Dist	COUNTY	ROUTE	POST MILES TOTAL PROJECT	SHEET No.	TOTAL SHEETS
11	Imp	8	R45.5/R55.0	101	211

REGISTERED CIVIL ENGINEER 04-28-15 DATE

08-03-15
PLANS APPROVAL DATE

REGISTERED PROFESSIONAL ENGINEER MICHAEL O. OREIRO No. 83247 Exp. 03-31-17 CIVIL STATE OF CALIFORNIA

THE STATE OF CALIFORNIA OR ITS OFFICERS OR AGENTS SHALL NOT BE RESPONSIBLE FOR THE ACCURACY OR COMPLETENESS OF SCANNED COPIES OF THIS PLAN SHEET.

LEGEND:

CROSSOVER AREA

TRANSITION AREA

FREEWAY CROSSOVER PAVEMENT LIMITS

LOCATION	STATION	OFFSET	ELEVATION
A	2935+60.00	17.19′ L†	362.255
B	2935+60.00	37.19′ L†	362.655
C	2936+10.00	17.46′ L†	362.878
D	2936+10.00	37.46′ L†	362.678
E	2939+04.08	3.69′ L†	363.094
F	2941+23.93	1.69′ L†	363.162
G	2944+17.97	36.87′ L†	363.098
H	2944+17.97	41.87′ L†	363.048
I	2935+60.00	17.19′ R†	362.274
J	2935+60.00	37.19′ R†	362.674
K	2936+10.00	17.46′ R†	362.876
L	2936+10.00	37.46′ R†	362.676
M	2939+04.08	3.69′ R†	363.088
N	2941+23.93	1.69′ R†	363.157
O	2944+17.97	36.87′ R†	363.056
P	2944+17.97	41.87′ R†	363.006

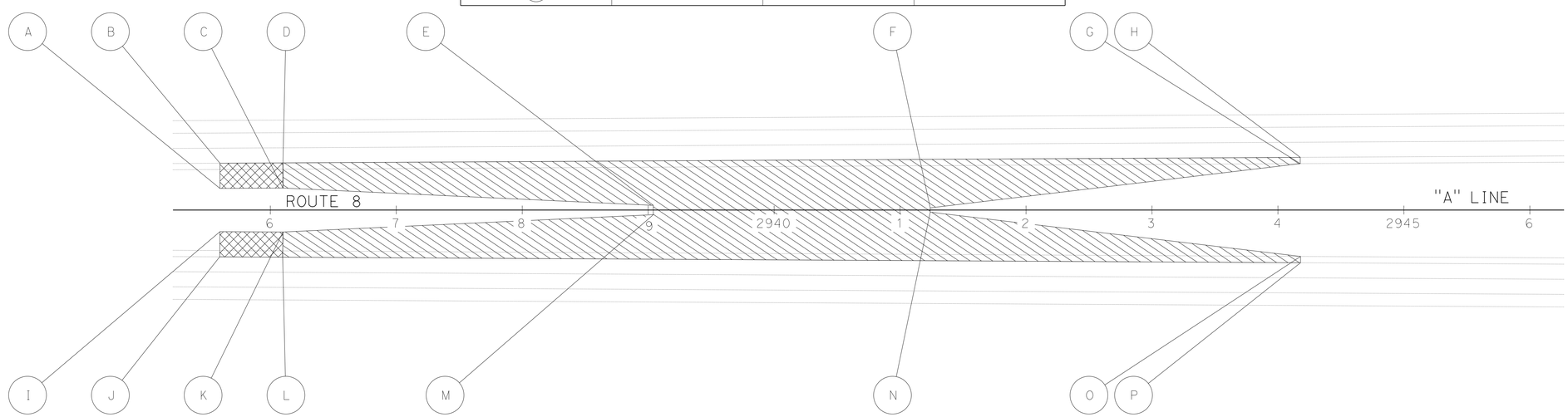

FREEWAY CROSSOVER
LOCATION 'D'

STAGE CONSTRUCTION DETAILS
NO SCALE

SCD-7

REVISED BY | DATE REVISED
MICHAEL OREIRO | JOHN HANSON
CALCULATED-DESIGNED BY | CHECKED BY
FUNCTIONAL SUPERVISOR | NICOLA BERNARD

STATE OF CALIFORNIA - DEPARTMENT OF TRANSPORTATION
Caltrans
TRADE CORRIDOR IMPROVEMENT FUND

LAST REVISION 04-20-15 | DATE PLOTTED => 10-AUG-2015 TIME PLOTTED => 15:10

Dist	COUNTY	ROUTE	POST MILES TOTAL PROJECT	SHEET No.	TOTAL SHEETS
11	Imp	8	R45.5/R55.0	102	211

REGISTERED CIVIL ENGINEER 04-28-15 DATE

08-03-15
PLANS APPROVAL DATE

REGISTERED PROFESSIONAL ENGINEER MICHAEL O. OREIRO No. 83247 Exp. 03-31-17 CIVIL STATE OF CALIFORNIA

THE STATE OF CALIFORNIA OR ITS OFFICERS OR AGENTS SHALL NOT BE RESPONSIBLE FOR THE ACCURACY OR COMPLETENESS OF SCANNED COPIES OF THIS PLAN SHEET.

NOTE:

TRAFFIC PLASTIC DRUMS TO BE PLACED AS SHOWN IN SCD-2

TEMPORARY BRIDGE COLUMN PROTECTION

STAGE	LOCATION	REMARKS
2	ANDERHOLT Rd BRIDGE COLUMN	TEMPORARY WB PROTECTION
	METS Rd BRIDGE COLUMN	TEMPORARY WB PROTECTION
	SR-7 BRIDGE COLUMN	TEMPORARY WB PROTECTION
	TOWLAND Rd BRIDGE COLUMN	TEMPORARY WB PROTECTION
	MILLER Rd BRIDGE COLUMN	TEMPORARY WB PROTECTION
	SR-115 BRIDGE COLUMN	TEMPORARY WB PROTECTION
3	BONDS CORNER Rd BRIDGE COLUMN	TEMPORARY WB PROTECTION
4	ANDERHOLT Rd BRIDGE COLUMN	TEMPORARY EB PROTECTION
	METS Rd BRIDGE COLUMN	TEMPORARY EB PROTECTION
	SR-7 BRIDGE COLUMN	TEMPORARY EB PROTECTION
	TOWLAND Rd BRIDGE COLUMN	TEMPORARY EB PROTECTION
	MILLER Rd BRIDGE COLUMN	TEMPORARY EB PROTECTION
	SR-115 BRIDGE COLUMN	TEMPORARY EB PROTECTION
5	BONDS CORNER Rd BRIDGE COLUMN	TEMPORARY EB PROTECTION

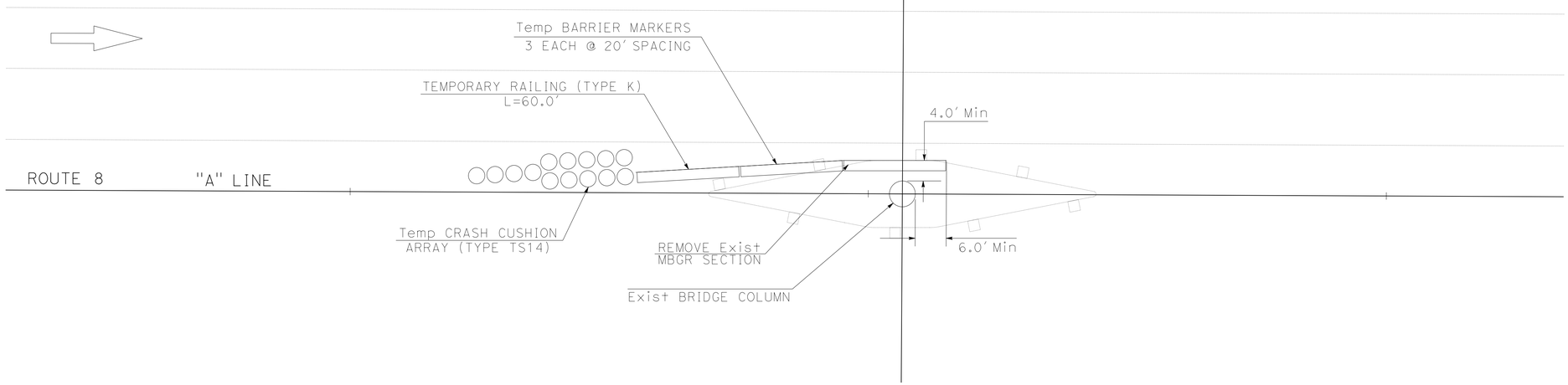

TEMPORARY BRIDGE COLUMN PROTECTION

TEMPORARY EASTBOUND AND TEMPORARY WESTBOUND

STAGE CONSTRUCTION DETAILS

NO SCALE

SCD-8

STATE OF CALIFORNIA - DEPARTMENT OF TRANSPORTATION
Caltrans
TRADE CORRIDOR IMPROVEMENT FUND

FUNCTIONAL SUPERVISOR: NICOLA BERNARD
CALCULATED-DESIGNED BY: RADHIKA MOTHKURI
CHECKED BY: MICHAEL OREIRO
REVISED BY
DATE REVISED

LAST REVISION 04-20-15
DATE PLOTTED => 10-AUG-2015
TIME PLOTTED => 15:10

Dist	COUNTY	ROUTE	POST MILES TOTAL PROJECT	SHEET No.	TOTAL SHEETS
11	Imp	8	R45.5/R55.0	103	211

REGISTERED CIVIL ENGINEER 04-28-15 DATE

08-03-15
PLANS APPROVAL DATE

REGISTERED PROFESSIONAL ENGINEER MICHAEL O. OREIRO No. 83247 Exp. 03-31-17 CIVIL STATE OF CALIFORNIA

THE STATE OF CALIFORNIA OR ITS OFFICERS OR AGENTS SHALL NOT BE RESPONSIBLE FOR THE ACCURACY OR COMPLETENESS OF SCANNED COPIES OF THIS PLAN SHEET.

STAGE CONSTRUCTION EARTHWORK

STAGE	SHEET No.	LOCATION	ROADWAY EXCAVATION (CY) *	EMBANKMENT (N) (CY) *	REMARKS
1	SC-8	"A" 2434+50 TO "A" 2669+30	13,045	5,001	INSTALL WB Temp WIDENING
	SC-8	"A" 2676+80 TO "A" 2719+30	2,362	906	INSTALL WB Temp WIDENING
	SC-8	"A" 2726+80 TO "A" 2907+00	10,012	3,838	INSTALL WB Temp WIDENING
	SC-8	"A" 2911+00 TO "A" 2936+10	1,395	535	INSTALL WB Temp WIDENING
2	SC-14	"A" 2434+50 TO "A" 2669+30	6,523	5,001	INSTALL EB Temp WIDENING
3	SC-22	"A" 2676+80 TO "A" 2719+30	1,181	906	INSTALL EB Temp WIDENING
2	SC-14	"A" 2726+80 TO "A" 2907+00	5,006	3,838	INSTALL EB Temp WIDENING
	SC-14	"A" 2911+00 TO "A" 2936+10	698	535	INSTALL EB Temp WIDENING
1	SC-9	"A" 2903+00 TO "A" 2907+00	75		OUTSIDE SHOULDER REBUILD
	SC-9	"A" 2910+13 TO "A" 2915+00	88		OUTSIDE SHOULDER REBUILD
	SC-9	"A" 2907+00 TO "A" 2907+20	2		INSIDE SHOULDER REBUILD
	SC-9	"A" 2910+55 TO "A" 2911+00	5		INSIDE SHOULDER REBUILD
1	SC-10	LOCATION 'A' CROSSOVER	756	265	INSTALL CROSSOVER
	SC-11	LOCATION 'B' CROSSOVER	834	292	INSTALL CROSSOVER
	SC-12	LOCATION 'C' CROSSOVER	834	292	INSTALL CROSSOVER
	SC-13	LOCATION 'D' CROSSOVER	898	315	INSTALL CROSSOVER
4	SC-28	"A" 2434+50 TO "A" 2669+30	4,349	2,175	REMOVE WB Temp WIDENING
	SC-28	"A" 2726+80 TO "A" 2907+00	3,338	1,669	REMOVE WB Temp WIDENING
	SC-28	"A" 2911+00 TO "A" 2936+10	465	233	REMOVE WB Temp WIDENING
5	SC-35	"A" 2434+50 TO "A" 2669+30	4,349	2,174	REMOVE EB Temp WIDENING
	SC-35	"A" 2726+80 TO "A" 2907+00	3,338	1,669	REMOVE EB Temp WIDENING
	SC-35	"A" 2911+00 TO "A" 2936+10	465	233	REMOVE EB Temp WIDENING
5	SC-36	"A" 2676+80 TO "A" 2719+30	788	394	REMOVE WB Temp WIDENING
6	SC-43	"A" 2676+80 TO "A" 2719+30	788	394	REMOVE EB Temp WIDENING
6	SC-44	LOCATION 'A' CROSSOVER	945	13	REMOVE CROSSOVER
	SC-45	LOCATION 'B' CROSSOVER	1,042	14	REMOVE CROSSOVER
	SC-46	LOCATION 'C' CROSSOVER	1,042	14	REMOVE CROSSOVER
	SC-47	LOCATION 'D' CROSSOVER	1,123	15	REMOVE CROSSOVER
		TOTAL	65,746	30,721	

(N)-NOT A SEPARATE PAY ITEM, FOR INFORMATION ONLY
* SEE SUMMARY OF QUANTITIES FOR ADDITIONAL QUANTITIES.

CONSTRUCTION AREA SIGNS

SHEET No.	CODE	PANEL SIZE	No. OF POST AND SIZE	No. OF SIGNS
SC-17, 19, 25, 32, 34 & 40	W1-4L	48" X 48"	1 - 6" X 6" (S)	6
	W13-1P (50 MPH)	30" X 30"		
SC-17, 19, 25, 32, 34 & 40	W1-4R	48" X 48"	1 - 6" X 6" (S)	6
	W13-1P (50 MPH)	30" X 30"		
SCD-1	W20-5 (L)	48" X 48"	1 - 6" X 6" (S)	6
SCD-1	C-20 (CA) L	48" X 48"	1 - 6" X 6" (S)	6
SCD-1	W4-2L	48" X 48"	1 - 6" X 6" (S)	6
SCD-1	ARROW BOARD (R)			6
SCD-2	C30 (CA)	48" X 48"	PORTABLE	34
SC-17, 19, 25, 32, 34 & 40	R81A (CA)	12" X 5"	1 - 6" X 6" (S)	6
	R8-4	48" X 36"		
SC-18, 20, 26, 31, 33 & 39	R81B (CA)	8" X 5"	1 - 6" X 6" (S)	6
	R8-4	48" X 36"		
SC-14 & 28	R8-4	48" X 36"	1 - 6" X 6" (S)	2
			TOTAL	84

SEE CONSTRUCTION AREA SIGN AND TRAFFIC HANDLING QUANTITY SHEETS FOR ADDITIONAL CONSTRUCTION AREA SIGN QUANTITIES.
(S) STATIONARY SIGN

STAGE CONSTRUCTION TEMPORARY STRUCTURAL SECTION

STAGE	SHEET No.	LOCATION	AREA (SQFT) (N)	HOT MIX ASPHALT (TYPE A) (TON) *	CLASS 2 AB (CY) *	COLD PLANE ASPHALT CONCRETE PAVEMENT (SQYD) *	ASPHALTIC EMULSION (FOG SEAL COAT)(TON) *	REMOVE ASPHALT CONCRETE PAVEMENT (CY)	REMARKS
1	SC-8	"A" 2434+50 TO "A" 2669+30		8,808	8,697			2,175	WB Temp WIDENING (AC TO BE REMOVED IN STAGE 4)
	SC-8	"A" 2676+80 TO "A" 2719+30		1,595	1,575			394	WB Temp WIDENING (AC TO BE REMOVED IN STAGE 5)
	SC-8	"A" 2726+80 TO "A" 2907+00		6,760	6,675			1,669	WB Temp WIDENING (AC TO BE REMOVED IN STAGE 4)
	SC-8	"A" 2911+00 TO "A" 2936+10		942	930			233	WB Temp WIDENING (AC TO BE REMOVED IN STAGE 4)
2	SC-14	"A" 2434+50 TO "A" 2669+30		4,404	4,349			2,175	EB Temp WIDENING (AC TO BE REMOVED IN STAGE 5)
3	SC-22	"A" 2676+80 TO "A" 2719+30		798	788			394	EB Temp WIDENING (AC TO BE REMOVED IN STAGE 6)
2	SC-14	"A" 2726+80 TO "A" 2907+00		3,380	3,338			1,669	EB Temp WIDENING (AC TO BE REMOVED IN STAGE 5)
	SC-14	"A" 2911+00 TO "A" 2936+10		471	465			233	EB Temp WIDENING (AC TO BE REMOVED IN STAGE 5)
1	SC-9	"A" 2903+00 TO "A" 2907+00		151					OUTSIDE SHOULDER REBUILD
	SC-9	"A" 2910+13 TO "A" 2915+00		177					OUTSIDE SHOULDER REBUILD
	SC-9	"A" 2907+00 TO "A" 2907+20		4					INSIDE SHOULDER REBUILD
	SC-9	"A" 2910+55 TO "A" 2911+00		9					INSIDE SHOULDER REBUILD
1	SC-10	LOCATION 'A' CROSSOVER	32,510	1,220	1,205			603	CROSSOVER (AC TO BE REMOVED IN STAGE 6)
	SC-11	LOCATION 'B' CROSSOVER	39,400	1,478	1,460			730	CROSSOVER (AC TO BE REMOVED IN STAGE 6)
	SC-12	LOCATION 'C' CROSSOVER	39,400	1,478	1,460			730	CROSSOVER (AC TO BE REMOVED IN STAGE 6)
	SC-13	LOCATION 'D' CROSSOVER	46,530	1,746	1,724			862	CROSSOVER (AC TO BE REMOVED IN STAGE 6)
6	SC-44	LOCATION 'A' CROSSOVER	6,800			756	0.16		INSIDE SHOULDER GRINDING
6	SC-47	LOCATION 'D' CROSSOVER	8,080			898	0.19		INSIDE SHOULDER GRINDING
		TOTAL		33,421	32,666	1,654	0.35	11,867	

(N)-NOT A SEPARATE PAY ITEM, FOR INFORMATION ONLY
* SEE SUMMARY OF QUANTITIES FOR ADDITIONAL QUANTITIES.

STAGE CONSTRUCTION QUANTITIES
SCQ-1

STATE OF CALIFORNIA - DEPARTMENT OF TRANSPORTATION
Caltrans®
TRADE CORRIDOR IMPROVEMENT FUND

FUNCTIONAL SUPERVISOR: NICOLA BERNARD
CALCULATED-DESIGNED BY: MICHAEL OREIRO
CHECKED BY: JOHN HANSON
REVISED BY
DATE REVISED

LAST REVISION 04-20-15
DATE PLOTTED => 10-AUG-2015
TIME PLOTTED => 15:10

Dist	COUNTY	ROUTE	POST MILES TOTAL PROJECT	SHEET No.	TOTAL SHEETS
11	Imp	8	R45.5/R55.0	104	211

REGISTERED CIVIL ENGINEER 04-28-15 DATE

08-03-15
PLANS APPROVAL DATE

REGISTERED PROFESSIONAL ENGINEER MICHAEL O. OREIRO No. 83247 Exp. 03-31-17 CIVIL STATE OF CALIFORNIA

THE STATE OF CALIFORNIA OR ITS OFFICERS OR AGENTS SHALL NOT BE RESPONSIBLE FOR THE ACCURACY OR COMPLETENESS OF SCANNED COPIES OF THIS PLAN SHEET.

STAGE CONSTRUCTION PAVEMENT DELINEATION REMOVALS

STAGE	SHEET	DETAIL No.	REMOVE PAINTED TRAFFIC STRIPE	REMOVE PAVEMENT MARKER (N)	REMARKS
			LF	EA	
1	SC-9	27B	1,190		WB (EAST HIGHLINE CANAL BRIDGE)
	SCD-1	11/13	780	244	EB LEFT LANE DROP (LOCATION 'A')
	SC-10	11/13	428	134	EB (LOCATION 'A')
	SCD-1	11/13	780	244	EB LEFT LANE DROP (LOCATION 'B')
	SC-11	11/13	2,432	760	EB (LOCATION 'B' TO LOCATION 'C')
	SCD-1	11/13	780	244	EB LEFT LANE DROP (LOCATION 'D')
	SC-13	11/13	504	158	EB (LOCATION 'D')
	SC-8	11/13	20,884	6,526	WB (ENTIRE DISTANCE)
	SCD-1	11/13	780	244	WB LEFT LANE DROP (LOCATION 'D')
2	SC-17	25	880	37	LOCATION 'A' CROSSOVER
	SC-18	25	430	18	LOCATION 'B' CROSSOVER
	SC-19	25	500	21	LOCATION 'C' CROSSOVER
	SC-20	25	440	18	LOCATION 'D' CROSSOVER
	SC-17	27B	880		LOCATION 'A' CROSSOVER
	SC-18	27B	430		LOCATION 'B' CROSSOVER
	SC-19	27B	500		LOCATION 'C' CROSSOVER
	SC-20	27B	440		LOCATION 'D' CROSSOVER
3	SC-24	25	440	18	LOCATION 'A' CROSSOVER
	SC-25	25	220	9	LOCATION 'B' CROSSOVER
	SC-26	25	220	9	LOCATION 'C' CROSSOVER
	SC-27	25	440	18	LOCATION 'D' CROSSOVER
	SC-24	27B	440		LOCATION 'A' CROSSOVER
	SC-25	27B	220		LOCATION 'B' CROSSOVER
	SC-26	27B	220		LOCATION 'C' CROSSOVER
	SC-27	27B	440		LOCATION 'D' CROSSOVER
4	SC-31	25	500	21	LOCATION 'A' CROSSOVER
	SC-32	25	1,235	51	LOCATION 'B' CROSSOVER
	SC-33	25	1,285	54	LOCATION 'C' CROSSOVER
	SC-34	25	720	30	LOCATION 'D' CROSSOVER
	SC-31	27B	500		LOCATION 'A' CROSSOVER
	SC-32	27B	1,235		LOCATION 'B' CROSSOVER
	SC-33	27B	1,285		LOCATION 'C' CROSSOVER
	SC-34	27B	720		LOCATION 'D' CROSSOVER
5	SC-38	25	1,785	74	LOCATION 'A' CROSSOVER
	SC-39	25	510	21	LOCATION 'B' CROSSOVER
	SC-40	25	510	21	LOCATION 'C' CROSSOVER
	SC-41	25	720	30	LOCATION 'D' CROSSOVER
	SC-38	27B	885		LOCATION 'A' CROSSOVER
	SC-39	27B	690		LOCATION 'B' CROSSOVER
	SC-40	27B	710		LOCATION 'C' CROSSOVER
	SC-37	27B	1,200		EAST HIGHLINE CANAL BRIDGE
	SC-41	27B	720		LOCATION D CROSSOVER
6	SC-43	25	52,030	2,170	EB LOCATION 'A' TO LOCATION 'D'
	SCD-1	25	1,200	50	EB LEFT LANE DROP (LOCATION 'A')
	SCD-1	ARROW	380		EB TYPE VI ARROW X 3 (LOCATION 'A')
	SCD-1	25	1,200	50	WB LEFT LANE DROP (LOCATION 'D')
	SCD-1	ARROW	380		WB TYPE VI ARROW X 3 (LOCATION 'D')
	SC-42	25	23,480	979	LOCATION 'A' TO LOCATION 'B'
	SC-45	25	885	37	LOCATION 'B' CROSSOVER
	SC-43	25	4,250	177	LOCATION 'B' TO LOCATION 'C'
	SC-46	25	885	37	LOCATION C CROSSOVER
	SC-42	25	20,930	873	EB LOCATION 'C' TO LOCATION 'D'
	SC-42	25	20,800	867	WB LOCATION 'C' TO LOCATION 'D'
	SC-47	25	440	18	LOCATION 'D' CROSSOVER
	SC-45	27B	440		LOCATION 'B' CROSSOVER
	SC-46	27B	440		LOCATION 'C' CROSSOVER
TOTAL			178,648		

(N)-NOT A SEPARATE PAY ITEM, FOR INFORMATION ONLY.

STAGE CONSTRUCTION SPECIAL PAVEMENT DELINEATION REMOVALS

STAGE	SHEET	DETAIL No.	REMOVE YELLOW PAINTED TRAFFIC STRIPE (HAZARDOUS WASTE)	REMOVE PAVEMENT MARKER (N)	REMARKS
			LF	EA	
1	SCD-1	25	1,200	50	EB LEFT LANE DROP (LOCATION 'A')
	SC-10	25	1,070	45	EB (LOCATION 'A')
	SCD-1	25	1,200	50	EB LEFT LANE DROP (LOCATION 'B')
	SC-11	25	6,080	254	EB (LOCATION 'B' TO LOCATION 'C')
	SCD-1	25	1,200	50	EB LEFT LANE DROP (LOCATION 'D')
	SC-13	25	1,260	53	EB (LOCATION 'D')
	SC-10	25	1,010	42	WB (LOCATION 'A')
	SC-11	25	750	31	WB (LOCATION 'B')
	SC-12	25	750	31	WB (LOCATION 'C')
	SC-9	25	400	17	WB (EAST HIGHLINE CANAL BRIDGE)
	SCD-1	25	1,200	50	WB LEFT LANE DROP (LOCATION 'D')
	SC-13	25	220	9	WB (LOCATION 'D')
TOTAL			16,340		

STAGE CONSTRUCTION TEMPORARY DRAINAGE

STAGE	SHEET No.	LOCATION	TEMPORARY 8" CORRUGATED HIGH DENSITY POLYETHYLENE PIPE CONDUIT (LF)	CULVERT SLURRY-CEMENT BACKFILL (CY)
1	SCD-3	"A" 2429+44 TO "A" 2433+65	842	
	SCD-3	"A" 2429+44 TO "A" 2432+29		45.60
	SCD-3	"A" 2670+36 TO "A" 2675+60	1,048	
	SCD-3	"A" 2671+53 TO "A" 2674+57		48.64
	SCD-3	"A" 2720+30 TO "A" 2725+75	1,090	
	SCD-3	"A" 2721+53 TO "A" 2724+57		48.64
	SCD-3	"A" 2938+50 TO "A" 2941+60	620	
	SCD-3	"A" 2939+04 TO "A" 2941+24		35.20
TOTAL			3,600	178.08

STAGE CONSTRUCTION QUANTITIES
SCQ-2

STATE OF CALIFORNIA - DEPARTMENT OF TRANSPORTATION
Caltrans®
TRADE CORRIDOR IMPROVEMENT FUND

FUNCTIONAL SUPERVISOR: NICOLA BERNARD
CALCULATED-DESIGNED BY: MICHAEL OREIRO
CHECKED BY: JOHN HANSON
REVISED BY
DATE REVISED

LAST REVISION 04-20-15
DATE PLOTTED => 10-AUG-2015
TIME PLOTTED => 15:10

Dist	COUNTY	ROUTE	POST MILES TOTAL PROJECT	SHEET No.	TOTAL SHEETS
11	Imp	8	R45.5/R55.0	105	211

REGISTERED CIVIL ENGINEER 04-28-15 DATE

08-03-15
PLANS APPROVAL DATE

REGISTERED PROFESSIONAL ENGINEER MICHAEL O. OREIRO No. 83247 Exp. 03-31-17 CIVIL STATE OF CALIFORNIA

THE STATE OF CALIFORNIA OR ITS OFFICERS OR AGENTS SHALL NOT BE RESPONSIBLE FOR THE ACCURACY OR COMPLETENESS OF SCANNED COPIES OF THIS PLAN SHEET.

STAGE CONSTRUCTION PAVEMENT DELINEATION (MORE THAN 180 DAYS)

STAGE	SHEET	DETAIL No.	PAVEMENT MARKER (EA) * NON-REFLECTIVE TYPE A WHITE	RETROREFLECTIVE TYPE G CLEAR	RETROREFLECTIVE TYPE H YELLOW	RETROREFLECTIVE TYPE D YELLOW	PAINT TRAFFIC STRIPE (2 COAT) LF	PAINT PAVEMENT MARKING (2 COAT) SQFT	REMARKS
1	SCD-1	25			50		1,200		EB LEFT LANE DROP (LOCATION A)
	SCD-1	ARROW						126	EB TYPE VI ARROW X 3 (LOCATION A)
	SC-10	25			45		1,070		EB (LOCATION A)
	SCD-1	25			50		1,200		EB LEFT LANE DROP (LOCATION B)
	SCD-1	ARROW						126	EB TYPE VI ARROW X 3 (LOCATION B)
	SC-11	25			254		6,080		EB (LOCATION A TO LOCATION B)
	SCD-1	25			50		1,200		EB LEFT LANE DROP (LOCATION D)
	SCD-1	ARROW						126	EB TYPE VI ARROW X 3 (LOCATION D)
	SC-13	25			53		1,260		EB (LOCATION D)
	SC-8	25			2,177		52,210		WB (LOCATION A TO LOCATION D)
	SC-9	27B					1,190		WB (EAST HIGHLINE CANAL BRIDGE)
	SCD-1	25			50		1,200		WB LEFT LANE DROP (LOCATION D)
	SCD-1	ARROW						126	WB TYPE VI ARROW X 3 (LOCATION D)
2	SC-17	25			37		885		CROSSOVER (LOCATION A)
		27B					885		
	SC-14	25			979		23,480		LOCATION A TO LOCATION B
		27B					23,480		
	SC-18	25			37		885		CROSSOVER (LOCATION B)
		27B					885		
	SC-19	25			37		885		CROSSOVER (LOCATION C)
		27B					885		
	SC-14	25			873		20,940		LOCATION C TO LOCATION D
		27B					20,940		
	SC-20	25			43		1,020		CROSSOVER (LOCATION D)
		27B					1,020		
4	SC-31	25			37		885		CROSSOVER (LOCATION A)
		27B					885		
	SC-28	25			979		23,480		LOCATION A TO LOCATION B
		27B					23,480		
	SC-32	25			37		885		CROSSOVER (LOCATION B)
		27B					885		
	SC-29	25			251		6,010		LOCATION B TO LOCATION C
		27B					*		
	SC-33	25			37		885		CROSSOVER (LOCATION C)
		27B					885		
	SC-29	25			873		20,940		LOCATION C TO LOCATION D
		27B					20,940		
	SC-34	25			43		1,020		CROSSOVER (LOCATION D)
		27B					1,020		
6	SC-43	25					6,070		LOCATION B TO LOCATION C
	SCD-1	25			50		1,200		EB LEFT LANE DROP (LOCATION B)
	SCD-1	ARROW						126	EB TYPE VI ARROW X 3 (LOCATION B)
	SCD-1	25			50		1,200		WB LEFT LANE DROP (LOCATION C)
	SCD-1	ARROW						126	WB TYPE VI ARROW X 3 (LOCATION C)
	SC-46	25			5		120		
SUB-TOTAL (1)				7,097			273,590	756	

* FOR ADDITIONAL QUANTITIES, SEE PAVEMENT DELINEATION QUANTITIES.

STAGE CONSTRUCTION QUANTITIES
SCQ-3

STATE OF CALIFORNIA - DEPARTMENT OF TRANSPORTATION
Caltrans®
TRADE CORRIDOR IMPROVEMENT FUND

FUNCTIONAL SUPERVISOR: NICOLA BERNARD
CALCULATED-DESIGNED BY: MICHAEL OREIRO
CHECKED BY: JOHN HANSON
REVISED BY
DATE REVISED

LAST REVISION 04-20-15
DATE PLOTTED => 10-AUG-2015
TIME PLOTTED => 15:10

Dist	COUNTY	ROUTE	POST MILES TOTAL PROJECT	SHEET No.	TOTAL SHEETS
11	Imp	8	R45.5/R55.0	106	211

REGISTERED CIVIL ENGINEER 04-28-15 DATE

08-03-15
PLANS APPROVAL DATE

REGISTERED PROFESSIONAL ENGINEER MICHAEL O. OREIRO No. 83247 Exp. 03-31-17 CIVIL STATE OF CALIFORNIA

THE STATE OF CALIFORNIA OR ITS OFFICERS OR AGENTS SHALL NOT BE RESPONSIBLE FOR THE ACCURACY OR COMPLETENESS OF SCANNED COPIES OF THIS PLAN SHEET.

STAGE CONSTRUCTION TEMPORARY PAVEMENT DELINEATION (MORE THAN 180 DAYS)

STAGE	SHEET	DETAIL No.	PAVEMENT MARKER (EA) * NON-REFLECTIVE TYPE A WHITE	RETROREFLECTIVE TYPE G CLEAR	RETROREFLECTIVE TYPE H YELLOW	RETROREFLECTIVE TYPE D YELLOW	PAINT TRAFFIC STRIPE (2 COAT) LF	PAINT PAVEMENT MARKING (2 COAT) SQFT	REMARKS
3	SC-24	25			17		410		CROSSOVER (LOCATION 'A')
		27B					410		
	SC-21	25			974		23,350		LOCATION 'A' TO LOCATION 'B'
		27B					*		
	SC-25	25			37		885		CROSSOVER (LOCATION 'B')
		27B					885		
	SC-22	25			177		4,250		LOCATION 'B' TO LOCATION 'C'
		27B					4,250		
	SC-26	25			37		885		CROSSOVER (LOCATION 'C')
		27B					885		
	SC-21	25			867		20,800		LOCATION 'C' TO LOCATION 'D'
		27B					*		
	SC-23	27B					1,200		EAST HIGHLINE CANAL BRIDGE
	SC-27	25			18		440		CROSSOVER (LOCATION 'D')
		27B					440		
5	SC-38	25			*		*		CROSSOVER (LOCATION 'A')
		27B					*		
	SC-35	25			*		*		LOCATION 'A' TO LOCATION 'B'
		27B					*		
	SC-38	25			37		885		CROSSOVER (LOCATION 'B')
		27B					885		
	SC-36	25			177		4,250		LOCATION 'B' TO LOCATION 'C'
		27B					4,250		
	SC-40	25			37		885		CROSSOVER (LOCATION 'C')
		27B					885		
	SC-35	25			867		20,800		LOCATION 'C' TO LOCATION 'D'
		27B					*		
	SC-41	25			18		440		CROSSOVER (LOCATION 'D')
		27B					*		
SUB-TOTAL (1) (SCQ-3)				7,097			273,590	756	
SUB-TOTAL (2)				3,263			92,370		
TOTAL				10,360			365,960	756	

* FOR ADDITIONAL QUANTITIES, SEE PAVEMENT DELINEATION QUANTITIES.

APPROVED FOR STAGE CONSTRUCTION WORK ONLY

STAGE CONSTRUCTION QUANTITIES
SCALE 1"= 50'

SCQ-4

REVISED BY | DATE REVISED
MICHAEL OREIRO | JOHN HANSON
CALCULATED-DESIGNED BY | CHECKED BY
FUNCTIONAL SUPERVISOR | NICOLA BERNARD

STATE OF CALIFORNIA - DEPARTMENT OF TRANSPORTATION
Caltrans®
TRADE CORRIDOR IMPROVEMENT FUND

LAST REVISION 04-20-15 | DATE PLOTTED => 10-AUG-2015 | TIME PLOTTED => 15:10

Dist	COUNTY	ROUTE	POST MILES TOTAL PROJECT	SHEET No.	TOTAL SHEETS
11	Imp	8	R45.5/R55.0	107	211

REGISTERED CIVIL ENGINEER 04-28-15 DATE

08-03-15
PLANS APPROVAL DATE

REGISTERED PROFESSIONAL ENGINEER MICHAEL O. OREIRO No. 83247 Exp. 03-31-17 CIVIL STATE OF CALIFORNIA

THE STATE OF CALIFORNIA OR ITS OFFICERS OR AGENTS SHALL NOT BE RESPONSIBLE FOR THE ACCURACY OR COMPLETENESS OF SCANNED COPIES OF THIS PLAN SHEET.

RESET ROADSIDE SIGN *

LINE	LOCATION	DIRECTION EB	DIRECTION WB	SIDE R†	SIDE L†	SIGN CODE	RESET ROADSIDE SIGN EA	REMOVED IN STAGE (N)	RESET IN STAGE (N)
"A"	2518+33	X		X		G86-1 (CA)	1	2	2
						D9-8			
						D9-9			
						M1-6			
"A"	2520+43	X		X		D9-17P	1	2	2
"A"	2526+17	X		X		G24-3 (CA)	1	2	2
						G66-56 (CA)			
						M5-1 (Blue)			
"A"	2532+81	X		X		R18A (CA)	1	2	2
"A"	2540+25	X		X		G84-3 (CA)	1	2	2
"A"	2551+10	X		X		W4-1	1	2	2
"A"	2562+29	X		X		W4-1	1	2	2
"A"	2577+56	X		X		G27-2 (CA)	1	2	2
						M3-2 (Blue)			
"A"	2597+64	X			X	R4-3	1	2	6
"A"	2608+72	X		X		S32 (CA)	1	2	2
						S32-1 (CA)			
"A"	2610+77	X		X		R8-4	1	2	2
"A"	2658+75	X		X		G11-4.1 (CA)	1	2	2
"A"	2634+17	X		X		G83-4 (CA)	1	2	2
"A"	2685+32	X		X		G85-1 (CA)	1	3	3
"A"	2689+79	X		X		G84-3 (CA)	1	3	3
"A"	2704+43	X		X		W4-1	1	3	3
"A"	2720+80	X		X		G27-2 (CA)	1	2	2
						M3-2 (Blue)			
"A"	2739+89	X			X	R4-3	1	2	6
"A"	2794+11	X		X		G83-4 (CA)	1	2	2
"A"	2811+19	X		X		G86-7 (CA)	1	2	2
"A"	2841+70	X		X		G66-56 (CA)	1	2	2
						M6-2 (Blue)			
"A"	2842+35	X		X		G85-3 (CA)	1	2	2
"A"	2846+93	X		X		G84-3 (CA)	1	2	2
"A"	2877+88	X		X		G27-2 (CA)	1	2	2
						M3-2 (Blue)			
"A"	2880+75	X		X		R2-1	1	2	2
						R48-1			
"A"	2883+32	X		X		R48-2	1	2	2
"A"	2888+19	X		X		R6-4 (CA)	1	2	2
						R48-1			
"A"	2907+72	X		X		G11-5 (CA)	1	2	2
"A"	2926+26		X	X		G83-5 (CA)	1	4	4
"A"	2910+23		X	X		G11-5 (CA)	1	4	4
"A"	2898+60		X	X		G86-7 (CA)	1	4	4
						SUBTOTAL	31		

* SIGNS MAY BE RESET ON DIFFERENT DAYS AS DIRECTED BY THE ENGINEER

LINE	LOCATION	DIRECTION EB	DIRECTION WB	SIDE R†	SIDE L†	SIGN CODE	RESET ROADSIDE SIGN EA	REMOVED IN STAGE (N)	RESET IN STAGE (N)
"A"	2890+62		X	X		G86-1 (CA)	1	4	4
						D9-3a			
						D9-8			
						D9-9			
"A"	2883+32		X	X		D9-17P	1	4	4
"A"	2873+31		X	X		G85-4 (CA)	1	4	4
"A"	2872+25		X	X		G66-56 (CA)	1	4	4
						M6-2 (Blue)			
"A"	2868+51		X	X		G84-3 (CA)	1	4	4
"A"	2850+65		X	X		W4-1	1	4	4
"A"	2835+88		X	X		G27-2 (CA)	1	4	4
						M3-4 (Blue)			
"A"	2830+44		X	X		R2-1	1	4	4
						R48-1			
"A"	2822+93		X	X		R6-4 (CA)	1	4	4
						R48-1			
"A"	2762+97		X	X		G83-4 (CA)	1	4	4
"A"	2730+55		X	X		S32 (CA)	1	4	4
						S32-1 (CA)			
"A"	2710+84		X	X		G85-1 (CA)	1	5	5
"A"	2707+42		X	X		W3-1	1	5	5
"A"	2706+42		X	X		G84-3 (CA)	1	5	5
"A"	2702+02		X	X		SR15 (CA)	1	5	5
"A"	2691+68		X	X		W4-1	1	5	5
"A"	2680+80		X	X		G27-2 (CA)	1	5	5
						M3-4 (Blue)			
"A"	2659+62		X	X		G11-4.1 (CA)	1	4	4
"A"	2650+85		X		X	R4-3	1	1	6
"A"	2642+27		X	X		R8-4	1	4	4
"A"	2608+75		X	X		S32 (CA)	1	4	4
						S32-1 (CA)			
"A"	2586+44		X	X		G24-3 (CA)	1	4	4
"A"	2579+00		X	X		G86-13 (CA)	1	4	4
						M1-6			
						G66-56 (CA)			
						M5-1 (Blue)			
"A"	2571+93		X	X		G85-6 (CA)	1	4	4
"A"	2567+69		X	X		G84-3 (CA)	1	4	4
"A"	2557+05		X	X		W4-1	1	4	4
"A"	2544+49		X	X		W4-1	1	4	4
"A"	2530+00		X	X		G27-2 (CA)	1	4	4
						M3-4 (Blue)			
"A"	2491+00		X	X		R8-4	1	4	4
						SUBTOTAL 2	29		
						SUBTOTAL 1	31		
						TOTAL	60		

STAGE CONSTRUCTION QUANTITIES
SCQ-5

STATE OF CALIFORNIA - DEPARTMENT OF TRANSPORTATION
Caltrans®
TRADE CORRIDOR IMPROVEMENT FUND

FUNCTIONAL SUPERVISOR: NICOLA BERNARD
CALCULATED-DESIGNED BY: MICHAEL OREIRO
CHECKED BY: JOHN HANSON
REVISED BY
DATE REVISED

LAST REVISION 04-20-15
DATE PLOTTED => 10-AUG-2015
TIME PLOTTED => 15:10

Dist	COUNTY	ROUTE	POST MILES TOTAL PROJECT	SHEET No.	TOTAL SHEETS
11	Imp	8	R45.5/R55.0	108	211

REGISTERED CIVIL ENGINEER 04-28-15 DATE

08-03-15
PLANS APPROVAL DATE

REGISTERED PROFESSIONAL ENGINEER MICHAEL O. OREIRO No. 83247 Exp. 03-31-17 CIVIL STATE OF CALIFORNIA

THE STATE OF CALIFORNIA OR ITS OFFICERS OR AGENTS SHALL NOT BE RESPONSIBLE FOR THE ACCURACY OR COMPLETENESS OF SCANNED COPIES OF THIS PLAN SHEET.

STAGE CONSTRUCTION TEMPORARY TRAFFIC ITEMS

STAGE	SHEET No.	TRAFFIC PLASTIC DRUM (EA)	TEMPORARY CRASH CUSHION MODULE (EA)	TYPE III BARRICADE (EA)	TEMPORARY RAILING (TYPE K) (LF)	TEMPORARY BARRIER MARKERS (N) (EA)	LOCATION
1	SC-8				52,100	2,605	WB LOCATION A TO LOCATION D
	SC-9		14		100	5	WB EAST HIGHLINE CANAL BRIDGE
	SC-10		14		1,060	53	EB LOCATION A
	SC-11		14		6,040	302	EB LOCATION B TO LOCATION C
	SC-13		14		1,280	64	EB LOCATION D
	SC-13		14		140	7	WB LOCATION D
2	SC-16	5	14		200	10	WB EAST HIGHLINE CANAL BRIDGE
	SC-17	12	14		960	96	EB LOCATION A CROSSOVER
	SC-18	5	14		960	96	EB LOCATION B CROSSOVER (RIGHT)
	SC-18	6	14	3	140	7	EB LOCATION B CROSSOVER (LEFT)
	SC-19	11	14		960	96	EB LOCATION C CROSSOVER
	SC-20	13	14	3	1,100	110	EB LOCATION D CROSSOVER
3	SC-21	234					EB LOCATION A TO LOCATION B
	SC-21	208					EB LOCATION C TO LOCATION D
	SC-24	5	14		520	26	EB LOCATION A CROSSOVER
	SC-25	12	14		960	96	EB LOCATION B CROSSOVER
	SC-26	13	14	3	960	96	EB LOCATION C CROSSOVER
	SC-27	5	14		1,280	64	EB LOCATION D CROSSOVER
4	SC-29				51,640	2,582	EB LOCATION A TO LOCATION D
	SC-30	5	14		200	10	WB EAST HIGHLINE CANAL BRIDGE
	SC-31	11	14	3	960	96	WB LOCATION A CROSSOVER
	SC-32	12	14		960	96	WB LOCATION B CROSSOVER
	SC-33		14		960	96	WB LOCATION C CROSSOVER (LEFT)
	SC-33	11	14	3	160	8	WB LOCATION C CROSSOVER (RIGHT)
	SC-34	13	14		1,100	110	WB LOCATION D CROSSOVER
5	SC-35	208					WB LOCATION C TO LOCATION D
	SC-39	12	14	3	960	96	WB LOCATION B CROSSOVER
	SC-40	13	14		960	96	WB LOCATION C CROSSOVER
6	SC-43				5,900	295	EB LOCATION B TO LOCATION C
	SC-43				5,900	295	WB LOCATION B TO LOCATION C
	SC-45		14		140	7	EB LOCATION B
	SC-46		14		140	7	WB LOCATION C
1 AND 6	SCD-1	108					LEFT LANE DROPS
2 TO 6	SCD-8	70	196		840	42	TEMPORARY BRIDGE COLUMN PROTECTION
TOTAL		992	546	18	139,580		

STAGE CONSTRUCTION SLURRY SEAL

STAGE	SHEET No.	LOCATION	LENGTH (LF) (N)	WIDTH (LF) (N)	AREA (SY) (N)	SLURRY SEAL (TON)
1	SC-1	HUNT Rd BETWEEN MILLER Rd AND VANDERLINDEN Rd	5,286	22	12,922	97
					TOTAL	97

(N)-NOT A SEPARATE PAY ITEM, FOR INFORMATION ONLY.

STAGE CONSTRUCTION QUANTITIES

SCALE 1"= 50'

SCQ-6

STATE OF CALIFORNIA - DEPARTMENT OF TRANSPORTATION
Caltrans
TRADE CORRIDOR IMPROVEMENT FUND

FUNCTIONAL SUPERVISOR: NICOLA BERNARD
CALCULATED-DESIGNED BY: MICHAEL OREIRO
CHECKED BY: JOHN HANSON
REVISED BY
DATE REVISED

LAST REVISION 04-20-15
DATE PLOTTED => 10-AUG-2015
TIME PLOTTED => 15:10

Dist	COUNTY	ROUTE	POST MILES TOTAL PROJECT	SHEET No.	TOTAL SHEETS
11	Imp	8	R45.5/R55.0	109	211

REGISTERED CIVIL ENGINEER 04-28-15 DATE

08-03-15
PLANS APPROVAL DATE

REGISTERED PROFESSIONAL ENGINEER MICHAEL O. OREIRO No. 83247 Exp. 03-31-17 CIVIL STATE OF CALIFORNIA

THE STATE OF CALIFORNIA OR ITS OFFICERS OR AGENTS SHALL NOT BE RESPONSIBLE FOR THE ACCURACY OR COMPLETENESS OF SCANNED COPIES OF THIS PLAN SHEET.

NOTES:

1. EXACT LOCATION OF CONSTRUCTION AREA SIGNS WILL BE DETERMINED BY THE ENGINEER.

LEGEND:

- DIRECTION OF TRAVEL
- CONSTRUCTION AREA SIGNS
- Caps CAPITAL LETTERS
- SPCL SPECIAL CONSTRUCTION AREA SIGN

SIGN #1

SPCL-1 8" Caps

7 USE
BONDS CORNER RD

72" 72"

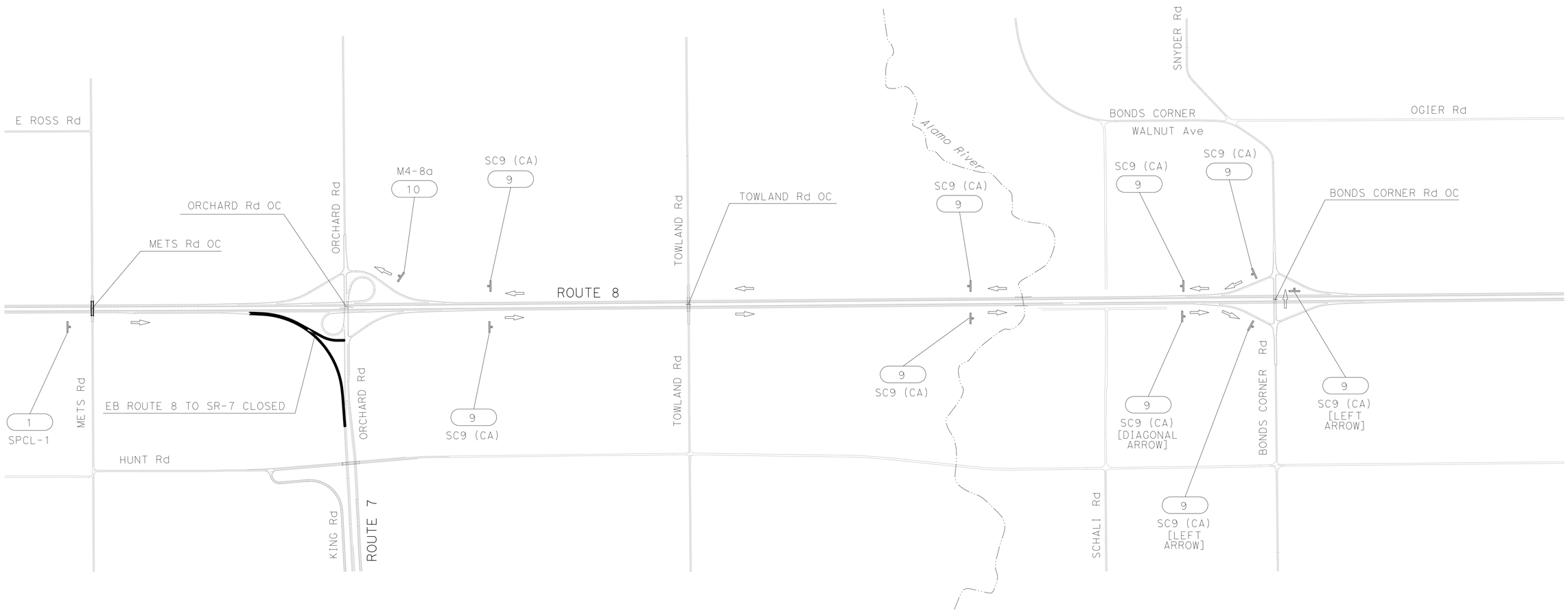

STAGE 2

EB ROUTE 8 TO ROUTE 7 OFF-RAMP DETOUR

APPROVED FOR TRAFFIC HANDLING WORK ONLY

TRAFFIC HANDLING PLAN

NO SCALE

TH-1

STATE OF CALIFORNIA - DEPARTMENT OF TRANSPORTATION

Caltrans

TRADE CORRIDOR IMPROVEMENT FUND

FUNCTIONAL SUPERVISOR: NICOLA BERNARD

CALCULATED-DESIGNED BY: MICHAEL OREIRO

CHECKED BY: JOHN HANSON

REVISED BY

DATE REVISED

LAST REVISION 04-20-15

DATE PLOTTED => 10-AUG-2015
TIME PLOTTED => 15:10

Dist	COUNTY	ROUTE	POST MILES TOTAL PROJECT	SHEET No.	TOTAL SHEETS
11	Imp	8	R45.5/R55.0	110	211

REGISTERED CIVIL ENGINEER 04-28-15 DATE

08-03-15
PLANS APPROVAL DATE

REGISTERED PROFESSIONAL ENGINEER MICHAEL O. OREIRO No. 83247 Exp. 03-31-17 CIVIL STATE OF CALIFORNIA

THE STATE OF CALIFORNIA OR ITS OFFICERS OR AGENTS SHALL NOT BE RESPONSIBLE FOR THE ACCURACY OR COMPLETENESS OF SCANNED COPIES OF THIS PLAN SHEET.

NOTES:

1. EXACT LOCATION OF CONSTRUCTION AREA SIGNS WILL BE DETERMINED BY THE ENGINEER.

SIGN #2

SPCL-2 8" Caps

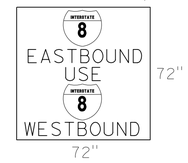

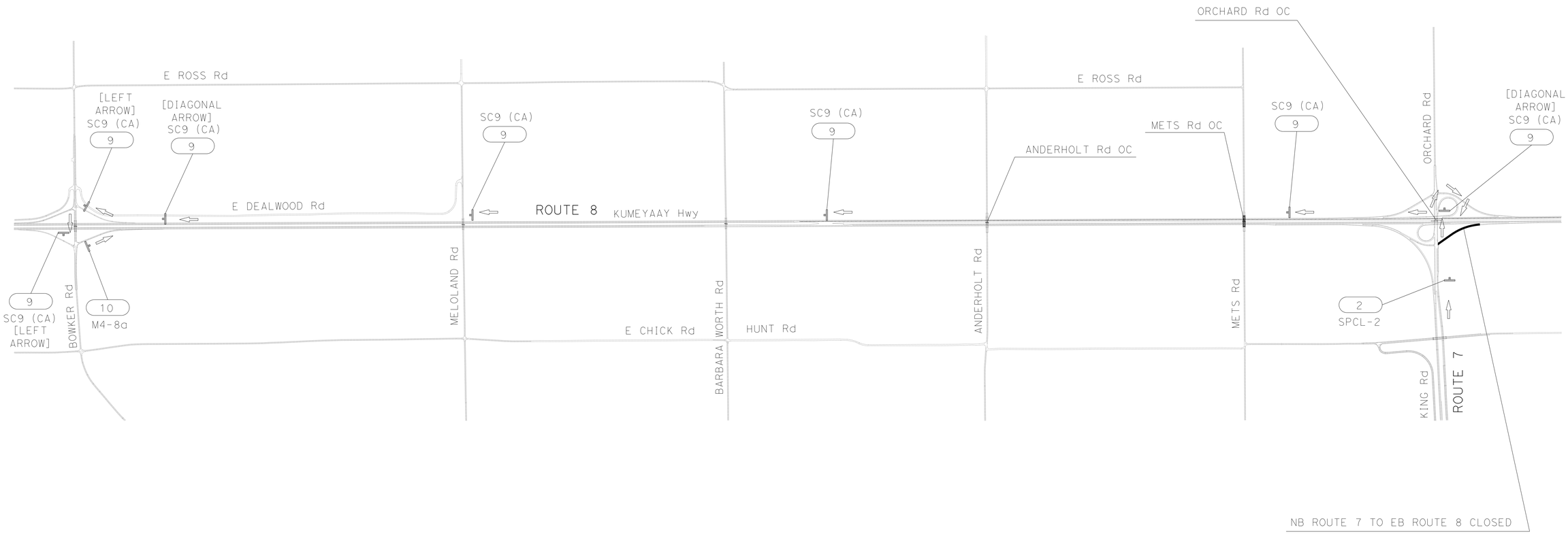

STAGE 2

NB ROUTE 7 TO EB ROUTE 8 ON-RAMP DETOUR

APPROVED FOR TRAFFIC HANDLING WORK ONLY

TRAFFIC HANDLING PLAN

NO SCALE

TH-2

REVISED BY	DATE REVISED

CALCULATED-DESIGNED BY	CHECKED BY
MICHAEL OREIRO	JOHN HANSON

FUNCTIONAL SUPERVISOR: NICOLA BERNARD

STATE OF CALIFORNIA - DEPARTMENT OF TRANSPORTATION

Caltrans®

TRADE CORRIDOR IMPROVEMENT FUND

LAST REVISION 04-20-15 | DATE PLOTTED => 10-AUG-2015 | TIME PLOTTED => 15:10

Dist	COUNTY	ROUTE	POST MILES TOTAL PROJECT	SHEET No.	TOTAL SHEETS
11	Imp	8	R45.5/R55.0	111	211

REGISTERED CIVIL ENGINEER 04-28-15 DATE

08-03-15
PLANS APPROVAL DATE

REGISTERED PROFESSIONAL ENGINEER MICHAEL O. OREIRO No. 83247 Exp. 03-31-17 CIVIL STATE OF CALIFORNIA

THE STATE OF CALIFORNIA OR ITS OFFICERS OR AGENTS SHALL NOT BE RESPONSIBLE FOR THE ACCURACY OR COMPLETENESS OF SCANNED COPIES OF THIS PLAN SHEET.

NOTES:

1. EXACT LOCATION OF CONSTRUCTION AREA SIGNS WILL BE DETERMINED BY THE ENGINEER.

SIGN #2

SPCL-2 8" Caps

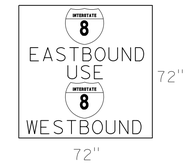

STAGE 2

SB ROUTE 7 TO EB ROUTE 8 ON-RAMP DETOUR

APPROVED FOR TRAFFIC HANDLING WORK ONLY

TRAFFIC HANDLING PLAN

NO SCALE

TH-3

STATE OF CALIFORNIA - DEPARTMENT OF TRANSPORTATION

Caltrans

TRADE CORRIDOR IMPROVEMENT FUND

FUNCTIONAL SUPERVISOR: NICOLA BERNARD

CALCULATED-DESIGNED BY: MICHAEL OREIRO

CHECKED BY: JOHN HANSON

REVISED BY

DATE REVISED

LAST REVISION 04-20-15

DATE PLOTTED => 10-AUG-2015
TIME PLOTTED => 15:10

Dist	COUNTY	ROUTE	POST MILES TOTAL PROJECT	SHEET No.	TOTAL SHEETS
11	Imp	8	R45.5/R55.0	112	211

REGISTERED CIVIL ENGINEER 04-28-15 DATE

08-03-15
PLANS APPROVAL DATE

REGISTERED PROFESSIONAL ENGINEER MICHAEL O. OREIRO No. 83247 Exp. 03-31-17 CIVIL STATE OF CALIFORNIA

THE STATE OF CALIFORNIA OR ITS OFFICERS OR AGENTS SHALL NOT BE RESPONSIBLE FOR THE ACCURACY OR COMPLETENESS OF SCANNED COPIES OF THIS PLAN SHEET.

NOTES:

1. EXACT LOCATION OF CONSTRUCTION AREA SIGNS WILL BE DETERMINED BY THE ENGINEER.

SIGN #3

SPCL-3 8" Caps

115 USE
BONDS CORNER RD

72"

72"

STAGE 2

EB ROUTE 8 TO ROUTE 115 OFF RAMP DETOUR

APPROVED FOR TRAFFIC HANDLING WORK ONLY

TRAFFIC HANDLING PLAN

NO SCALE

TH-4

REVISED BY	DATE REVISED
MICHAEL OREIRO	JOHN HANSON
CALCULATED-DESIGNED BY	CHECKED BY
FUNCTIONAL SUPERVISOR	NICOLA BERNARD

STATE OF CALIFORNIA - DEPARTMENT OF TRANSPORTATION

Caltrans®

TRADE CORRIDOR IMPROVEMENT FUND

LAST REVISION 04-20-15 DATE PLOTTED => 10-AUG-2015 TIME PLOTTED => 15:10

Dist	COUNTY	ROUTE	POST MILES TOTAL PROJECT	SHEET No.	TOTAL SHEETS
11	Imp	8	R45.5/R55.0	113	211

REGISTERED CIVIL ENGINEER 04-28-15 DATE

08-03-15
PLANS APPROVAL DATE

REGISTERED PROFESSIONAL ENGINEER MICHAEL O. OREIRO No. 83247 Exp. 03-31-17 CIVIL STATE OF CALIFORNIA

THE STATE OF CALIFORNIA OR ITS OFFICERS OR AGENTS SHALL NOT BE RESPONSIBLE FOR THE ACCURACY OR COMPLETENESS OF SCANNED COPIES OF THIS PLAN SHEET.

NOTES:

1. EXACT LOCATION OF CONSTRUCTION AREA SIGNS WILL BE DETERMINED BY THE ENGINEER.

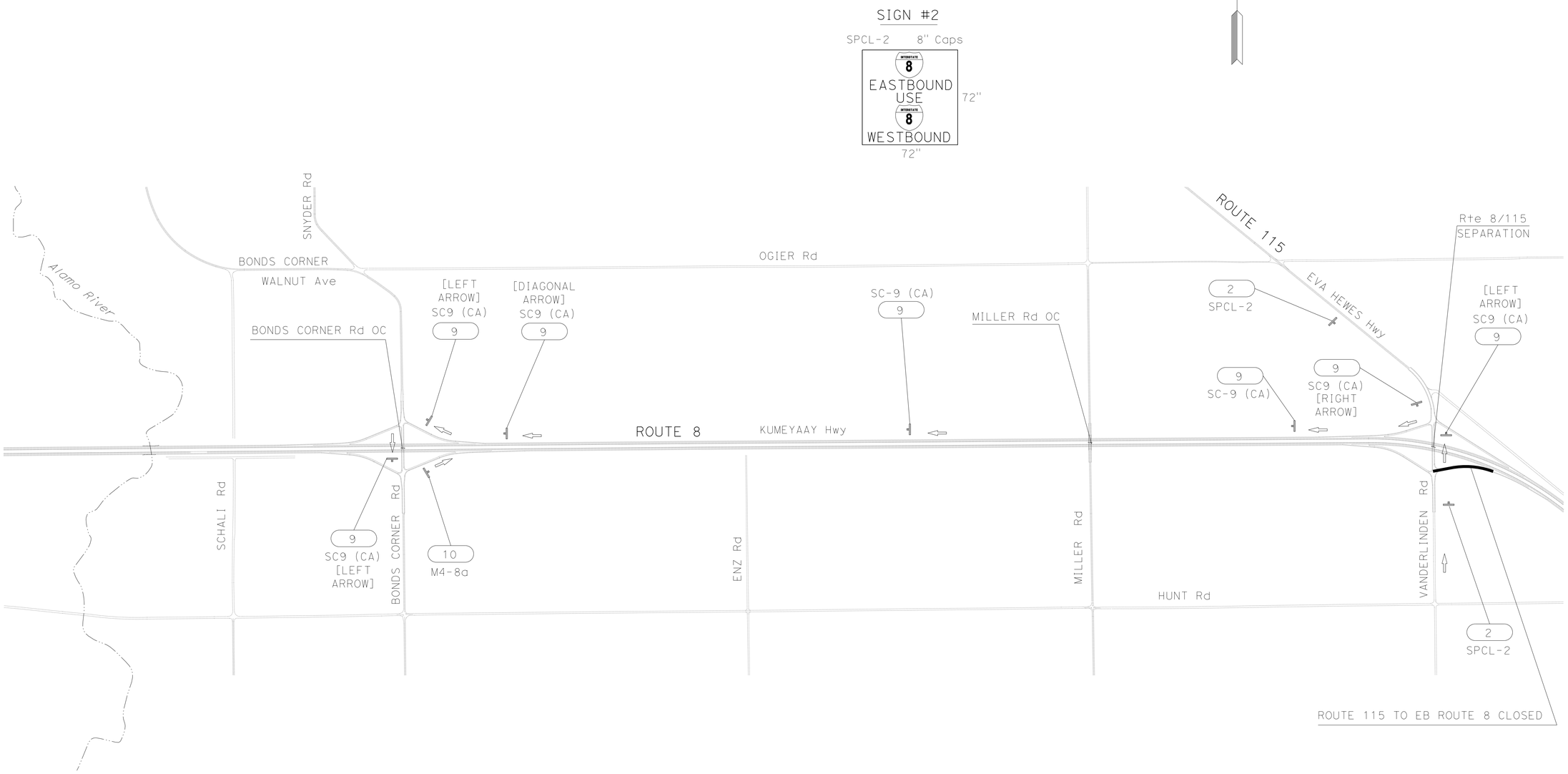

STAGE 2

ROUTE 115 TO EB ROUTE 8 ON RAMP DETOUR

APPROVED FOR TRAFFIC HANDLING WORK ONLY

TRAFFIC HANDLING PLAN

NO SCALE

TH-5

STATE OF CALIFORNIA - DEPARTMENT OF TRANSPORTATION
Caltrans
TRADE CORRIDOR IMPROVEMENT FUND

FUNCTIONAL SUPERVISOR: NICOLA BERNARD
CALCULATED-DESIGNED BY: MICHAEL OREIRO
CHECKED BY: JOHN HANSON
REVISED BY
DATE REVISED

LAST REVISION 04-20-15
DATE PLOTTED => 10-AUG-2015
TIME PLOTTED => 15:10

Dist	COUNTY	ROUTE	POST MILES TOTAL PROJECT	SHEET No.	TOTAL SHEETS
11	Imp	8	R45.5/R55.0	114	211

REGISTERED CIVIL ENGINEER 04-28-15 DATE

08-03-15
PLANS APPROVAL DATE

REGISTERED PROFESSIONAL ENGINEER MICHAEL O. OREIRO No. 83247 Exp. 03-31-17 CIVIL STATE OF CALIFORNIA

THE STATE OF CALIFORNIA OR ITS OFFICERS OR AGENTS SHALL NOT BE RESPONSIBLE FOR THE ACCURACY OR COMPLETENESS OF SCANNED COPIES OF THIS PLAN SHEET.

NOTES:

1. EXACT LOCATION OF CONSTRUCTION AREA SIGNS WILL BE DETERMINED BY THE ENGINEER.

SIGN #4

SPCL-4 8" Caps

BONDS CORNER RD
USE 115

72" 72"

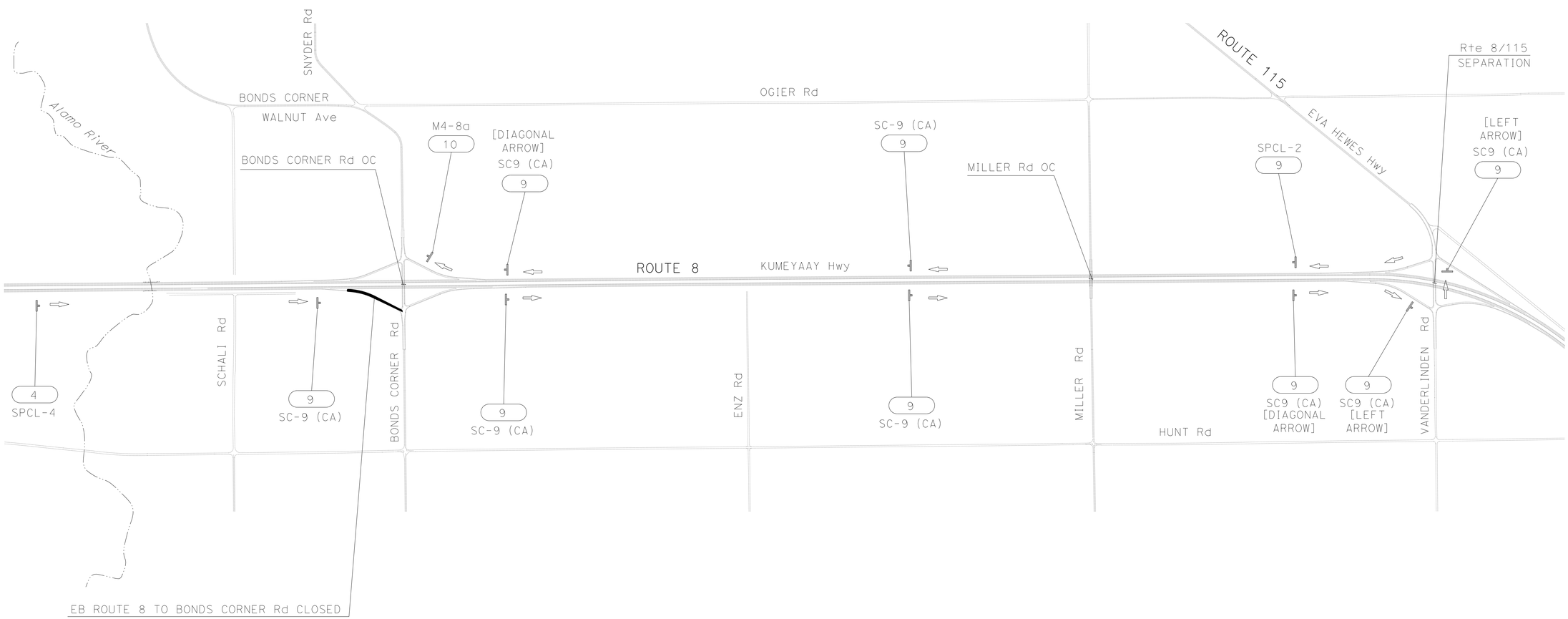

STAGE 3

EB ROUTE 8 TO BONDS CORNER Rd OFF RAMP DETOUR

APPROVED FOR TRAFFIC HANDLING WORK ONLY

TRAFFIC HANDLING PLAN

NO SCALE

TH-6

STATE OF CALIFORNIA - DEPARTMENT OF TRANSPORTATION

Caltrans

TRADE CORRIDOR IMPROVEMENT FUND

FUNCTIONAL SUPERVISOR: NICOLA BERNARD

CALCULATED-DESIGNED BY: MICHAEL OREIRO

CHECKED BY: JOHN HANSON

REVISED BY

DATE REVISED

LAST REVISION 04-20-15

DATE PLOTTED => 10-AUG-2015
TIME PLOTTED => 15:10

Dist	COUNTY	ROUTE	POST MILES TOTAL PROJECT	SHEET No.	TOTAL SHEETS
11	Imp	8	R45.5/R55.0	115	211

REGISTERED CIVIL ENGINEER 04-28-15 DATE

08-03-15
PLANS APPROVAL DATE

REGISTERED PROFESSIONAL ENGINEER MICHAEL O. OREIRO No. 83247 Exp. 03-31-17 CIVIL STATE OF CALIFORNIA

THE STATE OF CALIFORNIA OR ITS OFFICERS OR AGENTS SHALL NOT BE RESPONSIBLE FOR THE ACCURACY OR COMPLETENESS OF SCANNED COPIES OF THIS PLAN SHEET.

NOTES:

1. EXACT LOCATION OF CONSTRUCTION AREA SIGNS WILL BE DETERMINED BY THE ENGINEER.

SIGN #2

SPCL-2 8" Caps

INTERSTATE 8
EASTBOUND USE
INTERSTATE 8
WESTBOUND

72" 72"

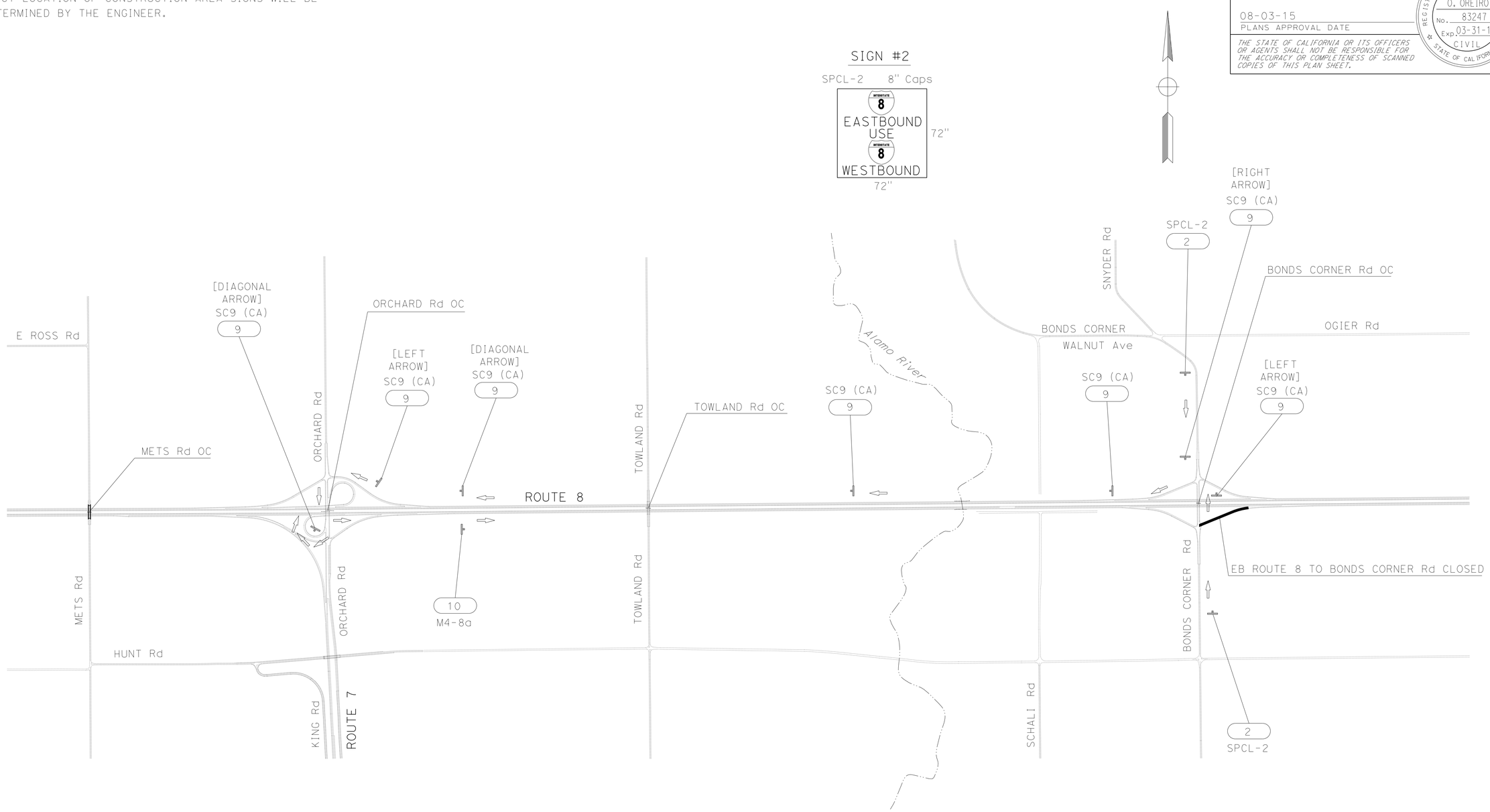

STAGE 3

EB ROUTE 8 TO BONDS CORNER Rd ON-RAMP DETOUR

APPROVED FOR TRAFFIC HANDLING WORK ONLY

TRAFFIC HANDLING PLAN

NO SCALE

TH-7

STATE OF CALIFORNIA - DEPARTMENT OF TRANSPORTATION
Caltrans®
TRADE CORRIDOR IMPROVEMENT FUND

FUNCTIONAL SUPERVISOR: NICOLA BERNARD
CALCULATED-DESIGNED BY: MICHAEL OREIRO
CHECKED BY: JOHN HANSON
REVISED BY
DATE REVISED

LAST REVISION 04-20-15
DATE PLOTTED => 10-AUG-2015
TIME PLOTTED => 15:10

Dist	COUNTY	ROUTE	POST MILES TOTAL PROJECT	SHEET No.	TOTAL SHEETS
11	Imp	8	R45.5/R55.0	116	211

REGISTERED CIVIL ENGINEER 04-28-15 DATE

08-03-15
PLANS APPROVAL DATE

REGISTERED PROFESSIONAL ENGINEER MICHAEL O. OREIRO No. 83247 Exp. 03-31-17 CIVIL STATE OF CALIFORNIA

THE STATE OF CALIFORNIA OR ITS OFFICERS OR AGENTS SHALL NOT BE RESPONSIBLE FOR THE ACCURACY OR COMPLETENESS OF SCANNED COPIES OF THIS PLAN SHEET.

NOTES:

1. EXACT LOCATION OF CONSTRUCTION AREA SIGNS WILL BE DETERMINED BY THE ENGINEER.

SIGN #5

SPCL-5 8" Caps

7 USE
BOWKER RD

72" 72"

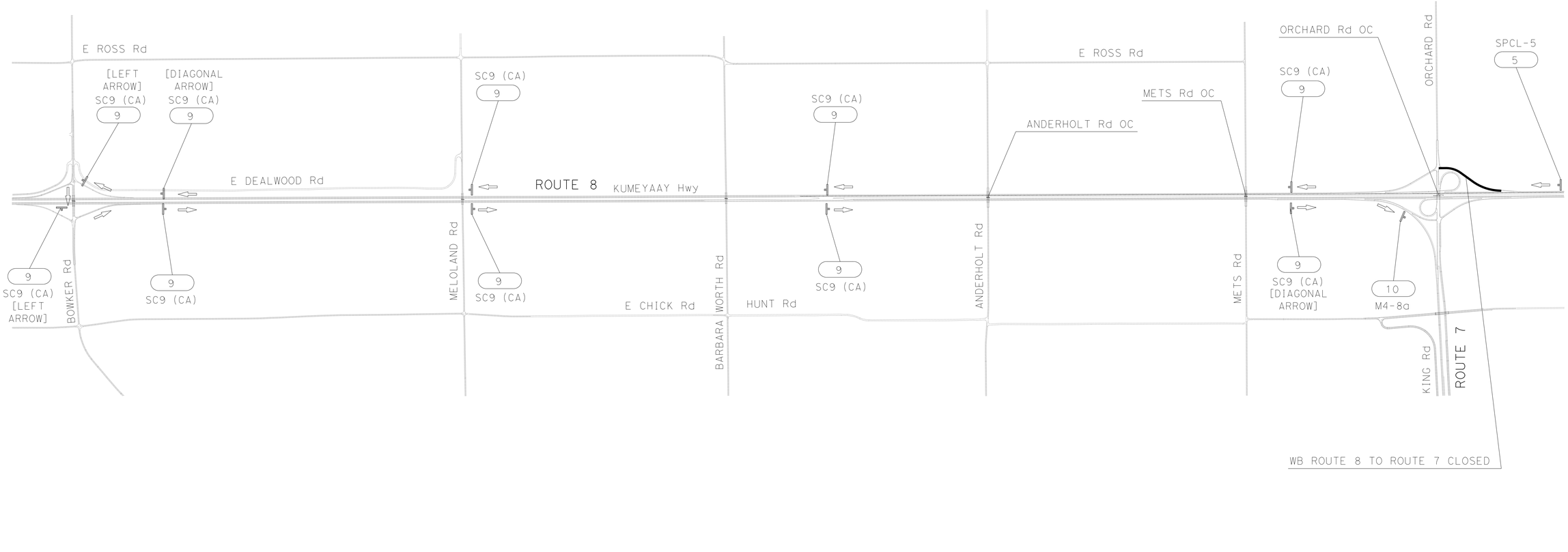

STAGE 4

WB ROUTE 8 TO ROUTE 7 OFF-RAMP DETOUR

APPROVED FOR TRAFFIC HANDLING WORK ONLY

TRAFFIC HANDLING PLAN

NO SCALE

TH-8

STATE OF CALIFORNIA - DEPARTMENT OF TRANSPORTATION

Caltrans

TRADE CORRIDOR IMPROVEMENT FUND

FUNCTIONAL SUPERVISOR: NICOLA BERNARD

CALCULATED-DESIGNED BY: MICHAEL OREIRO

CHECKED BY: JOHN HANSON

REVISED BY

DATE REVISED

LAST REVISION 04-20-15

DATE PLOTTED => 10-AUG-2015
TIME PLOTTED => 15:10

Dist	COUNTY	ROUTE	POST MILES TOTAL PROJECT	SHEET No.	TOTAL SHEETS
11	Imp	8	R45.5/R55.0	117	211

REGISTERED CIVIL ENGINEER 04-28-15 DATE

08-03-15
PLANS APPROVAL DATE

REGISTERED PROFESSIONAL ENGINEER MICHAEL O. OREIRO No. 83247 Exp. 03-31-17 CIVIL STATE OF CALIFORNIA

THE STATE OF CALIFORNIA OR ITS OFFICERS OR AGENTS SHALL NOT BE RESPONSIBLE FOR THE ACCURACY OR COMPLETENESS OF SCANNED COPIES OF THIS PLAN SHEET.

NOTES:

1. EXACT LOCATION OF CONSTRUCTION AREA SIGNS WILL BE DETERMINED BY THE ENGINEER.

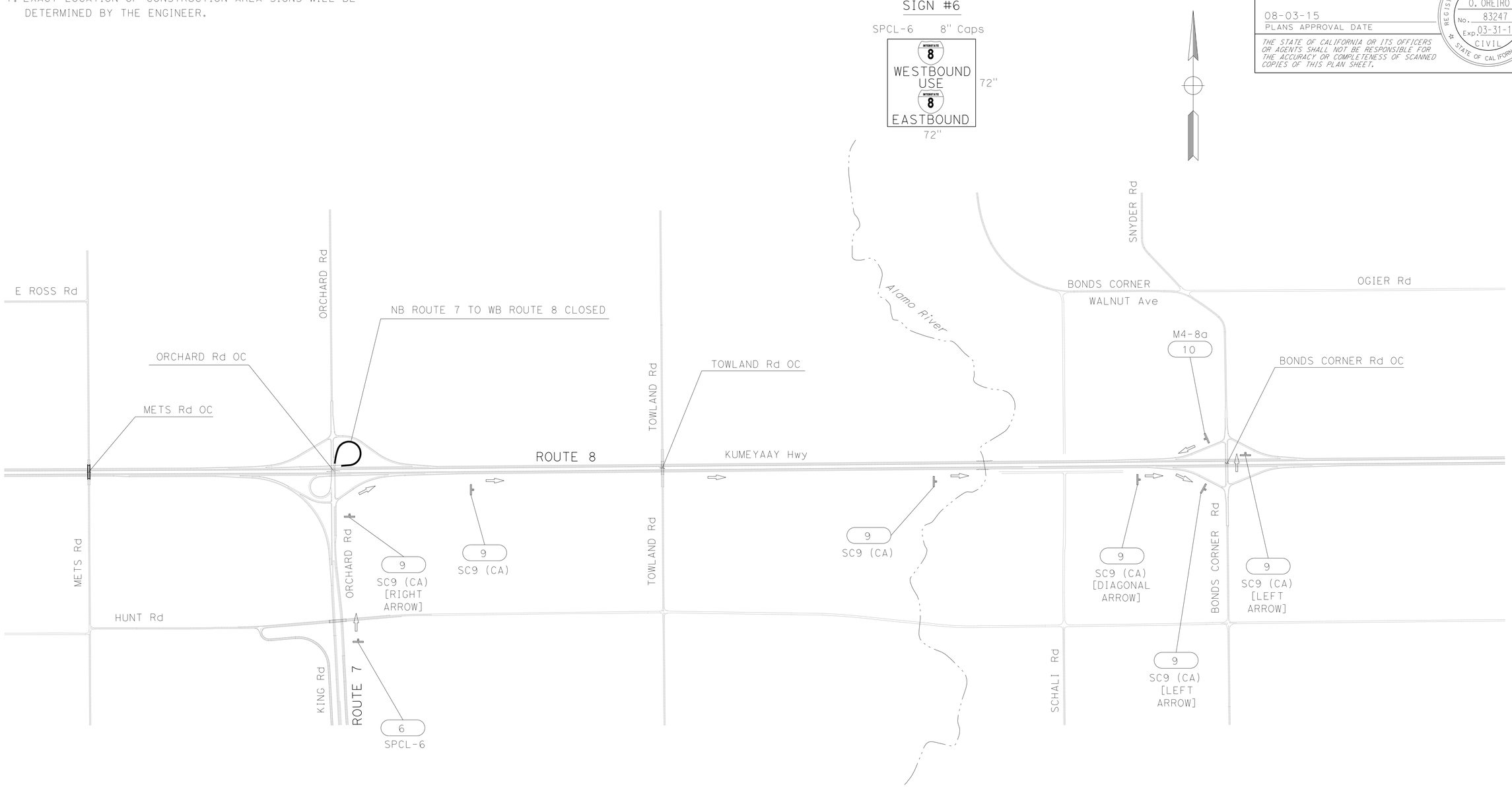

STAGE 4

NB ROUTE 7 TO WB ROUTE 8 ON-RAMP DETOUR

APPROVED FOR TRAFFIC HANDLING WORK ONLY

TRAFFIC HANDLING PLAN

NO SCALE

TH-9

STATE OF CALIFORNIA - DEPARTMENT OF TRANSPORTATION

Caltrans®

TRADE CORRIDOR IMPROVEMENT FUND

FUNCTIONAL SUPERVISOR: NICOLA BERNARD

CALCULATED-DESIGNED BY: MICHAEL OREIRO

CHECKED BY: JOHN HANSON

REVISED BY

DATE REVISED

LAST REVISION 04-20-15

DATE PLOTTED => 10-AUG-2015

TIME PLOTTED => 15:10

Dist	COUNTY	ROUTE	POST MILES TOTAL PROJECT	SHEET No.	TOTAL SHEETS
11	Imp	8	R45.5/R55.0	118	211

REGISTERED CIVIL ENGINEER 04-28-15 DATE

08-03-15
PLANS APPROVAL DATE

REGISTERED PROFESSIONAL ENGINEER MICHAEL O. OREIRO No. 83247 Exp. 03-31-17 CIVIL STATE OF CALIFORNIA

THE STATE OF CALIFORNIA OR ITS OFFICERS OR AGENTS SHALL NOT BE RESPONSIBLE FOR THE ACCURACY OR COMPLETENESS OF SCANNED COPIES OF THIS PLAN SHEET.

NOTES:

1. EXACT LOCATION OF CONSTRUCTION AREA SIGNS WILL BE DETERMINED BY THE ENGINEER.

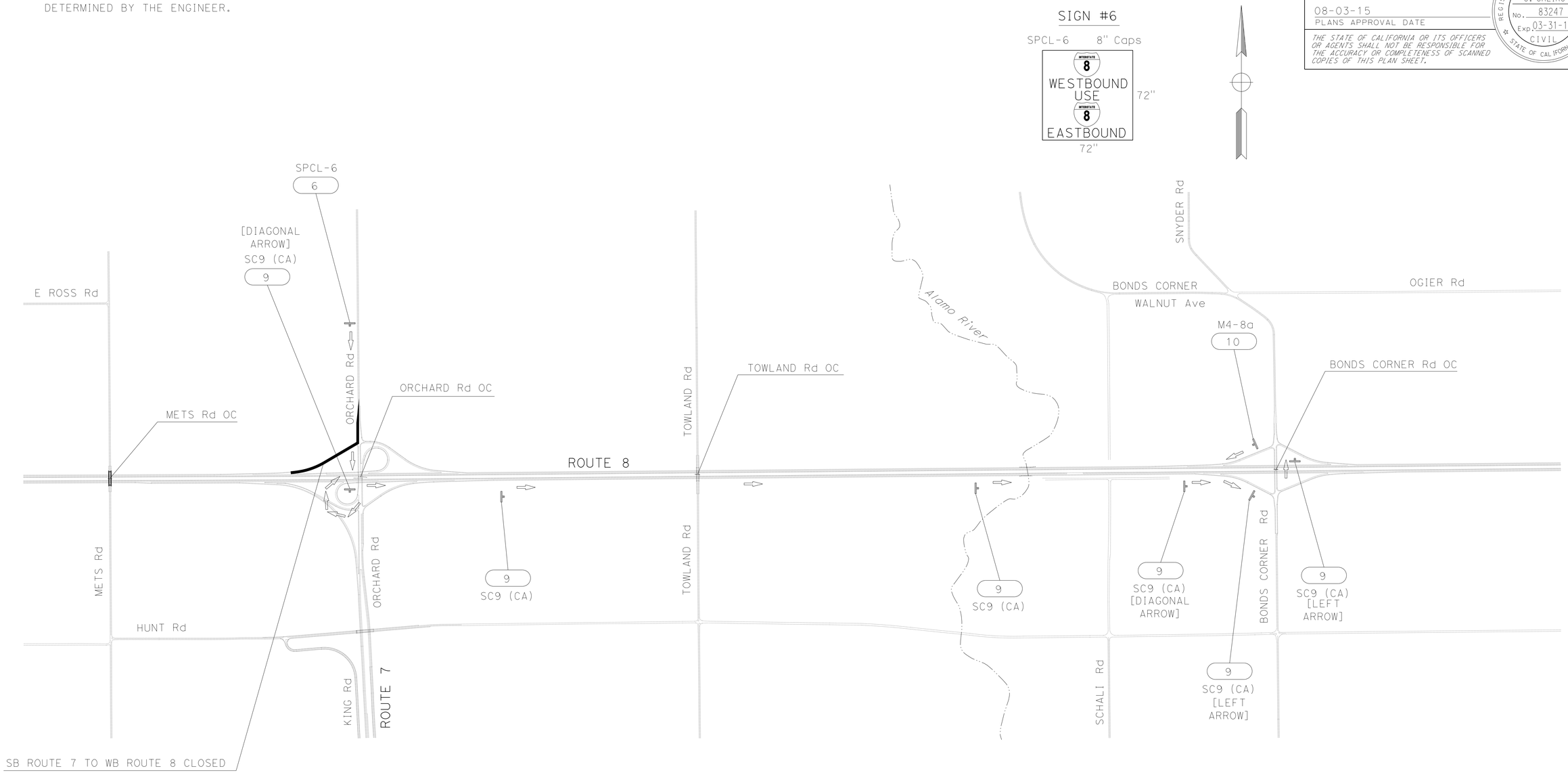

STAGE 4

SB ORCHARD Rd TO WB ROUTE 8 ON-RAMP DETOUR

APPROVED FOR TRAFFIC HANDLING WORK ONLY

TRAFFIC HANDLING PLAN

NO SCALE

TH-10

STATE OF CALIFORNIA - DEPARTMENT OF TRANSPORTATION

Caltrans

TRADE CORRIDOR IMPROVEMENT FUND

FUNCTIONAL SUPERVISOR: NICOLA BERNARD

CALCULATED-DESIGNED BY: MICHAEL OREIRO

CHECKED BY: JOHN HANSON

REVISED BY

DATE REVISED

LAST REVISION 04-20-15

DATE PLOTTED => 10-AUG-2015

TIME PLOTTED => 15:10

Dist	COUNTY	ROUTE	POST MILES TOTAL PROJECT	SHEET No.	TOTAL SHEETS
11	Imp	8	R45.5/R55.0	119	211

REGISTERED CIVIL ENGINEER 04-28-15 DATE

08-03-15
PLANS APPROVAL DATE

REGISTERED PROFESSIONAL ENGINEER MICHAEL O. OREIRO No. 83247 Exp. 03-31-17 CIVIL STATE OF CALIFORNIA

THE STATE OF CALIFORNIA OR ITS OFFICERS OR AGENTS SHALL NOT BE RESPONSIBLE FOR THE ACCURACY OR COMPLETENESS OF SCANNED COPIES OF THIS PLAN SHEET.

NOTES:

1. EXACT LOCATION OF CONSTRUCTION AREA SIGNS WILL BE DETERMINED BY THE ENGINEER.

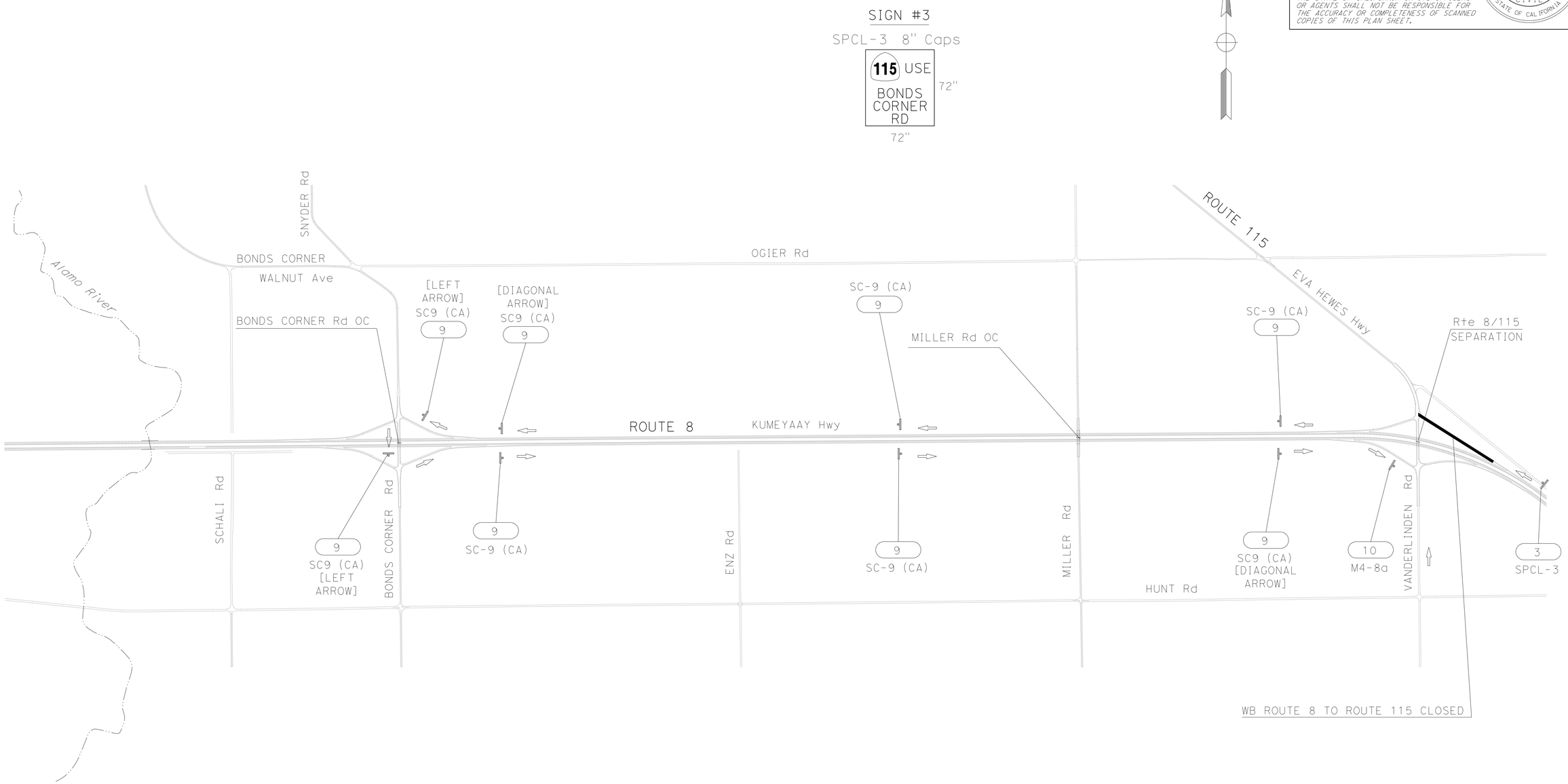

STAGE 4

WB ROUTE 8 TO ROUTE 115 OFF-RAMP DETOUR

APPROVED FOR TRAFFIC HANDLING WORK ONLY

TRAFFIC HANDLING PLAN

NO SCALE

TH-11

STATE OF CALIFORNIA - DEPARTMENT OF TRANSPORTATION

Caltrans

TRADE CORRIDOR IMPROVEMENT FUND

FUNCTIONAL SUPERVISOR: NICOLA BERNARD

CALCULATED-DESIGNED BY: MICHAEL OREIRO

CHECKED BY: JOHN HANSON

REVISED BY

DATE REVISED

LAST REVISION 04-20-15

DATE PLOTTED => 10-AUG-2015

TIME PLOTTED => 15:10

Dist	COUNTY	ROUTE	POST MILES TOTAL PROJECT	SHEET No.	TOTAL SHEETS
11	Imp	8	R45.5/R55.0	120	211

REGISTERED CIVIL ENGINEER 04-28-15 DATE

08-03-15
PLANS APPROVAL DATE

REGISTERED PROFESSIONAL ENGINEER MICHAEL O. OREIRO No. 83247 Exp. 03-31-17 CIVIL STATE OF CALIFORNIA

THE STATE OF CALIFORNIA OR ITS OFFICERS OR AGENTS SHALL NOT BE RESPONSIBLE FOR THE ACCURACY OR COMPLETENESS OF SCANNED COPIES OF THIS PLAN SHEET.

NOTES:

1. EXACT LOCATION OF CONSTRUCTION AREA SIGNS WILL BE DETERMINED BY THE ENGINEER.

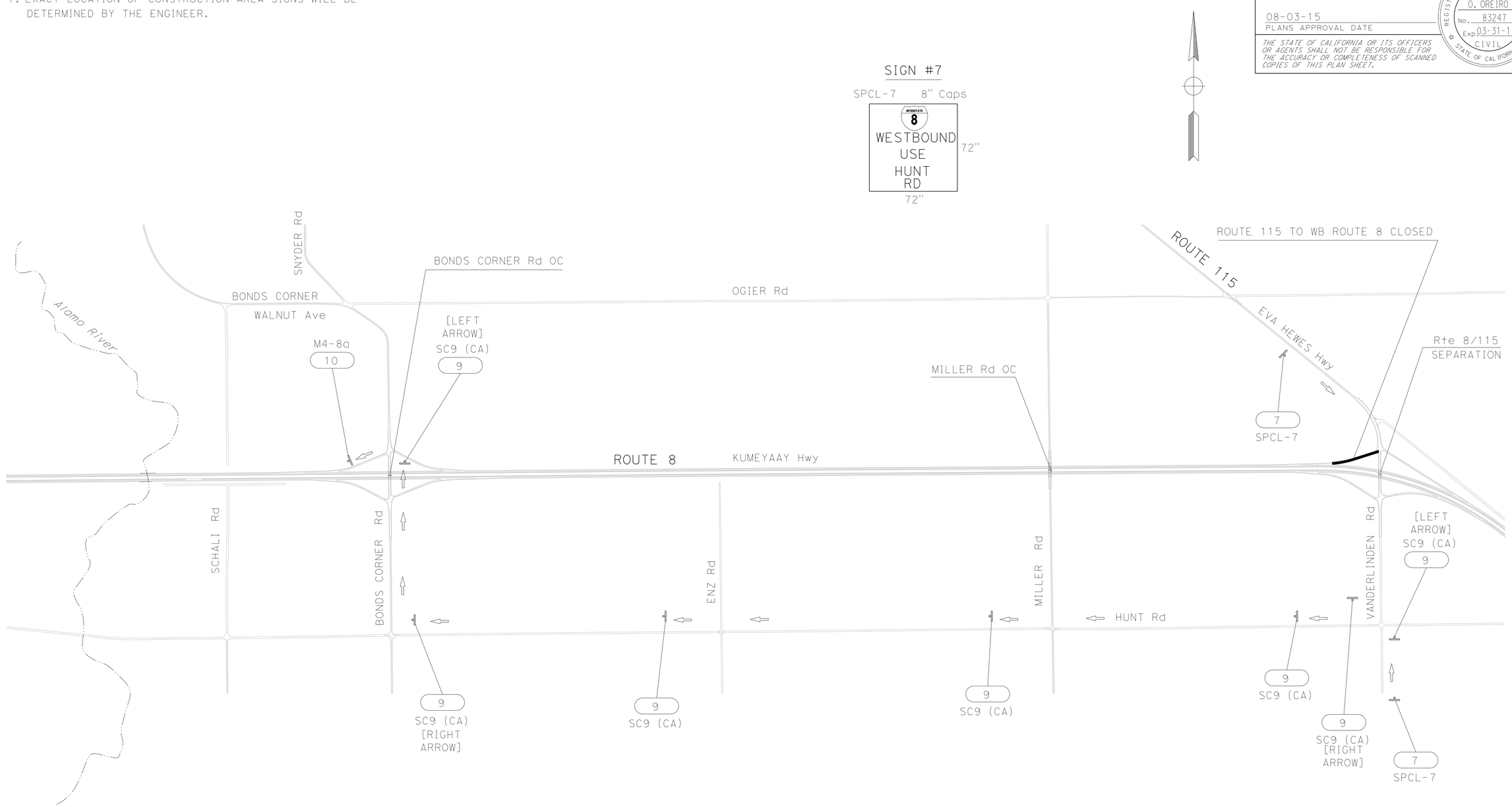

STAGE 4

ROUTE 115 TO WB ROUTE 8 ON-RAMP DETOUR

APPROVED FOR TRAFFIC HANDLING WORK ONLY

TRAFFIC HANDLING PLAN

NO SCALE

TH-12

STATE OF CALIFORNIA - DEPARTMENT OF TRANSPORTATION

Caltrans®

TRADE CORRIDOR IMPROVEMENT FUND

FUNCTIONAL SUPERVISOR: NICOLA BERNARD

CALCULATED-DESIGNED BY: MICHAEL OREIRO

CHECKED BY: JOHN HANSON

REVISED BY

DATE REVISED

LAST REVISION 04-20-15

DATE PLOTTED => 10-AUG-2015
TIME PLOTTED => 15:10

Dist	COUNTY	ROUTE	POST MILES TOTAL PROJECT	SHEET No.	TOTAL SHEETS
11	Imp	8	R45.5/R55.0	121	211

REGISTERED CIVIL ENGINEER 04-28-15 DATE

08-03-15
PLANS APPROVAL DATE

REGISTERED PROFESSIONAL ENGINEER MICHAEL O. ORETRO No. 83247 Exp. 03-31-17 CIVIL STATE OF CALIFORNIA

THE STATE OF CALIFORNIA OR ITS OFFICERS OR AGENTS SHALL NOT BE RESPONSIBLE FOR THE ACCURACY OR COMPLETENESS OF SCANNED COPIES OF THIS PLAN SHEET.

NOTES:

1. EXACT LOCATION OF CONSTRUCTION AREA SIGNS WILL BE DETERMINED BY THE ENGINEER.

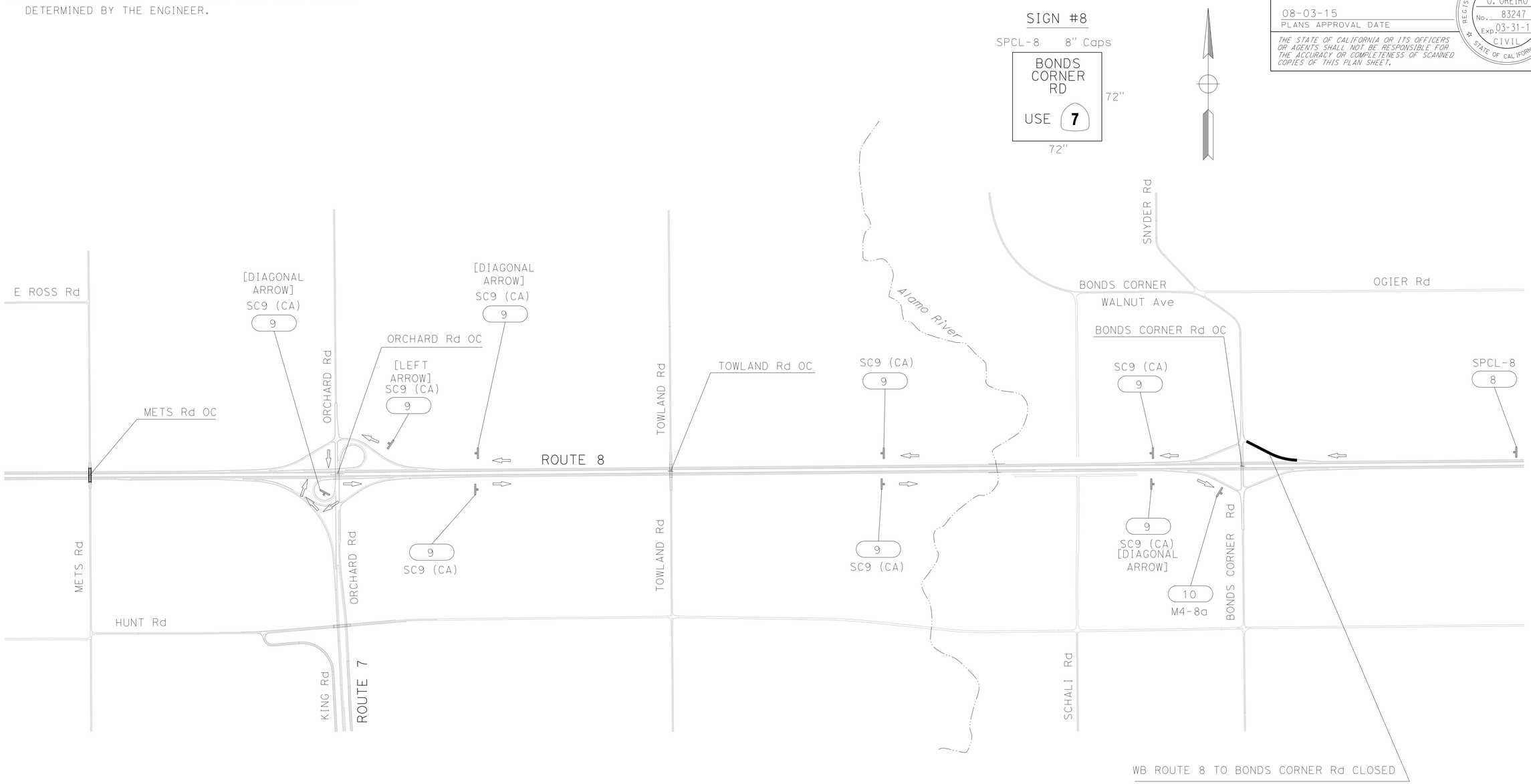

STAGE 5

WB ROUTE 8 TO BONDS CORNER RD OFF-RAMP DETOUR

APPROVED FOR TRAFFIC HANDLING WORK ONLY

TRAFFIC HANDLING PLAN

NO SCALE

TH-13

STATE OF CALIFORNIA - DEPARTMENT OF TRANSPORTATION
Caltrans
TRADE CORRIDOR IMPROVEMENT FUND

FUNCTIONAL SUPERVISOR: NICOLA BERNARD
CALCULATED-DESIGNED BY: MICHAEL ORETRO
CHECKED BY: JOHN HANSON
REVISED BY
DATE REVISED

LAST REVISION 04-20-15
DATE PLOTTED => 10-AUG-2015
TIME PLOTTED => 15:10

Dist	COUNTY	ROUTE	POST MILES TOTAL PROJECT	SHEET No.	TOTAL SHEETS
11	Imp	8	R45.5/R55.0	122	211

REGISTERED CIVIL ENGINEER 04-28-15 DATE

08-03-15
PLANS APPROVAL DATE

REGISTERED PROFESSIONAL ENGINEER MICHAEL O. OREIRO No. 83247 Exp. 03-31-17 CIVIL STATE OF CALIFORNIA

THE STATE OF CALIFORNIA OR ITS OFFICERS OR AGENTS SHALL NOT BE RESPONSIBLE FOR THE ACCURACY OR COMPLETENESS OF SCANNED COPIES OF THIS PLAN SHEET.

NOTES:

1. EXACT LOCATION OF CONSTRUCTION AREA SIGNS WILL BE DETERMINED BY THE ENGINEER.

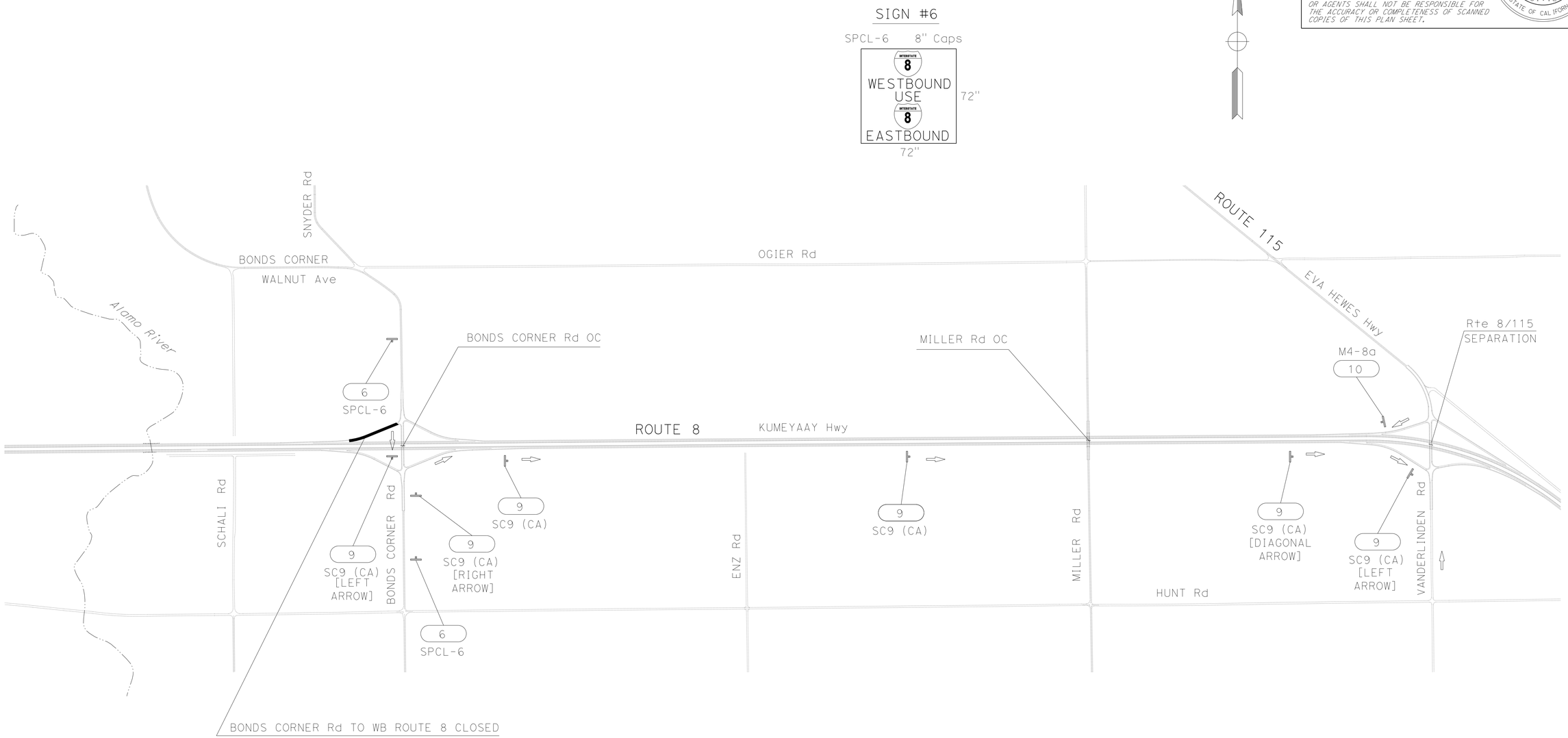

STAGE 5

BONDS CORNER Rd TO WB ROUTE 8 ON-RAMP DETOUR

APPROVED FOR TRAFFIC HANDLING WORK ONLY

TRAFFIC HANDLING PLAN

NO SCALE

TH-14

STATE OF CALIFORNIA - DEPARTMENT OF TRANSPORTATION

Caltrans®

TRADE CORRIDOR IMPROVEMENT FUND

FUNCTIONAL SUPERVISOR: NICOLA BERNARD

CALCULATED-DESIGNED BY: MICHAEL OREIRO

CHECKED BY: JOHN HANSON

REVISED BY

DATE REVISED

LAST REVISION 04-20-15

DATE PLOTTED => 10-AUG-2015

TIME PLOTTED => 15:10

Dist	COUNTY	ROUTE	POST MILES TOTAL PROJECT	SHEET No.	TOTAL SHEETS
11	Imp	8	R45.5/R55.0	123	211

REGISTERED CIVIL ENGINEER 04-28-15 DATE

08-03-15
PLANS APPROVAL DATE

REGISTERED PROFESSIONAL ENGINEER
MICHAEL O. OREIRO
No. 83247
Exp. 03-31-17
CIVIL
STATE OF CALIFORNIA

THE STATE OF CALIFORNIA OR ITS OFFICERS OR AGENTS SHALL NOT BE RESPONSIBLE FOR THE ACCURACY OR COMPLETENESS OF SCANNED COPIES OF THIS PLAN SHEET.

CONSTRUCTION AREA SIGNS

SIGN	SHEET No.	CODE	PANEL SIZE	No. OF POST AND SIZE	No. OF SIGNS
1	TH-1	SPCL-1	72" X 72"	1 - 6" X 6" (S)	1
2	TH-2, 3, 5 & 7	SPCL-2	72" X 72"	1 - 6" X 6" (S)	6
3	TH-4 & 11	SPCL-3	72" X 72"	1 - 6" X 6" (S)	2
4	TH-6	SPCL-4	72" X 72"	1 - 6" X 6" (S)	1
5	TH-8	SPCL-5	72" X 72"	1 - 6" X 6" (S)	1
6	TH-9, 10 & 14	SPCL-6	72" X 72"	1 - 6" X 6" (S)	4
7	TH-12	SPCL-7	72" X 72"	1 - 6" X 6" (S)	2
8	TH-13	SPCL-8	72" X 72"	1 - 6" X 6" (S)	1
9	TH-1 THROUGH TH-14	SC9 (CA)	36" X 36"	1 - 6" X 6" (S)	104
10	TH-1 THROUGH TH-14	M4-8a	24" X 18"	1 - 6" X 6" (S)	14
				TOTAL	136

NOTES:

1. SEE CONSTRUCTION AREA SIGN AND STAGE CONSTRUCTION QUANTITY SHEETS FOR ADDITIONAL CONSTRUCTION AREA SIGN QUANTITIES.

2. (S)STATIONARY SIGN

TRAFFIC HANDLING QUANTITIES
THQ-1

REVISED BY | DATE REVISED
MICHAEL OREIRO | JOHN HANSON
CALCULATED-DESIGNED BY | CHECKED BY
FUNCTIONAL SUPERVISOR
NICOLA BERNARD

STATE OF CALIFORNIA - DEPARTMENT OF TRANSPORTATION
Caltrans®
TRADE CORRIDOR IMPROVEMENT FUND

LAST REVISION 04-20-15 | DATE PLOTTED => 10-AUG-2015 TIME PLOTTED => 15:10

Dist	COUNTY	ROUTE	POST MILES TOTAL PROJECT	SHEET No.	TOTAL SHEETS
11	Imp	8	R45.5/R55.0	124	211

REGISTERED CIVIL ENGINEER 04-27-15 DATE

08-03-15
PLANS APPROVAL DATE

REGISTERED PROFESSIONAL ENGINEER DYLAN S. MOORE No. 74711 Exp. 12-31-15 CIVIL STATE OF CALIFORNIA

THE STATE OF CALIFORNIA OR ITS OFFICERS OR AGENTS SHALL NOT BE RESPONSIBLE FOR THE ACCURACY OR COMPLETENESS OF SCANNED COPIES OF THIS PLAN SHEET.

LEGEND

LINES

- 6" OR 8" WHITE THERMOPLASTIC STRIPE
- 4" OR 6" YELLOW THERMOPLASTIC STRIPE
- 3" BLACK PAINT STRIPE
- DIRECTION OF TRAVEL

EXIT RAMP NEUTRAL AREA (GORE) TREATMENT

DETAIL 36 (Mod)

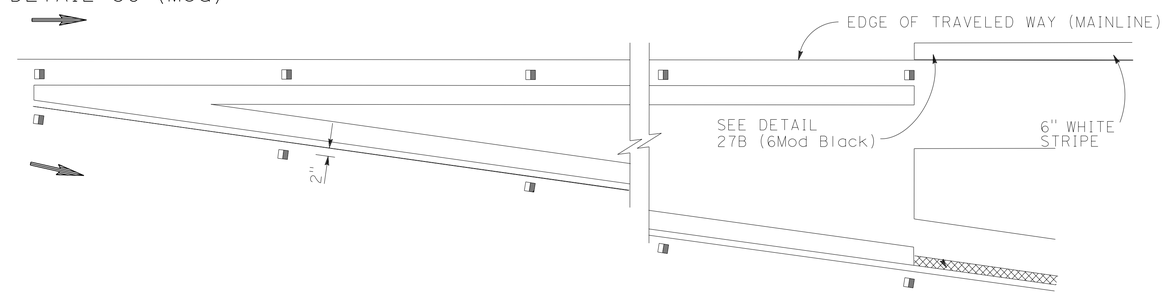

LANELINES

(MULTILANE HIGHWAYS)

DETAIL 11/13 (6Mod)

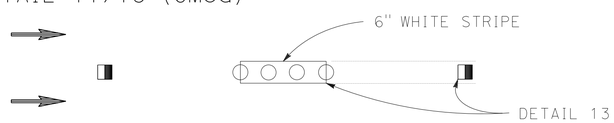

DETAIL 11/14 (6Mod)

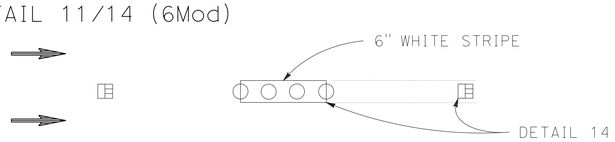

LEFT EDGELINES

(DIVIDED HIGHWAYS)

DETAIL 25 (6Mod Black)

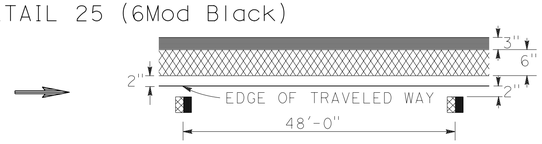

RIGHT EDGELINES

DETAIL 27B (6Mod Black)

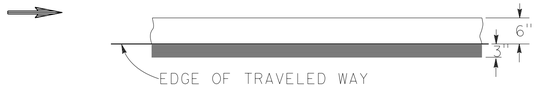

ENTRANCE RAMP NEUTRAL AREA (MERGE) TREATMENT

DETAIL 36A (Mod)

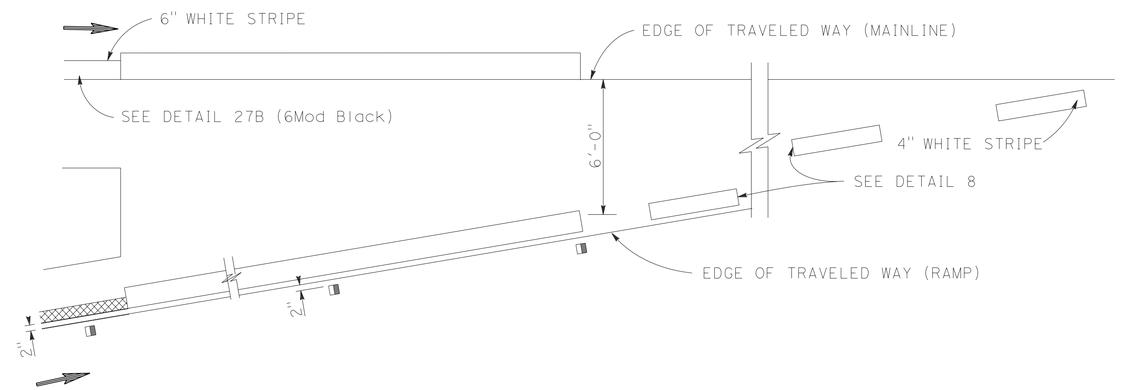

ENTRANCE RAMP NEUTRAL AREA (ACCELERATION LANE) TREATMENT

DETAIL 36B (Mod)

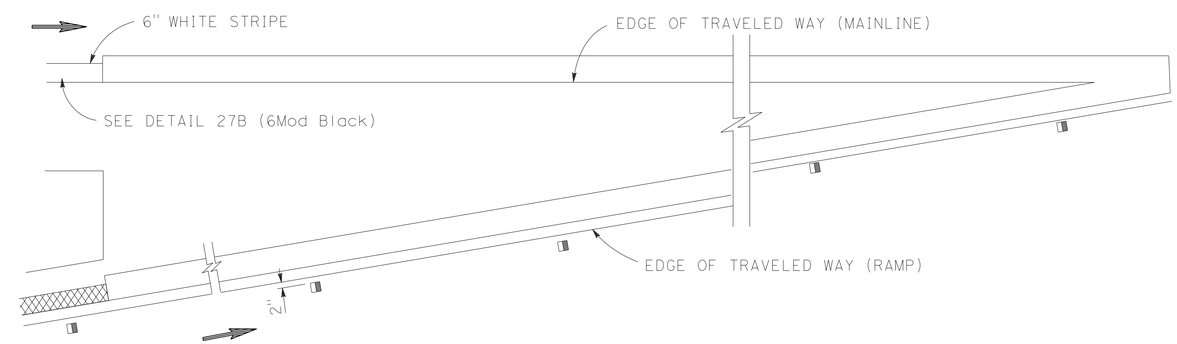

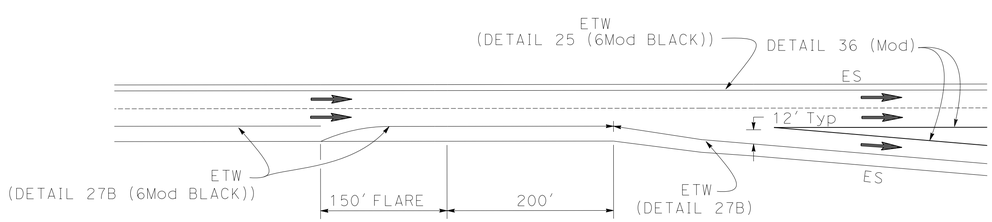

RIGHT EDGELINE FLARE DETAIL

[FOR USE ON ALL EXIT RAMPS EXCEPT WHERE LANE(S) TRAP OFF]

PAVEMENT DELINEATION DETAILS

NO SCALE

PDD-1

STATE OF CALIFORNIA - DEPARTMENT OF TRANSPORTATION

Caltrans®

TRADE CORRIDOR IMPROVEMENT FUND

FUNCTIONAL SUPERVISOR: NICOLA BERNARD

CALCULATED-DESIGNED BY: SIRAJUL RONI

CHECKED BY: JOEL SIMS

REVISED BY

DATE REVISED

LAST REVISION 04-20-15

DATE PLOTTED => 10-AUG-2015
TIME PLOTTED => 15:10

Dist	COUNTY	ROUTE	POST MILES TOTAL PROJECT	SHEET No.	TOTAL SHEETS
11	Imp	8	R45.5/R55.0	125	211

REGISTERED CIVIL ENGINEER 04-27-15 DATE

08-03-15
PLANS APPROVAL DATE

REGISTERED PROFESSIONAL ENGINEER
DYLAN S. MOORE
No. 74711
Exp. 12-31-15
CIVIL
STATE OF CALIFORNIA

THE STATE OF CALIFORNIA OR ITS OFFICERS OR AGENTS SHALL NOT BE RESPONSIBLE FOR THE ACCURACY OR COMPLETENESS OF SCANNED COPIES OF THIS PLAN SHEET.

NOTES:

1. BEGIN AT "B" 2460+81 AND CONTINUE EVERY ONE MILE THEREAFTER (9 EACH).

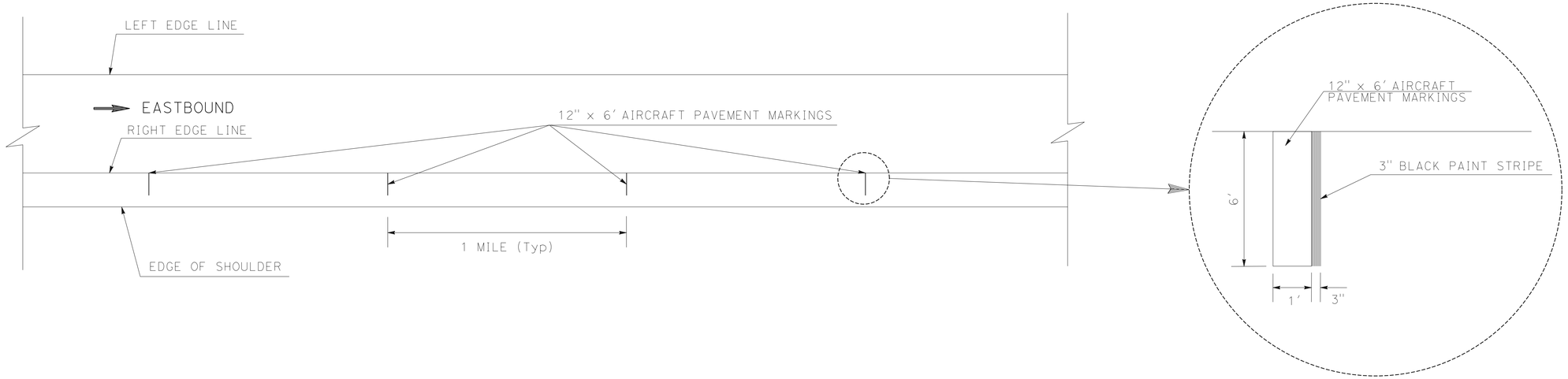

12" AIRCRAFT PAVEMENT MARKING

PAVEMENT DELINEATION DETAILS

NO SCALE

PDD-2

STATE OF CALIFORNIA - DEPARTMENT OF TRANSPORTATION
Caltrans®
TRADE CORRIDOR IMPROVEMENT FUND

FUNCTIONAL SUPERVISOR: NICOLA BERNARD
CALCULATED-DESIGNED BY: SIRAJUL RONI
CHECKED BY: JOEL SIMS
REVISED BY
DATE REVISED

LAST REVISION 04-20-15
DATE PLOTTED => 10-AUG-2015
TIME PLOTTED => 15:10

Dist	COUNTY	ROUTE	POST MILES TOTAL PROJECT	SHEET No.	TOTAL SHEETS
11	Imp	8	R45.5/R55.0	126	211

REGISTERED CIVIL ENGINEER 04-27-15 DATE

08-03-15
PLANS APPROVAL DATE

REGISTERED PROFESSIONAL ENGINEER DYLAN S. MOORE No. 74711 Exp. 12-31-15 CIVIL STATE OF CALIFORNIA

THE STATE OF CALIFORNIA OR ITS OFFICERS OR AGENTS SHALL NOT BE RESPONSIBLE FOR THE ACCURACY OR COMPLETENESS OF SCANNED COPIES OF THIS PLAN SHEET.

PAVEMENT DELINEATION QUANTITIES

DESCRIPTION	DETAIL No.	PAVEMENT MARKER SUMMARY				TRAFFIC STRIPE SUMMARY						
		NON-REFLECTIVE (EA)	RETROREFLECTIVE (EA)			THERMOPLASTIC (ENHANCED WET NIGHT VISIBILITY) (LF)						PAINT (1-COAT) (LF)
		TYPE A	TYPE C	TYPE G	TYPE H	4" (SOLID)	6" (SOLID)	8" (SOLID)	4" (BROKEN 17'-7')	6" (BROKEN 36'-12')	8" (BROKEN 12'-3')	3" BLACK
EAST BOUND ROUTE 8	11/13 (6Mod) *	4,180	72	974						50,160		
	25 (6Mod BLACK)				1,046		50,160					50,160
	27B (6Mod BLACK)						47,418					47,418
	37		8	66							1,078	
	38B			28				300				
WEST BOUND ROUTE 8	11/13 (6Mod) *	4,180	72	974						50,160		
	25 (6Mod BLACK)				1,046		50,160					50,160
	27B (6Mod BLACK)						47,886					47,886
WB OFF RAMP TO ORCHARD Rd- "WS"	25A				58	1,377						
	27B					1,647						
	36 (Mod)			26				540				
SB ORCHARD Rd TO WB ROUTE 8 - "SW"	8								329			
	25A				49	1,157						
	27B					1,765						
	36A (Mod)			13				279				
NB ORCHARD Rd TO WB ROUTE 8 - "NW"	8								354			
	25A				50	1,168						
	27B					1,885						
	36A (Mod)			15				327				
	36B (Mod)			6				114				
EB ROUTE 8 TO SB ROUTE 7 - "ESR"	25A				85	2,022						
	27B					3,021						
	36 (Mod)			64				1,466				
	36A (Mod)			17				375				
	37			28							363	
EB ROUTE 8 TO NB ROUTE 7 -"EN"	25A				32	752						
	27B					522						
SB ROUTE 7 TO EB ROUTE 8 - "SE"	8								301			
	25A				31	714						
	27B					1,324						
	36 (Mod)			5				73				
	36A (Mod)			11				236				
NB ROUTE 7 TO EB ROUTE 8 - "NE"	8								330			
	25A				39	914						
	27B					1,558						
	36A (Mod)			12				270				
WB ROUTE 8 TO BONDS CORNER Rd - "R1B"	25A				38	897						
	27B					1,183						
	36 (Mod)			23				572				
	SUBTOTAL	8,360	4,888			21,906	195,624	4,552	1,314	100,320	1,441	195,624

* INCLUDES 11/14 (6Mod) DETAIL.

PAVEMENT DELINEATION QUANTITIES

PDQ-1

REVISED BY | DATE REVISED
SIRAJUL RONI | JOEL SIMS
CALCULATED-DESIGNED BY | CHECKED BY
FUNCTIONAL SUPERVISOR
NICOLA BERNARD

STATE OF CALIFORNIA - DEPARTMENT OF TRANSPORTATION
Caltrans®
TRADE CORRIDOR IMPROVEMENT FUND

LAST REVISION 04-20-15 | DATE PLOTTED => 10-AUG-2015 TIME PLOTTED => 15:10

Dist	COUNTY	ROUTE	POST MILES TOTAL PROJECT	SHEET No.	TOTAL SHEETS
11	Imp	8	R45.5/R55.0	127	211

REGISTERED CIVIL ENGINEER 04-27-15 DATE

08-03-15
PLANS APPROVAL DATE

REGISTERED PROFESSIONAL ENGINEER DYLAN S. MOORE No. 74711 Exp. 12-31-15 CIVIL STATE OF CALIFORNIA

THE STATE OF CALIFORNIA OR ITS OFFICERS OR AGENTS SHALL NOT BE RESPONSIBLE FOR THE ACCURACY OR COMPLETENESS OF SCANNED COPIES OF THIS PLAN SHEET.

PAVEMENT DELINEATION QUANTITIES

DESCRIPTION	DETAIL No.	PAVEMENT MARKER SUMMARY				TRAFFIC STRIPE SUMMARY						
		NON-REFLECTIVE (EA)	RETROREFLECTIVE (EA)			THERMOPLASTIC (ENHANCED WET NIGHT VISIBILITY) (LF)						PAINT (1-COAT) (LF)
		TYPE A	TYPE C	TYPE G	TYPE H	4" (SOLID)	6" (SOLID)	8" (SOLID)	4" (BROKEN 17'-7')	6" (BROKEN 36'-12')	8" (BROKEN 12'-3')	3" BLACK
BONDS CORNER Rd TO EB ROUTE 8 - "R2B"	8								399			
	25A				35	820						
	27B					1,409						
	36A (Mod)			9				190				
EB ROUTE 8 TO BONDS CORNER Rd - "R3B"	25A				39	900						
	27B					1,192						
	36 (Mod)			24				584				
BONDS CORNER Rd TO WB ROUTE 8 - "R4B"	8								428			
	25A				35	827						
	27B					1,415						
	36A (Mod)			8				160				
WB ROUTE 8 TO VANDERLINDEN Rd - "R1"	25A				57	1,353						
	27B					1,628						
	36 (Mod)			23				550				
VANDERLINDEN Rd TO EB ROUTE 8 - "R2"	8								374			
	25A				38	880						
	27B					1,516						
	36A (Mod)			12				262				
EB ROUTE 8 TO VANDERLINDEN Rd - "R3"	25A				47	1,095						
	27B					1,353						
	36 (Mod)			21				516				
VANDERLINDEN Rd TO WB ROUTE 8 - "R4"	8								332			
	25A				32	753						
	27B					1,263						
	36A (Mod)			8				178				
BLACK STRIPE FOR AIRCRAFT MARKING / EB "B" FROM 2460+81 TO 2883+32	SEE PAVEMENT DELINEATION DETAILS											54
SUBTOTAL		0	388			16,404	0	2,440	1,533	0	0	54
SUBTOTAL (PDQ-1)		8,360	4,888			21,906	195,624	4,552	1,314	100,320	1,441	195,624
TOTAL		8,360	5,276 *			38,310	195,624	6,992	2,847	100,320	1,441	195,678

* SEE STAGE CONSTRUCTION QUANTITIES FOR ADDITIONAL QUANTITIES.

STATE OF CALIFORNIA - DEPARTMENT OF TRANSPORTATION
Caltrans®
TRADE CORRIDOR IMPROVEMENT FUND

FUNCTIONAL SUPERVISOR: NICOLA BERNARD
CALCULATED-DESIGNED BY: SIRAJUL RONI
CHECKED BY: JOEL SIMS
REVISED BY
DATE REVISED

PAVEMENT DELINEATION QUANTITIES

PDQ-2

LAST REVISION 04-20-15
DATE PLOTTED => 10-AUG-2015
TIME PLOTTED => 15:10

Dist	COUNTY	ROUTE	POST MILES TOTAL PROJECT	SHEET No.	TOTAL SHEETS
11	Imp	8	R45.5/R55.0	128	211

REGISTERED CIVIL ENGINEER 04-27-15 DATE

08-03-15
PLANS APPROVAL DATE

REGISTERED PROFESSIONAL ENGINEER DYLAN S. MOORE No. 74711 Exp. 12-31-15 CIVIL STATE OF CALIFORNIA

THE STATE OF CALIFORNIA OR ITS OFFICERS OR AGENTS SHALL NOT BE RESPONSIBLE FOR THE ACCURACY OR COMPLETENESS OF SCANNED COPIES OF THIS PLAN SHEET.

PAVEMENT MARKING QUANTITIES

LOCATION	THERMOPLASTIC PAVEMENT MARKING (ENHANCED WET NIGHT VISIBILITY)		REMARKS
	DESCRIPTION	(SQFT)	
ORCHARD Rd OC (EB OFF-RAMP)	TYPE V ARROW	165	*
	LIMIT LINE	14	*
	"STOP" (EB)	44	*
	"AHEAD" (EB)	31	*
ORCHARD Rd OC (EB ON-RAMP)	TYPE V ARROW	99	*
	TYPE I 24'-0" ARROW	62	*
	TYPE III (R) ARROW	84	*
ORCHARD Rd OC (WB OFF-RAMP)	TYPE V ARROW	66	*
	LIMIT LINE	24	*
	"STOP" (WB)	44	*
	"AHEAD" (WB)	31	*
ORCHARD Rd OC (WB ON-RAMP)	TYPE I 24'-0" ARROW	62	*
	TYPE III (R) ARROW	42	*
BONDS CORNER Rd OC (EB OFF-RAMP)	TYPE V ARROW	66	*
	LIMIT LINE	20	*
	"STOP" (EB)	44	*
	"AHEAD" (EB)	31	*
	"YIELD" (SB)	24	*
	TYPE V ARROW	33	**
BONDS CORNER Rd OC (EB ON-RAMP)	TYPE I 24'-0" ARROW	31	***
BONDS CORNER Rd OC (WB OFF-RAMP)	TYPE V ARROW	66	*
	LIMIT LINE	30	*
	"STOP" (EB)	44	*
	"AHEAD" (EB)	31	*
	"YIELD" (SB)	24	*
	TYPE V ARROW	33	**
BONDS CORNER Rd OC (WB ON-RAMP)	TYPE I 24'-0" ARROW	31	***
Rte 8 / 115 Sep (EB OFF-RAMP)	TYPE V ARROW	66	*
	LIMIT LINE	20	*
	"STOP" (EB)	44	*
	"AHEAD" (EB)	31	*
	"YIELD" (SB)	24	*
	TYPE V ARROW	33	**
Rte 8 / 115 Sep (EB ON-RAMP)	TYPE I 24'-0" ARROW	31	***
Rte 8 / 115 Sep (WB OFF-RAMP)	TYPE V ARROW	66	*
	LIMIT LINE	20	*
	"STOP" (EB)	44	*
	"AHEAD" (EB)	31	*
	"YIELD" (SB)	24	*
	TYPE V ARROW	33	**
Rte 8 / 115 Sep (WB ON-RAMP)	TYPE I 24'-0" ARROW	31	***
I-8: EB RIGHT EDGE OF PAVEMENT FROM 2460+81 TO 2883+32	12" AIRCRAFT PAVEMENT MARKING	54	
	TOTAL	1,882	

NOTES:

* = REPLACE IN KIND
** = REPLACE TYPE II (B) ARROW
*** = REPLACE TYPE I 18'-0" ARROW

PAVEMENT DELINEATION QUANTITIES

PDQ-3

REVISED BY | DATE REVISED
RADHIKA MOTHKURI | DYLAN MOORE
CALCULATED-DESIGNED BY | CHECKED BY
FUNCTIONAL SUPERVISOR: NICOLA BERNARD

STATE OF CALIFORNIA - DEPARTMENT OF TRANSPORTATION
Caltrans®
TRADE CORRIDOR IMPROVEMENT FUND

LAST REVISION 04-20-15 | DATE PLOTTED => 10-AUG-2015 | TIME PLOTTED => 15:10

Dist	COUNTY	ROUTE	POST MILES TOTAL PROJECT	SHEET No.	TOTAL SHEETS
11	Imp	8	R45.5/R55.0	129	211

REGISTERED CIVIL ENGINEER 04-27-15 DATE

08-03-15
PLANS APPROVAL DATE

REGISTERED PROFESSIONAL ENGINEER DYLAN S. MOORE No. 74711 Exp. 12-31-15 CIVIL STATE OF CALIFORNIA

THE STATE OF CALIFORNIA OR ITS OFFICERS OR AGENTS SHALL NOT BE RESPONSIBLE FOR THE ACCURACY OR COMPLETENESS OF SCANNED COPIES OF THIS PLAN SHEET.

ROADWAY QUANTITIES

LOCATION					LENGTH (N)	WIDTH (N)			DEPTH (N)				CONTINUOUSLY REINFORCED CONCRETE PAVEMENT	HOT MIX ASPHALT (TYPE A) *	CLASS 2 AB *	ROADWAY EXCAVATION *	LEAN CONCRETE BASE	REMARKS
LINE	STATION LIMITS BEGIN	STATION LIMITS END	SIDE L†	SIDE R†	LF	LANE LF	OUTSIDE SHOULDER LF	INSIDE SHOULDER LF	CRCP LF	HMA LF	CLASS 2 LF	LEAN CONCRETE BASE LF	CY	TON	CY	CY	CY	
"A"	2434+50.00	2435+30.00	X		80.00	24	10	5	0.95	0.25	0.60	1.00	127.5	58	69.3	324	97	SEE REVISED Std PLAN P32A
"A"	2435+30.00	2532+43.16	X		9713.16	24	10	5	0.95	0.25	0.25		13,329	7,015	899	17,736		
"A"	2532+43.16	2555+00.00	X		2256.84	26	0	5	0.95	0.25	0.25		2,462	1,296		3,109		
"A"	2555+00.00	2556+38.37	X		138.37	26	0	5	0.90	0.25	0.25		143	79		183		
"A"	2556+38.37	2567+76.40	X		1138.03	24	10	5	0.90	0.25	0.25		1,479	822	105	1,996		
"A"	2567+76.40	2572+04.00	X		427.60	26	0	5	0.90	0.25	0.25		442	245		565		
"A"	2572+04.00	2586+00.00	X		1396.00	24	11.33	5	0.90	0.25	0.25		1,877	1,043	146	2,544		
"A"	2586+00.00	2635+70.00	X		4970.00	24	10	5	0.90	0.25	0.25		6,461	3,589	460	8,716		
"A"	2635+70.00	2658+00.00	X		2230.00	24	11.33	5	0.90	0.25	0.25		2,998	1,665	234	4,065		
"A"	2658+00.00	2662+00.00	X		400.00	24	10.67	5	0.90	0.25	0.25		529	294	40	715		
"A"	2662+00.00	2670+95.00	X		895.00	24	11.33	5	0.90	0.25	0.25		1,203	668	94	1,631		
"A"	2670+95.00	2680+01.60	X		906.60	24	10	5	0.90	0.25	0.25		1,179	655	84	1,590		
"A"	2680+01.60	2690+18.48	X		1016.88	24	2	5	0.90	0.25	0.25		1,051	584	19	1,361		
"A"	2690+18.48	2706+49.18	X		1630.70	24	10	5	0.90	0.25	0.25		2,120	1,178	151	2,860		
"A"	2706+49.18	2711+24.28	X		475.10	24	2	5	0.90	0.25	0.25		491	273	9	636		
"A"	2711+24.28	2839+16.24	X		12791.96	24	10	5	0.90	0.25	0.25		16,630	9,239	1,184	22,433		
"A"	2839+16.24	2849+14.78	X		998.54	24	2	5	0.90	0.25	0.25		1,032	573	18	1,337		
"A"	2849+14.78	2868+62.77	X		1947.99	24	10	5	0.90	0.25	0.25		2,532	1,407	180	3,416		
"A"	2868+62.77	2874+68.03	X		605.26	24	2	5	0.90	0.25	0.25		625	347	11	810		
"A"	2874+68.03	2885+90.00	X		1121.97	24	10	5	0.90	0.25	0.25		1,459	810	104	1,968		
"A"	2885+90.00	2906+09.22	X		2019.22	24	11.33	5	0.90	0.25	0.25		2,715	1,508	212	3,680		
"A"	2906+09.22	2906+97.27	X		88.05	24	11.33	5	0.90	0.25	0.60	1.00	130.4	62	74.7	343	106	SEE REVISED Std PLAN P32A
"A"	2910+48.56	2911+31.78	X		83.22	24	10	5	0.90	0.25	0.60	1.00	122	57	70	315	97	SEE REVISED Std PLAN P32A
"A"	2911+31.78	2912+26.78	X		95.00	24	10.67	5	0.90	0.25	0.25		126	70	9	170		
"A"	2912+26.78	2931+80.00	X		1953.22	24	11.33	5	0.90	0.25	0.25		2,626	1,459	205	3,560		
"A"	2931+80.00	2935+30.00	X		350.00	24	10	5	0.90	0.25	0.25		455	253	32	614		
"A"	2935+30.00	2936+10.00	X		80.00	24	10	5	0.90	0.25	0.6	1.00	122	58	69	318	97	SEE REVISED Std PLAN P32A
"A"	2434+50.00	2435+30.00		X	80.00	24	10	5	0.95	0.25	0.6	1.00	127	58	69	324	97	SEE REVISED Std PLAN P32A
"A"	2435+30.00	2520+00.00		X	8470.00	24	10	5	0.95	0.25	0.25		11,623	6,117	1,176	15,858		
"A"	2520+00.00	2522+45.00		X	245.00	30	10	5	0.95	0.25	0.25		388	204	34	524		AUX LANE TAPER
"A"	2522+45.00	2536+22.70		X	1377.70	36	10	5	0.95	0.25	0.25		2,472	1,301	191	3,314		
												SUBTOTAL (Q-1)	79,076	42,987	5,949	107,015	494	

(N) - NOT A SEPARATE PAY ITEM, FOR INFORMATION ONLY
* SEE STAGE CONSTRUCTION QUANTITY SHEETS FOR ADDITIONAL QUANTITIES
** SEE COLD PLANE QUANTITIES TABLE, EARTHWORK AND STAGE CONSTRUCTION QUANTITIES FOR ADDITIONAL QUANTITIES

SUMMARY OF QUANTITIES
Q-1

REVISED BY | DATE REVISED
SIRAJUL RONI | JOHN HANSON
CALCULATED-DESIGNED BY | CHECKED BY
FUNCTIONAL SUPERVISOR
NICOLA BERNARD

STATE OF CALIFORNIA - DEPARTMENT OF TRANSPORTATION
Caltrans®
TRADE CORRIDOR IMPROVEMENT FUND

LAST REVISION 04-20-15
DATE PLOTTED => 10-AUG-2015
TIME PLOTTED => 15:10

Dist	COUNTY	ROUTE	POST MILES TOTAL PROJECT	SHEET No.	TOTAL SHEETS
11	Imp	8	R45.5/R55.0	130	211

REGISTERED CIVIL ENGINEER 04-27-15 DATE

08-03-15
PLANS APPROVAL DATE

REGISTERED PROFESSIONAL ENGINEER DYLAN S. MOORE No. 74711 Exp. 12-31-15 CIVIL STATE OF CALIFORNIA

THE STATE OF CALIFORNIA OR ITS OFFICERS OR AGENTS SHALL NOT BE RESPONSIBLE FOR THE ACCURACY OR COMPLETENESS OF SCANNED COPIES OF THIS PLAN SHEET.

ROADWAY QUANTITIES

LOCATION					LENGTH (N)	WIDTH (N)			DEPTH (N)				CONTINUOUSLY REINFORCED CONCRETE PAVEMENT	HOT MIX ASPHALT (TYPE A) *	CLASS 2 AB *	ROADWAY EXCAVATION *	LEAN CONCRETE BASE	REMARKS
LINE	STATION LIMITS BEGIN	STATION LIMITS END	SIDE L†	SIDE R†	LF	LANE LF	OUTSIDE SHOULDER LF	INSIDE SHOULDER LF	CRCP LF	HMA LF	CLASS 2 LF	LEAN CONCRETE BASE LF	CY	TON	CY	CY	CY	
"A"	2536+22.70	2540+17.98		X	395.28	24	2	5	0.95	0.25	0.25		431	227	26	570		
"A"	2540+17.98	2544+50.00		X	432.02	24	11.33	5	0.95	0.25	0.25		613	323	65	840		
"A"	2544+50.00	2552+53.21		X	803.21	24	10	5	0.95	0.25	0.25		1,102	580	112	1,504		
"A"	2552+53.21	2555+00.00		X	246.79	24	2	5	0.95	0.25	0.25		269	142	16	356		
"A"	2555+00.00	2575+79.46		X	2079.46	24	2	5	0.90	0.25	0.25		2,149	1,194	135	2,880		
"A"	2575+79.46	2586+00.00		X	1020.54	24	11.33	5	0.90	0.25	0.25		1,372	762	154	1,907		
"A"	2586+00.00	2635+70.00		X	4970.00	24	10	5	0.90	0.25	0.25		6,461	3,589	690	8,946		
"A"	2635+70.00	2656+37.50		X	2067.50	24	11.33	5	0.90	0.25	0.25		2,779	1,544	313	3,864		
"A"	2656+37.50	2660+00.00		X	362.50	24	10.67	5	0.90	0.25	0.25		479	266	53	665		
"A"	2660+00.00	2670+95.00		X	1095.00	24	11.33	5	0.90	0.25	0.25		1,472	818	166	2,047		
"A"	2670+95.00	2684+41.65		X	1346.65	24	10	5	0.90	0.25	0.25		1,751	973	187	2,424		
"A"	2684+41.65	2689+68.65		X	527.00	24	2	5	0.90	0.25	0.25		545	303	34	730		
"A"	2689+68.65	2705+94.62		X	1625.97	24	10	5	0.90	0.25	0.25		2,114	1,174	226	2,927		
"A"	2705+94.62	2716+09.73		X	1015.11	24	2	5	0.90	0.25	0.25		1,049	583	66	1,406		
"A"	2716+09.73	2841+81.87		X	12572.14	24	10	5	0.90	0.25	0.25		16,344	9,080	1,746	22,630		
"A"	2841+81.87	2846+63.69		X	481.82	24	2	5	0.90	0.25	0.25		498	277	31	667		
"A"	2846+63.69	2866+41.71		X	1978.02	24	10	5	0.90	0.25	0.25		2,571	1,429	275	3,560		
"A"	2866+41.71	2877+78.15		X	1136.44	24	2	5	0.90	0.25	0.25		1,174	652	74	1,574		
"A"	2877+78.15	2885+80.00		X	801.85	24	10	5	0.90	0.25	0.25		1,042	579	111	1,443		
"A"	2885+80.00	2893+87.23		X	807.23	24	11.33	5	0.90	0.25	0.25		1,085	603	122	1,509		
"A"	2893+87.23	2896+00.00		X	212.77	24	10.67	5	0.90	0.25	0.25		281	156	31	390		
"A"	2896+00.00	2906+56.50		X	1056.50	24	10	5	0.90	0.25	0.25		1,373	763	147	1,902		
"A"	2906+56.50	2907+44.08		X	87.58	24	10	5	0.90	0.25	0.60	1.00	127.3	61	73.0	335	103	SEE REVISED Std PLAN P32A
"A"	2911+02.77	2911+89.34		X	86.57	24	10	5	0.90	0.25	0.60	1.00	125.4	59.8	71.8	329	101	SEE REVISED Std PLAN P32A
"A"	2911+89.34	2923+40.00		X	1150.66	24	10	5	0.90	0.25	0.25		1,496	831	160	2,071		
"A"	2923+40.00	2931+50.00		X	810.00	24	11.33	5	0.90	0.25	0.25		1,089	605	122	1,514		
"A"	2931+50.00	2935+30.00		X	380.00	24	10	5	0.90	0.25	0.25		494	274	53	684		
"A"	2935+30.00	2936+10.00		X	80.00	24	10	5	0.90	0.25	0.60	1.00	122	58	69	318	97	SEE REVISED Std PLAN P32A
												SUBTOTAL (Q-2)	50,408	27,906	5,329	69,992	301	
												SUBTOTAL (Q-1)	79,076	42,987	5,949	107,015	494	
												TOTAL	129,484	70,893	11,278	177,007	795	

(N) - NOT A SEPARATE PAY ITEM, FOR INFORMATION ONLY
* SEE STAGE CONSTRUCTION QUANTITY SHEETS FOR ADDITIONAL QUANTITIES
** SEE COLD PLANE QUANTITIES TABLE, EARTHWORK AND STAGE CONSTRUCTION QUANTITIES FOR ADDITIONAL QUANTITIES

SUMMARY OF QUANTITIES
Q-2

REVISED BY | DATE REVISED
SIRAJUL RONI | JOHN HANSON
CALCULATED-DESIGNED BY | CHECKED BY
FUNCTIONAL SUPERVISOR
NICOLA BERNARD

STATE OF CALIFORNIA - DEPARTMENT OF TRANSPORTATION
Caltrans
TRADE CORRIDOR IMPROVEMENT FUND

LAST REVISION 04-20-15
DATE PLOTTED => 10-AUG-2015
TIME PLOTTED => 15:10

Dist	COUNTY	ROUTE	POST MILES TOTAL PROJECT	SHEET No.	TOTAL SHEETS
11	Imp	8	R45.5/R55.0	131	211

REGISTERED CIVIL ENGINEER 04-27-15 DATE

08-03-15
PLANS APPROVAL DATE

REGISTERED PROFESSIONAL ENGINEER DYLAN S. MOORE No. 74711 Exp. 12-31-15 CIVIL STATE OF CALIFORNIA

THE STATE OF CALIFORNIA OR ITS OFFICERS OR AGENTS SHALL NOT BE RESPONSIBLE FOR THE ACCURACY OR COMPLETENESS OF SCANNED COPIES OF THIS PLAN SHEET.

EARTHWORK

LOCATION					EMBANKMENT (N) *	REMARKS
LINE	SIDE		STATION LIMITS		CY	
	R†	L†	BEGIN	END		
"A"	X		2656+60.00	2662+15.00	100	REPAIR HINGE AND SLOPE
"A"		X	2656+65.00	2662+25.00	125	REPAIR HINGE AND SLOPE
"A"	X		2657+80.00	2659+00.00	180	REPAIR ERODED CHANNEL
"A"		X	2659+00.00	2660+75.00	250	REPAIR ERODED CHANNEL
				TOTAL	655	

(N) - NOT A SEPARATE PAY ITEM, FOR INFORMATION ONLY
* SEE ROADWAY QUANTITIES, COLD PLANE QUANTITIES AND STAGE CONSTRUCTION QUANTITIES TABLE FOR ADDITIONAL QUANTITIES.

FENCE

LOCATION					FENCE (TYPE WM AND BW)
LINE	SIDE		STATION LIMITS		
	R†	L†	BEGIN	END	LF
"A"	X		2657+15.39	2659+07.07	192.0
"A"		X	2659+03.18	2660+63.41	161.0
				TOTAL	353.0

COLD PLANE QUANTITIES

LOCATION			LENGTH (N)	WIDTH (N)			TOTAL AREA (N) (LANE + Shld + GORE)	COLD PLANE ASPHALT CONCRETE PAVEMENT *	DEPTH (N)	VOLUME (N)	RUBBERIZED HOT MIX ASPHALT (GAP GRADED)	TACK COAT	AREA (FOG SEAL COAT) (N)	ASPHALTIC EMULSION (FOG SEAL COAT) **	EMBANKMENT (N) ***	REMARKS
LINE	STATION			LANE	INSIDE SHOULDER	OUTSIDE SHOULDER										
	BEGIN	END	LF	LF	LF	LF	SQFT	SQYD	LF	CY	TON	TON	SQYD	TON	CY	
"ESR"	2536+22.95	2563+15.00	2692.05	12	5	10	79,217.07	8,801.90	0.20	586.79	1,173.59	2.20	5,212.50	1.30	98.71	EB OFF RAMP/ORCHARD Rd
"EN"	2548+20.04	2555+72.40	752.36	12	4	8	17,628.96	1,958.77	0.20	130.58	261.17	0.49	955.63	0.24	27.59	EB OFF RAMP/ORCHARD Rd
"SE"	2544+77.74	2558+00.59	1322.85	15	4	8	34,063.46	3,784.83	0.20	252.32	504.64	0.95	1,580.08	0.40	48.50	EB ON RAMP (LOOP)
"A"	2558+00.59	2563+94.97	594.38	6		8	7,166.07	796.23	0.20	53.08	106.16	0.20	399.98	0.10	21.79	EB ON RAMP (LOOP)
"NE"	2554+49.51	2569+89.94	1540.43	12	4	8	40,482.64	4,498.07	0.20	299.87	599.74	1.12	2,444.16	0.61	56.48	EB ON RAMP/ORCHARD Rd
"A"	2569+89.94	2575+79.46	589.52	6		8	7,210.56	801.17	0.20	53.41	106.82	0.20	408.16	0.10	21.62	EB ON RAMP/ORCHARD Rd
"WS"	2554+00.00	2570+47.20	1647.20	12	8	4	43,876.06	4,875.12	0.20	325.01	650.02	1.22	2,678.85	0.67	60.40	WB OFF RAMP/ORCHARD Rd
"A"	2570+47.20	2572+04.00	156.80	6	8		1,829.19	203.24	0.20	13.55	27.10	0.05	98.71	0.02	5.75	WB OFF RAMP/ORCHARD Rd
"A"	2544+39.74	2549+84.21	544.47	6	8		7,278.70	808.74	0.20	53.92	107.83	0.20	445.76	0.11	19.96	WB ON RAMP (LOOP)
"NW"	2549+84.21	2568+55.00	1870.79	15	8	4	51,162.07	5,684.67	0.20	378.98	757.96	1.42	2,566.69	0.64	68.60	WB ON RAMP (LOOP)
"A"	2532+35.63	2538+35.69	600.06	6	8		7,301.40	811.27	0.20	54.08	108.17	0.20	411.23	0.10	22.00	WB ON RAMP/ORCHARD Rd
"SW"	2538+35.69	2555+97.37	1761.68	12	8	4	45,764.55	5,084.95	0.20	339.00	677.99	1.27	2,736.04	0.68	64.59	WB ON RAMP/ORCHARD Rd
"A"	2684+41.65	2686+78.55	236.90	6		8	2,475.91	275.10	0.20	18.34	36.68	0.07	117.17	0.03	8.69	EB OFF RAMP/BONDS CORNER Rd
"R3B"	2686+78.55	2698+61.00	1182.45	12	4	8	32,604.70	3,622.74	0.20	241.52	483.03	0.91	2,046.14	0.51	43.36	EB OFF RAMP/BONDS CORNER Rd
"R2B"	2697+56.01	2711+83.62	1427.61	12	4	8	37,577.94	4,175.33	0.20	278.36	556.71	1.04	2,271.85	0.57	52.35	EB ON RAMP/BONDS CORNER Rd
"A"	2711+83.62	2716+09.73	426.11	6		8	5,848.82	649.87	0.20	43.32	86.65	0.16	365.80	0.09	15.62	EB ON RAMP/BONDS CORNER Rd
"R1B"	2697+51.14	2709+34.69	1183.55	12	8	4	32,583.40	3,620.38	0.20	241.36	482.72	0.91	2,042.31	0.51	43.40	WB OFF RAMP/BONDS CORNER Rd
"A"	2709+34.69	2711+24.28	189.59	6	8		2,092.04	232.45	0.20	15.50	30.99	0.06	106.06	0.03	6.95	WB OFF RAMP/BONDS CORNER Rd
"A"	2680+01.60	2684+29.62	428.02	6	8		5,872.27	652.47	0.20	43.50	87.00	0.16	367.13	0.09	15.69	WB ON RAMP/BONDS CORNER Rd
"R4B"	2684+29.62	2698+40.00	1410.38	12	8	4	38,046.21	4,227.36	0.20	281.82	563.65	1.06	2,346.85	0.59	51.71	WB ON RAMP/BONDS CORNER Rd
"A"	2841+81.87	2844+08.45	226.58	6		8	2,390.82	265.65	0.20	17.71	35.42	0.07	114.59	0.03	8.31	EB OFF RAMP/SR-115
"R3"	2844+08.45	2857+59.82	1351.37	12	4	8	36,128.66	4,014.30	0.20	267.62	535.24	1.00	2,212.47	0.55	49.55	EB OFF RAMP/SR-115
"R2"	2857+62.82	2872+83.28	1520.46	12	4	8	42,348.55	4,705.39	0.20	313.69	627.39	1.18	2,678.11	0.67	55.75	EB ON RAMP/SR-115
"A"	2872+83.28	2877+78.15	494.87	6		8	6,045.54	671.73	0.20	44.78	89.56	0.17	341.81	0.09	18.15	EB ON RAMP/SR-115
"R1"	2855+00.00	2871+33.34	1633.34	12	8	4	44,885.62	4,987.29	0.20	332.49	664.97	1.25	2,809.50	0.70	59.89	WB OFF RAMP/SR-115
"A"	2871+33.34	2874+68.03	334.69	6	8		3,755.73	417.30	0.20	27.82	55.64	0.10	194.18	0.05	12.27	WB OFF RAMP/SR-115
"A"	2839+16.24	2844+08.45	492.21	6	8		6,430.18	714.46	0.20	47.63	95.26	0.18	386.32	0.10	18.05	WB ON RAMP/SR-115
"R4"	2844+08.45	2856+71.63	1263.18	12	8	4	33,644.39	3,738.27	0.20	249.22	498.44	0.93	2,054.03	0.51	46.32	WB ON RAMP/SR-115
							TOTAL	75,079			10,010	18.77		10.10		

(N) - NOT A SEPARATE PAY ITEM, FOR INFORMATION ONLY.
* SEE STAGE CONSTRUCTION QUANTITIES FOR ADDITIONAL QUANTITIES.
** SEE DIKE QUANTITIES TABLE, OVERSIDE DRAIN QUANTITIES TABLE & STAGING QUANTITES FOR ADDITIONAL QUANTITIES.
*** SEE ROADWAY QUANTITIES TABLE, EARTHWORK TABLE AND STAGE CONSTRUCTION QUANTITIES FOR ADDITIONAL QUANTITIES.

SUMMARY OF QUANTITIES
Q-3

STATE OF CALIFORNIA - DEPARTMENT OF TRANSPORTATION
Caltrans®
TRADE CORRIDOR IMPROVEMENT FUND

FUNCTIONAL SUPERVISOR: NICOLA BERNARD
CALCULATED-DESIGNED BY: SIRAJUL RONI
CHECKED BY: DYLAN MOORE
REVISED BY
DATE REVISED

LAST REVISION 04-20-15
DATE PLOTTED => 10-AUG-2015
TIME PLOTTED => 15:10

Dist	COUNTY	ROUTE	POST MILES TOTAL PROJECT	SHEET No.	TOTAL SHEETS
11	Imp	8	R45.5/R55.0	132	211

REGISTERED CIVIL ENGINEER 04-27-15 DATE

08-03-15
PLANS APPROVAL DATE

REGISTERED PROFESSIONAL ENGINEER DYLAN S. MOORE No. 74711 Exp. 12-31-15 CIVIL STATE OF CALIFORNIA

THE STATE OF CALIFORNIA OR ITS OFFICERS OR AGENTS SHALL NOT BE RESPONSIBLE FOR THE ACCURACY OR COMPLETENESS OF SCANNED COPIES OF THIS PLAN SHEET.

DIKE QUANTITIES

LOCATION								REMOVE ASPHALT CONCRETE DIKE	PLACE HOT MIX ASPHALT DIKE (TYPE C)	PLACE HOT MIX ASPHALT DIKE (TYPE E)	PLACE HOT MIX ASPHALT DIKE (TYPE F)	MINOR HOT MIX ASPHALT	ASPHALTIC EMULSION (FOG SEAL COAT)	REMARKS
LINE	STATION		SIDE		TYPE									
	BEGIN	END	Lt	Rt	C	E	F	LF	LF	LF	LF	TON	TON	
"A"	2540+17.98	2544+50.00		X		X				432.02		18.10	0.015	EB I-8
"A"	2569+90.00	2575+79.46		X		X		589.46		589.46		24.70	0.021	EB I-8
"A"	2575+79.46	2586+00.00		X		X				1,020.54		42.76	0.036	EB I-8
"A"	2635+70.00	2656+37.50		X		X				2,067.50		86.63	0.073	EB I-8
"A"	2656+37.50	2657+00.00		X	X				62.50			1.11	0.001	EB I-8
"A"	2657+00.00	2660+00.00		X			X				300.00	6.94	0.007	EB I-8
"A"	2660+00.00	2670+95.00		X		X				1,095.00		45.88	0.039	EB I-8
"A"	2885+80.00	2893+87.23		X		X				807.23		33.82	0.029	EB I-8
"A"	2893+87.23	2894+49.73		X	X				62.50			1.11	0.001	EB I-8
"A"	2894+49.73	2895+80.00		X			X				130.27	3.01	0.003	EB I-8
"A"	2895+80.00	2896+00.00		X		X				20.00		0.84	0.001	EB I-8
"A"	2923+40.00	2931+50.00		X		X		810.00		810.00		33.94	0.029	EB I-8
"A"	2535+55.00	2542+15.00	X			X		660.00		660.00		27.65	0.023	WB I-8
"A"	2570+47.20	2572+04.00	X			X		156.80		156.80		6.57	0.006	WB I-8
"A"	2572+04.00	2586+00.00	X			X				1,396.00		58.49	0.049	WB I-8
"A"	2635+70.00	2658+00.00	X			X				2,230.00		93.44	0.079	WB I-8
"A"	2658+00.00	2661+37.50	X				X				337.50	7.81	0.008	WB I-8
"A"	2661+37.50	2662+00.00	X		X				62.50			1.11	0.001	WB I-8
"A"	2662+00.00	2670+95.00	X			X				895.00		37.50	0.032	WB I-8
"A"	2570+47.70	2572+04.00	X					156.30		156.30		6.55	0.006	WB I-8
"A"	2885+90.00	2886+90.00	X			X				100.00		4.19	0.004	WB I-8
"A"	2887+00.00	2907+00.00	X			X				2,000.00		83.80	0.071	WB I-8
"A"	2910+26.78	2911+64.28	X				X				137.50	3.18	0.003	WB I-8
"A"	2911+64.28	2912+26.78	X		X				62.50			1.11	0.001	WB I-8
"A"	2912+26.78	2931+80.00	X			X				1,953.22		81.84	0.069	WB I-8
"ESR"	2536+40.00	2566+44.00		X		X		3,004.00		3,004.00		125.87	0.106	EB OFF-RAMP/ORCHARD Rd
"EN"	2549+70.00	2555+70.00	X			X		600.00		600.00		25.14	0.021	EB OFF-RAMP/ORCHARD Rd
"EN"	2555+00.00	2555+84.00		X		X		84.00		84.00		3.52	0.003	EB OFF-RAMP/ORCHARD Rd
"AW"	384+50.00	385+25.00	X			X		75.00		75.00		3.14	0.003	ROUTE 7
"SE"	2544+77.00	2557+05.00		X		X		1,228.00		1,228.00		51.45	0.043	PART OF Shld EXCAVATION
"NE"	2554+02.00	2569+89.94		X		X		1,587.94		1,587.94		66.53	0.056	EB ON-RAMP/ORCHARD Rd
"WS"	2554+00.00	2554+70.00	X			X		70.00		70.00		2.93	0.002	WB OFF-RAMP/ORCHARD Rd
"WS"	2561+00.00	2570+47.20	X			X		947.20		947.20		39.69	0.033	PART OF Shld EXCAVATION
"WS"	2554+00.00	2561+20.00		X		X		720.00		720.00		30.17	0.025	WB OFF-RAMP/ORCHARD Rd
"SW"	2542+15.00	2556+11.00	X			X		1,396.00		1,396.00		58.49	0.049	WB ON-RAMP/ORCHARD Rd
"A"	2549+75.00	2549+84.21	X			X		9.21		9.21		0.39	0.000	"NW" RAMP DIKE OFF OF "A" LINE
"NW"	2549+84.21	2568+55.00	X			X		1,870.79		1,870.79		78.39	0.066	PART OF Shld EXCAVATION
"R3B"	2689+25.00	2698+84.00		X		X		959.00		959.00		40.18	0.034	EB OFF-RAMP/BONDS CORNER Rd
"R3B"	2698+00.00	2698+83.77	X			X		83.77		83.77		3.51	0.003	EB OFF-RAMP/BONDS CORNER Rd
"R2B"	2697+57.00	2698+30.00	X			X		73.00		73.00		3.06	0.003	EB ON-RAMP/BONDS CORNER Rd
"R2B"	2697+57.00	2708+84.00		X		X		1,127.00		1,127.00		47.22	0.040	EB ON-RAMP/BONDS CORNER Rd
"R1B"	2697+35.00	2698+20.00		X		X		85.00		85.00		3.56	0.003	WB OFF-RAMP/BONDS CORNER Rd
"R1B"	2697+35.00	2708+00.00	X			X		1,065.00		1,065.00		44.62	0.038	WB OFF-RAMP/BONDS CORNER Rd
"R4B"	2688+80.00	2698+57.00	X			X		977.00		977.00		40.94	0.035	WB ON-RAMP/BONDS CORNER Rd
"R4B"	2697+70.00	2698+50.00		X		X		80.00		80.00		3.35	0.003	WB ON-RAMP/BONDS CORNER Rd
SUBTOTAL (Q-4)								18,414.47	250.00	32,430.98	905.27	1384.23	1.173	

* SEE OVERSIDE DRAIN QUANTITIES TABLE FOR ADDITIONAL QUANTITIES.
** SEE COLD PLANE QUANTITIES TABLE, OVERSIDE DRAIN QUANTITIES TABLE & STAGING QUANTITIES FOR ADDITIONAL QUANTITIES.

SHOULDER RUMBLE STRIP (CONCRETE PAVEMENT, GROUND-IN INDENTATIONS)

LOCATION			SIDE		INSIDE SHOULDER	OUTSIDE SHOULDER
LINE	STATION LIMITS					
	BEGIN	END	Lt	Rt	Sta	Sta
"A"	2434+50.00	2532+43.16	X		97.9	97.9
"A"	2532+43.16	2556+38.37	X		24.0	-
"A"	2556+38.37	2567+76.40	X		11.4	11.4
"A"	2567+76.40	2572+04.00	X		4.3	-
"A"	2572+04.00	2680+01.60	X		108.0	108.0
"A"	2680+01.60	2690+18.48	X		10.2	-
"A"	2690+18.48	2706+49.18	X		16.3	16.3
"A"	2706+49.18	2711+24.28	X		4.8	-
"A"	2711+24.28	2839+16.24	X		127.9	127.9
"A"	2839+16.24	2849+14.78	X		10.0	-
"A"	2849+14.78	2868+62.77	X		19.5	19.5
"A"	2868+62.77	2874+68.03	X		6.1	-
"A"	2874+68.03	2906+89.22	X		32.2	32.2
"A"	2906+89.22	2906+97.27	X		0.1	-
"A"	2910+48.56	2910+55.40	X		-	0.1
"A"	2910+55.40	2936+10.00	X		25.6	25.6
"A"	2434+50.00	2520+00.00		X	85.5	85.5
"A"	2520+00.00	2540+17.98		X	20.2	-
"A"	2540+17.98	2552+53.21		X	12.4	12.4
"A"	2552+53.21	2575+79.46		X	23.3	-
"A"	2575+79.46	2684+41.65		X	108.6	108.6
"A"	2684+41.65	2689+68.65		X	5.3	-
"A"	2689+68.65	2705+94.62		X	16.3	16.3
"A"	2705+94.62	2716+09.73		X	10.2	-
"A"	2716+09.73	2841+81.87		X	125.7	125.7
"A"	2841+81.87	2846+63.69		X	4.8	-
"A"	2846+63.69	2866+41.71		X	19.8	19.8
"A"	2866+41.71	2877+78.15		X	11.4	-
"A"	2877+78.15	2907+36.50		X	29.6	29.6
"A"	2907+36.50	2907+44.08		X	-	0.1
"A"	2911+02.77	2911+09.34		X	0.1	-
"A"	2911+09.34	2936+10.00		X	25.0	25.0
				SUBTOTAL	996.5	861.9
				TOTAL	1,858.4	

SUMMARY OF QUANTITIES
Q-4

STATE OF CALIFORNIA - DEPARTMENT OF TRANSPORTATION
Caltrans®
TRADE CORRIDOR IMPROVEMENT FUND

FUNCTIONAL SUPERVISOR: NICOLA BERNARD
CALCULATED-DESIGNED BY
CHECKED BY
REVISED BY
DATE REVISED

LAST REVISION 04-20-15
DATE PLOTTED => 10-AUG-2015
TIME PLOTTED => 15:10

Dist	COUNTY	ROUTE	POST MILES TOTAL PROJECT	SHEET No.	TOTAL SHEETS
11	Imp	8	R45.5/R55.0	133	211

REGISTERED CIVIL ENGINEER 04-27-15 DATE

08-03-15
PLANS APPROVAL DATE

REGISTERED PROFESSIONAL ENGINEER DYLAN S. MOORE No. 74711 Exp. 12-31-15 CIVIL STATE OF CALIFORNIA

THE STATE OF CALIFORNIA OR ITS OFFICERS OR AGENTS SHALL NOT BE RESPONSIBLE FOR THE ACCURACY OR COMPLETENESS OF SCANNED COPIES OF THIS PLAN SHEET.

DIKE QUANTITIES

LOCATION								REMOVE ASPHALT CONCRETE DIKE	PLACE HOT MIX ASPHALT DIKE (TYPE C)	PLACE HOT MIX ASPHALT DIKE (TYPE E)	PLACE HOT MIX ASPHALT DIKE (TYPE F)	MINOR HOT MIX ASPHALT *	ASPHALTIC EMULSION (FOG SEAL COAT)**	REMARKS
LINE	STATION		SIDE		TYPE									
	BEGIN	END	L+	R+	C	E	F	LF	LF	LF	LF	TON	TON	
"R3"	2847+68.00	2857+82.00		X		X		1,014.00		1,014.00		42.49	0.036	EB OFF-RAMP/VANDERLINDEN Rd
"R3"	2856+80.00	2857+75.00	X			X		95.00		95.00		3.98	0.003	EB OFF-RAMP/VANDERLINDEN Rd
"R2"	2857+45.00	2872+83.00		X		X		1,538.00		1,538.00		64.44	0.054	EB ON-RAMP/VANDERLINDEN Rd
"R2"	2857+50.00	2858+25.00	X			X		75.00		75.00		3.14	0.003	EB ON-RAMP/VANDERLINDEN Rd
"R4"	2848+25.00	2856+89.00	X			X		864.00		864.00		36.20	0.031	WB ON-RAMP/VANDERLINDEN Rd
"R4"	2856+00.00	2856+80.00		X		X		80.00		80.00		3.35	0.003	WB ON-RAMP/VANDERLINDEN Rd
"R1"	2854+81.00	2868+00.00	X			X		1,319.00		1,319.00		55.27	0.047	WB OFF-RAMP/VANDERLINDEN Rd
"R1"	2855+00.00	2856+00.00		X		X		100.00		100.00		4.19	0.004	WB OFF-RAMP/VANDERLINDEN Rd
SUBTOTAL (Q-5)								5,085.00		5,085.00		213.06	0.181	
SUBTOTAL (Q-4)								18,414.47	250.00	32,430.98	905.27	1,384.23	1.173	
TOTAL								23,499.47	250.00	37,515.98	905.27	1,597.29	1.354	

* SEE OVERSIDE DRAIN QUANTITIES TABLE FOR ADDITIONAL QUANTITIES.
** SEE COLD PLANE QUANTITIES TABLE, OVERSIDE DRAIN QUANTITIES TABLE AND STAGING QUANTITES FOR ADDITIONAL QUANTITIES.

CRCP TERMINAL JOINTS

LOCATION				CONTINUOUSLY REINFORCED CONCRETE PAVEMENT (TERMINAL JOINT TYPE D) (N)	CONTINUOUSLY REINFORCED CONCRETE PAVEMENT (TERMINAL JOINT TYPE E) (N)	CONTINUOUSLY REINFORCED CONCRETE PAVEMENT (EXPANSION JOINT TYPE WF) (N)	CONTINUOUSLY REINFORCED CONCRETE PAVEMENT (WIDE FLANGE BEAM TERMINAL) (N)	JOINT SEAL (TYPE A)	JOINT SEAL (MR 2")
LINE	STATION	SIDE							
		L+	R+	LF	LF	LF	LF	LF	LF
"A"	2434+50.00	X		39					
"A"	2434+85.00	X				39			39
"A"	2435+05.00	X					39	39	
"A"	2434+50.00		X	39					
"A"	2434+85.00		X			39			39
"A"	2435+05.00		X				39	39	
"A"	2536+22.70		X						
"A"	2906+34.22	X					40.3	40.3	
"A"	2906+54.22	X				40.3			40.3
"A"	2906+89.22	X			22				
"A"	2906+97.27	X			17				
"A"	2906+81.50		X				39	39	
"A"	2907+01.50		X			39			39
"A"	2907+36.50		X		17				
"A"	2907+44.08		X		22				
"A"	2910+48.56	X			22				
"A"	2910+55.40	X			17				
"A"	2910+90.40	X				39			39
"A"	2911+10.40	X					39	39	
"A"	2911+02.77		X		17				
"A"	2911+09.34		X		22				
"A"	2911+44.34		X			39			39
"A"	2911+64.34		X				39	39	
"A"	2935+55.00		X				39	39	
"A"	2935+75.00		X			39			39
"A"	2936+10.00		X	39					
"A"	2935+55.00	X					39	39	
"A"	2935+75.00	X				39			39
"A"	2936+10.00	X		39					
							TOTAL	313.3	313.3

EXISTING CALL BOXES (TO BE RELOCATED BY OTHERS)

LINE	STATION	DIRECTION		CALL BOX ID	RELOCATE BOXES (N)
		EB	WB		EA
"A"	2460+80	X		8-460	1
"A"	2513+66	X		8-470	1
"A"	2586+05	X		8-482	1
"A"	2672+17	X		8-500	1
"A"	2777+68	X		8-520	1
"A"	2883+43	X		8-540	1
"A"	2460+89		X	8-461	1
"A"	2514+46		X	8-471	1
"A"	2585+86		X	8-483	1
"A"	2671+98		X	8-501	1
"A"	2777+79		X	8-521	1
"A"	2883+05		X	8-541	1
				TOTAL	12

DELINEATOR (CLASS 1)

LOCATION							DELINEATOR (CLASS 1)	
							EA	
LINE	STATION LIMITS		DIRECTION		SIDE		TYPE	
	BEGIN	END	EB	WB	R+	L+	F	G
"A"	2540+25	2575+45	X		X		13	6
"A"	2680+75	2716+11	X		X		15	2
"A"	2838+00	2877+62	X		X		15	2
"A"	2911+10	2925+10	X		X		14	
"A"	2894+00	2928+06		X		X		32
"A"	2838+48	2880+20		X	X		17	2
"A"	2679+10	2715+00		X	X		15	2
"A"	2532+43	2575+25		X	X		15	2
						TOTAL	152	

(N) - NOT A SEPARATE PAY ITEM, FOR INFORMATION ONLY.

SUMMARY OF QUANTITIES
Q-5

STATE OF CALIFORNIA - DEPARTMENT OF TRANSPORTATION
Caltrans®
TRADE CORRIDOR IMPROVEMENT FUND

FUNCTIONAL SUPERVISOR: NICOLA BERNARD
CALCULATED-DESIGNED BY: SIRAJUL RONI
CHECKED BY: DYLAN MOORE
REVISED BY
DATE REVISED

LAST REVISION 04-20-15
DATE PLOTTED => 10-AUG-2015
TIME PLOTTED => 15:10

Dist	COUNTY	ROUTE	POST MILES TOTAL PROJECT	SHEET No.	TOTAL SHEETS
11	Imp	8	R45.5/R55.0	134	211

REGISTERED CIVIL ENGINEER 04-27-15 DATE

08-03-15
PLANS APPROVAL DATE

REGISTERED PROFESSIONAL ENGINEER DYLAN S. MOORE No. 74711 Exp. 12-31-15 CIVIL STATE OF CALIFORNIA

THE STATE OF CALIFORNIA OR ITS OFFICERS OR AGENTS SHALL NOT BE RESPONSIBLE FOR THE ACCURACY OR COMPLETENESS OF SCANNED COPIES OF THIS PLAN SHEET.

MIDWEST GUARDRAIL SYSTEM

MGS No. #	LOCATION	DIRECTION	LAYOUT	MIDWEST GUARDRAIL SYSTEM	DOUBLE MIDWEST GUARDRAIL SYSTEM (WOOD POST)	MINOR CONCRETE (MINOR STRUCTURE) *	TRANSITION RAILING (TYPE WB-31)	END ANCHOR ASSEMBLY (TYPE SFT)	ALTERNATIVE MEDIAN CRASH CUSHION SYSTEM	ALTERNATIVE IN-LINE TERMINAL SYSTEM	ALTERNATIVE FLARED TERMINAL SYSTEM	RAIL TENSIONING ASSEMBLY	GUARD RAILING DELINEATOR TYPE F	GUARD RAILING DELINEATOR TYPE G	REMOVE GUARDRAIL	TREATED WOOD WASTE	REMOVE METAL RAILING	REMARKS
			(N)	LF	LF	CY	EA	EA	EA	EA	EA	EA	EA	EA	LF	LB	LF	
1	ANDERHOLT Rd OC	EB	14A	37.5	25.0			1	1			1						
		WB	14A	37.5	25.0			1	1			1						
		EB/WB													150.0	1,500		INCLUDES END TREATMENT
2	METZ Rd OC	EB	14A	37.5	25.0			1	1			1						
		WB	14A	37.5	25.0			1	1			1						
		EB/WB													150.0	1,500		INCLUDES END TREATMENT
3	TOWLAND Rd OC	EB	14A	37.5	25.0			1	1			1						
		WB	14A	37.5	25.0			1	1			1						
		EB/WB													150.0	1,500		INCLUDES END TREATMENT
4	ALAMO RIVER	EB	11B	300.0				1			1		12					2657+00.00 TO 2660+00.00 "A"
		EB													200.0	2,000		INCLUDES END TREATMENT
		WB	11B	337.5				1			1		14					2658+00.00 TO 2661+37.50 "A"
		WB													250.0	2,000		INCLUDES END TREATMENT
5	BONDS CORNER Rd OC	EB	14A	37.5	25.0			1	1			1						
		WB	14A	37.5	25.0			1	1			1						
		EB/WB													150.0	2,000		INCLUDES END TREATMENT
6	MILLER Rd OC	EB	14A	37.5	25.0			1	1			1						
		WB	14A	37.5	25.0			1	1			1						
		EB/WB													150.0	1,500		INCLUDES END TREATMENT
7	Rte 115/ 8 SEPARATION	EB	14A	37.5	25.0			1	1			1						
		WB	14A	37.5	25.0			1	1			1						
		EB/WB													150.0	1,500		
8	EAST HIGHLINE CANAL BRIDGE	EB-Rt	12B	1,300		1.3	1				1		53					2894+49.73 TO 2907+74.73 "A"
		EB-Rt													1,300.0	13,000	65.0	2894+00.00 TO 2907+00.00 "A"
9	EAST HIGHLINE CANAL BRIDGE (MEDIAN)	EB-Lt	12E	50.0	75.0	1.3	1		1			1		6				2905+48.79 TO 2906+98.79 "A"
		EB-Lt															100.0	
10	EAST HIGHLINE CANAL BRIDGE	WB-Lt	12B	125.0		1.3	1				1		6					2910+26.78 TO 2911+64.28 "A"
		WB-Lt															65.0	
11	EAST HIGHLINE CANAL BRIDGE (MEDIAN)	WB-Rt	12E	50	112.5	1.3	1		1			1		8				2910+50.12 TO 2912+37.62 "A"
		WB-Rt															85.0	
12	OVERHEAD SIGN	EB	16A	50.0				1		1			2					2523+19.00 "A"
		EB													87.5	875		
13	OVERHEAD SIGN	EB	16A	62.50				1		1			3					2536+16.90 "A"
		EB													87.5	875		
		SUBTOTAL		2,712.5	487.5	5.2	4	16	14	2	4	14	90	14				
		TOTAL		2,712.5	487.5	5.2	4	16	14	2	4	14	104		2,825	28,250	315	

* SEE DRAINAGE QUANTITIES SHEETS FOR ADDITIONAL QUANTITIES

SUMMARY OF QUANTITIES
Q-6

STATE OF CALIFORNIA - DEPARTMENT OF TRANSPORTATION
Caltrans®
TRADE CORRIDOR IMPROVEMENT FUND

FUNCTIONAL SUPERVISOR: NICOLA BERNARD
CALCULATED-DESIGNED BY: RADHIKA MOTHKURI
CHECKED BY: DYLAN MOORE
REVISED BY
DATE REVISED

LAST REVISION 04-20-15
DATE PLOTTED => 10-AUG-2015
TIME PLOTTED => 15:10

Dist	COUNTY	ROUTE	POST MILES TOTAL PROJECT	SHEET No.	TOTAL SHEETS
11	Imp	8	R45.5/R55.0	135	211

Dylan Moore 04-27-15
REGISTERED CIVIL ENGINEER DATE

08-03-15
PLANS APPROVAL DATE

REGISTERED PROFESSIONAL ENGINEER DYLAN S. MOORE No. 74711 Exp. 12-31-15 CIVIL STATE OF CALIFORNIA

THE STATE OF CALIFORNIA OR ITS OFFICERS OR AGENTS SHALL NOT BE RESPONSIBLE FOR THE ACCURACY OR COMPLETENESS OF SCANNED COPIES OF THIS PLAN SHEET.

OVERSIDE DRAIN QUANTITIES

LOCATION				REMOVE ASPHALT CONCRETE OVERSIDE DRAIN	REMOVE CONCRETE	MINOR CONCRETE (Misc CONSTRUCTION)				PLACE HOT MIX ASPHALT (Misc AREA)		MINOR HOT MIX ASPHALT *	ASPHALTIC EMULSION ** (FOG SEAL COAT)	REMARKS
						GUTTER	DITCH (N) LENGTH	DITCH	CUTOFF WALL	GUTTER	DITCH			
LINE	STATION	SIDE L+	SIDE R+	EA	CY	CY	LF	CY	CY	SQYD	SQYD	TON	TON	
"A"	2570+15.00		X		1.04	1.0	16.0	0.54	0.043					EB ROUTE 8
"A"	2573+85.00		X		1.91	1.0	22.0	0.74	0.043					EB ROUTE 8
"A"	2575+90.00		X		2.20	1.0	29.0	0.98	0.043					EB ROUTE 8
"A"	2656+20.00		X			1.2	20.0	0.58	0.043					EB/ ALAMO RIVER AREA (AI+ 2)
"A"	2657+00.00		X	1										EB/ REMOVE ONLY
"A"	2659+50.00		X	1										EB/ REMOVE ONLY
"A"	2662+12.00		X			1.2	32.0	1.03	0.043					EB/ ALAMO RIVER AREA (AI+ 2)
"A"	2886+80.00		X		7.93	1.0	37.0	1.25	0.043					EB ROUTE 8
"A"	2931+87.00		X		7.49	1.0	29.0	0.98	0.043					EB ROUTE 8
"A"	2535+60.00	X		1		1.0	8.0	0.27	0.043					WB ROUTE 8
"A"	2571+80.00	X			2.52	1.0	46.0	1.55	0.043					WB ROUTE 8
"A"	2575+00.00	X			2.42	1.0	16.0	0.54	0.043					WB ROUTE 8
"A"	2656+20.00	X				1.2	20.0	0.78	0.043					WB/ ALAMO RIVER AREA (AI+ 2)
"A"	2658+00.00	X		1										WB/ REMOVE ONLY
"A"	2662+12.00	X				1.2	33.0	1.23	0.043					WB/ ALAMO RIVER AREA (AI+ 2)
"A"	2887+00.00	X			7.93	1.0	37.0	1.25	0.043					EB ROUTE 8
"A"	2931+85.00	X			7.74	1.0	26.0	0.88	0.043					EB ROUTE 8
"ESR"	2536+33.00		X	1						3.9	3.3	1.20	0.002	EB OFF-RAMP/SB ORCHARD Rd OC
"ESR"	2539+36.00		X	1						3.9	3.3	1.20	0.002	EB OFF-RAMP/SB ORCHARD Rd OC
"ESR"	2542+50.00		X	1						3.9	4.8	1.44	0.002	EB OFF-RAMP/SB ORCHARD Rd OC
"ESR"	2547+17.00		X	1						3.9	8.4	2.06	0.003	EB OFF-RAMP/SB ORCHARD Rd OC
"ESR"	2549+90.00		X		1.38					3.9	7.3	1.87	0.003	EB OFF-RAMP/SB ORCHARD Rd OC
"ESR"	2555+65.00		X		2.02					3.9	11.4	2.54	0.004	EB OFF-RAMP/SB ORCHARD Rd OC
"EN"	2551+15.00	X			1.88					3.9	9.2	2.18	0.003	EB OFF-RAMP/NB ORCHARD Rd OC
"SE"	2552+04.00		X	1						3.9	4.4	1.38	0.002	EB ON-RAMP/SB ORCHARD Rd OC
"SE"	2552+80.00		X	1						3.9	4.4	1.38	0.002	EB ON-RAMP/SB ORCHARD Rd OC
"SE"	2554+00.00		X	1						3.9	2.6	1.08	0.002	EB ON-RAMP/SB ORCHARD Rd OC
"WS"	2558+36.00		X		1.38					3.9	6.6	1.75	0.003	WB OFF-RAMP/ ORCHARD Rd OC
"WS"	2559+68.00		X		1.38					3.9	5.9	1.63	0.002	WB OFF-RAMP/ ORCHARD Rd OC
"WS"	2562+90.00	X			1.28					3.9	4.4	1.38	0.002	WB OFF-RAMP/ ORCHARD Rd OC
"WS"	2565+00.00	X			1.05					3.9	4.4	1.38	0.002	WB OFF-RAMP/ ORCHARD Rd OC
"WS"	2567+55.00	X			1.05					3.9	4.8	1.44	0.002	WB OFF-RAMP/ ORCHARD Rd OC
"AW"	392+00.00		X	1						3.9	5.1	1.51	0.002	ORCHARD Rd OC (NB)
"SW"	2542+23.00	X		1						3.9	3.7	1.26	0.002	WB ON-RAMP/SB ORCHARD Rd OC
"SW"	2544+57.00	X		1						3.9	3.7	1.26	0.002	WB ON-RAMP/SB ORCHARD Rd OC
"SW"	2548+51.00	X			1.47					3.9	9.2	2.18	0.003	WB ON-RAMP/SB ORCHARD Rd OC
"NW"	2557+73.00	X		1						3.9	5.5	1.57	0.002	WB ON-RAMP/NB ORCHARD Rd OC
"NE"	2554+43.00		X		2.57					3.9	17.6	3.58	0.005	EB ON-RAMP/NB ORCHARD Rd OC
"NE"	2557+31.00		X		1.88					3.9	12.1	2.67	0.004	EB ON-RAMP/NB ORCHARD Rd OC
"NE"	2559+90.00		X		1.28					3.9	7.3	1.87	0.003	EB ON-RAMP/NB ORCHARD Rd OC
"NE"	2563+28.00		X	1						3.9	5.9	1.63	0.002	EB ON-RAMP/NB ORCHARD Rd OC
"NE"	2565+60.00		X	1						3.9	6.2	1.69	0.003	EB ON-RAMP/NB ORCHARD Rd OC
"NE"	2567+65.00		X	1						3.9	6.6	1.75	0.003	EB ON-RAMP/NB ORCHARD Rd OC
"R3B"	2690+74.00		X		2.57					3.9	9.5	2.24	0.003	EB OFF-RAMP/BONDS CORNER Rd OC
"R2B"	2705+33.00		X		5.67					3.9	9.2	2.18	0.003	EB ON-RAMP/BONDS CORNER Rd OC
"R1B"	2705+60.00	X			5.14					3.9	7.3	1.87	0.003	WB OFF-RAMP/BONDS CORNER Rd OC
"R4B"	2690+17.00	X			3.97					3.9	5.9	1.63	0.002	WB ON-RAMP/BONDS CORNER Rd OC
"R2"	2865+82.00		X							3.9	11.7	2.61	0.004	REMOVE PIPE/ SEE DQ-2
"R3"	2849+06.00		X		6.95					3.9	8.1	1.99	0.003	EB OFF-RAMP/Rte 115/8 Sep
"R4"	2849+32.00	X			4.71					3.9	8.1	1.99	0.003	WB ON-RAMP/Rte 115/8 Sep
SUBTOTAL				18	88.8	14.80	-	12.60	0.60	128.7	227.9	59.4	0.088	
TOTAL				18	88.8	28.00				356.6		59.4	0.088	

(N) - NOT A SEPARATE PAY ITEM, FOR INFORMATION ONLY
* SEE DIKE QUANTITIES TABLE FOR ADDITIONAL QUANTITIES.
** SEE DIKE QUANTITIES TABLE, COLD PLANE QUANTITIES TABLE & STAGING QUANTITIES FOR ADDITIONAL QUANTITIES.

DOWNDRAIN QUANTITIES

LOCATION				REMOVE DOWNDRAIN (EA)	12" CORRUGATED STEEL PIPE DOWNDRAIN (.079" THICK) ***	REMARKS
LINE	STATION	SIDE L+	SIDE R+	EA	LF	
"NW"	2561+42.00	X		1	30	WB ON-RAMP/ INLET PROTECT IN PLACE
"NW"	2564+78.00	X		1	40	WB ON-RAMP/ INLET PROTECT IN PLACE
"R1"	2863+50.00	X	X	1	80	WB OFF-RAMP/ INLET PROTECT IN PLACE
TOTAL				3	150	

*** TO BE REMOVED/REPLACED IN KIND

JOINT SEAL (PREFORMED COMPRESSION)

LOCATION							JOINT SEAL (PREFORMED COMPRESSION)
LINE	STATION LIMITS BEGIN	STATION LIMITS END	DIRECTION EB	DIRECTION WB	SIDE INSIDE ETW	SIDE OUTSIDE ETW	LF
"A"	2434+50.00	2907+36.50	X		X		47,287
"A"	2434+50.00	2907+44.08	X			X	47,294
"A"	2911+02.77	2936+10.00	X		X		2,507
"A"	2911+09.34	2936+10.00	X			X	2,501
"A"	2434+50.00	2906+97.27		X	X		47,247
"A"	2434+50.00	2906+89.22		X		X	47,239
"A"	2910+55.40	2936+10.00		X	X		2,555
"A"	2910+48.56	2936+10.00		X		X	2,561
						TOTAL	199,191

SUMMARY OF QUANTITIES
Q-7

REVISED BY | DATE REVISED
SIRAJUL RONI | DYLAN MOORE
CALCULATED-DESIGNED BY | CHECKED BY
FUNCTIONAL SUPERVISOR
NICOLA BERNARD

STATE OF CALIFORNIA - DEPARTMENT OF TRANSPORTATION
Caltrans®
TRADE CORRIDOR IMPROVEMENT FUND

LAST REVISION 04-20-15 | DATE PLOTTED => 10-AUG-2015 TIME PLOTTED => 15:10

Dist	COUNTY	ROUTE	POST MILES TOTAL PROJECT	SHEET No.	TOTAL SHEETS
11	Imp	8	R45.5/R55.0	136	211

REGISTERED ELECTRICAL ENGINEER 07-19-15 DATE

08-03-15
PLANS APPROVAL DATE

REGISTERED PROFESSIONAL ENGINEER DANNY D.McCLURE No. 16074 Exp. 12-31-15 ELECTRICAL STATE OF CALIFORNIA

THE STATE OF CALIFORNIA OR ITS OFFICERS OR AGENTS SHALL NOT BE RESPONSIBLE FOR THE ACCURACY OR COMPLETENESS OF SCANNED COPIES OF THIS PLAN SHEET.

LEGEND and NOTES(TSO):

1 - FOR ACCURATE RIGHT OF WAY DATA, CONTACT RIGHT OF WAY ENGINEERING AT THE DISTRICT OFFICE.

2 - RS Exist 310 w HPS. INSTALL Roadway 2 LED LUMINAIRE.

LEGEND:

TSO = THIS SHEET ONLY

N C = NO CHANGE

CS = COUNT STATION

IID = IMPERIAL IRRIGATION DISTRICT

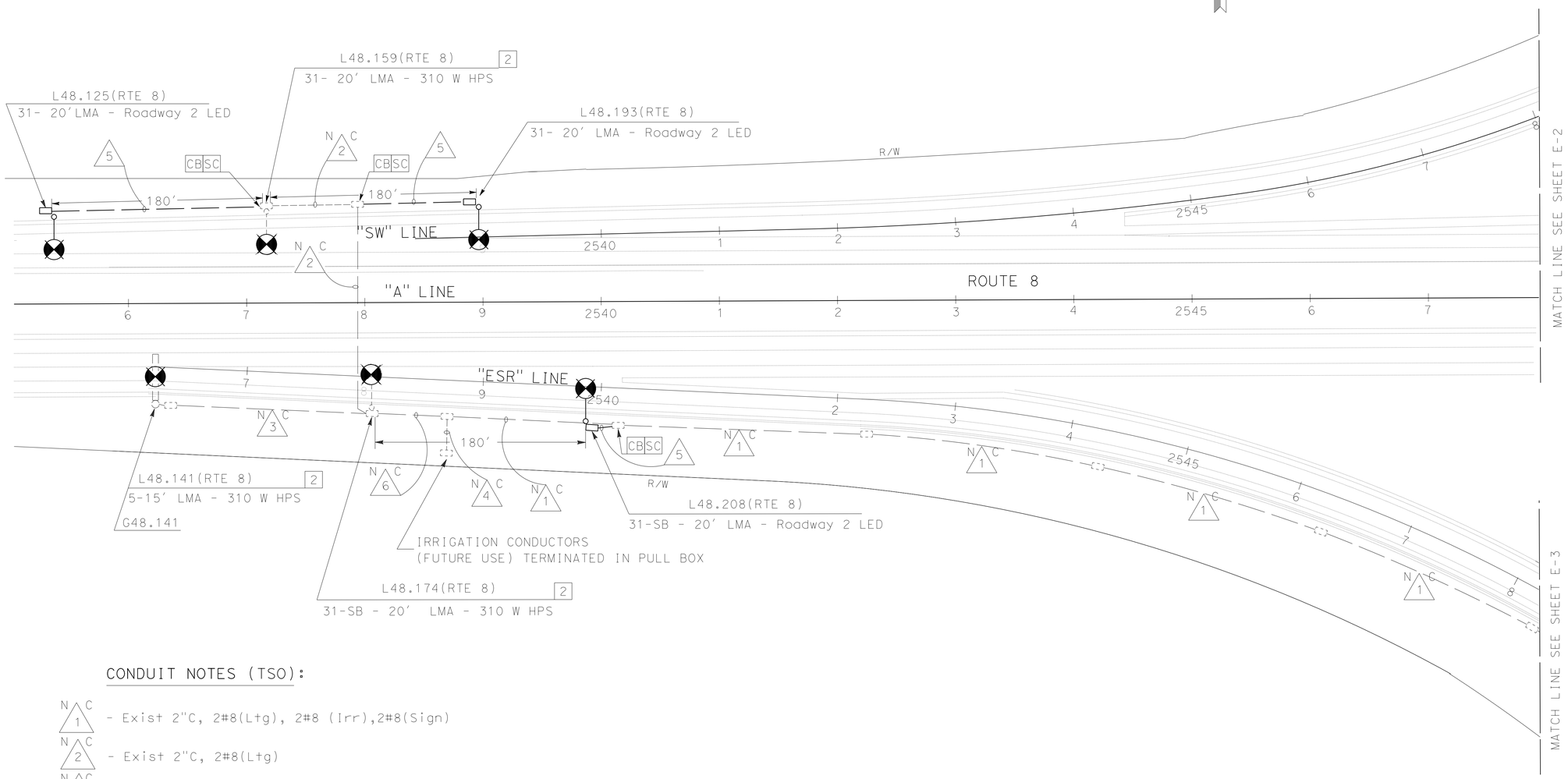

CONDUIT NOTES (TSO):

N C 1 - Exist 2"C, 2#8(Ltg), 2#8 (Irr),2#8(Sign)

N C 2 - Exist 2"C, 2#8(Ltg)

N C 3 - Exist 2"C, 2#8(Sign)

N C 4 - Exist 2"C, 2#8(Irr)

5 - 2"C, 2#8(Ltg)

N C 6 - Exist 2"C, 2#8(Ltg),2#8(Sign)

ROUTE 8/ORCHARD ROAD

MODIFY LIGHTING

E-1

APPROVED FOR ELECTRICAL WORK ONLY

SCALE: 1"= 50'

STATE OF CALIFORNIA - DEPARTMENT OF TRANSPORTATION
Caltrans® TRAFFIC ELECTRICAL

FUNCTIONAL SUPERVISOR: RAJPREET SINGH
CALCULATED-DESIGNED BY: ANTONIO A. RODRIGUEZ
CHECKED BY: DANNY McCLURE
REVISED BY / DATE REVISED

LAST REVISION 04-27-15
DATE PLOTTED => 10-AUG-2015
TIME PLOTTED => 15:10

Dist	COUNTY	ROUTE	POST MILES TOTAL PROJECT	SHEET No.	TOTAL SHEETS
11	Imp	8	R45.5/R55.0	137	211

REGISTERED ELECTRICAL ENGINEER 07-19-15 DATE

08-03-15
PLANS APPROVAL DATE

REGISTERED PROFESSIONAL ENGINEER DANNY D.McCLURE No. 16074 Exp. 12-31-15 ELECTRICAL STATE OF CALIFORNIA

THE STATE OF CALIFORNIA OR ITS OFFICERS OR AGENTS SHALL NOT BE RESPONSIBLE FOR THE ACCURACY OR COMPLETENESS OF SCANNED COPIES OF THIS PLAN SHEET.

LEGEND and NOTES(TSO):

1 - FOR ACCURATE RIGHT OF WAY DATA, CONTACT RIGHT OF WAY ENGINEERING AT THE DISTRICT OFFICE.

2 - RS Exist 310 w HPS. INSTALL Roadway 2 LED LUMINAIRE.

CONDUIT NOTES (TSO):

N C 1 - Exist 2"C, 2#8(Ltg)

N C 2 - Exist 2"C, 2#8(Ltg),2#8(Irr),2#6(FB),2#4(Ltg)
Exist 2"C, PT, 2#8 Sign)

N C 3 - Exist 2"C, 2#4(Ltg),6#8(Ltg),2#8(Irr),2#6(FB),2#8(Sign)

N C 4 - Exist 2"C, 2#4(Ltg-),6#8(Ltg),2#8(Irr),2#6(FB),4#14(PEU),2#8(Sign)

N C 5 - Exist 2"C, 2#4(Ltg),4#8(Ltg),2#8(Irr),2#6(FB),2#8(Sign)

6 - 2"C, 2#4(Ltg)

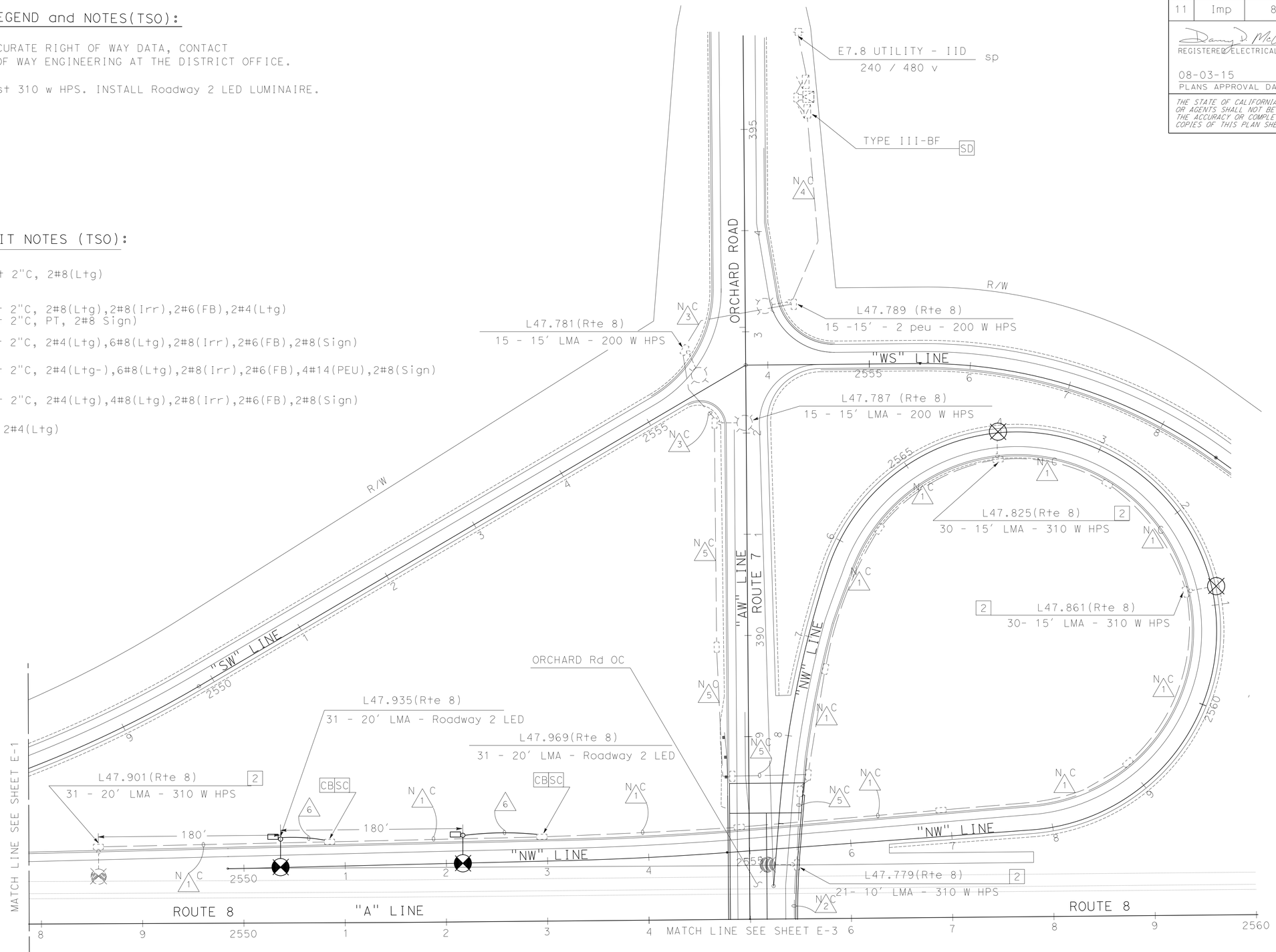

ROUTE 8/ROUTE 7

MODIFY LIGHTING

E-2

APPROVED FOR ELECTRICAL WORK ONLY

SCALE: 1" = 50'

STATE OF CALIFORNIA - DEPARTMENT OF TRANSPORTATION
Caltrans® TRAFFIC ELECTRICAL

FUNCTIONAL SUPERVISOR: RAJPREET SINGH
CALCULATED-DESIGNED BY: ANTONIO A. RODRIGUEZ
CHECKED BY: DANNY McCLURE
REVISED BY
DATE REVISED

LAST REVISION 04-27-15
DATE PLOTTED => 10-AUG-2015
TIME PLOTTED => 15:10

Dist	COUNTY	ROUTE	POST MILES TOTAL PROJECT	SHEET No.	TOTAL SHEETS
11	Imp	8	R45.5/R55.0	138	211

REGISTERED ELECTRICAL ENGINEER 07-19-15 DATE

08-03-15
PLANS APPROVAL DATE

REGISTERED PROFESSIONAL ENGINEER DANNY D.McCLURE No. 16074 Exp. 12-31-15 ELECTRICAL STATE OF CALIFORNIA

THE STATE OF CALIFORNIA OR ITS OFFICERS OR AGENTS SHALL NOT BE RESPONSIBLE FOR THE ACCURACY OR COMPLETENESS OF SCANNED COPIES OF THIS PLAN SHEET.

LEGEND and NOTES(TSO):

1 - FOR ACCURATE RIGHT OF WAY DATA, CONTACT RIGHT OF WAY ENGINEERING AT THE DISTRICT OFFICE.

2 - RS Exist 310 w HPS. INSTALL Roadway 2 LED LUMINAIRE.

CONDUIT NOTES (TSO):

N C 1 - Exist 2"C, 2#8(Ltg)

N C 2 - Exist 2"C, 2#8(Ltg)

N C 3 - Exist 2"C, 2#4(Ltg), 2#8(Irr), 2#6(FB), 2#8(Sign)

N C 4 - Exist 2"C, 2#4(Ltg),2#8(Irr),2#6(FB), 2#8(Sign)

N C 5 - Exist 2"C, 2#8(Ltg), 2#6(FB)

N C 6 - Exist 2"C, 2#8(Ltg), 2#8(Irr), 2#8(Sign)

N C 7 - Exist 2"C, 2#8(Ltg), 4#14(PEU)

N C 8 - Exist 2"C, 2#8(Ltg),2#8(Irr),2#6(FB), 2#4(Ltg), 2#8 (Sign)
Exist 2"C, PT

9 - 2"C, 2#8(Ltg)

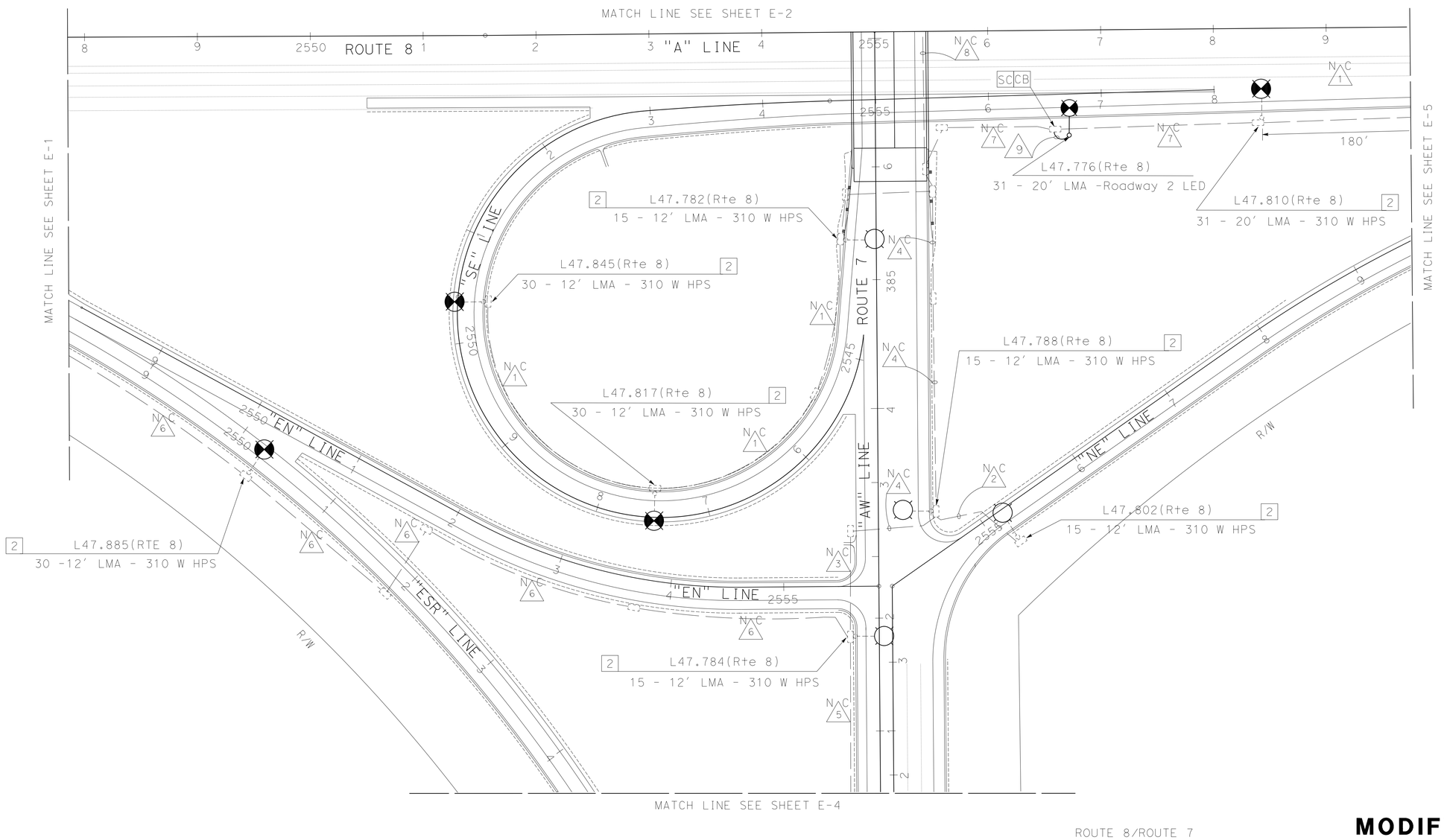

ROUTE 8/ROUTE 7

MODIFY LIGHTING

APPROVED FOR ELECTRICAL WORK ONLY

SCALE: 1" = 50'

E-3

STATE OF CALIFORNIA - DEPARTMENT OF TRANSPORTATION
Caltrans® TRAFFIC ELECTRICAL

FUNCTIONAL SUPERVISOR: RAJPREET SINGH
CALCULATED-DESIGNED BY: ANTONIO A. RODRIGUEZ
CHECKED BY: DANNY McCLURE
REVISED BY
DATE REVISED

LAST REVISION 04-27-15
DATE PLOTTED => 10-AUG-2015
TIME PLOTTED => 15:10

Dist	COUNTY	ROUTE	POST MILES TOTAL PROJECT	SHEET No.	TOTAL SHEETS
11	Imp	8	R45.5/R55.0	139	211

REGISTERED ELECTRICAL ENGINEER 07-19-15 DATE

08-03-15
PLANS APPROVAL DATE

REGISTERED PROFESSIONAL ENGINEER DANNY D.McCLURE No. 16074 Exp. 12-31-15 ELECTRICAL STATE OF CALIFORNIA

THE STATE OF CALIFORNIA OR ITS OFFICERS OR AGENTS SHALL NOT BE RESPONSIBLE FOR THE ACCURACY OR COMPLETENESS OF SCANNED COPIES OF THIS PLAN SHEET.

LEGEND and NOTES(TSO):

1 - FOR ACCURATE RIGHT OF WAY DATA, CONTACT RIGHT OF WAY ENGINEERING AT THE DISTRICT OFFICE.

2 - RS Exist 310 w HPS. INSTALL Roadway 2 LED LUMINAIRE.

CONDUIT NOTES(TSO):

N C 1 - Exist 2"C, 2#8(Ltg)

N C 2 - Exist 2"C, 2#8(Ltg), 2#6(FB)

3 - 2"C, 2#8(Ltg)

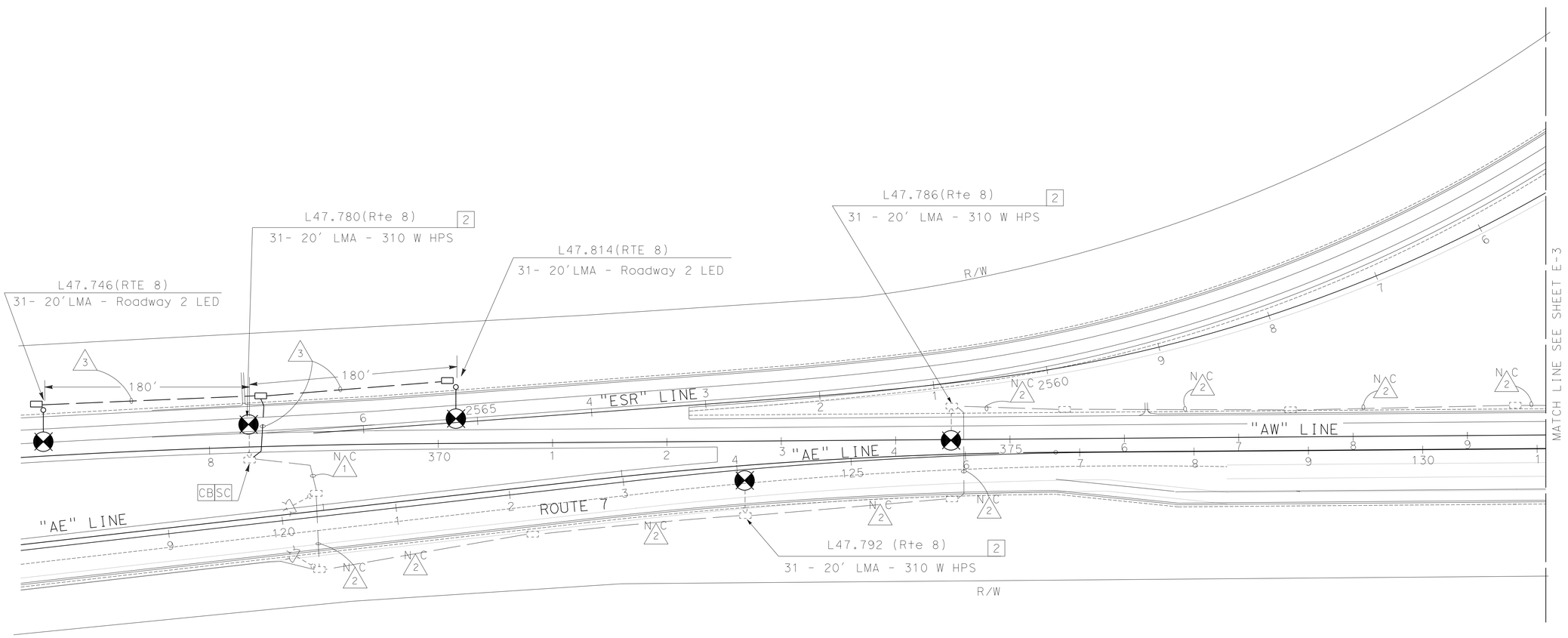

ROUTE 8/ROUTE 7

MODIFY LIGHTING

APPROVED FOR ELECTRICAL WORK ONLY

SCALE: 1" = 50'

E-4

STATE OF CALIFORNIA - DEPARTMENT OF TRANSPORTATION
Caltrans® TRAFFIC ELECTRICAL

FUNCTIONAL SUPERVISOR: RAJPREET SINGH
CALCULATED-DESIGNED BY: ANTONIO A. RODRIGUEZ
CHECKED BY: DANNY McCLURE
REVISED BY
DATE REVISED

LAST REVISION 04-27-15
DATE PLOTTED => 10-AUG-2015
TIME PLOTTED => 15:10

Dist	COUNTY	ROUTE	POST MILES TOTAL PROJECT	SHEET No.	TOTAL SHEETS
11	Imp	8	R45.5/R55.0	140	211

REGISTERED ELECTRICAL ENGINEER 07-19-15 DATE

08-03-15
PLANS APPROVAL DATE

REGISTERED PROFESSIONAL ENGINEER DANNY D.McCLURE No. 16074 Exp. 12-31-15 ELECTRICAL STATE OF CALIFORNIA

THE STATE OF CALIFORNIA OR ITS OFFICERS OR AGENTS SHALL NOT BE RESPONSIBLE FOR THE ACCURACY OR COMPLETENESS OF SCANNED COPIES OF THIS PLAN SHEET.

LEGEND and NOTES(TSO):

1 - FOR ACCURATE RIGHT OF WAY DATA, CONTACT RIGHT OF WAY ENGINEERING AT THE DISTRICT OFFICE.

[2] - [RS] Exist 310 w HPS. INSTALL Roadway 2 LED LUMINAIRE.

CONDUIT NOTES(TSO):

N C 1 - Exist 2"C, 2#8(Ltg)

2 - 2"C, 2#8(Ltg)

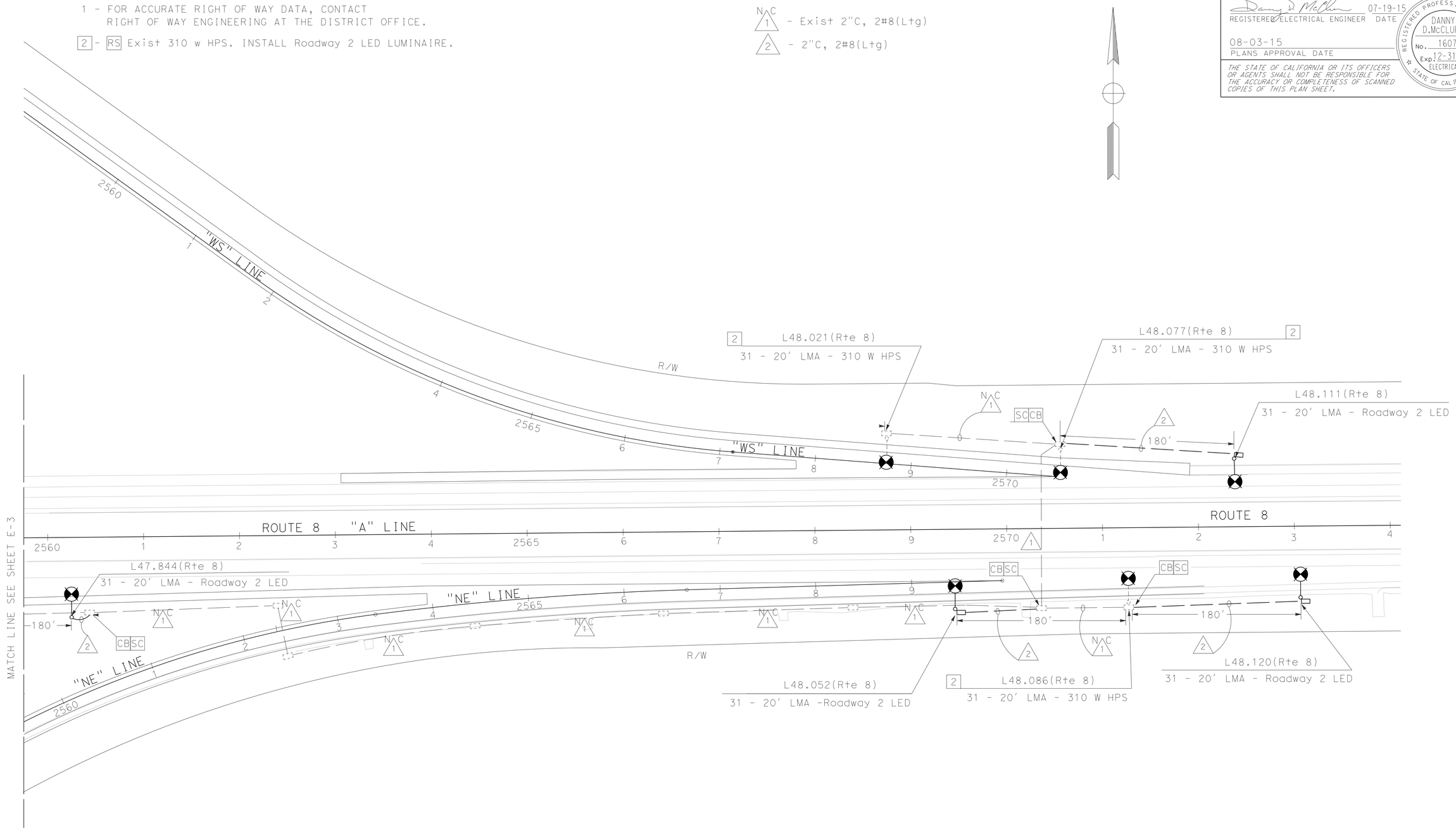

ROUTE 8/ROUTE 7

MODIFY LIGHTING

E-5

APPROVED FOR ELECTRICAL WORK ONLY

SCALE: 1" = 50'

STATE OF CALIFORNIA - DEPARTMENT OF TRANSPORTATION
Caltrans® **TRAFFIC ELECTRICAL**

FUNCTIONAL SUPERVISOR: RAJPREET SINGH
CALCULATED-DESIGNED BY: ANTONIO A. RODRIGUEZ
CHECKED BY: DANNY McCLURE
REVISED BY
DATE REVISED

LAST REVISION 04-27-15
DATE PLOTTED => 10-AUG-2015
TIME PLOTTED => 15:10

Dist	COUNTY	ROUTE	POST MILES TOTAL PROJECT	SHEET No.	TOTAL SHEETS
11	Imp	8	R45.5/R55.0	141	211

Danny D. McClure 07-19-15
REGISTERED ELECTRICAL ENGINEER DATE

08-03-15
PLANS APPROVAL DATE

REGISTERED PROFESSIONAL ENGINEER DANNY D.McCLURE No. 16074 Exp. 12-31-15 ELECTRICAL STATE OF CALIFORNIA

THE STATE OF CALIFORNIA OR ITS OFFICERS OR AGENTS SHALL NOT BE RESPONSIBLE FOR THE ACCURACY OR COMPLETENESS OF SCANNED COPIES OF THIS PLAN SHEET.

LEGEND and NOTES(TSO):

1 - FOR ACCURATE RIGHT OF WAY DATA, CONTACT RIGHT OF WAY ENGINEERING AT THE DISTRICT OFFICE.

CONDUIT NOTES(TSO):

1 - 2"C, 2#6(L+g-E).

CIRCUIT BREAKERS

MAIN-2P-100 A

A 1P-15 A SPARE
B 1P-30 A SPARE
C 1P-15 A
D, E } 2P-30 A
F, G } 2P-30 A

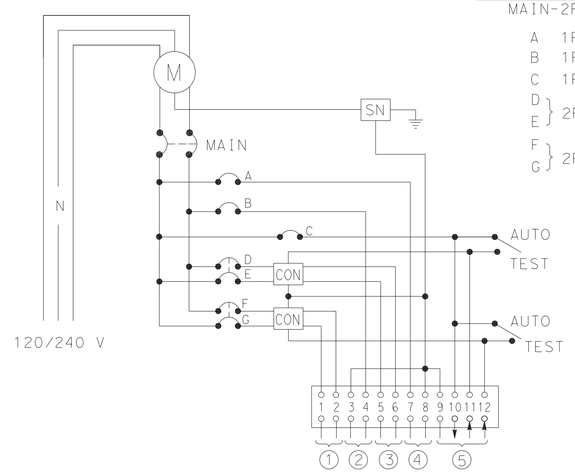

1 - LIGHTING(E)
2 - SPARE
3 - LIGHTING(W)
4 - SPARE
5 - PEU

WIRING DIAGRAM "A"

(TYPE III-BF EQUIPMENT ENCLOSURE
(SEE Std PLANS ES-2C & ES-2E)

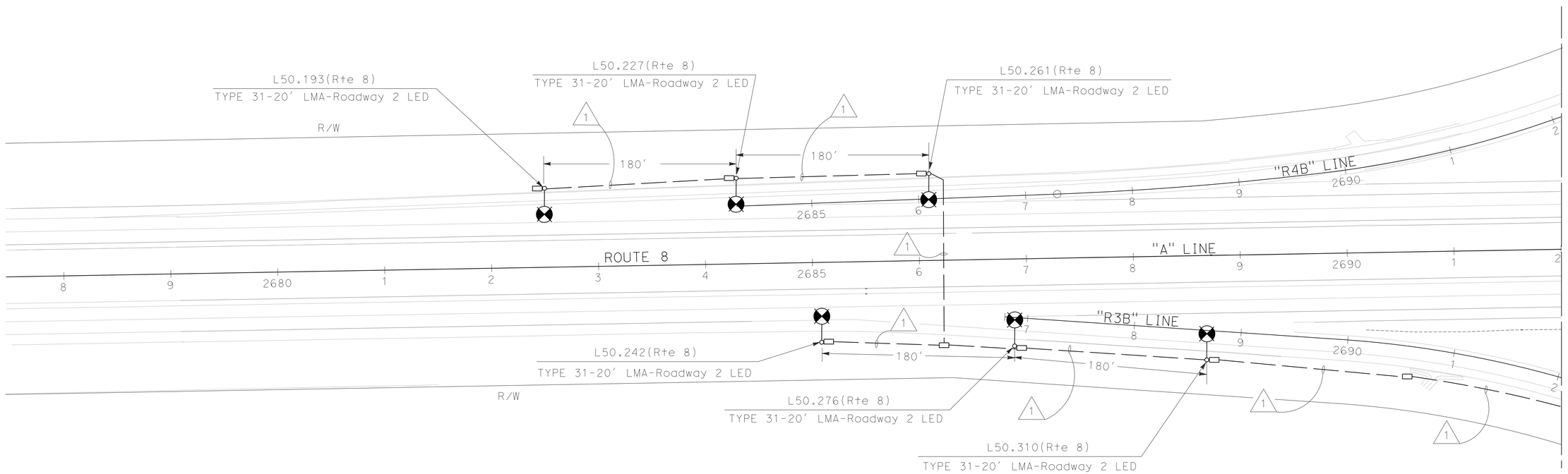

ROUTE 8/BONDS CORNER ROAD

SCALE: 1" = 50'

APPROVED FOR ELECTRICAL WORK ONLY

LIGHTING

E-6

REVISED BY	DATE REVISED
ANTONIO A. RODRIGUEZ	DANNY McCLURE
CALCULATED-DESIGNED BY	CHECKED BY
FUNCTIONAL SUPERVISOR	RAJPREET SINGH

STATE OF CALIFORNIA - DEPARTMENT OF TRANSPORTATION
Caltrans® TRAFFIC ELECTRICAL

LAST REVISION 04-27-15 | DATE PLOTTED => 10-AUG-2015 | TIME PLOTTED => 15:10

Dist	COUNTY	ROUTE	POST MILES TOTAL PROJECT	SHEET No.	TOTAL SHEETS
11	Imp	8	R45.5/R55.0	142	211

REGISTERED ELECTRICAL ENGINEER — DATE 07-19-15

08-03-15
PLANS APPROVAL DATE

REGISTERED PROFESSIONAL ENGINEER — DANNY D.McCLURE — No. 16074 — Exp. 12-31-15 — ELECTRICAL — STATE OF CALIFORNIA

THE STATE OF CALIFORNIA OR ITS OFFICERS OR AGENTS SHALL NOT BE RESPONSIBLE FOR THE ACCURACY OR COMPLETENESS OF SCANNED COPIES OF THIS PLAN SHEET.

LEGEND and NOTES(TSO):

1 - FOR ACCURATE RIGHT OF WAY DATA, CONTACT RIGHT OF WAY ENGINEERING AT THE DISTRICT OFFICE.

2 - INSTALL TYPE H SERVICE RISER PER IID REQUIREMENTS.

3 - TYPE III-BF SERVICE EQUIPMENT ENCLOSURE. SEE WIRING DIAGRAM "A" ON SHEET E-6

4 - DUAL PEU REQUIRED.

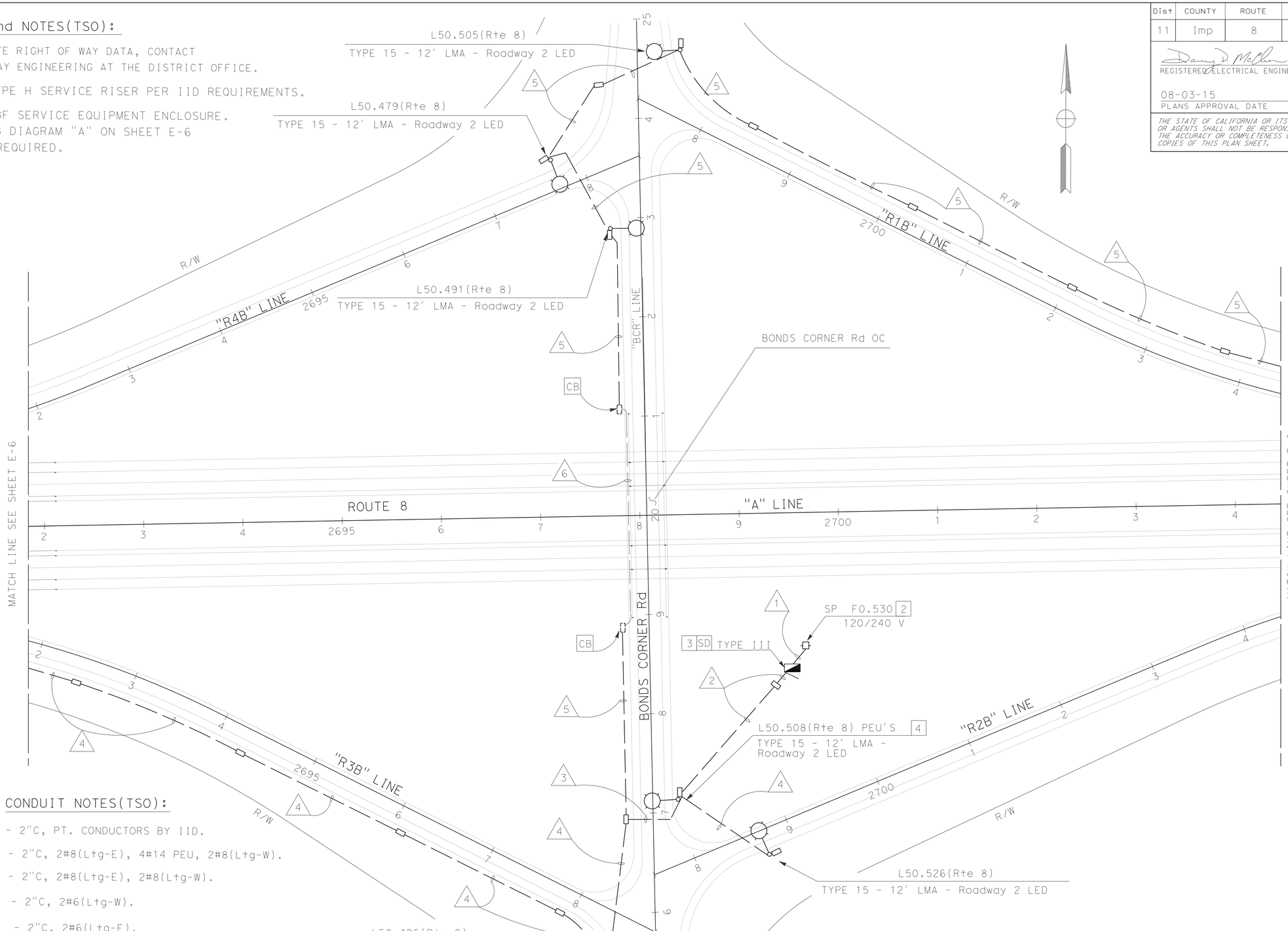

CONDUIT NOTES(TSO):

1 - 2"C, PT. CONDUCTORS BY IID.

2 - 2"C, 2#8(Ltg-E), 4#14 PEU, 2#8(Ltg-W).

3 - 2"C, 2#8(Ltg-E), 2#8(Ltg-W).

4 - 2"C, 2#6(Ltg-W).

5 - 2"C, 2#6(Ltg-E).

6 - Exist 1 1/2"C, PT. ADD 2#8(Ltg-E).

APPROVED FOR ELECTRICAL WORK ONLY

ROUTE 8/BONDS CORNER ROAD

SCALE: 1" = 50'

LIGHTING

E-7

REVISED BY	DATE REVISED
ANTONIO A. RODRIGUEZ	DANNY McCLURE
CALCULATED-DESIGNED BY	CHECKED BY
FUNCTIONAL SUPERVISOR	RAJPREET SINGH

STATE OF CALIFORNIA - DEPARTMENT OF TRANSPORTATION
Caltrans® TRAFFIC ELECTRICAL

LAST REVISION 04-27-15 | DATE PLOTTED => 10-AUG-2015 | TIME PLOTTED => 15:10

Dist	COUNTY	ROUTE	POST MILES TOTAL PROJECT	SHEET No.	TOTAL SHEETS
11	Imp	8	R45.5/R55.0	143	211

REGISTERED ELECTRICAL ENGINEER DATE 07-19-15

08-03-15
PLANS APPROVAL DATE

REGISTERED PROFESSIONAL ENGINEER DANNY D.McCLURE No. 16074 Exp. 12-31-15 ELECTRICAL STATE OF CALIFORNIA

THE STATE OF CALIFORNIA OR ITS OFFICERS OR AGENTS SHALL NOT BE RESPONSIBLE FOR THE ACCURACY OR COMPLETENESS OF SCANNED COPIES OF THIS PLAN SHEET.

LEGEND and NOTES(TSO):

1 - FOR ACCURATE RIGHT OF WAY DATA, CONTACT RIGHT OF WAY ENGINEERING AT THE DISTRICT OFFICE.

CONDUIT NOTES(TSO):

1 - 2"C, 2#6(Ltg-E).

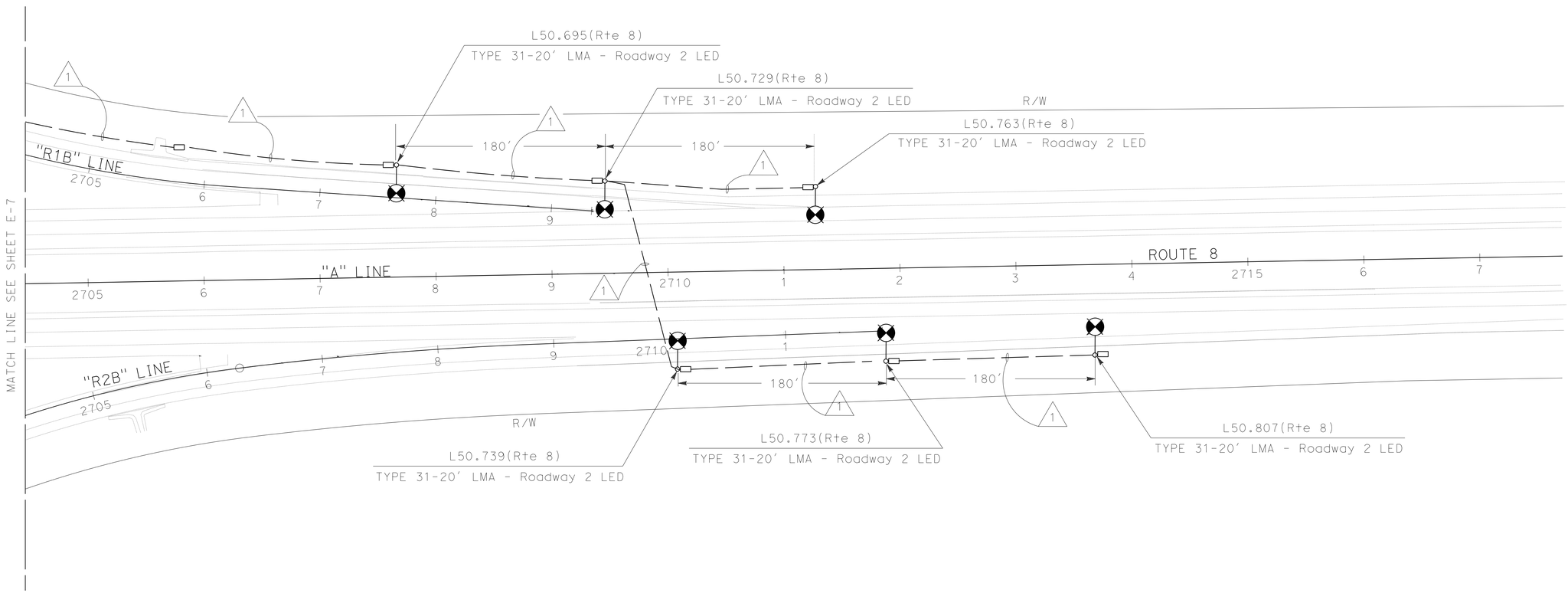

ROUTE 8/BONDS CORNER ROAD

LIGHTING

E-8

APPROVED FOR ELECTRICAL WORK ONLY

SCALE: 1" = 50'

STATE OF CALIFORNIA - DEPARTMENT OF TRANSPORTATION
Caltrans® **TRAFFIC ELECTRICAL**

FUNCTIONAL SUPERVISOR: RAJPREET SINGH
CALCULATED-DESIGNED BY: ANTONIO A. RODRIGUEZ
CHECKED BY: DANNY McCLURE
REVISED BY
DATE REVISED

LAST REVISION 04-27-15
DATE PLOTTED => 10-AUG-2015
TIME PLOTTED => 15:10

Dist	COUNTY	ROUTE	POST MILES TOTAL PROJECT	SHEET No.	TOTAL SHEETS
11	Imp	8	R45.5/R55.0	144	211

REGISTERED ELECTRICAL ENGINEER DATE 07-19-15

08-03-15
PLANS APPROVAL DATE

REGISTERED PROFESSIONAL ENGINEER DANNY D.McCLURE No. 16074 Exp. 12-31-15 ELECTRICAL STATE OF CALIFORNIA

THE STATE OF CALIFORNIA OR ITS OFFICERS OR AGENTS SHALL NOT BE RESPONSIBLE FOR THE ACCURACY OR COMPLETENESS OF SCANNED COPIES OF THIS PLAN SHEET.

LEGEND and NOTES(TSO):

1 - FOR ACCURATE RIGHT OF WAY DATA, CONTACT RIGHT OF WAY ENGINEERING AT THE DISTRICT OFFICE.

2 - INSTALL BY PLAN SHEET E-16.

CIRCUIT BREAKERS

MAIN-2P-100 A

A 1P-20 A
B 1P-20 A
C 1P-20 A
D 1P-15 A
E, F 2P-30 A
G, H 2P-30 A

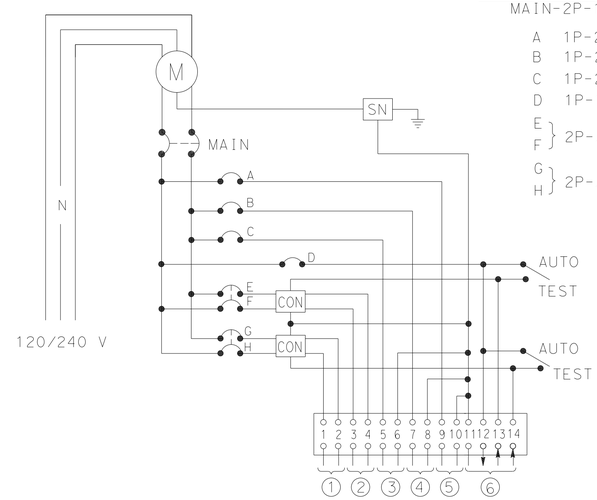

1 - LIGHTING(EAST)
2 - LIGHTING(WEST)
3 - TMS 1
4 - TMS 2
5 - TMS 3
6 - PEU

WIRING DIAGRAM "B"

(TYPE III-BF EQUIPMENT ENCLOSURE
SEE Std PLANS ES-2C & ES-2E)

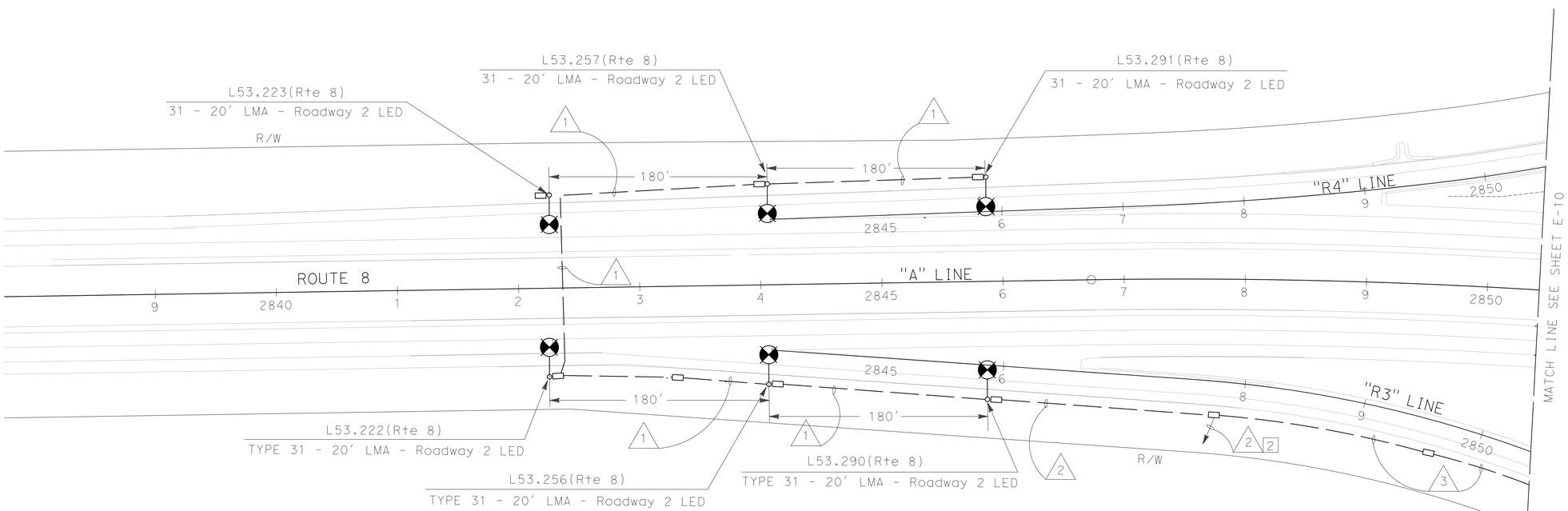

CONDUIT NOTES(TSO):

1 - 2"C, 2#8(Ltg-W).

2 - 2"C, 2#8(TMS 1).

3 - 2"C, 2#8(Ltg-W), 2#8(TMS 1).

ROUTE 8/VANDERLINDEN ROAD

APPROVED FOR ELECTRICAL WORK ONLY

SCALE: 1" = 50'

LIGHTING

E-9

REVISED BY | DATE REVISED
ANTONIO A. RODRIGUEZ | DANNY McCLURE
CALCULATED-DESIGNED BY | CHECKED BY
FUNCTIONAL SUPERVISOR | RAJPREET SINGH

STATE OF CALIFORNIA - DEPARTMENT OF TRANSPORTATION
Caltrans® TRAFFIC ELECTRICAL

LAST REVISION 04-27-15 | DATE PLOTTED => 10-AUG-2015 | TIME PLOTTED => 15:10

Dist	COUNTY	ROUTE	POST MILES TOTAL PROJECT	SHEET No.	TOTAL SHEETS
11	Imp	8	R45.5/R55.0	145	211

Danny D. McClure 07-19-15
REGISTERED ELECTRICAL ENGINEER DATE

08-03-15
PLANS APPROVAL DATE

REGISTERED PROFESSIONAL ENGINEER DANNY D.McCLURE No. 16074 Exp. 12-31-15 ELECTRICAL STATE OF CALIFORNIA

THE STATE OF CALIFORNIA OR ITS OFFICERS OR AGENTS SHALL NOT BE RESPONSIBLE FOR THE ACCURACY OR COMPLETENESS OF SCANNED COPIES OF THIS PLAN SHEET.

LEGEND and NOTES(TSO):

1 - FOR ACCURATE RIGHT OF WAY DATA, CONTACT RIGHT OF WAY ENGINEERING AT THE DISTRICT OFFICE.

2 - SEE WIRING DIAGRAM "B" ON SHEET E-9.

3 - INSTALL TYPE III-BF SERVICE EQUIPMENT ENCLOSURE IN EXISTING CONDUIT RUN. CONNECT CONDUCTORS AS NECESSARY.

4 - WORK SHOWN SHEET E-17.

5 - DUAL PEU REQUIRED.

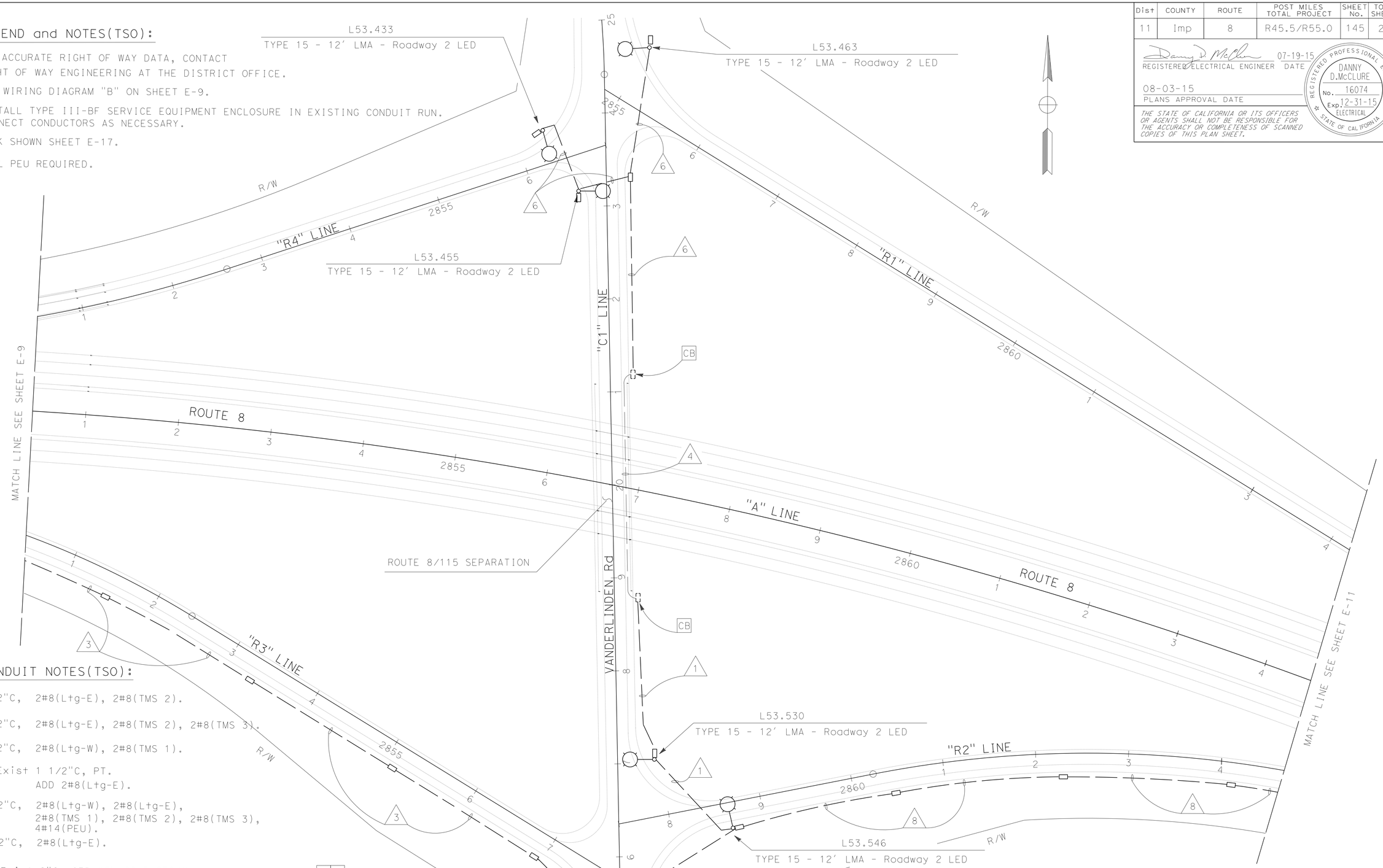

CONDUIT NOTES(TSO):

1 - 2"C, 2#8(Ltg-E), 2#8(TMS 2).

2 - 2"C, 2#8(Ltg-E), 2#8(TMS 2), 2#8(TMS 3).

3 - 2"C, 2#8(Ltg-W), 2#8(TMS 1).

4 - Exist 1 1/2"C, PT. ADD 2#8(Ltg-E).

5 - 2"C, 2#8(Ltg-W), 2#8(Ltg-E), 2#8(TMS 1), 2#8(TMS 2), 2#8(TMS 3), 4#14(PEU).

6 - 2"C, 2#8(Ltg-E).

7 - Exist 2"C, SERVICE CONDUCTORS.

8 - 2"C, 2#8(Ltg-E), 2#8(TMS 3).

APPROVED FOR ELECTRICAL WORK ONLY

SCALE: 1" = 50'

LIGHTING

E-10

REVISED BY	DATE REVISED
ANTONIO A. RODRIGUEZ	DANNY McCLURE
CALCULATED-DESIGNED BY	CHECKED BY
FUNCTIONAL SUPERVISOR	RAJPREET SINGH

STATE OF CALIFORNIA - DEPARTMENT OF TRANSPORTATION
Caltrans® TRAFFIC ELECTRICAL

LAST REVISION 04-27-15 | DATE PLOTTED => 10-AUG-2015 | TIME PLOTTED => 15:11

Dist	COUNTY	ROUTE	POST MILES TOTAL PROJECT	SHEET No.	TOTAL SHEETS
11	Imp	8	R45.5/R55.0	146	211

REGISTERED ELECTRICAL ENGINEER 07-19-15 DATE

08-03-15
PLANS APPROVAL DATE

REGISTERED PROFESSIONAL ENGINEER DANNY D.McCLURE No. 16074 Exp. 12-31-15 ELECTRICAL STATE OF CALIFORNIA

THE STATE OF CALIFORNIA OR ITS OFFICERS OR AGENTS SHALL NOT BE RESPONSIBLE FOR THE ACCURACY OR COMPLETENESS OF SCANNED COPIES OF THIS PLAN SHEET.

CONDUIT NOTES(TSO):

1 - 2"C, 2#8(Ltg-E).

2 - 2"C, 2#8(TMS 3)

3 - 2"C, 2#8(Ltg-E), 2#8(TMS 3).

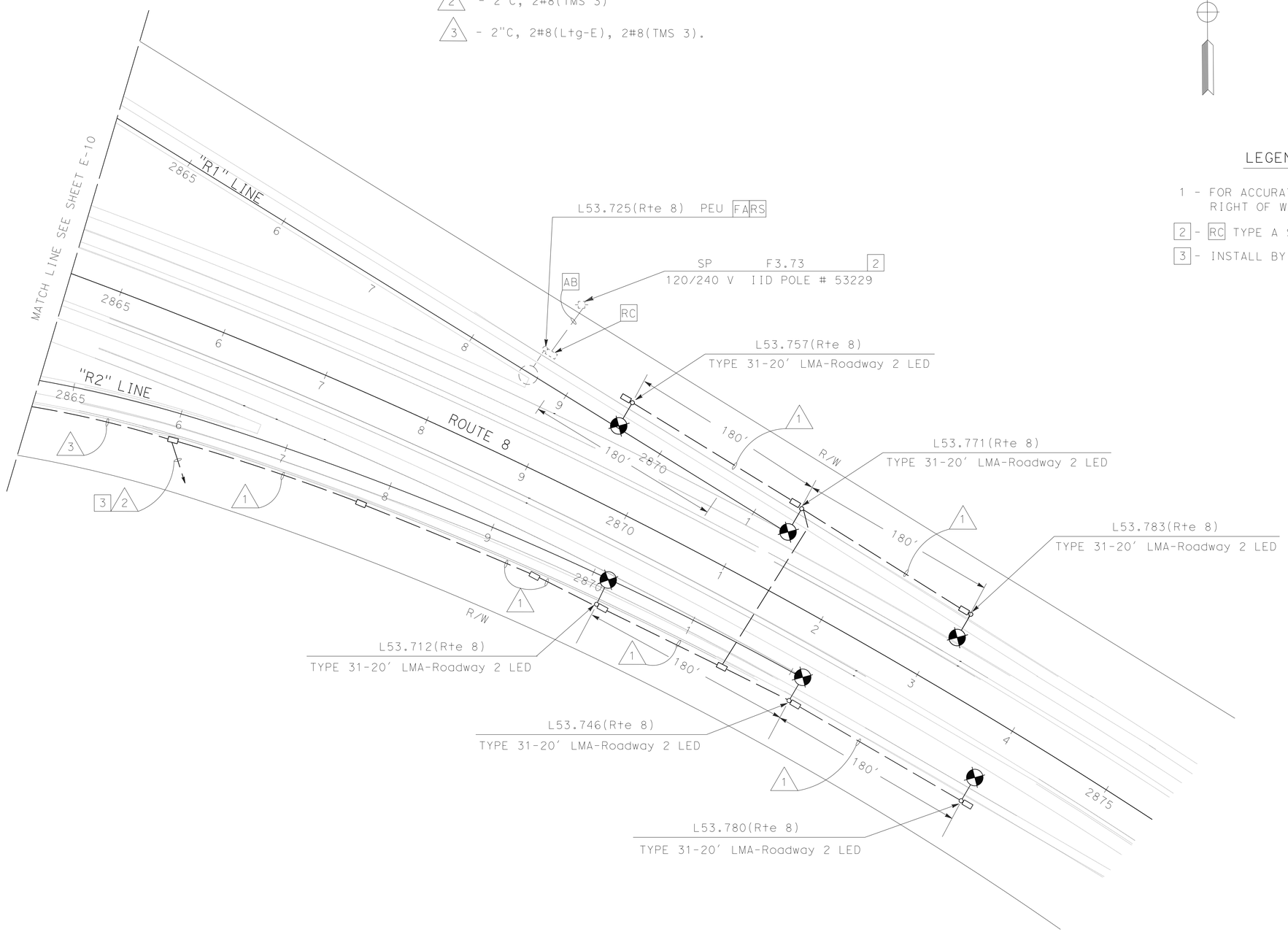

LEGEND and NOTES(TSO):

1 - FOR ACCURATE RIGHT OF WAY DATA, CONTACT RIGHT OF WAY ENGINEERING AT THE DISTRICT OFFICE.

2 - RC TYPE A SERVICE.

3 - INSTALL BY PLAN SHEET E-18.

ROUTE 8/VANDERLINDEN ROAD

LIGHTING

E-11

APPROVED FOR ELECTRICAL WORK ONLY

SCALE: 1" = 50'

STATE OF CALIFORNIA - DEPARTMENT OF TRANSPORTATION
Caltrans® TRAFFIC ELECTRICAL

FUNCTIONAL SUPERVISOR: RAJPREET SINGH
CALCULATED-DESIGNED BY: ANTONIO A. RODRIGUEZ
CHECKED BY: DANNY McCLURE
REVISED BY
DATE REVISED

LAST REVISION 04-27-15
DATE PLOTTED => 10-AUG-2015
TIME PLOTTED => 15:11

Dist	COUNTY	ROUTE	POST MILES TOTAL PROJECT	SHEET No.	TOTAL SHEETS
11	Imp	8	R45.5/R55.0	147	211

REGISTERED ELECTRICAL ENGINEER — DATE 07-19-15

08-03-15
PLANS APPROVAL DATE

REGISTERED PROFESSIONAL ENGINEER — DANNY D.McCLURE — No. 16074 — Exp. 12-31-15 — ELECTRICAL — STATE OF CALIFORNIA

THE STATE OF CALIFORNIA OR ITS OFFICERS OR AGENTS SHALL NOT BE RESPONSIBLE FOR THE ACCURACY OR COMPLETENESS OF SCANNED COPIES OF THIS PLAN SHEET.

LEGEND and NOTES(TSO):

1 - FOR ACCURATE RIGHT OF WAY DATA, CONTACT RIGHT OF WAY ENGINEERING AT THE DISTRICT OFFICE.

2 - DEPARTMENT FURNISHED TYPE 334 CABINET.

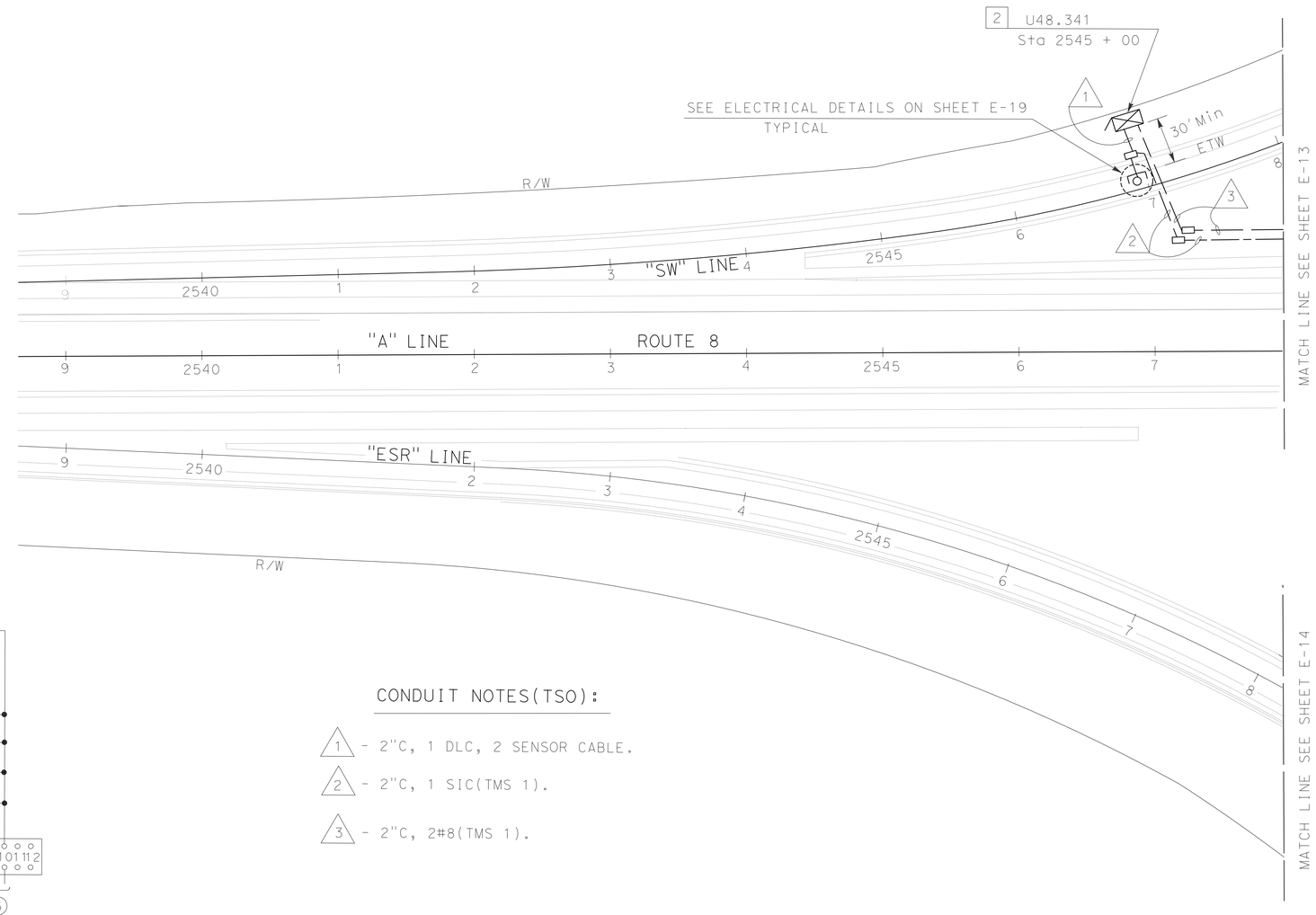

CIRCUIT BREAKERS

MAIN-SP-40 AMP
A-SP-15 AMP
B-SP-15 AMP
C-SP-15 AMP
D-SP-15 AMP
E-SP-15 AMP

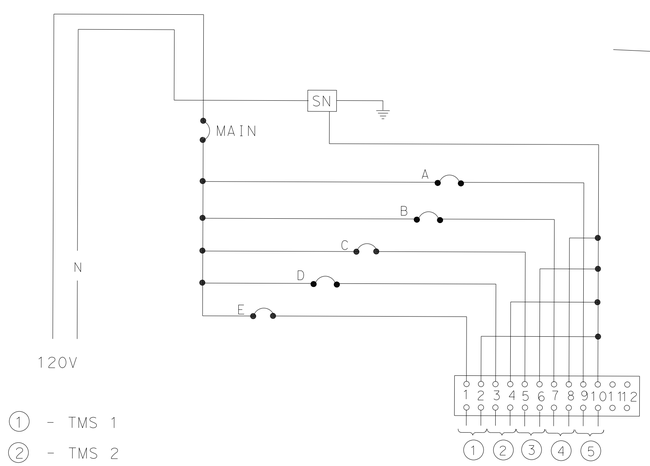

1 - TMS 1
2 - TMS 2
3 - TMS 3
4 - TMS 4
5 - TMS 5

SD WIRING DIAGRAM "D"
(TYPE III-BF SERVICE EQUIPMENT ENCLOSURE SEE ES-2C & ES-2E)

CONDUIT NOTES(TSO):

1 - 2"C, 1 DLC, 2 SENSOR CABLE.

2 - 2"C, 1 SIC(TMS 1).

3 - 2"C, 2#8(TMS 1).

ROUTE 8/ROUTE 7

TRAFFIC MONITORING STATION
(LOCATION 1)

APPROVED FOR ELECTRICAL WORK ONLY

SCALE: 1"= 50'

E-12

STATE OF CALIFORNIA - DEPARTMENT OF TRANSPORTATION
Caltrans® TRAFFIC ELECTRICAL

FUNCTIONAL SUPERVISOR: RAJPREET SINGH
CALCULATED-DESIGNED BY: DANNY McCLURE
CHECKED BY: ANTONIO A. RODRIGUEZ
REVISED BY
DATE REVISED

LAST REVISION 04-27-15
DATE PLOTTED => 10-AUG-2015
TIME PLOTTED => 15:11

Dist	COUNTY	ROUTE	POST MILES TOTAL PROJECT	SHEET No.	TOTAL SHEETS
11	Imp	8	R45.5/R55.0	148	211

REGISTERED ELECTRICAL ENGINEER — DATE 07-19-15

08-03-15
PLANS APPROVAL DATE

REGISTERED PROFESSIONAL ENGINEER — DANNY D.McCLURE — No. 16074 — Exp. 12-31-15 — ELECTRICAL — STATE OF CALIFORNIA

THE STATE OF CALIFORNIA OR ITS OFFICERS OR AGENTS SHALL NOT BE RESPONSIBLE FOR THE ACCURACY OR COMPLETENESS OF SCANNED COPIES OF THIS PLAN SHEET.

CONDUIT NOTES(TSO):

- N C 1 - Exist 2"C, 2#8(Ltg).
- 2 - 2"C, 2#8(SUB TMS).
- 3 - Exist 2"C, 2#4(Ltg),6#8(Ltg),2#8(Irr),2#6(FB). ADD 2#8(SUB TMS).
- 4 - Exist 2"C, 2#4(Ltg-),6#8(Ltg),2#8(Irr),2#6(FB),4#14(PEU). ADD 2#8(SUB TMS).
- N C 5 - Exist 2"C, 2#4(Ltg),4#8(Ltg),2#8(Irr),2#6(FB).
- N C 6 - Exist 2"C, 2#4(Ltg).
- 7 - 3"C, 2#8(TMS 1), 2#8(TMS 2), 2#8(TMS 4), 2#8(TMS 5).
- 8 - 2"C, 2#8(TMS 3).
- 9 - 2"C, 2#8(TMS 1).
- 10 - 2"C, 2#8(TMS 2), 2#8(TMS 4).
- 11 - 2"C, 2#8(TMS 5).
- 12 - 2"C, 4 SIC(TMS 1, TMS 2, TMS 4, TMS 5), 1 DLC, 2 SENSOR CABLE.
- 13 - 2"C, 1 SIC(TMS 1), 1 DLC, 2 SENSOR CABLE.
- 14 - 2"C, 1 SIC(TMS 1).
- 15 - 2"C, 1 SIC(TMS 5).
- 16 - 2"C, 2 SIC(TMS 2, TMS 4).

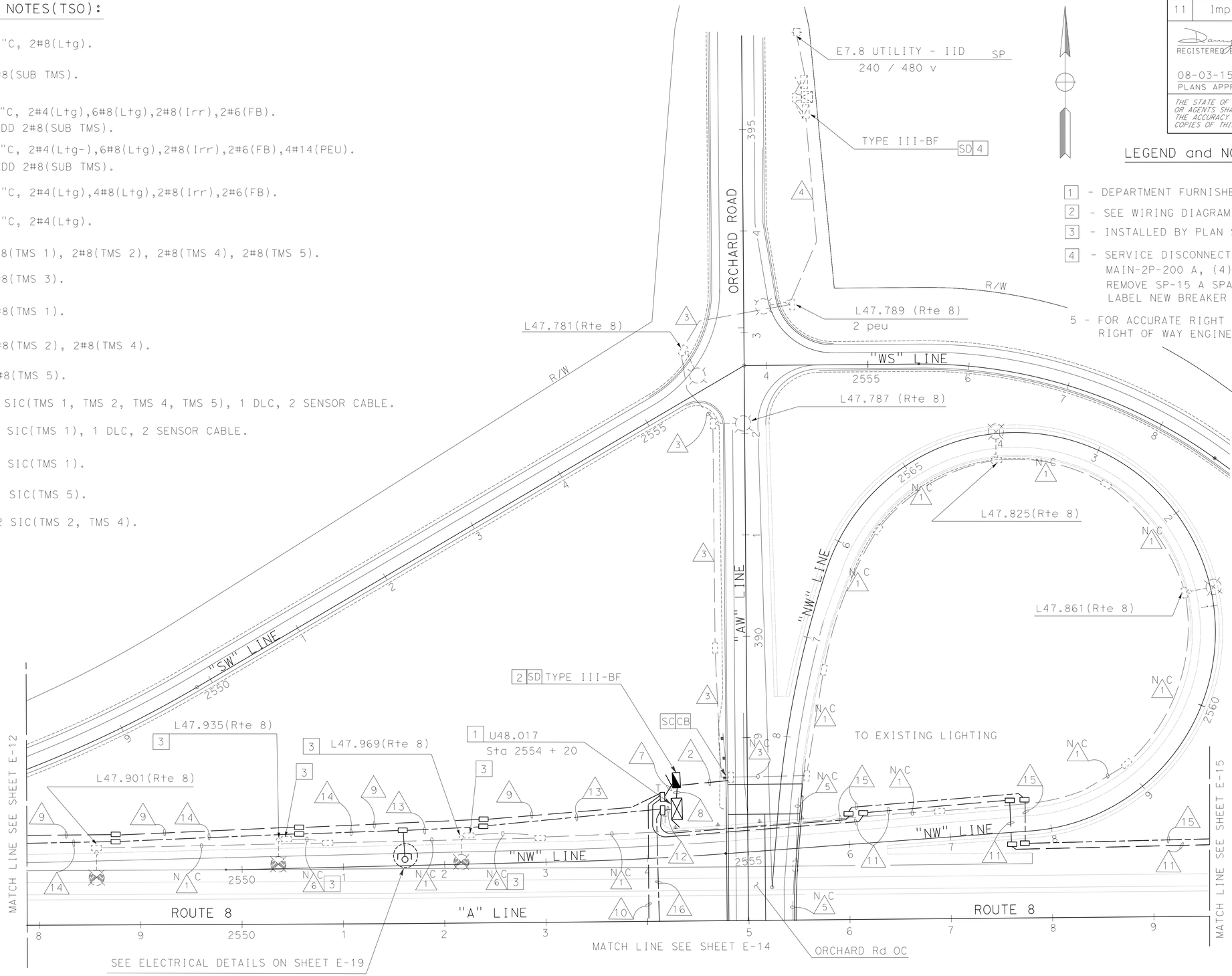

LEGEND and NOTES(TSO):

1 - DEPARTMENT FURNISHED TYPE 334 CABINET.

2 - SEE WIRING DIAGRAM "D" ON SHEET E-12.

3 - INSTALLED BY PLAN SHEET E-2.

4 - SERVICE DISCONNECT WITH :
MAIN-2P-200 A, (4) 2P-40 A, (4) SP-15 A BREAKERS.
REMOVE SP-15 A SPARE AND ADD SP-60 A BREAKER.
LABEL NEW BREAKER "SUB POWER TMS".

5 - FOR ACCURATE RIGHT OF WAY DATA, CONTACT RIGHT OF WAY ENGINEERING AT THE DISTRICT OFFICE.

TRAFFIC MONITORING STATION (LOCATION 1)

E-13

SCALE: 1" = 50'

APPROVED FOR ELECTRICAL WORK ONLY

STATE OF CALIFORNIA - DEPARTMENT OF TRANSPORTATION
Caltrans® TRAFFIC ELECTRICAL

FUNCTIONAL SUPERVISOR: RAJPREET SINGH
CALCULATED-DESIGNED BY: ANTONIO A. RODRIGUEZ
CHECKED BY: DANNY McCLURE
REVISED BY / DATE REVISED

LAST REVISION 04-27-15 | DATE PLOTTED => 10-AUG-2015 | TIME PLOTTED => 15:11

Dist	COUNTY	ROUTE	POST MILES TOTAL PROJECT	SHEET No.	TOTAL SHEETS
11	Imp	8	R45.5/R55.0	149	211

REGISTERED ELECTRICAL ENGINEER 07-19-15 DATE

08-03-15
PLANS APPROVAL DATE

REGISTERED PROFESSIONAL ENGINEER DANNY D.McCLURE No. 16074 Exp. 12-31-15 ELECTRICAL STATE OF CALIFORNIA

THE STATE OF CALIFORNIA OR ITS OFFICERS OR AGENTS SHALL NOT BE RESPONSIBLE FOR THE ACCURACY OR COMPLETENESS OF SCANNED COPIES OF THIS PLAN SHEET.

CONDUIT NOTES (TSO):

N C 1 - Exist 2"C, 2#8(Ltg)
N C 2 - Exist 2"C, 2#8(Ltg)
N C 3 - Exist 2"C, 2#4(Ltg), 2#8(Irr), 2#6(FB)
N C 4 - Exist 2"C, 2#4(Ltg),2#8(Irr),2#6(FB)
N C 5 - Exist 2"C, 2#8(Ltg), 2#6(FB)
N C 6 - Exist 2"C, 2#8(Ltg), 2#8(Irr)
N C 7 - Exist 2"C, 2#8(Ltg), 4#14(PEU)
N C 8 - Exist 2"C, 4#8(Ltg),2#8(Irr),2#6(FB), 2#4(Ltg).
9 - 2"C, 2#8(TMS 2), 2#8(TMS 4).
10 - 2"C, 2#8(TMS 2).
11 - 2"C, 2#8(TMS 4).
12 - 2"C, 1 SIC(TMS 2, TMS 4).
13 - 2"C, 1 SIC(TMS 2).
14 - 2"C, 1 DLC, 2 SENSOR CABLE, 1 SIC(TMS 2).
15 - 2"C, 2 DLC, 4 SENSOR CABLE, 1 SIC(TMS 2).
16 - 2"C, 1 SIC(TMS 4).
17 - 2"C, 1 DLC, 2 SENSOR CABLE, 1 SIC(TMS 4).
18 - 2"C, 1 DLC, 2 SENSOR CABLE,

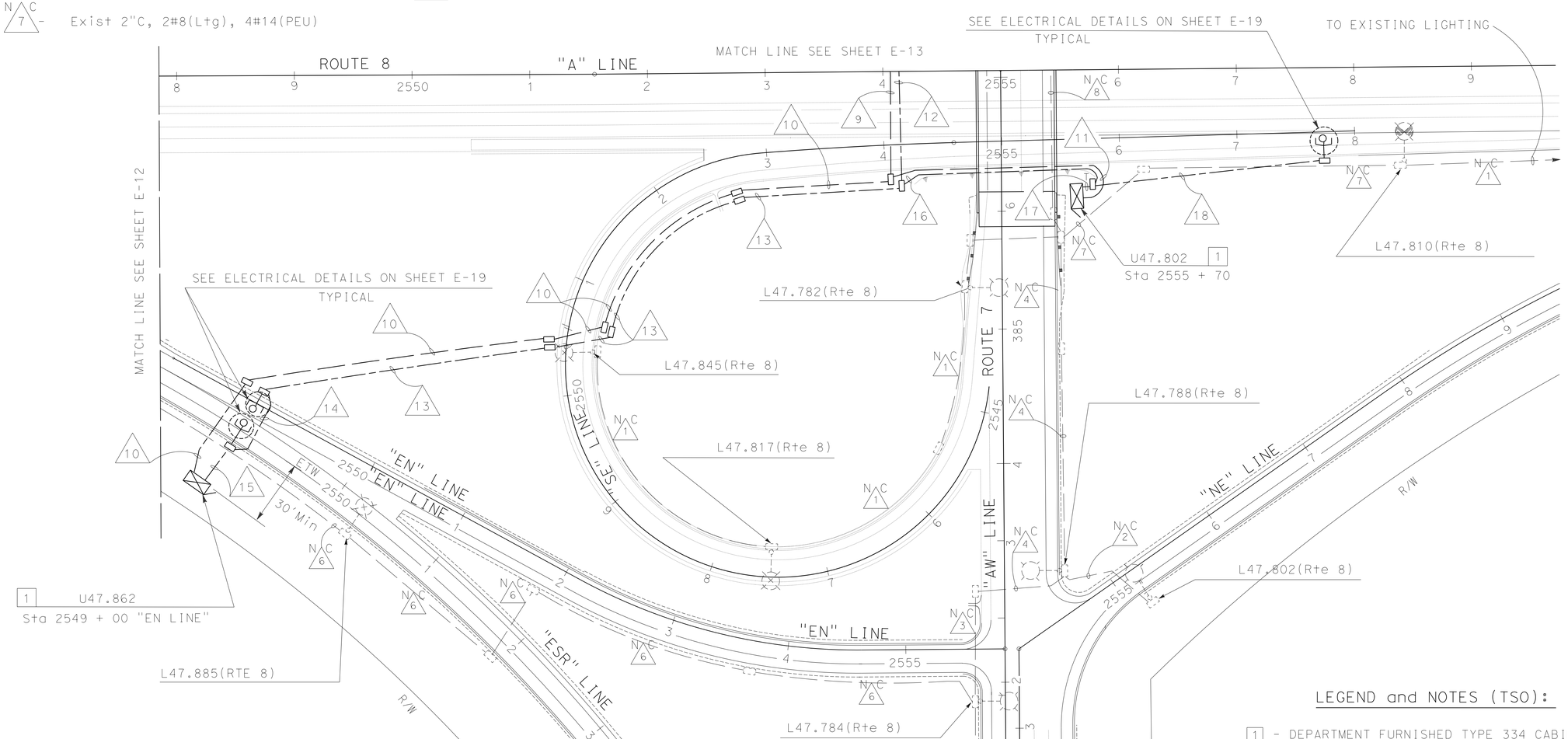

LEGEND and NOTES (TSO):

1 - DEPARTMENT FURNISHED TYPE 334 CABINET.

2 - FOR ACCURATE RIGHT OF WAY DATA, CONTACT RIGHT OF WAY ENGINEERING AT THE DISTRICT OFFICE.

TRAFFIC MONITORING STATION
(LOCATION 1)

ROUTE 8/ROUTE 7

SCALE: 1" = 50'

E-14

APPROVED FOR ELECTRICAL WORK ONLY

STATE OF CALIFORNIA - DEPARTMENT OF TRANSPORTATION
Caltrans® **TRAFFIC ELECTRICAL**

FUNCTIONAL SUPERVISOR: RAJPREET SINGH
CALCULATED-DESIGNED BY: DANNY McCLURE
CHECKED BY: ANTONIO A. RODRIGUEZ
REVISED BY
DATE REVISED

LAST REVISION 04-27-15
DATE PLOTTED => 10-AUG-2015
TIME PLOTTED => 15:11

Dist	COUNTY	ROUTE	POST MILES TOTAL PROJECT	SHEET No.	TOTAL SHEETS
11	Imp	8	R45.5/R55.0	150	211

REGISTERED ELECTRICAL ENGINEER 07-19-15 DATE

08-03-15
PLANS APPROVAL DATE

REGISTERED PROFESSIONAL ENGINEER DANNY D.McCLURE No. 16074 Exp. 12-31-15 ELECTRICAL STATE OF CALIFORNIA

THE STATE OF CALIFORNIA OR ITS OFFICERS OR AGENTS SHALL NOT BE RESPONSIBLE FOR THE ACCURACY OR COMPLETENESS OF SCANNED COPIES OF THIS PLAN SHEET.

CONDUIT NOTES(TSO):

1. - 3"C, 6 DLC, 12 SENSOR CABLE, 1 SIC(TMS 5).
2. - 3"C, 5 DLC, 10 SENSOR CABLE, 1 SIC(TMS 5).
3. - 3"C, 5 DLC, 10 SENSOR CABLE.
4. - 2"C, 4 DLC, 8 SENSOR CABLE.
5. - 2"C, 3 DLC, 6 SENSOR CABLE.
6. - 2"C, 2 DLC, 4 SENSOR CABLE.
7. - 2"C, 1 SIC(TMS 5).
8. - 2"C, 2#8(TMS 5).

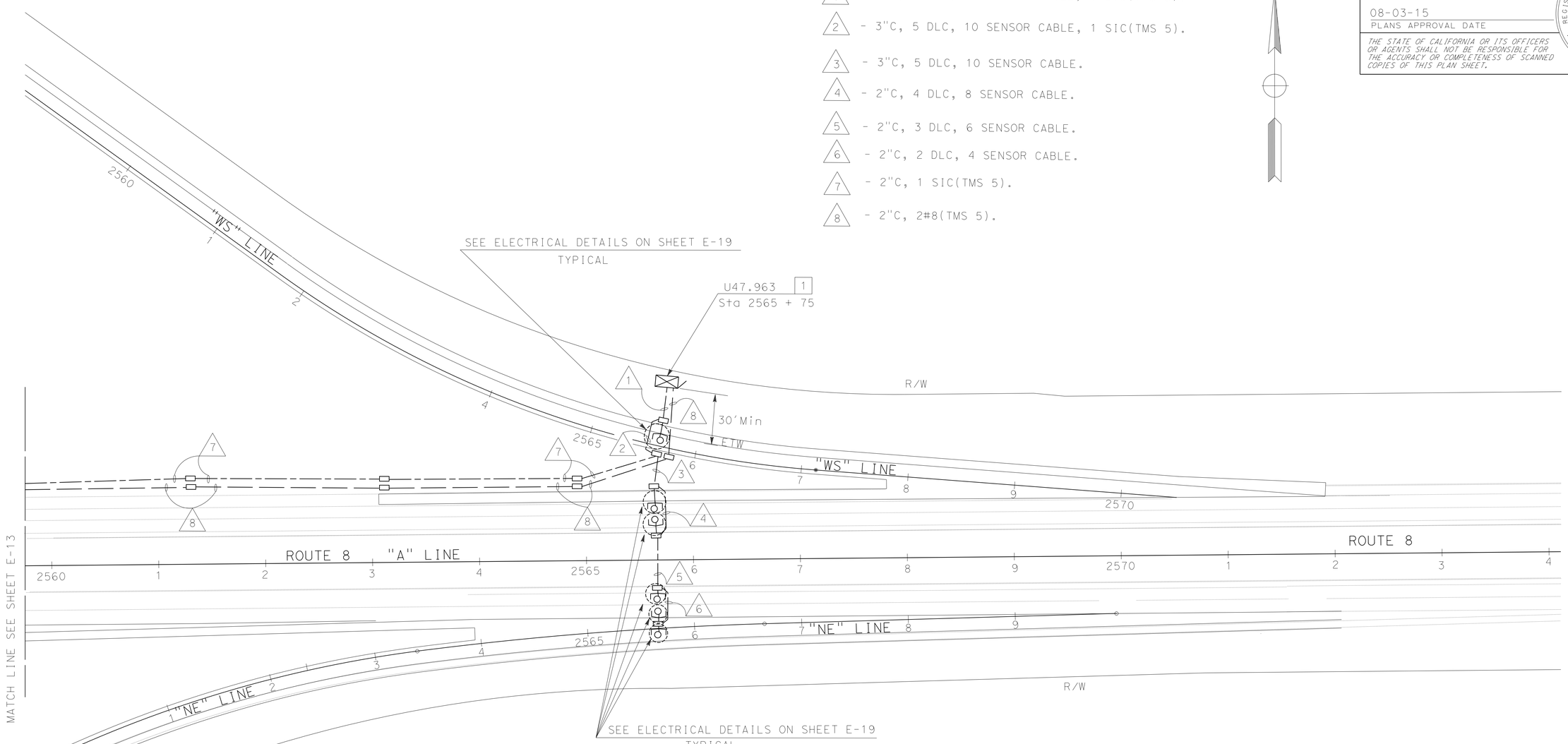

LEGEND and NOTES(TSO):

1 - DEPARTMENT FURNISHED TYPE 334 CABINET.

2 - FOR ACCURATE RIGHT OF WAY DATA, CONTACT RIGHT OF WAY ENGINEERING AT THE DISTRICT OFFICE.

TRAFFIC MONITORING STATION
(LOCATION 1)

ROUTE 8/ROUTE 7

APPROVED FOR ELECTRICAL WORK ONLY

SCALE: 1" = 50'

E-15

STATE OF CALIFORNIA - DEPARTMENT OF TRANSPORTATION
Caltrans® **TRAFFIC ELECTRICAL**

FUNCTIONAL SUPERVISOR: RAJPREET SINGH
CALCULATED-DESIGNED BY: DANNY McCLURE
CHECKED BY: ANTONIO A. RODRIGUEZ
REVISED BY
DATE REVISED

LAST REVISION 04-27-15
DATE PLOTTED => 10-AUG-2015
TIME PLOTTED => 15:11

Dist	COUNTY	ROUTE	POST MILES TOTAL PROJECT	SHEET No.	TOTAL SHEETS
11	Imp	8	R45.5/R55.0	151	211

REGISTERED ELECTRICAL ENGINEER 07-19-15 DATE

08-03-15
PLANS APPROVAL DATE

REGISTERED PROFESSIONAL ENGINEER DANNY D.McCLURE No. 16074 Exp. 12-31-15 ELECTRICAL STATE OF CALIFORNIA

THE STATE OF CALIFORNIA OR ITS OFFICERS OR AGENTS SHALL NOT BE RESPONSIBLE FOR THE ACCURACY OR COMPLETENESS OF SCANNED COPIES OF THIS PLAN SHEET.

NOTE:

FOR ACCURATE RIGHT OF WAY DATA, CONTACT
RIGHT OF WAY ENGINEERING AT THE DISTRICT OFFICE.

CONDUIT NOTES(TSO):

N C
1 - Exist 2"C, 2#6(Ltg-W), 2#8(TMS 1).
2 - 2"C, 2 DLC, 4 SENSOR CABLE.
3 - 2"C, 1 DLC, 2 SENSOR CABLE.
4 - 2"C, 2#8(TMS 1).
5 - 2"C, 1 SIC(TMS 1).

LEGEND and NOTES(TSO):

1 - INSTALLED BY PLAN SHEET E-9.
2 - DEPARTMENT FURNISHED TYPE 334 CABINET.
3 - PLACE CONDUIT IN THE SAME TRENCH AS LIGHTING CONDUIT SEE E-9.

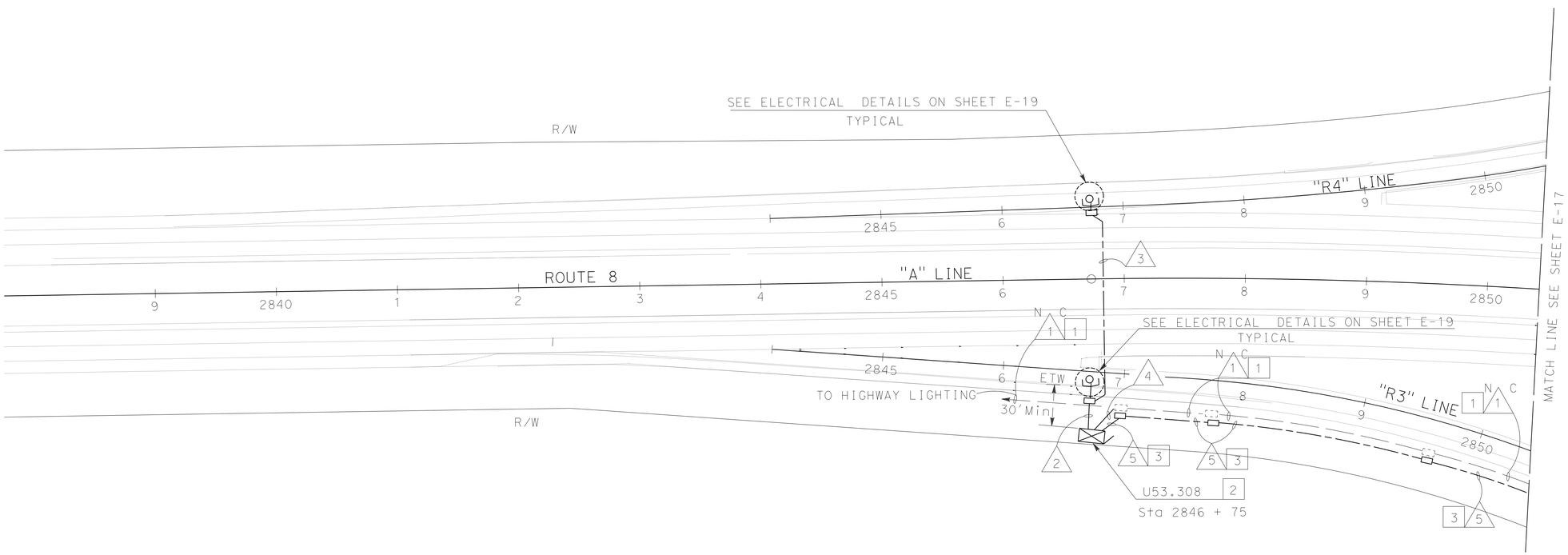

ROUTE 8/VANDERLIDEN ROAD

TRAFFIC MONITORING STATION (LOCATION 2)

E-16

APPROVED FOR ELECTRICAL WORK ONLY

STATE OF CALIFORNIA - DEPARTMENT OF TRANSPORTATION
Caltrans
TRAFFIC ELECTRICAL

FUNCTIONAL SUPERVISOR: RAJPREET SINGH
CALCULATED-DESIGNED BY: DANNY McCLURE
CHECKED BY: ANTONIO A. RODRIGUEZ
REVISED BY
DATE REVISED

LAST REVISION 04-27-15
DATE PLOTTED => 10-AUG-2015
TIME PLOTTED => 15:11

Dist	COUNTY	ROUTE	POST MILES TOTAL PROJECT	SHEET No.	TOTAL SHEETS
11	Imp	8	R45.5/R55.0	152	211

REGISTERED ELECTRICAL ENGINEER DATE 07-19-15

08-03-15
PLANS APPROVAL DATE

REGISTERED PROFESSIONAL ENGINEER DANNY D.McCLURE No. 16074 Exp. 12-31-15 ELECTRICAL STATE OF CALIFORNIA

THE STATE OF CALIFORNIA OR ITS OFFICERS OR AGENTS SHALL NOT BE RESPONSIBLE FOR THE ACCURACY OR COMPLETENESS OF SCANNED COPIES OF THIS PLAN SHEET.

CONDUIT NOTES(TSO):

1. Exist 2"C, 2#8 (CS), 16 DLC, RC 2#8(TMS 2), 10 DLC. ADD 4 DLC, 8 SENSOR CABLES, 2#8(TMS 2), 2 SIC(TMS 1, TMS 2).
2. 2"C, 4 DLC, 8 SENSOR CABLE.
3. 2"C, 3 DLC, 6 SENSOR CABLE.
4. 2"C, 2 DLC, 4 SENSOR CABLE.
5. 2"C, 1 DLC, 2 SENSOR CABLE.
6. 2"C, 2#8(TMS 2).
7. N C Exist 2"C, 2#8 (Ltg-W), 2#8(TMS 2).
8. 2"C, 2#8 (Ltg-W), 2#8(TMS 2), 2#8(TMS 3).
9. 2"C, 2#8 (Ltg-W), 2#8(TMS 1), 2#8(TMS 2), 2#8(Ltg-W).
10. N C Exist 2"C, 2#8 (Ltg-W), 2#8(TMS 1).
11. N C Exist 2"C, 2#8 (Ltg-E), 2#8(TMS 3).
12. 2"C, 2 SIC(TMS 1, TMS 1, TMS 3).
13. 2"C, 1 SIC(TMS 1).
14. 2"C, 1 SIC(TMS 2).
15. Exist 1 1/2"C, 2#8 (Ltg-E).
16. N C Exist 1 1/2"C, 6 DLC.

LEGEND and NOTES(TSO):

1. INSTALLED BY PLAN SHEET E-10.
2. AB LOOPS.
3. PLACE CONDUIT IN THE SAME TRENCH AS LIGHTING CONDUIT SEE SHEET E-10.
4. FOR ACCURATE RIGHT OF WAY DATA, CONTACT RIGHT OF WAY ENGINEERING AT THE DISTRICT OFFICE.

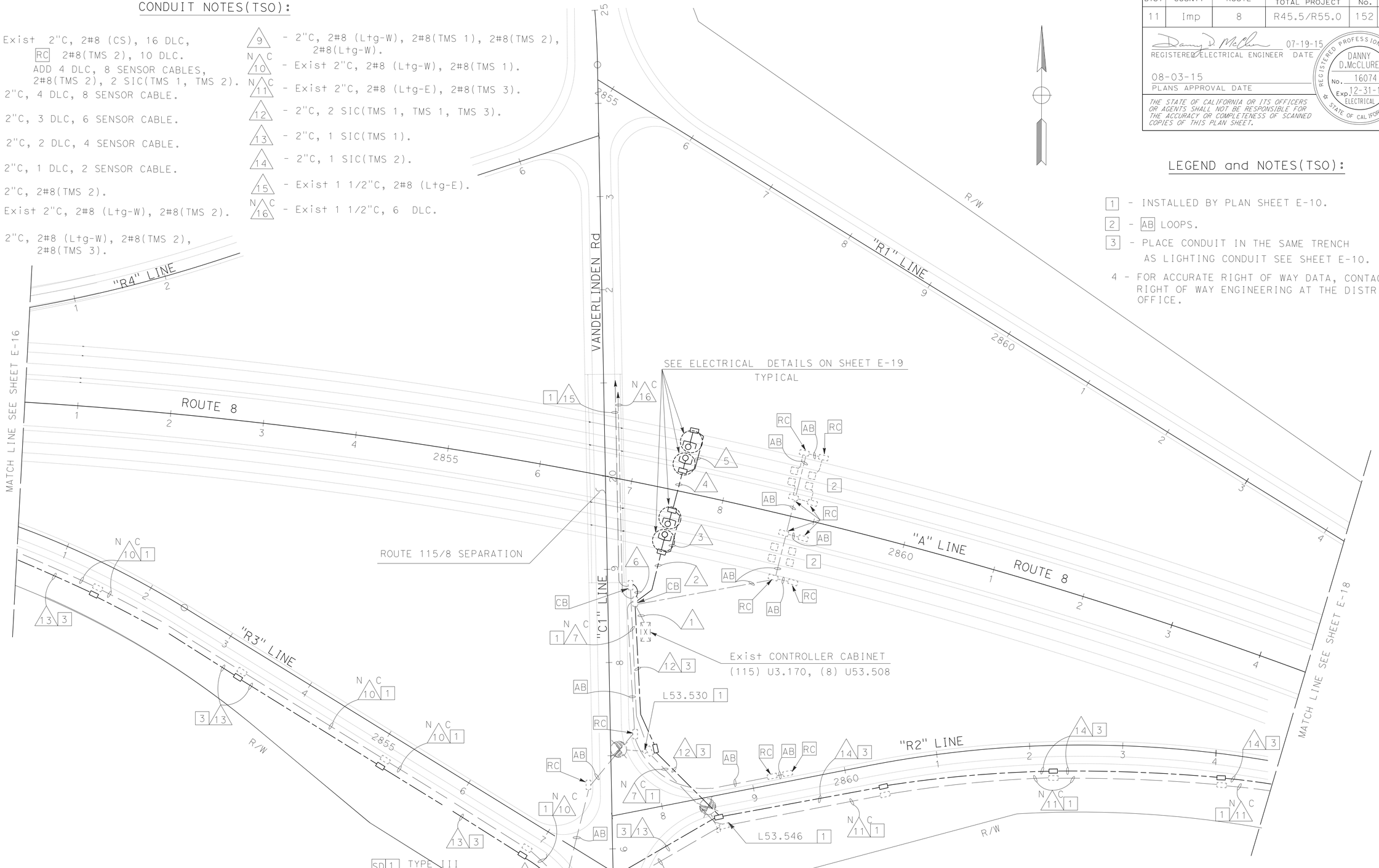

APPROVED FOR ELECTRICAL WORK ONLY

TRAFFIC MONITORING STATION
(LOCATION 2)

E-17

SCALE: 1" = 50'

STATE OF CALIFORNIA - DEPARTMENT OF TRANSPORTATION
Caltrans® **TRAFFIC ELECTRICAL**

FUNCTIONAL SUPERVISOR: RAJPREET SINGH
CALCULATED-DESIGNED BY: DANNY McCLURE
CHECKED BY: ANTONIO A. RODRIGUEZ
REVISED BY / DATE REVISED

LAST REVISION 04-27-15 | DATE PLOTTED => 10-AUG-2015 | TIME PLOTTED => 15:11

Dist	COUNTY	ROUTE	POST MILES TOTAL PROJECT	SHEET No.	TOTAL SHEETS
11	Imp	8	R45.5/R55.0	153	211

REGISTERED ELECTRICAL ENGINEER 07-19-15 DATE

08-03-15
PLANS APPROVAL DATE

REGISTERED PROFESSIONAL ENGINEER DANNY D.McCLURE No. 16074 Exp. 12-31-15 ELECTRICAL STATE OF CALIFORNIA

THE STATE OF CALIFORNIA OR ITS OFFICERS OR AGENTS SHALL NOT BE RESPONSIBLE FOR THE ACCURACY OR COMPLETENESS OF SCANNED COPIES OF THIS PLAN SHEET.

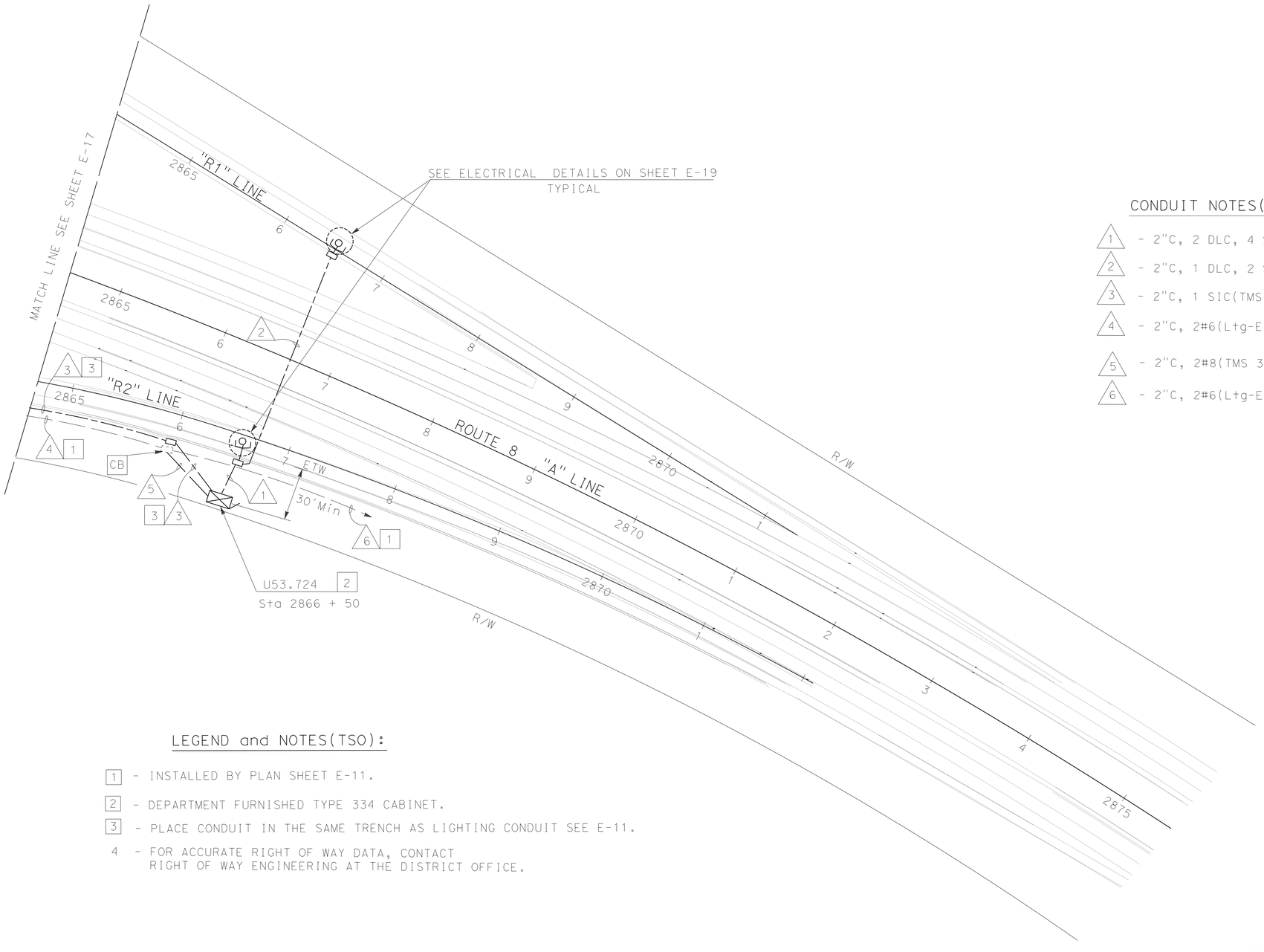

CONDUIT NOTES(TSO):

1. - 2"C, 2 DLC, 4 SENSOR CABLE.
2. - 2"C, 1 DLC, 2 SENSOR CABLE.
3. - 2"C, 1 SIC(TMS 3).
4. - 2"C, 2#6(Ltg-E), 2#8(TMS 3).
5. - 2"C, 2#8(TMS 3).
6. - 2"C, 2#6(Ltg-E).

LEGEND and NOTES(TSO):

1 - INSTALLED BY PLAN SHEET E-11.

2 - DEPARTMENT FURNISHED TYPE 334 CABINET.

3 - PLACE CONDUIT IN THE SAME TRENCH AS LIGHTING CONDUIT SEE E-11.

4 - FOR ACCURATE RIGHT OF WAY DATA, CONTACT RIGHT OF WAY ENGINEERING AT THE DISTRICT OFFICE.

APPROVED FOR ELECTRICAL WORK ONLY

TRAFFIC MONITORING STATION
(LOCATION 2)

ROUTE 8/ROUTE 7/VANDERLIDEN ROAD

SCALE: 1" = 50'

E-18

STATE OF CALIFORNIA - DEPARTMENT OF TRANSPORTATION
Caltrans® **TRAFFIC ELECTRICAL**

FUNCTIONAL SUPERVISOR: RAJPREET SINGH
CALCULATED-DESIGNED BY: DANNY McCLURE
CHECKED BY: ANTONIO A. RODRIGUEZ
REVISED BY
DATE REVISED

LAST REVISION 04-27-15
DATE PLOTTED => 10-AUG-2015
TIME PLOTTED => 15:11

Dist	COUNTY	ROUTE	POST MILES TOTAL PROJECT	SHEET No.	TOTAL SHEETS
11	Imp	8	R45.5/R55.0	154	211

REGISTERED ELECTRICAL ENGINEER 07-19-15 DATE

08-03-15
PLANS APPROVAL DATE

REGISTERED PROFESSIONAL ENGINEER DANNY D.McCLURE No. 16074 Exp. 12-31-15 ELECTRICAL STATE OF CALIFORNIA

THE STATE OF CALIFORNIA OR ITS OFFICERS OR AGENTS SHALL NOT BE RESPONSIBLE FOR THE ACCURACY OR COMPLETENESS OF SCANNED COPIES OF THIS PLAN SHEET.

LEGEND and NOTES:

1 - PLACE 2" DUCT TAPE ALONG THE EDGE OF SAW CUT BEFORE POURING EPOXY SEALANT. LEVEL EPOXY SEALANT TO FINISHED ROAD SURFACE. WAIT 5 MINUTES AND REMOVE DUCT TAPE.

FIRST SENSOR TRANSMISSION CABLE	FIRST LOOP DLC	SECOND SENSOR TRANSMISSION CABLE
1-W-1	1-W-1	1-W-2

PIEZO SENSOR IDENTIFICATION

DIRECTION OF TRAVEL → (TYPICAL)

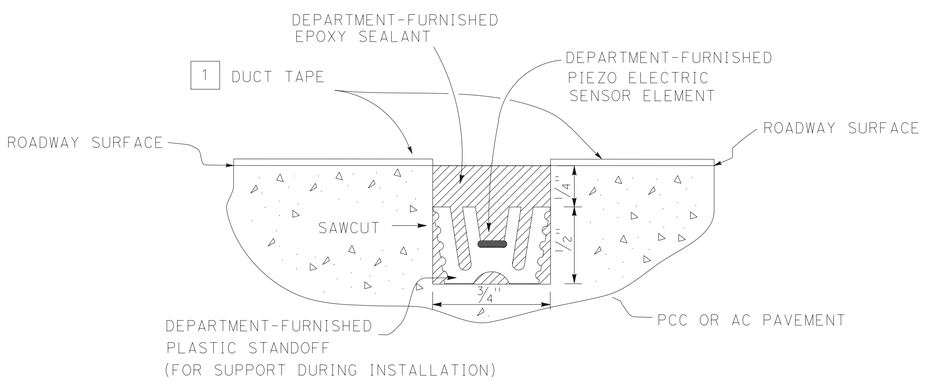

SECTION B-B

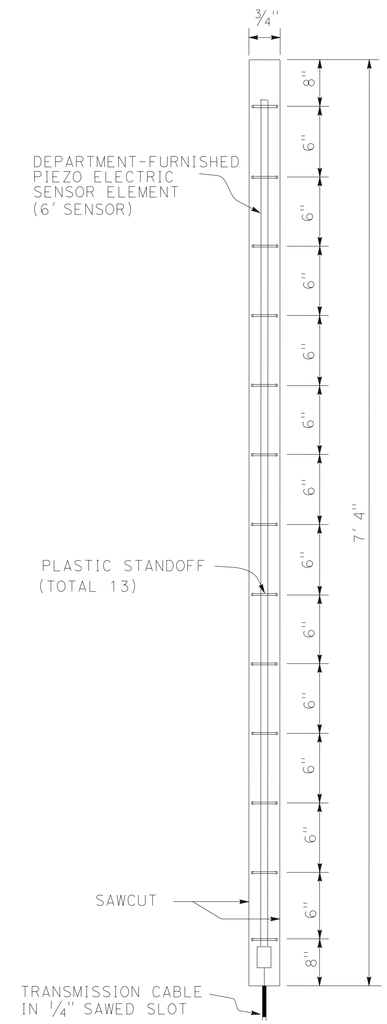

DETAIL "M"

SENSOR INSTALLATION

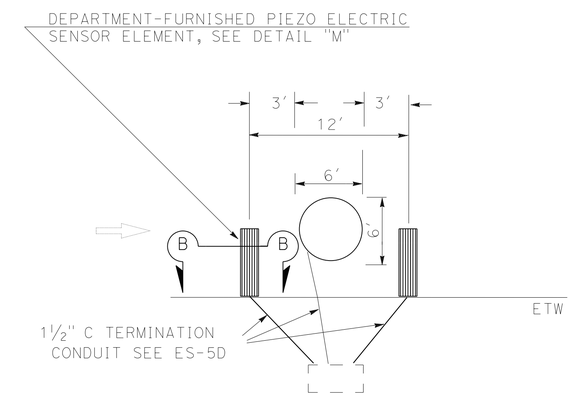

LOOP AND SENSOR PLACEMENT

TYPICAL

PIEZO ELECTRIC SENSOR INSTALLATION DETAILS

TRAFFIC MONITORING STATION (ELECTRICAL DETAILS)

NO SCALE

E-19

APPROVED FOR ELECTRICAL WORK ONLY

STATE OF CALIFORNIA - DEPARTMENT OF TRANSPORTATION
Caltrans® **TRAFFIC ELECTRICAL**

FUNCTIONAL SUPERVISOR: RAJPREET SINGH
CALCULATED-DESIGNED BY: DANNY MCCLURE
CHECKED BY: ANTONIO A. RODRIGUEZ
REVISED BY
DATE REVISED

LAST REVISION 04-09-15
DATE PLOTTED => 10-AUG-2015
TIME PLOTTED => 15:11

M

Maint	MAINTENANCE
Max	MAXIMUM
MB	METAL BEAM
MBB	METAL BEAM BARRIER
MBGR	METAL BEAM GUARD RAILING
Med	MEDIAN
MGS	MIDWEST GUARDRAIL SYSTEM
MH	MANHOLE
Min	MINIMUM
Misc	MISCELLANEOUS
Misc I & S	MISCELLANEOUS IRON AND STEEL
Mkr	MARKER
Mod	MODIFIED,
	MODIFY
Mon	MONUMENT
MP	METAL PLATE
MPGR	METAL PLATE GUARD RAILING
MR	MOVEMENT RATING
MSE	MECHANICALLY STABILIZED EMBANKMENT
Mt	MOUNTAIN, MOUNT
Mtl	MATERIAL
MVP	MAINTENANCE VEHICLE PULLOUT

N

N	NORTH
NB	NORTHBOUND
No.	NUMBER (MUST HAVE PERIOD)
Nos.	NUMBERS (MUST HAVE PERIOD)
NPS	NOMINAL PIPE SIZE
NS	NEAR SIDE
NSP	NEW STANDARD PLAN
NTS	NOT TO SCALE

O

Oblr	OBLITERATE
OC	OVERCROSSING
OD	OUTSIDE DIAMETER
OF	OUTSIDE FACE
OG	ORIGINAL GROUND
OGAC	OPEN GRADED ASPHALT CONCRETE
OGFC	OPEN GRADED FRICTION COURSE
OH	OVERHEAD
OHWM	ORDINARY HIGH WATER MARK
O-O	OUT TO OUT
Opp	OPPOSITE
OSD	OVERSIDE DRAIN

P

P	PAGE
PAP	PERFORATED ALUMINUM PIPE
PB	PULL BOX
PC	POINT OF CURVATURE,
	PRECAST
PCC	POINT OF COMPOUND CURVE,
	PORTLAND CEMENT CONCRETE
PCMS	PORTABLE CHANGEABLE MESSAGE SIGN
PCP	PERFORATED CONCRETE PIPE,
	PRESTRESSED CONCRETE PIPE
PCVC	POINT OF COMPOUND VERTICAL CURVE
PEC	PERMIT TO ENTER AND CONSTRUCT
Ped	PEDESTRIAN
Ped OC	PEDESTRIAN OVERCROSSING
Ped UC	PEDESTRIAN UNDERCROSSING
Perm Mtl	PERMEABLE MATERIAL

P continued

PG	PROFILE GRADE
PI	POINT OF INTERSECTION
PJP	PARTIAL JOINT PENETRATION
Pkwy	PARKWAY
ℙ,PL	PLATE
P/L	PROPERTY LINE
PM	POST MILE,
	TIME FROM NOON TO MIDNIGHT
PN	PAVING NOTCH
POC	POINT OF HORIZONTAL CURVE
POT	POINT OF TANGENT
POVC	POINT OF VERTICAL CURVE
PP	PIPE PILE,
	PLASTIC PIPE,
	POWER POLE
PPL	PREFORMED PERMEABLE LINER
PPP	PERFORATED PLASTIC PIPE
PRC	POINT OF REVERSE CURVE
PRF	PAVEMENT REINFORCING FABRIC
PRVC	POINT OF REVERSE VERTICAL CURVE
PS&E	PLANS, SPECIFICATIONS AND ESTIMATES
PS, P/S	PRESTRESSED
PSP	PERFORATED STEEL PIPE
PT	POINT OF TANGENCY
PVC	POLYVINYL CHLORIDE
Pvmt	PAVEMENT

Q

Qty	QUANTITY

R

R	RADIUS
R & D	REMOVE AND DISPOSE
R & S	REMOVE AND SALVAGE
R/C	RATE OF CHANGE
RCA	REINFORCED CONCRETE ARCH
RCB	REINFORCED CONCRETE BOX
RCP	REINFORCED CONCRETE PIPE
RCPA	REINFORCED CONCRETE PIPE ARCH
Rd	ROAD
Reinf	REINFORCED,
	REINFORCEMENT,
	REINFORCING
Rel	RELOCATE
Repl	REPLACEMENT
Ret	RETAINING
Rev	REVISED, REVISION
Rdwy	ROADWAY
RHMA	RUBBERIZED HOT MIX ASPHALT
Riv	RIVER
RM	ROAD-MIXED
RP	RADIUS POINT,
	REFERENCE POINT
RR	RAILROAD
RSP	ROCK SLOPE PROTECTION,
	REVISED STANDARD PLAN
Rt	RIGHT
Rte	ROUTE
RW	REDWOOD,
	RETAINING WALL
R/W	RIGHT OF WAY
Rwy	RAILWAY

S

S	SOUTH,
	SUPPLEMENT
SAE	STRUCTURE APPROACH EMBANKMENT
Salv	SALVAGE
SAPP	STRUCTURAL ALUMINUM PLATE PIPE
SB	SOUTHBOUND
SC	SAND CUSHION
SCSP	SLOTTED CORRUGATED STEEL PIPE
SD	STORM DRAIN
Sec	SECOND,
	SECTION
Sep	SEPARATION
SG	SUBGRADE
Shld	SHOULDER
Sht	SHEET
Sim	SIMILAR
℄	STATION LINE
SM	SELECTED MATERIAL
Spec	SPECIAL,
	SPECIFICATIONS
SPP	SLOTTED PLASTIC PIPE
SS	SLOPE STAKE
SSBM	STRAP AND SADDLE BRACKET METHOD
SSD	STRUCTURAL SECTION DRAIN
SSPA	STRUCTURAL STEEL PLATE ARCH
SSPP	STRUCTURAL STEEL PLATE PIPE
SSPPA	STRUCTURAL STEEL PLATE PIPE ARCH
SSRP	STEEL SPIRAL RIB PIPE
St	STREET
Sta	STATION
STBB	SINGLE THRIE BEAM BARRIER
Std	STANDARD
Str	STRUCTURE
Surf	SURFACING
SW	SIDEWALK,
	SOUND WALL
Swr	SEWER
Sym	SYMMETRICAL
S4S	SURFACE 4 SIDES

T

T	SEMI-TANGENT
Tan	TANGENT
TBB	THRIE BEAM BARRIER
Tbr	TIMBER
TC	TOP OF CURB
TCB	TRAFFIC CONTROL BOX
TCE	TEMPORARY CONSTRUCTION EASEMENT
Tel	TELEPHONE
Temp	TEMPORARY
TG	TOP OF GRADE
Tot	TOTAL
TP	TELEPHONE POLE
TPB	TREATED PERMEABLE BASE
TPM	TREATED PERMEABLE MATERIAL
Trans	TRANSITION

T continued

TS	TRANSVERSE,
	TRAFFIC SIGNAL,
	TUBULAR STEEL
Typ	TYPICAL

U

UC	UNDERCROSSING
UD	UNDERDRAIN
UG	UNDERGROUND
UON	UNLESS OTHERWISE NOTED
UP	UNDERPASS

V

V	VALVE,
	DESIGN SPEED
Var	VARIABLE,
	VARIES
VC	VERTICAL CURVE
VCP	VITRIFIED CLAY PIPE
Vert	VERTICAL
Via	VIADUCT
Vol	VOLUME

W

W	WEST,
	WIDTH
WB	WESTBOUND
WH	WEEP HOLE
WM	WIRE MESH
WS	WATER SURFACE
WSP	WELDED STEEL PIPE
Wt	WEIGHT
WV	WATER VALVE
WW	WINGWALL
WWLOL	WINGWALL LAYOUT LINE

X

X Sec	CROSS SECTION
Xing	CROSSING

Y

Yr	YEAR
Yrs	YEARS

Dist	COUNTY	ROUTE	POST MILES TOTAL PROJECT	SHEET No.	TOTAL SHEETS
11	Imp	8	R45.5/R55.0	155	211

Grace M. Tsushima
REGISTERED CIVIL ENGINEER

July 19, 2013
PLANS APPROVAL DATE

REGISTERED PROFESSIONAL ENGINEER
Grace M. Tsushima
No. C49814
Exp. 9-30-14
CIVIL
STATE OF CALIFORNIA

THE STATE OF CALIFORNIA OR ITS OFFICERS OR AGENTS SHALL NOT BE RESPONSIBLE FOR THE ACCURACY OR COMPLETENESS OF SCANNED COPIES OF THIS PLAN SHEET.

TO ACCOMPANY PLANS DATED 08-03-15

UNIT OF MEASUREMENT SYMBOLS:

Some of the symbols used in the project plan quantity tables and in the Bid Item List are:

TABLE A

SYMBOL USED	DEFINITIONS
ACRE	ACRE
CF	CUBIC FOOT
CY	CUBIC YARD
EA	EACH
GAL	GALLON
LB	POUND
LF	LINEAR FOOT
SQFT	SQUARE FOOT
SQYD	SQUARE YARD
STA	100 FEET
TAB	TABLET
TON	2,000 POUNDS

Some of the symbols used in the plans other than in the project plan quantity tables are:

TABLE B

SYMBOL USED	DEFINITIONS
ksi	KIPS PER SQUARE INCH
ksf	KIPS PER SQUARE FOOT
psi	POUNDS PER SQUARE INCH
psf	POUNDS PER SQUARE FOOT
lb/ft^3, pcf	POUNDS PER CUBIC FOOT
tsf	TONS PER SQUARE FOOT
mph, MPH *	MILES PER HOUR
ø	NOMINAL DIAMETER
oz	OUNCE
lb	POUND
kip	1,000 POUNDS
cal	CALORIE
ft	FOOT OR FEET
gal	GALLON

* For use on a sign panel only

STATE OF CALIFORNIA
DEPARTMENT OF TRANSPORTATION

ABBREVIATIONS (SHEET 2 OF 2)

NO SCALE

RSP A10B DATED JULY 19, 2013 SUPERSEDES STANDARD PLAN A10B DATED MAY 20, 2011 - PAGE 2 OF THE STANDARD PLANS BOOK DATED 2010.

REVISED STANDARD PLAN RSP A10B

2010 REVISED STANDARD PLAN RSP A10B

6-7-13

Dist	COUNTY	ROUTE	POST MILES TOTAL PROJECT	SHEET No.	TOTAL SHEETS
11	Imp	8	R45.5/R55.0	156	211

REGISTERED CIVIL ENGINEER

July 19, 2013
PLANS APPROVAL DATE

REGISTERED PROFESSIONAL ENGINEER Roberta L. McLaughlin No. C40375 Exp. 3-31-15 CIVIL STATE OF CALIFORNIA

THE STATE OF CALIFORNIA OR ITS OFFICERS OR AGENTS SHALL NOT BE RESPONSIBLE FOR THE ACCURACY OR COMPLETENESS OF SCANNED COPIES OF THIS PLAN SHEET.

TO ACCOMPANY PLANS DATED 08-03-15

EXIT RAMP NEUTRAL AREA (GORE) TREATMENT

DETAIL 36

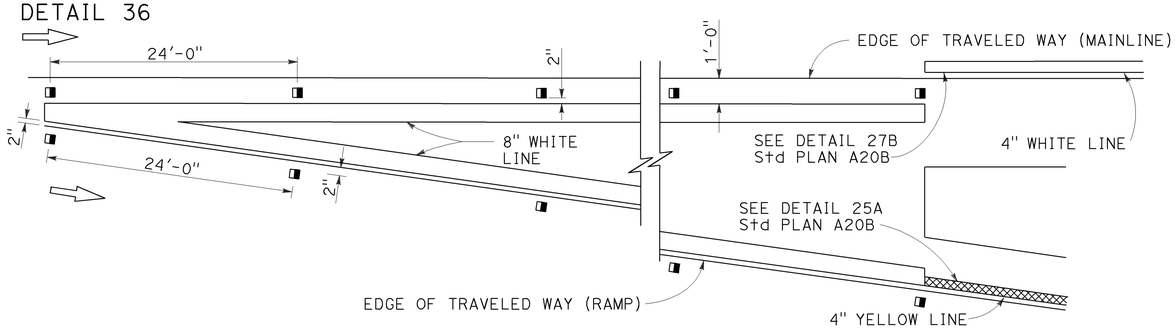

ENTRANCE RAMP NEUTRAL AREA (MERGE) TREATMENT

DETAIL 36A

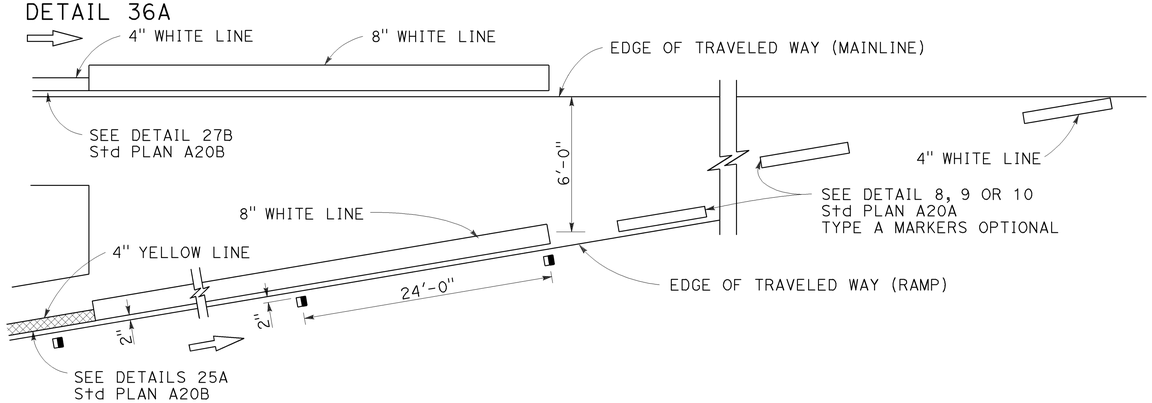

ENTRANCE RAMP NEUTRAL AREA (ACCELERATION LANE) TREATMENT

DETAIL 36B

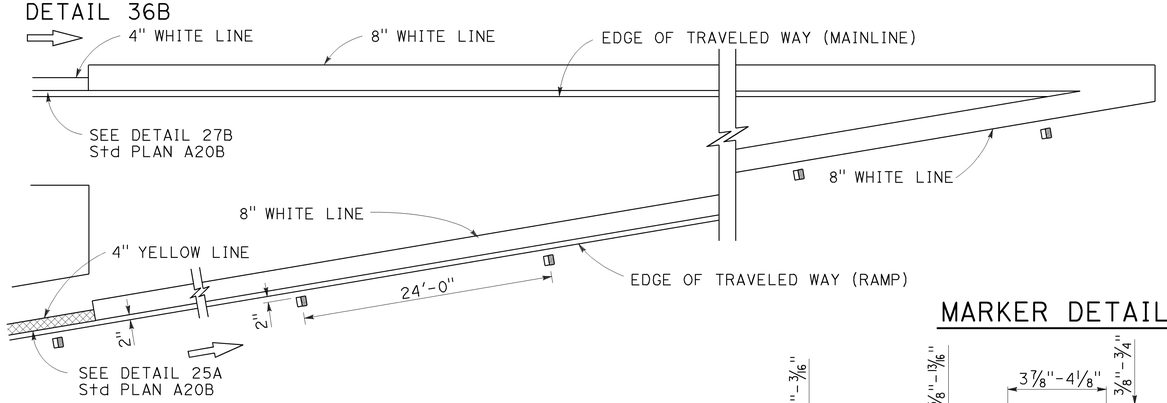

MARKER DETAILS

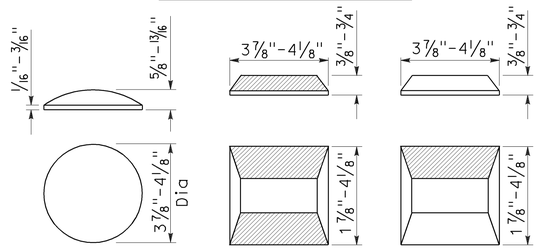

RETROREFLECTIVE FACE

LEGEND:

MARKERS

- ○ TYPE A WHITE NON-REFLECTIVE
- ⊟ TYPE C RED-CLEAR RETROREFLECTIVE
- ◨ TYPE G ONE-WAY CLEAR RETROREFLECTIVE

LANE DROP AT EXIT RAMPS

DETAIL 37

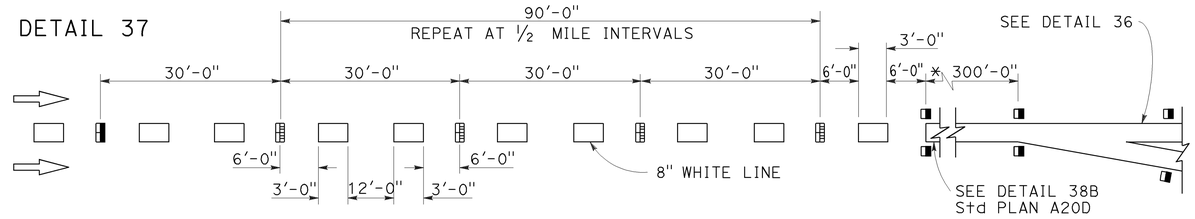

DETAIL 37A

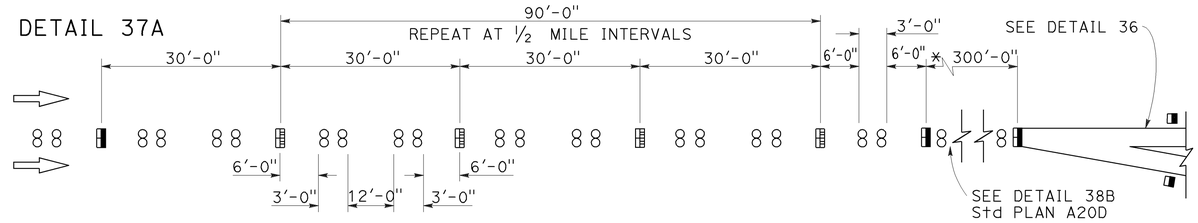

* The solid channelizing line shown may be omitted on short auxiliary lanes where weaving length is critical.

LANE DROP AT INTERSECTIONS

DETAIL 37B

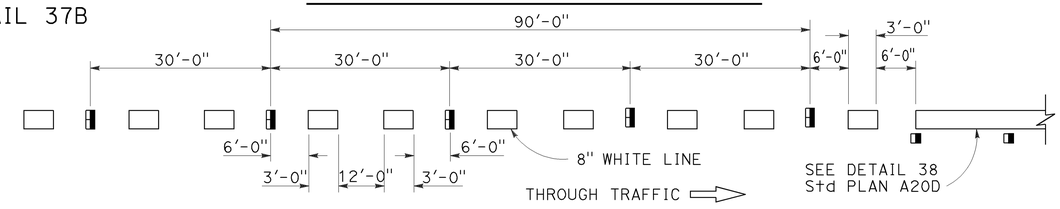

DETAIL 37C

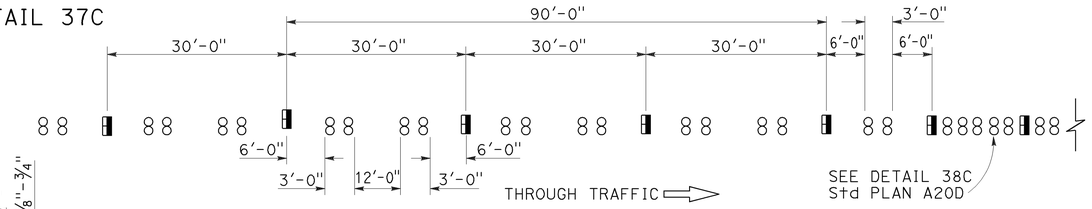

STATE OF CALIFORNIA
DEPARTMENT OF TRANSPORTATION

PAVEMENT MARKERS AND TRAFFIC LINE TYPICAL DETAILS

NO SCALE

RSP A20C DATED JULY 19, 2013 SUPERSEDES STANDARD PLAN A20C DATED MAY 20, 2011 - PAGE 11 OF THE STANDARD PLANS BOOK DATED 2010.

REVISED STANDARD PLAN RSP A20C

2010 REVISED STANDARD PLAN RSP A20C

4-29-13

Dist	COUNTY	ROUTE	POST MILES TOTAL PROJECT	SHEET No.	TOTAL SHEETS
11	Imp	8	R45.5/R55.0	157	211

REGISTERED CIVIL ENGINEER

April 20, 2012
PLANS APPROVAL DATE

REGISTERED PROFESSIONAL ENGINEER
Roberta L. McLaughlin
No. C40375
Exp. 3-31-13
CIVIL
STATE OF CALIFORNIA

THE STATE OF CALIFORNIA OR ITS OFFICERS OR AGENTS SHALL NOT BE RESPONSIBLE FOR THE ACCURACY OR COMPLETENESS OF SCANNED COPIES OF THIS PLAN SHEET.

TO ACCOMPANY PLANS DATED 08-03-15

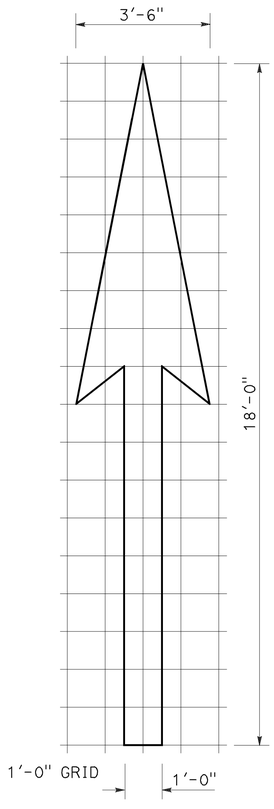

A=25 ft^2

TYPE I 18'-0" ARROW

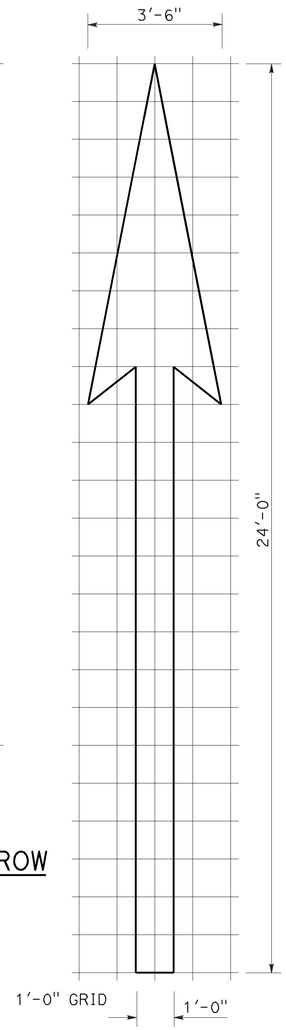

A=31 ft^2

TYPE I 24'-0" ARROW

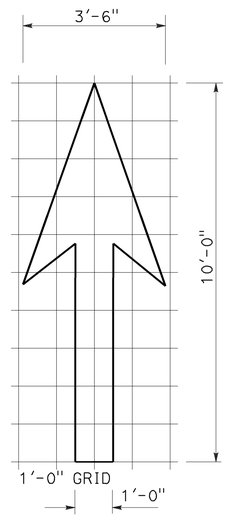

A=14 ft^2

TYPE I 10'-0" ARROW

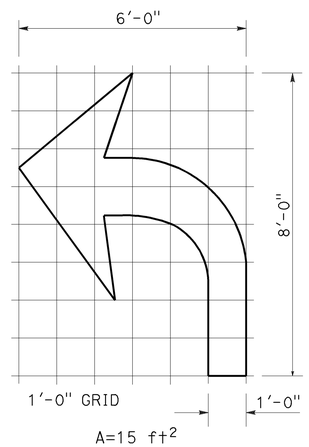

A=15 ft^2

TYPE IV (L) ARROW

(For Type IV (R) arrow, use mirror image)

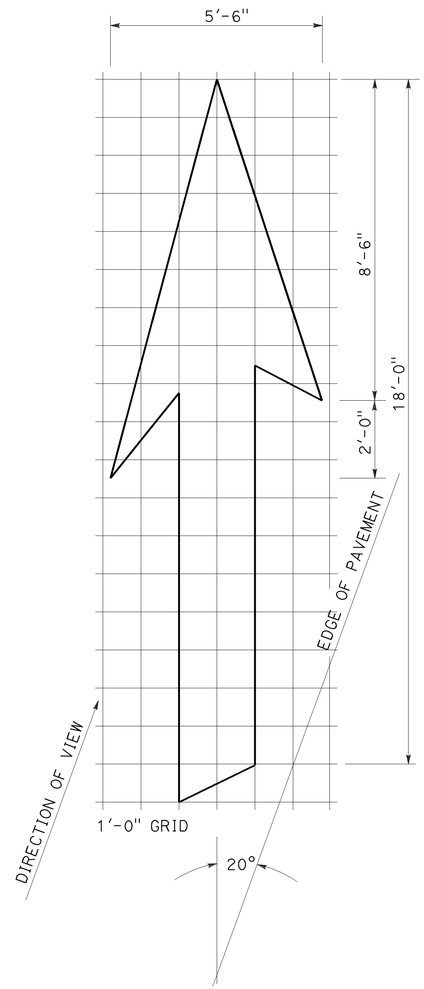

A=42 ft^2

TYPE VI ARROW

Right lane drop arrow
(For left lane, use mirror image)

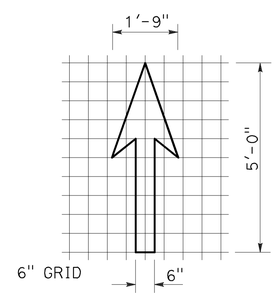

A=3.5 ft^2

BIKE LANE ARROW

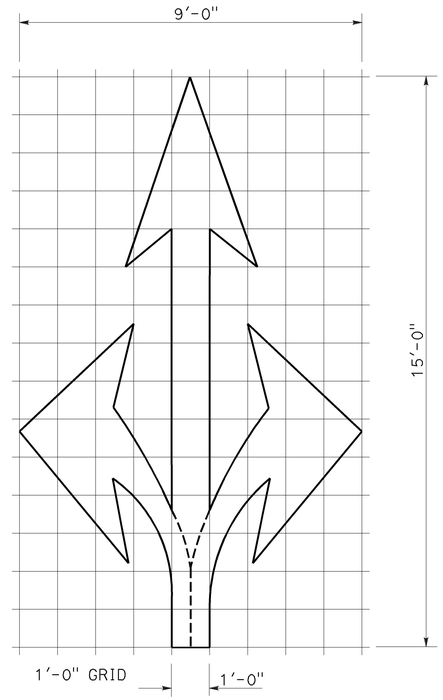

A=36 ft^2

TYPE VIII ARROW

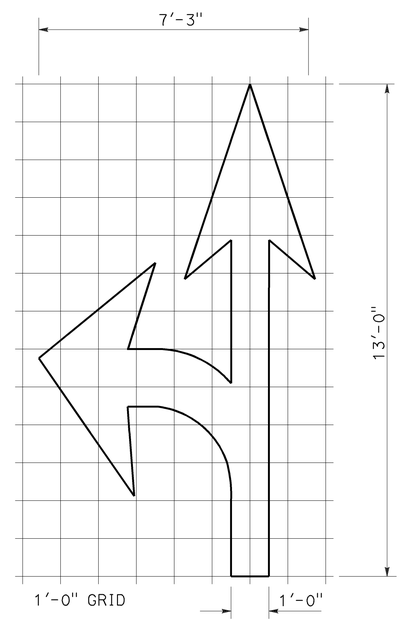

A=27 ft^2

TYPE VII (L) ARROW

(For Type VII (R) arrow, use mirror image)

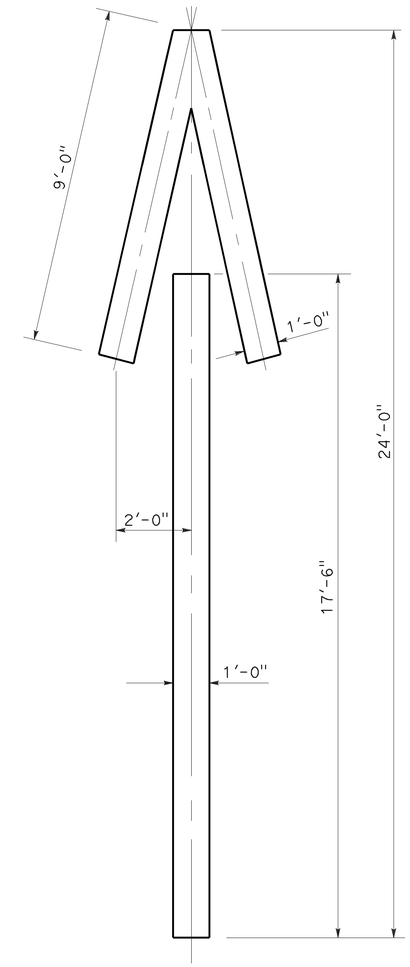

A=33 ft^2

TYPE V ARROW

NOTE:
Minor variations in dimensions may be accepted by the Engineer.

STATE OF CALIFORNIA
DEPARTMENT OF TRANSPORTATION

PAVEMENT MARKINGS ARROWS

NO SCALE

RSP A24A DATED APRIL 20, 2012 SUPERSEDES STANDARD PLAN A24A DATED MAY 20, 2011 - PAGE 13 OF THE STANDARD PLANS BOOK DATED 2010.

REVISED STANDARD PLAN RSP A24A

2010 REVISED STANDARD PLAN RSP A24A

3-14-12

Dist	COUNTY	ROUTE	POST MILES TOTAL PROJECT	SHEET No.	TOTAL SHEETS
11	Imp	8	R45.5/R55.0	158	211

REGISTERED CIVIL ENGINEER

July 20, 2012
PLANS APPROVAL DATE

REGISTERED PROFESSIONAL ENGINEER
Roberta L. McLaughlin
No. C40375
Exp. 3-31-13
CIVIL
STATE OF CALIFORNIA

THE STATE OF CALIFORNIA OR ITS OFFICERS OR AGENTS SHALL NOT BE RESPONSIBLE FOR THE ACCURACY OR COMPLETENESS OF SCANNED COPIES OF THIS PLAN SHEET.

TO ACCOMPANY PLANS DATED 08-03-15

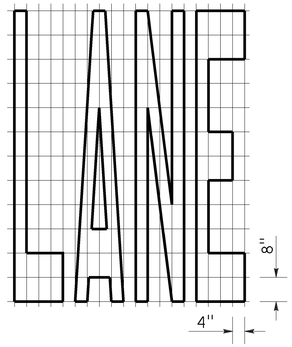

A=24 ft^2

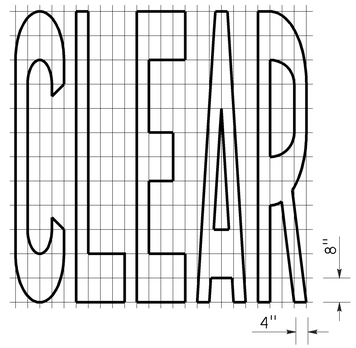

A=27 ft^2

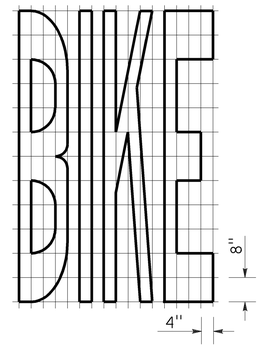

A=21 ft^2

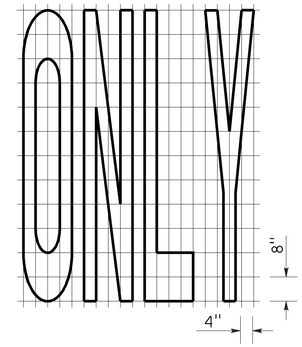

A=22 ft^2

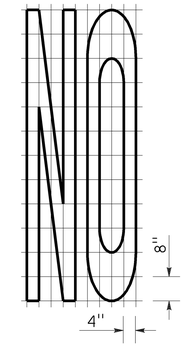

A=14 ft^2

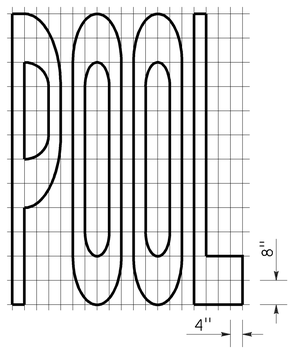

A=23 ft^2

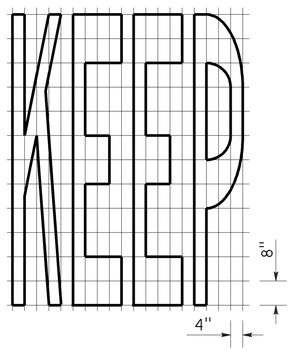

A=24 ft^2

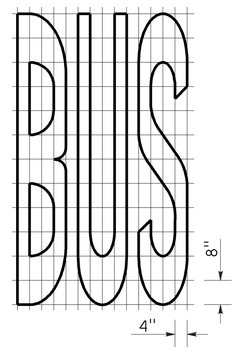

A=20 ft^2

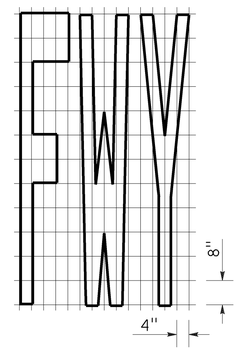

A=16 ft^2

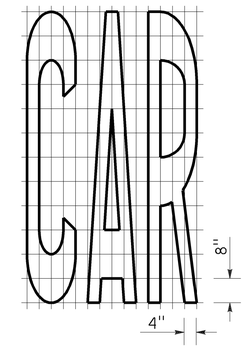

A=17 ft^2

WORD MARKINGS			
ITEM	ft^2	ITEM	ft^2
LANE	24	NO	14
POOL	23	BIKE	21
CAR	17	BUS	20
CLEAR	27	ONLY	22
KEEP	24	FWY	16

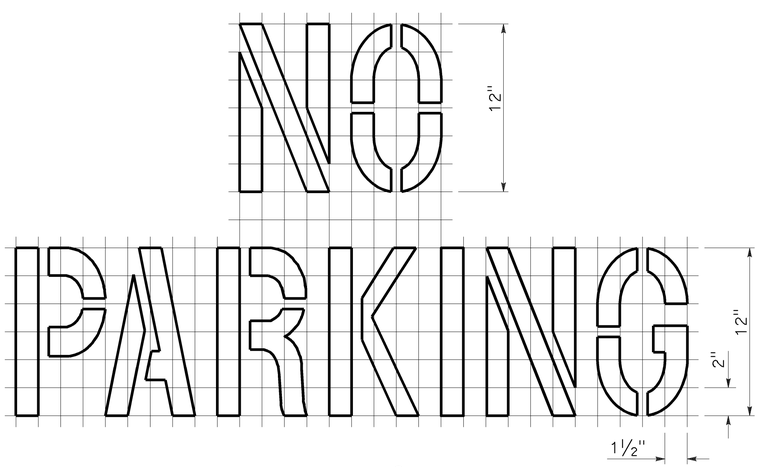

A=2 ft^2
See Notes 6 and 7

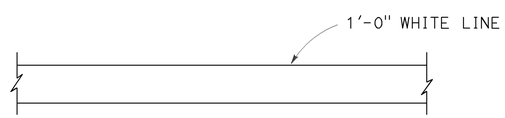

LIMIT LINE (STOP LINE)

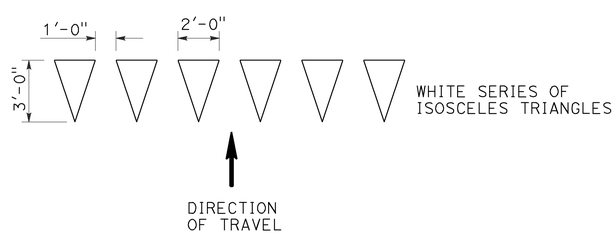

YIELD LINE

NOTES:

1. If a message consists of more than one word, it should read "UP", i.e., the first word should be nearest the driver.
2. The space between words should be at least four times the height of the characters for low speed roads, but not more than ten times the height of the characters. The space may be reduced appropriately where there is limited space because of local conditions.
3. Minor variations in dimensions may be accepted by the Engineer.
4. Portions of a letter, number or symbol may be separated by connecting segments not to exceed 2" in width.
5. The words "NO PARKING" pavement marking is to be used for parking facilities. For typical locations of markings, see Standard Plans A90A and A90B.
6. The words "NO PARKING", shall be painted in white letters no less than 1'-0" high on a contrasting background and located so that it is visible to traffic enforcement officials.

STATE OF CALIFORNIA
DEPARTMENT OF TRANSPORTATION

PAVEMENT MARKINGS WORDS, LIMIT AND YIELD LINES

NO SCALE

RSP A24E DATED JULY 20, 2012 SUPERSEDES STANDARD PLAN A24E
DATED MAY 20, 2011 - PAGE 17 OF THE STANDARD PLANS BOOK DATED 2010.

REVISED STANDARD PLAN RSP A24E

2010 REVISED STANDARD PLAN RSP A24E

6-12-12

Dist	COUNTY	ROUTE	POST MILES TOTAL PROJECT	SHEET No.	TOTAL SHEETS
11	Imp	8	R45.5/R55.0	159	211

Randell D. Hiatt
REGISTERED CIVIL ENGINEER

July 19, 2013
PLANS APPROVAL DATE

REGISTERED PROFESSIONAL ENGINEER
Randell D. Hiatt
No. C50200
Exp. 6-30-15
CIVIL
STATE OF CALIFORNIA

THE STATE OF CALIFORNIA OR ITS OFFICERS OR AGENTS SHALL NOT BE RESPONSIBLE FOR THE ACCURACY OR COMPLETENESS OF SCANNED COPIES OF THIS PLAN SHEET.

TO ACCOMPANY PLANS DATED 08-03-15

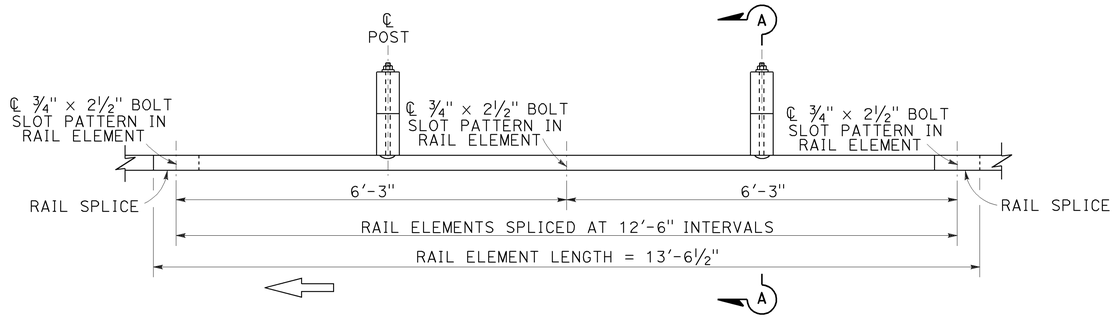

PLAN

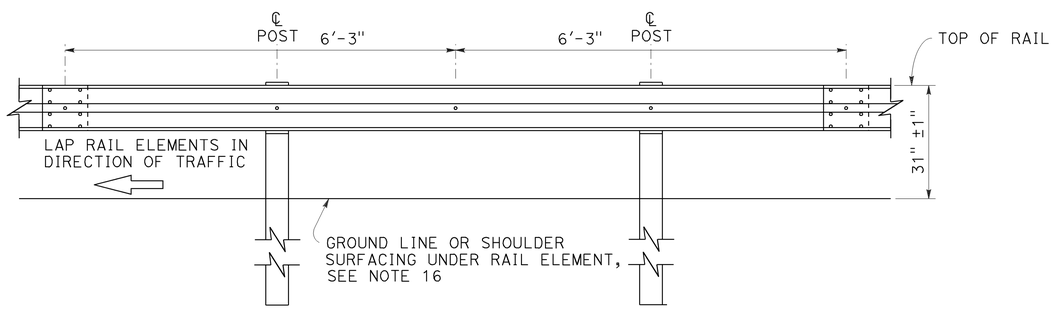

ELEVATION

MIDWEST GUARDRAIL SYSTEM WITH WOOD POST AND BLOCKS

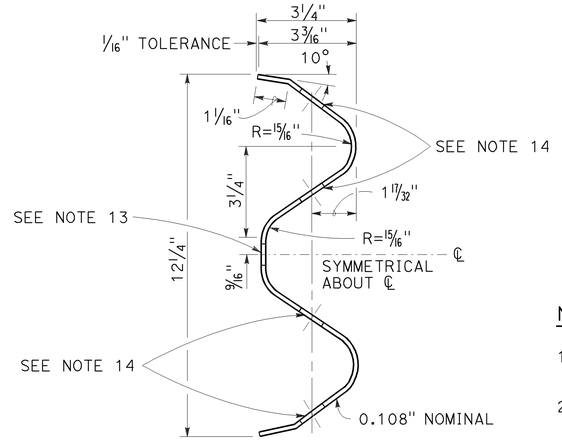

SECTION THRU RAIL ELEMENT

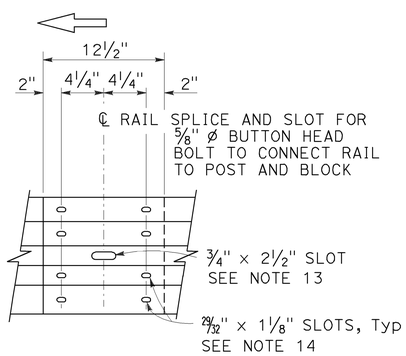

ELEVATION

RAIL ELEMENT SPLICE DETAIL

a) Connect the over lapped end of the rail elements with ⅝" ø × 1⅜" button head oval shoulder splice bolts inserted into the 29⁄32" × 1⅛" slots and bolted together with ⅝" ø recessed hex nuts. Recess of hex nut points toward rail element. A total of 8 bolts and nuts are to be used at each rail splice connection.

b) The ends of the rail elements are to be overlapped in the direction of traffic (see details).

c) Where end cap is to be attached to the end of a rail element, a total of 4 of the above described splice bolts and nuts are to be used.

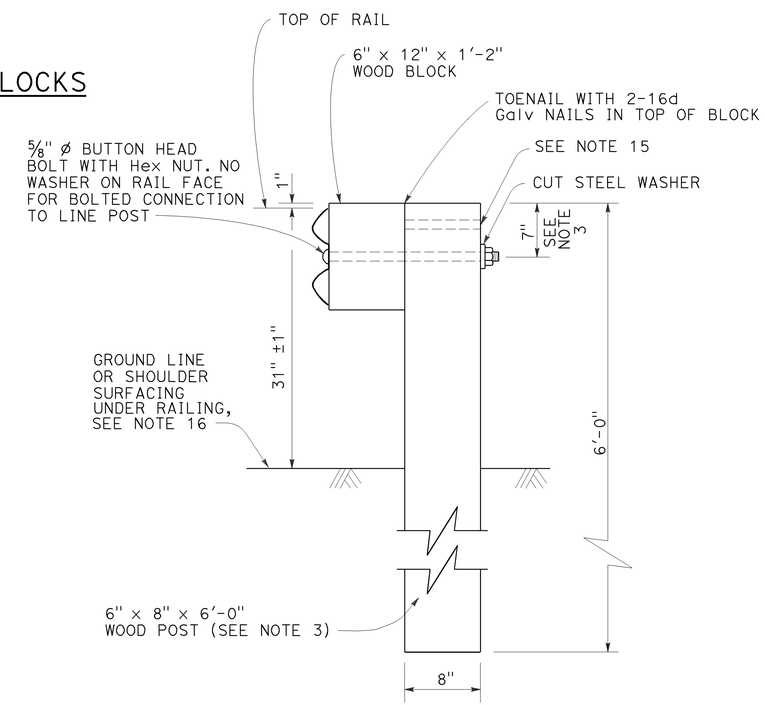

SECTION A-A

TYPICAL WOOD LINE POST INSTALLATION

See Note 4

NOTES:

1. For details of steel post installations, see Revised Standard Plan RSP A77L2.
2. For details of standard hardware used to construct MGS, see Revised Standard Plan RSP A77M1.
3. For details of wood posts and wood blocks used to construct MGS, see Revised Standard Plan RSP A77N1.
4. For additional installation details, see Revised Standard Plan RSP A77N3.
5. MGS post spacing to be 6'-3" center to center, except as otherwise noted.
6. For MGS typical layouts, see the A77P, A77Q and A77R Series of Standard Plans.
7. If railing is connected to terminal system end treatment, use 31" height terminal system end treatment.
8. For MGS end anchor details, see Revised Standard Plans RSP A77S1 and RSP A77T2.
9. For details of MGS transition to bridge railing, see Revised Standard Plan RSP A77U4.
10. For additional details of MSG connection to bridge railing, see Revised Standard Plans RSP A77U1, RSP A77U2 and RSP A77V1.
11. For MGS connection details to abutments and walls, see Revised Standard Plan RSP A77U3.
12. For typical MGS delineation and dike positioning details, see Revised Standard Plan RSP A77N4.
13. Slotted hole for bolted connection of rail element to block and post. See "Section Thru Rail Element".
14. Slotted holes for splice bolts to overlap ends of rail element. See "Section Thru Rail Element".
15. Additional hole in uppermost portion of line post is for potential future adjustments of railing height. See Revised Standard Plan RSP A77N1.
16. Install posts in soil.

STATE OF CALIFORNIA
DEPARTMENT OF TRANSPORTATION

MIDWEST GUARDRAIL SYSTEM STANDARD RAILING SECTION (WOOD POST WITH WOOD BLOCK)

NO SCALE

RSP A77L1 DATED JULY 19, 2013 SUPPLEMENTS STANDARD PLANS BOOK DATED 2010.

REVISED STANDARD PLAN RSP A77L1

2010 REVISED STANDARD PLAN RSP A77L1

Dist	COUNTY	ROUTE	POST MILES TOTAL PROJECT	SHEET No.	TOTAL SHEETS
11	Imp	8	R45.5/R55.0	160	211

Randell D. Hiatt
REGISTERED CIVIL ENGINEER

July 19, 2013
PLANS APPROVAL DATE

REGISTERED PROFESSIONAL ENGINEER
Randell D. Hiatt
No. C50200
Exp. 6-30-15
CIVIL
STATE OF CALIFORNIA

THE STATE OF CALIFORNIA OR ITS OFFICERS OR AGENTS SHALL NOT BE RESPONSIBLE FOR THE ACCURACY OR COMPLETENESS OF SCANNED COPIES OF THIS PLAN SHEET.

TO ACCOMPANY PLANS DATED 08-03-15

2010 REVISED STANDARD PLAN RSP A77L2

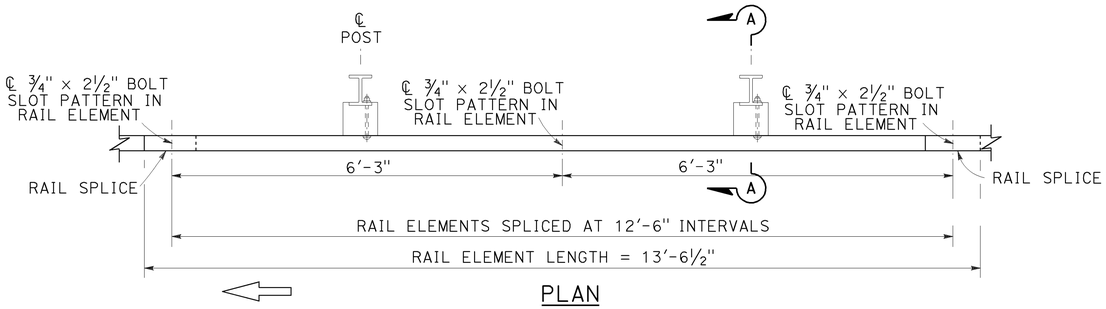

PLAN

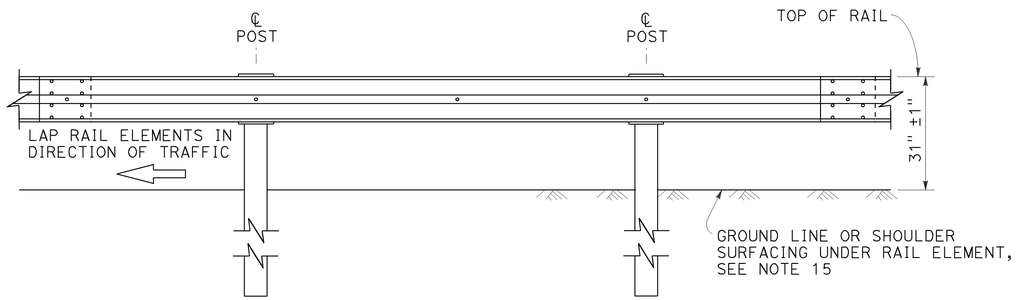

ELEVATION

MIDWEST GUARDRAIL SYSTEM WITH STEEL POSTS AND NOTCHED WOOD OR NOTCHED RECYCLED PLASTIC BLOCKS

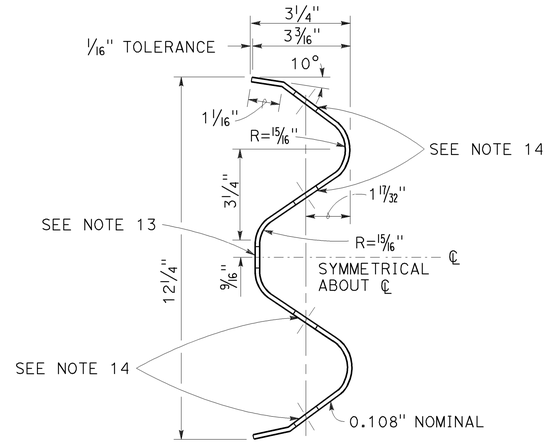

SECTION THRU RAIL ELEMENT

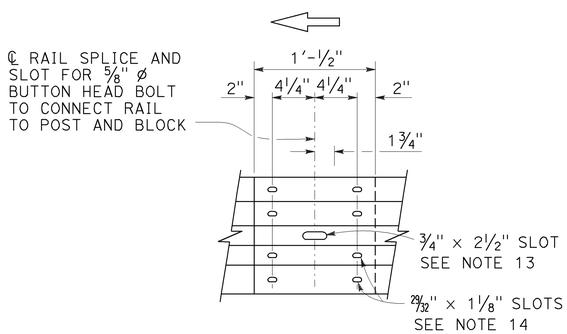

ELEVATION

RAIL ELEMENT SPLICE DETAIL

a) Connect the over lapped end of the rail elements with ⅝" ø × 1⅜" button head oval shoulder splice bolts inserted into the 29⁄32" × 1⅛" slots and bolted together with ⅝" ø recessed hex nuts. Recess of hex nut points toward rail element. A total of 8 bolts and nuts are to be used at each rail splice connection.

b) The ends of the rail elements are to be overlapped in the direction of traffic (see details).

c) Where end cap is to be attached to the end of a rail element, a total of 4 of the above described splice bolts and nuts are to be used.

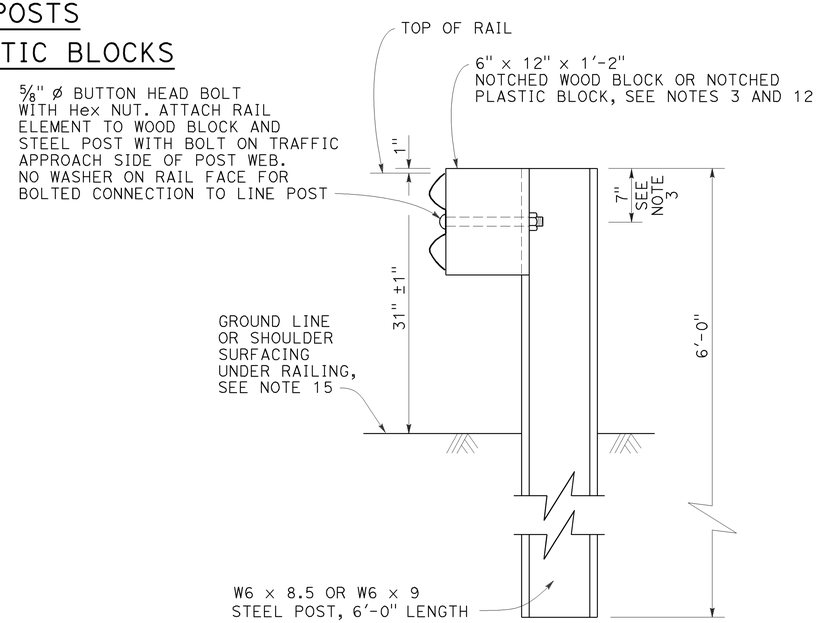

SECTION A-A

TYPICAL STEEL LINE POST INSTALLATION

See Note 4

NOTES:

1. For details of wood post installations, see Revised Standard Plan RSP A77L1.
2. For details of standard hardware used to construct MGS, see Revised Standard Plan RSP A77M1.
3. For details of steel posts and notched wood blocks used to construct MGS, see Revised Standard Plan RSP A77N2.
4. For additional installation details, see Revised Standard Plan RSP A77N3.
5. MGS post spacing to be 6'-3" center to center, except as otherwise noted.
6. For MGS typical layouts, see the A77P, A77Q and A77R Series of Standard Plans.
7. If railing is connected to terminal system end treatment, use 31" height terminal system end treatment.
8. For MGS end anchor details, see Revised Standard Plans RSP A77S1 and RSP A77T2.
9. For details of MGS transition to bridge railing, see Revised Standard Plan RSP A77U4.
10. For additional details of MGS connection to bridge railings, see Revised Standard Plans RSP A77U1, RSP A77U2 and RSP A77V1.
11. For dike positioning and MGS delineation details, see Revised Standard Plan RSP A77N4.
12. Notched face of block faces steel post.
13. Slotted hole for bolted connection of rail element to block and post. See "Section Thru Rail Element".
14. Slotted holes for splice bolts to overlap ends of rail element. See "Section Thru Rail Element".
15. Install posts in soil.

STATE OF CALIFORNIA
DEPARTMENT OF TRANSPORTATION

MIDWEST GUARDRAIL SYSTEM STANDARD RAILING SECTION (STEEL POST WITH NOTCHED WOOD OR NOTCHED RECYCLED PLASTIC BLOCK)

NO SCALE

RSP A77L2 DATED JULY 19, 2013 SUPPLEMENTS THE STANDARD PLANS BOOK DATED 2010.

REVISED STANDARD PLAN RSP A77L2

Dist	COUNTY	ROUTE	POST MILES TOTAL PROJECT	SHEET No.	TOTAL SHEETS
11	Imp	8	R45.5/R55.0	161	211

Randell D. Hiatt
REGISTERED CIVIL ENGINEER

July 19, 2013
PLANS APPROVAL DATE

REGISTERED PROFESSIONAL ENGINEER
Randell D. Hiatt
No. C50200
Exp. 6-30-15
CIVIL
STATE OF CALIFORNIA

THE STATE OF CALIFORNIA OR ITS OFFICERS OR AGENTS SHALL NOT BE RESPONSIBLE FOR THE ACCURACY OR COMPLETENESS OF SCANNED COPIES OF THIS PLAN SHEET.

TO ACCOMPANY PLANS DATED 08-03-15

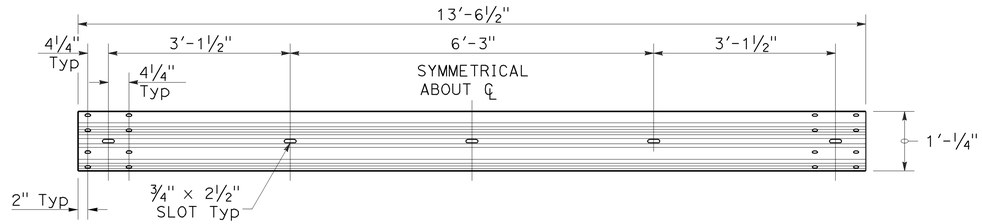

TYPICAL RAIL ELEMENT

NOTE:

1. Slotted holes for splice bolts to overlap ends of rail element.

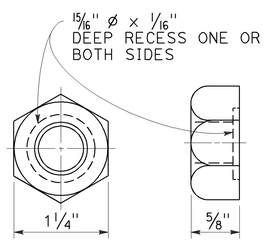

⅝" ø RECESS NUT

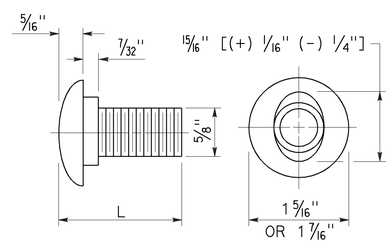

⅝" ø BUTTON HEAD BOLT

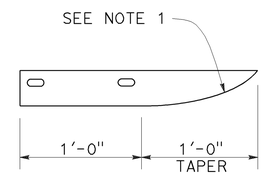

PLAN

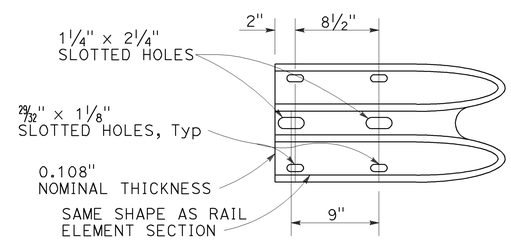

ELEVATION

END CAP
(TYPE A)

BUTTON HEAD BOLT

L	THREAD LENGTH
1⅜"	FULL THREAD LENGTH
2"	FULL THREAD LENGTH
10"	4" Min THREAD LENGTH
18"	4" Min THREAD LENGTH
20"	4" Min THREAD LENGTH
22"	4" Min THREAD LENGTH
26"	4" Min THREAD LENGTH
36"	4" Min THREAD LENGTH
** 2¾"	2" Min THREAD LENGTH
** 19"	4" Min THREAD LENGTH

** For nested rail applications.

STATE OF CALIFORNIA
DEPARTMENT OF TRANSPORTATION

MIDWEST GUARDRAIL SYSTEM STANDARD HARDWARE

NO SCALE

RSP A77M1 DATED JULY 19, 2013 SUPPLEMENTS THE STANDARD PLANS BOOK DATED 2010.

REVISED STANDARD PLAN RSP A77M1

2010 REVISED STANDARD PLAN RSP A77M1

Dist	COUNTY	ROUTE	POST MILES TOTAL PROJECT	SHEET No.	TOTAL SHEETS
11	Imp	8	R45.5/R55.0	162	211

Randell D. Hiatt
REGISTERED CIVIL ENGINEER

July 19, 2013
PLANS APPROVAL DATE

REGISTERED PROFESSIONAL ENGINEER
Randell D. Hiatt
No. C50200
Exp. 6-30-15
CIVIL
STATE OF CALIFORNIA

THE STATE OF CALIFORNIA OR ITS OFFICERS OR AGENTS SHALL NOT BE RESPONSIBLE FOR THE ACCURACY OR COMPLETENESS OF SCANNED COPIES OF THIS PLAN SHEET.

TO ACCOMPANY PLANS DATED 08-03-15

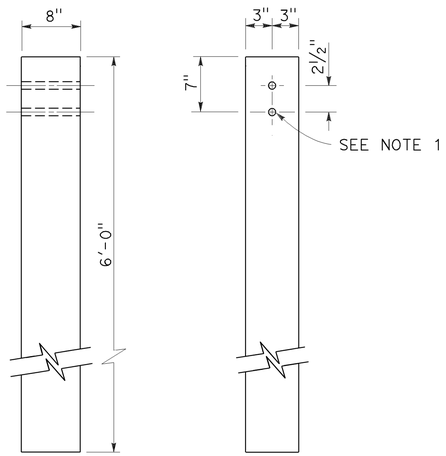

SIDE FRONT

6" x 8" WOOD POST
See Note 3

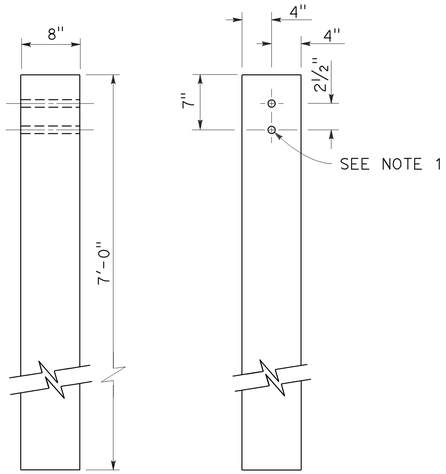

SIDE FRONT

8" x 8" WOOD POST
See Note 4

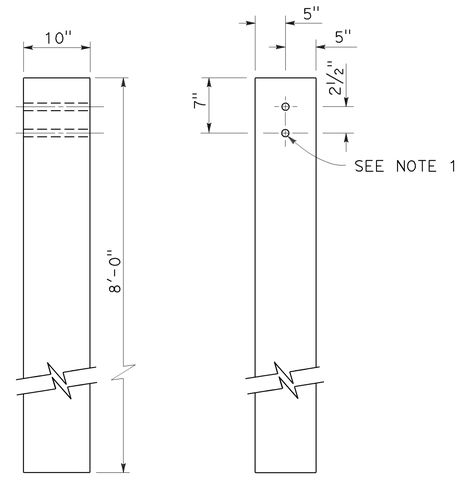

SIDE FRONT

10" x 10" WOOD POST
See Note 5

NOTES:

1. All holes in wood posts and blocks shall be ¾" Dia ± 1/16".
2. Dimensions shown for wood post are nominal.
3. This post and block combination used for standard line post sections of MGS.
4. This post and 8" x 12" block combination used for line post sections of MGS on narrow roadways.
5. This post and 8" x 12" block combination is typically used where strengthened line post sections of MGS are warranted to shield fixed objects.
6. See Revised Standard Plan RSP A77L3 for use of 6" x 8" and 8" x 8" wood blocks.

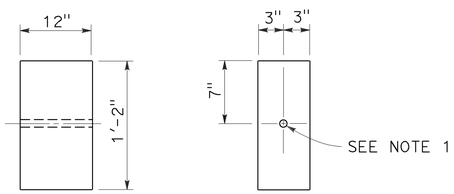

SIDE FRONT

6" x 12" WOOD BLOCK
See Note 3

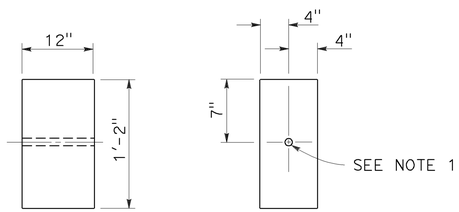

SIDE FRONT

8" x 12" WOOD BLOCK

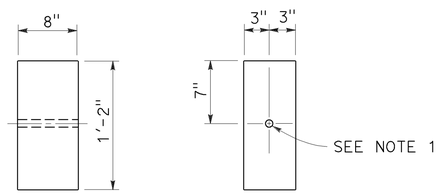

SIDE FRONT

6" x 8" WOOD BLOCK
Only for use with metal beam guard rail see Note 6

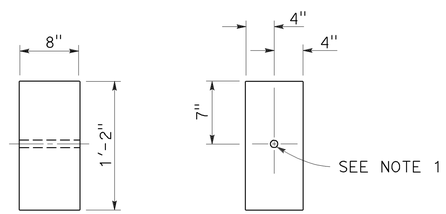

SIDE FRONT

8" x 8" WOOD BLOCK
Only for use with metal beam guard rail see Note 6

STATE OF CALIFORNIA
DEPARTMENT OF TRANSPORTATION

MIDWEST GUARDRAIL SYSTEM WOOD POST AND WOOD BLOCK DETAILS

NO SCALE

RSP A77N1 DATED JULY 19, 2013 SUPPLEMENTS THE STANDARD PLANS BOOK DATED 2010.

REVISED STANDARD PLAN RSP A77N1

2010 REVISED STANDARD PLAN RSP A77N1

7-3-13

Dist	COUNTY	ROUTE	POST MILES TOTAL PROJECT	SHEET No.	TOTAL SHEETS
11	Imp	8	R45.5/R55.0	163	211

Randell D. Hiatt
REGISTERED CIVIL ENGINEER

November 15, 2013
PLANS APPROVAL DATE

REGISTERED PROFESSIONAL ENGINEER
Randell D. Hiatt
No. C50200
Exp. 6-30-15
CIVIL
STATE OF CALIFORNIA

THE STATE OF CALIFORNIA OR ITS OFFICERS OR AGENTS SHALL NOT BE RESPONSIBLE FOR THE ACCURACY OR COMPLETENESS OF SCANNED COPIES OF THIS PLAN SHEET.

TO ACCOMPANY PLANS DATED 08-03-15

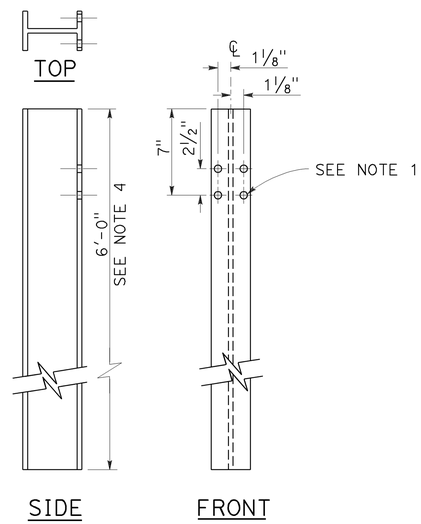

W6 x 9 OR W6 x 8.5
STEEL POST
See Note 4

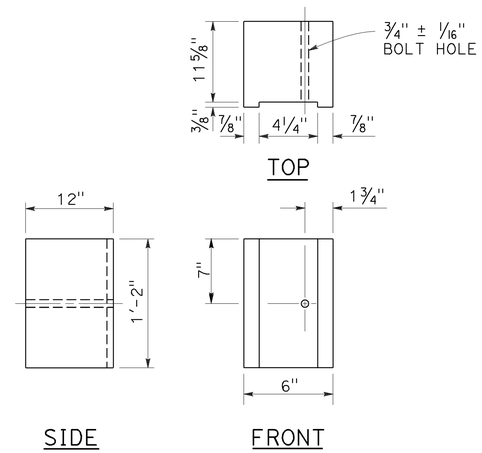

6" x 12"
NOTCHED WOOD BLOCK
See Notes 2 and 3

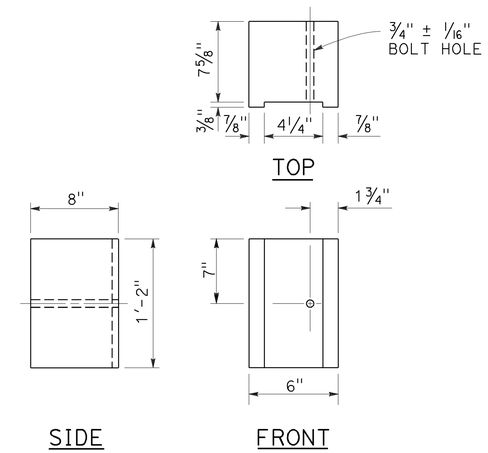

6" x 8"
NOTCHED WOOD BLOCK
Only for use with metal beam guard railing. See Note 5

NOTES:

1. All holes in steel post shall be 13/16" Dia maximum.
2. Dimensions shown for wood block are nominal.
3. Notched face of block faces steel post.
4. 6'-0" length posts to be used for typical roadway installation. See Revised Standard Plan RSP A77N3.
5. See Revised Standard Plan RSP A77L3 for use of 6" x 8" and 8" x 8" notched wood blocks.
6. This post and 8" x 12" block combination to be used for line post sections of MGS on narrow roadways and where strengthened line post sections of MGS are warranted to shield fixed objects.

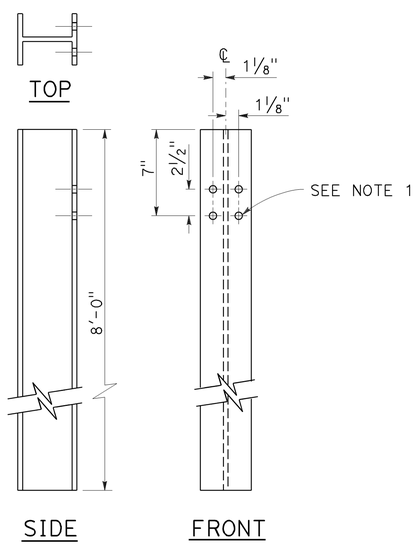

W6 x 15
STEEL POST
See Note 6

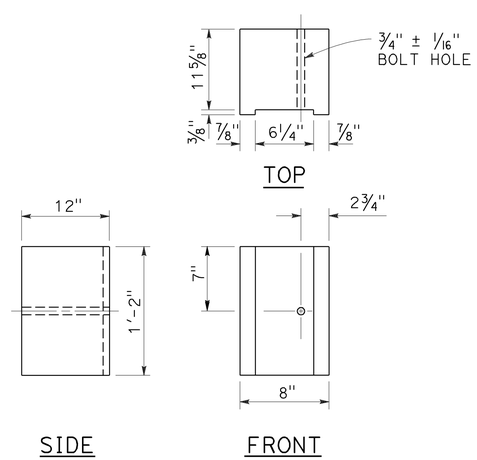

8" x 12"
NOTCHED WOOD BLOCK
See Notes 2 and 3

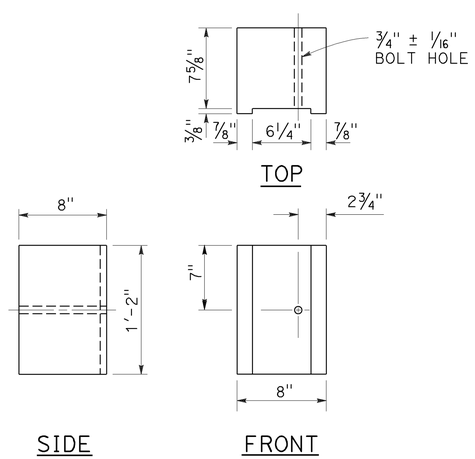

8" x 8"
NOTCHED WOOD BLOCK
Only for use with metal beam guard railing. See Note 5

STATE OF CALIFORNIA
DEPARTMENT OF TRANSPORTATION

MIDWEST GUARDRAIL SYSTEM STEEL POST AND NOTCHED WOOD BLOCK DETAILS

NO SCALE

RSP A77N2 DATED NOVEMBER 15, 2013 SUPERSEDES RSP A77N2
DATED JULY 19, 2013 THAT SUPPLEMENTS THE STANDARD PLANS BOOK DATED 2010.

REVISED STANDARD PLAN RSP A77N2

2010 REVISED STANDARD PLAN RSP A77N2

10-29-13

Dist	COUNTY	ROUTE	POST MILES TOTAL PROJECT	SHEET No.	TOTAL SHEETS
11	Imp	8	R45.5/R55.0	164	211

Randell D. Hiatt
REGISTERED CIVIL ENGINEER

November 15, 2013
PLANS APPROVAL DATE

REGISTERED PROFESSIONAL ENGINEER
Randell D. Hiatt
No. C50200
Exp. 6-30-15
CIVIL
STATE OF CALIFORNIA

THE STATE OF CALIFORNIA OR ITS OFFICERS OR AGENTS SHALL NOT BE RESPONSIBLE FOR THE ACCURACY OR COMPLETENESS OF SCANNED COPIES OF THIS PLAN SHEET.

TO ACCOMPANY PLANS DATED 08-03-15

2010 REVISED STANDARD PLAN RSP A77N3

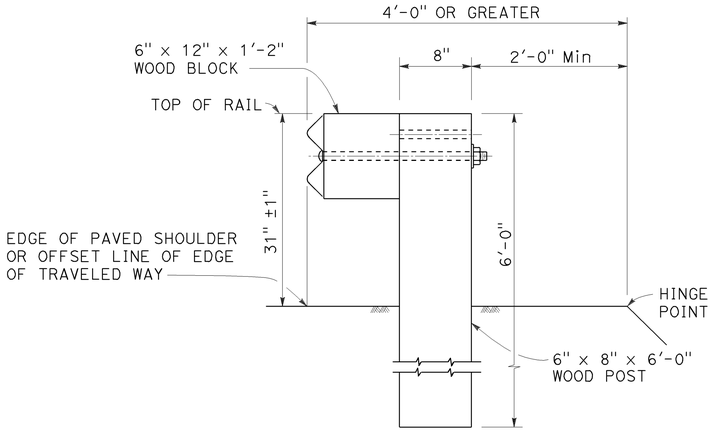

DETAIL A

TYPICAL ROADWAY INSTALLATION

See Note 1

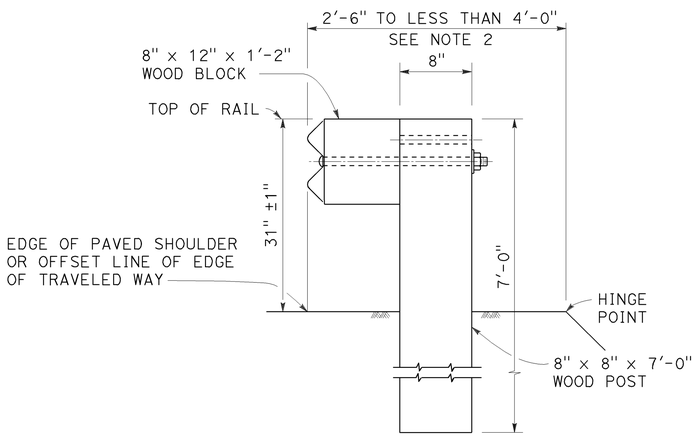

DETAIL B

NARROW ROADWAY INSTALLATION

See Note 1

POST EMBEDMENT

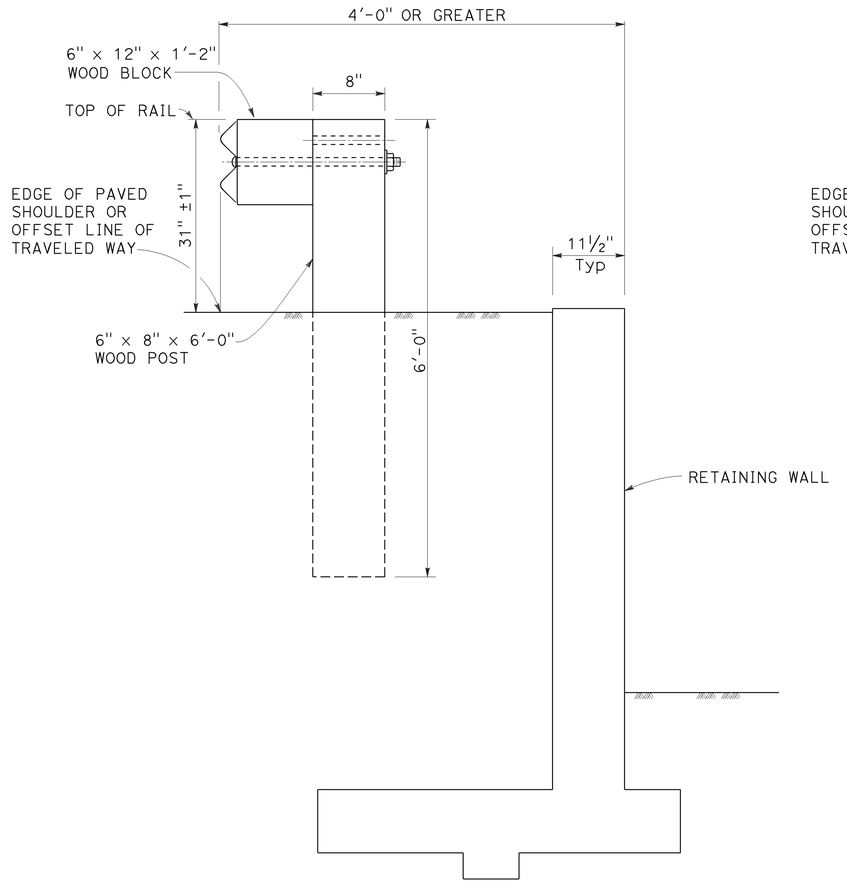

DETAIL C

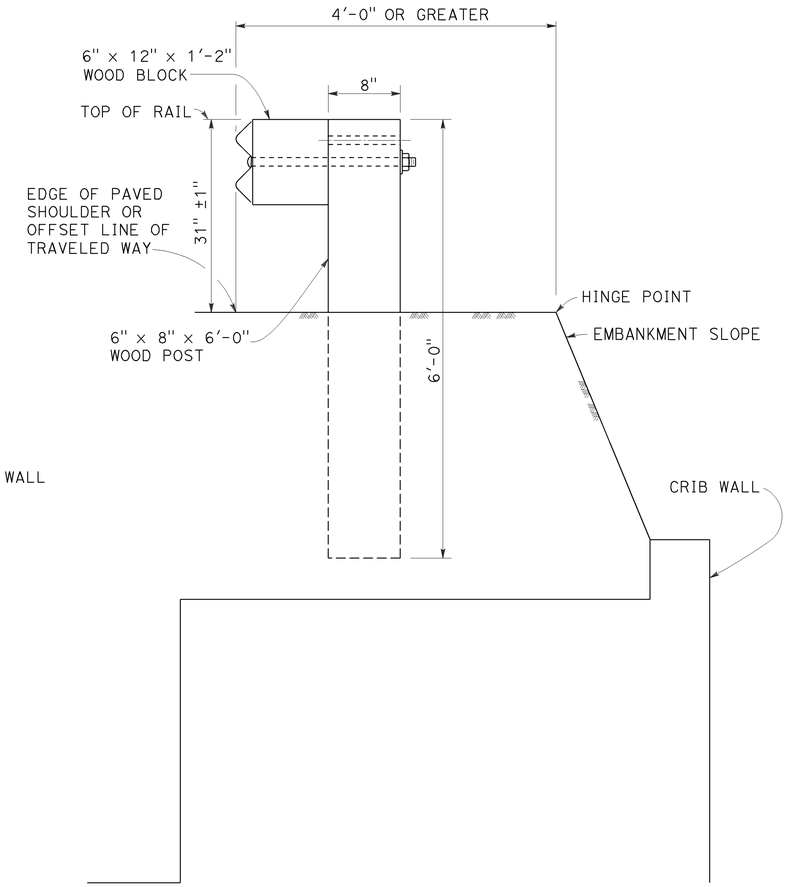

DETAIL D

INSTALLATION AT EARTH RETAINING WALLS

NOTES:

1. These installation details also applicable to steel line post installations. For Detail A, C, and D, where steel line post installations are constructed, W6 x 8.5 or W6 x 9 steel post, 6'-0" in length, with 6" x 12" x 1'-2" notched wood blocks or notched recycled plastic blocks are to be used in place of the size of wood post and wood block shown. For Detail B, where steel line post installations are constructed, W6 x 15 steel post, 8'-0" in length, with 8" x 12" x 1'-2" notched wood blocks or notched recycled plastic blocks are to be used in place of the size of wood post and wood block shown. For additional installation details, see Revised Standard Plan RSP A77L1 and RSP A77L2.
2. Where the distance between the face of the rail and the hinge point is less than 2'-6", see the Project Plans for special details.
3. For dike positioning with MGS installations, see Revised Standard Plan RSP A77N4.

STATE OF CALIFORNIA
DEPARTMENT OF TRANSPORTATION

MIDWEST GUARDRAIL SYSTEM TYPICAL LINE POST EMBEDMENT AND HINGE POINT OFFSET DETAILS

NO SCALE

RSP A77N3 DATED NOVEMBER 15, 2013 SUPERSEDES RSP A77N3
DATED JULY 19, 2013 THAT SUPPLEMENTS THE STANDARD PLANS BOOK DATED 2010.

REVISED STANDARD PLAN RSP A77N3

10-29-13

Dist	COUNTY	ROUTE	POST MILES TOTAL PROJECT	SHEET No.	TOTAL SHEETS
11	Imp	8	R45.5/R55.0	165	211

Randell D. Hiatt
REGISTERED CIVIL ENGINEER

July 19, 2013
PLANS APPROVAL DATE

REGISTERED PROFESSIONAL ENGINEER
Randell D. Hiatt
No. C50200
Exp. 6-30-15
CIVIL
STATE OF CALIFORNIA

THE STATE OF CALIFORNIA OR ITS OFFICERS OR AGENTS SHALL NOT BE RESPONSIBLE FOR THE ACCURACY OR COMPLETENESS OF SCANNED COPIES OF THIS PLAN SHEET.

TO ACCOMPANY PLANS DATED 08-03-15

NOTES:

1. When necessary to place dike more than 7" in front of face of MGS, only Type C dike may be used. For dike details, see Revised Standard Plan RSP A87B.
2. For standard railing post embedment, see Revised Standard Plan RSP A77N3.
3. MGS delineation to be used where shown on the Project Plans.
4. When dike or curb is placed under MGS, the maximum height of the dike or curb shall be 6". Mountable dike should not be used. For dike and curb details, see Revised Standard Plans RSP A87A and RSP A87B.
5. For details of typical distance between the face of rail and hinge point, see Revised Standard Plan RSP A77N3.
6. For steel line posts, use 1/4 - 20 self-tapping screws in 0.22" diameter holes or 1/4" bolts in 9/32" diameter holes.

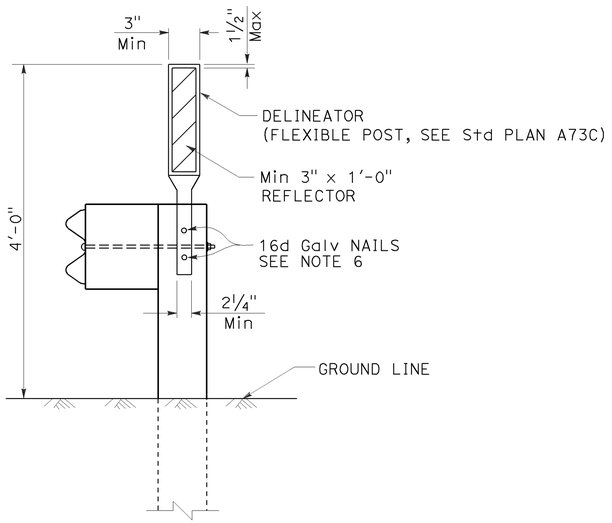

MGS DELINEATION

See Note 3

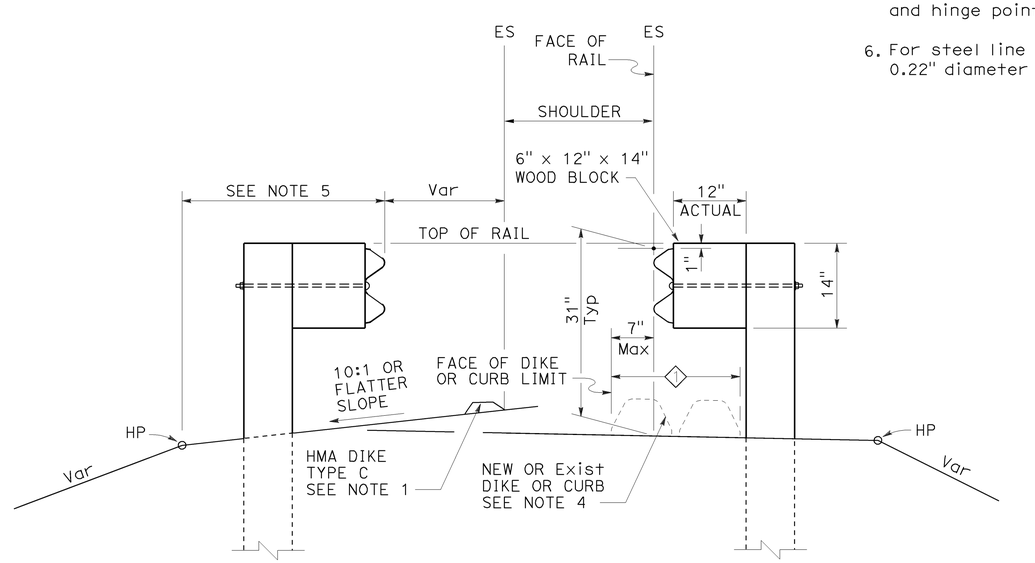

DIKE POSITIONING

See Note 1

1 PERMISSIBLE DIKE OR CURB PLACEMENT AREA

STATE OF CALIFORNIA
DEPARTMENT OF TRANSPORTATION

MIDWEST GUARDRAIL SYSTEM TYPICAL RAILING DELINEATION AND DIKE POSITIONING DETAILS

NO SCALE

RSP A77N4 DATED JULY 19, 2013 SUPPLEMENTS THE STANDARD PLANS BOOK DATED 2010.

REVISED STANDARD PLAN RSP A77N4

2010 REVISED STANDARD PLAN RSP A77N4

7-10-13

Dist	COUNTY	ROUTE	POST MILES TOTAL PROJECT	SHEET No.	TOTAL SHEETS
11	Imp	8	R45.5/R55.0	166	211

Randell D. Hiatt
REGISTERED CIVIL ENGINEER

November 15, 2013
PLANS APPROVAL DATE

REGISTERED PROFESSIONAL ENGINEER
Randell D. Hiatt
No. C50200
Exp. 6-30-15
CIVIL
STATE OF CALIFORNIA

THE STATE OF CALIFORNIA OR ITS OFFICERS OR AGENTS SHALL NOT BE RESPONSIBLE FOR THE ACCURACY OR COMPLETENESS OF SCANNED COPIES OF THIS PLAN SHEET.

TO ACCOMPANY PLANS DATED 08-03-15

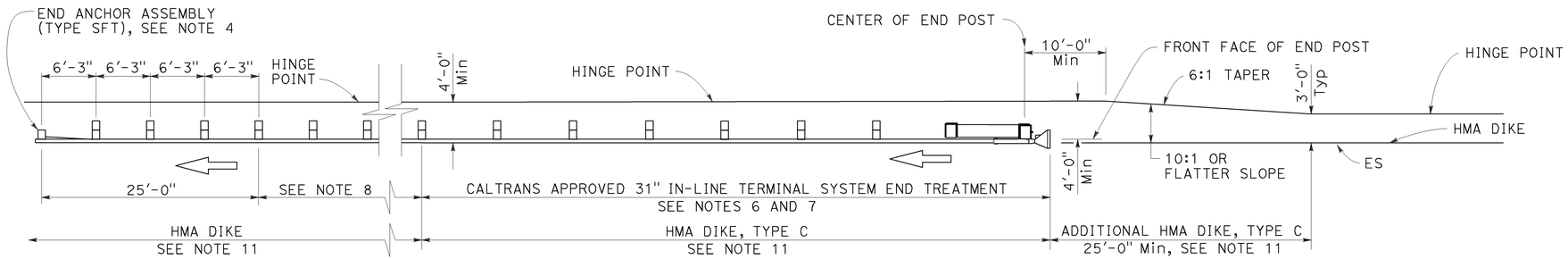

TYPE 11A LAYOUT

(Embankment MGS installation with 31" in-line end treatment at traffic approach end of railing) see Note 5

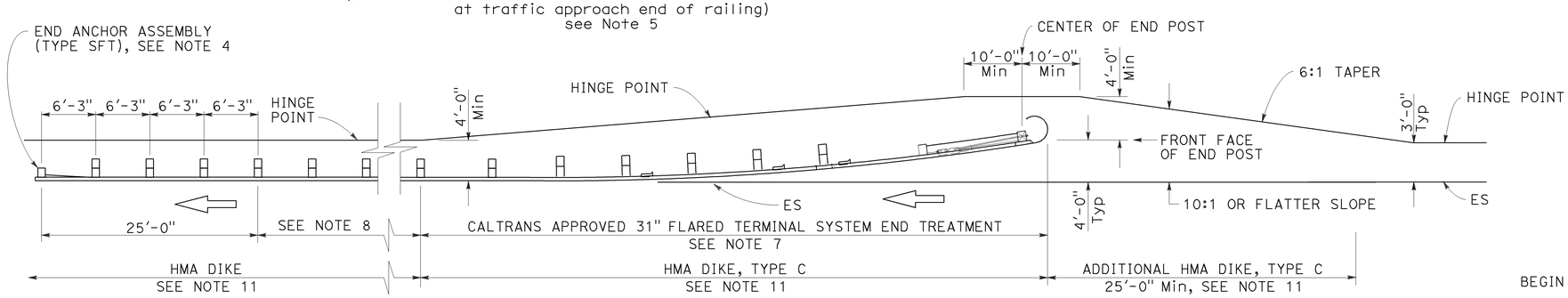

TYPE 11B LAYOUT

(Embankment MGS installation with 31" flared end treatment at traffic approach end of railing) see Note 5

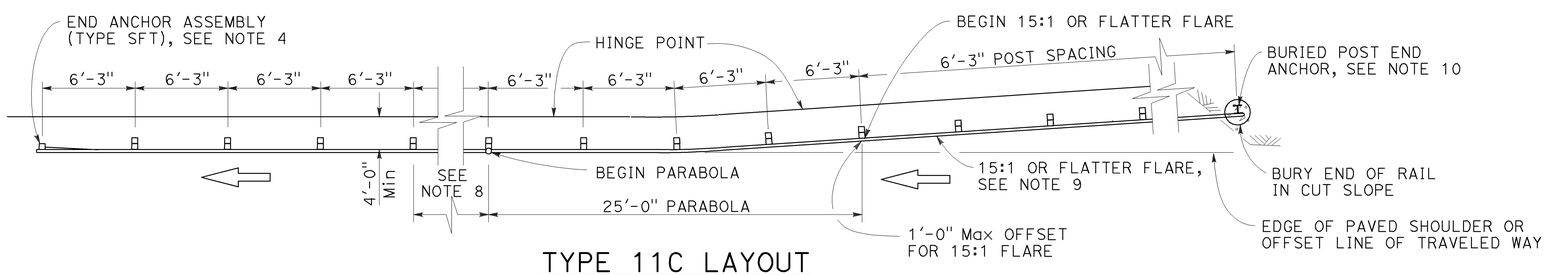

TYPE 11C LAYOUT

(Embankment MGS installation with buried end anchor treatment at traffic approach end of railing) see Notes 5 and 11

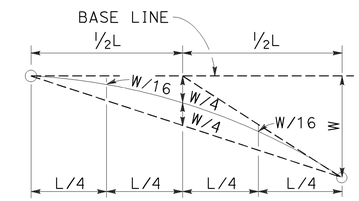

TYPICAL PARABOLIC LAYOUT

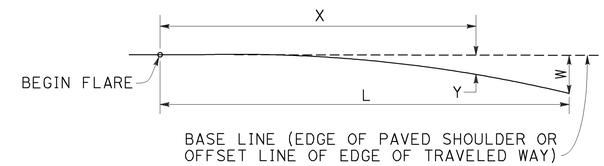

$$Y = \frac{WX^2}{L^2}$$

Y = OFFSET FROM BASE LINE
W = MAXIMUM OFFSET
X = DISTANCE ALONG BASE LINE
L = LENGTH OF FLARE

PARABOLIC FLARE OFFSETS

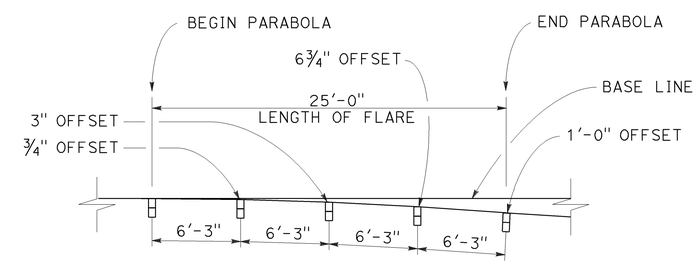

TYPICAL FLARE OFFSETS FOR 1 FOOT Max END OFFSET

NOTES:

1. Line post, blocks and hardware to be used are shown on Revised Standard Plans RSP A77L1, RSP A77L2, RSP A77M1, RSP A77N1 and RSP A77N2.
2. MGS post spacing to be 6'-3" center to center, except as otherwise noted.
3. Except as noted, line posts are 6" x 8" x 6'-0" wood with 6" x 12" x 1'-2" wood blocks. W6 x 8.5 or W6 x 9 steel posts, 6'-0" in length, with 6" x 12" x 1'-2" notched wood blocks or recycled plastic blocks may be used for 6" x 8" x 6'-0" wood post with 6" x 12" x 1'-2" wood blocks where applicable and when specified.
4. For End Anchor Assembly (Type SFT) details, see Revised Standard Plan RSP A77S1.
5. Layout Types 11A, 11B or 11C are typically used where MGS is recommended to shield embankment slopes and a crashworthy end treatment is required for only one direction of traffic.
6. 31" in-line terminal system end treatments are used where site conditions will not accommodate a flared end treatment.
7. The type of 31" terminal system end treatment to be used will be shown on the Project Plans.
8. Dependent on site conditions (embankment height and side slope), construction of additional MGS (length equal to multiples of 12'-6" with 6'-3" post spacing) may be advisable.
9. The 15:1 or flatter flare used with buried end anchors is based on the edge of the paved shoulder or offset line of edge of the traveled way. The length of MGS within the 15:1 or flatter flare is based on site conditions and should be a length equal to multiples of 12'-6".
10. For details of the buried post end anchor used with Type 11C Layout, see Revised Standard Plan RSP A77T2.
11. Where placement of dike is required with MGS installations, see Revised Standard Plan RSP A77N4 for dike positioning details.

STATE OF CALIFORNIA
DEPARTMENT OF TRANSPORTATION

MIDWEST GUARDRAIL SYSTEM TYPICAL LAYOUTS FOR EMBANKMENTS

NO SCALE

RSP A77P1 DATED NOVEMBER 15, 2013 SUPERSEDES RSP A77P1 DATED JULY 19, 2013 THAT SUPPLEMENTS THE STANDARD PLANS BOOK DATED 2010.

REVISED STANDARD PLAN RSP A77P1

2010 REVISED STANDARD PLAN RSP A77P1

10-4-13

Dist	COUNTY	ROUTE	POST MILES TOTAL PROJECT	SHEET No.	TOTAL SHEETS
11	Imp	8	R45.5/R55.0	167	211

Randell D. Hiatt
REGISTERED CIVIL ENGINEER

July 19, 2013
PLANS APPROVAL DATE

REGISTERED PROFESSIONAL ENGINEER
Randell D. Hiatt
No. C50200
Exp. 6-30-15
CIVIL
STATE OF CALIFORNIA

THE STATE OF CALIFORNIA OR ITS OFFICERS OR AGENTS SHALL NOT BE RESPONSIBLE FOR THE ACCURACY OR COMPLETENESS OF SCANNED COPIES OF THIS PLAN SHEET.

TO ACCOMPANY PLANS DATED 08-03-15

2010 REVISED STANDARD PLAN RSP A77Q1

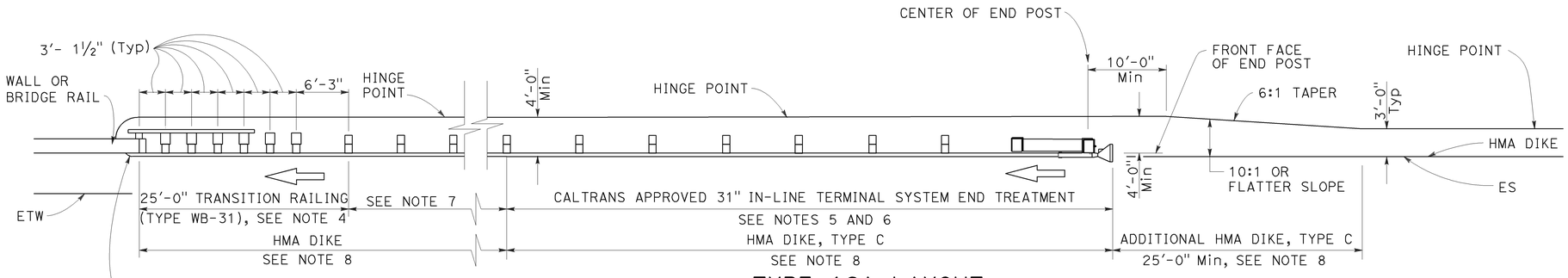

TYPE 12A LAYOUT

(MGS installation at structure approach with
31" In-line end treatment at traffic approach end of railing)
See Notes 9

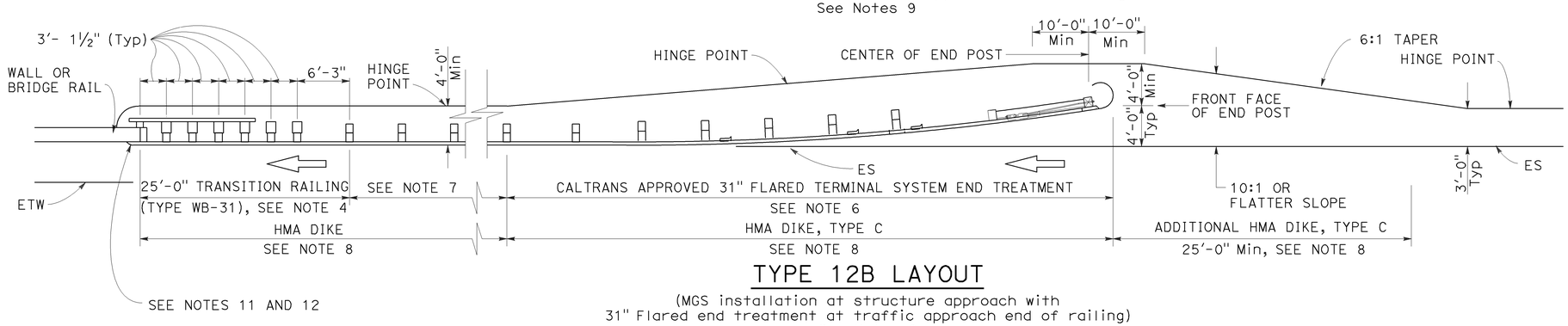

TYPE 12B LAYOUT

(MGS installation at structure approach with
31" Flared end treatment at traffic approach end of railing)
See Notes 9

NOTES:

1. Line post, blocks and hardware to be used are shown on Revised Standard Plans RSP A77L1, RSP A77L2, RSP A77M1, RSP A77N1 and RSP A77N2.
2. MGS post spacing to be 6'-3" center to center, except as otherwise noted.
3. Except as noted, line posts are 6" x 8" x 6'-0" wood with 6" x 12" x 1'-2" wood blocks. W6 x 8.5 or W6 x 9 steel posts, 6'-0" in length, with 6" x 12" x 1'-2" notched wood blocks or plastic blocks may be used for 6" x 8" x 6'-0" wood posts with 6" x 12" x 1'-2" wood blocks where applicable and when specified.
4. For Transition Railing (Type WB-31) details for Types 12A and 12B Layouts, see Revised Standard Plan RSP A77U4.
5. 31" in-line terminal system end treatments are used where site conditions will not accommodate a 31" flared end treatment.
6. The type 31" of terminal system end treatment to be used will be shown on the Project Plans.
7. Dependent on site conditions (embankment height, side slopes, or other fixed objects), it may be advisable to construct additional guard railing (a length equal to multiples of 12'-6" with 6'-3" post spacing) between the transition railing and end treatment. A 12.5 degree angle of departure can be drawn on the Project Plans from the edge of traveled way through the outer most point of the fixed object to determine the additional length of railing needed.
8. Where placement of dike is required with guard railing installations, see Revised Standard Plan RSP A77N4 for dike positioning details.
9. Type 12A or Type 12B Layouts are typically used:
   a. To the right of approaching traffic, at the end of a structure, on two-lane conventional highway where the roadbed width across the structure is less than 40 feet.
   b. To the left of approaching traffic, at the end of a structure, on two-lane conventional highway where the roadbed width across the structure is less than 40 feet.
   c. To the right of approaching traffic at the end of each structure on multilane freeways or expressways with separate adjacent or parallel bridges.
   d. To the right of approaching traffic at the end of the structure on multilane freeways or expressways with decked median on the bridge.
10. See Revised Standard Plan RSP A77Q3 for typical layout used left of approaching traffic at the ends of each structure on multilane freeways or expressways with separate adjacent or parallel bridges.
11. For additional details of typical connections to bridge rail, see Connection Detail AA on Revised Standard Plans RSP A77U1 and RSP A77U2 and Connection Detail FF on Revised Standard Plans RSP A77V1 and RSP A77V2.
12. For additional details of a typical connection to walls or abutments, see Revised Standard Plan RSP A77U3.

STATE OF CALIFORNIA
DEPARTMENT OF TRANSPORTATION

MIDWEST GUARDRAIL SYSTEM TYPICAL LAYOUTS FOR STRUCTURE APPROACH

NO SCALE

RSP A77Q1 DATED JULY 19, 2013 SUPPLEMENTS THE STANDARD PLANS BOOK DATED 2010.

REVISED STANDARD PLAN RSP A77Q1

Dist	COUNTY	ROUTE	POST MILES TOTAL PROJECT	SHEET No.	TOTAL SHEETS
11	Imp	8	R45.5/R55.0	168	211

Randell D. Hiatt
REGISTERED CIVIL ENGINEER

July 19, 2013
PLANS APPROVAL DATE

REGISTERED PROFESSIONAL ENGINEER
Randell D. Hiatt
No. C50200
Exp. 6-30-15
CIVIL
STATE OF CALIFORNIA

THE STATE OF CALIFORNIA OR ITS OFFICERS OR AGENTS SHALL NOT BE RESPONSIBLE FOR THE ACCURACY OR COMPLETENESS OF SCANNED COPIES OF THIS PLAN SHEET.

TO ACCOMPANY PLANS DATED 08-03-15

2010 REVISED STANDARD PLAN RSP A77Q3

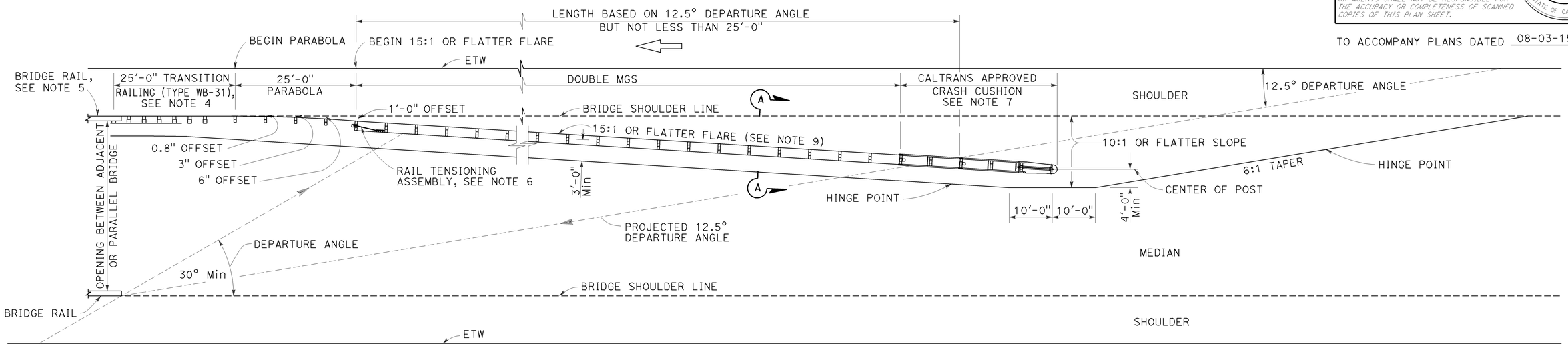

TYPE 12E LAYOUT

See Note 9

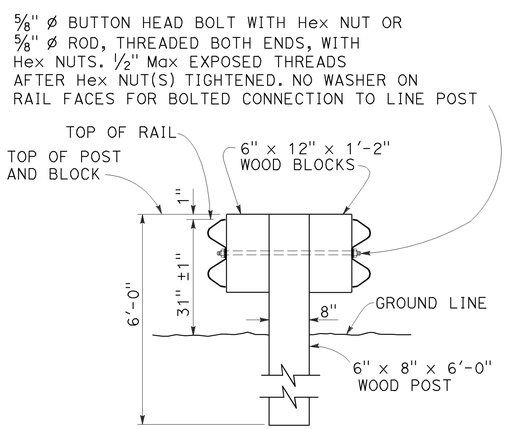

SECTION A-A

TYPICAL DOUBLE MIDWEST GUARDRAIL SYSTEM

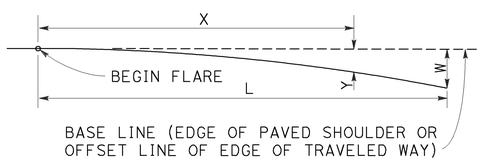

$$Y = \frac{WX^2}{L^2}$$

Y = OFFSET FROM BASE LINE
W = MAXIMUM OFFSET
X = DISTANCE ALONG BASE LINE
L = LENGTH OF FLARE

PARABOLIC FLARE OFFSETS

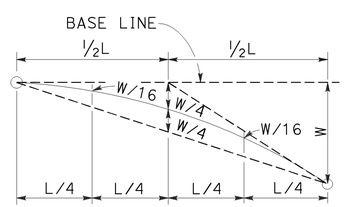

TYPICAL PARABOLIC LAYOUT

NOTES:

1. Line post, blocks and hardware to be used are shown on Revised Standard Plans RSP A77L1, RSP A77L2, RSP A77M1, RSP A77N1 and RSP A77N2.
2. MGS post spacing to be 6'-3" center to center, except as otherwise noted.
3. Except as noted, line posts are 6" x 8" x 6'-0" wood with 6" x 12" x 1'-2" wood blocks. W6 x 8.5 or W6 x 9 steel posts, 6'-0" in length, with 6" x 12" x 1'-2" notched wood blocks or notched recycled plastic blocks may be used for 6" x 8" x 6'-0" wood line posts with 6" x 12" x 1'-2" wood blocks where applicable and when specified.
4. For Transition Railing (Type WB-31) details, see Revised Standard Plan RSP A77U4.
5. For additional details of a typical connection to bridge rail, see Connection Detail AA on Revised Standard Plan RSP A77U1.
6. For Rail Tensioning Assembly details, see Revised Standard Plan RSP A77S2.
7. The type of Crash Cushion to be used will be shown on the Project Plans.
8. Type 12E Layout is typically used left of approaching traffic at the end of each structure on multilane freeways or expressways where a median type barrier is not constructed between separated roadbeds.
9. The 15:1 or flatter flare is measured off of the edge of traveled way.

STATE OF CALIFORNIA
DEPARTMENT OF TRANSPORTATION

MIDWEST GUARDRAIL SYSTEM TYPICAL LAYOUTS FOR STRUCTURE APPROACH

NO SCALE

RSP A77Q3 DATED JULY 19, 2013 SUPPLEMENTS THE STANDARD PLANS BOOK DATED 2010.

REVISED STANDARD PLAN RSP A77Q3

Dist	COUNTY	ROUTE	POST MILES TOTAL PROJECT	SHEET No.	TOTAL SHEETS
11	Imp	8	R45.5/R55.0	169	211

Randell D. Hiatt
REGISTERED CIVIL ENGINEER

July 19, 2013
PLANS APPROVAL DATE

REGISTERED PROFESSIONAL ENGINEER
Randell D. Hiatt
No. C50200
Exp. 6-30-15
CIVIL
STATE OF CALIFORNIA

THE STATE OF CALIFORNIA OR ITS OFFICERS OR AGENTS SHALL NOT BE RESPONSIBLE FOR THE ACCURACY OR COMPLETENESS OF SCANNED COPIES OF THIS PLAN SHEET.

TO ACCOMPANY PLANS DATED 08-03-15

2010 REVISED STANDARD PLAN RSP A77R1

NOTES:

1. Line post, blocks and hardware to be used are shown on Revised Standard Plans RSP A77L1, RSP A77L2, RSP A77M1, RSP A77N1, and RSP A77N2.
2. MGS post spacing to be 6′-3″ center to center, except as otherwise noted.
3. Except as noted, line posts are 6″ x 8″ x 6′-0″ wood with 6″ x 12″ x 1′-2″ wood blocks. W6 x 8.5 or W6 x 9 steel posts, 6′-0″ in length, with 6″ x 12″ x 1′-2″ notched wood blocks or notched recycled plastic blocks may be used for 6″ x 8″ x 6′-0″ wood line posts with 6″ x 12″ x 1′-2″ wood blocks where applicable and when specified.
4. A 4′-0″ minimum clearance is required between the face of the railing and the face of a fixed object located directly behind MGS sections with post spacing of 6′-3″. Construct MGS as shown in the detail "Strengthened Midwest Guardrail System Sections for Fixed Object" on this plan, where the clearance between the face of the railing and the face of a fixed object is less than 4′-0″, but not less than 3′-0″. Where the clearance is less than 3′-0″, a concrete wall or barrier should be constructed to shield the fixed object(s).
5. For End Anchor Assembly (Type SFT) details, see Revised Standard Plan RSP A77S1.
6. For details of Rail Tensioning Assembly, see Revised Standard Plan RSP A77S2.
7. The type of crash cushion to be used will be shown on the Project Plans.
8. Type 14A layout is typically used on multilane freeways or expressways to shield fixed objects where a median type barrier is not constructed between the separated roadbeds.
9. For typical flare offsets for 25′-0″ length parabola with maximum offset of 1′-0″, see Revised Standard Plan RSP A77P1.
10. The 15:1 or flatter flare is measured off of the edge of traveled way.
11. W6 x 15 steel post, 8′-0″ in length, with 8″ x 12″ x 1′-2″ notched wood block or notched recycled plastic block may be used in place of the 10″ x 10″ x 8′-0″ wood post with 8″ x 12″ x 1′-2″ wood block shown in the detail "Strengthened Midwest Guardrail System Sections for Fixed Object".

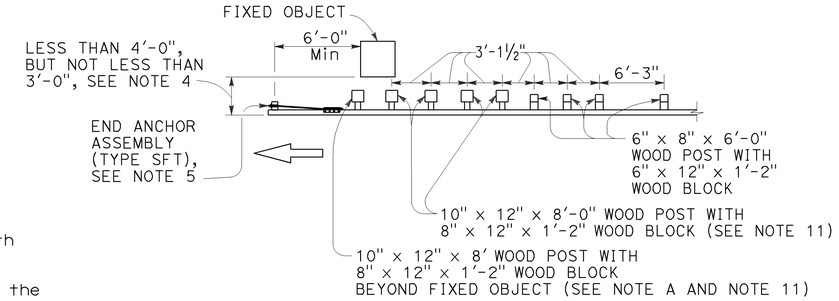

NOTE A: For a series of fixed objects (bridge columns, overhead sign supports, etc.) additional 10″ x 10″ x 8′-0″ wood post with 8″ x 12″ x 1′-2″ wood blocks at 3′-1½″ center to center spacing are to be used between fixed objects.

STRENGTHENED MIDWEST GUARDRAIL SYSTEM SECTIONS FOR FIXED OBJECT

Use strengthened MGS sections with Type 14A layout where minimum clearance between the face of the railing and fixed object(s) is less than 4′-0″, but not less than 3′-0″, See Note 4.

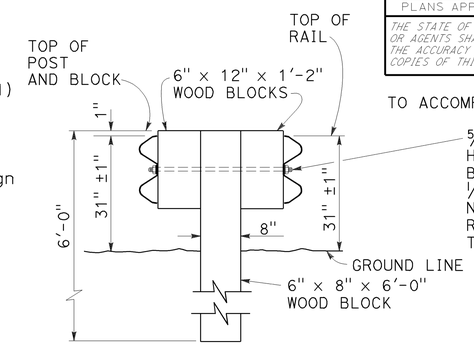

SECTION A-A
TYPICAL DOUBLE MIDWEST GUARDRAIL SYSTEM

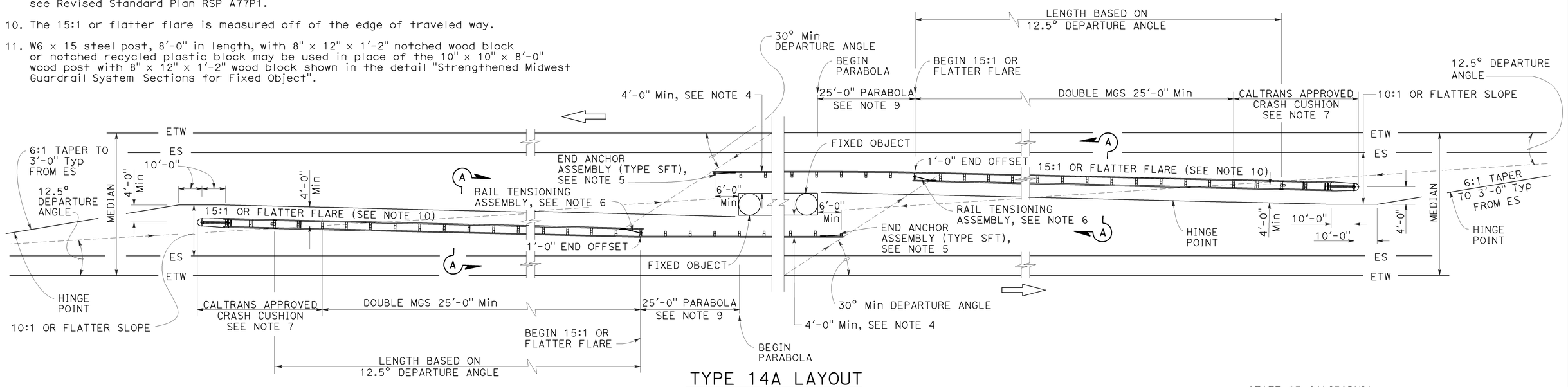

TYPE 14A LAYOUT

See Note 8

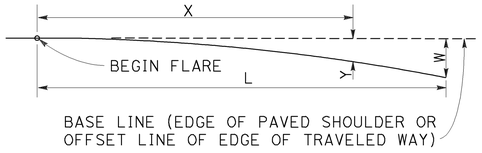

$$Y = \frac{WX^2}{L^2}$$

Y = OFFSET FROM BASE LINE
W = MAXIMUM OFFSET
X = DISTANCE ALONG BASE LINE
L = LENGTH OF FLARE

PARABOLIC FLARE OFFSETS

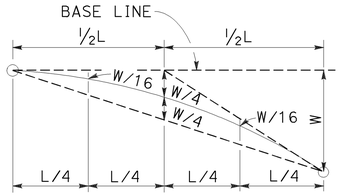

TYPICAL PARABOLIC LAYOUT

STATE OF CALIFORNIA
DEPARTMENT OF TRANSPORTATION

MIDWEST GUARDRAIL SYSTEM TYPICAL LAYOUTS FOR FIXED OBJECTS BETWEEN SEPARATE ROADBEDS (TWO-WAY TRAFFIC)

NO SCALE

RSP A77R1 DATED JULY 19, 2013 SUPPLEMENTS THE STANDARD PLANS BOOK DATED 2010.

REVISED STANDARD PLAN RSP A77R1

7-16-13

Dist	COUNTY	ROUTE	POST MILES TOTAL PROJECT	SHEET No.	TOTAL SHEETS
11	Imp	8	R45.5/R55.0	170	211

Randell D. Hiatt
REGISTERED CIVIL ENGINEER

July 19, 2013
PLANS APPROVAL DATE

REGISTERED PROFESSIONAL ENGINEER
Randell D. Hiatt
No. C50200
Exp. 6-30-15
CIVIL
STATE OF CALIFORNIA

THE STATE OF CALIFORNIA OR ITS OFFICERS OR AGENTS SHALL NOT BE RESPONSIBLE FOR THE ACCURACY OR COMPLETENESS OF SCANNED COPIES OF THIS PLAN SHEET.

TO ACCOMPANY PLANS DATED 08-03-15

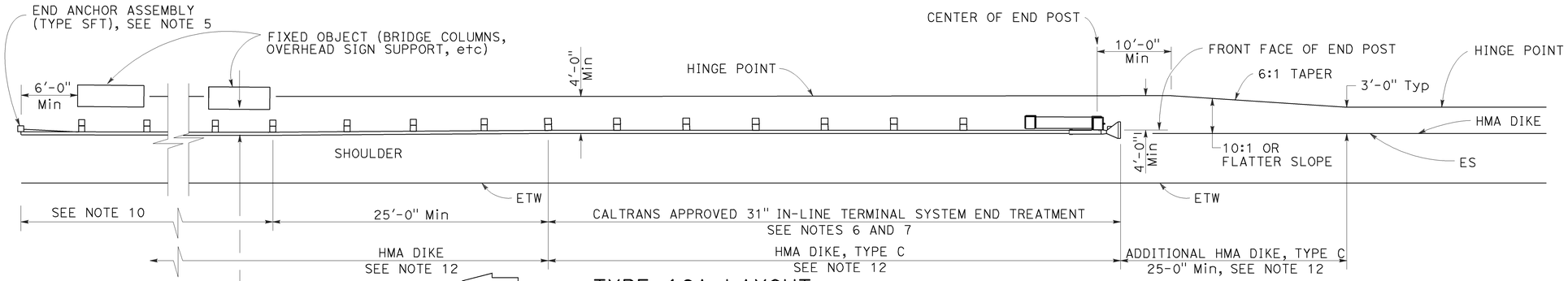

TYPE 16A LAYOUT

(MGS installation at roadside fixed object or objects with 31" in-line end treatment at traffic approach end of railing)
See Notes 11 and 12

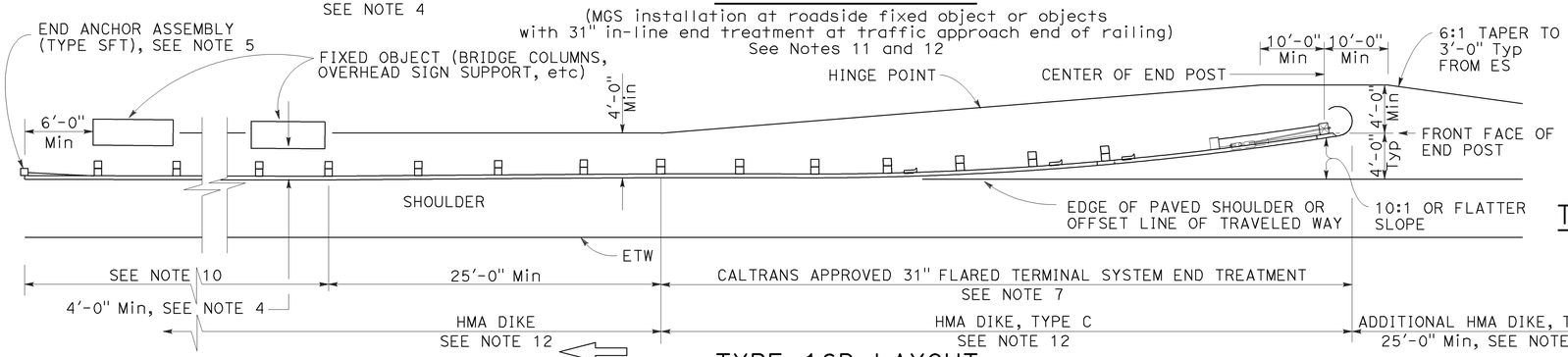

TYPE 16B LAYOUT

(MGS installation at roadside fixed object or objects with 31' flared end treatment at traffic approach end of railing)
See Notes 11 and 12

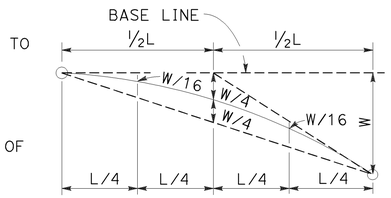

TYPIC AL PARABOLIC LAYOUT

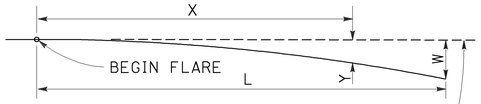

BASE LINE (EDGE OF PAVED SHOULDER OR OFFSET LINE OF EDGE OF TRAVELED WAY)

$$Y = \frac{WX^2}{L^2}$$

Y = OFFSET FROM BASE LINE
W = MAXIMUM OFFSET
X = DISTANCE ALONG BASE LINE
L = LENGTH OF FLARE

PARABOLIC FLARE OFFSETS

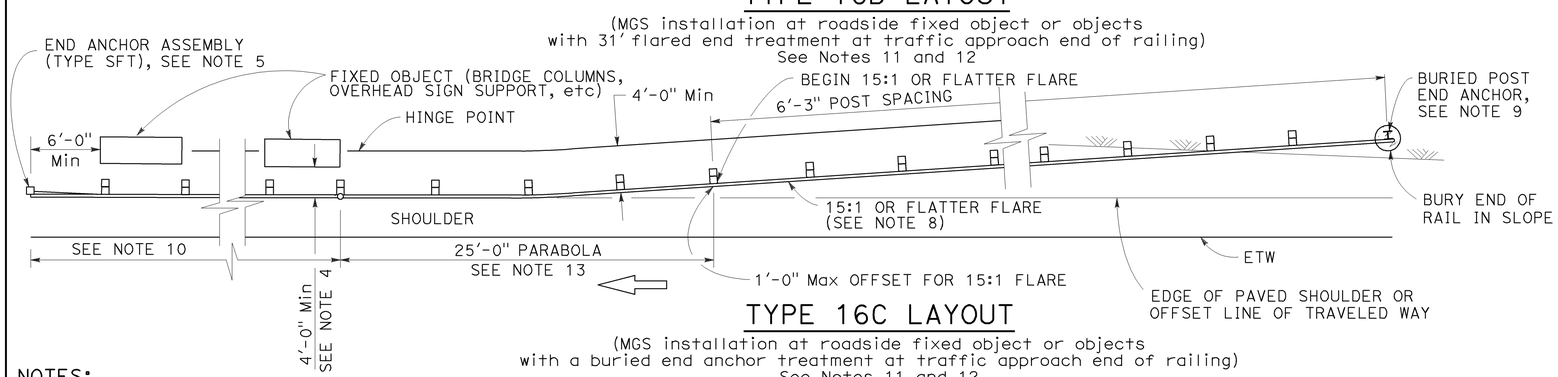

TYPE 16C LAYOUT

(MGS installation at roadside fixed object or objects with a buried end anchor treatment at traffic approach end of railing)
See Notes 11 and 12

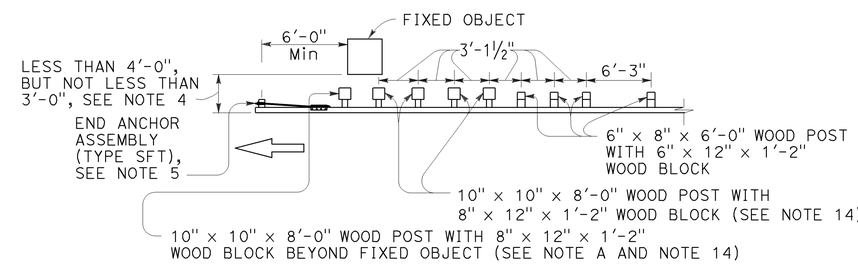

NOTE A: For a series of fixed objects (bridge columns, overhead sign supports, etc.) additional 10" x 10" x 8'-0" wood post with 8" x 12" x 1'-2" wood blocks at 3'-1½" center to center spacing are to be used between fixed objects.

STRENGTHENED MIDWEST GUARDRAIL SYSTEM SECTIONS FOR FIXED OBJECT

Use strengthened MGS sections with Types 16A, 16B or 16C layouts where minimum clearance between the face of the railing and fixed object(s) is less than 4'-0", but not less than 3'-0". See Note 4

NOTES:

1. Line post, blocks and hardware to be used are shown on Revised Standard Plans RSP A77L1, RSP A77L2, RSP A77M1, RSP A77N1 and RSP A77N2.
2. MGS post spacing to be 6'-3" center to center, except as otherwise noted.
3. Except as noted, line posts are 6" x 8" x 6'-0" wood with 6" x 12" x 1'-2" wood blocks. W6 x 8.5 or W6 x 9 steel posts, 6'-0" in length, with 6" x 12" x 1'-2" notched wood blocks or notched recycled plastic blocks may be used for 6" x 8" x 6'-0" wood line posts with 6" x 12" x 1'-2" wood blocks where applicable and when specified.
4. A 4'-0" minimum clearance is required between the face of the railing and the face of a fixed object located directly behind MGS sections with post spacing of 6'-3". Construct MGS as shown in the detail "Strengthened Midwest Guardrail System Sections for Fixed Object" on this plan, where the clearance between the face of the railing and the face of a fixed object is less than 4'-0", but not less than 3'-0". Where the clearance is less than 3'-0", a concrete wall or barrier should be constructed to shield the fixed object(s).
5. For End Anchor Assembly (Type SFT) details, see Revised Standard Plan RSP A77S1.
6. 31" in-line terminal system end treatments are used where site conditions will not accommodate a 31" flared end treatment.
7. The type of 31" terminal system to be used will be shown on the Project Plans.
8. The 15:1 or flatter flare used with Type 16C Layout is based on the edge of the paved shoulder or offset line of edge of the traveled way. The length of MGS within the 15:1 or flatter flare is based on site conditions and should be a length equal to multiples of 12'-6".
9. For details of the Buried Post End Anchor used with Type 16C Layout, see Revised Standard Plan RSP A77T2.
10. As site conditions dictate, construct additional MGS to shield fixed object(s). Additional MGS length equal to multiples of 12'-6". Post spacing at 6'-3" except as specified in Note 4.
11. Layout Types 16A, 16B or 16C are typically used where MGS is recommended to shield roadside fixed object(s) and a crashworthy 31" end treatment is required for only one direction of traffic.
12. Where placement of dike is required with MGS, see Revised Standard Plan RSP A77N4 for dike positioning details.
13. For typical flare offsets for 25'-0" length parabola with maximum offset of 1'-0", see Revised Standard Plan RSP A77P1.
14. W6 x 15 steel post, 8'-0" in length, with 8" x 12" x 1'-2" notched wood block or notched recycled plastic blocks may be used in place of the 10" x 10" x 8'-0" wood post with 8" x 12" x 1'-2" wood block shown in the detail "Strengthened Midwest Guardrail System Sections for Fixed Object".

STATE OF CALIFORNIA
DEPARTMENT OF TRANSPORTATION

MIDWEST GUARDRAIL SYSTEM TYPICAL LAYOUTS FOR ROADSIDE FIXED OBJECTS

NO SCALE

RSP A77R3 DATED JULY 19, 2013 SUPPLEMENTS THE STANDARD PLANS BOOK DATED 2010.

REVISED STANDARD PLAN RSP A77R3

2010 REVISED STANDARD PLAN RSP A77R3

6-20-13

Dist	COUNTY	ROUTE	POST MILES TOTAL PROJECT	SHEET No.	TOTAL SHEETS
11	Imp	8	R45.5/R55.0	171	211

Randell D. Hiatt
REGISTERED CIVIL ENGINEER

November 15, 2013
PLANS APPROVAL DATE

REGISTERED PROFESSIONAL ENGINEER
Randell D. Hiatt
No. C50200
Exp. 6-30-15
CIVIL
STATE OF CALIFORNIA

THE STATE OF CALIFORNIA OR ITS OFFICERS OR AGENTS SHALL NOT BE RESPONSIBLE FOR THE ACCURACY OR COMPLETENESS OF SCANNED COPIES OF THIS PLAN SHEET.

TO ACCOMPANY PLANS DATED 08-03-15

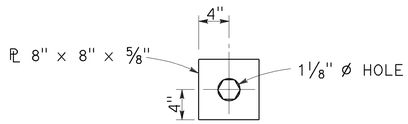

DETAIL "A"
CABLE CONNECTION
END PLATE

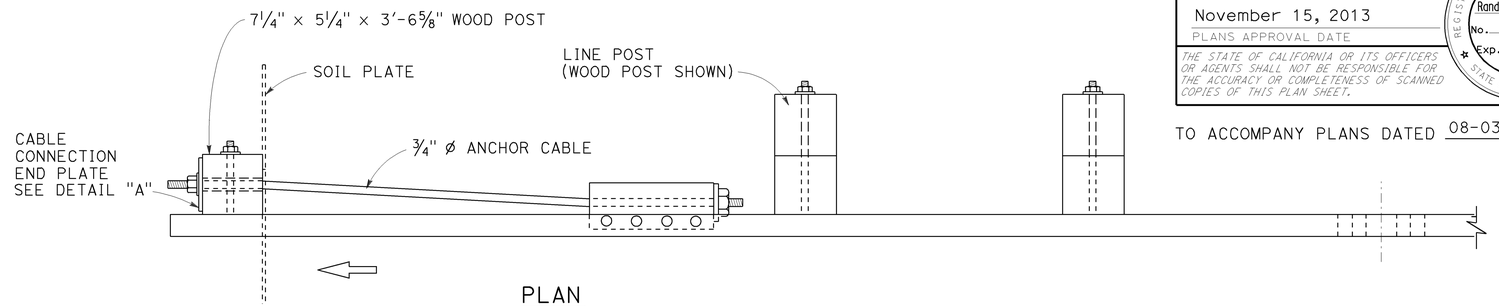

PLAN

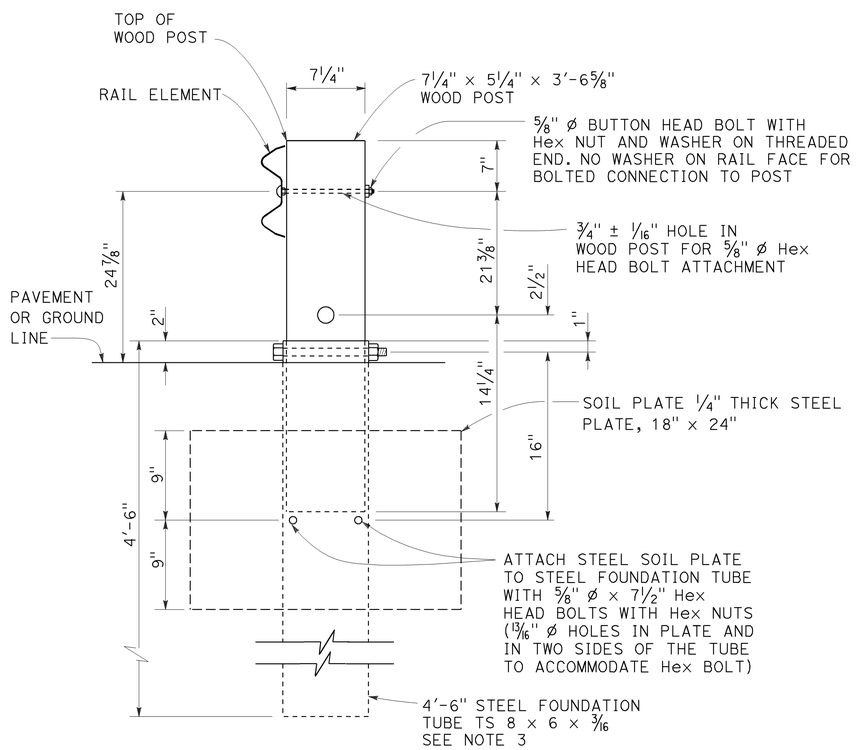

SECTION A-A

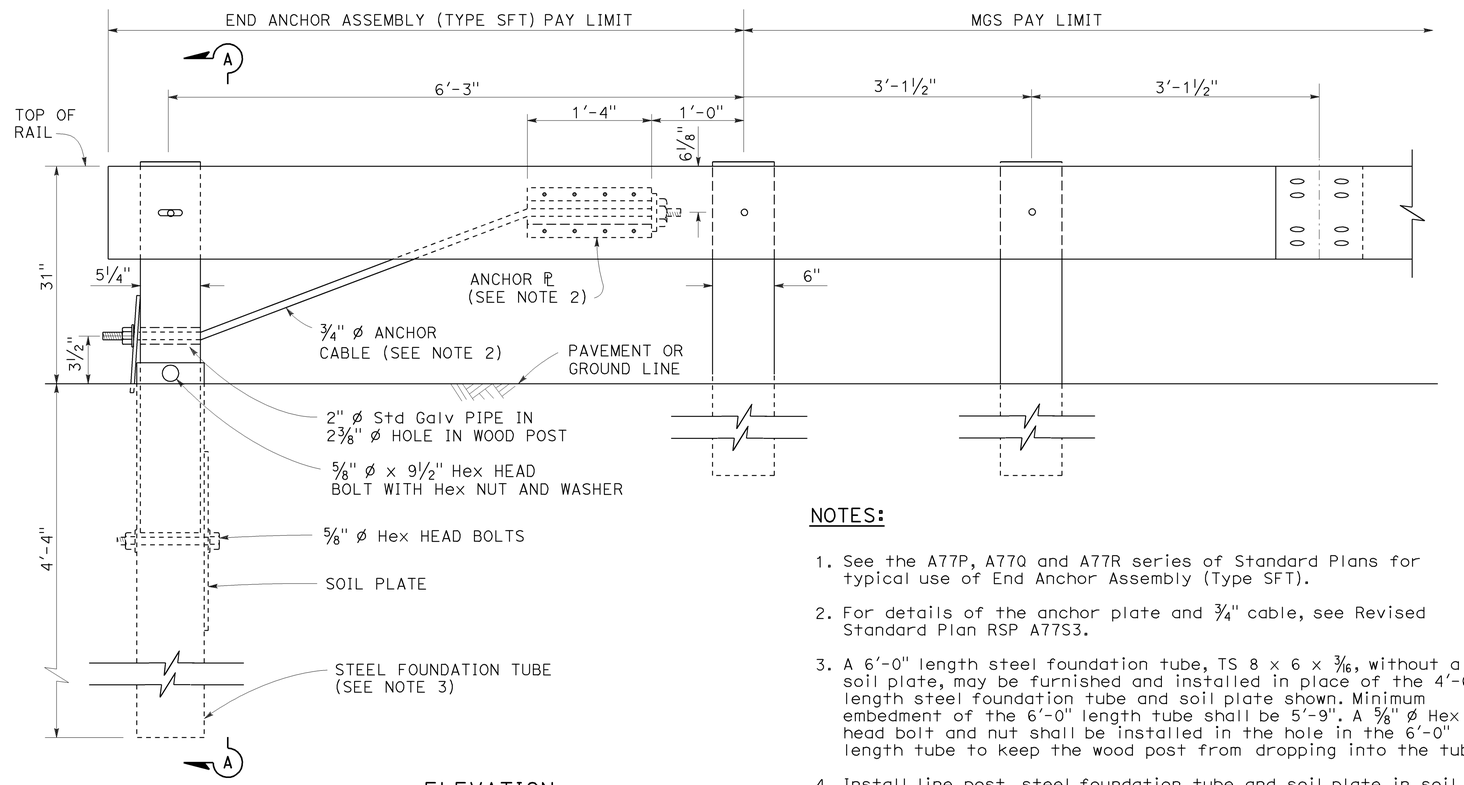

ELEVATION

END ANCHOR
ASSEMBLY (TYPE SFT)
See Note 1

NOTES:

1. See the A77P, A77Q and A77R series of Standard Plans for typical use of End Anchor Assembly (Type SFT).
2. For details of the anchor plate and 3/4" cable, see Revised Standard Plan RSP A77S3.
3. A 6'-0" length steel foundation tube, TS 8 x 6 x 3/16, without a soil plate, may be furnished and installed in place of the 4'-6" length steel foundation tube and soil plate shown. Minimum embedment of the 6'-0" length tube shall be 5'-9". A 5/8" ø Hex head bolt and nut shall be installed in the hole in the 6'-0" length tube to keep the wood post from dropping into the tube.
4. Install line post, steel foundation tube and soil plate in soil.

STATE OF CALIFORNIA
DEPARTMENT OF TRANSPORTATION

MIDWEST GUARDRAIL SYSTEM END ANCHOR ASSEMBLY (TYPE SFT)

NO SCALE

RSP A77S1 DATED NOVEMBER 15, 2013 SUPERSEDES RSP A77S1
DATED JULY 19, 2013 THAT SUPPLEMENTS THE STANDARD PLANS BOOK DATED 2010.

REVISED STANDARD PLAN RSP A77S1

2010 REVISED STANDARD PLAN RSP A77S1

10-4-13

Dist	COUNTY	ROUTE	POST MILES TOTAL PROJECT	SHEET No.	TOTAL SHEETS
11	Imp	8	R45.5/R55.0	172	211

Randell D. Hiatt
REGISTERED CIVIL ENGINEER

July 19, 2013
PLANS APPROVAL DATE

REGISTERED PROFESSIONAL ENGINEER
Randell D. Hiatt
No. C50200
Exp. 6-30-15
CIVIL
STATE OF CALIFORNIA

THE STATE OF CALIFORNIA OR ITS OFFICERS OR AGENTS SHALL NOT BE RESPONSIBLE FOR THE ACCURACY OR COMPLETENESS OF SCANNED COPIES OF THIS PLAN SHEET.

TO ACCOMPANY PLANS DATED 08-03-15

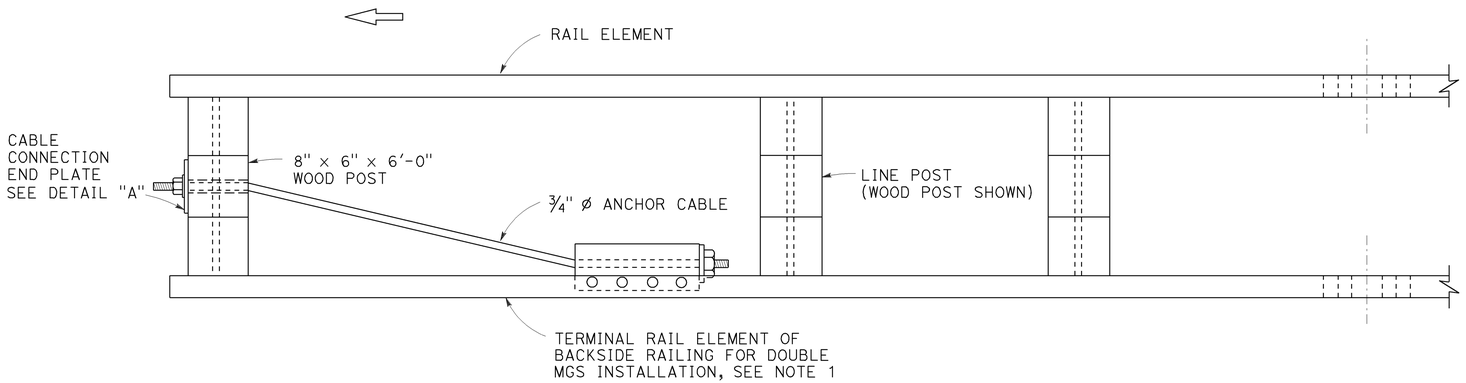

PLAN

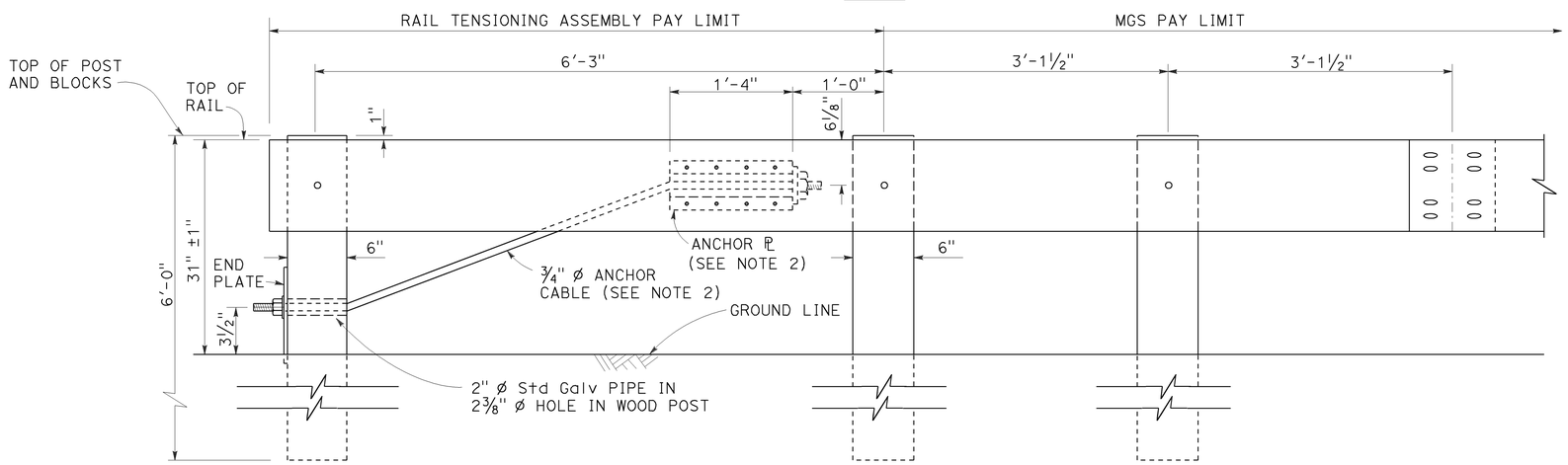

ELEVATION
RAIL TENSIONING ASSEMBLY
See Note 1

NOTES:

1. See Revised Standard Plans RSP A77Q3 and RSP A77R1 for typical use of rail tensioning assembly.
2. For details of the anchor plate and ¾" cable, see Revised Standard Plan RSP A77S3.

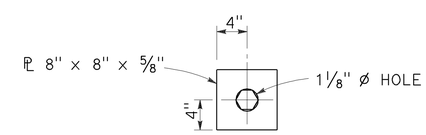

DETAIL "A"
CABLE CONNECTION END PLATE

STATE OF CALIFORNIA
DEPARTMENT OF TRANSPORTATION

MIDWEST GUARDRAIL SYSTEM RAIL TENSIONING ASSEMBLY

NO SCALE

RSP A77S2 DATED JULY 19, 2013 SUPPLEMENTS THE STANDARD PLANS BOOK DATED 2010.

REVISED STANDARD PLAN RSP A77S2

2010 REVISED STANDARD PLAN RSP A77S2

7-3-13

Dist	COUNTY	ROUTE	POST MILES TOTAL PROJECT	SHEET No.	TOTAL SHEETS
11	Imp	8	R45.5/R55.0	173	211

Randell D. Hiatt
REGISTERED CIVIL ENGINEER

November 15, 2013
PLANS APPROVAL DATE

REGISTERED PROFESSIONAL ENGINEER
Randell D. Hiatt
No. C50200
Exp. 6-30-15
CIVIL
STATE OF CALIFORNIA

THE STATE OF CALIFORNIA OR ITS OFFICERS OR AGENTS SHALL NOT BE RESPONSIBLE FOR THE ACCURACY OR COMPLETENESS OF SCANNED COPIES OF THIS PLAN SHEET.

TO ACCOMPANY PLANS DATED 08-03-15

2010 REVISED STANDARD PLAN RSP A77S3

NOTE:

See Revised Standard Plans RSP A77S1, RSP A77S2 and RSP A77T1 for typical use of anchor cable and anchor plate.

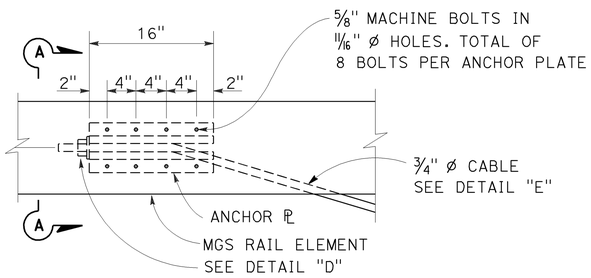

ANCHOR PLATE DETAIL
(MGS shown, TBB similar)

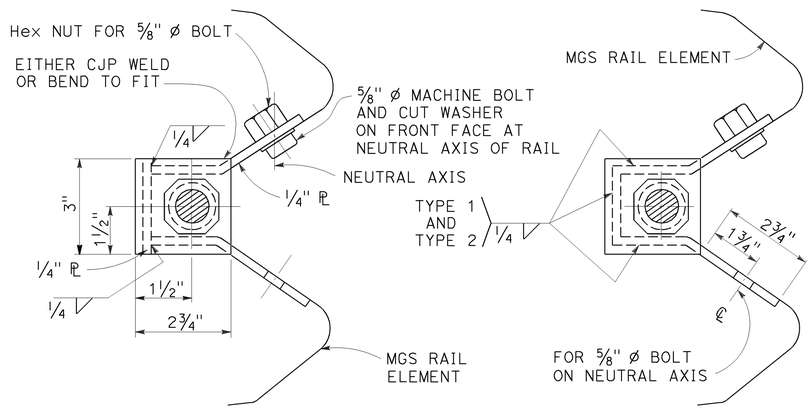

NOTE:
Dimensioning applies to both types.

SECTION A-A
(ALTERNATIVE TYPE 1)

SECTION A-A
(ALTERNATIVE TYPE 2)

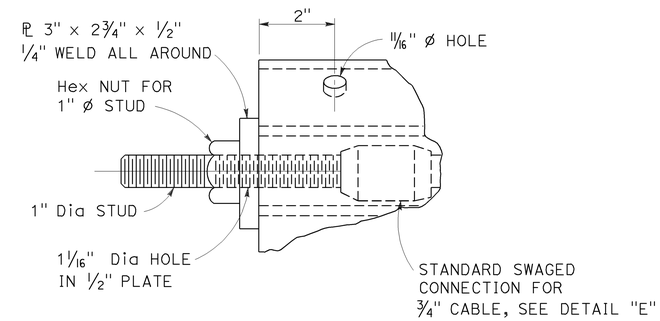

DETAIL "D"

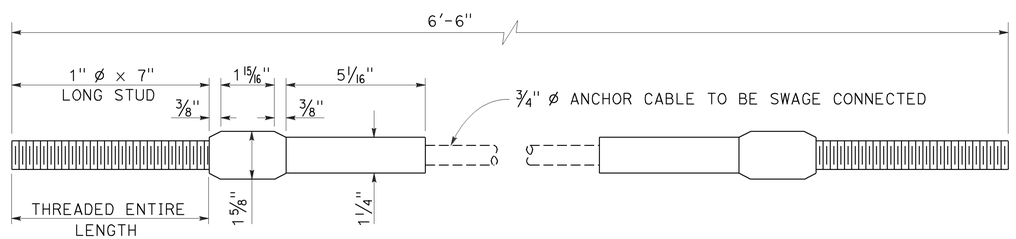

ANCHOR CABLE WITH
SWAGED FITTING AND STUD
DETAIL "E"

STATE OF CALIFORNIA
DEPARTMENT OF TRANSPORTATION

METAL RAILING ANCHOR CABLE AND ANCHOR PLATE DETAILS

NO SCALE

RSP A77S3 DATED NOVEMBER 15, 2013 SUPERSEDES RSP A77S3
DATED JULY 19, 2013 THAT SUPPLEMENTS THE STANDARD PLANS BOOK DATED 2010.

REVISED STANDARD PLAN RSP A77S3

10-4-13

Dist	COUNTY	ROUTE	POST MILES TOTAL PROJECT	SHEET No.	TOTAL SHEETS
11	Imp	8	R45.5/R55.0	174	211

Randell D. Hiatt
REGISTERED CIVIL ENGINEER

November 15, 2013
PLANS APPROVAL DATE

REGISTERED PROFESSIONAL ENGINEER
Randell D. Hiatt
No. C50200
Exp. 6-30-15
CIVIL
STATE OF CALIFORNIA

THE STATE OF CALIFORNIA OR ITS OFFICERS OR AGENTS SHALL NOT BE RESPONSIBLE FOR THE ACCURACY OR COMPLETENESS OF SCANNED COPIES OF THIS PLAN SHEET.

TO ACCOMPANY PLANS DATED 08-03-15

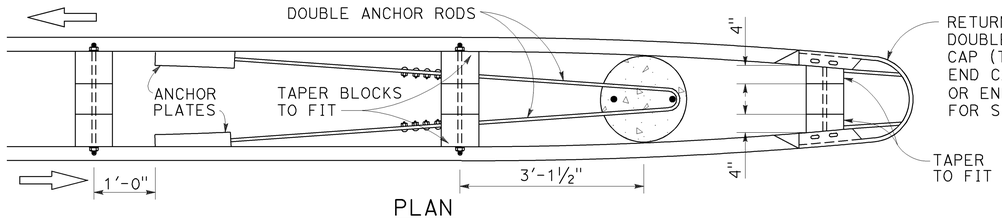

PLAN
See Note 4

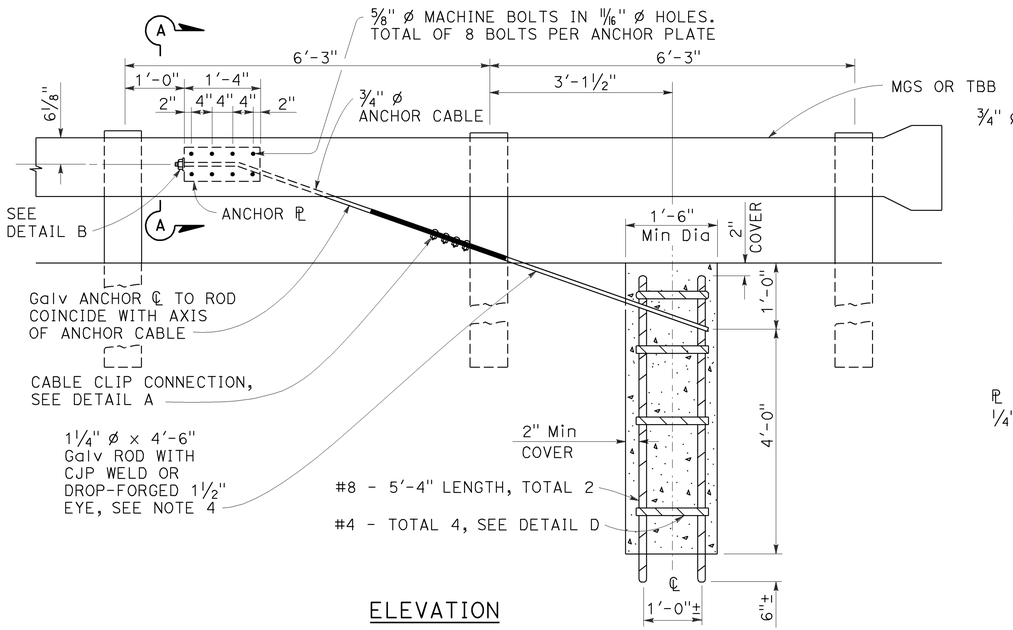

ELEVATION
END ANCHOR ASSEMBLY
(TYPE CA)
(Wood post, MGS shown, details similar for Thrie Beam Barrier.)

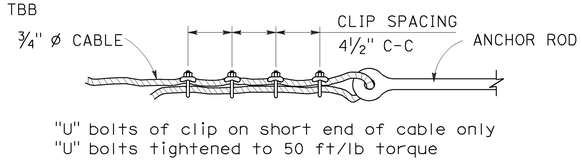

DETAIL A
CABLE CLIP CONNECTION

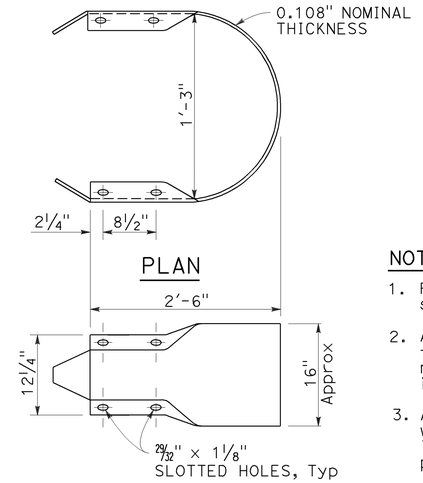

PLAN
ELEVATION
RETURN CAP
(TYPE A)

NOTES:

1. For typical use of this type of end anchor, see Revised Standard Plan RSP A78E2.
2. Anchor cable to be parallel to railing for straight runs of rail. Anchor cable may have angle point at anchor plate if railing is curved.
3. Anchor rod hooks to be in contact with anchor reinforcement when concrete is placed. Wire ties may be used to position anchor rods.
4. Single sided railing installations require only one anchor plate, anchor rod and anchor cable. Single sided railing will not have a rail element or blockouts on backside of line posts as shown in the plan view.

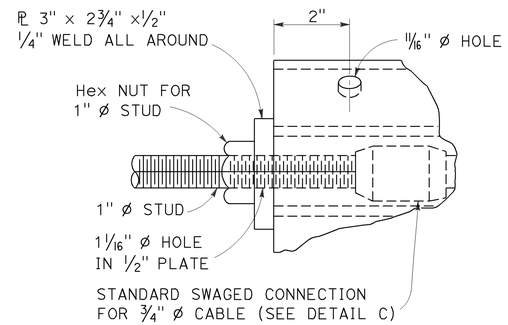

DETAIL B

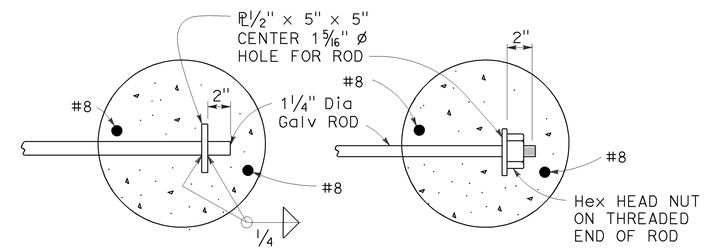

OPTIONAL ENDS ON SINGLE ANCHOR ROD
(Not to be used for double anchors)

NOTE:
Use two 1¼" Ø Galv rods with hook and eye for double MGS anchor.

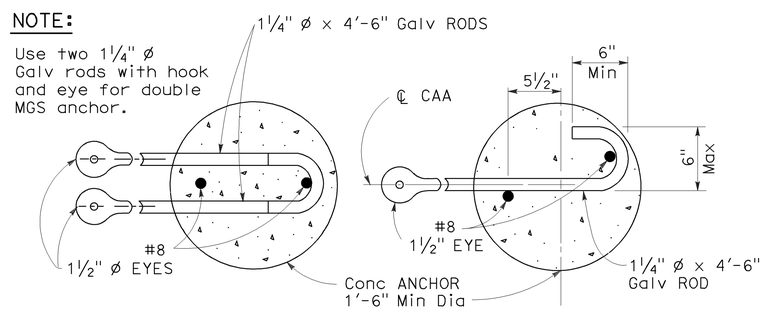

DOUBLE ANCHOR
SINGLE ANCHOR
ANCHOR RODS

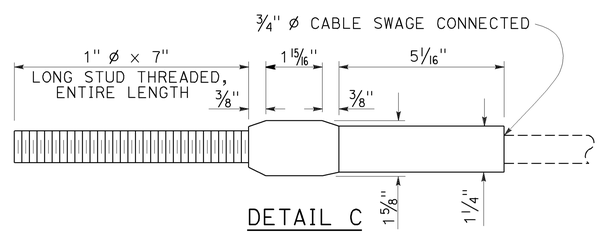

DETAIL C

ANCHOR CABLE WITH
SWAGED FITTING AND STUD

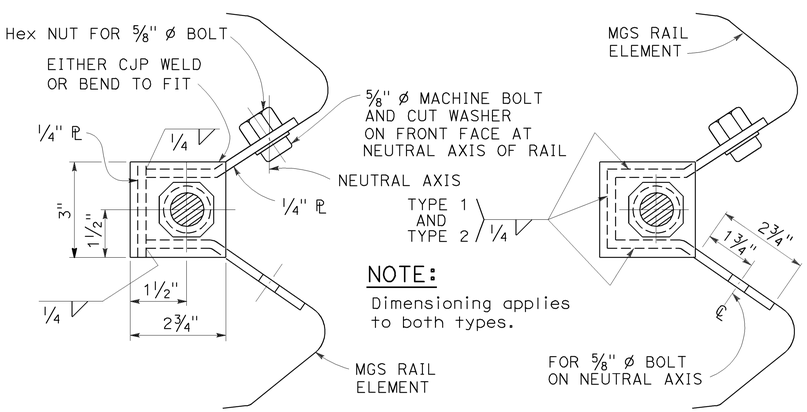

NOTE:
Dimensioning applies to both types.

SECTION A-A
(Alternative Type 1)

SECTION A-A
(Alternative Type 2)

ANCHOR PLATE DETAILS

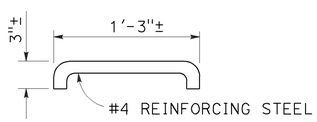

DETAIL D

STATE OF CALIFORNIA
DEPARTMENT OF TRANSPORTATION

METAL RAILING END ANCHOR ASSEMBLY (TYPE CA)

NO SCALE

RSP A77T1 DATED NOVEMBER 15, 2013 SUPERSEDES RSP A77T1 DATED JULY 19, 2013 THAT SUPPLEMENTS THE STANDARD PLANS BOOK DATED 2010.

REVISED STANDARD PLAN RSP A77T1

2010 REVISED STANDARD PLAN RSP A77T1

10-22-13

Dist	COUNTY	ROUTE	POST MILES TOTAL PROJECT	SHEET No.	TOTAL SHEETS
11	Imp	8	R45.5/R55.0	175	211

Randell D. Hiatt
REGISTERED CIVIL ENGINEER

July 19, 2013
PLANS APPROVAL DATE

REGISTERED PROFESSIONAL ENGINEER
Randell D. Hiatt
No. C50200
Exp. 6-30-15
CIVIL
STATE OF CALIFORNIA

THE STATE OF CALIFORNIA OR ITS OFFICERS OR AGENTS SHALL NOT BE RESPONSIBLE FOR THE ACCURACY OR COMPLETENESS OF SCANNED COPIES OF THIS PLAN SHEET.

TO ACCOMPANY PLANS DATED 08-03-15

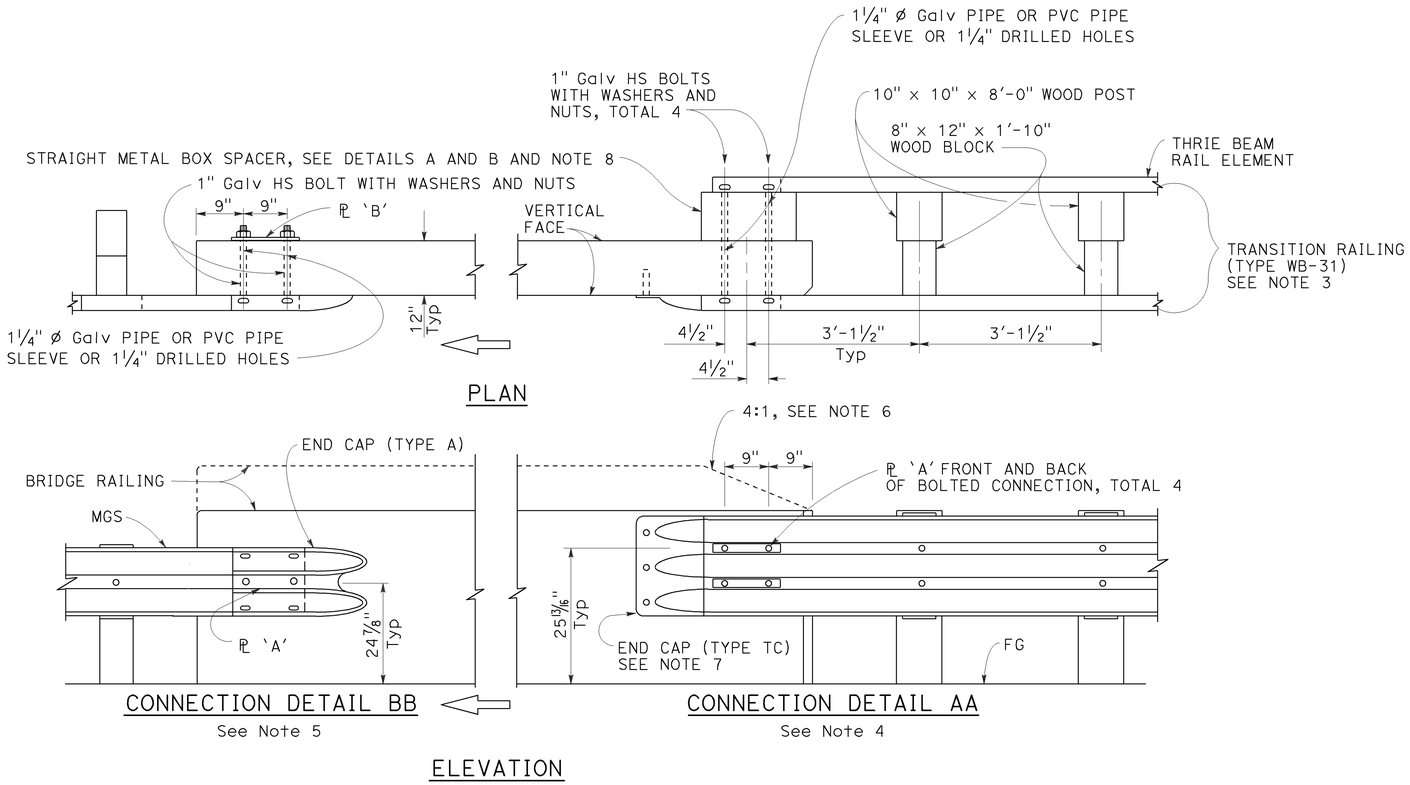

MIDWEST GUARDRAIL SYSTEM CONNECTION TO BRIDGE RAILING WITHOUT SIDEWALK

NOTES:

1. See Revised Standard Plan RSP A77U2 for additional connection details to bridges without sidewalks.
2. Additional details of posts, blocks and hardware are shown on Revised Standard Plans RSP A77M1, RSP A77N1 and RSP A77N2.
3. For additional details of Transition Railing (Type WB-31), see Revised Standard Plan RSP A77U4. Transition Railing (Type WB-31) transitions the 12 gauge MGS railing section to a heavier gage nested thrie beam railing section which is connected to the concrete bridge railing.
4. For typical use of Connection Detail AA, see Layout Types 12A and 12B on Revised Standard Plan RSP A77Q1, Layout Types 12C and 12D on Revised Standard Plan RSP A77Q2, and Layout Type 12E on Revised Standard Plan RSP A77Q3.
5. For typical use of Connection Detail BB, see Layout Type 12D (structure departure railing connection) on Revised Standard Plan RSP A77Q2 and Layout Type 12DD on Revised Standard Plan RSP A77Q5.
6. Where the height of the bridge railing exceeds the height of the thrie beam railing by more than 1" at Connection Detail AA, taper the top of the end of the bridge railing at 4:1 to match the top elevation of the thrie beam rail.
7. For details of End Cap (Type TC), see Revised Standard Plan RSP A77U4.
8. See Revised Standard Plan RSP A77U4 for additional details regarding depth dimension for straight metal box spacer.

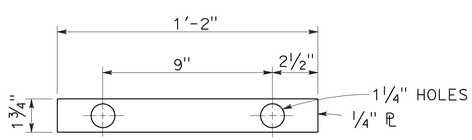

PLATE 'A'

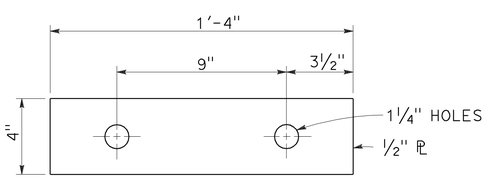

PLATE 'B'
(For backside of connection BB)

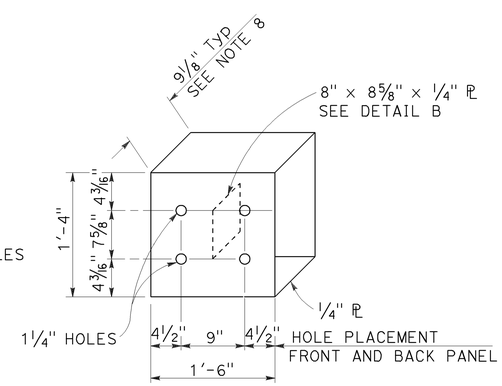

DETAIL A

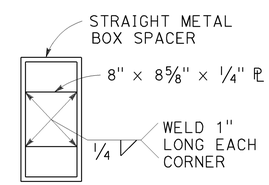

DETAIL B

STRAIGHT METAL BOX SPACER

STATE OF CALIFORNIA
DEPARTMENT OF TRANSPORTATION

MIDWEST GUARDRAIL SYSTEM CONNECTIONS TO BRIDGE RAILINGS WITHOUT SIDEWALKS DETAILS No. 1

NO SCALE

RSP A77U1 DATED JULY 19, 2013 SUPPLEMENTS THE STANDARD PLANS BOOK DATED 2010.

REVISED STANDARD PLAN RSP A77U1

2010 REVISED STANDARD PLAN RSP A77U1

7-8-13

Dist	COUNTY	ROUTE	POST MILES TOTAL PROJECT	SHEET No.	TOTAL SHEETS
11	Imp	8	R45.5/R55.0	176	211

Randell D. Hiatt
REGISTERED CIVIL ENGINEER

July 19, 2013
PLANS APPROVAL DATE

REGISTERED PROFESSIONAL ENGINEER
Randell D. Hiatt
No. C50200
Exp. 6-30-15
CIVIL
STATE OF CALIFORNIA

THE STATE OF CALIFORNIA OR ITS OFFICERS OR AGENTS SHALL NOT BE RESPONSIBLE FOR THE ACCURACY OR COMPLETENESS OF SCANNED COPIES OF THIS PLAN SHEET.

TO ACCOMPANY PLANS DATED 08-03-15

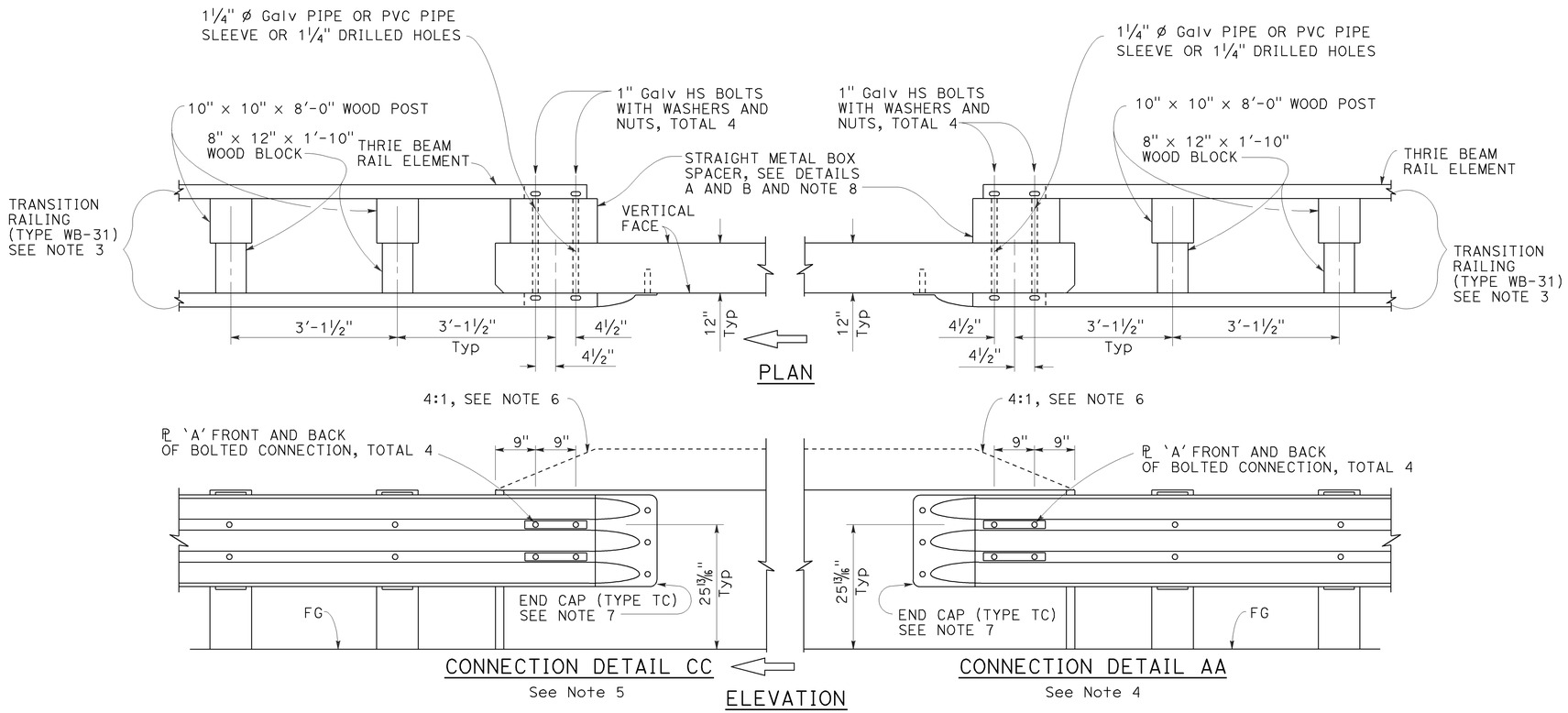

MIDWEST GUARDRAIL SYSTEM CONNECTION TO BRIDGE RAILING WITHOUT SIDEWALK

NOTES:

1. See Revised Standard Plan RSP A77U1 for additional connection details to bridges without sidewalks.
2. Additional details of posts, blocks and hardware are shown on Revised Standard Plans RSP A77M1, RSP A77N1 and RSP A77N2.
3. For additional details of Transition Railing (Type WB-31), see Revised Standard Plan RSP A77U4. Transition Railing (Type WB-31) transitions the 12 gauge MGS railing section to a heavier gage nested thrie beam railing section which is connected to the concrete bridge railing.
4. For typical use of Connection Detail AA, see Layout Types 12A and 12B on Revised Standard Plan RSP A77Q1, Layout Types 12C and 12D on Revised Standard Plan RSP A77Q2, and Layout Type 12E on Revised Standard Plan RSP A77Q3.
5. For typical use of Connection Detail CC, see Layout Types 12AA and 12BB on Revised Standard Plan RSP A77Q4 and Layout Type 12CC on Revised Standard Plan RSP A77Q5.
6. Where the height of the bridge railing exceeds the height of the thrie beam railing by more than 1" at Connection Detail AA and connection Detail CC, taper the top of the end of the bridge railing at 4:1 to match the top elevation of the thrie beam railing.
7. For details of End Cap (Type TC), see Revised Standard Plan RSP A77U4.
8. See Revised Standard Plan RSP A77U4 for additional details regarding depth dimension for straight metal box spacer.

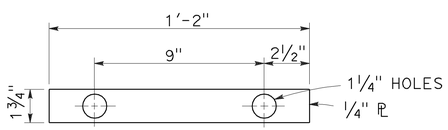

PLATE 'A'

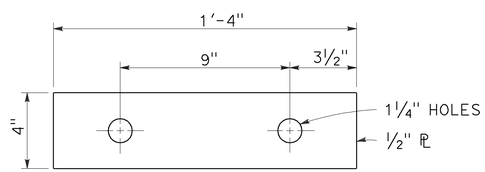

PLATE 'B'
(For backside of connection BB)

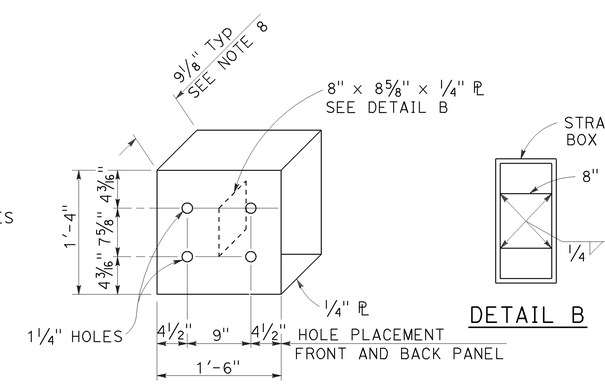

DETAIL A

DETAIL B

STRAIGHT METAL BOX SPACER

STATE OF CALIFORNIA
DEPARTMENT OF TRANSPORTATION

MIDWEST GUARDRAIL SYSTEM CONNECTIONS TO BRIDGE RAILINGS WITHOUT SIDEWALKS DETAILS No. 2

NO SCALE

RSP A77U2 DATED JULY 19, 2013 SUPPLEMENTS THE STANDARD PLANS BOOK DATED 2010.

REVISED STANDARD PLAN RSP A77U2

2010 REVISED STANDARD PLAN RSP A77U2

6-20-13

Dist	COUNTY	ROUTE	POST MILES TOTAL PROJECT	SHEET No.	TOTAL SHEETS
11	Imp	8	R45.5/R55.0	177	211

Randell D. Hiatt
REGISTERED CIVIL ENGINEER

July 19, 2013
PLANS APPROVAL DATE

REGISTERED PROFESSIONAL ENGINEER
Randell D. Hiatt
No. C50200
Exp. 6-30-15
CIVIL
STATE OF CALIFORNIA

THE STATE OF CALIFORNIA OR ITS OFFICERS OR AGENTS SHALL NOT BE RESPONSIBLE FOR THE ACCURACY OR COMPLETENESS OF SCANNED COPIES OF THIS PLAN SHEET.

TO ACCOMPANY PLANS DATED 08-03-15

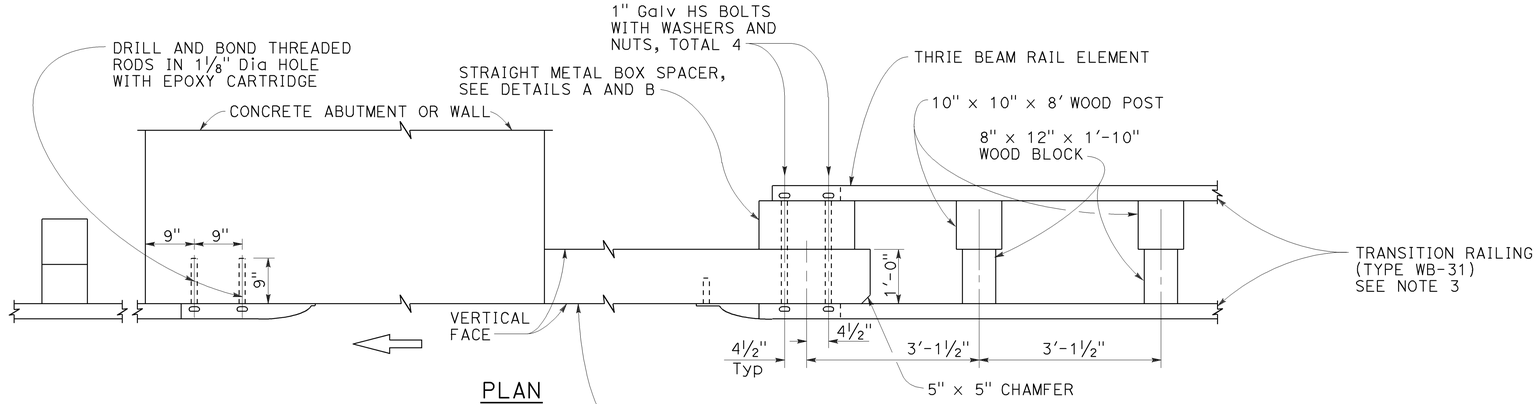

PLAN

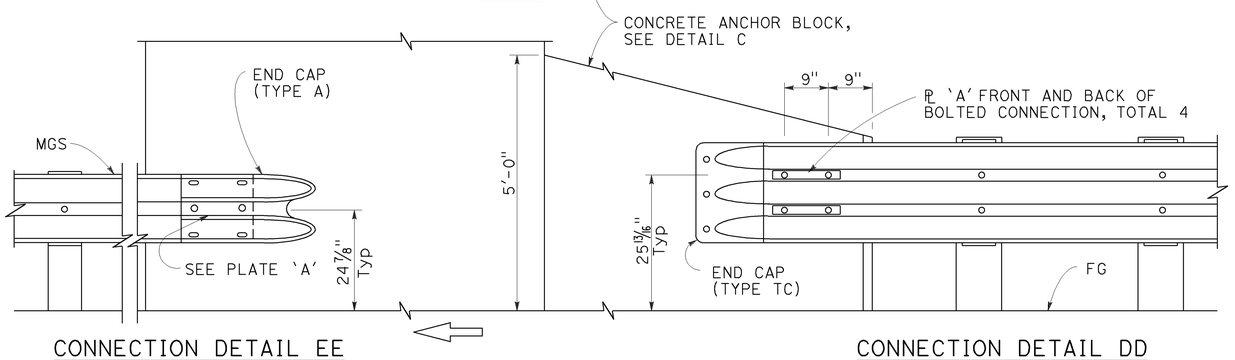

CONNECTION DETAIL EE
See Note 5

CONNECTION DETAIL DD
See Note 4

ELEVATION

MIDWEST GUARDRAIL SYSTEM CONNECTION TO ABUTMENT OR WALL

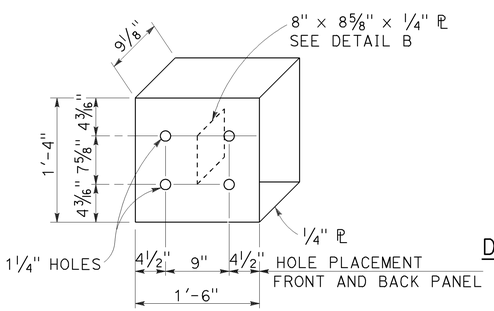

DETAIL A

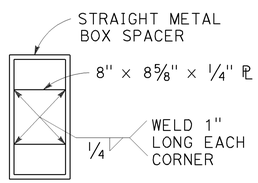

DETAIL B

STRAIGHT METAL BOX SPACER

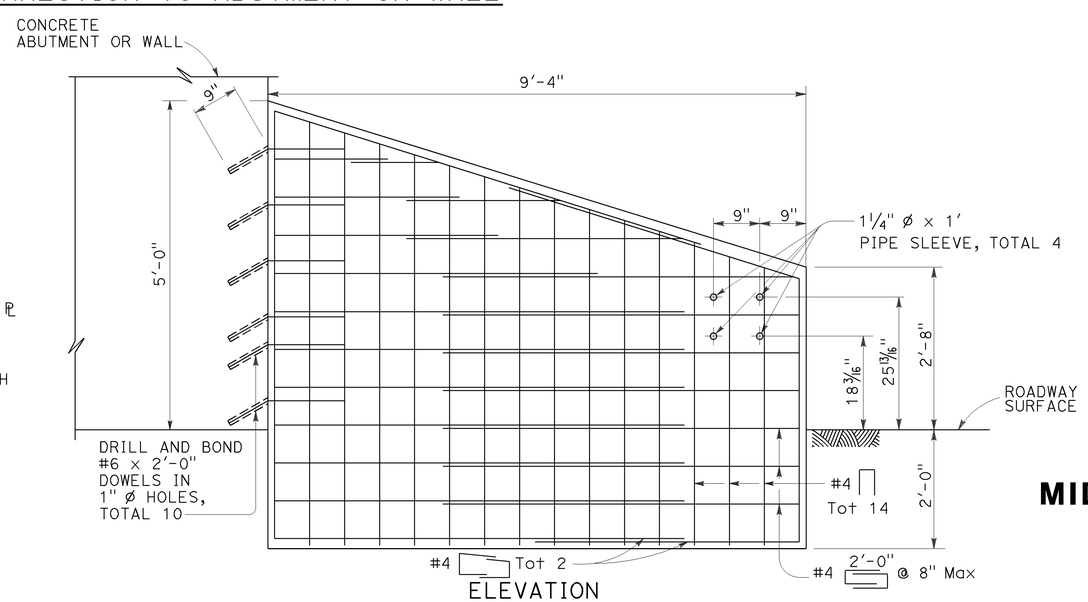

ELEVATION

ANCHOR BLOCK FOR TRANSITION RAILING CONNECTION

DETAIL C

NOTES:

1. These connection details apply to abutments and walls.
2. Additional details of posts, blocks and hardware are shown on Revised Standard Plans RSP A77M1, RSP A77N1 and RSP A77N2.
3. For additional details of Transition Railing (Type WB-31), see Revised Standard Plan RSP A77U4. Transition Railing (Type WB-31) transitions the 12 gauge MGS railing section to a heavier gage nested thrie beam railingsection which is connected to the concrete anchor block.
4. For typical use of Connection Details DD, see Layout Types 12A and 12B on Revised Standard Plan RSP A77Q1 and Layout Types 12C and 12D on Revised Standard Plan RSP A77Q2.
5. For typical use of Connection Detail EE, see Layout Type 12D on Revised Standard Plan RSP A77Q2 and Layout Type 12DD on Revised Standard Plan RSP A77Q5.

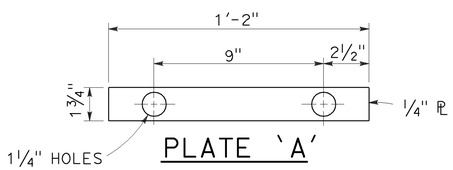

PLATE 'A'

STATE OF CALIFORNIA
DEPARTMENT OF TRANSPORTATION

MIDWEST GUARDRAIL SYSTEM CONNECTIONS TO ABUTMENTS AND WALLS

NO SCALE

RSP A77U3 DATED JULY 19, 2013 SUPPLEMENTS THE STANDARD PLANS BOOK DATED 2010.

REVISED STANDARD PLAN RSP A77U3

2010 REVISED STANDARD PLAN RSP A77U3

7-8-13

Dist	COUNTY	ROUTE	POST MILES TOTAL PROJECT	SHEET No.	TOTAL SHEETS
11	Imp	8	R45.5/R55.0	178	211

Randell D. Hiatt
REGISTERED CIVIL ENGINEER

January 23, 2015
PLANS APPROVAL DATE

REGISTERED PROFESSIONAL ENGINEER
Randell D. Hiatt
No. C50200
Exp. 6-30-15
CIVIL
STATE OF CALIFORNIA

THE STATE OF CALIFORNIA OR ITS OFFICERS OR AGENTS SHALL NOT BE RESPONSIBLE FOR THE ACCURACY OR COMPLETENESS OF SCANNED COPIES OF THIS PLAN SHEET.

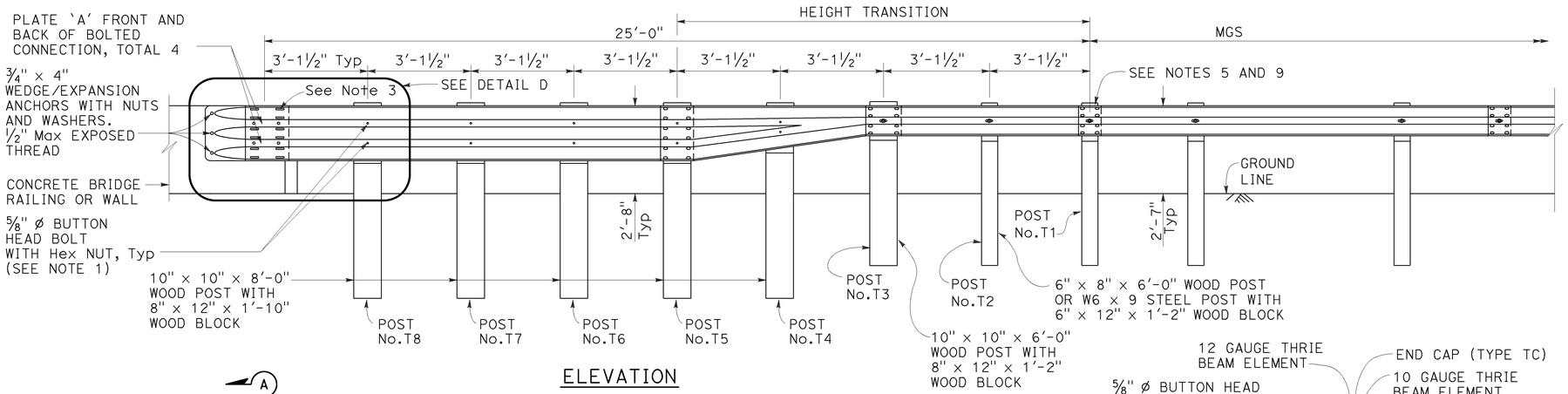

ELEVATION

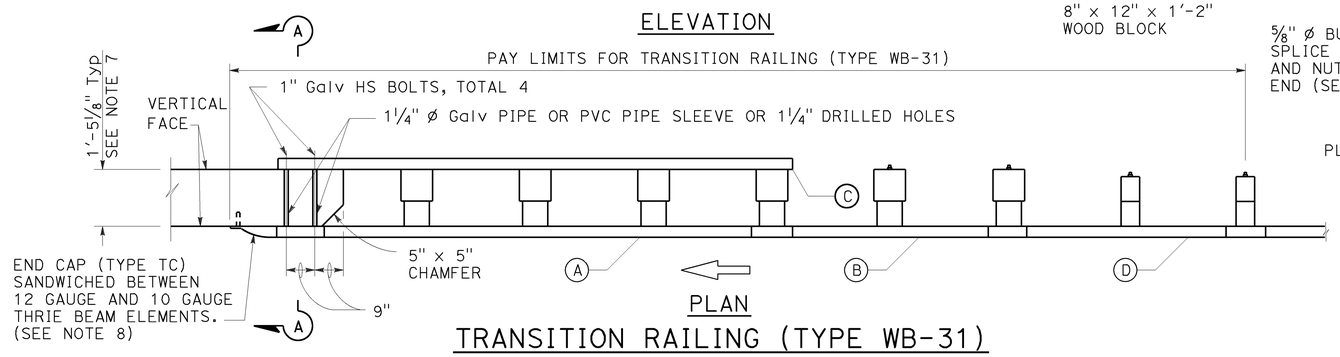

PLAN

TRANSITION RAILING (TYPE WB-31)

(No Blockout Attachment)

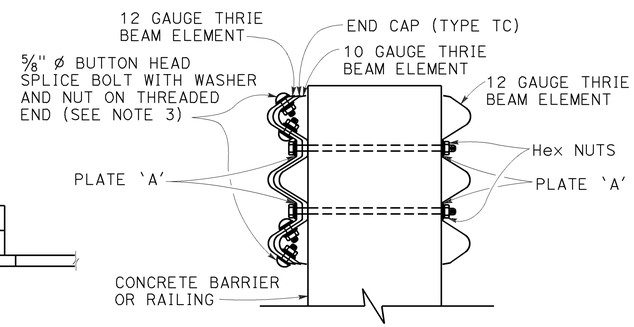

SECTION A-A

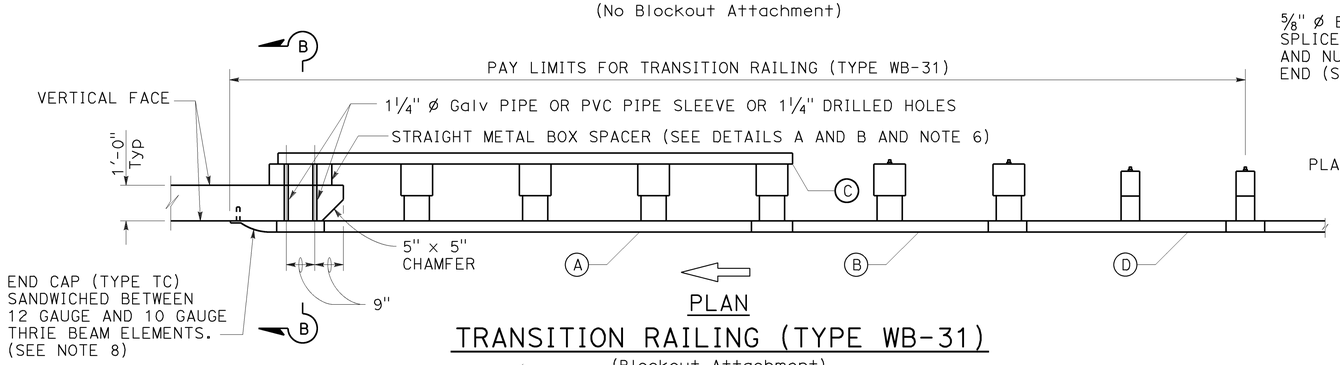

PLAN

TRANSITION RAILING (TYPE WB-31)

(Blockout Attachment)

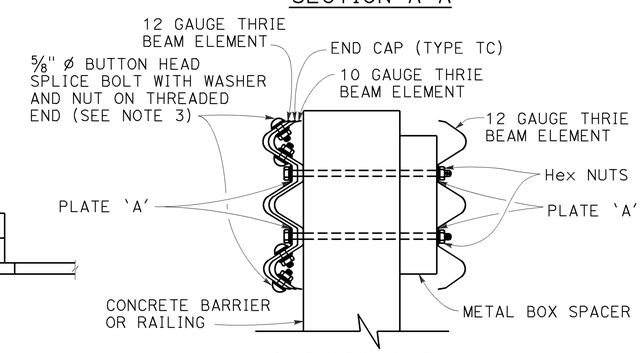

SECTION B-B

LEGEND:

(A) NESTED THRIE BEAM ELEMENTS (ONE 12 GAUGE ELEMENT NESTED OVER ONE 10 GAUGE ELEMENT).

(B) ONE ASYMMETRICAL 10 GAUGE "W" BEAM TO THRIE BEAM ELEMENT.

(C) ONE 12 GAUGE THRIE BEAM ELEMENT.

(D) ONE 10 GAUGE "W" BEAM RAIL ELEMENT (7'-3 1/2"LENGTH)

10 GAUGE = 0.138" THICK
12 GAUGE = 0.108" THICK

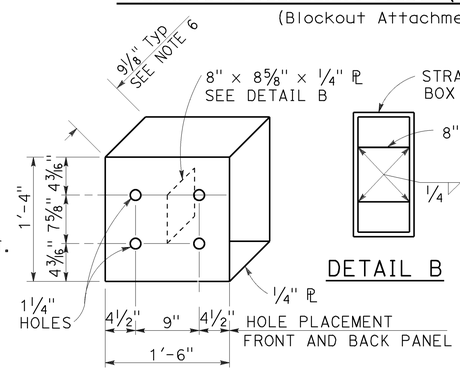

DETAIL A

STRAIGHT METAL BOX SPACER

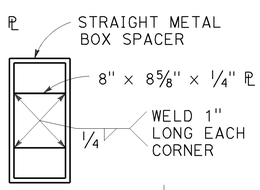

DETAIL B

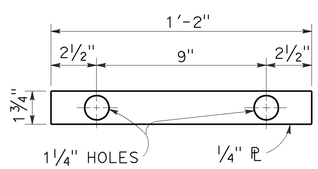

DETAIL C

PLATE 'A'

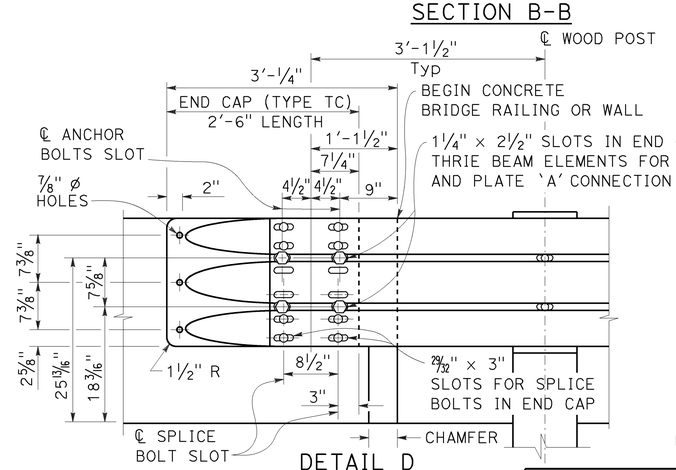

DETAIL D

NOTES:

TO ACCOMPANY PLANS DATED 08-03-15

1. Use 5/8" ø Button head bolts and hex nuts for connections to posts. No washer on rail face for bolted connections to post.

2. The nested rail elements, end cap, and 'W' beam to thrie beam element may be spliced together prior to bolting the elements to the wood post and concrete barrier or railing.

3. Exterior splice bolt holes for rail element splices at Post No. T5 and the connection to the concrete barrier or railing shall be the standard 29/32" x 1 1/8" slot size. Interior splice bolt holes at these locations may be increased up to 1 1/4" ø. Only the top 4 and the bottom 4 splice bolts with washers and nuts are required for rail splices at Post No. T5 and the connection to the concrete barrier or railing.

4. The top elevation of Posts No. T2 through No. T7 shall not project more than 1" above the top elevation of the rail element.

5. Typically, the railing connected to Transition Railing (Type WB-31) will be either standard railing section of MGS with height transition ratio of 150:1 or a Caltrans approved 31" end treatment attached to Post No. T1.

6. The depth of the metal box spacer varies from the 9 1/8" to 1 1/2" and is dependent on the width of the concrete railing or wall. The combined dimension for the depth of the metal box spacer plus the width of railing or wall is typically 21 1/8". Where the space between the backside of the concrete railing or wall and the rear thrie beam element is less than 1 1/2", metal plates similar to Plate 'A' are to be used as spacers.

7. Where the width of the concrete railing or wall is greater than 17 1/8", wood blocks are to be used to fill the space created between the backside of Posts No. T5 through No. T8 and the rear thrie beam element. These wood blocks shall be 8" in width and 1'-2" in length. The dimension between the front thrie beam element and the rear thrie beam element is to match the width of the concrete railing or wall.

8. End cap may be installed over 12 gauge and 10 gauge thrie beam elements where transition railing is installed on the departure end of bridge railing.

9. Conform standard railing section height to 31" at Post No. T1 using height transition ratio of 150:1.

STATE OF CALIFORNIA
DEPARTMENT OF TRANSPORTATION

MIDWEST GUARDRAIL SYSTEM TRANSITION RAILING (TYPE WB-31)

NO SCALE

RSP A77U4 DATED JANUARY 23, 2015 SUPERSEDES RSP A77U4 DATED NOVEMBER 15, 2013 AND RSP A77U4 DATED JULY 19, 2013 THAT SUPPLEMENTS THE STANDARD PLANS BOOK DATED 2010.

REVISED STANDARD PLAN RSP A77U4

2010 REVISED STANDARD PLAN RSP A77U4

1-8-15

Dist	COUNTY	ROUTE	POST MILES TOTAL PROJECT	SHEET No.	TOTAL SHEETS
11	Imp	8	R45.5/R55.0	179	211

Raymond Don Tsztoo
REGISTERED CIVIL ENGINEER

October 19, 2012
PLANS APPROVAL DATE

REGISTERED PROFESSIONAL ENGINEER
Raymond Don Tsztoo
No. C37332
Exp. 6-30-14
CIVIL
STATE OF CALIFORNIA

THE STATE OF CALIFORNIA OR ITS OFFICERS OR AGENTS SHALL NOT BE RESPONSIBLE FOR THE ACCURACY OR COMPLETENESS OF SCANNED COPIES OF THIS PLAN SHEET.

TO ACCOMPANY PLANS DATED 08-03-15

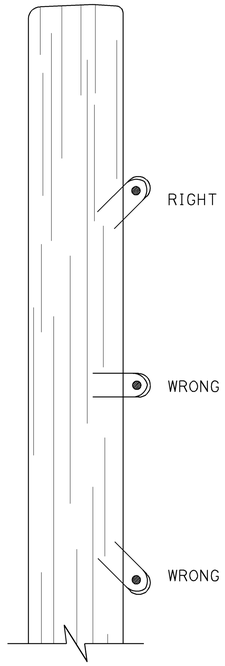

DRIVE STAPLES AT ANGLE

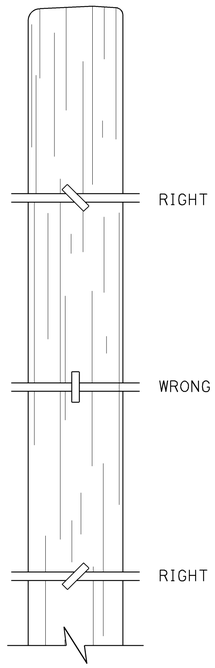

DO NOT DRIVE STAPLES PARALLEL TO SIDE OF POST

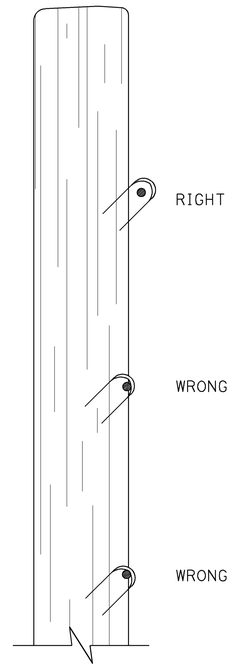

LEAVE WIRE LOOSE IN STAPLE

LINE POST STAPLING DETAILS

(Apply to rectangular/square and round posts)
Do not staple vertical wire in wire mesh.

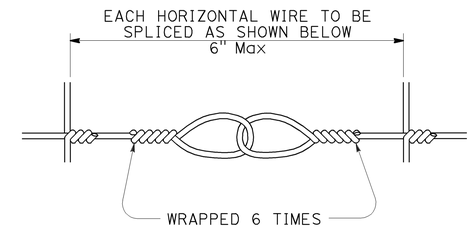

SPLICE DETAIL FOR BARBED WIRE/WIRE MESH FENCE

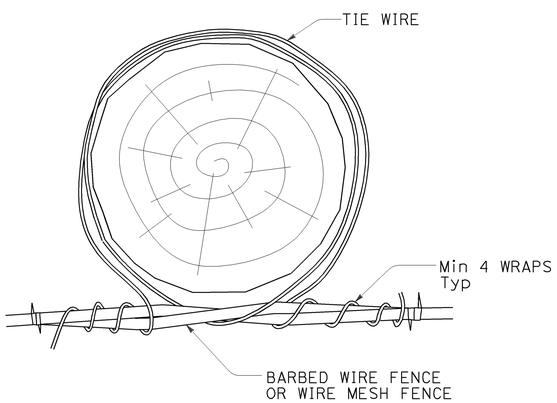

OPTION A

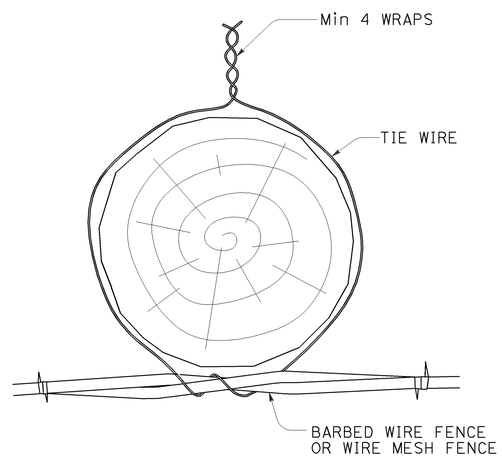

OPTION B

LINE POST WIRE TIE OPTION DETAILS

(Option details also apply to rectangular/square posts)

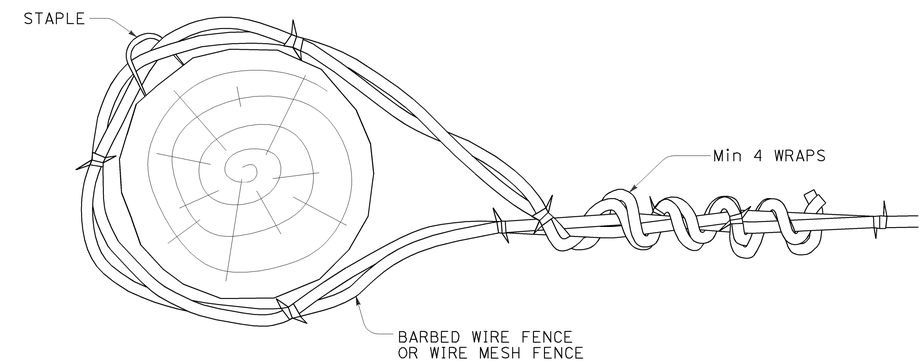

END, LATCH, PULL, AND CORNER POST DETAIL

(Also applies to rectangular/square posts)

STATE OF CALIFORNIA
DEPARTMENT OF TRANSPORTATION

BARBED WIRE AND WIRE MESH FENCE - MISCELLANEOUS DETAILS

NO SCALE

RSP A86D DATED OCTOBER 19, 2012 SUPPLEMENTS THE STANDARD PLANS BOOK DATED 2010.

REVISED STANDARD PLAN RSP A86D

2010 REVISED STANDARD PLAN RSP A86D

10-9-12

Dist	COUNTY	ROUTE	POST MILES TOTAL PROJECT	SHEET No.	TOTAL SHEETS
11	Imp	8	R45.5/R55.0	180	211

REGISTERED CIVIL ENGINEER

July 19, 2013
PLANS APPROVAL DATE

REGISTERED PROFESSIONAL ENGINEER
Michael Janzen
No. 44788
Exp. 03-31-14
CIVIL
STATE OF CALIFORNIA

THE STATE OF CALIFORNIA OR ITS OFFICERS OR AGENTS SHALL NOT BE RESPONSIBLE FOR THE ACCURACY OR COMPLETENESS OF SCANNED COPIES OF THIS PLAN SHEET.

TO ACCOMPANY PLANS DATED 08-03-15

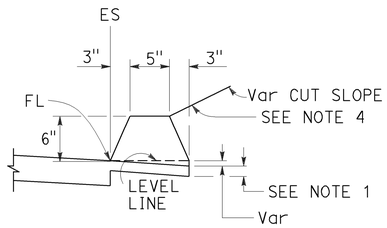

TYPE A
See Note 3

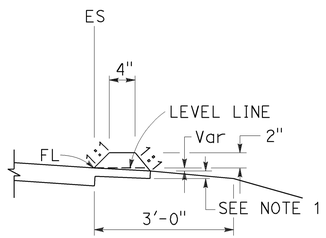

TYPE C

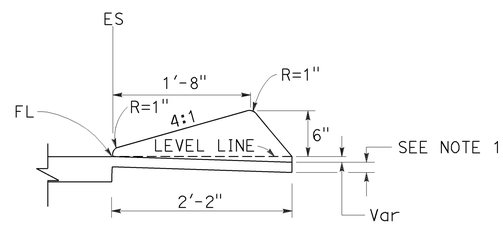

TYPE D

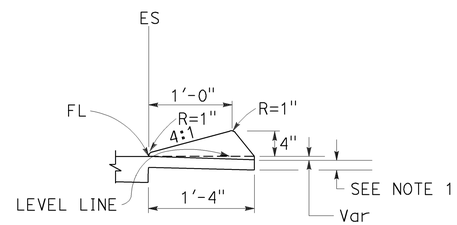

TYPE E

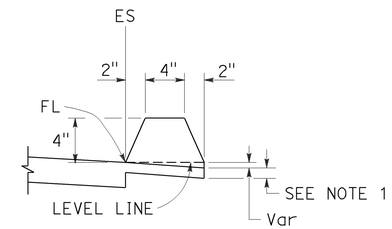

TYPE F
See Note 5

DIKES

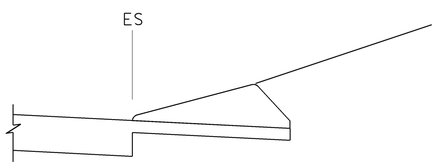

CASE C-1
Cut Slope

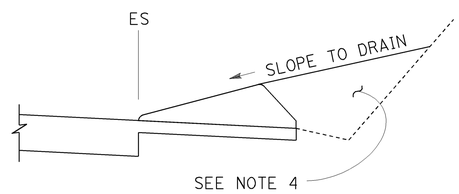

CASE C-2
Cut Slope

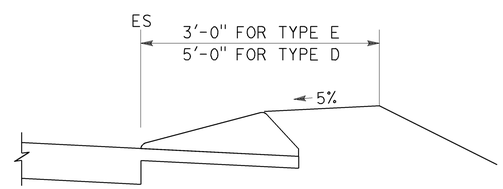

CASE F

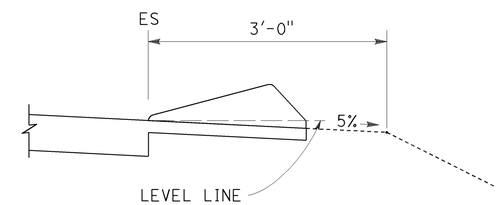

CASE R
See Note 2

TYPE D AND E BACKFILL DETAILS

NOTES:

1. For HMA shoulders only, extend top layer of HMA placed on the shoulder under dike with no joint at the ES. For projects with OGFC shoulders, do not extend OGFC under dike. See project plans for modified dike detail.
2. Case R applies to retrofit only projects where restrictive conditions do not provide enough width for Case F backfill.
3. Type A dike only to be used where restrictive slope conditions do not provide enough width to use Type D or Type E dike.
4. Fill and compact with excavated material to top of dike.
5. Use Type F dike, where dike is required with guard railing installations. See Revised Standard Plan RSP A77N4 for dike positioning details.

DIKE QUANTITIES

TYPE	CUBIC YARDS PER LINEAR FOOT
A	0.0135
C	0.0038
D	0.0293
E	0.0130
F	0.0066

Quantities based on 5% cross slope.

STATE OF CALIFORNIA
DEPARTMENT OF TRANSPORTATION

HOT MIX ASPHALT DIKES

NO SCALE

RSP A87B DATED JULY 19, 2013 SUPERSEDES STANDARD PLAN A87B DATED MAY 20, 2011 - PAGE 120 OF THE STANDARD PLANS BOOK DATED 2010.

REVISED STANDARD PLAN RSP A87B

2010 REVISED STANDARD PLAN RSP A87B

6-27-13

Dist	COUNTY	ROUTE	POST MILES TOTAL PROJECT	SHEET No.	TOTAL SHEETS
11	Imp	8	R45.5/R55.0	181	211

William K. Farnbach
REGISTERED CIVIL ENGINEER

July 19, 2013
PLANS APPROVAL DATE

REGISTERED PROFESSIONAL ENGINEER
William K. Farnbach
No. C49042
Exp. 9-30-14
CIVIL
STATE OF CALIFORNIA

THE STATE OF CALIFORNIA OR ITS OFFICERS OR AGENTS SHALL NOT BE RESPONSIBLE FOR THE ACCURACY OR COMPLETENESS OF SCANNED COPIES OF THIS PLAN SHEET.

TO ACCOMPANY PLANS DATED 08-03-15

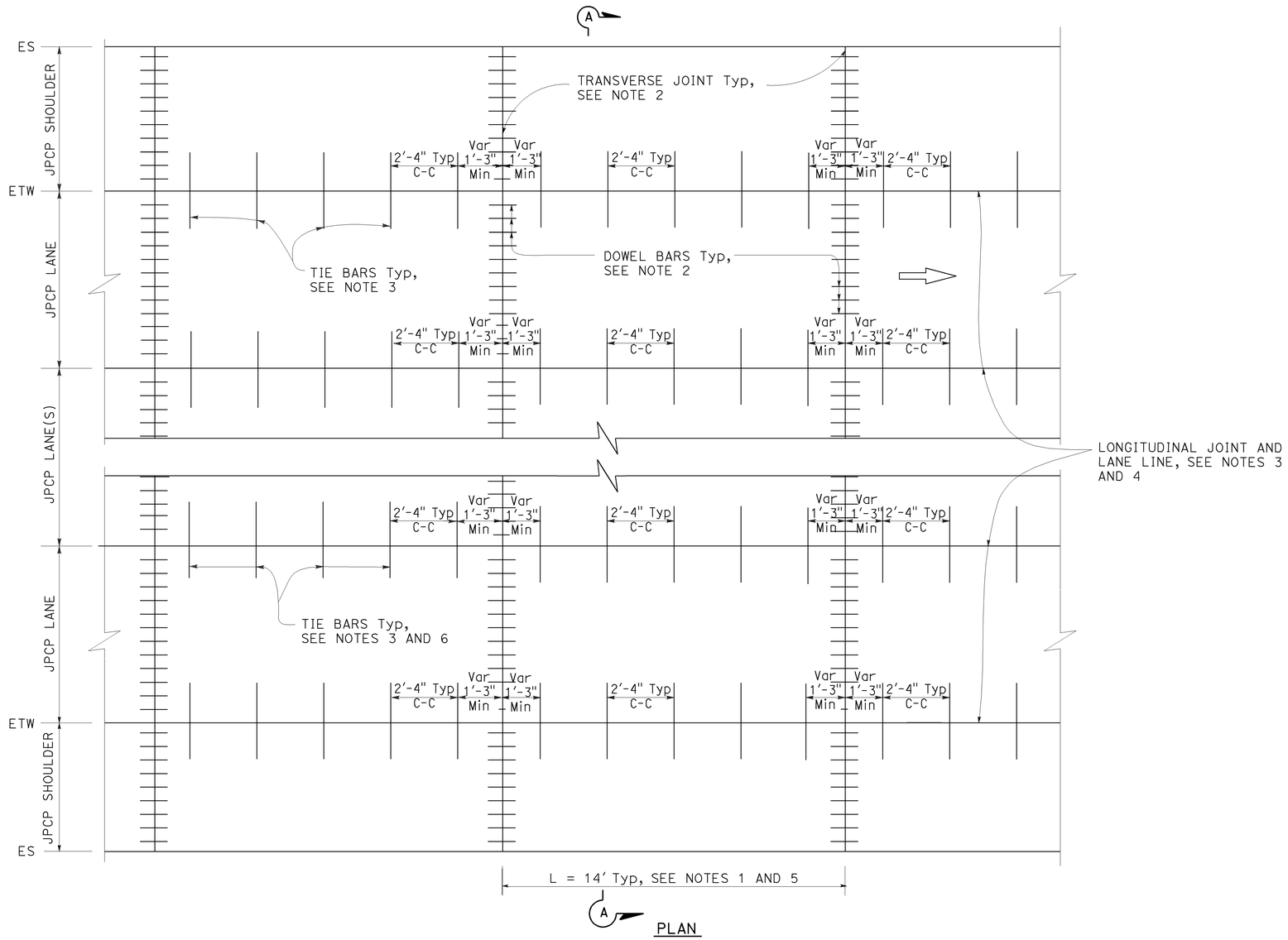

PLAN

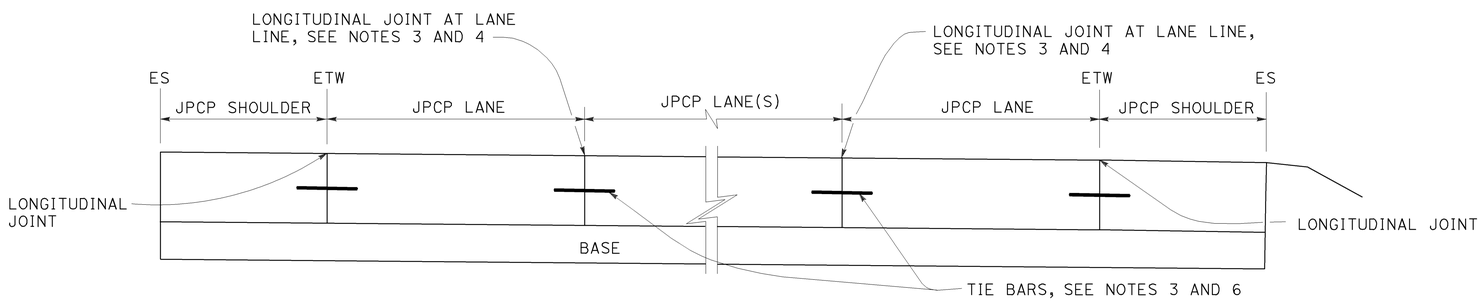

SECTION A-A

NOTES:

1. Transverse joint spacing may be adjusted to no less than 10' and no more than 14' to conform to bridges, change in pavement type, and hardened concrete pavement.
2. For transverse joint and dowel bar details not shown, see Revised Standard Plan RSP P10.
3. For longitudinal joint and tie bar details not shown, see Revised Standard Plan RSP P15.
4. For additional longitudinal joint layout details, see Revised Standard Plan RSP P18.
5. For joint layout at intersections, see Project Plans.
6. For dowel bars at longitudinal joint. see Revised Standard Plan RSP P18.

STATE OF CALIFORNIA
DEPARTMENT OF TRANSPORTATION

JOINTED PLAIN CONCRETE PAVEMENT NEW CONSTRUCTION

NO SCALE

RSP P1 DATED JULY 19, 2013 SUPERSEDES STANDARD PLAN P1
DATED MAY 20, 2011 - PAGE 125 OF THE STANDARD PLANS BOOK DATED 2010.

REVISED STANDARD PLAN RSP P1

2010 REVISED STANDARD PLAN RSP P1

5-31-13

Dist	COUNTY	ROUTE	POST MILES TOTAL PROJECT	SHEET No.	TOTAL SHEETS
11	Imp	8	R45.5/R55.0	182	211

William K. Farnbach
REGISTERED CIVIL ENGINEER

July 19, 2013
PLANS APPROVAL DATE

REGISTERED PROFESSIONAL ENGINEER
William K. Farnbach
No. C49042
Exp. 9-30-14
CIVIL
STATE OF CALIFORNIA

THE STATE OF CALIFORNIA OR ITS OFFICERS OR AGENTS SHALL NOT BE RESPONSIBLE FOR THE ACCURACY OR COMPLETENESS OF SCANNED COPIES OF THIS PLAN SHEET.

TO ACCOMPANY PLANS DATED 08-03-15

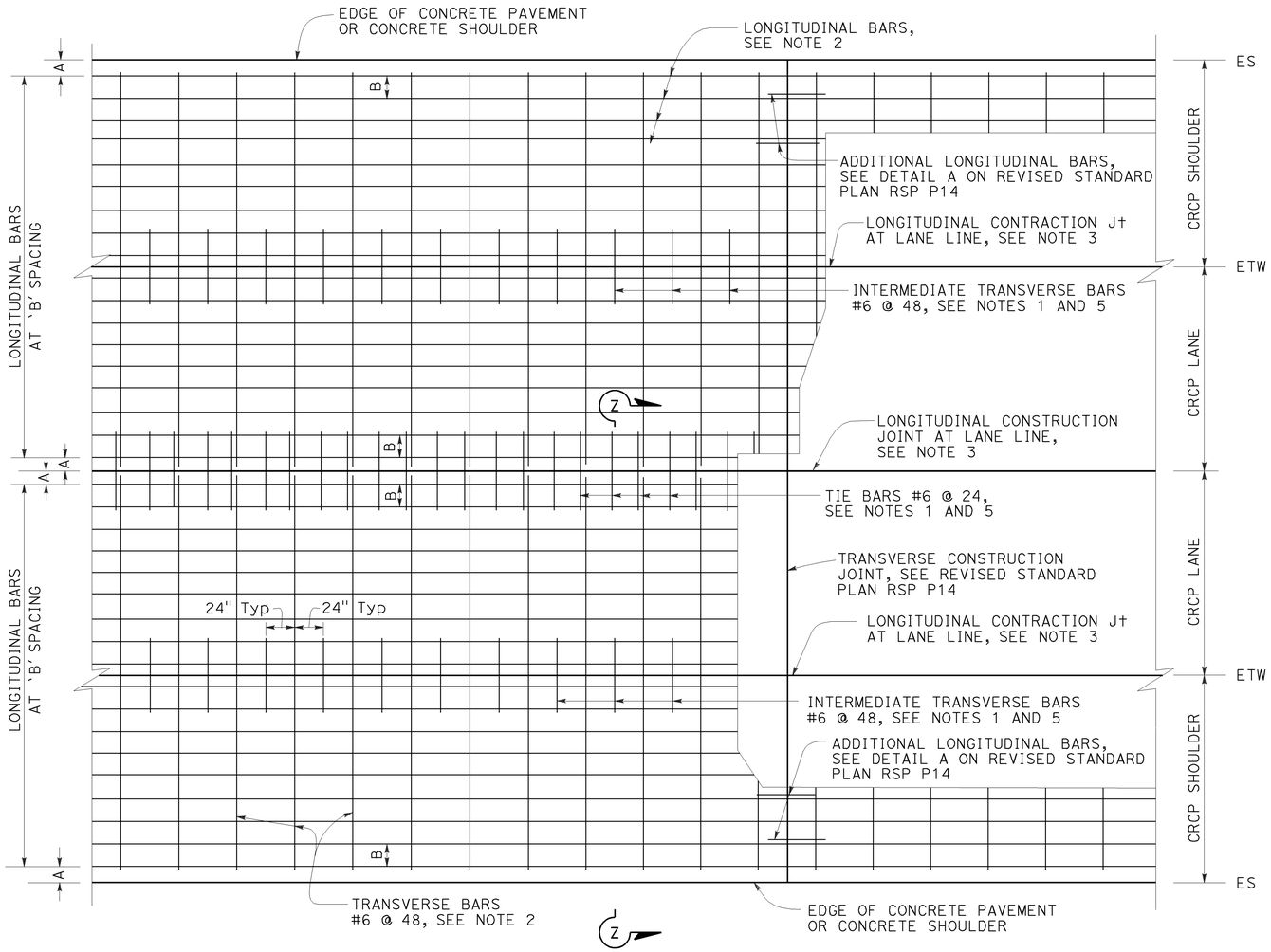

PLAN

See Note 4

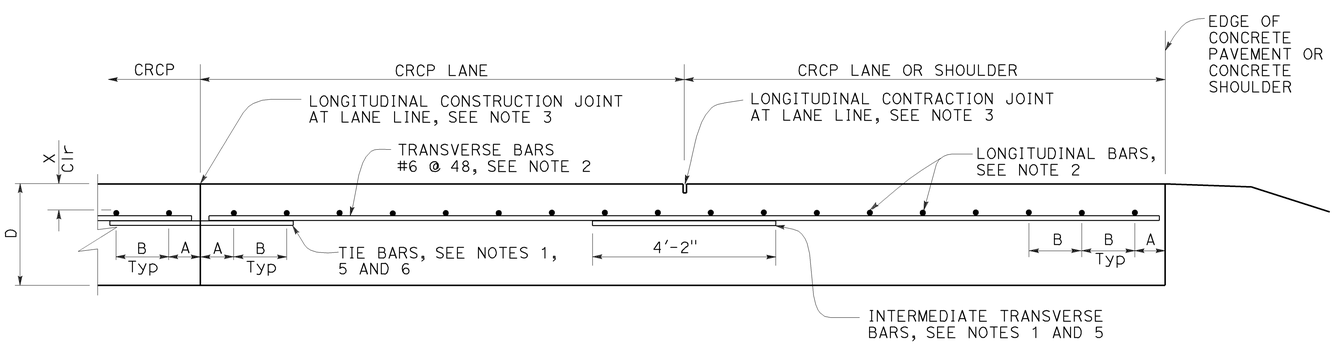

SECTION Z-Z

TABLE No. 1 LONGITUDINAL BAR REINFORCEMENT					
SLAB THICKNESS AND BAR SIZE		FIRST SPACING AT EDGE OR JOINT	REGULAR BARS	ADDITIONAL BARS AT TRANSVERSE CONSTRUCTION JOINT	Clr
D	BAR SIZE	SPACING A	SPACING B	SPACING 2 × B	X
.75′	#6	3" TO 4"	8.0"	16"	4"
.80′	#6	3" TO 4"	7.5"	15"	4"
.85′	#6	3" TO 4"	7.0"	14"	4"
.90′	#6	3" TO 4"	6.5"	13"	4"
.95′	#6	3" TO 4"	6.25"	12.5"	4"
1.00′	#6	3" TO 4"	6.0"	12"	5"
1.05′	#6	3" TO 4"	5.75"	11.5"	5"
1.10′	#6	3" TO 4"	5.5"	11"	5.5"

NOTES:

1. Place transverse tie bars and intermediate transvese bars parallel to and in the same plane as transverse bars.
2. The length of lap splices for bar reinforcement must be at least 25".
3. For longitudinal contraction and construction joint details, see Revised Standard Plan RSP P16.
4. For curved lane layout see Revised Standard Plan RSP P16.
5. For tie bar and intermediate transverse bar details see Revised Standard Plan RSP P16.

STATE OF CALIFORNIA
DEPARTMENT OF TRANSPORTATION

CONTINUOUSLY REINFORCED CONCRETE PAVEMENT

NO SCALE

RSP P4 DATED JULY 19, 2013 SUPERSEDES RSP P4 DATED APRIL 20, 2012 AND STANDARD PLAN P4 DATED MAY 20, 2011 - PAGE 128 OF THE STANDARD PLANS BOOK DATED 2010.

REVISED STANDARD PLAN RSP P4

2010 REVISED STANDARD PLAN RSP P4

5-31-13

Dist	COUNTY	ROUTE	POST MILES TOTAL PROJECT	SHEET No.	TOTAL SHEETS
11	Imp	8	R45.5/R55.0	183	211

William K. Farnbach
REGISTERED CIVIL ENGINEER

July 19, 2013
PLANS APPROVAL DATE

REGISTERED PROFESSIONAL ENGINEER William K. Farnbach No. C49042 Exp. 9-30-14 CIVIL STATE OF CALIFORNIA

THE STATE OF CALIFORNIA OR ITS OFFICERS OR AGENTS SHALL NOT BE RESPONSIBLE FOR THE ACCURACY OR COMPLETENESS OF SCANNED COPIES OF THIS PLAN SHEET.

TO ACCOMPANY PLANS DATED 08-03-15

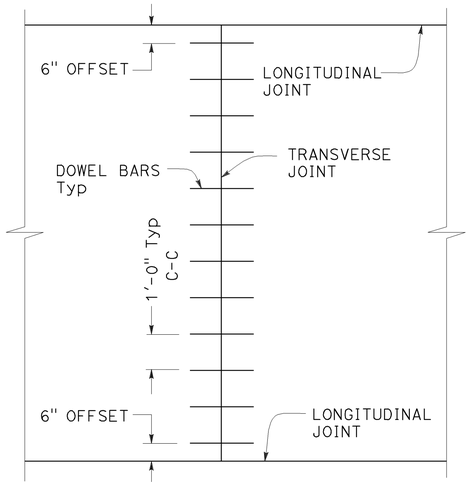

TRANSVERSE JOINT DOWEL BAR LAYOUT

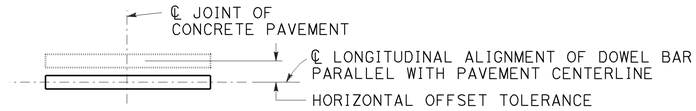

PLAN

HORIZONTAL OFFSET TOLERANCE

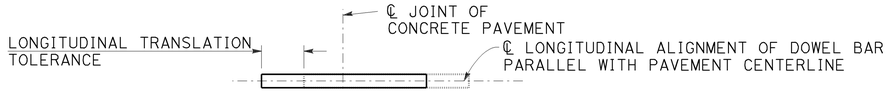

PLAN

LONGITUDINAL TRANSLATION TOLERANCE

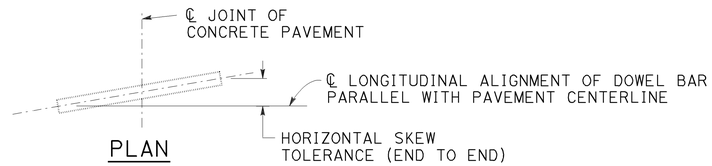

PLAN

HORIZONTAL SKEW TOLERANCE

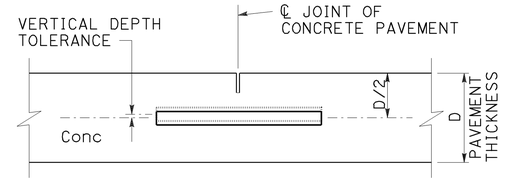

ELEVATION

VERTICAL DEPTH TOLERANCE

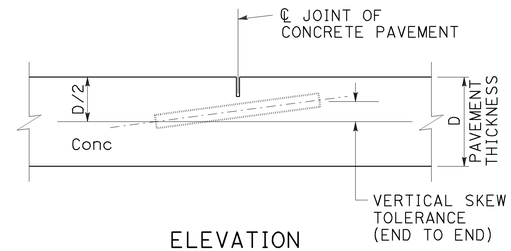

ELEVATION

VERTICAL SKEW TOLERANCE

NOTES:

1. See Revised Standard Plan RSP P1 for typical dowel bar placement and locations.
2. Where fresh concrete pavement is placed against new concrete or existing concrete pavement, rounding the corner of the existing concrete pavement is not required.
3. May also use ¾" Dia dowel bars 2'-4" ± ¼" in length. Center the length of dowel bars at the centerline of longitudinal joint.

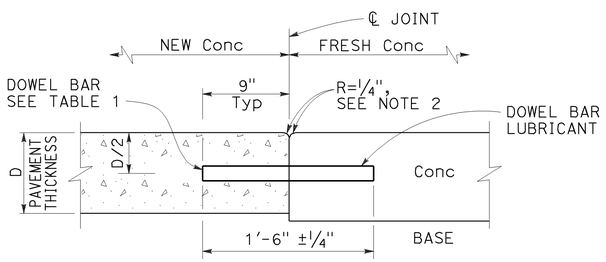

TRANSVERSE CONSTRUCTION JOINT DETAIL

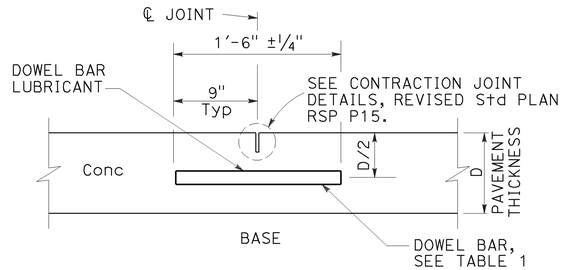

TRANSVERSE CONTRACTION JOINT

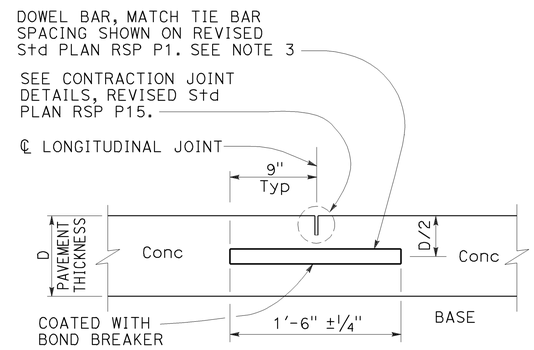

LONGITUDINAL CONTRACTION JOINT WITH DOWEL BARS

See Revised Std Plan RSP P18

TABLE 1

DOWEL BAR DIAMETER TABLE			
PAVEMENT THICKNESS	0.65'	> 0.65' - 0.85'	> 0.85'
MINIMUM DOWEL * BAR DIAMETER	1"	1¼"	1½"

* The drilled hole diameter must be ⅛" to 3/16" larger than the bar diameter.

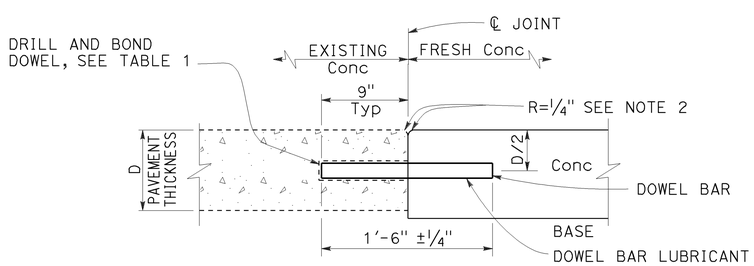

TRANSVERSE CONSTRUCTION JOINT FOR EXISTING CONCRETE PAVEMENT

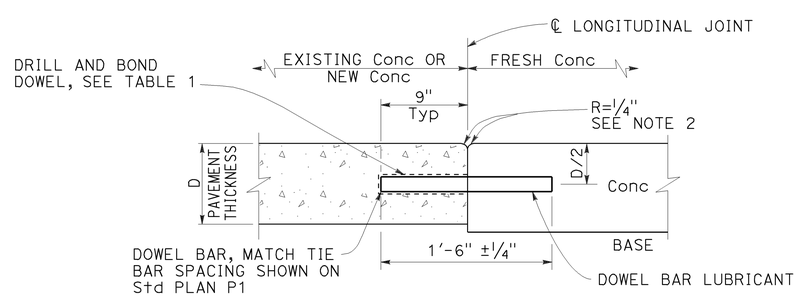

LONGITUDINAL CONSTRUCTION JOINT WITH DOWEL BARS

See Revised Std Plan RSP P18

STATE OF CALIFORNIA
DEPARTMENT OF TRANSPORTATION

CONCRETE PAVEMENT DOWEL BAR DETAILS

NO SCALE

RSP P10 DATED JULY 19, 2013 SUPERSEDES RSP P10 DATED APRIL 20, 2012 AND STANDARD PLAN P10 DATED MAY 20, 2011 - PAGE 131 OF THE STANDARD PLANS BOOK DATED 2010.

REVISED STANDARD PLAN RSP P10

2010 REVISED STANDARD PLAN RSP P10

5-31-13

Dist	COUNTY	ROUTE	POST MILES TOTAL PROJECT	SHEET No.	TOTAL SHEETS
11	Imp	8	R45.5/R55.0	184	211

William K. Farnbach
REGISTERED CIVIL ENGINEER

October 19, 2012
PLANS APPROVAL DATE

REGISTERED PROFESSIONAL ENGINEER
William K. Farnbach
No. C49042
Exp. 9-30-14
CIVIL
STATE OF CALIFORNIA

THE STATE OF CALIFORNIA OR ITS OFFICERS OR AGENTS SHALL NOT BE RESPONSIBLE FOR THE ACCURACY OR COMPLETENESS OF SCANNED COPIES OF THIS PLAN SHEET.

TO ACCOMPANY PLANS DATED 08-03-15

2010 REVISED STANDARD PLAN RSP P13

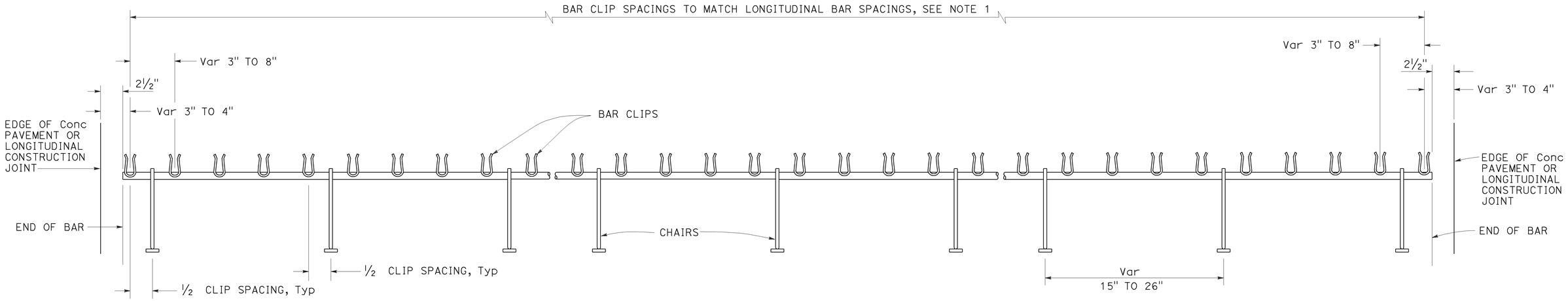

TRANSVERSE BAR ASSEMBLY

NOTES:

1. See Revised Standard Plan RSP P4 for spacing of longitudinal bars.
2. Tensile strength of chair shall be at least 50,000 psi.
3. Wire sizes shown are minimum required.
4. For concrete cover (X), see Table 1 in Revised Standard Plan RSP P4.

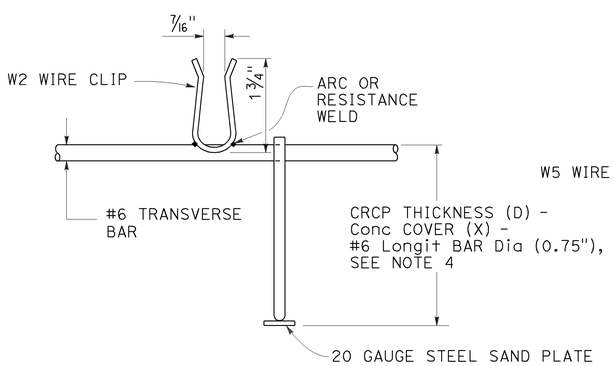

#6 BAR CLIP DETAIL

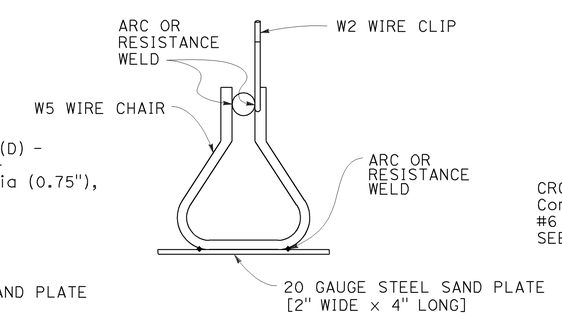

CHAIR DETAIL

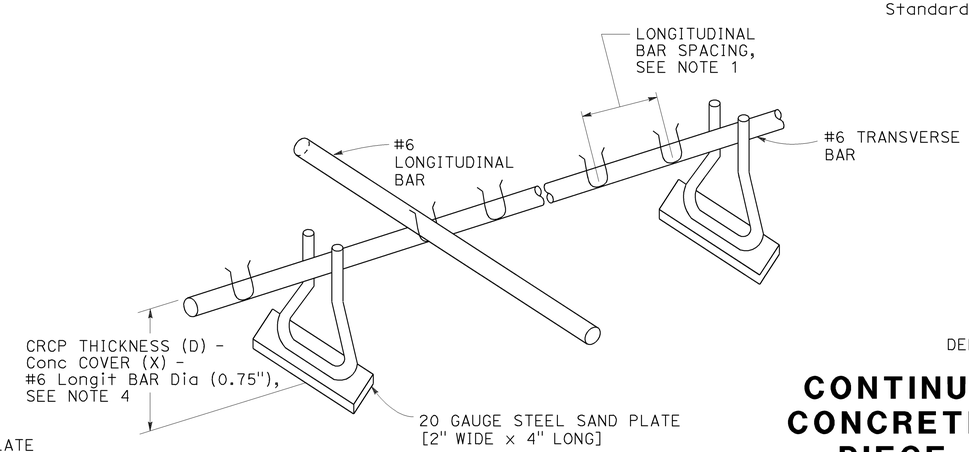

ISOMETRIC VIEW OF CHAIR ASSEMBLY

STATE OF CALIFORNIA
DEPARTMENT OF TRANSPORTATION

CONTINUOUSLY REINFORCED CONCRETE PAVEMENT-SINGLE PIECE TRANSVERSE BAR ASSEMBLY

NO SCALE

RSP P13 DATED OCTOBER 19, 2012 SUPERSEDES STANDARD PLAN P13 DATED MAY 20, 2011 - PAGE 133 OF THE STANDARD PLANS BOOK DATED 2010.

REVISED STANDARD PLAN RSP P13

Dist	COUNTY	ROUTE	POST MILES TOTAL PROJECT	SHEET No.	TOTAL SHEETS
11	Imp	8	R45.5/R55.0	185	211

William K. Farnbach
REGISTERED CIVIL ENGINEER

July 19, 2013
PLANS APPROVAL DATE

REGISTERED PROFESSIONAL ENGINEER
William K. Farnbach
No. C49042
Exp. 9-30-14
CIVIL
STATE OF CALIFORNIA

THE STATE OF CALIFORNIA OR ITS OFFICERS OR AGENTS SHALL NOT BE RESPONSIBLE FOR THE ACCURACY OR COMPLETENESS OF SCANNED COPIES OF THIS PLAN SHEET.

TO ACCOMPANY PLANS DATED 08-03-15

NOTES:

1. For longitudinal bar size, spacing and clearances, see Table 1 on Revised Standard Plan RSP P4.
2. The length of lap splices for bar reinforcement must be at least 25".
3. For tie bars in longitudinal construction joint, see Revised Standard Plan RSP P16.
4. Place additional longitudinal bars parallel to and in the same plane as the longitudinal bars.
5. Place additional longitudinal bars symmetrically about longitudinal construction joint.

ABBREVIATION

D = Thickness of CRCP

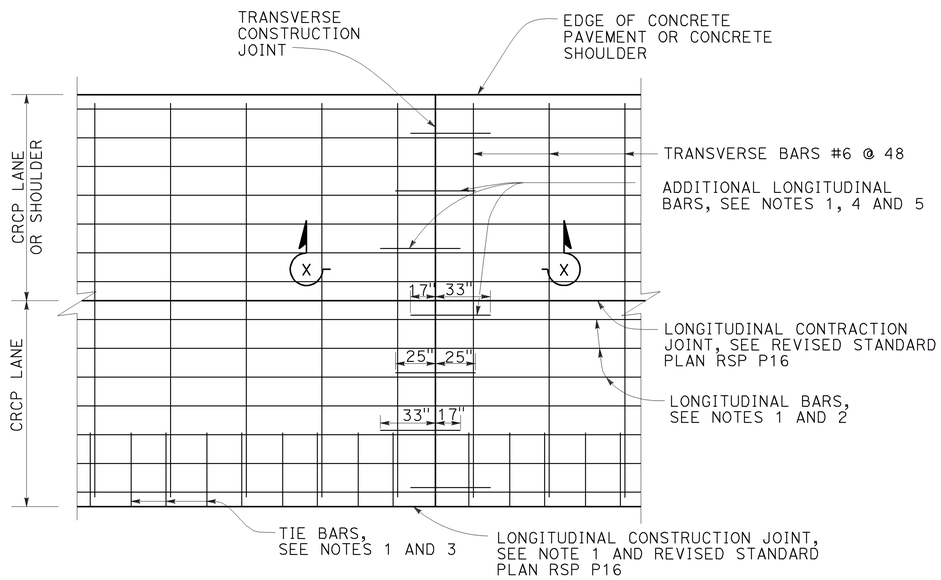

DETAIL A

Additional longitudinal bars at transverse construction joint

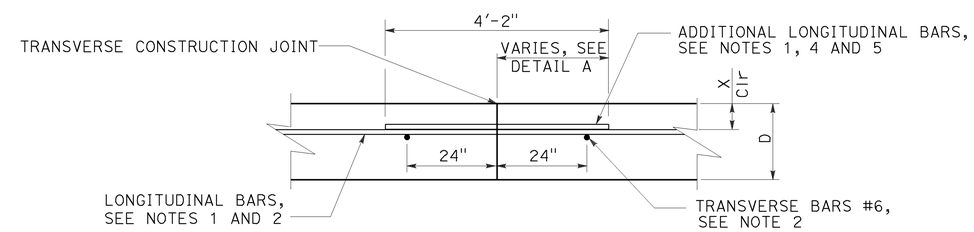

SECTION X-X

TRANSVERSE CONSTRUCTION JOINT

STATE OF CALIFORNIA
DEPARTMENT OF TRANSPORTATION

CONTINUOUSLY REINFORCED CONCRETE PAVEMENT TRANSVERSE CONSTRUCTION JOINT

NO SCALE

RSP P14 DATED JULY 19, 2013 SUPPLEMENTS THE STANDARD PLANS BOOK DATED 2010.

REVISED STANDARD PLAN RSP P14

2010 REVISED STANDARD PLAN RSP P14

5-31-13

Dist	COUNTY	ROUTE	POST MILES TOTAL PROJECT	SHEET No.	TOTAL SHEETS
11	Imp	8	R45.5/R55.0	186	211

William K. Farnbach
REGISTERED CIVIL ENGINEER

July 19, 2013
PLANS APPROVAL DATE

REGISTERED PROFESSIONAL ENGINEER
William K. Farnbach
No. C49042
Exp. 9-30-14
CIVIL
STATE OF CALIFORNIA

THE STATE OF CALIFORNIA OR ITS OFFICERS OR AGENTS SHALL NOT BE RESPONSIBLE FOR THE ACCURACY OR COMPLETENESS OF SCANNED COPIES OF THIS PLAN SHEET.

TO ACCOMPANY PLANS DATED 08-03-15

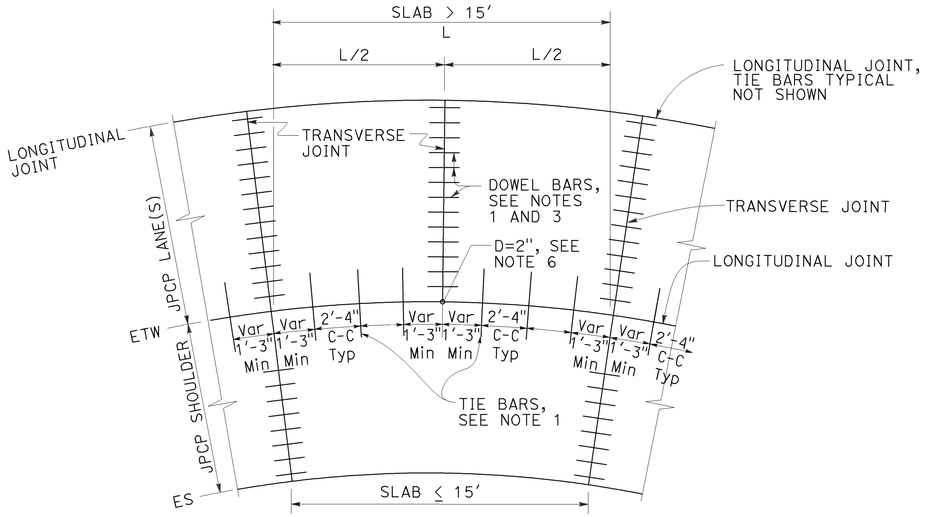

TIE BAR LAYOUT IN CURVED LANES

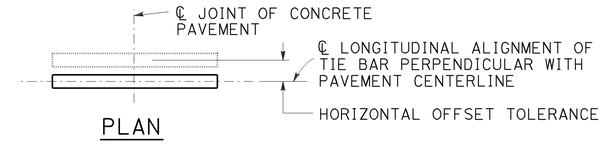

PLAN

HORIZONTAL OFFSET TOLERANCE

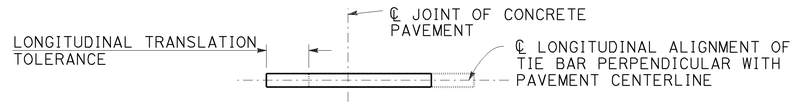

PLAN

LONGITUDINAL TRANSLATION TOLERANCE

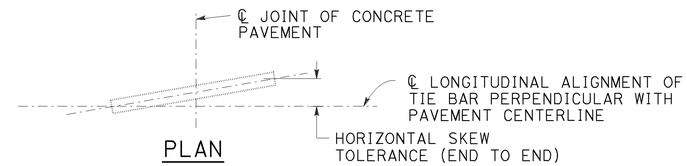

PLAN

HORIZONTAL SKEW TOLERANCE

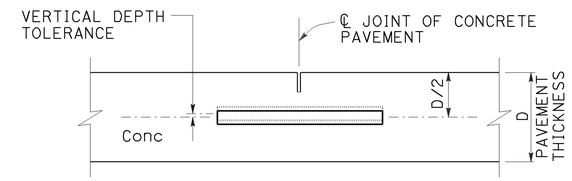

ELEVATION

VERTICAL DEPTH TOLERANCE

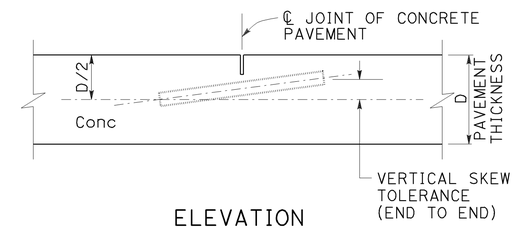

ELEVATION

VERTICAL SKEW TOLERANCE

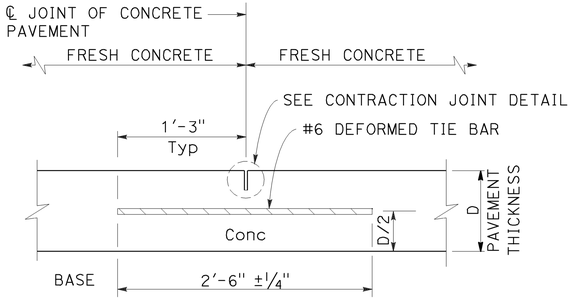

LONGITUDINAL CONTRACTION JOINT

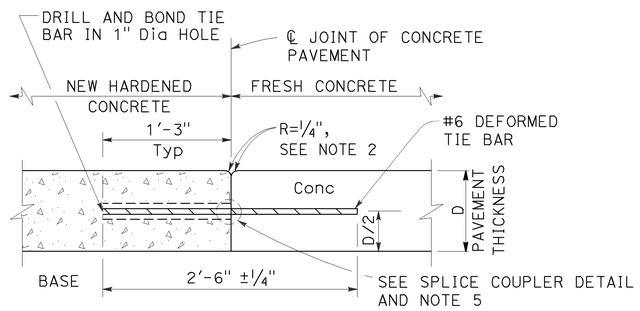

LONGITUDINAL CONSTRUCTION JOINT

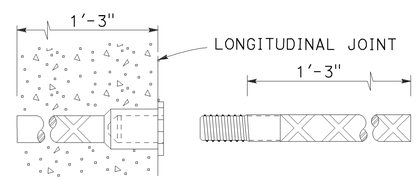

ALTERNATIVE SPLICE COUPLER

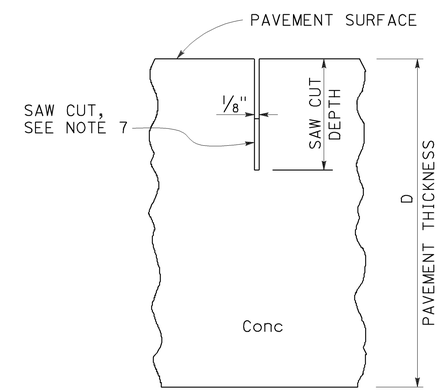

CONTRACTION JOINT DETAIL

NOTES:

1. See Revised Standard Plan RSP P1 for typical dowel bar and tie bar placement and locations.
2. Where new pavement is placed against existing concrete pavement, rounding the corner is not required.
3. For dowel bar sizes, See Revised Standard Plan RSP P10.
4. Tie bar details apply to inside widenings.
5. Use either drill and bond or splice couplers.
6. Full depth drilled hole. Fill hole with filler material.
7. The bottom of the saw cut must be at least 0.5" clear of any dowel bar, tie bar and bar reinforcement.

STATE OF CALIFORNIA
DEPARTMENT OF TRANSPORTATION

CONCRETE PAVEMENT-TIE BAR DETAILS

NO SCALE

RSP P15 DATED JULY 19, 2013 SUPPLEMENTS THE STANDARD PLANS BOOK DATED 2010.

REVISED STANDARD PLAN RSP P15

2010 REVISED STANDARD PLAN RSP P15

5-31-13

Dist	COUNTY	ROUTE	POST MILES TOTAL PROJECT	SHEET No.	TOTAL SHEETS
11	Imp	8	R45.5/R55.0	187	211

William K. Farnbach
REGISTERED CIVIL ENGINEER

July 19, 2013
PLANS APPROVAL DATE

REGISTERED PROFESSIONAL ENGINEER William K. Farnbach No. C49042 Exp. 9-30-14 CIVIL STATE OF CALIFORNIA

THE STATE OF CALIFORNIA OR ITS OFFICERS OR AGENTS SHALL NOT BE RESPONSIBLE FOR THE ACCURACY OR COMPLETENESS OF SCANNED COPIES OF THIS PLAN SHEET.

TO ACCOMPANY PLANS DATED 08-03-15

2010 REVISED STANDARD PLAN RSP P18

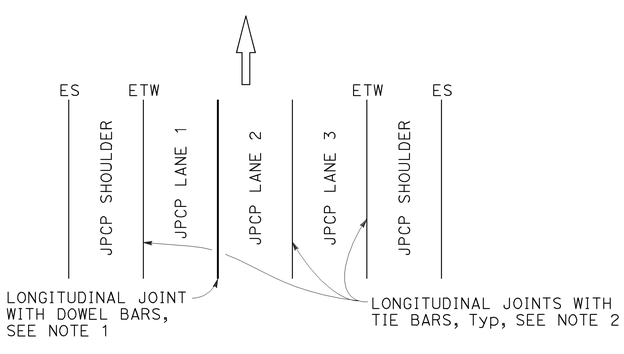

3 LANES WITH CONCRETE SHOULDERS
PLAN

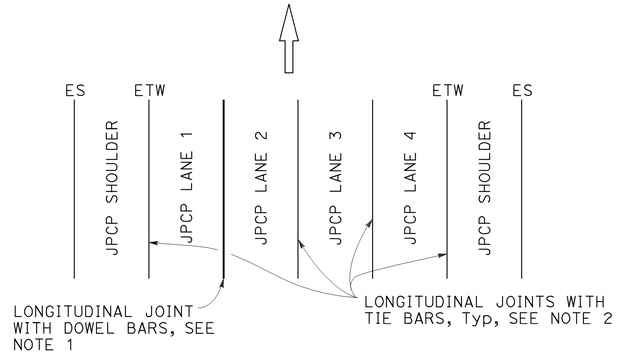

4 LANES WITH CONCRETE SHOULDERS
PLAN

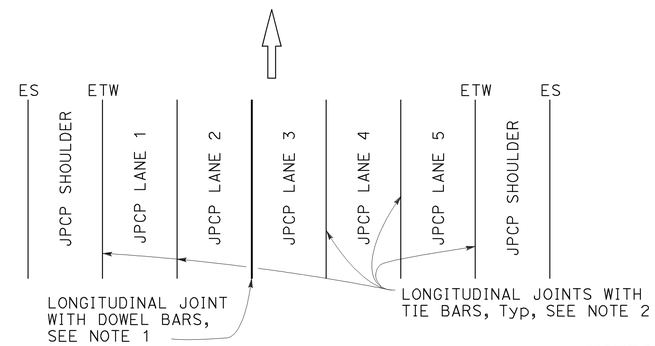

5 LANES WITH CONCRETE SHOULDERS
PLAN

NOTES:

1. See Revised Standard Plan RSP P10 for longitudinal joint with dowel bars.
2. See Revised Standard Plan RSP P15 for longitudinal joint with tie bars.
3. S= Reservoir depth.
   S= 7/8" ± 1/16" for asphalt rubber seals
   S= 9/16" ± 1/16" for silicone seals
   Preformed compression seals must be 13/16" wide and S= 1 11/16" ± 1/16"

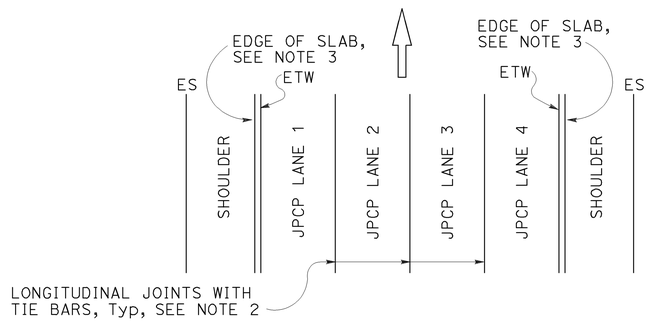

4 LANES OR LESS WITH AC SHOULDERS
PLAN

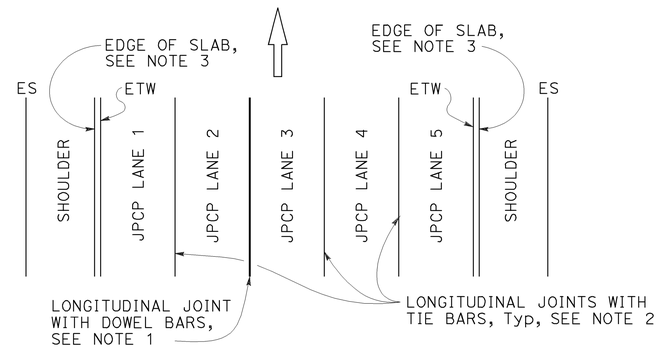

5 LANES WITH AC SHOULDERS
PLAN

NEW CONSTRUCTION

Location of Longitudinal Joints For JPCP

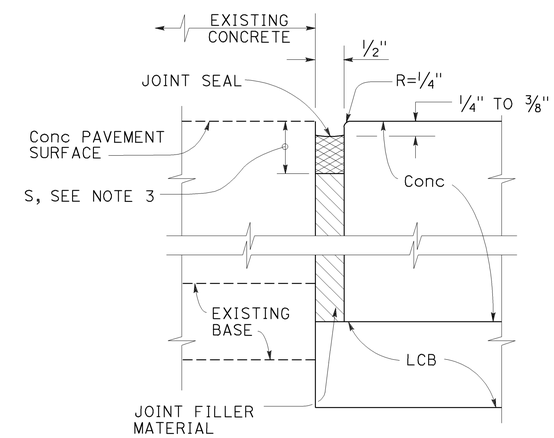

DETAIL "A"

ISOLATION JOINT

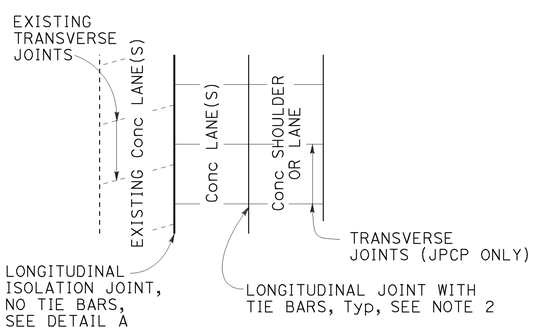

CASE 1
PLAN

Transverse Joints do not align between new and existing.

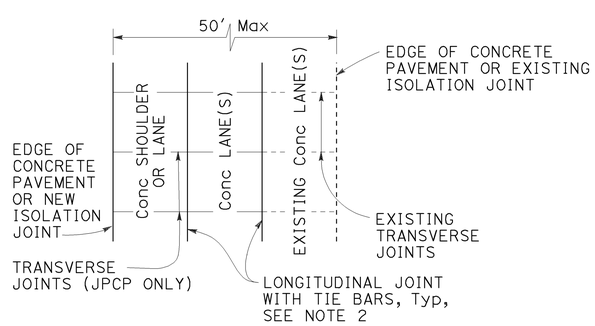

CASE 2
PLAN

Transverse Joints align between new and existing. (For JPCP only)

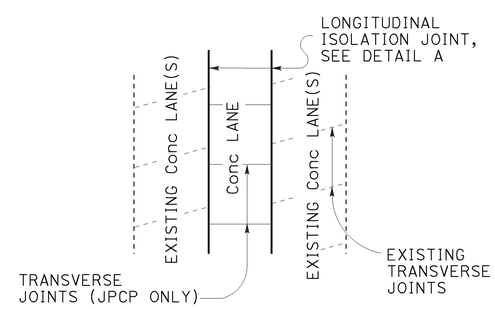

CASE 3 (INTERIOR LANE REPLACEMENT)
PLAN

Transverse Joints do not align between new and existing.

LANE/SHOULDER ADDITION OR RECONSTRUCTION

For JPCP and CRCP

STATE OF CALIFORNIA
DEPARTMENT OF TRANSPORTATION

CONCRETE PAVEMENT LANE SCHEMATICS AND ISOLATION JOINT DETAIL

NO SCALE

RSP P18 DATED JULY 19, 2013 SUPERSEDES RSP P18 DATED APRIL 20, 2012 AND STANDARD PLAN P18 DATED MAY 20, 2011 - PAGE 135 OF THE STANDARD PLANS BOOK DATED 2010.

REVISED STANDARD PLAN RSP P18

5-31-13

Dist	COUNTY	ROUTE	POST MILES TOTAL PROJECT	SHEET No.	TOTAL SHEETS
11	Imp	8	R45.5/R55.0	188	211

William K. Farnbach
REGISTERED CIVIL ENGINEER

July 19, 2013
PLANS APPROVAL DATE

REGISTERED PROFESSIONAL ENGINEER
William K. Farnbach
No. C49042
Exp. 9-30-14
CIVIL
STATE OF CALIFORNIA

THE STATE OF CALIFORNIA OR ITS OFFICERS OR AGENTS SHALL NOT BE RESPONSIBLE FOR THE ACCURACY OR COMPLETENESS OF SCANNED COPIES OF THIS PLAN SHEET.

TO ACCOMPANY PLANS DATED 08-03-15

2010 REVISED STANDARD PLAN RSP P20

NOTES:

1. Details do not apply to isolation joints and longitudinal construction joints.
2. Tie bars, dowel bars, and bar reinforcement are not shown.
3. Depths are measured from the final concrete pavement surface elevation after any grinding.

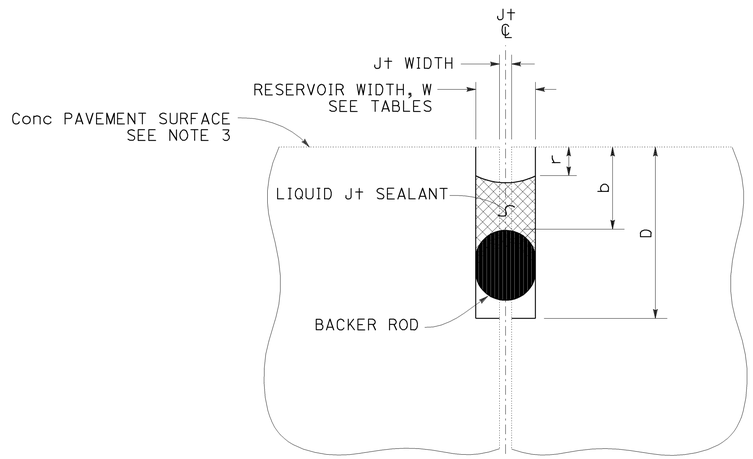

LIQUID JOINT SEALANT

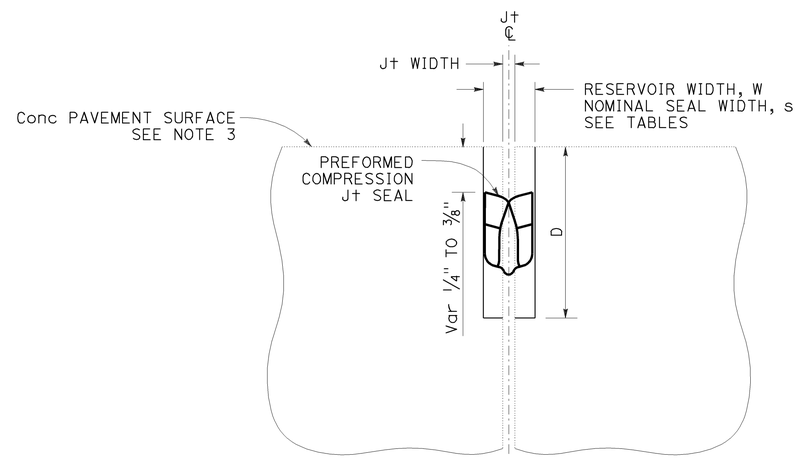

PREFORMED COMPRESSION JOINT SEAL

Const SEASON	Min RESERVOIR WIDTH * W ± 1/16"
WINTER	1/4"
SPRING	3/8"
SUMMER	3/8"
FALL	3/8"

* Minimum reservoir width for replace joint seal = existing joint width + 1/8"

RESERVOIR WIDTH W ±1/16"	LIQUID JOINT SEALANT DIMENSIONS					
	BACKER ROD NOMINAL Dia *	DEPTHS (ASPHALT RUBBER) **		DEPTHS (SILICONE)		
		RESERVOIR D ± 1/4"	BACKER ROD b ± 1/16"	RESERVOIR D ± 1/4"	BACKER ROD b ± 1/16"	RECESS r ± 1/16"
1/4"	3/8"	1 3/4"	7/8"	1 3/8"	1/2"	1/4"
3/8"	1/2"	1 7/8"	7/8"	1 1/2"	1/2"	1/4"
1/2"	3/4"	2"	7/8"	1 3/4"	9/16"	5/16"
5/8"	7/8"	2 1/4"	1"	2"	5/8"	5/16"
3/4"	1"	2 3/4"	1 1/8"	2 1/4"	3/4"	3/8"
7/8"	1 1/4"	3"	1 1/4"	2 1/2"	13/16"	3/8"
1"	1 1/2"	3 1/4"	1 3/8"	2 5/8"	7/8"	3/8"
1 1/8"	1 1/2"	3 1/2"	1 1/2"	2 13/16"	1"	1/2"

* Larger diameter backer rods may be substituted according to manufacturer recommendations if reservoir depth is increased equivalently.

** Asphalt rubber sealant recess depth "r" varies from 1/4" to 3/8"

RESERVOIR WIDTH W ±1/16"	PREFORMED COMPRESSION JOINT SEAL DIMENSIONS	
	NOMINAL SEAL WIDTH s	RESERVOIR DEPTH D ± 1/4"
1/4"	7/16"	1 1/4"
3/8"	11/16"	1 7/16"
1/2"	13/16"	1 11/16"
5/8"	1"	1 7/8"
3/4"	1 1/4"	2 1/8"
7/8"	1 5/8"	2 5/8"
1"	1 5/8"	2 5/8"
1 1/8"	2"	2 7/8"

STATE OF CALIFORNIA
DEPARTMENT OF TRANSPORTATION

JOINT SEALS

NO SCALE

RSP P20 DATED JULY 19, 2013 SUPERSEDES STANDARD PLAN P20
DATED MAY 20, 2011 - PAGE 136 OF THE STANDARD PLANS BOOK DATED 2010.

REVISED STANDARD PLAN RSP P20

Dist	COUNTY	ROUTE	POST MILES TOTAL PROJECT	SHEET No.	TOTAL SHEETS
11	Imp	8	R45.5/R55.0	189	211

William K. Farnbach
REGISTERED CIVIL ENGINEER

July 19, 2013
PLANS APPROVAL DATE

REGISTERED PROFESSIONAL ENGINEER
William K. Farnbach
No. C49042
Exp. 9-30-14
CIVIL
STATE OF CALIFORNIA

THE STATE OF CALIFORNIA OR ITS OFFICERS OR AGENTS SHALL NOT BE RESPONSIBLE FOR THE ACCURACY OR COMPLETENESS OF SCANNED COPIES OF THIS PLAN SHEET.

TO ACCOMPANY PLANS DATED 08-03-15

2010 REVISED STANDARD PLAN RSP P31A

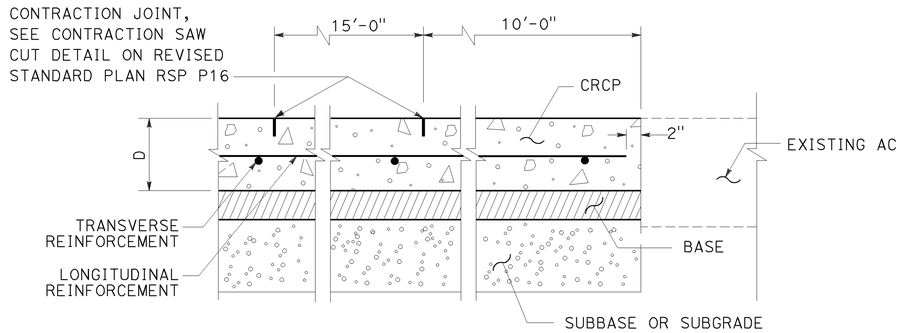

TERMINAL JOINT TYPE A

(For Existing AC)

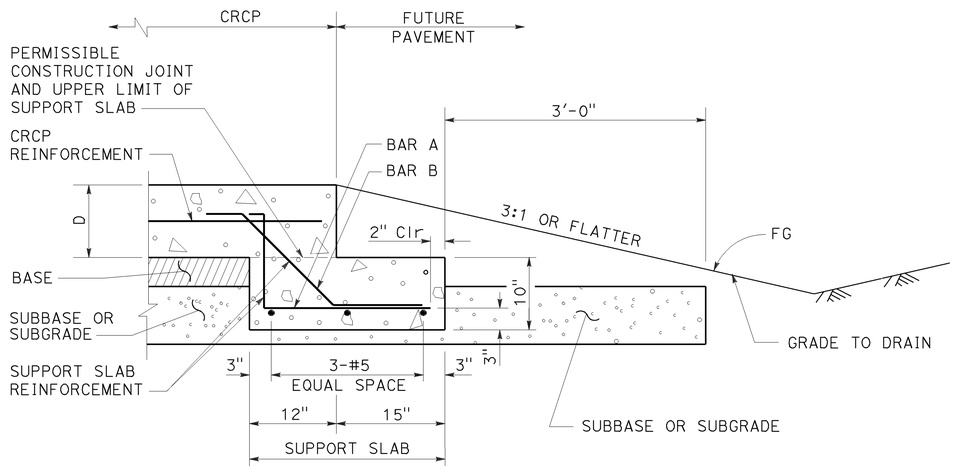

TERMINAL JOINT TYPE B

(For Future Pavement)

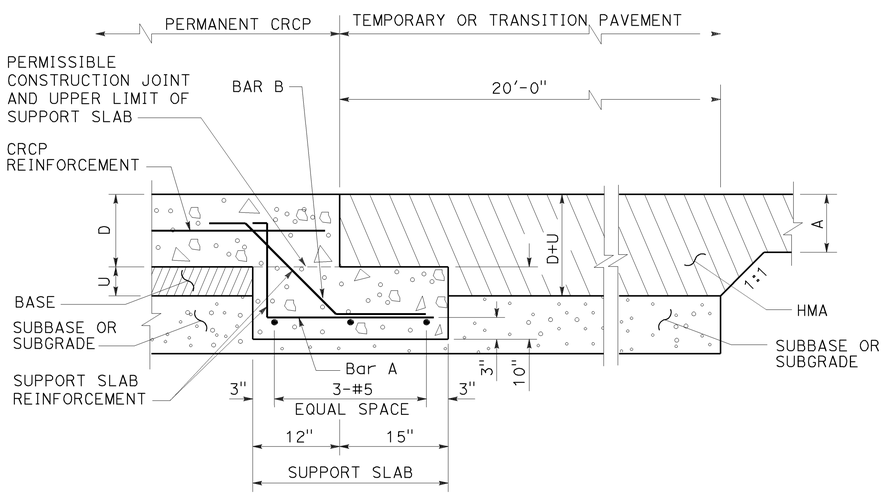

TERMINAL JOINT TYPE C

(For Temporary HMA Pavement)

NOTES:

1. For the locations of wide flange beam terminal, pavement anchors and expansion joints, see Projects Plans.
2. See Revised Standard Plans RSP P31B and RSP P32A.

ABBREVIATIONS

D = Thickness of CRCP

A = Depth of HMA as shown on Project Plans

U = Thickness of Base

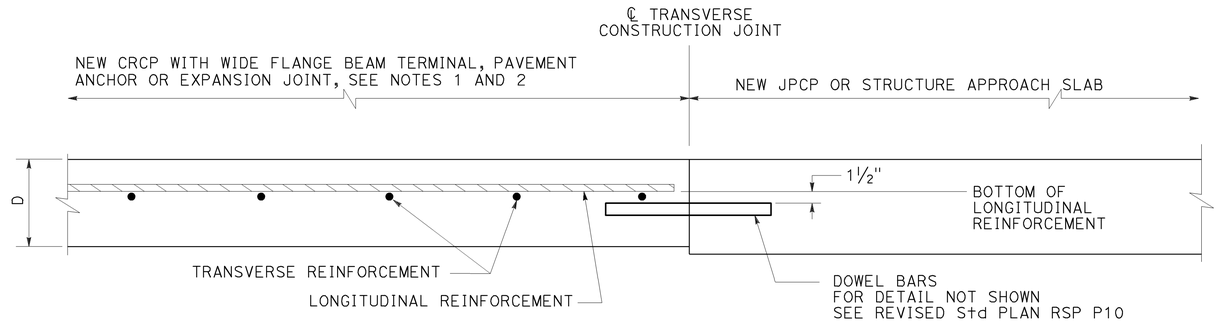

TERMINAL JOINT TYPE E

(For New JPCP or Structure Appproach Slabs)

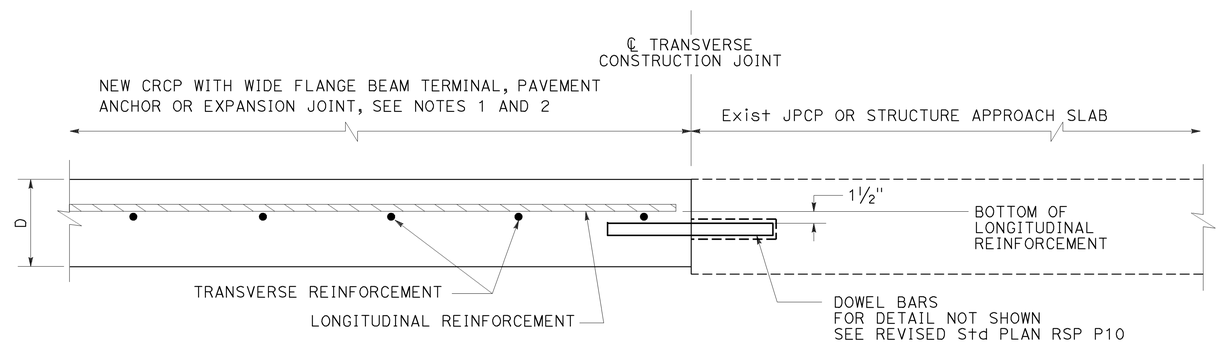

TERMINAL JOINT TYPE D

(For Existing JPCP or Structure Appproach Slabs)

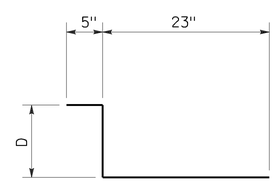

BAR "A" (#5)
AT 12" C-C

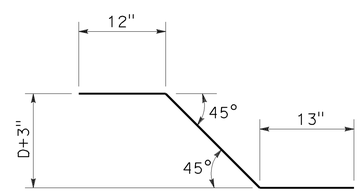

BAR "B" (#5)
AT 12" C-C

STATE OF CALIFORNIA
DEPARTMENT OF TRANSPORTATION

CONTINUOUSLY REINFORCED CONCRETE PAVEMENT TERMINAL JOINT DETAILS

NO SCALE

RSP P31A DATED JULY 19, 2013 SUPERSEDES STANDARD PLAN P31A
DATED MAY 20, 2011 - PAGE 138 OF THE STANDARD PLANS BOOK DATED 2010.

REVISED STANDARD PLAN RSP P31A

5-31-13

Dist	COUNTY	ROUTE	POST MILES TOTAL PROJECT	SHEET No.	TOTAL SHEETS
11	Imp	8	R45.5/R55.0	190	211

REGISTERED CIVIL ENGINEER

April 20, 2012
PLANS APPROVAL DATE

REGISTERED PROFESSIONAL ENGINEER Florante E. Bautista No. C54859 Exp. 6-30-12 CIVIL STATE OF CALIFORNIA

THE STATE OF CALIFORNIA OR ITS OFFICERS OR AGENTS SHALL NOT BE RESPONSIBLE FOR THE ACCURACY OR COMPLETENESS OF SCANNED COPIES OF THIS PLAN SHEET.

TO ACCOMPANY PLANS DATED 08-03-15

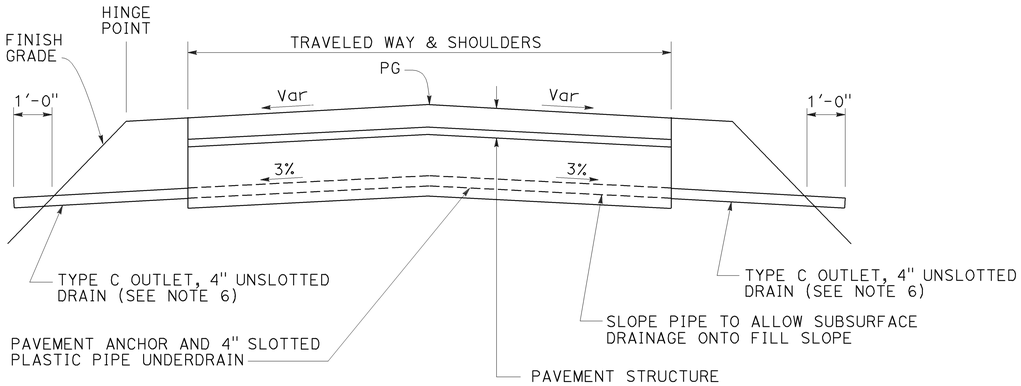

PAVEMENT ANCHOR PROFILE

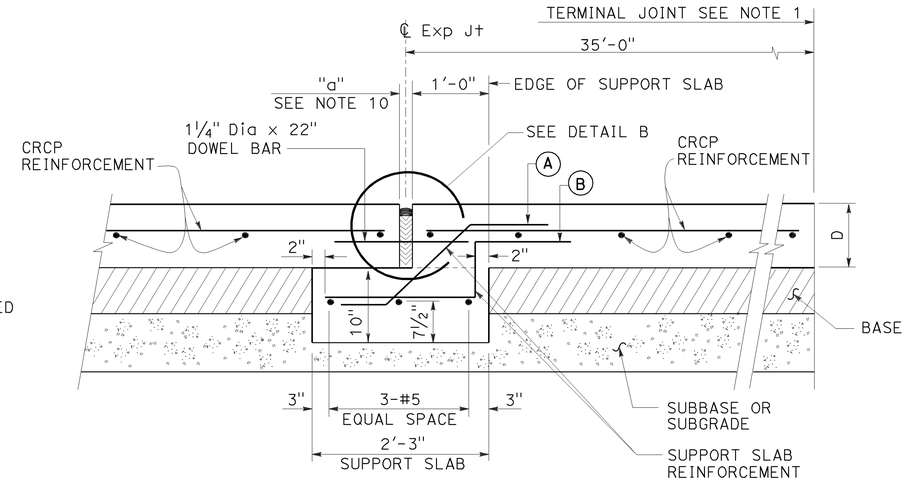

EXPANSION JOINT TYPE AN

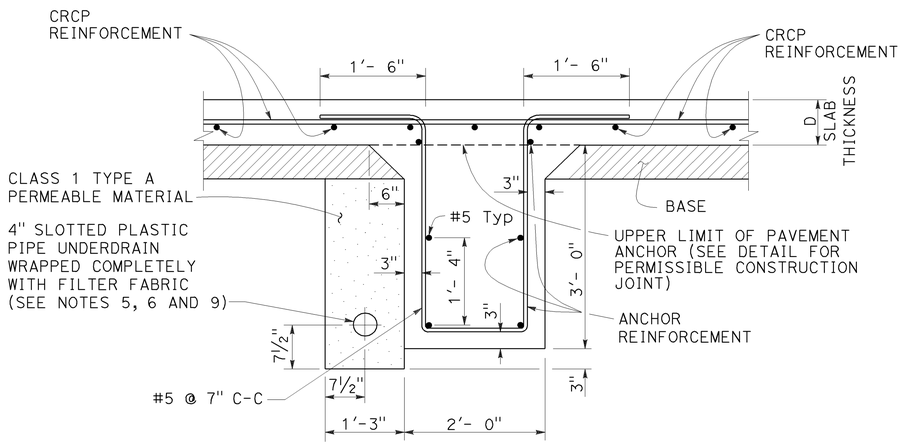

PAVEMENT ANCHOR

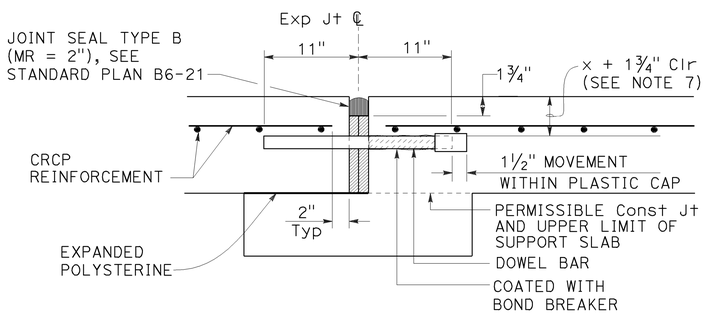

DETAIL B

(For layout, tolerances, and other details not shown, see Revised Standard Plan RSP P10.)

NOTES:

1. For the locations of the terminal joints, expansion joints and pavement anchors, see project plans.
2. The CRCP shall continue across the pavement anchor and expansion joints as shown.
3. Details of reinforcement, tie bars, and longitudinal joints (and if necessary, transverse construction joints) are shown on Revised Standard Plan RSP P4.
4. Transverse construction joints are not allowed within 20'-0" of the pavement anchor.
5. When placing pipe through concrete barrier, use 4" unslotted plastic pipe wrapped completely with 9/16" polystyrene.
6. See Standard Plan D99B for details not shown.
7. See Revised Standard Plan RSP P4 for "x".
8. D = thickness of CRCP
9. Place the 4" Slotted Plastic Pipe on the high side of the longitudinal grade.
10. See Standard Plan B6-21 for "a".

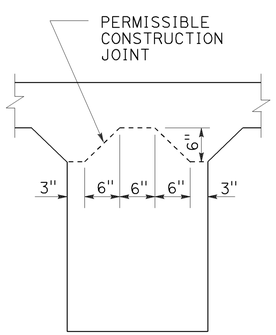

PAVEMENT ANCHOR DETAIL SHOWING PERMISSIBLE CONSTRUCTION JOINT

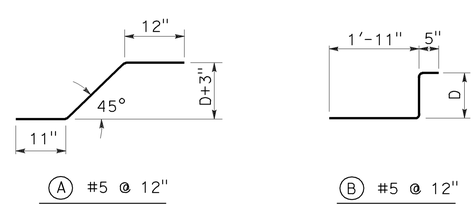

REINFORCEMENT DETAIL

STATE OF CALIFORNIA
DEPARTMENT OF TRANSPORTATION

CONTINUOUSLY REINFORCED CONCRETE PAVEMENT- EXPANSION JOINT AND ANCHOR DETAILS

NO SCALE

RSP P31B DATED APRIL 20, 2012 SUPERSEDES STANDARD PLAN P31B DATED MAY 20, 2011 - PAGE 139 OF THE STANDARD PLANS BOOK DATED 2010.

REVISED STANDARD PLAN RSP P31B

2010 REVISED STANDARD PLAN RSP P31B

2-22-12

Dist	COUNTY	ROUTE	POST MILES TOTAL PROJECT	SHEET No.	TOTAL SHEETS
11	Imp	8	R45.5/R55.0	191	211

Florante E. Bautista
REGISTERED CIVIL ENGINEER

April 20, 2012
PLANS APPROVAL DATE

REGISTERED PROFESSIONAL ENGINEER
Florante E. Bautista
No. C54859
Exp. 6-30-12
CIVIL
STATE OF CALIFORNIA

THE STATE OF CALIFORNIA OR ITS OFFICERS OR AGENTS SHALL NOT BE RESPONSIBLE FOR THE ACCURACY OR COMPLETENESS OF SCANNED COPIES OF THIS PLAN SHEET.

TO ACCOMPANY PLANS DATED 08-03-15

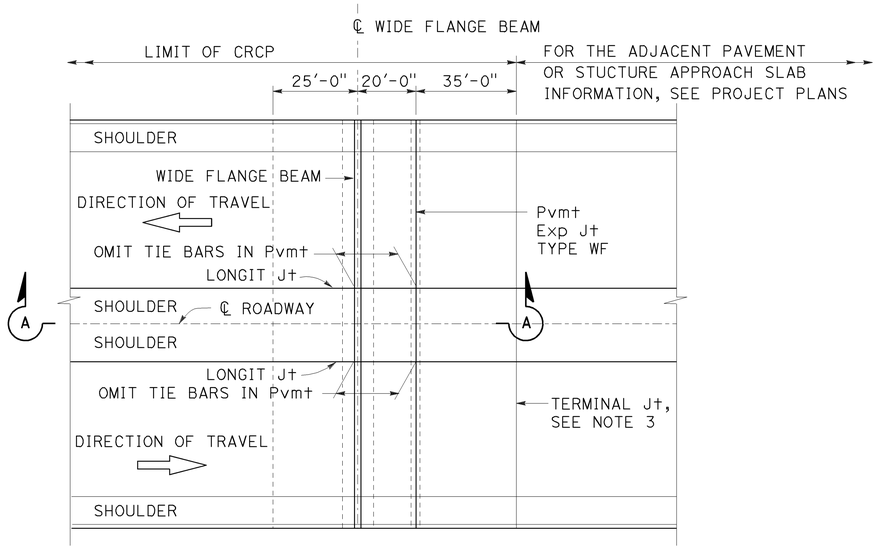

PLAN

NOTES:

1. For additional details on reinforcement member quantities of the wide flange beam terminal and Pavement Expansion Joint Type WF, see Revised Standard Plan RSP P32B.
2. For reinforcement (A), (B), and (C) Details, see Revised Standard Plan RSP P32B.
3. For the Pavement Terminal Joint Details, see Standard Plan P31A. For Pavement Terminal Joint Type, see Project Plans.
4. See Revised Standard Plan RSP P4 for "x".
5. D = Thickness of CRCP
6. See Standard Plan B6-21 for "a".

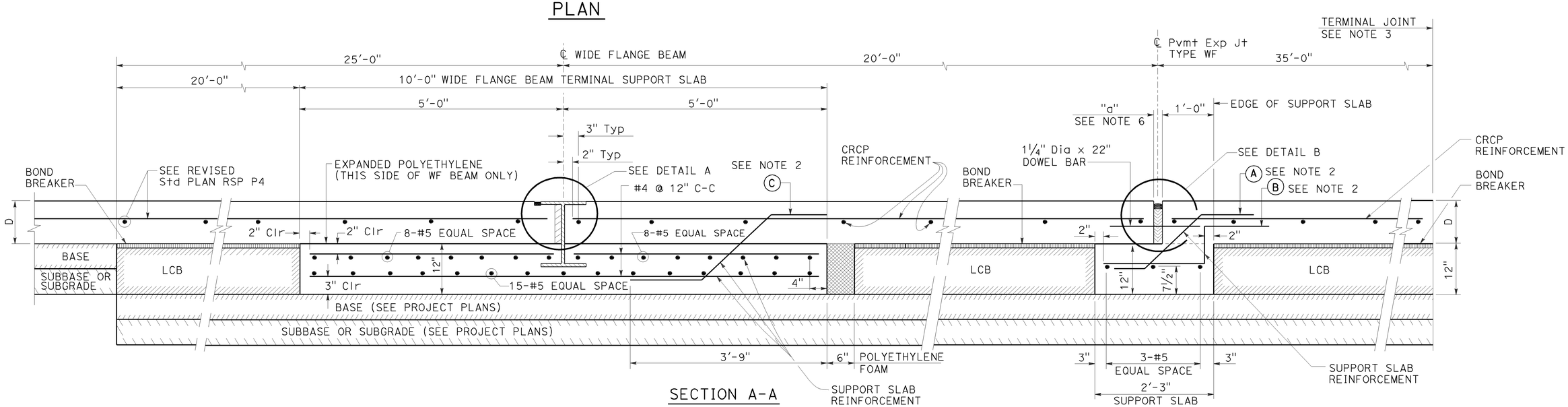

SECTION A-A

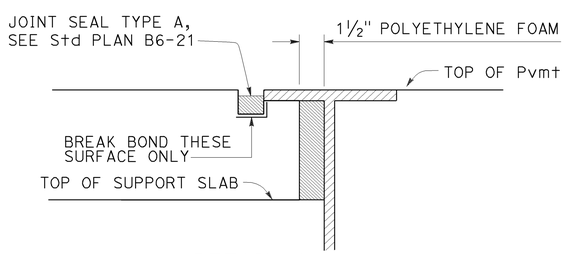

DETAIL A

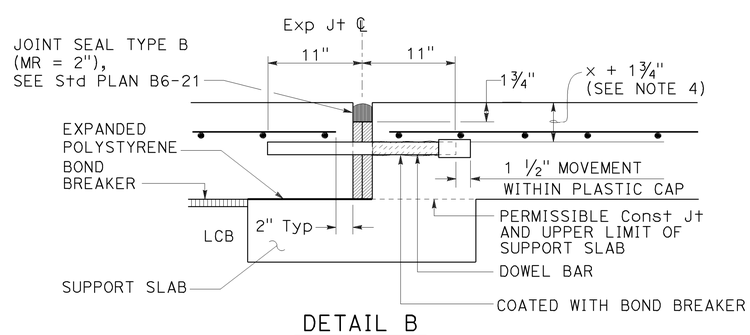

DETAIL B

For layout, tolerances, and other details not shown see Revised Std Plan RSP P10.

STATE OF CALIFORNIA
DEPARTMENT OF TRANSPORTATION

CONTINOUSLY REINFORCED CONCRETE PAVEMENT - WIDE FLANGE BEAM TERMINALS

NO SCALE

RSP P32A DATED APRIL 20, 2012 SUPERSEDES STANDARD PLAN P32A DATED MAY 20, 2011 - PAGE 140 OF THE STANDARD PLANS BOOK DATED 2010.

REVISED STANDARD PLAN RSP P32A

2010 REVISED STANDARD PLAN RSP P32A

Dist	COUNTY	ROUTE	POST MILES TOTAL PROJECT	SHEET No.	TOTAL SHEETS
11	Imp	8	R45.5/R55.0	192	211

William K. Farnbach
REGISTERED CIVIL ENGINEER

July 19, 2013
PLANS APPROVAL DATE

REGISTERED PROFESSIONAL ENGINEER William K. Farnbach No. C49042 Exp. 9-30-14 CIVIL STATE OF CALIFORNIA

THE STATE OF CALIFORNIA OR ITS OFFICERS OR AGENTS SHALL NOT BE RESPONSIBLE FOR THE ACCURACY OR COMPLETENESS OF SCANNED COPIES OF THIS PLAN SHEET.

TO ACCOMPANY PLANS DATED 08-03-15

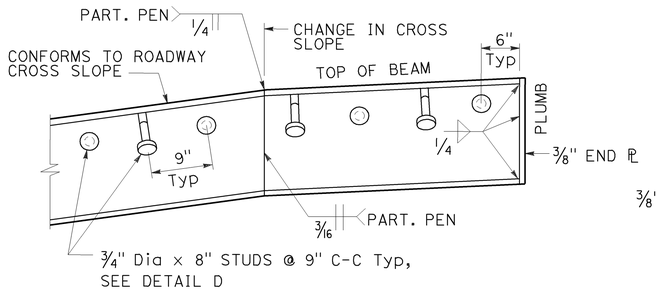

WIDE FLANGE DETAIL

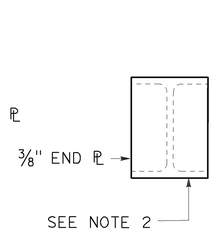

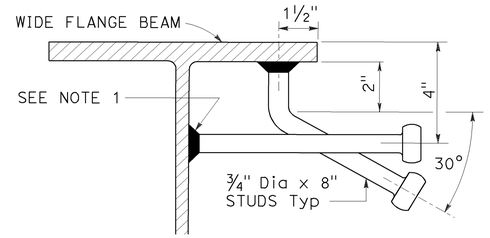

DETAIL D

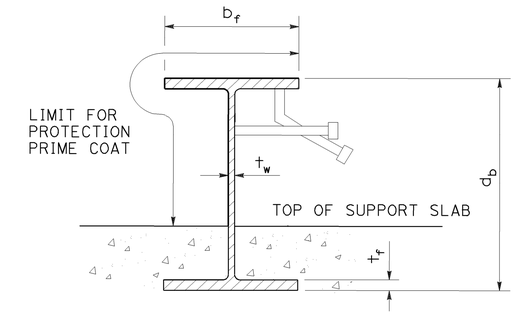

WIDE FLANGE PAINTING DETAIL

See "TABLE OF BEAM SIZES"

LEGEND:

b_f - FLANGE WIDTH
t_f - FLANGE THICKNESS
t_w - WEB THICKNESS
d_b - BEAM DEPTH
D1, D2 - PAVEMENT THICKNESSES

NOTES:

1. Studs must be electric arc end welded with complete fusion. Any stud dislodged in shipping or that can be dislodged by hammer must be replaced.
2. Weld 3/8" plate to each end of wide flange beam at pavement edges only. End plate covers the entire wide flange beam.
3. Extend polyethylene foam to the sides and edges of the front part of the plate.

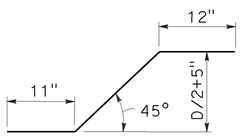

Ⓐ #5 @ 12"

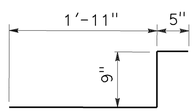

Ⓑ #5 @ 12"

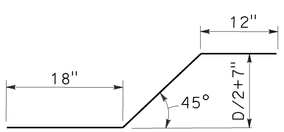

Ⓒ #4 @ 12"

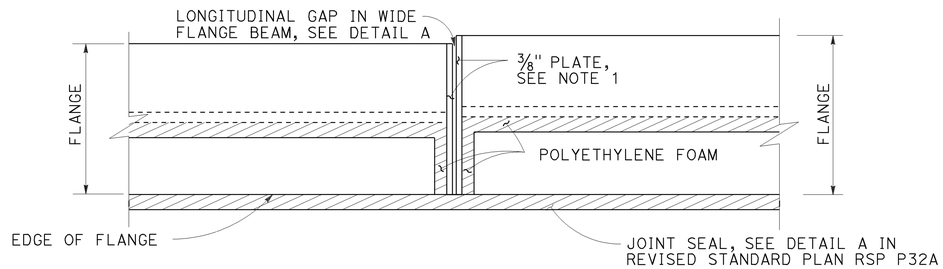

PLAN

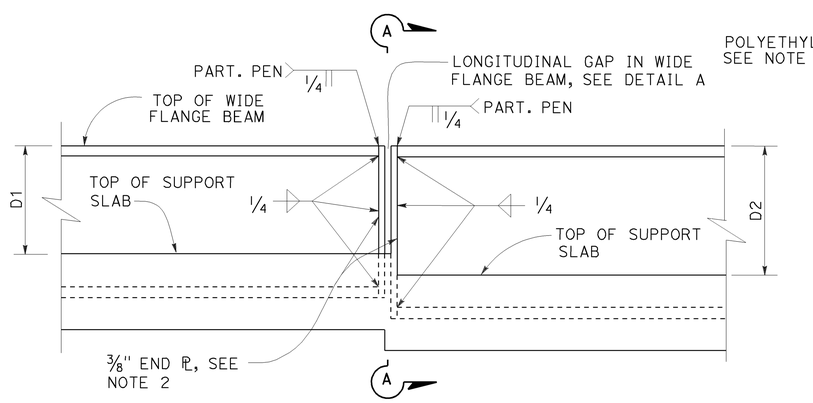

ELEVATION

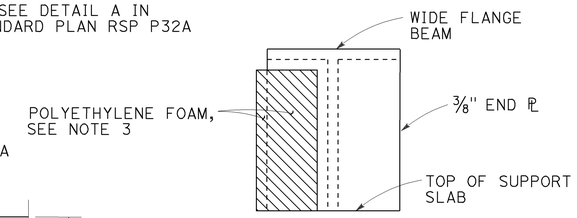

SECTION A-A

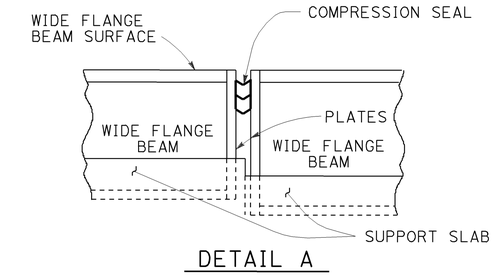

DETAIL A

TABLE OF BEAM SIZES					
PAVEMENT THICKNESS	WIDE FLANGE BEAM DESIGNATION	d_b	b_f	t_f	t_w
.75′	W14 × 43	13.70"	8.00"	0.53"	0.31"
.80′	W14 × 68	14.04"	10.04"	0.72"	0.42"
.85′	W16 × 89	16.75"	10.37"	0.88"	0.53"
.90′	W16 × 89	16.75"	10.37"	0.88"	0.53"
.95′	W18 × 97	18.59"	11.15"	0.87"	0.54"
1.00′	W18 × 97	18.59"	11.15"	0.87"	0.54"
1.05′	W18 × 97	18.59"	11.15"	0.87"	0.54"
1.10′	W18 × 97	18.59"	11.15"	0.87"	0.54"

CONCRETE AND STEEL QUANTITIES									
	ITEM	PAVEMENT THICKNESS							
		.75′	.80′	.85′	.90′	.95′	1.00′	1.05′	1.10′
WIDE FLANGE BEAM TERMINAL SLAB	CONCRETE	4.8 CY	4.8 CY	4.8 CY	4.8 CY	4.8 CY	4.8 CY	4.8 CY	4.8 CY
	REINFORCING STEEL	552.0 LBS	552.2 LBS	552.4 LBS	552.6 LBS	552.8 LBS	553.0 LBS	553.1 LBS	553.3 LBS
Exp JOINT TYPE WIDE FLANGE SUPPORT SLAB	CONCRETE	1.1 CY	1.1 CY	1.1 CY	1.1 CY	1.1 CY	1.1 CY	1.1 CY	1.1 CY
	REINFORCING STEEL	99.9 LBS	99.9 LBS	100.2 LBS	100.5 LBS	100.8 LBS	101.1 LBS	101.1 LBS	101.6 LBS
	STEEL BEAM (WEIGHT OF WIDE FLANGE BEAM AND STUDS)	43.0 LBS/LF +2 PLATES @ 14.9 LBS EA	69.51 LBS/LF +2 PLATES @ 14.9 LBS EA	90.51 LBS/LF +2 PLATES @ 18.5 LBS EA	90.51 LBS/LF +2 PLATES @ 18.5 LBS EA	98.51 LBS/LF +2 PLATES @ 22.0 LBS EA	98.51 LBS/LF +2 PLATES @ 22.0 LBS EA	98.51 LBS/LF +2 PLATES @ 22.0 LBS EA	98.51 LBS/LF +2 PLATES @ 22.0 LBS EA

STATE OF CALIFORNIA
DEPARTMENT OF TRANSPORTATION

CONTINOUSLY REINFORCED CONCRETE PAVEMENT WIDE FLANGE BEAM TERMINALS

NO SCALE

RSP P32B DATED JULY 19, 2013 SUPERSEDES RSP P32B DATED APRIL 20, 2012 AND STANDARD PLAN P32B DATED MAY 20, 2011 - PAGE 141 OF THE STANDARD PLANS BOOK DATED 2010.

REVISED STANDARD PLAN RSP P32B

2010 REVISED STANDARD PLAN RSP P32B

5-31-13

TO ACCOMPANY PLANS DATED 08-03-15

Dist	COUNTY	ROUTE	POST MILES TOTAL PROJECT	SHEET No.	TOTAL SHEETS
11	Imp	8	R45.5/R55.0	193	211

REGISTERED CIVIL ENGINEER

October 19, 2012
PLANS APPROVAL DATE

REGISTERED PROFESSIONAL ENGINEER Glenn DeCou No. C34547 Exp. 9-30-13 CIVIL STATE OF CALIFORNIA

THE STATE OF CALIFORNIA OR ITS OFFICERS OR AGENTS SHALL NOT BE RESPONSIBLE FOR THE ACCURACY OR COMPLETENESS OF SCANNED COPIES OF THIS PLAN SHEET.

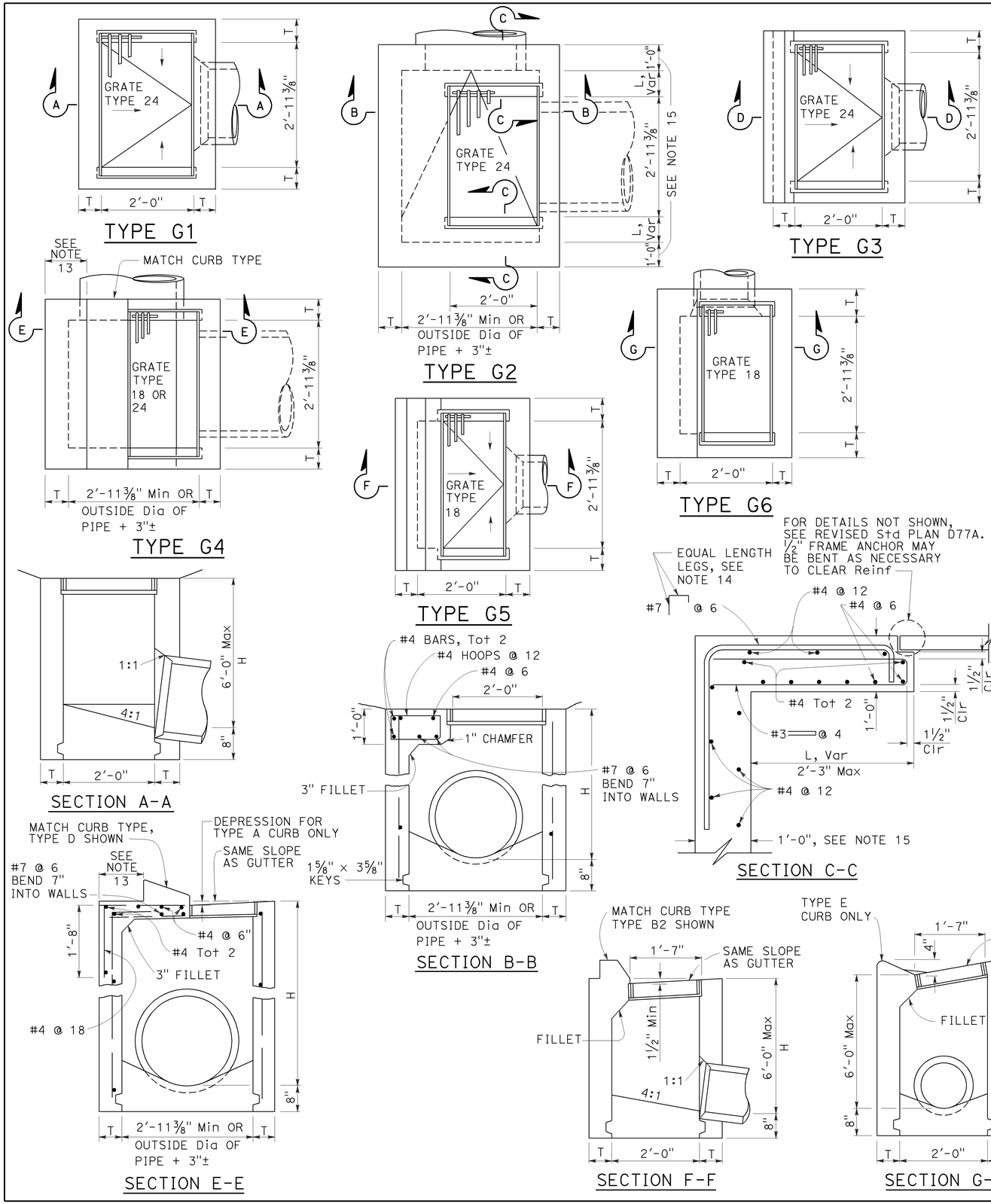

NOTES:

1. "H" is the difference in elevation between the outlet pipe flow line and the normal gutter grade line undepressed.
2. For "T" wall thickness, see Table A below.
3. Wall reinforcing not required when "H" is 8'-0" or less and the unsupported width or length is 7'-0" or less. Walls exceeding these limits shall be reinforced with #4 bars @ 1'-6" ± centers placed 1½" clear to inside of box unless otherwise shown.
4. Inlet bottom reinforcing not required. See Standard Plan D74C for alternative reinforced bottom and alternative half round bottom.
5. Steps-None required where "H" is less than 2'-6". Where "H" is 2'-6" or more, install steps with lowest rung 1'-0" above the floor and highest rung not more than 6" below top of inlet. The distance between steps shall not exceed 1'-0" and shall be uniform throughout the length of the wall. Place steps in the wall without an opening. Steps inserts may be substituted for the bar steps. Step inserts shall comply with State Industrial Safety requirements. See Standard Plan D74C for step details.
6. Details shown apply to both metal and concrete pipe.
7. Pipe(s) can be placed in any wall.
8. Curb section shall match adjacent curb.
9. Basin floors shall have wood trowel finish and a minimum slope of 12:3 from all directions toward outlet pipe.
10. Set inlet so that grate bars are parallel to direction of principal surface flow.
11. See Revised Standard Plans D77A and D77B for grate and frame details and weights of miscellaneous iron and steel.
12. See Standard Plan D78A for gutter depression details.
13. This dimenison will vary with different grates, curbs types, box width and wall thickness.
14. Bar may be rotated as necessary to clear opening. Where "L" is 6" or less, bar may be omitted.
15. Where "L" is 6" or less, wall thickness shall be as shown in Table A.
16. Cast-in-place inlets to be formed around all pipes/stubs intersecting the inlet, and concrete poured in one continuous operation. Precast inlets shall have mortared connections conforming to details for Type GCP Inlet shown on Standard Plan D75B. See Standard Specifications for mortar composition.

TABLE A

CONCRETE QUANTITIES				
TYPE	H=3'-0" TO 8'-0" (T=6")		H=8'-1" TO 20'-0" (T=8")	
	H=3'-0" (CY)	ADDITIONAL PCC PER FOOT (CY)	H=8'-1" (CY)	ADDITIONAL PCC PER FOOT (CY)
G-1	0.95	0.220	See Note A	SEE NOTE A
G-2*	1.31	0.255	3.50	0.357
G-3	1.03	0.220	See Note A	SEE NOTE A
G-4* (TYPE 24)	1.27	0.255	3.48	0.357
G-4* (TYPE 18)	1.30	0.255	3.50	0.357
G-5	1.02	0.220	SEE NOTE A	SEE NOTE A
G-6	1.04	0.220	SEE NOTE A	SEE NOTE A

TABLE BASED ON 8" FLOOR SLAB. NO DEDUCTIONS ARE TO BE MADE TO THESE QUANTITIES BECAUSE OF PIPE OPENINGS, DIFFERENT FLOOR ALTERNATIVES OR DIFFERENT CURB TYPES. * QUANTITIES FOR TYPE G-2 AND G-4 INLETS BASED ON THE MINIMUM INTERIOR DIMENSIONS.

NOTE A:

Maximum allowable height 6'-0".

STATE OF CALIFORNIA
DEPARTMENT OF TRANSPORTATION

DRAINAGE INLETS

NO SCALE

RSP D73 DATED OCTOBER 19, 2012 SUPERSEDES STANDARD PLAN D73 DATED MAY 20, 2011 - PAGE 156 OF THE STANDARD PLANS BOOK DATED 2010.

REVISED STANDARD PLAN RSP D73

2010 REVISED STANDARD PLAN RSP D73

7-19-12

Dist	COUNTY	ROUTE	POST MILES TOTAL PROJECT	SHEET No.	TOTAL SHEETS
11	Imp	8	R45.5/R55.0	194	211

Raymond Don Tsztoo
REGISTERED CIVIL ENGINEER

April 19, 2013
PLANS APPROVAL DATE

REGISTERED PROFESSIONAL ENGINEER Raymond Don Tsztoo No. C37332 Exp. 6-30-14 CIVIL STATE OF CALIFORNIA

THE STATE OF CALIFORNIA OR ITS OFFICERS OR AGENTS SHALL NOT BE RESPONSIBLE FOR THE ACCURACY OR COMPLETENESS OF SCANNED COPIES OF THIS PLAN SHEET.

TO ACCOMPANY PLANS DATED 08-03-15

2010 REVISED STANDARD PLAN RSP D77A

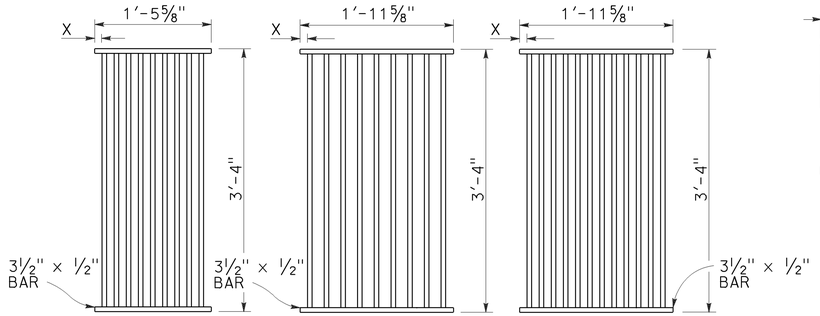

TYPE 18-9

1⅜" Clear spacing. Use within the roadbed on highways where bicycles and pedestrians are excluded.

TYPE 24-9

2" Clear spacing. Use in locations off the roadbed on all types of highways.

TYPE 24-12

1⅜" Clear spacing. Use within the roadbed on highways where bicycles and pedestrians are excluded.

RECTANGULAR GRATE DETAILS

(See table below)

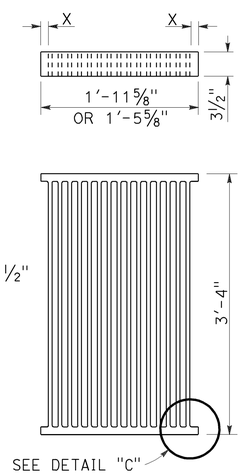

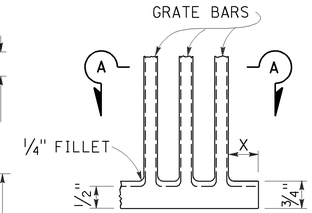

DETAIL "C"

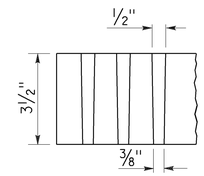

SECTION A-A

ALTERNATIVE CAST DUCTILE IRON GRATE OR CAST CARBON STEEL GRATE

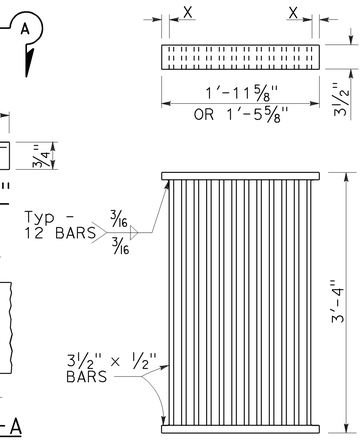

ALTERNATIVE WELDED GRATE

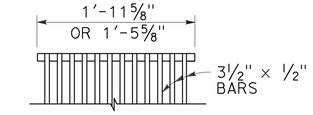

CAST END BLOCK

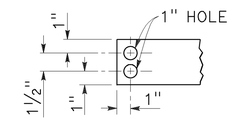

END OF BAR

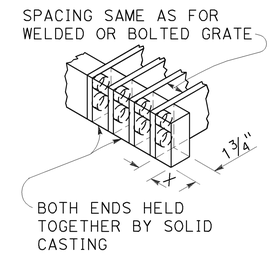

ALTERNATIVE CAST DUCTILE IRON OR CAST CARBON STEEL END BLOCK GRATE

NOTES:

1. Grate type numbers refer to approximate width of grate in inches and number of bars, respectively.
2. Contractor has the option of using cast ductile iron, cast carbon steel, welded, bolted, or cast end block grate.
3. Rounded top of bars optional on all grates.
4. Pipe inlets with a grate shall be placed so that bars parallel direction of principle surface flow.
5. Complete joint penetration butt welds may be substituted for the fillet welds on all anchors.
6. Standard square, hexagon, round or equivalent headed anchors may be substituted for the right angle hooks on the anchors shown on this plan.
7. Grate and frame weights are based on welded grates (weights of face angles, steps, protection bars, etc. are not included).
8. Connect chain to grate and frame only at locations shown on the plans. When chain is required, do not use cast ductile iron grates.

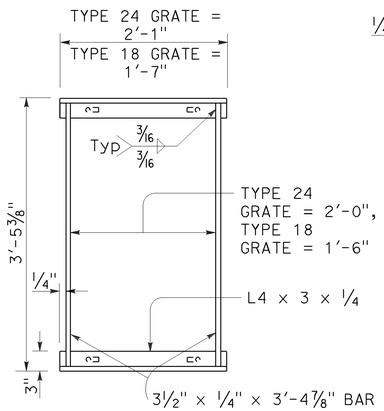

TYPICAL FRAME

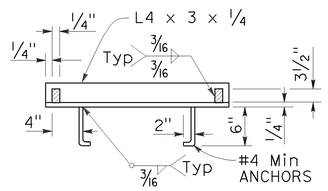

CROSS SECTION

(Thru frame)

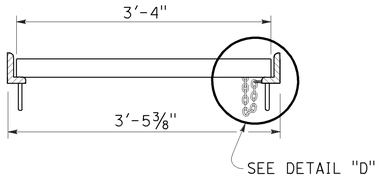

LONGITUDINAL SECTION

(Thru frame and grate)

RECTANGULAR FRAME DETAILS

(For all rectangular grates)

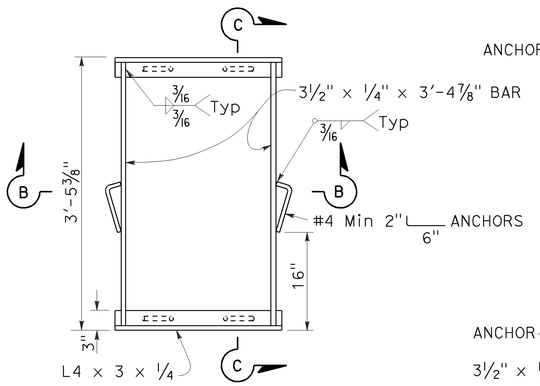

TYPICAL FRAME

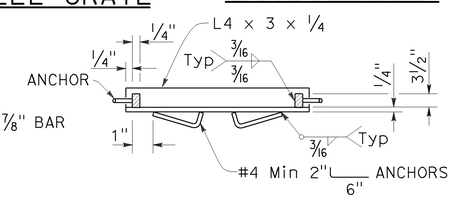

SECTION B-B

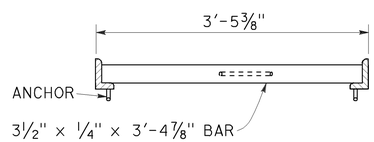

SECTION C-C

ALTERNATIVE ANCHOR FOR RECTANGULAR FRAME

(For details not shown, See Rectangular Frame Details)

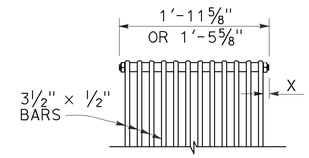

BOLTED END BLOCK

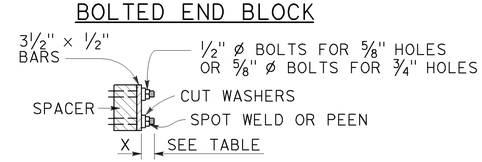

BOLTING DETAIL

ALTERNATIVE BOLTED GRATE

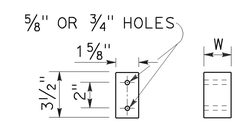

BAR SPACER

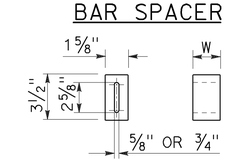

ALTERNATIVE SPACER

W = 1⅜" or 2"

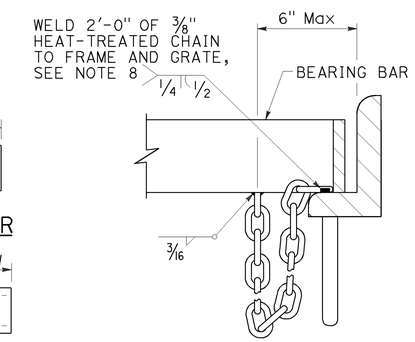

DETAIL "D"

(Steel grates only)

GRATE BAR SPACING TABLE

TYPE	No. OF BARS	CLEAR BAR SPACING	X
18-9	9	1⅜"	1 1/16"
24-9	9	2"	1 9/16"
24-12	12	1⅜"	1¼"

INLET TYPE	COVER TYPE	WEIGHT LB
OS	PLATE	174
OL-7	PLATE	170
OL-10	PLATE	170
OL-14	PLATE	170
OL-21	PLATE	170
OCP	PLATE	112
OCPI	PLATE	112
OCPI	REDWOOD	42
OMP	PLATE	177
OMPI	PLATE	177

INLET TYPE	GRATE TYPE	No. OF GRATES	WEIGHT LB
GDO	24-12	2	634
GOL-7	24-12	1	326
GOL-10	24-12	1	326
GO,G1,G2,G3,G4 (TYPE 24)	24-9	1	263
	24-12	1	326
G4 (TYPE 18),G5,G6	18-9	1	249
GT1	18-9	2	498
GT2	18-9	2	498
GT3	24-12	2	652
GT4	24-12	2	652
TRASH RACK			22
GRATE CHAIN			3

BASIS FOR Misc IRON & STEEL FINAL PAY WEIGHTS FOR DRAINAGE INLETS

(See Note 7)

STATE OF CALIFORNIA
DEPARTMENT OF TRANSPORTATION

GRATE DETAILS No. 1

NO SCALE

RSP D77A DATED APRIL 19, 2013 SUPERSEDES RSP D77A DATED JULY 20, 2012 AND STANDARD PLAN D77A DATED MAY 20, 2011 - PAGE 164 OF THE STANDARD PLANS BOOK DATED 2010.

REVISED STANDARD PLAN RSP D77A

4-4-13

Dist	COUNTY	ROUTE	POST MILES TOTAL PROJECT	SHEET No.	TOTAL SHEETS
11	Imp	8	R45.5/R55.0	195	211

Raymond Don Tsztoo
REGISTERED CIVIL ENGINEER

April 19, 2013
PLANS APPROVAL DATE

REGISTERED PROFESSIONAL ENGINEER
Raymond Don Tsztoo
No. C37332
Exp. 6-30-14
CIVIL
STATE OF CALIFORNIA

THE STATE OF CALIFORNIA OR ITS OFFICERS OR AGENTS SHALL NOT BE RESPONSIBLE FOR THE ACCURACY OR COMPLETENESS OF SCANNED COPIES OF THIS PLAN SHEET.

TO ACCOMPANY PLANS DATED 08-03-15

2010 REVISED STANDARD PLAN RSP D77B

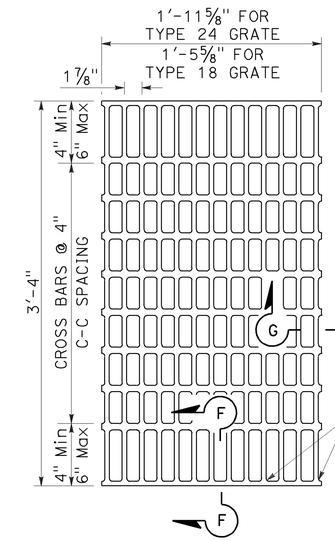

NOTES:

Bearing bars to be 3½" × ¼" bars on 1⅞" centers.

⅜"± ø Cross bars may be fillet welded, resistance welded or electroforged to bearing bars.

Weight of Type 24 grate = 141 LBS.

Weight of Type 18 grate = 107 LBS. (Type 24 grate shown).

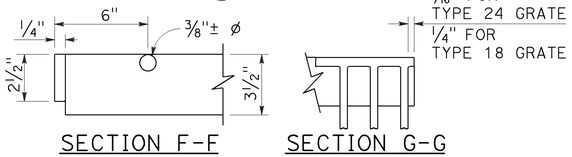

SECTION F-F SECTION G-G

TYPE 18-10 AND 24-13 GRATE

(Welded Steel)

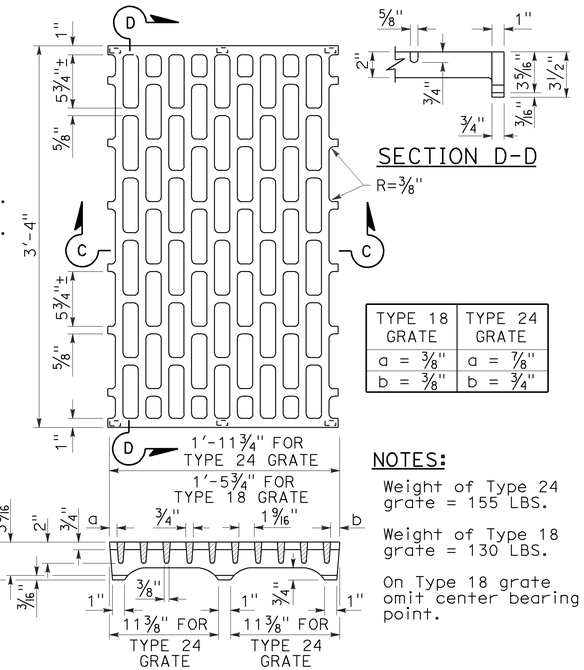

SECTION D-D

TYPE 18 GRATE	TYPE 24 GRATE
a = ⅜"	a = ⅞"
b = ⅜"	b = ¾"

NOTES:

Weight of Type 24 grate = 155 LBS.

Weight of Type 18 grate = 130 LBS.

On Type 18 grate omit center bearing point.

SECTION C-C

TYPE 18-8C AND 24-10C GRATE

(Cast ductile iron)

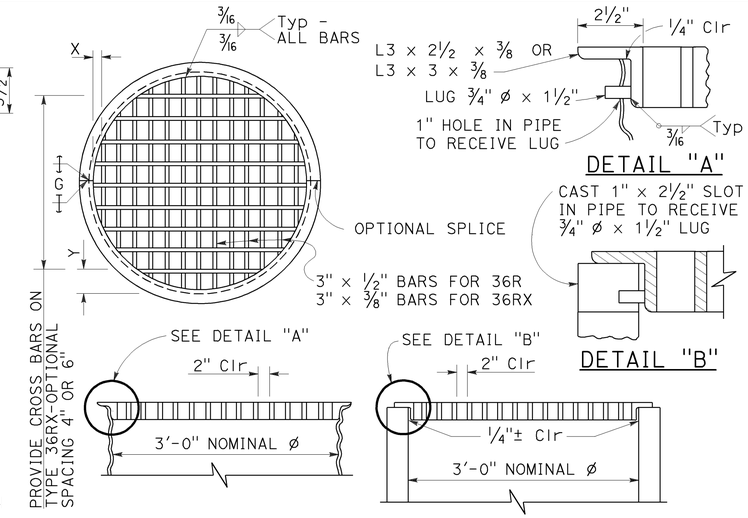

TYPE 36R AND 36RX GRATE DETAILS

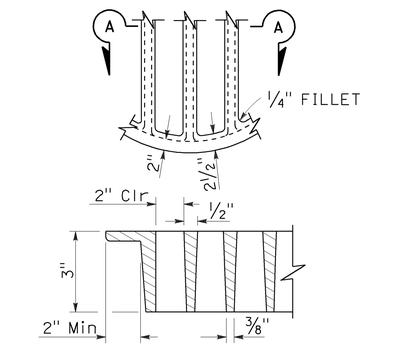

SECTION A-A

ALTERNATIVE CAST DUCTILE IRON GRATE OR CAST CARBON STEEL GRATE TYPE 36R AND 36RX

BASIS FOR Misc IRON AND STEEL FINAL PAY WEIGHTS FOR DRAINAGE INLETS

INLET TYPE	GRATE TYPE	No. OF GRATES	WEIGHT LB
GDO (SEE NOTE 4)	24-10C	2	391
	24-10S	2	456
	24-12X	2	473
	24-13	2	374
GO,GOL,G1,G2, G3,G4 (TYPE 24)	24-10C	1	202
	24-10S	1	229
	24-12X	1	239
	24-13	1	188
G4 (TYPE 18) G5,G6	18-8S	1	187
	18-9X	1	187
	18-10	1	149
GT1,GT2	18-8S	2	374
	18-9X	2	374
	18-10	2	298
GT3,GT4	24-10C	2	404
	24-10S	2	458
	24-12X	2	478
	24-13	2	376
ODI	36RX (Mod)	1	196
GMP,GCP,GCPI	36RX	1	215
ODI	36R (Mod)	1	220
GMP,GCP,GCPI	36R	1	236
TRASH RACK			22
GRATE CHAIN			3

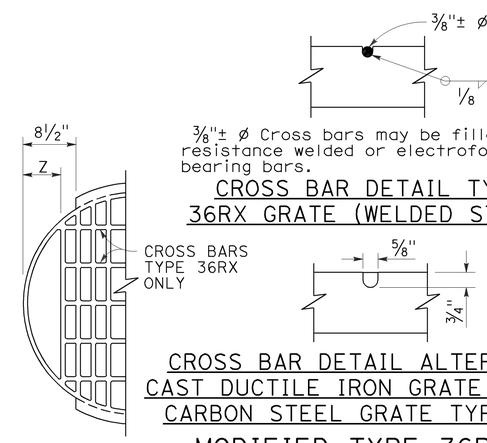

⅜"± ø Cross bars may be fillet welded, resistance welded or electroforged to bearing bars.

CROSS BAR DETAIL TYPE 36RX GRATE (WELDED STEEL)

CROSS BAR DETAIL ALTERNATIVE CAST DUCTILE IRON GRATE OR CAST CARBON STEEL GRATE TYPE 36RX

MODIFIED TYPE 36R AND 36RX GRATE FOR ODI INLET

NOTES:

1. When alternative grates are allowed - Final pay based on alternative with the lesser weight.
2. Use frame shown on Standard Plan D74A, D74B or RSP D77A as appropriate.
3. When Type 24-10S, 24-12X or 24-13 grates are used with GDO Inlets, a ¼" × 3½" × 3'-4⅞" steel bar shall be welded across the center of inlet frame to separate the individual grates.
4. See Revised Standard Plan RSP D77A for connecting chain to welded grate and frame. When chain is required, do not use cast ductile iron grate.

GRATE BAR SPACING TABLE

TYPE	No. OF BARS	CLEAR BAR SPACING	X	Y 4" SPACING	Y 6" SPACING	Z
36R	13	2"	2⅛"	-	-	-
36RX (STEEL)	15	2"	9/16"	3¾"	5¾"	-
36RX (CAST)	13	2"	2⅛"	3¾"	5¾"	-
36R Mod	12	2"	2⅛"	-	-	5"
36RX Mod (STEEL)	13	2"	9/16"	3¾"	5¾"	5 11/16"
36RX Mod (CAST)	12	2"	2⅛"	3¾"	5¾"	5"

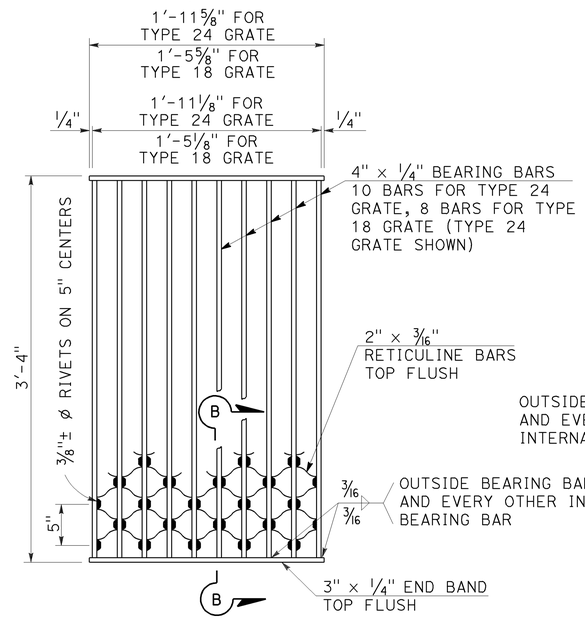

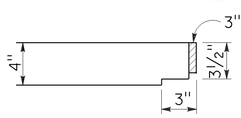

NOTES:

Weight of Type 24 grate = 182 LBS.
Weight of Type 18 grate = 145 LBS.

SECTION B-B

TYPE 18-8S AND 24-10S GRATE

(Welded Steel) Reticuline type

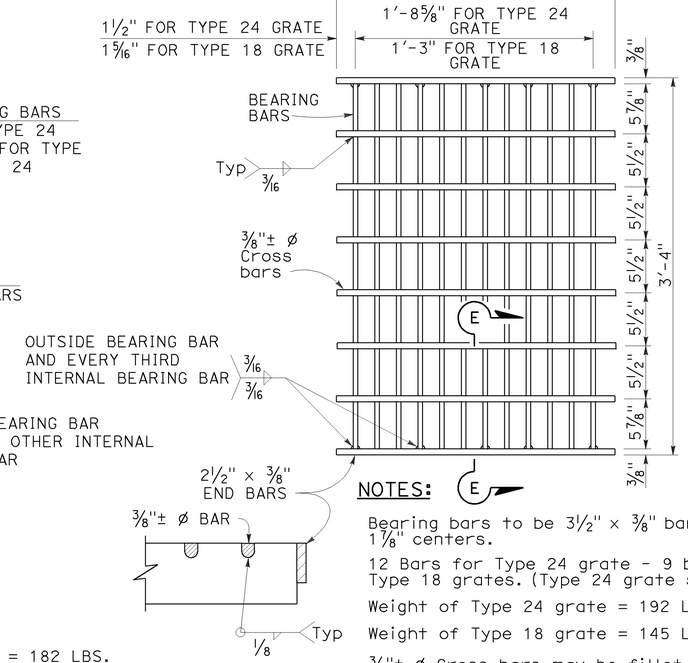

SECTION E-E

NOTES:

Bearing bars to be 3½" × ⅜" bars on 1⅞" centers.

12 Bars for Type 24 grate - 9 bars for Type 18 grates. (Type 24 grate shown).

Weight of Type 24 grate = 192 LBS.

Weight of Type 18 grate = 145 LBS.

⅜"± ø Cross bars may be fillet welded, resistance welded or electroforged to bearing bars.

TYPE 18-9X AND 24-12X GRATE

(Welded Steel)

STATE OF CALIFORNIA
DEPARTMENT OF TRANSPORTATION

GRATE DETAILS No. 2

NO SCALE

RSP D77B DATED APRIL 19, 2013 SUPERSEDES RSP D77B DATED JULY 20, 2012 AND STANDARD PLAN D77B DATED MAY 20, 2011 - PAGE 165 OF THE STANDARD PLANS BOOK DATED 2010.

REVISED STANDARD PLAN RSP D77B

4-4-13

Dist	COUNTY	ROUTE	POST MILES TOTAL PROJECT	SHEET No.	TOTAL SHEETS
11	Imp	8	R45.5/R55.0	196	211

REGISTERED CIVIL ENGINEER

July 19, 2013
PLANS APPROVAL DATE

REGISTERED PROFESSIONAL ENGINEER
Gurinderpal Bhullar
No. C48815
Exp. 9-30-14
CIVIL
STATE OF CALIFORNIA

THE STATE OF CALIFORNIA OR ITS OFFICERS OR AGENTS SHALL NOT BE RESPONSIBLE FOR THE ACCURACY OR COMPLETENESS OF SCANNED COPIES OF THIS PLAN SHEET.

TO ACCOMPANY PLANS DATED 08-03-15

2010 REVISED STANDARD PLAN RSP T9

TABLE 1

TAPER LENGTH CRITERIA AND CHANNELIZING DEVICE SPACING

SPEED (S)	MINIMUM TAPER LENGTH * FOR WIDTH OF OFFSET 12 FEET (W)				MAXIMUM CHANNELIZING DEVICE SPACING		
					X	Y	Z **
	TANGENT 2L	MERGING L	SHIFTING L/2	SHOULDER L/3	TAPER	TANGENT	CONFLICT
mph	ft	ft	ft	ft	ft	ft	ft
20	160	80	40	27	20	40	10
25	250	125	63	42	25	50	12
30	360	180	90	60	30	60	15
35	490	245	123	82	35	70	17
40	640	320	160	107	40	80	20
45	1080	540	270	180	45	90	22
50	1200	600	300	200	50	100	25
55	1320	660	330	220	55	110	27
60	1440	720	360	240	60	120	30
65	1560	780	390	260	65	130	32
70	1680	840	420	280	70	140	35

* - For other offsets, use the following merging taper length formula for L:
For speed of 40 mph or less, $L = WS^2/60$
For speed of 45 mph or more, $L = WS$

Where: L = Taper length in feet
W = Width of offset in feet
S = Posted speed limit, off-peak 85th-percentile speed prior to work starting, or the anticipated operating speed in mph

** - Use for taper and tangent sections where there are no pavement markings or where there is a conflict between existing pavement markings and channelizers (CA).

TABLE 2

LONGITUDINAL BUFFER SPACE AND FLAGGER STATION SPACING

SPEED *	Min D **	DOWNGRADE Min D ***		
		-3%	-6%	-9%
mph	ft	ft	ft	ft
20	115	116	120	126
25	155	158	165	173
30	200	205	215	227
35	250	257	271	287
40	305	315	333	354
45	360	378	400	427
50	425	446	474	507
55	495	520	553	593
60	570	598	638	686
65	645	682	728	785
70	730	771	825	891

* - Speed is posted speed limit, off-peak 85th-percentile speed prior to work starting, or the anticipated operating speed in mph

** - Longitudinal buffer space or flagger station spacing

*** - Use on sustained downgrade steeper than -3 percent and longer than 1 mile.

TABLE 3

ADVANCE WARNING SIGN SPACING

ROAD TYPE	DISTANCE BETWEEN SIGNS *		
	A	B	C
	ft	ft	ft
URBAN - 25 mph OR LESS	100	100	100
URBAN - MORE THAN 25 mph TO 40 mph	250	250	250
URBAN - MORE THAN 40 mph	350	350	350
RURAL	500	500	500
EXPRESSWAY / FREEWAY	1000	1500	2640

* - The distances are approximate, are intended for guidance purposes only, and should be applied with engineering judgment. These distances should be adjusted by the Engineer for field conditions, if necessary, by increasing or decreasing the recommmended distances.

STATE OF CALIFORNIA
DEPARTMENT OF TRANSPORTATION

TRAFFIC CONTROL SYSTEM TABLES FOR LANE AND RAMP CLOSURES

NO SCALE

RSP T9 DATED JULY 19, 2013 SUPERSEDES RSP T9 DATED APRIL 19, 2013 THAT SUPPLEMENTS THE STANDARD PLANS BOOK DATED 2010.

REVISED STANDARD PLAN RSP T9

Dist	COUNTY	ROUTE	POST MILES TOTAL PROJECT	SHEET No.	TOTAL SHEETS
11	Imp	8	R45.5/R55.0	197	211

REGISTERED CIVIL ENGINEER

April 19, 2013
PLANS APPROVAL DATE

REGISTERED PROFESSIONAL ENGINEER Gurinderpal Bhullar No. C48815 Exp. 9-30-14 CIVIL STATE OF CALIFORNIA

THE STATE OF CALIFORNIA OR ITS OFFICERS OR AGENTS SHALL NOT BE RESPONSIBLE FOR THE ACCURACY OR COMPLETENESS OF SCANNED COPIES OF THIS PLAN SHEET.

TO ACCOMPANY PLANS DATED 08-03-15

NOTES:

See Revised Standard Plan RSP T9 for tables.

Use cone spacing X for taper segment, Y for tangent segment or Z for conflict situations, as approriate, per Table 1, unless X, Y, or Z cone spacing is shown on this sheet.

Unless otherwise specified in the special provisions, all temporary warning signs shall have black legend on fluorescent orange background.

California codes are designated by (CA). Otherwise, Federal (MUTCD) codes are shown.

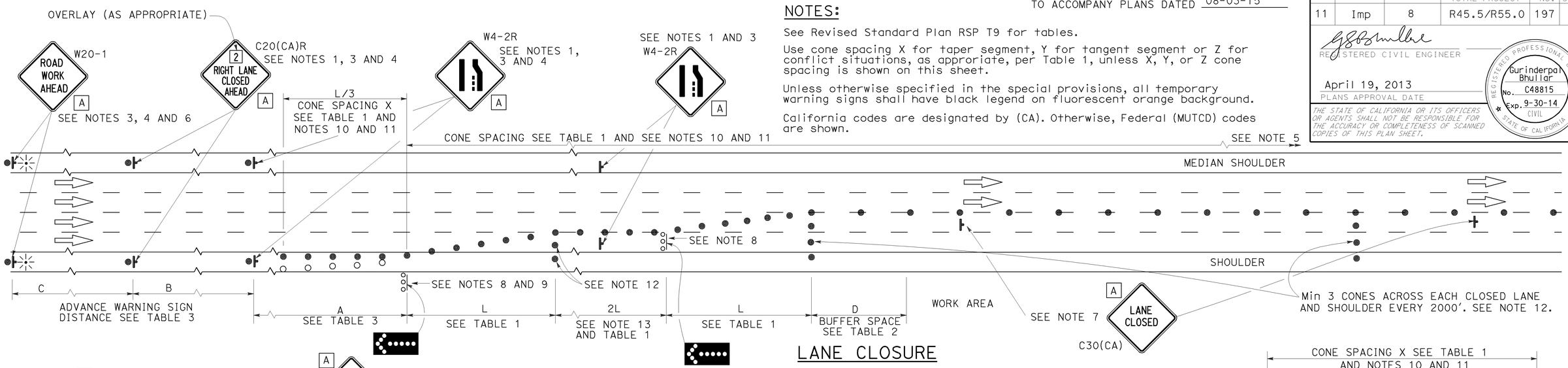

LANE CLOSURE

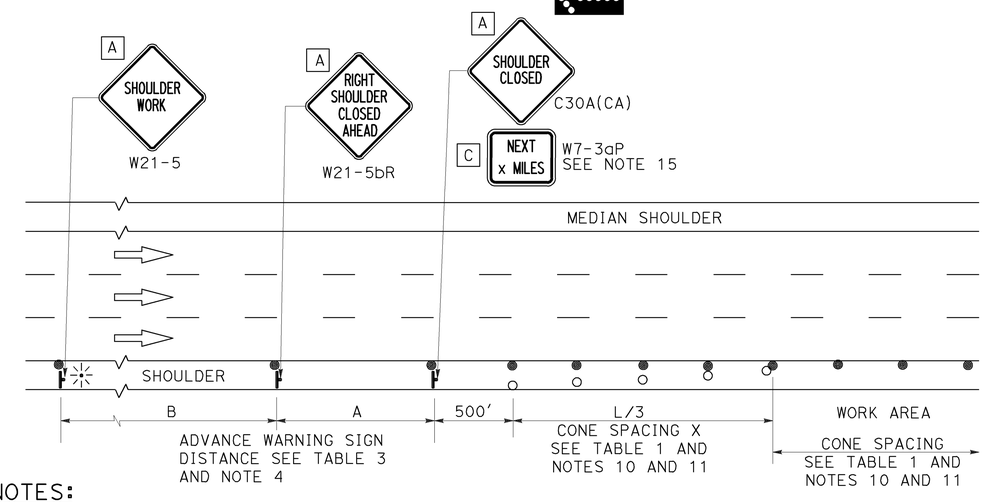

SHOULDER CLOSURE

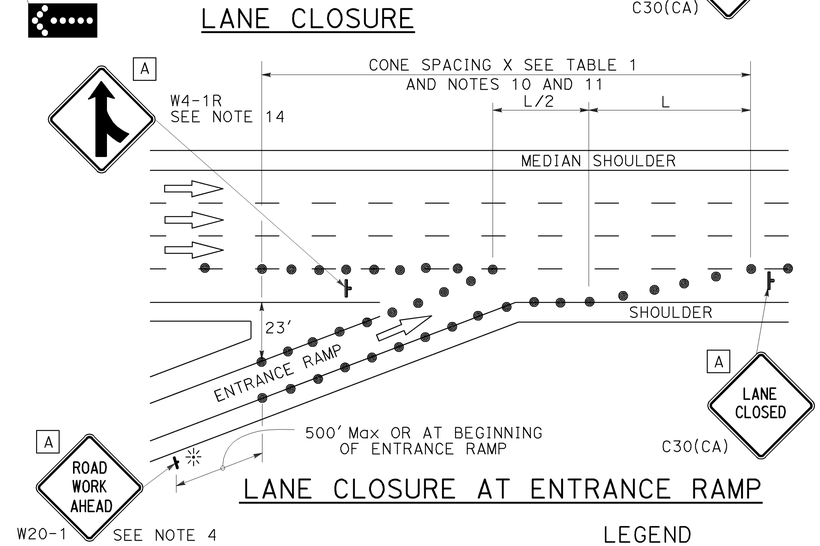

LANE CLOSURE AT ENTRANCE RAMP

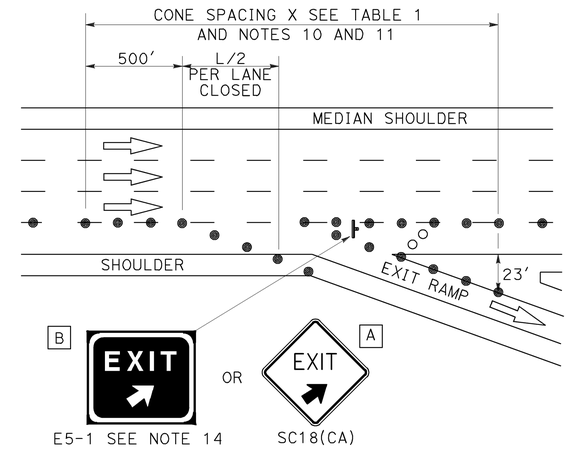

LANE CLOSURE AT EXIT RAMP

NOTES:

1. Median lane closures shall conform to the details as shown except that C20(CA)L and W4-2L signs shall be used.
2. At least one person shall be assigned to provide full time maintenance of traffic control devices for lane closures.
3. Duplicate sign installations are not required:
   a) On opposite shoulder if at least one-half of the available lanes remain open to traffic.
   b) In the median if the width of the median shoulder is less than 8' and the outside lanes are to be closed.
4. Each advance warning sign on each side of the roadway shall be equipped with at least two flags for daytime closure. Each flag shall be at least 16" x 16" in size and shall be orange or fluorescent red-orange in color. Flashing beacons shall be placed at the locations indicated for lane closure during hours of darkness.
5. A G20-2 "END ROAD WORK" sign, with minimum size of 48" x 24" as appropriate, shall be placed at the end of the lane closure unless the end of work area is obvious or ends within a larger project's limits.
6. If the W20-1 sign would follow within 2000' of a stationary W20-1 or G20-1 "ROAD WORK NEXT _____ MILES", use a C20(CA) sign for the first advance warning sign.
7. Place a C30(CA) sign every 2000' throughout length of lane closure.
8. One flashing arrow sign for each lane closed. The flashing arrow signs shall be Type I.
9. A minimum 1500' of sight distance shall be provided where possible for vehicles approaching the first flashing arrow sign. Lane closures shall not begin at top of crest vertical curve or on a horizontal curve.
10. All cones used for lane closures during the hours of darkness shall be fitted with retroreflective bands (or sleeves) as specified in the specifications.
11. Portable delineators, placed at one-half the spacing indicated for traffic cones may be used instead of cones for daytime closures only.
12. Unless otherwise specified in the special provisions, a minimum of 3 cones shall be placed transversely across each closed lane and shoulder at each location where a taper across a traffic lane ends and every 2000' as shown on the "Lane Closure" detail. Two Type II barricades may be used instead of the 3 cones. The transverse alignment of the cones or barricades on the closed shoulder may be shifted from the transverse alignment to provide access to the work.
13. Unless otherwise specified in the special provisions, the 2L tangent shown along lane lines shall be used between the L tapers required for each closed traffic lane.
14. Unless otherwise specified in the special provisions, the E5-1 or SC18(CA) and W4-1 signs shall be used as shown.
15. A W7-3aP "NEXT____ MILES" plaque must be used if theshoulder closure extends beyond the distance that can be perceived by road users.

LEGEND

- TRAFFIC CONE
- TRAFFIC CONE (OPTIONAL TAPER)
- TEMPORARY TRAFFIC CONTROL SIGN
- FLASHING ARROW SIGN (FAS)
- FAS SUPPORT OR TRAILER
- PORTABLE FLASHING BEACON

SIGN PANEL SIZE (Min)

A	48" x 48"
B	72" x 60"
C	36" x 30"

STATE OF CALIFORNIA
DEPARTMENT OF TRANSPORTATION

TRAFFIC CONTROL SYSTEM FOR LANE CLOSURE ON FREEWAYS AND EXPRESSWAYS

NO SCALE

RSP T10 DATED APRIL 19, 2013 SUPERSEDES STANDARD PLAN T10 DATED MAY 20, 2011 - PAGE 237 OF THE STANDARD PLANS BOOK DATED 2010.

REVISED STANDARD PLAN RSP T10

2010 REVISED STANDARD PLAN RSP T10

12-18-12

TO ACCOMPANY PLANS DATED 08-03-15

Dist	COUNTY	ROUTE	POST MILES TOTAL PROJECT	SHEET No.	TOTAL SHEETS
11	Imp	8	R45.5/R55.0	198	211

REGISTERED CIVIL ENGINEER

April 19, 2013
PLANS APPROVAL DATE

REGISTERED PROFESSIONAL ENGINEER Gurinderpal Bhullar No. C48815 Exp. 9-30-14 CIVIL STATE OF CALIFORNIA

THE STATE OF CALIFORNIA OR ITS OFFICERS OR AGENTS SHALL NOT BE RESPONSIBLE FOR THE ACCURACY OR COMPLETENESS OF SCANNED COPIES OF THIS PLAN SHEET.

NOTES: See Revised Standard Plan RSP T9 for tables.

Use cone spacing X for taper segment, Y for tangent segment or Z for conflict situations, as approriate, per Table 1, unless X, Y, or Z cone spacing is shown on this sheet.

Unless otherwise specified in the special provisions, all temporary warning signs shall have black legend on fluorescent orange background.

California codes are designated by (CA). Otherwise, Federal (MUTCD) codes are shown.

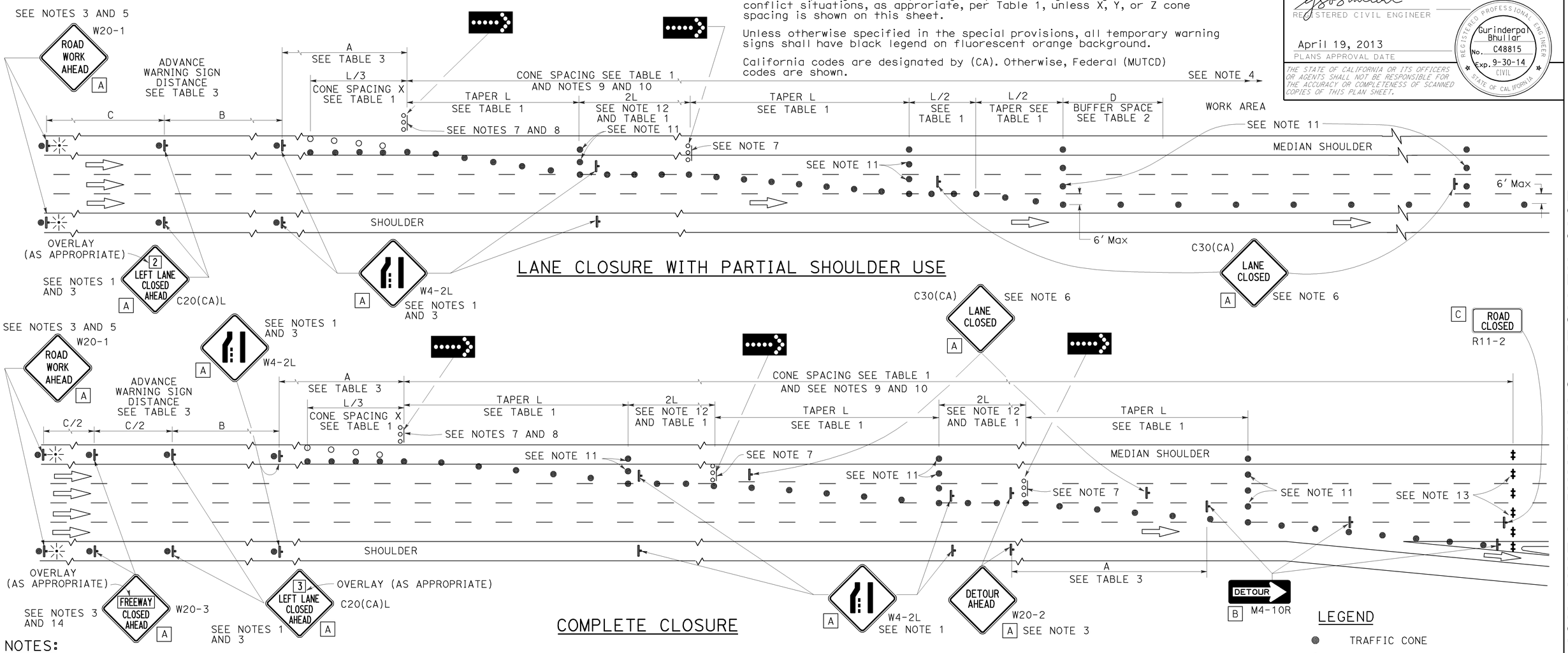

LANE CLOSURE WITH PARTIAL SHOULDER USE

COMPLETE CLOSURE

LEGEND

- TRAFFIC CONE
- TRAFFIC CONE (OPTIONAL TAPER)
- TEMPORARY TRAFFIC CONTROL SIGN
- FLASHING ARROW SIGN (FAS)
- FAS SUPPORT OR TRAILER
- PORTABLE FLASHING BEACON

NOTES:

1. Lane closures on the right side using partial median shoulder as a traffic lane shall conform to the details as shown except that C20(CA)R and W4-2R signs shall be used.
2. At least one person shall be assigned to provide full time maintenance of traffic control devices for lane closures.
3. Each advance warning sign on each side of the roadway shall be equipped with at least two flags for daytime closure. Each flag shall be at least 16" X 16" in size and shall be orange or fluorescent red-orange in color. Flashing beacons shall be placed at the locations indicated for lane closure during hours of darkness.
4. A G20-2 "END ROAD WORK" sign, with minimum size of 48" x 24" as appropriate, shall be placed at the end of the lane closure unless the end of work area is obvious or ends within a larger project's limits.
5. If the W20-1 sign would follow within 2000' of a stationary W20-1 or G20-1 "ROAD WORK NEXT ___ MILES", use a C20(CA) sign for the first advance warning sign.
6. Place a C30(CA) sign every 2000' throughout length of lane closure.
7. One flashing arrow sign for each lane closed. The flashing arrow signs shall be Type I.
8. A minimum 1500' of sight distance shall be provided where possible for vehicles approaching the first flashing arrow sign. Lane closures shall not begin at the top of crest vertical curve or on a horizontal curve.
9. All cones used for lane closures during the hours of darkness shall be fitted with retroreflective bands (or sleeves) as specified in the specifications.
10. Portable delineators, placed at one-half the spacing indicated for traffic cones, may be used instead of cones for daytime closures only.
11. Unless otherwise specified in the special provisions, a minimum of 3 cones shall be placed transversely across each closed lane and shoulder at each location where a taper across a traffic lane ends and every 2000' as shown on the "Lane Closure With Partial Shoulder Use" detail. Two Type II barricades may be used instead of the 3 cones. The transverse alignment of the cones or barricades on the closed shoulder may be shifted from the transverse alignment to provide access to the work.
12. Unless otherwise specified in the special provisions, the 2L tangent shown along lane lines shall be used between the L tapers required for each closed traffic lane.
13. A minimum of Two Type II or III barricades shall be placed across each closed lane and shoulder at the location shown and every 2000' within the complete closure area. Within the complete closure area, the transverse alignment of the barricades on the closed shoulder may be shifted from the transverse alignment to provide access to the work.
14. When specified in the special provisions, a W20-2 "DETOUR AHEAD" sign is to be used in place of the W20-3 "FREEWAY CLOSED AHEAD" sign.

SIGN PANEL SIZE (Min)

A	48" x 48"
B	48" x 18"
C	48" x 30"

STATE OF CALIFORNIA
DEPARTMENT OF TRANSPORTATION

TRAFFIC CONTROL SYSTEM FOR LANE CLOSURES ON FREEWAYS AND EXPRESSWAYS

NO SCALE

RSP T10A DATED APRIL 19, 2013 SUPERSEDES STANDARD PLAN T10A DATED MAY 20, 2011 - PAGE 238 OF THE STANDARD PLANS BOOK DATED 2010.

REVISED STANDARD PLAN RSP T10A

2010 REVISED STANDARD PLAN RSP T10A

12-18-12

Dist	COUNTY	ROUTE	POST MILES TOTAL PROJECT	SHEET No.	TOTAL SHEETS
11	Imp	8	R45.5/R55.0	199	211

REGISTERED CIVIL ENGINEER

April 19, 2013
PLANS APPROVAL DATE

REGISTERED PROFESSIONAL ENGINEER Gurinderpal Bhullar No. C48815 Exp. 9-30-14 CIVIL STATE OF CALIFORNIA

THE STATE OF CALIFORNIA OR ITS OFFICERS OR AGENTS SHALL NOT BE RESPONSIBLE FOR THE ACCURACY OR COMPLETENESS OF SCANNED COPIES OF THIS PLAN SHEET.

TO ACCOMPANY PLANS DATED 08-03-15

TYPICAL RAMP CLOSURES

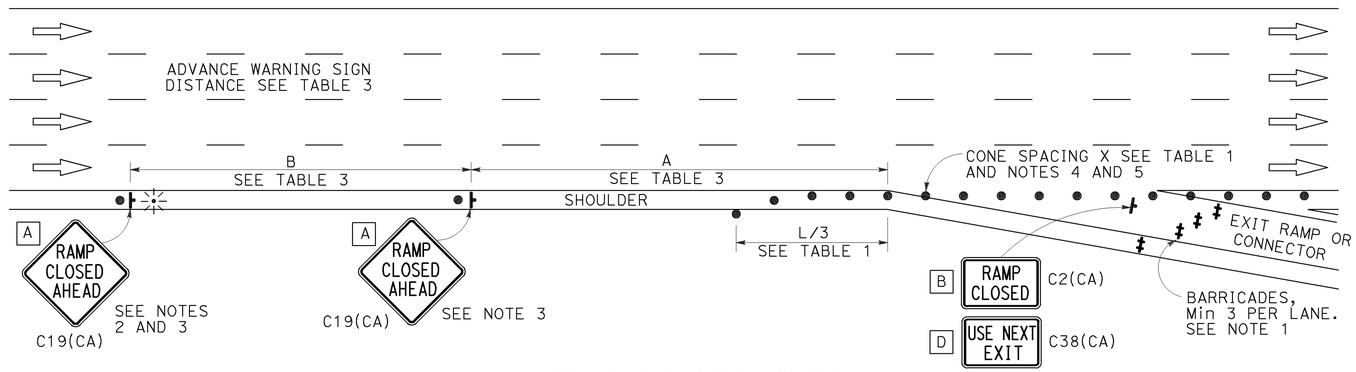

EXIT RAMP OR CONNECTOR

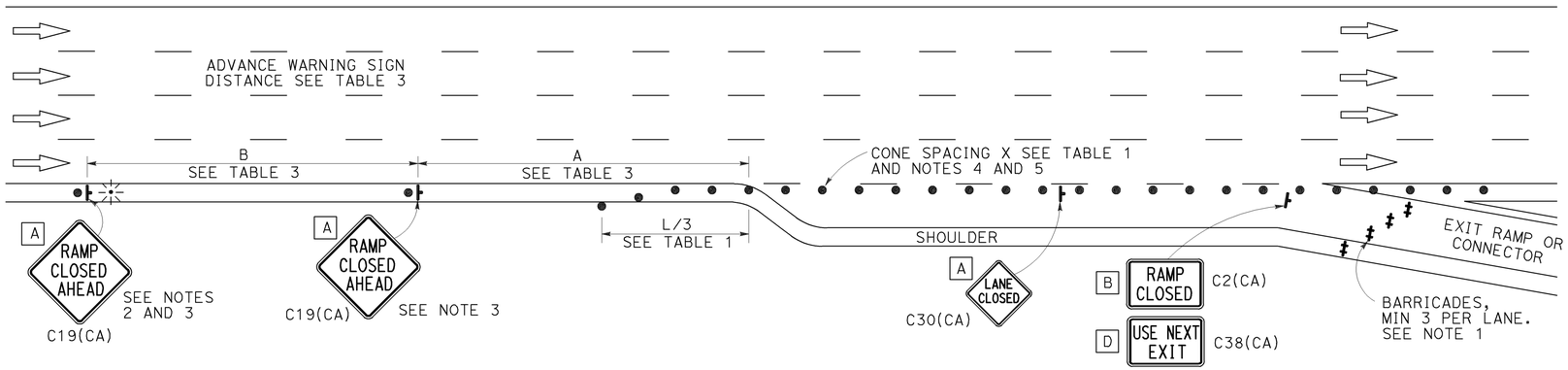

EXIT RAMP OR CONNECTOR WITH ADDITIONAL LANE

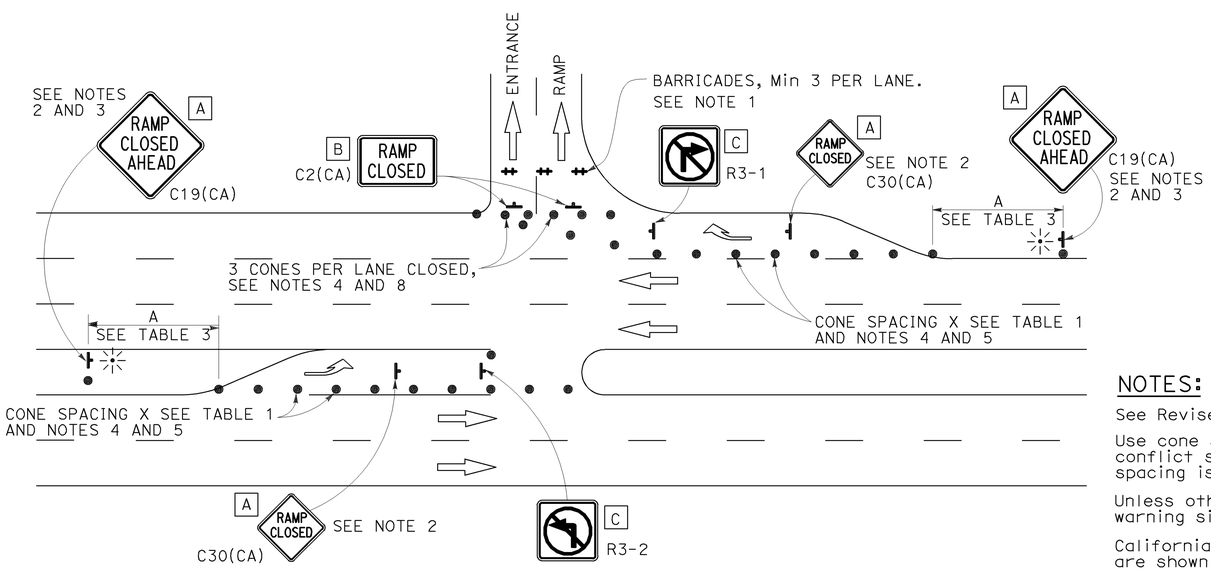

ENTRANCE RAMP WITH TURNING POCKETS

SIGN PANEL SIZE (Min)

- A 48" × 48"
- B 48" × 30"
- C 36" × 36"
- D 48" × 36"

LEGEND

- TRAFFIC CONE
- TEMPORARY TRAFFIC CONTROL SIGN
- BARRICADES
- PORTABLE FLASHING BEACON

NOTES:

1. Barricades shall be Type I, II, or III for closures lasting one week or less and Type III for closures lasting longer than one week.
2. In addition to placing the C19(CA) "RAMP CLOSED AHEAD" and C30(CA) "RAMP CLOSED" signs, black on orange overlay plates with the word "CLOSED" may be mounted, as directed by the Engineer, on all guide signs that refer to the closed ramp. The letter size on the overlay shall be the same as the guide sign.
3. Each advance C19(CA) "RAMP CLOSED AHEAD" sign shall be equipped with at least two flags for daytime closure. Each flag shall be at least 16" × 16" in size and shall be orange or fluorescent red-orange in color. A flashing beacon shall be placed on top of the first C19(CA) sign during hours of darkness.
4. All cones used for ramp closures during the hours of darkness shall be fitted with retroreflective bands (or sleeves) as specified in the specifications.
5. Portable delineators, placed at one-half the spacing indicated for traffic cones, may be used instead of cones for daytime ramp closures only.
6. At least one person shall be assigned to provide full time maintenance of traffic control devices, unless otherwise directed by the Engineer.
7. The existing "EXIT" signs shall be covered during ramp closures.
8. A minimum of 3 cones shall be placed transversely across each closed lane and shoulder.

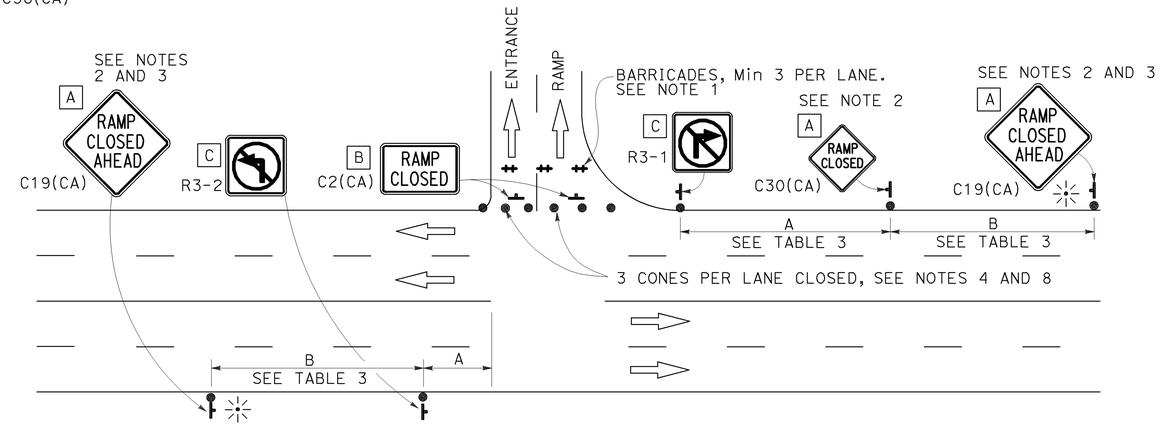

ENTRANCE RAMP WITHOUT TURNING POCKETS

NOTES:

See Revised Standard Plan RSP T9 for tables.

Use cone spacing X for taper segment, Y for tangent segment or Z for conflict situations, as approriate, per Table 1, unless X, Y, or Z cone spacing is shown on this sheet.

Unless otherwise specified in the special provisions, all temporary warning signs shall have black legend on fluorescent orange background.

California codes are designated by (CA). Otherwise, Federal (MUTCD) codes are shown.

STATE OF CALIFORNIA
DEPARTMENT OF TRANSPORTATION

TRAFFIC CONTROL SYSTEM FOR RAMP CLOSURE

NO SCALE

RSP T14 DATED APRIL 19, 2013 SUPERSEDES STANDARD PLAN T14 DATED MAY 20, 2011 - PAGE 242 OF THE STANDARD PLANS BOOK DATED 2010.

REVISED STANDARD PLAN RSP T14

2010 REVISED STANDARD PLAN RSP T14

12-18-12

Dist	COUNTY	ROUTE	POST MILES TOTAL PROJECT	SHEET No.	TOTAL SHEETS
11	Imp	8	R45.5/R55.0	200	211

REGISTERED CIVIL ENGINEER

April 19, 2013
PLANS APPROVAL DATE

REGISTERED PROFESSIONAL ENGINEER
Gurinderpal Bhullar
No. C48815
Exp. 9-30-14
CIVIL
STATE OF CALIFORNIA

THE STATE OF CALIFORNIA OR ITS OFFICERS OR AGENTS SHALL NOT BE RESPONSIBLE FOR THE ACCURACY OR COMPLETENESS OF SCANNED COPIES OF THIS PLAN SHEET.

TO ACCOMPANY PLANS DATED 08-03-15

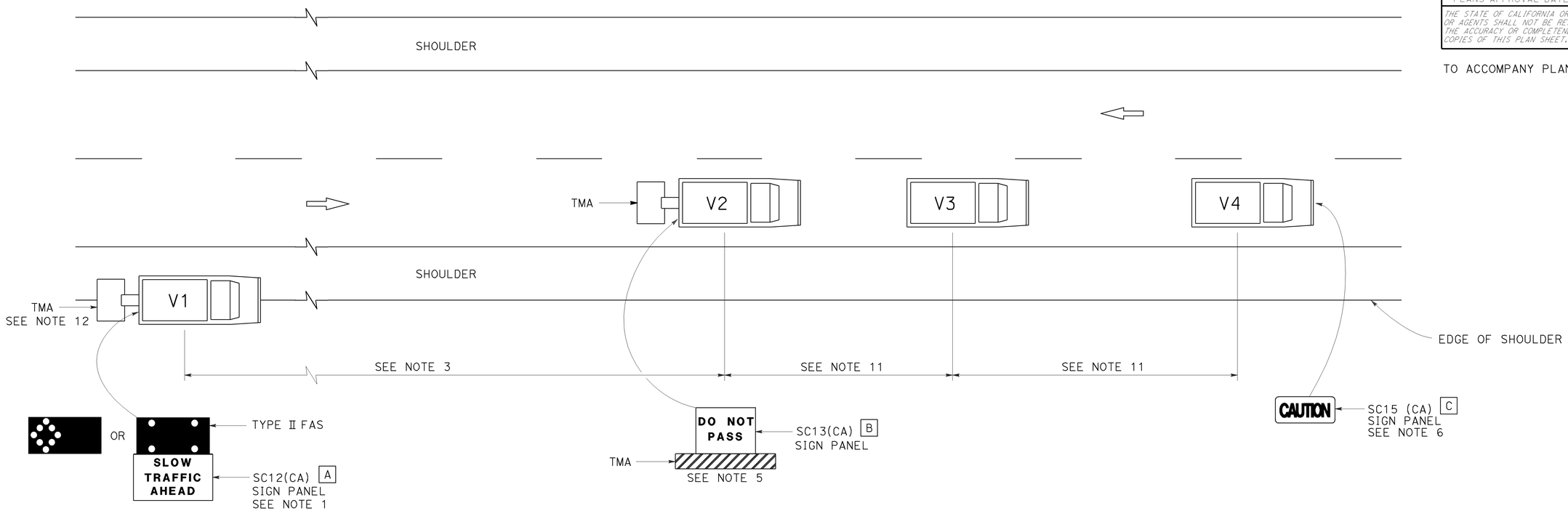

LEGEND

V1	SIGN VEHICLE
V2	SHADOW VEHICLE
V3	WORK/APPLICATION VEHICLE
V4	SIGN VEHICLE
TMA	TRUCK-MOUNTED ATTENUATOR
	FLASHING ARROW SIGN (FAS) IN FLASHING CAUTION MODE
	FLASHING ARROW SIGN (FAS) IN ALTERNATING DIAMOND CAUTION

SIGN PANEL SIZE (Min)

A	72" x 42"
B	54" x 42"
C	54" x 24"

NOTES:

1. Either a changeable message sign or a SC12(CA) "SLOW TRAFFIC AHEAD" sign shall be mounted on the rear of sign vehicle V1. The changeable message sign shall be sequenced to show the "CAUTION" message first, follow by the "SLOW TRAFFIC AHEAD" message. A Type II flashing arrow sign may be used with the SC12(CA) sign panel.
2. Sign vehicle V1 should be positioned where highly visible when shoulders are not available.
3. If traffic queues develop, sign vehicle V1 should be positioned upstream from the end of queue.
4. Vehicle-mounted sign panels shall have Type III or above retroreflective sheeting, black on white, or black on fluorescent orange, with 6" minimum series D letters per Caltrans sign specifications.
5. Shadow vehicle shall be equipped with a truck-mounted attenuator. The sign panel shown shall be mounted on the rear of shadow vehicle V2. The message "LANE CLOSED" may be used in place of the "DO NOT PASS" message.
6. The sign panel shown shall be mounted on the front of sign vehicle V4, facing opposing traffic.
7. All vehicles shall be equipped with flashing or rotating amber lights.
8. Sign vehicle V4 will not be required when the work and vehicles V2 and V3 are 2′ or more from the centerline of the highway during the work or application operations.
9. All vehicles used for lane closures shall be equipped with two-way radios and the vehicle operators shall maintain communication during the work or application operation.
10. This plan shall not be used where workers would be on foot in the work area. Use a stationary type lane closure (Revised Standard Plan T13) for this condition.
11. Minimize spacing between vehicles V2 and V3 and vehicles V3 and V4 to deter road users from driving in between them.
12. If sign vehicle V1 encroaches into the traffic lane due to insufficient shoulder width, sign vehicle V1 shall be equipped with a truck-mounted attenuator. Sign vehicle V1 shall stay as close to the edge of shoulder as practicable.

STATE OF CALIFORNIA
DEPARTMENT OF TRANSPORTATION

TRAFFIC CONTROL SYSTEM FOR MOVING LANE CLOSURE ON TWO LANE HIGHWAYS

NO SCALE

RSP T17 DATED APRIL 19, 2013 SUPERSEDES STANDARD PLAN T17
DATED MAY 20, 2011 - PAGE 245 OF THE STANDARD PLANS BOOK DATED 2010.

REVISED STANDARD PLAN RSP T17

2010 REVISED STANDARD PLAN RSP T17

12-18-12