Dist	COUNTY	ROUTE	POST MILES TOTAL PROJECT	SHEET No.	TOTAL SHEETS
10	Sta	120	6.1/11.3	1	54

ACNHP-P120(056)E

STATE OF CALIFORNIA
DEPARTMENT OF TRANSPORTATION

PROJECT PLANS FOR CONSTRUCTION ON
STATE HIGHWAY
IN STANISLAUS COUNTY
IN OAKDALE
FROM 0.1 MILE EAST OF MAAG ROAD
TO 0.1 MILE WEST OF LANCASTER ROAD

TO BE SUPPLEMENTED BY STANDARD PLANS DATED 2010

INDEX OF PLANS

SHEET No.	DESCRITPTION
1	TITLE AND LOCATION MAP
2-3	TYPICAL CROSS SECTION
4-9	CONSTRUCTION DETAILS
10	CONSTRUCTION AREA SIGNS
11-15	PAVEMENT DELINEATION PLAN, DETAILS AND QUANTITIES
16-22	SIGN DETAILS AND QUANTITIES
23-24	SUMMARY OF QUANTITIES
25-27	ELECTRICAL PLANS
28-54	REVISED STANDARD PLANS

THE STANDARD PLANS LIST APPLICABLE TO THIS CONTRACT IS INCLUDED IN THE NOTICE TO BIDDERS AND SPECIAL PROVISIONS BOOK.

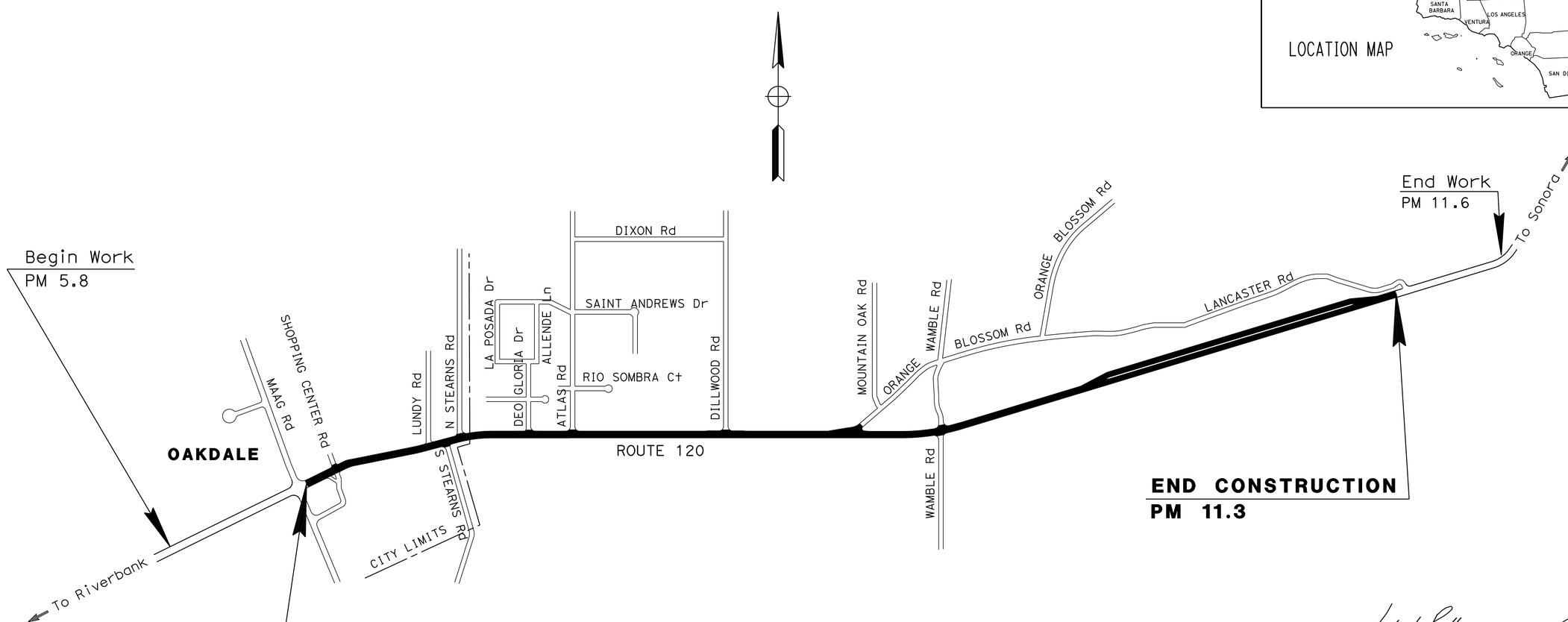

NO SCALE

THE CONTRACTOR SHALL POSSESS THE CLASS (OR CLASSES) OF LICENSE AS SPECIFIED IN THE "NOTICE TO BIDDERS."

PROJECT MANAGER: ARVINDER BAJWA
DESIGN ENGINEER: MICHAEL HUTCHISON

PROJECT ENGINEER REGISTERED CIVIL ENGINEER — DATE 1/6/14

January 6, 2014
PLANS APPROVAL DATE

REGISTERED PROFESSIONAL ENGINEER — Jes Padda — No. 59153 — Exp. 6/30/15 — CIVIL — STATE OF CALIFORNIA

THE STATE OF CALIFORNIA OR ITS OFFICERS OR AGENTS SHALL NOT BE RESPONSIBLE FOR THE ACCURACY OR COMPLETENESS OF SCANNED COPIES OF THIS PLAN SHEET.

CONTRACT No.	10-0V6804
PROJECT ID	1012000003

LAST REVISION 00-00-00 — DATE PLOTTED => 03-FEB-2014 — TIME PLOTTED => 08:41

Dist	COUNTY	ROUTE	POST MILES TOTAL PROJECT	SHEET No.	TOTAL SHEETS
10	Sta	120	6.1/11.3	2	54

REGISTERED CIVIL ENGINEER 1/6/14 DATE

01-06-14
PLANS APPROVAL DATE

REGISTERED PROFESSIONAL ENGINEER Jes Padda No. 59153 Exp 6/30/15 CIVIL STATE OF CALIFORNIA

THE STATE OF CALIFORNIA OR ITS OFFICERS OR AGENTS SHALL NOT BE RESPONSIBLE FOR THE ACCURACY OR COMPLETENESS OF SCANNED COPIES OF THIS PLAN SHEET.

NOTES:
1. DIMENSIONS OF THE PAVEMENT STRUCTURES (STRUCTURAL SECTIONS) ARE SUBJECT TO TOLERANCES SPECIFIED IN THE STANDARD SPECIFICATIONS.
2. FOR ACCURATE R/W DATA, CONTACT RIGHT OF WAY ENGINEERING AT THE DISTRICT OFFICE.
3. EXISTING UTILITY FACILITIES HAVE NOT BEEN PLOTTED ON THESE PLANS.
4. FOR HMA DIKE TYPES AND LOCATIONS, SEE SUMMARY OF QUANTITIES.
5. FOR COLD PLANE AC PAVEMENT DIMENSIONS AND LOCATIONS, SEE SUMMARY OF QUANTITIES.
6. FOR RUMBLE STRIP LOCATIONS, SEE SUMMARY OF QUANTITIES.

ABBREVIATIONS

RHMA, SP-G - RUBBERIZED HOT MIX ASPHALT, SUPERPAVE (GAP GRADED)
HMA, SP (TYPE A) - HOT MIX ASPHALT, SUPERPAVE (TYPE A)
CFIPR - COLD FOAM IN PLACE RECYCLE
SE - SAFETY EDGE

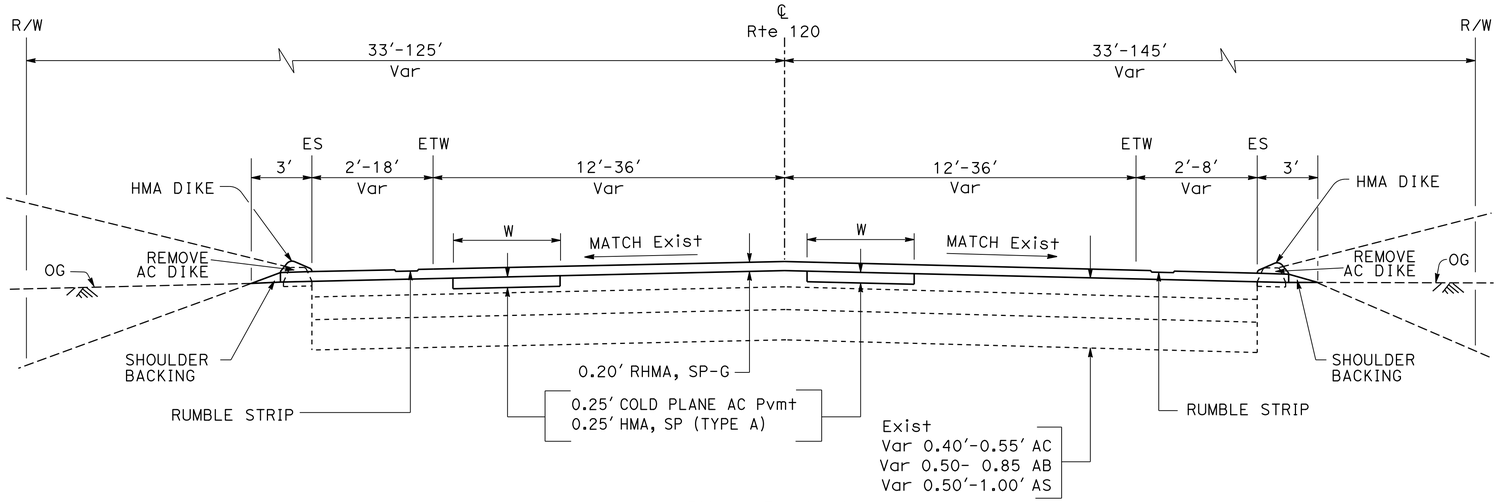

PM 6.27/10.20
PM 10.65/11.30

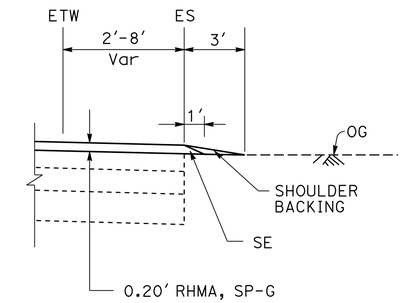

PM 6.27 TO 11.30
SAFETY EDGE DETAIL

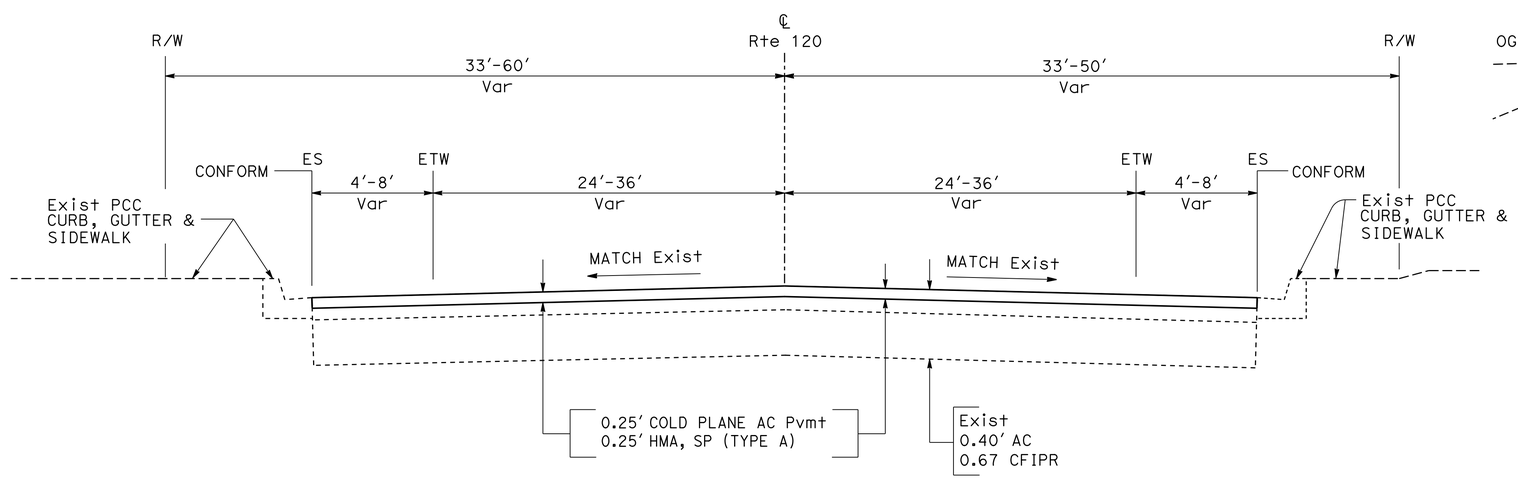

PM 6.10/6.27

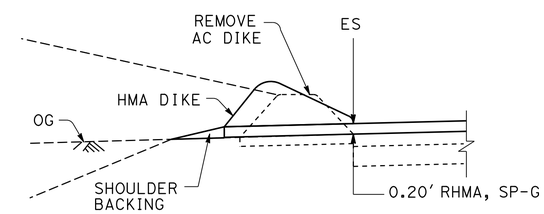

(SEE SUMMARY OF QUANTITIES)
PLACE HMA DIKE

ROUTE 120

TYPICAL CROSS SECTIONS

NO SCALE

X-1

HERNANDO RAPOSAS	HR	12/26/13
JES PADDA	REVISED BY	DATE REVISED
CALCULATED-DESIGNED BY	CHECKED BY	
FUNCTIONAL SUPERVISOR	MICHAEL HUTCHISON	

STATE OF CALIFORNIA - DEPARTMENT OF TRANSPORTATION
Caltrans® **DESIGN**

LAST REVISION 00-00-00 | DATE PLOTTED => 13-JAN-2014 | TIME PLOTTED => 12:56

Dist	COUNTY	ROUTE	POST MILES TOTAL PROJECT	SHEET No.	TOTAL SHEETS
10	Sta	120	6.1/11.3	3	54

REGISTERED CIVIL ENGINEER — DATE 1/6/14

01-06-14
PLANS APPROVAL DATE

REGISTERED PROFESSIONAL ENGINEER — Jes Padda — No. 59153 — Exp. 6/30/15 — CIVIL — STATE OF CALIFORNIA

THE STATE OF CALIFORNIA OR ITS OFFICERS OR AGENTS SHALL NOT BE RESPONSIBLE FOR THE ACCURACY OR COMPLETENESS OF SCANNED COPIES OF THIS PLAN SHEET.

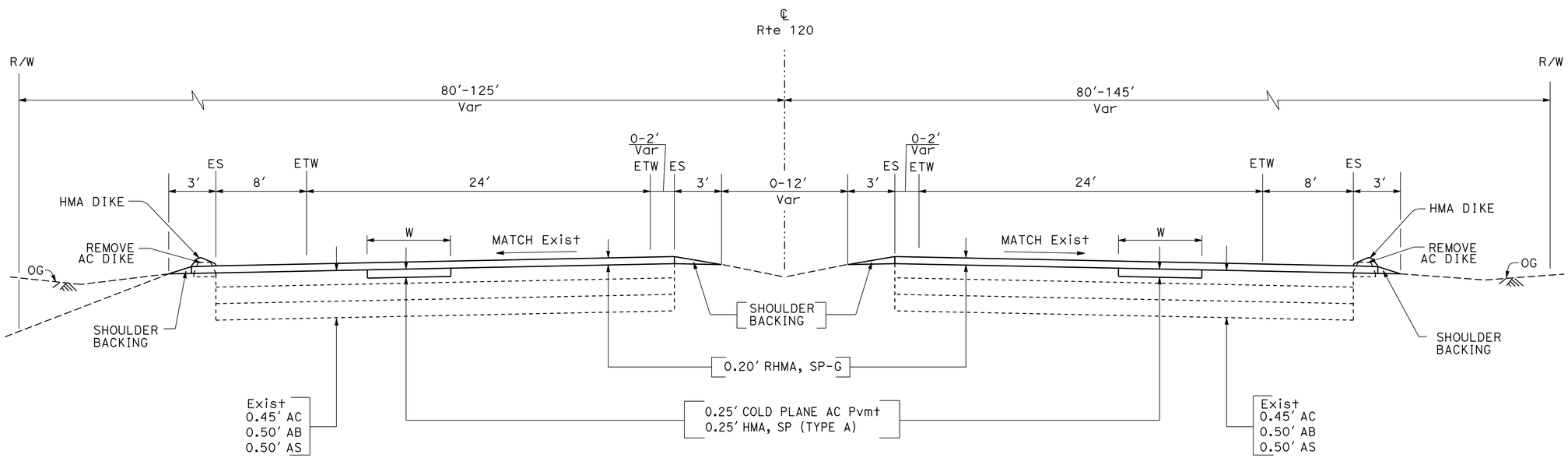

PM 10.20 TO 10.65

ROUTE 120

TYPICAL CROSS SECTIONS

NO SCALE

X-2

STATE OF CALIFORNIA - DEPARTMENT OF TRANSPORTATION	Caltrans® DESIGN
FUNCTIONAL SUPERVISOR	MICHAEL HUTCHISON
CALCULATED-DESIGNED BY	HERNANDO RAPOSAS
CHECKED BY	JES PADDA
REVISED BY	HR
DATE REVISED	12/26/13

LAST REVISION 00-00-00 | DATE PLOTTED => 13-JAN-2014 | TIME PLOTTED => 12:56

Dist	COUNTY	ROUTE	POST MILES TOTAL PROJECT	SHEET No.	TOTAL SHEETS
10	Sta	120	6.1/11.3	4	54

REGISTERED CIVIL ENGINEER 1/6/14 DATE

01-06-14
PLANS APPROVAL DATE

REGISTERED PROFESSIONAL ENGINEER Jes Padda No. 59153 Exp. 6/30/13 CIVIL STATE OF CALIFORNIA

THE STATE OF CALIFORNIA OR ITS OFFICERS OR AGENTS SHALL NOT BE RESPONSIBLE FOR THE ACCURACY OR COMPLETENESS OF SCANNED COPIES OF THIS PLAN SHEET.

LEGEND

- COLD PLANE AC PAVEMENT RHMA, SP-G
- COLD PLANE AC PAVEMENT HMA, SP (TYPE A)
- HMA, SP (TYPE A)

ABBREVIATIONS

RHMA, SP-G - RUBBERIZED HOT MIX ASPHALT, SUPERPAVE (GAP GRADED)
HMA, SP (TYPE A) - HOT MIX ASPHALT, SUPERPAVE (TYPE A)

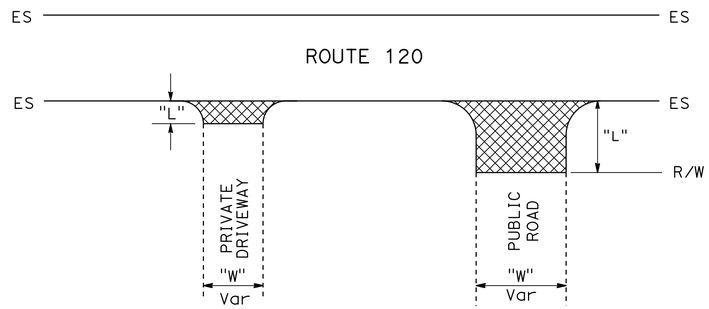

PAVING LIMITS AT PRIVATE DRIVEWAYS AND PUBLIC ROAD INTERSECTIONS

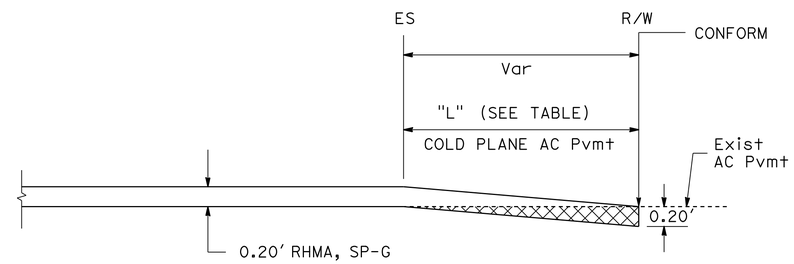

PUBLIC ROAD AND DRIVEWAY CONFORM TAPER

PRIVATE DRIVEWAYS

No.	PM	SIDE	L	W
1	6.24	Lt	6'	43'
2	6.26	Rt	8'	35'
3	6.29	Rt	13'	30'
4	6.37	Lt	5'	62'
5	6.38	Lt	9'	31'
6	6.39	Rt	9'	69'
7	6.43	Rt	6'	20'
8	6.44	Lt	5'	83'
9	6.51	Lt	7'	43'
10	6.53	Lt	5'	50'
11	6.58	Lt	20'	48'
12	6.63	Rt	9'	39'
13	6.65	Lt	17'	30'
14	6.66	Rt	10'	30'
15	7.15	Rt	20'	41'
16	7.33	Rt	15'	22'
17	7.48	Rt	35'	38'
18	7.65	Lt	28'	28'
19	7.65	Rt	41'	34'
20	7.83	Rt	22'	26'
21	8.00	Rt	16'	47'
22	8.29	Lt	21'	29'
23	8.34	Rt	22'	29'
24	8.61	Lt	22'	35'
25	8.66	Rt	22'	29'
26	8.92	Rt	20'	40'
27	9.67	Rt	22'	33'
28	10.15	Rt	25'	40'
29	10.15	Lt	20'	38'
30	10.48	Lt	17'	29'
31	10.48	Rt	17'	38'

PUBLIC ROAD INTERSECTIONS

PM	SIDE	NAME	L	W
6.19	Lt	SHOPPING CENTER Rd	40'	50'
6.86	Rt	S STEARNS Rd	40'	40'
6.90	Lt	N STEARNS Rd	32'	58'
7.23	Lt	DEO GLORIA Dr	25'	45'
7.48	Lt	ATLAS Rd	53'	43'
8.20	Lt	DILLWOOD Rd	26'	52'
8.86	Lt	ORANGE BLOSSOM Rd	99'	48'
9.24	Lt	WAMBLE Rd	60'	32'
9.24	Rt	WAMBLE Rd	33'	34'

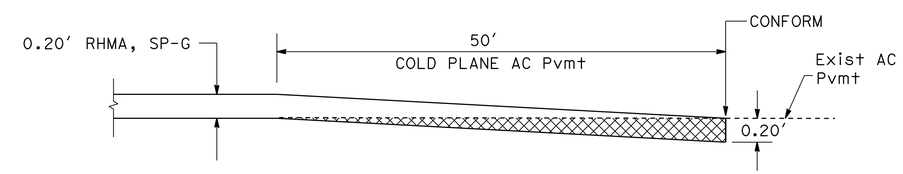

TRANSVERSE CONFORM TAPER

NOTE: POSTMILE LOCATIONS OF DRIVEWAYS SHOWN ARE APPROXIMATE. EXACT LOCATIONS TO BE DETERMINED BY THE ENGINEER.

CONSTRUCTION DETAILS

NO SCALE

C-1

REVISED BY	DATE REVISED
HR	12/26/13

HERNANDO RAPOSAS — JES PADDA — CALCULATED-DESIGNED BY — CHECKED BY
FUNCTIONAL SUPERVISOR — MICHAEL HUTCHISON

STATE OF CALIFORNIA - DEPARTMENT OF TRANSPORTATION
Caltrans® DESIGN

LAST REVISION 00-00-00 | DATE PLOTTED => 13-JAN-2014 | TIME PLOTTED => 12:57

Dist	COUNTY	ROUTE	POST MILES TOTAL PROJECT	SHEET No.	TOTAL SHEETS
10	Sta	120	6.1/11.3	5	54

REGISTERED CIVIL ENGINEER — DATE 1/6/14

01-06-14
PLANS APPROVAL DATE

REGISTERED PROFESSIONAL ENGINEER — Jes Padda — No. 59153 — Exp 6/30/15 — CIVIL — STATE OF CALIFORNIA

THE STATE OF CALIFORNIA OR ITS OFFICERS OR AGENTS SHALL NOT BE RESPONSIBLE FOR THE ACCURACY OR COMPLETENESS OF SCANNED COPIES OF THIS PLAN SHEET.

NOTE:

FOR ACCURATE RIGHT OF WAY DATA, CONTACT RIGHT OF WAY ENGINEERING AT THE DISTRICT OFFICE.

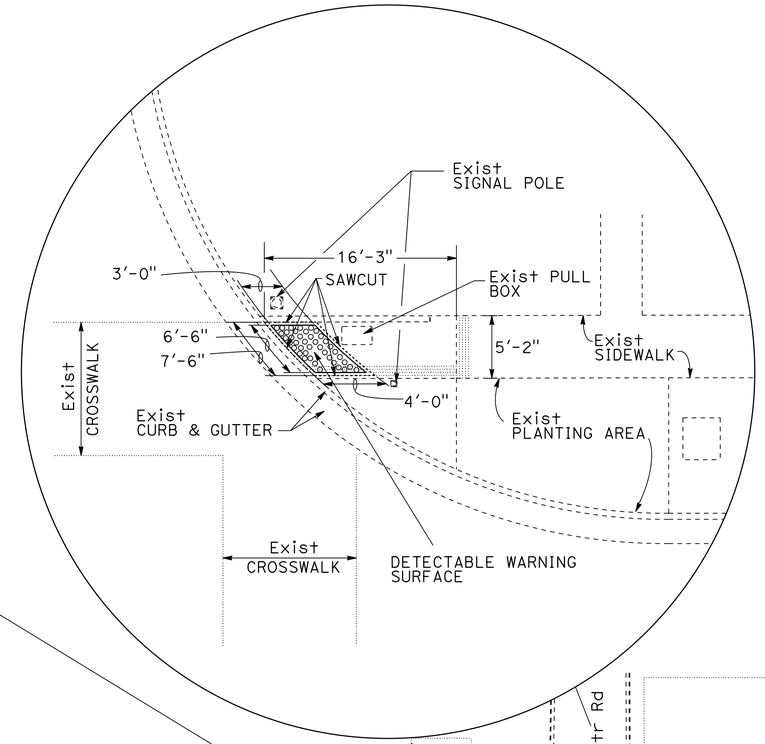

PM 6.20
DETAIL B

PM 6.18
DETAIL A
SEE CONSTRUCTION DETAILS SHEET C-3

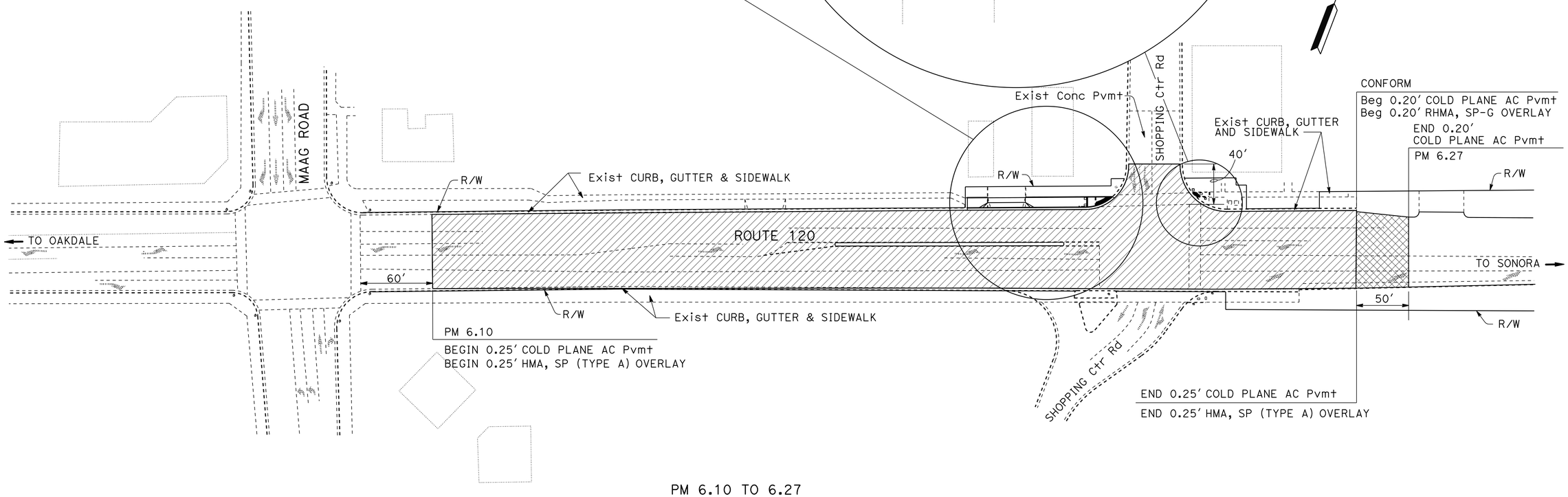

PM 6.10 TO 6.27
PAVING DETAIL

CONSTRUCTION DETAILS

NO SCALE

C-2

REVISED BY	DATE REVISED
HR	12/26/13

CALCULATED-DESIGNED BY: HERNANDO RAPOSAS
CHECKED BY: JES PADDA
FUNCTIONAL SUPERVISOR: MICHAEL HUTCHISON

STATE OF CALIFORNIA - DEPARTMENT OF TRANSPORTATION
Caltrans
DESIGN

LAST REVISION 00-00-00
DATE PLOTTED => 13-JAN-2014
TIME PLOTTED => 12:57

Dist	COUNTY	ROUTE	POST MILES TOTAL PROJECT	SHEET No.	TOTAL SHEETS
10	Sta	120	6.1/11.3	6	54

REGISTERED CIVIL ENGINEER 1/6/14 DATE

01-06-14
PLANS APPROVAL DATE

REGISTERED PROFESSIONAL ENGINEER Jes Padda No. 59153 Exp 6/30/15 CIVIL STATE OF CALIFORNIA

THE STATE OF CALIFORNIA OR ITS OFFICERS OR AGENTS SHALL NOT BE RESPONSIBLE FOR THE ACCURACY OR COMPLETENESS OF SCANNED COPIES OF THIS PLAN SHEET.

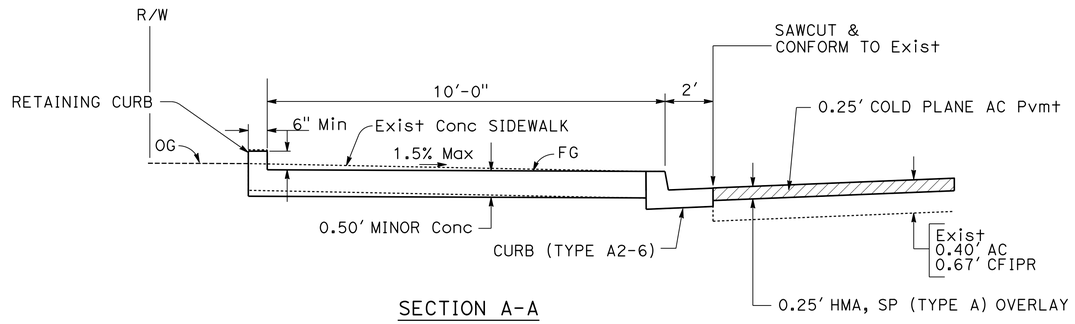

SECTION A-A

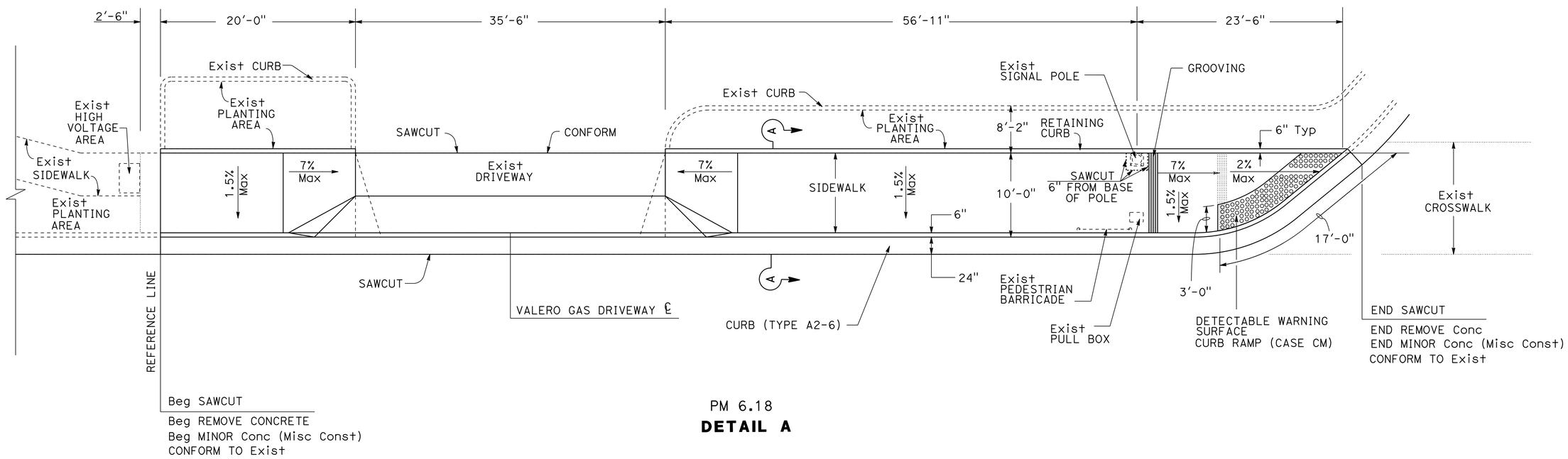

PM 6.18

DETAIL A

RECONSTRUCT SIDEWALK, DRIVEWAY AND CURB RAMP

CONSTRUCTION DETAILS

NO SCALE

C-3

REVISED BY	DATE REVISED
HR	12/26/13

CALCULATED-DESIGNED BY: HERNANDO RAPOSAS
CHECKED BY: JES PADDA
FUNCTIONAL SUPERVISOR: MICHAEL HUTCHISON

STATE OF CALIFORNIA - DEPARTMENT OF TRANSPORTATION
DESIGN
Caltrans

LAST REVISION 00-00-00
DATE PLOTTED => 07-MAR-2014
TIME PLOTTED => 12:55

Dist	COUNTY	ROUTE	POST MILES TOTAL PROJECT	SHEET No.	TOTAL SHEETS
10	Sta	120	6.1/11.3	7	54

REGISTERED CIVIL ENGINEER 1/6/13 DATE

01-06-14
PLANS APPROVAL DATE

REGISTERED PROFESSIONAL ENGINEER Jes Padda No. 59153 Exp 6/30/13 CIVIL STATE OF CALIFORNIA

THE STATE OF CALIFORNIA OR ITS OFFICERS OR AGENTS SHALL NOT BE RESPONSIBLE FOR THE ACCURACY OR COMPLETENESS OF SCANNED COPIES OF THIS PLAN SHEET.

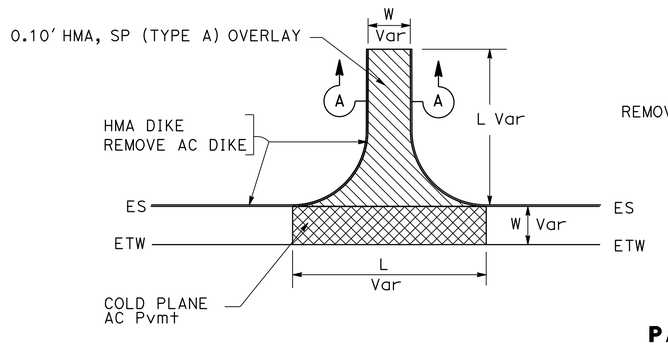

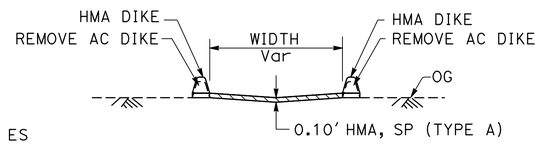

SECTION A-A

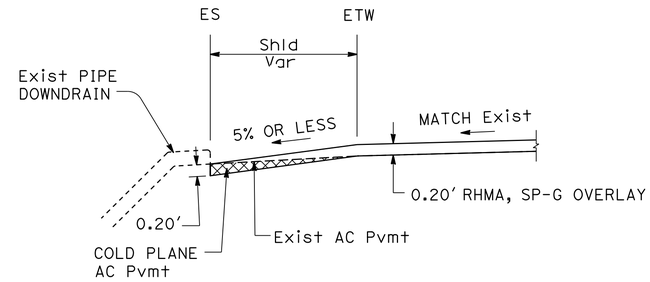

PAVING DETAIL AT EXISTING AC OVERSIDE DRAIN AND DOWNDRAIN CONFORM TAPER

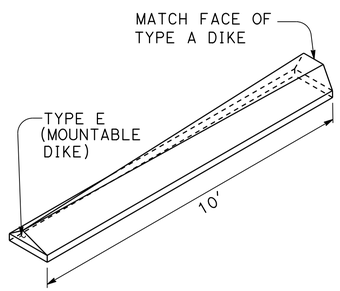

FROM (TYPE E) TO (TYPE A)

HMA DIKE TRANSITION

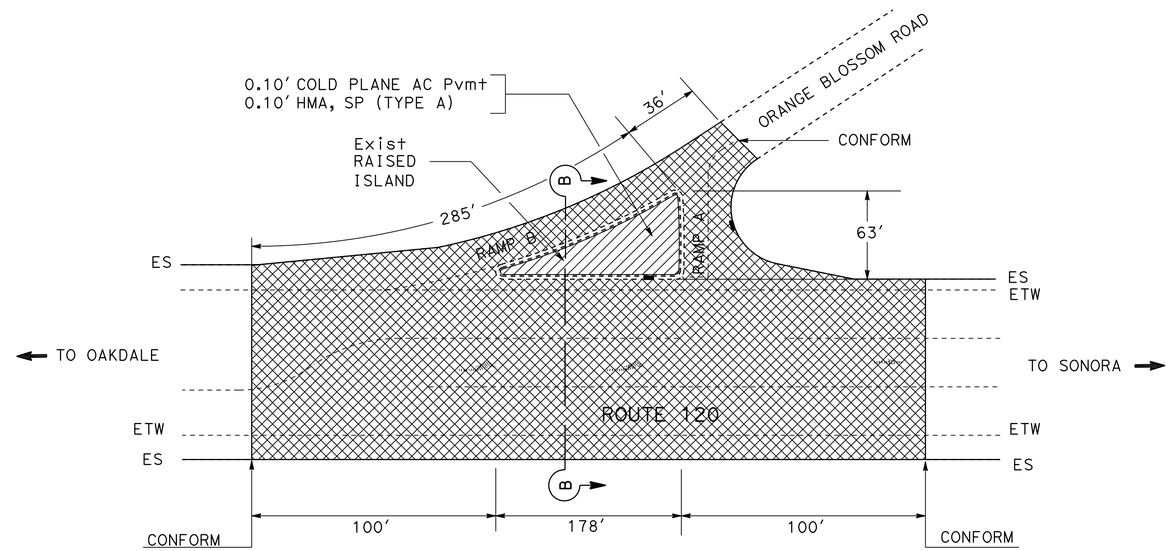

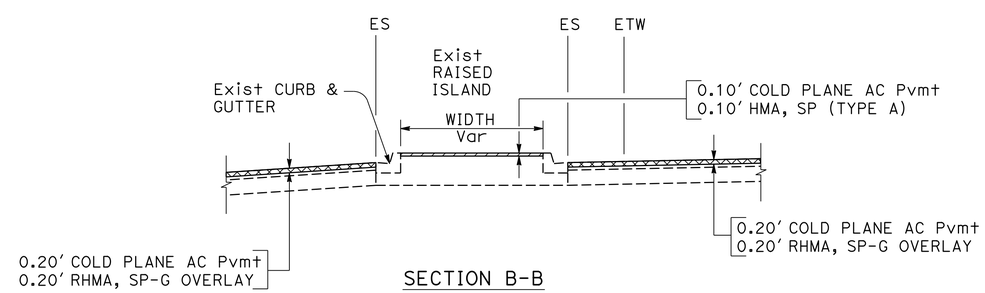

SECTION B-B

PAVING DETAIL AT ORANGE BLOSSOM ROAD

CONSTRUCTION DETAILS

NO SCALE

C-4

REVISED BY	DATE REVISED
HR	12/26/13

CALCULATED-DESIGNED BY: HERNANDO RAPOSAS
CHECKED BY: JES PADDA
FUNCTIONAL SUPERVISOR: MICHAEL HUTCHISON

STATE OF CALIFORNIA - DEPARTMENT OF TRANSPORTATION
Caltrans® DESIGN

LAST REVISION 00-00-00 | DATE PLOTTED => 13-JAN-2014 | TIME PLOTTED => 12:57

Dist	COUNTY	ROUTE	POST MILES TOTAL PROJECT	SHEET No.	TOTAL SHEETS
10	Sta	120	6.1/11.3	8	54

REGISTERED CIVIL ENGINEER 1/6/14 DATE

01-06-14
PLANS APPROVAL DATE

REGISTERED PROFESSIONAL ENGINEER Jes Padda No. 59153 Exp 6/30/13 CIVIL STATE OF CALIFORNIA

THE STATE OF CALIFORNIA OR ITS OFFICERS OR AGENTS SHALL NOT BE RESPONSIBLE FOR THE ACCURACY OR COMPLETENESS OF SCANNED COPIES OF THIS PLAN SHEET.

NOTES (THIS SHEET ONLY):

1. LOCATIONS OF UTILITY FACILITIES SHOWN ON THESE PLANS ARE APPROXIMATE AND SHALL BE VERIFIED BY THE CONTRACTOR PRIOR TO CONSTRUCTION.
2. ALL UTILITIES ARE EXISTING UNLESS OTHERWISE SHOWN.

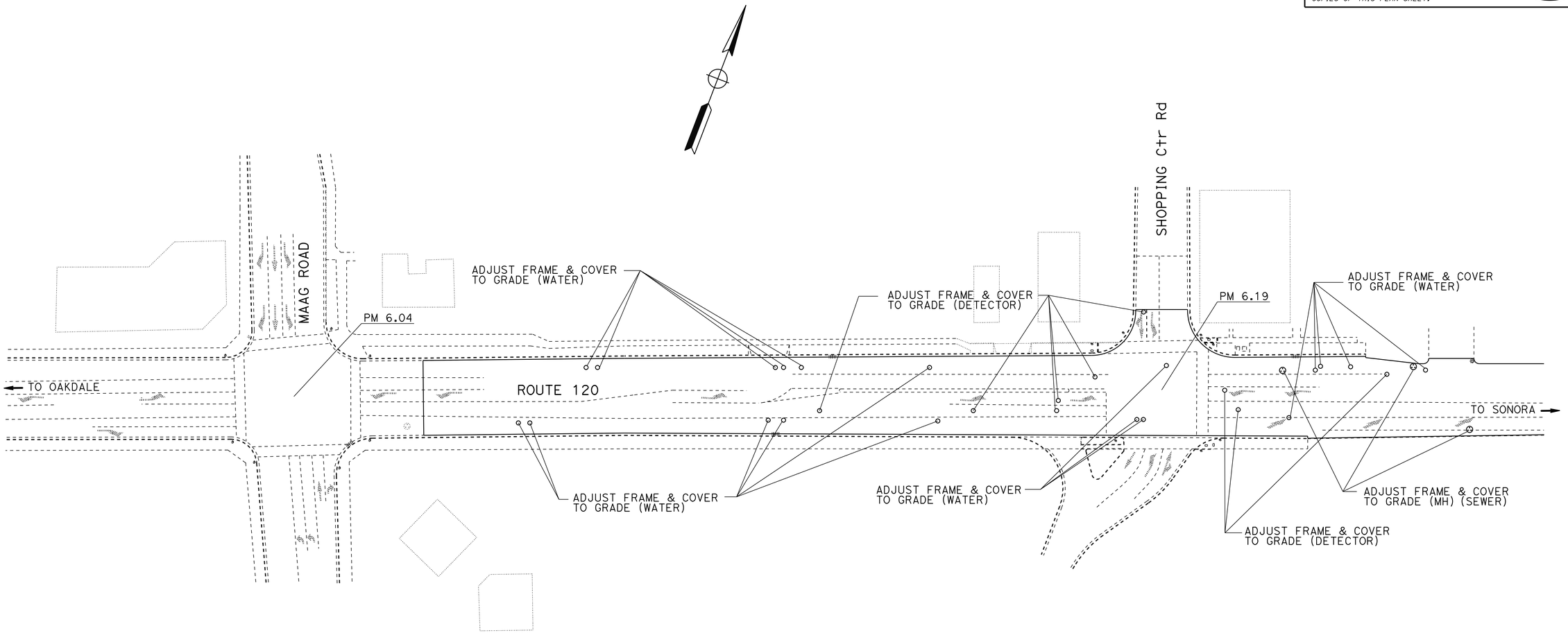

ADJUST FRAME AND COVER TO GRADE LOCATIONS

CONSTRUCTION DETAILS

NO SCALE

C-5

REVISED BY	DATE REVISED
HR	12/26/13

CALCULATED-DESIGNED BY: HERNANDO RAPOSAS
CHECKED BY: JES PADDA
FUNCTIONAL SUPERVISOR: MICHAEL HUTCHISON

STATE OF CALIFORNIA - DEPARTMENT OF TRANSPORTATION
Caltrans
DESIGN

LAST REVISION 00-00-00
DATE PLOTTED => 13-JAN-2014
TIME PLOTTED => 12:57

Dist	COUNTY	ROUTE	POST MILES TOTAL PROJECT	SHEET No.	TOTAL SHEETS
10	Sta	120	6.1/11.3	9	54

REGISTERED CIVIL ENGINEER 1/6/14 DATE

01-06-14
PLANS APPROVAL DATE

REGISTERED PROFESSIONAL ENGINEER Jes Padda No. 59153 Exp 6/30/15 CIVIL STATE OF CALIFORNIA

THE STATE OF CALIFORNIA OR ITS OFFICERS OR AGENTS SHALL NOT BE RESPONSIBLE FOR THE ACCURACY OR COMPLETENESS OF SCANNED COPIES OF THIS PLAN SHEET.

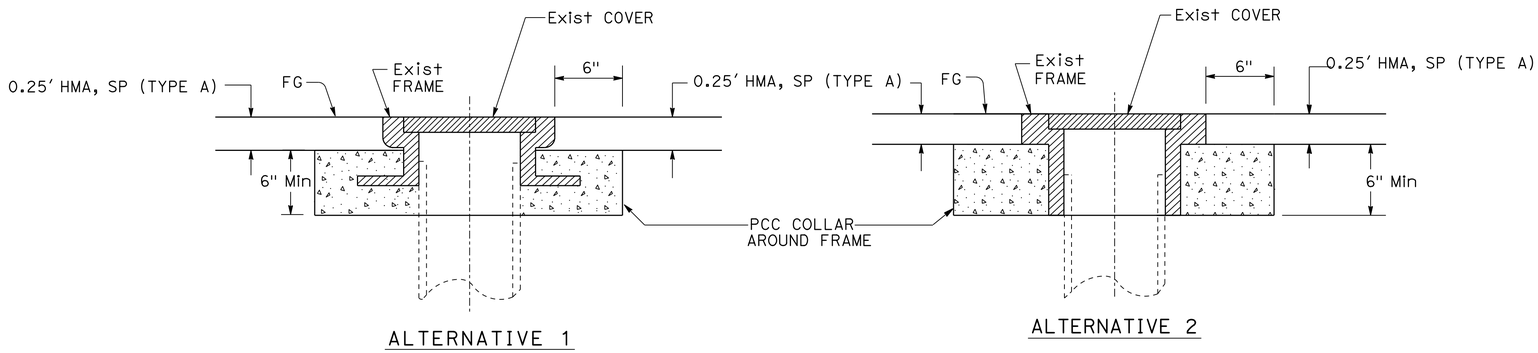

WATER VALVE / DETECTOR

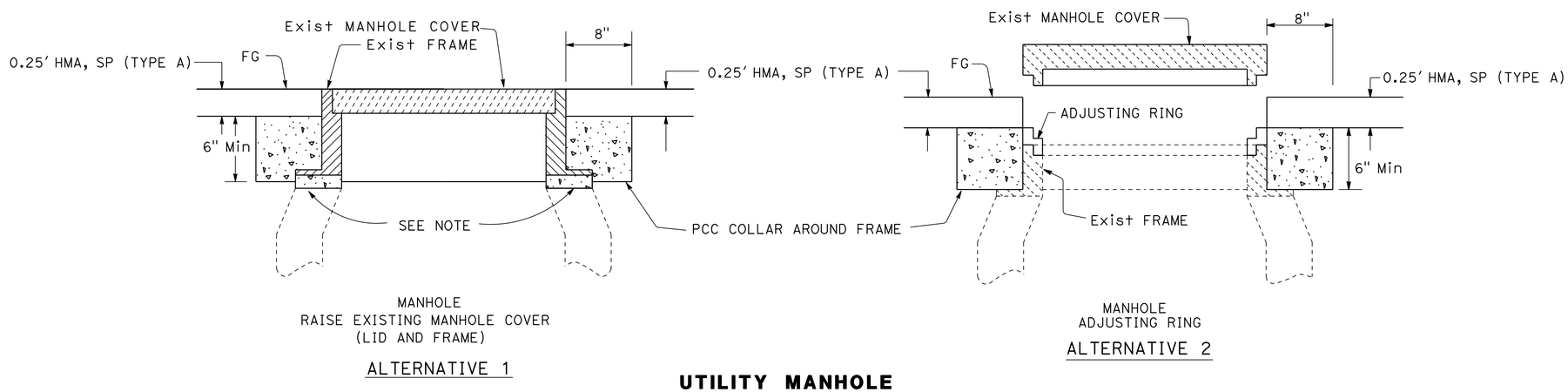

UTILITY MANHOLE

NOTE: HMA THICKNESS VARIES TO MEET FIELD CONDITION. MINIMUM THICKNESS 0.75" TO MAXIMUM OF 2.5". FOR ADJUSTMENTS OF MORE THAN 2.5" USE STANDARD PRECAST CONCRETE RINGS.

ADJUST FRAME AND COVER TO GRADE

CONSTRUCTION DETAILS

NO SCALE

C-6

REVISED BY	HR
DATE REVISED	12/26/13
CALCULATED-DESIGNED BY	HERNANDO RAPOSAS
CHECKED BY	JES PADDA
FUNCTIONAL SUPERVISOR	MICHAEL HUTCHISON

STATE OF CALIFORNIA - DEPARTMENT OF TRANSPORTATION
Caltrans
DESIGN

LAST REVISION 00-00-00 | DATE PLOTTED => 13-JAN-2014 | TIME PLOTTED => 12:57

Dist	COUNTY	ROUTE	POST MILES TOTAL PROJECT	SHEET No.	TOTAL SHEETS
10	Sta	120	6.1/11.3	10	54

REGISTERED CIVIL ENGINEER 1/6/14 DATE

01-06-14
PLANS APPROVAL DATE

REGISTERED PROFESSIONAL ENGINEER HUE NGUYEN No. 74484 Exp. 12/31/15 CIVIL STATE OF CALIFORNIA

THE STATE OF CALIFORNIA OR ITS OFFICERS OR AGENTS SHALL NOT BE RESPONSIBLE FOR THE ACCURACY OR COMPLETENESS OF SCANNED COPIES OF THIS PLAN SHEET.

STATIONARY MOUNTED CONSTRUCTION AREA SIGNS

SIGN	SIGN CODE FEDERAL	SIGN CODE CALIFORNIA	SIGN MESSAGE	No. OF SIGNS	PANEL SIZE	No. OF POST AND SIZE
A	W20-1		ROAD WORK AHEAD	2	48" x 48"	1- 6" x 6"
B	G20-2		END ROAD WORK	13	36" x 18"	1- 4" x 4"
C	W20-1		ROAD WORK AHEAD	14	36" x 36"	1- 4" x 6"
D	G20-1		ROAD WORK NEXT 5 MILES	2	60" x 36"	2- 4" x 6"

NOTE:
EXACT LOCATIONS OF CONSTRUCTION AREA SIGNS TO BE DETERMINED BY THE ENGINEER.

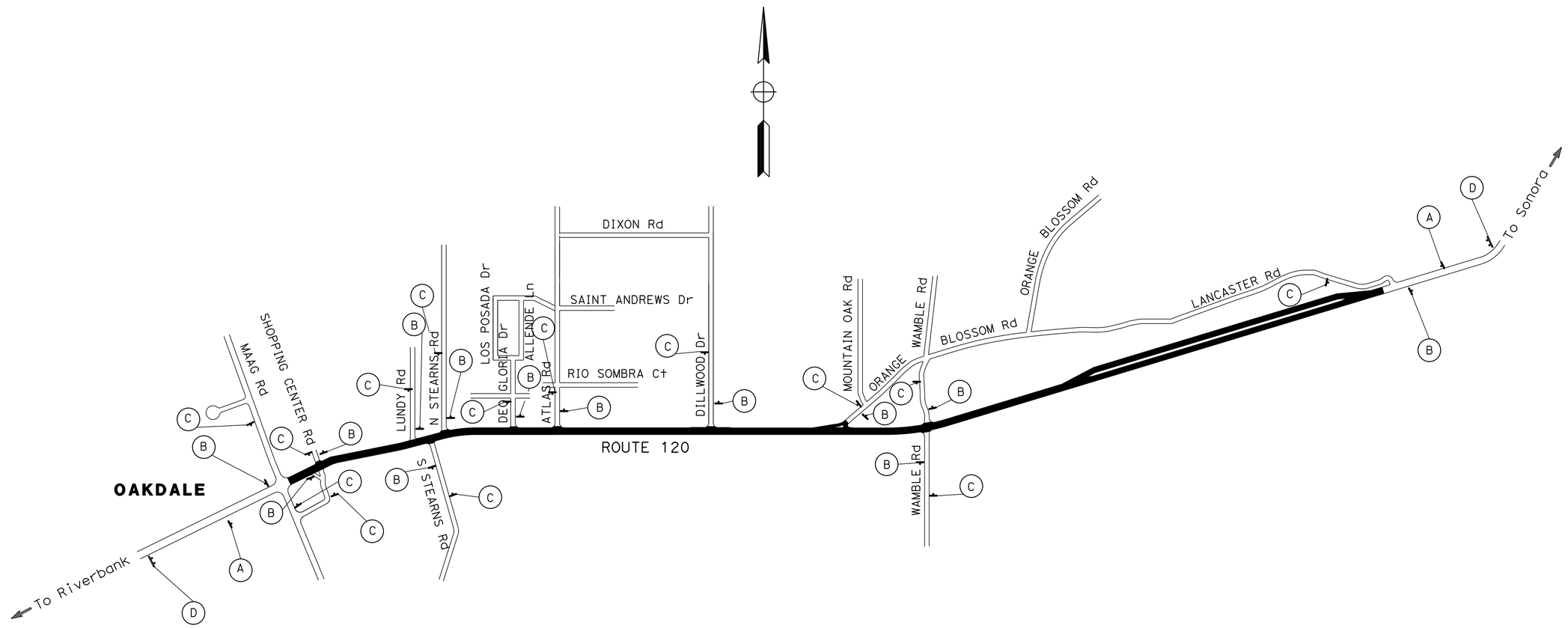

APPROVED FOR CONSTRUCTION AREA SIGN WORK ONLY

CONSTRUCTION AREA SIGNS

NO SCALE

CS-1

CN	12/26/13
REVISED BY	DATE REVISED
CECILE NGUYEN	
HUE NGUYEN	
CALCULATED-DESIGNED BY	
CHECKED BY	
FUNCTIONAL SUPERVISOR	
MOHAMMED QATAMI	

STATE OF CALIFORNIA - DEPARTMENT OF TRANSPORTATION
Caltrans® **TRAFFIC DESIGN**

LAST REVISION 07-09-13 | DATE PLOTTED => 13-JAN-2014 | TIME PLOTTED => 12:57

Dist	COUNTY	ROUTE	POST MILES TOTAL PROJECT	SHEET No.	TOTAL SHEETS
10	Sta	120	6.1/11.3	11	54

REGISTERED CIVIL ENGINEER 1/6/14 DATE

01-06-14
PLANS APPROVAL DATE

REGISTERED PROFESSIONAL ENGINEER HUE NGUYEN No. 74484 Exp. 12/31/15 CIVIL STATE OF CALIFORNIA

THE STATE OF CALIFORNIA OR ITS OFFICERS OR AGENTS SHALL NOT BE RESPONSIBLE FOR THE ACCURACY OR COMPLETENESS OF SCANNED COPIES OF THIS PLAN SHEET.

LEGEND

G - DELINEATOR (CLASS 1) TYPE G

- ROADSIDE SIGN - ONE POST

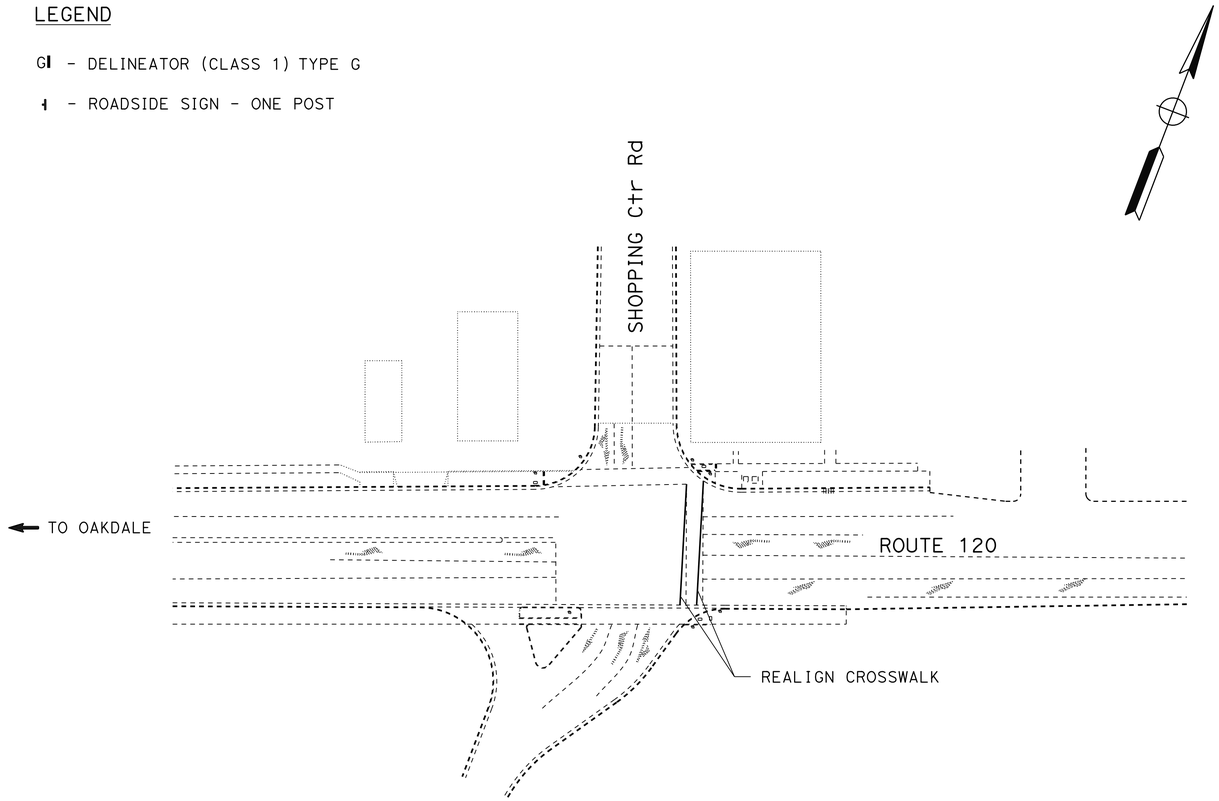

PM 6.19

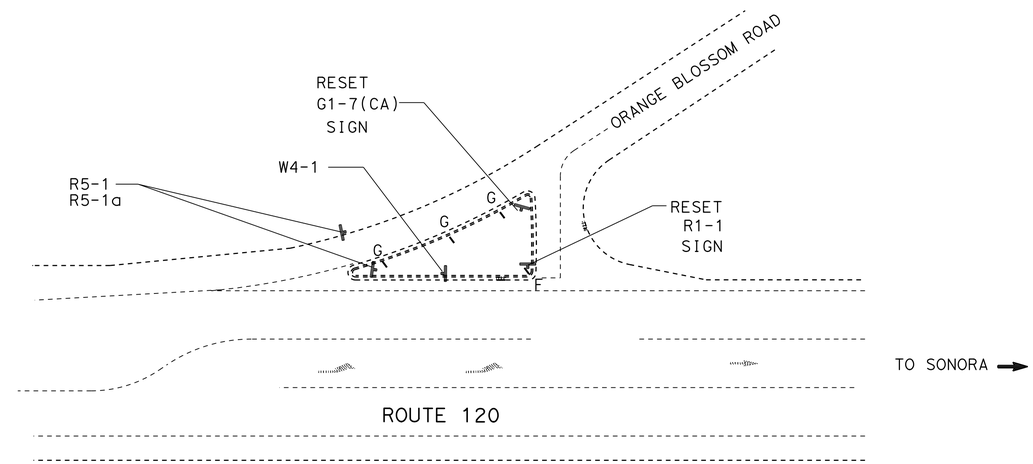

PM 8.86

APPROVED FOR PAVEMENT DELINEATION AND SIGN WORK ONLY

PAVEMENT DELINEATION AND SIGN PLAN

NO SCALE

PD-1

CALCULATED-DESIGNED BY	CECILE NGUYEN
CHECKED BY	HUE NGUYEN
REVISED BY	CN
DATE REVISED	12/26/13
FUNCTIONAL SUPERVISOR	MOHAMMED QATAMI

STATE OF CALIFORNIA - DEPARTMENT OF TRANSPORTATION
Caltrans® **TRAFFIC DESIGN**

LAST REVISION 00-00-00 | DATE PLOTTED => 13-JAN-2014 | TIME PLOTTED => 12:57

Dist	COUNTY	ROUTE	POST MILES TOTAL PROJECT	SHEET No.	TOTAL SHEETS
10	Sta	120	6.1/11.3	12	54

REGISTERED CIVIL ENGINEER 1/6/14 DATE

01-06-14
PLANS APPROVAL DATE

REGISTERED PROFESSIONAL ENGINEER HUE NGUYEN No. 74484 Exp 12/31/15 CIVIL STATE OF CALIFORNIA

THE STATE OF CALIFORNIA OR ITS OFFICERS OR AGENTS SHALL NOT BE RESPONSIBLE FOR THE ACCURACY OR COMPLETENESS OF SCANNED COPIES OF THIS PLAN SHEET.

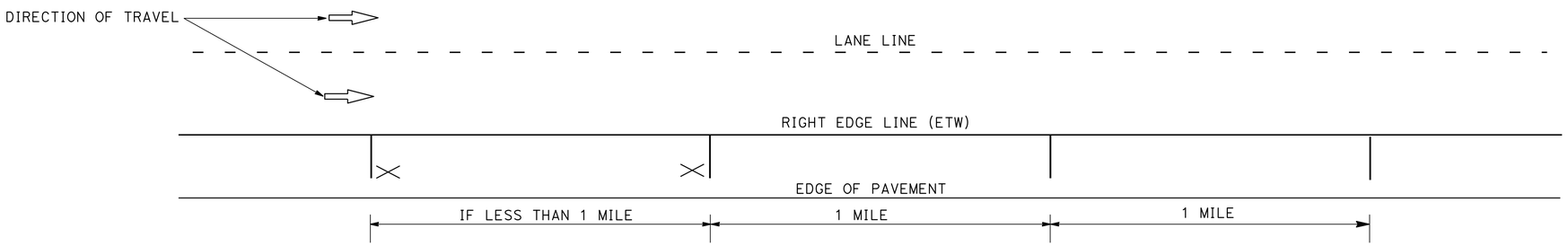

AIRCRAFT PATROL PAVEMENT MARKING LAYOUT

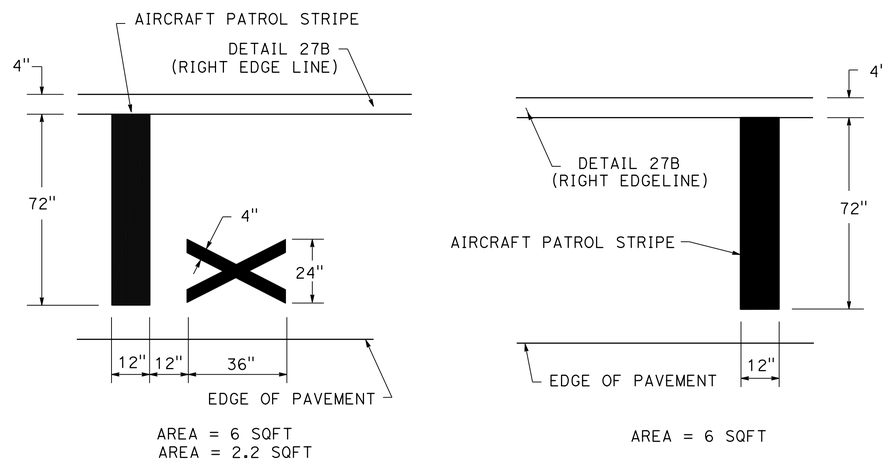

AIRCRAFT PATROL PAVEMENT MARKING DETAILS

NOTE: ALL MARKINGS FOR THIS DETAIL SHALL BE WHITE

PAVEMENT DELINEATION DETAILS

PDD-1

STATE OF CALIFORNIA - DEPARTMENT OF TRANSPORTATION
Caltrans® TRAFFIC DESIGN

FUNCTIONAL SUPERVISOR: MOHAMMED QATAMI
CALCULATED-DESIGNED BY: CECILE NGUYEN
CHECKED BY: HUE NGUYEN
REVISED BY: CN
DATE REVISED: 01/06/14

LAST REVISION 01-10-14
DATE PLOTTED => 13-JAN-2014
TIME PLOTTED => 12:57

Dist	COUNTY	ROUTE	POST MILES TOTAL PROJECT	SHEET No.	TOTAL SHEETS
10	Sta	120	6.1/11.3	13	54

REGISTERED CIVIL ENGINEER 1/6/14 DATE

01-06-14
PLANS APPROVAL DATE

REGISTERED PROFESSIONAL ENGINEER HUE NGUYEN No. 74484 Exp. 12/31/15 CIVIL STATE OF CALIFORNIA

THE STATE OF CALIFORNIA OR ITS OFFICERS OR AGENTS SHALL NOT BE RESPONSIBLE FOR THE ACCURACY OR COMPLETENESS OF SCANNED COPIES OF THIS PLAN SHEET.

PAVEMENT DELINEATION ITEMS (STRIPE AND MARKER)

LOCATION/ POST MILE LIMITS	SIDE	DIRECTION	LOCATION	DETAIL No.	THERMOPLASTIC TRAFFIC STRIPE (SPRAYABLE) 4" DOUBLE YELLOW	4" BROKEN (36-12) YELLOW	4" SOLID BROKEN YELLOW	4" BROKEN (36-12) WHITE	4" SOLID WHITE	8" SOLID WHITE	4" BROKEN (12-3) WHITE	REMOVE PAVEMENT MARKER	PAVEMENT MARKER (RETROREFLECTIVE) TYPE D	TYPE H	TYPE G	BLUE RAISED	OBJECT MAKER (TYPE L)
					LF							EA	EA				EA
6.10 - 6.27		EB		38,12				793		224					28		
6.10 - 6.27			℄	22,29,32	1009		57						74				
6.10 - 6.27		WB		38						136					24		
6.27 - 6.29		EB		12				106							3		
6.27 - 6.82			℄	32			5808	789					187				
6.81 - 6.84		EB		27C							158						
6.83 - 6.88		EB	℄	22	264								24				
6.87 - 6.91		EB		38						211					10		
6.89 - 7.21		EB	℄	22	1690								143				
7.19 - 7.22		EB		38						153					7		
7.22 - 7.42		EB	℄	22	1056								90				
7.41 - 7.42		EB		38						102					3		
7.40 - 7.63		EB		12				1214							26		
7.42 - 7.71		EB	℄	22	1531								130				
7.71 - 7.78		EB	℄	19			370						9	16			
7.78 - 7.90		EB	℄	6		634							14				
7.90 - 8.18		EB	℄	22	1478								125				
8.09 - 8.21		EB		38						634					27		
8.19 - 8.29		EB	℄	22	528								46				
8.29 - 8.35		EB	℄,L†	19			317						8	14			
8.35 - 8.64		EB	℄	6		1531							33				
8.64 - 8.70		EB	℄,R†	19			317						8	14			
8.70 - 8.83		EB	℄	22	686								59				
8.81 - 8.86		EB		38						264					12		
8.84 - 9.21			℄	22	1954								165				
9.22 - 9.28			℄,R†	19			317						8	14			
9.28 - 9.92			℄	6		3379							71				
9.92 - 10.08			℄,R†	19			845						19	36			
10.08 - 11.02		EB		12				4963							104		
10.08 - 10.21			℄	29	1372								59				
10.21 - 10.51			℄	22	1584								134				
10.52 - 10.66			℄	22	739								64				
10.66 - 11.17			℄	29	5386								226				
10.93 - 11.01		EB															1
11.16 - 11.20			℄	22	211								20				
6.10 - 11.20		EB/WB		27B					52,481								
11.15 - 10.21		WB		12				4963							104		
9.24 - 9.18		WB		27C							317						
8.86 - 8.82		WB		27C							211						
8.79 - 8.77		WB		38						108					5		
8.77 - 8.74		WB		12				203							6		
8.25 - 8.18		WB		38						370					16		
8.19 - 8.08		WB		38						581					25		
7.44 - 7.40		WB		27C							211						
7.22 - 7.20		WB		27C							106						
6.91 - 6.86		WB		27C							264						
6.83 - 6.81		WB		38						106					5		
6.70 - 6.72		WB		27C							106						
6.27 - 11.20		WB/EB										2089					
SUBTOTAL					19,488	5544	8031	13,031	52,481	2889	1373	2089	1716	94	405		1
TOTAL 1					102,836								2215				1

PAVEMENT DELINEATION QUANTITIES

PDQ-1

STATE OF CALIFORNIA - DEPARTMENT OF TRANSPORTATION
Caltrans® TRAFFIC DESIGN

FUNCTIONAL SUPERVISOR: MOHAMMED QATAMI
CALCULATED-DESIGNED BY: CECILE NGUYEN
CHECKED BY: HUE NGUYEN
REVISED BY: CN
DATE REVISED: 12/26/13

LAST REVISION 00-00-00
DATE PLOTTED => 17-JAN-2014
TIME PLOTTED => 08:30

Dist	COUNTY	ROUTE	POST MILES TOTAL PROJECT	SHEET No.	TOTAL SHEETS
10	Sta	120	6.1/11.3	14	54

REGISTERED CIVIL ENGINEER 1/6/14 DATE

01-06-14
PLANS APPROVAL DATE

REGISTERED PROFESSIONAL ENGINEER HUE NGUYEN No. 74484 Exp. 12/31/15 CIVIL STATE OF CALIFORNIA

THE STATE OF CALIFORNIA OR ITS OFFICERS OR AGENTS SHALL NOT BE RESPONSIBLE FOR THE ACCURACY OR COMPLETENESS OF SCANNED COPIES OF THIS PLAN SHEET.

PAVEMENT DELINEATION ITEMS (STRIPE AND MARKER)

LOCATION/ POST MILE LIMITS	SIDE	DIRECTION	LOCATION	DETAIL No.	THERMOPLASTIC TRAFFIC STRIPE (SPRAYABLE) 4" DOUBLE YELLOW	4" BROKEN (36-12) YELLOW	4" SOLID BROKEN YELLOW	4" BROKEN (36-12) WHITE	4" SOLID WHITE	8" SOLID WHITE	4" BROKEN (12-3) WHITE	REMOVE PAVEMENT MARKER	PAVEMENT MARKER (RETROREFLECTIVE) TYPE D	TYPE H	TYPE G	BLUE RAISED	OBJECT MAKER (TYPE L)
					LF							EA	EA				EA
SHOPPING CENTER Rd	Lt			38							40				3		
				22	40								6				
	Rt			22	60								8				
				38							60				4		
S STEARNS Rd	Rt			22	40								6				
N STEARNS Rd	Lt			22	32								4		2		
				38							25						
DEO GLORIA Dr	Lt			22	25							92				5	
ATLAS Rd	Lt			22	53								6				
				38							74				4		
DILLWOOD Rd	Lt			22	26								2				
				38					160		78				4		
ORANGE BLOSSOM Rd	Lt			22	99								10				
				38					282		700				30		
WAMBLE Rd	Lt			22	60				120				8				
WAMBLE Rd	Rt			22	33								8		8		
SUBTOTAL					468				526		977	92	60		55	5	
TOTAL THIS SHEET					1971							92	120				
TOTAL 1					102,836							2089	2215				1
TOTAL					104,807							2181	2335				1

PAVEMENT DELINEATION QUANTITIES

PDQ-2

CALCULATED-DESIGNED BY	CECILE NGUYEN	REVISED BY	CN
CHECKED BY	HUE NGUYEN	DATE REVISED	12/26/13
FUNCTIONAL SUPERVISOR	MOHAMMED QATAMI		

STATE OF CALIFORNIA - DEPARTMENT OF TRANSPORTATION
Caltrans® TRAFFIC DESIGN

LAST REVISION 00-00-00 | DATE PLOTTED => 17-JAN-2014 | TIME PLOTTED => 08:42

Dist	COUNTY	ROUTE	POST MILES TOTAL PROJECT	SHEET No.	TOTAL SHEETS
10	Sta	120	6.1/11.3	15	54

REGISTERED CIVIL ENGINEER 1/6/14 DATE

01-06-14
PLANS APPROVAL DATE

REGISTERED PROFESSIONAL ENGINEER HUE NGUYEN No. 74484 Exp. 12/31/15 CIVIL STATE OF CALIFORNIA

THE STATE OF CALIFORNIA OR ITS OFFICERS OR AGENTS SHALL NOT BE RESPONSIBLE FOR THE ACCURACY OR COMPLETENESS OF SCANNED COPIES OF THIS PLAN SHEET.

PAVEMENT DELINEATION ITEMS (MARKING AND DELINEATORS)

LOCATION/ POSTMILE LIMIT	SIDE	DIRECTION	REMOVE THERMO-PLASTIC PAVEMENT MARKING	THERMOPLASTIC PAVEMENT MARKING											AIRCRAFT PATROL THERMO-PLASTIC PAVEMENT MARKING	DELINEATOR (CLASS 1)		GUARD RAILING DELINEATOR
				CROSS-WALK	STOP	SIGNAL	AHEAD	TYPE III (L) ARROW	TYPE II (R) ARROW	TYPE VI ARROW	TYPE V ARROW	TYPE I ARROW	LIMIT LINE	DIAGONAL MARKING		TYPE G	TYPE F	TYPE F
			SQFT	SQFT											SQFT	EA		EA
6.10-6.21		EB						168										
6.24-6.25		EB		164				84		126			42					
6.25-6.29		EB						84										
6.28-6.75		EB						420										
6.83-6.91		EB/WB						84				31						
7.19		EB						42										
7.41		EB						42										
7.56-7.63		EB								126								
8.09-8.17		EB						168				31				3	1	
8.20		EB																
8.82-8.83		EB						84				31						
10.49-10.52		EB									132							
10.93-11.01		EB								126								3
10.56-10.53		WB									132							
10.30-10.20		WB								126								
8.25-8.19		WB						126										
8.15-8.08		WB								126								
8.76-8.70		WB								84								
6.47		WB				32												
6.46		WB					31											
6.27 - 11.20		WB/EB	2136												12			
6.04															12			
7.04															12			
8.04															12			
9.04															12			
10.04															12			
11.04															12			
SHOPPING CENTER Rd	L+			180				42	45									
	R+							42	45			24						
S STEARNS Rd	R+				22			42					30					
N STEARNS Rd	L+				44								35					
DEO GLORIA Dr	L+		1058		22								35					
ATLAS Rd	L+				22			42					41	32				
DILLWOOD Rd	L+				44			42					43	38				
ORANGE BLOSSOM Rd	L+				22								20					
WAMBLE Rd	L+				22								25					
WAMBLE Rd	R+				22								35					
SUBTOTAL			3194	180	220	32	31	1512	90	714	264	117	306	70	84	3	1	
TOTAL			3194	3784												4		3

NOTE:
METAL BEAM GUARD RAILING DELINEATORS TO BE SPACED 25' APART.

PAVEMENT DELINEATION QUANTITIES
PDQ-3

REVISED BY	DATE REVISED	CALCULATED-DESIGNED BY	CHECKED BY	FUNCTIONAL SUPERVISOR
CN	12/26/13	CECILE NGUYEN	HUE NGUYEN	MOHAMMED QATAMI

STATE OF CALIFORNIA - DEPARTMENT OF TRANSPORTATION
Caltrans® TRAFFIC DESIGN

LAST REVISION 00-00-00 | DATE PLOTTED => 17-JAN-2014 | TIME PLOTTED => 08:30

Dist	COUNTY	ROUTE	POST MILES TOTAL PROJECT	SHEET No.	TOTAL SHEETS
10	Sta	120	6.1/11.3	16	54

REGISTERED CIVIL ENGINEER 1/6/14 DATE

01-06-14
PLANS APPROVAL DATE

REGISTERED PROFESSIONAL ENGINEER HUE NGUYEN No. 74484 Exp. 12/31/15 CIVIL STATE OF CALIFORNIA

THE STATE OF CALIFORNIA OR ITS OFFICERS OR AGENTS SHALL NOT BE RESPONSIBLE FOR THE ACCURACY OR COMPLETENESS OF SCANNED COPIES OF THIS PLAN SHEET.

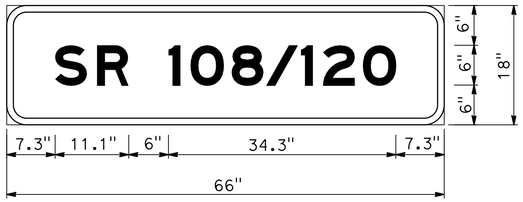

3.0" RADIUS, 1.0" BORDER, WHITE ON GREEN;
[SR 108/120] E Mod;

PM 6.19 FNBT

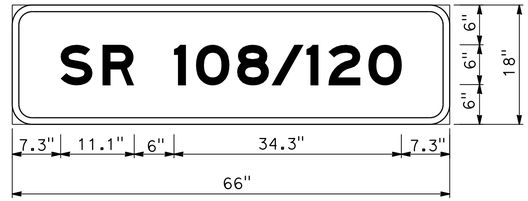

3.0" RADIUS, 1.0" BORDER, WHITE ON GREEN;
[SR 108/120] E Mod;

PM 6.21 FSBT

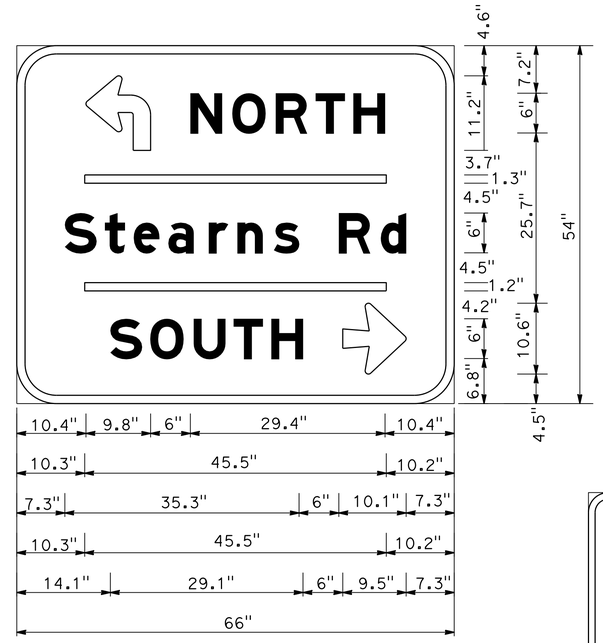

6.0" RADIUS, 1.3" BORDER, WHITE ON GREEN;
90 Deg ADVANCED TURN ARROW 9.8" x 11.3";
[NORTH] E Mod; [Stearns Rd] E Mod;
[SOUTH] E Mod;
ARROW 6UC-2LH - 9.6" 0°;

PM 6.8 FEBT

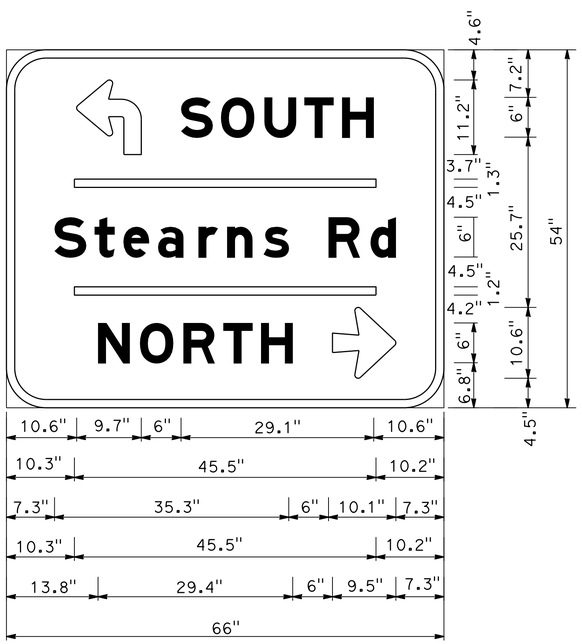

6.0" RADIUS, 1.3" BORDER, WHITE ON GREEN;
90 Deg ADVANCED TURN ARROW 9.8" x 11.3";
[SOUTH] E Mod; [Stearns Rd] E Mod;
[NORTH] E Mod;
ARROW 6UC-2LH - 9.6" 0°;

PM 7.01 FWBT

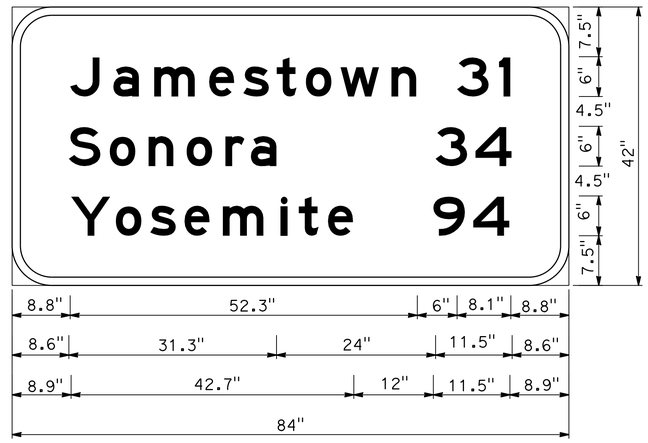

6.0" RADIUS, 1.3" BORDER, WHITE ON GREEN;
[Jamestown] E; [31] E; [Sonora 34] E;
[Yosemite 94] E;

PM 7.06 FEBT

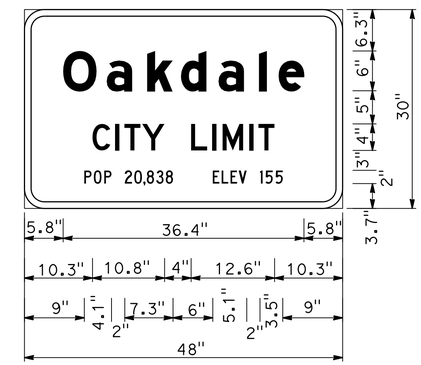

3.0" RADIUS, 1.0" BORDER, WHITE ON GREEN;
[Oakdale] E Mod;
[CITY LIMIT] D;
[POP 20,838 ELEV 155] C;

PM 6.89 FWBT

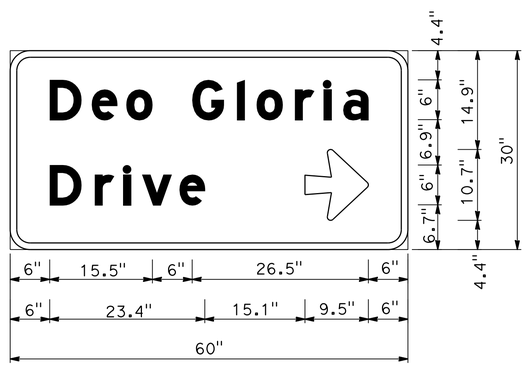

3.0" RADIUS, 1.0" BORDER, WHITE ON GREEN;
[Deo Gloria] E Mod; [Drive] E Mod;
ARROW 6UC-2LH - 9.6" 0°;

PM 7.10 FEBT

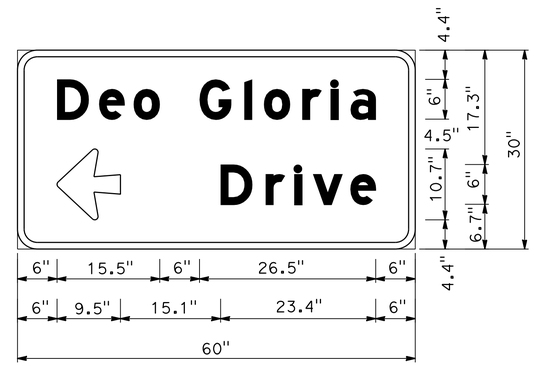

3.0" RADIUS, 1.0" BORDER, WHITE ON GREEN;
[Deo Gloria] E Mod;
ARROW 6UC-2LH - 9.6" 180°;
[Drive] E Mod;

PM 7.32 FWBT

SIGN DETAILS

NO SCALE

SD-1

STATE OF CALIFORNIA - DEPARTMENT OF TRANSPORTATION
Caltrans® TRAFFIC DESIGN

FUNCTIONAL SUPERVISOR: MOHAMMED QATAMI
CALCULATED-DESIGNED BY: CECILE NGUYEN
CHECKED BY: HUE NGUYEN
REVISED BY: CN
DATE REVISED: 12/26/13

LAST REVISION 00-00-00
DATE PLOTTED => 13-JAN-2014
TIME PLOTTED => 12:57

Dist	COUNTY	ROUTE	POST MILES TOTAL PROJECT	SHEET No.	TOTAL SHEETS
10	Sta	120	6.1/11.3	17	54

REGISTERED CIVIL ENGINEER 1/6/14 DATE

01-06-14
PLANS APPROVAL DATE

REGISTERED PROFESSIONAL ENGINEER HUE NGUYEN No. 74484 Exp. 12/31/15 CIVIL STATE OF CALIFORNIA

THE STATE OF CALIFORNIA OR ITS OFFICERS OR AGENTS SHALL NOT BE RESPONSIBLE FOR THE ACCURACY OR COMPLETENESS OF SCANNED COPIES OF THIS PLAN SHEET.

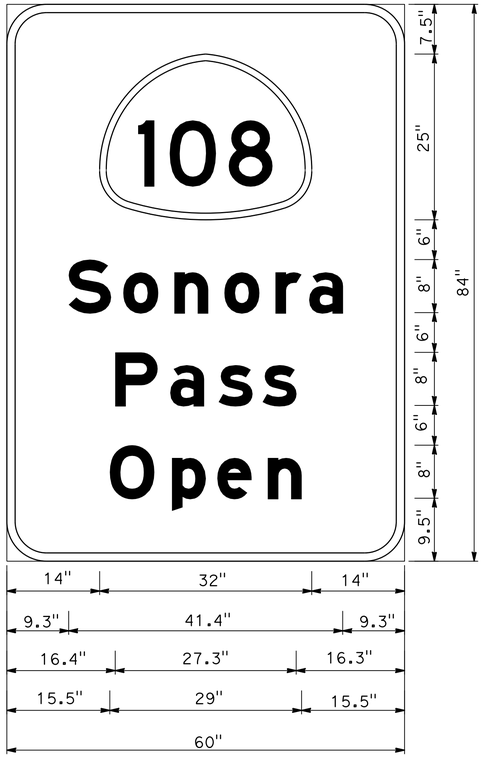

6.0" RADIUS, 1.3" BORDER, WHITE ON GREEN;
[Sonora] E Mod; [Pass] E Mod;
[Open] E Mod;

PM 7.66 FEBT

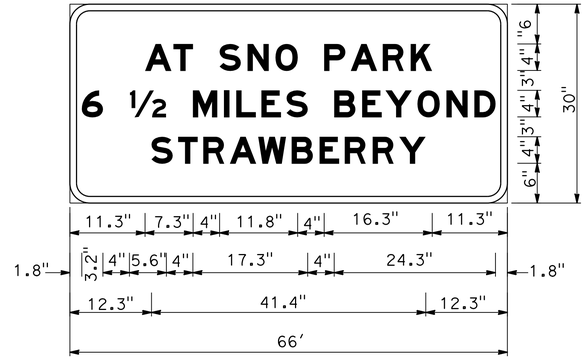

3.0" RADIUS, 1.0" BORDER, WHITE ON GREEN;
[AT SNO PARK] E Mod;
[6 ½ MILES BEYOND] E Mod;
[STRAWBERRY] E Mod;

PM 7.66 FEBT

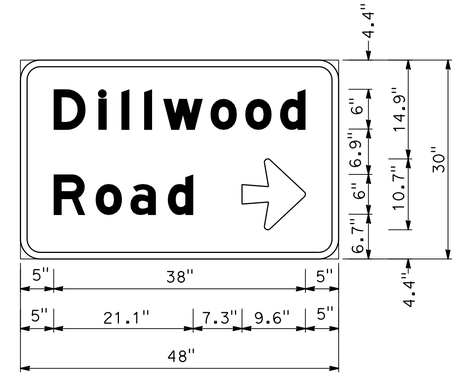

3.0" RADIUS, 1.0" BORDER, WHITE ON GREEN;
[Dillwood] E Mod;
[Road] E Mod;
ARROW 6UC-2LH - 9.6" 0°;

PM 8.08 FEBT

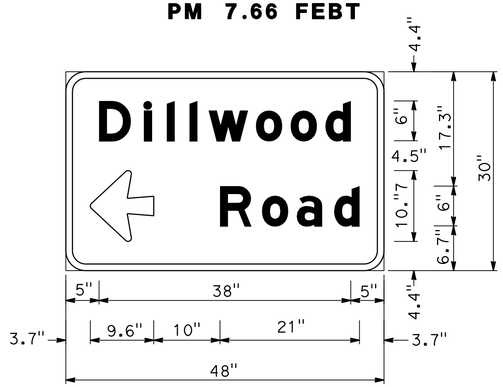

3.0" RADIUS, 1.0" BORDER, WHITE ON GREEN;
[Dillwood] E Mod;
ARROW 6UC-2LH - 9.6" 180°;
[Road] E Mod;

PM 8.30 FWBT

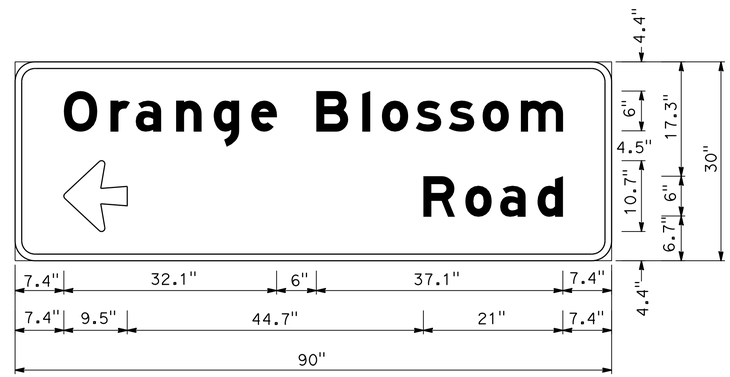

3.0" RADIUS, 1.0" BORDER, WHITE ON GREEN;
[Orange Blossom] E Mod;
ARROW 6UC-2LH - 9.6" 180°; [Road] E Mod;

PM 8.76 FEBT

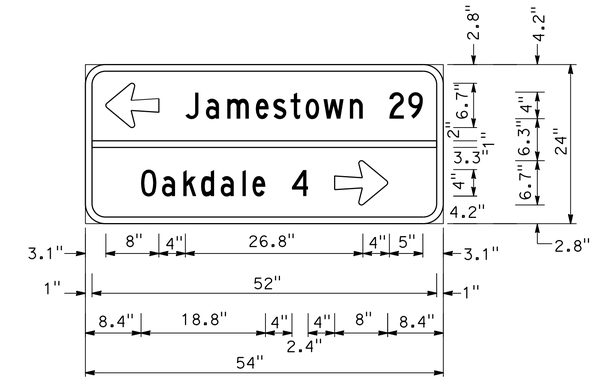

3.0" RADIUS, 1.0" BORDER, WHITE ON GREEN;
ARROW CUSTOM - 8.0" 180°;
[Jamestown 29] C;
[Oakdale 4] C;
ARROW CUSTOM - 8.0" 0°;

PM 8.858 FSBT

SIGN DETAILS

NO SCALE

SD-2

REVISED BY	DATE REVISED
CN	12/27/13

CALCULATED-DESIGNED BY: CECILE NGUYEN
CHECKED BY: HUE NGUYEN

FUNCTIONAL SUPERVISOR: MOHAMMED QATAMI

STATE OF CALIFORNIA - DEPARTMENT OF TRANSPORTATION
Caltrans® TRAFFIC DESIGN

LAST REVISION 07-09-13 | DATE PLOTTED => 13-JAN-2014 | TIME PLOTTED => 12:57

Dist	COUNTY	ROUTE	POST MILES TOTAL PROJECT	SHEET No.	TOTAL SHEETS
10	Sta	120	6.1/11.3	18	54

REGISTERED CIVIL ENGINEER 1/6/14 DATE

01-06-14
PLANS APPROVAL DATE

REGISTERED PROFESSIONAL ENGINEER HUE NGUYEN No. 74484 Exp. 12/31/15 CIVIL STATE OF CALIFORNIA

THE STATE OF CALIFORNIA OR ITS OFFICERS OR AGENTS SHALL NOT BE RESPONSIBLE FOR THE ACCURACY OR COMPLETENESS OF SCANNED COPIES OF THIS PLAN SHEET.

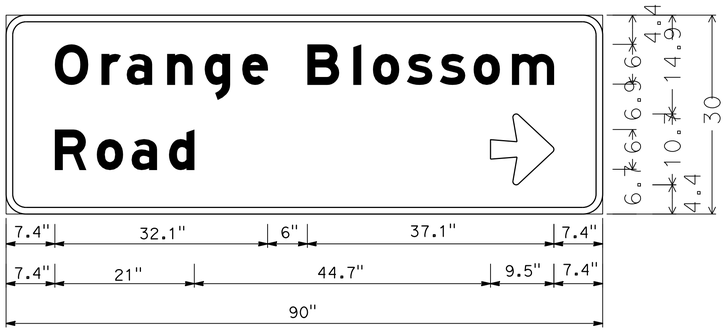

3.0" RADIUS, 1.0" BORDER, WHITE ON GREEN;
[Orange Blossom] E Mod; [Road] E Mod;
ARROW 6UC-2LH - 9.6" 0°;

PM 8.99 FWBT

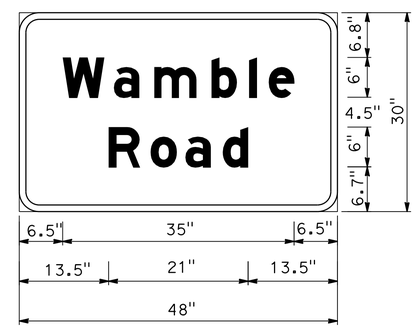

3.0" RADIUS, 1.0" BORDER, BLACK ON YELLOW;
[Wamble] E Mod;
[Road] E Mod;

PM 9.15 FEBT

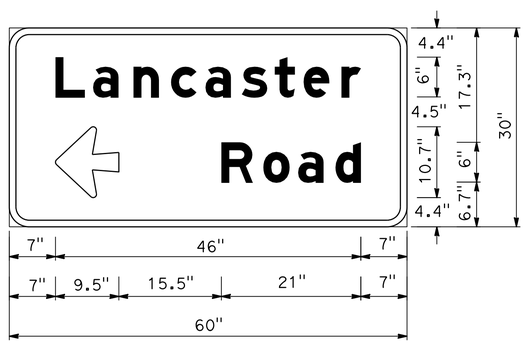

3.0" RADIUS, 1.0" BORDER, WHITE ON GREEN;
[Lancaster] E Mod;
Arrow 6UC-2LH - 9.6" 180{;
[Road] E Mod;

PM 11.29 FEBT

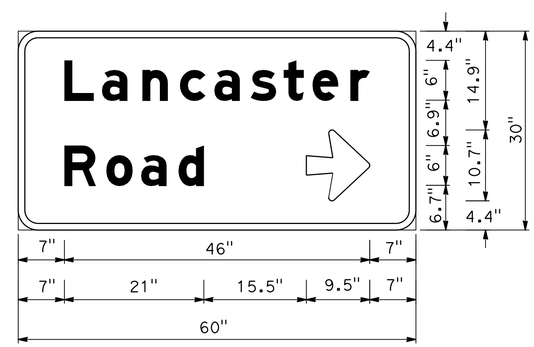

3.0" RADIUS, 1.0" BORDER, WHITE ON GREEN;
[Lancaster] E Mod; [Road] E Mod;
ARROW 6UC-2LH - 9.6" 0°;

PM 11.5 FWBT

SIGN DETAILS

NO SCALE

SD-3

STATE OF CALIFORNIA - DEPARTMENT OF TRANSPORTATION
Caltrans® **TRAFFIC DESIGN**

FUNCTIONAL SUPERVISOR: MOHAMMED QATAMI
CALCULATED-DESIGNED BY: CECILE NGUYEN
CHECKED BY: HUE NGUYEN
REVISED BY: CN
DATE REVISED: 12/31/13

LAST REVISION 07-09-13
DATE PLOTTED => 13-JAN-2014
TIME PLOTTED => 12:57

Dist	COUNTY	ROUTE	POST MILES TOTAL PROJECT	SHEET No.	TOTAL SHEETS
10	Sta	120	6.1/11.3	19	54

REGISTERED CIVIL ENGINEER 1/6/14 DATE

01-06-14
PLANS APPROVAL DATE

REGISTERED PROFESSIONAL ENGINEER HUE NGUYEN No. 74484 Exp. 12/31/15 CIVIL STATE OF CALIFORNIA

THE STATE OF CALIFORNIA OR ITS OFFICERS OR AGENTS SHALL NOT BE RESPONSIBLE FOR THE ACCURACY OR COMPLETENESS OF SCANNED COPIES OF THIS PLAN SHEET.

NOTE:
EXACT SIGN LOCATIONS TO BE DETERMINED BY THE ENGINEER.

ROADSIDE SIGN ITEMS

POST MILE	DIRECTION	SIGN CODE FEDERAL	SIGN CODE CALIFORNIA	PANEL SIGN	POST SIZE	SIGN MESSAGE	ROADSIDE SIGN - ONE POST (EA)	ROADSIDE SIGN - TWO POST (EA)	INSTALL SIGN (STRAP AND SADDLE BRACKET METHOD) (EA)	REMOVE SIGN FROM ELECTROLIER (EA)	REMOVE ROADSIDE SIGN MOUNTED ON MAST ARM (EA)	REMOVE ROADSIDE SIGN (STRAP AND SADDLE BRACKET METHOD) (EA)	RESET ROADSIDE SIGN (EA)	REMOVE ROADSIDE SIGN (EA)	FURNISH SINGLE SHEET ALUMINUM SIGN (SQFT) FRAMED 0.063"	FRAMED 0.080"	UNFRAMED 0.063"	UNFRAMED 0.080"	SINGLE FACED	DOUBLE FACED	SIGN MATERIAL BACKGROUND SHEETING COLOR	BACKGROUND RETRO-REFLECTIVE ASTM TYPE	LEGEND SHEETING COLOR	LEGEND RETRO-REFLECTIVE ASTM TYPE	GRAFFITI FILM STANDARD	GRAFFITI FILM PREMIUM	TREATED WOOD WASTE (LB)	REMARKS
6.06	FWBT		R26(CA)			NO PARKING ANY TIME							1															
6.07	FNBT		R49(CA)	42" x 18"		NO PED CROSSING, USE CROSSWALK											5.25		×		WHITE	III	BLACK			×		MOUNT ON PEDESTRIAN BARRICADE
6.06	FEBT	R2-1		36" x 48"		SPEED LIMIT (35)			1	1							12.00		×		WHITE	III	BLACK			×		ON ELECTROLIER
6.19	FNBT	D3 (MOD)		66" x 18"		SR 108/120					1				8.25					×	GREEN	IV	WHITE	IV		×		ON MAST ARM
6.21	FSBT	D3 (MOD)		66" x 18"		SR 108/120					1				8.25					×	GREEN	IV	WHITE	IV		×		ON MAST ARM
6.28	FEBT	R2-1		36" x 48"	4" x 6"	SPEED LIMIT (45)	1							1			12.00		×		WHITE	III	BLACK			×	50	
6.30	FWBT	R2-1		36" x 48"	4" x 6"	SPEED LIMIT (35)	1							1			12.00		×		WHITE	VII	BLACK			×	50	
6.47	FWBT	W3-3		48" x 48"	6" x 6"	SIGNAL AHEAD	1							1				16.00	×		YELLOW	IX	R/Y/G			×	50	
6.70	FEBT	R2-1		36" x 48"	4" x 6"	SPEED LIMIT (50)	1							1			12.00				WHITE	III	BLACK			×	50	
6.72	FWBT	R2-1		36" x 48"	4" x 6"	SPEED LIMIT (45)	1							1			12.00		×		WHITE	III	BLACK			×	50	
6.80	FEBT		G77-1(CA)	66" x 48"	4" x 6"	STEARNS Rd/SOUTH/NORTH		1						1	22.00				×		GREEN	IV	WHITE	IV		×	80	
6.86	FNBT	R1-1		30" x 30"	4" x 6"	STOP	1							1			6.25		×		RED	IX	WHITE	IX		×	50	
6.89	FWBT		G9-5(CA)	48" x 30"	4" x 6"	OAKDALE CITY LIMIT	1							1				10.00	×		GREEN	IV	WHITE	IV		×	50	
6.90	FSBT	R1-1		30" x 30"	4" x 6"	STOP	1							1			6.25		×		RED	IX	WHITE	IX		×	50	
6.94	FEBT		R47(CA)	54" x 36"	4" x 6"	$1000 FINE FOR LITTERING	1							1				13.50	×		WHITE	III	BLACK			×	50	
7.01	FWBT		G77-1(CA)	66" x 48"	4" x 6"	STEARNS Rd/SOUTH/NORTH		1						1	22.00				×		GREEN	IV	WHITE	IV		×	80	
7.03	FEBT		R3(CA)	36" x 45"	4" x 6"	END 50 SPEED LIMIT	1							1			11.25		×		WHITE	III	BLACK			×	50	
7.05	FWBT	R2-1		36" x 48"	4" x 6"	SPEED LIMIT 50	1							1			12.00		×		WHITE	III	BLACK			×	50	
7.06	FEBT		G5(CA)	84" x 42"		3 DESTINATIONS/Mi		1						1		24.50			×		GREEN	IV	WHITE	IX		×	80	
		M3-2 M3-2		2(24" x 12")	4" x 6"	EAST EAST											4.00		×		GREEN	III	WHITE	III		×		
			G8-2(CA) G8-2(CA)	2(25" x 28")		ROUTE MARKER (108) AND (120)											9.72		×		GREEN	III	WHITE	III				
7.10	FEBT		G8-22(CA)	60" x 30"	4" x 4"	DEO GLORIA Dr WITH ARROW		1						1	12.50				×		GREEN	IV	WHITE	IX		×	80	
7.20	FEBT	R2-1		36" x 48"	4" x 6"	SPEED LIMIT 55	1							1			12.00		×		WHITE	III	BLACK			×	50	
			R48-1(CA)	36" x 18"		RADAR ENFORCED											4.50		×		WHITE	III	BLACK			×		
TOTAL 1							12	4	1	1	2		1	16	73.00	24.50	131.22	39.50									920	

SIGN QUANTITIES
SQ-1

REVISED BY	DATE REVISED
CN	12/31/13

CECILE NGUYEN — HUE NGUYEN
CALCULATED-DESIGNED BY — CHECKED BY
FUNCTIONAL SUPERVISOR: MOHAMMED QATAMI

STATE OF CALIFORNIA - DEPARTMENT OF TRANSPORTATION
Caltrans® TRAFFIC DESIGN

LAST REVISION 07-09-13
DATE PLOTTED => 13-JAN-2014
TIME PLOTTED => 12:57

Dist	COUNTY	ROUTE	POST MILES TOTAL PROJECT	SHEET No.	TOTAL SHEETS
10	Sta	120	6.1/11.3	20	54

REGISTERED CIVIL ENGINEER 1/6/14 DATE

01-06-14
PLANS APPROVAL DATE

REGISTERED PROFESSIONAL ENGINEER HUE NGUYEN No. 74484 Exp. 12/31/15 CIVIL STATE OF CALIFORNIA

THE STATE OF CALIFORNIA OR ITS OFFICERS OR AGENTS SHALL NOT BE RESPONSIBLE FOR THE ACCURACY OR COMPLETENESS OF SCANNED COPIES OF THIS PLAN SHEET.

NOTE:
EXACT SIGN LOCATIONS TO BE DETERMINED BY THE ENGINEER.

ROADSIDE SIGN ITEMS

POST MILE	DIRECTION	SIGN CODE FEDERAL	SIGN CODE CALIFORNIA	PANEL SIGN	POST SIZE	SIGN MESSAGE	ROADSIDE SIGN - ONE POST (EA)	ROADSIDE SIGN - TWO POST (EA)	INSTALL SIGN (STRAP AND SADDLE BRACKET METHOD) (EA)	REMOVE ROADSIDE SIGN MOUNTED ON MAST ARM (EA)	REMOVE ROADSIDE SIGN (STRAP AND SADDLE BRACKET METHOD) (EA)	RESET ROADSIDE SIGN (EA)	REMOVE ROADSIDE SIGN (EA)	FURNISH SINGLE SHEET ALUMINUM SIGN (SQFT) FRAMED 0.063"	FRAMED 0.080"	UNFRAMED 0.063"	UNFRAMED 0.080"	SINGLE FACED	SIGN MATERIAL BACKGROUND SHEETING COLOR	BACKGROUND RETRO-REFLECTIVE ASTM TYPE	LEGEND SHEETING COLOR	LEGEND RETRO-REFLECTIVE ASTM TYPE	GRAFFITI FILM STANDARD	GRAFFITI FILM PREMIUM	TREATED WOOD WASTE (LB)	REMARKS
7.22	FSBT	R1-1		30" x 30"	4" x 6"	STOP	1						1			6.25		×	RED	IX	WHITE	IX		×	50	
7.32	FWBT		G8-22(CA)	60" x 30"	4" x 4"	DEO GLORIA DRIVE with ARROW		1					1	12.50				×	GREEN	IV	WHITE	IV		×	80	
7.54	FEBT	W9-1R		48" x 48"	6" x 6"	RIGHT LANE ENDS	2										16.00	×	YELLOW	VII	BLACK			×		ON WESTBOUND SIDE
7.63	FEBT	W4-2		48" x 48"	6" x 6"	RIGHT LANE ENDS (SYMBOL)	2						2				32.00	×	YELLOW	VII	BLACK			×	100	ON WESTBOUND SIDE
7.66	FEBT	GSPEC		60" x 84"	6" x 6"	Rte 108 SONORA PASS OPEN		1					1	35.00				×	GREEN	IV	WHITE	IV		×	80	
		GSPEC		66" x 30"		AT SNO PARK 6½MILES BEYOND STRAWBERRY								13.75				×	GREEN	IV	WHITE	IV		×		
7.68	FEBT	R4-1		24" x 30"	4" x 4"	DO NOT PASS	1									5.00		×	WHITE	III	BLACK			×		ON WESTBOUND SIDE
		R4-1		24" x 30"	4" x 4"	DO NOT PASS	1									5.00		×	WHITE	III	BLACK			×		
8.08	FEBT		G8-22 (CA)	48" x 30"	4" x 6"	DILLWOOD ROAD WITH ARROW	1						1				10.00	×	GREEN	IV	WHITE	IV		×	50	
8.10	FWBT	R4-1		24" x 30"	4" x 4"	DO NOT PASS	1						1			5.00		×	WHITE	III	BLACK			×	50	
8.15	FWBT	W4-2R		48" x 48"	6" x 6"	RIGHT LANE ENDS	1						1				16.00	×	YELLOW	VII	BLACK			×	50	
8.18	FWBT	W9-1R		48" x 48"	6" x 6"	RIGHT LANE ENDS	1						1				16.00	×	YELLOW	VII	BLACK			×	50	
8.20	FSBT	R1-1		30" x 30"	4" x 4"	STOP	1						1			6.25		×	RED	IX	WHITE	IX		×	50	
8.30	FEBT		G8-22 (CA)	48" x 30"	4" x 6"	DILLWOOD ROAD WITH ARROW	1						1				10.00	×	GREEN	IV	WHITE	IV		×	50	
8.76	FEBT		G8-22 (CA)	90" x 30"	6" x 6"	ORANGE BLOSSOM ROAD WITH ARROW		1					1		18.75			×	GREEN	IV	WHITE	IV		×	80	
8.83	FEBT	R5-1		36" x 36"	4" x 6"	DO NOT ENTER	2						2			18.00		×	RED	IX	WHITE	IX		×	100	
		R5-1a		36" x 24"		WRONG WAY										12.00		×	RED	IX	WHITE	IX		×		
	FSBT	R1-1										1														
	FSBT		G1-7(CA)									1														
8.84	FWBT	W4-1		36" x 36"	4" x 6"	MERGE	1						1			9.00		×	YELLOW	VII	BLACK			×	50	
8.86	FSBT		G1-7 (CA)	54" x 24"	4" x 6"	JAMESTOWN 29 WITH ARROW LEFT OAKDALE 4 WITH ARROW RIGHT	1	1					1				9.00	×	GREEN	IV	WHITE	IV		×	50	
		R1-1		36" x 36"	4" x 6"	STOP	1						1			9.00		×	RED	IX	WHITE	IX		×	50	
		W3-1		48" x 48"	6" x 6"	STOP AHEAD	1						1				16.00	×	YELLOW	VII	BLACK			×	50	
8.99	FWBT		G8-22(CA)	90" x 30"	4" x 6"	ORANGE BLOSSOM ROAD WITH ARROW		1					1		18.75			×	GREEN	IV	WHITE	IV		×	80	
9.13	FEBT	W2-1		48" x 48"	6" x 6"	CROSS ROAD			1		1						16.00	×	YELLOW	VII	BLACK			×		ON FLASHING BEACON
9.15	FEBT		G7(CA)	48" x 30"	4" x 6"	WAMBLE ROAD	1						1				10.00	×	YELLOW	VII	BLACK			×	50	
TOTAL 2							20	5	1		1	2	20	61.25	37.50	75.50	151.00								1120	

SIGN QUANTITIES
SQ-2

REVISED BY	DATE REVISED
CN	12/31/13

CECILE NGUYEN — HUE NGUYEN — CALCULATED-DESIGNED BY — CHECKED BY
FUNCTIONAL SUPERVISOR — MOHAMMED QATAMI

STATE OF CALIFORNIA - DEPARTMENT OF TRANSPORTATION
Caltrans® TRAFFIC DESIGN

LAST REVISION 07-09-13 | DATE PLOTTED => 13-JAN-2014 | TIME PLOTTED => 12:57

Dist	COUNTY	ROUTE	POST MILES TOTAL PROJECT	SHEET No.	TOTAL SHEETS
10	Sta	120	6.1/11.3	21	54

REGISTERED CIVIL ENGINEER 1/6/14 DATE

01-06-14
PLANS APPROVAL DATE

REGISTERED PROFESSIONAL ENGINEER HUE NGUYEN No. 74484 Exp. 12/31/15 CIVIL STATE OF CALIFORNIA

THE STATE OF CALIFORNIA OR ITS OFFICERS OR AGENTS SHALL NOT BE RESPONSIBLE FOR THE ACCURACY OR COMPLETENESS OF SCANNED COPIES OF THIS PLAN SHEET.

NOTE:
EXACT SIGN LOCATIONS TO BE DETERMINED BY THE ENGINEER.

ROADSIDE SIGN ITEMS

POST MILE	DIRECTION	SIGN CODE FEDERAL	SIGN CODE CALIFORNIA	PANEL SIGN	POST SIZE	SIGN MESSAGE	ROADSIDE SIGN - ONE POST (EA)	ROADSIDE SIGN - TWO POST (EA)	INSTALL SIGN (STRAP AND SADDLE BRACKET METHOD) (EA)	REMOVE ROADSIDE SIGN MOUNTED ON MAST ARM (EA)	REMOVE RdSIDE SIGN (STRAP & SADDLE BRACKET METHOD) (EA)	RESET ROADSIDE SIGN (EA)	REMOVE ROADSIDE SIGN (EA)	FURNISH SINGLE SHEET ALUMINUM SIGN (SQFT) FRAMED 0.063"	FRAMED 0.080"	UNFRAMED 0.063"	UNFRAMED 0.080"		SIGN MATERIAL BACKGROUND SHEETING COLOR	BACKGROUND RETRO-REFLECTIVE ASTM TYPE	LEGEND SHEETING COLOR	LEGEND RETRO-REFLECTIVE ASTM TYPE	GRAFFITI FILM STANDARD	GRAFFITI FILM PREMIUM	TREATED WOOD WASTE (LB)	REMARKS
9.17	FEBT		G94-1(CA)	24" x 24"	4" x 4"	CONVENTIONAL AIRPORT	1						1			4.00		×	GREEN	IV	WHITE	IV		×	50	
			G33-1(CA)	24" x 6"		DIRECTION ARROW AUXILIARY										1.00		×	GREEN	IV	WHITE	IV				
9.24	FSBT	W3-1		36" x 36"	4" x 6"	STOP AHEAD SYMBOL	1						1			9.00		×	YELLOW	VII	BLACK/RED			×	50	
		R1-1		30" x 30"	4" x 4"	STOP	1						1			6.25			RED	IX	WHITE	IX		×	50	
9.24	FNBT	R1-1		30" x 30"	4" x 4"	STOP	1						1			6.25		×	RED	IX	WHITE	IX		×	50	
		W3-1		36" x 36"	4" x 6"	STOP AHEAD SYMBOL	1						1			9.00		×	YELLOW	VII	BLACK/RED			×	50	
9.33	FWBT		G94-1(CA)	24" x 24"	4" x 4"	CONVENTIONAL AIRPORT	1						1			4.00		×	GREEN	IV	WHITE	IV		×	50	
			G33-1(CA)	24" x 6"		DIRECTION ARROW AUXILIARY										1.00			GREEN	IV	WHITE	IV				
9.35	FWBT		G7(CA)	48" x 30"	4" x 6"	WAMBLE ROAD	1						1				10.00	×	YELLOW	VII	BLACK			×	50	
9.36	FWBT	W2-1		48" x 48"	6" x 6"	CROSS ROAD			1		1						16.00	×	YELLOW	VII	BLACK			×		
9.95	FWBT	W6-3		48" x 48"	6" x 6"	TWO WAY TRAFFIC (SYMBOL)	1						1				16.00	×	YELLOW	VII	BLACK			×	50	
10.07	FEBT	R5-1		36" x 36"	4" x 6"	DO NOT ENTER	1						1			9.00		×	RED	IX	WHITE	IX		×	50	ON WESTBOUND SIDE
		R5-1a		36" x 24"		WRONG WAY										6.00			RED	IX	WHITE	IX				
		R4-7		36" x 48"	4" x 6"	KEEP RIGHT (SYMBOL)	1						1			12.00		×	WHITE	III	BLACK			×	50	IN MEDIAN
			TYPE N(CA)	18" x 18"		OBJECT MARKER TYPE N										2.25			YELLOW	VII	BLACK					
		R5-1		36" x 36"	4" x 6"	DO NOT ENTER	1						1			9.00		×	RED	IX	WHITE	IX		×	50	
		R5-1a		36" x 24"		WRONG WAY										6.00			RED	IX	WHITE	IX				
11.06	FWBT	R5-1		36" x 36"	4" x 6"	DO NOT ENTER	1						1			9.00		×	RED	IX	WHITE	IX		×	50	ON EASTBOUND SIDE
		R5-1a		36" x 24"		WRONG WAY										6.00		×	RED	IX	WHITE	IX				
11.07	FWBT	R4-7		36" x 48"	4" x 6"	KEEP RIGHT (SYMBOL)	1						1			12.00		×	WHITE	III	BLACK			×	50	IN MEDIAN
			TYPE N(CA)	18" x 18"		OBJECT MARKER TYPE N										2.25			YELLOW	VII	BLACK					
10.41	FWBT		W75(CA)			LANE ENDS MERGE RIGHT							1												50	ON EASTBOUND SIDE
		W9-1		36" x 36"	4" x 6"	LEFT LANE ENDS	1									9.00		×	YELLOW	VII	BLACK			×		
			W75(CA)			LANE ENDS MERGE RIGHT							1												50	
		W9-1		36" x 36"	4" x 6"	LEFT LANE ENDS	1									9.00		×	YELLOW	VII	BLACK			×		
10.25	FWBT	W4-2 R4-1				LANE ENDS (SYMBOL) DO NOT PASS							1												50	IN MEDIAN
10.29	FWBT	W4-2		48" x 48"	6" x 6"	LANE ENDS (SYMBOL)	1										16.00	×	YELLOW	VII	BLACK			×		
		W4-2 R4-1				LANE ENDS (SYMBOL) DO NOT PASS							1												50	
10.25	FWBT	W4-2		48" x 48"	6" x 6"	LANE ENDS (SYMBOL)	1										16.00	×	YELLOW	VII	BLACK			×		
TOTAL 3							17	1	1		1		17			132.00	74.00								850	

SIGN QUANTITIES
SQ-3

STATE OF CALIFORNIA - DEPARTMENT OF TRANSPORTATION
Caltrans® TRAFFIC DESIGN

FUNCTIONAL SUPERVISOR: MOHAMMED QATAMI
CALCULATED-DESIGNED BY: CECILE NGUYEN
CHECKED BY: HUE NGUYEN
REVISED BY: CN
DATE REVISED: 12/31/13

LAST REVISION 12-09-13
DATE PLOTTED => 13-JAN-2014
TIME PLOTTED => 12:57

Dist	COUNTY	ROUTE	POST MILES TOTAL PROJECT	SHEET No.	TOTAL SHEETS
10	Sta	120	6.1/11.3	22	54

REGISTERED CIVIL ENGINEER 1/6/14 DATE

01-06-14
PLANS APPROVAL DATE

REGISTERED PROFESSIONAL ENGINEER HUE NGUYEN No. 74484 Exp. 12/31/15 CIVIL STATE OF CALIFORNIA

THE STATE OF CALIFORNIA OR ITS OFFICERS OR AGENTS SHALL NOT BE RESPONSIBLE FOR THE ACCURACY OR COMPLETENESS OF SCANNED COPIES OF THIS PLAN SHEET.

NOTE:
EXACT SIGN LOCATIONS TO BE DETERMINED BY THE ENGINEER.

ROADSIDE SIGN ITEMS

POST MILE	DIRECTION	SIGN CODE FEDERAL	SIGN CODE CALIFORNIA	PANEL SIGN	POST SIZE	SIGN MESSAGE	ROADSIDE SIGN - ONE POST	ROADSIDE SIGN - TWO POST	INSTALL SIGN (STRAP AND SADDLE BRACKET METHOD)	REMOVE SIGN FROM ELECTROLIER	REMOVE ROADSIDE SIGN MOUNTED ON MAST ARM	REMOVE RdSIDE SIGN (STRAP & SADDLE BRACKET METHOD)	RESET ROADSIDE SIGN	REMOVE ROADSIDE SIGN	FURNISH SINGLE SHEET ALUMINUM SIGN FRAMED 0.063"	FURNISH SINGLE SHEET ALUMINUM SIGN FRAMED 0.080"	FURNISH SINGLE SHEET ALUMINUM SIGN UNFRAMED 0.063"	FURNISH SINGLE SHEET ALUMINUM SIGN UNFRAMED 0.080"	SINGLE FACED	SIGN MATERIAL BACKGROUND SHEETING COLOR	SIGN MATERIAL BACKGROUND RETRO-REFLECTIVE ASTM TYPE	SIGN MATERIAL LEGEND SHEETING COLOR	SIGN MATERIAL LEGEND RETRO-REFLECTIVE ASTM TYPE	SIGN MATERIAL GRAFFITI FILM STANDARD	SIGN MATERIAL GRAFFITI FILM PREMIUM	TREATED WOOD WASTE	REMARKS
							EA	EA	EA	EA	EA	EA	EA	EA	SQFT											LB	
10.25	FWBT	R4-1		36" x 48"		DO NOT PASS	1										12.00		×	WHITE	III	BLACK			×		IN MEDIAN
		R4-1		36" x 48"		DO NOT PASS	1										12.00		×	WHITE	III	BLACK			×		APPLY MTUCD FOR STRIPPING
10.81	FEBT		W75(CA)			LANE ENDS MERGE RIGHT								2												160	ON WESTBOUND SIDE
		W9-1		36" x 36"	4" x 6"	LEFT LANE ENDS	2										18.00		×	YELLOW	VII	BLACK			×		ON WESTBOUND SIDE
10.97	FEBT	W4-2 R4-1				LANE ENDS (SYMBOL) DO NOT PASS								1												50	ON WESTBOUND SIDE
10.93	FEBT	W4-2		48" x 48"	6" x 6"	LANE ENDS (SYMBOL)	1											16.00	×	YELLOW	VII	BLACK			×		
10.97	FEBT	W4-2 R4-1				LANE ENDS (SYMBOL) DO NOT PASS								1												50	
10.93	FEBT	W4-2		48" x 48"	6" x 6"	LANE ENDS (SYMBOL)	1											16.00	×	YELLOW	VII	BLACK					ON WESTBOUND SIDE
11.00	FEBT	R4-1		36" x 48"		DO NOT PASS	1										12.00		×	WHITE	III	BLACK			×		ON WESTBOUND SIDE
		R4-1		36" x 48"		DO NOT PASS	1										12.00		×	WHITE	III	BLACK			×		APPLY MTUCD FOR STRIPPING
11.26	FEBT	W6-3		48" x 48"	6" x 6"	TWO WAY TRAFFIC (SYMBOL)	1							1				16.00		YELLOW	VII	BLACK			×	50	
11.29	FEBT		G8-22(CA)	60" x 30"	4" x 6"	LANCASTER ROAD WITH ARROW		1						1	12.50				×	GREEN	IV	WHITE	IV		×	80	
11.50	FWBT		G8-22(CA)	60" x 30"	4" x 6"	LANCASTER ROAD WITH ARROW		1						1	12.50				×	GREEN	IV	WHITE	IV		×	80	
TOTAL THIS SHEET							9	2						7	25.00		66.00	48.00								470	
TOTAL 3							17	1	1			1		17			132.00	74.00								850	
TOTAL 2							20	5	1			1	2	20	61.25	37.50	75.50	151.00								1120	
TOTAL 1							12	4	1	1	2		1	16	73.00	24.50	131.22	39.50								920	
TOTAL							58	12	3	1	2	2	3	60	159.25	62.00	405.00	312.00								3360	

SIGN QUANTITIES
SQ-4

CALCULATED-DESIGNED BY CECILE NGUYEN
CHECKED BY HUE NGUYEN
REVISED BY CN
DATE REVISED 12/31/13
FUNCTIONAL SUPERVISOR MOHAMMED QATAMI

STATE OF CALIFORNIA - DEPARTMENT OF TRANSPORTATION
Caltrans® TRAFFIC DESIGN

LAST REVISION 12-09-13 | DATE PLOTTED => 13-JAN-2014 | TIME PLOTTED => 12:57

Dist	COUNTY	ROUTE	POST MILES TOTAL PROJECT	SHEET No.	TOTAL SHEETS
10	Sta	120	6.1/11.3	23	54

REGISTERED CIVIL ENGINEER 1/6/14 DATE

01-06-14
PLANS APPROVAL DATE

REGISTERED PROFESSIONAL ENGINEER Jes Padda No. 59153 Exp 6/30/15 CIVIL STATE OF CALIFORNIA

THE STATE OF CALIFORNIA OR ITS OFFICERS OR AGENTS SHALL NOT BE RESPONSIBLE FOR THE ACCURACY OR COMPLETENESS OF SCANNED COPIES OF THIS PLAN SHEET.

NOTES:

1. (N) - NOT A SEPARATE PAY ITEM, FOR INFORMATION ONLY.
2. * - QUANTITY FROM SHEET Q-2.
3. ** - QUANTITY AND LOCATION FROM SHEET SQ-2.
4. *** - QUANTITY ADDED ON Q-1.
5. **** - TOTAL INCLUDED ON ROADWAY ITEMS TABLE.

ABBREVIATIONS:

RHMA, SP-G - RUBBERIZED HOT MIX ASPHALT, SUPERPAVE (GAP-GRADED)
HMA, SP (TYPE A) - HOT MIX ASPHALT, SUPERPAVE (TYPE A)

COLD PLANE AC PAVEMENT

LOCATION		PM	SIDE	LENGTH	WIDTH	DEPTH	COLD PLANE AC Pvmt SQYD
BEGIN CONSTRUCTION (Rte 120)		6.10/6.27	Lt/Rt	870'	76'	0.25'	7347
SHOPPING CENTER ROAD		6.19	Lt	40'	50'	0.25'	223
Rte 120		6.26	Lt/Rt	50'	76'	0.20'	423
S STEARNS Rd		6.86	Rt	40'	40'	0.20'	178
N STEARNS Rd		6.90	Lt	32'	58'	0.20'	207
DEO GLORIA Dr		7.23	Lt	25'	45'	0.20'	125
ATLAS Rd		7.48	Lt	53'	43'	0.20'	254
DILLWOOD Rd		8.20	Lt	26'	52'	0.20'	151
ORANGE BLOSSOM Rd RAMP A		8.86	Lt	99'	48'	0.20'	528
ORANGE BLOSSOM Rd RAMP B		8.86	Lt	285'	22'	0.20'	697
Rte 120		8.81/8.88	Lt/Rt	378'	51'	0.20'	2142
WAMBLE Rd		9.24	Lt	60'	32'	0.20'	214
WAMBLE Rd		9.24	Rt	33'	34'	0.20'	125
END CONSTRUCTION (Rte 120)		11.30	Lt/Rt	50'	40'	0.20'	223
SUBTOTAL 1							12,837
PRIVATE DRIVEWAY	1	6.24	Lt	6'	43'	0.20'	29
	2	6.26	Rt	8'	35'	0.20'	32
	3	6.29	Rt	13'	30'	0.20'	44
	4	6.37	Lt	5'	62'	0.20'	35
	5	6.38	Lt	9'	31'	0.20'	31
	6	6.39	Rt	9'	69'	0.20'	69
	7	6.43	Rt	6'	20'	0.20'	14
	8	6.44	Lt	5'	83'	0.20'	47
	9	6.51	Lt	7'	43'	0.20'	34
	10	6.53	Lt	5'	50'	0.20'	28
	11	6.58	Lt	20'	48'	0.20'	107
	12	6.63	Rt	9'	39'	0.20'	39
	13	6.65	Lt	17'	30'	0.20'	57
	14	6.66	Rt	10'	30'	0.20'	34
	15	7.15	Rt	20'	41'	0.20'	92
	16	7.33	Rt	15'	22'	0.20'	37
	17	7.48	Rt	35'	38'	0.20'	148
	18	7.65	Lt	28'	28'	0.20'	88
	19	7.65	Rt	41'	34'	0.20'	155
	20	7.83	Rt	22'	26'	0.20'	64
	21	8.00	Rt	16'	47'	0.20'	84
	22	8.29	Lt	21'	29'	0.20'	68
	23	8.34	Rt	22'	29'	0.20'	71
	24	8.61	Lt	22'	35'	0.20'	86
	25	8.66	Rt	22'	29'	0.20'	71
	26	8.92	Rt	20'	40'	0.20'	89
	27	9.67	Rt	22'	33'	0.20'	81
	28	10.15	Rt	25'	40'	0.20'	112
	29	10.15	Lt	19'	38'	0.20'	81
	30	10.48	Lt	17'	29'	0.20'	55
	31	10.48	Rt	17'	38'	0.20'	72
SUBTOTAL 2							2054

TREATED WOOD WASTE

LOCATION PM	DESCRIPTION	LB
10.97	MBGR WOOD POST & WOOD BLOCK	900
**	SIGN POSTS	3360
TOTAL		4260

COLD PLANE AC PAVEMENT

LOCATION			PM	SIDE	LENGTH	WIDTH	DEPTH	COLD PLANE AC Pvmt SQYD
SHOULDER DRAINAGE	EASTBOUND	AC OVERSIDE DRAIN	6.93	Rt	13'	8'	0.20'	12
		AC OVERSIDE DRAIN	7.00	Rt	13'	8'	0.20'	12
		AC OVERSIDE DRAIN	7.71	Rt	13'	8'	0.20'	12
		PIPE DOWNDRAIN	7.79	Rt	13'	8'	0.20'	12
		DRAINAGE INLET	9.64	Rt	20'	12'	0.20'	27
		AC OVERSIDE DRAIN	10.53	Rt	13'	8'	0.20'	12
		AC OVERSIDE DRAIN	10.55	Rt	13'	8'	0.20'	12
		AC OVERSIDE DRAIN	10.62	Rt	13'	8'	0.20'	12
		DRAINAGE INLET	10.65	Rt	20'	12'	0.20'	27
		PIPE DOWNDRAIN	11.12	Rt	13'	8'	0.20'	12
		AC OVERSIDE DRAIN	11.30	Rt	13'	8'	0.20'	12
	WESTBOUND	PIPE DOWNDRAIN	7.80	Lt	13'	8'	0.20'	12
		PIPE DOWNDRAIN	8.90	Lt	13'	8'	0.20'	12
		AC OVERSIDE DRAIN	8.96	Lt	13'	8'	0.20'	12
		AC OVERSIDE DRAIN	9.37	Lt	13'	8'	0.20'	12
		AC OVERSIDE DRAIN	9.62	Lt	13'	8'	0.20'	12
		AC OVERSIDE DRAIN	9.88	Lt	13'	8'	0.20'	12
		AC OVERSIDE DRAIN	10.66	Lt	13'	8'	0.20'	12
		AC OVERSIDE DRAIN	11.00	Lt	13'	8'	0.20'	12
		AC OVERSIDE DRAIN	11.06	Lt	13'	8'	0.20'	12
		AC OVERSIDE DRAIN	11.23	Lt	13'	8'	0.20'	12
TRIANGULAR RAISED ISLAND			8.86	Lt	175'	61'	0.10'	594
SUBTOTAL 3								876
SUBTOTAL 2								2,054
SUBTOTAL 1								12,837
DIGOUTS								25,884 *
TOTAL								41,651

SUMMARY OF QUANTITIES

Q-1

STATE OF CALIFORNIA - DEPARTMENT OF TRANSPORTATION
Caltrans DESIGN
FUNCTIONAL SUPERVISOR MICHAEL HUTCHISON
CALCULATED-DESIGNED BY HERNANDO RAPOSAS
CHECKED BY JES PADDA
REVISED BY HR
DATE REVISED 12/31/13

LAST REVISION 00-00-00
DATE PLOTTED => 13-JAN-2014
TIME PLOTTED => 12:57

Dist	COUNTY	ROUTE	POST MILES TOTAL PROJECT	SHEET No.	TOTAL SHEETS
10	Sta	120	6.1/11.3	24	54

REGISTERED CIVIL ENGINEER 1/6/14 DATE

01-06-14
PLANS APPROVAL DATE

REGISTERED PROFESSIONAL ENGINEER Jes Padda No. 59153 Exp. 6/30/15 CIVIL STATE OF CALIFORNIA

THE STATE OF CALIFORNIA OR ITS OFFICERS OR AGENTS SHALL NOT BE RESPONSIBLE FOR THE ACCURACY OR COMPLETENESS OF SCANNED COPIES OF THIS PLAN SHEET.

DIGOUTS

LOCATION PM/PM	SIDE	LENGTH	WIDTH	DEPTH	COLD PLANE AC Pvmt SQYD	HMA, SP (TYPE A) TON
6.89 / 7.52	R†	3320′	12′	0.25′	4,427	738
6.89 / 7.52	L†	3320′	12′	0.25′	4,427	738
7.52 / 7.86	R†	1800′	12′	0.25′	2,400	400
7.52 / 7.86	L†	1800′	12′	0.25′	2,400	400
9.99 / 10.13	R†	730′	12′	0.25′	974	163
9.99 / 10.13	L†	730′	12′	0.25′	974	163
10.16 / 10.40	L†	1270′	12′	0.25′	1,694	283
10.16 / 10.70	R†	2850′	12′	0.25′	3,800	634
10.96 / 11.30	R†	1795′	12′	0.25′	2,394	399
10.96 / 11.30	L†	1795′	12′	0.25′	2,394	399
TOTAL					25,884 ***	4,317 ****

ACTUAL LOCATIONS AND DIMENSIONS OF DIGOUTS MAY VARY IN THE FIELD AND WILL BE DETERMINED BY THE ENGINEER.

ROADWAY ITEMS

LOCATION	PM/PM	HMA, SP (TYPE A) TON	RHMA, SP-G TON	TACK COAT TON	SHOULDER BACKING TON
SAFETY EDGE	6.27/11.30		94		
Misc AREA	6.93/11.30	49			
HMA DIKES	6.25/11.30	496			
DIGOUTS	6.27/11.30	4,317		12.5	
PUBLIC Rd/Dwy/DRAINAGE	6.10/11.30	39	670	2.3	
ROADWAY OVERLAY	6.10/11.30	1,286	21,249	51.4	1,136
TOTAL		6,187	22,013	66.2	1,136

SHOULDER RUMBLE STRIP (HMA, GROUND-IN INDENTATION)

PM/PM	SIDE	LOCATION	Sta
6.92 / 7.04	L†	SHOULDER	7
11.00 / 11.30	L†/R†	SHOULDER	22
		TOTAL	29

CONCRETE ITEMS

LOCATION	PM	DESCRIPTION	MINOR Conc (Misc Const) CY	REMOVE CONCRETE CY
1	6.18	NW CORNER OF ROUTE 120/SHOPPING CENTER Rd	33.5	33.5
2	6.20	NE CORNER OF ROUTE 120/SHOPPING CENTER Rd	0.6	0.6
		TOTAL	34.1	34.1

TEMPORARY CONCRETE WASHOUT

PM	SIDE	DESCRIPTION
6.18	L†	CONCRETE WASHOUT

PLACE HOT MIX ASPHALT (Misc AREA)

PM	SIDE	LOCATION	AREA SQYD	HMA, SP (TYPE A) TON
8.86	L†	RAISED ISLAND	594	40
6.93/11.30	L†/R†	AC OVERSIDE DRAINS	134	9
		TOTAL	728	49 ****

DIKE ITEMS

LOCATION PM/PM	SIDE	REMOVE AC DIKE LF	PLACE HMA DIKE (TYPE A) LF	PLACE HMA DIKE (TYPE E) LF	PLACE HMA DIKE (TYPE C)	HMA, SP (TYPE A) TON
6.25 / 6.28	R†	180		180		4.68
6.25 / 6.26	L†	40		40		1.04
6.28 / 6.32	L†	210		210		5.46
6.31 / 6.33	R†	110		110		2.86
6.87 / 6.93	L†	330		330		8.58
6.94 / 7.00	R†	320		320		8.32
7.69 / 7.88	L†	990		990		25.74
7.72 / 7.87	R†	800		800		20.80
8.65 / 8.84	L†	980		980		25.48
8.70 / 8.74	R†	200		200		5.20
8.86 / 9.00	L†	760		760		19.76
9.00 / 9.24	R†	1,290	1,150	140		34.69
9.00 / 9.24	L†	1,270	1,150	120		34.17
9.25 / 9.39	L†	760		760		19.76
9.44 / 9.64	L†	1,060	890	170		28.45
9.46 / 9.64	R†	960	760	200		25.72
9.69 / 9.82	L†	690		690		17.94
10.46 / 10.48	Med	230		230		5.98
10.48 / 10.96	L†	2,525	1,545	980		67.20
10.48 / 11.01	R†	2,810	2,125	660	25	74.73
10.96 / 11.21	L†	1,320		1,320		34.32
11.01 / 11.30	R†	955		955		24.83
TOTAL		18,790	7,620	11,145	25	495.71****

WOOD MULCH

PM	SIDE	TYPE	LOCATION	CY
7.00 / 11.30	L†/R†	WOOD CHIP	OVERSIDE DRAINS	1.7

DETECTABLE WARNING SURFACE

LOCATION	PM	DESCRIPTION	SQFT
1	6.18	NW CORNER OF ROUTE 120 / SHOPPING CENTER Rd	51.0
2	6.20	NE CORNER OF ROUTE 120 / SHOPPING CENTER Rd	19.5
		TOTAL	70.5

TEMPORARY DRAINAGE INLET PROTECTION

PM	SIDE	DESCRIPTION	EA
6.04	R†	SE CORNER OF R†e120/MAAG Rd	1
6.14	R†	0.09 MILE EAST OF MAAG Rd	1
6.14	L†	0.11 MILE EAST OF MAAG Rd	1
6.21	L†	0.17 MILE EAST OF MAAG Rd	1
6.24	L†	WEST OAKDALE SADDLE CLUB Dwy	1
6.59	L†	BUCKSWORTH WESTERN WEAR Dwy	1
7.48	L†	NW CORNER OF R†e 120/ATLAS Rd	1
8.86	L†	R†e 120/ORANGE BLOSSOM Rd	2
9.64	R†	0.40 MILE EAST OF WAMBLE Rd	1
10.17	Med	0.17 MILE EAST OF PM 10 MARKER	1
10.50	Med	0.50 MILE EAST OF PM 10 MARKER	1
10.61	R†	0.61 MILE EAST OF PM 10 MARKER	1
		TOTAL	13

ADJUST FRAME AND COVER TO GRADE

PM	SIDE	DESCRIPTION	EA
6.10-6.30	L†/R†	WATER VALVE	18
6.10-6.30	L†/R†	SEWER MANHOLE	3
6.10-6.30	L†/R†	DETECTOR	9
		TOTAL	30

GUARDRAIL ITEMS

PM	SIDE	REMOVE GR LF	MGS (WOOD POST) LF	END ANCHOR ASSEMBLY (TYPE SFT) EA	(N) BURIED POST ANCHOR EA	REMARKS
10.97	R†	75.0	75.0	1	1	TYPE 11C LAYOUT

SUMMARY OF QUANTITIES

Q-2

STATE OF CALIFORNIA - DEPARTMENT OF TRANSPORTATION
Caltrans® DESIGN
FUNCTIONAL SUPERVISOR MICHAEL HUTCHISON
CALCULATED-DESIGNED BY HERNANDO RAPOSAS CHECKED BY JES PADDA
REVISED BY HR DATE REVISED 12/31/13

LAST REVISION 00-00-00 DATE PLOTTED => 13-JAN-2014 TIME PLOTTED => 12:57

Dist	COUNTY	ROUTE	POST MILES TOTAL PROJECT	SHEET No.	TOTAL SHEETS
10	Sta	120	6.1/11.3	25	54

REGISTERED ELECTRICAL ENGINEER 1/6/14 DATE

01-06-14
PLANS APPROVAL DATE

REGISTERED PROFESSIONAL ENGINEER JASPAL SINGH No. 16657 Exp. 6/30/14 ELECTRICAL STATE OF CALIFORNIA

THE STATE OF CALIFORNIA OR ITS OFFICERS OR AGENTS SHALL NOT BE RESPONSIBLE FOR THE ACCURACY OR COMPLETENESS OF SCANNED COPIES OF THIS PLAN SHEET.

LEGEND:

1 AB Exist LOOP DETECTORS.

2 INTERCEPT Exist CONDUIT FOR LOOP TERMINATION.

3 TYPE I PEDESTRIAN BARRICADE.

4 AB Exist LOOP DETECTORS AND INSTALL AS SHOWN IN DETAIL B ON SHEET E-2.

NOTES: (FOR THIS SHEET ONLY)

1. LOOP DETECTORS IN THRU LANE MUST BE SPLICED IN PB AS SHOWN IN DETAIL A ON THIS SHEET.
2. Exist SIGNAL AND LIGHTING DETAILS NOT SHOWN.
3. FOR ACCURATE RIGHT OF WAY DATA, CONTACT RIGHT OF WAY ENGINEERING AT THE DISTRICT OFFICE.

ABBREVIATION:

PG&E - PACIFIC GAS AND ELECTRIC

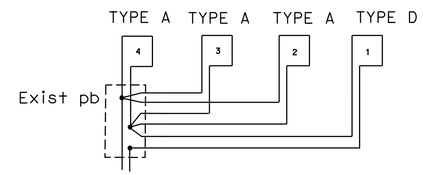

TYPICAL LOOP CONNECTIONS

DETAIL A

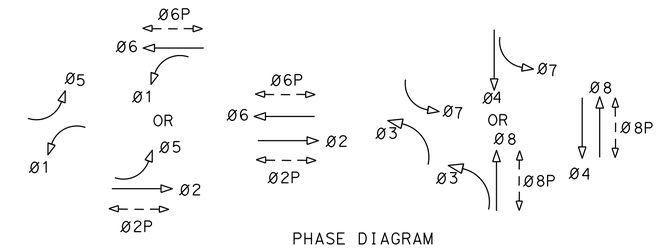

PHASE DIAGRAM
STEADY DEMAND SEQUENCE

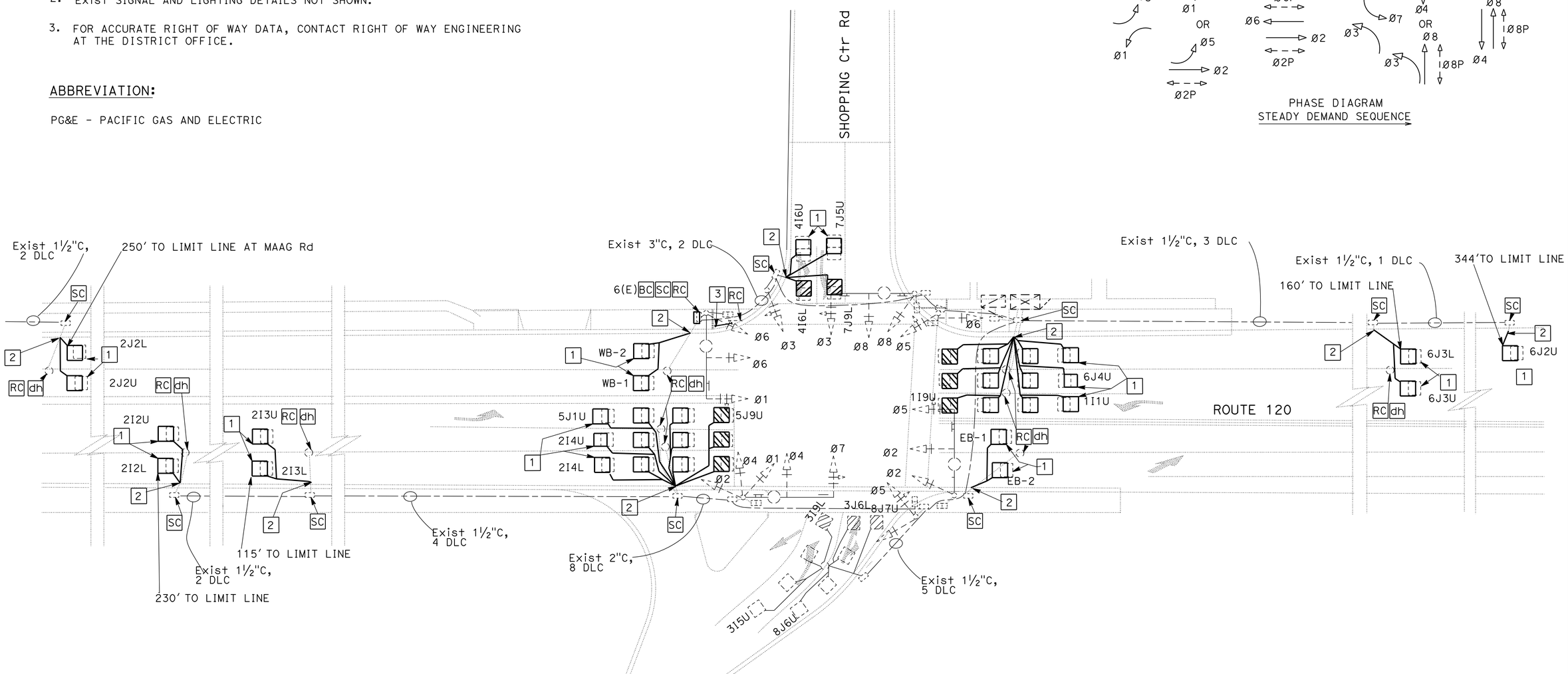

APPROVED FOR ELECTRICAL WORK ONLY

MODIFY SIGNAL

NO SCALE

E-1

STATE OF CALIFORNIA - DEPARTMENT OF TRANSPORTATION
Caltrans® **ELECTRICAL DESIGN**

FUNCTIONAL SUPERVISOR: ALI BAKHDOUD

CALCULATED-DESIGNED BY: JASPAL SINGH
CHECKED BY: FRED IYASERE

REVISED BY: JS
DATE REVISED: 12/13/13

LAST REVISION 12-13-13 | DATE PLOTTED => 13-JAN-2014 | TIME PLOTTED => 12:57

Dist	COUNTY	ROUTE	POST MILES TOTAL PROJECT	SHEET No.	TOTAL SHEETS
10	Sta	120	6.1/11.3	26	54

REGISTERED ELECTRICAL ENGINEER 1/6/14 DATE

01-06-14
PLANS APPROVAL DATE

REGISTERED PROFESSIONAL ENGINEER JASPAL SINGH No. 16657 Exp. 6/30/14 ELECTRICAL STATE OF CALIFORNIA

THE STATE OF CALIFORNIA OR ITS OFFICERS OR AGENTS SHALL NOT BE RESPONSIBLE FOR THE ACCURACY OR COMPLETENESS OF SCANNED COPIES OF THIS PLAN SHEET.

NOTE:

FOR ACCURATE RIGHT OF WAY DATA, CONTACT RIGHT OF WAY ENGINEERING AT THE DISTRICT OFFICE.

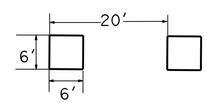

TYPICAL LOOP DETECTOR LAYOUT

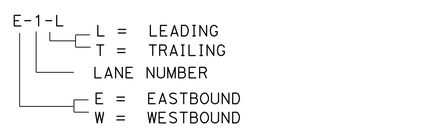

LOOP DETECTOR IDENTIFICATION

DETAIL B

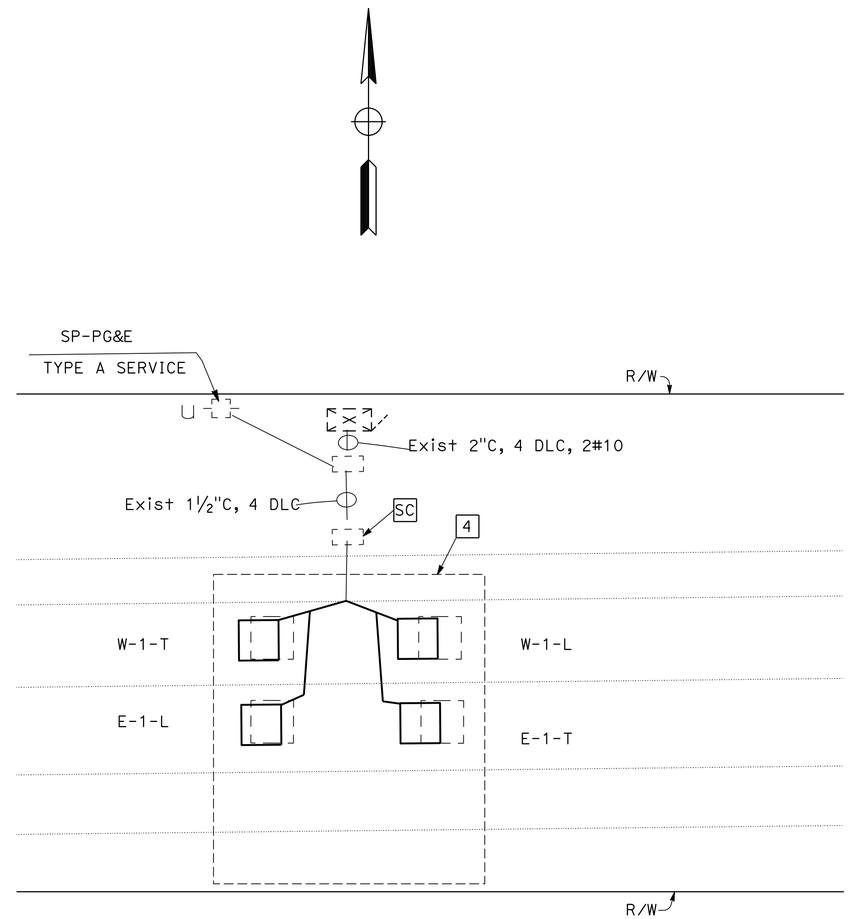

PM 7.30

APPROVED FOR ELECTRICAL WORK ONLY

MODIFY TRAFFIC MONITORING STATION

NO SCALE

E-2

STATE OF CALIFORNIA - DEPARTMENT OF TRANSPORTATION
Caltrans® **ELECTRICAL DESIGN**

FUNCTIONAL SUPERVISOR: ALI BAKHDOUD
CALCULATED-DESIGNED BY: JASPAL SINGH
CHECKED BY: FRED IYASERE
REVISED BY: JS
DATE REVISED: 12/13/13

LAST REVISION 12-13-13
DATE PLOTTED => 13-JAN-2014
TIME PLOTTED => 12:57

Dist	COUNTY	ROUTE	POST MILES TOTAL PROJECT	SHEET No.	TOTAL SHEETS
10	Sta	120	6.1/11.3	27	54

REGISTERED ELECTRICAL ENGINEER 1/6/14 DATE

01-06-14
PLANS APPROVAL DATE

REGISTERED PROFESSIONAL ENGINEER Jaspal Singh No. 16657 Exp. 6/30/14 ELECTRICAL STATE OF CALIFORNIA

THE STATE OF CALIFORNIA OR ITS OFFICERS OR AGENTS SHALL NOT BE RESPONSIBLE FOR THE ACCURACY OR COMPLETENESS OF SCANNED COPIES OF THIS PLAN SHEET.

NOTE:

THE QUANTITIES ON THIS SHEET ARE FOR INFORMATION ONLY AND ARE NOT SEPARATE PAY ITEMS.

MODIFY SIGNAL

SHEET No.	TYPE A INDUCTIVE LOOP DETECTOR	TYPE D INDUCTIVE LOOP DETECTOR
	EA	EA
E-1	31	8

MODIFY TRAFFIC MONITORING STATION

SHEET No.	TYPE A INDUCTIVE LOOP DETECTOR
	EA
E-2	4

ELECTRICAL QUANTITIES

E-3

STATE OF CALIFORNIA - DEPARTMENT OF TRANSPORTATION
Caltrans® ELECTRICAL DESIGN

FUNCTIONAL SUPERVISOR: ALI BAKHDOUD
CALCULATED-DESIGNED BY: JASPAL SINGH
CHECKED BY: FRED IYASERE
REVISED BY: JS
DATE REVISED: 12/31/13

LAST REVISION 9/13/13
DATE PLOTTED => 13-JAN-2014
TIME PLOTTED => 12:57

M

Maint	MAINTENANCE
Max	MAXIMUM
MB	METAL BEAM
MBB	METAL BEAM BARRIER
MBGR	METAL BEAM GUARD RAILING
Med	MEDIAN
MGS	MIDWEST GUARDRAIL SYSTEM
MH	MANHOLE
Min	MINIMUM
Misc	MISCELLANEOUS
Misc I & S	MISCELLANEOUS IRON AND STEEL
Mkr	MARKER
Mod	MODIFIED,
	MODIFY
Mon	MONUMENT
MP	METAL PLATE
MPGR	METAL PLATE GUARD RAILING
MR	MOVEMENT RATING
MSE	MECHANICALLY STABILIZED EMBANKMENT
Mt	MOUNTAIN, MOUNT
Mtl	MATERIAL
MVP	MAINTENANCE VEHICLE PULLOUT

N

N	NORTH
NB	NORTHBOUND
No.	NUMBER (MUST HAVE PERIOD)
Nos.	NUMBERS (MUST HAVE PERIOD)
NPS	NOMINAL PIPE SIZE
NS	NEAR SIDE
NSP	NEW STANDARD PLAN
NTS	NOT TO SCALE

O

Oblr	OBLITERATE
OC	OVERCROSSING
OD	OUTSIDE DIAMETER
OF	OUTSIDE FACE
OG	ORIGINAL GROUND
OGAC	OPEN GRADED ASPHALT CONCRETE
OGFC	OPEN GRADED FRICTION COURSE
OH	OVERHEAD
OHWM	ORDINARY HIGH WATER MARK
O-O	OUT TO OUT
Opp	OPPOSITE
OSD	OVERSIDE DRAIN

P

P	PAGE
PAP	PERFORATED ALUMINUM PIPE
PB	PULL BOX
PC	POINT OF CURVATURE,
	PRECAST
PCC	POINT OF COMPOUND CURVE,
	PORTLAND CEMENT CONCRETE
PCMS	PORTABLE CHANGEABLE MESSAGE SIGN
PCP	PERFORATED CONCRETE PIPE,
	PRESTRESSED CONCRETE PIPE
PCVC	POINT OF COMPOUND VERTICAL CURVE
PEC	PERMIT TO ENTER AND CONSTRUCT
Ped	PEDESTRIAN
Ped OC	PEDESTRIAN OVERCROSSING
Ped UC	PEDESTRIAN UNDERCROSSING
Perm Mtl	PERMEABLE MATERIAL

P continued

PG	PROFILE GRADE
PI	POINT OF INTERSECTION
PJP	PARTIAL JOINT PENETRATION
Pkwy	PARKWAY
ℙ,PL	PLATE
P/L	PROPERTY LINE
PM	POST MILE,
	TIME FROM NOON TO MIDNIGHT
PN	PAVING NOTCH
POC	POINT OF HORIZONTAL CURVE
POT	POINT OF TANGENT
POVC	POINT OF VERTICAL CURVE
PP	PIPE PILE,
	PLASTIC PIPE,
	POWER POLE
PPL	PREFORMED PERMEABLE LINER
PPP	PERFORATED PLASTIC PIPE
PRC	POINT OF REVERSE CURVE
PRF	PAVEMENT REINFORCING FABRIC
PRVC	POINT OF REVERSE VERTICAL CURVE
PS&E	PLANS, SPECIFICATIONS AND ESTIMATES
PS, P/S	PRESTRESSED
PSP	PERFORATED STEEL PIPE
PT	POINT OF TANGENCY
PVC	POLYVINYL CHLORIDE
Pvmt	PAVEMENT

Q

Qty	QUANTITY

R

R	RADIUS
R & D	REMOVE AND DISPOSE
R & S	REMOVE AND SALVAGE
R/C	RATE OF CHANGE
RCA	REINFORCED CONCRETE ARCH
RCB	REINFORCED CONCRETE BOX
RCP	REINFORCED CONCRETE PIPE
RCPA	REINFORCED CONCRETE PIPE ARCH
Rd	ROAD
Reinf	REINFORCED,
	REINFORCEMENT,
	REINFORCING
Rel	RELOCATE
Repl	REPLACEMENT
Ret	RETAINING
Rev	REVISED, REVISION
Rdwy	ROADWAY
RHMA	RUBBERIZED HOT MIX ASPHALT
Riv	RIVER
RM	ROAD-MIXED
RP	RADIUS POINT,
	REFERENCE POINT
RR	RAILROAD
RSP	ROCK SLOPE PROTECTION,
	REVISED STANDARD PLAN
Rt	RIGHT
Rte	ROUTE
RW	REDWOOD,
	RETAINING WALL
R/W	RIGHT OF WAY
Rwy	RAILWAY

S

S	SOUTH,
	SUPPLEMENT
SAE	STRUCTURE APPROACH EMBANKMENT
Salv	SALVAGE
SAPP	STRUCTURAL ALUMINUM PLATE PIPE
SB	SOUTHBOUND
SC	SAND CUSHION
SCSP	SLOTTED CORRUGATED STEEL PIPE
SD	STORM DRAIN
Sec	SECOND,
	SECTION
Sep	SEPARATION
SG	SUBGRADE
Shld	SHOULDER
Sht	SHEET
Sim	SIMILAR
℄	STATION LINE
SM	SELECTED MATERIAL
Spec	SPECIAL,
	SPECIFICATIONS
SPP	SLOTTED PLASTIC PIPE
SS	SLOPE STAKE
SSBM	STRAP AND SADDLE BRACKET METHOD
SSD	STRUCTURAL SECTION DRAIN
SSPA	STRUCTURAL STEEL PLATE ARCH
SSPP	STRUCTURAL STEEL PLATE PIPE
SSPPA	STRUCTURAL STEEL PLATE PIPE ARCH
SSRP	STEEL SPIRAL RIB PIPE
St	STREET
Sta	STATION
STBB	SINGLE THRIE BEAM BARRIER
Std	STANDARD
Str	STRUCTURE
Surf	SURFACING
SW	SIDEWALK,
	SOUND WALL
Swr	SEWER
Sym	SYMMETRICAL
S4S	SURFACE 4 SIDES

T

T	SEMI-TANGENT
Tan	TANGENT
TBB	THRIE BEAM BARRIER
Tbr	TIMBER
TC	TOP OF CURB
TCB	TRAFFIC CONTROL BOX
TCE	TEMPORARY CONSTRUCTION EASEMENT
Tel	TELEPHONE
Temp	TEMPORARY
TG	TOP OF GRADE
Tot	TOTAL
TP	TELEPHONE POLE
TPB	TREATED PERMEABLE BASE
TPM	TREATED PERMEABLE MATERIAL
Trans	TRANSITION

T continued

TS	TRANSVERSE,
	TRAFFIC SIGNAL,
	TUBULAR STEEL
Typ	TYPICAL

U

UC	UNDERCROSSING
UD	UNDERDRAIN
UG	UNDERGROUND
UON	UNLESS OTHERWISE NOTED
UP	UNDERPASS

V

V	VALVE,
	DESIGN SPEED
Var	VARIABLE,
	VARIES
VC	VERTICAL CURVE
VCP	VITRIFIED CLAY PIPE
Vert	VERTICAL
Via	VIADUCT
Vol	VOLUME

W

W	WEST,
	WIDTH
WB	WESTBOUND
WH	WEEP HOLE
WM	WIRE MESH
WS	WATER SURFACE
WSP	WELDED STEEL PIPE
Wt	WEIGHT
WV	WATER VALVE
WW	WINGWALL
WWLOL	WINGWALL LAYOUT LINE

X

X Sec	CROSS SECTION
Xing	CROSSING

Y

Yr	YEAR
Yrs	YEARS

Dist	COUNTY	ROUTE	POST MILES TOTAL PROJECT	SHEET No.	TOTAL SHEETS
10	Sta	120	6.1/11.3	28	54

Grace M. Tsushima
REGISTERED CIVIL ENGINEER

July 19, 2013
PLANS APPROVAL DATE

REGISTERED PROFESSIONAL ENGINEER
Grace M. Tsushima
No. C49814
Exp. 9-30-14
CIVIL
STATE OF CALIFORNIA

THE STATE OF CALIFORNIA OR ITS OFFICERS OR AGENTS SHALL NOT BE RESPONSIBLE FOR THE ACCURACY OR COMPLETENESS OF SCANNED COPIES OF THIS PLAN SHEET.

TO ACCOMPANY PLANS DATED 01-06-14

UNIT OF MEASUREMENT SYMBOLS:

Some of the symbols used in the project plan quantity tables and in the Bid Item List are:

TABLE A

SYMBOL USED	DEFINITIONS
ACRE	ACRE
CF	CUBIC FOOT
CY	CUBIC YARD
EA	EACH
GAL	GALLON
LB	POUND
LF	LINEAR FOOT
SQFT	SQUARE FOOT
SQYD	SQUARE YARD
STA	100 FEET
TAB	TABLET
TON	2,000 POUNDS

Some of the symbols used in the plans other than in the project plan quantity tables are:

TABLE B

SYMBOL USED	DEFINITIONS
ksi	KIPS PER SQUARE INCH
ksf	KIPS PER SQUARE FOOT
psi	POUNDS PER SQUARE INCH
psf	POUNDS PER SQUARE FOOT
lb/ft^3, pcf	POUNDS PER CUBIC FOOT
tsf	TONS PER SQUARE FOOT
mph, MPH *	MILES PER HOUR
ø	NOMINAL DIAMETER
oz	OUNCE
lb	POUND
kip	1,000 POUNDS
cal	CALORIE
ft	FOOT OR FEET
gal	GALLON

* For use on a sign panel only

STATE OF CALIFORNIA
DEPARTMENT OF TRANSPORTATION

ABBREVIATIONS (SHEET 2 OF 2)

NO SCALE

RSP A10B DATED JULY 19, 2013 SUPERSEDES STANDARD PLAN A10B DATED MAY 20, 2011 - PAGE 2 OF THE STANDARD PLANS BOOK DATED 2010.

REVISED STANDARD PLAN RSP A10B

2010 REVISED STANDARD PLAN RSP A10B

6-7-13

Dist	COUNTY	ROUTE	POST MILES TOTAL PROJECT	SHEET No.	TOTAL SHEETS
10	Sta	120	6.1/11.3	29	54

REGISTERED CIVIL ENGINEER

April 20, 2012
PLANS APPROVAL DATE

REGISTERED PROFESSIONAL ENGINEER
Roberta L. McLaughlin
No. C40375
Exp. 3-31-13
CIVIL
STATE OF CALIFORNIA

THE STATE OF CALIFORNIA OR ITS OFFICERS OR AGENTS SHALL NOT BE RESPONSIBLE FOR THE ACCURACY OR COMPLETENESS OF SCANNED COPIES OF THIS PLAN SHEET.

TO ACCOMPANY PLANS DATED 01-06-14

2010 REVISED STANDARD PLAN RSP A24A

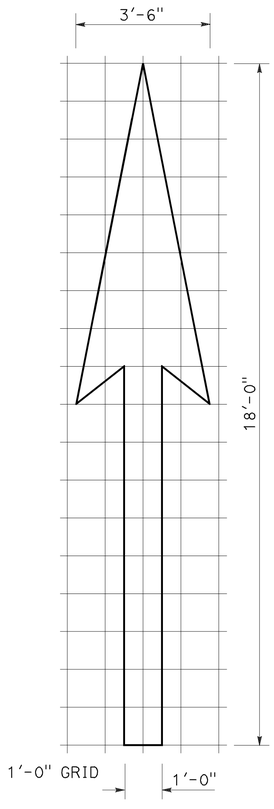

A=25 ft^2

TYPE I 18'-0" ARROW

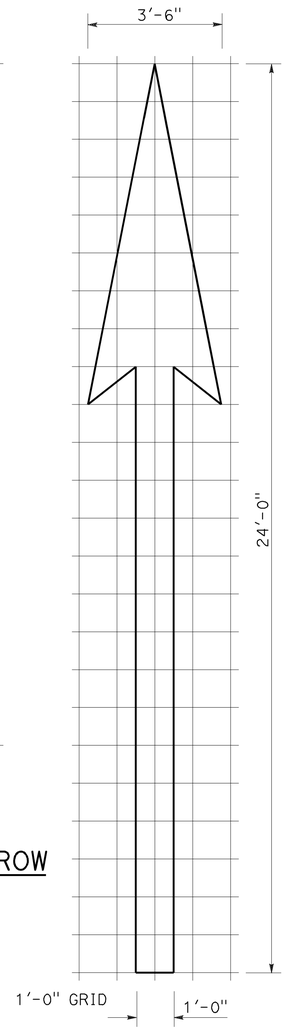

A=31 ft^2

TYPE I 24'-0" ARROW

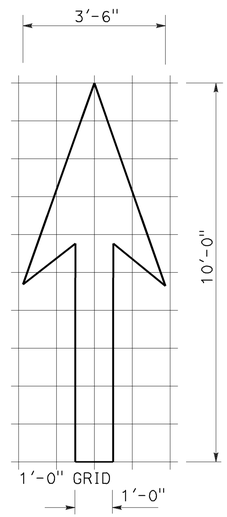

A=14 ft^2

TYPE I 10'-0" ARROW

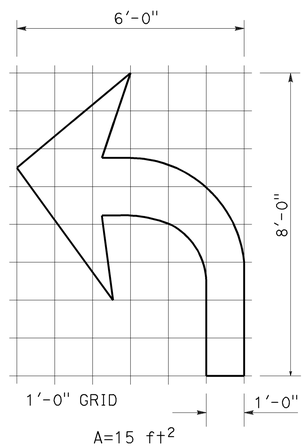

A=15 ft^2

TYPE IV (L) ARROW

(For Type IV (R) arrow, use mirror image)

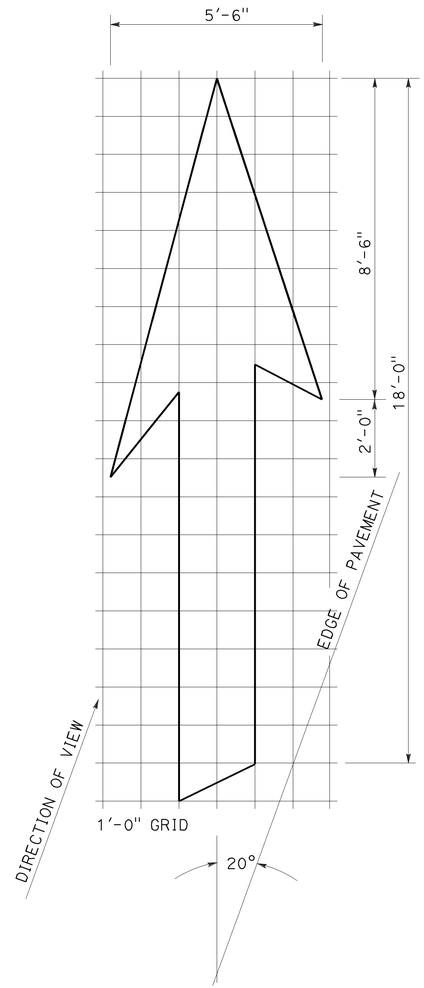

A=42 ft^2

TYPE VI ARROW

Right lane drop arrow
(For left lane, use mirror image)

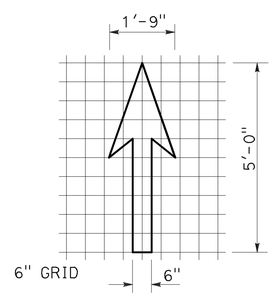

A=3.5 ft^2

BIKE LANE ARROW

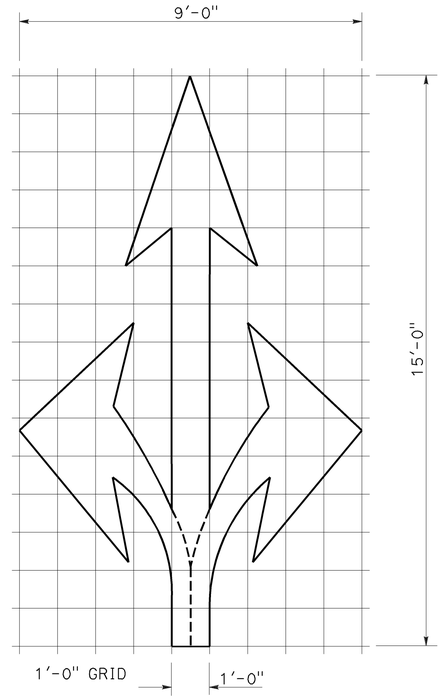

A=36 ft^2

TYPE VIII ARROW

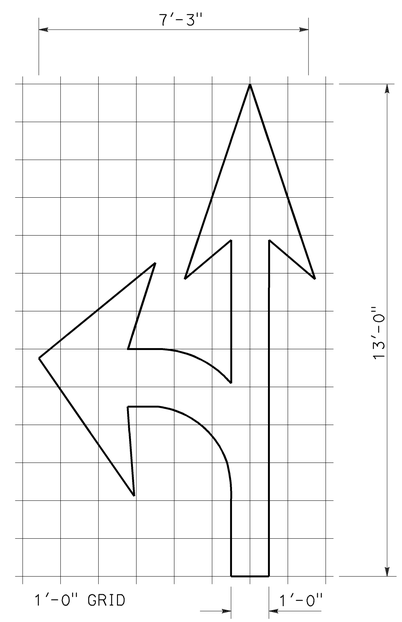

A=27 ft^2

TYPE VII (L) ARROW

(For Type VII (R) arrow, use mirror image)

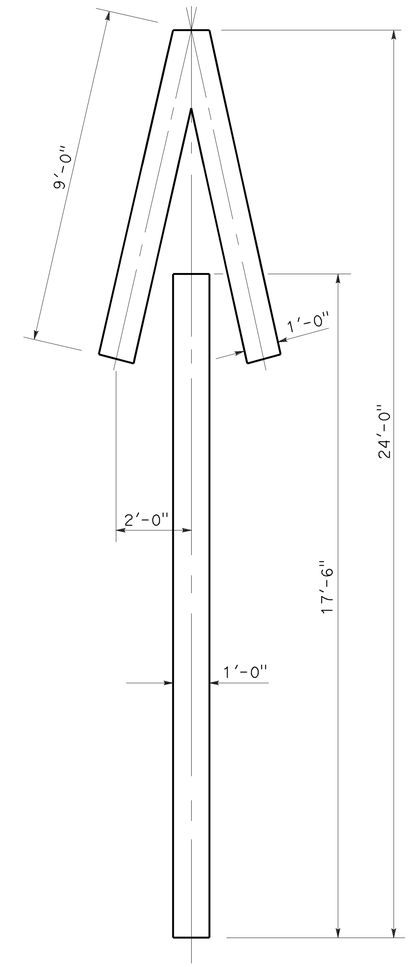

A=33 ft^2

TYPE V ARROW

NOTE:
Minor variations in dimensions may be accepted by the Engineer.

STATE OF CALIFORNIA
DEPARTMENT OF TRANSPORTATION

PAVEMENT MARKINGS ARROWS

NO SCALE

RSP A24A DATED APRIL 20, 2012 SUPERSEDES STANDARD PLAN A24A DATED MAY 20, 2011 - PAGE 13 OF THE STANDARD PLANS BOOK DATED 2010.

REVISED STANDARD PLAN RSP A24A

3-14-12

Dist	COUNTY	ROUTE	POST MILES TOTAL PROJECT	SHEET No.	TOTAL SHEETS
10	Sta	120	6.1/11.3	30	54

REGISTERED CIVIL ENGINEER

July 20, 2012
PLANS APPROVAL DATE

REGISTERED PROFESSIONAL ENGINEER
Roberta L. McLaughlin
No. C40375
Exp. 3-31-13
CIVIL
STATE OF CALIFORNIA

THE STATE OF CALIFORNIA OR ITS OFFICERS OR AGENTS SHALL NOT BE RESPONSIBLE FOR THE ACCURACY OR COMPLETENESS OF SCANNED COPIES OF THIS PLAN SHEET.

TO ACCOMPANY PLANS DATED 01-06-14

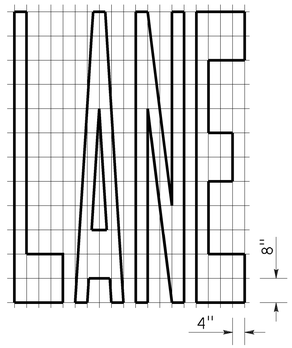

A=24 ft^2

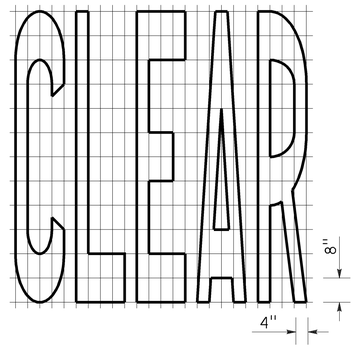

A=27 ft^2

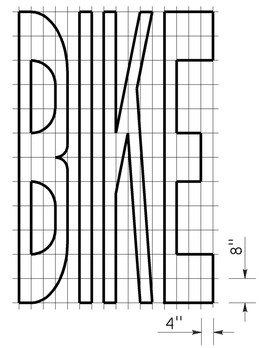

A=21 ft^2

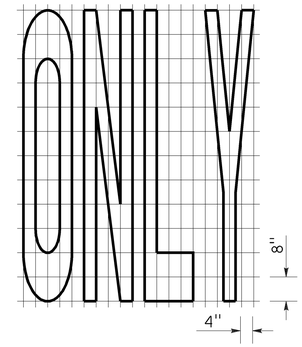

A=22 ft^2

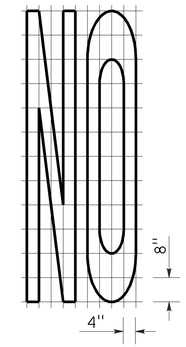

A=14 ft^2

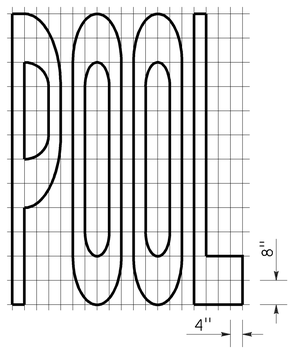

A=23 ft^2

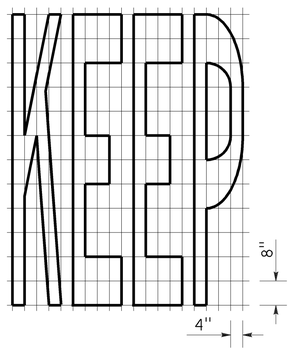

A=24 ft^2

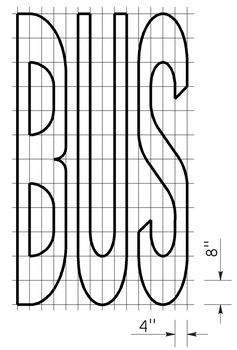

A=20 ft^2

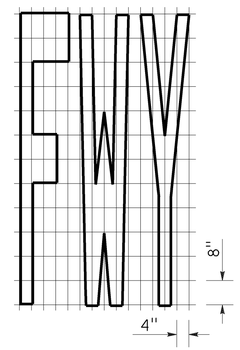

A=16 ft^2

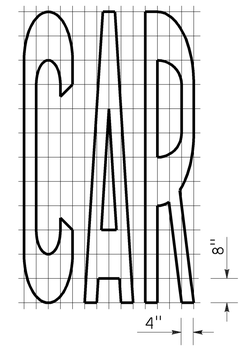

A=17 ft^2

WORD MARKINGS			
ITEM	ft^2	ITEM	ft^2
LANE	24	NO	14
POOL	23	BIKE	21
CAR	17	BUS	20
CLEAR	27	ONLY	22
KEEP	24	FWY	16

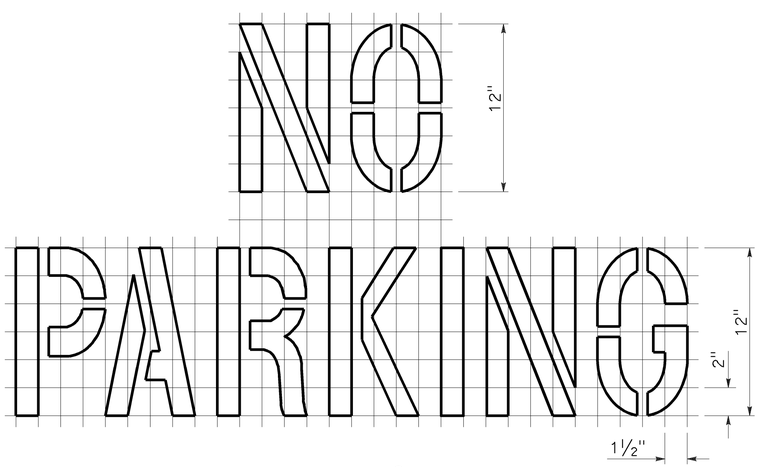

A=2 ft^2
See Notes 6 and 7

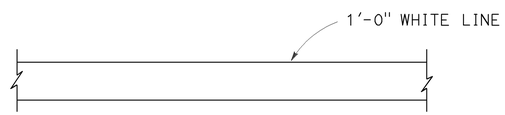

LIMIT LINE (STOP LINE)

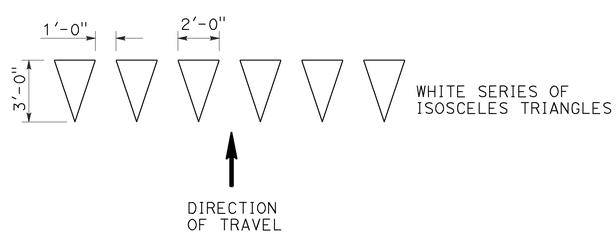

YIELD LINE

NOTES:

1. If a message consists of more than one word, it should read "UP", i.e., the first word should be nearest the driver.
2. The space between words should be at least four times the height of the characters for low speed roads, but not more than ten times the height of the characters. The space may be reduced appropriately where there is limited space because of local conditions.
3. Minor variations in dimensions may be accepted by the Engineer.
4. Portions of a letter, number or symbol may be separated by connecting segments not to exceed 2" in width.
5. The words "NO PARKING" pavement marking is to be used for parking facilities. For typical locations of markings, see Standard Plans A90A and A90B.
6. The words "NO PARKING", shall be painted in white letters no less than 1'-0" high on a contrasting background and located so that it is visible to traffic enforcement officials.

STATE OF CALIFORNIA
DEPARTMENT OF TRANSPORTATION

PAVEMENT MARKINGS WORDS, LIMIT AND YIELD LINES

NO SCALE

RSP A24E DATED JULY 20, 2012 SUPERSEDES STANDARD PLAN A24E
DATED MAY 20, 2011 - PAGE 17 OF THE STANDARD PLANS BOOK DATED 2010.

REVISED STANDARD PLAN RSP A24E

2010 REVISED STANDARD PLAN RSP A24E

6-12-12

Dist	COUNTY	ROUTE	POST MILES TOTAL PROJECT	SHEET No.	TOTAL SHEETS
10	Sta	120	6.1/11.3	31	54

REGISTERED CIVIL ENGINEER

July 20, 2012
PLANS APPROVAL DATE

REGISTERED PROFESSIONAL ENGINEER
Roberta L. McLaughlin
No. C40375
Exp. 3-31-13
CIVIL
STATE OF CALIFORNIA

THE STATE OF CALIFORNIA OR ITS OFFICERS OR AGENTS SHALL NOT BE RESPONSIBLE FOR THE ACCURACY OR COMPLETENESS OF SCANNED COPIES OF THIS PLAN SHEET.

TO ACCOMPANY PLANS DATED 01-06-14

2010 REVISED STANDARD PLAN RSP A24F

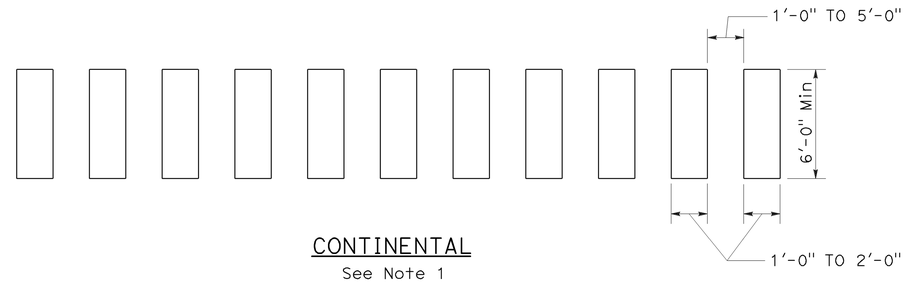

CONTINENTAL
See Note 1

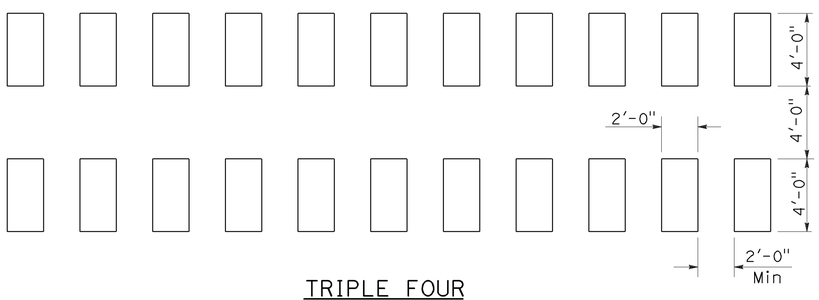

TRIPLE FOUR
See Note 1

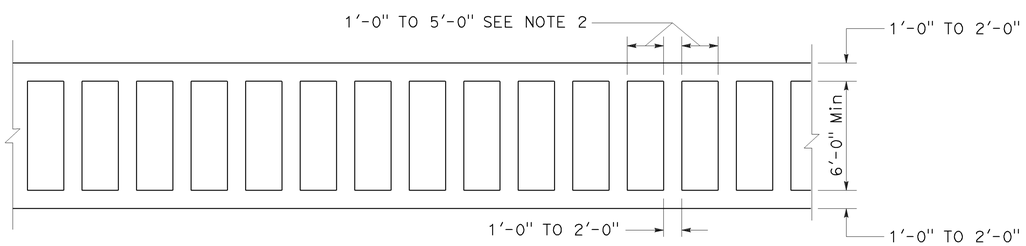

LADDER

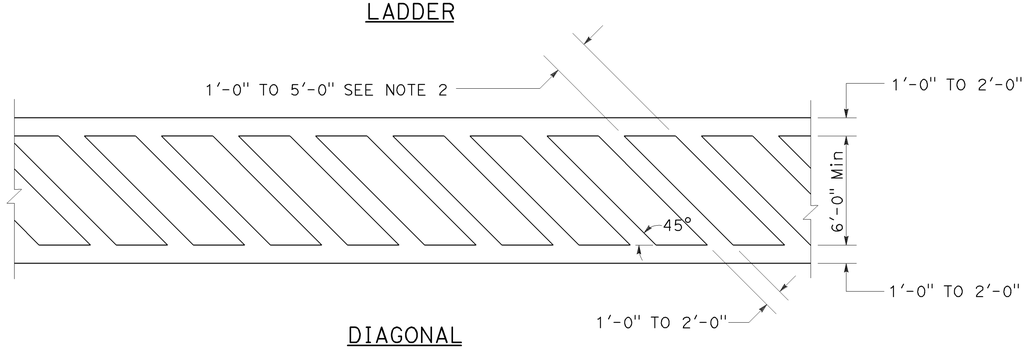

DIAGONAL

HIGHER VISIBILITY CROSSWALKS

NOTES:

1. Spaces between markings should be placed in wheel tracks of each lane.
2. Spacings not to exceed 2.5 times width of longitudinal line.
3. All crosswalk markings must be white except for those near schools must be yellow.

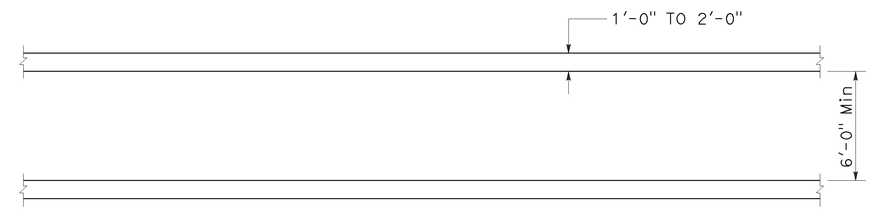

BASIC

STATE OF CALIFORNIA
DEPARTMENT OF TRANSPORTATION

PAVEMENT MARKINGS CROSSWALKS

NO SCALE

RSP A24F DATED JULY 20, 2012 SUPPLEMENTS THE STANDARD PLANS BOOK DATED 2010.

REVISED STANDARD PLAN RSP A24F

Dist	COUNTY	ROUTE	POST MILES TOTAL PROJECT	SHEET No.	TOTAL SHEETS
10	Sta	120	6.1/11.3	32	54

Randell D. Hiatt
REGISTERED CIVIL ENGINEER

July 19, 2013
PLANS APPROVAL DATE

REGISTERED PROFESSIONAL ENGINEER
Randell D. Hiatt
No. C50200
Exp. 6-30-15
CIVIL
STATE OF CALIFORNIA

THE STATE OF CALIFORNIA OR ITS OFFICERS OR AGENTS SHALL NOT BE RESPONSIBLE FOR THE ACCURACY OR COMPLETENESS OF SCANNED COPIES OF THIS PLAN SHEET.

TO ACCOMPANY PLANS DATED 01-06-14

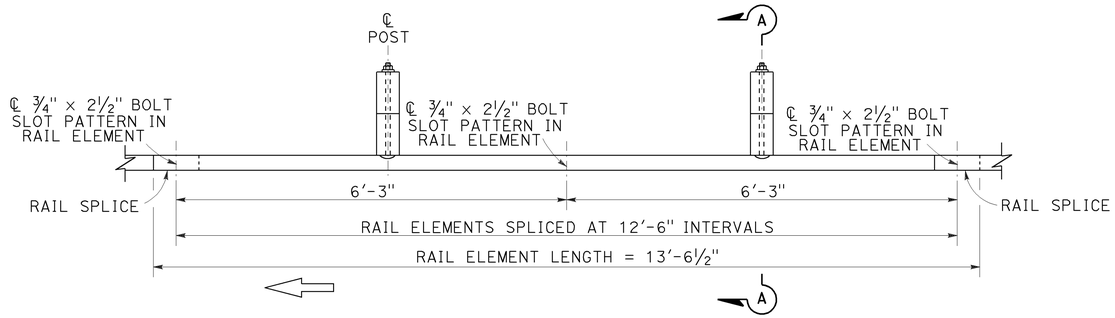

PLAN

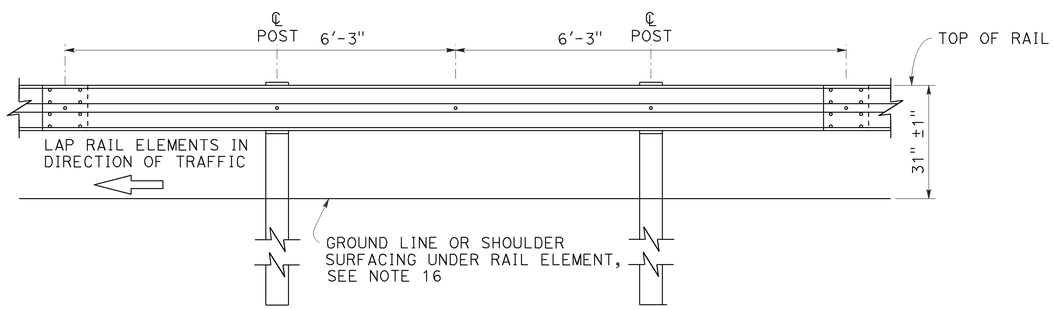

ELEVATION

MIDWEST GUARDRAIL SYSTEM WITH WOOD POST AND BLOCKS

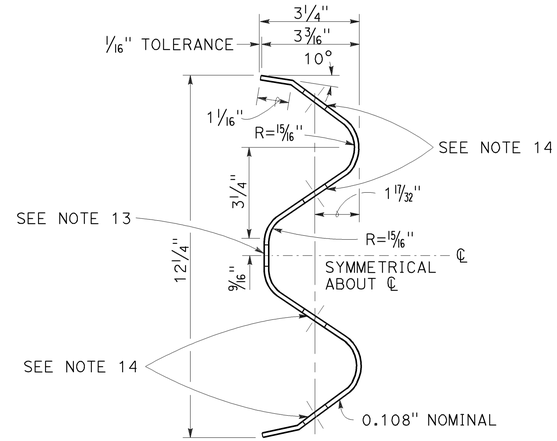

SECTION THRU RAIL ELEMENT

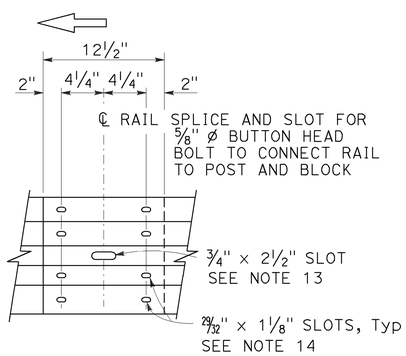

ELEVATION

RAIL ELEMENT SPLICE DETAIL

a) Connect the over lapped end of the rail elements with ⅝" ø × 1⅜" button head oval shoulder splice bolts inserted into the 29⁄32" × 1⅛" slots and bolted together with ⅝" ø recessed hex nuts. Recess of hex nut points toward rail element. A total of 8 bolts and nuts are to be used at each rail splice connection.

b) The ends of the rail elements are to be overlapped in the direction of traffic (see details).

c) Where end cap is to be attached to the end of a rail element, a total of 4 of the above described splice bolts and nuts are to be used.

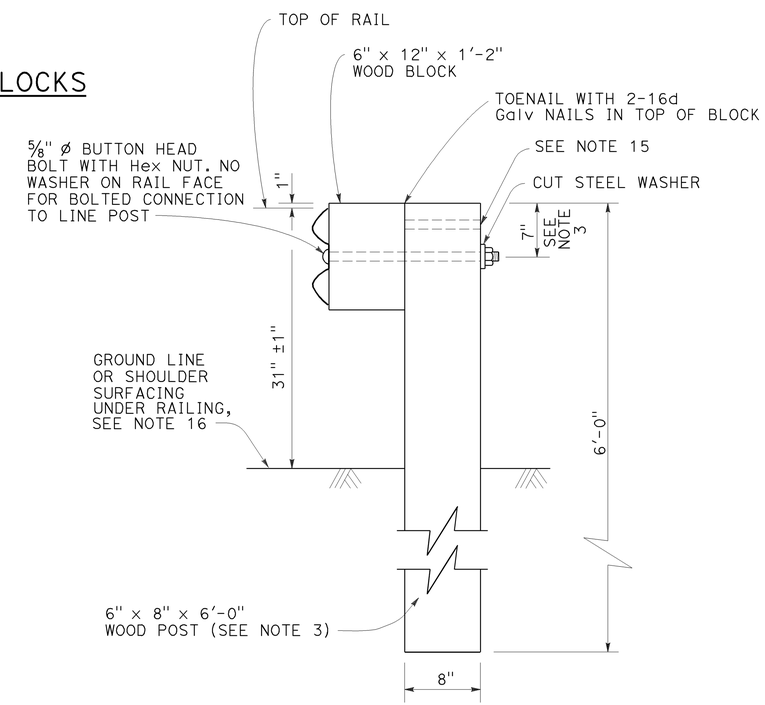

SECTION A-A

TYPICAL WOOD LINE POST INSTALLATION

See Note 4

NOTES:

1. For details of steel post installations, see Revised Standard Plan RSP A77L2.
2. For details of standard hardware used to construct MGS, see Revised Standard Plan RSP A77M1.
3. For details of wood posts and wood blocks used to construct MGS, see Revised Standard Plan RSP A77N1.
4. For additional installation details, see Revised Standard Plan RSP A77N3.
5. MGS post spacing to be 6'-3" center to center, except as otherwise noted.
6. For MGS typical layouts, see the A77P, A77Q and A77R Series of Standard Plans.
7. If railing is connected to terminal system end treatment, use 31" height terminal system end treatment.
8. For MGS end anchor details, see Revised Standard Plans RSP A77S1 and RSP A77T2.
9. For details of MGS transition to bridge railing, see Revised Standard Plan RSP A77U4.
10. For additional details of MSG connection to bridge railing, see Revised Standard Plans RSP A77U1, RSP A77U2 and RSP A77V1.
11. For MGS connection details to abutments and walls, see Revised Standard Plan RSP A77U3.
12. For typical MGS delineation and dike positioning details, see Revised Standard Plan RSP A77N4.
13. Slotted hole for bolted connection of rail element to block and post. See "Section Thru Rail Element".
14. Slotted holes for splice bolts to overlap ends of rail element. See "Section Thru Rail Element".
15. Additional hole in uppermost portion of line post is for potential future adjustments of railing height. See Revised Standard Plan RSP A77N1.
16. Install posts in soil.

STATE OF CALIFORNIA
DEPARTMENT OF TRANSPORTATION

MIDWEST GUARDRAIL SYSTEM STANDARD RAILING SECTION (WOOD POST WITH WOOD BLOCK)

NO SCALE

RSP A77L1 DATED JULY 19, 2013 SUPPLEMENTS STANDARD PLANS BOOK DATED 2010.

REVISED STANDARD PLAN RSP A77L1

2010 REVISED STANDARD PLAN RSP A77L1

7-3-13

Dist	COUNTY	ROUTE	POST MILES TOTAL PROJECT	SHEET No.	TOTAL SHEETS
10	Sta	120	6.1/11.3	33	54

Randell D. Hiatt
REGISTERED CIVIL ENGINEER

July 19, 2013
PLANS APPROVAL DATE

REGISTERED PROFESSIONAL ENGINEER
Randell D. Hiatt
No. C50200
Exp. 6-30-15
CIVIL
STATE OF CALIFORNIA

THE STATE OF CALIFORNIA OR ITS OFFICERS OR AGENTS SHALL NOT BE RESPONSIBLE FOR THE ACCURACY OR COMPLETENESS OF SCANNED COPIES OF THIS PLAN SHEET.

TO ACCOMPANY PLANS DATED 01-06-14

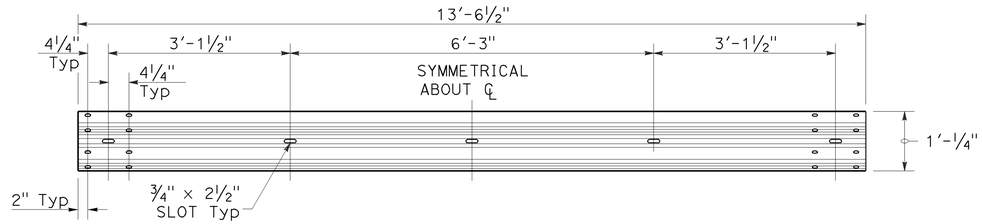

TYPICAL RAIL ELEMENT

NOTE:

1. Slotted holes for splice bolts to overlap ends of rail element.

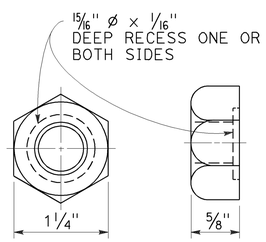

⅝" ø RECESS NUT

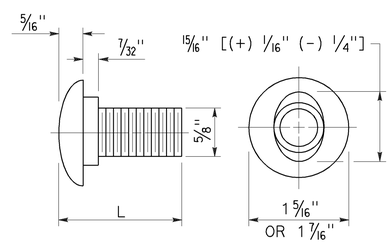

⅝" ø BUTTON HEAD BOLT

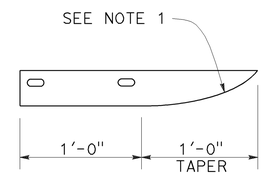

PLAN

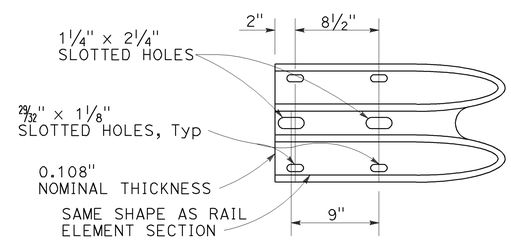

ELEVATION

END CAP
(TYPE A)

BUTTON HEAD BOLT

L	THREAD LENGTH
1⅜"	FULL THREAD LENGTH
2"	FULL THREAD LENGTH
10"	4" Min THREAD LENGTH
18"	4" Min THREAD LENGTH
20"	4" Min THREAD LENGTH
22"	4" Min THREAD LENGTH
26"	4" Min THREAD LENGTH
36"	4" Min THREAD LENGTH
** 2¾"	2" Min THREAD LENGTH
** 19"	4" Min THREAD LENGTH

** For nested rail applications.

STATE OF CALIFORNIA
DEPARTMENT OF TRANSPORTATION

MIDWEST GUARDRAIL SYSTEM STANDARD HARDWARE

NO SCALE

RSP A77M1 DATED JULY 19, 2013 SUPPLEMENTS THE STANDARD PLANS BOOK DATED 2010.

REVISED STANDARD PLAN RSP A77M1

2010 REVISED STANDARD PLAN RSP A77M1

7-3-13

Dist	COUNTY	ROUTE	POST MILES TOTAL PROJECT	SHEET No.	TOTAL SHEETS
10	Sta	120	6.1/11.3	34	54

Randell D. Hiatt
REGISTERED CIVIL ENGINEER

July 19, 2013
PLANS APPROVAL DATE

REGISTERED PROFESSIONAL ENGINEER
Randell D. Hiatt
No. C50200
Exp. 6-30-15
CIVIL
STATE OF CALIFORNIA

THE STATE OF CALIFORNIA OR ITS OFFICERS OR AGENTS SHALL NOT BE RESPONSIBLE FOR THE ACCURACY OR COMPLETENESS OF SCANNED COPIES OF THIS PLAN SHEET.

TO ACCOMPANY PLANS DATED 01-06-14

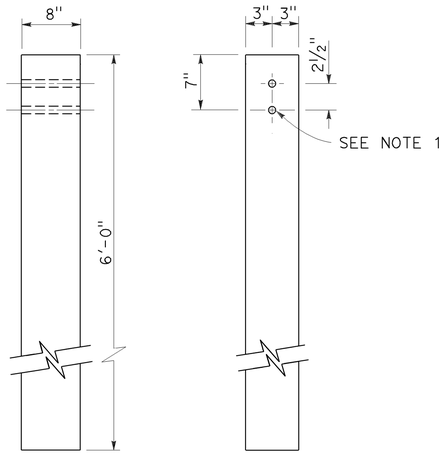

SIDE FRONT

6" x 8" WOOD POST
See Note 3

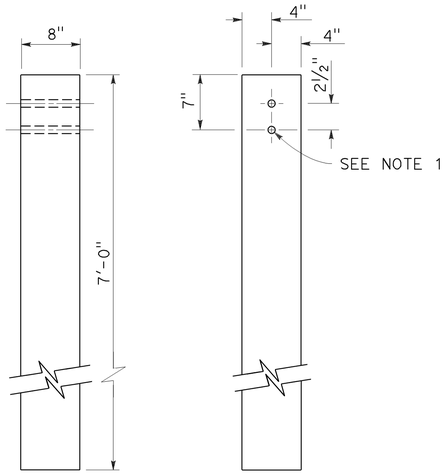

SIDE FRONT

8" x 8" WOOD POST
See Note 4

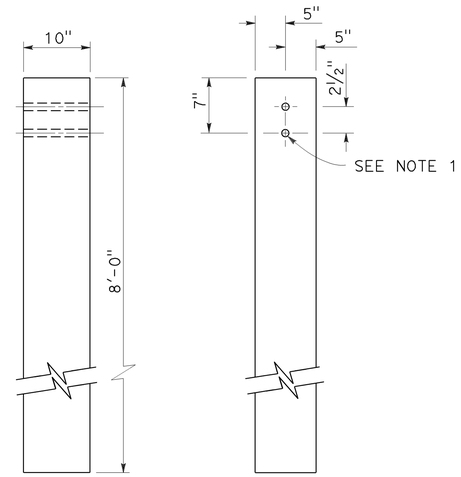

SIDE FRONT

10" x 10" WOOD POST
See Note 5

NOTES:

1. All holes in wood posts and blocks shall be ¾" Dia ± 1/16".
2. Dimensions shown for wood post are nominal.
3. This post and block combination used for standard line post sections of MGS.
4. This post and 8" x 12" block combination used for line post sections of MGS on narrow roadways.
5. This post and 8" x 12" block combination is typically used where strengthened line post sections of MGS are warranted to shield fixed objects.
6. See Revised Standard Plan RSP A77L3 for use of 6" x 8" and 8" x 8" wood blocks.

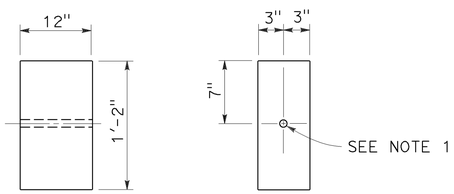

SIDE FRONT

6" x 12" WOOD BLOCK
See Note 3

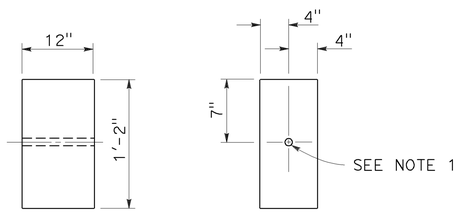

SIDE FRONT

8" x 12" WOOD BLOCK

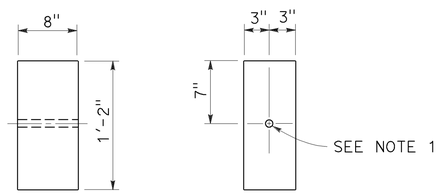

SIDE FRONT

6" x 8" WOOD BLOCK
Only for use with metal beam guard rail see Note 6

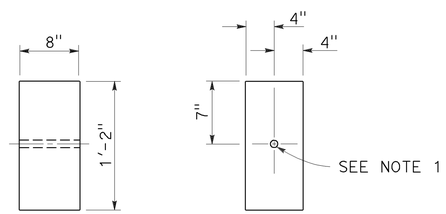

SIDE FRONT

8" x 8" WOOD BLOCK
Only for use with metal beam guard rail see Note 6

STATE OF CALIFORNIA
DEPARTMENT OF TRANSPORTATION

MIDWEST GUARDRAIL SYSTEM WOOD POST AND WOOD BLOCK DETAILS

NO SCALE

RSP A77N1 DATED JULY 19, 2013 SUPPLEMENTS THE STANDARD PLANS BOOK DATED 2010.

REVISED STANDARD PLAN RSP A77N1

2010 REVISED STANDARD PLAN RSP A77N1

7-3-13

Dist	COUNTY	ROUTE	POST MILES TOTAL PROJECT	SHEET No.	TOTAL SHEETS
10	Sta	120	6.1/11.3	35	54

Randell D. Hiatt
REGISTERED CIVIL ENGINEER

November 15, 2013
PLANS APPROVAL DATE

REGISTERED PROFESSIONAL ENGINEER
Randell D. Hiatt
No. C50200
Exp. 6-30-15
CIVIL
STATE OF CALIFORNIA

THE STATE OF CALIFORNIA OR ITS OFFICERS OR AGENTS SHALL NOT BE RESPONSIBLE FOR THE ACCURACY OR COMPLETENESS OF SCANNED COPIES OF THIS PLAN SHEET.

TO ACCOMPANY PLANS DATED 01-06-14

2010 REVISED STANDARD PLAN RSP A77N3

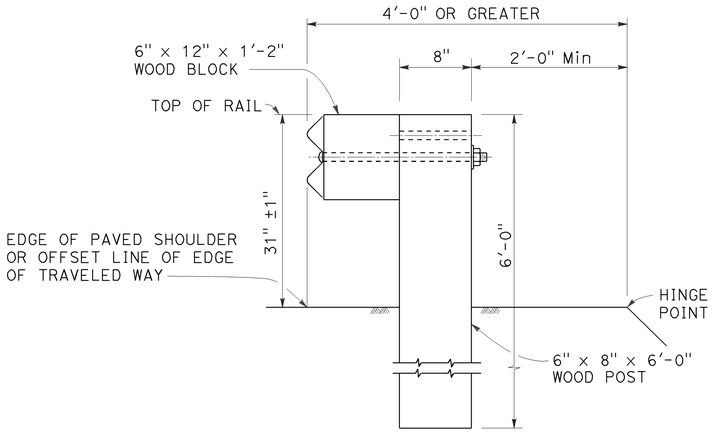

DETAIL A

TYPICAL ROADWAY INSTALLATION

See Note 1

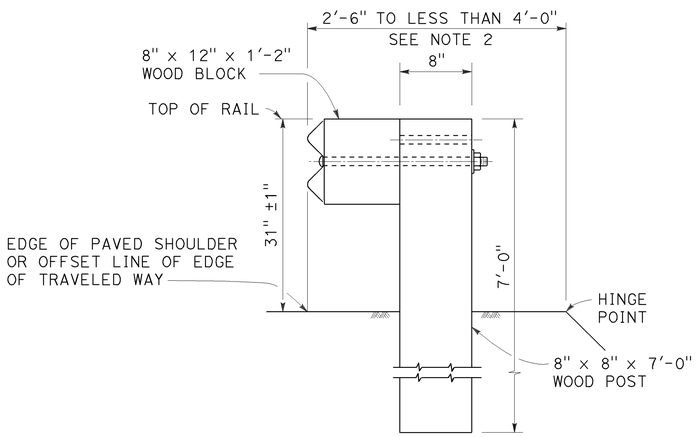

DETAIL B

NARROW ROADWAY INSTALLATION

See Note 1

POST EMBEDMENT

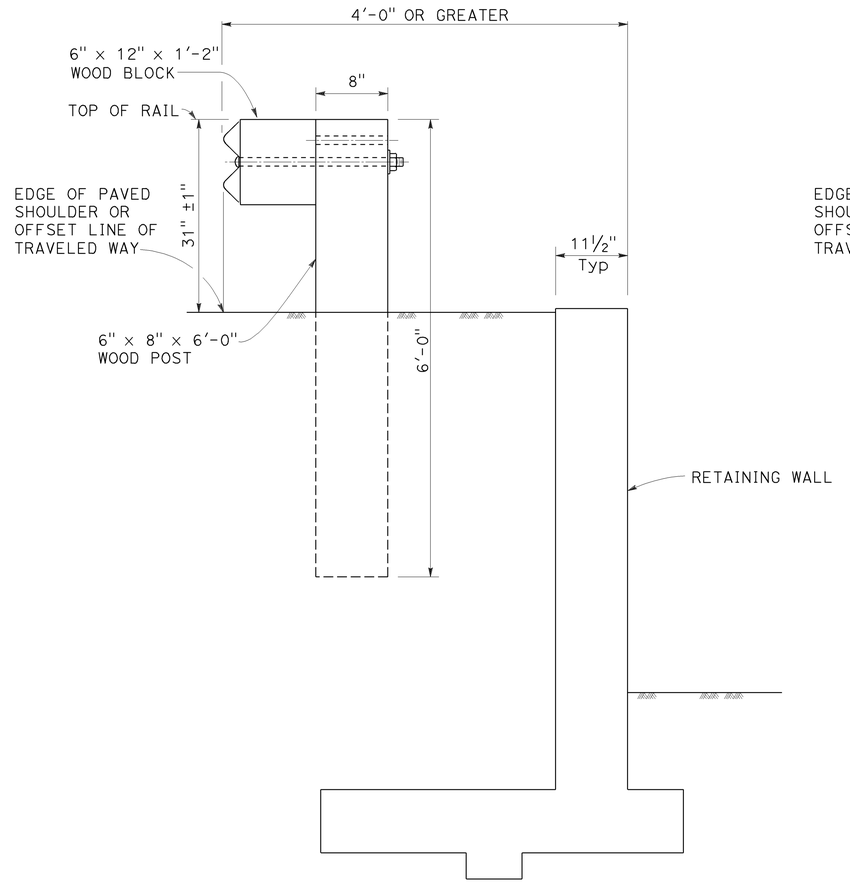

DETAIL C

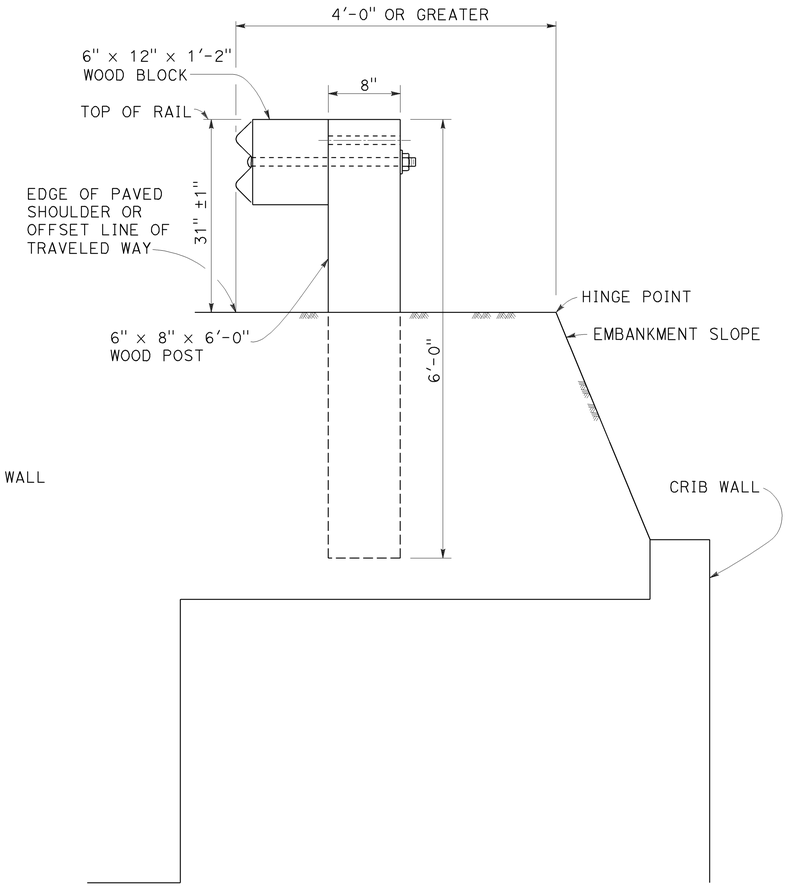

DETAIL D

INSTALLATION AT EARTH RETAINING WALLS

NOTES:

1. These installation details also applicable to steel line post installations. For Detail A, C, and D, where steel line post installations are constructed, W6 x 8.5 or W6 x 9 steel post, 6'-0" in length, with 6" x 12" x 1'-2" notched wood blocks or notched recycled plastic blocks are to be used in place of the size of wood post and wood block shown. For Detail B, where steel line post installations are constructed, W6 x 15 steel post, 8'-0" in length, with 8" x 12" x 1'-2" notched wood blocks or notched recycled plastic blocks are to be used in place of the size of wood post and wood block shown. For additional installation details, see Revised Standard Plan RSP A77L1 and RSP A77L2.
2. Where the distance between the face of the rail and the hinge point is less than 2'-6", see the Project Plans for special details.
3. For dike positioning with MGS installations, see Revised Standard Plan RSP A77N4.

STATE OF CALIFORNIA
DEPARTMENT OF TRANSPORTATION

MIDWEST GUARDRAIL SYSTEM TYPICAL LINE POST EMBEDMENT AND HINGE POINT OFFSET DETAILS

NO SCALE

RSP A77N3 DATED NOVEMBER 15, 2013 SUPERSEDES RSP A77N3
DATED JULY 19, 2013 THAT SUPPLEMENTS THE STANDARD PLANS BOOK DATED 2010.

REVISED STANDARD PLAN RSP A77N3

10-29-13

Dist	COUNTY	ROUTE	POST MILES TOTAL PROJECT	SHEET No.	TOTAL SHEETS
10	Sta	120	6.1/11.3	36	54

Randell D. Hiatt
REGISTERED CIVIL ENGINEER

July 19, 2013
PLANS APPROVAL DATE

REGISTERED PROFESSIONAL ENGINEER
Randell D. Hiatt
No. C50200
Exp. 6-30-15
CIVIL
STATE OF CALIFORNIA

THE STATE OF CALIFORNIA OR ITS OFFICERS OR AGENTS SHALL NOT BE RESPONSIBLE FOR THE ACCURACY OR COMPLETENESS OF SCANNED COPIES OF THIS PLAN SHEET.

TO ACCOMPANY PLANS DATED 01-06-14

NOTES:

1. When necessary to place dike more than 7" in front of face of MGS, only Type C dike may be used. For dike details, see Revised Standard Plan RSP A87B.
2. For standard railing post embedment, see Revised Standard Plan RSP A77N3.
3. MGS delineation to be used where shown on the Project Plans.
4. When dike or curb is placed under MGS, the maximum height of the dike or curb shall be 6". Mountable dike should not be used. For dike and curb details, see Revised Standard Plans RSP A87A and RSP A87B.
5. For details of typical distance between the face of rail and hinge point, see Revised Standard Plan RSP A77N3.
6. For steel line posts, use 1/4 - 20 self-tapping screws in 0.22" diameter holes or 1/4" bolts in 9/32" diameter holes.

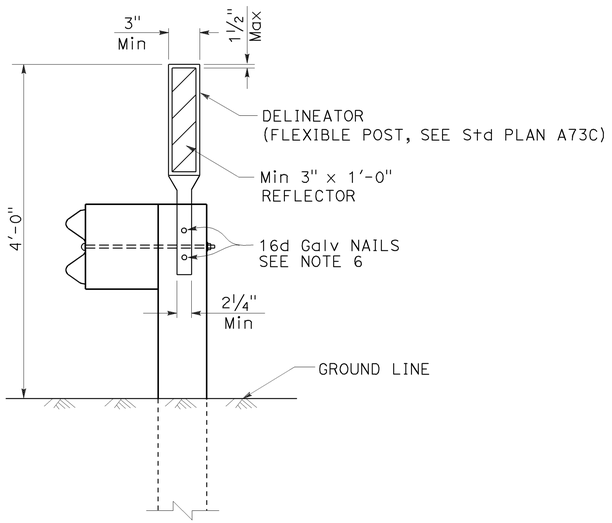

MGS DELINEATION

See Note 3

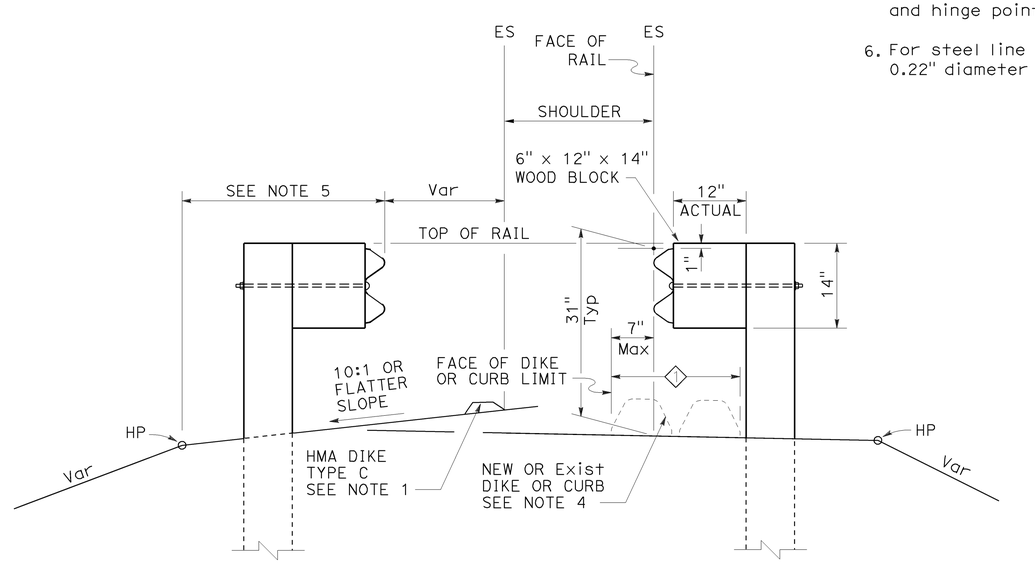

DIKE POSITIONING

See Note 1

1 PERMISSIBLE DIKE OR CURB PLACEMENT AREA

STATE OF CALIFORNIA
DEPARTMENT OF TRANSPORTATION

MIDWEST GUARDRAIL SYSTEM TYPICAL RAILING DELINEATION AND DIKE POSITIONING DETAILS

NO SCALE

RSP A77N4 DATED JULY 19, 2013 SUPPLEMENTS THE STANDARD PLANS BOOK DATED 2010.

REVISED STANDARD PLAN RSP A77N4

2010 REVISED STANDARD PLAN RSP A77N4

7-10-13

Dist	COUNTY	ROUTE	POST MILES TOTAL PROJECT	SHEET No.	TOTAL SHEETS
10	Sta	120	6.1/11.3	37	54

Randell D. Hiatt
REGISTERED CIVIL ENGINEER

November 15, 2013
PLANS APPROVAL DATE

REGISTERED PROFESSIONAL ENGINEER
Randell D. Hiatt
No. C50200
Exp. 6-30-15
CIVIL
STATE OF CALIFORNIA

THE STATE OF CALIFORNIA OR ITS OFFICERS OR AGENTS SHALL NOT BE RESPONSIBLE FOR THE ACCURACY OR COMPLETENESS OF SCANNED COPIES OF THIS PLAN SHEET.

TO ACCOMPANY PLANS DATED 01-06-14

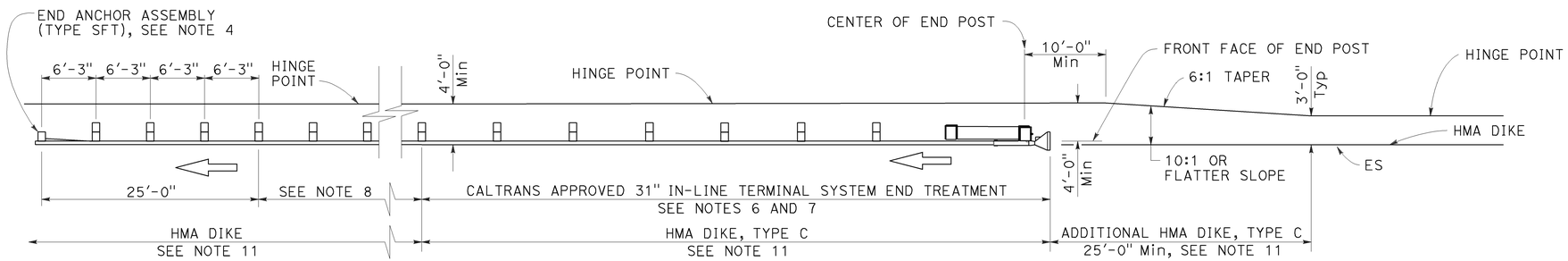

TYPE 11A LAYOUT

(Embankment MGS installation with 31" in-line end treatment at traffic approach end of railing) see Note 5

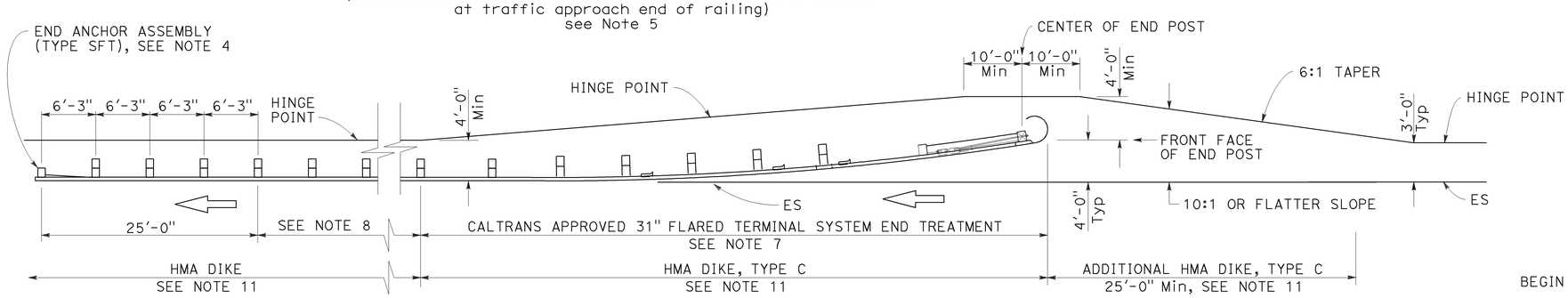

TYPE 11B LAYOUT

(Embankment MGS installation with 31" flared end treatment at traffic approach end of railing) see Note 5

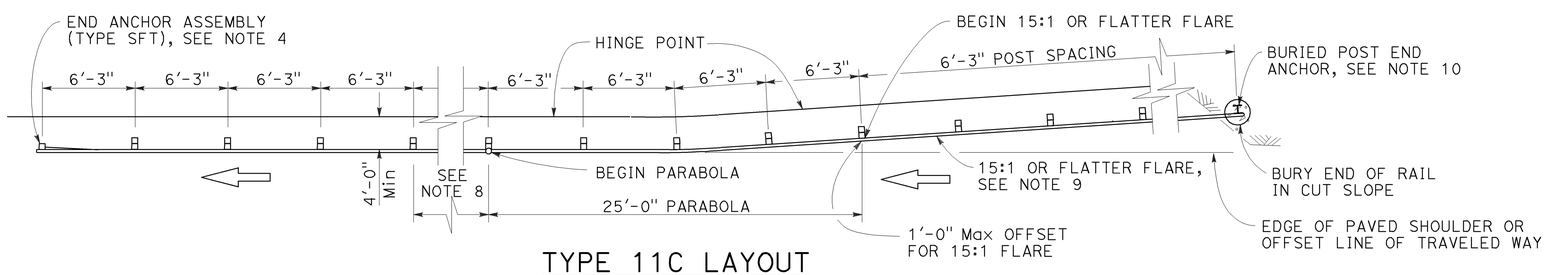

TYPE 11C LAYOUT

(Embankment MGS installation with buried end anchor treatment at traffic approach end of railing) see Notes 5 and 11

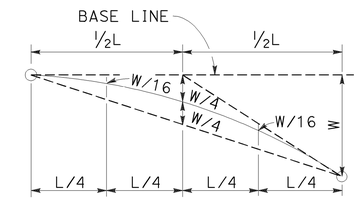

TYPICAL PARABOLIC LAYOUT

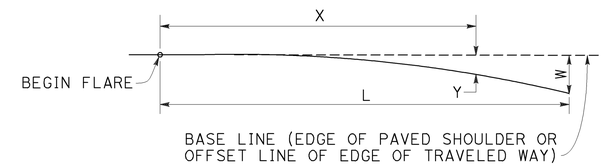

$$Y = \frac{WX^2}{L^2}$$

Y = OFFSET FROM BASE LINE
W = MAXIMUM OFFSET
X = DISTANCE ALONG BASE LINE
L = LENGTH OF FLARE

PARABOLIC FLARE OFFSETS

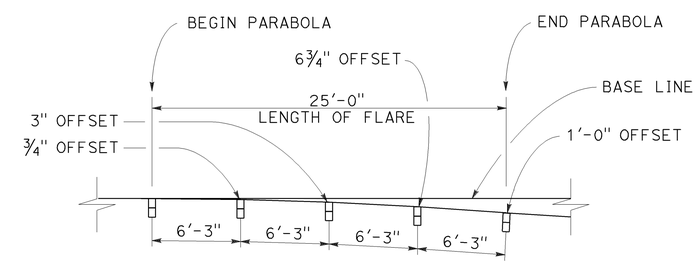

TYPICAL FLARE OFFSETS FOR 1 FOOT Max END OFFSET

NOTES:

1. Line post, blocks and hardware to be used are shown on Revised Standard Plans RSP A77L1, RSP A77L2, RSP A77M1, RSP A77N1 and RSP A77N2.
2. MGS post spacing to be 6'-3" center to center, except as otherwise noted.
3. Except as noted, line posts are 6" x 8" x 6'-0" wood with 6" x 12" x 1'-2" wood blocks. W6 x 8.5 or W6 x 9 steel posts, 6'-0" in length, with 6" x 12" x 1'-2" notched wood blocks or recycled plastic blocks may be used for 6" x 8" x 6'-0" wood post with 6" x 12" x 1'-2" wood blocks where applicable and when specified.
4. For End Anchor Assembly (Type SFT) details, see Revised Standard Plan RSP A77S1.
5. Layout Types 11A, 11B or 11C are typically used where MGS is recommended to shield embankment slopes and a crashworthy end treatment is required for only one direction of traffic.
6. 31" in-line terminal system end treatments are used where site conditions will not accommodate a flared end treatment.
7. The type of 31" terminal system end treatment to be used will be shown on the Project Plans.
8. Dependent on site conditions (embankment height and side slope), construction of additional MGS (length equal to multiples of 12'-6" with 6'-3" post spacing) may be advisable.
9. The 15:1 or flatter flare used with buried end anchors is based on the edge of the paved shoulder or offset line of edge of the traveled way. The length of MGS within the 15:1 or flatter flare is based on site conditions and should be a length equal to multiples of 12'-6".
10. For details of the buried post end anchor used with Type 11C Layout, see Revised Standard Plan RSP A77T2.
11. Where placement of dike is required with MGS installations, see Revised Standard Plan RSP A77N4 for dike positioning details.

STATE OF CALIFORNIA
DEPARTMENT OF TRANSPORTATION

MIDWEST GUARDRAIL SYSTEM TYPICAL LAYOUTS FOR EMBANKMENTS

NO SCALE

RSP A77P1 DATED NOVEMBER 15, 2013 SUPERSEDES RSP A77P1 DATED JULY 19, 2013 THAT SUPPLEMENTS THE STANDARD PLANS BOOK DATED 2010.

REVISED STANDARD PLAN RSP A77P1

2010 REVISED STANDARD PLAN RSP A77P1

10-4-13

Dist	COUNTY	ROUTE	POST MILES TOTAL PROJECT	SHEET No.	TOTAL SHEETS
10	Sta	120	6.1/11.3	38	54

Randell D. Hiatt
REGISTERED CIVIL ENGINEER

November 15, 2013
PLANS APPROVAL DATE

REGISTERED PROFESSIONAL ENGINEER
Randell D. Hiatt
No. C50200
Exp. 6-30-15
CIVIL
STATE OF CALIFORNIA

THE STATE OF CALIFORNIA OR ITS OFFICERS OR AGENTS SHALL NOT BE RESPONSIBLE FOR THE ACCURACY OR COMPLETENESS OF SCANNED COPIES OF THIS PLAN SHEET.

TO ACCOMPANY PLANS DATED 01-06-14

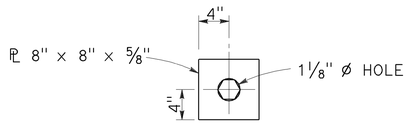

DETAIL "A"
CABLE CONNECTION
END PLATE

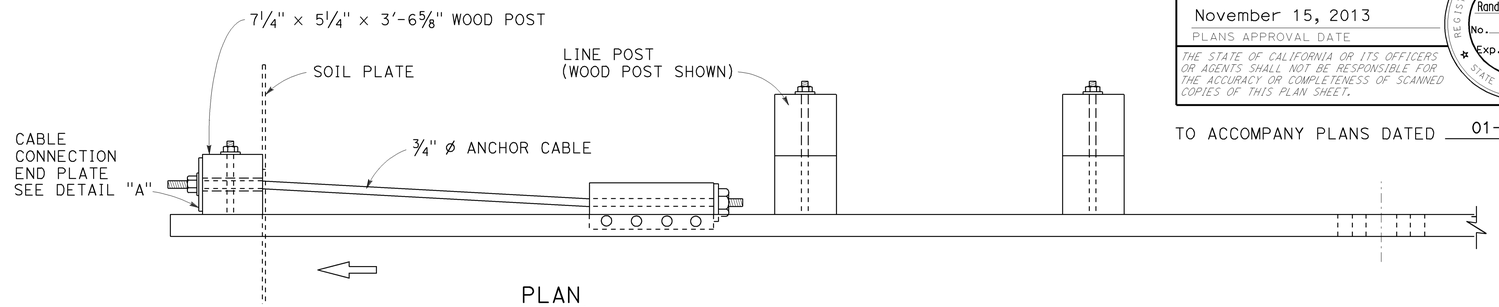

PLAN

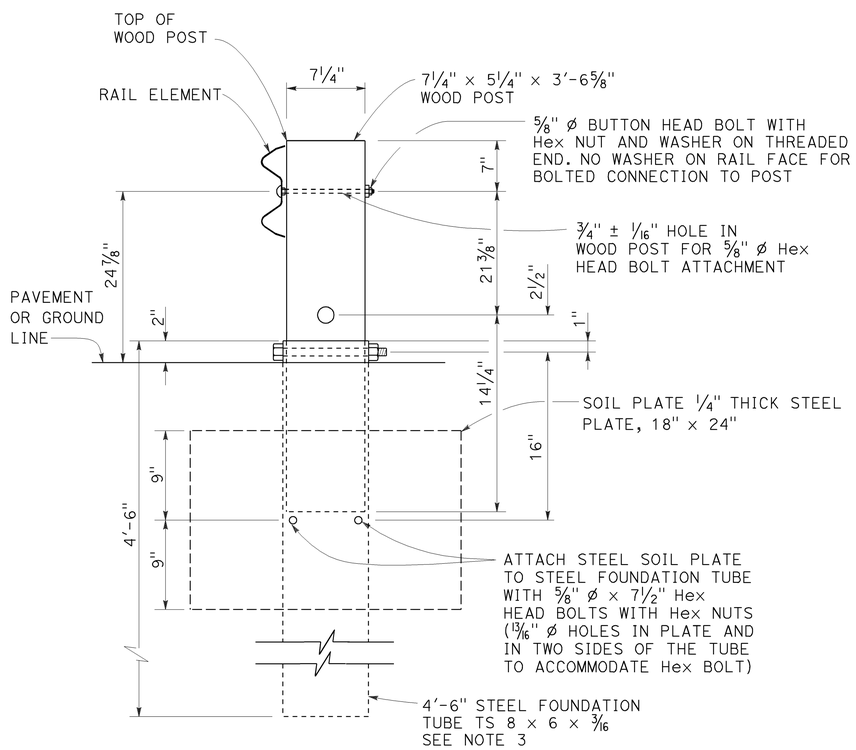

SECTION A-A

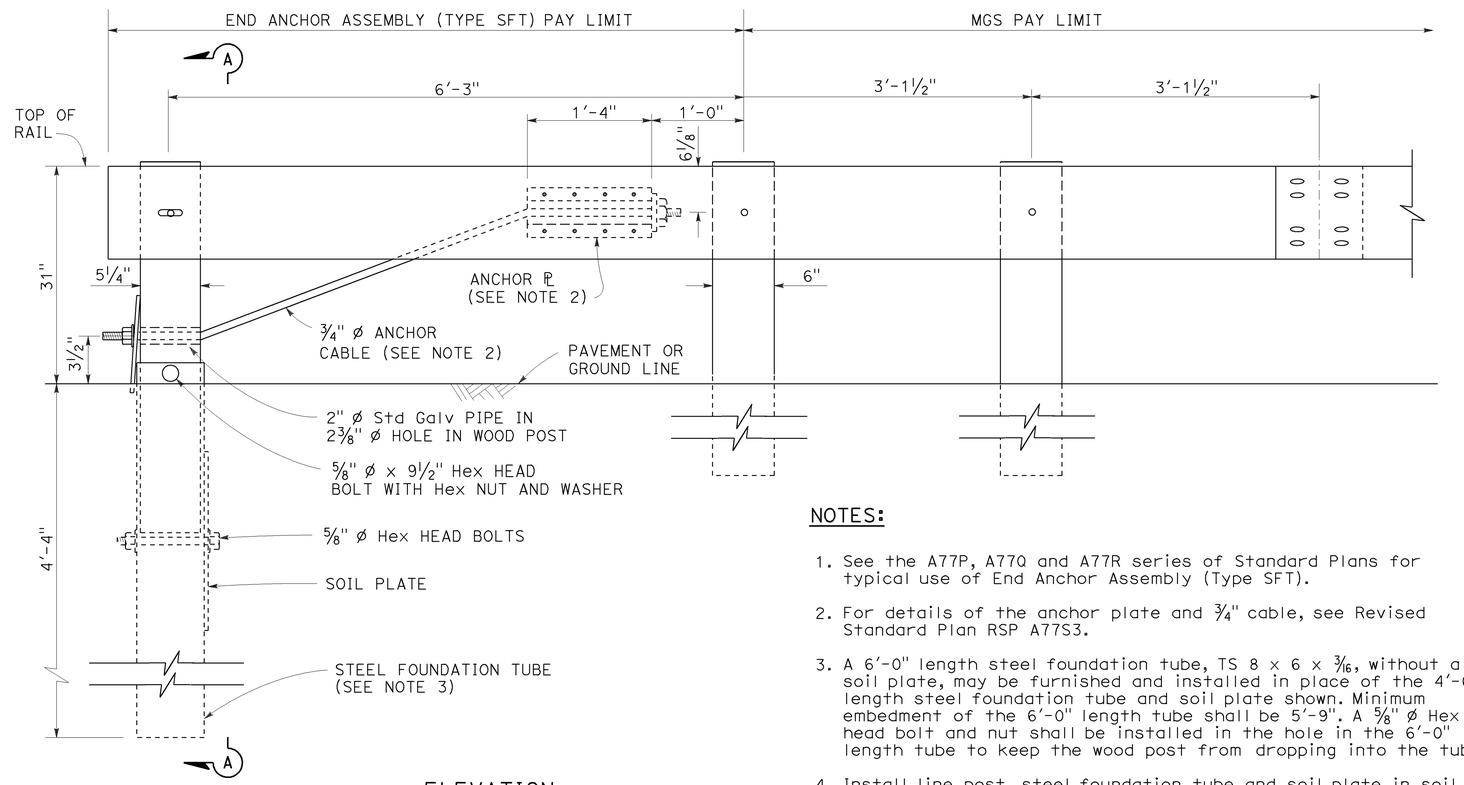

ELEVATION

END ANCHOR
ASSEMBLY (TYPE SFT)
See Note 1

NOTES:

1. See the A77P, A77Q and A77R series of Standard Plans for typical use of End Anchor Assembly (Type SFT).
2. For details of the anchor plate and 3/4" cable, see Revised Standard Plan RSP A77S3.
3. A 6'-0" length steel foundation tube, TS 8 x 6 x 3/16, without a soil plate, may be furnished and installed in place of the 4'-6" length steel foundation tube and soil plate shown. Minimum embedment of the 6'-0" length tube shall be 5'-9". A 5/8" ø Hex head bolt and nut shall be installed in the hole in the 6'-0" length tube to keep the wood post from dropping into the tube.
4. Install line post, steel foundation tube and soil plate in soil.

STATE OF CALIFORNIA
DEPARTMENT OF TRANSPORTATION

MIDWEST GUARDRAIL SYSTEM END ANCHOR ASSEMBLY (TYPE SFT)

NO SCALE

RSP A77S1 DATED NOVEMBER 15, 2013 SUPERSEDES RSP A77S1
DATED JULY 19, 2013 THAT SUPPLEMENTS THE STANDARD PLANS BOOK DATED 2010.

REVISED STANDARD PLAN RSP A77S1

2010 REVISED STANDARD PLAN RSP A77S1

10-4-13

Dist	COUNTY	ROUTE	POST MILES TOTAL PROJECT	SHEET No.	TOTAL SHEETS
10	Sta	120	6.1/11.3	39	54

Randell D. Hiatt
REGISTERED CIVIL ENGINEER

November 15, 2013
PLANS APPROVAL DATE

REGISTERED PROFESSIONAL ENGINEER
Randell D. Hiatt
No. C50200
Exp. 6-30-15
CIVIL
STATE OF CALIFORNIA

THE STATE OF CALIFORNIA OR ITS OFFICERS OR AGENTS SHALL NOT BE RESPONSIBLE FOR THE ACCURACY OR COMPLETENESS OF SCANNED COPIES OF THIS PLAN SHEET.

TO ACCOMPANY PLANS DATED 01-06-14

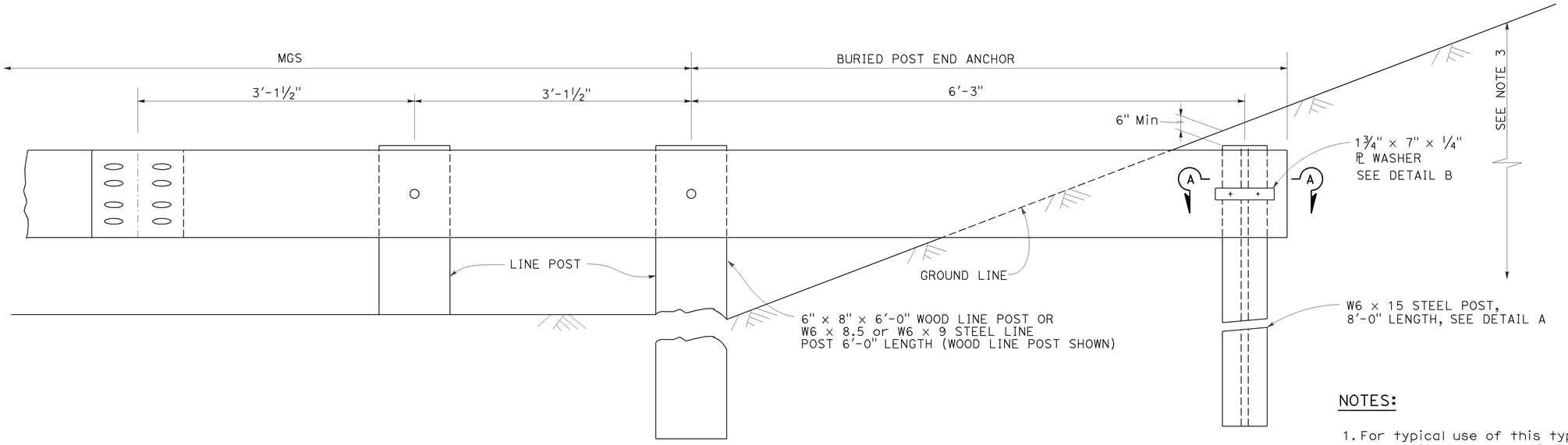

BURIED POST END ANCHOR

See Note 3

NOTES:

1. For typical use of this type of end anchor with MGS see the A77P, A77Q and A77R Series of the Standard Plans.
2. Holes excavation in the slope to construct the buried post end anchor shall be backfilled with selected earth, placed in layers approximately 1'-0" thick. Each layer shall be moistened and thoroughly compacted.
3. The buried post end anchor shall only be constructed at those locations where the slope perpendicular to the roadway is non-traversable.

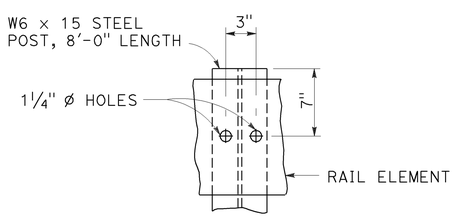

DETAIL A

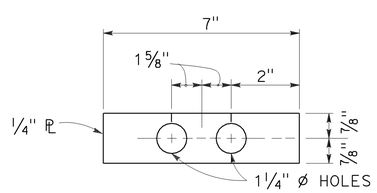

DETAIL B

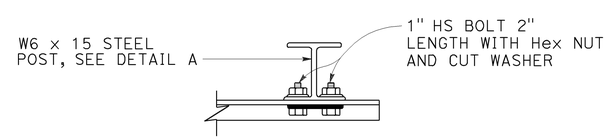

SECTION A-A

STATE OF CALIFORNIA
DEPARTMENT OF TRANSPORTATION

MIDWEST GUARDRAIL SYSTEM BURIED POST END ANCHOR

NO SCALE

RSP A77T2 DATED NOVEMBER 15, 2013 SUPERSEDES RSP A77T2
DATED JULY 19, 2013 THAT SUPPLEMENTS THE STANDARD PLANS BOOK DATED 2010.

REVISED STANDARD PLAN RSP A77T2

2010 REVISED STANDARD PLAN RSP A77T2

10-4-13

Dist	COUNTY	ROUTE	POST MILES TOTAL PROJECT	SHEET No.	TOTAL SHEETS
10	Sta	120	6.1/11.3	40	54

REGISTERED CIVIL ENGINEER

July 19, 2013
PLANS APPROVAL DATE

REGISTERED PROFESSIONAL ENGINEER Michael Janzen No. 44788 Exp. 03-31-14 CIVIL STATE OF CALIFORNIA

THE STATE OF CALIFORNIA OR ITS OFFICERS OR AGENTS SHALL NOT BE RESPONSIBLE FOR THE ACCURACY OR COMPLETENESS OF SCANNED COPIES OF THIS PLAN SHEET.

TO ACCOMPANY PLANS DATED 01-06-14

2010 REVISED STANDARD PLAN RSP A87A

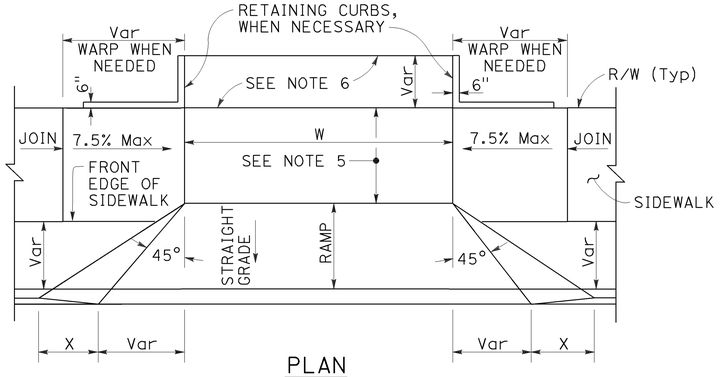

PLAN

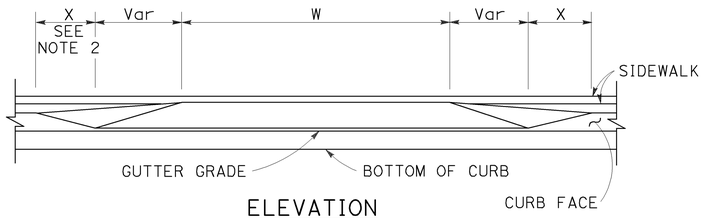

ELEVATION

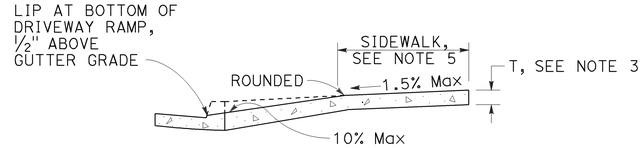

CASE A

Typical driveway, sidewalk not depressed

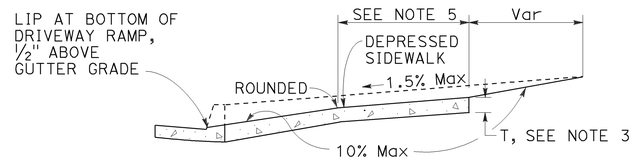

CASE B

Driveway with depressed sidewalk

SECTIONS

DRIVEWAYS

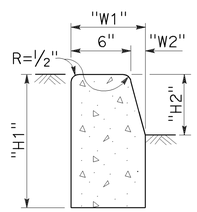

TYPE A1 CURBS

See Table A

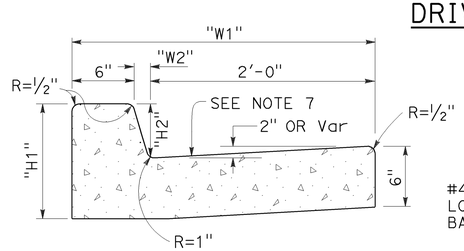

TYPE A2 CURBS

See Table A

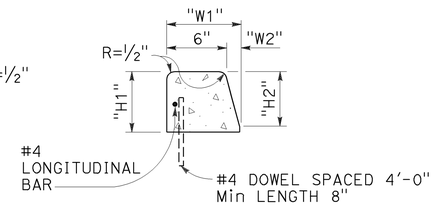

TYPE A3 CURBS

Superimposed on existing pavement
See Table A

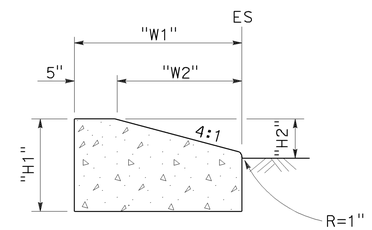

TYPE D CURBS

See Table A

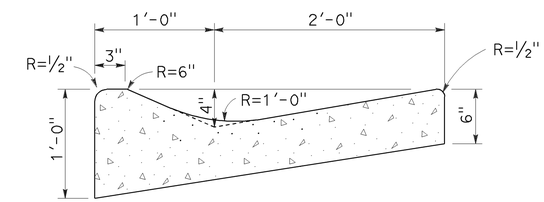

TYPE E CURB

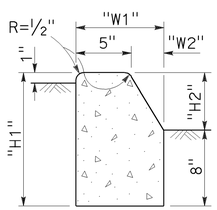

TYPE B1 CURBS

See Table A

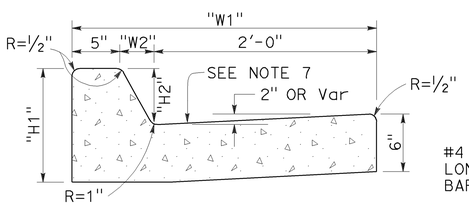

TYPE B2 CURBS

See Table A

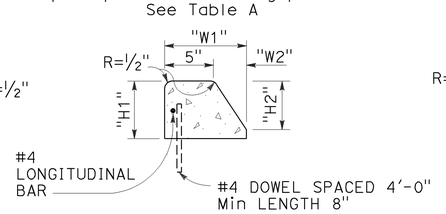

TYPE B3 CURBS

Superimposed on existing pavement
See Table A

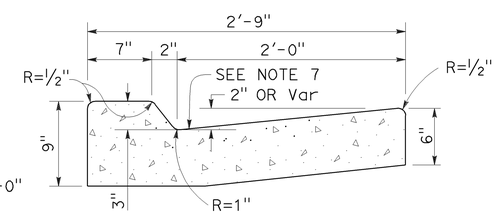

TYPE B4 CURBS

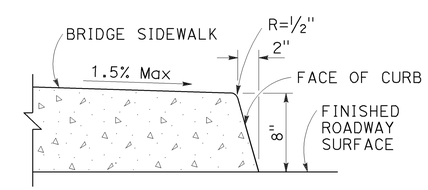

TYPE H CURB

On Bridges

CURBS

TABLE A

CURB TYPE	DIMENSIONS			
	"H1"	"H2"	"W1"	"W2"
A1-6	1'-2"	6"	7½"	1½"
A1-8	1'-4"	8"	8"	2"
A2-6	1'-0"	6"	2'-7½"	1½"
A2-8	1'-2"	8"	2'-8"	2"
A3-6	6"	5"	7¼"	1¼"
A3-8	8"	7"	7¾"	1¾"
B1-4	1'-0"	4"	7½"	2½"
B1-6	1'-2"	6"	9"	4"
B2-4	10"	4"	2'-7½"	2½"
B2-6	1'-0"	6"	2'-9"	4"
B3-4	4"	3"	7"	2"
B3-6	6"	5"	8½"	3½"
D-4	10"	4"	1'-6"	1'-1"
D-6	1'-0"	6"	2'-2"	1'-9"

CURB QUANTITIES

TYPE	CUBIC YARDS PER LINEAR FOOT
A1-6	0.02585
A1-8	0.03084
A2-6	0.05903
A2-8	0.06379
A3-6	0.01036
A3-8	0.01435
B1-4	0.02185
B1-6	0.02930
B2-4	0.05515
B2-6	0.06171
B3-4	0.00641
B3-6	0.01074
B4	0.05709
D-4	0.04083
D-6	0.06804
E	0.06661

NOTES:

1. Case A driveway section typically applies.
2. X=3'-0" except for curb heights over 10" where 4:1 slopes shall be used on curb slope.
3. Sidewalk and ramp thickness "T" at driveway shall be 4" for residental and 6" for commercial.
4. Difference in slope of the driveway ramp and the slope of a line between the gutter and a point on the roadway 5'-0" from gutter line shall not exceed 15%. Reduce driveway ramp slope, not gutter slope, where required.
5. Minimum width of clear passageway for sidewalk shall be 4'-2".
6. Retaining curbs and acquisition of construction easement may be necessary for narrow sidewalks or curb heights in excess of 6".
7. Across the pedestrian route at curb ramp locations, the gutter pan slope shall not exceed 1" of depth for each 2'-0" of width.

STATE OF CALIFORNIA
DEPARTMENT OF TRANSPORTATION

CURBS AND DRIVEWAYS

NO SCALE

RSP A87A DATED JULY 19, 2013 SUPERSEDES STANDARD PLAN A87A
DATED MAY 20, 2011 - PAGE 119 OF THE STANDARD PLANS BOOK DATED 2010.

REVISED STANDARD PLAN RSP A87A

Dist	COUNTY	ROUTE	POST MILES TOTAL PROJECT	SHEET No.	TOTAL SHEETS
10	Sta	120	6.1/11.3	41	54

REGISTERED CIVIL ENGINEER

July 19, 2013
PLANS APPROVAL DATE

REGISTERED PROFESSIONAL ENGINEER
Michael Janzen
No. 44788
Exp. 03-31-14
CIVIL
STATE OF CALIFORNIA

THE STATE OF CALIFORNIA OR ITS OFFICERS OR AGENTS SHALL NOT BE RESPONSIBLE FOR THE ACCURACY OR COMPLETENESS OF SCANNED COPIES OF THIS PLAN SHEET.

TO ACCOMPANY PLANS DATED 01-06-14

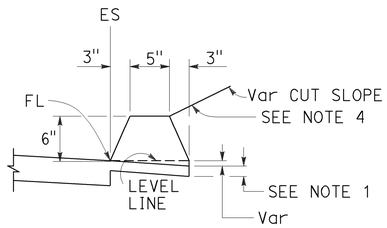

TYPE A
See Note 3

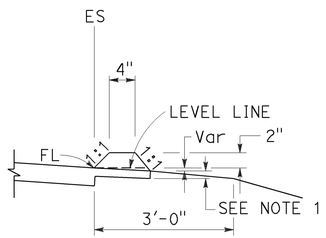

TYPE C

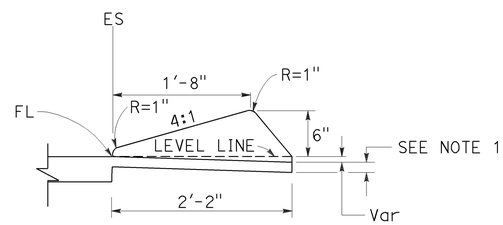

TYPE D

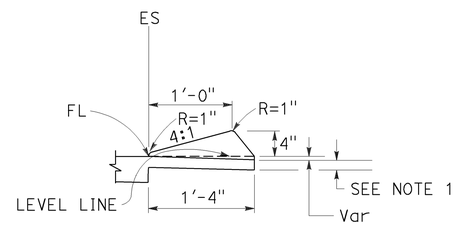

TYPE E

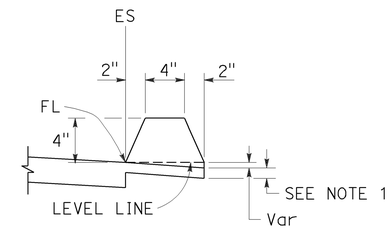

TYPE F
See Note 5

DIKES

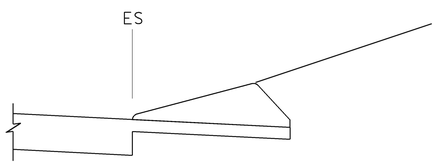

CASE C-1
Cut Slope

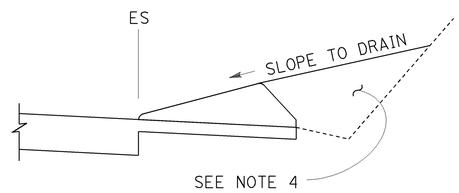

CASE C-2
Cut Slope

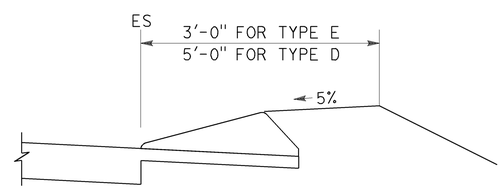

CASE F

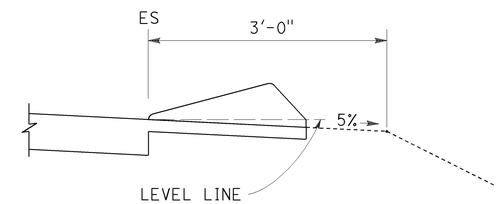

CASE R
See Note 2

TYPE D AND E BACKFILL DETAILS

NOTES:

1. For HMA shoulders only, extend top layer of HMA placed on the shoulder under dike with no joint at the ES. For projects with OGFC shoulders, do not extend OGFC under dike. See project plans for modified dike detail.
2. Case R applies to retrofit only projects where restrictive conditions do not provide enough width for Case F backfill.
3. Type A dike only to be used where restrictive slope conditions do not provide enough width to use Type D or Type E dike.
4. Fill and compact with excavated material to top of dike.
5. Use Type F dike, where dike is required with guard railing installations. See Revised Standard Plan RSP A77N4 for dike positioning details.

DIKE QUANTITIES

TYPE	CUBIC YARDS PER LINEAR FOOT
A	0.0135
C	0.0038
D	0.0293
E	0.0130
F	0.0066

Quantities based on 5% cross slope.

STATE OF CALIFORNIA
DEPARTMENT OF TRANSPORTATION

HOT MIX ASPHALT DIKES

NO SCALE

RSP A87B DATED JULY 19, 2013 SUPERSEDES STANDARD PLAN A87B DATED MAY 20, 2011 - PAGE 120 OF THE STANDARD PLANS BOOK DATED 2010.

REVISED STANDARD PLAN RSP A87B

2010 REVISED STANDARD PLAN RSP A87B

6-27-13

Dist	COUNTY	ROUTE	POST MILES TOTAL PROJECT	SHEET No.	TOTAL SHEETS
10	Sta	120	6.1/11.3	42	54

REGISTERED CIVIL ENGINEER

July 19, 2013
PLANS APPROVAL DATE

REGISTERED PROFESSIONAL ENGINEER Hector David Cordova No. C41957 Exp. 3-31-14 CIVIL STATE OF CALIFORNIA

THE STATE OF CALIFORNIA OR ITS OFFICERS OR AGENTS SHALL NOT BE RESPONSIBLE FOR THE ACCURACY OR COMPLETENESS OF SCANNED COPIES OF THIS PLAN SHEET.

TO ACCOMPANY PLANS DATED 01-06-14

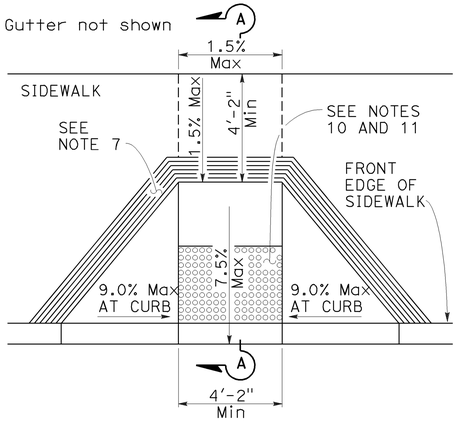

CASE A

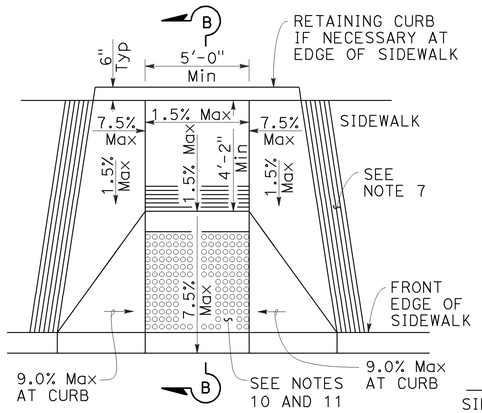

CASE B

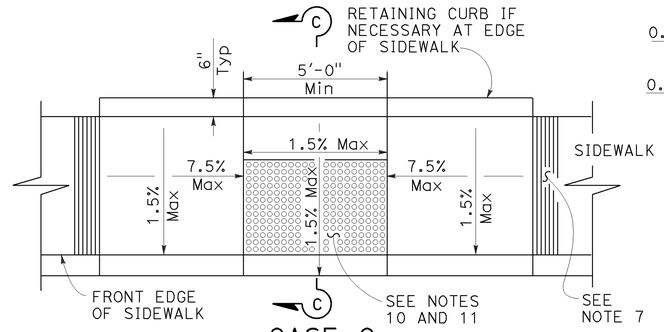

CASE C

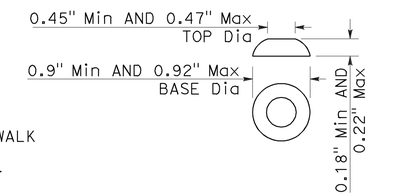

RAISED TRUNCATED DOME

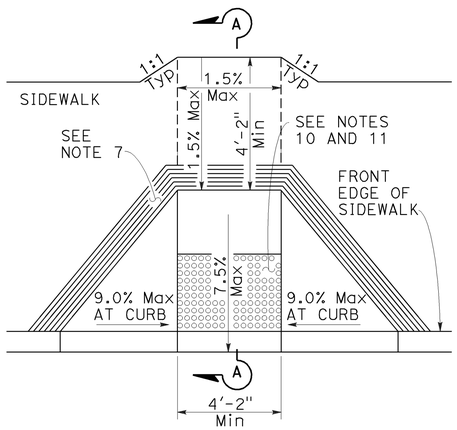

CASE D

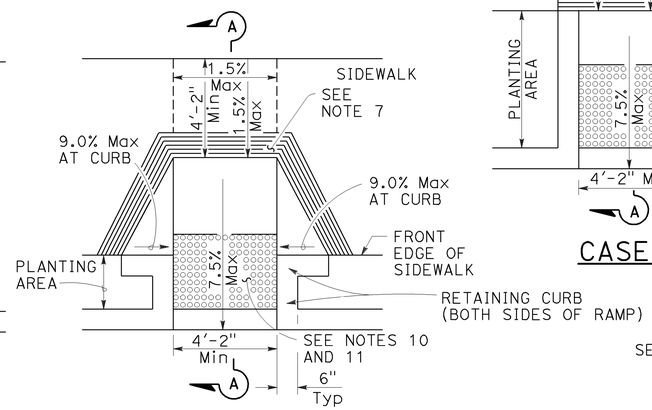

CASE E

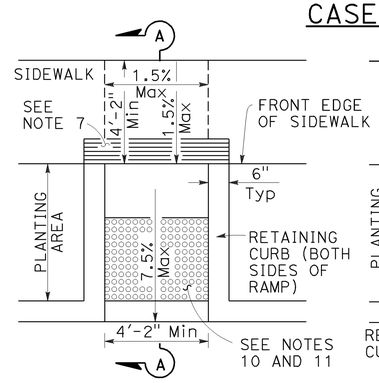

CASE F

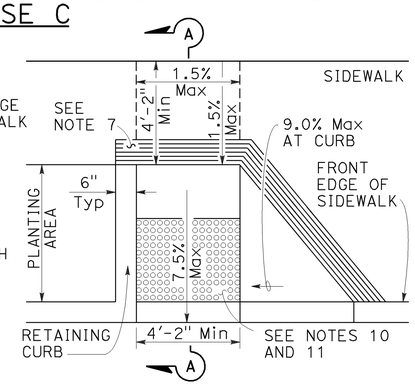

CASE G

See Note 4

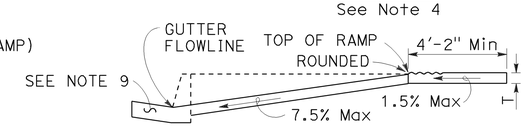

SECTION A-A

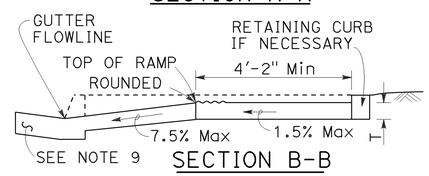

SECTION B-B

Depress entire sidewalk as required

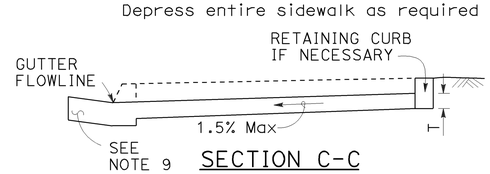

SECTION C-C

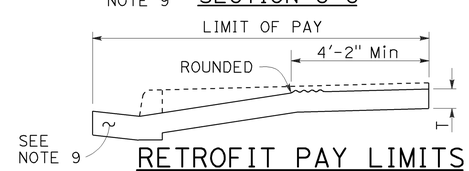

RETROFIT PAY LIMITS

Existing curb and sidewalk

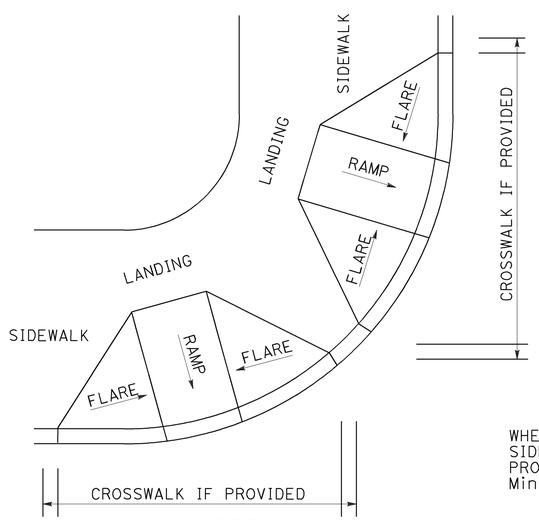

DETAIL A

TYPICAL TWO-RAMP CORNER INSTALLATION

See Note 1

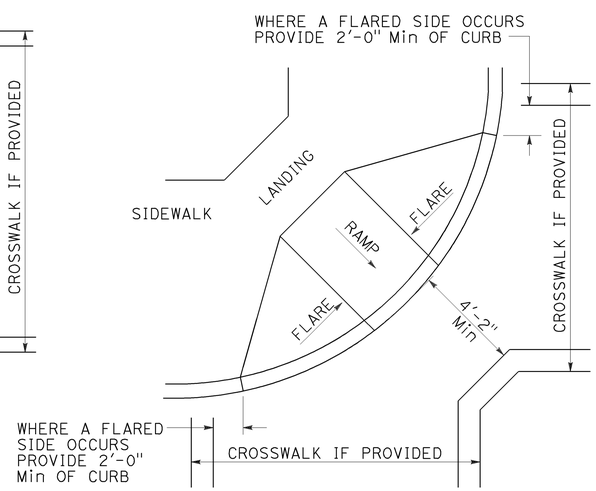

DETAIL B

TYPICAL ONE-RAMP CORNER INSTALLATION

See Notes 1 and 3

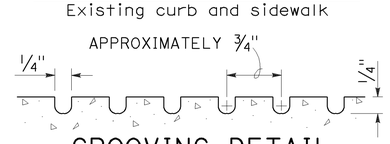

GROOVING DETAIL

NOTES:

1. As site conditions dictate, Case A through Case G curb ramps may be used for corner installations similar to those shown in Detail A and Detail B. The case of curb ramps used in Detail A do not have to be the same. Case A through Case G curb ramps also may be used at mid block locations, as site conditions dictate.
2. If distance from curb to back of sidewalk is too short to accommodate ramp and 4'-2" platform (landing) as shown in Case A, the sidewalk may be depressed longitudinally as in Case B, or C or may be widened as in Case D.
3. When ramp is located in center of curb return, crosswalk configuration must be similar to that shown for Detail B.
4. As site conditions dictate, the retaining curb side and the flared side of the Case G ramp shall be constructed in reversed position.
5. If located on a curve, the sides of the ramp need not be parallel, but the minimum width of the ramp shall be 4'-2".
6. Side slope of ramp flares vary uniformly from a maximum of 9.0% at curb to conform with longitudinal sidewalk slope adjacent to top of the ramp, except in Case C and Case F.
7. The curb ramp shall be outlined, as shown, with a 1'-0" wide border with 1/4" grooves approximately 3/4" on center. See grooving detail.
8. Transitions from ramps and landing to walks, gutters or streets shall be flush (no lip) and free of abrupt changes.
9. Counter slopes of adjoining gutters and road surfaces immediately adjacent to and within 24 inches of the curb ramp shall not be steeper than 1:20 (5.0%). Gutter pan slope shall not exceed 1" of depth for each 2'-0" of width.
10. Curb ramps shall have a detectable warning surface that extends the full width and 3'-0" depth of the ramp. Detectable Warning Surfaces shall conform to the details on this plan and the requirements in the Standard Specifications.
11. The edge of the detectable warning surface nearest the street shall be between 6" and 8" from the gutter flowline.
12. Sidewalk and ramp thickness, "T", shall be 3 1/2" minimum.
13. Utility pull boxes, manholes, vaults and all other utility facilities within the boundaries of the curb ramp will be relocated or adjusted to grade by the owner prior to, or in conjunction with, curb ramp construction.
14. Detectable warning surface may have to be cut to allow removal of utility covers while maintaining full detectable warning width and depth.

RAISED TRUNCATED DOME PATTERN (IN-LINE)

DETECTABLE WARNING SURFACE

See Note 10

STATE OF CALIFORNIA
DEPARTMENT OF TRANSPORTATION

CURB RAMP DETAILS

NO SCALE

RSP A88A DATED JULY 19, 2013 SUPERSEDES STANDARD PLAN A88A
DATED MAY 20, 2011 - PAGE 121 OF THE STANDARD PLANS BOOK DATED 2010.

REVISED STANDARD PLAN RSP A88A

2010 REVISED STANDARD PLAN RSP A88A

7-8-13

Dist	COUNTY	ROUTE	POST MILES TOTAL PROJECT	SHEET No.	TOTAL SHEETS
10	Sta	120	6.1/11.3	43	54

REGISTERED CIVIL ENGINEER

July 19, 2013
PLANS APPROVAL DATE

REGISTERED PROFESSIONAL ENGINEER
Hector David Cordova
No. C41957
Exp. 3-31-14
CIVIL
STATE OF CALIFORNIA

THE STATE OF CALIFORNIA OR ITS OFFICERS OR AGENTS SHALL NOT BE RESPONSIBLE FOR THE ACCURACY OR COMPLETENESS OF SCANNED COPIES OF THIS PLAN SHEET.

TO ACCOMPANY PLANS DATED 01-06-14

Gutter not shown

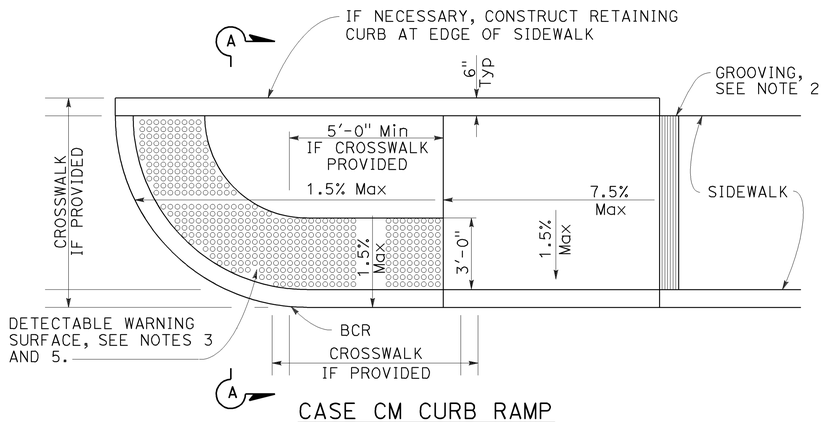

CASE CM CURB RAMP

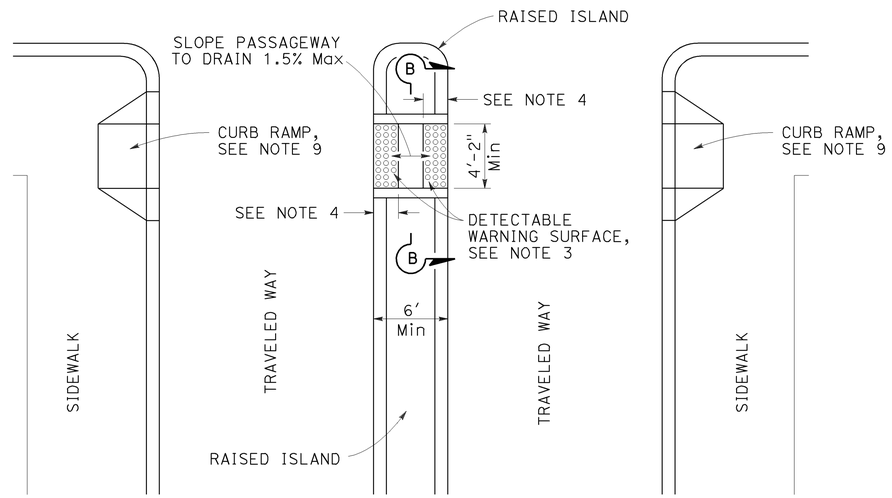

TYPE A PASSAGEWAY

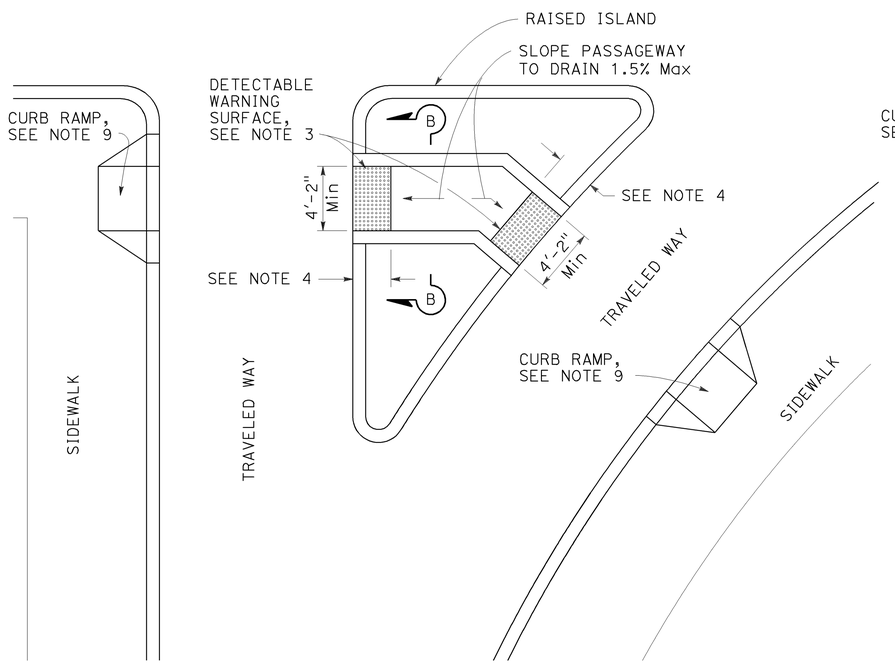

TYPE B PASSAGEWAY

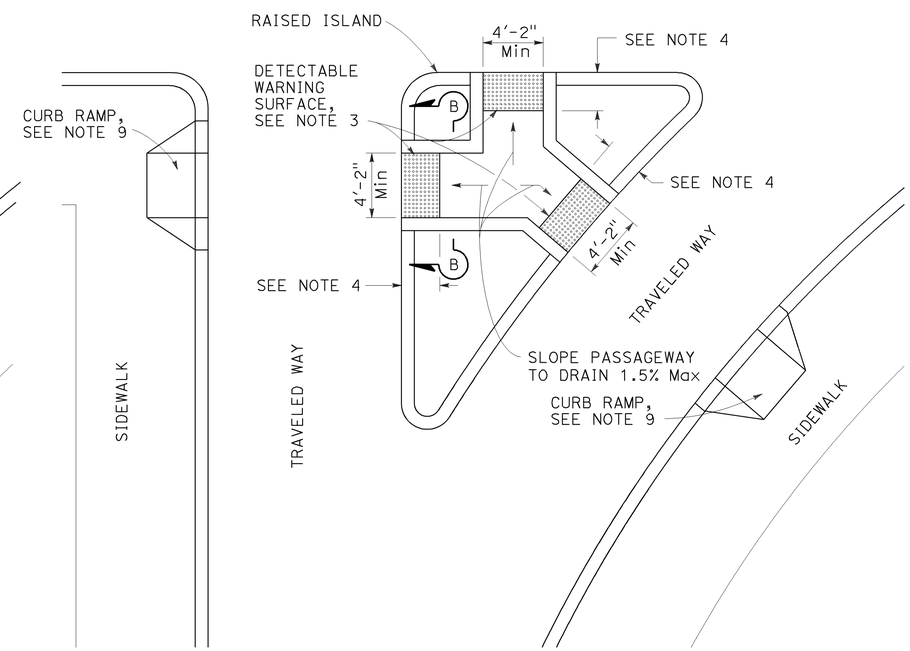

TYPE C PASSAGEWAY

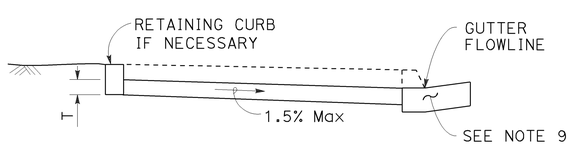

SECTION A-A

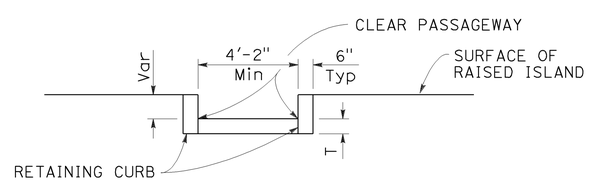

SECTION B-B

NOTES:

1. Sidewalk, ramp and passageway thickness, "T", shall be 3½" minimum.
2. For details of grooving used with Case CM curb ramp, see Revised Standard Plan RSP A88A.
3. For details of detectable warning surfaces, see Revised Standard Plan RSP A88A.
4. Where an island passageway length is greater than or equal to 6'-0", but less than 8'-0", each detectable warning surface shall extend the full width and 2'-0" depth of the passageway length. Where an island passageway length is greater than or equal to 8'-0", each detectable warning surface shall extend the full width and 3'-0" depth of the passageway length.
5. For Case CM curb ramp, the edge of the detectable warning surface nearest the street shall be between 6" and 8" from the gutter flowline.
6. Transitions from ramps to walks, gutters or streets shall be flush (no lip) and free of abrupt changes.
7. Utility pull boxes, manholes, vaults and all other utility facilities within the boundaries of the curb ramp will be relocated or adjusted to grade by the owner prior to, or in conjunction with, curb ramp construction.
8. Detectable warning surface may have to be cut to allow removal of utility covers while maintaining full detectable warning width and depth.
9. For additional curb ramp details, see Revised Standard Plan RSP A88A.

STATE OF CALIFORNIA
DEPARTMENT OF TRANSPORTATION

CURB RAMP AND ISLAND PASSAGEWAY DETAILS

NO SCALE

RSP A88B DATED JULY 19, 2013 SUPERSEDES STANDARD PLAN A88B DATED MAY 20, 2011 - PAGE 122 OF THE STANDARD PLANS BOOK DATED 2010.

REVISED STANDARD PLAN RSP A88B

2010 REVISED STANDARD PLAN RSP A88B

6-25-13

DIST	COUNTY	ROUTE	POST MILES TOTAL PROJECT	SHEET No.	TOTAL SHEETS
10	Sta	120	6.1/11.3	44	54

REGISTERED CIVIL ENGINEER

November 15, 2013
PLANS APPROVAL DATE

REGISTERED PROFESSIONAL ENGINEER Cornelis M. Hakim No. C55610 Exp. 12-31-14 CIVIL STATE OF CALIFORNIA

THE STATE OF CALIFORNIA OR ITS OFFICERS OR AGENTS SHALL NOT BE RESPONSIBLE FOR THE ACCURACY OR COMPLETENESS OF SCANNED COPIES OF THIS PLAN SHEET.

TO ACCOMPANY PLANS DATED 01-06-14

ABBREVIATIONS:

SE SAFETY EDGE

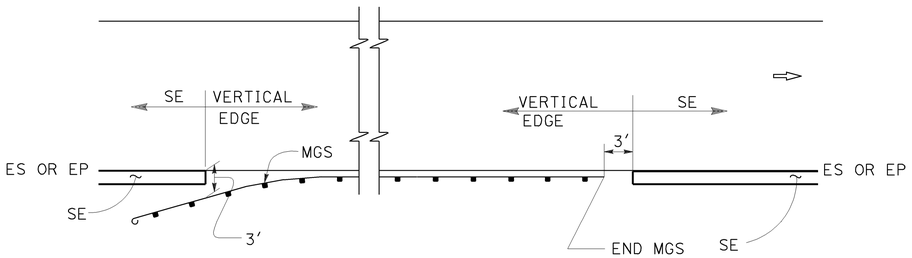

MGS

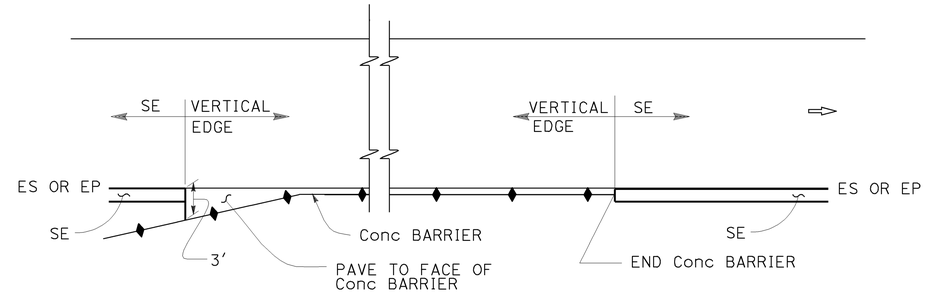

CONCRETE BARRIER

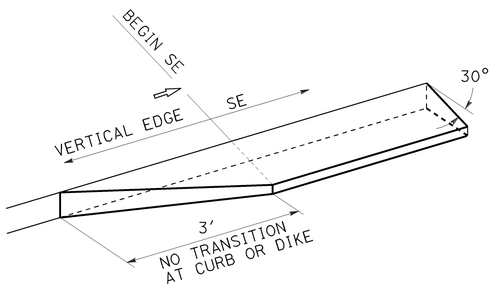

TRANSITION DETAIL FOR CONCRETE ONLY

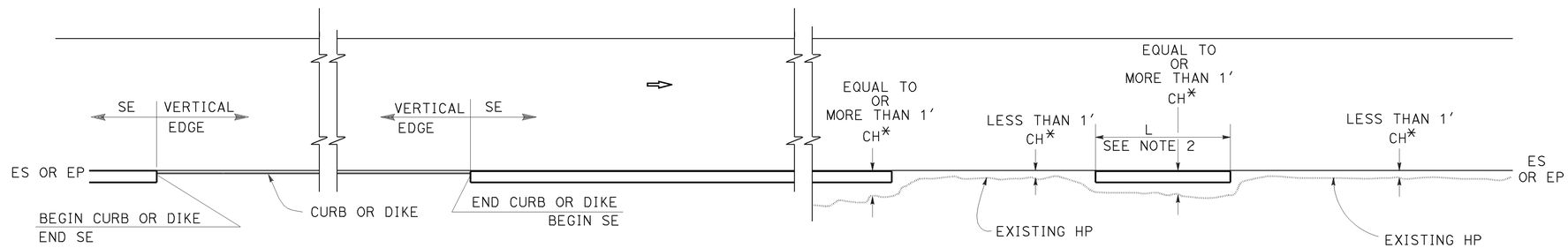

CURB OR DIKE

NARROW SIDE SLOPE

* CH = Distance from ES or EP to existing HP.

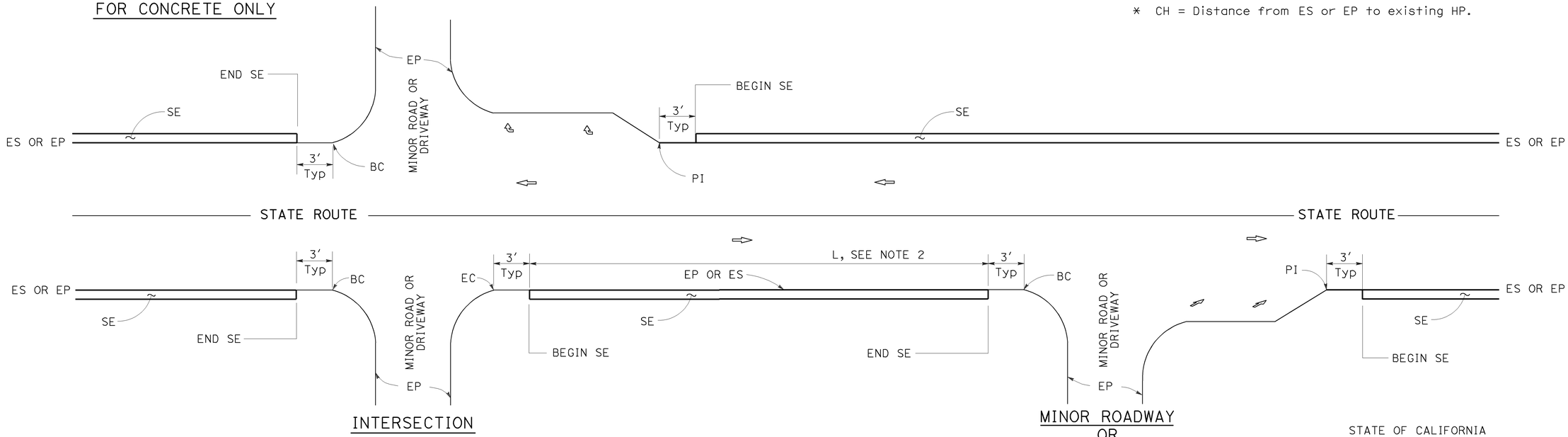

INTERSECTION

MINOR ROADWAY OR DRIVEWAY

DRIVEWAY AND INTERSECTION

NOTES:

1. For details not shown, see Revised Standard Plans RSP P75 and RSP P76.
2. Safety edge is optional when L is less than 30′.

STATE OF CALIFORNIA
DEPARTMENT OF TRANSPORTATION

PAVEMENT EDGE TREATMENTS

NO SCALE

RSP P74 DATED NOVEMBER 15, 2013 SUPERSEDES RSP P74 DATED JANUARY 20, 2012 THAT SUPPLEMENTS THE STANDARD PLANS BOOK DATED 2010.

REVISED STANDARD PLAN RSP P74

2010 REVISED STANDARD PLAN RSP P74

10-11-13

DIST	COUNTY	ROUTE	POST MILES TOTAL PROJECT	SHEET No.	TOTAL SHEETS
10	Sta	120	6.1/11.3	45	54

REGISTERED CIVIL ENGINEER

November 15, 2013
PLANS APPROVAL DATE

REGISTERED PROFESSIONAL ENGINEER Cornelis M. Hakim No. C55610 Exp. 12-31-14 CIVIL STATE OF CALIFORNIA

THE STATE OF CALIFORNIA OR ITS OFFICERS OR AGENTS SHALL NOT BE RESPONSIBLE FOR THE ACCURACY OR COMPLETENESS OF SCANNED COPIES OF THIS PLAN SHEET.

TO ACCOMPANY PLANS DATED 01-06-14

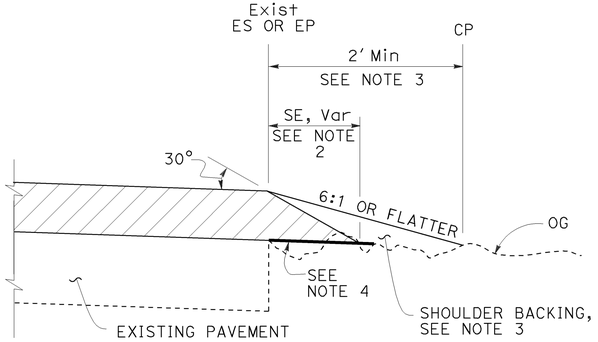

CASE A
Safety Edge

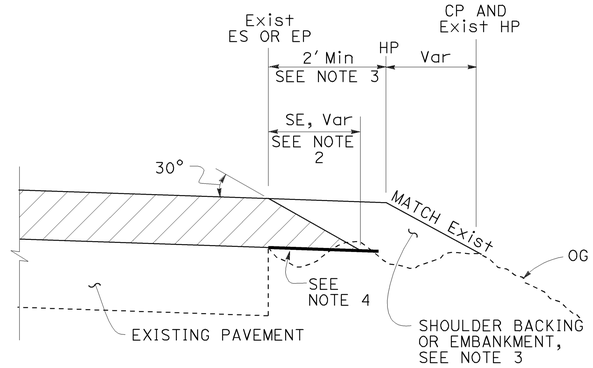

CASE B
Safety Edge

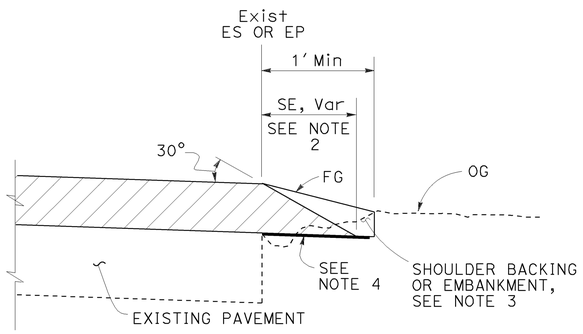

CASE C
Safety Edge

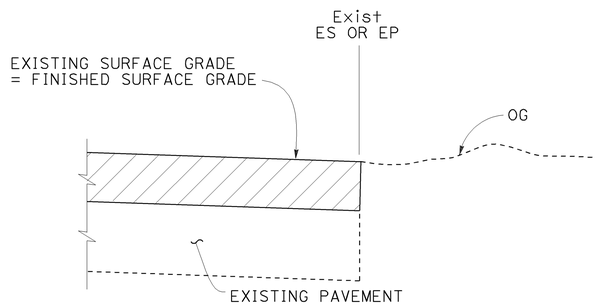

CASE D
Vertical Edge

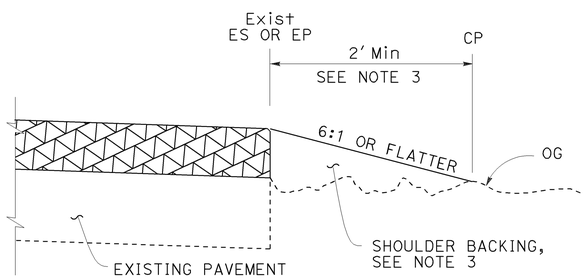

CASE E
Vertical Edge

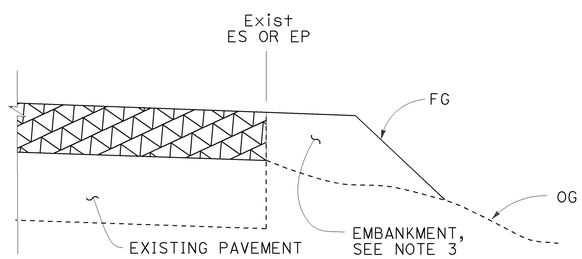

CASE F
Vertical Edge
* See Table A and Revised Std Plan RSP P74

LEGEND:

- HMA OVERLAY
- HMA OR CONCRETE OVERLAY
- CONCRETE OVERLAY

ABBREVIATIONS:

SE SAFETY EDGE
TT TOTAL THICKNESS OF SE

TABLE A
EDGE TREATMENT FOR VARIOUS OVERLAY THICKNESS AND CONDITIONS

	OVERLAY THICKNESS	
FIELD CONDITION	LESS THAN 0.15′	0.15′ OR MORE
Exist SLOPE 6:1 OR FLATTER	CASE E	CASE A
Exist SLOPE 3:1 TO 6:1	CASE E	CASE B
Exist SLOPE STEEPER THAN 3:1	CASE F	CASE F
CUT SECTION (REPLACE, COLD PLANE, MILL PAVEMENT)	CASE D	CASE C

ADDITIONAL HMA OR CONCRETE QUANTITIES FOR SE/SIDE/MILE

TYPICAL CROSS SECTION	TT	TOTAL ADDITIONAL MATERIAL FOR SE/SIDE/MILE		
		HMA (TON)	CONCRETE (CY)*	CONCRETE (CY)**
TT	0.15′	NA	NA	NA
	0.20′	13.7	NA	NA
	0.30′	30.9	NA	NA
	0.40′	54.9	NA	NA
	0.45′	69.4	NA	NA
TT 0.43′	0.50′	84.2	NA	NA
	0.60′	113.9	NA	NA
	0.70′	143.6	70.9	94.2
	0.80′	173.3	85.6	112.2
	0.90′	203.0	100.3	130.2
	1.00′	232.7	114.9	148.2
	1.10′	262.4	129.6	166.2
	1.20′	292.1	144.3	184.2

* For Detail "A"
** For Optional Detail "A"

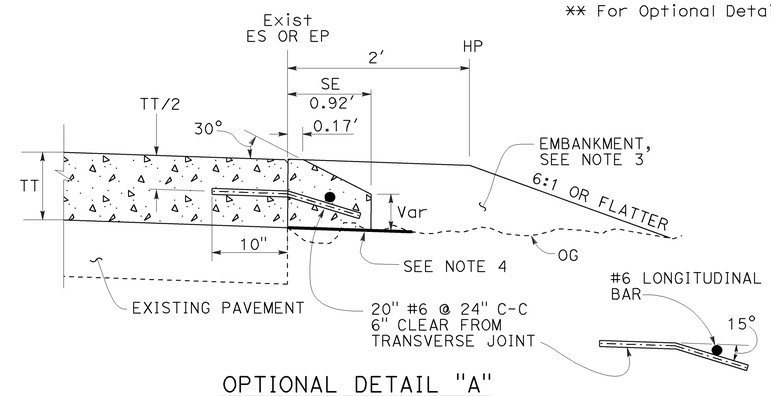

OPTIONAL DETAIL "A"
For concrete overlay
See Note 5

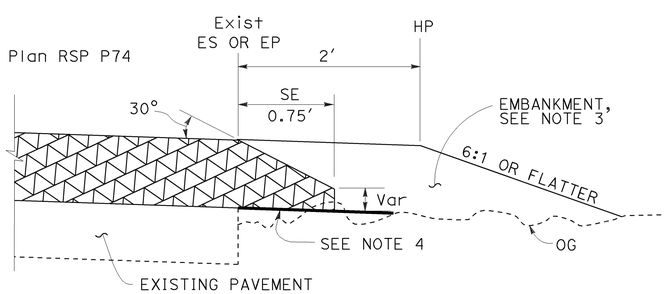

DETAIL "A"
For HMA overlay thickness more than 0.43′ or concrete overlay

NOTES:

1. For limits of safety edge and vertical edge treatments, see Revised Standard Plan RSP P74.
2. Details shown for HMA overlay thickness less than 0.43′. See Detail "A" for HMA overlay thickness more than 0.43′ or concrete overlay.
3. For locations and limits of shoulder backing or embankment see project plans.
4. Grade existing ground to place safety edge. 1′ minimum width
5. Safety edge transverse joint must match overlay transverse joint. End of #6 longitudinal bar must be 2" ±½" clear from transverse joint.
6. Safety edge is not needed in the area of MGS, barrier, right turn lane and acceleration lane. See Revised Standard Plan RSP P74.

STATE OF CALIFORNIA
DEPARTMENT OF TRANSPORTATION

PAVEMENT EDGE TREATMENTS-OVERLAYS

NO SCALE

RSP P75 DATED NOVEMBER 15, 2013 SUPERSEDES RSP P75 DATED JANUARY 20, 2012 THAT SUPPLEMENTS THE STANDARD PLANS BOOK DATED 2010.

REVISED STANDARD PLAN RSP P75

2010 REVISED STANDARD PLAN RSP P75

10-4-13

Dist	COUNTY	ROUTE	POST MILES TOTAL PROJECT	SHEET No.	TOTAL SHEETS
10	Sta	120	6.1/11.3	46	54

REGISTERED CIVIL ENGINEER

April 19, 2013
PLANS APPROVAL DATE

REGISTERED PROFESSIONAL ENGINEER
Gurinderpal Bhullar
No. C48815
Exp. 9-30-14
CIVIL
STATE OF CALIFORNIA

THE STATE OF CALIFORNIA OR ITS OFFICERS OR AGENTS SHALL NOT BE RESPONSIBLE FOR THE ACCURACY OR COMPLETENESS OF SCANNED COPIES OF THIS PLAN SHEET.

TO ACCOMPANY PLANS DATED 01-06-14

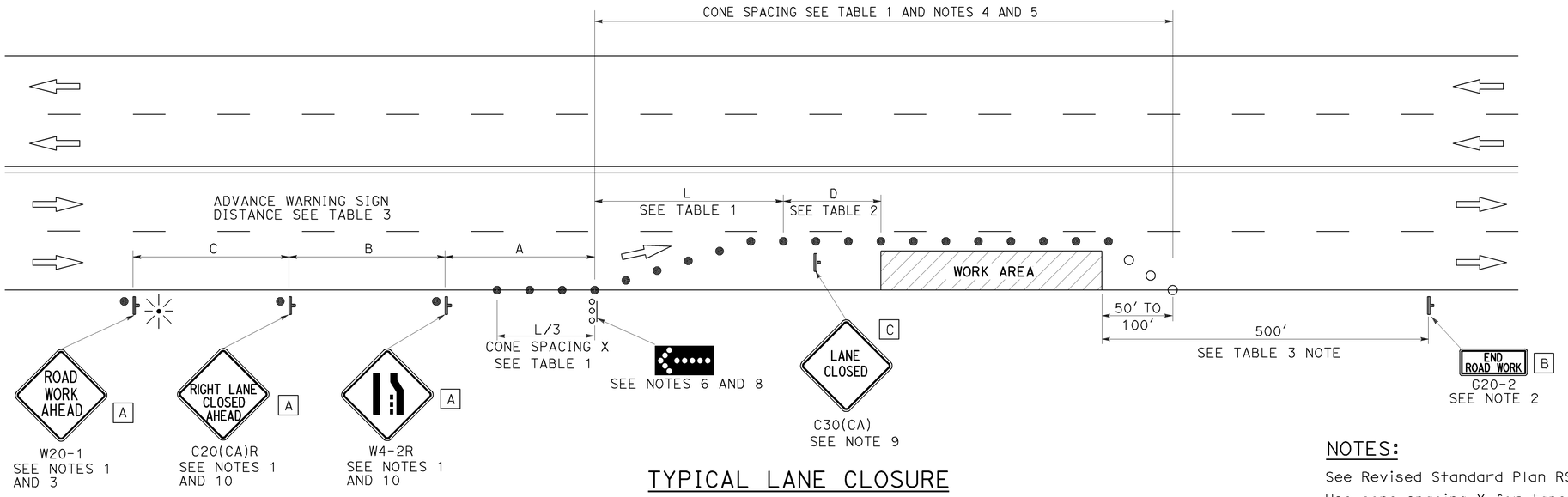

TYPICAL LANE CLOSURE

NOTES:

See Revised Standard Plan RSP T9 for tables.

Use cone spacing X for taper segment, Y for tangent segment or Z for conflict situations, as approriate, per Table 1, unless X, Y, or Z cone spacing is shown on this sheet.

Unless otherwise specified in the special provisions, all temporary warning signs shall have black legend on fluorescent orange background.

California codes are designated by (CA). Otherwise, Federal (MUTCD) codes are shown.

NOTES:

1. Each advance warning sign shall be equipped with at least two flags for daytime closure. Each flag shall be at least 16" x 16" in size and shall be orange or fluorescent red-orange in color. Flashing beacons shall be placed at the locations indicated for lane closure during hours of darkness.
2. A G20-2 "END ROAD WORK" sign, as appropriate, shall be placed at the end of the lane closure unless the end of work area is obvious, or ends within a larger project's limits.
3. If the W20-1 sign would follow within 2000' of a stationary W20-1 or G20-1 "ROAD WORK NEXT _____ MILES", use a C20(CA) sign for the first advance warning sign.
4. All cones used for lane closures during the hours of darkness shall be fitted with retroreflective bands (or sleeves) as specified in the specifications.
5. Portable delineators, placed at one-half the spacing indicated for traffic cones, may be used instead of cones for daytime closures only.
6. Flashing arrow sign shall be either Type I or Type II.
7. For approach speeds over 50 mph, use the "Traffic Control System for Lane Closure On Freeways And Expressways" plan for lane closure details and requirements.
8. A minimum 1500' of sight distance shall be provided where possible for vehicles approaching the first flashing arrow sign. Lane closures shall not begin at the top of crest vertical curve or on a horizontal curve.
9. Place a C30(CA) sign every 2000' throughout length of lane closure.
10. Median lane closures shall conform to the details as shown except that C20(CA)L and W4-2L signs shall be used.
11. At least one person shall be assigned to provide full time maintenance of traffic control devices for lane closure unless, otherwise directed by the Engineer.

LEGEND

- TRAFFIC CONE
- TRAFFIC CONE (OPTIONAL TAPER)
- TEMPORARY TRAFFIC CONTROL SIGN
- FLASHING ARROW SIGN (FAS)
- FAS SUPPORT OR TRAILER
- PORTABLE FLASHING BEACON

SIGN PANEL SIZE (Min)

A	48" x 48"
B	36" x 18"
C	30" x 30"

STATE OF CALIFORNIA
DEPARTMENT OF TRANSPORTATION

TRAFFIC CONTROL SYSTEM FOR LANE CLOSURE ON MULTILANE CONVENTIONAL HIGHWAYS

NO SCALE

RSP T11 DATED APRIL 19, 2013 SUPERSEDES STANDARD PLAN T11 DATED MAY 20, 2011 - PAGE 239 OF THE STANDARD PLANS BOOK DATED 2010.

REVISED STANDARD PLAN RSP T11

2010 REVISED STANDARD PLAN RSP T11

4-2-13

Dist	COUNTY	ROUTE	POST MILES TOTAL PROJECT	SHEET No.	TOTAL SHEETS
10	Sta	120	6.1/11.3	47	54

REGISTERED CIVIL ENGINEER

April 19, 2013
PLANS APPROVAL DATE

REGISTERED PROFESSIONAL ENGINEER Gurinderpal Bhullar No. C48815 Exp. 9-30-14 CIVIL STATE OF CALIFORNIA

THE STATE OF CALIFORNIA OR ITS OFFICERS OR AGENTS SHALL NOT BE RESPONSIBLE FOR THE ACCURACY OR COMPLETENESS OF SCANNED COPIES OF THIS PLAN SHEET.

TO ACCOMPANY PLANS DATED 01-06-14

2010 REVISED STANDARD PLAN RSP T13

NOTES:

See Revised Standard Plan RSP T9 for tables.

Use cone spacing X for taper segment, Y for tangent segment or Z for conflict situations, as approriate, per Table 1, unless X, Y, or Z cone spacing is shown on this sheet.

Unless otherwise specified in the special provisions, all temporary warning signs shall have black legend on fluorescent orange background.

California codes are designated by (CA). Otherwise, Federal (MUTCD) codes are shown.

TYPICAL LANE CLOSURE WITH REVERSIBLE CONTROL

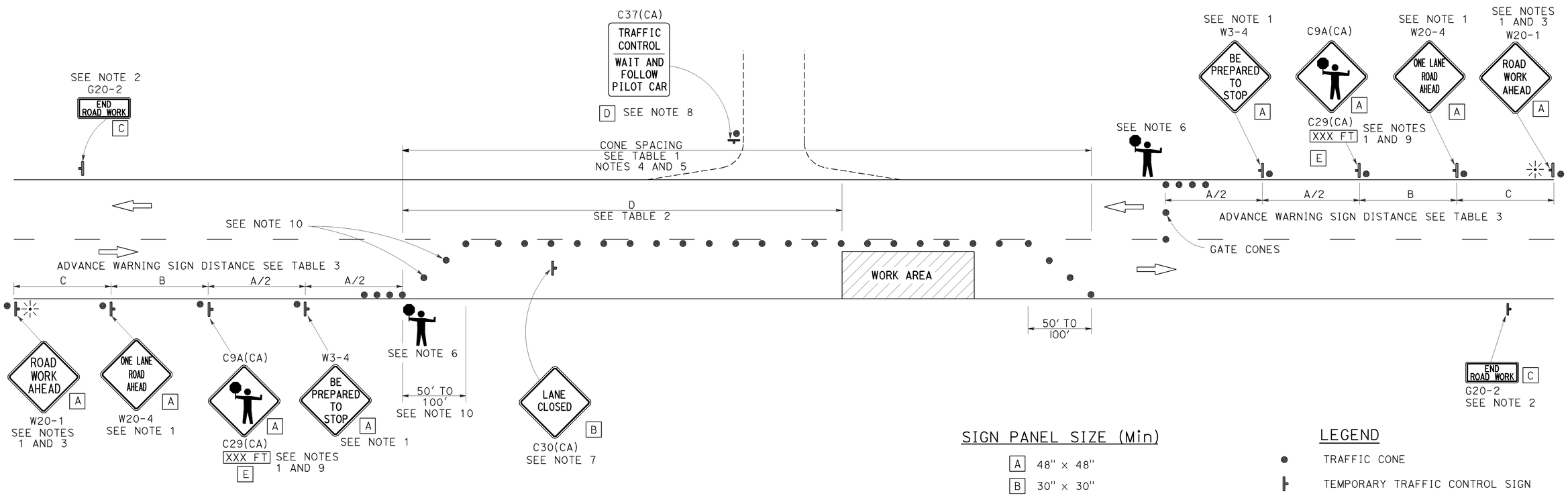

SIGN PANEL SIZE (Min)

A	48" × 48"
B	30" × 30"
C	36" × 18"
D	36" × 42"
E	20" × 7"

LEGEND

- TRAFFIC CONE
- TEMPORARY TRAFFIC CONTROL SIGN
- PORTABLE FLASHING BEACON
- FLAGGER

NOTES:

1. Each advance warning sign in each direction of travel shall be equipped with at least two flags for daytime closure. Each flag shall be at least 16" x 16" in size and shall be orange or fluorescent red-orange in color. Flashing beacons shall be placed at the locations indicated for lane closure during hours of darkness.
2. A G20-2 "END ROAD WORK" sign, as appropriate, shall be placed at the end of the lane control unless the end of work area is obvious, or ends within a larger project's limits.
3. If the W20-1 sign would follow within 2000' of a stationary W20-1 or G20-1 "ROAD WORK NEXT _____ MILES", use a W20-4 sign for the first advance warning sign.
4. All cones used for lane closures during the hours of darkness shall be fitted with retroreflective bands (or sleeves) as specified in the specifications.
5. Portable delineators, placed at one-half the spacing indicated for traffic cones, may be used instead of cones for daytime closures only.
6. Additional advance flaggers may be required. Flagger should stand in a conspicuous place, be visible to approaching traffic as well as approaching vehicles after the first vehicle has stopped. During the hours of darkness, the flagging-station and flagger shall be illuminated and clearly visible to approaching traffic. The illumination footprint of the lighting on the ground shall be at least 20' in diameter. Place a minimum of four cones at 50' intervals in advance of flagger station as shown.
7. Place C30(CA) "LANE CLOSED" sign at 500' to 1000' intervals throughout extended work areas. They are optional if the work area is visible from the flagger station.
8. When a pilot car is used, place a C37(CA) "TRAFFIC CONTROL-WAIT AND FOLLOW PILOT CAR" sign with black legend on white background at all intersections, driveways and alleys without a flagger within traffic control area. Signs shall be clean and visible at all times. Where traffic can not be effectively self-regulated, at least one flagger shall be used at each intersection within traffic control area.
9. An optional C29(CA) sign may be placed below the C9A(CA) sign.
10. Either traffic cones or barricades shall be placed on the taper. Barricades shall be Type I, II, or III.

STATE OF CALIFORNIA
DEPARTMENT OF TRANSPORTATION

TRAFFIC CONTROL SYSTEM FOR LANE CLOSURE ON TWO LANE CONVENTIONAL HIGHWAYS

NO SCALE

RSP T13 DATED APRIL 19, 2013 SUPERSEDES STANDARD PLAN T13 DATED MAY 20, 2011 - PAGE 241 OF THE STANDARD PLANS BOOK DATED 2010.

REVISED STANDARD PLAN RSP T13

Dist	COUNTY	ROUTE	POST MILES TOTAL PROJECT	SHEET No.	TOTAL SHEETS
10	Sta	120	6.1/11.3	48	54

REGISTERED CIVIL ENGINEER

April 19, 2013
PLANS APPROVAL DATE

REGISTERED PROFESSIONAL ENGINEER Gurinderpal Bhullar No. C48815 Exp. 9-30-14 CIVIL STATE OF CALIFORNIA

THE STATE OF CALIFORNIA OR ITS OFFICERS OR AGENTS SHALL NOT BE RESPONSIBLE FOR THE ACCURACY OR COMPLETENESS OF SCANNED COPIES OF THIS PLAN SHEET.

TO ACCOMPANY PLANS DATED 01-06-14

2010 REVISED STANDARD PLAN RSP T15

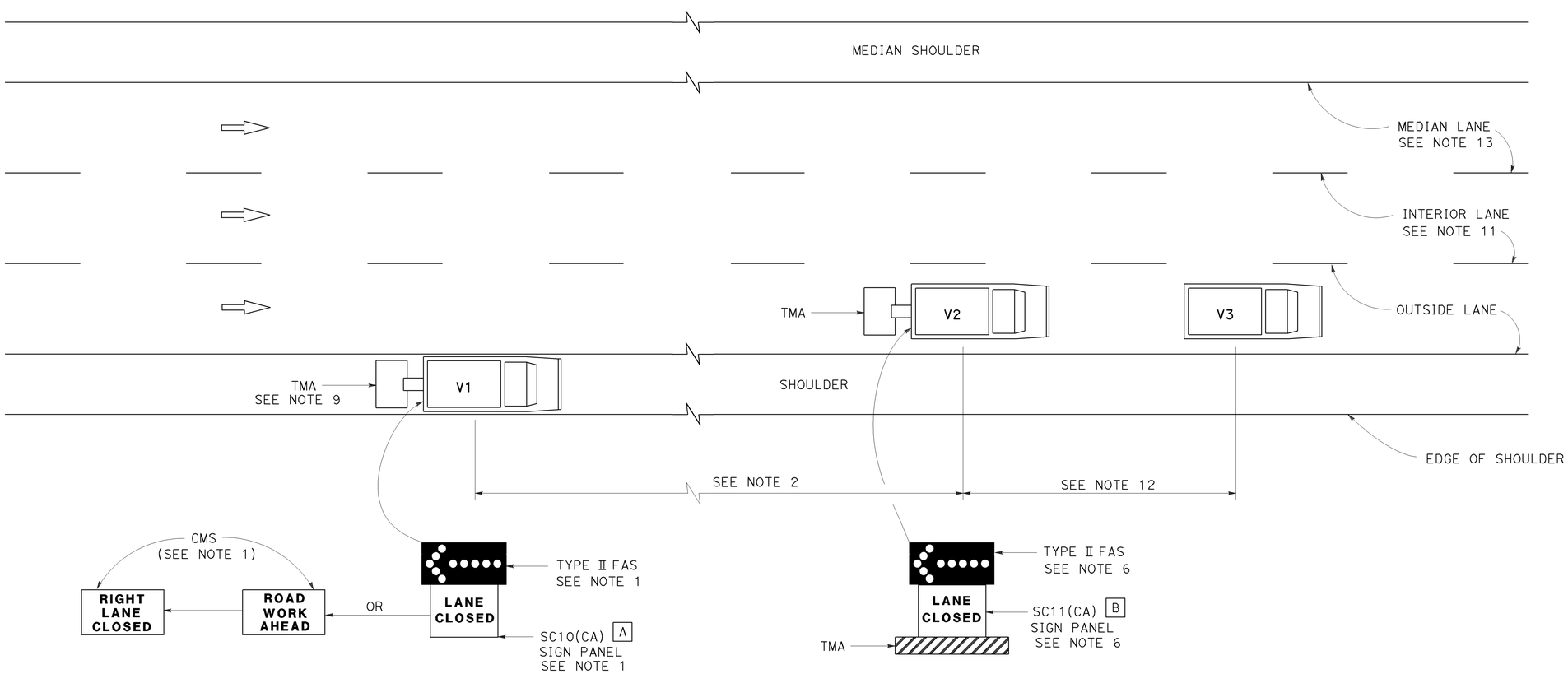

MOVING LANE CLOSURE ON MEDIAN LANE OR OUTSIDE LANE OF MULTILANE HIGHWAYS

SIGN PANEL SIZE (Min)

A 66" x 36"

B 54" x 42"

LEGEND

V1	SIGN VEHICLE
V2	SHADOW VEHICLE
V3	WORK/APPLICATION VEHICLE
	FLASHING ARROW SIGN (FAS)
CMS	CHANGEABLE MESSAGE SIGN
TMA	TRUCK-MOUNTED ATTENUATOR

NOTES:

1. Either a changeable message sign or a SC10(CA) sign panel and a Type II flashing arrow sign shall be mounted on the rear of sign vehicle V1. The changeable message sign shall be sequenced to show the "ROAD WORK AHEAD" message first, followed by the "RIGHT LANE CLOSED" message. For median lane closure, the flashing arrow symbol shall be reversed with the arrowhead on the right and the changeable message sign shall show "LEFT LANE CLOSED".
2. If traffic queues develop, sign vehicle V1 should be positioned upstream from the end of queue. Sign vehicle V1 shall be positioned where highly visible when shoulders are not available.
3. A minimum sight distance of 1500′ should be provided in advance of sign vehicle V1.
4. Sign vehicle V1 should remain at the beginning of horizontal or vertical curves until the other vehicles (V2 and V3) are far enough beyond the curve to resume the minimum sight distance of 1500′.
5. Vehicle-mounted sign panels shall have Type III or above retroreflective sheeting, black on white, or black on fluorescent orange, with 6" minimum series D letters per Caltrans sign specifications.
6. Shadow vehicle V2 shall be equipped with a truck-mounted attenuator. The sign panel shown and a Type II flashing arrow sign shall be mounted on the rear of shadow vehicle V2. For median lane closure the flashing arrow sign symbol shall be displayed with the arrowhead on the right.
7. All vehicles used for lane closures shall be equipped with two-way radios, and the vehicle operators shall maintain communication during the work or application operation.
8. All vehicles shall be equipped with flashing or rotating amber lights.
9. If sign vehicle V1 encroaches into the traffic lane due to insufficient shoulder width, sign vehicle V1 shall be equipped with a truck-mounted attenuator. Sign vehicle V1 shall stay as close to the edge of shoulder as practicable.
10. Where workers would be on foot in the work area, a stationary type lane closure (Revised Standard Plan T10, T11, etc., as applicable) shall be used instead of this plan.
11. For moving lane closure on interior lane of multilane highways, use Revised Standard Plan T16.
12. The spacing between work vehicle(s) and the shadow vehicles, and between each shadow vehicle should be minimized to deter road users from driving in between.
13. When the work/application vehicle V3 occupies the median lane, sign vehicle V1 should drive in the median shoulder and indicate left lane closed ahead.

STATE OF CALIFORNIA
DEPARTMENT OF TRANSPORTATION

TRAFFIC CONTROL SYSTEM FOR MOVING LANE CLOSURE ON MULTILANE HIGHWAYS

NO SCALE

RSP T15 DATED APRIL 19, 2013 SUPERSEDES STANDARD PLAN T15
DATED MAY 20, 2011 - PAGE 243 OF THE STANDARD PLANS BOOK DATED 2010.

REVISED STANDARD PLAN RSP T15

12-18-12

Dist	COUNTY	ROUTE	POST MILES TOTAL PROJECT	SHEET No.	TOTAL SHEETS
10	Sta	120	6.1/11.3	49	54

REGISTERED CIVIL ENGINEER

April 19, 2013
PLANS APPROVAL DATE

REGISTERED PROFESSIONAL ENGINEER Gurinderpal Bhullar No. C48815 Exp. 9-30-14 CIVIL STATE OF CALIFORNIA

THE STATE OF CALIFORNIA OR ITS OFFICERS OR AGENTS SHALL NOT BE RESPONSIBLE FOR THE ACCURACY OR COMPLETENESS OF SCANNED COPIES OF THIS PLAN SHEET.

TO ACCOMPANY PLANS DATED 01-06-14

2010 REVISED STANDARD PLAN RSP T16

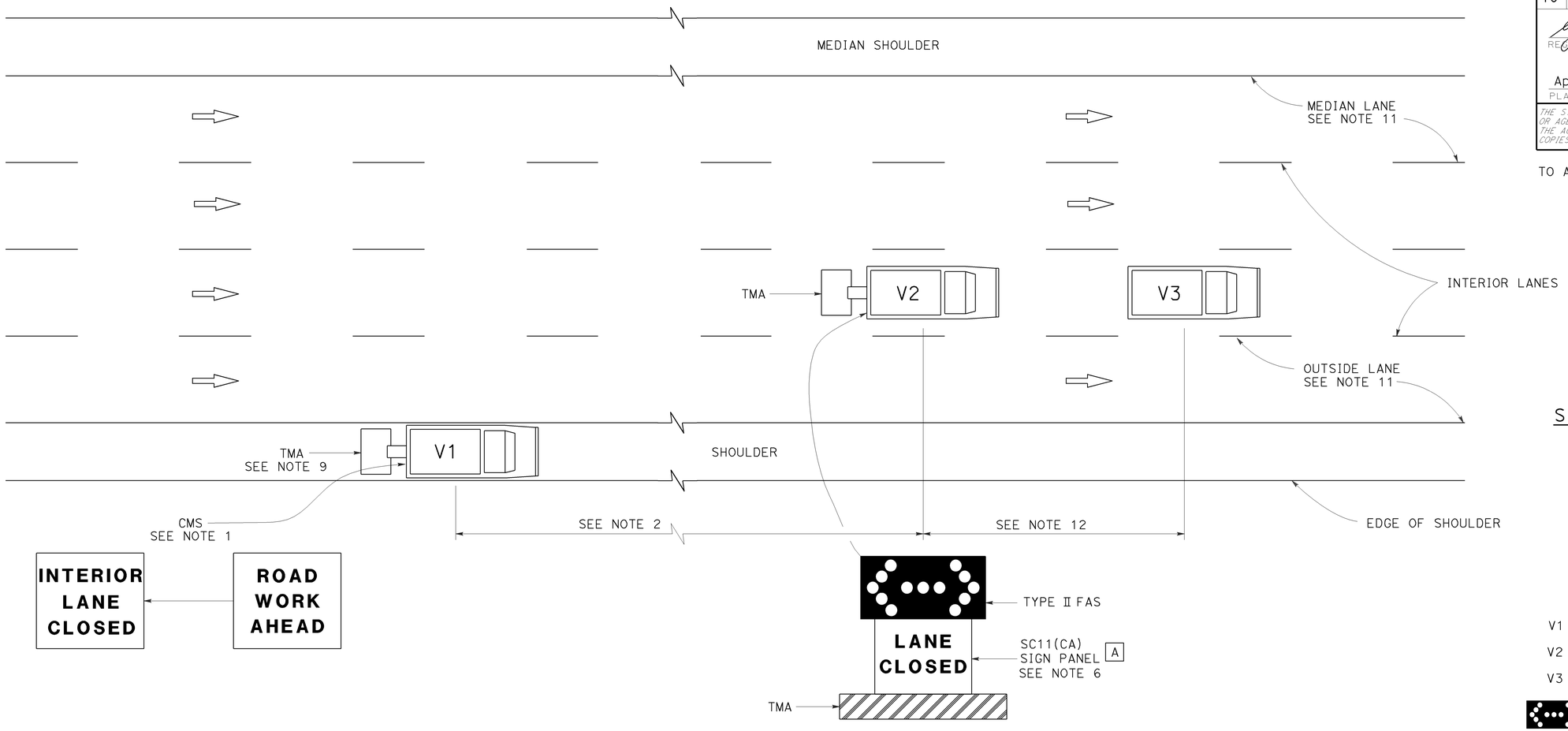

MOVING LANE CLOSURE ON INTERIOR LANE OF MULTILANE HIGHWAYS

SIGN PANEL SIZE (Min)

A 54" x 42"

LEGEND

V1	SIGN VEHICLE
V2	SHADOW VEHICLE
V3	WORK/APPLICATION VEHICLE
	FLASHING ARROW SIGN (FAS) IN FLASHING DOUBLE ARROW MODE
CMS	CHANGEABLE MESSAGE SIGN
TMA	TRUCK-MOUNTED ATTENUATOR

NOTES:

1. A changeable message sign shall be mounted on the rear of sign vehicle V1. The changeable message sign shall be sequenced to show the "ROAD WORK AHEAD" message first, followed by the "INTERIOR LANE CLOSED" message. The message "CENTER LANE CLOSED" may be used in place of the "INTERIOR LANE CLOSED" message.
2. If traffic queues develop, sign vehicle V1 should be positioned upstream from the end of queue. Sign vehicle V1 shall be positioned where highly visible when shoulders are not available.
3. A minimum sight distance of 1500′ should be provided in advance of sign vehicle V1.
4. Sign vehicle V1 should remain at the beginning of horizontal or vertical curves until the other vehicles (V2 and V3) are far enough beyond the curve to resume the minimum sight distance of 1500′.
5. Vehicle-mounted sign panels shall have Type III or above retroreflective sheeting, black on white, or black on fluorescent orange, with 6" minimum series D letters per Caltrans sign specifications.
6. Shadow vehicle V2 shall be equipped with a truck-mounted attenuator. The sign panel shown and a Type II flashing arrow sign shall be mounted on the rear of shadow vehicle V2.
7. All vehicles used for lane closures shall be equipped with two-way radios, and the vehicle operators shall maintain communication during the work or application operation.
8. All vehicles shall be equipped with flashing or rotating amber lights.
9. If sign vehicle V1 encroaches into the traffic lane due to insufficient shoulder width, sign vehicle V1 shall be equipped with a truck-mounted attenuator. Sign vehicle V1 shall stay as close to the edge of shoulder as practicable.
10. Where workers would be on foot in the work area, a stationary type lane closure (Revised Standard Plan T10, T11 etc., as applicable) shall be used instead of this plan.
11. For moving lane closure on median lane or outside lane of multilane highways, use Revised Standard Plan T15.
12. The spacing between work vehicle(s) and the shadow vehicles, and between each shadow vehicle should be minimized to deter road users from driving in between.

STATE OF CALIFORNIA
DEPARTMENT OF TRANSPORTATION

TRAFFIC CONTROL SYSTEM FOR MOVING LANE CLOSURE ON MULTILANE HIGHWAYS

NO SCALE

RSP T16 DATED APRIL 19, 2013 SUPERSEDES STANDARD PLAN T16
DATED MAY 20, 2011 - PAGE 244 OF THE STANDARD PLANS BOOK DATED 2010.

REVISED STANDARD PLAN RSP T16

12-18-12

Dist	COUNTY	ROUTE	POST MILES TOTAL PROJECT	SHEET No.	TOTAL SHEETS
10	Sta	120	6.1/11.3	50	54

REGISTERED CIVIL ENGINEER

April 19, 2013
PLANS APPROVAL DATE

REGISTERED PROFESSIONAL ENGINEER Gurinderpal Bhullar No. C48815 Exp. 9-30-14 CIVIL STATE OF CALIFORNIA

THE STATE OF CALIFORNIA OR ITS OFFICERS OR AGENTS SHALL NOT BE RESPONSIBLE FOR THE ACCURACY OR COMPLETENESS OF SCANNED COPIES OF THIS PLAN SHEET.

TO ACCOMPANY PLANS DATED 01-06-14

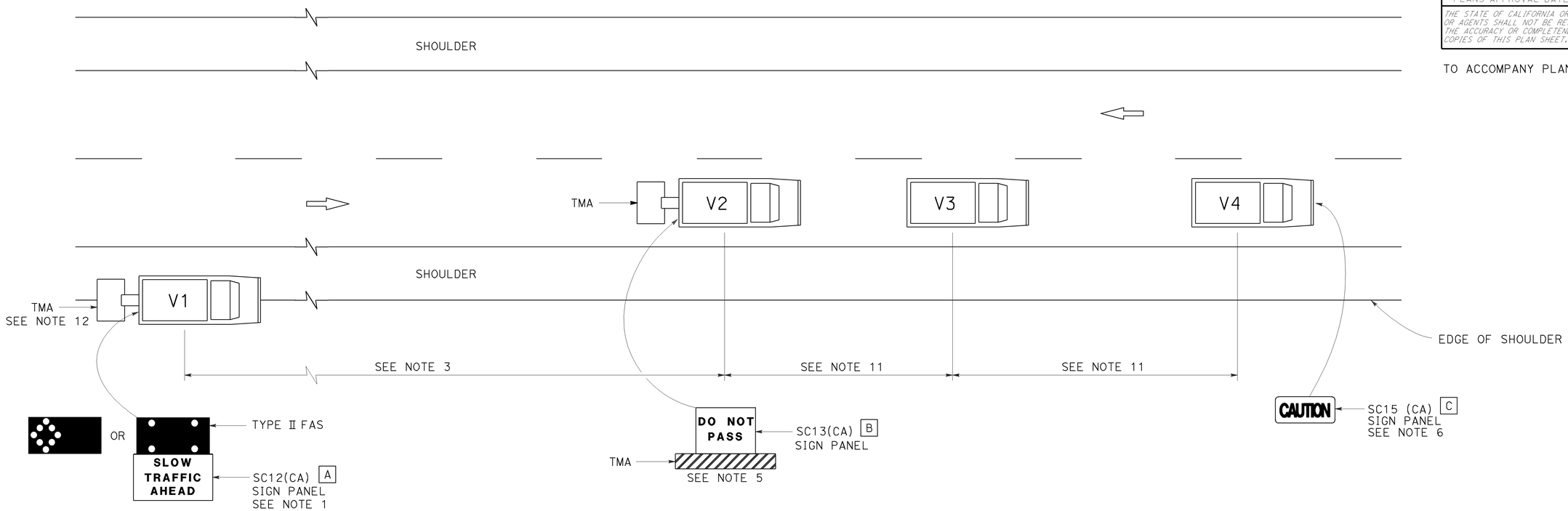

LEGEND

V1	SIGN VEHICLE
V2	SHADOW VEHICLE
V3	WORK/APPLICATION VEHICLE
V4	SIGN VEHICLE
TMA	TRUCK-MOUNTED ATTENUATOR
	FLASHING ARROW SIGN (FAS) IN FLASHING CAUTION MODE
	FLASHING ARROW SIGN (FAS) IN ALTERNATING DIAMOND CAUTION

SIGN PANEL SIZE (Min)

A	72" x 42"
B	54" x 42"
C	54" x 24"

NOTES:

1. Either a changeable message sign or a SC12(CA) "SLOW TRAFFIC AHEAD" sign shall be mounted on the rear of sign vehicle V1. The changeable message sign shall be sequenced to show the "CAUTION" message first, follow by the "SLOW TRAFFIC AHEAD" message. A Type II flashing arrow sign may be used with the SC12(CA) sign panel.
2. Sign vehicle V1 should be positioned where highly visible when shoulders are not available.
3. If traffic queues develop, sign vehicle V1 should be positioned upstream from the end of queue.
4. Vehicle-mounted sign panels shall have Type III or above retroreflective sheeting, black on white, or black on fluorescent orange, with 6" minimum series D letters per Caltrans sign specifications.
5. Shadow vehicle shall be equipped with a truck-mounted attenuator. The sign panel shown shall be mounted on the rear of shadow vehicle V2. The message "LANE CLOSED" may be used in place of the "DO NOT PASS" message.
6. The sign panel shown shall be mounted on the front of sign vehicle V4, facing opposing traffic.
7. All vehicles shall be equipped with flashing or rotating amber lights.
8. Sign vehicle V4 will not be required when the work and vehicles V2 and V3 are 2′ or more from the centerline of the highway during the work or application operations.
9. All vehicles used for lane closures shall be equipped with two-way radios and the vehicle operators shall maintain communication during the work or application operation.
10. This plan shall not be used where workers would be on foot in the work area. Use a stationary type lane closure (Revised Standard Plan T13) for this condition.
11. Minimize spacing between vehicles V2 and V3 and vehicles V3 and V4 to deter road users from driving in between them.
12. If sign vehicle V1 encroaches into the traffic lane due to insufficient shoulder width, sign vehicle V1 shall be equipped with a truck-mounted attenuator. Sign vehicle V1 shall stay as close to the edge of shoulder as practicable.

STATE OF CALIFORNIA
DEPARTMENT OF TRANSPORTATION

TRAFFIC CONTROL SYSTEM FOR MOVING LANE CLOSURE ON TWO LANE HIGHWAYS

NO SCALE

RSP T17 DATED APRIL 19, 2013 SUPERSEDES STANDARD PLAN T17
DATED MAY 20, 2011 - PAGE 245 OF THE STANDARD PLANS BOOK DATED 2010.

REVISED STANDARD PLAN RSP T17

2010 REVISED STANDARD PLAN RSP T17

12-18-12

Dist	COUNTY	ROUTE	POST MILES TOTAL PROJECT	SHEET No.	TOTAL SHEETS
10	Sta	120	6.1/11.3	51	54

Theresa Gabriel
REGISTERED ELECTRICAL ENGINEER

July 19, 2013
PLANS APPROVAL DATE

REGISTERED PROFESSIONAL ENGINEER
Theresa Aziz Gabriel
No. E15129
Exp. 6-30-14
ELECTRICAL
STATE OF CALIFORNIA

THE STATE OF CALIFORNIA OR ITS OFFICERS OR AGENTS SHALL NOT BE RESPONSIBLE FOR THE ACCURACY OR COMPLETENESS OF SCANNED COPIES OF THIS PLAN SHEET.

TO ACCOMPANY PLANS DATED 01-06-14

LEGEND:

- AB — ABANDON. IF APPLIED TO CONDUIT, REMOVE CONDUCTORS
- BC — INSTALL PULL BOX IN EXISTING CONDUIT RUN
- BP — PEDESTRIAN BARRICADE, TYPE AS INDICATED ON PLAN
- CB — INSTALL CONDUIT INTO EXISTING PULL BOX
- CC — CONNECT NEW AND EXISTING CONDUIT. REMOVE EXISTING CONDUCTORS AND INSTALL CONDUCTORS AS INDICATED
- CF — CONDUIT TO REMAIN FOR FUTURE USE. REMOVE CONDUCTORS. INSTALL PULL TAPE
- DH — DETECTOR HANDHOLE
- FA — FOUNDATION TO BE ABANDONED
- IS — INSTALL SIGN ON SIGNAL MAST ARM
- NS — NO SLIP BASE ON STANDARD
- PEC — PHOTOELECTRIC CONTROL
- PEU — PHOTOELECTRIC UNIT
- RC — EQUIPMENT OR MATERIAL TO BE REMOVED AND BECOME THE PROPERTY OF THE CONTRACTOR
- RE — REMOVE ELECTROLIER, FUSES AND BALLAST. TAPE ENDS OF CONDUCTORS
- RL — RELOCATE EQUIPMENT
- RR — REMOVE AND REUSE EQUIPMENT
- RS — REMOVE AND SALVAGE EQUIPMENT
- SC — SPLICE NEW TO EXISTING CONDUCTORS
- SD — SERVICE DISCONNECT
- TSP — TELEPHONE SERVICE POINT

ABBREVIATIONS

APS	ACCESSIBLE PEDESTRIAN SIGNAL
BBS	BATTERY BACKUP SYSTEM
BC	BOLT CIRCLE
BPB	BICYCLE PUSH BUTTON
C	CONDUIT
CB	CIRCUIT BREAKER
CCTV	CLOSED CIRCUIT TELEVISION
Ckt	CIRCUIT
CMS	CHANGEABLE MESSAGE SIGN
Ctid	CALTRANS IDENTIFICATION
Comm	COMMUNICATION
DLC	LOOP DETECTOR LEAD-IN CABLE
EMS	EXTINGUISHABLE MESSAGE SIGN
EVUC	EMERGENCY VEHICLE UNIT CABLE
EVUD	EMERGENCY VEHICLE UNIT DETECTOR
FB	FLASHING BEACON
FBCA	FLASHING BEACON CONTROL ASSEMBLY
FBS	FLASHING BEACON WITH SLIP BASE
FO	FIBER OPTIC
G	EQUIPMENT GROUNDING CONDUCTOR
GB	GROUND BUS
GFCI	GROUND FAULT CIRCUIT INTERRUPTER
HAR	HIGHWAY ADVISORY RADIO
Hex	HEXAGONAL
HPS	HIGH PRESSURE SODIUM
IISNS	INTERNALLY ILLUMINATED STREET NAME SIGN
ISL	INDUCTION SIGN LIGHTING
LED	LIGHT EMITTING DIODE
LMA	LUMINAIRE MAST ARM
LPS	LOW PRESSURE SODIUM
Ltg	LIGHTING
Lum	LUMINAIRE
M	METERED
MAT	MAST ARM MOUNTING TOP ATTACHMENT
MAS	MAST ARM MOUNTING SIDE ATTACHMENT
M/M	MULTIPLE TO MULTIPLE TRANSFORMER
Mtg	MOUNTING
MV	MERCURY VAPOR LIGHTING FIXTURE
MVDS	MICROWAVE VEHICLE DETECTION SYSTEM
N	NEUTRAL (GROUNDED CONDUCTOR)
NB	NEUTRAL BUS
NC	NORMALLY CLOSE
NO	NORMALLY OPEN
P	CIRCUIT BREAKER'S POLE
PB	PULL BOX
PBA	PUSH BUTTON ASSEMBLY
PEC	PHOTOELECTRIC CONTROL
Ped	PEDESTRIAN
PEU	PHOTOELECTRIC UNIT
PT	CONDUIT WITH PULL TAPE
RE	RELOCATED EQUIPMENT
RM	RAMP METERING
RWIS	ROADSIDE WEATHER INFORMATION SYSTEM
SB	SLIP BASE
SIC	SIGNAL INTERCONNECT CABLE
Sig	SIGNAL
SMA	SIGNAL MAST ARM
SNS	STREET NAME SIGN
SP	SERVICE POINT
TDC	TELEPHONE DEMARCATION CABINET
TMS	TRAFFIC MONITORING STATION
TOS	TRAFFIC OPERATIONS SYSTEM
Veh	VEHICLE
VIVDS	VIDEO IMAGE VEHICLE DETECTION SYSTEM
WIM	WEIGH-IN-MOTION
Xfmr	TRANSFORMER

SOFFIT AND WALL MOUNTED LUMINAIRES

- PENDANT, 70 W HPS UNLESS OTHERWISE SPECIFIED
- FLUSH, 70 W HPS UNLESS OTHERWISE SPECIFIED
- WALL SURFACE, 70 W HPS UNLESS OTHERWISE SPECIFIED
- EXISTING SOFFIT OR WALL LUMINAIRE TO REMAIN UNMODIFIED
- EXISTING SOFFIT OR WALL LUMINAIRE TO BE MODIFIED AS SPECIFIED

NOTE:
Arrow indicates "street side" of luminaire.

COMMONLY USED SYMBOLS FOR UNITED STATES CUSTOMARY UNITS OF MEASUREMENT:

SYMBOL USED	DEFINITIONS
Ω	OHMS
min	MINUTE
s	SECOND
bps	BITS PER SECOND
Bps	BYTES PER SECOND
A	AMPERE
V	VOLT
V(dc)	VOLT (DIRECT CURRENT)
V(ac)	VOLT (ALTERNATING CURRENT)
FC	FOOT - CANDLE
W	WATTS
VA	VOLT-AMPERE
M	MEGA
k	KILO
m	MILLI
μ	MICRO
P	PICO
Hz	HERTZ

MISCELLANEOUS ELECTROLIERS

NEW	EXISTING	
		LUMINAIRE ON WOOD POLE
		NON-STANDARD ELECTROLIER (SEE PROJECT NOTES OR PROJECT PLANS)
		CITY ELECTROLIER
		ELECTROLIER FOUNDATION (FUTURE INSTALLATION)

NOTES:

1. HPS luminaires shall be 310 W HPS when installed on Type 21, 21D, 30, 31 and 32 Standards, unless otherwise specified. HPS luminaires shall be 200 W when installed on other type standards or poles, unless otherwise specified.
2. LED luminaires shall be 235 W when installed on Type 21, 21D, 30, 31 and 32 Standards, unless otherwise specified. LED luminaires shall be 165 W when installed on other type standards or poles, unless otherwise specified.
3. Luminaires shall be the cutoff type, ANSI Type III medium cutoff lighting distribution, unless otherwise specified.

STANDARD ELECTROLIER

NEW	EXISTING	STANDARD TYPE
		15
		15D
		15 STRUCTURE
		15D STRUCTURE
		21
		21D
		21 STRUCTURE
		21D STRUCTURE
		30
		31
		32

STATE OF CALIFORNIA
DEPARTMENT OF TRANSPORTATION

ELECTRICAL SYSTEMS (LEGEND AND ABBREVIATIONS)

NO SCALE

RSP ES-1A DATED JULY 19, 2013 SUPERSEDES STANDARD PLAN ES-1A DATED MAY 20, 2011 - PAGE 425 OF THE STANDARD PLANS BOOK DATED 2010.

REVISED STANDARD PLAN RSP ES-1A

2010 REVISED STANDARD PLAN RSP ES-1A

Dist	COUNTY	ROUTE	POST MILES TOTAL PROJECT	SHEET No.	TOTAL SHEETS
10	Sta	120	6.1/11.3	52	54

Theresa Gabriel
REGISTERED ELECTRICAL ENGINEER

July 19, 2013
PLANS APPROVAL DATE

REGISTERED PROFESSIONAL ENGINEER
Theresa Aziz Gabriel
No. E15129
Exp. 6-30-14
ELECTRICAL
STATE OF CALIFORNIA

THE STATE OF CALIFORNIA OR ITS OFFICERS OR AGENTS SHALL NOT BE RESPONSIBLE FOR THE ACCURACY OR COMPLETENESS OF SCANNED COPIES OF THIS PLAN SHEET.

TO ACCOMPANY PLANS DATED 01-06-14

CONDUIT

NEW	EXISTING	
		LIGHTING CONDUIT, UNLESS OTHERWISE INDICATED OR NOTED
		TRAFFIC SIGNAL CONDUIT
C	c	COMMUNICATION CONDUIT
T	t	TELEPHONE CONDUIT
F	f	FIRE ALARM CONDUIT
FO	fo	FIBER OPTIC CONDUIT
		CONDUIT TERMINATION
R	r	CONDUIT RISER ATTACHED TO THE STRUCTURE OR SERVICE POLE

SERVICE EQUIPMENT

NEW	EXISTING	
OH	oh	OVERHEAD LINES
U	U	WOOD POLE, "U" INDICATES UTILITY OWNED
		POLE GUY WITH ANCHOR
		UTILITY TRANSFORMER - GROUND MOUNTED
III	III	SERVICE EQUIPMENT ENCLOSURE TYPE. DOOR INDICATES FRONT OF ENCLOSURE
T	t	TELEPHONE DEMARCATION CABINET

POLE-MOUNTED SERVICE DESIGNATION

TYPE H SERVICE, 28'-10" — TYPE OF INSTALLATION AND POLE HEIGHT ABOVE GRADE

FLASHING BEACON

NEW	EXISTING	
R	R	FLASHING BEACON (ONE VEHICLE SIGNAL HEAD WITH BACKPLATE AND VISOR) "R" INDICATES RED INDICATION, "Y" INDICATES YELLOW INDICATION
Y Y	Y Y	FLASHING BEACON WITH TYPE 15-FBS STANDARD AND A SIGN.
R R	R R	FLASHING BEACON WITH TYPES 9, 9A OR 9B SIGN UNLESS OTHERWISE SPECIFIED OR INDICATED

SIGNAL EQUIPMENT

NEW	EXISTING	
C	C	PEDESTRIAN SIGNAL HEAD "C" INDICATES COUNTDOWN PEDESTRIAN HEAD
		PUSH BUTTON ASSEMBLY POST
		PEDESTRIAN BARRICADE
		VEHICLE SIGNAL HEAD (WITH BACKPLATE AND 3-SECTIONS: RED, YELLOW AND GREEN)
		VEHICLE SIGNAL HEAD WITH ANGLE VISOR
PV	PV	MODIFICATIONS OF BASIC SYMBOL: "L" INDICATES ALL NON-ARROW SECTIONS LOUVERED "LG" INDICATES LOUVERED GREEN SECTION ONLY "PV" INDICATES ALL 12" SECTIONS PROGRAMMED VISIBILITY "8" INDICATES ALL 8" SECTIONS (ONLY WHEN SPECIFIED)
		VEHICLE SIGNAL HEAD CONSISTING OF RED, YELLOW AND GREEN LEFT ARROW SECTIONS
		VEHICLE SIGNAL HEAD CONSISTING OF RED AND YELLOW SECTIONS WITH AN UP GREEN ARROW SECTION
		VEHICLE SIGNAL HEAD (5 SECTION) CONSISTING OF RED, YELLOW AND GREEN SECTIONS WITH YELLOW AND GREEN RIGHT ARROW SECTIONS
		TYPE 15TS STANDARD WITH VEHICLE SIGNAL HEAD AND LUMINAIRE
		TYPE 21TS STANDARD WITH VEHICLE SIGNAL HEAD AND LUMINAIRE
		STANDARD WITH LUMINAIRE AND SIGNAL MAST ARMS AND ATTACHED VEHICLE SIGNAL HEADS
		TYPE 1 STANDARD WITH ATTACHED VEHICLE SIGNAL HEADS
		STANDARD WITH A SIGNAL MAST ARM, ATTACHED VEHICLE SIGNAL HEADS AND INTERNALLY ILLUMINATED STREET NAME SIGN
		CONTROLLER ASSEMBLY. DOOR INDICATES FRONT OF CABINET

SIGNAL EQUIPMENT Cont

NEW	EXISTING	
		GUARD POST
		TYPE 1 STANDARD WITH RAMP METERING SIGN
		OPTICAL DETECTOR FOR THE EMERGENCY VEHICLE DETECTION SYSTEM

NOTES:

1. All signal sections shall be 12" unless shown otherwise.
2. Signal heads shall be provided with backplates unless shown otherwise.

ILLUMINATED OVERHEAD SIGN

NEW	EXISTING	
		SINGLE POST, SINGLE ILLUMINATED SIGN, BALANCED BUTTERFLY
		SINGLE POST, DOUBLE ILLUMINATED SIGN, BALANCED BUTTERFLY
		SINGLE POST, SINGLE ILLUMINATED SIGN, FULL CANTILEVER
		DOUBLE POST, SINGLE ILLUMINATED SIGN
		SINGLE ILLUMINATED SIGN MOUNTED ON STRUCTURE
		DOUBLE POST, SINGLE ILLUMINATED SIGN WITH ELECTROLIER

STATE OF CALIFORNIA
DEPARTMENT OF TRANSPORTATION

ELECTRICAL SYSTEMS (LEGEND AND ABBREVIATIONS)

NO SCALE

RSP ES-1B DATED JULY 19, 2013 SUPERSEDES STANDARD PLAN ES-1B DATED MAY 20, 2011 - PAGE 426 OF THE STANDARD PLANS BOOK DATED 2010.

REVISED STANDARD PLAN RSP ES-1B

2010 REVISED STANDARD PLAN RSP ES-1B

7-15-13

Dist	COUNTY	ROUTE	POST MILES TOTAL PROJECT	SHEET No.	TOTAL SHEETS
10	Sta	120	6.1/11.3	53	54

Theresa Gabriel
REGISTERED ELECTRICAL ENGINEER

July 19, 2013
PLANS APPROVAL DATE

REGISTERED PROFESSIONAL ENGINEER
Theresa Aziz Gabriel
No. E15129
Exp. 6-30-14
ELECTRICAL
STATE OF CALIFORNIA

THE STATE OF CALIFORNIA OR ITS OFFICERS OR AGENTS SHALL NOT BE RESPONSIBLE FOR THE ACCURACY OR COMPLETENESS OF SCANNED COPIES OF THIS PLAN SHEET.

TO ACCOMPANY PLANS DATED 01-06-14

EQUIPMENT IDENTIFICATION

ILLUMINATED SIGN IDENTIFICATION NUMBER:

SIGN No. 12345
10 ISL SCI 1.0

- SIGN NUMBER - PLACE ON POST OR STRUCTURE
- TRANSFORMER RATING (kVA)
- LIGHTING CONTROL TYPE
- NUMBER AND TYPE OF FIXTURES

DO NOT PLACE ON STANDARD OR STRUCTURE

ELECTROLIER OR EQUIPMENT IDENTIFICATION NUMBER:

12345 - 15'-0"

- MAST ARM LENGTH, IF SHOWN. DO NOT PLACE ON STANDARD OR STRUCTURE
- EQUIPMENT NUMBER - PLACE ON STANDARD OR STRUCTURE. EXISTING EQUIPMENT NUMBERS ARE SHOWN IN PARENTHESIS

CONDUIT AND CONDUCTOR IDENTIFICATION:

1½"C, 2#10, 15#14, 2 DLC, 12P#18

- PAIR
- NUMBER AND SIZE OF CONDUCTORS AND CABLES
- SIZE OF CONDUIT IN INCHES

ø1, ø2, ø2P, etc.	TRAFFIC PHASE IDENTIFICATION FOR SIGNAL FACES, DETECTORS AND PHASE DIAGRAMS
1 2 3	LEGEND NUMBERS
A B C	EQUIPMENT, SIGNAL POLES, INSTALLATION OR ITEMS
1 2 3	CONDUIT RUN NUMBERS

SIGNAL AND LIGHTING STANDARD (TYPICAL DESIGNATION):

19A - 3 - 100

- WIND VELOCITY = 100 mph
- CASE 3 ARM LOADING
- STANDARD TYPE
- STANDARD PLAN SHEET NUMBER
- DETAIL, NUMBER, SECTION, TYPE OR ELEVATION

MISCELLANEOUS EQUIPMENT

NEW	EXISTING	
CMS	cms	CHANGEABLE MESSAGE SIGN
		CLOSED CIRCUIT TELEVISION CAMERA
		HIGHWAY ADVISORY RADIO POLE AND ANTENNA
EMS	ems	EXTINGUISHABLE MESSAGE SIGN
M V	m v	DETECTION DEVICE M = MICROWAVE SENSOR V = VIDEO IMAGE SENSOR

WIRING DIAGRAM LEGEND

----	EXTERNAL CONDUCTOR
	CONDUCTOR OR BUS
	TIE POINT
	CONTACTOR COIL
	CONTACTOR, NO CONTACT
	TERMINAL BLOCKS
	CONTACTOR, NC CONTACT
	ENCLOSURE BOND
	GROUNDING ELECTRODE
	CIRCUIT BREAKER
	RECEPTACLE

PULL BOXES

NEW	EXISTING	
		PULL BOX, No. 5 UNLESS OTHERWISE INDICATED OR NOTED
3	9A(21)	PULL BOX, ADDITIONAL DESIGNATIONS OR DESCRIPTIONS

3 No. 3½ PULL BOX
5 No. 5 PULL BOX
6 No. 6 PULL BOX
7 No. 7 (CEILING PULL BOX)
8 No. 8 (PENDANT SOFFIT PULL BOX)
9 No. 9 PULL BOX
9A No. 9A PULL BOX

(C) COMMUNICATIONS PULL BOX
(E) PULL BOX WITH EXTENSION
(S) SPRINKLER CONTROL PULL BOX
(21) ANCHOR BOLTS AND CONDUIT FOR FUTURE INSTALLATION OF TYPE 21 STANDARD
(T) TRAFFIC PULL BOX

VEHICLE DETECTORS

5 J 9 U

- VEHICLE DETECTOR DESIGNATION
- U = UPPER
  L = LOWER
- SLOT NUMBER IN INPUT FILE
- INPUT FILE (I OR J)
- PHASE

NEW	EXISTING	
		TYPE A DETECTOR LOOP. OUTLINE OF SAWCUT SHOWN
		TYPE B DETECTOR LOOP. OUTLINE OF SAWCUT SHOWN
		TYPE C DETECTOR LOOP. OUTLINE OF SAWCUT SHOWN
		TYPE D DETECTOR LOOP. OUTLINE OF SAWCUT SHOWN
		TYPE E DETECTOR LOOP. OUTLINE OF SAWCUT SHOWN
		TYPE Q DETECTOR LOOP. OUTLINE OF SAWCUT SHOWN
		MAGNETIC DETECTOR
DH	dh	DETECTOR HANDHOLE
		MICROWAVE OR VIDEO DETECTION ZONE

STATE OF CALIFORNIA
DEPARTMENT OF TRANSPORTATION

ELECTRICAL SYSTEMS (LEGEND AND ABBREVIATIONS)

NO SCALE

RSP ES-1C DATED JULY 19, 2013 SUPERSEDES STANDARD PLAN ES-1C DATED MAY 20, 2011 - PAGE 427 OF THE STANDARD PLANS BOOK DATED 2010.

REVISED STANDARD PLAN RSP ES-1C

2010 REVISED STANDARD PLAN RSP ES-1C

7-11-13

Dist	COUNTY	ROUTE	POST MILES TOTAL PROJECT	SHEET No.	TOTAL SHEETS
10	Sta	120	6.1/11.3	54	54

Theresa Gabriel
REGISTERED ELECTRICAL ENGINEER

July 19, 2013
PLANS APPROVAL DATE

REGISTERED PROFESSIONAL ENGINEER
Theresa Aziz Gabriel
No. E15129
Exp. 6-30-14
ELECTRICAL
STATE OF CALIFORNIA

THE STATE OF CALIFORNIA OR ITS OFFICERS OR AGENTS SHALL NOT BE RESPONSIBLE FOR THE ACCURACY OR COMPLETENESS OF SCANNED COPIES OF THIS PLAN SHEET.

TO ACCOMPANY PLANS DATED 01-06-14

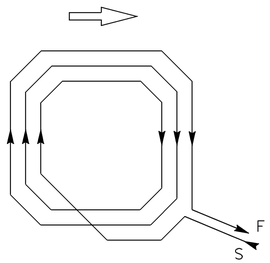

WINDING DETAIL

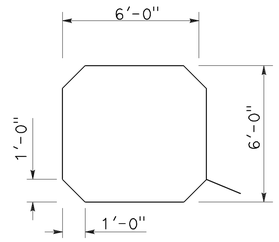

SAWCUT DETAIL

TYPE A LOOP DETECTOR CONFIGURATION

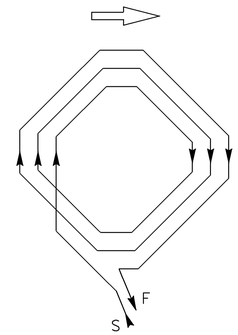

WINDING DETAIL

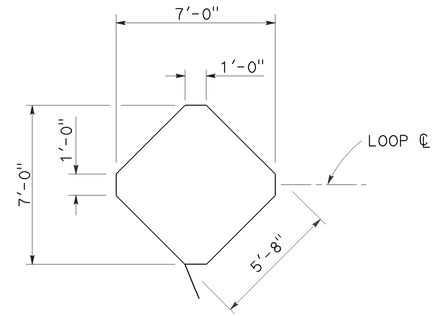

SAWCUT DETAIL

TYPE B LOOP DETECTOR CONFIGURATION

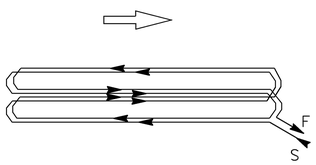

WINDING DETAIL

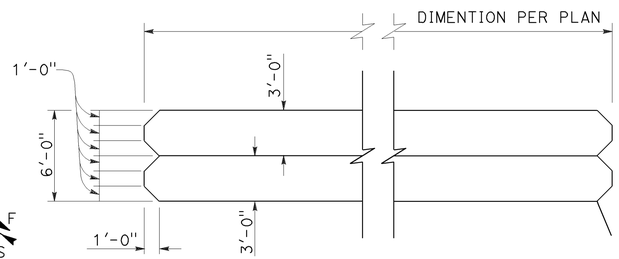

SAWCUT DETAIL

TYPE C LOOP DETECTOR CONFIGURATION

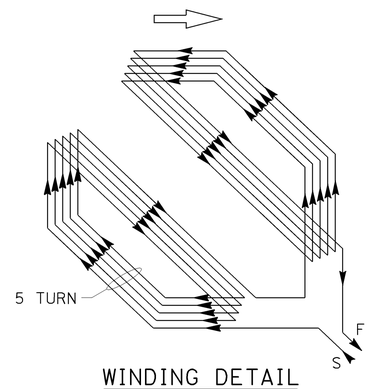

WINDING DETAIL

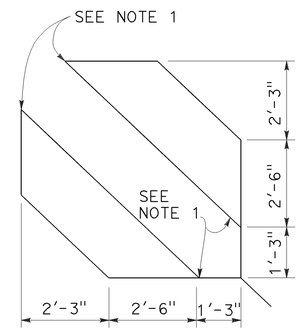

SAWCUT DETAIL

TYPE D LOOP DETECTOR CONFIGURATION

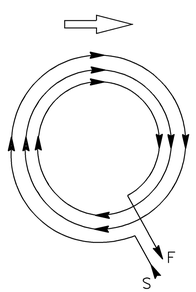

WINDING DETAIL

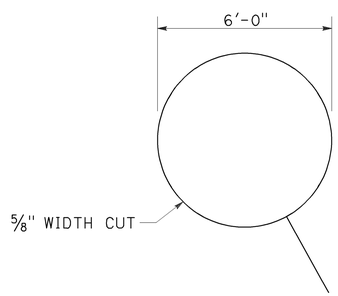

SAWCUT DETAIL

TYPE E LOOP DETECTOR CONFIGURATION

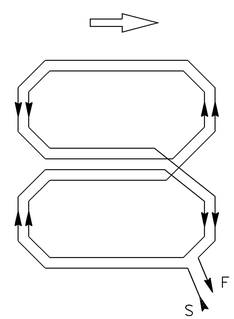

WINDING DETAIL

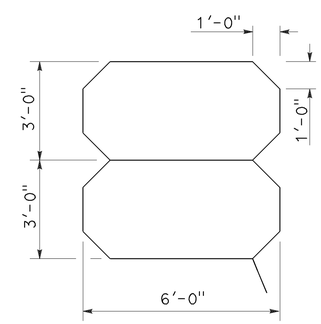

SAWCUT DETAIL

TYPE Q LOOP DETECTOR CONFIGURATION

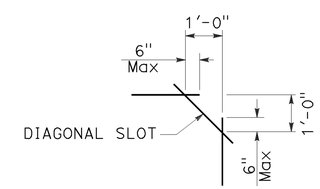

PLAN VIEW OF DIAGONAL SLOT AT CORNERS

NOTES:

1. Round corners of acute angle sawcuts to prevent damage to conductors.
2. Typical distance separating loops from edge to edge is 10' for Type A, B, D and E installation in single lane.

STATE OF CALIFORNIA
DEPARTMENT OF TRANSPORTATION

ELECTRICAL SYSTEMS (DETECTORS)

NO SCALE

RSP ES-5B DATED JULY 19, 2013 SUPERSEDES STANDARD PLAN ES-5B DATED MAY 20, 2011 - PAGE 449 OF THE STANDARD PLANS BOOK DATED 2010.

REVISED STANDARD PLAN RSP ES-5B

2010 REVISED STANDARD PLAN RSP ES-5B

7-9-13