Dist	COUNTY	ROUTE	POST MILES TOTAL PROJECT	SHEET No.	TOTAL SHEETS
07	LA	5	19.2/28.9	101	217

REGISTERED CIVIL ENGINEER 1-31-14 DATE

2-10-14
PLANS APPROVAL DATE

REGISTERED PROFESSIONAL ENGINEER EDGAR HERRERA No. C67603 Exp. 6-30-15 CIVIL STATE OF CALIFORNIA

THE STATE OF CALIFORNIA OR ITS OFFICERS OR AGENTS SHALL NOT BE RESPONSIBLE FOR THE ACCURACY OR COMPLETENESS OF SCANNED COPIES OF THIS PLAN SHEET.

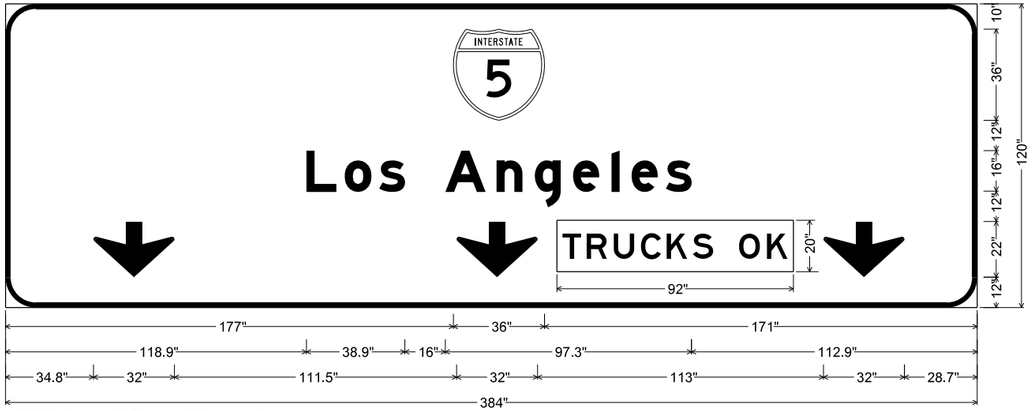

12.0" Radius, 2.0" Border, White on Green;
[Los Angeles] E Mod; Down Arrow 22.0" 270°; Down Arrow 22.0" 270°; Down Arrow 22.0" 270°;

SIGN OS13-2a
FSBT Sta
OVERHEAD SIGN STRUCTURE
(TRUSS)

9.0" Radius, 1.5" Border, White on Green;
[EXIT] E; [138] E;

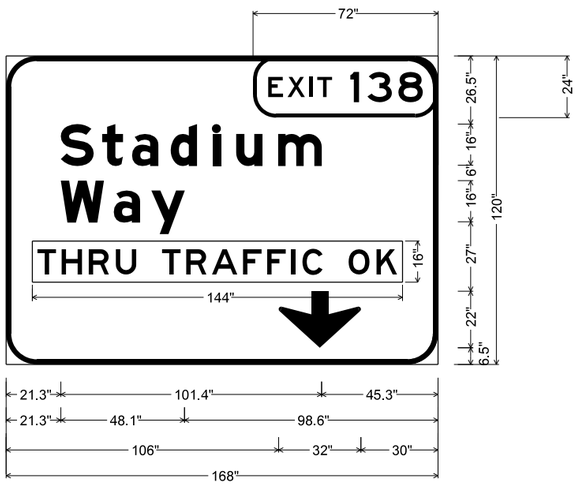

12.0" Radius, 2.0" Border, White on Green;
[Stadium] E Mod; [Way] E Mod; Down Arrow 22.0" 270°;

SIGN OS13-2b
FSBT Sta
OVERHEAD SIGN STRUCTURE
(TRUSS)

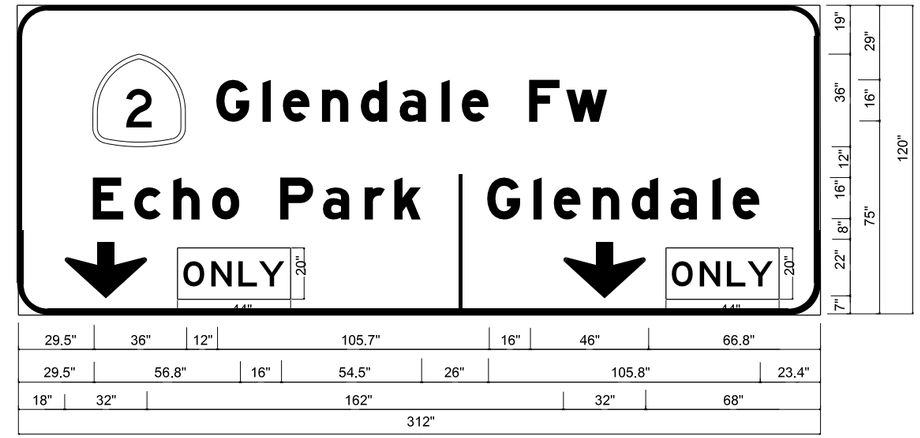

12.0" Radius, 2.0" Border, White on Green;
Down Arrow 22.0" 270°; Down Arrow 22.0" 270°;
[Glendale Fwy] E Mod; [Echo Park] E Mod; [Glendale] E Mod; Down Arrow 22.0" 270°; Down Arrow 22.0" 270°;

SIGN OS13-2c
FSBT Sta
OVERHEAD SIGN STRUCTURE
(TRUSS)

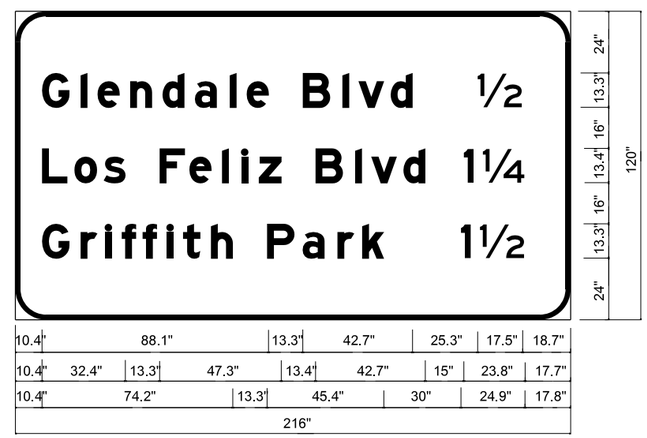

12.0" Radius, 2.0" Border, White on Green;
[Glendale Blvd] E Mod; [½] E; [Los Feliz Blvd] E Mod; [1¼] E; [Griffith Park] E Mod; [1½] E;

SIGN OS13-3a
FNBT Sta
OVERHEAD SIGN STRUCTURE
(TRUSS)

SIGN DETAILS
NO SCALE

SD-8

REVISED BY	DATE REVISED

CALCULATED-DESIGNED BY	CHECKED BY
SHAHAN PETROSSIAN	EDGAR HERRERA

FUNCTIONAL SUPERVISOR: GRISH BIGLARIAN

STATE OF CALIFORNIA - DEPARTMENT OF TRANSPORTATION
Caltrans® TRAFFIC DESIGN

LAST REVISION 11-20-13 | DATE PLOTTED => 18-MAR-2014 | TIME PLOTTED => 11:23

Dist	COUNTY	ROUTE	POST MILES TOTAL PROJECT	SHEET No.	TOTAL SHEETS
07	LA	5	19.2/28.9	102	217

REGISTERED CIVIL ENGINEER 1-31-14 DATE

2-10-14
PLANS APPROVAL DATE

REGISTERED PROFESSIONAL ENGINEER
EDGAR HERRERA
No. C67603
Exp. 6-30-15
CIVIL
STATE OF CALIFORNIA

THE STATE OF CALIFORNIA OR ITS OFFICERS OR AGENTS SHALL NOT BE RESPONSIBLE FOR THE ACCURACY OR COMPLETENESS OF SCANNED COPIES OF THIS PLAN SHEET.

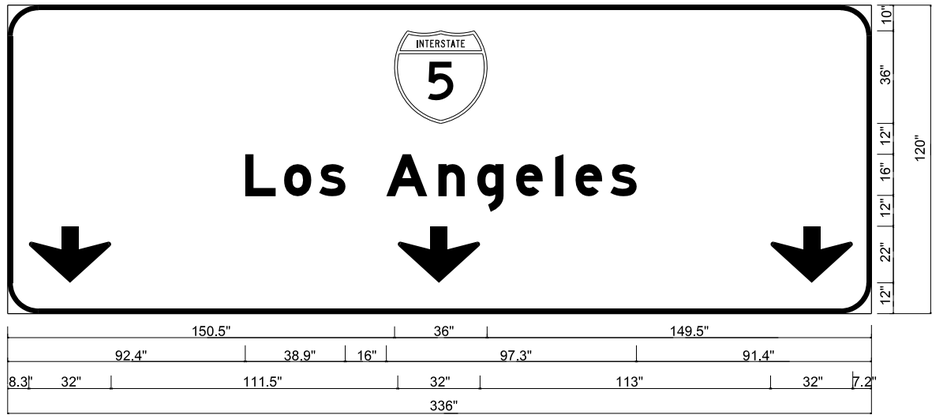

12.0" Radius, 2.0" Border, White on Green;
[Los Angeles] E Mod; Down Arrow 22.0" 270°; Down Arrow 22.0" 270°; Down Arrow 22.0" 270°;

SIGN OS14-1a
FSBT Sta
OVERHEAD SIGN STRUCTURE
(TRUSS)

9.0" Radius, 1.5" Border, White on Green;
[EXIT] E; [140 A] E;

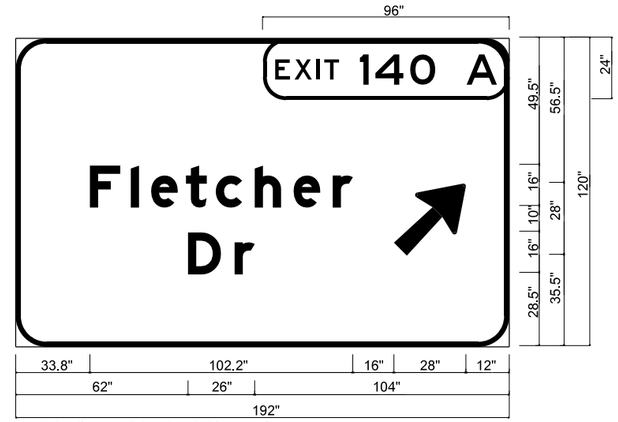

12.0" Radius, 2.0" Border, White on Green;
[Fletcher] E Mod; [Dr] E Mod; Arrow 16CAP-2LV - 35.6" 45°;

SIGN OS14-1c
FSBT Sta
OVERHEAD SIGN STRUCTURE
(TRUSS)

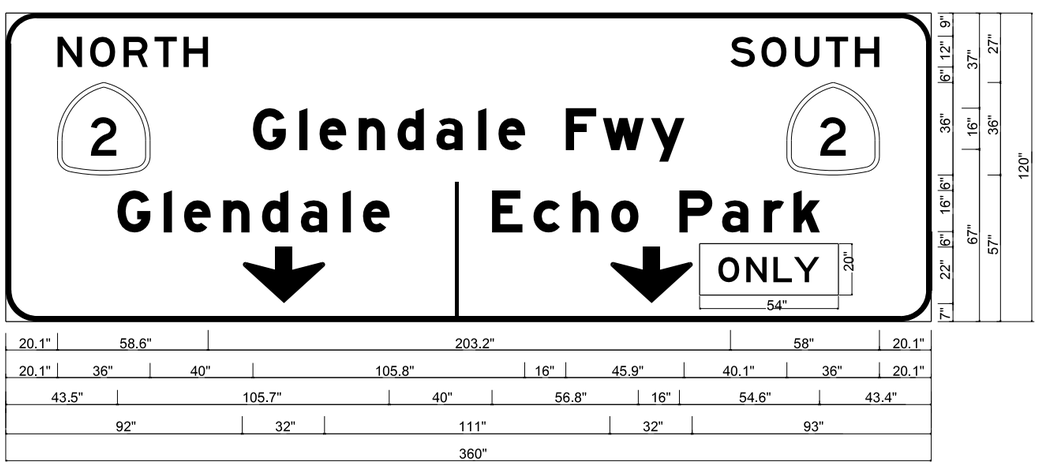

12.0" Radius, 2.0" Border, White on Green;
[NORTH] E; [SOUTH] E; [Glendale Fwy] E Mod; [Glendale] E Mod; [Echo Park] E Mod; Down
Down Arrow 22.0" 270°; Down Arrow 22.0" 270°;

SIGN OS14-1b
FSBT Sta
OVERHEAD SIGN STRUCTURE
(TRUSS)

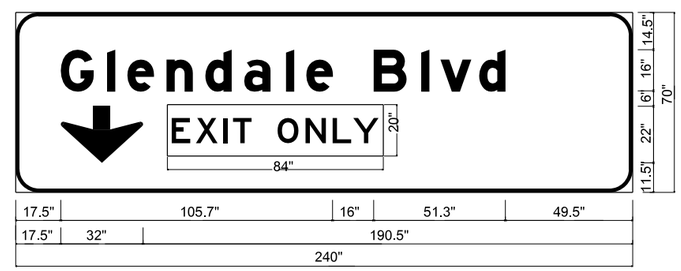

9.0" Radius, 1.5" Border, White on Green;
[Glendale Blvd] E Mod; Down Arrow 22.0" 270°;

SIGN OS14-2a
FNBT Sta
OVERHEAD SIGN STRUCTURE
(TRUSS)

SIGN DETAILS

NO SCALE

SD-9

STATE OF CALIFORNIA - DEPARTMENT OF TRANSPORTATION
Caltrans® TRAFFIC DESIGN

FUNCTIONAL SUPERVISOR: GRISH BIGLARIAN
CALCULATED-DESIGNED BY: SHAHAN PETROSSIAN
CHECKED BY: EDGAR HERRERA
REVISED BY
DATE REVISED

LAST REVISION 11-20-13
DATE PLOTTED => 18-MAR-2014
TIME PLOTTED => 11:23

Dist	COUNTY	ROUTE	POST MILES TOTAL PROJECT	SHEET No.	TOTAL SHEETS
07	LA	5	19.2/28.9	103	217

REGISTERED CIVIL ENGINEER 1-31-14 DATE

2-10-14
PLANS APPROVAL DATE

REGISTERED PROFESSIONAL ENGINEER
EDGAR HERRERA
No. C67603
Exp. 6-30-15
CIVIL
STATE OF CALIFORNIA

THE STATE OF CALIFORNIA OR ITS OFFICERS OR AGENTS SHALL NOT BE RESPONSIBLE FOR THE ACCURACY OR COMPLETENESS OF SCANNED COPIES OF THIS PLAN SHEET.

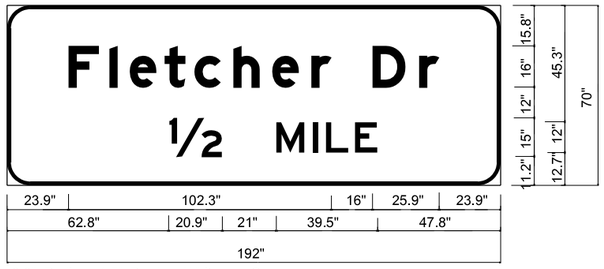

9.0" Radius, 1.5" Border, White on Green;
[Fletcher Dr] E Mod; [½] E Mod; [MILE] E;

SIGN OS15-1a
FSBT Sta
OVERHEAD SIGN STRUCTURE
(TRUSS)

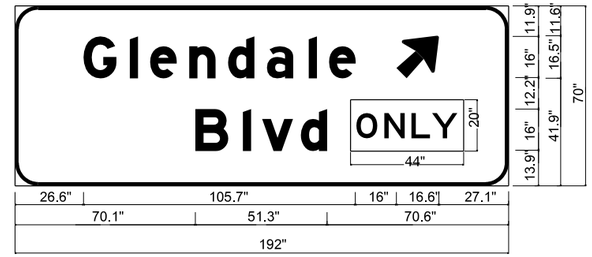

9.0" Radius, 1.5" Border, White on Green;
[Glendale] E Mod; Arrow 12CAP-1L - 20.3" 45°; [Blvd] E Mod;

SIGN OS15-2b
FNBT Sta
OVERHEAD SIGN STRUCTURE
(TRUSS)

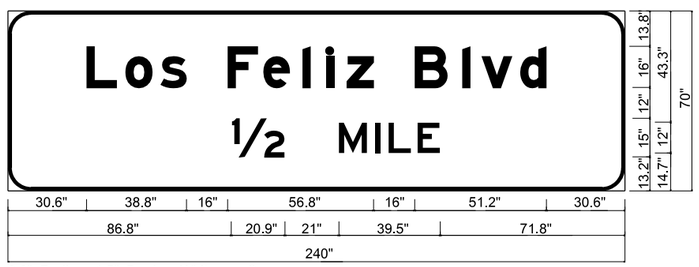

9.0" Radius, 1.5" Border, White on Green;
[Los Feliz Blvd] E Mod; [½] E Mod; [MILE] E;

SIGN OS15-2a
FNBT Sta
OVERHEAD SIGN STRUCTURE
(TRUSS)

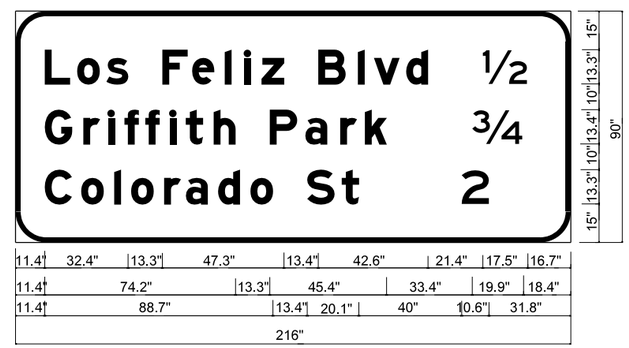

12.0" Radius, 2.0" Border, White on Green;
[Los Feliz Blvd] E Mod; [½] E; [Griffith Park] E Mod; [¾] E; [Colorado St] E Mod; [2] E;

SIGN OS15-3a
FNBT Sta
OVERHEAD SIGN STRUCTURE
(TRUSS)

SIGN DETAILS

NO SCALE

SD-10

STATE OF CALIFORNIA - DEPARTMENT OF TRANSPORTATION
Caltrans® TRAFFIC DESIGN

FUNCTIONAL SUPERVISOR: GRISH BIGLARIAN
CALCULATED-DESIGNED BY: SHAHAN PETROSSIAN
CHECKED BY: EDGAR HERRERA
REVISED BY
DATE REVISED

LAST REVISION 11-20-13
DATE PLOTTED => 18-MAR-2014
TIME PLOTTED => 11:23

Dist	COUNTY	ROUTE	POST MILES TOTAL PROJECT	SHEET No.	TOTAL SHEETS
07	LA	5	19.2/28.9	104	217

REGISTERED CIVIL ENGINEER 1-31-14 DATE

2-10-14
PLANS APPROVAL DATE

REGISTERED PROFESSIONAL ENGINEER EDGAR HERRERA No. C67603 Exp. 6-30-15 CIVIL STATE OF CALIFORNIA

THE STATE OF CALIFORNIA OR ITS OFFICERS OR AGENTS SHALL NOT BE RESPONSIBLE FOR THE ACCURACY OR COMPLETENESS OF SCANNED COPIES OF THIS PLAN SHEET.

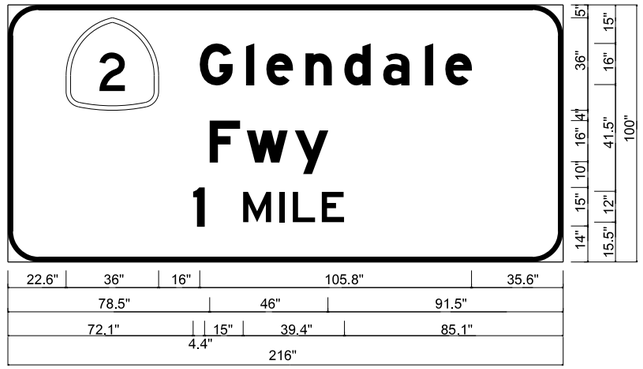

12.0" Radius, 2.0" Border, White on Green;
[Glendale] E Mod; [Fwy] E Mod; [1] E Mod; [MILE] E;

SIGN OS16-1a
FNBT Sta
OVERHEAD SIGN PANEL

9.0" Radius, 1.5" Border, White on Green;
[EXIT] E; [140 B] E;

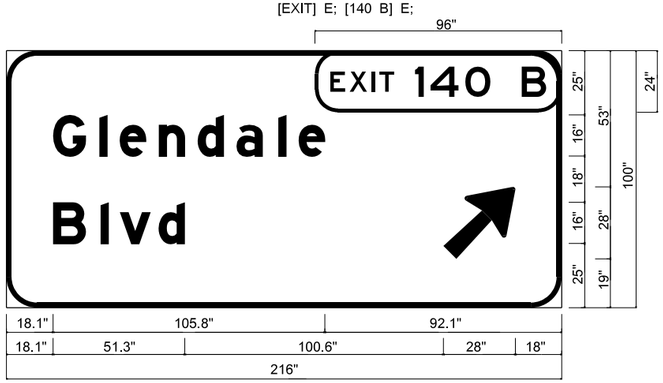

12.0" Radius, 2.0" Border, White on Green;
[Glendale] E Mod; [Blvd] E Mod; Arrow 16CAP-2LV - 35.6" 45°;

SIGN OS16-1b
FNBT Sta
OVERHEAD SIGN PANEL

[EXIT] E; [141B] E;
6.0" Radius, 2.0" Border, White on Green;

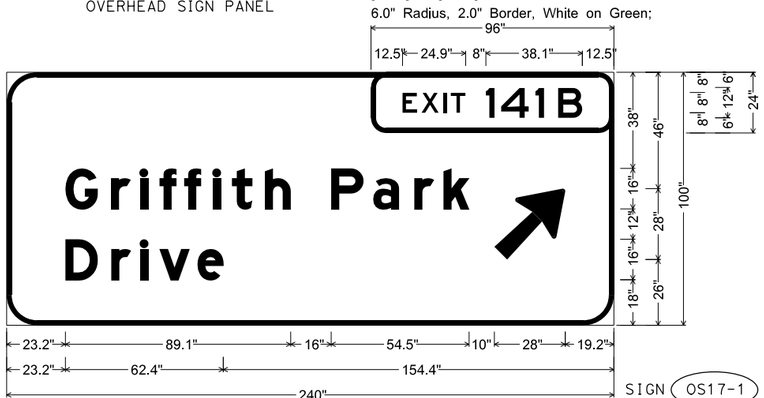

12.0" Radius, 2.0" Border, White on Green;
[Griffith Park] E Mod; [Drive] E Mod; Arrow 16CAP-2LV - 35.6" 45°;

SIGN OS17-1
FNBT Sta
OVERHEAD SIGN PANEL

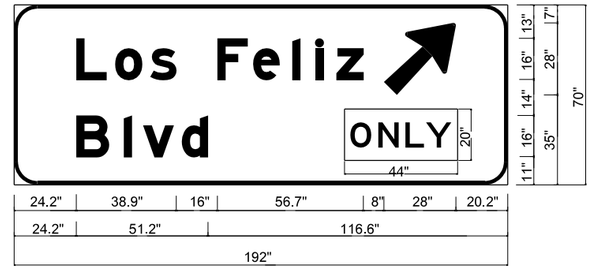

9.0" Radius, 1.5" Border, White on Green;
[Los Feliz] E Mod; Arrow 16CAP-2LV - 35.6" 45°; [Blvd] E Mod;

SIGN OS16-2a
FNBT Sta
OVERHEAD SIGN STRUCTURE
(TRUSS)

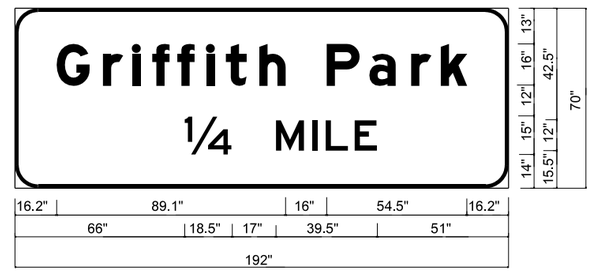

9.0" Radius, 1.5" Border, White on Green;
[Griffith Park] E Mod; [¼] E; [MILE] E;

SIGN OS16-3a
FNBT Sta
OVERHEAD SIGN STRUCTURE
(TRUSS)

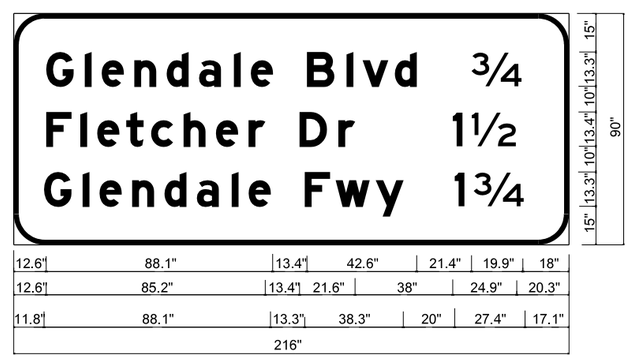

12.0" Radius, 2.0" Border, White on Green;
[Glendale Blvd] E Mod; [¾] E; [Fletcher Dr] E Mod; [1½] E; [Glendale Fwy] E Mod; [1¾] E;

SIGN OS18-1a
FSBT Sta
OVERHEAD SIGN STRUCTURE
(TRUSS)

SIGN DETAILS

NO SCALE

SD-11

STATE OF CALIFORNIA - DEPARTMENT OF TRANSPORTATION
Caltrans® TRAFFIC DESIGN

FUNCTIONAL SUPERVISOR: GRISH BIGLARIAN
CALCULATED-DESIGNED BY: SHAHAN PETROSSIAN
CHECKED BY: EDGAR HERRERA
REVISED BY
DATE REVISED

LAST REVISION 11-20-13
DATE PLOTTED => 18-MAR-2014
TIME PLOTTED => 11:23

Dist	COUNTY	ROUTE	POST MILES TOTAL PROJECT	SHEET No.	TOTAL SHEETS
07	LA	5	19.2/28.9	105	217

REGISTERED CIVIL ENGINEER 1-31-14 DATE

2-10-14
PLANS APPROVAL DATE

REGISTERED PROFESSIONAL ENGINEER
EDGAR HERRERA
No. C67603
Exp. 6-30-15
CIVIL
STATE OF CALIFORNIA

THE STATE OF CALIFORNIA OR ITS OFFICERS OR AGENTS SHALL NOT BE RESPONSIBLE FOR THE ACCURACY OR COMPLETENESS OF SCANNED COPIES OF THIS PLAN SHEET.

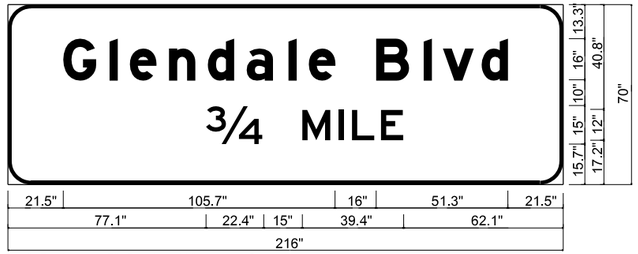

9.0" Radius, 1.5" Border, White on Green;
[Glendale Blvd] E Mod; [3/4] E; [MILE] E;

SIGN OS19-1a
FSBT Sta
OVERHEAD SIGN STRUCTURE
(TRUSS)

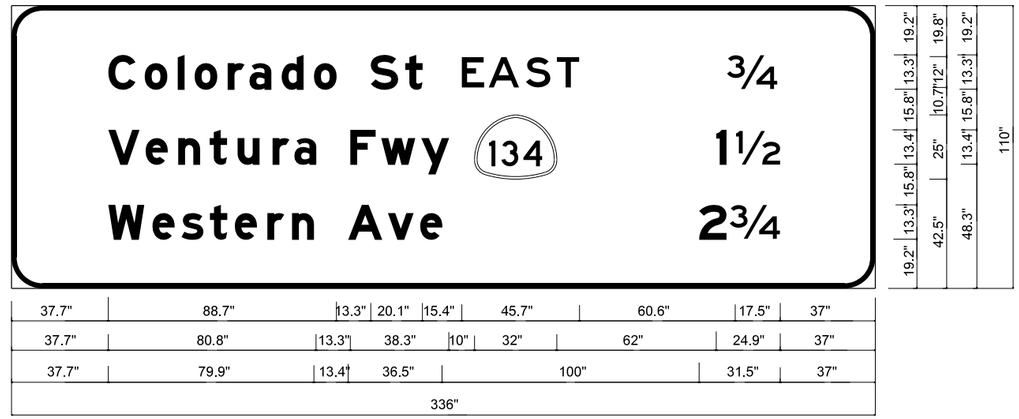

12.0" Radius, 2.0" Border, White on Green;
[Colorado St] E Mod; [EAST] E; [1/2] E; [Ventura Fwy] E Mod; [1 1/4] E Mod; [Western Ave] E Mod; [2 1/4] E Mod;

SIGN OS19-2a
FNBT Sta
OVERHEAD SIGN STRUCTURE
(TRUSS)

9.0" Radius, 1.5" Border, White on Green;
[THRU TRAFFIC OK] E Mod;

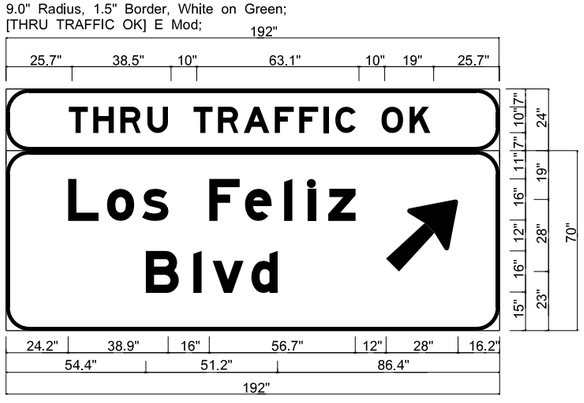

9.0" Radius, 1.5" Border, White on Green;
[Los Feliz] E Mod; [Blvd] E Mod; Arrow 16CAP-2LV - 35.6" 45°;

SIGN OS19-1b
FSBT Sta
OVERHEAD SIGN STRUCTURE
(TRUSS)

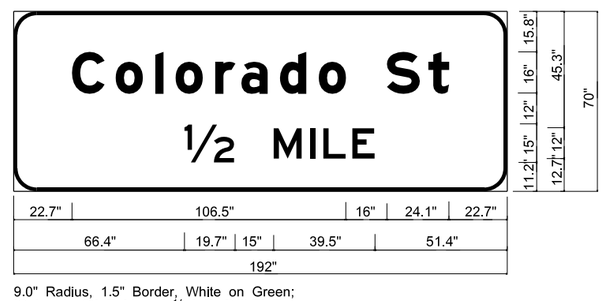

9.0" Radius, 1.5" Border, White on Green;
[Colorado St] E Mod; [1/2] E; [MILE] E;

SIGN OS20-1a
FNBT Sta
OVERHEAD SIGN STRUCTURE
(TRUSS)

SIGN DETAILS

NO SCALE

SD-12

LAST REVISION	DATE PLOTTED => 18-MAR-2014
11-20-13	TIME PLOTTED => 11:23

STATE OF CALIFORNIA - DEPARTMENT OF TRANSPORTATION
Caltrans® TRAFFIC DESIGN

FUNCTIONAL SUPERVISOR: GRISH BIGLARIAN
CALCULATED-DESIGNED BY: SHAHAN PETROSSIAN
CHECKED BY: EDGAR HERRERA
REVISED BY
DATE REVISED

Dist	COUNTY	ROUTE	POST MILES TOTAL PROJECT	SHEET No.	TOTAL SHEETS
07	LA	5	19.2/28.9	106	217

REGISTERED CIVIL ENGINEER 1-31-14 DATE

2-10-14
PLANS APPROVAL DATE

REGISTERED PROFESSIONAL ENGINEER EDGAR HERRERA No. C67603 Exp. 6-30-15 CIVIL STATE OF CALIFORNIA

THE STATE OF CALIFORNIA OR ITS OFFICERS OR AGENTS SHALL NOT BE RESPONSIBLE FOR THE ACCURACY OR COMPLETENESS OF SCANNED COPIES OF THIS PLAN SHEET.

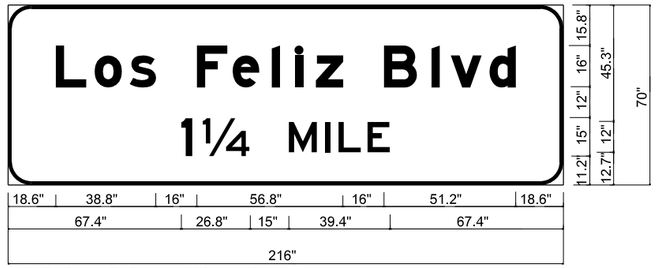

9.0" Radius, 1.5" Border, White on Green;
[Los Feliz Blvd] E Mod; [1¼] E; [MILE] E;

SIGN OS21-1a
FSBT Sta
OVERHEAD SIGN STRUCTURE
(TRUSS)

9.0" Radius, 1.5" Border, White on Green;
[EXIT] E; [142] E;

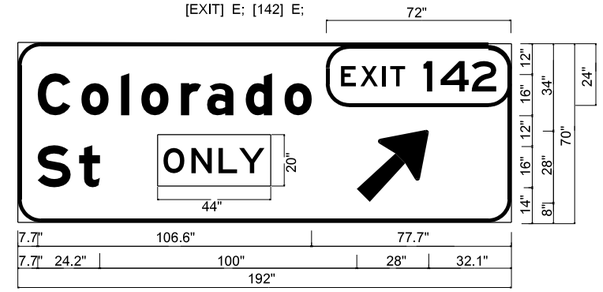

9.0" Radius, 1.5" Border, White on Green;
[Colorado] E Mod; [St] E Mod; Arrow 16CAP-2LV - 35.6" 45°;

SIGN OS22-1a
FSBT Sta
OVERHEAD SIGN STRUCTURE
(TRUSS)

9.0" Radius, 1.5" Border, White on Green;
[EXIT] E; [142] E;

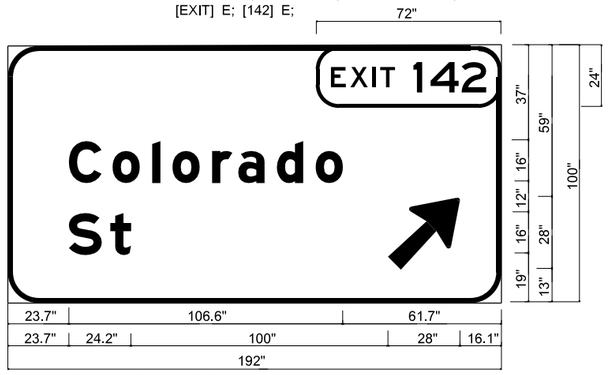

12.0" Radius, 2.0" Border, White on Green;
[Colorado] E Mod; [St] E Mod; Arrow 16CAP-2LV - 35.6" 45°;

SIGN OS21-2a
FNBT Sta
OVERHEAD SIGN STRUCTURE
(TRUSS)

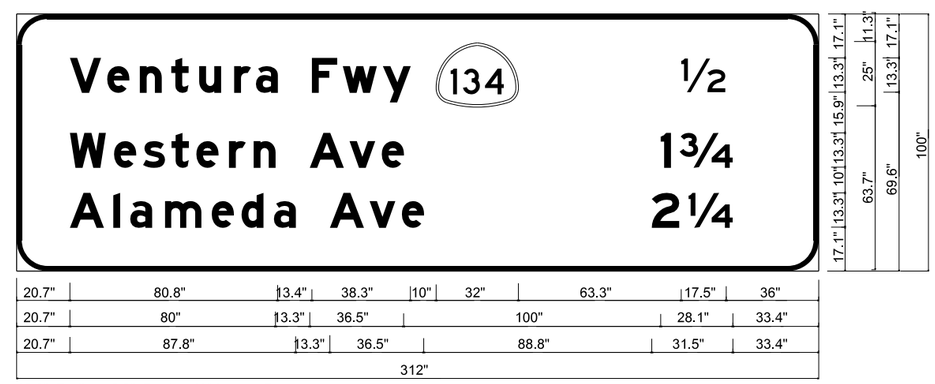

12.0" Radius, 2.0" Border, White on Green;
[Ventura Fwy] E Mod; [½] E; [Western Ave] E Mod; [1¾] E Mod; [Alameda Ave] E Mod; [2¼] E Mod;

SIGN OS22-2a
FNBT Sta
OVERHEAD SIGN STRUCTURE
(TRUSS)

SIGN DETAILS

NO SCALE

SD-13

REVISED BY	DATE REVISED
SHAHAN PETROSSIAN	EDGAR HERRERA

CALCULATED-DESIGNED BY / CHECKED BY

FUNCTIONAL SUPERVISOR: GRISH BIGLARIAN

STATE OF CALIFORNIA - DEPARTMENT OF TRANSPORTATION
Caltrans® TRAFFIC DESIGN

LAST REVISION 11-20-13 | DATE PLOTTED => 18-MAR-2014 | TIME PLOTTED => 11:23

Dist	COUNTY	ROUTE	POST MILES TOTAL PROJECT	SHEET No.	TOTAL SHEETS
07	LA	5	19.2/28.9	107	217

REGISTERED CIVIL ENGINEER 1-31-14 DATE

2-10-14
PLANS APPROVAL DATE

REGISTERED PROFESSIONAL ENGINEER
EDGAR HERRERA
No. C67603
Exp. 6-30-15
CIVIL
STATE OF CALIFORNIA

THE STATE OF CALIFORNIA OR ITS OFFICERS OR AGENTS SHALL NOT BE RESPONSIBLE FOR THE ACCURACY OR COMPLETENESS OF SCANNED COPIES OF THIS PLAN SHEET.

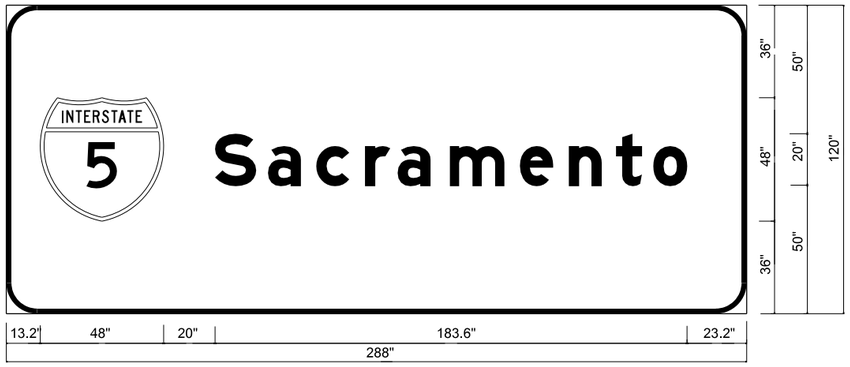

12.0" Radius, 2.0" Border, White on Green;
[Sacramento] E Mod;

SIGN OS22-3a
FNBT Sta
OVERHEAD SIGN STRUCTURE
(TRUSS)

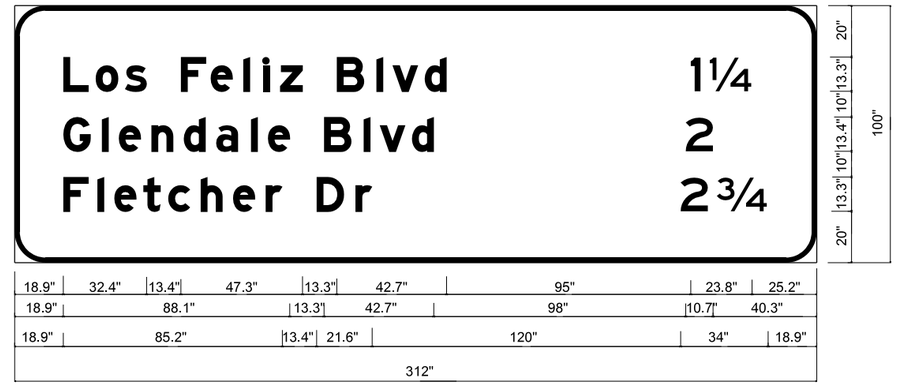

12.0" Radius, 2.0" Border, White on Green;
[Los Feliz Blvd] E Mod; [1¼] E; [Glendale Blvd] E Mod; [2] E; [Fletcher Dr] E Mod; [2¾] E;

SIGN OS22-4a
FSBT Sta
OVERHEAD SIGN STRUCTURE
(TRUSS)

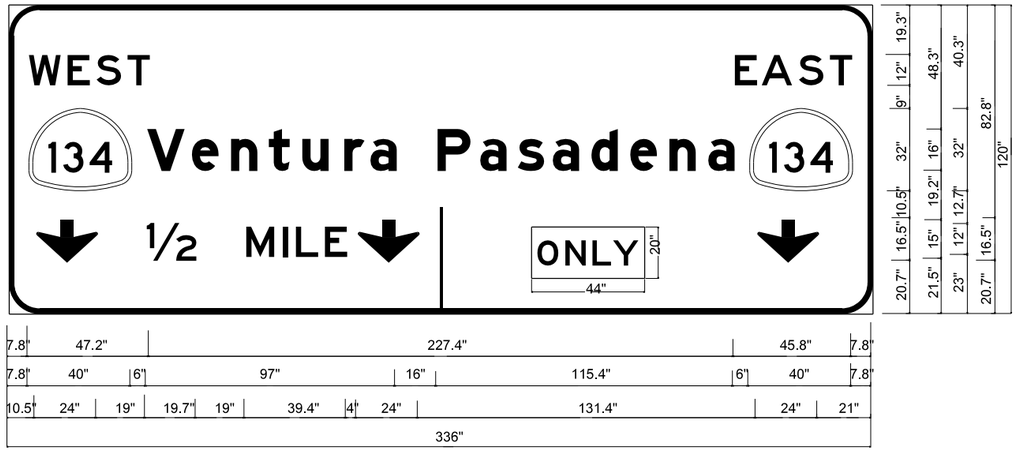

12.0" Radius, 2.0" Border, White on Green;
Down Arrow 16.0" 270°; [½] E; [MILE] E; Down Arrow 16.0" 270°; Down Arrow 16.0" 270°;
[WEST] E; [EAST] E; [Ventura] E Mod; [Pasadena] E Mod; Down Arrow 16.0" 270°; [½] E; [MILE] E; Down Arrow 16.0" 270°;

SIGN OS22-3b
FNBT Sta
OVERHEAD SIGN STRUCTURE
(TRUSS)

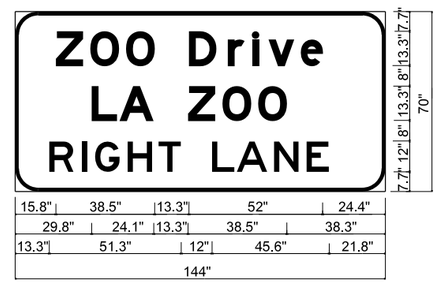

9.0" Radius, 1.5" Border, White on Green;
[ZOO Drive] E Mod; [LA ZOO] E Mod; [RIGHT LANE] E;

SIGN OS23-1a
FNBT Sta
OVERHEAD SIGN STRUCTURE
(TRUSS)

SIGN DETAILS

NO SCALE

SD-14

STATE OF CALIFORNIA - DEPARTMENT OF TRANSPORTATION
Caltrans® **TRAFFIC DESIGN**

FUNCTIONAL SUPERVISOR: GRISH BIGLARIAN
CALCULATED-DESIGNED BY: SHAHAN PETROSSIAN
CHECKED BY: EDGAR HERRERA
REVISED BY
DATE REVISED

LAST REVISION 11-20-13
DATE PLOTTED => 18-MAR-2014
TIME PLOTTED => 11:23

Dist	COUNTY	ROUTE	POST MILES TOTAL PROJECT	SHEET No.	TOTAL SHEETS
07	LA	5	19.2/28.9	108	217

REGISTERED CIVIL ENGINEER 1-31-14 DATE

2-10-14
PLANS APPROVAL DATE

REGISTERED PROFESSIONAL ENGINEER EDGAR HERRERA No. C67603 Exp. 6-30-15 CIVIL STATE OF CALIFORNIA

THE STATE OF CALIFORNIA OR ITS OFFICERS OR AGENTS SHALL NOT BE RESPONSIBLE FOR THE ACCURACY OR COMPLETENESS OF SCANNED COPIES OF THIS PLAN SHEET.

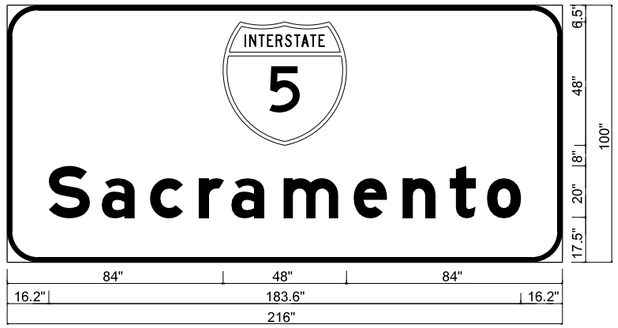

12.0" Radius, 2.0" Border, White on Green;
[Sacramento] E Mod;

SIGN OS24-1a

FNBT Sta
OVERHEAD SIGN STRUCTURE
(TRUSS)

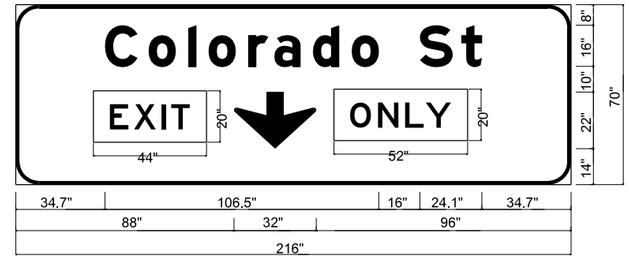

9.0" Radius, 1.5" Border, White on Green;
[Colorado St] E Mod; Down Arrow 22.0" 270°;

SIGN OS24-3a

FSBT Sta
OVERHEAD BRIDGE MOUNTED PANELS

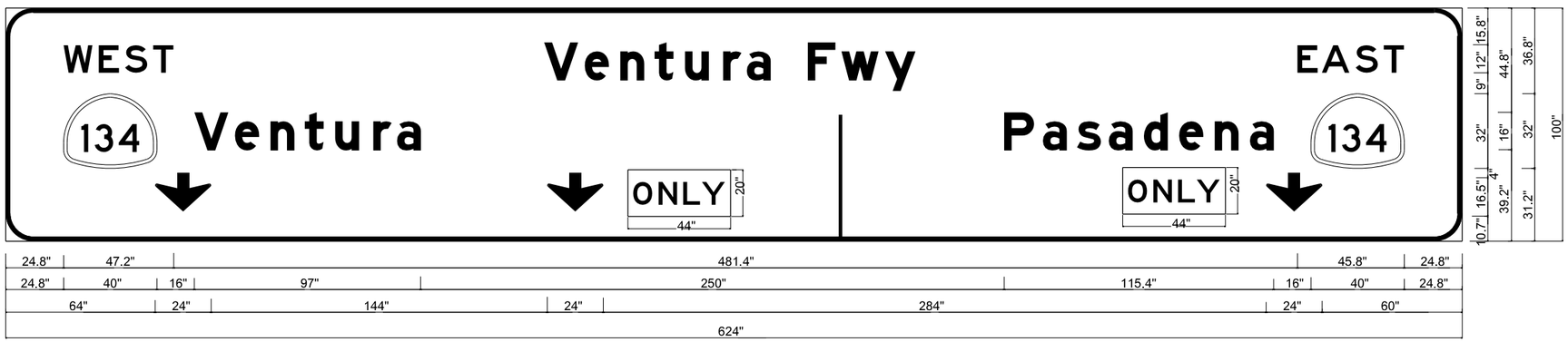

12.0" Radius, 2.0" Border, White on Green;
Down Arrow 16.0" 270°; Down Arrow 16.0" 270°; Down Arrow 16.0" 270°;
[WEST] E; [EAST] E; [Ventura] E Mod; [Pasadena] E Mod; Down Arrow 16.0" 270°;

SIGN OS24-1b

FNBT Sta
OVERHEAD SIGN STRUCTURE
(TRUSS)

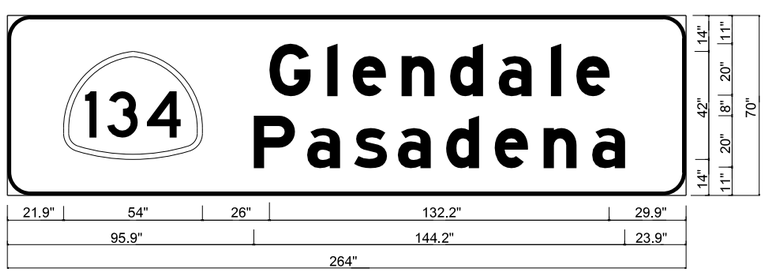

9.0" Radius, 1.5" Border, White on Green;
[Glendale] E Mod; [Pasadena] E Mod;

SIGN OS24-2a

FNBT Sta
OVERHEAD BRIDGE MOUNTED PANELS

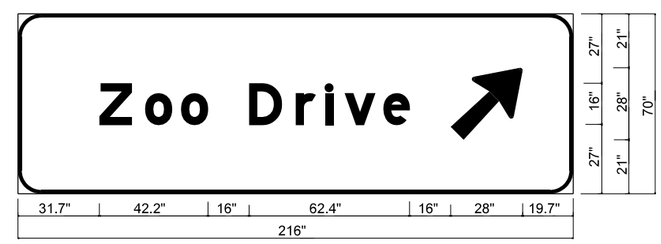

9.0" Radius, 1.5" Border, White on Green;
[Zoo Drive] E Mod; Arrow 16CAP-2LV - 35.6" 45°;

SIGN OS24-2b

FNBT Sta
OVERHEAD BRIDGE MOUNTED PANELS

SIGN DETAILS

NO SCALE

SD-15

REVISED BY | DATE REVISED
SHAHAN PETROSSIAN | EDGAR HERRERA
CALCULATED-DESIGNED BY | CHECKED BY
FUNCTIONAL SUPERVISOR | GRISH BIGLARIAN
STATE OF CALIFORNIA - DEPARTMENT OF TRANSPORTATION
Caltrans® TRAFFIC DESIGN

LAST REVISION 11-20-13 | DATE PLOTTED => 18-MAR-2014 | TIME PLOTTED => 11:23

Dist	COUNTY	ROUTE	POST MILES TOTAL PROJECT	SHEET No.	TOTAL SHEETS
07	LA	5	19.2/28.9	109	217

REGISTERED CIVIL ENGINEER 1-31-14 DATE

2-10-14
PLANS APPROVAL DATE

REGISTERED PROFESSIONAL ENGINEER EDGAR HERRERA No. C67603 Exp. 6-30-15 CIVIL STATE OF CALIFORNIA

THE STATE OF CALIFORNIA OR ITS OFFICERS OR AGENTS SHALL NOT BE RESPONSIBLE FOR THE ACCURACY OR COMPLETENESS OF SCANNED COPIES OF THIS PLAN SHEET.

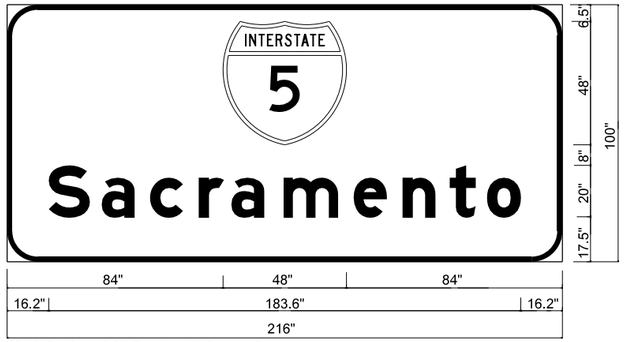

12.0" Radius, 2.0" Border, White on Green;
[Sacramento] E Mod;

SIGN OS25-1a

FNBT Sta
OVERHEAD SIGN STRUCTURE
(TRUSS)

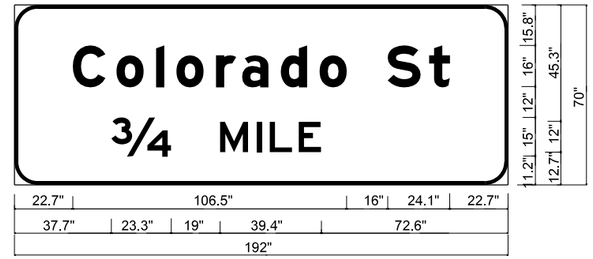

9.0" Radius, 1.5" Border, White on Green;
[Colorado St] E Mod; [3/4] E Mod; [MILE] E;

SIGN OS25-2a

FSBT Sta
OVERHEAD SIGN STRUCTURE
(TRUSS)

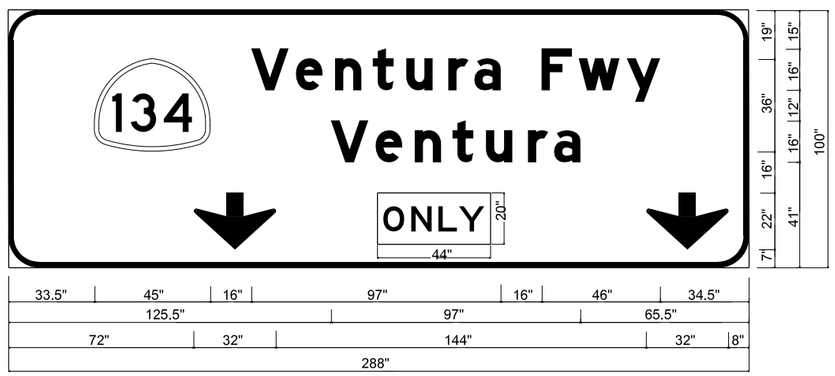

12.0" Radius, 2.0" Border, White on Green;
Down Arrow 22.0" 270°; Down Arrow 22.0" 270°;
[Ventura Fwy] E Mod; [Ventura] E Mod; Down Arrow 22.0" 270°;

SIGN OS25-1b

FNBT Sta
OVERHEAD SIGN STRUCTURE
(TRUSS)

SIGN DETAILS

NO SCALE

SD-16

REVISED BY	DATE REVISED
SHAHAN PETROSSIAN	EDGAR HERRERA

CALCULATED-DESIGNED BY / CHECKED BY

FUNCTIONAL SUPERVISOR: GRISH BIGLARIAN

STATE OF CALIFORNIA - DEPARTMENT OF TRANSPORTATION
Caltrans® TRAFFIC DESIGN

LAST REVISION 11-20-13 | DATE PLOTTED => 18-MAR-2014 | TIME PLOTTED => 11:23

Dist	COUNTY	ROUTE	POST MILES TOTAL PROJECT	SHEET No.	TOTAL SHEETS
07	LA	5	19.2/28.9	110	217

REGISTERED CIVIL ENGINEER 1-31-14 DATE

2-10-14
PLANS APPROVAL DATE

REGISTERED PROFESSIONAL ENGINEER EDGAR HERRERA No. C67603 Exp. 6-30-15 CIVIL STATE OF CALIFORNIA

THE STATE OF CALIFORNIA OR ITS OFFICERS OR AGENTS SHALL NOT BE RESPONSIBLE FOR THE ACCURACY OR COMPLETENESS OF SCANNED COPIES OF THIS PLAN SHEET.

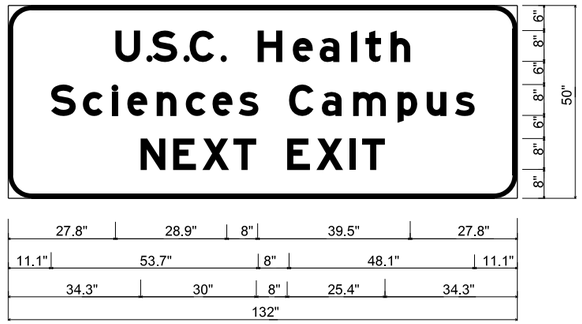

9.0" Radius, 1.5" Border, White on Green;
[U.S.C. Health] E Mod; [Sciences Campus] E Mod; [NEXT EXIT] E Mod;

SIGN S2-2
FNBT Sta
ROADSIDE SIGN

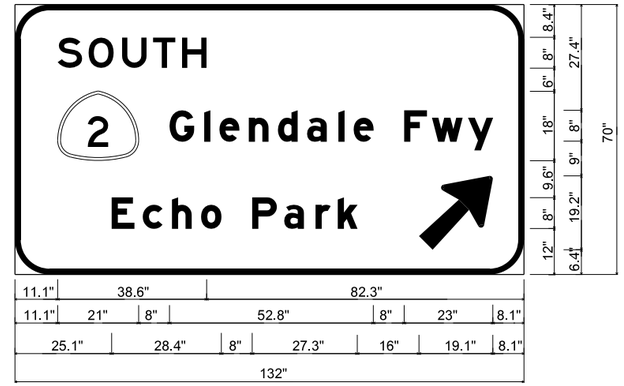

9.0" Radius, 1.5" Border, White on Green;
[SOUTH] E; [Glendale Fwy] E Mod; [Echo Park] E Mod; Arrow 10.67UC-2LV - 24.3" 45°;

SIGN S12-2
FNBT Sta
ROADSIDE SIGN

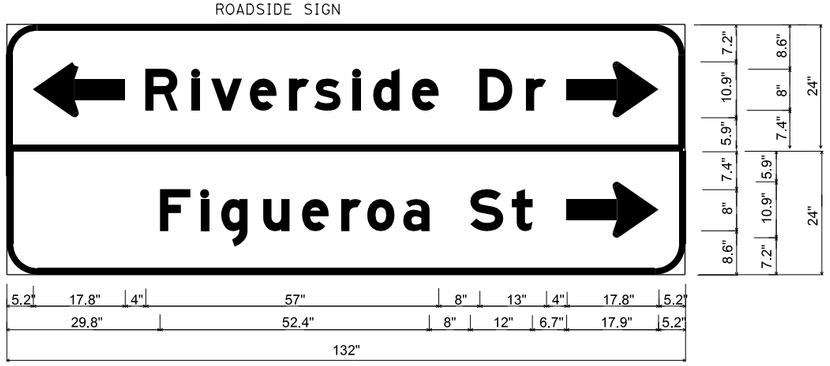

6.0" Radius, 1.3" Border, White on Green;
[Figueroa St] E Mod; Standard Arrow Custom 17.9" X 10.9" 0°;
Standard Arrow Custom 17.9" X 10.9" 180°; [Riverside Dr] E Mod; Standard Arrow Custom 17.9" X 10.9" 0°;

SIGN S6-2
FNBT Sta
ROADSIDE SIGN

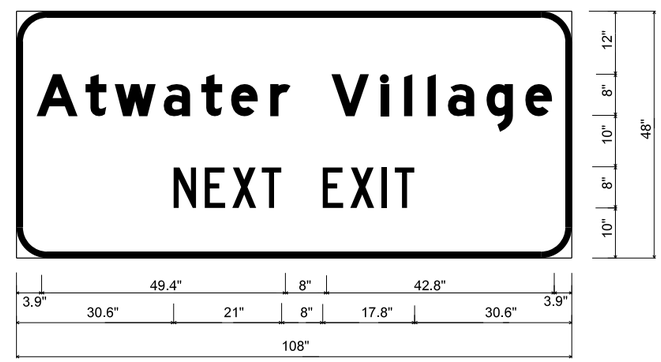

6.0" Radius, 1.3" Border, White on Green;
[Atwater Village] E Mod; [NEXT EXIT] C;

SIGN S14-2
FNBT Sta
ROADSIDE SIGN

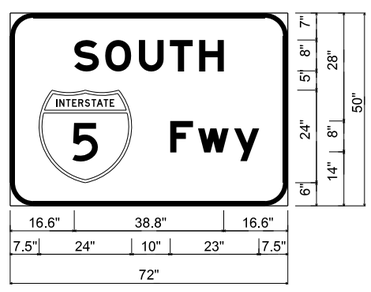

6.0" Radius, 1.3" Border, White on Green;
[SOUTH] E Mod; [Fwy] E Mod;

SIGN S11-2
FSBT Sta
ROADSIDE SIGN

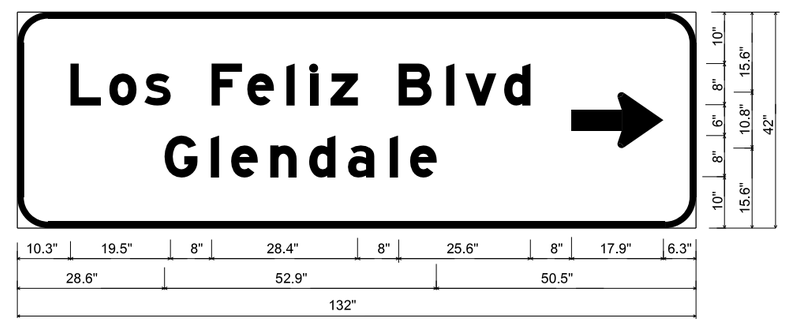

6.0" Radius, 1.3" Border, White on Green;
[Los Feliz Blvd] E Mod; [Glendale] E Mod; Standard Arrow Custom 17.9" X 10.9" 0°;

SIGN S17-2
FNBT Sta
ROADSIDE SIGN

SIGN DETAILS

NO SCALE

SD-17

STATE OF CALIFORNIA - DEPARTMENT OF TRANSPORTATION
Caltrans® TRAFFIC DESIGN

FUNCTIONAL SUPERVISOR: GRISH BIGLARIAN
CALCULATED-DESIGNED BY: SHAHAN PETROSSIAN
CHECKED BY: EDGAR HERRERA
REVISED BY
DATE REVISED

LAST REVISION 11-20-13
DATE PLOTTED => 18-MAR-2014
TIME PLOTTED => 11:23

Dist	COUNTY	ROUTE	POST MILES TOTAL PROJECT	SHEET No.	TOTAL SHEETS
07	LA	5	19.2/28.9	111	217

REGISTERED CIVIL ENGINEER 1-31-14 DATE

2-10-14
PLANS APPROVAL DATE

REGISTERED PROFESSIONAL ENGINEER EDGAR HERRERA No. C67603 Exp. 6-30-15 CIVIL STATE OF CALIFORNIA

THE STATE OF CALIFORNIA OR ITS OFFICERS OR AGENTS SHALL NOT BE RESPONSIBLE FOR THE ACCURACY OR COMPLETENESS OF SCANNED COPIES OF THIS PLAN SHEET.

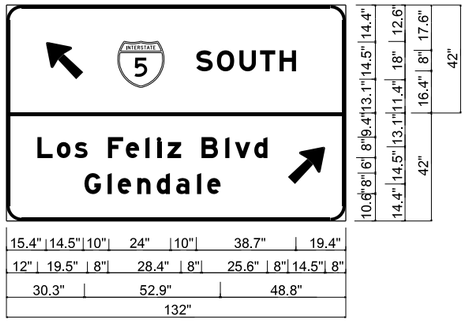

6.0" Radius, 1.3" Border, White on Green;
[Los Feliz Blvd] E Mod; [Glendale] E Mod; Arrow 8UC-2LV - 18.3" 45°;
Arrow 8UC-2LV - 18.3" 135°; [SOUTH] E Mod;

SIGN S17-4
FNBT Sta
ROADSIDE SIGN

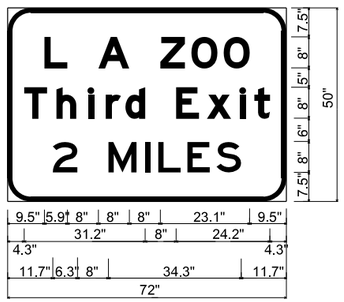

6.0" Radius, 1.3" Border, White on Green;
[L A ZOO] E Mod; [Third Exit] E Mod; [2 MILES] E;

SIGN S17-6
FNBT Sta
ROADSIDE SIGN

6.0" Radius, 1.3" Border, White on Green;
[EXIT] E; [141 B] E;

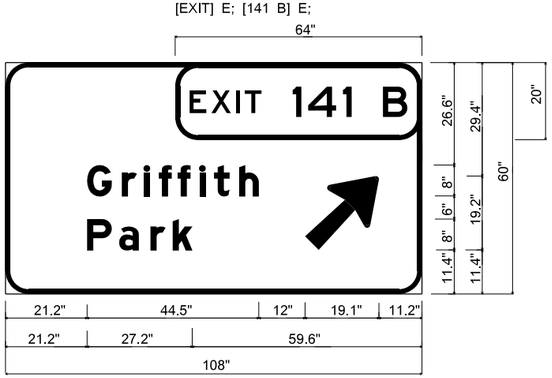

6.0" Radius, 1.3" Border, White on Green;
[Griffith] E Mod; [Park] E Mod; Arrow 10.67UC-2LV - 24.3" 45°;

SIGN S18-2
FNBT Sta
ROADSIDE SIGN

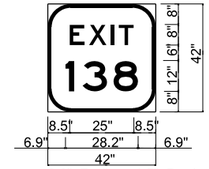

9.0" Radius, 1.5" Border, White on Green;
[EXIT] E; [138] E;

SIGN S8-1 FNBT Sta STRAP TO POST

SIGN S11-3 FSBT Sta STRAP TO POST

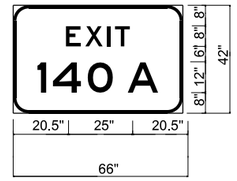

6.0" Radius, 1.3" Border, White on Green;
[EXIT] E; [140 A] E;

SIGN S15-1
FSBT Sta
STRAP TO POST

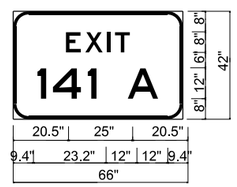

6.0" Radius, 1.3" Border, White on Green;
[EXIT] E; [141 A] E;

SIGN S16-1 FNBT Sta STRAP TO POST

SIGN S19-1 FSBT Sta STRAP TO POST

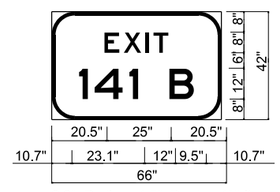

9.0" Radius, 1.5" Border, White on Green;
[EXIT] E; [141 B] E;

SIGN S16-2
FNBT Sta
STRAP TO POST

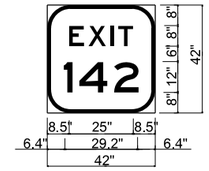

9.0" Radius, 1.5" Border, White on Green;
[EXIT] E; [142] E;

SIGN S20-1 FNBT Sta STRAP TO POST

SIGN S25-1 FSBT Sta STRAP TO POST

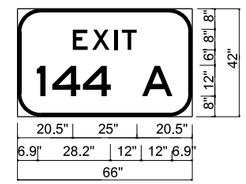

9.0" Radius, 1.5" Border, White on Green;
[EXIT] E; [144 A] E;

SIGN S23-1
FNBT Sta
STRAP TO POST

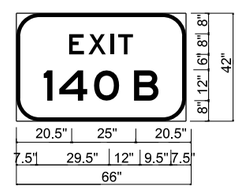

6.0" Radius, 1.3" Border, White on Green;
[EXIT] E; [140 B] E;

SIGN S14-3 FNBT Sta STRAP TO POST

SIGN S15-2 FNBT Sta STRAP TO POST

6.0" Radius, 1.3" Border, White on Green;
[EXIT] E; [135 C] E;

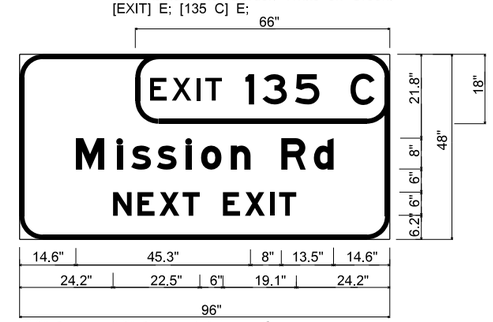

6.0" Radius, 1.3" Border, White on Green;
[Mission Rd] E Mod; [NEXT EXIT] E Mod;

SIGN S3-1
FSBT Sta
ROADSIDE SIGN

SIGN DETAILS

NO SCALE

SD-18

REVISED BY	DATE REVISED

CALCULATED-DESIGNED BY	CHECKED BY
SHAHAN PETROSSIAN	EDGAR HERRERA

FUNCTIONAL SUPERVISOR: GRISH BIGLARIAN

STATE OF CALIFORNIA - DEPARTMENT OF TRANSPORTATION
Caltrans® TRAFFIC DESIGN

LAST REVISION 11-20-13 | DATE PLOTTED => 18-MAR-2014 | TIME PLOTTED => 11:23

Dist	COUNTY	ROUTE	POST MILES TOTAL PROJECT	SHEET No.	TOTAL SHEETS
07	LA	5	19.2/28.9	112	217

REGISTERED CIVIL ENGINEER 1-31-14 DATE

2-10-14
PLANS APPROVAL DATE

REGISTERED PROFESSIONAL ENGINEER EDGAR HERRERA No. C67603 Exp. 6-30-15 CIVIL STATE OF CALIFORNIA

THE STATE OF CALIFORNIA OR ITS OFFICERS OR AGENTS SHALL NOT BE RESPONSIBLE FOR THE ACCURACY OR COMPLETENESS OF SCANNED COPIES OF THIS PLAN SHEET.

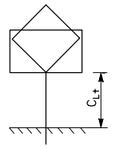

TYPICAL POST HEIGHT DETAIL

ROADSIDE SIGN QUANTITIES

SHEET No.	SIGN No.	LOCATION		SIGN CODE	SIGN AREA	PANEL SIZE (L X D)	SINGLE FACED	POST DATA	SIGN FACING MATERIAL						FURNISH					INSTALL			REMOVE		TREATED WOOD WASTE	REMARKS
									BACKGROUND		LEGEND		GRAFFITI FILM		SINGLE SHEET ALUMINUM SIGN				LAMINATED PANEL SIGN (1" - TYPE B)	ROADSIDE SIGN		ROADSIDE SIGN (STRAP & SADDLE BRACKET METHOD)	ROADSIDE SIGN			
								SIZE	SHEETING COLOR	RETROREFLECTIVE ASTM TYPE	SHEETING COLOR	RETROREFLECTIVE ASTM TYPE	STANDARD	PREMIUM	(0.063"- UNFRAMED)	(0.080" - UNFRAMED)	(0.063"- FRAMED)	(0.080"- FRAMED)		ONE POST	TWO POST		ONE POST (WOOD POST)	TWO POSTS (WOOD POST)		
		ROUTE / (PM)	DIRECTION		SQFT	INCH x INCH		INCH x INCH							SQFT	SQFT	SQFT	SQFT	SQFT	EA	EA	EA	EA	EA	LB	
S-2	S2-1	ROUTE 5 / 19.6	FSBT	G86 (CA)			X																	1	120.2	
	S2-2	ROUTE 5 / 19.6	FSBT	G86 (CA)	45.8	132 X 50	X	6 X 6	GREEN	XI	WHITE	XI		X				45.8			1					
S-3	S3-1	ROUTE 5 /	FSBT	G86-13 (CA)	32.0	96 X 48	X	6 X 6	GREEN	XI	WHITE	XI		X				32.0			1					
S-6	S6-1	ROUTE 5 / 21.063	FSBT	G8-7 (CA)			X																	1	120.2	
	S6-2	ROUTE 5 / 21.063	FSBT	G8-7 (CA)	44.0	132 X 48	X	6 X 6	GREEN	XI	WHITE	XI		X				48.0			1					
S-8	S8-1	ROUTE 5 /	FNBT	G70-4 (CA)	12.3	42 X 42	X		GREEN	XI	WHITE	XI		X			12.3					1				
S-11	S11-1	ROUTE 5 / 22.3	FSBT	G24-1 (CA)																				1	120.2	
	S11-2	ROUTE 5 / 22.3	FSBT	G24-1 (CA)	25.0	72 X 50	X	6 X 6	GREEN	XI	WHITE	XI		X			25.0				1					
	S11-3	ROUTE 5 / 22.3	FSBT	G70-4 (CA)	12.3	42 X 42	X		GREEN	XI	WHITE	XI		X			12.3					1				
S-12	S12-1	ROUTE 5 / 22.55	FNBT	G24 (CA)																				1	120.2	
	S12-2	ROUTE 5 / 22.55	FNBT	G24 (CA)	64.1	132 X 70	X	6 X 6	GREEN	XI	WHITE	XI		X				64.1			1					
S-14	S14-1	ROUTE 5 / 23.0	FNBT	G87 (CA)																				1	120.2	
	S14-2	ROUTE 5 / 23.0	FNBT	G87 (CA)	36.0	108 X 48	X	6 X 6	GREEN	XI	WHITE	XI		X				36.0			1					
	S14-3	ROUTE 5 /	FNBT	G70-5 (CA)	19.3	66 X 42	X		GREEN	XI	WHITE	XI		X			19.3					1				
S-15	S15-1	ROUTE 5 / 23.5	FSBT	G70-5 (CA)	19.3	66 X 42	X		GREEN	XI	WHITE	XI		X			19.3					1				
	S15-2	ROUTE 5 /	FNBT	G70-5 (CA)	19.3	66 X 42	X		GREEN	XI	WHITE	XI		X			19.3					1				
S-16	S16-1	ROUTE 5 / 24.1	FNBT	G70-5 (CA)	19.3	66 X 42	X		GREEN	XI				X			19.3					1				
	S16-2	ROUTE 5 / 24.3	FNBT	G70-5 (CA)	19.3	66 X 42	X		GREEN	XI	WHITE	XI		X			19.3					1				
S-17	S17-1	ROUTE 5 / 24.3	FSBT	G8 (CA)																				1	120.2	
	S17-2	ROUTE 5 / 24.3	FSBT	G8 (CA)	38.5	132 X 42	X	4 X 6	GREEN	XI	WHITE	XI		X			21.0				1					
	S17-3	ROUTE 5 / 24.5	FSBT	G8 (CA)			X																	1	120.2	
	S17-4	ROUTE 5 / 24.5	FSBT	G8 (CA)	44.0	132 X 48	X	4 X 6	GREEN	XI	WHITE	XI		X			44.0				1					
	S17-5	ROUTE 5 / 24.3	FNBT	G83 (CA)																				1	120.2	
	S17-6	ROUTE 5 / 24.3	FNBT	G83 (CA)	25.0	72 X 50	X	6 X 6	GREEN	XI	WHITE	XI		X			25.0				1					
S-18	S18-1	ROUTE 5 / 24.7	FSBT	G8 (CA)																				1	120.2	
	S18-2	ROUTE 5 / 24.7	FSBT	G8 (CA)	45.0	108 X 60	X	6 X 6	GREEN	XI	WHITE	XI		X				45.0			1					
S-19	S19-1	ROUTE 5 /	FSBT	G70-5 (CA)	19.3	66 X 42	X		GREEN	XI	WHITE	XI		X			19.3					1				
S-20	S20-1	ROUTE 5 / 25.2	FNBT	G70-4 (CA)	12.3	42 X 42	X		GREEN	XI	WHITE	XI		X			12.3					1				
S-23	S23-1	ROUTE 5 / 26.3	FNBT	G70-5 (CA)	19.3	66 X 42	X		GREEN	XI	WHITE	XI		X			19.3					1				
S-25	S25-1	ROUTE 5 / 26.9	FSBT	G70-4 (CA)	12.3	42 X 42	X		GREEN	XI	WHITE	XI		X			12.3					1				
						SHEET TOTAL											299.3	270.9			10	11		9	1081.8	
						GRAND TOTAL											299.3	270.9			10	11		9	1081.8	

SIGN QUANTITIES
SQ-1

STATE OF CALIFORNIA - DEPARTMENT OF TRANSPORTATION
Caltrans® TRAFFIC DESIGN

FUNCTIONAL SUPERVISOR: GRISH BIGLARIAN
CALCULATED-DESIGNED BY: SHAHAN PETROSSIAN
CHECKED BY: EDGAR HERRERA
REVISED BY
DATE REVISED

LAST REVISION 11-20-13
DATE PLOTTED => 18-MAR-2014
TIME PLOTTED => 11:23

Dist	COUNTY	ROUTE	POST MILES TOTAL PROJECT	SHEET No.	TOTAL SHEETS
07	LA	5	19.2/28.9	113	217

REGISTERED CIVIL ENGINEER 1-31-14 DATE

2-10-14
PLANS APPROVAL DATE

REGISTERED PROFESSIONAL ENGINEER EDGAR HERRERA No. C67603 Exp. 6-30-15 CIVIL STATE OF CALIFORNIA

THE STATE OF CALIFORNIA OR ITS OFFICERS OR AGENTS SHALL NOT BE RESPONSIBLE FOR THE ACCURACY OR COMPLETENESS OF SCANNED COPIES OF THIS PLAN SHEET.

OVERHEAD SIGN QUANTITIES

SHEET No.	SIGN No.	LOCATION	SIGN CODE	SIGN SIZE L X D (in x in)	CIDH CONCRETE PILE (SIGN FOUNDATION)	SIGN STRUCTURE (TRUSS)		INSTALL SIGN PANEL ON EXISTING FRAME	MATERIAL SUMMARY									REMARKS
									SINGLE FACED	BACKGROUND		LEGEND		GRAFFITI FILM		FURNISH FORMED PANEL SIGN (OVERHEAD)	FURNISH LAMINATED SIGN PANEL (1" TYPE A)	
					5'-0"	FURNISH	INSTALL			SHEETING COLOR	RETROREFLECTIVE ASTM TYPE	SHEETING COLOR	RETROREFLECTIVE ASTM TYPE	STANDARD	PREMIUM			
					LF	LB	LB	SQFT								SQFT	SQFT	
S-1	OS1-1(a)	FSBT	G24(CA)	216" X 120"				180	X	GREEN	IV	WHITE	IV		X	180		
	OS1-1(b)	FSBT	G24(CA)	360" X 120"				300	X	GREEN	IV	WHITE	IV		X	300		
	OS1-2(a)	FNBT	G85(CA)	144" X 70"				70	X	GREEN	IV	WHITE	IV		X	70		
	OS1-3(a)	FNBT	G83(CA)	168" X 100"				117	X	GREEN	IV	WHITE	IV		X	117		
	OS1-3(b)	FNBT	G85(CA)	192" X 100"				134	X	GREEN	IV	WHITE	IV		X	134		
S-2	OS2-1(a)	FSBT	G23(CA)	288" X 100"				200	X	GREEN	IV	WHITE	IV		X	200		
S-3	OS3-1(a)	FSBT	G83(CA)	168" X 70"				82	X	GREEN	IV	WHITE	IV		X	82		
	OS3-1(b)	FSBT	G85(CA)	216" X 70"				105	X	GREEN	IV	WHITE	IV		X	105		
	OS3-2(a)	FSBT	G23(CA)	288" X 90"				180	X	GREEN	IV	WHITE	IV		X	180		
S-4	OS4-1(a)	FSBT	G24(CA)	168" X 100"				117	X	GREEN	IV	WHITE	IV		X	117		
	OS4-1(b)	FSBT	G85(CA)	192" X 100"				134	X	GREEN	IV	WHITE	IV		X	134		
	OS4-2(a)	FNBT	G85(CA)	168" X 120"				140	X	GREEN	IV	WHITE	IV		X	140		
S-7	OS7-1(a)	FNBT	G23(CA)	264" X 120"				220	X	GREEN	IV	WHITE	IV		X	220		
S-8	OS8-1(a)	FNBT	G83(CA)	216" X 70"				105	X	GREEN	IV	WHITE	IV		X		105	
S-9	OS9-1(a)	FNBT	G24(CA)	288" X 120"				240	X	GREEN	IV	WHITE	IV		X		240	
	OS9-1(b)	FNBT	G83(CA)	192" X 120"				160	X	GREEN	IV	WHITE	IV		X		160	
	OS9-1(c)	FNBT	G85(CA)	168" X 120"				140	X	GREEN	IV	WHITE	IV		X		140	
S-10	OS10-1(a)	FSBT	G20(CA)	192" X 120"				160	X	GREEN	IV	WHITE	IV		X	160		
	OS10-1(b)	FSBT	G85(CA)	144" X 120"				120	X	GREEN	IV	WHITE	IV		X	120		
	OS10-2(a)	FNBT	G23(CA)	240" X 100"				184	X	GREEN	IV	WHITE	IV		X	184		
S-11	OS11-1(a)	FSBT	G20(CA)	384" X 120"				320	X	GREEN	IV	WHITE	IV		X	320		
	OS11-1(b)	FNBT	G24(CA)	312" X 120"				260	X	GREEN	IV	WHITE	IV		X	260		
	OS11-2(a)	FNBT	G20(CA)	240" X 120"				200	X	GREEN	IV	WHITE	IV		X	200		
	OS11-2(b)	FNBT	G85(MOD)(CA)	504" X 120"				420	X	GREEN	IV	WHITE	IV		X	420		
SUB-TOTAL SQ-2								4,288								3,643	645	

LEGEND: B = BLACK ; Y = YELLOW ; R = RED ; W = WHITE ; G = GREEN ; BLU = BLUE
* = SEE STRUCTURAL DETAIL SHEETS

SIGN QUANTITIES
SQ-2

STATE OF CALIFORNIA - DEPARTMENT OF TRANSPORTATION
Caltrans® TRAFFIC DESIGN

FUNCTIONAL SUPERVISOR: GRISH BIGLARIAN
CALCULATED-DESIGNED BY: SHAHAN PETROSSIAN
CHECKED BY: EDGAR HERRERA
REVISED BY
DATE REVISED

LAST REVISION 11-20-13
DATE PLOTTED => 18-MAR-2014
TIME PLOTTED => 11:23

Dist	COUNTY	ROUTE	POST MILES TOTAL PROJECT	SHEET No.	TOTAL SHEETS
07	LA	5	19.2/28.9	114	217

REGISTERED CIVIL ENGINEER 1-31-14 DATE

2-10-14
PLANS APPROVAL DATE

REGISTERED PROFESSIONAL ENGINEER EDGAR HERRERA No. C67603 Exp. 6-30-15 CIVIL STATE OF CALIFORNIA

THE STATE OF CALIFORNIA OR ITS OFFICERS OR AGENTS SHALL NOT BE RESPONSIBLE FOR THE ACCURACY OR COMPLETENESS OF SCANNED COPIES OF THIS PLAN SHEET.

OVERHEAD SIGN QUANTITIES

SHEET No.	SIGN No.	LOCATION	SIGN CODE	SIGN SIZE L X D (in x in)	CIDH CONCRETE PILE (SIGN FOUNDATION)	SIGN STRUCTURE (TRUSS)		INSTALL SIGN PANEL ON EXISTING FRAME	MATERIAL SUMMARY									REMARKS
									SINGLE FACED	BACKGROUND		LEGEND		GRAFFITI FILM		FURNISH FORMED PANEL SIGN (OVERHEAD)	FURNISH LAMINATED SIGN PANEL (1" TYPE A)	
					5'-0"	FURNISH	INSTALL			SHEETING COLOR	RETROREFLECTIVE ASTM TYPE	SHEETING COLOR	RETROREFLECTIVE ASTM TYPE	STANDARD	PREMIUM			
					LF	LB	LB	SQFT								SQFT	SQFT	
S-11	OS11-3(a)	FNBT	G85(CA)	168" X 70"				82	X	GREEN	IV	WHITE	IV		X	82		
S-12	OS12-1(a)	FSBT	G20(CA)	240" X 120"				200	X	GREEN	IV	WHITE	IV		X	200		
	OS12-1(b)	FSBT	G83(CA)	192" X 120"				160	X	GREEN	IV	WHITE	IV		X	160		
	OS12-2(a)	FNBT	G20(CA)	384" X 120"				320	X	GREEN	IV	WHITE	IV		X	320		
	OS12-2(b)	FNBT	G83(CA)	264" X 120"				220	X	GREEN	IV	WHITE	IV		X	220		
S-13	OS13-1(a)	FSBT	G83(CA)	240" X 120"				200	X	GREEN	IV	WHITE	IV		X		200	
	OS13-1(b)	FSBT	G85(CA)	240" X 120"				200	X	GREEN	IV	WHITE	IV		X		200	
	OS13-2(a)	FSBT	G85(CA)	384" X 120"				320	X	GREEN	IV	WHITE	IV		X		320	
	OS13-2(b)	FSBT	G23(CA)	168" X 120"				140	X	GREEN	IV	WHITE	IV		X		140	
	OS13-2(c)	FSBT	G24(CA)	312" X 120"				260	X	GREEN	IV	WHITE	IV		X	260		
	OS13-3(a)	FNBT	G23(CA)	216" X 120"				180	X	GREEN	IV	WHITE	IV		X	180		
S-14	OS14-1(a)	FSBT	G24(CA)	336" X 120"				280	X	GREEN	IV	WHITE	IV		X		280	
	OS14-1(b)	FSBT	G24(CA)	360" X 120"				300	X	GREEN	IV	WHITE	IV		X		300	
	OS14-1(c)	FSBT	G85(CA)	192" X 120"				160	X	GREEN	IV	WHITE	IV		X		160	
	OS14-2(a)	FNBT	G24(CA)	240" X 70"				117	X	GREEN	IV	WHITE	IV		X		117	
S-15	OS15-1(a)	FSBT	G83(CA)	192" X 70"				94	X	GREEN	IV	WHITE	IV		X	94		
	OS15-2(a)	FNBT	G85(CA)	240" X 70"				117	X	GREEN	IV	WHITE	IV		X		117	
	OS15-2(b)	FNBT	G20(CA)	192" X 70"				94	X	GREEN	IV	WHITE	IV		X		94	
	OS15-3(a)	FNBT	G85(CA)	216" X 90"				135	X	GREEN	IV	WHITE	IV		X	135		
S-16	OS16-1(a)	FSBT	G23(CA)	216" X 100"				150	X	GREEN	IV	WHITE	IV		X		150	
	OS16-1(b)	FSBT	G20(CA)	216" X 100"				150	X	GREEN	IV	WHITE	IV		X		150	
	OS16-2(a)	FNBT	G24(CA)	192" X 70"				94	X	GREEN	IV	WHITE	IV		X	94		
	OS16-3(a)	FNBT	G20(CA)	192" X 70"				94	X	GREEN	IV	WHITE	IV		X	94		
S-17	OS17-1(a)	FNBT	G85(CA)	240" X 100"	23	19,740	19,740	167	X	GREEN	IV	WHITE	IV		X	167		
SUB-TOTAL SQ-3					23	19,740	19,740	4,234								2,006	2,228	

LEGEND: B = BLACK ; Y = YELLOW ; R = RED ; W = WHITE ; G = GREEN ; BLU = BLUE
* = SEE STRUCTURAL DETAIL SHEETS

SIGN QUANTITIES
SQ-3

STATE OF CALIFORNIA - DEPARTMENT OF TRANSPORTATION
Caltrans® TRAFFIC DESIGN

FUNCTIONAL SUPERVISOR: GRISH BIGLARIAN
CALCULATED-DESIGNED BY: SHAHAN PETROSSIAN
CHECKED BY: EDGAR HERRERA
REVISED BY
DATE REVISED

LAST REVISION 00-00-00
DATE PLOTTED => 18-MAR-2014
TIME PLOTTED => 11:23

Dist	COUNTY	ROUTE	POST MILES TOTAL PROJECT	SHEET No.	TOTAL SHEETS
07	LA	5	19.2/28.9	115	217

REGISTERED CIVIL ENGINEER 1-31-14 DATE

2-10-14
PLANS APPROVAL DATE

REGISTERED PROFESSIONAL ENGINEER EDGAR HERRERA No. C67603 Exp. 6-30-15 CIVIL STATE OF CALIFORNIA

THE STATE OF CALIFORNIA OR ITS OFFICERS OR AGENTS SHALL NOT BE RESPONSIBLE FOR THE ACCURACY OR COMPLETENESS OF SCANNED COPIES OF THIS PLAN SHEET.

OVERHEAD SIGN QUANTITIES

SHEET No.	SIGN No.	LOCATION	SIGN CODE	SIGN SIZE L X D (in x in)	CIDH CONCRETE PILE (SIGN FOUNDATION)	SIGN STRUCTURE (TRUSS)		INSTALL SIGN PANEL ON EXISTING FRAME	MATERIAL SUMMARY									REMARKS
									SINGLE FACED	BACKGROUND		LEGEND		GRAFFITI FILM		FURNISH FORMED PANEL SIGN (OVERHEAD)	FURNISH LAMINATED SIGN PANEL (1" TYPE A)	
					5'-0"	FURNISH	INSTALL			SHEETING COLOR	RETROREFLECTIVE ASTM TYPE	SHEETING COLOR	RETROREFLECTIVE ASTM TYPE	STANDARD	PREMIUM			
					LF	LB	LB	SQFT								SQFT	SQFT	
S-18	OS18-1(a)	FSBT	G23(CA)	216" X 90"				135	X	GREEN	IV	WHITE	IV		X	135		
S-19	OS19-1(a)	FSBT	G83(CA)	216" X 70"				105	X	GREEN	IV	WHITE	IV		X		105	
	OS19-1(b)	FSBT	G85(CA)	192" X 70"				94	X	GREEN	IV	WHITE	IV		X		94	
	OS19-1(c)	FSBT		192" X 24"				32	X	GREEN	IV	WHITE	IV		X		32	
	OS19-2(a)	FNBT	G23(CA)	336" X 110"				257	X	GREEN	IV	WHITE	IV		X	257		
S-20	OS20-1(a)	FNBT	G83(CA)	192" X 70"				94	X	GREEN	IV	WHITE	IV		X	94		
S-21	OS21-1(a)	FSBT	G83(CA)	216" X 70"				105	X	GREEN	IV	WHITE	IV		X	105		
	OS21-2(a)	FNBT	G85(CA)	192" X 100"				133	X	GREEN	IV	WHITE	IV		X	133		
S-22	OS22-1(a)	FSBT	G85(CA)	192" X 70"				94	X	GREEN	IV	WHITE	IV		X	94		
	OS22-2(a)	FNBT	G23(CA)	312" X 100"				217	X	GREEN	IV	WHITE	IV		X	217		
	OS22-3(a)	FNBT	G24(CA)	288" X 120"				240	X	GREEN	IV	WHITE	IV		X	240		
	OS22-3(b)	FNBT	G23(CA)	336" X 120"				280	X	GREEN	IV	WHITE	IV		X	280		
	OS22-4(a)	FSBT	G23(CA)	312" X 100"				217	X	GREEN	IV	WHITE	IV		X	217		
S-23	OS23-1(a)	FNBT	G20-3(CA)	144" X 70"				70	X	GREEN	IV	WHITE	IV		X	70		
S-24	OS24-1(a)	FNBT	G24(CA)	216" X 100"				150	X	GREEN	IV	WHITE	IV		X	150		
	OS24-1(b)	FNBT	G24(CA)	624" X 100"				434	X	GREEN	IV	WHITE	IV		X	434		
	OS24-2(a)	FNBT	G24(CA)	264" X 70"				129	X	GREEN	IV	WHITE	IV		X	129		
	OS24-2(b)	FNBT	G85(CA)	216" X 70"				105	X	GREEN	IV	WHITE	IV		X	105		
	OS24-3(a)	FSBT	G85(CA)	216" X 70"				105	X	GREEN	IV	WHITE	IV		X		105	
S-25	OS25-1(a)	FNBT	G20(CA)	216" X 100"				150	X	GREEN	IV	WHITE	IV		X	150		
	OS25-1(b)	FNBT	G24(CA)	288" X 100"				200	X	GREEN	IV	WHITE	IV		X	200		
	OS25-2(a)	FSBT	G83(CA)	192" X 70"				93	X	GREEN	IV	WHITE	IV		X	93		
SUB-TOTAL SQ-4					23	19,740	19,740	3,439								3,103	336	
GRAND TOTAL					23	19,740	19,740	11,961								8,752	3,209	

LEGEND: B = BLACK ; Y = YELLOW ; R = RED ; W = WHITE ; G = GREEN ; BLU = BLUE
* = SEE STRUCTURAL DETAIL SHEETS

SIGN QUANTITIES
SQ-4

REVISED BY	DATE REVISED
SHAHAN PETROSSIAN	EDGAR HERRERA
CALCULATED-DESIGNED BY	CHECKED BY
FUNCTIONAL SUPERVISOR	GRISH BIGLARIAN

STATE OF CALIFORNIA - DEPARTMENT OF TRANSPORTATION
Caltrans® TRAFFIC DESIGN

LAST REVISION 00-00-00 | DATE PLOTTED => 18-MAR-2014 | TIME PLOTTED => 11:23

Dist	COUNTY	ROUTE	POST MILES TOTAL PROJECT	SHEET No.	TOTAL SHEETS
07	LA	5	19.2/28.9	116	217

REGISTERED CIVIL ENGINEER 1-31-14 DATE

2-10-14
PLANS APPROVAL DATE

REGISTERED PROFESSIONAL ENGINEER LOHIT R. KOTHA No. C75977 Exp. 6/30/14 CIVIL STATE OF CALIFORNIA

THE STATE OF CALIFORNIA OR ITS OFFICERS OR AGENTS SHALL NOT BE RESPONSIBLE FOR THE ACCURACY OR COMPLETENESS OF SCANNED COPIES OF THIS PLAN SHEET.

(N) NOT A SEPERATE PAY ITEM, FOR INFORMATION ONLY.

LANE REPLACEMENT

DIRECTION	LOCATION FROM	LOCATION TO	NUMBER OF SLABS (N) SLAB No. 1	SLAB No. 2	SLAB No. 3	SLAB No. 4	JPCP (RSC)	ATB*	REMOVE CONCRETE Pvmt & BASE	BASE BOND BREAKER
			EA	EA	EA	EA	CY	CY	CY	SQYD
NB	23.92	23.99	20	20	28	28	689	197	886	1045
	27.05	27.07	10	10	10	10	274	82	356	747
	27.51	27.54	10	10	10	10	274	82	356	747
	27.82	27.84	10	10	10	10	274	82	356	747
	28.12	28.14	10	10	10	10	274	82	356	747
	28.41	28.43	10	10	10	10	274	82	356	747
	28.70	28.72	10	10	10	10	274	82	356	747
	28.73	28.92	16	16	16	16	438	131	569	1,195
SB	23.28	23.55		102	102	102	1515	628	2143	5,712
	27.05	27.07	10	10	10	10	274	82	356	747
	27.51	27.54	10	10	10	10	274	82	356	747
	27.82	27.84	10	10	10	10	274	82	356	747
	28.12	28.14	10	10	10	10	274	82	356	747
	28.41	28.43	10	10	10	10	274	82	356	747
	28.70	28.72	10	10	10	10	274	82	356	747
	28.73	28.92	16	16	16	16	438	131	569	1195
						TOTAL	6,368	2,071	8,439	18,111

* FOR ADDITIONAL QUANTITIES, SEE SHEET Q-2

INDIVIDUAL SLAB REPLACEMENT

DIRECTION	LOCATION FROM	LOCATION TO	NUMBER OF SLABS (N) SLAB No. 1	SLAB No. 2	SLAB No. 3	SLAB No. 4	ISR (RSC)	DRILL & BOND (DOWEL BAR)	REPLACE BASE	REMOVE CONCRETE Pvmt & BASE	BASE BOND BREAKER
			EA	EA	EA	EA	CY	EA	CY	CY	SQYD
NB	19.20	19.73		2			8.33	36	4.12	12.45	37
	19.73	19.86		1			4.17	24	2.05	6.22	19
	19.86	20.26		1			4.67	24	2.05	6.72	19
	20.94	20.99			1		4.67	24	2.05	6.72	19
	20.99	21.94			2	4	28.00	120	12.32	40.32	112
	21.94	22.26		1			4.17	24	2.05	6.22	19
	22.26	22.78		1			4.17	24	2.05	6.22	19
	22.78	23.73		1			4.17	24	2.05	6.22	19
SB	19.20	19.73		1			4.17	24	2.05	6.22	19
	19.73	19.86		1			4.17	24	2.05	6.22	19
	19.86	20.26		1			4.67	24	2.05	6.72	19
	20.94	20.99			1	1	9.33	48	4.11	13.44	37
	20.99	21.94			1	1	9.33	48	4.11	13.44	37
	21.94	22.26			1	1	9.33	48	4.11	13.44	37
	22.26	22.78		1			4.17	24	2.05	6.22	19
						SUB TOTAL	107.52	540	49.27	156.79	450
						FROM LANE REPLACEMENT				8,439.00	18,111
						TOTAL	107.52	540	49.27	8,595.79	18,561

SUMMARY OF QUANTITIES

Q-1

STATE OF CALIFORNIA - DEPARTMENT OF TRANSPORTATION
Caltrans DESIGN

FUNCTIONAL SUPERVISOR: KHAN HOSSAIN
CALCULATED-DESIGNED BY: LOHIT KOTHA
CHECKED BY: SULE K ALABI
REVISED BY
DATE REVISED

LAST REVISION 11-20-13
DATE PLOTTED => 18-MAR-2014
TIME PLOTTED => 11:23

Dist	COUNTY	ROUTE	POST MILES TOTAL PROJECT	SHEET No.	TOTAL SHEETS
07	LA	5	19.2/28.9	117	217

REGISTERED CIVIL ENGINEER 1-31-14 DATE

2-10-14
PLANS APPROVAL DATE

REGISTERED PROFESSIONAL ENGINEER LOHIT R. KOTHA No. C75977 Exp. 6/30/14 CIVIL STATE OF CALIFORNIA

THE STATE OF CALIFORNIA OR ITS OFFICERS OR AGENTS SHALL NOT BE RESPONSIBLE FOR THE ACCURACY OR COMPLETENESS OF SCANNED COPIES OF THIS PLAN SHEET.

GRIND EXISTING CONCRETE PAVEMENT

PM	LOCATION DESCRIPTION	GRIND EXISTING CONCRETE Pvmt
		SQYD
19.857	NB Rte 5 OFF-RAMP TO Rte 110/FIGUEROA St	700
20.247	NB Rte 5 Conn TO NB Rte 110	4,900
20.237	SB Rte 110/Ave 26 Conn to SB Rte 5	2,400
20.238	SB Rte 5 TO Rte 5/PASADENA Ave	3,100
20.357	SB Rte 110 Conn TO SB Rte 5	2,200
20.453	SB Rte 5 Conn TO NB Rte 110	3,600
20.561	SB Rte 5 Conn TO NB Rte 110/PASADENA Ave	1,670
22.850	EB Rte 2 Conn TO NB Rte 5	980
22.850	SB Rte 5 Conn TO EB Rte 2	2,640
21.820	EB Rte 2 Conn TO SB Rte 5	1,200
21.820	WB Rte 2 Conn to SB Rte 5	5,720
22.398	NB Rte 5 Conn TO EB Rte 2	1,500
22.398	NEWELL St ON-RAMP TO EB Rte 2	300
TOTAL		30,910

MAINTENANCE VEHICLE PULLOUT

LOCATION No.	POST MILE	DIRECTION	DESCRIPTION	ROADWAY EXCAVATION * (TYPE Z-2) (AERIALLY DEPOSITED LEAD)	ALTERNATE TREATED BASE	HMA SP-A *
				CY	CY	TON
1	19.69	SB	MAINLINE	20.84	13.6	17.6
2	19.95	SB	OFF-RAMP TO PASADENA Ave	20.84	13.6	17.6
3	20.30	SB	OFF-RAMP TO PASADENA Ave	20.84	13.6	17.6
4	20.70	SB	Conn To SB Rte 110	20.84	13.6	17.6
5	23.67	NB	MAINLINE AT GLENDALE Blvd OC	20.84	13.6	17.6
6	24.02	NB	MAINLINE NEAR LOS FELIZ Blvd OFF-RAMP	20.84	13.6	17.6
7	24.30	SB	OFF-RAMP TO EB LOS FELIZ Blvd	20.84	13.6	17.6
8	24.34	SB	ON-RAMP FROM WB LOS FELIZ Blvd	20.84	13.6	17.6
SUB TOTAL				166.72	108.8	140.8
SUBTOTAL FROM LANE REPLACEMENT					2,071.0	
SUBTOTAL SHEET TH-1						147.0
TOTAL				166.72	2,179.8	287.8

* FOR ADDITIONAL QUANTITIES, SEE SHEET Q-17

SPALL REPAIR (POLYESTER GROUT)

FROM	TO	SOUTHBOUND	NORTHBOUND
PM	PM	SQYD	SQYD
19.2	28.9	500	500
TOTAL		1,000	

TEMPORARY BMP'S

ITEM	UNIT	Qty
TEMPORARY DRAINAGE INLET PROTECTION	EA	160
TEMPORARY GRAVEL BAG BERM	LF	15,000

SUMMARY OF QUANTITIES

Q-2

STATE OF CALIFORNIA - DEPARTMENT OF TRANSPORTATION
Caltrans DESIGN

FUNCTIONAL SUPERVISOR: KHAN HOSSAIN
CALCULATED-DESIGNED BY: LOHIT KOTHA
CHECKED BY: SULE K ALABI
REVISED BY
DATE REVISED

LAST REVISION 11-20-13
DATE PLOTTED => 18-MAR-2014
TIME PLOTTED => 11:23

Dist	COUNTY	ROUTE	POST MILES TOTAL PROJECT	SHEET No.	TOTAL SHEETS
07	LA	5	19.2/28.9	118	217

REGISTERED CIVIL ENGINEER 1-31-14 DATE

2-10-14
PLANS APPROVAL DATE

REGISTERED PROFESSIONAL ENGINEER LOHIT R. KOTHA No. C75977 Exp. 6/30/14 CIVIL STATE OF CALIFORNIA

THE STATE OF CALIFORNIA OR ITS OFFICERS OR AGENTS SHALL NOT BE RESPONSIBLE FOR THE ACCURACY OR COMPLETENESS OF SCANNED COPIES OF THIS PLAN SHEET.

ROADWAY QUANTITIES (RAMPS)-NB

TABLE 1

No.	RAMP DESCRIPTION	COLD PLANE AC Pvmt	RHMA SP-G	REMOVE AC DIKE	PLACE HMA DIKE (TYPE E)	HMA SP-A
		SQYD	TON	LF	LF	TON
1	NB OFF-RAMP TO MAIN St	2,600	295			
2	NB OFF-RAMP TO BROADWAY	4,689	584			
3	SEGMENT BROADWAY TO PASADENA St	1,733	234			
4	NB ON-RAMP FROM PASADENA St	1,586	211	600	600	0.61
5	NB OFF-RAMP TO Ave 26 th	2,410	301			
6	NB Conn TO NB Rte 110	2,244	152			
7	NB ON-RAMP FROM RIVERSIDE Dr	2,150	262			
8	NB OFF-RAMP TO STADIUM Dr	3,061	390			
9	NB ON-RAMP FROM STADIUM Dr	2,692	340	500	500	0.51
10	NB Rte 5 CONNECTOR TO NB Rte 2	1,156	116			
11	NB Rte 5 CONNECTOR WB Rte 2	2,413	274	600	600	0.61
12	NB Rte2 CONNECTOR NB Rte 5	2,964	341			
13	NB ON-RAMP FROM FLETCHER Dr	3,749	492	850	850	0.86
14	NB OFF-RAMP TO GLENDALE Blvd	3,044	387			
15	NB ON-RAMP FROM GLENDALE Blvd	1,751	212			
16	NB OFF-RAMP TO LOS FELIZ Blvd	3,006	377			
17	NB ON-RAMP FROM WB LOS FELIZ Blvd	2,889	364			
18	NB ON-RAMP FROM EB LOS FELIZ Blvd	7,281	948	920	920	0.93
19	NB OFF-RAMP TO CRYSTAL SPRINGS Dr	2,533	316			
20	NB OFF-RAMP TO COLORADO Fwy Ext	2,867	333			
21	NB OFF-RAMP TO COLORADO Blvd	1897	244			
22	NB ON-RAMP TO COLORADO Fwy Ext	1509	211			
23	NB OFF-RAMP TO W ELK Ave	1022	138			
24	NB OFF-RAMP TO ZOO Dr	2,271	284			
25	NB ON-RAMP FROM WESTERN Ave	3,033	398	500	500	0.51
26	NB ALAMEDA Ave RAMPS	9,659	2,285	500	500	0.51
	SUBTOTAL	76,209	10,489	4,470	4,470	4.54

ROADWAY QUANTITIES (RAMPS)-SB

TABLE 2

No.	RAMP DESCRIPTION	COLD PLANE AC Pvmt	RHMA SP-G	REMOVE AC DIKE	PLACE HMA DIKE (TYPE E)	HMA SP-A
		SQYD	TON	LF	LF	TON
27	MAIN St OFF	5,789	694			
28	BROADWAY ON-RAMP	4,904	579			
29	SEGMENT PASADENA TO BROADWAY	1,733	234			
30	PASADENA Ave OFF-RAMP	2,750	357			
31	SB Rte 5 OFF-RAMP TO PASADENA Ave	1,220	494			
32	SB 110 Conn TO SB Rte 5	1,062	430			
33	SB Rte 5 Conn TO NB Rte 110	1,549	627			
34	RIVERSIDE Dr ON-RAMP	2,205	892			
35	SB Rte 5 Conn TO SB Rte 110	789	319			
36	RIVERSIDE Dr OFF-RAMP	1,336	541			
37	STADIUM WAY ON-RAMP	1,669	675			
38	SB ON-RAMP FROM Rte 2 Conn	1,718	695			
39	STADIUM WAY OFF-RAMP	680	275			
40	ON-RAMP FROM NB Rte 2 Conn	933	378			
41	ON-RAMP FROM SB Rte 2 Conn	1,299	526			
42	OFF-RAMP TO SB Rte 2 Conn	1,390	562			
43	OFF-RAMP TO NB Rte 2 Conn	1,351	547			
44	FLETCHER Dr OFF-RAMP	2,789	365	700	700	0.71
45	GLENDALE Blvd ON-RAMP	3,297	379			
46	GLENDALE Blvd OFF-RAMP	1,896	254	840	840	0.85
47	LOS FELIZ Blvd & CRYSTAL SPRINGS Dr RAMPS	18,400	2,235	600	600	0.61
48	SB Rte 5 TO COLORADO Conn	14,860	254	1,000	1,000	1.01
49	ON-RAMP FROM COLORADO Blvd	1,361	168	375	375	0.38
50	COLORADO Conn	240	16			
51	EDENHURST Ave OFF-RAMP	2,572	324			
52	EDENHURST Ave ON-RAMP	2,272	302			
53	COLORADO Conn	2,825	310			
54	WESTERN Ave RAMPS	11,101	1,390	340	340	0.35
55	ALAMEDA Ave RAMPS	10,356	1,272			
	SUBTOTAL	104,756	16,149	3,855	3,855	3.91

SUMMARY OF QUANTITIES
Q-3

LAST REVISION 11-20-13 | DATE PLOTTED => 18-MAR-2014 TIME PLOTTED => 11:23

STATE OF CALIFORNIA - DEPARTMENT OF TRANSPORTATION
Caltrans® DESIGN

FUNCTIONAL SUPERVISOR: KHAN HOSSAIN
CALCULATED-DESIGNED BY: LOHIT KOTHA
CHECKED BY: KHAN HOSSAIN
REVISED BY
DATE REVISED

Dist	COUNTY	ROUTE	POST MILES TOTAL PROJECT	SHEET No.	TOTAL SHEETS
07	LA	5	19.2/28.9	119	217

REGISTERED CIVIL ENGINEER 1-31-14 DATE

2-10-14
PLANS APPROVAL DATE

REGISTERED PROFESSIONAL ENGINEER LOHIT R. KOTHA No. C75977 Exp. 6/30/14 CIVIL STATE OF CALIFORNIA

THE STATE OF CALIFORNIA OR ITS OFFICERS OR AGENTS SHALL NOT BE RESPONSIBLE FOR THE ACCURACY OR COMPLETENESS OF SCANNED COPIES OF THIS PLAN SHEET.

ROADWAY QUANTITIES (MAIN LINE)

TABLE 3

PM	DESCRIPTION	COLD PLANE ASPHALT CONCRETE PAVEMENT	RHMA SP-G	REMOVE AC DIKE		PLACE HMA DIKE *				HMA SP-A
						TYPE E		TYPE C		
				SB	NB	SB	NB	SB	NB	
		SQYD	TON	LF	LF	LF	LF	LF	LF	TON
19.20 TO 20.48	MAIN St UC to Rte 110 & N FIGUEROA St	21,718	2,199	643	250					
20.68 TO 20.93	LA RIVER UC TO DUVALL St ON-RAMP UC	3,605	365							
20.93 TO 20.98	DUVALL St ON-RAMP UC TO ELMGROVE St OFF-RAMP	675	68							
20.98 TO 21.94	ELMGROVE St OFF RAMP UC TO RIVERSIDE Dr UC	24,501	2,481	2,188	328	1,500				1.52
21.94 TO 22.25	RIVERSIDE Dr UC TO NEWELL St UC	6,916	700	1,471				1,471		0.42
22.25 TO 22.77	NEWELL St UC TO GILROY St UC	12,204	1,236	333	740			175	175	0.21
22.77 TO 22.97	GILROY St UC TO FLETCHER ST UC	4,048	410	273	315					
22.97 TO 23.63	FLETCHER St UC TO GLENDALE Blvd OC	18,960	1,920	2,175	8,212			760	6,247	2.00
23.63 TO 27.10	GLENDALE Blvd UC TO Rte 134/LOS ANGELES RIVER	284,892	28,845	4,480	3,252					
27.10 TO 27.52	Rte 134/LOS ANGELES RIVER UC TO SONORA Ave UC	31,314	3,170							
27.52 TO 27.83	SONORA Ave UC TO WESTERN Ave UC	20,820	2,108	428						
27.83 TO 28.11	WESTERN Ave UC TO ALLEN Ave UC	20,878	2,114							
28.15 TO 28.42	ALLEN Ave UC TO ALAMEDA Ave	22,223	2,250	270						
28.46 TO 28.71	ALAMEDA Ave TO FLOWER St UC	19,444	1,969							
	SUBTOTAL	492,198	49,835	12,261	13,097	1,500		2,406	6,422	4.15
	SUBTOTAL FROM TABLE 1	76,209	10,489		4,470		4,470			4.54
	SUBTOTAL FROM TABLE 2	104,756	16,149	3,855		3,855				3.91
	GRAND TOTAL	673,163	76,473	33,683		9,825		8,828		12.60

* FOR ADDITIONAL QUANTITIES, SEE SHEET Q-17

SUMMARY OF QUANTITIES
Q-4

STATE OF CALIFORNIA - DEPARTMENT OF TRANSPORTATION
Caltrans DESIGN

FUNCTIONAL SUPERVISOR: KHAN HOSSAIN
CALCULATED-DESIGNED BY: NEIL LIANG
CHECKED BY: LOHIT KOTHA
REVISED BY
DATE REVISED

LAST REVISION 11-20-13
DATE PLOTTED => 18-MAR-2014
TIME PLOTTED => 11:23

Dist	COUNTY	ROUTE	POST MILES TOTAL PROJECT	SHEET No.	TOTAL SHEETS
07	LA	5	19.2/28.9	120	217

Zebunnesa Amena 1-31-14
REGISTERED CIVIL ENGINEER DATE

2-10-14
PLANS APPROVAL DATE

REGISTERED PROFESSIONAL ENGINEER ZEBUNNESA AMENA TAREQUE No. 79912 Exp 9/30/14 CIVIL STATE OF CALIFORNIA

THE STATE OF CALIFORNIA OR ITS OFFICERS OR AGENTS SHALL NOT BE RESPONSIBLE FOR THE ACCURACY OR COMPLETENESS OF SCANNED COPIES OF THIS PLAN SHEET.

ROADWAY QUANTITIES

LOCATION No.	PM	DESCRIPTION	MIDWEST GUARDRAIL SYSTEM TYPE LAYOUT (N)	REMOVE GUARDRAIL	TREATED WOOD WASTE	REMOVE CRASH CUSHION	MIDWEST GUARDRAIL SYSTEM (WOOD POST)	TRANSITION RAILING (TYPE WB-31)	ALTERNATIVE IN-LINE TERMINAL SYSTEM	ALTERNATIVE FLARED TERMINAL SYSTEM	END ANCHOR ASSEMBLY (TYPE SFT)	BURIED POST END ANCHOR (N)	STRENGTHENED MIDWEST GUARDRAIL SYSTEM SECTIONS FOR FIXED OBJECT (N)	MINOR CONCRETE (MINOR STRUCTURE)	SINGLE THRIE BEAM BARRIER	DOUBLE THRIE BEAM BARRIER	ALTERNATIVE CRASH CUSHION	VEGETATION CONTROL (MINOR CONCRETE)	ROADWAY EXCAVATION (TYPE Z-2) (AERIALLY DEPOSITED LEAD)	PLACE HOT MIX ASPHALT DIKE		HMA SP-A
																				TYPE C	TYPE F	
				LF	LB	EA	LF	EA	EA	EA	EA	EA	LF	CY	LF	EA	EA	SQYD	CY	LF	LF	TON
1	19.32	NB Rte 5 BEFORE BROADWAY OFF RAMP	12B	62.5	806			1		1				2.01				62.18	1.56	77.5	30	0.30
2	19.70	NB Rte 5 AT 200′ SOUTH OF BROADWAY OC	12C	62.5	806		87.5	1				1						85.10	1.48	87.5	55	0.42
3	19.75	NB Rte 5 UNDER BROADWAY OC	12C	62.5	806		75	1				1						78.39				
4	19.85	NB Rte 5 BETWEEN OVERHEAD SIGN AND PASADENA Ave OC	15A	225.0	2,903																	
5	19.91	NB Rte 5 TO NB Rte 110 CONNECTOR AT PASADENA Ave OC LEFT SIDE	12D	500.0	6,452	1	195	1						1.85				120.75	1.48			
5A	19.91	NB Rte 5 TO NB Rte 110 CONNECTOR AT PASADENA Ave OC RIGHT SIDE	12DD	487.5	6,290		312.5				1			1.85				167.71	1.48			
6	20.12	NB Rte 5 AT HUMBOLDT St OC		100.0	1,290																	
7	20.26	NB Rte 5 AT LACY St UNION PACIFIC RAILROAD LEFT SIDE		337.5	4,355																	
7A	20.26	NB Rte 5 AT LACY St UNION PACIFIC RAILROAD RIGHT SIDE		75.0	968																	
8	21.74	NB Rte 5 OFF RAMP TO STADIUM WAY	12A	75.0	968	1		1	1					1.85				45.53	1.56	90	30	0.33
9	21.94	NB Rte 5 AT RIVERSIDE Dr UC	12A	162.5	2,097		87.5	1	1					1.85				92.49	1.48	90	117.5	0.68
10	22.50	NB Rte 5 AT 30′ SOUTH OF CALL BOX 5-226	11B	75.0	968		12.5			1	1							48.76		77.5	42.5	0.35
11	22.54	NB Rte 5 AT Rte 2/5 Sep BRIDGE No 53-0527R	11B	375.0	4,839		337.5			1	1							223.18		77.5	367.5	1.65
12	22.81	NB Rte 5 AT GILROY St UC	12B	62.5	806			1		1				1.85				55.47	1.48	77.5	30	0.30
13	22.90	NB Rte 5 AT FLETCHER Dr UC	12D 12A	1,075.0	13,871		900 87.5	1 1	1					1.85 1.85				496.42 92.49	1.48	90	117.5	0.68
14	22.91	NB Rte 5 AT NORTH END OF FLETCHER Dr UC	12DD	600.0	7,742		600				1			1.85				322	1.48			
15	23.44	NB ON-RAMP FROM FLETCHER Dr TO CONCRETE BARRIER	12A	1,800.0	23,226		1,725	1	1					1.85				971.28	1.48	77.5	1,755	7.22
		SHEET TOTAL		6,137.5	79,194	2	4,420	10	4	4	4	2		18.66				2,861.74	14.96	745	2,575	11.93

(N) NOT A SEPARATE PAY ITEM, FOR INFORMATION ONLY

SUMMARY OF QUANTITIES
Q-5

STATE OF CALIFORNIA - DEPARTMENT OF TRANSPORTATION
Caltrans® DESIGN

FUNCTIONAL SUPERVISOR: KHAN HOSSAIN
CALCULATED-DESIGNED BY: MOHAMMED ALAM
CHECKED BY: ZEBUNNESA TAREQUE
REVISED BY
DATE REVISED

LAST REVISION 11-20-13
DATE PLOTTED => 18-MAR-2014
TIME PLOTTED => 11:23

Dist	COUNTY	ROUTE	POST MILES TOTAL PROJECT	SHEET No.	TOTAL SHEETS
07	LA	5	19.2/28.9	121	217

REGISTERED CIVIL ENGINEER 1-31-14 DATE

2-10-14
PLANS APPROVAL DATE

REGISTERED PROFESSIONAL ENGINEER ZEBUNNESA AMENA TAREQUE No. 79912 Exp 9/30/14 CIVIL STATE OF CALIFORNIA

THE STATE OF CALIFORNIA OR ITS OFFICERS OR AGENTS SHALL NOT BE RESPONSIBLE FOR THE ACCURACY OR COMPLETENESS OF SCANNED COPIES OF THIS PLAN SHEET.

ROADWAY QUANTITIES

LOCATION No.	PM	DESCRIPTION	MIDWEST GUARDRAIL SYSTEM TYPE LAYOUT (N)	REMOVE GUARDRAIL	TREATED WOOD WASTE	REMOVE CRASH CUSHION	MIDWEST GUARDRAIL SYSTEM (WOOD POST)	TRANSITION RAILING (TYPE WB-31)	ALTERNATIVE IN-LINE TERMINAL SYSTEM	ALTERNATIVE FLARED TERMINAL SYSTEM	END ANCHOR ASSEMBLY (TYPE SFT)	BURIED POST END ANCHOR (N)	STRENGTHENED MIDWEST GUARDRAIL SYSTEM SECTIONS FOR FIX OBJECT (N)	MINOR CONCRETE (MINOR STRUCTURE)	SINGLE THRIE BEAM BARRIER	DOUBLE THRIE BEAM BARRIER	ALTERNATIVE CRASH CUSHION	VEGETATION CONTROL (MINOR CONCRETE)	ROADWAY EXCAVATION (TYPE Z-2) (AERIALLY DEPOSITED LEAD)	PLACE HOT MIX ASPHALT DIKE		HMA SP-A
																				TYPE C	TYPE F	
				LF	LB	EA	LF	EA	EA	EA	EA	EA	LF	CY	LF	LF	EA	SQYD	CY	LF	LF	TON
16	23.54	NB Rte 5 OFF RAMP TO GLANDALE Blvd OVERHEAD SIGN	11B	62	806		25			1	1							55.47		77.5	55	0.40
17	23.72	NB Rte 5 AT GLENDALE Blvd OC	12B	175	2,258		100	1		1				1.85				109.14	1.48	77.5	130	0.70
18	23.74	NB Rte 5 AT BETWEEN GLENDALE Blvd AND HYPERION Ave VIADUCT		110	1,452									2.01					1.48			
19	23.97	NB Rte 5 AT GRIFFITH PARK POC	16B	75	968		50			1	1							68.89		52.5	80	0.44
20	24.06	NB Rte 5 OFF-RAMP TO LOS FELIZ Blvd OVERHEAD SIGN	16B	75	968		50			1	1							68.89		52.5	80	0.44
21	24.22	NB Rte 5 ON-RAMP FROM NB LOS FELIZ Blvd OC	12B	120	1,613		50	1		1				1.85				82.31	1.48	77.5	80	0.50
22	24.34	NB Rte 5 AT LOS FELIZ Blvd OC LEFT SIDE	12A	290	3,710		12.5	1	1									52.24		90	42.5	0.38
22A	24.34	NB Rte 5 AT LOS FELIZ Blvd OC RIGHT SIDE	11A				350		1									219.94		90	380	1.73
23	24.44	NB Rte 5 OFF TO CRYSTAL SPRINGS Dr LEFT SIDE	12A	125	2,258		50	1	1					1.85				72.36	1.48	52.5	80	0.44
23A	24.44	NB Rte 5 OFF TO CRYSTAL SPRINGS Dr RIGHT SIDE	12B	50			50	1		1				1.85				82.31	1.48			
24	24.60	NB Rte 5 AT CRYSTAL SPRINGS Dr BRIDGE	16B	75	968		50			1	1							68.89		77.5	80	0.50
25	24.77	NB Rte 5 AT 325′ FROM LOS FELIZ Blvd ON-RAMP NOSE		55	645									1.85					1.48			
26	24.99	NB Rte 5 AT 18′ SOUTH FROM CALL BOX 248	12A	70	968		12.5	1	1					1.85				52.24	1.48	90	42.5	0.38
27	25.07	Rte 5 AND COLORADO St "1/2 MILE" OVERHEAD SIGN	12BB	30	323			1		1				1.85				55.47	1.48	77.5	30	0.30
28	25.65	NB Rte 5 AND "COLORADO St" OVERHEAD SIGN	16B	60	806		37.5			1	1							62.18		77.5	67.5	0.45
29	26.08	NB Rte 5 AT 350′ SOUTH FROM "ZOO DRIVE LA ZOO" OVERHEAD SIGN	12C	60	806		25	1				1		1.85				51.56	1.48			
30	26.36	NB Rte 5 AT "5/134 Sep" OVERHEAD SIGN	11A	600	7,742		550		1		1							327.28		90	580	2.53
31	26.47	NB Rte 5 AT ZOO Dr OC		80	968																	
32	26.52	NB Rte 5 PROTECTING CLOSED CIRCUIT TELEVISION POLE	11B	60	806		25			1	1							55.47		77.5	55	0.40
SHEET TOTAL				2,172	28,065		1,438	8	5	10	7	1		16.81				1,484.63	13.32	1,060	1,782	9.59

(N) NOT A SEPARATE PAY ITEM. FOR INFORMATION ONLY

SUMMARY OF QUANTITIES
Q-6

STATE OF CALIFORNIA - DEPARTMENT OF TRANSPORTATION
Caltrans® DESIGN

FUNCTIONAL SUPERVISOR: KHAN HOSSAIN
CALCULATED-DESIGNED BY: MOHAMMED ALAM
CHECKED BY: ZEBUNESSA TAREQUE
REVISED BY
DATE REVISED

LAST REVISION 11-20-13
DATE PLOTTED => 18-MAR-2014
TIME PLOTTED => 11:23

Dist	COUNTY	ROUTE	POST MILES TOTAL PROJECT	SHEET No.	TOTAL SHEETS
07	LA	5	19.2/28.9	122	217

REGISTERED CIVIL ENGINEER 1-31-14 DATE

2-10-14
PLANS APPROVAL DATE

REGISTERED PROFESSIONAL ENGINEER ZEBUNNESA AMENA TAREQUE No. 79912 Exp 9/30/14 CIVIL STATE OF CALIFORNIA

THE STATE OF CALIFORNIA OR ITS OFFICERS OR AGENTS SHALL NOT BE RESPONSIBLE FOR THE ACCURACY OR COMPLETENESS OF SCANNED COPIES OF THIS PLAN SHEET.

ROADWAY QUANTITIES

LOCATION No.	PM	DESCRIPTION	MIDWEST GUARDRAIL SYSTEM TYPE LAYOUT (N)	REMOVE GUARDRAIL	TREATED WOOD WASTE	REMOVE CRASH CUSHION	MIDWEST GUARDRAIL SYSTEM (WOOD POST)	TRANSITION RAILING (TYPE WB-31)	ALTERNATIVE IN-LINE TERMINAL SYSTEM	ALTERNATIVE FLARED TERMINAL SYSTEM	END ANCHOR ASSEMBLY (TYPE SFT)	BURIED POST END ANCHOR(N)	STRENGTHENED MIDWEST GUARDRAIL SYSTEM SECTIONS FOR FIXED OBJECT (N)	MINOR CONCRETE (MINOR STRUCTURE)	SINGLE THRIE BEAM BARRIER	DOUBLE THRIE BEAM BARRIER	ALTERNATIVE CRASH CUSHION	VEGETATION CONTROL (MINOR CONCRETE)	ROADWAY EXCAVATION (TYPE Z-2) (AERIALLY DEPOSITED LEAD)	PLACE HOT MIX ASPHALT DIKE		HMA SP-A
																				TYPE C	TYPE F	
				LF	LB	EA	LF	EA	EA	EA	EA	EA	LF	CY	LF	LF	EA	SQYD	CY	LF	LF	TON
33	26.61	NB Rte 5 AT Rte 134 OC		125.0	1,613															77.5	160	0.82
34	26.78	NB Rte 5 AT WALL	12B	87.5	1,129		37.5	1		1				1.85				75.6	1.48	77.5	120	0.66
35	27.02	NB Rte 5 AND LOS ANGELES RIVER SOUNDWALL	12B	62.5	806			1		1				1.85				55.47	1.56	77.5	30	0.30
36	27.30	NB Rte 5 AT LOS ANGELES RIVER BETWEEN TWO SOUNDWALLS	12D	550.0	7,097		525	1						1.85				295.17	1.48			
37	27.84	NB Rte 5 AND WESTERN Ave UC	15A		0		75						50	3.70			1	75.6	2.96			
38	28.41	SB Rte 5 AT ALAMEDA Ave UC	12B	87.5	1,129	1	12.5	1		1				1.85				62.18	1.48	77.5	42.5	0.35
39	28.41	SB Rte 5 AT ALAMEDA Ave UC BETWEEN COLLECTOR-DISTRIBUTIOR ROAD AND MAINLINE SB Rte 5 LEFT SIDE	15A	62.5	806		37.5						25	1.85			1	62.85	1.48			
39A	28.41	SB Rte 5 AT ALAMEDA Ave UC BETWEEN COLLECTOR-DISTRIBUTOR ROAD AND MAINLINE SB Rte 5 RIGHT SIDE	15A	62.5	806		75						25	1.85				62.85	1.48			
40	28.02	SB Rte 5 AT OVERHEAD SIGN	11C	137.5	1,774		150				1	1						105.22		70	80	0.48
41	27.82	SB Rte 5 AT WESTERN Ave	12B	100.0	1,290		25	1		1				1.85				68.89	1.48	77.5	55	0.40
42	27.82	SB Rte 5 AT WESTERN Ave UC BETWEEN COLLECTOR-DISTRIBUTOR ROAD AND MAINLINE SB Rte 5	15A	75.0	968	1	75				2		50	3.70			1	75.6	2.96			
43	27.83	SB Rte 5 AT Rte 134 UC LEFT SIDE	12DD	1,750.0	22,581		1,750				1			1.85				939.17	1.48			
43A	27.83	SB Rte 5 AT Rte 134 UC RIGHT SIDE	11A	250.0	3,226		175		1		1							126.03		90	205	1.03
44	26.81	SB Rte 5 AT Rte 5/134 Jct	15A	612.5	7.903	1	562.5				1		50	1.85			1	441.39	1.48			
45	26.67	SB Rte 5 AT Rte 134 OC	12C	200.0	2,581		125	1				1		2.00				105.22	1.48	70	55	0.38
46	26.54	SB Rte 5 AND Rte 134 MERGE AREA	15A	62.5	806	1	75				2		50				1	75.6				
SHEET TOTAL				4,225	54,516	4	3,700	6	1	4	8	2	250	26.05			5	2,626.82	20.80	617.5	747.5	4.42

(N) NOT A SEPARATE PAY ITEM, FOR INFORMATION ONLY.

SUMMARY OF QUANTITIES

Q-7

CALCULATED-DESIGNED BY	MOHAMMED ALAM	REVISED BY
CHECKED BY	ZEBUNNESA TAREQUE	DATE REVISED

FUNCTIONAL SUPERVISOR: KHAN HOSSAIN

STATE OF CALIFORNIA - DEPARTMENT OF TRANSPORTATION

Caltrans® DESIGN

LAST REVISION 11-20-13 DATE PLOTTED => 18-MAR-2014 TIME PLOTTED => 11:23

Dist	COUNTY	ROUTE	POST MILES TOTAL PROJECT	SHEET No.	TOTAL SHEETS
07	LA	5	19.2/28.9	123	217

REGISTERED CIVIL ENGINEER 1-31-14 DATE

2-10-14
PLANS APPROVAL DATE

REGISTERED PROFESSIONAL ENGINEER ZEBUNNESA AMENA TAREQUE No. 79912 Exp 9/30/14 CIVIL STATE OF CALIFORNIA

THE STATE OF CALIFORNIA OR ITS OFFICERS OR AGENTS SHALL NOT BE RESPONSIBLE FOR THE ACCURACY OR COMPLETENESS OF SCANNED COPIES OF THIS PLAN SHEET.

ROADWAY QUANTITIES

LOCATION No.	PM	DESCRIPTION	MIDWEST GUARDRAIL SYSTEM TYPE LAYOUT (N)	REMOVE GUARDRAIL	TREATED WOOD WASTE	REMOVE CRASH CUSHION	MIDWEST GUARDRAIL SYSTEM (WOOD POST)	TRANSITION RAILING (TYPE WB-31)	ALTERNATIVE IN-LINE TERMINAL SYSTEM	ALTERNATIVE FLARED TERMINAL SYSTEM	END ANCHOR ASSEMBLY (TYPE SFT)	BURIED POST END ANCHOR (N)	STRENGTHENED MIDWEST GUARDRAIL SYSTEM SECTIONS FOR FIXED OBJECT (N)	MINOR CONCRETE (MINOR STRUCTURE)	SINGLE THRIE BEAM BARRIER	DOUBLE THRIE BEAM BARRIER	ALTERNATIVE CRASH CUSHION	VEGETATION CONTROL (MINOR CONCRETE)	ROADWAY EXCAVATION (TYPE Z-2) (AERIALLY DEPOSITED LEAD)	PLACE HOT MIX ASPHALT DIKE		HMA SP-A
																				TYPE C	TYPE F	
				LF	LB	EA	LF	EA	EA	EA	EA	EA	LF	CY	LF	LF	EA	SQYD	CY	LF	LF	TON
47	26.44	SB Rte 5 AT ZOO Dr OC	16B	125.0	1,613		87.5			1	1							102.43		77.5	117.5	0.65
48	26.38	SB Rte 5 ON-RAMP FROM ZOO Dr	12B	1,800.0	23,226		1,725	1		1				1.85				981.22	1.48	77.5	1,755	7.22
49	26.00	SB Rte 5 AT COLORADO St OFF-RAMP	12DD	300.0	3.871		300				1							161.0				
50	25.86	BETWEEN OFF-RAMP AND ON-RAMP FROM/TO COLORADO St	11B	162.5	2,097		125			1	1							109.14		77.5	155	0.80
51	25.77	SB Rte 5 UNDER COLORADO St UC	12B	100.0	1,290		37.5	1		1				1.85				75.6	1.48	77.5	67.5	0.45
52	24.88	SB Rte 5 ABOUT 1000' NORTH OF LOS FALIZ Blvd OFF-RAMP	11B	650.0	8,387		950			1	1							551.89		77.5	950.0	3.99
53	24.68	SB Rte 5 UNDER NB OFF TO GRIFFITH PARK OC	11B	575.0	7,419		537.5			1	1							330.51		77.5	567.5	2.45
54	24.32	SB Rte 5 AT LOS FELIZ Blvd OC		200.0	2,581																	
55	24.20	SB Rte 5 AT NB ON-RAMP TO NB Rte 5 OC	15A	125.0	1,613	1	50				2		100				1	102.33				
56	23.96	SB Rte 5 AT GRIFFITH PARK POC	12B	87.5	1,129		50	1		1								68.89		62.5	75	0.60
57	23.72	SB Rte 5 AT HYPERION Ave OC	12B	162.5	2,097		37.5	1		1				1.85				75.6	1.48	77.5	67.5	0.45
58	23.64	SB Rte 5 AT GLENDALE Blvd OC	12B	262.5	3,387		12.5	1		1				1.85				62.18	1.48	77.5	42.5	0.35
59	23.26	SB Rte 5 AT 925' NORTH OF FLETCHER Dr OFF-RAMP GORE AREA	12B	900.0	11,613		837.5	1		1				1.85				504.93	1.48	77.5	867.5	3.66
60	23.01	SB Rte 5 AT FLETCHER Dr UC	12A	450.0	5,806		375	1	1					1.85				246.78	1.48	90	380	1.73
61	22.93	SB Rte 5 AT FLETCHER Dr BRIDGE RAILING AND GILROY St BRIDGE RAILING	12D	1,075.0	13,871		1,050	1						1.85				576.92	1.48			
62	22.75	SB Rte 5 AT SOUTH OF GILROY St BRIDGE RAILING	12D	262.5	3,387		237.5	1						1.85				140.88	1.48			
62A	22.75	SB Rte 5 AT SOUTH OF GILROY St BRIDGE RAILING	12A	237.5	3,065		162.5	1	1					1.85				132.74	1.48	90	182.5	0.94
		SHEET TOTAL		7,475	96,452	1	6,575	10	2	10	7		100	16.65			1	4,223.02	13.32	940	5,227.5	23.29

(N) NOT A SEPARATE PAY ITEM, FOR INFORMATION ONLY.

SUMMARY OF QUANTITIES

Q-8

REVISED BY | DATE REVISED

MOHAMMED ALAM | ZEBUNNESA TAREQUE

CALCULATED-DESIGNED BY | CHECKED BY

FUNCTIONAL SUPERVISOR: KHAN HOSSAIN

STATE OF CALIFORNIA - DEPARTMENT OF TRANSPORTATION

Caltrans DESIGN

LAST REVISION 11-20-13 | DATE PLOTTED => 18-MAR-2014 | TIME PLOTTED => 11:23

Dist	COUNTY	ROUTE	POST MILES TOTAL PROJECT	SHEET No.	TOTAL SHEETS
07	LA	5	19.2/28.9	124	217

Zebunnesa Ameena 1-31-14
REGISTERED CIVIL ENGINEER DATE

2-10-14
PLANS APPROVAL DATE

REGISTERED PROFESSIONAL ENGINEER ZEBUNNESA AMENA TAREQUE No. 79912 Exp 9/30/14 CIVIL STATE OF CALIFORNIA

THE STATE OF CALIFORNIA OR ITS OFFICERS OR AGENTS SHALL NOT BE RESPONSIBLE FOR THE ACCURACY OR COMPLETENESS OF SCANNED COPIES OF THIS PLAN SHEET.

ROADWAY QUANTITIES

LOCATION No.	PM	DESCRIPTION	MIDWEST GUARDRAIL SYSTEM TYPE LAYOUT (N)	REMOVE GUARDRAIL	TREATED WOOD WASTE	REMOVE CRASH CUSHION	MIDWEST GUARDRAIL SYSTEM	TRANSITION RAILING (TYPE WB-31)	ALTERNATIVE IN-LINE TERMINAL SYSTEM	ALTERNATIVE FLARED TERMINAL SYSTEM	END ANCHOR ASSEMBLY (TYPE SFT)	BURIED POST END ANCHOR (N)	STRENGTHENED MIDWEST GUARDRAIL SYSTEM SECTIONS FOR FIXED OBJECT (N)	MINOR CONCRETE (MINOR STRUCTURE)	SINGLE THRIE BEAM BARRIER	DOUBLE THRIE BEAM BARRIER	ALTERNATIVE CRASH CUSHION	VEGETATION CONTROL (MINOR CONCRETE)	ROADWAY EXCAVATION (TYPE Z-2) (AERIALLY DEPOSITED LEAD)	PLACE HOT MIX ASPHALT DIKE		HMA SP-A
																				TYPE C	TYPE F	
				LF	LB	EA	LF	EA	EA	EA	EA	EA	LF	CY	LF	LF	EA	SQYD	CY	LF	LF	TON
63	22.35	SB Rte 5 AT "CLOSED CIRCUIT TELEVISION POLE"	16B	62.5	806		50			1	1							68.89		77.5	80	0.50
64	22.26	SB Rte 5 AT "STADIUM WAY OVERHEAD SIGN" LEFT SIDE	12D	75.0	968		50	1						1.85				40.25	1.48			
64A	22.26	SB Rte 5 AT "STADIUM WAY OVERHEAD SIGN" RIGHT SIDE	12D	75.0	968		50	1						1.85				40.25	1.48			
65	21.90	SB Rte 5 AT GORE AREA OF STADIUM WAY OFF-RAMP	12A	62.5	806			1	1					1.85				45.53	1.48	90	30	0.33
66	21.55	SB Rte 5 AT "ARROYO SECO PARKWAY Rte 110 " OVERHEAD SIGN	16B		0		25			1	1							55.47		77.5	30	0.30
67	21.28	SB Rte 5 AT "CLOSED CIRCUIT TELEVISION POLE"	16B	62.5	806		37.5			1	1							62.18		77.5	67.5	0.45
68	21.20	SB Rte 5 AT OVERHEAD SIGN NEAR GORE AREA	16B	62.5	806		50			1								68.89		77.5	80	0.50
69	21.14	SB Rte 5 BETWEEN GORE OF Rte 110 AND SOUTH Rte 5		150.0	1,935	1					1			1.85	150		1	112.61	1.48			
70	20.23	SB Rte 5 AT LACY St UP		75.0	968																	
71	20.12	SB Rte 5 AT HUMBOLDT St OC		100.0	1,290												1					
72	19.84	SB Rte 5 AT PASADENA Ave OC	12B	75.0	968		25	1		1				1.85				68.89	1.48	77.5	55	0.40
73	19.70	SB Rte 5 AT BROADWAY OC	12A	75.0	968			1	1									45.53		90	30	0.33
74	19.56	SB Rte 5 AT GORE AREA OF BROADWAY OFF-RAMP "CLOSED CIRCUIT TELEVISION POLE" LEFT SIDE	15A	75.0	968	1	37.5						25				1	76.16				
75	19.56	SB Rte 5 AT GORE AREA OF BROADWAY OFF-RAMP "CLOSED CIRCUIT TELEVISION POLE" RIGHT SIDE	15A	375.0	4,839		75											36.23				
76	19.50	SB Rte 5 AT CMS	11B	125.0	1,613		87.5			1	1							89.01		77.5	117.5	0.65
76A	19.45	SB Rte 5 AT GORE AREA OF THE MERGE OF ON-RAMP	11B	125.0	1,613		87.5			1	1							89.01		77.5	117.5	0.65
77	19.510	NB OFF-RAMP TO N BROADWAY RIGHT SIDE	11A	87.5	1,129		50		1		1							58.94		90	70	0.49
78	20.025	NB ON-RAMP FROM PASADENA Ave RIGHT SIDE	15A	100.0	1,290		75						50				1	56.35				
SHEET TOTAL				1,762.5	22,742	2	587.5	5	3	7	7		75	9.25	150		4	1,014.20	7.40	812.5	677.5	4.60

(N) NOT A SEPARATE PAY ITEM, FOR INFORMATION ONLY.

SUMMARY OF QUANTITIES
Q-9

MOHAMMED ALAM — REVISED BY
ZEBUNNESA TAREQUE — CALCULATED-DESIGNED BY
CHECKED BY
FUNCTIONAL SUPERVISOR
KHAN HOSSAIN

STATE OF CALIFORNIA - DEPARTMENT OF TRANSPORTATION
Caltrans®
DESIGN

LAST REVISION 11-20-13
DATE PLOTTED => 18-MAR-2014
TIME PLOTTED => 11:23

Dist	COUNTY	ROUTE	POST MILES TOTAL PROJECT	SHEET No.	TOTAL SHEETS
07	LA	5	19.2/28.9	125	217

Zebunnesa Ameena 1-31-14
REGISTERED CIVIL ENGINEER DATE

2-10-14
PLANS APPROVAL DATE

REGISTERED PROFESSIONAL ENGINEER ZEBUNNESA AMENA TAREQUE No. 79912 Exp 9/30/14 CIVIL STATE OF CALIFORNIA

THE STATE OF CALIFORNIA OR ITS OFFICERS OR AGENTS SHALL NOT BE RESPONSIBLE FOR THE ACCURACY OR COMPLETENESS OF SCANNED COPIES OF THIS PLAN SHEET.

ROADWAY QUANTITIES

LOCATION No.	PM	DESCRIPTION	MIDWEST GUARDRAIL SYSTEM TYPE LAYOUT (N)	REMOVE GUARDRAIL	TREATED WOOD WASTE	REMOVE CRASH CUSHION	MIDWEST GUARDRAIL SYSTEM (WOOD POST)	TRANSITION RAILING (TYPE WB-31)	ALTERNATIVE IN-LINE TERMINAL SYSTEM	ALTERNATIVE FLARED TERMINAL SYSTEM	END ANCHOR ASSEMBLY (TYPE SFT)	BURIED POST END ANCHOR (N)	STRENGTHENED MIDWEST GUARDRAIL SYSTEM SECTIONS FOR FIXED OBJECT (N)	MINOR CONCRETE (MINOR STRUCTURE)	SINGLE THRIE BEAM BARRIER	DOUBLE THRIE BEAM BARRIER	ALTERNATIVE CRASH CUSHION	VEGETATION CONTROL (MINOR CONCRETE)	ROADWAY EXCAVATION (TYPE Z-2) (AERIALLY DEPOSITED LEAD)	PLACE HOT MIX ASPHALT DIKE		HMA SP-A
																				TYPE C	TYPE F	
				LF	LB	EA	LF	EA	EA	EA	EA	EA	LF	CY	LF	LF	EA	SQYD	CY	LF	LF	TON
79	20.246	NB OFF-RAMP SEGMENT TO FIGUEROA	15A	162.5	2,097		75						100				1	69.77				
80	20.92	NB ON-RAMP FROM RIVERSIDE Dr	12A	87.5	1,129		12.5	1	1					1.85				52.24	1.48	90.0	42.5	0.38
81	21.672	NB OFF-RAMP TO STADIUM WAY ON LEFT SIDE		87.5	1,129																	
82	21.962	NB ON-RAMP FROM STADIUM WAY RIGHT SIDE	12B	62.5	806			1		1				1.85				55.47	1.48	77.5	30	0.30
83	22.634	NB OFF-RAMP TO WB Rte 2 LEFT SIDE	12B	75.0	968			1		1				1.85				55.47	1.48	77.5	30	0.30
83A	22.634	NB OFF-RAMP TO WB Rte 2 RIGHT SIDE	12B	75.0	968			1		1				1.85				55.47	1.48	77.5	30	0.30
84	22.846	NB ON-RAMP FROM Rte 2 LEFT SIDE OF GILROY St UC	12B	75.0	968			1		1				1.85				55.47	1.48	77.5	30	0.30
84A	22.846	NB ON-RAMP FROM Rte 2 RIGHT SIDE OF GILROY St UC	12B	75.0	968			1		1				1.85				55.47	1.48	77.5	30	0.30
85	23.855	NB ON-RAMP FROM GLENDALE Blvd LEFT SIDE	11A	650.0	8,387		600		1		1							354.11		90.0	630	2.73
86	24.531	NB ON-RAMP FROM EB LOS FELIZ Blvd LEFT SIDE	12A	125.0	1,613		50	1	1					1.85				72.36	1.48	90.0	80	0.53
86A	24.531	NB ON-RAMP FROM EB LOS FELIZ Blvd RIGHT SIDE	12B	250.0	3,226		187.5	1		1				1.85				156.10	1.48	77.5	217.5	1.05
87	24.531	NB ON-RAMP FROM EB LOS FELIZ Blvd RIGHT SIDE "END OF THE RAMP"	12D	100.0	1,290		100				1			1.85				53.67	1.48			
87A	24.531	NB ON-RAMP FROM EB LOS FELIZ Blvd LEFT SIDE "END OF THE RAMP"	12D	187.5	2,419		200				1			1.85				107.33	1.48			
88	24.532	NB ON-RAMP FROM WB LOS FELIZ Blvd LEFT SIDE	11A	150.0	1,935		100		1		1							85.78		90.0	130	0.73
89	24.709	NB ON-RAMP FROM EB/WB LOS FELIZ Blvd RIGHT SIDE	11B	300.0	3,871		262.5			1	1							182.93		77.5	292.5	1.35
90	24.709	NB ON-RAMP FROM EB/WB LOS FELIZ Blvd LEFT SIDE	11B	400.0	5,161		362.5			1	1							236.60		77.5	392.5	1.75
91	25.78	NB OFF-RAMP EB COLORADO St LEFT SIDE	12B	125.0	1,631		50	1		1				1.85				82.31	1.48	77.5	80	0.50
SHEET TOTAL				2,987.5	38,548		2,000	9	4	9	6		100	20.35			1	1,730.54	16.28	1,057.5	2,015	10.52

(N) NOT A SEPARATE PAY ITEM, FOR INFORMATION ONLY.

SUMMARY OF QUANTITIES

Q-10

CALCULATED-DESIGNED BY	MOHMMAD ALAM	REVISED BY
CHECKED BY	ZEBUNNESA TAREQUE	DATE REVISED

FUNCTIONAL SUPERVISOR: KHAN HOSSAIN

STATE OF CALIFORNIA - DEPARTMENT OF TRANSPORTATION

Caltrans® DESIGN

LAST REVISION 11-20-13 | DATE PLOTTED => 18-MAR-2014 | TIME PLOTTED => 11:23

Dist	COUNTY	ROUTE	POST MILES TOTAL PROJECT	SHEET No.	TOTAL SHEETS
07	LA	5	19.2/28.9	126	217

REGISTERED CIVIL ENGINEER 1-31-14 DATE

2-10-14
PLANS APPROVAL DATE

REGISTERED PROFESSIONAL ENGINEER ZEBUNNESA AMENA TAREQUE No. 79912 Exp 9/30/14 CIVIL STATE OF CALIFORNIA

THE STATE OF CALIFORNIA OR ITS OFFICERS OR AGENTS SHALL NOT BE RESPONSIBLE FOR THE ACCURACY OR COMPLETENESS OF SCANNED COPIES OF THIS PLAN SHEET.

ROADWAY QUANTITIES

LOCATION No.	PM	DESCRIPTION	MIDWEST GUARDRAIL SYSTEM TYPE LAYOUT (N)	REMOVE GUARDRAIL	TREATED WOOD WASTE	REMOVE CRASH CUSHION	MIDWEST GUARDRAIL SYSTEM (WOOD POST)	MIDWEST GUARDRAIL SYSTEM (WOOD POST) TRANSITION RAILING (TYPE WB-31)	ALTERNATIVE IN-LINE TERMINAL SYSTEM	ALTERNATIVE FLARED TERMINAL SYSTEM	END ANCHOR ASSEMBLY (TYPE SFT)	BURIED POST END ANCHOR (N)	STRENGTHENED MIDWEST GUARDRAIL SYSTEM SECTIONS FOR FIXED OBJECT (N)	MINOR CONCRETE (MINOR STRUCTURE)	SINGLE THRIE BEAM BARRIER	DOUBLE THRIE BEAM BARRIER	ALTERNATIVE CRASH CUSHION	VEGETATION CONTROL (MINOR CONCRETE)	ROADWAY EXCAVATION (TYPE Z-2) (AERIALLY DEPOSITED LEAD)	PLACE HOT MIX ASPHALT DIKE		HMA SP-A
																				TYPE C	TYPE F	
				LF	LB	EA	LF	EA	EA	EA	EA	EA	LF	CY	LF	LF	EA	SQYD	CY	LF	LF	TON
91A	25.66	NB OFF-RAMP TO EB COLORADO EXTENSION (RIGHT SIDE)	12DD	112.5	1,452		112.5					1		1.85				60.38	1.48			
92	25.90	NB ON-RAMP FROM WB COLORADO EXTENSION	15A	212.5	2,742	1	225						50	1.85			1	152.95	1.48			
93	27.66	NB OFF-RAMP TO WESTERN Ave	16B	62.5	806		12.5		1		1							48.76				
94	27.60	SB ON-RAMP FROM WESTERN Ave	12A	112.5	1,452		37.5	1	1					1.85				65.65	1.48			
95	25.97	SB OFF-RAMP TO EB COLORADO EXTENSION (RIGHT SIDE)	12A	900	11,613		825	1	1					1.85				488.28	1.48	90	855	4.25
96	25.85	SB ON-RAMP FROM WB COLORADO EXTENSION (LEFT SIDE)	11B	400	5,161		362.5			1	1							236.60		90	380	1.73
97	24.71	SB OFF-RAMP TO LOS FELIZ Blvd (RIGHT SIDE)	12A	125	1,613		75	1	1					1.85				85.78	1.48	75	125	1.73
98	24.71	SB OFF-RAMP TO LOS FELIZ Blvd (LEFT SIDE)	12B	100	1,290		50	1		1				1.85				82.31	1.48	75	62.5	1.70
99	24.48	SB ON-RAMP FROM GRIFFITH PARK (RIGHT SIDE)	12A	62.5	806			1	1					1.85				45.53	1.48	90	30	1.73
100	24.48	SB ON RAMP FROM GRIFFITH PARK (LEFT SIDE)			0	1											1					
101	24.17	SB ON-RAMP FROM WB LOS FELIZ	15A	275	3,548	1	325						180				1	179.78				
102	24.32	SB ON-RAMP FROM LOS FELIZ/GRIFFITH PARK Dr (LEFT SIDE)		150	1,935																	
102A	24.32	SB ON-RAMP FROM LOS FELIZ/GRIFFITH PARK Dr (RIGHT SIDE)	12B	50	645			1		1				2.01				55.47	1.48	77.5	30	1.70
103	23.84	SB OFF-RAMP TO GLENDALE Blvd 'OVERHEAD SIGN'	16A		0		25		1		1							45.53				
104	23.84	SB OFF-RAMP TO GLENDALE Blvd (LEFT SIDE)	11A	162.5	2,097		112.5		1		1							92.49		90	30	1.73
105	23.59	SB ON-RAMP FROM GLENDALE Blvd (LEFT SIDE)	11A	750	9,677		700		1		1							407.78		90	30	1.73
105A	23.59	SB ON-RAMP FROM GLENDALE Blvd (RIGHT SIDE)	12A	75	968			1	1					1.85				45.53	1.48	90	30	1.73
106	22.30	SB OFF-RAMP TO STADIUM WAY (BRIDGE APPROACH, Br No. 53 0162K)	12D	75	968			1	1					1.85				45.53	1.48	90	30	1.73
106A	22.30	SB OFF-RAMP TO STADIUM WAY (BRIDGE APPROACH, Br No. 53 0162K)	12A	62.5	806			1	1					1.85				45.53	1.48	90	30	1.73
		SHEET TOTAL		3,687.50	47,581	3	2866.5	9	11	3	5	1	230	20.51			3	2,151.75	16.28	947.5	1,632.50	21.49

(N) NOT A SEPARATE PAY ITEM, FOR INFORMATION ONLY.

SUMMARY OF QUANTITIES

Q-11

STATE OF CALIFORNIA - DEPARTMENT OF TRANSPORTATION
Caltrans DESIGN

FUNCTIONAL SUPERVISOR: KHAN HOSSAIN
CALCULATED-DESIGNED BY: MOHAMMED ALAM
CHECKED BY: ZEBUNNESA TAREQUE
REVISED BY
DATE REVISED

LAST REVISION 11-20-13
DATE PLOTTED => 18-MAR-2014
TIME PLOTTED => 11:23

Dist	COUNTY	ROUTE	POST MILES TOTAL PROJECT	SHEET No.	TOTAL SHEETS
07	LA	5	19.2/28.9	127	217

Zebunnesa Amena 1-31-14
REGISTERED CIVIL ENGINEER DATE

2-10-14
PLANS APPROVAL DATE

REGISTERED PROFESSIONAL ENGINEER ZEBUNNESA AMENA TAREQUE No. 79912 Exp 9/30/14 CIVIL STATE OF CALIFORNIA

THE STATE OF CALIFORNIA OR ITS OFFICERS OR AGENTS SHALL NOT BE RESPONSIBLE FOR THE ACCURACY OR COMPLETENESS OF SCANNED COPIES OF THIS PLAN SHEET.

ROADWAY QUANTITIES

LOCATION No.	PM	DESCRIPTION	MIDWEST GUARDRAIL SYSTEM TYPE LAYOUT (N)	REMOVE GUARDRAIL	TREATED WOOD WASTE	REMOVE CRASH CUSHION	MIDWEST GUARDRAIL SYSTEM (WOOD POST)	TRANSITION RAILING (TYPE WB-31)	ALTERNATIVE IN-LINE TERMINAL SYSTEM	ALTERNATIVE FLARED TERMINAL SYSTEM	END ANCHOR ASSEMBLY (TYPE SFT)	BURIED POST END ANCHOR (N)	STRENGTHENED MIDWEST GUARDRAIL SYSTEM SECTIONS FOR FIXED OBJECT (N)	MINOR CONCRETE (MINOR STRUCTURE)	SINGLE THRIE BEAM BARRIER	DOUBLE THRIE BEAM BARRIER	ALTERNATIVE CRASH CUSHION	VEGETATION CONTROL (MINOR CONCRETE)	ROADWAY EXCAVATION (TYPE Z-2) (AERIALLY DEPOSITED LEAD)	PLACE HOT MIX ASPHALT DIKE		HMA SP-A
																				TYPE C	TYPE F	
				LF	LB	EA	LF	EA	EA	EA	EA	EA	LF	CY	LF	LF	EA	SQYD	CY	LF	LF	TON
107	22.30	SB Rte 5 OFF-RAMP TO STADIUM WAY (BRIDGE APPROACH, Br No.53-0162H)	12A	75	968			1	1					1.85				45.53	1.48	90	30.0	1.73
107A	22.30	SB Rte 5 OFF-RAMP TO STADIUM WAY (BRIDGE APPROACH,Br No.53-0162H)	12A	62.5	806			1	1					1.85				45.53	1.48			
108	21.93	SEG SB Rte 5 ON FROM Rte 2	12D	1,375	17,742		1,355.0	1						1.85				737.92	1.48			
109	21.97	SB Rte 5 OFF- RAMP TO STADIUM WAY	11A	125	1,613		75.0		1		1							72.36		90	105.0	1.73
110	21.71	SB Rte 5 ON-RAMP FROM STADIUM WAY	11A	162.5	2,097		112.5		1		1							92.49		90	142.5	1.73
111	21.06	SEG SB Rte 5 OFF TO ELMGROVE/RIVERSIDE DRIVE (LEFT SIDE)	11B	75	968		12.5			1	1							48.76		77.5	42.5	1.70
111A	21.06	SEG SB Rte 5 OFF TO ELMGROVE/RIVERSIDE DRIVE (RIGHT SIDE)	12A	112.5	1,452	1	50.0	1						1.85				72.36	1.48	90	30.0	1.73
112	20.79	SB Rte 5 ON-RAMP FROM DUVALL St	12DD	125	1,613		125.0				1							67.08				
113	20.79	SB Rte 5 ON-RAMP FROM DUVALL St	12D	700	9,032		675.0	1						1.85				375.67	1.48			
114	20.06	SB Rte 5 OFF-RAMP TO BROADWAY (LEFT SIDE)	12D	225	2,903		200.0	1						1.85				120.75	1.48			
114A	20.06	SB Rte 5 OFF-RAMP TO BROADWAY (RIGHT SIDE)	12B	75	968		12.5	1		1				1.85				62.18	1.48	77.5	42.5	1.70
115	19.71	SB OFF BROADWAY LEFT SIDE	11A	550	7,097		500.0		1		1							300.44		90	780.0	1.73
116	19.86	SEG NB Rte 5 OFF TO 110/FIGUEROA	12B	75	968		12.5	1		1				1.85				62.18	1.48	77.5	42.5	1.70
117	20.32	W Ave 26 UC (LEFT SIDE) IN BETWEEN NB Rte 5 TO NB Rte 110 Conn	12B	75	968		12.5	1		1				1.85				62.18	1.48	77.5	42.5	1.70
117A	20.32	W Ave 26 UC (RIGHT SIDE) BETWEEN NB Rte 5 TO NB Rte 110 Conn	12B	75	968		12.5	1		1				1.85				62.18	1.48	77.5	42.5	1.70
118	20.32	W Ave 26 UC (STRUCTURE DEPARTURE) BETWEEN NB Rte 5 TO NB Rte 110 Conn	12DD	300	3,871		300.0				1							161.00				
119	20.33	ARROYO SECO CHANNEL (LEFE SIDE) BETWEEN NB Rte 5 TO NB Rte 110 Conn	12A	87.5	1,129			1	1					1.85				45.53	1.48	90	30.0	1.73
SHEET TOTAL				4,275	55,161	1	3,455	11	6	5	6			20.35				2,434.14	16.28	927.50	1,330	18.88

(N) NOT A SEPARATE PAY ITEM, FOR INFORMATION ONLY.

SUMMARY OF QUANTITIES

Q-12

REVISED BY	DATE REVISED

CALCULATED-DESIGNED BY	MOHAMMAD ALAM
CHECKED BY	ZEBUNNESA TAREQUE

FUNCTIONAL SUPERVISOR: KHAN HOSSAIN

STATE OF CALIFORNIA - DEPARTMENT OF TRANSPORTATION
Caltrans DESIGN

LAST REVISION 11-20-13 | DATE PLOTTED => 18-MAR-2014 | TIME PLOTTED => 11:23

Dist	COUNTY	ROUTE	POST MILES TOTAL PROJECT	SHEET No.	TOTAL SHEETS
07	LA	5	19.2/28.9	128	217

REGISTERED CIVIL ENGINEER 1-31-14 DATE

2-10-14
PLANS APPROVAL DATE

REGISTERED PROFESSIONAL ENGINEER ZEBUNNESA AMENA TAREQUE No. 79912 Exp 9/30/14 CIVIL STATE OF CALIFORNIA

THE STATE OF CALIFORNIA OR ITS OFFICERS OR AGENTS SHALL NOT BE RESPONSIBLE FOR THE ACCURACY OR COMPLETENESS OF SCANNED COPIES OF THIS PLAN SHEET.

ROADWAY QUANTITIES

LOCATION No.	PM		DESCRIPTION	MIDWEST GUARDRAIL SYSTEM TYPE LAYOUT (N)	REMOVE GUARDRAIL	TREATED WOOD WASTE	REMOVE CRASH CUSHION	MIDWEST GUARDRAIL SYSTEM (WOOD POST)	TRANSITION RAILING (TYPE WB-31)	ALTERNATIVE IN-LINE TERMINAL SYSTEM	ALTERNATIVE FLARED TERMINAL SYSTEM	END ANCHOR ASSEMBLY (TYPE SFT)	BURIED POST END ANCHOR (N)	STRENGTHENED MIDWEST GUARDRAIL SYSTEM SECTIONS FOR FIXED OBJECT (N)	MINOR CONCRETE (MINOR STRUCTURE)	SINGLE THRIE BEAM BARRIER	DOUBLE THRIE BEAM BARRIER	ALTERNATIVE CRASH CUSHION	VEGETATION CONTROL (MINOR CONCRETE)	ROADWAY EXCAVATION (TYPE Z-2) (AERIALLY DEPOSITED LEAD)	PLACE HOT MIX ASPHALT DIKE		HMA SP-A
																					TYPE C	TYPE F	
					LF	LB	EA		EA	EA	EA	EA	EA	LF	CY	LF	LF	EA	SQYD	CY	LF	LF	TON
120A	20.33		ARRYO SECO CHANNEL(RIGHT SIDE) IN BETWEEN NB Rte 5 TO NB Rte 110 Conn	12A	87.5	1,129			1	1					1.85				45.53	1.48	90.0	30.0	1.73
120	26.3 Rte 110		Rte 5 ON-RAMP FROM SB Rte 110 "OVERHEAD SIGN"	12DD	125	1,613		125				1							67.08				
121	26.12 Rte 110		SB 110 CONNECTOR TO Rte 5	12D	450	5,806		425	1						1.85				241.50	1.48			
121A	26.12 Rte 110		SB 110 CONNECTOR TO Rte 5	12B	362.5	4,677		297.5	1		1				1.85				216.47	1.48	77.5	530.0	1.70
122	25.91 Rte 110		SB 110 CONNECTOR TO Rte 5 AT W Ave 26 UC	12D	425	5,484		405	1						1.85				228.08	1.48			
122A	25.91 Rte 110		SB 110 CONNECTOR TO Rte 5 AT W Ave 26 UC	12D	425	5,484		405	1						1.85				228.08	1.48			
123	20.357		SB 110 CONNECTOR TO SB Rte 5	12DD	425	2,419		420				1							228.08				
124	20.358		W Ave 26 ON TO SB Rte 5	16B	187.5	0		152.5			1	1							122.56		77.5	217.5	1.70
125	21.064		SB Rte 5 TO SB Rte 110		650	8,387				1					1.85		650	1	380.94	1.48			
126	25.51 Rte 110		NB Rte 110 TO NB Rte 5 OVERHEAD SIGN	12DD	75	968		87.5				1							46.96				
127	20.70		NB Rte 110 TO NB Rte 5 CONNECTOR		675	8,710																	
128	20.72		NB Rte 110 TO NB Rte 5 CONNECTOR LEFT SIDE	12B	350	4,516		287.5	1		1				1.85				204.76	1.48	77.5	317.5	1.70
129	20.82		NB Rte 110 Conn TO OFF RAMP TO RIVERSIDE	11J	100	1,290		12.5		2									80.88	1.48	77.5	80.0	1.70
130	20.940		NB Rte 110 Conn & ON RAMP TO NB Rte 5	12D	75	968		50	1						1.85				40.25	1.48			
130A	20.940		NB Rte 110 Conn & ON RAMP TO NB Rte 5	12A	75	968		12.5	1	1					1.85				52.24	1.48			
131	20.94		NB Rte 110 Conn AND ON RAMP TO NB Rte 5 AT DUVALL St	12D	175	2,194		145	1						1.85				93.92	1.48			
132	22.26		ON-RAMP FROM NEWELL TO NB Rte 2	11A	600	7,742		450		1		1							273.61		90.0	480.0	1.73
SHEET TOTAL					5,262.50	67,839		3,275.0	9	6	3	5			18.50		650	1	2,555.94	16.28	490.0	1,655.0	10.26

(N) NOT A SEPARATE PAY ITEM, FOR INFORMATION ONLY

SUMMARY OF QUANTITIES

Q-13

MOHAMMAD ALAM — ZEBUNNESA TAREQUE — REVISED BY — DATE REVISED

CALCULATED-DESIGNED BY — CHECKED BY

FUNCTIONAL SUPERVISOR: KHAN HOSSAIN

STATE OF CALIFORNIA - DEPARTMENT OF TRANSPORTATION

Caltrans® DESIGN

LAST REVISION 11-20-13 — DATE PLOTTED => 18-MAR-2014 TIME PLOTTED => 11:23

Dist	COUNTY	ROUTE	POST MILES TOTAL PROJECT	SHEET No.	TOTAL SHEETS
07	LA	5	19.2/28.9	129	217

REGISTERED CIVIL ENGINEER 1-31-14 DATE

2-10-14
PLANS APPROVAL DATE

REGISTERED PROFESSIONAL ENGINEER ZEBUNNESA AMENA TAREQUE No. 79912 Exp 9/30/14 CIVIL STATE OF CALIFORNIA

THE STATE OF CALIFORNIA OR ITS OFFICERS OR AGENTS SHALL NOT BE RESPONSIBLE FOR THE ACCURACY OR COMPLETENESS OF SCANNED COPIES OF THIS PLAN SHEET.

ROADWAY QUANTITIES

LOCATION No.	PM	DESCRIPTION	MIDWEST GUARDRAIL SYSTEM TYPE LAYOUT (N)	REMOVE GUARDRAIL	TREATED WOOD WASTE	REMOVE CRASH CUSHION	MIDWEST GUARDRAIL SYSTEM (WOOD POST)	TRANSITION RAILING (TYPE WB-31)	ALTERNATIVE IN-LINE TERMINAL SYSTEM	ALTERNATIVE FLARED TERMINAL SYSTEM	END ANCHOR ASSEMBLY (TYPE SFT)	BURIED POST END ANCHOR (N)	STRENGTHENED MIDWEST GUARDRAIL SYSTEM SECTIONS FOR FIXED OBJECT (N)	MINOR CONCRETE (MINOR STRUCTURE)	SINGLE THRIE BEAM BARRIER	DOUBLE THRIE BEAM BARRIER	ALTERNATIVE CRASH CUSHION	VEGETATION CONTROL (MINOR CONCRETE)	ROADWAY EXCAVATION (TYPE Z-2) (AERIALLY DEPOSITED LEAD)	PLACE HOT MIX ASPHALT DIKE		HMA SP-A
																				TYPE C	TYPE F	
				LF	LB	EA	LF	EA	EA	EA	EA	EA	LF	CY	LF	LF	EA	SQYD	CY	LF	LF	TON
133	15.32 LA 2	NB Rte 5 TO NB Rte 2 CONNECTOR AT RIPPLE St UC	12B	62.5	806			1		1				1.85				55.47	1.48	77.5	30.0	1.70
134	22.63	NB Rte 5 TO SB Rte 2 CONNECTOR AT STRUCTURE APPROACH (RIGHT SIDE)	12B	75	968			1		1				1.85				55.47	1.48	77.5	42.5	1.70
134A	22.63	NB Rte 5 TO SB Rte 2 CONNECTOR AT STRUCTURE APPROACH (LEFT SIDE)	12B	75	968		12.5	1	1					1.85				62.18	1.48	77.5	42.5	1.70
135	22.63	NB Rte 5 TO SB Rte 2 CONNECTOR AT STRUCTURE DEPARTURE (RIGHT SIDE)	12D	237.5	3,065		215.0	1						1.85				134.17	1.48			
135A	22.63	NB Rte 5 TO SB Rte 2 CONNECTOR AT STRUCTURE APPROACH (LEFT SIDE)	12B	87.5	1,129		12.5	1	1					1.85				62.18	1.48	90.0	42.5	1.73
136	25.58	LA 5 NB OFF RAMP AT COLORADO BLVD				1											1					
137	22.29	LA 5 SB AT STADIUM WAY SLIP				1											1					
138	22.75	LA 5 SB TO LA 2 SB/NB CONNECTOR NEAR GILROY				1											1					
139	27.0	SB Rte 134 EB Conn/SB Rte 5		100	832																	
		SHEET TOTAL		637.50	5,325	3	240	5	2	2				9.25			3	369.47	7.40	322.5	157.5	6.83

(N) NOT A SEPARATE ITEM, FOR INFORMATION ONLY.

CALCULATED-DESIGNED BY MOHAMMAD ALAM
CHECKED BY ZEBUNNESA TAREQUE
REVISED BY
DATE REVISED
FUNCTIONAL SUPERVISOR KHAN HOSSAIN

STATE OF CALIFORNIA - DEPARTMENT OF TRANSPORTATION
Caltrans DESIGN

LAST REVISION 11-20-13
DATE PLOTTED => 18-MAR-2014
TIME PLOTTED => 11:24

SUMMARY OF QUANTITIES
Q-14

Dist	COUNTY	ROUTE	POST MILES TOTAL PROJECT	SHEET No.	TOTAL SHEETS
07	LA	5	19.2/28.9	130	217

Zebunnesa Ameena 1-31-14
REGISTERED CIVIL ENGINEER DATE

2-10-14
PLANS APPROVAL DATE

REGISTERED PROFESSIONAL ENGINEER ZEBUNNESA AMENA TAREQUE No. 79912 Exp 9/30/14 CIVIL STATE OF CALIFORNIA

THE STATE OF CALIFORNIA OR ITS OFFICERS OR AGENTS SHALL NOT BE RESPONSIBLE FOR THE ACCURACY OR COMPLETENESS OF SCANNED COPIES OF THIS PLAN SHEET.

CONCRETE BARRIER QUANTITIES

LOCATION No.	PM	DESCRIPTION	REMOVE CRASH CUSHION	ALTERNATIVE CRASH CUSHION	CONCRETE BARRIER (TYPE 60GE)	CONCRETE BARRIER (TYPE 60D)	CONCRETE BARRIER (TYPE 60)	CONCRETE BARRIER (TYPE 60R)	CONCRETE BARRIER (TYPE 60R Mod)	CONCRETE BARRIER (TYPE 60F)	MINOR CONCRETE (MINOR STRUCTURE)	CHAIN LINK RAILING (TYPE 7 MODIFIED)	CABLE RAILING	ROADWAY EXCAVATION (TYPE Z-2) (AERIALLY DEPOSITED LEAD)	SALVAGE CONCRETE BARRIER (TYPE K)	CRASH CUSHION (TYPE SCI-70GM)
			EA	EA	LF	LF	LF	LF	LF	LF	CY	LF	LF	CY	LF	EA
3	19.75	NB Rte 5 UNDER BROADWAY BRIDGE OC				290					1.80			1.48		
4	19.85	NB Rte 5 BETWEEN PASADENA Ave AND OVERHEAD SIGN			86	62	147				1.85			1.48		
5	19.91	NB Rte 5 AND NB Rte 110 AT PASADENA Ave OC (LEFT SIDE)	1	1			123	162.5			1.85			1.48		
5A	19.91	NB Rte 5 AND NB Rte 110 AT PASADENA Ave OC (RIGHT SIDE)					113				1.85			1.48		
6	20.12	NB Rte 5 AT HUMBOLDT St OC	1	1			635			150						
7	20.26	NB Rte 5 AT LACY St UPRR	1				10			56						
18	23.74	NB Rte 5 AT BETWEEN GLENDALE Blvd AND HYPERION Ave					40		64		1.85			1.48		
22	24.34	NB Rte 5 AT LOS FELIZ Blvd OC					12		184		3.20			2.67		
25	24.77	NB FROM ON RAMP LOS FELIZ Blvd		1			350				1.85	350		1.48		
31	26.47	NB Rte 5 AT ZOO Dr OC		1			20			138						
33	26.61	NB Rte 5 AT Rte 134 OC		1		120	20		88							
54/102	24.32	SB Rte 5 AT LOS FELIZ Blvd OC	1	1			30	190								
56	23.96	SB Rte 5 AT GRIFFITH PARK POC							13		1.68			1.19		
57	23.72	SB Rte 5 AT HYPERION Ave OC				80					1.85			1.48		
58	23.64	SB Rte 5 AT GLENDALE Blvd OC					40.5		194		1.85			1.48		
70	20.23	SB Rte 5 AT LACY St UP					20		80		5.00			3.26		
71	20.12	SB Rte 5 AT HUMBOLDT St OC	1	1			20			150.5						
81	21.67	NB OFF-RAMP TO STADIUM WAY ON LEFT SIDE					128								80	1
97	24.71	SB OFF-RAMP TO LOS FELIZ Blvd RIGHT SIDE					20		128		1.85			1.48		
98	24.71	SB OFF-RAMP TO LOS FELIZ Blvd LEFT SIDE					10		50		1.85			1.48		
127	20.7	NB 110 TO NB Rte 5 CONNECTOR	1	1			525.5		200		5.24			3.70	140	
		SHEET TOTAL	6	8	86	552	2264	352.5	1001	494.5	33.57	350		25.62	220	1

SUMMARY OF QUANTITIES

Q-15

STATE OF CALIFORNIA - DEPARTMENT OF TRANSPORTATION
Caltrans® DESIGN

FUNCTIONAL SUPERVISOR: KHAN HOSSAIN
CALCULATED-DESIGNED BY: MOHAMMED ALAM
CHECKED BY: ZEBUNNESA TAREQUE
REVISED BY
DATE REVISED

LAST REVISION 11-20-13
DATE PLOTTED => 18-MAR-2014
TIME PLOTTED => 11:24

Dist	COUNTY	ROUTE	POST MILES TOTAL PROJECT	SHEET No.	TOTAL SHEETS
07	LA	5	19.2/28.9	131	217

REGISTERED CIVIL ENGINEER 1-31-14 DATE

2-10-14
PLANS APPROVAL DATE

REGISTERED PROFESSIONAL ENGINEER ZEBUNNESA AMENA TAREQUE No. 79912 Exp 9/30/14 CIVIL STATE OF CALIFORNIA

THE STATE OF CALIFORNIA OR ITS OFFICERS OR AGENTS SHALL NOT BE RESPONSIBLE FOR THE ACCURACY OR COMPLETENESS OF SCANNED COPIES OF THIS PLAN SHEET.

CONCRETE BARRIER QUANTITIES

LOCATION No.	PM	DESCRIPTION	REMOVE CRASH CUSHION	ALTERNATIVE CRASH CUSHION	CONCRETE BARRIER (TYPE 60GE)	CONCRETE BARRIER (TYPE 60D)	CONCRETE BARRIER (TYPE 60)	CONCRETE BARRIER (TYPE 60R)	CONCRETE BARRIER (TYPE 60R Mod)	CONCRETE BARRIER (TYPE 60F)	MINOR CONCRETE (MINOR STRUCTURE)	CHAIN LINK RAILING (TYPE 7 MODIFIED)	CABLE RAILING	ROADWAY EXCAVATION (TYPE Z-2) (AERIALLY DEPOSITED LEAD)	SALVAGE CONCRETE BARRIER (TYPE K)	CRASH CUSHION (TYPE SCI-70GM)
			EA	EA	LF	LF	LF	LF	LF	LF	CY	LF	LF	CY	LF	EA
139	27.02	SB Rte 134 EB Conn/SB Rte 5		1			150				1.85		150			
140	21.03	SB Rte 5 Ret WALL NEAR ELMGROVE St											350			
141	22.80	SB Rte 5 AT GILROY AND RIVERSIDE Dr											190			
142	23.57	SB Rte 5 AT SOUTH OF GLENDALE Blvd											300			
		SHEET TOTAL		1			150				1.85		990			
		SHEET TOTAL, Q-15	6	8	86	552	2464	352.5	1001	494.5	33.57	350		25.62	220	1
		GRAND TOTAL	6	9	86	552	2614	352.5	1001	494.5	35.42	350	990	25.62	220	1

SUMMARY OF QUANTITIES

Q-16

STATE OF CALIFORNIA - DEPARTMENT OF TRANSPORTATION
Caltrans DESIGN

FUNCTIONAL SUPERVISOR: KHAN HOSSAIN
CALCULATED-DESIGNED BY: MOHAMMED ALAM
CHECKED BY: ZEBUNNESA TAREQUE
REVISED BY
DATE REVISED

LAST REVISION 11-20-13
DATE PLOTTED => 18-MAR-2014
TIME PLOTTED => 11:24

Dist	COUNTY	ROUTE	POST MILES TOTAL PROJECT	SHEET No.	TOTAL SHEETS
07	LA	5	19.2/28.9	132	217

Zebunnesa Amena 1-31-14
REGISTERED CIVIL ENGINEER DATE

2-10-14
PLANS APPROVAL DATE

REGISTERED PROFESSIONAL ENGINEER ZEBUNNESA AMENA TAREQUE No. 79912 Exp 9/30/14 CIVIL STATE OF CALIFORNIA

THE STATE OF CALIFORNIA OR ITS OFFICERS OR AGENTS SHALL NOT BE RESPONSIBLE FOR THE ACCURACY OR COMPLETENESS OF SCANNED COPIES OF THIS PLAN SHEET.

	REMOVE GUARDRAIL	TREATED WOOD WASTE	REMOVE CRASH CUSHION	MIDWEST GUARDRAIL SYSTEM (WOOD POST)	TRANSITION RAILING (TYPE WB-31)	ALTERNATIVE IN-LINE TERMINAL SYSTEM	ALTERNATIVE FLARED TERMINAL SYSTEM	END ANCHOR ASSEMBLY (TYPE SFT)	BURIED POST END ANCHOR (N)	STRENGTHENED MIDWEST GUARDRAIL SYSTEM SECTION FOR FIXED OBJECT (N)	MINOR CONCRETE (MINOR STRUCTURE)	SINGLE THRIE BEAM BARRIER	DOUBLE THRIE BEAM BARRIER	ALTERNATIVE CRASH CUSHION	PLACE HOT MIX ASPHALT DIKE			HMA SP-A	VEGETATION CONTROL (MINOR CONCRETE)	CONCRETE BARRIER (TYPE 60GE)	CONCRETE BARRIER (TYPE 60D)	CONCRETE BARRIER (TYPE 60)	CONCRETE BARRIER (TYPE 60R)	CONCRETE BARRIER (TYPE 60R Mod)	CONCRETE BARRIER (TYPE 60F)	CHAIN LINK RAILING (TYPE 7 MODIFIED)	CABLE RAILING	ROADWAY EXCAVATION (TYPE Z-2) (AERIALLY DEPOSITED LEAD)	SALVAGE CONCRETE BARRIER (TYPE K)	CRASH CUSHION (TYPE SCI-70GM)
															TYPE E	TYPE C	TYPE F													
	LF	LB	EA	LF	EA	EA	EA	EA	EA	LF	CY	LF	LF	EA	LF	LF	LF	TON	SQYD	LF	LF	LF	LF	LF	LF	LF	LF	CY	LF	EA
SHEET TOTAL, Q-2																		287.8										166.72		
SHEET TOTAL, Q-4															9,825	8,828		12.60												
SHEET TOTAL, Q-5	6,137.50	79,194	2	4,420	10	4	4	4	2		18.66					745	2,575	11.93	2,861.74									14.96		
SHEET TOTAL, Q-6	2,175	28,065		1,437.5	8	5	10	7	1		16.81					1,060	1,782.5	9.59	1,484.63									11.84		
SHEET TOTAL, Q-7	4,225	54,516	4	3,700	6	1	4	8	2	250	26.05			5		617.5	747.5	4.42	2,626.82									20.80		
SHEET TOTAL, Q-8	7,475	96,452	1	6,575	10	2	10	7		100	16.65			1		940	5227.5	23.29	4,223.02									13.32		
SHEET TOTAL, Q-9	1,762.50	22,742	2	587.5	5	3	7	7		75	9.25	150		4		812.50	677.5	4.60	1,014.20									7.40		
SHEET TOTAL, Q-10	2,987.50	38,548		2,000	9	4	9	6		100	20.35			1		1,057.5	2,015	10.52	1,730.54									16.28		
SHEET TOTAL, Q-11	3,687.50	47,581	3	2866.5	9	11	3	5	1	230	20.51			3		947.5	1,632.5	21.49	2,151.75									16.28		
SHEET TOTAL, Q-12	4,275	55,161	1	3,455	11	6	5	6			20.35					927.5	1,330	18.88	2,434.14									16.28		
SHEET TOTAL, Q-13	5,262.50	67,839		3,275	9	6	3	5			18.50		650	1		490	1,655	10.26	2,555.94									16.28		
SHEET TOTAL, Q-14	637.50	6,935	3	240	5	2	2				9.25			3		322.5	157.5	6.83	369.47									7.40		
SHEET TOTAL, Q-16			6								35.42			9						86	552	2464	352.5	1001	494.5	350	990	25.62	220	1
GRAND TOTAL	38,625	497,032	22	28,669	82	44	57	55	6	755	211.80	150	650	27	9,825	16,748	17,800	422.11	21,452.24	86	552	2464	352.5	1001	494.5	350	990	332.18	220	1

*FOR ADDITIONAL QUANTITIES, SEE SHEET SQ-1
(N) NOT A SEPARATE ITEM, FOR INFORMATION ONLY

SUMMARY OF QUANTITIES
Q-17

STATE OF CALIFORNIA - DEPARTMENT OF TRANSPORTATION
Caltrans® DESIGN

FUNCTIONAL SUPERVISOR: KHAN HOSSAIN
CALCULATED-DESIGNED BY: MOHAMMAD ALAM
CHECKED BY: ZEBUNNESA TAREQUE
REVISED BY
DATE REVISED

LAST REVISION 11-20-13
DATE PLOTTED => 18-MAR-2014
TIME PLOTTED => 11:24

Dist	COUNTY	ROUTE	POST MILES TOTAL PROJECT	SHEET No.	TOTAL SHEETS
07	LA	5	19.2/28.9	133	217

REGISTERED CIVIL ENGINEER 1-31-14 DATE

2-10-14
PLANS APPROVAL DATE

REGISTERED PROFESSIONAL ENGINEER LOHIT R. KOTHA No. C75977 Exp. 6/30/14 CIVIL STATE OF CALIFORNIA

THE STATE OF CALIFORNIA OR ITS OFFICERS OR AGENTS SHALL NOT BE RESPONSIBLE FOR THE ACCURACY OR COMPLETENESS OF SCANNED COPIES OF THIS PLAN SHEET.

CURB RAMP QUANTITIES

TABLE 1

LOCATION No.	POST MILE	DESCRIPTION	CORNER	CURB RAMP CASE	REMOVE CONCRETE (CURB,GUTTER & SW)	MINOR CONCRETE (CURB RAMP)	MINOR CONCRETE (CURB,GUTTER, SIDEWALK & DRIVEWAY)	DETECTABLE WARNING SURFACE	ADJUST PULLBOX	PRE/ POST Const SURVEYS
					CY	CY	CY	SQFT	EA	EA
1	19.301	NB OFF-RAMP TO DALY St/MAIN St	N/W CORNER	CASE F	1.30	1.11	0.52	18	1	1
			S/W CORNER	CASE F	1.30	1.11	0.19	18		
2	19.453	SB ON-RAMP FROM NB BROADWAY	S/W CORNER	CASE F	1.30	1.11	0.19	18		1
3	19.51	NB OFF-RAMP TO NB BROADWAY	S/E CORNER	CASE A	3.70	3.11	0.59	12.6		1
4	19.71	SB FROM PASADENA TO BROADWAY @ PASADENA Ave	S/W CORNER	CASE F	1.02	0.49	0.86	15		1
			S/E CORNER	CASE F	1.02	0.49	0.86	15		
		SB FROM PASADENA TO BROADWAY @ BROADWAY	N/W CORNER	CASE F	1.02	0.49	0.86	15		
5	19.74	NB FROM BROADWAY TO PASADENA Ave	N/E CORNER	CASE F	1.30	1.11	0.19	18		1
6	20.025	NB ON-RAMP FROM PASADENA Ave	N/E CORNER	CASE F	1.30	1.11	0.19	18	1	1
7	20.057	SB TO PASADENA Ave	N/W CORNER	CASE C	2.12	1.41	1.13	15		1
8	20.246	NB OFF-RAMP TO FIGUEROA St/Ave 26	N/W CORNER	CASE F	1.02	0.49	0.86	15		1
			S/W CORNER	CASE A	3.70	3.11	0.59	12.6	1	
9	20.358	SB ON-RAMP FROM Ave 26	N/W CORNER	CASE C	2.12	1.41	1.13	15		1
			S/W CORNER	CASE F	1.02	0.49	0.86	15		
10	21.859	NB ON-RAMP FROM RIVERSIDE/EADS St	N/W CORNER	CASE A	3.70	3.11	0.59	12.6	1	1
			MEDIAN	TYPE A PASSAGEWAY	0.50	0.10	0.20	30	1	
			S/W CORNER	CASE C	2.12	1.41	1.13	15		
11	21.965	SB OFF-RAMP STADIUM WAY	N/E CORNER	CASE A	3.70	3.11	0.59	12.6		1
			S/E CORNER	CASE A	3.70	3.11	0.59	12.6		
			MEDIAN	TYPE A PASSAGEWAY	0.50	0.10	0.20	25		
12	23.085	SB OFF-RAMP TO FLETCHER Dr	N/E CORNER	CASE F	1.02	0.49	0.86	15		1
			N/W CORNER	CASE C	2.12	1.41	1.13	15		
13	23.166	NB ON-RAMP FROM FLETCHER Dr	N/E CORNER	CASE C	2.12	1.41	1.13	15		1
			N/W CORNER	CASE F	1.30	1.11	0.19	18		
14	23.573	NB OFF-RAMP TO GLENDALE Blvd	S/E CORNER	CASE C	2.12	1.41	1.13	15		1
			S/W CORNER	CASE CM	1.02	0.49	0.50	15		
15	23.588	NB ON-RAMP FROM WB GLENDALE Blvd	N/E CORNER	CASE C	2.12	1.41	1.13	15		1
			N/W CORNER	CASE CM	1.02	0.49	0.50	15		
16	23.588	SB ON-RAMP FROM GLENDALE Blvd	N/E CORNER	CASE C	2.12	1.41	1.13	15		1
			S/E CORNER	CASE F	1.30	1.11	0.19	18		
17	23.844	SB OFF-RAMP TO GLENDALE Blvd	N/E CORNER	CASE F	1.30	1.11	0.19	18		1
			S/E CORNER	CASE C	2.12	1.41	1.13	15		
18	24.122	NB OFF-RAMP TO LOS FELIZ Blvd	S/E CORNER	CASE CM	1.02	0.49	0.50	15		1
			S/W CORNER	CASE C	2.12	1.41	1.13	15		
19	24.524	SB ON-RAMP FROM WB LOS FELIZ Blvd	N/E CORNER	CASE CM	1.02	0.49	0.50	15		1
20	24.524	SB OFF-RAMP TO WB LOS FELIZ Blvd	N/E CORNER	CASE F	1.30	1.11	0.19	18		1
21	24.524	SB OFF-RAMP TO EB LOS FELIZ Blvd	N/E CORNER	CASE C	2.12	1.41	1.13	15		1
			S/E CORNER	CASE CM	1.30	1.11	0.19	18		
22	24.531	NB ON-RAMP FROM EB LOS FELIZ Blvd	N/E CORNER	CASE CM	1.30	1.11	0.19	18		1
			S/E CORNER	CASE C	2.12	1.41	1.13	15		
23	24.532	NB ON-RAMP FROM WB LOS FELIZ Blvd	N/E CORNER	CASE C	2.12	1.41	1.13	15		1
			N/E CORNER	CASE CM	1.30	1.11	0.19	18		
SUB-TOTAL, TABLE 1					72.86	52.30	27.81	679	5	23

SUMMARY OF QUANTITIES

Q-18

STATE OF CALIFORNIA - DEPARTMENT OF TRANSPORTATION
Caltrans DESIGN

FUNCTIONAL SUPERVISOR: KHAN HOSSAIN
CALCULATED-DESIGNED BY: LOHIT KOTHA
CHECKED BY: KHAN HOSSAIN
REVISED BY
DATE REVISED

LAST REVISION 11-20-13
DATE PLOTTED => 18-MAR-2014
TIME PLOTTED => 11:24

Dist	COUNTY	ROUTE	POST MILES TOTAL PROJECT	SHEET No.	TOTAL SHEETS
07	LA	5	19.2/28.9	134	217

REGISTERED CIVIL ENGINEER 1-31-14 DATE

2-10-14
PLANS APPROVAL DATE

REGISTERED PROFESSIONAL ENGINEER LOHIT R. KOTHA No. C75977 Exp. 6/30/14 CIVIL STATE OF CALIFORNIA

THE STATE OF CALIFORNIA OR ITS OFFICERS OR AGENTS SHALL NOT BE RESPONSIBLE FOR THE ACCURACY OR COMPLETENESS OF SCANNED COPIES OF THIS PLAN SHEET.

CURB RAMP QUANTITIES

TABLE 2

LOCATION No.	POST MILE	LOCATION DESCRIPTION	CORNER	CURB RAMP CASE	REMOVE CONCRETE (CURB,GUTTER & SW)	MINOR CONCRETE (CURB RAMP)	MINOR CONCRETE (CURB,GUTTER, SIDEWALK & DRIVEWAY)	DETECTABLE WARNING SURFACE	ADJUST PULLBOX	PRE/POST CONSTRUCTION SURVEYS
					CY	CY	CY	SQFT	EA	EA
24	27.712	SB ON-RAMP FROM EB WESTERN Ave	S/W CORNER	CASE C	2.12	1.41	1.13	15		1
			S/E CORNER	CASE F	1.30	1.11	0.19	18		
25	27.713	SB ON-RAMP FROM WB WESTERN Ave	N/E CORNER	CASE C	2.12	1.41	1.13	15		1
			N/W CORNER	CASE F	1.30	1.11	0.19	18		
26	27.957	SB OFF-RAMP TO EB WESTERN Ave	S/W CORNER	CASE F	1.30	1.11	0.19	18		1
			S/E CORNER	CASE C	2.12	1.41	1.13	15		
27	27.958	SB OFF-RAMP TO WB WESTERN Ave	N/E CORNER	CASE F	1.30	1.11	0.19	18		1
			N/W CORNER	CASE C	2.12	1.41	1.13	15		
28	27.971	SB ON-RAMP FROM EB WESTERN Ave	S/E CORNER	CASE C	2.12	1.41	1.13	15		1
			S/W CORNER	CASE F	1.30	1.11	0.19	18		
29	27.972	NB ON-RAMP FROM WB WESTERN Ave	N/E CORNER	CASE C	2.12	1.41	1.13	15		1
			N/W CORNER	CASE F	1.30	1.11	0.19	18		
30	28.308	SB ON-RAMP FROM WB ALAMEDA Ave	N/E CORNER	CASE C	2.12	1.41	1.13	15		1
			N/W CORNER	CASE F	1.30	1.11	0.19	18		
31	28.309	SB ON-RAMP FROM EB ALAMEDA Ave	S/E CORNER	CASE C	2.12	1.41	1.13	15		1
			S/W CORNER	CASE F	1.30	1.11	0.19	15		
32	28.323	NB OFF-RAMP TO EB ALAMEDA Ave	S/E CORNER	CASE C	2.12	1.41	1.13	18		1
			S/W CORNER	CASE F	1.30	1.11	0.19	15		
33	28.324	NB OFF-RAMP TO WB ALAMEDA Ave	N/E CORNER	CASE C	2.12	1.41	1.13	18		1
			N/W CORNER	CASE F	1.30	1.41	0.19	15		
34	28.537	SB OFF-RAMP TO WB ALAMEDA Ave	N/E CORNER	CASE C	2.12	1.11	0.19	18		1
			N/W CORNER	CASE F	1.30	1.11	1.13	15		
34	28.537	SB OFF-RAMP TO WB ALAMEDA Ave	N/E CORNER	CASE F	1.30	1.11	0.19	18		1
			N/W CORNER	CASE C	2.12	1.41	0.19	18		
35	28.538	NB ON-RAMP FROM EB ALAMEDA Ave	S/E CORNER	CASE C	2.12	1.41	1.13	15		1
			S/W CORNER	CASE F	1.30	1.11	0.19	18		
36	28.578	NB ON-RAMP FROM EB ALAMEDA Ave	S/E CORNER	CASE F	1.30	1.11	0.19	18		1
			S/W CORNER	CASE C	2.12	1.41	1.13	15		
37	28.579	NB ON-RAMP FROM WB ALAMEDA Ave	N/E CORNER	CASE C	2.12	1.41	1.13	15		1
			N/W CORNER	CASE F	1.30	1.11	0.19	18		
		SUB-TOTAL			51.30	37.80	18.86	495		15
		SUB-TOTAL, TABLE 1			72.86	52.30	27.81	679	5	23
		GRAND TOTAL			124.16	90.10	46.67	1,174	5	38

SUMMARY OF QUANTITIES

Q-19

REVISED BY | DATE REVISED
LOHIT KOTHA | KHAN HOSSAIN
CALCULATED-DESIGNED BY | CHECKED BY
FUNCTIONAL SUPERVISOR: KHAN HOSSAIN
STATE OF CALIFORNIA - DEPARTMENT OF TRANSPORTATION
Caltrans® DESIGN

LAST REVISION 11-20-13 | DATE PLOTTED => 18-MAR-2014 | TIME PLOTTED => 11:24

Dist	COUNTY	ROUTE	POST MILES TOTAL PROJECT	SHEET No.	TOTAL SHEETS
07	LA	5	19.2/28.9	135	217

LICENSED LANDSCAPE ARCHITECT 1-31-14

PLANS APPROVAL DATE 2-10-14

LICENSED LANDSCAPE ARCHITECT KATHLEEN LEDESMA No. 5888 Signature 12/31/15 Renewal Date 1/31/14 Date STATE OF CALIFORNIA

THE STATE OF CALIFORNIA OR ITS OFFICERS OR AGENTS SHALL NOT BE RESPONSIBLE FOR THE ACCURACY OR COMPLETENESS OF SCANNED COPIES OF THIS PLAN SHEET.

MISCELLANEOUS QUANTITIES

DIRECTION	LOCATION	DESCRIPTION	4' CHAIN LINK GATE (TYPE CL-6)	MINOR CONCRETE (TEXTURED PAVING)	SLOPE PAVING (CONCRETE)	SIGN COLLAR (N)	WOOD MULCH	REMARKS
	PM		EA	CY	CY	EA	CY	
NB	20.91	NB Rte 5 @ DUVALL St AND RIVERSIDE Dr	1				24	
	20.27	NB Rte 110 to NB Rte 5 SB CONNECTOR					26	
	20.23	NB Rte 110 to SB Rte 5 CONNECTOR (LEFT SIDE NEAR METRO)					25	
	19.786/19.912	NB Rte 5 UNDER BRIDGE @ PASADENA ON-RAMP		68				
	20.147/20.181	NB Rte 5 to NB Rte 110 CONNECTOR RIGHT SIDE		36				
	20.30	NB Rte 110 to SB Rte 5 CONNECTOR RIGHT SIDE					338	
	20.20	NB Rte 5 to NB Rte 110 CONNECTOR RIGHT SIDE					573	
	20.21	NB Rte 5 to NB Rte 110 CONNECTOR LEFT SIDE					803	
	20.25	NB/SB Rte 5 to NB Rte 110 CONNECTOR					865	
	24.343/24.546	NB Rte 5 MAINLINE LOS FELIZ Blvd/GLENDALE Blvd OFF-RAMP		112				
	22.24	NB Rte 5 @ NEWELL St	1					
	22.382/22.438	NB Rte 5 to NB Rte 2 CONNECTOR		58				
	22.632/22.641	NB Rte 5 to SB Rte 2 CONNECTOR		9.3		2		
	23.113/23.167	NB Rte 5 ON-RAMP @ FLETCHER Dr		23.4				
	23.581/23.611	NB Rte 5 OFF-RAMP @ GLENDALE Blvd		8.6				
	24.688/24.904	NB Rte 5 BEGINS FROM ON-RAMP LOS FELIZ Blvd		45				
	24.658/24.681	NB Rte 5 ON-RAMP @ W LOS FELIZ Blvd		7.4				
	25.723/25.732	NB Rte 5 ON-RAMP @ COLORADO Blvd		1.2				
	26.344/26.359	NB Rte 5 OFF-RAMP @ Rte 134 AND ZOO Dr		8.6		1		
	26.321/26.374	NB Rte 5 OFF-RAMP @ ZOO Dr GORE AREA		68				
		SUB-TOTAL	2	445.5	0	3	2,654	

(N) - NOT A SEPARATE PAY ITEM, FOR INFORMATION ONLY

SUMMARY OF QUANTITIES

Q-20

STATE OF CALIFORNIA - DEPARTMENT OF TRANSPORTATION
Caltrans® LANDSCAPE ARCHITECTURE

SENIOR LANDSCAPE ARCHITECT: PATRICIA WATANABE
CALCULATED-DESIGNED BY: KATHLEEN LEDESMA
CHECKED BY: TIRSIT KEBEDE
REVISED BY
DATE REVISED

LAST REVISION 00-00-00
DATE PLOTTED => 18-MAR-2014
TIME PLOTTED => 11:24

Dist	COUNTY	ROUTE	POST MILES TOTAL PROJECT	SHEET No.	TOTAL SHEETS
07	LA	5	19.2/28.9	136	217

LICENSED LANDSCAPE ARCHITECT 1-31-14

2-10-14
PLANS APPROVAL DATE

LICENSED LANDSCAPE ARCHITECT KATHLEEN LEDESMA No. 5868 Signature 12/31/15 Renewal Date 1/31/14 Date STATE OF CALIFORNIA

THE STATE OF CALIFORNIA OR ITS OFFICERS OR AGENTS SHALL NOT BE RESPONSIBLE FOR THE ACCURACY OR COMPLETENESS OF SCANNED COPIES OF THIS PLAN SHEET.

MISCELLANEOUS QUANTITIES

DIRECTION	LOCATION	DESCRIPTION	4' CHAIN LINK GATE (TYPE CL-6)	MINOR CONCRETE (TEXTURED PAVING)	SLOPE PAVING (CONCRETE)	SIGN COLLAR (N)	WOOD MULCH	REMARKS
	PM		EA	CY	CY	EA	CY	
SB	21.91	SB Rte 5 OFF-RAMP @ STADIUM WAY	1					
	21.979/22.257	SB Rte 5 BETWEEN SB MAINLINE AND STADIUM WAY SLIP		113				
	24.201/24.491	SB Rte 5 BETWEEN SB MAINLINE AND LOS FELIZ Blvd		26				
	22.218/22.258	SB Rte 2/SB Rte 5 CONNECTOR NEAR NEWELL St GORE AREA		41				
	22.589/22.601	SB Rte 5/SB Rte 2 CONNECTOR GORE AREA		17.3				
	23.037/23.084	SB Rte 5 OFF-RAMP @ FLETCHER Dr GORE AREA			12.3	1		
	23.619/23.639	SB Rte 5 ON-RAMP @ GLENDALE Blvd GORE AREA		7.4				
	23.873/23.888	SB Rte 5 OFF-RAMP @ HYPERION Ave GORE AREA		14.8		1		
	24.201/24.216	SB Rte 5 ON-RAMP @ LOS FELIZ Blvd GORE AREA		4.3				
	24.252/24.266	SB Rte 5 ON/OFF-RAMP @ LOS FELIZ Blvd GORE AREA		18.5				
	24.369/24.387	SB Rte 5 ON-RAMP @ LOS FELIZ Blvd GORE AREA		11.1				
	25.871/25.887	SB Rte 5 OFF-RAMP @ COLORADO Blvd GORE AREA		3.7		1		
	26.246/26.292	SB Rte 5 ON-RAMP @ ZOO Dr GORE AREA		25.9				
	26.273/26.308	WB Rte134 TO SB Rte 5 CONNECTOR GORE AREA		13.6				
	26.466/26.508	EB Rte 134 TO SB Rte 5 CONNECTOR SHOULDER AREA		31				
	26.749/26.857	SB Rte 5 TO EB Rte 134 CONNECTOR		222				
	24.241/24.311	SB Rte 5 OFF-RAMP @ LOS FELIZ Blvd SHOULDER AREA			32			
	24.326/24.409	SB Rte 5 ON-RAMP @ LOS FELIZ Blvd SHOULDER AREA			58		648	
	20.30	SB Rte 5 OFF-RAMP @ BROADWAY						
		SUB-TOTAL	1	549.6	102.3	3	648	
		SHEET Q-20 SUB-TOTAL	2	445.5	0	3	2,654	
		TOTAL	3	995.1	102.3	6	3,302	

(N) - NOT A SEPARATE PAY ITEM, FOR INFORMATION ONLY

SUMMARY OF QUANTITIES

Q-21

LAST REVISION 00-00-00 | DATE PLOTTED => 18-MAR-2014 | TIME PLOTTED => 11:24

STATE OF CALIFORNIA - DEPARTMENT OF TRANSPORTATION
Caltrans LANDSCAPE ARCHITECTURE
SENIOR LANDSCAPE ARCHITECT PATRICIA WATANABE
CALCULATED-DESIGNED BY KATHLEEN LEDESMA
CHECKED BY TIRSIT KEBEDE
REVISED BY
DATE REVISED

Dist	COUNTY	ROUTE	POST MILES TOTAL PROJECT	SHEET No.	TOTAL SHEETS
07	LA	5	19.2/28.9	137	217

1-31-14
LICENSED LANDSCAPE ARCHITECT

2-10-14
PLANS APPROVAL DATE

LICENSED LANDSCAPE ARCHITECT KATHLEEN LEDESMA No. 5868 Signature 12/31/15 Renewal Date 1/31/14 Date STATE OF CALIFORNIA

THE STATE OF CALIFORNIA OR ITS OFFICERS OR AGENTS SHALL NOT BE RESPONSIBLE FOR THE ACCURACY OR COMPLETENESS OF SCANNED COPIES OF THIS PLAN SHEET.

IRRIGATION LEGEND

SPRINKLER TYPE	DESCRIPTION	SPRAY PATTERN	OPERATING PRESSURE (psi)	PRESSURE COMPENSATING	PLUS/MINUS 5% ② DISCHARGE: GALLONS PER MINUTE (GPM)	DISCHARGE: GALLONS PER HOUR (GPH)	RADIUS (ft)	WIDTH x LENGTH (ft)	FLOW SHUTOFF DEVICE	SPRINKLER ASSEMBLY: RISER: TYPE	RISER: MATERIAL: PLASTIC	RISER: MATERIAL: GALVANIZED	RISER: SIZE (IPS INCH)	RISER: HEIGHT (INCH)	POP-UP: TYPE	POP-UP: INLET CONNECTION (NPT INCH)	POP-UP: SPRINKLER PROTECTOR (TYPE)	TREE WELL: HEIGHT (INCH)	REMARKS
A-3	RISER SPRINKLER ASSEMBLY (GEAR DRIVE)	P	35	—	1.73	—	24′	—	X	I	X	—	¾"	18"	—	—	—	—	
A-6	RISER SPRINKLER ASSEMBLY (GEAR DRIVE)	P	25	—	1.44	—	20′	—	X	V	X	—	¾"	18"	—	—	—	—	

X IN BOX DENOTES REQUIREMENT

APPLICABLE WHEN CIRCLED BELOW:

1 - SEE SPECIAL PROVISIONS.
2 - IF A PRESSURE COMPENSATING DEVICE IS SPECIFIED, THE DISCHARGE AND RADII SHOWN REFLECT ITS USE.
3 - VINYL-COATED CAST IRON HOUSING.
4 - SWING JOINTS REQUIRED ADJACENT TO SHOULDERS, CURBS, SIDEWALKS, AND DIKES.
5 - UNLESS OTHERWISE SHOWN.

IRRIGATION SPRINKLER SCHEDULE

ISS-1

REVISED BY	DATE REVISED

CALCULATED-DESIGNED BY: KATHLEEN LEDESMA
CHECKED BY: TIRSIT KEBEDE
SENIOR LANDSCAPE ARCHITECT: PATRICIA WATANABE

STATE OF CALIFORNIA - DEPARTMENT OF TRANSPORTATION
Caltrans®
LANDSCAPE ARCHITECTURE

LAST REVISION 00-00-00
DATE PLOTTED => 18-MAR-2014
TIME PLOTTED => 11:24

Dist	COUNTY	ROUTE	POST MILES TOTAL PROJECT	SHEET No.	TOTAL SHEETS
07	LA	5	19.2/28.9	138	217

LICENSED LANDSCAPE ARCHITECT 1-31-14

2-10-14
PLANS APPROVAL DATE

LICENSED LANDSCAPE ARCHITECT KATHLEEN LEDESMA No. 5868 Signature 12/31/15 Renewal Date 1/31/14 Date STATE OF CALIFORNIA

THE STATE OF CALIFORNIA OR ITS OFFICERS OR AGENTS SHALL NOT BE RESPONSIBLE FOR THE ACCURACY OR COMPLETENESS OF SCANNED COPIES OF THIS PLAN SHEET.

LEGEND:

MINOR CONCRETE (TEXTURED PAVING)

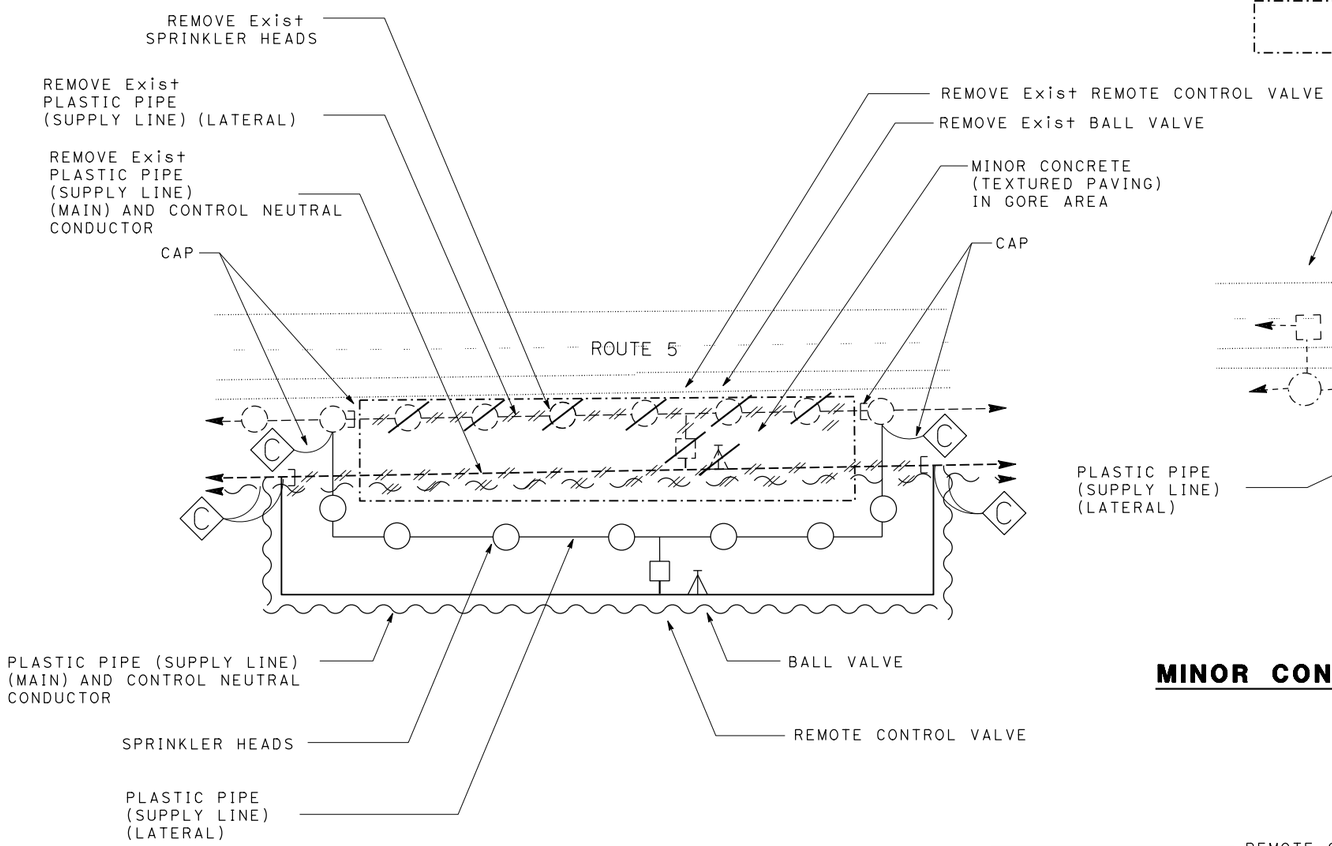

IRRIGATION MODIFICATION
MINOR CONCRETE (TEXTURED PAVING)
TYPICAL DETAIL

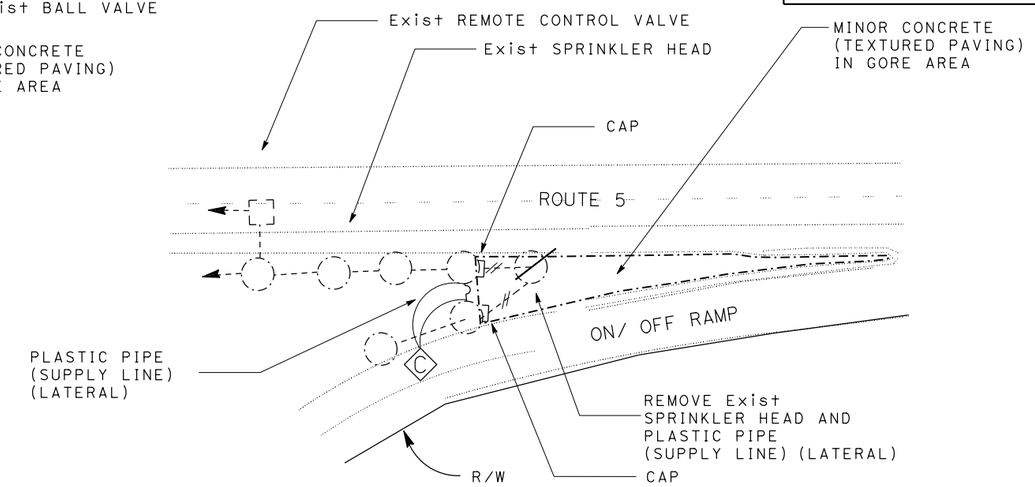

IRRIGATION MODIFICATION
MINOR CONCRETE (TEXTURED PAVING)/ GORE AREA
TYPICAL DETAIL

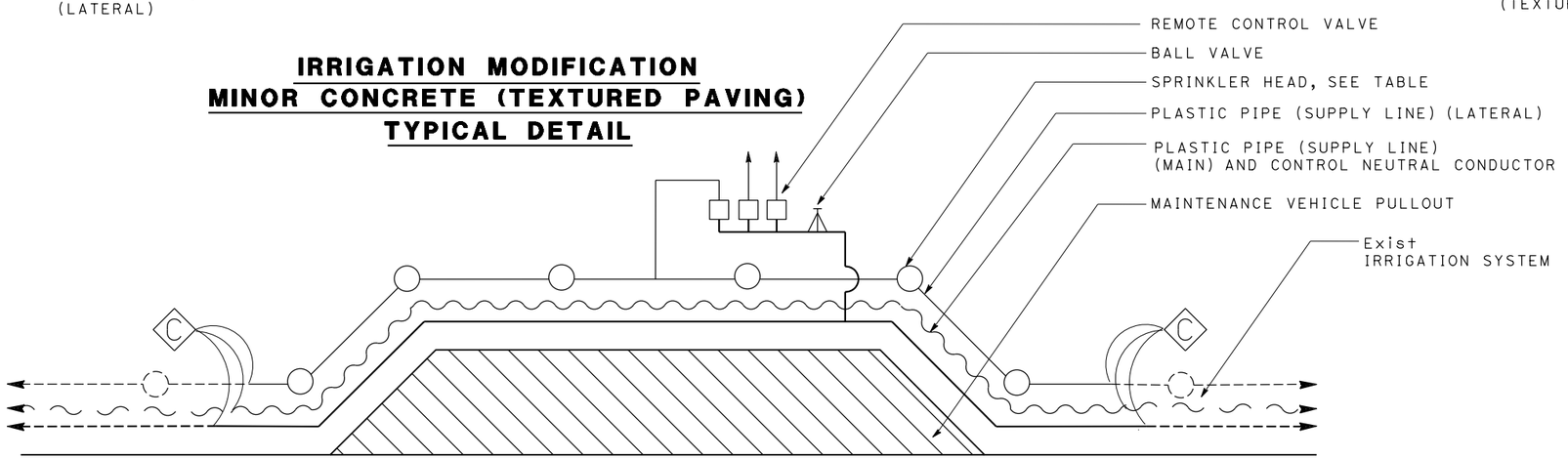

IRRIGATION MODIFICATION FOR MAINTENANCE VEHICLE PULLOUT
TYPICAL DETAIL

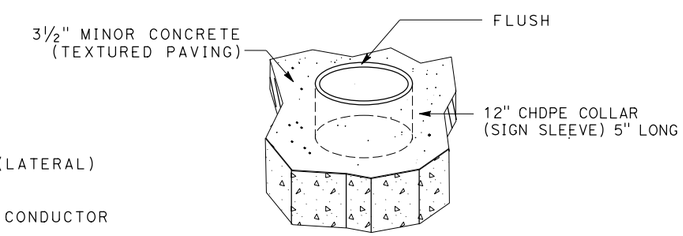

SIGN COLLAR
DETAIL

NOTE:
PLACE 12" Dia CHDPE COLLAR (5" LENGTH) AS FORM (CLEAR) AROUND POST

LANDSCAPE DETAILS
NO SCALE

LD-1

REVISED BY	DATE REVISED
KATHLEEN LEDESMA	TIRSIT KEBEDE
CALCULATED-DESIGNED BY	CHECKED BY
SENIOR LANDSCAPE ARCHITECT	PATTY WATANABE

STATE OF CALIFORNIA - DEPARTMENT OF TRANSPORTATION
Caltrans® LANDSCAPE ARCHITECTURE

LAST REVISION 00-00-00 | DATE PLOTTED => 18-MAR-2014 | TIME PLOTTED => 11:24

Dist	COUNTY	ROUTE	POST MILES TOTAL PROJECT	SHEET No.	TOTAL SHEETS
07	LA	5	19.2/28.9	139	217

1-31-14
LICENSED LANDSCAPE ARCHITECT

2-10-14
PLANS APPROVAL DATE

LICENSED LANDSCAPE ARCHITECT KATHLEEN LEDESMA No. 5888 Signature 12/31/15 Renewal Date 1/31/14 Date STATE OF CALIFORNIA

THE STATE OF CALIFORNIA OR ITS OFFICERS OR AGENTS SHALL NOT BE RESPONSIBLE FOR THE ACCURACY OR COMPLETENESS OF SCANNED COPIES OF THIS PLAN SHEET.

IRRIGATION FACILITIES

DIRECTION	LOCATION PM	DESCRIPTION	RISER SPRINKLER ASSEMBLY (GEAR DRIVEN) SPRINKLER TYPE	RISER SPRINKLER ASSEMBLY (GEAR DRIVEN) EA	REMOTE CONTROL VALVE SIZE	REMOTE CONTROL VALVE EA	PLASTIC PIPE SUPPLY LINE SCHEDULE 40 SIZE	PLASTIC PIPE SUPPLY LINE SCHEDULE 40 LF	GATE VALVE SIZE	GATE VALVE EA	BACKFLOW PREVENTER ASSEMBLY SIZE	BACKFLOW PREVENTER ASSEMBLY EA	BACKFLOW PREVENTER ENCLOSURE EA	REMARKS
SB	19.69	SB Rte 5 @ MAINLINE/BEFORE BROADWAY OFF-RAMP	A-6	4			1"	40						
							1¼"	80						
							2"	40						
	19.95	SB Rte 5 OFF-RAMP @ PASADENA Ave	A-6	4			1"	120						
							1¼"	40						
	20.70	SB Rte 5 CONNECTOR FROM SB Rte 5 TO SB Rte 110	A-3	4			1¼"	80						
							2"	80						
	24.30	SB Rte 5 OFF-RAMP @ LOS FELIZ Blvd/RIGHT SHOULDER	A-6	4			1"	120						
							1¼"	40						
							4"	100						
	24.34	SB Rte 5 ON-RAMP @ LOS FELIZ Blvd/RIGHT SHOULDER	A-6	4			1"	120						
							1¼"	40						
							4"	100						
	24.25	SB Rte 5 OFF-RAMP @ LOS FELIZ Blvd/SHOULDER	A-6	5			1"	120	4"	1				
							1¼"	40						
							4"	120						
	24.40	SB Rte 5 ON-RAMP @ LOS FELIZ Blvd/SHOULDER	A-6	13			1"	40	4"	1				
							1¼"	80						
							1½"	80						
							2"	80						
							4"	100						
	26.50	EB Rte 134 TO Rte 5 CONNECTOR/SHOULDER					2½"	20	2½"	1				
	22.02	SB Rte 5 OFF-RAMP @ STADIUM WAY									3"	1	1 (N)	
	22.30	SB Rte 5 NEAR NEWELL St									3"	1	1 (N)	
	22.74	SB Rte 5 NEAR GILROY St											1	
NB	19.77	NB Rte 5 UNDER BRIDGE @ PASADENA Ave ON-RAMP			1½"	1	2½"	500	2½"	1				
							2"	40						
	24.02	NB Rte 5 N OF PEDESTRIAN OVERCROSSING/NEAR LOS FELIZ Blvd OFF-RAMP					2"	12	2"	1				
	20.22	NB Rte 5 (Rte 110 PM 25.9) Connector Rte 110 N @ Lacy St									3"	1	1 (N)	
	22.50	NB Rte 5 Connector to NB Rte 2									3"	1	1 (N)	

(N) - NOT A SEPARATE PAY ITEM, FOR INFORMATION ONLY

IRRIGATION QUANTITIES

IQ-1

STATE OF CALIFORNIA - DEPARTMENT OF TRANSPORTATION
Caltrans® LANDSCAPE ARCHITECTURE

SENIOR LANDSCAPE ARCHITECT: PATRICIA WATANABE
CALCULATED-DESIGNED BY: KATHLEEN LEDESMA
CHECKED BY: TIRSIT KEBEDE
REVISED BY
DATE REVISED

LAST REVISION 00-00-00
DATE PLOTTED => 18-MAR-2014
TIME PLOTTED => 11:24

Dist	COUNTY	ROUTE	POST MILES TOTAL PROJECT	SHEET No.	TOTAL SHEETS
07	LA	5	19.2/28.9	140	217

LICENSED LANDSCAPE ARCHITECT 1-31-14

2-10-14
PLANS APPROVAL DATE

LICENSED LANDSCAPE ARCHITECT KATHLEEN LEDESMA No. 5868 Signature 12/31/15 Renewal Date 1/31/14 Date STATE OF CALIFORNIA

THE STATE OF CALIFORNIA OR ITS OFFICERS OR AGENTS SHALL NOT BE RESPONSIBLE FOR THE ACCURACY OR COMPLETENESS OF SCANNED COPIES OF THIS PLAN SHEET.

TOTAL QUANTITIES

TOTALS	UNIT	DESCRIPTION	
4	EA	3"	BPA
1	EA	ENCLOSURE	BPA
			IRRIGATION CONTROLLER
			CEC
1	EA	1½"	RCV
1	EA	2"	GV
2	EA	2½"	GV
2	EA	4"	BV
			VALVES AND ASSEMBLIES
			CONDUIT
560	LF	1"	SCH 40 PLASTIC PIPE SUPPLY LINE
400	LF	1¼"	SCH 40 PLASTIC PIPE SUPPLY LINE
80	LF	1½"	SCH 40 PLASTIC PIPE SUPPLY LINE
172	LF	2"	SCH 40 PLASTIC PIPE SUPPLY LINE
520	LF	2½"	SCH 40 PLASTIC PIPE SUPPLY LINE
420	LF	4"	SCH 40 PLASTIC PIPE SUPPLY LINE
118	LF	6"	SCH 40 PLASTIC PIPE SUPPLY LINE
12	LF	8"	SCH 40 PLASTIC PIPE SUPPLY LINE
			GSP
			DIP
38	EA	RISER (GEAR DRIVEN)	SPRINKLER ASSEMBLY

IRRIGATION CONDUIT

LOCATION		SIDE		EXTENSION CONNECTION TYPE		(N) WATER SUPPLY LINE	(N) SPRINKLER CONTROL CONDUIT	SCHEDULE 40 PVC PIPE CONDUIT SIZE (INCH)	
DIRECTION	PM	L†	R†	CB	OL	SIZE (INCH)	SIZE (INCH)	6"	8"
SB	24.25	-	X			4"	2"		6′
SB	24.4	-	X			4"	2"		6′
SB	26.5	-	X			2½"	2"	6′	
NB	19.77	-	X			2½"	2"	100′	
NB	24.02	-	X			2"	2"	12′	
							TOTAL	118′	12′

ABBREVIATIONS:
CB - COUPLING BAND
OL - OVERLAP

(N) - NOT A SEPARATE PAY ITEM, FOR INFORMATION ONLY
X - DENOTES REQUIREMENT

REMOVE IRRIGATION FACILITY

DIRECTION	LOCATION PM	DESCRIPTION	REMOVE SPRINKLERS (N) EA	REMOVE REMOTE CONTROL VALVE (N) EA	REMOVE GATE VALVE (N) EA	REMOVE BACKFLOW PREVENTER ASSEMBLY (N) EA
SB	19.69	SB Rte 5 @ MAINLINE/BEFORE BROADWAY OFF-RAMP	3			
	19.95	SB Rte 5 OFF-RAMP @ PASADENA Ave	3			
	20.70	SB Rte 5 CONNECTOR FROM SB Rte 5 TO SB Rte 110	3			
	21.97/22.25	SB Rte 5 BETWEEN SB MAINLINE AND STADIUM WAY SLIP	15	4		
	24.30	SB Rte 5 OFF-RAMP @ LOS FELIZ Blvd/RIGHT SHOULDER	3			
	24.34	SB Rte 5 ON-RAMP @ LOS FELIZ Blvd/RIGHT SHOULDER	3			
	24.25	SB Rte 5 OFF-RAMP @ LOS FELIZ Blvd/SHOULDER	5			
	24.40	SB Rte 5 ON-RAMP @ LOS FELIZ Blvd/SHOULDER	13			
	26.50	EB Rte 134 TO SB Rte 5 CONNECTOR/SHOULDER				
	26.78	SB Rte 5 TO EB Rte 134 CONNECTOR	6			
	22.02	SB Rte 5 OFF-RAMP @ STADIUM WAY				1
	22.30	SB Rte 5 NEAR NEWELL St				1
NB	19.77	NB Rte 5 UNDER BRIDGE @ PASADENA Ave ON-RAMP	40	2		
	24.02	NB Rte 5 N OF PEDESTRIAN OVERCROSSING/NEAR LOS FELIZ OFF-RAMP			1	
	20.22	NB Rte 5 (Rte 110 PM 25.90) Connector NB Rte 110 @ Lacy St				1
	22.50	NB Rte 5 Connector to NB Rte 2				
		TOTAL	94	6	1	4

IRRIGATION QUANTITIES
IQ-2

STATE OF CALIFORNIA - DEPARTMENT OF TRANSPORTATION
Caltrans® LANDSCAPE ARCHITECTURE
SENIOR LANDSCAPE ARCHITECT: PATRICIA WATANABE
CALCULATED-DESIGNED BY: KATHLEEN LEDESMA
CHECKED BY: TIRSIT KEBEDE
REVISED BY
DATE REVISED

LAST REVISION 00-00-00
DATE PLOTTED => 18-MAR-2014
TIME PLOTTED => 11:24

Dist	COUNTY	ROUTE	POST MILES TOTAL PROJECT	SHEET No.	TOTAL SHEETS
07	LA	5	19.2/28.9	141	217

REGISTERED ELECTRICAL ENGINEER 11/15/13 DATE

2-10-14
PLANS APPROVAL DATE

REGISTERED PROFESSIONAL ENGINEER G.S. TOOR No. E15613 Exp. 12/31/15 ELECTRICAL STATE OF CALIFORNIA

THE STATE OF CALIFORNIA OR ITS OFFICERS OR AGENTS SHALL NOT BE RESPONSIBLE FOR THE ACCURACY OR COMPLETENESS OF SCANNED COPIES OF THIS PLAN SHEET.

NOTES: (SHEETS E-1,E-2, E-3)

1. INSTALL NEW 2"C STUBOUT FOR NEW LOOP DETECTORS, AND ABANDON EXISTING ONE.
2. SPLICE NEW LOOP WIRES TO EXISTING DLC IN ADJACENT PULL BOX.
3. PRIOR TO CONSTRUCTION, LOCATE EXISTING INDUCTIVE LOOP DETECTORS.
4. TAG EXISTING DLC IN ADJACENT PULL BOX AND AT CONTROLLER CABINET.
5. SEE WIRING CONNECTION DETAIL ON SHEET E-3 FOR ONE TYPE D LOOP WITH TWO TYPE E LOOPS AND ONE TYPE D LOOP WITH THREE TYPE E LOOPS.

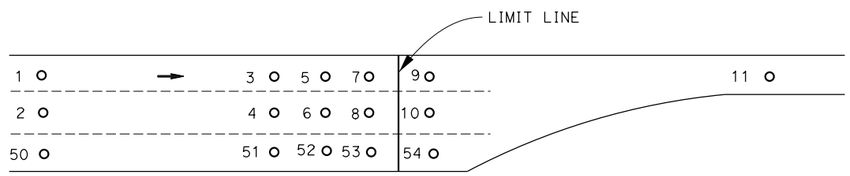

TYPICAL ON RAMP LOOPS

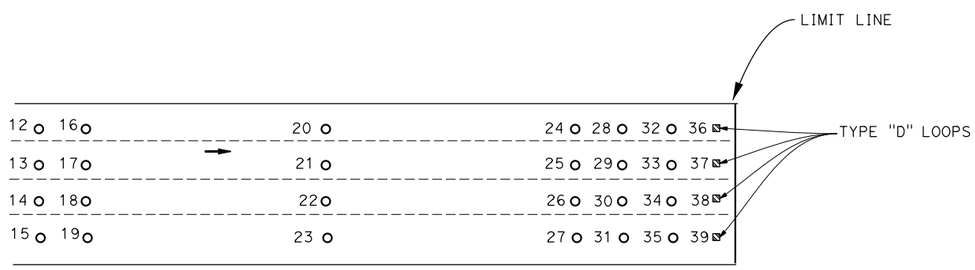

TYPICAL OFF RAMP LOOPS

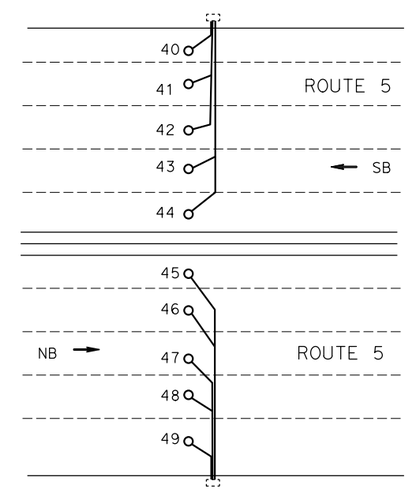

TYPICAL MAIN LINE LOOPS

INDUCTIVE LOOP DETECTOR

NO SCALE

E-1

STATE OF CALIFORNIA - DEPARTMENT OF TRANSPORTATION
Caltrans TRAFFIC DESIGN

FUNCTIONAL SUPERVISOR: OSWALD ELIZONDO
CALCULATED-DESIGNED BY: PARESH PATEL
CHECKED BY: GARY TOOR
REVISED BY
DATE REVISED

LAST REVISION 00-00-00
DATE PLOTTED => 18-MAR-2014
TIME PLOTTED => 11:24

Dist	COUNTY	ROUTE	POST MILES TOTAL PROJECT	SHEET No.	TOTAL SHEETS
07	LA	5	19.2/28.9	142	217

REGISTERED ELECTRICAL ENGINEER 11/15/13 DATE

PLANS APPROVAL DATE 2-10-14

REGISTERED PROFESSIONAL ENGINEER G.S. TOOR No. E15613 Exp. 12/31/15 ELECTRICAL STATE OF CALIFORNIA

THE STATE OF CALIFORNIA OR ITS OFFICERS OR AGENTS SHALL NOT BE RESPONSIBLE FOR THE ACCURACY OR COMPLETENESS OF SCANNED COPIES OF THIS PLAN SHEET.

No.	DIRECTION	POST MILE	NAME - LOCATION	#LOOP	STUBOUTS	INDUCTIVE LOOPS
1	S	19.45	BROADWAY	18	7	1 6 8 9 10 11 21 22 33 34 35 37 38 39 40 41 42 43
2	S	20.70	AVENUE 26	7	4	1 2 6 7 8 10 11
3	S	20.70	DUVALL STREET	15	6	1 5 7 9 11 22 23 34 35 38 39 40 41 42 43
4	N	21.10	RIVERSIDE DRIVE	17	6	1 2 5 7 9 12 13 22 23 34 35 38 39 46 47 48 49
5	N/S	21.10	DORRIS PLACE	10	3	40 41 42 43 44 45 46 47 48 49
6	N	21.80	STADIUM WAY	16	7	1 2 5 6 7 8 9 10 11 12 13 45 46 47 48 49
7	S	21.71	STADIUM WAY	19	7	1 2 5 6 9 11 22 23 33 34 35 37 38 39 40 41 42 43 44
8	N/S	22.40	SOUTH OF ROUTE 2	8	4	40 41 42 43 46 47 48 49
9	N/S	22.76	NORTH OF ROUTE 2	8	4	40 41 42 43 46 47 48 49
10	S	24.17	LOS FELIZ Blvd LOCATION 1	15	6	1 2 5 6 9 22 23 34 35 38 39 40 41 42 43
11	S	24.36	LOS FELIZ Blvd LOCATION 2	12	5	1 6 8 9 10 11 12 13 40 41 42 43
12	N	24.36	LOS FELIZ Blvd LOCATION 2	12	5	1 5 6 9 10 11 12 13 46 47 48 49
13	S	24.54	GRIFFITH PARK DRIVE	12	5	1 2 5 6 9 11 12 13 40 41 42 43
14	N	25.67	COLORADO STREET	6	3	2 6 7 8 10 11
15	S	25.67	COLORADO STREET	5	3	1 5 7 9 11
16	S	26.35	ZOO DRIVE	11	5	1 2 5 6 9 11 40 41 42 43 44
17	S	26.50	ROUTE 134	4	2	40 41 42 43
18	N	26.88	NORTH OF ROUTE 134	4	2	46 47 48 49
19	N/S	27.20	VICTORY TRUCK Blvd	10	4	40 41 42 43 44 45 46 47 48 49
20	S	27.70	WESTERN AVENUE LOCATION 1	12	6	1 6 8 9 10 11 12 40 41 42 43 44
21	S	27.66	WESTERN AVENUE LOCATION 2	11	7	1 5 7 9 11 12 40 41 42 43 44
22	N	27.70	WESTERN AVENUE LOCATION 1	13	6	1 2 5 6 7 8 9 10 11 46 47 48 49
23	N	27.66	WESTERN AVENUE LOCATION 2	31	11	1 2 5 6 7 8 9 10 11 12 13 20 21 22 23 32 33 34 35 36 37 38 39 46 47 48 49 50 52 53 54
24	S	28.20	ALAMEDA AVENUE LOCATION 1	11	7	1 5 7 9 11 12 40 41 42 43 44
25	S	28.30	ALAMEDA AVENUE LOCATION 2	11	7	1 5 7 9 11 12 40 41 42 43 44
26	N	28.20	ALAMEDA AVENUE LOCATION 1	11	7	1 5 7 9 11 12 40 41 42 43 44
27	N	28.30	ALAMEDA AVENUE LOCATION 2	11	7	1 5 7 9 11 12 40 41 42 43 44

FOR NOTES SEE SHEET E-1

INDUCTIVE LOOP DETECTOR

E-2

REVISED BY | DATE REVISED

PARESH PATEL | GARY TOOR

CALCULATED-DESIGNED BY | CHECKED BY

FUNCTIONAL SUPERVISOR | OSWALD ELIZONDO

STATE OF CALIFORNIA - DEPARTMENT OF TRANSPORTATION

Caltrans® TRAFFIC DESIGN

LAST REVISION 00-00-00 | DATE PLOTTED => 18-MAR-2014 TIME PLOTTED => 11:24

Dist	COUNTY	ROUTE	POST MILES TOTAL PROJECT	SHEET No.	TOTAL SHEETS
07	LA	5	19.2/28.9	143	217

REGISTERED ELECTRICAL ENGINEER 12/5/13 DATE

PLANS APPROVAL DATE 2-10-14

REGISTERED PROFESSIONAL ENGINEER G.S. TOOR No. E15613 Exp. 12/31/15 ELECTRICAL STATE OF CALIFORNIA

THE STATE OF CALIFORNIA OR ITS OFFICERS OR AGENTS SHALL NOT BE RESPONSIBLE FOR THE ACCURACY OR COMPLETENESS OF SCANNED COPIES OF THIS PLAN SHEET.

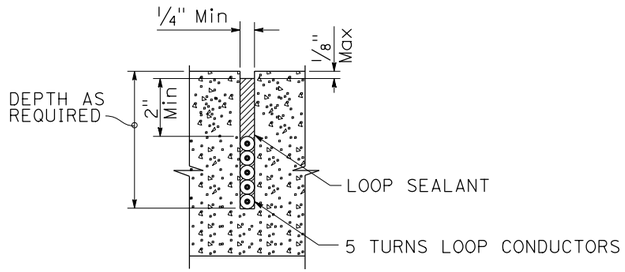

(FOR TYPE D LOOP DETECTOR)

SLOT DETAILS - TYPE 2 LOOP CONDUCTOR

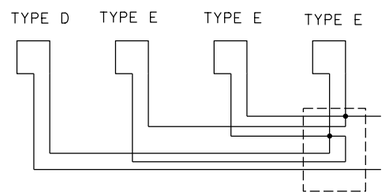

LOOP CONNECTION
NO SCALE

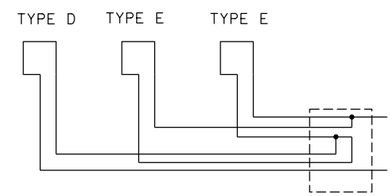

LOOP CONNECTION
NO SCALE

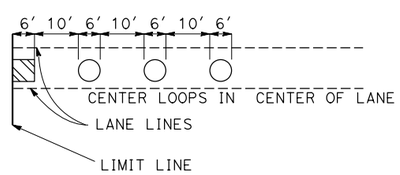

TYPICAL LOOP DETAIL
NO SCALE

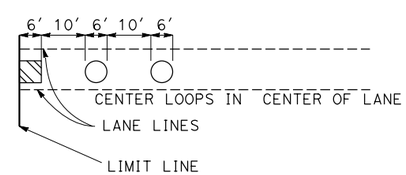

TYPICAL LOOP DETAIL
NO SCALE

FOR NOTES SEE SHEET E-1

INDUCTIVE LOOP DETECTOR

NO SCALE

E-3

STATE OF CALIFORNIA - DEPARTMENT OF TRANSPORTATION
Caltrans TRAFFIC DESIGN

FUNCTIONAL SUPERVISOR: OSWALD ELIZONDO
CALCULATED-DESIGNED BY: PARESH PATEL
CHECKED BY: GARY TOOR
REVISED BY
DATE REVISED

LAST REVISION 00-00-00
DATE PLOTTED => 18-MAR-2014
TIME PLOTTED => 11:24

Dist	COUNTY	ROUTE	POST MILES TOTAL PROJECT	SHEET No.	TOTAL SHEETS
07	LA	5	19.2/28.9	144	217

12/5/13
REGISTERED ELECTRICAL ENGINEER DATE

2-10-14
PLANS APPROVAL DATE

REGISTERED PROFESSIONAL ENGINEER
G.S. TOOR
No. E15613
Exp. 12/31/15
ELECTRICAL
STATE OF CALIFORNIA

THE STATE OF CALIFORNIA OR ITS OFFICERS OR AGENTS SHALL NOT BE RESPONSIBLE FOR THE ACCURACY OR COMPLETENESS OF SCANNED COPIES OF THIS PLAN SHEET.

INDUCTIVE LOOP DETECTOR

SHEET No.	(N) TYPE D LOOP (EA)	(N) TYPE E LOOP (EA)	(N) STUBOUT (EA)
E-2	16	304	146

(N) - NOT A SEPARATE PAY ITEM, FOR INFORMATION ONLY.

ELECTRICAL QUANTITIES

NO SCALE

E-4

LAST REVISION 00-00-00
DATE PLOTTED => 18-MAR-2014
TIME PLOTTED => 11:24

STATE OF CALIFORNIA - DEPARTMENT OF TRANSPORTATION
Caltrans® TRAFFIC DESIGN

FUNCTIONAL SUPERVISOR: OSWALD ELIZONDO
CALCULATED-DESIGNED BY: PARESH PATEL
CHECKED BY: GARY TOOR
REVISED BY
DATE REVISED

M

Maint	MAINTENANCE
Max	MAXIMUM
MB	METAL BEAM
MBB	METAL BEAM BARRIER
MBGR	METAL BEAM GUARD RAILING
Med	MEDIAN
MGS	MIDWEST GUARDRAIL SYSTEM
MH	MANHOLE
Min	MINIMUM
Misc	MISCELLANEOUS
Misc I & S	MISCELLANEOUS IRON AND STEEL
Mkr	MARKER
Mod	MODIFIED, MODIFY
Mon	MONUMENT
MP	METAL PLATE
MPGR	METAL PLATE GUARD RAILING
MR	MOVEMENT RATING
MSE	MECHANICALLY STABILIZED EMBANKMENT
Mt	MOUNTAIN, MOUNT
Mtl	MATERIAL
MVP	MAINTENANCE VEHICLE PULLOUT

N

N	NORTH
NB	NORTHBOUND
No.	NUMBER (MUST HAVE PERIOD)
Nos.	NUMBERS (MUST HAVE PERIOD)
NPS	NOMINAL PIPE SIZE
NS	NEAR SIDE
NSP	NEW STANDARD PLAN
NTS	NOT TO SCALE

O

Oblr	OBLITERATE
OC	OVERCROSSING
OD	OUTSIDE DIAMETER
OF	OUTSIDE FACE
OG	ORIGINAL GROUND
OGAC	OPEN GRADED ASPHALT CONCRETE
OGFC	OPEN GRADED FRICTION COURSE
OH	OVERHEAD
OHWM	ORDINARY HIGH WATER MARK
O-O	OUT TO OUT
Opp	OPPOSITE
OSD	OVERSIDE DRAIN

P

P	PAGE
PAP	PERFORATED ALUMINUM PIPE
PB	PULL BOX
PC	POINT OF CURVATURE, PRECAST
PCC	POINT OF COMPOUND CURVE, PORTLAND CEMENT CONCRETE
PCMS	PORTABLE CHANGEABLE MESSAGE SIGN
PCP	PERFORATED CONCRETE PIPE, PRESTRESSED CONCRETE PIPE
PCVC	POINT OF COMPOUND VERTICAL CURVE
PEC	PERMIT TO ENTER AND CONSTRUCT
Ped	PEDESTRIAN
Ped OC	PEDESTRIAN OVERCROSSING
Ped UC	PEDESTRIAN UNDERCROSSING
Perm Mtl	PERMEABLE MATERIAL

P continued

PG	PROFILE GRADE
PI	POINT OF INTERSECTION
PJP	PARTIAL JOINT PENETRATION
Pkwy	PARKWAY
ℙ,PL	PLATE
P/L	PROPERTY LINE
PM	POST MILE, TIME FROM NOON TO MIDNIGHT
PN	PAVING NOTCH
POC	POINT OF HORIZONTAL CURVE
POT	POINT OF TANGENT
POVC	POINT OF VERTICAL CURVE
PP	PIPE PILE, PLASTIC PIPE, POWER POLE
PPL	PREFORMED PERMEABLE LINER
PPP	PERFORATED PLASTIC PIPE
PRC	POINT OF REVERSE CURVE
PRF	PAVEMENT REINFORCING FABRIC
PRVC	POINT OF REVERSE VERTICAL CURVE
PS&E	PLANS, SPECIFICATIONS AND ESTIMATES
PS, P/S	PRESTRESSED
PSP	PERFORATED STEEL PIPE
PT	POINT OF TANGENCY
PVC	POLYVINYL CHLORIDE
Pvmt	PAVEMENT

Q

Qty	QUANTITY

R

R	RADIUS
R & D	REMOVE AND DISPOSE
R & S	REMOVE AND SALVAGE
R/C	RATE OF CHANGE
RCA	REINFORCED CONCRETE ARCH
RCB	REINFORCED CONCRETE BOX
RCP	REINFORCED CONCRETE PIPE
RCPA	REINFORCED CONCRETE PIPE ARCH
Rd	ROAD
Reinf	REINFORCED, REINFORCEMENT, REINFORCING
Rel	RELOCATE
Repl	REPLACEMENT
Ret	RETAINING
Rev	REVISED, REVISION
Rdwy	ROADWAY
RHMA	RUBBERIZED HOT MIX ASPHALT
Riv	RIVER
RM	ROAD-MIXED
RP	RADIUS POINT, REFERENCE POINT
RR	RAILROAD
RSP	ROCK SLOPE PROTECTION, REVISED STANDARD PLAN
Rt	RIGHT
Rte	ROUTE
RW	REDWOOD, RETAINING WALL
R/W	RIGHT OF WAY
Rwy	RAILWAY

S

S	SOUTH, SUPPLEMENT
SAE	STRUCTURE APPROACH EMBANKMENT
Salv	SALVAGE
SAPP	STRUCTURAL ALUMINUM PLATE PIPE
SB	SOUTHBOUND
SC	SAND CUSHION
SCSP	SLOTTED CORRUGATED STEEL PIPE
SD	STORM DRAIN
Sec	SECOND, SECTION
Sep	SEPARATION
SG	SUBGRADE
Shld	SHOULDER
Sht	SHEET
Sim	SIMILAR
℄	STATION LINE
SM	SELECTED MATERIAL
Spec	SPECIAL, SPECIFICATIONS
SPP	SLOTTED PLASTIC PIPE
SS	SLOPE STAKE
SSBM	STRAP AND SADDLE BRACKET METHOD
SSD	STRUCTURAL SECTION DRAIN
SSPA	STRUCTURAL STEEL PLATE ARCH
SSPP	STRUCTURAL STEEL PLATE PIPE
SSPPA	STRUCTURAL STEEL PLATE PIPE ARCH
SSRP	STEEL SPIRAL RIB PIPE
St	STREET
Sta	STATION
STBB	SINGLE THRIE BEAM BARRIER
Std	STANDARD
Str	STRUCTURE
Surf	SURFACING
SW	SIDEWALK, SOUND WALL
Swr	SEWER
Sym	SYMMETRICAL
S4S	SURFACE 4 SIDES

T

T	SEMI-TANGENT
Tan	TANGENT
TBB	THRIE BEAM BARRIER
Tbr	TIMBER
TC	TOP OF CURB
TCB	TRAFFIC CONTROL BOX
TCE	TEMPORARY CONSTRUCTION EASEMENT
Tel	TELEPHONE
Temp	TEMPORARY
TG	TOP OF GRADE
Tot	TOTAL
TP	TELEPHONE POLE
TPB	TREATED PERMEABLE BASE
TPM	TREATED PERMEABLE MATERIAL
Trans	TRANSITION

T continued

TS	TRANSVERSE, TRAFFIC SIGNAL, TUBULAR STEEL
Typ	TYPICAL

U

UC	UNDERCROSSING
UD	UNDERDRAIN
UG	UNDERGROUND
UON	UNLESS OTHERWISE NOTED
UP	UNDERPASS

V

V	VALVE, DESIGN SPEED
Var	VARIABLE, VARIES
VC	VERTICAL CURVE
VCP	VITRIFIED CLAY PIPE
Vert	VERTICAL
Via	VIADUCT
Vol	VOLUME

W

W	WEST, WIDTH
WB	WESTBOUND
WH	WEEP HOLE
WM	WIRE MESH
WS	WATER SURFACE
WSP	WELDED STEEL PIPE
Wt	WEIGHT
WV	WATER VALVE
WW	WINGWALL
WWLOL	WINGWALL LAYOUT LINE

X

X Sec	CROSS SECTION
Xing	CROSSING

Y

Yr	YEAR
Yrs	YEARS

Dist	COUNTY	ROUTE	POST MILES TOTAL PROJECT	SHEET NO.	TOTAL SHEETS
07	LA	5	19.2/28.9	145	217

Grace M. Tsushima
REGISTERED CIVIL ENGINEER

July 19, 2013
PLANS APPROVAL DATE

REGISTERED PROFESSIONAL ENGINEER
Grace M. Tsushima
No. C49814
Exp. 9-30-14
CIVIL
STATE OF CALIFORNIA

THE STATE OF CALIFORNIA OR ITS OFFICERS OR AGENTS SHALL NOT BE RESPONSIBLE FOR THE ACCURACY OR COMPLETENESS OF SCANNED COPIES OF THIS PLAN SHEET.

TO ACCOMPANY PLANS DATED 2-10-14

UNIT OF MEASUREMENT SYMBOLS:

Some of the symbols used in the project plan quantity tables and in the Bid Item List are:

TABLE A

SYMBOL USED	DEFINITIONS
ACRE	ACRE
CF	CUBIC FOOT
CY	CUBIC YARD
EA	EACH
GAL	GALLON
LB	POUND
LF	LINEAR FOOT
SQFT	SQUARE FOOT
SQYD	SQUARE YARD
STA	100 FEET
TAB	TABLET
TON	2,000 POUNDS

Some of the symbols used in the plans other than in the project plan quantity tables are:

TABLE B

SYMBOL USED	DEFINITIONS
ksi	KIPS PER SQUARE INCH
ksf	KIPS PER SQUARE FOOT
psi	POUNDS PER SQUARE INCH
psf	POUNDS PER SQUARE FOOT
lb/ft^3, pcf	POUNDS PER CUBIC FOOT
tsf	TONS PER SQUARE FOOT
mph, MPH *	MILES PER HOUR
ø	NOMINAL DIAMETER
oz	OUNCE
lb	POUND
kip	1,000 POUNDS
cal	CALORIE
ft	FOOT OR FEET
gal	GALLON

* For use on a sign panel only

STATE OF CALIFORNIA
DEPARTMENT OF TRANSPORTATION

ABBREVIATIONS (SHEET 2 OF 2)

NO SCALE

RSP A10B DATED JULY 19, 2013 SUPERSEDES STANDARD PLAN A10B
DATED MAY 20, 2011 - PAGE 2 OF THE STANDARD PLANS BOOK DATED 2010.

REVISED STANDARD PLAN RSP A10B

2010 REVISED STANDARD PLAN RSP A10B

6-7-13

Dist	COUNTY	ROUTE	POST MILES TOTAL PROJECT	SHEET No.	TOTAL SHEETS
07	LA	5	19.2/28.9	146	217

REGISTERED CIVIL ENGINEER

July 19, 2013
PLANS APPROVAL DATE

REGISTERED PROFESSIONAL ENGINEER Roberta L. McLaughlin No. C40375 Exp. 3-31-15 CIVIL STATE OF CALIFORNIA

THE STATE OF CALIFORNIA OR ITS OFFICERS OR AGENTS SHALL NOT BE RESPONSIBLE FOR THE ACCURACY OR COMPLETENESS OF SCANNED COPIES OF THIS PLAN SHEET.

TO ACCOMPANY PLANS DATED 2-10-14

EXIT RAMP NEUTRAL AREA (GORE) TREATMENT

DETAIL 36

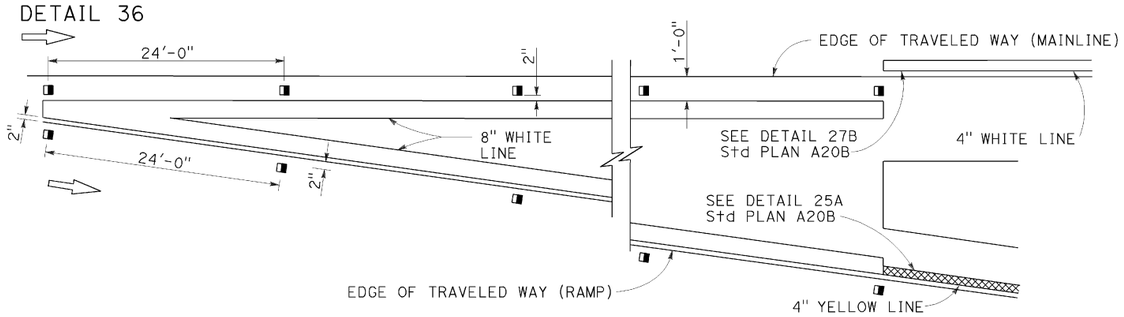

ENTRANCE RAMP NEUTRAL AREA (MERGE) TREATMENT

DETAIL 36A

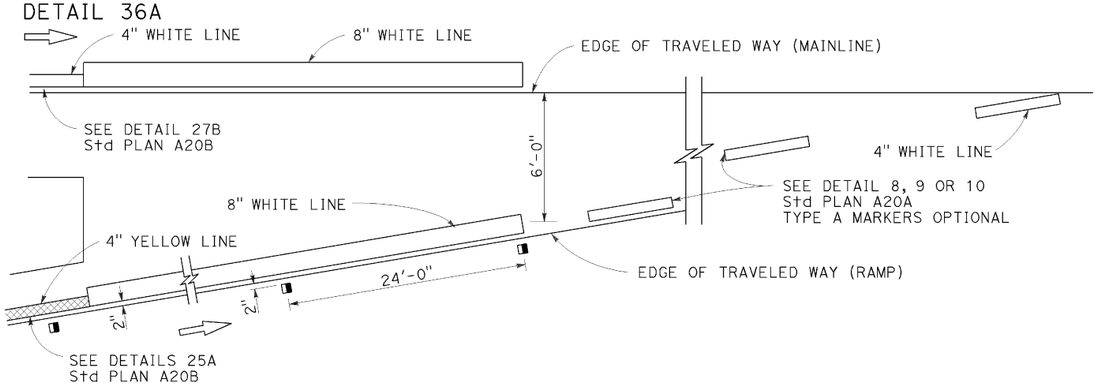

ENTRANCE RAMP NEUTRAL AREA (ACCELERATION LANE) TREATMENT

DETAIL 36B

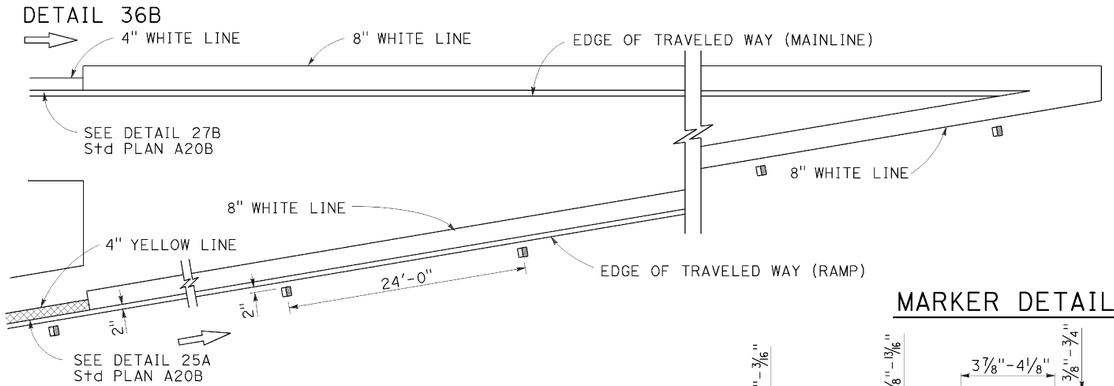

LANE DROP AT EXIT RAMPS

DETAIL 37

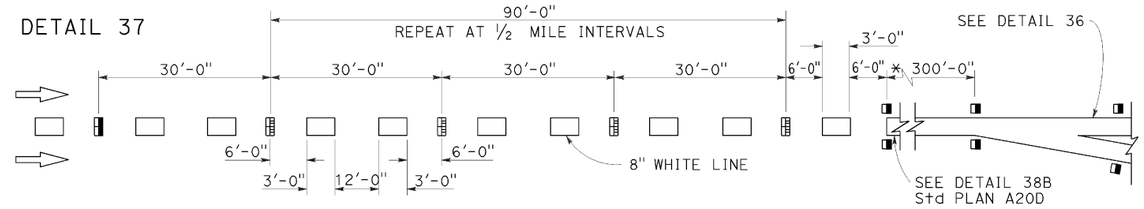

DETAIL 37A

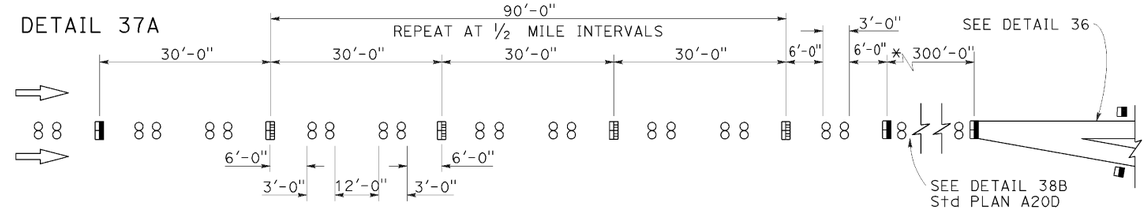

* The solid channelizing line shown may be omitted on short auxiliary lanes where weaving length is critical.

LANE DROP AT INTERSECTIONS

DETAIL 37B

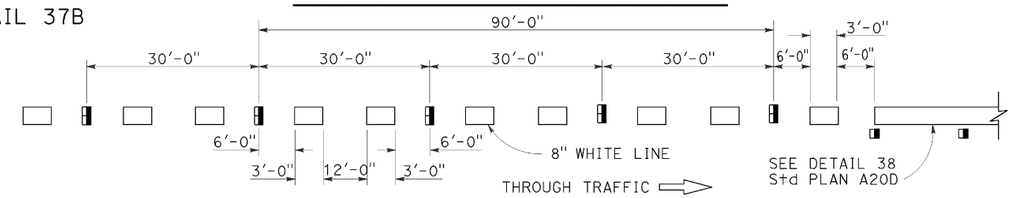

DETAIL 37C

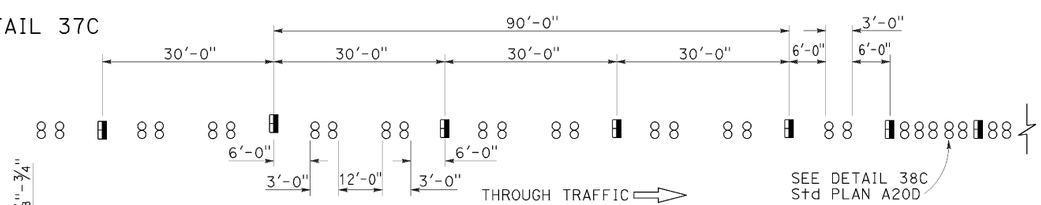

MARKER DETAILS

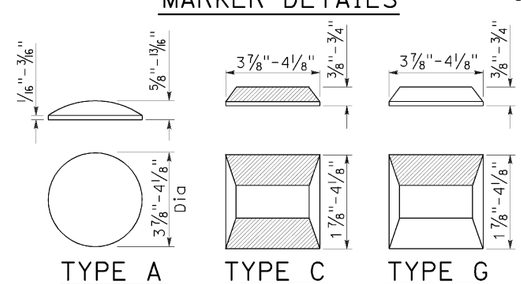

LEGEND:

MARKERS

- ○ TYPE A WHITE NON-REFLECTIVE
- ⊞ TYPE C RED-CLEAR RETROREFLECTIVE
- ◨ TYPE G ONE-WAY CLEAR RETROREFLECTIVE

STATE OF CALIFORNIA
DEPARTMENT OF TRANSPORTATION

PAVEMENT MARKERS AND TRAFFIC LINE TYPICAL DETAILS

NO SCALE

RSP A20C DATED JULY 19, 2013 SUPERSEDES STANDARD PLAN A20C DATED MAY 20, 2011 - PAGE 11 OF THE STANDARD PLANS BOOK DATED 2010.

REVISED STANDARD PLAN RSP A20C

2010 REVISED STANDARD PLAN RSP A20C

4-29-13

Dist	COUNTY	ROUTE	POST MILES TOTAL PROJECT	SHEET NO.	TOTAL SHEETS
07	LA	5	19.2/28.9	147	217

REGISTERED CIVIL ENGINEER

April 20, 2012
PLANS APPROVAL DATE

REGISTERED PROFESSIONAL ENGINEER
Roberta L. McLaughlin
No. C40375
Exp. 3-31-13
CIVIL
STATE OF CALIFORNIA

THE STATE OF CALIFORNIA OR ITS OFFICERS OR AGENTS SHALL NOT BE RESPONSIBLE FOR THE ACCURACY OR COMPLETENESS OF SCANNED COPIES OF THIS PLAN SHEET.

TO ACCOMPANY PLANS DATED 2-10-14

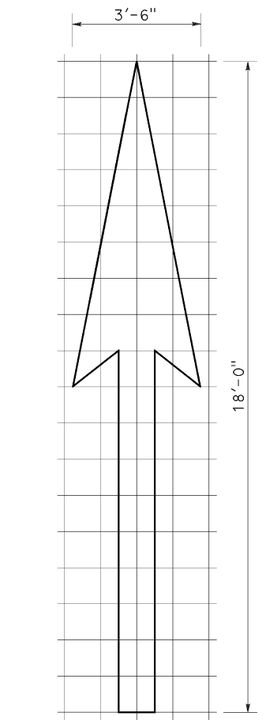

A=25 ft^2

TYPE I 18'-0" ARROW

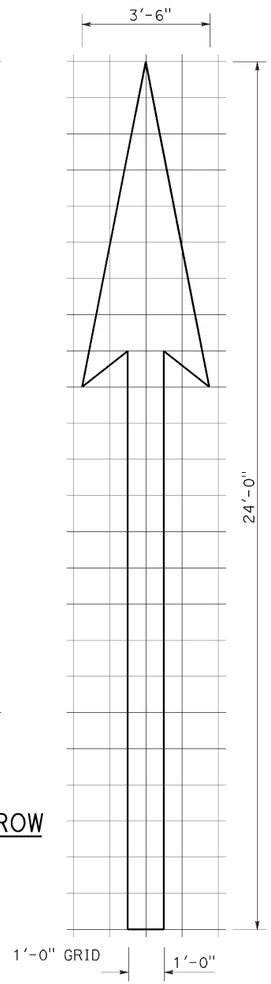

A=31 ft^2

TYPE I 24'-0" ARROW

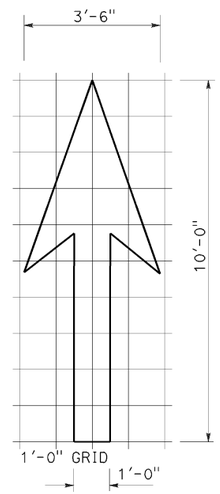

A=14 ft^2

TYPE I 10'-0" ARROW

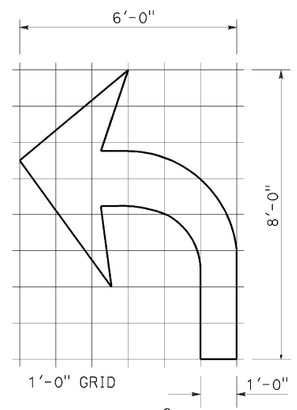

A=15 ft^2

TYPE IV (L) ARROW

(For Type IV (R) arrow, use mirror image)

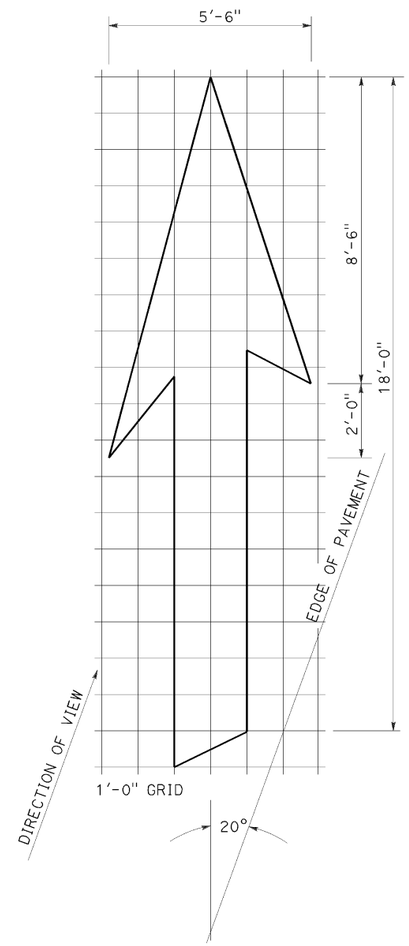

A=42 ft^2

TYPE VI ARROW

Right lane drop arrow (For left lane, use mirror image)

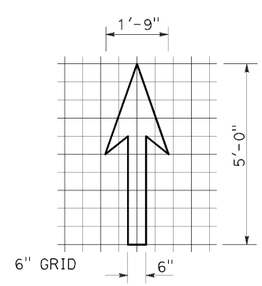

A=3.5 ft^2

BIKE LANE ARROW

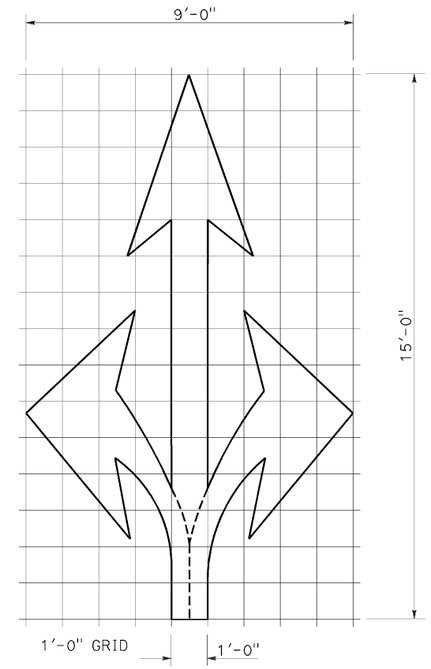

A=36 ft^2

TYPE VIII ARROW

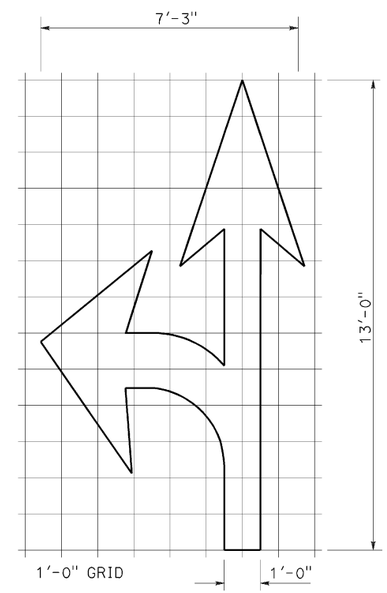

A=27 ft^2

TYPE VII (L) ARROW

(For Type VII (R) arrow, use mirror image)

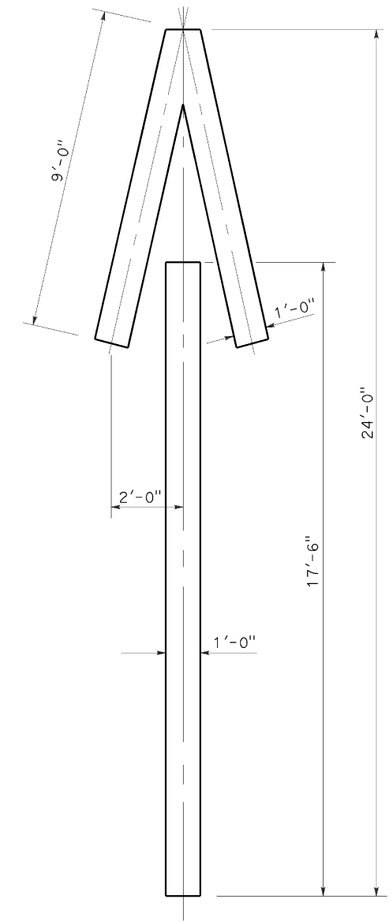

A=33 ft^2

TYPE V ARROW

NOTE:
Minor variations in dimensions may be accepted by the Engineer.

STATE OF CALIFORNIA
DEPARTMENT OF TRANSPORTATION

PAVEMENT MARKINGS ARROWS

NO SCALE

RSP A24A DATED APRIL 20, 2012 SUPERSEDES STANDARD PLAN A24A DATED MAY 20, 2011 - PAGE 13 OF THE STANDARD PLANS BOOK DATED 2010.

REVISED STANDARD PLAN RSP A24A

2010 REVISED STANDARD PLAN RSP A24A

3-14-12

Dist	COUNTY	ROUTE	POST MILES TOTAL PROJECT	SHEET No.	TOTAL SHEETS
07	LA	5	19.2/28.9	148	217

REGISTERED CIVIL ENGINEER

October 19, 2012
PLANS APPROVAL DATE

REGISTERED PROFESSIONAL ENGINEER
Roberta L. McLaughlin
No. C40375
Exp. 3-31-13
CIVIL
STATE OF CALIFORNIA

THE STATE OF CALIFORNIA OR ITS OFFICERS OR AGENTS SHALL NOT BE RESPONSIBLE FOR THE ACCURACY OR COMPLETENESS OF SCANNED COPIES OF THIS PLAN SHEET.

NOTE: TO ACCOMPANY PLANS DATED 2-10-14

Minor variations in dimensions may be accepted by the Engineer.

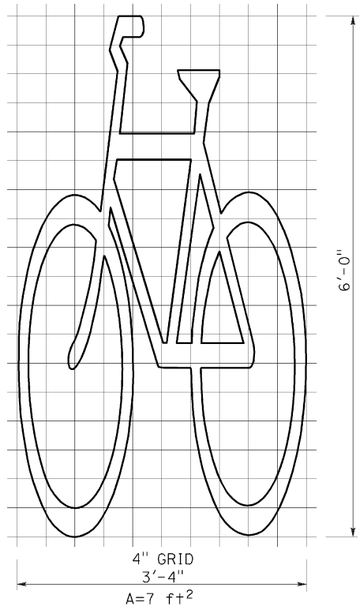

BIKE LANE SYMBOL WITHOUT PERSON

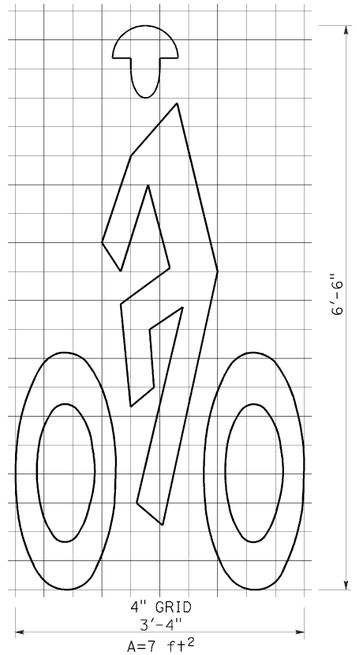

BIKE LANE SYMBOL WITH PERSON

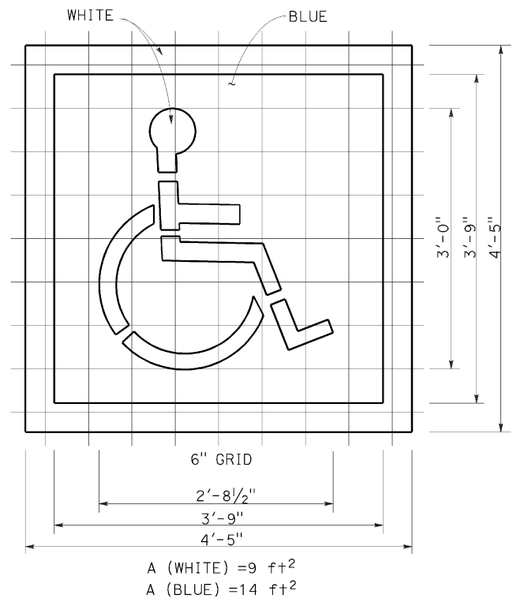

INTERNATIONAL SYMBOL OF ACCESSIBILITY (ISA) MARKING

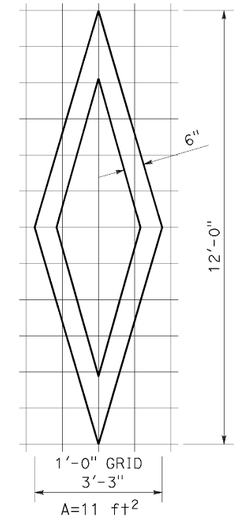

DIAMOND SYMBOL

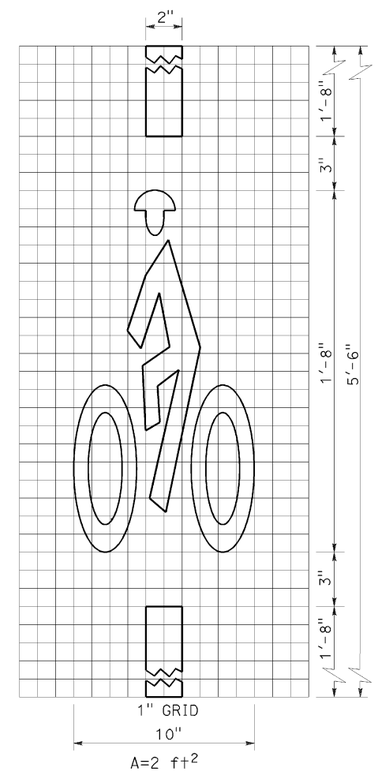

BICYCLE LOOP DETECTOR SYMBOL

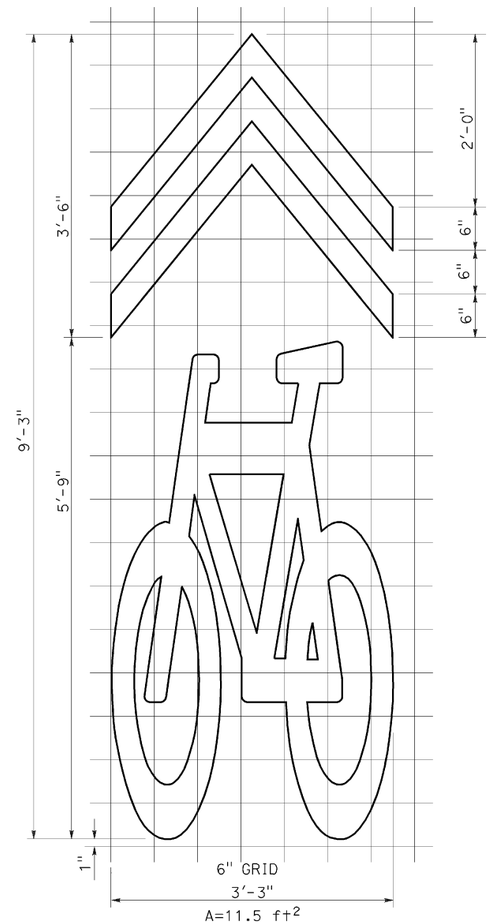

SHARED ROADWAY BICYCLE MARKING

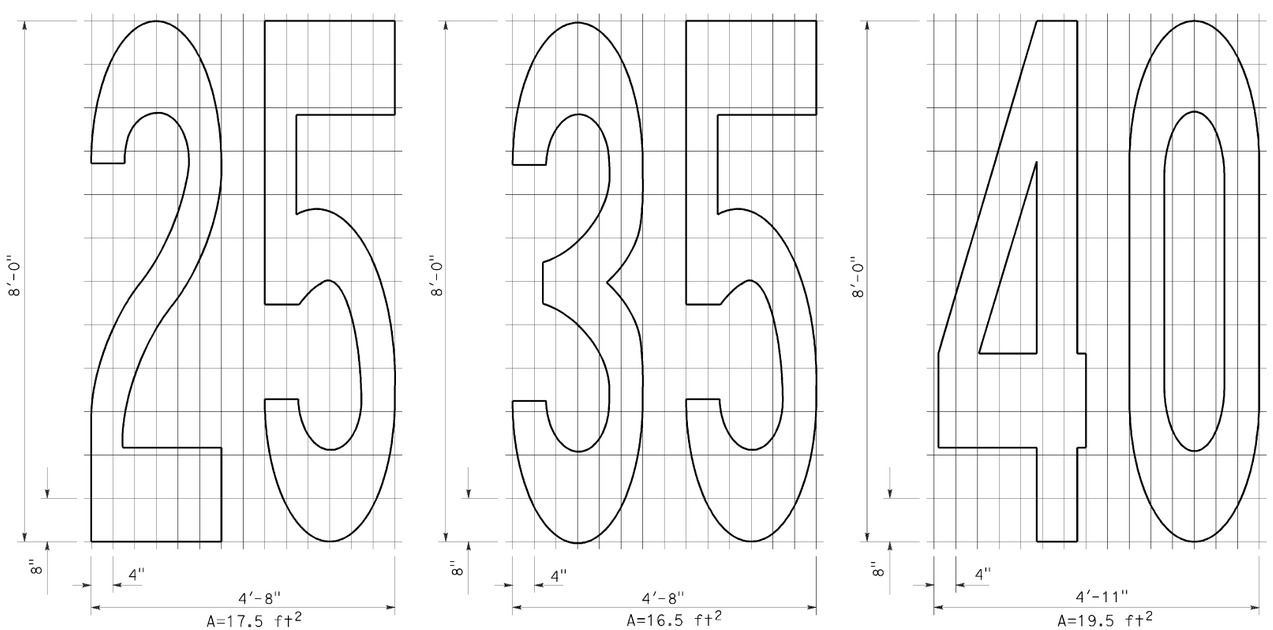

NUMERALS

STATE OF CALIFORNIA
DEPARTMENT OF TRANSPORTATION

PAVEMENT MARKINGS SYMBOLS AND NUMERALS

NO SCALE

RSP A24C DATED OCTOBER 19, 2012 SUPERSEDES STANDARD PLAN A24C DATED MAY 20, 2011 - PAGE 15 OF THE STANDARD PLANS BOOK DATED 2010.

REVISED STANDARD PLAN RSP A24C

2010 REVISED STANDARD PLAN RSP A24C

6-28-12

Dist	COUNTY	ROUTE	POST MILES TOTAL PROJECT	SHEET No.	TOTAL SHEETS
07	LA	5	19.2/28.9	149	217

REGISTERED CIVIL ENGINEER

July 20, 2012
PLANS APPROVAL DATE

REGISTERED PROFESSIONAL ENGINEER
Roberta L. McLaughlin
No. C40375
Exp. 3-31-13
CIVIL
STATE OF CALIFORNIA

THE STATE OF CALIFORNIA OR ITS OFFICERS OR AGENTS SHALL NOT BE RESPONSIBLE FOR THE ACCURACY OR COMPLETENESS OF SCANNED COPIES OF THIS PLAN SHEET.

TO ACCOMPANY PLANS DATED 2-10-14

2010 REVISED STANDARD PLAN RSP A24E

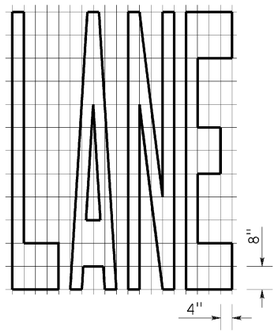

A=24 ft^2

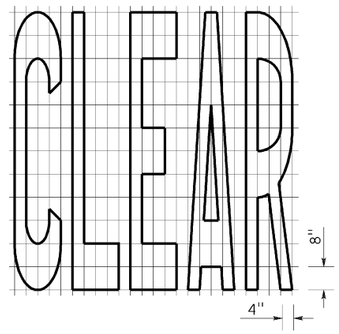

A=27 ft^2

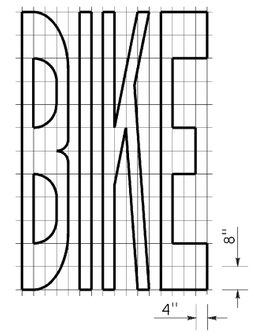

A=21 ft^2

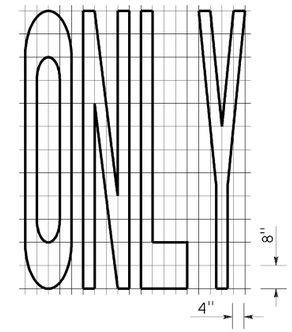

A=22 ft^2

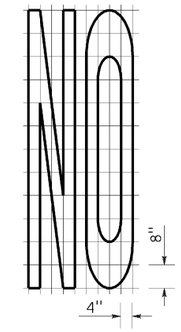

A=14 ft^2

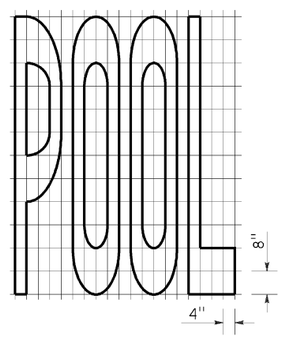

A=23 ft^2

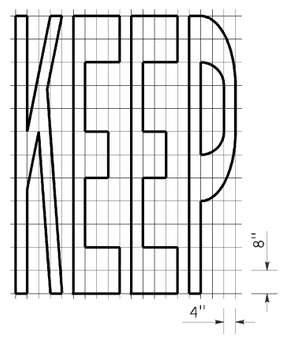

A=24 ft^2

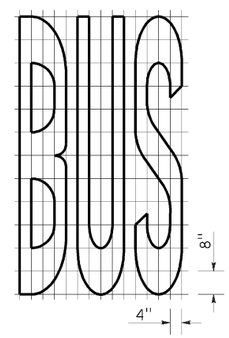

A=20 ft^2

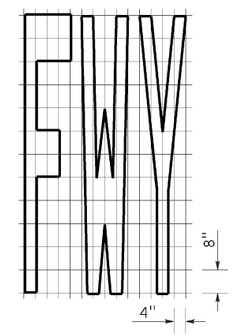

A=16 ft^2

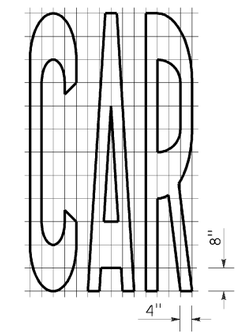

A=17 ft^2

WORD MARKINGS			
ITEM	ft^2	ITEM	ft^2
LANE	24	NO	14
POOL	23	BIKE	21
CAR	17	BUS	20
CLEAR	27	ONLY	22
KEEP	24	FWY	16

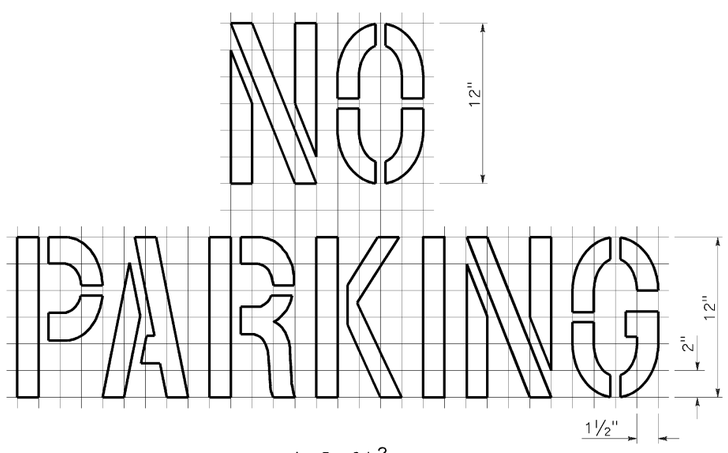

A=2 ft^2

See Notes 6 and 7

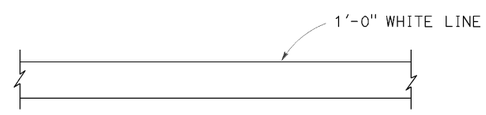

LIMIT LINE (STOP LINE)

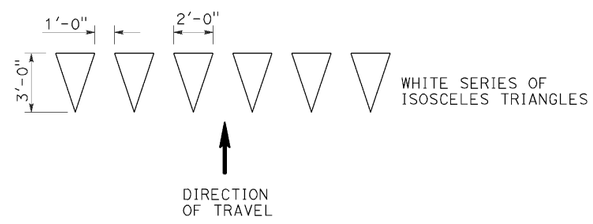

YIELD LINE

NOTES:

1. If a message consists of more than one word, it should read "UP", i.e., the first word should be nearest the driver.
2. The space between words should be at least four times the height of the characters for low speed roads, but not more than ten times the height of the characters. The space may be reduced appropriately where there is limited space because of local conditions.
3. Minor variations in dimensions may be accepted by the Engineer.
4. Portions of a letter, number or symbol may be separated by connecting segments not to exceed 2" in width.
5. The words "NO PARKING" pavement marking is to be used for parking facilities. For typical locations of markings, see Standard Plans A90A and A90B.
6. The words "NO PARKING", shall be painted in white letters no less than 1'-0" high on a contrasting background and located so that it is visible to traffic enforcement officials.

STATE OF CALIFORNIA
DEPARTMENT OF TRANSPORTATION

PAVEMENT MARKINGS WORDS, LIMIT AND YIELD LINES

NO SCALE

RSP A24E DATED JULY 20, 2012 SUPERSEDES STANDARD PLAN A24E
DATED MAY 20, 2011 - PAGE 17 OF THE STANDARD PLANS BOOK DATED 2010.

REVISED STANDARD PLAN RSP A24E

6-12-12

Dist	COUNTY	ROUTE	POST MILES TOTAL PROJECT	SHEET No.	TOTAL SHEETS
07	LA	5	19.2/28.9	150	217

REGISTERED CIVIL ENGINEER

July 20, 2012
PLANS APPROVAL DATE

REGISTERED PROFESSIONAL ENGINEER
Roberta L. McLaughlin
No. C40375
Exp. 3-31-13
CIVIL
STATE OF CALIFORNIA

THE STATE OF CALIFORNIA OR ITS OFFICERS OR AGENTS SHALL NOT BE RESPONSIBLE FOR THE ACCURACY OR COMPLETENESS OF SCANNED COPIES OF THIS PLAN SHEET.

TO ACCOMPANY PLANS DATED 2-10-14

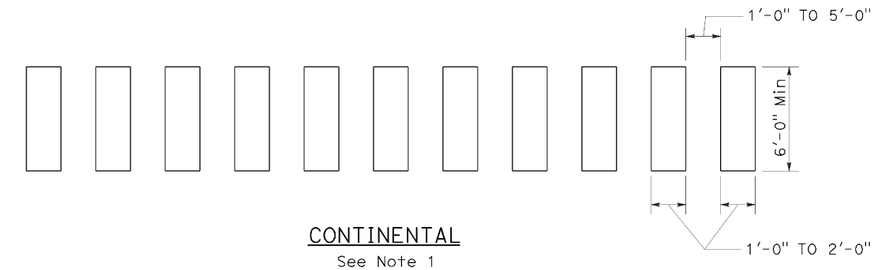

CONTINENTAL
See Note 1

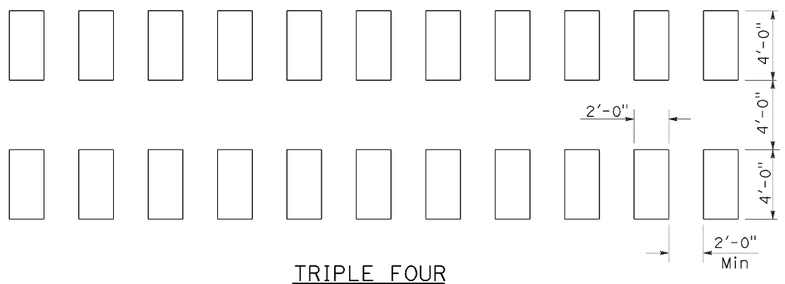

TRIPLE FOUR
See Note 1

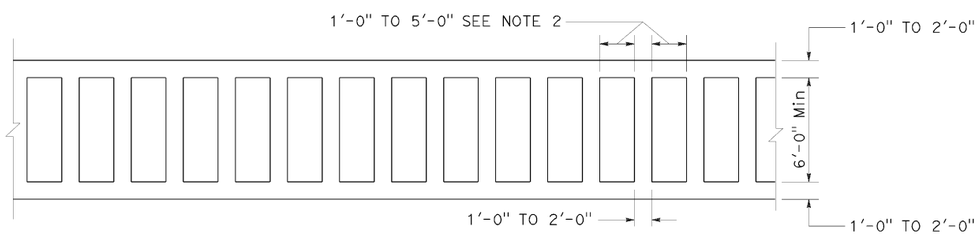

LADDER

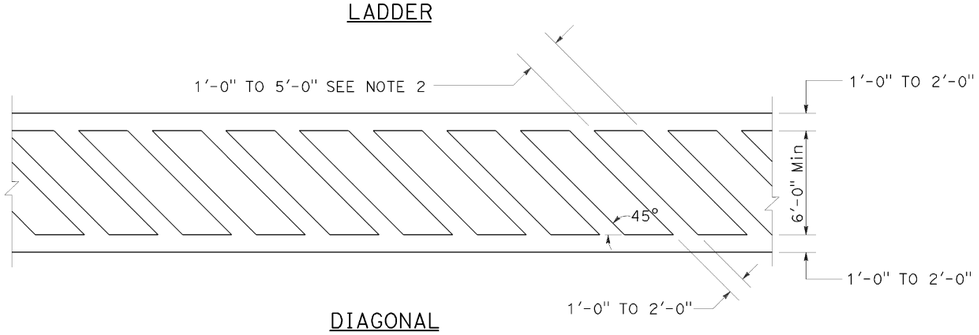

DIAGONAL

HIGHER VISIBILITY CROSSWALKS

NOTES:

1. Spaces between markings should be placed in wheel tracks of each lane.
2. Spacings not to exceed 2.5 times width of longitudinal line.
3. All crosswalk markings must be white except for those near schools must be yellow.

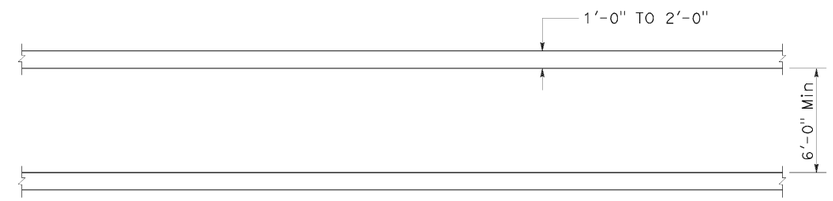

BASIC

STATE OF CALIFORNIA
DEPARTMENT OF TRANSPORTATION

PAVEMENT MARKINGS CROSSWALKS

NO SCALE

RSP A24F DATED JULY 20, 2012 SUPPLEMENTS THE STANDARD PLANS BOOK DATED 2010.

REVISED STANDARD PLAN RSP A24F

2010 REVISED STANDARD PLAN RSP A24F

6-28-12

Dist	COUNTY	ROUTE	POST MILES TOTAL PROJECT	SHEET No.	TOTAL SHEETS
07	LA	5	19.2/28.9	151	217

Randell D. Hiatt
REGISTERED CIVIL ENGINEER

July 19, 2013
PLANS APPROVAL DATE

Randell D. Hiatt No. C50200 Exp. 6-30-15 CIVIL STATE OF CALIFORNIA REGISTERED PROFESSIONAL ENGINEER

THE STATE OF CALIFORNIA OR ITS OFFICERS OR AGENTS SHALL NOT BE RESPONSIBLE FOR THE ACCURACY OR COMPLETENESS OF SCANNED COPIES OF THIS PLAN SHEET.

TO ACCOMPANY PLANS DATED 2-10-14

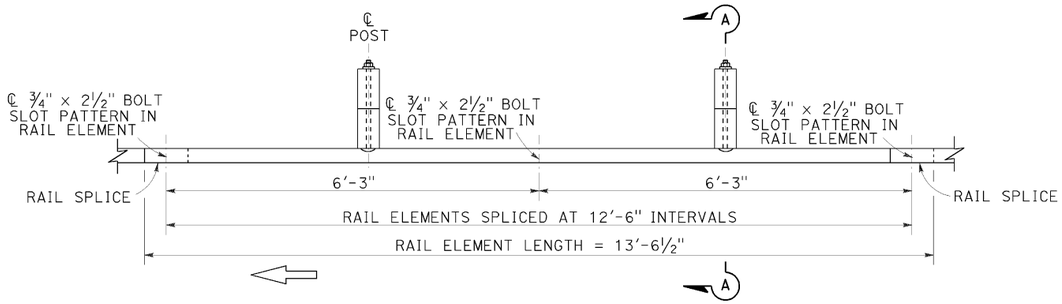

PLAN

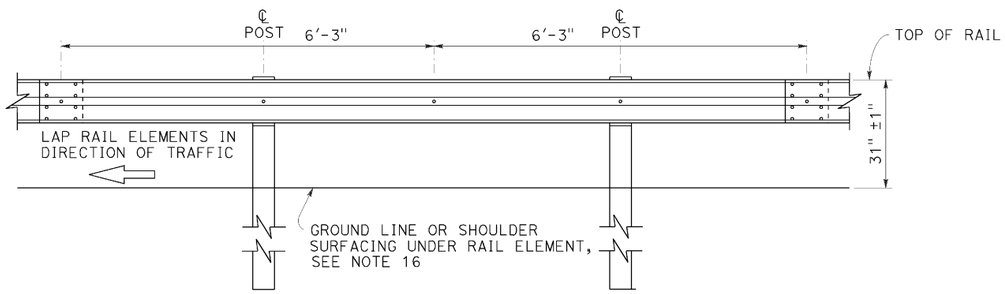

ELEVATION

MIDWEST GUARDRAIL SYSTEM WITH WOOD POST AND BLOCKS

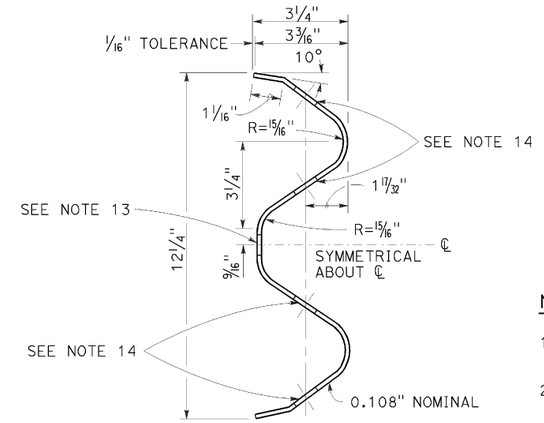

SECTION THRU RAIL ELEMENT

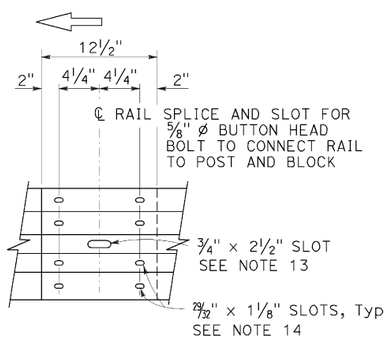

ELEVATION

RAIL ELEMENT SPLICE DETAIL

a) Connect the over lapped end of the rail elements with ⅝" ø x 1⅜" button head oval shoulder splice bolts inserted into the 29⁄32" x 1⅛" slots and bolted together with ⅝" ø recessed hex nuts. Recess of hex nut points toward rail element. A total of 8 bolts and nuts are to be used at each rail splice connection.

b) The ends of the rail elements are to be overlapped in the direction of traffic (see details).

c) Where end cap is to be attached to the end of a rail element, a total of 4 of the above described splice bolts and nuts are to be used.

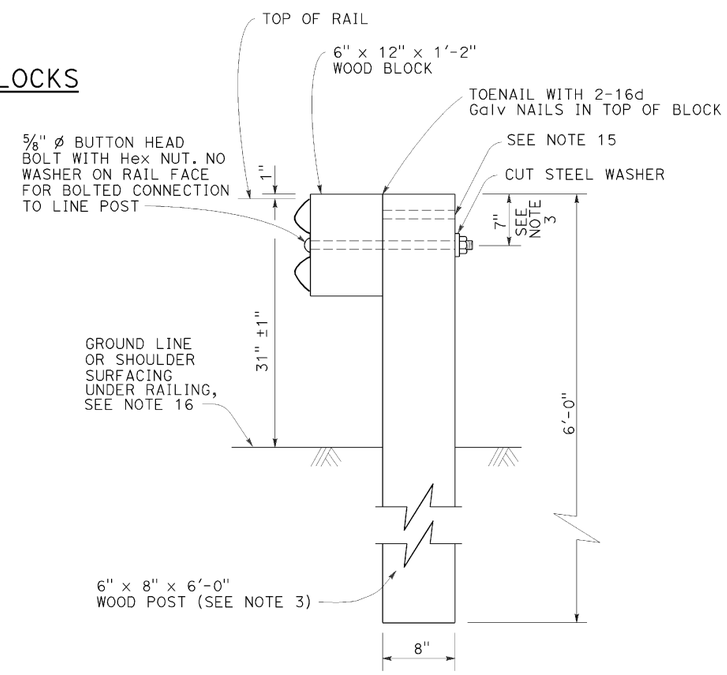

SECTION A-A

TYPICAL WOOD LINE POST INSTALLATION

See Note 4

NOTES:

1. For details of steel post installations, see Revised Standard Plan RSP A77L2.
2. For details of standard hardware used to construct MGS, see Revised Standard Plan RSP A77M1.
3. For details of wood posts and wood blocks used to construct MGS, see Revised Standard Plan RSP A77N1.
4. For additional installation details, see Revised Standard Plan RSP A77N3.
5. MGS post spacing to be 6'-3" center to center, except as otherwise noted.
6. For MGS typical layouts, see the A77P, A77Q and A77R Series of Standard Plans.
7. If railing is connected to terminal system end treatment, use 31" height terminal system end treatment.
8. For MGS end anchor details, see Revised Standard Plans RSP A77S1 and RSP A77T2.
9. For details of MGS transition to bridge railing, see Revised Standard Plan RSP A77U4.
10. For additional details of MSG connection to bridge railing, see Revised Standard Plans RSP A77U1, RSP A77U2 and RSP A77V1.
11. For MGS connection details to abutments and walls, see Revised Standard Plan RSP A77U3.
12. For typical MGS delineation and dike positioning details, see Revised Standard Plan RSP A77N4.
13. Slotted hole for bolted connection of rail element to block and post. See "Section Thru Rail Element".
14. Slotted holes for splice bolts to overlap ends of rail element. See "Section Thru Rail Element".
15. Additional hole in uppermost portion of line post is for potential future adjustments of railing height. See Revised Standard Plan RSP A77N1.
16. Install posts in soil.

STATE OF CALIFORNIA
DEPARTMENT OF TRANSPORTATION

MIDWEST GUARDRAIL SYSTEM STANDARD RAILING SECTION (WOOD POST WITH WOOD BLOCK)

NO SCALE

RSP A77L1 DATED JULY 19, 2013 SUPPLEMENTS STANDARD PLANS BOOK DATED 2010.

REVISED STANDARD PLAN RSP A77L1

2010 REVISED STANDARD PLAN RSP A77L1

7-3-13

Dist	COUNTY	ROUTE	POST MILES TOTAL PROJECT	SHEET No.	TOTAL SHEETS
07	LA	5	19.2/28.9	152	217

Randell D. Hiatt
REGISTERED CIVIL ENGINEER

July 19, 2013
PLANS APPROVAL DATE

REGISTERED PROFESSIONAL ENGINEER
Randell D. Hiatt
No. C50200
Exp. 6-30-15
CIVIL
STATE OF CALIFORNIA

THE STATE OF CALIFORNIA OR ITS OFFICERS OR AGENTS SHALL NOT BE RESPONSIBLE FOR THE ACCURACY OR COMPLETENESS OF SCANNED COPIES OF THIS PLAN SHEET.

TO ACCOMPANY PLANS DATED 2-10-14

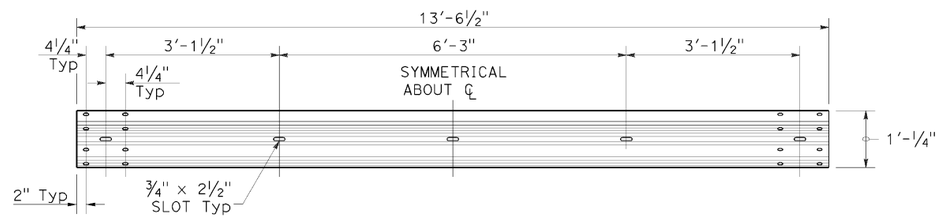

TYPICAL RAIL ELEMENT

NOTE:

1. Slotted holes for splice bolts to overlap ends of rail element.

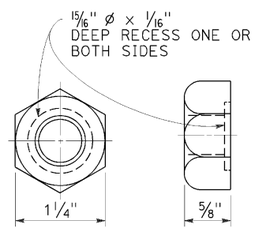

⅝" ø RECESS NUT

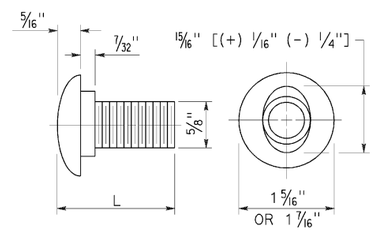

⅝" ø BUTTON HEAD BOLT

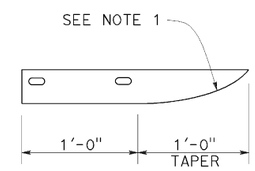

PLAN

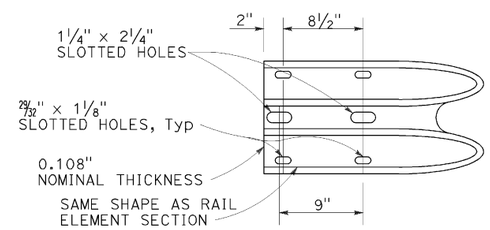

ELEVATION

END CAP
(TYPE A)

BUTTON HEAD BOLT

L	THREAD LENGTH
1⅜"	FULL THREAD LENGTH
2"	FULL THREAD LENGTH
10"	4" Min THREAD LENGTH
18"	4" Min THREAD LENGTH
20"	4" Min THREAD LENGTH
22"	4" Min THREAD LENGTH
26"	4" Min THREAD LENGTH
36"	4" Min THREAD LENGTH
** 2¾"	2" Min THREAD LENGTH
** 19"	4" Min THREAD LENGTH

** For nested rail applications.

STATE OF CALIFORNIA
DEPARTMENT OF TRANSPORTATION

MIDWEST GUARDRAIL SYSTEM STANDARD HARDWARE

NO SCALE

RSP A77M1 DATED JULY 19, 2013 SUPPLEMENTS THE STANDARD PLANS BOOK DATED 2010.

REVISED STANDARD PLAN RSP A77M1

2010 REVISED STANDARD PLAN RSP A77M1

7-3-13

Dist	COUNTY	ROUTE	POST MILES TOTAL PROJECT	SHEET No.	TOTAL SHEETS
07	LA	5	19.2/28.9	153	217

Randell D. Hiatt
REGISTERED CIVIL ENGINEER

July 19, 2013
PLANS APPROVAL DATE

REGISTERED PROFESSIONAL ENGINEER
Randell D. Hiatt
No. C50200
Exp. 6-30-15
CIVIL
STATE OF CALIFORNIA

THE STATE OF CALIFORNIA OR ITS OFFICERS OR AGENTS SHALL NOT BE RESPONSIBLE FOR THE ACCURACY OR COMPLETENESS OF SCANNED COPIES OF THIS PLAN SHEET.

TO ACCOMPANY PLANS DATED 2-10-14

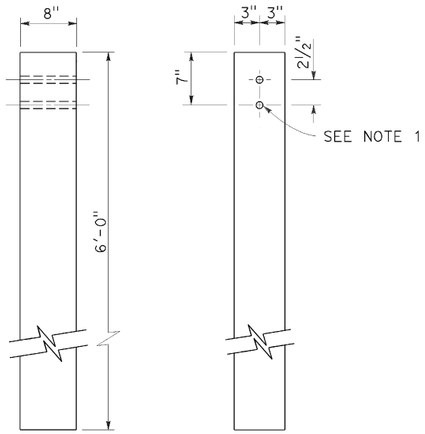

SIDE FRONT

6" x 8" WOOD POST
See Note 3

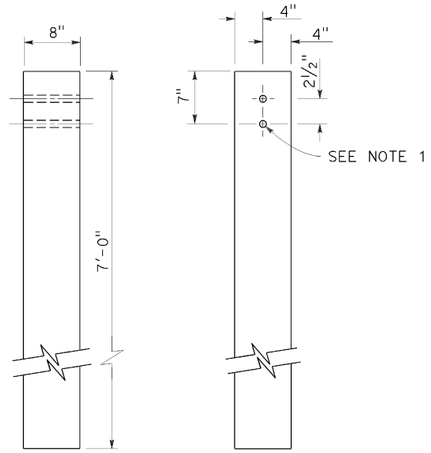

SIDE FRONT

8" x 8" WOOD POST
See Note 4

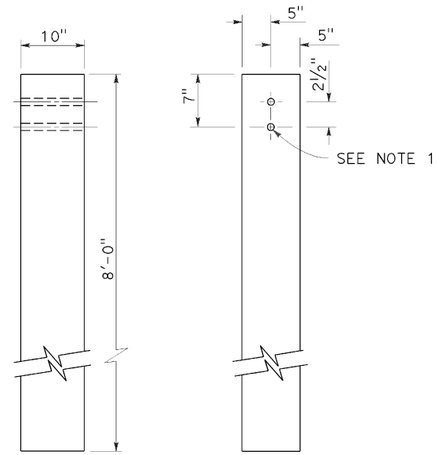

SIDE FRONT

10" x 10" WOOD POST
See Note 5

NOTES:

1. All holes in wood posts and blocks shall be 3/4" Dia ± 1/16".
2. Dimensions shown for wood post are nominal.
3. This post and block combination used for standard line post sections of MGS.
4. This post and 8" x 12" block combination used for line post sections of MGS on narrow roadways.
5. This post and 8" x 12" block combination is typically used where strengthened line post sections of MGS are warranted to shield fixed objects.
6. See Revised Standard Plan RSP A77L3 for use of 6" x 8" and 8" x 8" wood blocks.

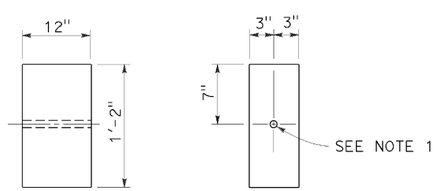

SIDE FRONT

6" x 12" WOOD BLOCK
See Note 3

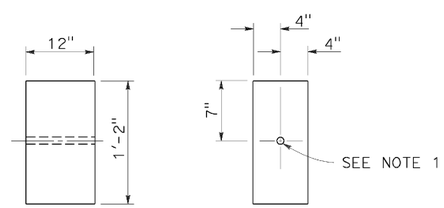

SIDE FRONT

8" x 12" WOOD BLOCK

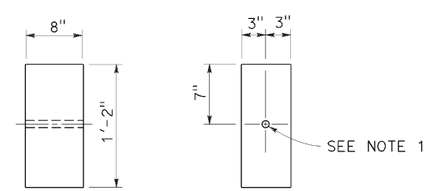

SIDE FRONT

6" x 8" WOOD BLOCK
Only for use with metal beam guard rail see Note 6

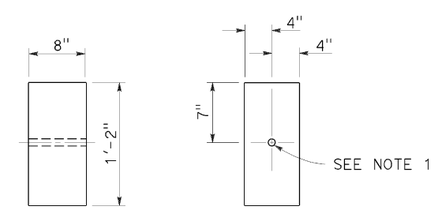

SIDE FRONT

8" x 8" WOOD BLOCK
Only for use with metal beam guard rail see Note 6

STATE OF CALIFORNIA
DEPARTMENT OF TRANSPORTATION

MIDWEST GUARDRAIL SYSTEM WOOD POST AND WOOD BLOCK DETAILS

NO SCALE

RSP A77N1 DATED JULY 19, 2013 SUPPLEMENTS THE STANDARD PLANS BOOK DATED 2010.

REVISED STANDARD PLAN RSP A77N1

2010 REVISED STANDARD PLAN RSP A77N1

7-3-13

Dist	COUNTY	ROUTE	POST MILES TOTAL PROJECT	SHEET No.	TOTAL SHEETS
07	LA	5	19.2/28.9	154	217

Randell D. Hiatt
REGISTERED CIVIL ENGINEER

November 15, 2013
PLANS APPROVAL DATE

REGISTERED PROFESSIONAL ENGINEER
Randell D. Hiatt
No. C50200
Exp. 6-30-15
CIVIL
STATE OF CALIFORNIA

THE STATE OF CALIFORNIA OR ITS OFFICERS OR AGENTS SHALL NOT BE RESPONSIBLE FOR THE ACCURACY OR COMPLETENESS OF SCANNED COPIES OF THIS PLAN SHEET.

TO ACCOMPANY PLANS DATED 2-10-14

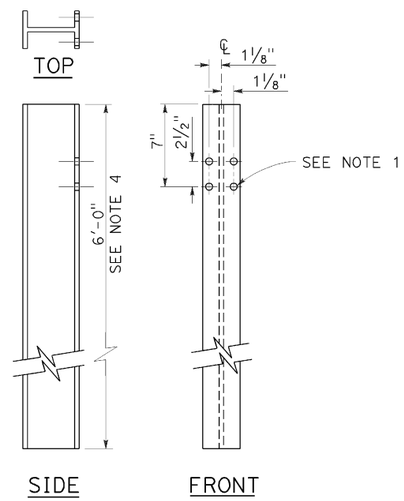

W6 x 9 OR W6 x 8.5
STEEL POST
See Note 4

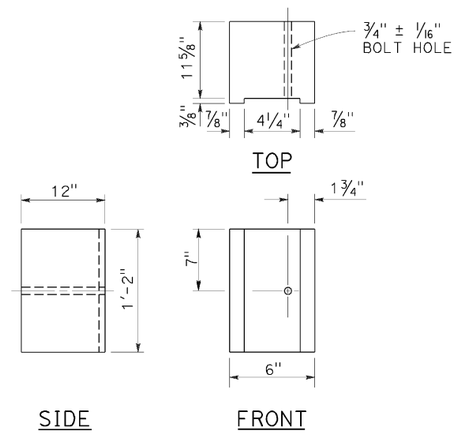

6" x 12"
NOTCHED WOOD BLOCK
See Notes 2 and 3

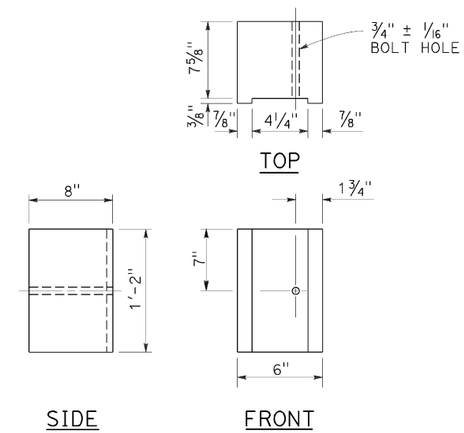

6" x 8"
NOTCHED WOOD BLOCK
Only for use with metal beam guard railing. See Note 5

NOTES:

1. All holes in steel post shall be 13/16" Dia maximum.
2. Dimensions shown for wood block are nominal.
3. Notched face of block faces steel post.
4. 6'-0" length posts to be used for typical roadway installation. See Revised Standard Plan RSP A77N3.
5. See Revised Standard Plan RSP A77L3 for use of 6" x 8" and 8" x 8" notched wood blocks.
6. This post and 8" x 12" block combination to be used for line post sections of MGS on narrow roadways and where strengthened line post sections of MGS are warranted to shield fixed objects.

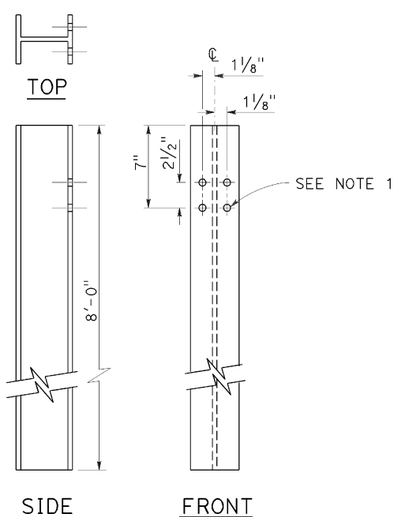

W6 x 15
STEEL POST
See Note 6

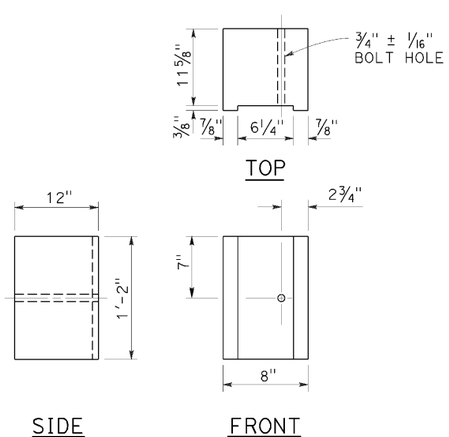

8" x 12"
NOTCHED WOOD BLOCK
See Notes 2 and 3

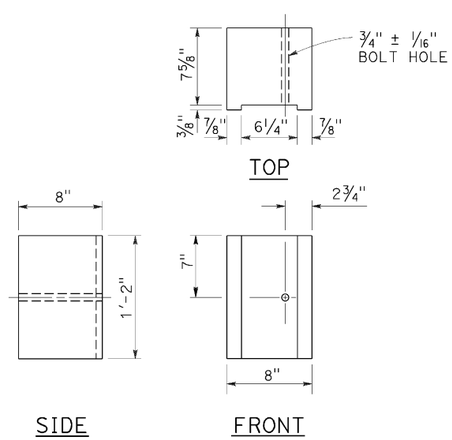

8" x 8"
NOTCHED WOOD BLOCK
Only for use with metal beam guard railing. See Note 5

STATE OF CALIFORNIA
DEPARTMENT OF TRANSPORTATION

MIDWEST GUARDRAIL SYSTEM STEEL POST AND NOTCHED WOOD BLOCK DETAILS

NO SCALE

RSP A77N2 DATED NOVEMBER 15, 2013 SUPERSEDES RSP A77N2 DATED JULY 19, 2013 THAT SUPPLEMENTS THE STANDARD PLANS BOOK DATED 2010.

REVISED STANDARD PLAN RSP A77N2

2010 REVISED STANDARD PLAN RSP A77N2

10-29-13

Dist	COUNTY	ROUTE	POST MILES TOTAL PROJECT	SHEET No.	TOTAL SHEETS
07	LA	5	19.2/28.9	155	217

Randell D. Hiatt
REGISTERED CIVIL ENGINEER

November 15, 2013
PLANS APPROVAL DATE

REGISTERED PROFESSIONAL ENGINEER
Randell D. Hiatt
No. C50200
Exp. 6-30-15
CIVIL
STATE OF CALIFORNIA

THE STATE OF CALIFORNIA OR ITS OFFICERS OR AGENTS SHALL NOT BE RESPONSIBLE FOR THE ACCURACY OR COMPLETENESS OF SCANNED COPIES OF THIS PLAN SHEET.

TO ACCOMPANY PLANS DATED 2-10-14

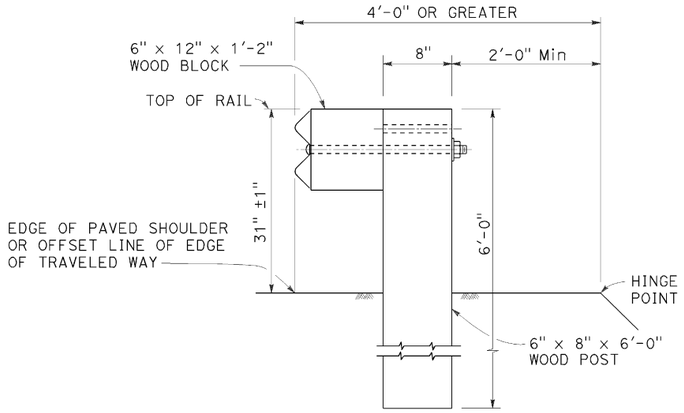

DETAIL A

TYPICAL ROADWAY INSTALLATION

See Note 1

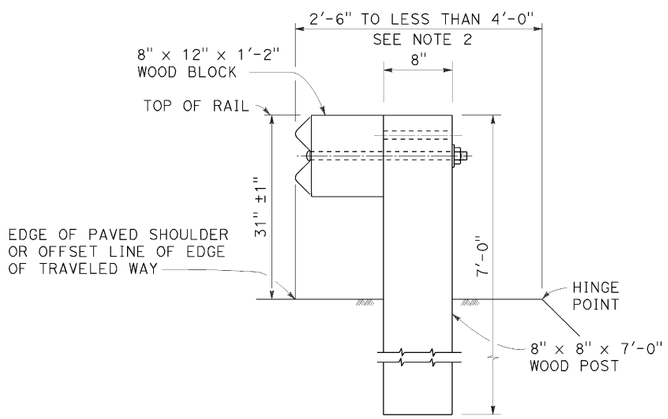

DETAIL B

NARROW ROADWAY INSTALLATION

See Note 1

POST EMBEDMENT

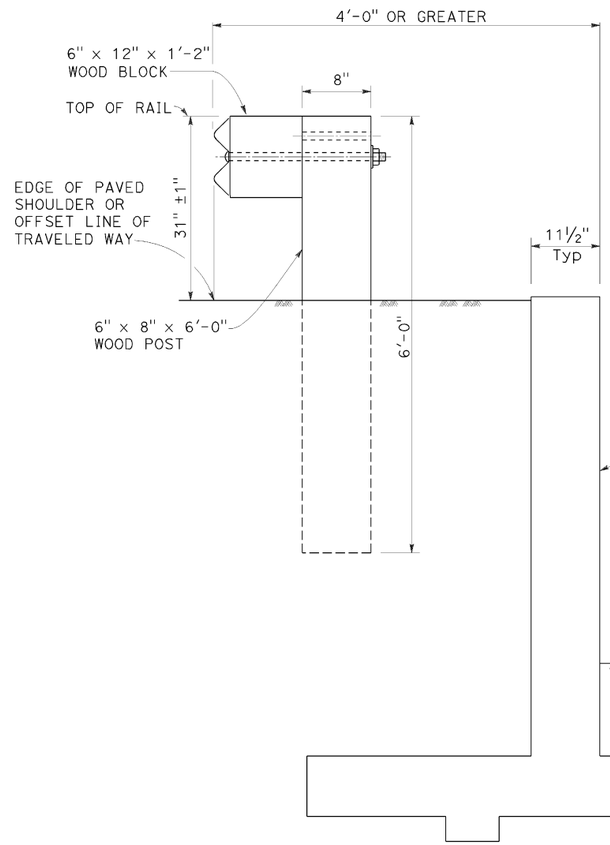

DETAIL C

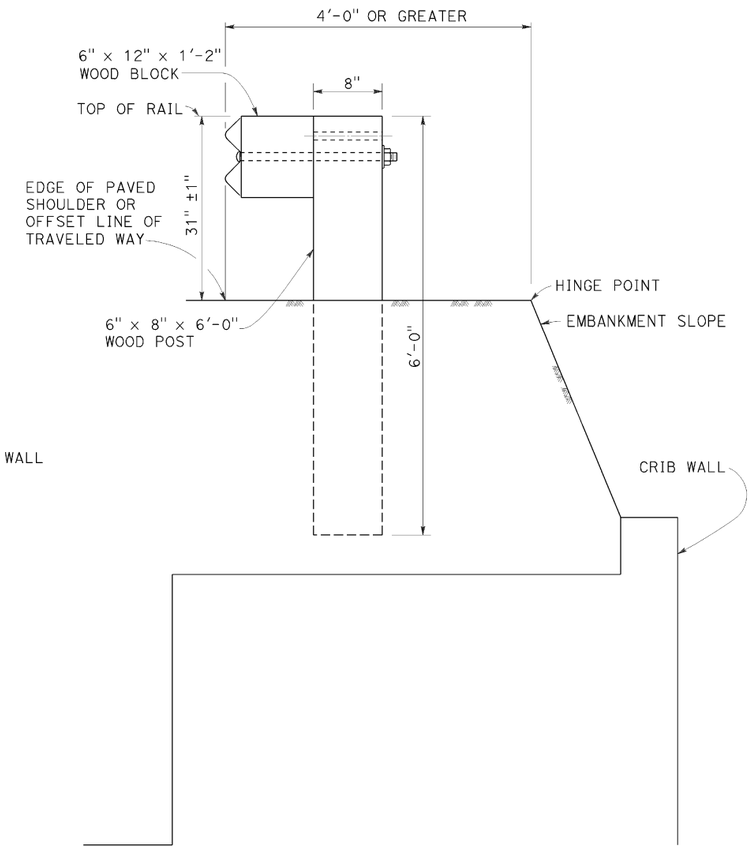

DETAIL D

INSTALLATION AT EARTH RETAINING WALLS

NOTES:

1. These installation details also applicable to steel line post installations. For Detail A, C, and D, where steel line post installations are constructed, W6 x 8.5 or W6 x 9 steel post, 6'-0" in length, with 6" x 12" x 1'-2" notched wood blocks or notched recycled plastic blocks are to be used in place of the size of wood post and wood block shown. For Detail B, where steel line post installations are constructed, W6 x 15 steel post, 8'-0" in length, with 8" x 12" x 1'-2" notched wood blocks or notched recycled plastic blocks are to be used in place of the size of wood post and wood block shown. For additional installation details, see Revised Standard Plan RSP A77L1 and RSP A77L2.
2. Where the distance between the face of the rail and the hinge point is less than 2'-6", see the Project Plans for special details.
3. For dike positioning with MGS installations, see Revised Standard Plan RSP A77N4.

STATE OF CALIFORNIA
DEPARTMENT OF TRANSPORTATION

MIDWEST GUARDRAIL SYSTEM TYPICAL LINE POST EMBEDMENT AND HINGE POINT OFFSET DETAILS

NO SCALE

RSP A77N3 DATED NOVEMBER 15, 2013 SUPERSEDES RSP A77N3 DATED JULY 19, 2013 THAT SUPPLEMENTS THE STANDARD PLANS BOOK DATED 2010.

REVISED STANDARD PLAN RSP A77N3

2010 REVISED STANDARD PLAN RSP A77N3

10-29-13

Dist	COUNTY	ROUTE	POST MILES TOTAL PROJECT	SHEET No.	TOTAL SHEETS
07	LA	5	19.2/28.9	156	217

Randell D. Hiatt
REGISTERED CIVIL ENGINEER

July 19, 2013
PLANS APPROVAL DATE

REGISTERED PROFESSIONAL ENGINEER
Randell D. Hiatt
No. C50200
Exp. 6-30-15
CIVIL
STATE OF CALIFORNIA

THE STATE OF CALIFORNIA OR ITS OFFICERS OR AGENTS SHALL NOT BE RESPONSIBLE FOR THE ACCURACY OR COMPLETENESS OF SCANNED COPIES OF THIS PLAN SHEET.

TO ACCOMPANY PLANS DATED 2-10-14

NOTES:

1. When necessary to place dike more than 7" in front of face of MGS, only Type C dike may be used. For dike details, see Revised Standard Plan RSP A87B.
2. For standard railing post embedment, see Revised Standard Plan RSP A77N3.
3. MGS delineation to be used where shown on the Project Plans.
4. When dike or curb is placed under MGS, the maximum height of the dike or curb shall be 6". Mountable dike should not be used. For dike and curb details, see Revised Standard Plans RSP A87A and RSP A87B.
5. For details of typical distance between the face of rail and hinge point, see Revised Standard Plan RSP A77N3.
6. For steel line posts, use 1/4 - 20 self-tapping screws in 0.22" diameter holes or 1/4" bolts in 9/32" diameter holes.

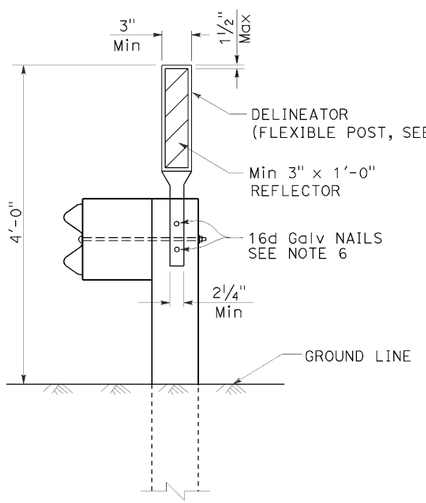

MGS DELINEATION

See Note 3

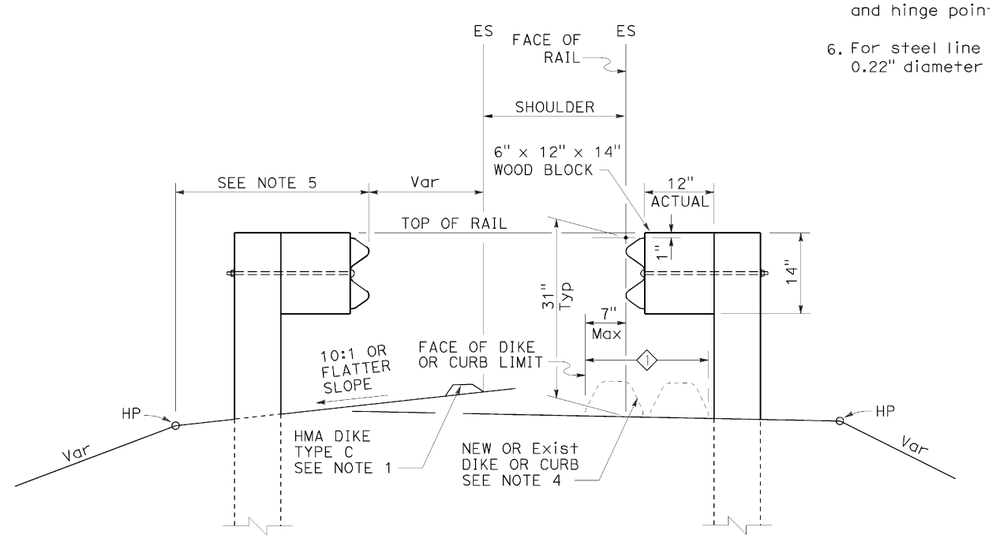

DIKE POSITIONING

See Note 1

◇1 PERMISSIBLE DIKE OR CURB PLACEMENT AREA

STATE OF CALIFORNIA
DEPARTMENT OF TRANSPORTATION

MIDWEST GUARDRAIL SYSTEM TYPICAL RAILING DELINEATION AND DIKE POSITIONING DETAILS

NO SCALE

RSP A77N4 DATED JULY 19, 2013 SUPPLEMENTS THE STANDARD PLANS BOOK DATED 2010.

REVISED STANDARD PLAN RSP A77N4

2010 REVISED STANDARD PLAN RSP A77N4

7-10-13

Dist	COUNTY	ROUTE	POST MILES TOTAL PROJECT	SHEET No.	TOTAL SHEETS
07	LA	5	19.2/28.9	157	217

Randell D. Hiatt
REGISTERED CIVIL ENGINEER

July 19, 2013
PLANS APPROVAL DATE

REGISTERED PROFESSIONAL ENGINEER
Randell D. Hiatt
No. C50200
Exp. 6-30-15
CIVIL
STATE OF CALIFORNIA

THE STATE OF CALIFORNIA OR ITS OFFICERS OR AGENTS SHALL NOT BE RESPONSIBLE FOR THE ACCURACY OR COMPLETENESS OF SCANNED COPIES OF THIS PLAN SHEET.

TO ACCOMPANY PLANS DATED 2-10-14

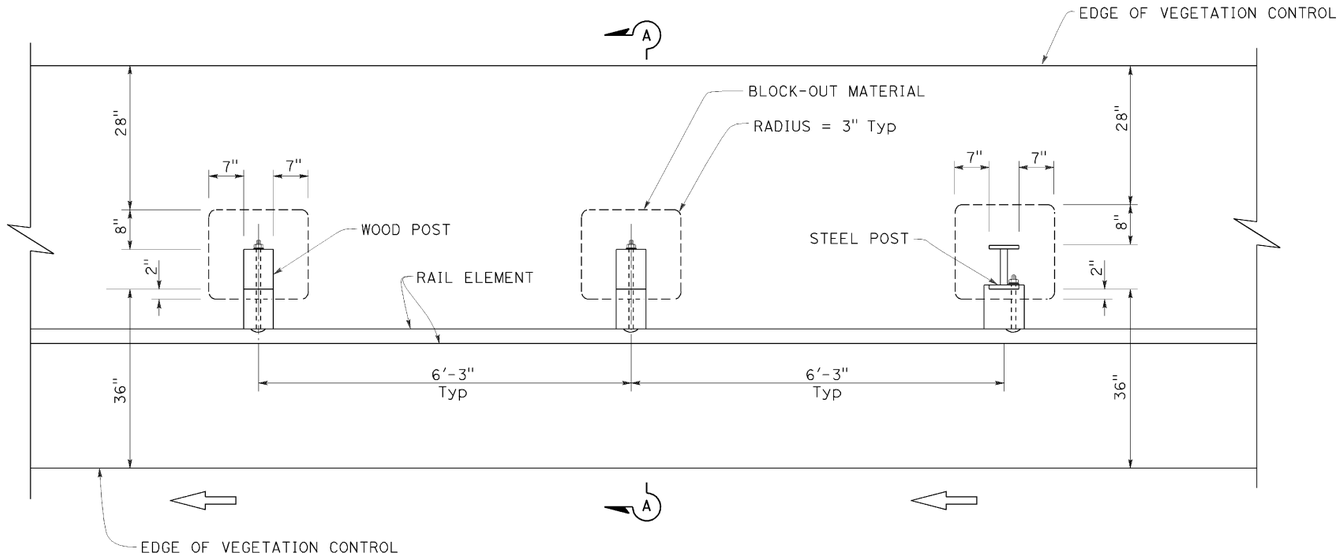

PLAN

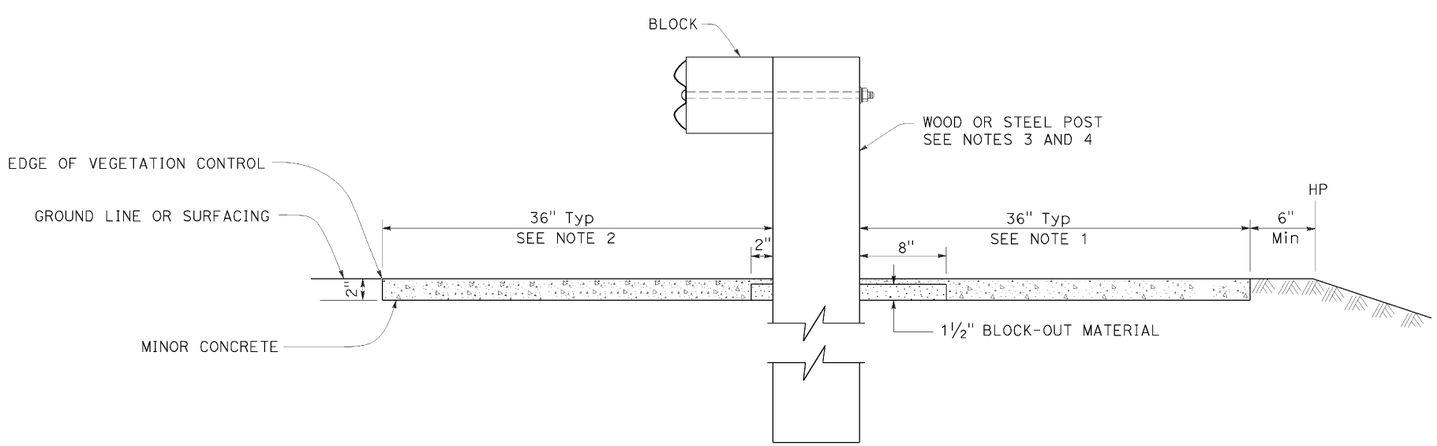

SECTION A-A

NOTES:

1. Where the distance between back of post and hinge point is less than 42", construct vegetation control to 6" from hinge point while maintaining the 8" block-out at back of post. If the 8" block-out at back of post can not be maintained, construct vegetation control flush with the back edge of post.
2. Where dike is constructed under railing, construct vegetation control to back edge of dike. Where paved shoulder is constructed within 36" in front of the post, construct vegetation control to the edge of paved shoulder.
3. For wood post sizes, see Revised Standard Plan RSP A77N1.
4. For steel post sizes, see Revised Standard Plan RSP A77N2.
5. For details not shown, see Revised Standard Plans RSP A77L1 and RSP A77L2.

STATE OF CALIFORNIA
DEPARTMENT OF TRANSPORTATION

MIDWEST GUARDRAIL SYSTEM TYPICAL VEGETATION CONTROL STANDARD RAILING SECTION

NO SCALE

RSP A77N5 DATED JULY 19, 2013 SUPPLEMENTS THE STANDARD PLANS BOOK DATED 2010.

REVISED STANDARD PLAN RSP A77N5

2010 REVISED STANDARD PLAN RSP A77N5

7-3-13

Dist	COUNTY	ROUTE	POST MILES TOTAL PROJECT	SHEET NO.	TOTAL SHEETS
07	LA	5	19.2/28.9	158	217

Randell D. Hiatt
REGISTERED CIVIL ENGINEER

July 19, 2013
PLANS APPROVAL DATE

REGISTERED PROFESSIONAL ENGINEER
Randell D. Hiatt
No. C50200
Exp. 6-30-15
CIVIL
STATE OF CALIFORNIA

THE STATE OF CALIFORNIA OR ITS OFFICERS OR AGENTS SHALL NOT BE RESPONSIBLE FOR THE ACCURACY OR COMPLETENESS OF SCANNED COPIES OF THIS PLAN SHEET.

TO ACCOMPANY PLANS DATED 2-10-14

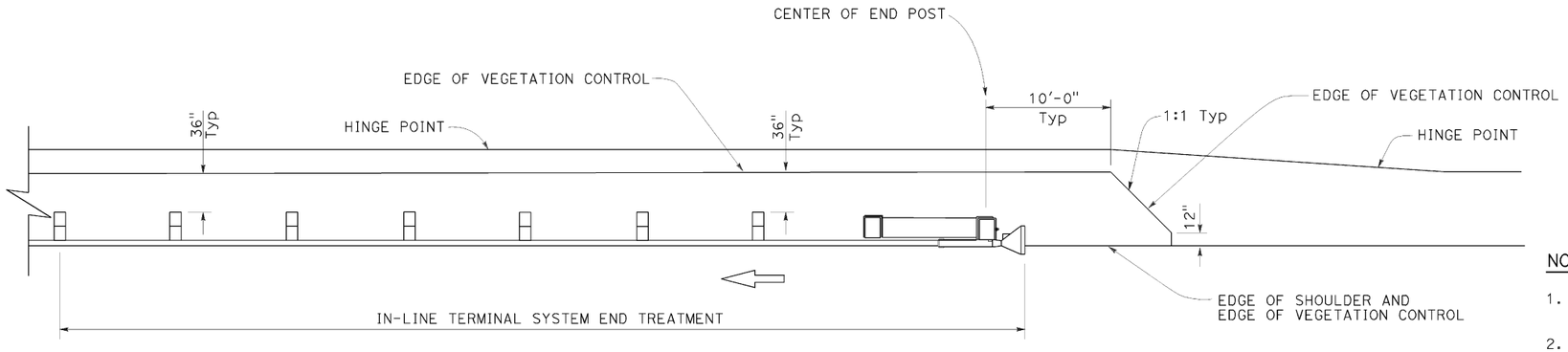

PLAN

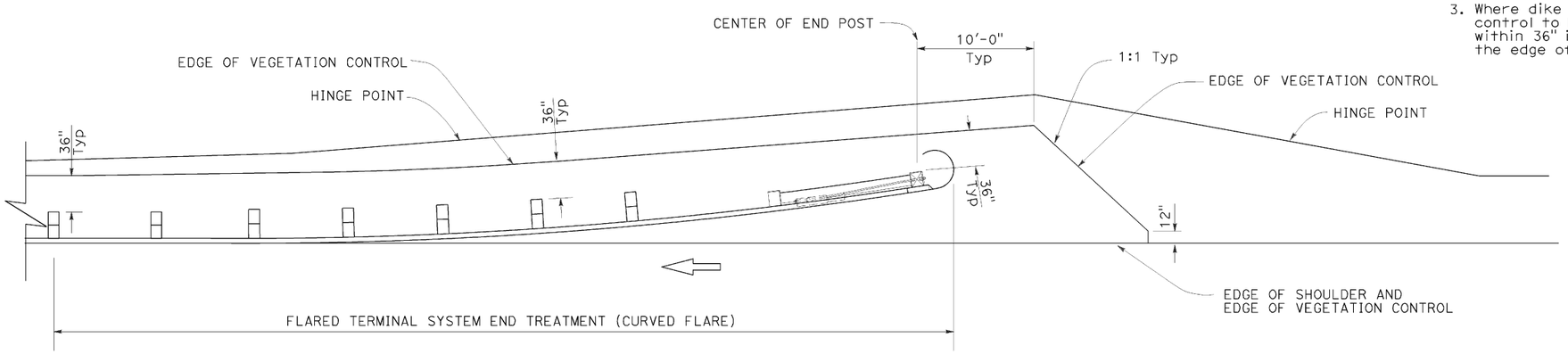

PLAN

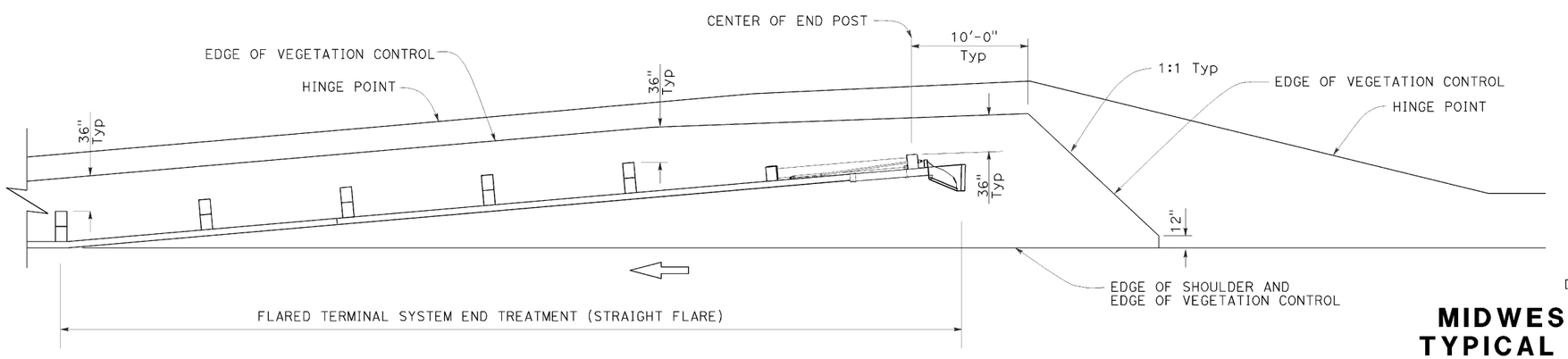

PLAN

NOTES:

1. See Revised Standard Plan RSP A77N5 for additional vegetation control details.
2. Where the distance between back of post and hinge point is less than 42", construct vegetation control to 6" from hinge point while maintaining the 8" block-out at back of post. If the 8" block-out at back of post can not be maintained, construct vegetation control flush with the back edge of post.
3. Where dike is constructed under railing, construct vegetation control to back edge of dike. Where paved shoulder is constructed within 36" in front of the post, construct vegetation control to the edge of paved shoulder.

STATE OF CALIFORNIA
DEPARTMENT OF TRANSPORTATION

MIDWEST GUARDRAIL SYSTEM TYPICAL VEGETATION CONTROL FOR TERMINAL SYSTEM END TREATMENTS

NO SCALE

RSP A77N6 DATED JULY 19, 2013 SUPPLEMENTS THE STANDARD PLANS BOOK DATED 2010.

REVISED STANDARD PLAN RSP A77N6

2010 REVISED STANDARD PLAN RSP A77N6

6-12-13

Dist	COUNTY	ROUTE	POST MILES TOTAL PROJECT	SHEET No.	TOTAL SHEETS
07	LA	5	19.2/28.9	159	217

Randell D. Hiatt
REGISTERED CIVIL ENGINEER

July 19, 2013
PLANS APPROVAL DATE

REGISTERED PROFESSIONAL ENGINEER
Randell D. Hiatt
No. C50200
Exp. 6-30-15
CIVIL
STATE OF CALIFORNIA

THE STATE OF CALIFORNIA OR ITS OFFICERS OR AGENTS SHALL NOT BE RESPONSIBLE FOR THE ACCURACY OR COMPLETENESS OF SCANNED COPIES OF THIS PLAN SHEET.

TO ACCOMPANY PLANS DATED 2-10-14

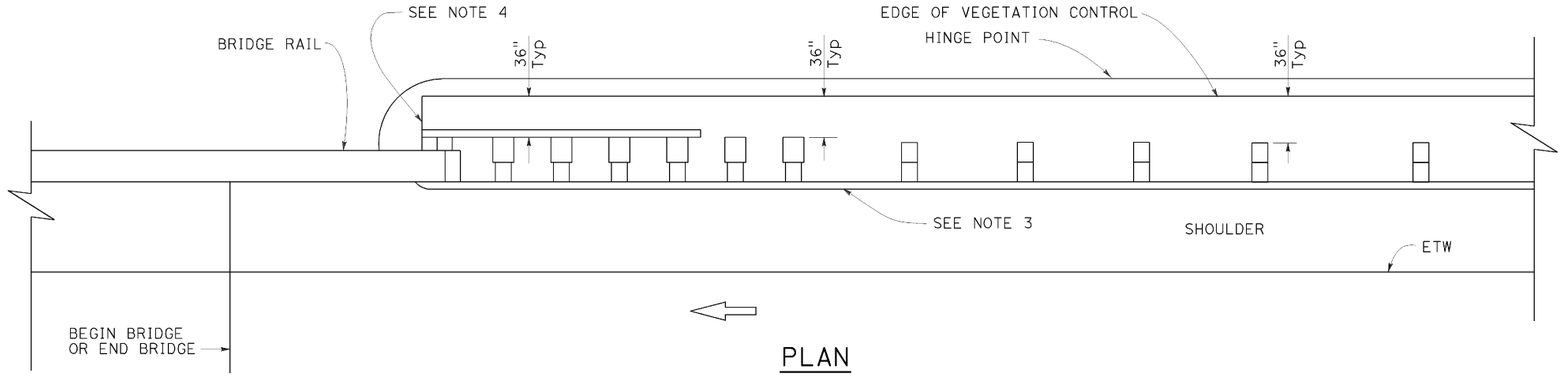

PLAN

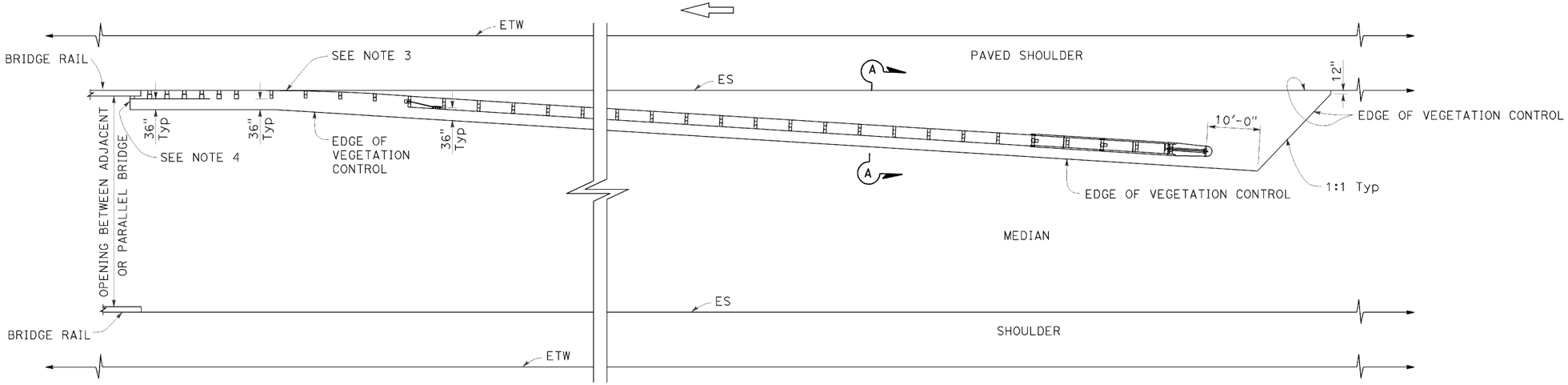

PLAN

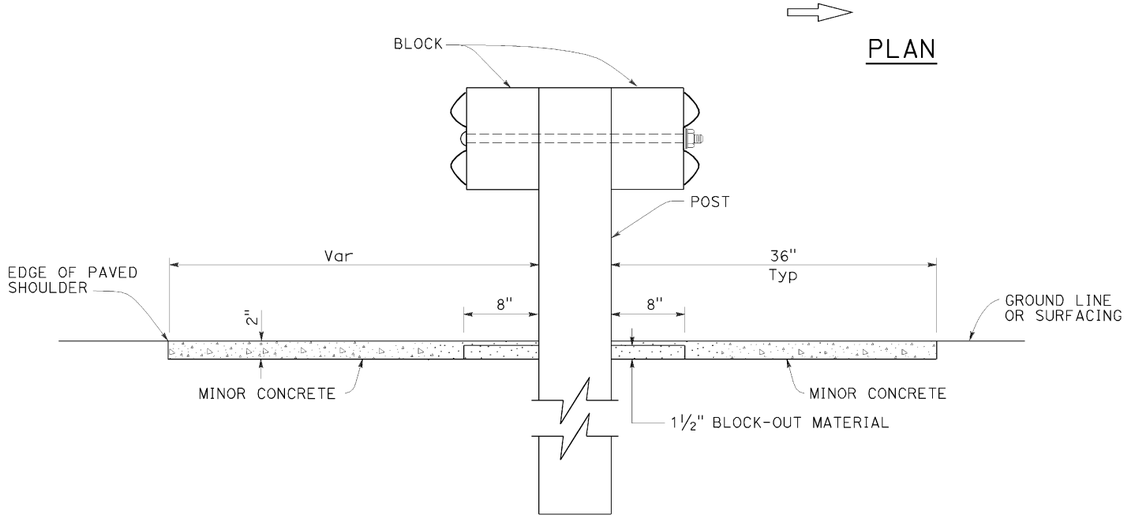

SECTION A-A

NOTES:

1. See Revised Standard Plan RSP A77N5 for additional vegetation control details.
2. Where the distance between back of post and hinge point is less than 42", construct vegetation control to 6" from hinge point while maintaining the 8" block-out at back of post. If the 8" block-out at back of post can not be maintained, construct vegetation control flush with the back edge of post.
3. Where dike is constructed under railing, construct vegetation control to back edge of dike. Where paved shoulder is constructed within 36" in front of the post, construct vegetation control to the edge of paved shoulder.
4. End vegetation control at end of backside rail element.

STATE OF CALIFORNIA
DEPARTMENT OF TRANSPORTATION

MIDWEST GUARDRAIL SYSTEM TYPICAL VEGETATION CONTROL AT STRUCTURE APPROACH

NO SCALE

RSP A77N7 DATED JULY 19, 2013 SUPPLEMENTS THE STANDARD PLANS BOOK DATED 2010.

REVISED STANDARD PLAN RSP A77N7

2010 REVISED STANDARD PLAN RSP A77N7

6-12-13

Dist	COUNTY	ROUTE	POST MILES TOTAL PROJECT	SHEET NO.	TOTAL SHEETS
07	LA	5	19.2/28.9	160	217

Randell D. Hiatt
REGISTERED CIVIL ENGINEER

July 19, 2013
PLANS APPROVAL DATE

REGISTERED PROFESSIONAL ENGINEER
Randell D. Hiatt
No. C50200
Exp. 6-30-15
CIVIL
STATE OF CALIFORNIA

THE STATE OF CALIFORNIA OR ITS OFFICERS OR AGENTS SHALL NOT BE RESPONSIBLE FOR THE ACCURACY OR COMPLETENESS OF SCANNED COPIES OF THIS PLAN SHEET.

TO ACCOMPANY PLANS DATED 2-10-14

NOTES:

1. See Revised Standard Plan RSP A77N5 for additional vegetation control details.
2. Where the distance between back of post and hinge point is less than 42", construct vegetation control to 6" from hinge point while maintaining the 8" block-out at back of post. If the 8" block-out at back of post can not be maintained, construct vegetation control flush with the back edge of post.
3. Where dike is constructed under railing, construct vegetation control to back edge of dike. Where paved shoulder is constructed within 36" in front of the post, construct vegetation control to the edge of paved shoulder.

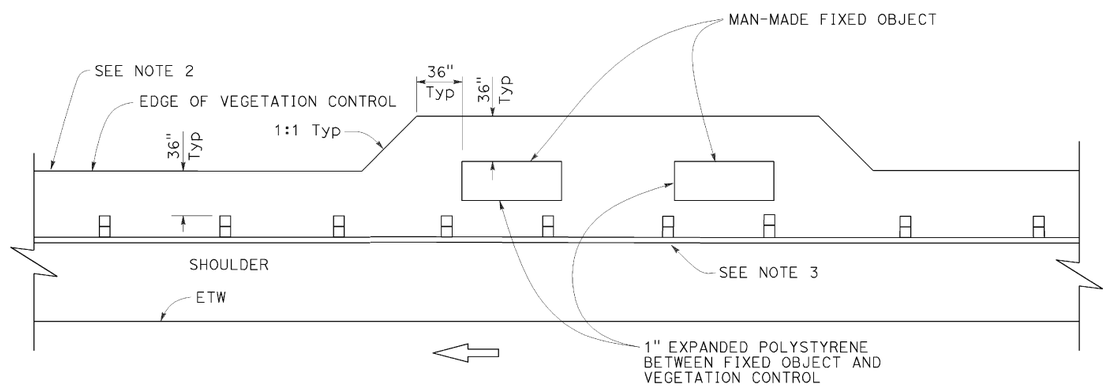

PLAN

Fixed object(s) on shoulder

STATE OF CALIFORNIA
DEPARTMENT OF TRANSPORTATION

MIDWEST GUARDRAIL SYSTEM TYPICAL VEGETATION CONTROL AT FIXED OBJECT

NO SCALE

RSP A77N8 DATED JULY 19, 2013 SUPPLEMENTS THE STANDARD PLANS BOOK DATED 2010.

REVISED STANDARD PLAN RSP A77N8

2010 REVISED STANDARD PLAN RSP A77N8

6-12-13

Dist	COUNTY	ROUTE	POST MILES TOTAL PROJECT	SHEET No.	TOTAL SHEETS
07	LA	5	19.2/28.9	161	217

Randell D. Hiatt
REGISTERED CIVIL ENGINEER

July 19, 2013
PLANS APPROVAL DATE

REGISTERED PROFESSIONAL ENGINEER
Randell D. Hiatt
No. C50200
Exp. 6-30-15
CIVIL
STATE OF CALIFORNIA

THE STATE OF CALIFORNIA OR ITS OFFICERS OR AGENTS SHALL NOT BE RESPONSIBLE FOR THE ACCURACY OR COMPLETENESS OF SCANNED COPIES OF THIS PLAN SHEET.

TO ACCOMPANY PLANS DATED 2-10-14

2010 REVISED STANDARD PLAN RSP A77N9

NOTES:

1. See Revised Standard Plan RSP A77N5 for additional vegetation control details.
2. Where dike is constructed under railing, construct vegetation control to back edge of dike. Where paved shoulder is constructed within 36" in front of the post, construct vegetation control to the edge of paved shoulder.

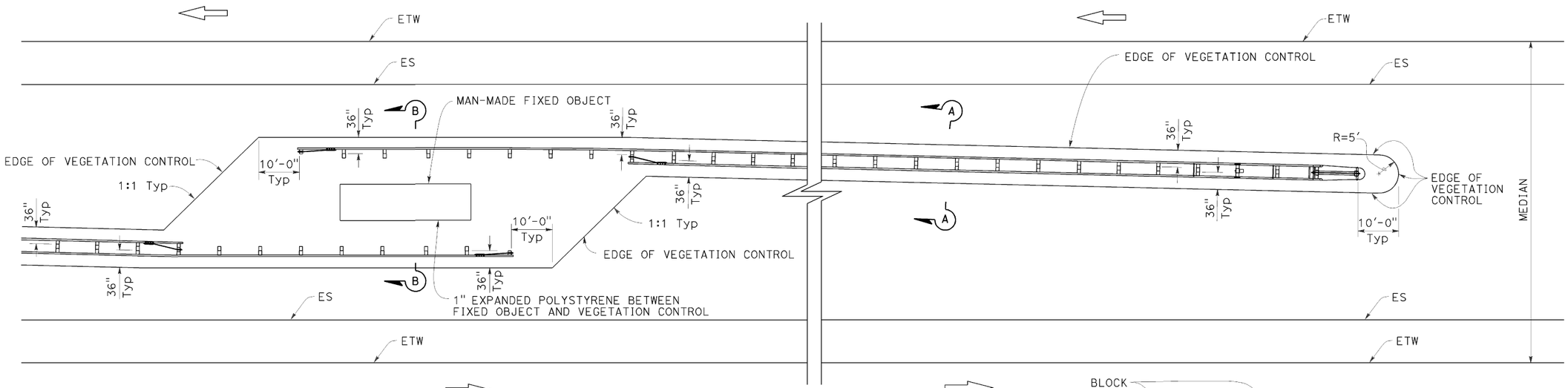

PLAN

Fixed object(s) in median

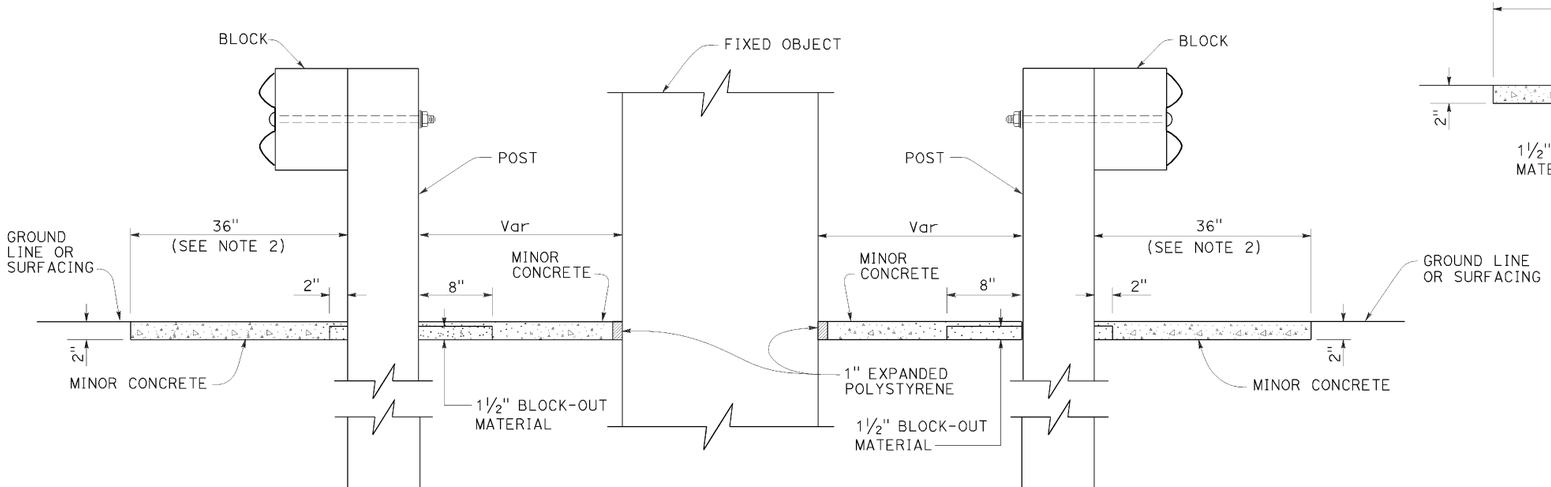

SECTION B-B

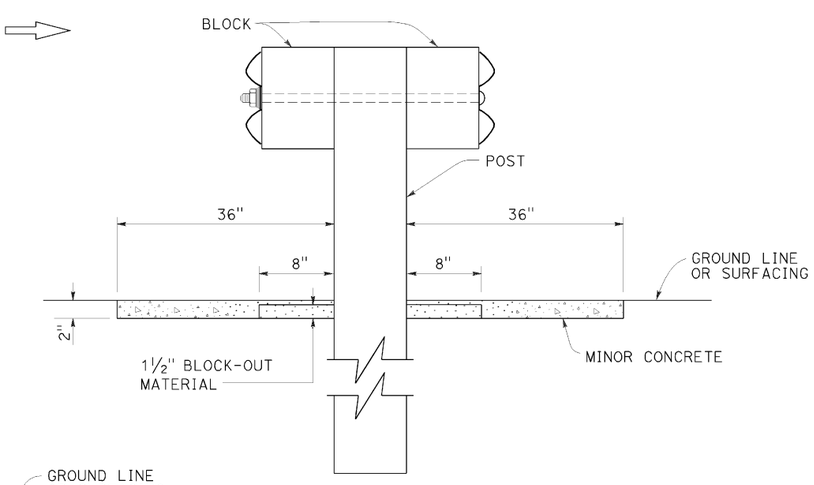

SECTION A-A

STATE OF CALIFORNIA
DEPARTMENT OF TRANSPORTATION

MIDWEST GUARDRAIL SYSTEM TYPICAL VEGETATION CONTROL AT FIXED OBJECT

NO SCALE

RSP A77N9 DATED JULY 19, 2013 SUPPLEMENTS THE STANDARD PLANS BOOK DATED 2010.

REVISED STANDARD PLAN RSP A77N9

6-12-13

Dist	COUNTY	ROUTE	POST MILES TOTAL PROJECT	SHEET No.	TOTAL SHEETS
07	LA	5	19.2/28.9	162	217

Randell D. Hiatt
REGISTERED CIVIL ENGINEER

July 19, 2013
PLANS APPROVAL DATE

REGISTERED PROFESSIONAL ENGINEER
Randell D. Hiatt
No. C50200
Exp. 6-30-15
CIVIL
STATE OF CALIFORNIA

THE STATE OF CALIFORNIA OR ITS OFFICERS OR AGENTS SHALL NOT BE RESPONSIBLE FOR THE ACCURACY OR COMPLETENESS OF SCANNED COPIES OF THIS PLAN SHEET.

TO ACCOMPANY PLANS DATED 2-10-14

2010 REVISED STANDARD PLAN RSP A77N10

NOTES:

1. See Revised Standard Plan RSP A77N5 for additional vegetation control details.
2. Where dike is constructed under railing, construct vegetation control to back edge of dike. Where paved shoulder is constructed within 36" in front of the post, construct vegetation control to the edge of paved shoulder.

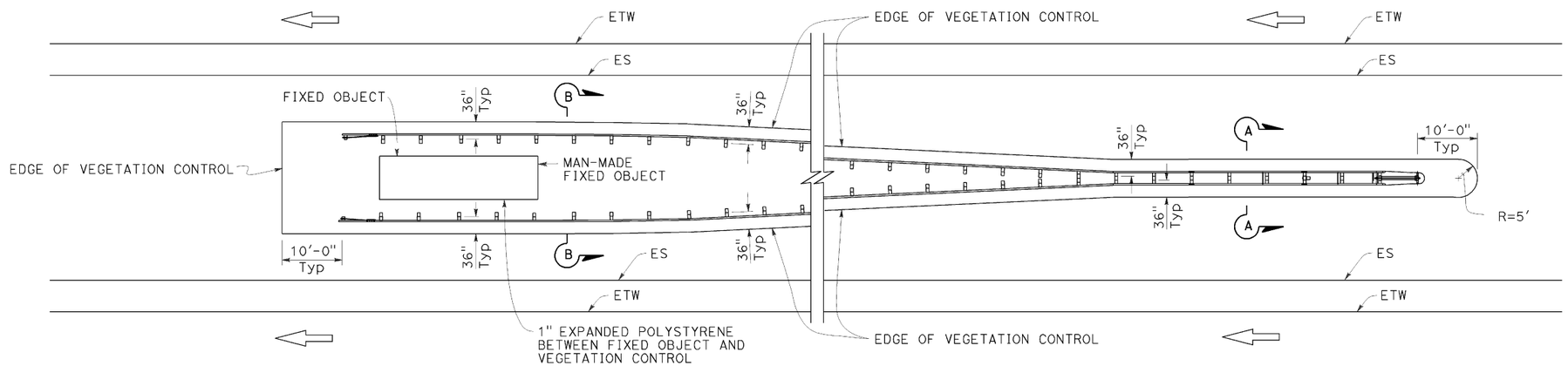

PLAN

Fixed object(s) between separate roadbeds
(One-Way Traffic)

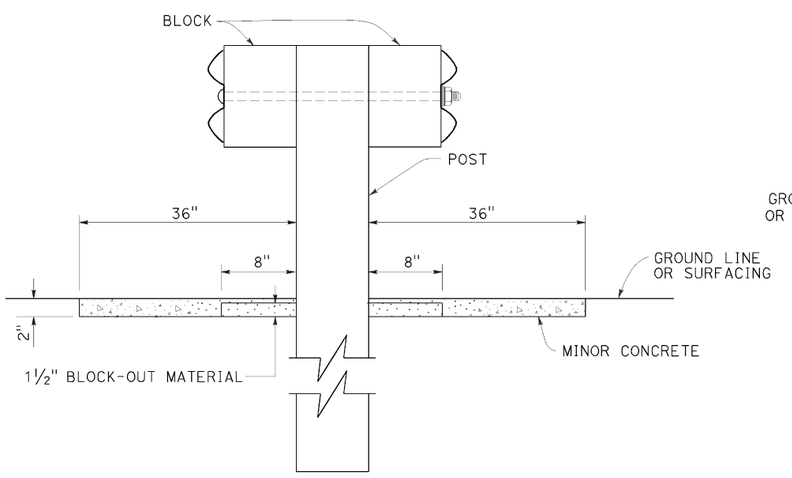

SECTION A-A

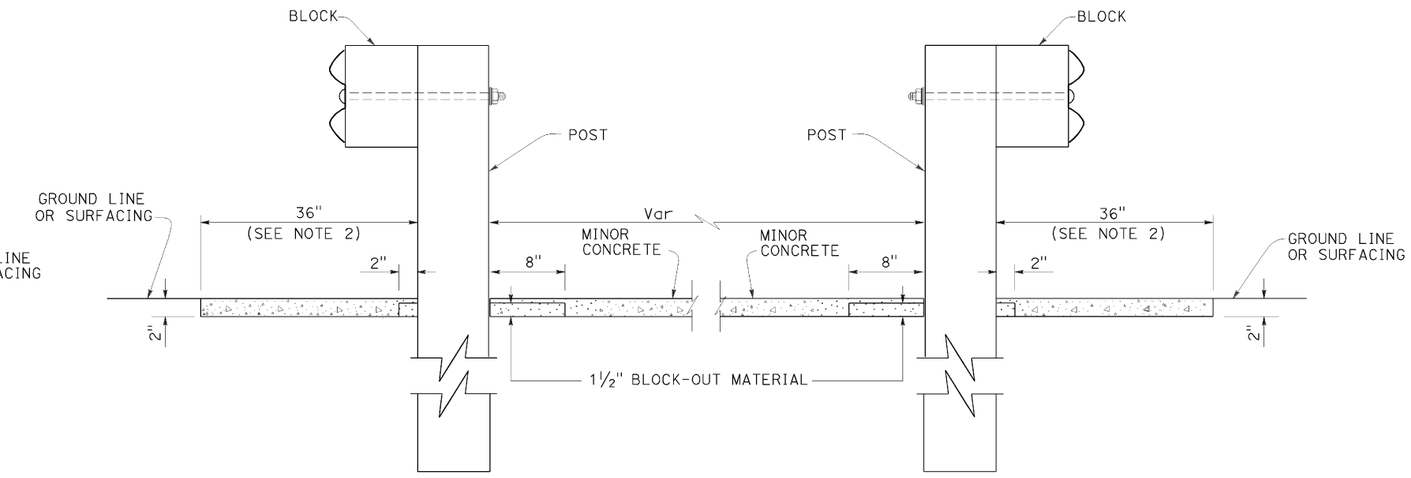

SECTION B-B

STATE OF CALIFORNIA
DEPARTMENT OF TRANSPORTATION

MIDWEST GUARDRAIL SYSTEM TYPICAL VEGETATION CONTROL AT FIXED OBJECT

NO SCALE

RSP A77N10 DATED JULY 19, 2013 SUPPLEMENTS THE STANDARD PLANS BOOK DATED 2010.

REVISED STANDARD PLAN RSP A77N10

6-12-13

Dist	COUNTY	ROUTE	POST MILES TOTAL PROJECT	SHEET No.	TOTAL SHEETS
07	LA	5	19.2/28.9	163	217

Randell D. Hiatt
REGISTERED CIVIL ENGINEER

November 15, 2013
PLANS APPROVAL DATE

REGISTERED PROFESSIONAL ENGINEER — Randell D. Hiatt — No. C50200 — Exp. 6-30-15 — CIVIL — STATE OF CALIFORNIA

THE STATE OF CALIFORNIA OR ITS OFFICERS OR AGENTS SHALL NOT BE RESPONSIBLE FOR THE ACCURACY OR COMPLETENESS OF SCANNED COPIES OF THIS PLAN SHEET.

TO ACCOMPANY PLANS DATED 2-10-14

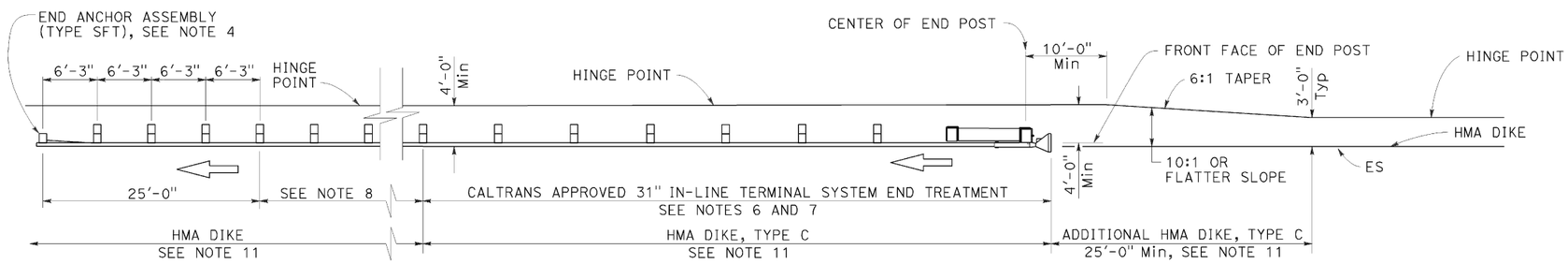

TYPE 11A LAYOUT

(Embankment MGS installation with 31" in-line end treatment at traffic approach end of railing) see Note 5

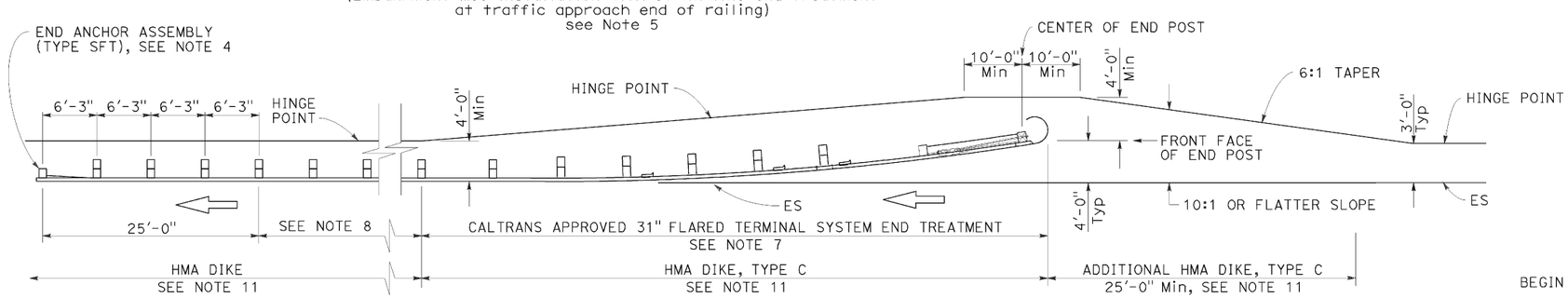

TYPE 11B LAYOUT

(Embankment MGS installation with 31" flared end treatment at traffic approach end of railing) see Note 5

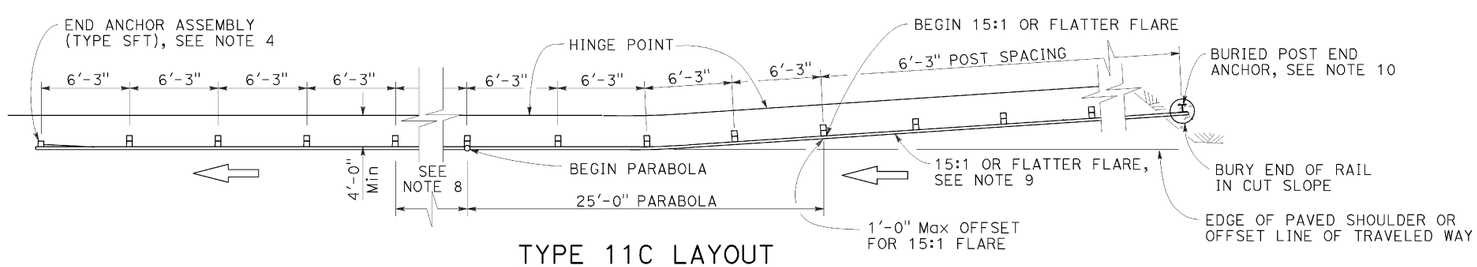

TYPE 11C LAYOUT

(Embankment MGS installation with buried end anchor treatment at traffic approach end of railing) see Notes 5 and 11

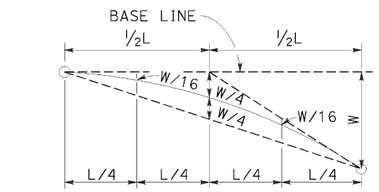

TYPICAL PARABOLIC LAYOUT

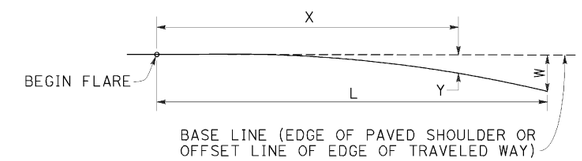

$$Y = \frac{WX^2}{L^2}$$

Y = OFFSET FROM BASE LINE
W = MAXIMUM OFFSET
X = DISTANCE ALONG BASE LINE
L = LENGTH OF FLARE

PARABOLIC FLARE OFFSETS

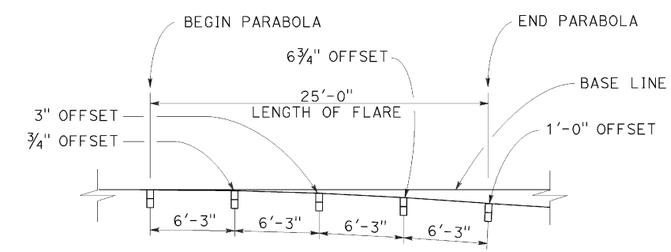

TYPICAL FLARE OFFSETS FOR 1 FOOT Max END OFFSET

NOTES:

1. Line post, blocks and hardware to be used are shown on Revised Standard Plans RSP A77L1, RSP A77L2, RSP A77M1, RSP A77N1 and RSP A77N2.
2. MGS post spacing to be 6'-3" center to center, except as otherwise noted.
3. Except as noted, line posts are 6" x 8" x 6'-0" wood with 6" x 12" x 1'-2" wood blocks. W6 x 8.5 or W6 x 9 steel posts, 6'-0" in length, with 6" x 12" x 1'-2" notched wood blocks or recycled plastic blocks may be used for 6" x 8" x 6'-0" wood post with 6" x 12" x 1'-2" wood blocks where applicable and when specified.
4. For End Anchor Assembly (Type SFT) details, see Revised Standard Plan RSP A77S1.
5. Layout Types 11A, 11B or 11C are typically used where MGS is recommended to shield embankment slopes and a crashworthy end treatment is required for only one direction of traffic.
6. 31" in-line terminal system end treatments are used where site conditions will not accommodate a flared end treatment.
7. The type of 31" terminal system end treatment to be used will be shown on the Project Plans.
8. Dependent on site conditions (embankment height and side slope), construction of additional MGS (length equal to multiples of 12'-6" with 6'-3" post spacing) may be advisable.
9. The 15:1 or flatter flare used with buried end anchors is based on the edge of the paved shoulder or offset line of edge of the traveled way. The length of MGS within the 15:1 or flatter flare is based on site conditions and should be a length equal to multiples of 12'-6".
10. For details of the buried post end anchor used with Type 11C Layout, see Revised Standard Plan RSP A77T2.
11. Where placement of dike is required with MGS installations, see Revised Standard Plan RSP A77N4 for dike positioning details.

STATE OF CALIFORNIA
DEPARTMENT OF TRANSPORTATION

MIDWEST GUARDRAIL SYSTEM TYPICAL LAYOUTS FOR EMBANKMENTS

NO SCALE

RSP A77P1 DATED NOVEMBER 15, 2013 SUPERSEDES RSP A77P1 DATED JULY 19, 2013 THAT SUPPLEMENTS THE STANDARD PLANS BOOK DATED 2010.

REVISED STANDARD PLAN RSP A77P1

2010 REVISED STANDARD PLAN RSP A77P1

10-4-13

Dist	COUNTY	ROUTE	POST MILES TOTAL PROJECT	SHEET No.	TOTAL SHEETS
07	LA	5	19.2/28.9	164	217

Randell D. Hiatt
REGISTERED CIVIL ENGINEER

July 19, 2013
PLANS APPROVAL DATE

REGISTERED PROFESSIONAL ENGINEER
Randell D. Hiatt
No. C50200
Exp. 6-30-15
CIVIL
STATE OF CALIFORNIA

THE STATE OF CALIFORNIA OR ITS OFFICERS OR AGENTS SHALL NOT BE RESPONSIBLE FOR THE ACCURACY OR COMPLETENESS OF SCANNED COPIES OF THIS PLAN SHEET.

TO ACCOMPANY PLANS DATED 2-10-14

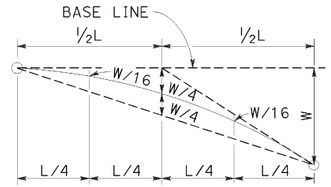

TYPICAL PARABOLIC LAYOUT

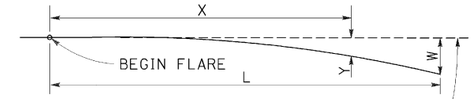

BASE LINE (EDGE OF PAVED SHOULDER OR OFFSET LINE OF EDGE OF TRAVELED WAY)

$$Y = \frac{WX^2}{L^2}$$

Y = OFFSET FROM BASE LINE
W = MAXIMUM OFFSET
X = DISTANCE ALONG BASE LINE
L = LENGTH OF FLARE

PARABOLIC FLARE OFFSETS

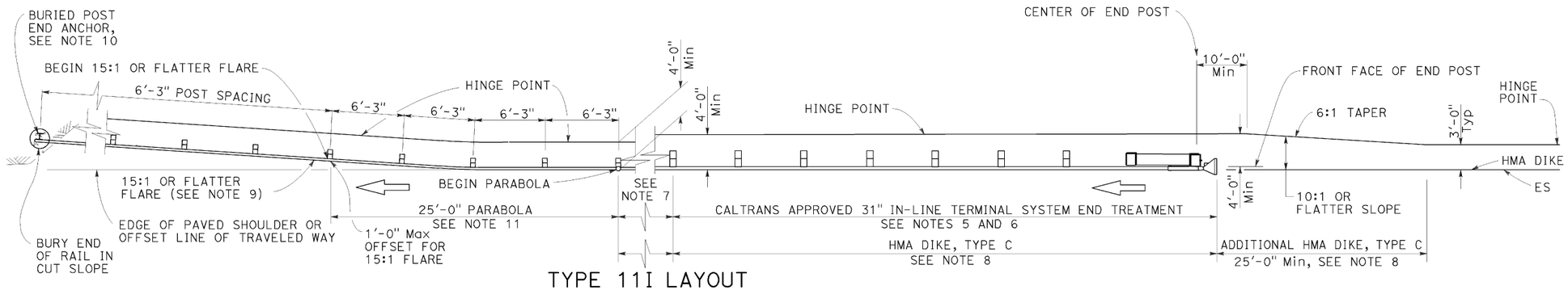

TYPE 11I LAYOUT

(Embankment MGS installation with 31" in-line end treatment and a buried end anchor treatment at the ends of railing)
See Note 4

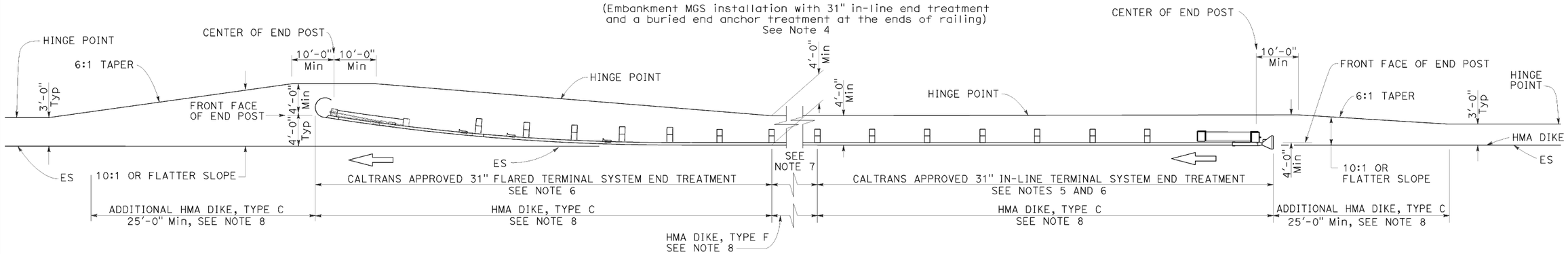

TYPE 11J LAYOUT

(Embankment MGS installation with 31" in-line end treatment and 31" flared end treatment at the ends of railing)
See Note 4

NOTES:

1. Line post, blocks and hardware to be used are shown on Revised Standard Plans RSP A77L1, RSP A77L2, RSP A77M1, RSP A77N1 and RSP A77N2.
2. MGS post spacing to be 6'-3" center to center, except as otherwise noted.
3. Except as noted, line posts are 6" x 8" x 6'-0" wood with 6" x 12" x 1'-2" wood blocks. W6 x 8.5 or W6 x 9 steel posts, 6'-0" in length, with 6" x 12" x 1'-2" notched wood blocks or plastic blocks may be used for 6" x 8" x 6'-0" wood post with 6" x 12" x 1'-2" wood blocks where applicable and when specified.
4. Layout Types 11D through 11L, shown on the A77P Series of Standard Plans, are typically used where MGS is recommended to shield embamkment slopes and a crashworthy 31" end treatment is required for both directions of traffic.
5. 31" in-line terminal system end treatments are used where site conditions will not accommodate a 31" flared end treatment.
6. The type of 31" terminal system end treatment to be used will be shown on the Project Plans.
7. Dependent on site conditions (embankment height and side slope), construction of additional MGS (length equal to multiples of 12'-6" with 6'-3" post spacing) may be advisable.
8. Where placement of dike is required with MGS installations, see Revised Standard Plan RSP A77N4 for dike positioning details.
9. The 15:1 or flatter flare used with buried end anchors is based on the edge of the paved shoulder or offset line of edge of the traveled way. The length of MGS within the 15:1 or flatter flare is based on site conditions and should be a length equal to multiples of 12'-6".
10. For details of the buried post end anchor used with Type 11I Layout, see Revised Standard Plan RSP A77T2.
11. For typical flare offsets for 25'-0" length parabola with maximum offset of 1'-0", see Revised Standard Plan RSP A77P1.

STATE OF CALIFORNIA
DEPARTMENT OF TRANSPORTATION

MIDWEST GUARDRAIL SYSTEM TYPICAL LAYOUTS FOR EMBANKMENTS

NO SCALE

RSP A77P5 DATED JULY 19, 2013 SUPPLEMENTS THE STANDARD PLANS BOOK DATED 2010.

REVISED STANDARD PLAN RSP A77P5

2010 REVISED STANDARD PLAN RSP A77P5

6-19-13

Dist	COUNTY	ROUTE	POST MILES TOTAL PROJECT	SHEET No.	TOTAL SHEETS
07	LA	5	19.2/28.9	165	217

Randell D. Hiatt
REGISTERED CIVIL ENGINEER

July 19, 2013
PLANS APPROVAL DATE

REGISTERED PROFESSIONAL ENGINEER
Randell D. Hiatt
No. C50200
Exp. 6-30-15
CIVIL
STATE OF CALIFORNIA

THE STATE OF CALIFORNIA OR ITS OFFICERS OR AGENTS SHALL NOT BE RESPONSIBLE FOR THE ACCURACY OR COMPLETENESS OF SCANNED COPIES OF THIS PLAN SHEET.

TO ACCOMPANY PLANS DATED 2-10-14

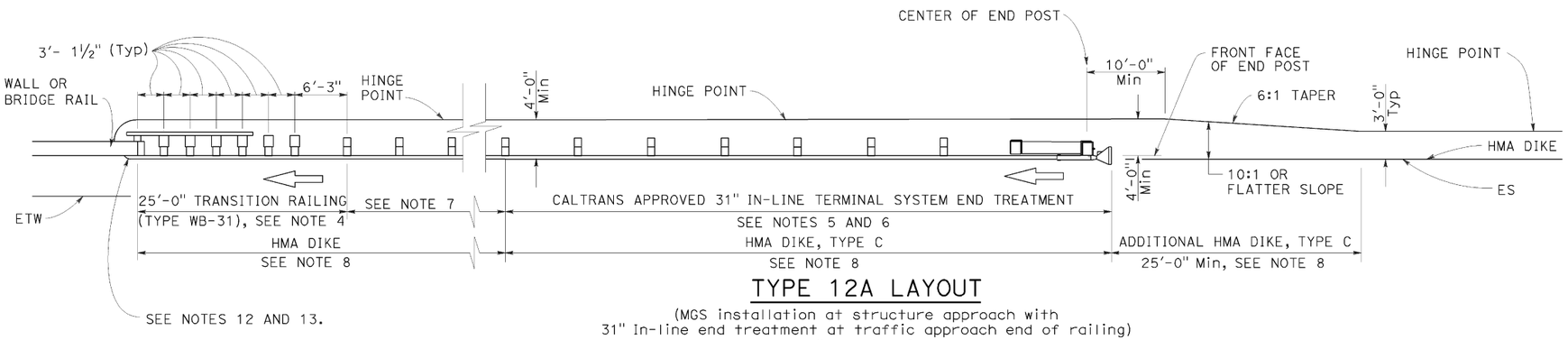

TYPE 12A LAYOUT

(MGS installation at structure approach with 31" In-line end treatment at traffic approach end of railing)
See Notes 9

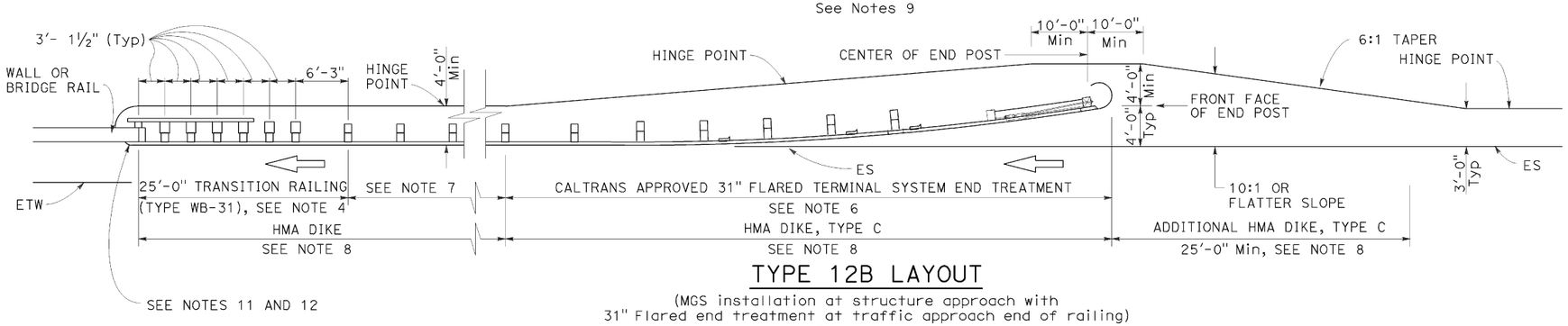

TYPE 12B LAYOUT

(MGS installation at structure approach with 31" Flared end treatment at traffic approach end of railing)
See Notes 9

NOTES:

1. Line post, blocks and hardware to be used are shown on Revised Standard Plans RSP A77L1, RSP A77L2, RSP A77M1, RSP A77N1 and RSP A77N2.
2. MGS post spacing to be 6'-3" center to center, except as otherwise noted.
3. Except as noted, line posts are 6" x 8" x 6'-0" wood with 6" x 12" x 1'-2" wood blocks. W6 x 8.5 or W6 x 9 steel posts, 6'-0" in length, with 6" x 12" x 1'-2" notched wood blocks or plastic blocks may be used for 6" x 8" x 6'-0" wood posts with 6" x 12" x 1'-2" wood blocks where applicable and when specified.
4. For Transition Railing (Type WB-31) details for Types 12A and 12B Layouts, see Revised Standard Plan RSP A77U4.
5. 31" in-line terminal system end treatments are used where site conditions will not accommodate a 31" flared end treatment.
6. The type 31" of terminal system end treatment to be used will be shown on the Project Plans.
7. Dependent on site conditions (embankment height, side slopes, or other fixed objects), it may be advisable to construct additional guard railing (a length equal to multiples of 12'-6" with 6'-3" post spacing) between the transition railing and end treatment. A 12.5 degree angle of departure can be drawn on the Project Plans from the edge of traveled way through the outer most point of the fixed object to determine the additional length of railing needed.
8. Where placement of dike is required with guard railing installations, see Revised Standard Plan RSP A77N4 for dike positioning details.
9. Type 12A or Type 12B Layouts are typically used:
   a. To the right of approaching traffic, at the end of a structure, on two-lane conventional highway where the roadbed width across the structure is less than 40 feet.
   b. To the left of approaching traffic, at the end of a structure, on two-lane conventional highway where the roadbed width across the structure is less than 40 feet.
   c. To the right of approaching traffic at the end of each structure on multilane freeways or expressways with separate adjacent or parallel bridges.
   d. To the right of approaching traffic at the end of the structure on multilane freeways or expressways with decked median on the bridge.
10. See Revised Standard Plan RSP A77Q3 for typical layout used left of approaching traffic at the ends of each structure on multilane freeways or expressways with separate adjacent or parallel bridges.
11. For additional details of typical connections to bridge rail, see Connection Detail AA on Revised Standard Plans RSP A77U1 and RSP A77U2 and Connection Detail FF on Revised Standard Plans RSP A77V1 and RSP A77V2.
12. For additional details of a typical connection to walls or abutments, see Revised Standard Plan RSP A77U3.

STATE OF CALIFORNIA
DEPARTMENT OF TRANSPORTATION

MIDWEST GUARDRAIL SYSTEM TYPICAL LAYOUTS FOR STRUCTURE APPROACH

NO SCALE

RSP A77Q1 DATED JULY 19, 2013 SUPPLEMENTS THE STANDARD PLANS BOOK DATED 2010.

REVISED STANDARD PLAN RSP A77Q1

2010 REVISED STANDARD PLAN RSP A77Q1

6-19-13

Dist	COUNTY	ROUTE	POST MILES TOTAL PROJECT	SHEET No.	TOTAL SHEETS
07	LA	5	19.2/28.9	166	217

Randell D. Hiatt
REGISTERED CIVIL ENGINEER

July 19, 2013
PLANS APPROVAL DATE

REGISTERED PROFESSIONAL ENGINEER
Randell D. Hiatt
No. C50200
Exp. 6-30-15
CIVIL
STATE OF CALIFORNIA

THE STATE OF CALIFORNIA OR ITS OFFICERS OR AGENTS SHALL NOT BE RESPONSIBLE FOR THE ACCURACY OR COMPLETENESS OF SCANNED COPIES OF THIS PLAN SHEET.

TO ACCOMPANY PLANS DATED 2-10-14

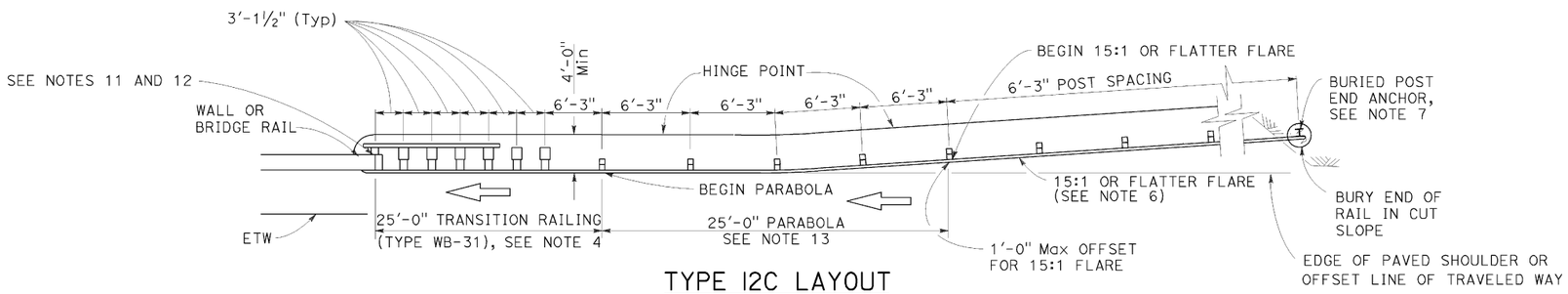

TYPE 12C LAYOUT

(MGS installation at structure approach with a Buried end anchor treatment at traffic approach end of railing)
See Notes 8 and 9

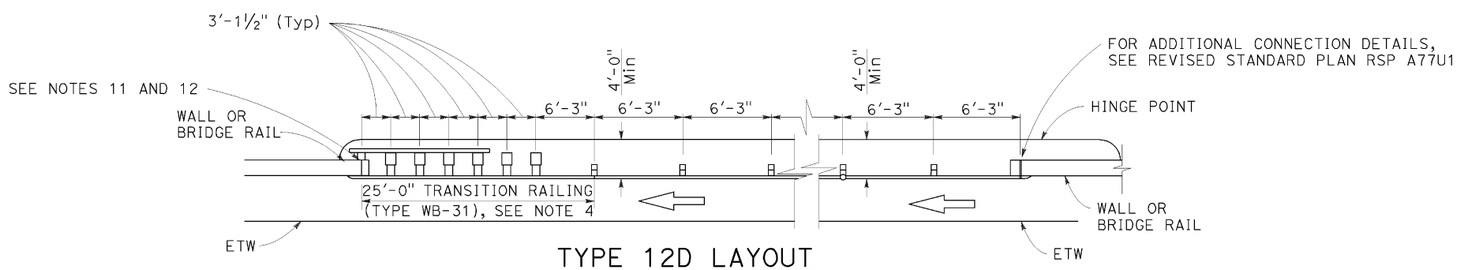

TYPE 12D LAYOUT

(Continuous MGS installation between structures)
See Notes 5 and 9

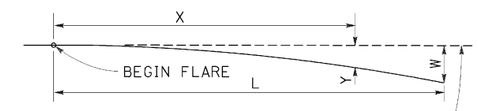

BASE LINE (EDGE OF PAVED SHOULDER OR OFFSET LINE OF EDGE OF TRAVELED WAY)

$$Y = \frac{WX^2}{L^2}$$

Y = OFFSET FROM BASE LINE
W = MAXIMUM OFFSET
X = DISTANCE ALONG BASE LINE
L = LENGTH OF FLARE

PARABOLIC FLARE OFFSETS

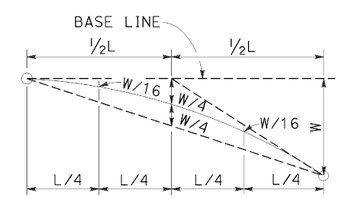

TYPICAL PARABOLIC LAYOUT

NOTES:

1. Line post, blocks and hardware to be used are shown on Revised Standard Plans RSP A77L1, RSP A77L2, RSP A77M1, RSP A77N1 and RSP A77N2.
2. MGS post spacing to be 6'-3" center to center, except as otherwise noted.
3. Except as noted, line posts are 6" x 8" x 6'-0" m wood with 6" x 12" x 1'-2" wood blocks. W6 x 8.5 or W6 x 9 steel posts, 6'-0" in length, with 6" x 12" x 1'-2" notched wood blocks or plastic blocks may be used for 6" x 8" x 6'-0" wood posts with 6" x 12" x 1'-2" wood blocks where applicable and when specified.
4. For Transition Railing (Type WB-31) details for Types 12C and 12D Layouts, see Revised Standard Plan RSP A77U4.
5. Type 12D layout is typically used where continous MGS is recommended between structures.
6. The 15:1 or flatter flare for Type 12C Layout is based on the edge of the paved shoulder or offset line of edge of the traveled way. The length of MGS with the 15:1 or flatter flare is based on site conditions and should be a length equal to multiples of 12'-6".
7. For details of the buried post end anchor used with Type 12C Layout, see Revised Standard Plan RSP A77T2.
8. Where placement of dike is required with MGS installations, see Revised Standard Plan RSP A77N4 for dike positioning details.
9. Type 12C Layout is typically used:
   a. To the right of approaching traffic, at the end of the structure, on two-lane conventional highway where the roadbed width across the structure is less than 40 feet.
   b. To the left of approaching traffic, at each of a structure, on two-lane conventional highway where the roadbed width across the structure is less than 40 feet.
   c. To the right of approaching traffic at the end of each structure on multilane freeways or expressways with separate adjacent or parallel bridges.
   d. To the right of approaching traffic at the end of the structure on multilane freeways or expressways with decked median on the bridge.
10. See Revised Standard Plan RSP A77Q3 for typical layout used left of approaching traffic at the ends of each structure on multilane freeways or expressways with separate adjacent or parallel bridges.
11. For additional details of typical connections to bridge rail, see Connection Detail AA on Revised Standard Plans RSP A77U1 and RSP A77U2 and Connection Detail FF on Revised Standard Plans RSP A77V1 and RSP A77V2.
12. For additional details of a typical connection to walls or abutments, see Revised Standard Plan RSP A77U3.
13. For typical flare offsets for 25'-0" length parabola with maximum offset of 1'-0", see Revised Standard Plan RSP A77P1.

STATE OF CALIFORNIA
DEPARTMENT OF TRANSPORTATION

MIDWEST GUARDRAIL SYSTEM TYPICAL LAYOUTS FOR STRUCTURE APPROACH AND BETWEEN STRUCTURES

NO SCALE

RSP A77Q2 DATED JULY 19, 2013 SUPPLEMENTS THE STANDARD PLANS BOOK DATED 2010.

REVISED STANDARD PLAN RSP A77Q2

2010 REVISED STANDARD PLAN RSP A77Q2

7-8-13

Dist	COUNTY	ROUTE	POST MILES TOTAL PROJECT	SHEET NO.	TOTAL SHEETS
07	LA	5	19.2/28.9	167	217

Randell D. Hiatt
REGISTERED CIVIL ENGINEER

July 19, 2013
PLANS APPROVAL DATE

REGISTERED PROFESSIONAL ENGINEER
Randell D. Hiatt
No. C50200
Exp. 6-30-15
CIVIL
STATE OF CALIFORNIA

THE STATE OF CALIFORNIA OR ITS OFFICERS OR AGENTS SHALL NOT BE RESPONSIBLE FOR THE ACCURACY OR COMPLETENESS OF SCANNED COPIES OF THIS PLAN SHEET.

TO ACCOMPANY PLANS DATED 2-10-14

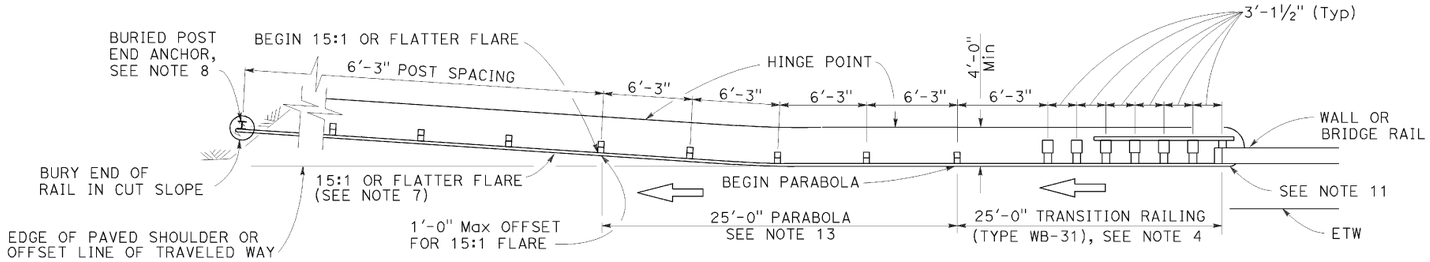

TYPE 12CC LAYOUT

(MGS installation at structure departure with a Buried end anchor treatment at trailing end of railing)
See Notes 9 and 10

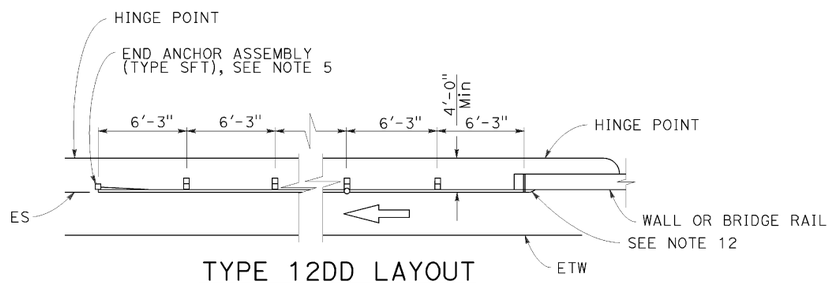

TYPE 12DD LAYOUT

(MGS installation at structure departure With end anchor assembly at trailing end of railing)
See Notes 6 and 9

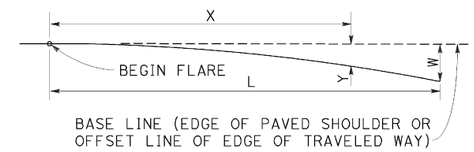

$$Y = \frac{WX^2}{L^2}$$

Y = OFFSET FROM BASE LINE
W = MAXIMUM OFFSET
X = DISTANCE ALONG BASE LINE
L = LENGTH OF FLARE

PARABOLIC FLARE OFFSETS

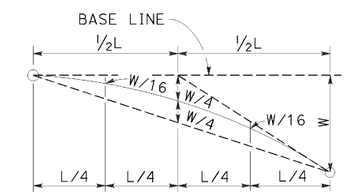

TYPICAL PARABOLIC LAYOUT

NOTES:

1. Line post, blocks and hardware to be used are shown on Revised Standard Plans RSP A77L1, RSP A77L2, RSP A77M1, RSP A77N1 and RSP A77N2.
2. MSG post spacing to be 6'-3" center to center, except as otherwise noted.
3. Except as noted, line posts are 6" x 8" x 6'-0" wood with 6" x 12" x 1'-2" wood blocks. W6 x 8.5 or W6 x 9 steel posts, 6'-0" in length, with 6" x 12" x 1'-2" notched wood blocks or notched recycled plastic blocks may be used for 6" x 8" x 6'-0" wood line posts with 6" x 12" x 1'-2" wood blocks where applicable and when specified.
4. For Transition Railing (Type WB-31) details for Type 12CC Layout, see Revised Standard Plan RSP A77U4.
5. For details of End Anchor Assembly (Type SFT) used with Type 12DD Layout, see Revised Standard Plan RSP A77S1.
6. Type 12DD layout is typically used to the right of traffic departing a structure on two-way conventional highways where the roadbed width across the structure is equal to or greater than 40 feet and MGS is recommended (embankment height, side slopes, other fixed objects). Length of railing to be equal to multiples of 12'-6". For MGS connection details to bridge rail, see Revised Standard Plans RSP A77U1 and RSP A77V1. For MGS connection details to wall, see Revised Standard Plan RSP A77U3.
7. The 15:1 or flatter flare for Type 12CC Layout is based on the edge of the paved shoulder or offset line of edge of the traveled way. The length of MGS within the 15:1 or flatter flare is based on site conditions and should be a length equal to multiples of 12'-6".
8. For details of the buried post end anchor used with Type 12CC Layout, see Revised Standard Plan RSP A77T2.
9. Where placement of dike is required with MGS installations, see Revised Standard Plan RSP A77N4 for dike positioning details.
10. Type 12CC Layout is typically used to the right of traffic departing a structure on two-way conventional highways where the roadbed width across the structure is less than 40 feet.
11. For additional details of a typical connection to bridge rail for Layout Type 12CC, see Connection Detail CC on Revised Standard Plan RSP A77U2 and Connection Detail HH on Revised Standard Plan RSP A77V2.
12. For additional details of a typical connection to bridge rail for Layout Type 12DD, see Connection Detail BB on Revised Standard Plan RSP A77U1 and Connection Detail GG on Revised Standard Plan RSP A77V1.
13. For typical flare offsets for 25'-0" length parabola with maximum offset of 1'-0", see Revised Standard Plan RSP A77P1.

STATE OF CALIFORNIA
DEPARTMENT OF TRANSPORTATION

MIDWEST GUARDRAIL SYSTEM TYPICAL LAYOUTS FOR STRUCTURE DEPARTURE

NO SCALE

RSP A77Q5 DATED JULY 19, 2013 SUPPLEMENTS THE STANDARD PLANS BOOK DATED 2010.

REVISED STANDARD PLAN RSP A77Q5

2010 REVISED STANDARD PLAN RSP A77Q5

6-20-13

Dist	COUNTY	ROUTE	POST MILES TOTAL PROJECT	SHEET No.	TOTAL SHEETS
07	LA	5	19.2/28.9	168	217

Randell D. Hiatt
REGISTERED CIVIL ENGINEER

July 19, 2013
PLANS APPROVAL DATE

REGISTERED PROFESSIONAL ENGINEER Randell D. Hiatt No. C50200 Exp. 6-30-15 CIVIL STATE OF CALIFORNIA

THE STATE OF CALIFORNIA OR ITS OFFICERS OR AGENTS SHALL NOT BE RESPONSIBLE FOR THE ACCURACY OR COMPLETENESS OF SCANNED COPIES OF THIS PLAN SHEET.

TO ACCOMPANY PLANS DATED 2-10-14

NOTES:

1. Line post, blocks and hardware to be used are shown on Revised Standard Plans RSP A77L1, RSP A77L2, RSP A77M1, RSP A77N1, and RSP A77N2.
2. MGS post spacing to be 6'-3" center to center, except as otherwise noted.
3. Except as noted, line posts are 6" x 8" x 6'-0" wood with 6" x 12" x 1'-2" wood blocks. W6 x 8.5 or W6 x 9 steel posts, 6'-0" in length, with 6" x 12" x 1'-2" notched wood blocks or notched recycled plastic blocks may be used for 6" x 8" x 6'-0" wood line posts with 6" x 12" x 1'-2" wood blocks where applicable and when specified.
4. A 4'-0" minimum clearance is required between the face of the railing and the face of a fixed object located directly behind MGS sections with post spacing of 6'-3". Construct MGS as shown in the detail "Strengthened Midwest Guardrail System Sections for Fixed Object" on this plan, where the clearance between the face of the railing and the face of a fixed object is less than 4'-0", but not less than 3'-0". Where the clearance is less than 3'-0", a concrete wall or barrier should be constructed to shield the fixed object(s).
5. For End Anchor Assembly (Type SFT) details, see Revised Standard Plan RSP A77S1.
6. For details of Rail Tensioning Assembly, see Revised Standard Plan RSP A77S2.
7. The type of crash cushion to be used will be shown on the Project Plans.
8. Type 14A layout is typically used on multilane freeways or expressways to shield fixed objects where a median type barrier is not constructed between the separated roadbeds.
9. For typical flare offsets for 25'-0" length parabola with maximum offset of 1'-0", see Revised Standard Plan RSP A77P1.
10. The 15:1 or flatter flare is measured off of the edge of traveled way.
11. W6 x 15 steel post, 8'-0" in length, with 8" x 12" x 1'-2" notched wood block or notched recycled plastic block may be used in place of the 10" x 10" x 8'-0" wood post with 8" x 12" x 1'-2" wood block shown in the detail "Strengthened Midwest Guardrail System Sections for Fixed Object".

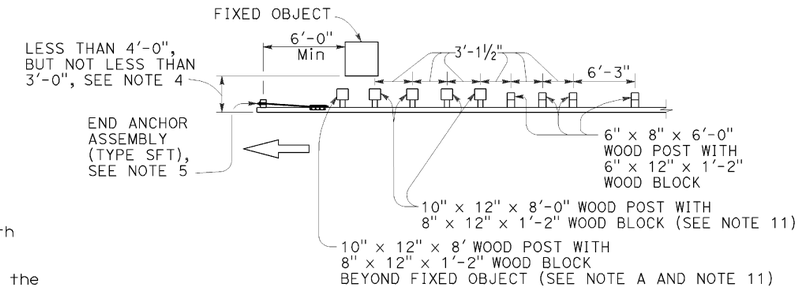

NOTE A: For a series of fixed objects (bridge columns, overhead sign supports, etc.) additional 10" x 10" x 8'-0" wood post with 8" x 12" x 1'-2" wood blocks at 3'-1½" center to center spacing are to be used between fixed objects.

STRENGTHENED MIDWEST GUARDRAIL SYSTEM SECTIONS FOR FIXED OBJECT

Use strengthened MGS sections with Type 14A layout where minimum clearance between the face of the railing and fixed object(s) is less than 4'-0", but not less than 3'-0", See Note 4.

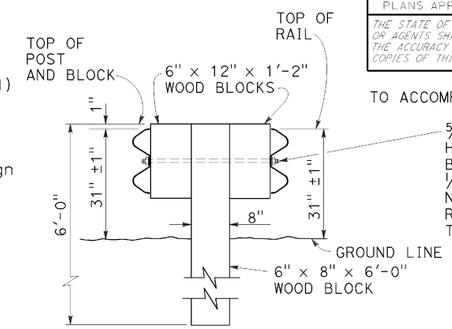

SECTION A-A
TYPICAL DOUBLE MIDWEST GUARDRAIL SYSTEM

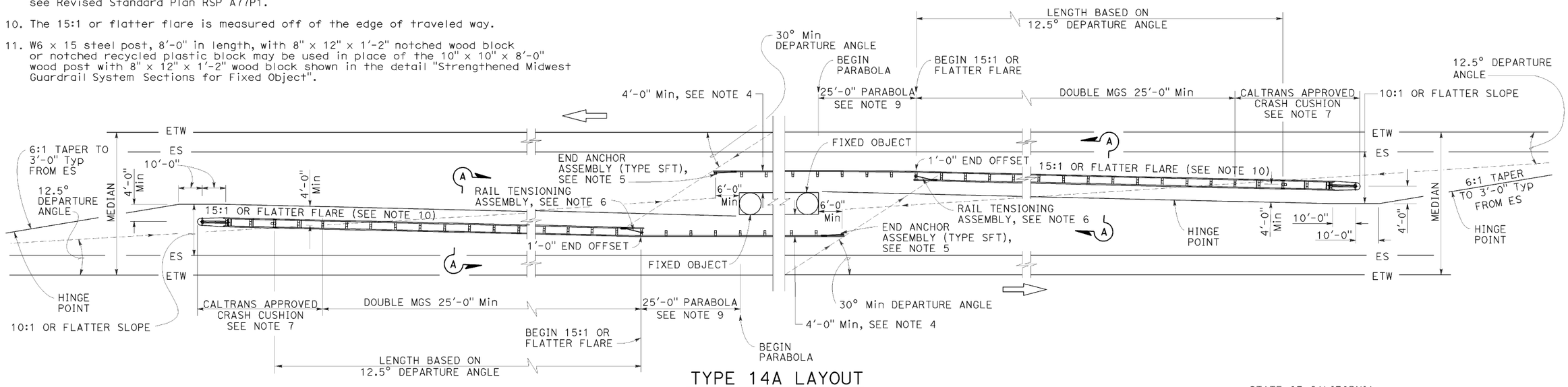

TYPE 14A LAYOUT

See Note 8

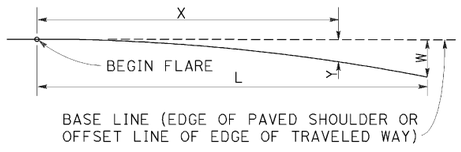

$$Y = \frac{WX^2}{L^2}$$

Y = OFFSET FROM BASE LINE
W = MAXIMUM OFFSET
X = DISTANCE ALONG BASE LINE
L = LENGTH OF FLARE

PARABOLIC FLARE OFFSETS

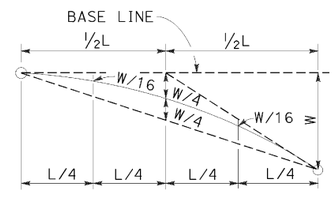

TYPICAL PARABOLIC LAYOUT

STATE OF CALIFORNIA
DEPARTMENT OF TRANSPORTATION

MIDWEST GUARDRAIL SYSTEM TYPICAL LAYOUTS FOR FIXED OBJECTS BETWEEN SEPARATE ROADBEDS (TWO-WAY TRAFFIC)

NO SCALE

RSP A77R1 DATED JULY 19, 2013 SUPPLEMENTS THE STANDARD PLANS BOOK DATED 2010.

REVISED STANDARD PLAN RSP A77R1

2010 REVISED STANDARD PLAN RSP A77R1

7-16-13

Dist	COUNTY	ROUTE	POST MILES TOTAL PROJECT	SHEET No.	TOTAL SHEETS
07	LA	5	19.2/28.9	169	217

Randell D. Hiatt
REGISTERED CIVIL ENGINEER

July 19, 2013
PLANS APPROVAL DATE

REGISTERED PROFESSIONAL ENGINEER Randell D. Hiatt No. C50200 Exp. 6-30-15 CIVIL STATE OF CALIFORNIA

THE STATE OF CALIFORNIA OR ITS OFFICERS OR AGENTS SHALL NOT BE RESPONSIBLE FOR THE ACCURACY OR COMPLETENESS OF SCANNED COPIES OF THIS PLAN SHEET.

TO ACCOMPANY PLANS DATED 2-10-14

NOTES:

1. Line post, blocks and hardware to be used are shown on Revised Standard Plans RSP A77L1, RSP A77L2, RSP A77M1, RSP A77N1 and RSP A77N2.
2. MGS post spacing to be 6'-3" center to center, except as otherwise noted.
3. Except as noted, line posts are 6" x 8" x 6'-0" wood with 6" x 12" x 1'-2" wood blocks. W6 x 8.5 or W6 x 9 steel posts, 6'-0" in length, with 6" x 12" x 1'-2" notched wood blocks or notched recycled plastic blocks may be used for 6" x 8" x 6'-0" wood line posts with 6" x 12" x 1'-2" wood blocks where applicable and when specified.
4. A 4'-0" minimum clearance is required between the face of the railing and the face of a fixed object located directly behind MGS section with post spacing of 6'-3". Construct MGS as shown in the detail "Strengthened Midwest Guardrail System Sections for Fixed Object" on this plan, where the clearance between the face of the railing and the face of a fixed object is less than 4'-0", but not less than 3'-0". Where the clearance is less than 3'-0", a concrete wall or barrier should be constructed to shield the fixed object(s).
5. For End Anchor Assembly (Type SFT) details, see Standard Plan RSP A77S1.
6. Type of crash cushion to be used will be shown on the Project Plans.
7. Type 15A layout is typically used on multilane freeways or expressways to shield fixed objects in the area between separated one-way roadbeds.
8. For typical flare offsets for 25'-0" length parabola with maximum offset of 1'-0", see Revised Standard Plan RSP A77P1.
9. The 15:1 or flatter flare is measured off of the edge of the traveled way.
10. W6 x 15 steel post, 8'-0" in length, with 8" x 12" x 1'-2" notched wood block or notched recycled plastic blocks may be used in place of the 10" x 10" x 8'-0" wood post with 8" x 12" x 1'-2" wood block shown in the detail "Strengthened Midwest Guardrail System Sections for Fixed Object".

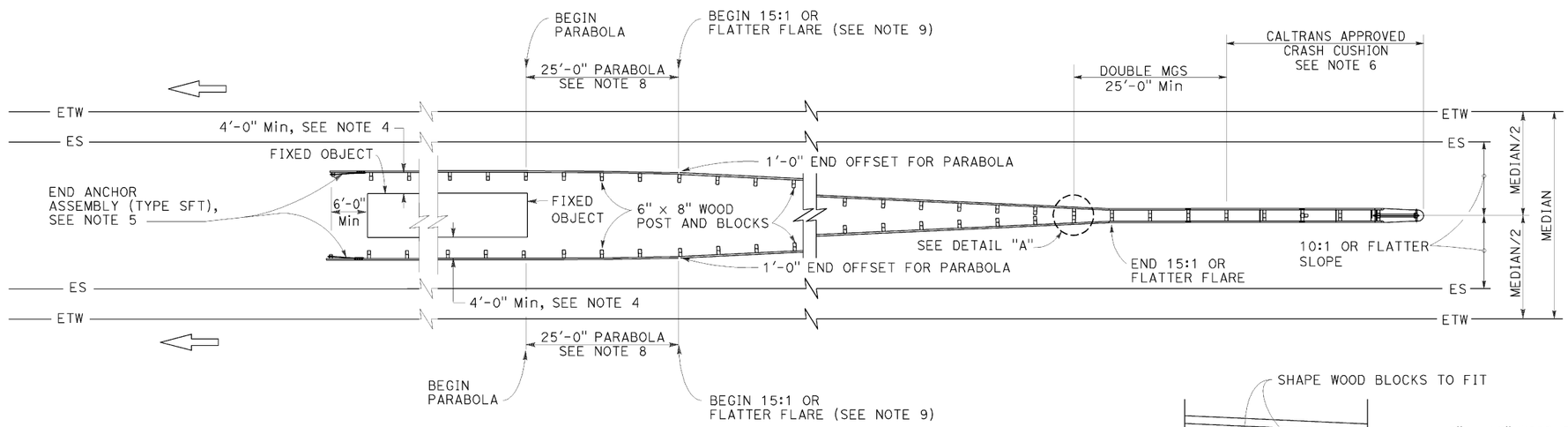

TYPE 15A LAYOUT

See Note 7

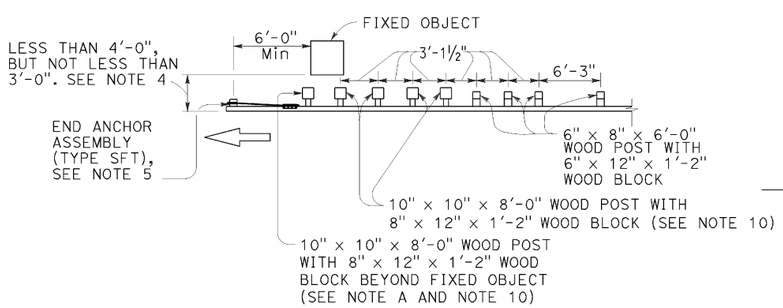

NOTE A: For a series of fixed objects (bridge columns, overhead sign supports, etc.) additional 10" x 10" x 8'-0" wood post with 8" x 12" x 1'-2" wood blocks at 3'-1½" center to center spacing are to be used between fixed objects.

STRENGTHENED MIDWEST GUARDRAIL SYSTEM SECTIONS FOR FIXED OBJECT

Use strengthened MGS sections with Type 15A layout where minimum clearance between the face of the MGS and the fixed object(s) is less than 4'-0", but not less than 3'-0". See Note 4.

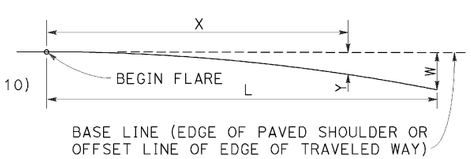

$$Y = \frac{WX^2}{L^2}$$

Y = OFFSET FROM BASE LINE
W = MAXIMUM OFFSET
X = DISTANCE ALONG BASE LINE
L = LENGTH OF FLARE

PARABOLIC FLARE OFFSETS

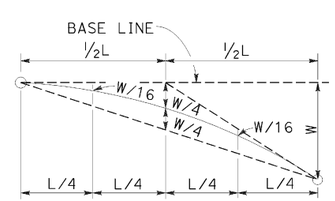

TYPICAL PARABOLIC LAYOUT

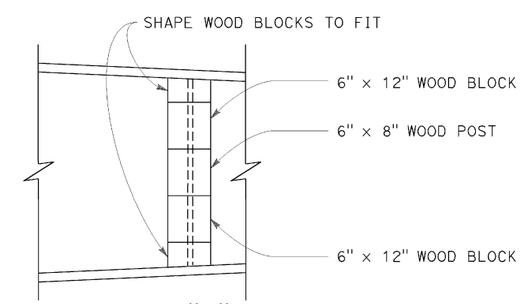

DETAIL "A"

STATE OF CALIFORNIA
DEPARTMENT OF TRANSPORTATION

MIDWEST GUARDRAIL SYSTEM TYPICAL LAYOUTS FOR FIXED OBJECTS BETWEEN SEPARATE ROADBEDS (ONE-WAY TRAFFIC)

NO SCALE

RSP A77R2 DATED JULY 19, 2013 SUPPLEMENTS THE STANDARD PLANS BOOK DATED 2010.

REVISED STANDARD PLAN RSP A77R2

2010 REVISED STANDARD PLAN RSP A77R2

6-20-13

Dist	COUNTY	ROUTE	POST MILES TOTAL PROJECT	SHEET NO.	TOTAL SHEETS
07	LA	5	19.2/28.9	170	217

Randell D. Hiatt
REGISTERED CIVIL ENGINEER

July 19, 2013
PLANS APPROVAL DATE

REGISTERED PROFESSIONAL ENGINEER
Randell D. Hiatt
No. C50200
Exp. 6-30-15
CIVIL
STATE OF CALIFORNIA

THE STATE OF CALIFORNIA OR ITS OFFICERS OR AGENTS SHALL NOT BE RESPONSIBLE FOR THE ACCURACY OR COMPLETENESS OF SCANNED COPIES OF THIS PLAN SHEET.

TO ACCOMPANY PLANS DATED 2-10-14

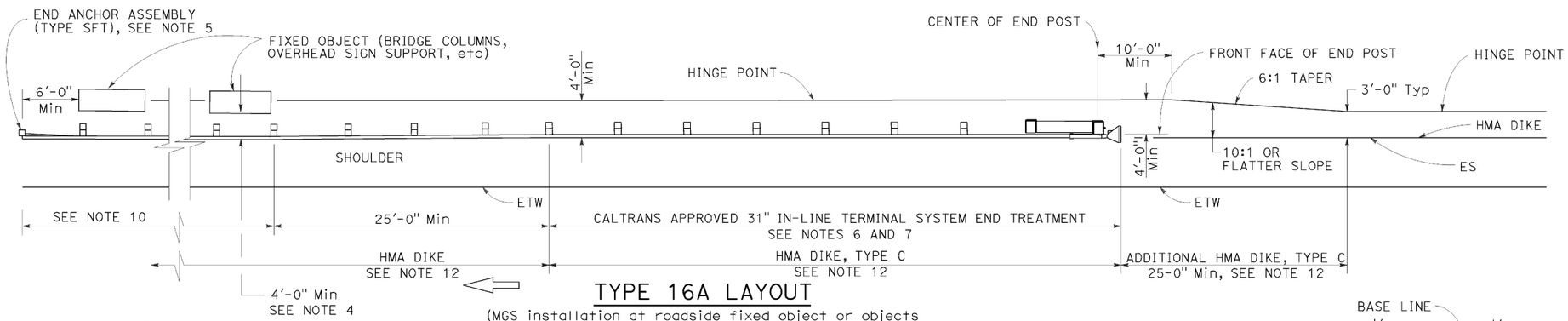

TYPE 16A LAYOUT

(MGS installation at roadside fixed object or objects with 31" in-line end treatment at traffic approach end of railing)
See Notes 11 and 12

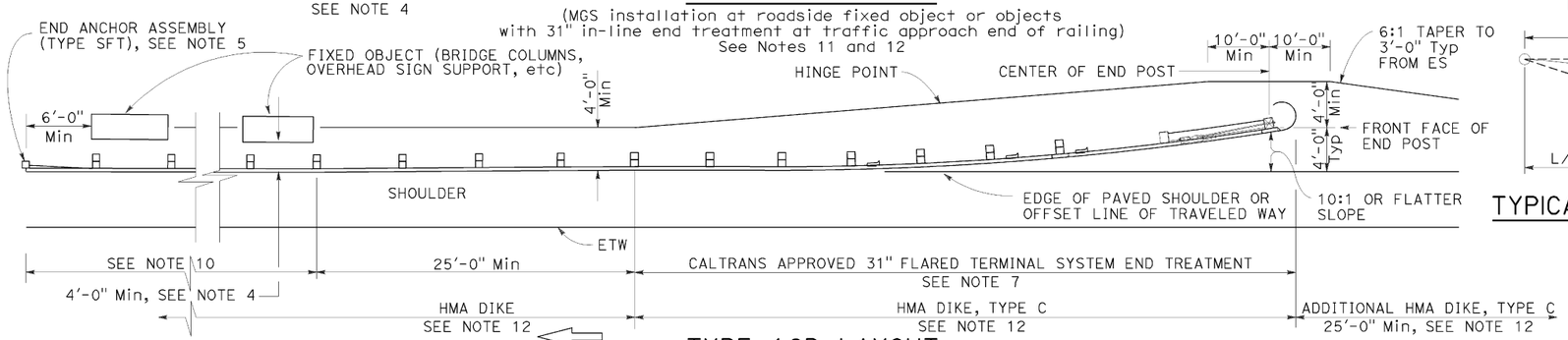

TYPE 16B LAYOUT

(MGS installation at roadside fixed object or objects with 31' flared end treatment at traffic approach end of railing)
See Notes 11 and 12

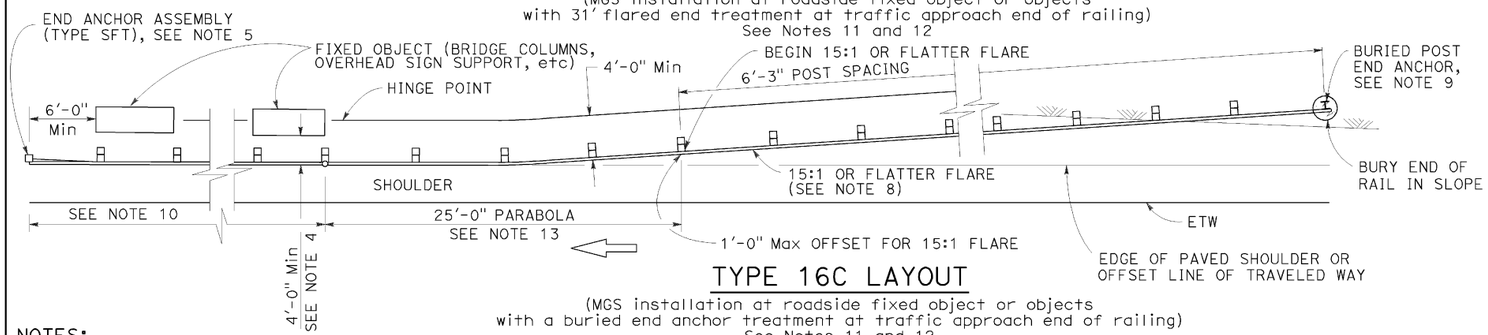

TYPE 16C LAYOUT

(MGS installation at roadside fixed object or objects with a buried end anchor treatment at traffic approach end of railing)
See Notes 11 and 12

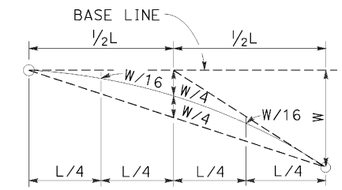

TYPICAL PARABOLIC LAYOUT

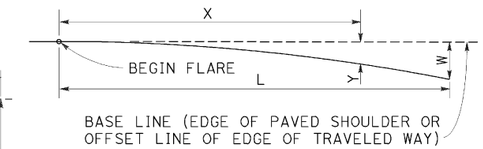

$$Y = \frac{WX^2}{L^2}$$

Y = OFFSET FROM BASE LINE
W = MAXIMUM OFFSET
X = DISTANCE ALONG BASE LINE
L = LENGTH OF FLARE

PARABOLIC FLARE OFFSETS

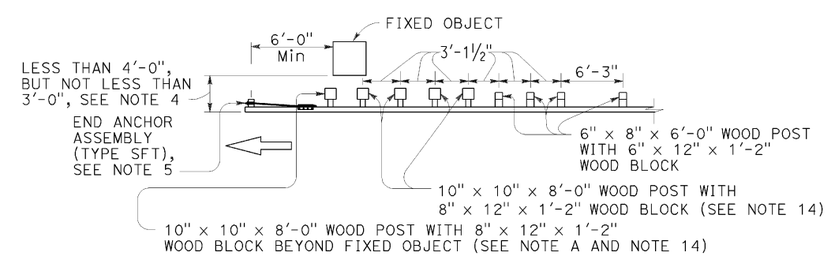

NOTE A: For a series of fixed objects (bridge columns, overhead sign supports, etc.) additional 10" x 10" x 8'-0" wood post with 8" x 12" x 1'-2" wood blocks at 3'-1½" center to center spacing are to be used between fixed objects.

STRENGTHENED MIDWEST GUARDRAIL SYSTEM SECTIONS FOR FIXED OBJECT

Use strengthened MGS sections with Types 16A, 16B or 16C layouts where minimum clearance between the face of the railing and fixed object(s) is less than 4'-0", but not less than 3'-0". See Note 4

NOTES:

1. Line post, blocks and hardware to be used are shown on Revised Standard Plans RSP A77L1, RSP A77L2, RSP A77M1, RSP A77N1 and RSP A77N2.
2. MGS post spacing to be 6'-3" center to center, except as otherwise noted.
3. Except as noted, line posts are 6" x 8" x 6'-0" wood with 6" x 12" x 1'-2" wood blocks. W6 x 8.5 or W6 x 9 steel posts, 6'-0" in length, with 6" x 12" x 1'-2" notched wood blocks or notched recycled plastic blocks may be used for 6" x 8" x 6'-0" wood line posts with 6" x 12" x 1'-2" wood blocks where applicable and when specified.
4. A 4'-0" minimum clearance is required between the face of the railing and the face of a fixed object located directly behind MGS sections with post spacing of 6'-3". Construct MGS as shown in the detail "Strengthened Midwest Guardrail System Sections for Fixed Object" on this plan, where the clearance between the face of the railing and the face of a fixed object is less than 4'-0", but not less than 3'-0". Where the clearance is less than 3'-0", a concrete wall or barrier should be constructed to shield the fixed object(s).
5. For End Anchor Assembly (Type SFT) details, see Revised Standard Plan RSP A77S1.
6. 31" in-line terminal system end treatments are used where site conditions will not accommodate a 31" flared end treatment.
7. The type of 31" terminal system to be used will be shown on the Project Plans.
8. The 15:1 or flatter flare used with Type 16C Layout is based on the edge of the paved shoulder or offset line of edge of the traveled way. The length of MGS within the 15:1 or flatter flare is based on site conditions and should be a length equal to multiples of 12'-6".
9. For details of the Buried Post End Anchor used with Type 16C Layout, see Revised Standard Plan RSP A77T2.
10. As site conditions dictate, construct additional MGS to shield fixed object(s). Additional MGS length equal to multiples of 12'-6". Post spacing at 6'-3" except as specified in Note 4.
11. Layout Types 16A, 16B or 16C are typically used where MGS is recommended to shield roadside fixed object(s) and a crashworthy 31" end treatment is required for only one direction of traffic.
12. Where placement of dike is required with MGS, see Revised Standard Plan RSP A77N4 for dike positioning details.
13. For typical flare offsets for 25'-0" length parabola with maximum offset of 1'-0", see Revised Standard Plan RSP A77P1.
14. W6 x 15 steel post, 8'-0" in length, with 8" x 12" x 1'-2" notched wood block or notched recycled plastic blocks may be used in place of the 10" x 10" x 8'-0" wood post with 8" x 12" x 1'-2" wood block shown in the detail "Strengthened Midwest Guardrail System Sections for Fixed Object".

STATE OF CALIFORNIA
DEPARTMENT OF TRANSPORTATION

MIDWEST GUARDRAIL SYSTEM TYPICAL LAYOUTS FOR ROADSIDE FIXED OBJECTS

NO SCALE

RSP A77R3 DATED JULY 19, 2013 SUPPLEMENTS THE STANDARD PLANS BOOK DATED 2010.

REVISED STANDARD PLAN RSP A77R3

2010 REVISED STANDARD PLAN RSP A77R3

6-20-13

Dist	COUNTY	ROUTE	POST MILES TOTAL PROJECT	SHEET No.	TOTAL SHEETS
07	LA	5	19.2/28.9	171	217

Randell D. Hiatt
REGISTERED CIVIL ENGINEER

November 15, 2013
PLANS APPROVAL DATE

REGISTERED PROFESSIONAL ENGINEER
Randell D. Hiatt
No. C50200
Exp. 6-30-15
CIVIL
STATE OF CALIFORNIA

THE STATE OF CALIFORNIA OR ITS OFFICERS OR AGENTS SHALL NOT BE RESPONSIBLE FOR THE ACCURACY OR COMPLETENESS OF SCANNED COPIES OF THIS PLAN SHEET.

TO ACCOMPANY PLANS DATED 2-10-14

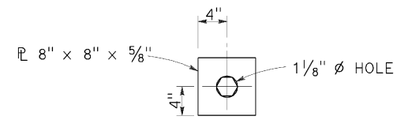

DETAIL "A"
CABLE CONNECTION
END PLATE

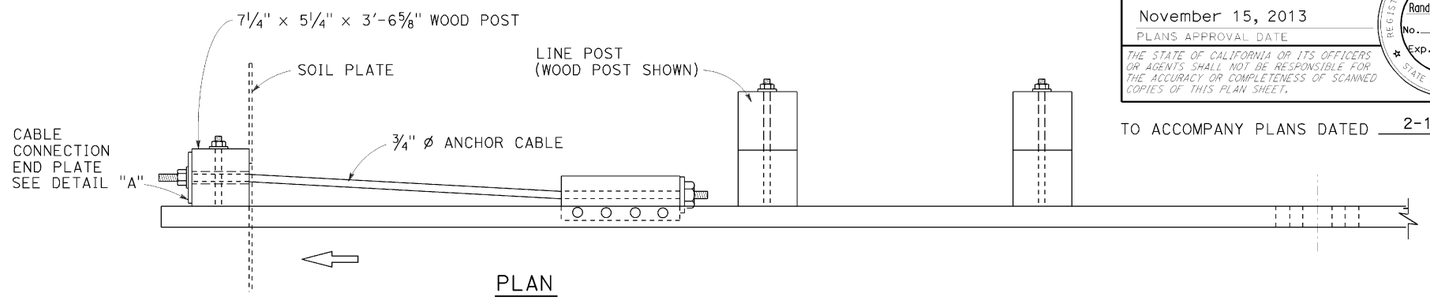

PLAN

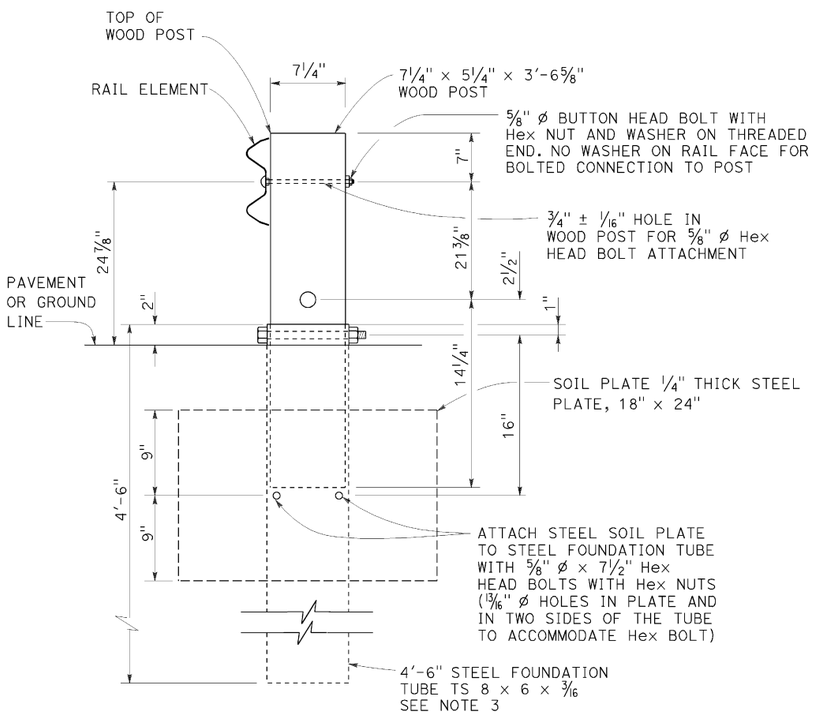

SECTION A-A

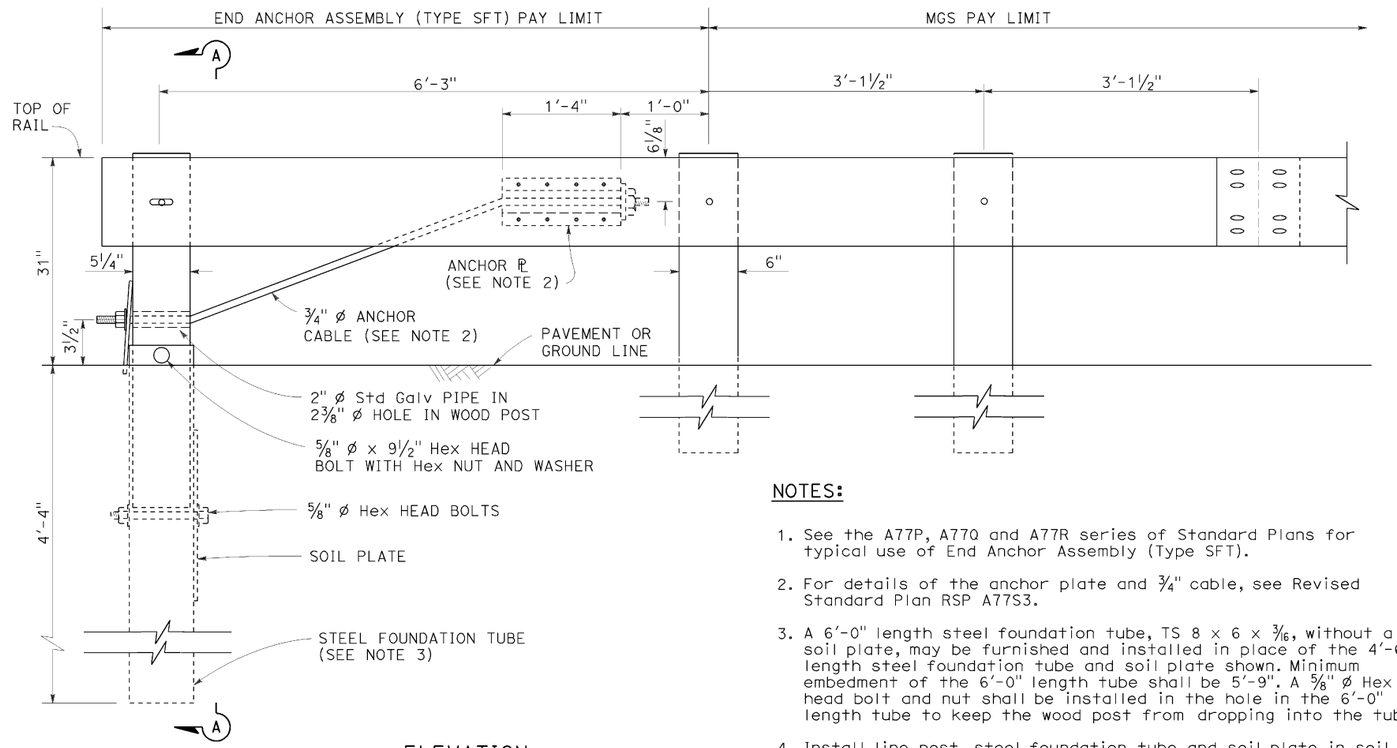

ELEVATION

END ANCHOR
ASSEMBLY (TYPE SFT)
See Note 1

NOTES:

1. See the A77P, A77Q and A77R series of Standard Plans for typical use of End Anchor Assembly (Type SFT).
2. For details of the anchor plate and 3/4" cable, see Revised Standard Plan RSP A77S3.
3. A 6'-0" length steel foundation tube, TS 8 x 6 x 3/16, without a soil plate, may be furnished and installed in place of the 4'-6" length steel foundation tube and soil plate shown. Minimum embedment of the 6'-0" length tube shall be 5'-9". A 5/8" ø Hex head bolt and nut shall be installed in the hole in the 6'-0" length tube to keep the wood post from dropping into the tube.
4. Install line post, steel foundation tube and soil plate in soil.

STATE OF CALIFORNIA
DEPARTMENT OF TRANSPORTATION

MIDWEST GUARDRAIL SYSTEM END ANCHOR ASSEMBLY (TYPE SFT)

NO SCALE

RSP A77S1 DATED NOVEMBER 15, 2013 SUPERSEDES RSP A77S1 DATED JULY 19, 2013 THAT SUPPLEMENTS THE STANDARD PLANS BOOK DATED 2010.

REVISED STANDARD PLAN RSP A77S1

2010 REVISED STANDARD PLAN RSP A77S1

10-4-13

Dist	COUNTY	ROUTE	POST MILES TOTAL PROJECT	SHEET No.	TOTAL SHEETS
07	LA	5	19.2/28.9	172	217

Randell D. Hiatt
REGISTERED CIVIL ENGINEER

November 15, 2013
PLANS APPROVAL DATE

REGISTERED PROFESSIONAL ENGINEER
Randell D. Hiatt
No. C50200
Exp. 6-30-15
CIVIL
STATE OF CALIFORNIA

THE STATE OF CALIFORNIA OR ITS OFFICERS OR AGENTS SHALL NOT BE RESPONSIBLE FOR THE ACCURACY OR COMPLETENESS OF SCANNED COPIES OF THIS PLAN SHEET.

TO ACCOMPANY PLANS DATED 2-10-14

2010 REVISED STANDARD PLAN RSP A77S3

NOTE:

See Revised Standard Plans RSP A77S1, RSP A77S2 and RSP A77T1 for typical use of anchor cable and anchor plate.

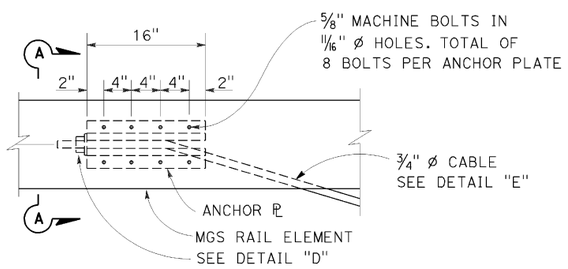

ANCHOR PLATE DETAIL
(MGS shown, TBB similar)

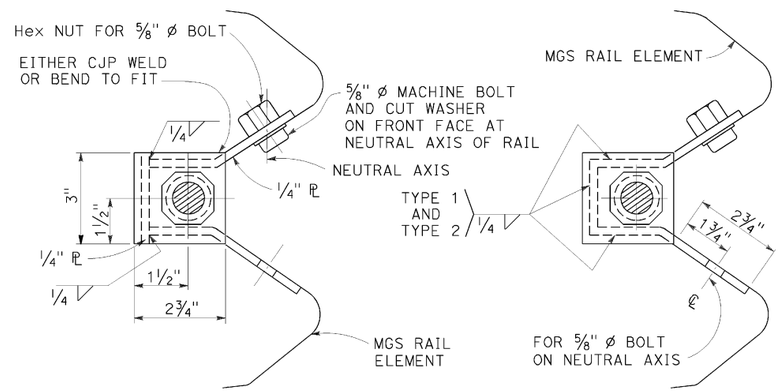

NOTE:
Dimensioning applies to both types.

SECTION A-A
(ALTERNATIVE TYPE 1)

SECTION A-A
(ALTERNATIVE TYPE 2)

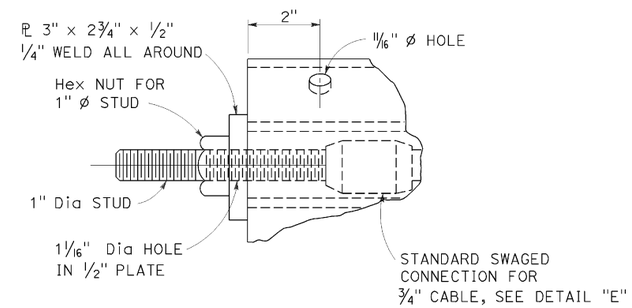

DETAIL "D"

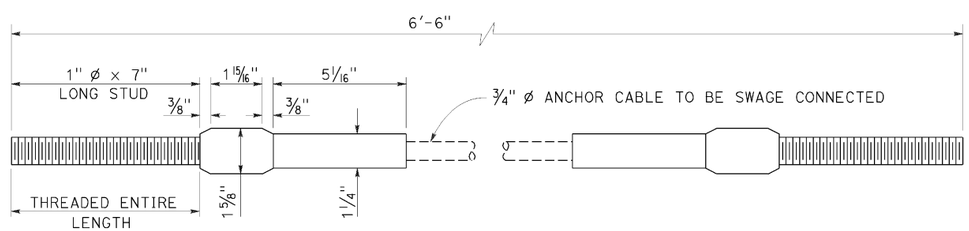

ANCHOR CABLE WITH
SWAGED FITTING AND STUD
DETAIL "E"

STATE OF CALIFORNIA
DEPARTMENT OF TRANSPORTATION

METAL RAILING ANCHOR CABLE AND ANCHOR PLATE DETAILS

NO SCALE

RSP A77S3 DATED NOVEMBER 15, 2013 SUPERSEDES RSP A77S3
DATED JULY 19, 2013 THAT SUPPLEMENTS THE STANDARD PLANS BOOK DATED 2010.

REVISED STANDARD PLAN RSP A77S3

10-4-13

Dist	COUNTY	ROUTE	POST MILES TOTAL PROJECT	SHEET No.	TOTAL SHEETS
07	LA	5	19.2/28.9	173	217

Randell D. Hiatt
REGISTERED CIVIL ENGINEER

July 19, 2013
PLANS APPROVAL DATE

REGISTERED PROFESSIONAL ENGINEER
Randell D. Hiatt
No. C50200
Exp. 6-30-15
CIVIL
STATE OF CALIFORNIA

THE STATE OF CALIFORNIA OR ITS OFFICERS OR AGENTS SHALL NOT BE RESPONSIBLE FOR THE ACCURACY OR COMPLETENESS OF SCANNED COPIES OF THIS PLAN SHEET.

TO ACCOMPANY PLANS DATED 2-10-14

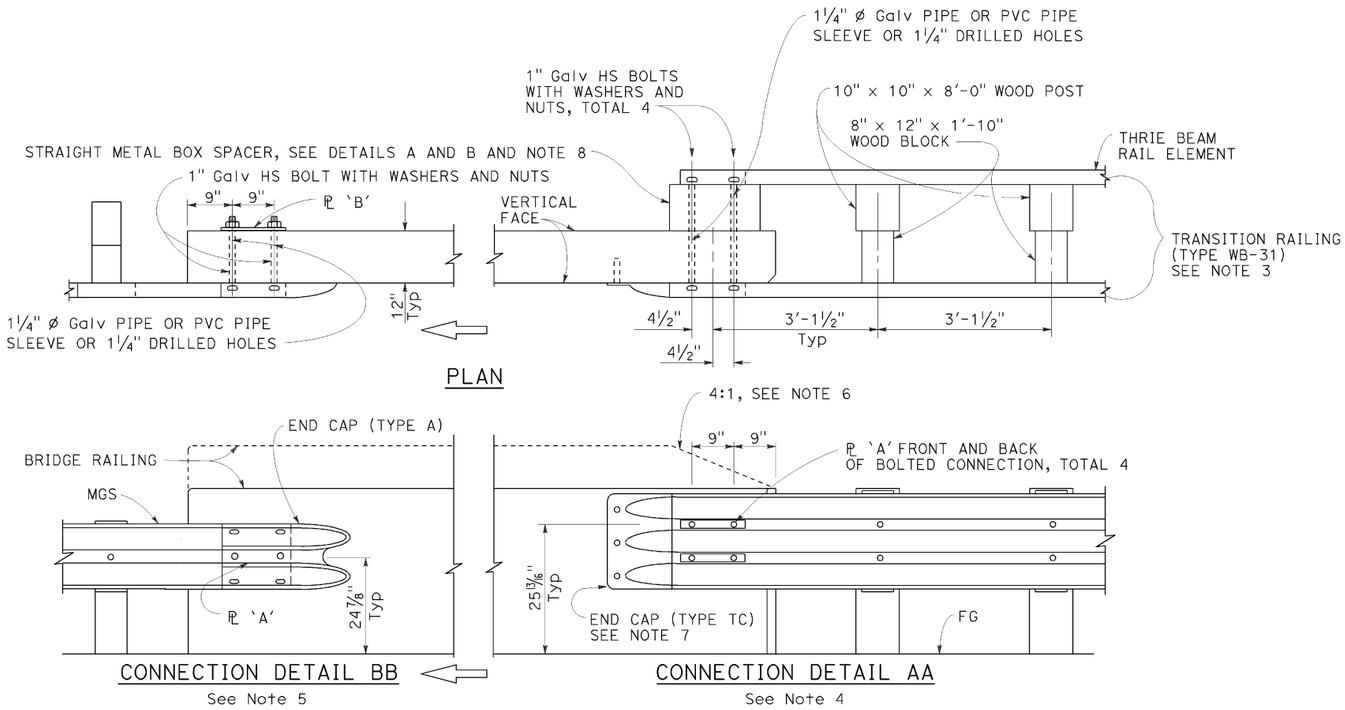

MIDWEST GUARDRAIL SYSTEM CONNECTION TO BRIDGE RAILING WITHOUT SIDEWALK

NOTES:

1. See Revised Standard Plan RSP A77U2 for additional connection details to bridges without sidewalks.
2. Additional details of posts, blocks and hardware are shown on Revised Standard Plans RSP A77M1, RSP A77N1 and RSP A77N2.
3. For additional details of Transition Railing (Type WB-31), see Revised Standard Plan RSP A77U4. Transition Railing (Type WB-31) transitions the 12 gauge MGS railing section to a heavier gage nested thrie beam railing section which is connected to the concrete bridge railing.
4. For typical use of Connection Detail AA, see Layout Types 12A and 12B on Revised Standard Plan RSP A77Q1, Layout Types 12C and 12D on Revised Standard Plan RSP A77Q2, and Layout Type 12E on Revised Standard Plan RSP A77Q3.
5. For typical use of Connection Detail BB, see Layout Type 12D (structure departure railing connection) on Revised Standard Plan RSP A77Q2 and Layout Type 12DD on Revised Standard Plan RSP A77Q5.
6. Where the height of the bridge railing exceeds the height of the thrie beam railing by more than 1" at Connection Detail AA, taper the top of the end of the bridge railing at 4:1 to match the top elevation of the thrie beam rail.
7. For details of End Cap (Type TC), see Revised Standard Plan RSP A77U4.
8. See Revised Standard Plan RSP A77U4 for additional details regarding depth dimension for straight metal box spacer.

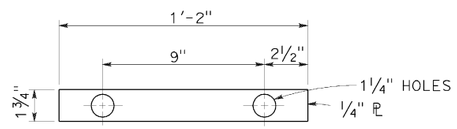

PLATE 'A'

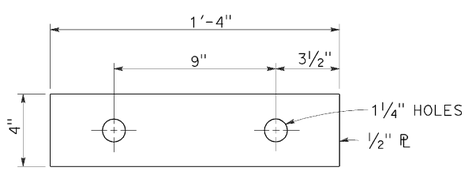

PLATE 'B'
(For backside of connection BB)

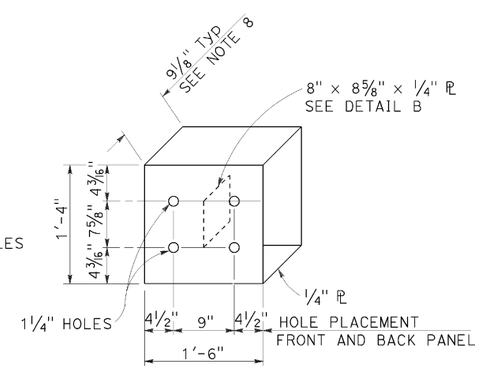

DETAIL A

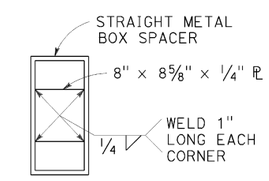

DETAIL B

STRAIGHT METAL BOX SPACER

STATE OF CALIFORNIA
DEPARTMENT OF TRANSPORTATION

MIDWEST GUARDRAIL SYSTEM CONNECTIONS TO BRIDGE RAILINGS WITHOUT SIDEWALKS DETAILS No. 1

NO SCALE

RSP A77U1 DATED JULY 19, 2013 SUPPLEMENTS THE STANDARD PLANS BOOK DATED 2010.

REVISED STANDARD PLAN RSP A77U1

2010 REVISED STANDARD PLAN RSP A77U1

7-8-13

Dist	COUNTY	ROUTE	POST MILES TOTAL PROJECT	SHEET No.	TOTAL SHEETS
07	LA	5	19.2/28.9	174	217

Randell D. Hiatt
REGISTERED CIVIL ENGINEER

July 19, 2013
PLANS APPROVAL DATE

REGISTERED PROFESSIONAL ENGINEER Randell D. Hiatt No. C50200 Exp. 6-30-15 CIVIL STATE OF CALIFORNIA

THE STATE OF CALIFORNIA OR ITS OFFICERS OR AGENTS SHALL NOT BE RESPONSIBLE FOR THE ACCURACY OR COMPLETENESS OF SCANNED COPIES OF THIS PLAN SHEET.

TO ACCOMPANY PLANS DATED 2-10-14

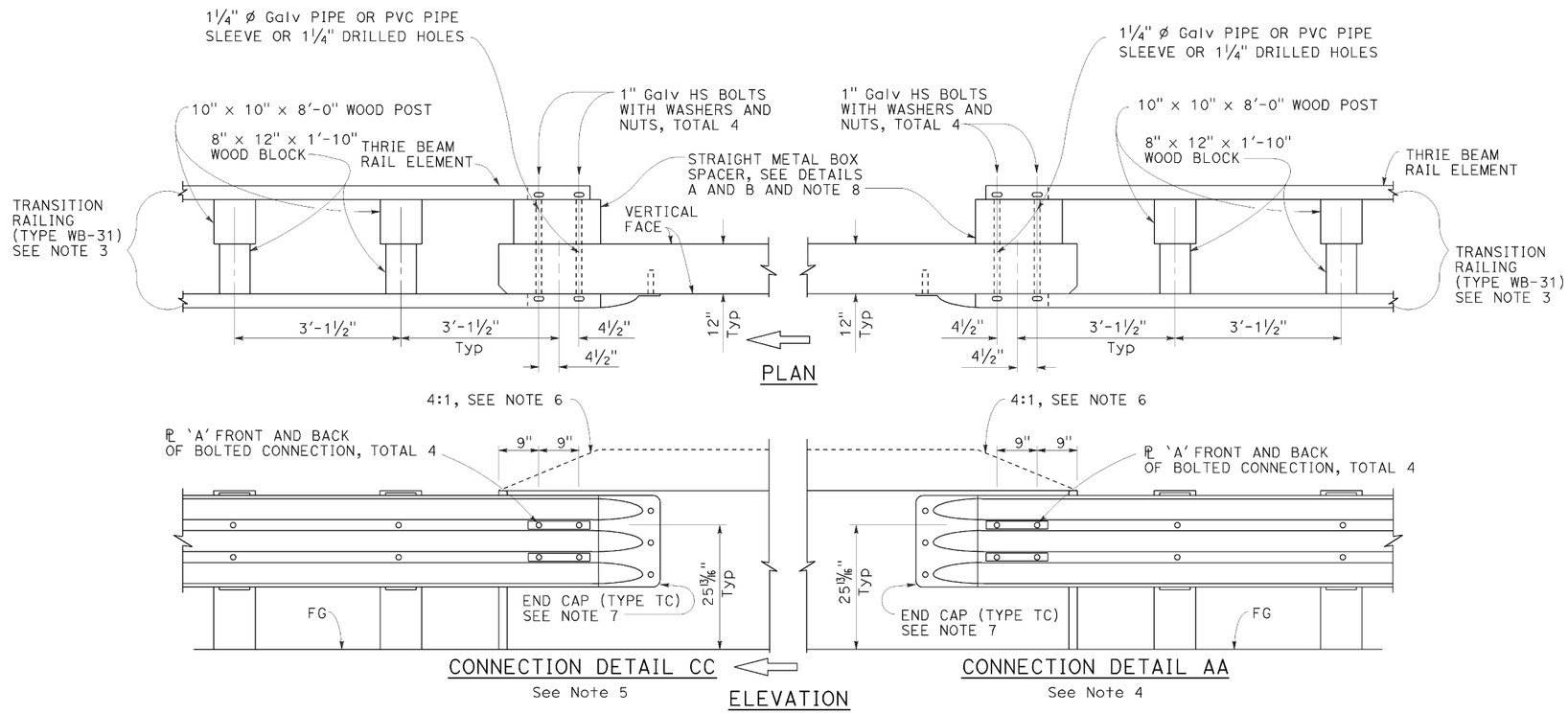

MIDWEST GUARDRAIL SYSTEM CONNECTION TO BRIDGE RAILING WITHOUT SIDEWALK

NOTES:

1. See Revised Standard Plan RSP A77U1 for additional connection details to bridges without sidewalks.
2. Additional details of posts, blocks and hardware are shown on Revised Standard Plans RSP A77M1, RSP A77N1 and RSP A77N2.
3. For additional details of Transition Railing (Type WB-31), see Revised Standard Plan RSP A77U4. Transition Railing (Type WB-31) transitions the 12 gauge MGS railing section to a heavier gage nested thrie beam railing section which is connected to the concrete bridge railing.
4. For typical use of Connection Detail AA, see Layout Types 12A and 12B on Revised Standard Plan RSP A77Q1, Layout Types 12C and 12D on Revised Standard Plan RSP A77Q2, and Layout Type 12E on Revised Standard Plan RSP A77Q3.
5. For typical use of Connection Detail CC, see Layout Types 12AA and 12BB on Revised Standard Plan RSP A77Q4 and Layout Type 12CC on Revised Standard Plan RSP A77Q5.
6. Where the height of the bridge railing exceeds the height of the thrie beam railing by more than 1" at Connection Detail AA and connection Detail CC, taper the top of the end of the bridge railing at 4:1 to match the top elevation of the thrie beam railing.
7. For details of End Cap (Type TC), see Revised Standard Plan RSP A77U4.
8. See Revised Standard Plan RSP A77U4 for additional details regarding depth dimension for straight metal box spacer.

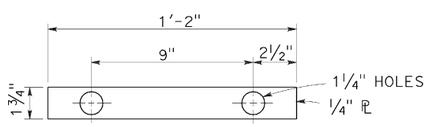

PLATE 'A'

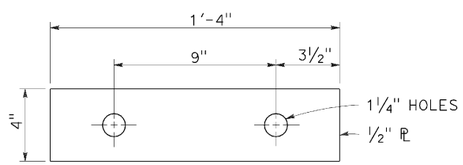

PLATE 'B'
(For backside of connection BB)

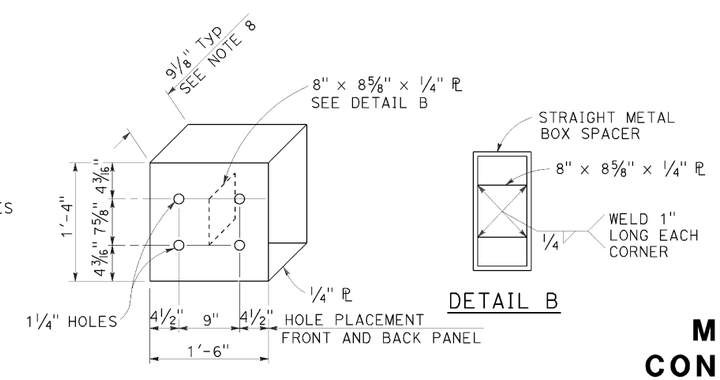

DETAIL A

DETAIL B

STRAIGHT METAL BOX SPACER

STATE OF CALIFORNIA
DEPARTMENT OF TRANSPORTATION

MIDWEST GUARDRAIL SYSTEM CONNECTIONS TO BRIDGE RAILINGS WITHOUT SIDEWALKS DETAILS No. 2

NO SCALE

RSP A77U2 DATED JULY 19, 2013 SUPPLEMENTS THE STANDARD PLANS BOOK DATED 2010.

REVISED STANDARD PLAN RSP A77U2

2010 REVISED STANDARD PLAN RSP A77U2

6-20-13

Dist	COUNTY	ROUTE	POST MILES TOTAL PROJECT	SHEET NO.	TOTAL SHEETS
07	LA	5	19.2/28.9	175	217

Randell D. Hiatt
REGISTERED CIVIL ENGINEER

July 19, 2013
PLANS APPROVAL DATE

REGISTERED PROFESSIONAL ENGINEER
Randell D. Hiatt
No. C50200
Exp. 6-30-15
CIVIL
STATE OF CALIFORNIA

THE STATE OF CALIFORNIA OR ITS OFFICERS OR AGENTS SHALL NOT BE RESPONSIBLE FOR THE ACCURACY OR COMPLETENESS OF SCANNED COPIES OF THIS PLAN SHEET.

TO ACCOMPANY PLANS DATED 2-10-14

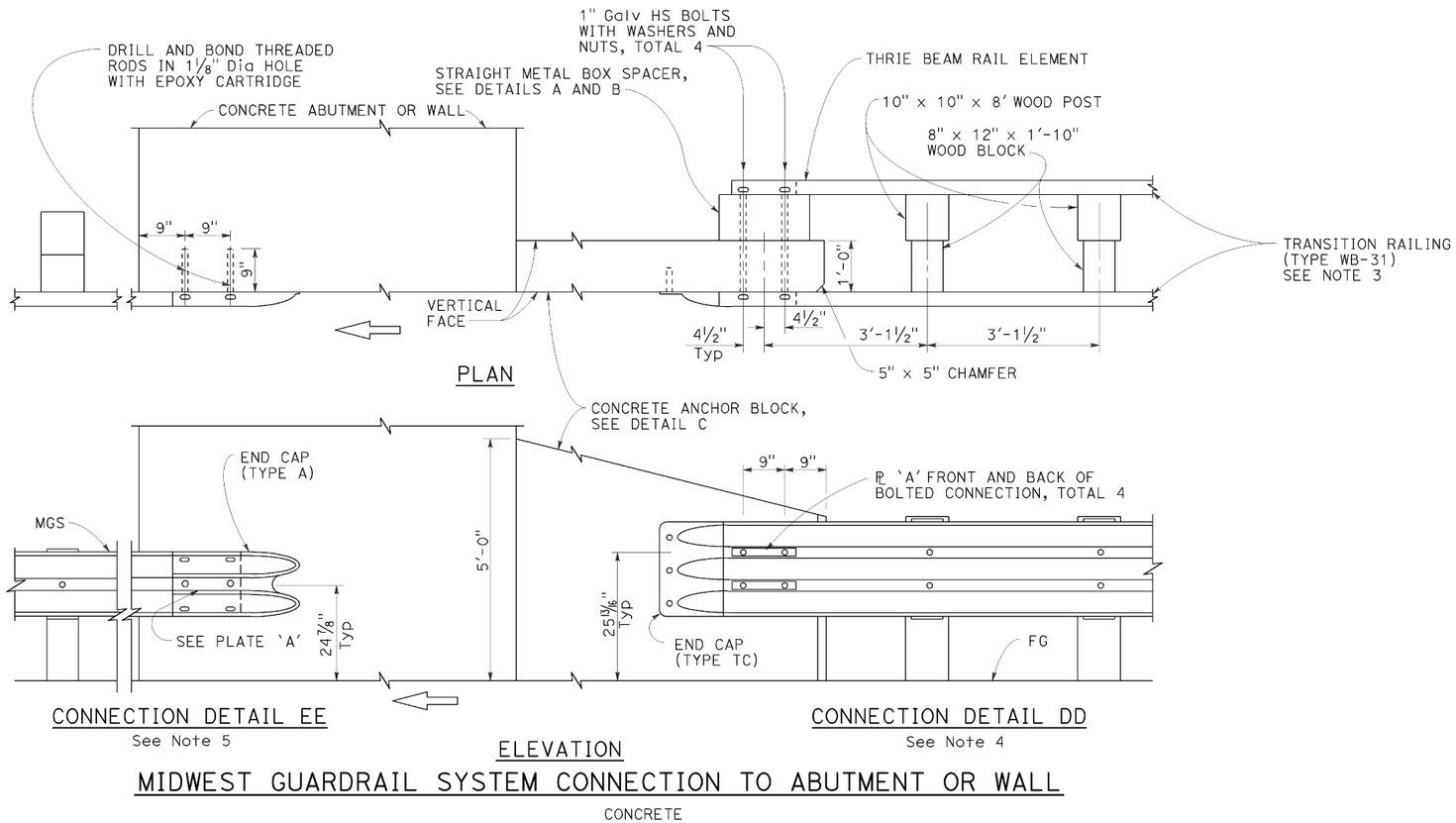

MIDWEST GUARDRAIL SYSTEM CONNECTION TO ABUTMENT OR WALL

NOTES:

1. These connection details apply to abutments and walls.
2. Additional details of posts, blocks and hardware are shown on Revised Standard Plans RSP A77M1, RSP A77N1 and RSP A77N2.
3. For additional details of Transition Railing (Type WB-31), see Revised Standard Plan RSP A77U4. Transition Railing (Type WB-31) transitions the 12 gauge MGS railing section to a heavier gage nested thrie beam railingsection which is connected to the concrete anchor block.
4. For typical use of Connection Details DD, see Layout Types 12A and 12B on Revised Standard Plan RSP A77Q1 and Layout Types 12C and 12D on Revised Standard Plan RSP A77Q2.
5. For typical use of Connection Detail EE, see Layout Type 12D on Revised Standard Plan RSP A77Q2 and Layout Type 12DD on Revised Standard Plan RSP A77Q5.

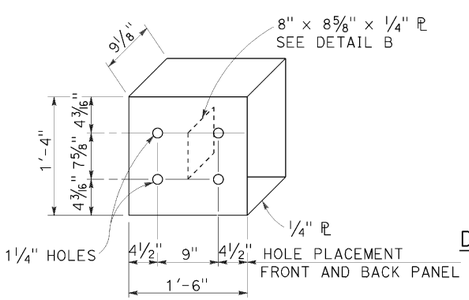

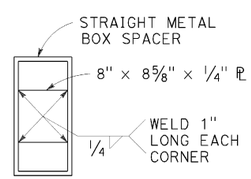

STRAIGHT METAL BOX SPACER

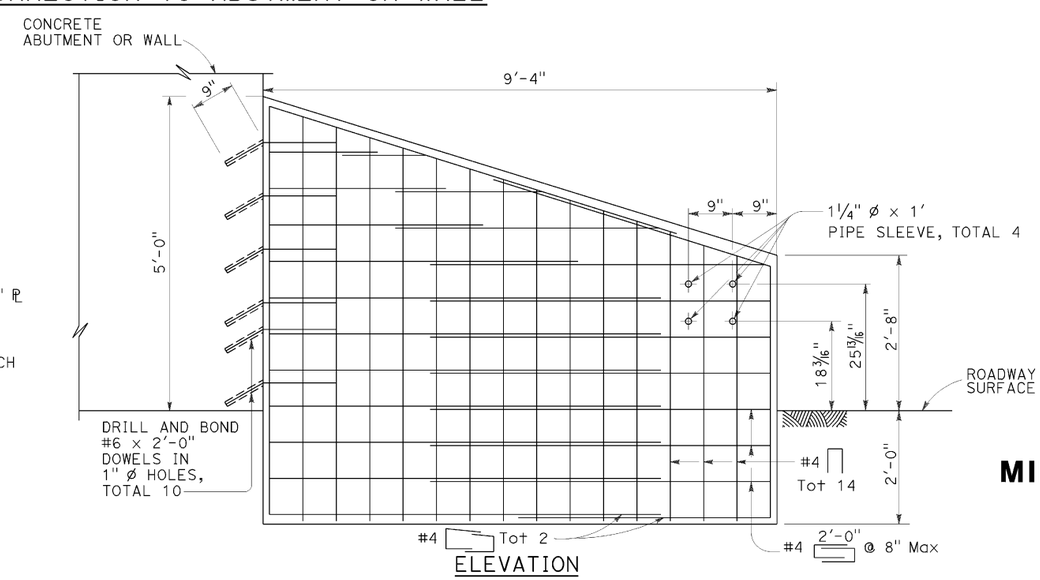

ELEVATION

ANCHOR BLOCK FOR TRANSITION RAILING CONNECTION

DETAIL C

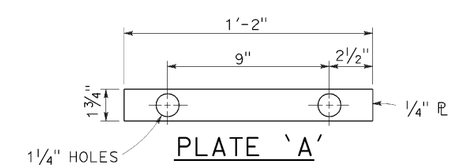

STATE OF CALIFORNIA
DEPARTMENT OF TRANSPORTATION

MIDWEST GUARDRAIL SYSTEM CONNECTIONS TO ABUTMENTS AND WALLS

NO SCALE

RSP A77U3 DATED JULY 19, 2013 SUPPLEMENTS THE STANDARD PLANS BOOK DATED 2010.

REVISED STANDARD PLAN RSP A77U3

2010 REVISED STANDARD PLAN RSP A77U3

7-8-13

Dist	COUNTY	ROUTE	POST MILES TOTAL PROJECT	SHEET No.	TOTAL SHEETS
07	LA	5	19.2/28.9	176	217

Randell D. Hiatt
REGISTERED CIVIL ENGINEER

November 15, 2013
PLANS APPROVAL DATE

REGISTERED PROFESSIONAL ENGINEER — Randell D. Hiatt — No. C50200 — Exp. 6-30-15 — CIVIL — STATE OF CALIFORNIA

THE STATE OF CALIFORNIA OR ITS OFFICERS OR AGENTS SHALL NOT BE RESPONSIBLE FOR THE ACCURACY OR COMPLETENESS OF SCANNED COPIES OF THIS PLAN SHEET.

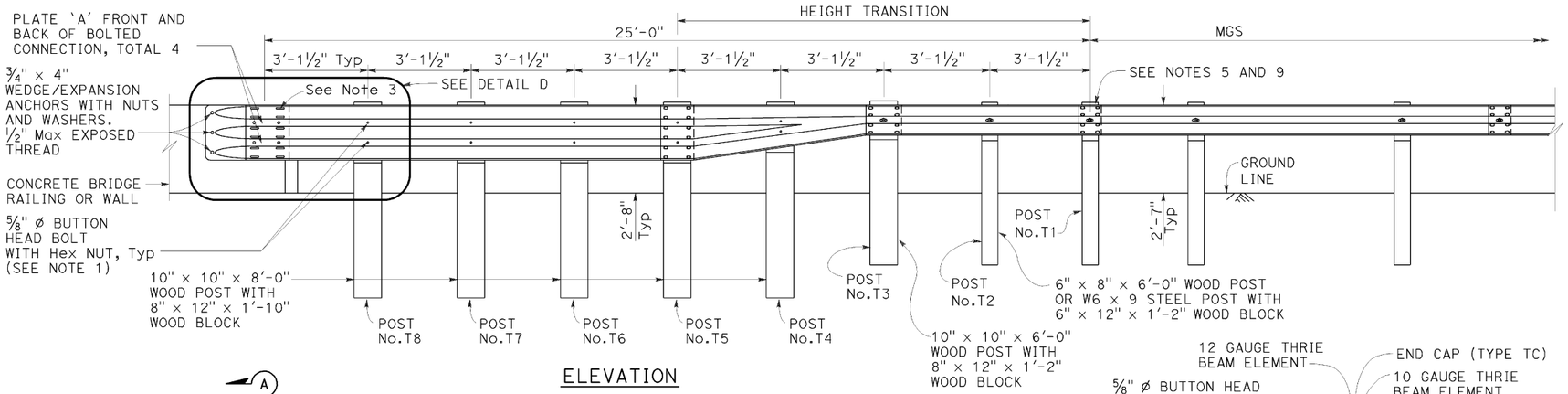

ELEVATION

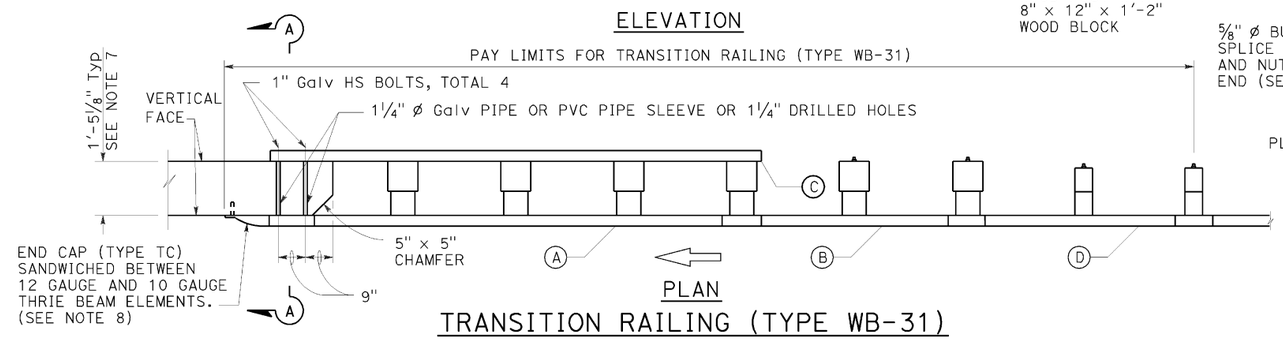

PLAN

TRANSITION RAILING (TYPE WB-31)

(No Blockout Attachment)

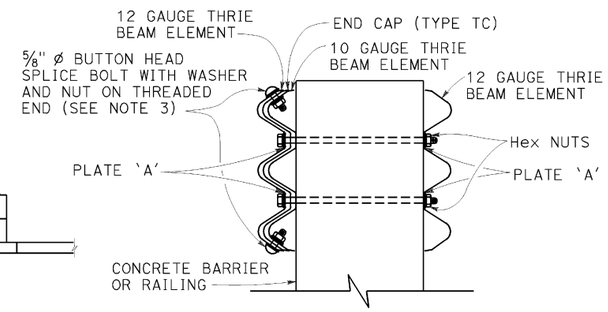

SECTION A-A

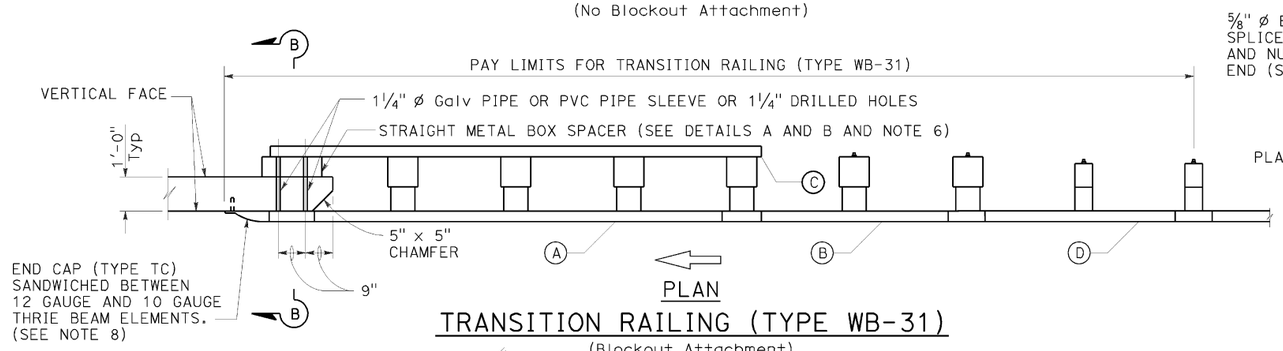

PLAN

TRANSITION RAILING (TYPE WB-31)

(Blockout Attachment)

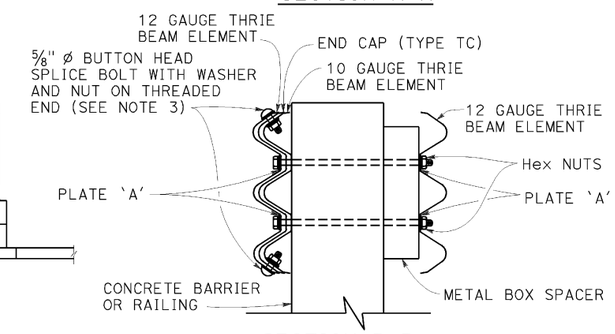

SECTION B-B

NOTES:

TO ACCOMPANY PLANS DATED 2-10-14

1. Use 5/8" ø Button head bolts and hex nuts for connections to posts. No washer on rail face for bolted connections to post.
2. The nested rail elements, end cap, and 'W' beam to thrie beam element may be spliced together prior to bolting the elements to the wood post and concrete barrier or railing.
3. Exterior splice bolt holes for rail element splices at Post No. T5 and the connection to the concrete barrier or railing shall be the standard 29/32" x 1 1/8" slot size. Interior splice bolt holes at these locations may be increased up to 1 1/4" ø. Only the top 4 and the bottom 4 splice bolts with washers and nuts are required for rail splices at Post No. T5 and the connection to the concrete barrier or railing.
4. The top elevation of Posts No. T2 through No. T7 shall not project more than 1" above the top elevation of the rail element.
5. Typically, the railing connected to Transition Railing (Type WB-31) will be either standard railing section of MGS with height transition ratio of 150:1 or a Caltrans approved 31" end treatment attached to Post No. T1.
6. The depth of the metal box spacer varies from the 9 1/8" to 1 1/2" and is dependent on the width of the concrete railing or wall. The combined dimension for the depth of the metal box spacer plus the width of railing or wall is typically 21 1/8". Where the space between the backside of the concrete railing or wall and the rear thrie beam element is less than 1 1/2", metal plates similar to Plate 'A' are to be used as spacers.
7. Where the width of the concrete railing or wall is greater than 17 1/8", wood blocks are to be used to fill the space created between the backside of Posts No. T5 through No. T8 and the rear thrie beam element. These wood blocks shall be 8" in width and 1'-2" in length. The dimension between the front thrie beam element and the rear thrie beam element is to match the width of the concrete railing or wall.
8. End cap may be installed over 12 gauge and 10 gauge thrie beam elements where transition railing is installed on the departure end of bridge railing.
9. Conform standard railing section height to 31" at Post No. T1 using height transition ratio of 150:1.

LEGEND:

(A) NESTED THRIE BEAM ELEMENTS (ONE 12 GAUGE ELEMENT NESTED OVER ONE 10 GAUGE ELEMENT).

(B) ONE ASYMMETRICAL 10 GAUGE "W" BEAM TO THRIE BEAM ELEMENT.

(C) ONE 12 GAUGE THRIE BEAM ELEMENT.

(D) ONE 10 GAUGE "W" BEAM RAIL ELEMENT (7'-3 1/2" LENGTH)

10 GAUGE = 0.138" THICK
12 GAUGE = 0.108" THICK

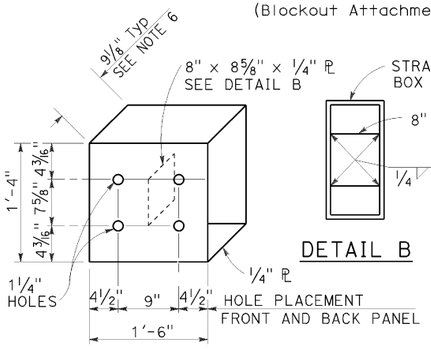

DETAIL A

STRAIGHT METAL BOX SPACER

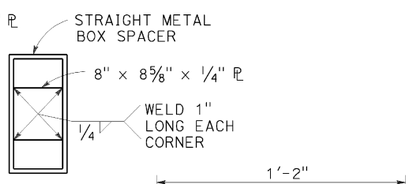

DETAIL B

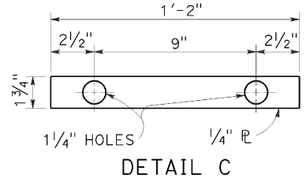

DETAIL C

PLATE 'A'

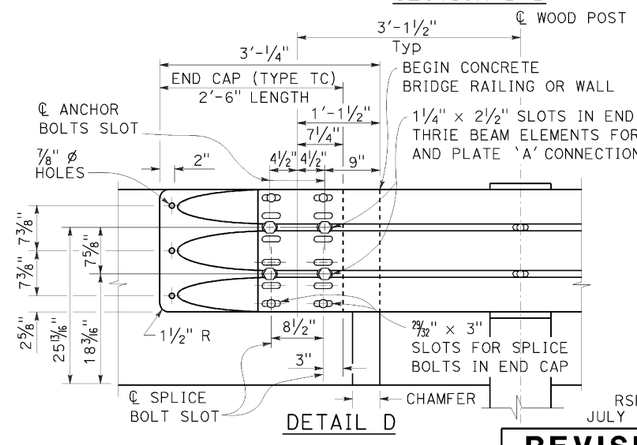

DETAIL D

STATE OF CALIFORNIA
DEPARTMENT OF TRANSPORTATION

MIDWEST GUARDRAIL SYSTEM TRANSITION RAILING (TYPE WB-31)

NO SCALE

RSP A77U4 DATED NOVEMBER 15, 2013 SUPERSEDES RSP A77U4 DATED JULY 19, 2013 THAT SUPPLEMENTS THE STANDARD PLANS BOOK DATED 2010.

REVISED STANDARD PLAN RSP A77U4

2010 REVISED STANDARD PLAN RSP A77U4

10-4-13

Dist	COUNTY	ROUTE	POST MILES TOTAL PROJECT	SHEET No.	TOTAL SHEETS
07	LA	5	19.2/28.9	177	217

Randell D. Hiatt
REGISTERED CIVIL ENGINEER

July 19, 2013
PLANS APPROVAL DATE

Randell D. Hiatt No. C50200 Exp. 6-30-15 CIVIL STATE OF CALIFORNIA REGISTERED PROFESSIONAL ENGINEER

THE STATE OF CALIFORNIA OR ITS OFFICERS OR AGENTS SHALL NOT BE RESPONSIBLE FOR THE ACCURACY OR COMPLETENESS OF SCANNED COPIES OF THIS PLAN SHEET.

TO ACCOMPANY PLANS DATED 2-10-14

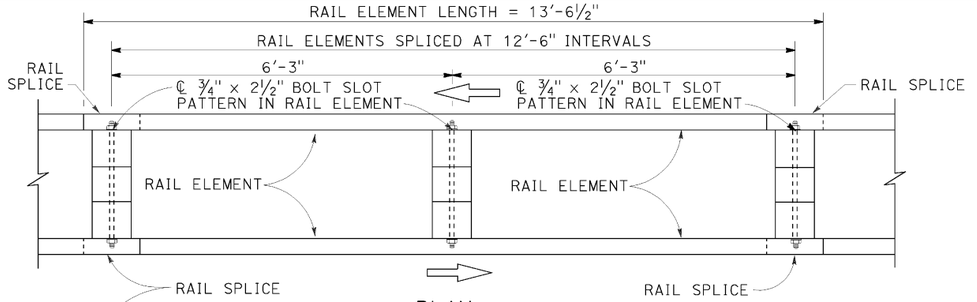

PLAN

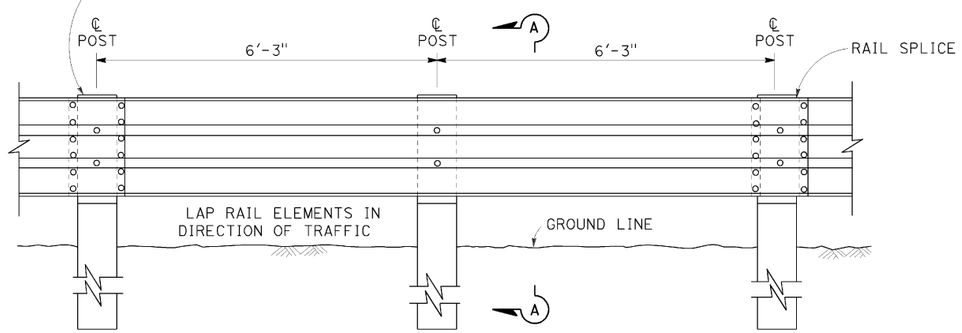

ELEVATION

DOUBLE THRIE BEAM BARRIER

(Wood post and blocks)
See Note 1

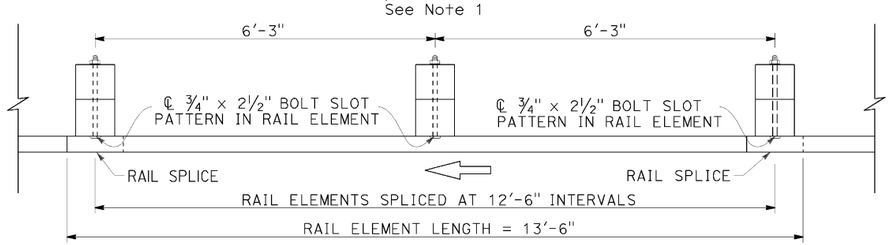

PLAN

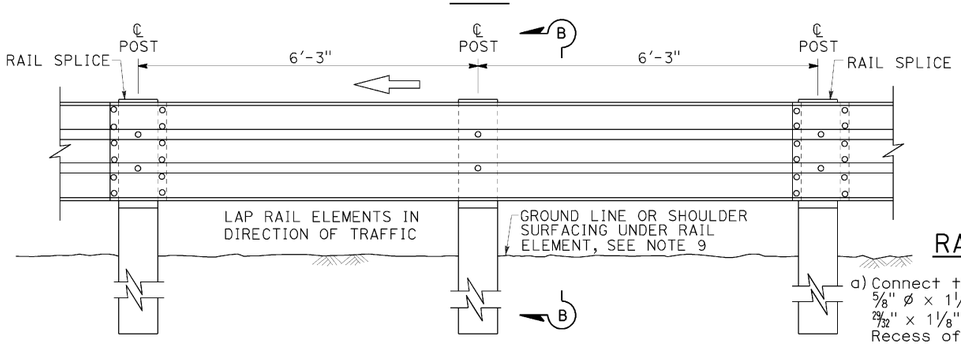

ELEVATION

SINGLE THRIE BEAM BARRIER

(Wood post and blocks)
See Note 1

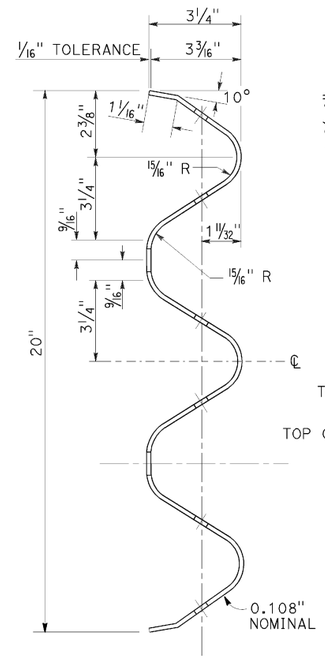

SECTION THRU RAIL ELEMENT

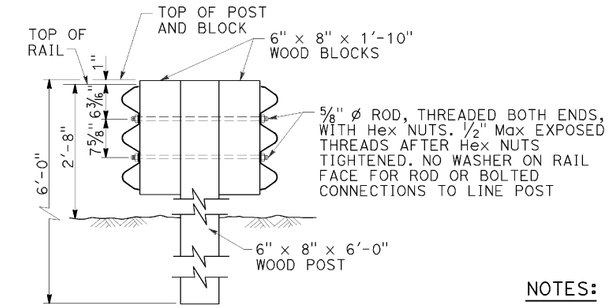

SECTION A-A

TYPICAL WOOD LINE POST INSTALLATION

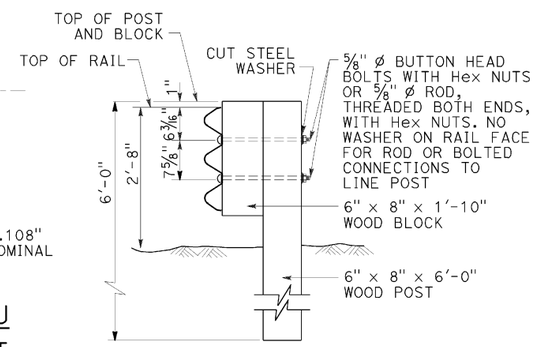

Where bolts are used, install so that the threaded end of the bolts and nuts are placed away from traffic side of rail.

SECTION B-B

TYPICAL WOOD LINE POST INSTALLATION

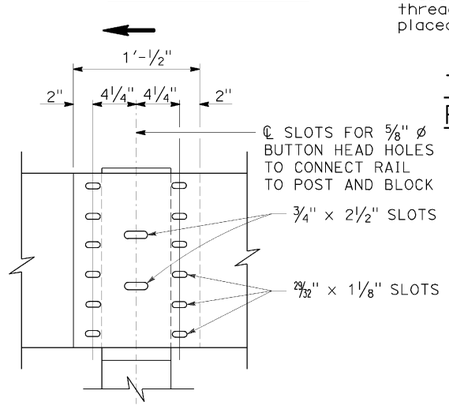

ELEVATION

RAIL ELEMENT SPLICE DETAIL

a) Connect the overlapped ends of the thrie beam rail elements with ⅝" ø x 1¼" button head oval shoulder bolts inserted into the 29/32" x 1⅛" slots and bolted together with ⅝" ø recessed hex nuts. Recess of hex nut points toward rail element. A total of 12 bolts and nuts are to be used at each rail splice connection.

b) The ends of the rail elements are to be overlapped in the direction of traffic (see details).

c) Where end cap is to be attached to the end of a rail element, a total of 4 of the above described splice bolts and nuts are to be used. Where a return cap is to be attached to the ends of rail elements, a total of 8 of the above described splice bolts and nuts are to be used.

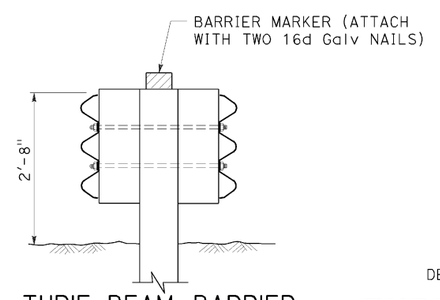

THRIE BEAM BARRIER DELINEATION

See Note 8

NOTES:

1. For details of steel post thrie beam barrier, see Standard Plan A78B.
2. For details of standard hardware, posts and blocks used to construct thrie beam barrier, see Standard Plan A78C1 and Revised Standard Plan RSP A78C2.
3. Thrie beam barrier post spacing to be 6'-3" center to center, except as otherwise noted.
4. Top of barrier rail to be 2'-8" above ground line or shoulder surfacing under the rail element.
5. For barrier end treatments and barrier connections, see Standard Plans A78E3 and A78G, and Revised Standard Plans RSP A78E1, RSP A78E2 RSP A77Q1, RSP A77Q2 and RSP A78H.
6. For connection to Concrete Barrier (Type 60), see Standard Plans A78I.
7. For details of thrie beam barrier on bridge see Standard Plan A78D2. For details of thrie beam barrier at fixed object, see Revised Standard Plan RSP A78D1.
8. Median barrier delineation to be used when required by the Special Provisions. Spacing of barrier markers to match spacing of raised pavement markers on adjacent median edgeline pavement delineation.
9. Install posts in soil.

STATE OF CALIFORNIA
DEPARTMENT OF TRANSPORTATION

THRIE BEAM BARRIER STANDARD BARRIER RAILING SECTION (WOOD POST WITH WOOD BLOCK)

NO SCALE

RSP A78A DATED JULY 19, 2013 SUPERSEDES STANDARD PLAN A78A DATED MAY 20, 2011 - PAGE 89 OF THE STANDARD PLANS BOOK DATED 2010.

REVISED STANDARD PLAN RSP A78A

2010 REVISED STANDARD PLAN RSP A78A

6-27-13

Dist	COUNTY	ROUTE	POST MILES TOTAL PROJECT	SHEET No.	TOTAL SHEETS
07	LA	5	19.2/28.9	178	217

Randell D. Hiatt
REGISTERED CIVIL ENGINEER

July 19, 2013
PLANS APPROVAL DATE

REGISTERED PROFESSIONAL ENGINEER
Randell D. Hiatt
No. C50200
Exp. 6-30-15
CIVIL
STATE OF CALIFORNIA

THE STATE OF CALIFORNIA OR ITS OFFICERS OR AGENTS SHALL NOT BE RESPONSIBLE FOR THE ACCURACY OR COMPLETENESS OF SCANNED COPIES OF THIS PLAN SHEET.

TO ACCOMPANY PLANS DATED 2-10-14

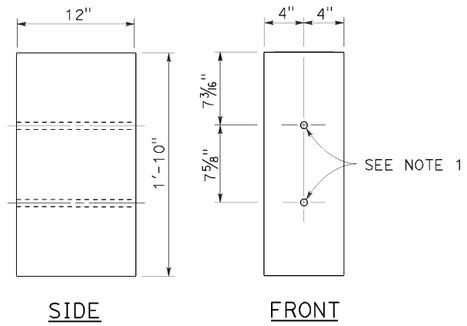

8" x 12"
WOOD BLOCK

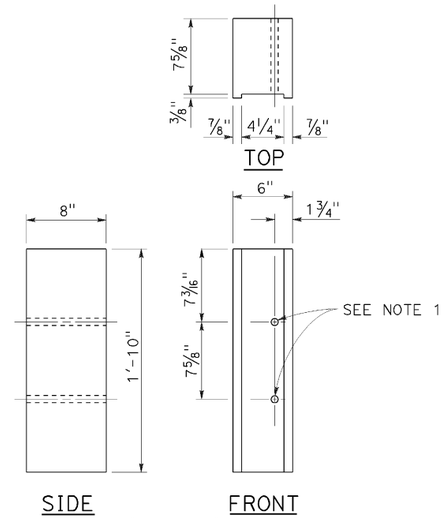

6" x 8"
NOTCHED WOOD BLOCK
See Notes 3 and 5

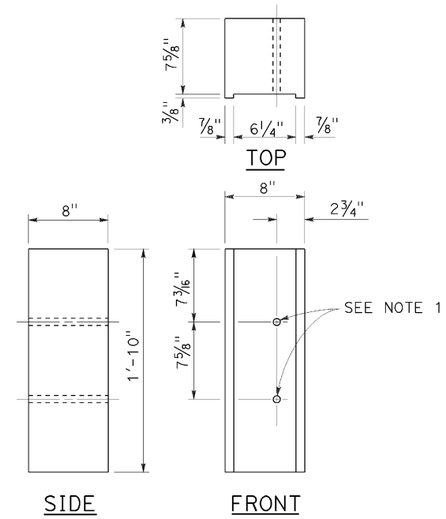

8" x 8"
NOTCHED WOOD BLOCK
See Notes 4 and 5

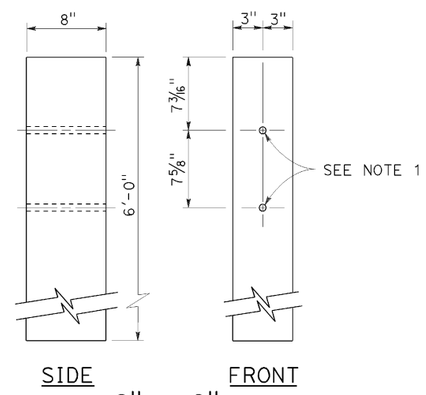

6" x 8"
WOOD POST

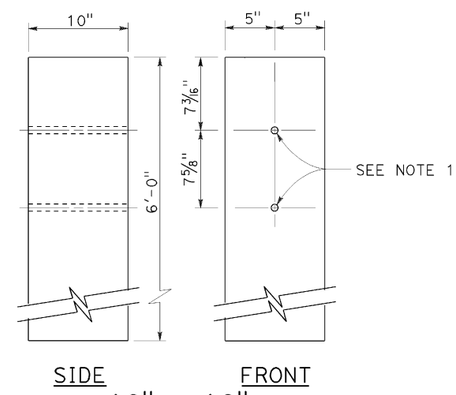

10" x 10"
WOOD POST

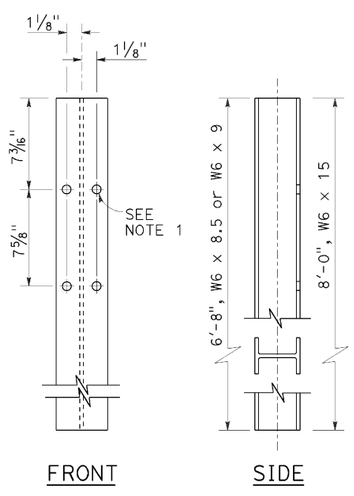

STEEL POST
W6 x 9 or W6 x 8.5 and W6 x 15

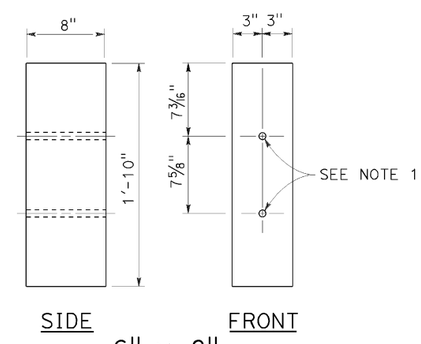

6" x 8"
WOOD BLOCK

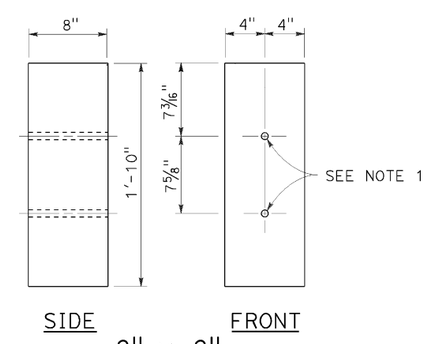

8" x 8"
WOOD BLOCK

NOTES:

1. All holes in steel post to be 13/16" Dia maximum. Holes in wood posts and wood blocks to be 3/4" Dia ±1/16".
2. Dimensions shown for wood post are nominal.
3. For use with W6 x 8.5 or W6 x 9 steel post.
4. For use with W6 x 15 steel post.
5. Notched face of block faces steel post.

STATE OF CALIFORNIA
DEPARTMENT OF TRANSPORTATION

THRIE BEAM BARRIER POST AND BLOCK DETAILS

NO SCALE

RSP A78C2 DATED JULY 19, 2013 SUPERSEDES STANDARD PLAN A78C2 DATED MAY 20, 2011 - PAGE 92 OF THE STANDARD PLANS BOOK DATED 2010.

REVISED STANDARD PLAN RSP A78C2

2010 REVISED STANDARD PLAN RSP A78C2

7-3-13

Dist	COUNTY	ROUTE	POST MILES TOTAL PROJECT	SHEET No.	TOTAL SHEETS
07	LA	5	19.2/28.9	179	217

Randell D. Hiatt
REGISTERED CIVIL ENGINEER

July 19, 2013
PLANS APPROVAL DATE

REGISTERED PROFESSIONAL ENGINEER
Randell D. Hiatt
No. C50200
Exp. 6-30-15
CIVIL
STATE OF CALIFORNIA

THE STATE OF CALIFORNIA OR ITS OFFICERS OR AGENTS SHALL NOT BE RESPONSIBLE FOR THE ACCURACY OR COMPLETENESS OF SCANNED COPIES OF THIS PLAN SHEET.

TO ACCOMPANY PLANS DATED 2-10-14

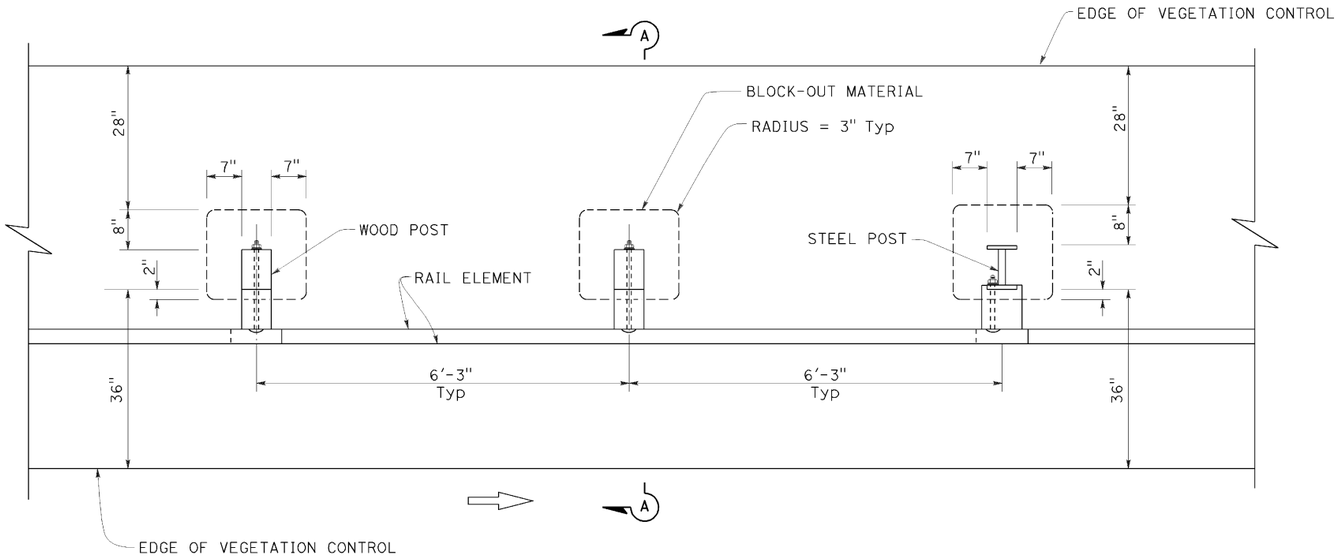

PLAN

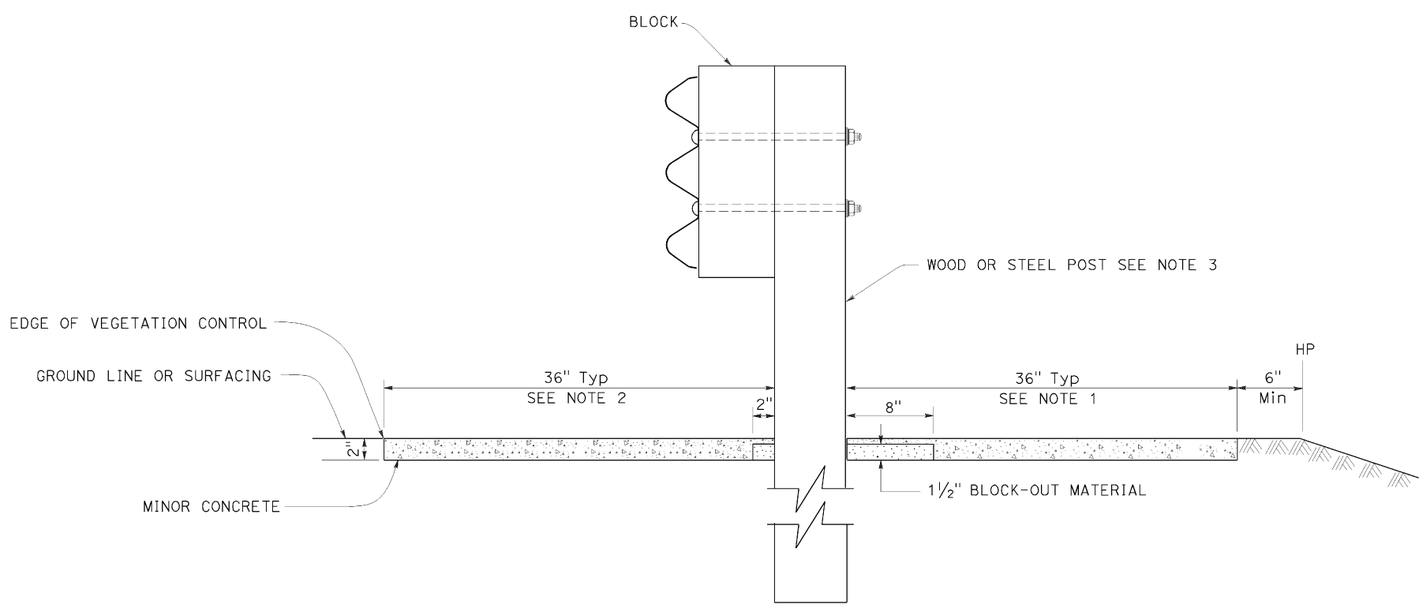

SECTION A-A

NOTES:

1. Where the distance between back of post and hinge point is less than 42", construct vegetation control to 6" from hinge point while maintaining the 8" block-out at back of post. If the 8" block-out at back of post can not be maintained, construct vegetation control flush with the back edge of post.
2. Where dike is constructed under barrier, construct vegetation control to back edge of dike. Where paved shoulder is constructed within 36" in front of the post, construct vegetation control to the edge of paved shoulder.
3. For wood and steel post sizes, see Revised Standard Plan RSP A77N2.
4. For details not shown, see Standard Plan A78B and Revised Standard Plan RSP A78A.

STATE OF CALIFORNIA
DEPARTMENT OF TRANSPORTATION

SINGLE THRIE BEAM BARRIER TYPICAL VEGETATION CONTROL STANDARD BARRIER RAILING SECTION

NO SCALE

RSP A78C3 DATED JULY 19, 2013 SUPERSEDES STANDARD PLAN A78C3 DATED MAY 20, 2011 - PAGE 93 OF THE STANDARD PLANS BOOK DATED 2010.

REVISED STANDARD PLAN RSP A78C3

2010 REVISED STANDARD PLAN RSP A78C3

6-27-13

Dist	COUNTY	ROUTE	POST MILES TOTAL PROJECT	SHEET No.	TOTAL SHEETS
07	LA	5	19.2/28.9	180	217

Randell D. Hiatt
REGISTERED CIVIL ENGINEER

October 19, 2012
PLANS APPROVAL DATE

REGISTERED PROFESSIONAL ENGINEER
Randell D. Hiatt
No. C50200
Exp. 6-30-13
CIVIL
STATE OF CALIFORNIA

THE STATE OF CALIFORNIA OR ITS OFFICERS OR AGENTS SHALL NOT BE RESPONSIBLE FOR THE ACCURACY OR COMPLETENESS OF SCANNED COPIES OF THIS PLAN SHEET.

TO ACCOMPANY PLANS DATED 2-10-14

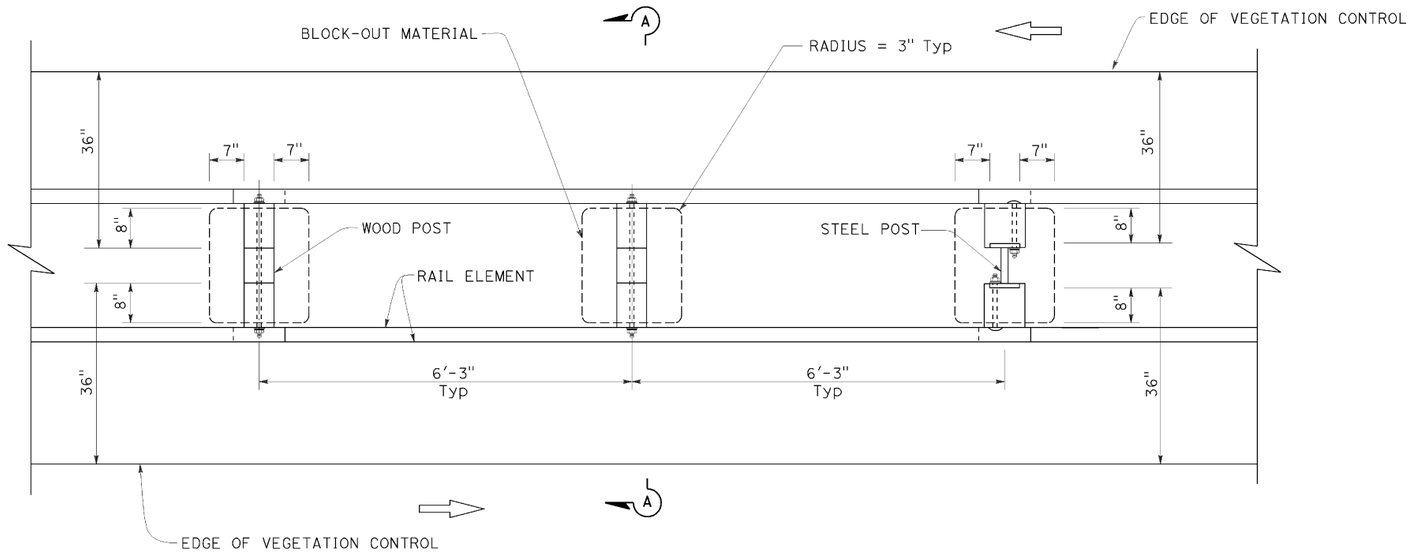

PLAN

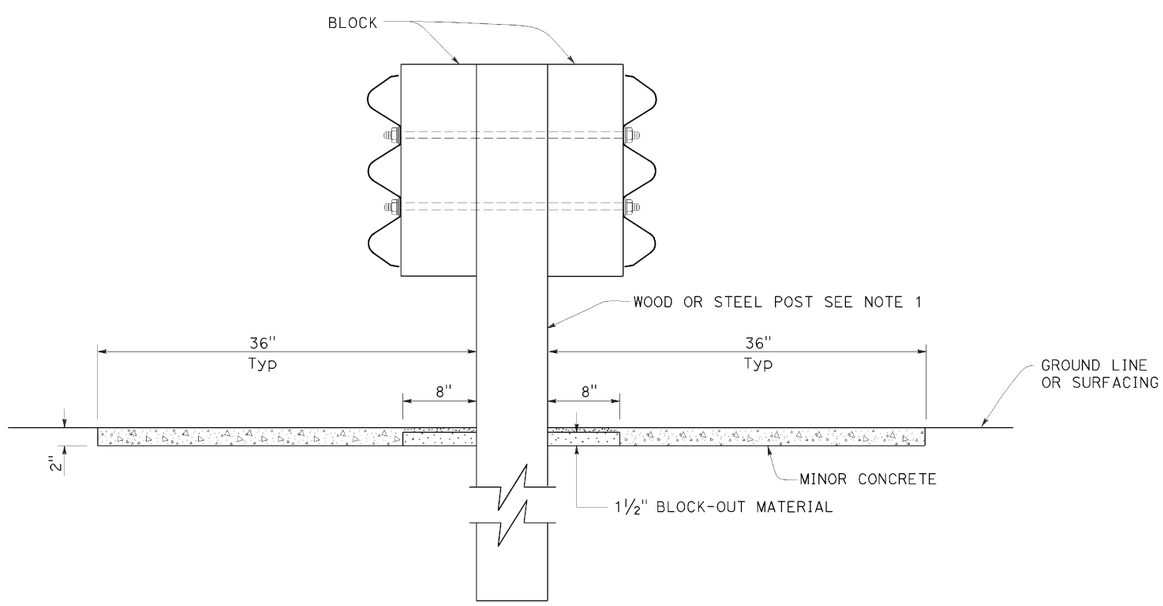

SECTION A-A

NOTES:

1. For wood and steel post sizes, see Standard Plan A78C2.
2. For details not shown, see Standard Plans A78A and A78B.

STATE OF CALIFORNIA
DEPARTMENT OF TRANSPORTATION

DOUBLE THRIE BEAM BARRIER TYPICAL VEGETATION CONTROL STANDARD BARRIER RAILING SECTION

NO SCALE

RSP A78C4 DATED OCTOBER 19, 2012 SUPERSEDES STANDARD PLAN A78C4 DATED MAY 20, 2011 - PAGE 94 OF THE STANDARD PLANS BOOK DATED 2010.

REVISED STANDARD PLAN RSP A78C4

2010 REVISED STANDARD PLAN RSP A78C4

9-26-12

Dist	COUNTY	ROUTE	POST MILES TOTAL PROJECT	SHEET No.	TOTAL SHEETS
07	LA	5	19.2/28.9	181	217

REGISTERED CIVIL ENGINEER

October 19, 2012
PLANS APPROVAL DATE

REGISTERED PROFESSIONAL ENGINEER Glenn DeCou No. C34547 Exp. 9-30-13 CIVIL STATE OF CALIFORNIA

THE STATE OF CALIFORNIA OR ITS OFFICERS OR AGENTS SHALL NOT BE RESPONSIBLE FOR THE ACCURACY OR COMPLETENESS OF SCANNED COPIES OF THIS PLAN SHEET.

TO ACCOMPANY PLANS DATED 2-10-14

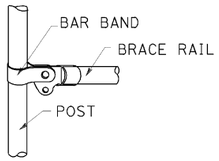

BRACE RAIL

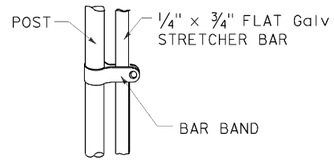

STRETCHER BAR

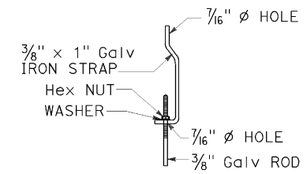

TRUSS TIGHTENER

NOTES:

1. All material for abutment connection to be galvanized.
2. The chain link fabric shall be replaced by barbed wire strands at 12" maximum centers between the double posts.
3. When the width of the culvert makes it necessary to anchor a post to the top of the culvert, a cast iron shoe or other device approved by the Engineer shall be used.
4. Fencing over stream and around headwall may also use Barbed Wire or Wire Mesh fencing with either wood post or steel post installation.
5. See Standard Plan A85 for Chain Link fence dimensions. See Standard Plan A86 for Barbed Wire and Wire Mesh fence dimensions and for wood post and steel post installation.

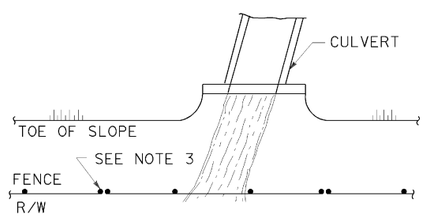

PLAN

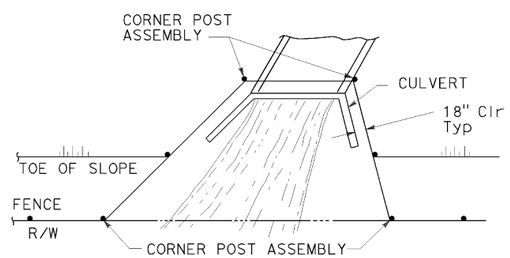

PLAN

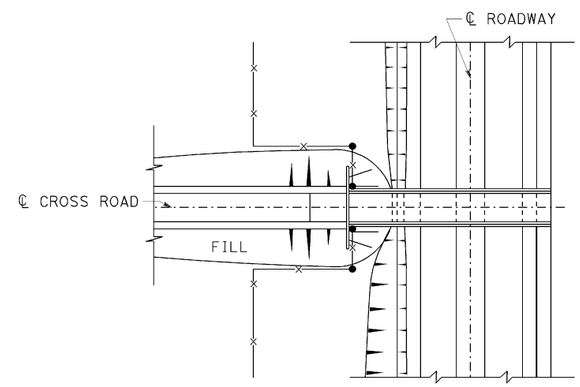

PLAN OF ROADWAY - OVERCROSSING

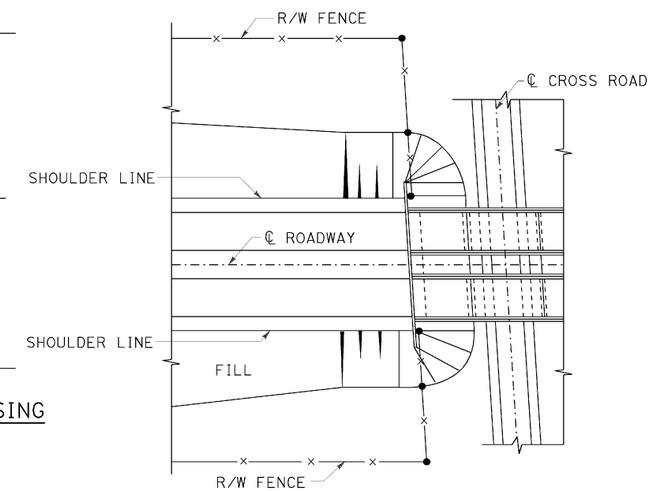

PLAN OF ROADWAY - UNDERCROSSING

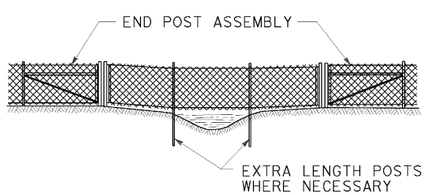

ELEVATION

INSTALLATION OVER STREAM

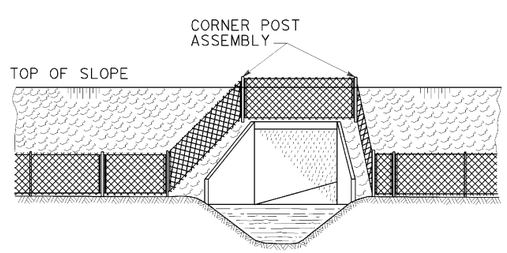

ELEVATION

INSTALLATION AROUND HEADWALL

See Note 4

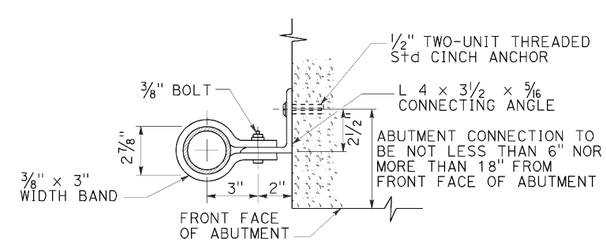

ABUTMENT CONNECTION

TYPICAL INSTALLATION AT BRIDGES

STATE OF CALIFORNIA
DEPARTMENT OF TRANSPORTATION

CHAIN LINK FENCE DETAILS

NO SCALE

RSP A85B DATED OCTOBER 19, 2012 SUPERSEDES STANDARD PLAN A85B
DATED MAY 20, 2011 - PAGE 114 OF THE STANDARD PLANS BOOK DATED 2010.

REVISED STANDARD PLAN RSP A85B

2010 REVISED STANDARD PLAN RSP A85B

7-19-12

Dist	COUNTY	ROUTE	POST MILES TOTAL PROJECT	SHEET No.	TOTAL SHEETS
07	LA	5	19.2/28.9	182	217

REGISTERED CIVIL ENGINEER

July 19, 2013
PLANS APPROVAL DATE

REGISTERED PROFESSIONAL ENGINEER Michael Janzen No. 44788 Exp. 03-31-14 CIVIL STATE OF CALIFORNIA

THE STATE OF CALIFORNIA OR ITS OFFICERS OR AGENTS SHALL NOT BE RESPONSIBLE FOR THE ACCURACY OR COMPLETENESS OF SCANNED COPIES OF THIS PLAN SHEET.

TO ACCOMPANY PLANS DATED 2-10-14

2010 REVISED STANDARD PLAN RSP A87A

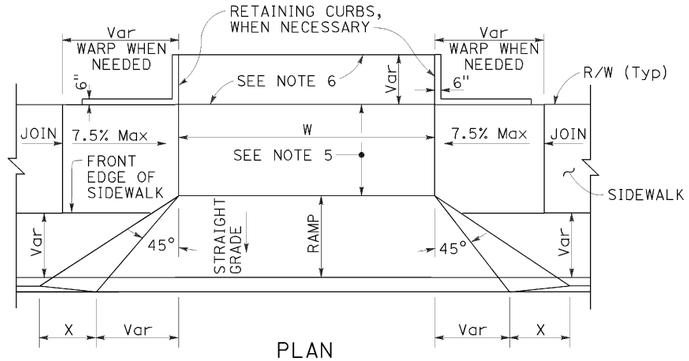

PLAN

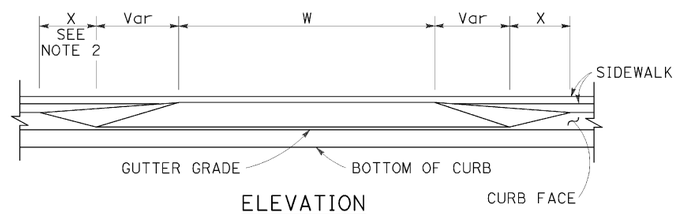

ELEVATION

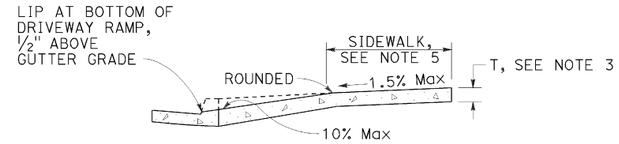

CASE A

Typical driveway, sidewalk not depressed

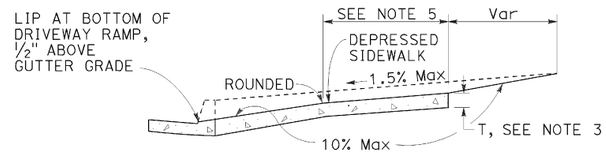

CASE B

Driveway with depressed sidewalk

SECTIONS

DRIVEWAYS

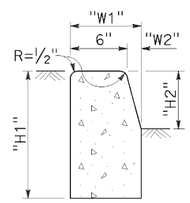

TYPE A1 CURBS

See Table A

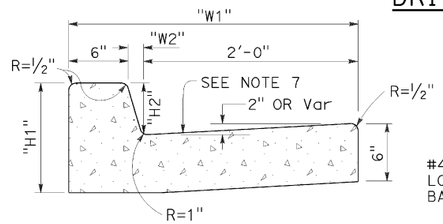

TYPE A2 CURBS

See Table A

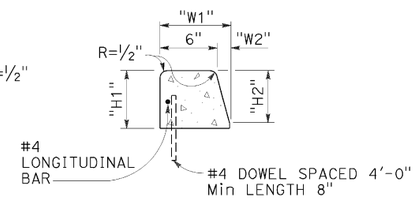

TYPE A3 CURBS

Superimposed on existing pavement
See Table A

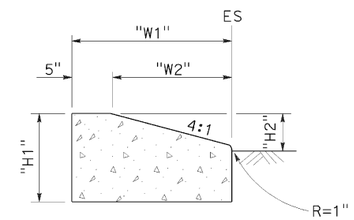

TYPE D CURBS

See Table A

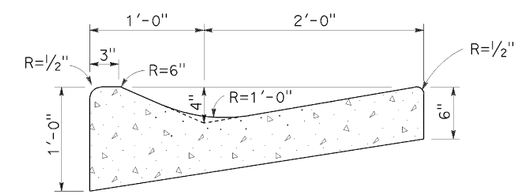

TYPE E CURB

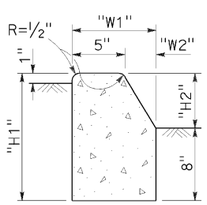

TYPE B1 CURBS

See Table A

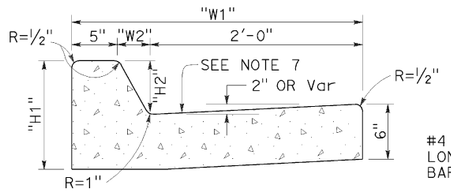

TYPE B2 CURBS

See Table A

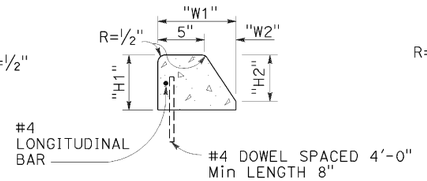

TYPE B3 CURBS

Superimposed on existing pavement
See Table A

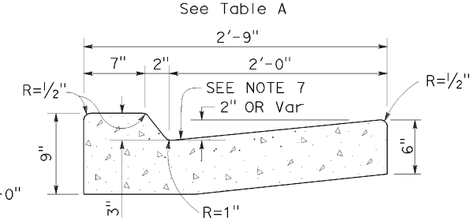

TYPE B4 CURBS

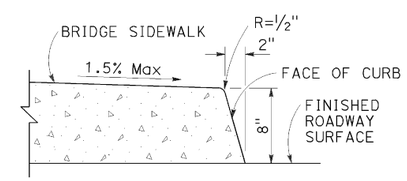

TYPE H CURB

On Bridges

CURBS

TABLE A

CURB TYPE	DIMENSIONS			
	"H1"	"H2"	"W1"	"W2"
A1-6	1'-2"	6"	7 1/2"	1 1/2"
A1-8	1'-4"	8"	8"	2"
A2-6	1'-0"	6"	2'-7 1/2"	1 1/2"
A2-8	1'-2"	8"	2'-8"	2"
A3-6	6"	5"	7 1/4"	1 1/4"
A3-8	8"	7"	7 3/4"	1 3/4"
B1-4	1'-0"	4"	7 1/2"	2 1/2"
B1-6	1'-2"	6"	9"	4"
B2-4	10"	4"	2'-7 1/2"	2 1/2"
B2-6	1'-0"	6"	2'-9"	4"
B3-4	4"	3"	7"	2"
B3-6	6"	5"	8 1/2"	3 1/2"
D-4	10"	4"	1'-6"	1'-1"
D-6	1'-0"	6"	2'-2"	1'-9"

CURB QUANTITIES

TYPE	CUBIC YARDS PER LINEAR FOOT
A1-6	0.02585
A1-8	0.03084
A2-6	0.05903
A2-8	0.06379
A3-6	0.01036
A3-8	0.01435
B1-4	0.02185
B1-6	0.02930
B2-4	0.05515
B2-6	0.06171
B3-4	0.00641
B3-6	0.01074
B4	0.05709
D-4	0.04083
D-6	0.06804
E	0.06661

NOTES:

1. Case A driveway section typically applies.
2. X=3'-0" except for curb heights over 10" where 4:1 slopes shall be used on curb slope.
3. Sidewalk and ramp thickness "T" at driveway shall be 4" for residental and 6" for commercial.
4. Difference in slope of the driveway ramp and the slope of a line between the gutter and a point on the roadway 5'-0" from gutter line shall not exceed 15%. Reduce driveway ramp slope, not gutter slope, where required.
5. Minimum width of clear passageway for sidewalk shall be 4'-2".
6. Retaining curbs and acquisition of construction easement may be necessary for narrow sidewalks or curb heights in excess of 6".
7. Across the pedestrian route at curb ramp locations, the gutter pan slope shall not exceed 1" of depth for each 2'-0" of width.

STATE OF CALIFORNIA
DEPARTMENT OF TRANSPORTATION

CURBS AND DRIVEWAYS

NO SCALE

RSP A87A DATED JULY 19, 2013 SUPERSEDES STANDARD PLAN A87A
DATED MAY 20, 2011 - PAGE 119 OF THE STANDARD PLANS BOOK DATED 2010.

REVISED STANDARD PLAN RSP A87A

7-8-13

Dist	COUNTY	ROUTE	POST MILES TOTAL PROJECT	SHEET No.	TOTAL SHEETS
07	LA	5	19.2/28.9	183	217

REGISTERED CIVIL ENGINEER

July 19, 2013
PLANS APPROVAL DATE

REGISTERED PROFESSIONAL ENGINEER
Michael Janzen
No. 44788
Exp. 03-31-14
CIVIL
STATE OF CALIFORNIA

THE STATE OF CALIFORNIA OR ITS OFFICERS OR AGENTS SHALL NOT BE RESPONSIBLE FOR THE ACCURACY OR COMPLETENESS OF SCANNED COPIES OF THIS PLAN SHEET.

TO ACCOMPANY PLANS DATED 2-10-14

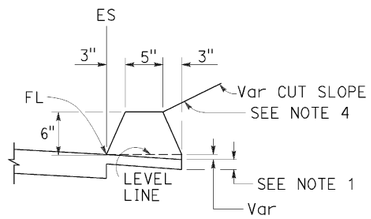

TYPE A
See Note 3

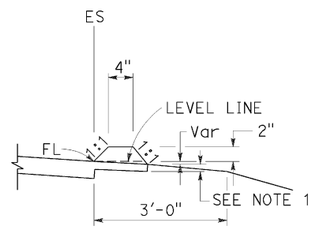

TYPE C

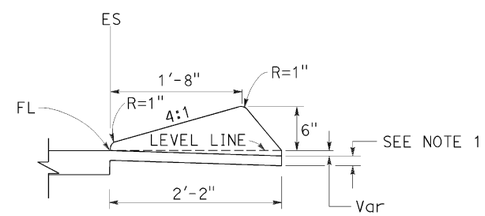

TYPE D

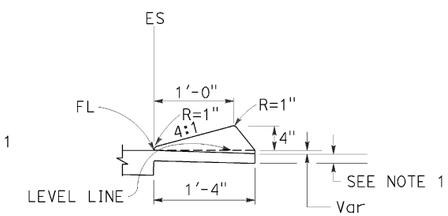

TYPE E

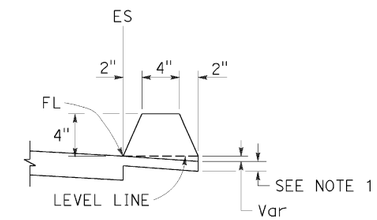

TYPE F
See Note 5

DIKES

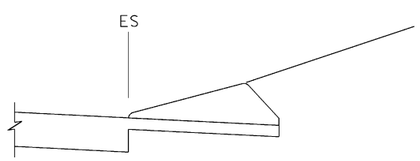

CASE C-1
Cut Slope

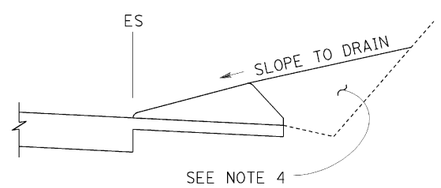

CASE C-2
Cut Slope

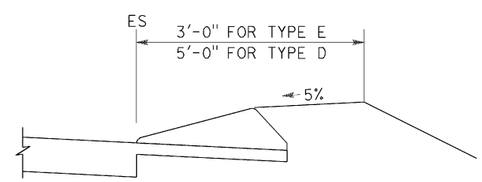

CASE F

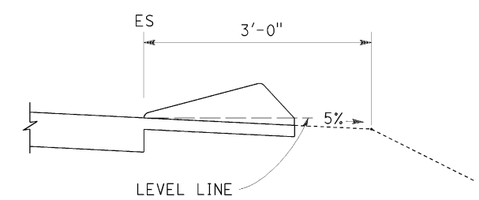

CASE R
See Note 2

TYPE D AND E BACKFILL DETAILS

NOTES:

1. For HMA shoulders only, extend top layer of HMA placed on the shoulder under dike with no joint at the ES. For projects with OGFC shoulders, do not extend OGFC under dike. See project plans for modified dike detail.
2. Case R applies to retrofit only projects where restrictive conditions do not provide enough width for Case F backfill.
3. Type A dike only to be used where restrictive slope conditions do not provide enough width to use Type D or Type E dike.
4. Fill and compact with excavated material to top of dike.
5. Use Type F dike, where dike is required with guard railing installations. See Revised Standard Plan RSP A77N4 for dike positioning details.

DIKE QUANTITIES

TYPE	CUBIC YARDS PER LINEAR FOOT
A	0.0135
C	0.0038
D	0.0293
E	0.0130
F	0.0066

Quantities based on 5% cross slope.

STATE OF CALIFORNIA
DEPARTMENT OF TRANSPORTATION

HOT MIX ASPHALT DIKES

NO SCALE

RSP A87B DATED JULY 19, 2013 SUPERSEDES STANDARD PLAN A87B DATED MAY 20, 2011 - PAGE 120 OF THE STANDARD PLANS BOOK DATED 2010.

REVISED STANDARD PLAN RSP A87B

2010 REVISED STANDARD PLAN RSP A87B

6-27-13

Dist	COUNTY	ROUTE	POST MILES TOTAL PROJECT	SHEET No.	TOTAL SHEETS
07	LA	5	19.2/28.9	184	217

REGISTERED CIVIL ENGINEER

July 19, 2013
PLANS APPROVAL DATE

Hector David Cordova No. C41957 Exp. 3-31-14 CIVIL — REGISTERED PROFESSIONAL ENGINEER — STATE OF CALIFORNIA

THE STATE OF CALIFORNIA OR ITS OFFICERS OR AGENTS SHALL NOT BE RESPONSIBLE FOR THE ACCURACY OR COMPLETENESS OF SCANNED COPIES OF THIS PLAN SHEET.

TO ACCOMPANY PLANS DATED 2-10-14

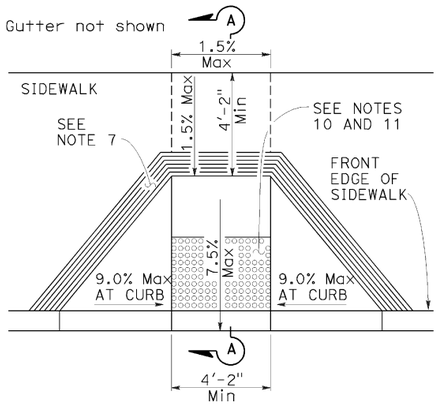

CASE A

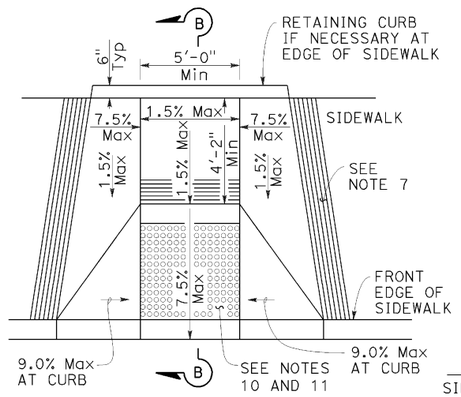

CASE B

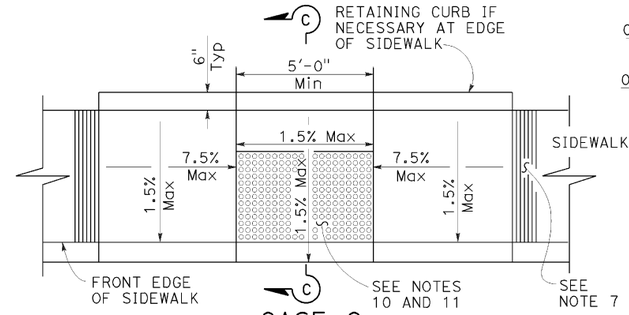

CASE C

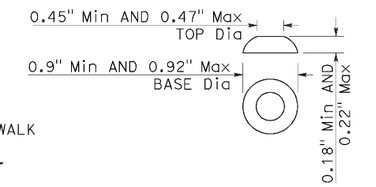

RAISED TRUNCATED DOME

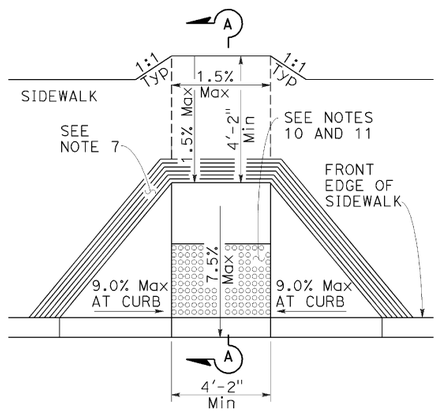

CASE D

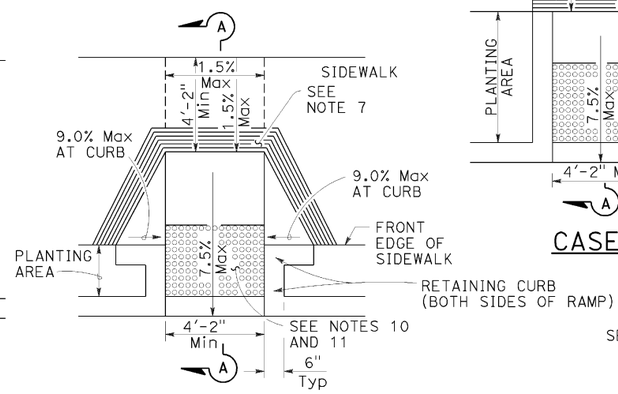

CASE E

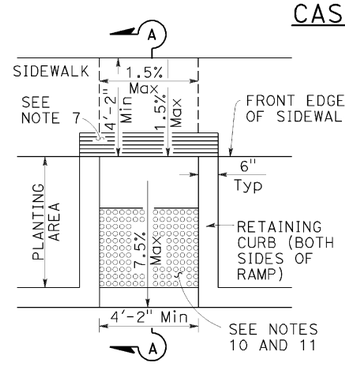

CASE F

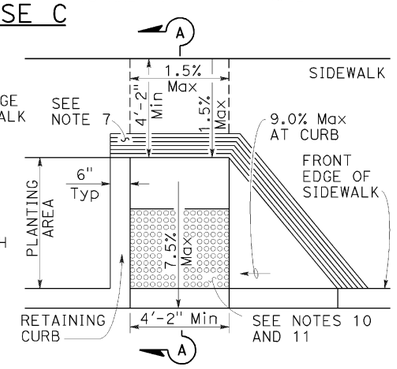

CASE G
See Note 4

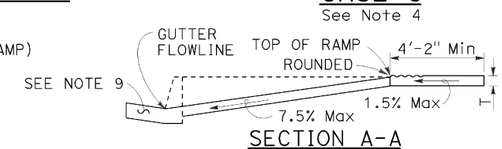

SECTION A-A

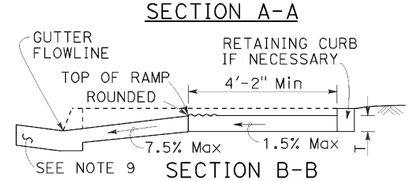

SECTION B-B
Depress entire sidewalk as required

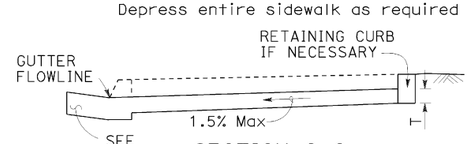

SECTION C-C

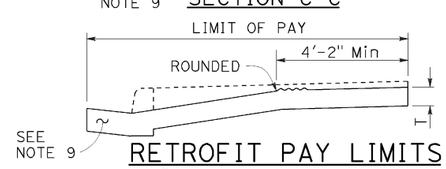

RETROFIT PAY LIMITS
Existing curb and sidewalk

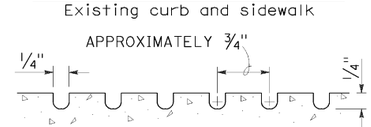

GROOVING DETAIL

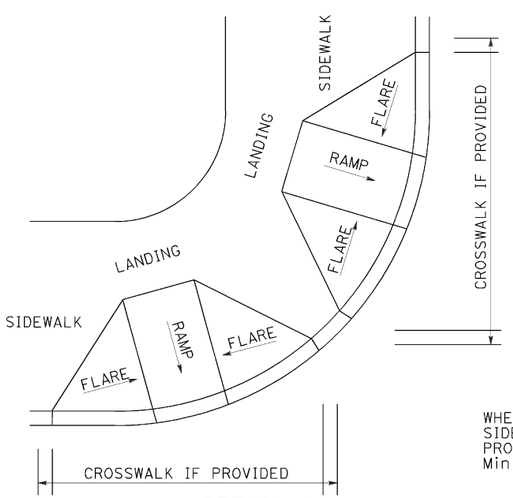

DETAIL A

TYPICAL TWO-RAMP CORNER INSTALLATION
See Note 1

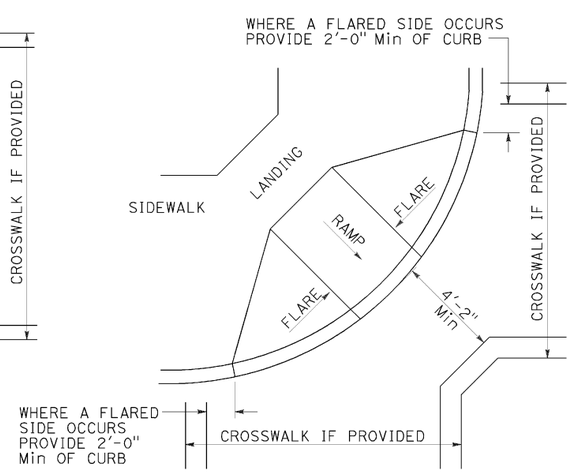

DETAIL B

TYPICAL ONE-RAMP CORNER INSTALLATION
See Notes 1 and 3

NOTES:

1. As site conditions dictate, Case A through Case G curb ramps may be used for corner installations similar to those shown in Detail A and Detail B. The case of curb ramps used in Detail A do not have to be the same. Case A through Case G curb ramps also may be used at mid block locations, as site conditions dictate.
2. If distance from curb to back of sidewalk is too short to accommodate ramp and 4'-2" platform (landing) as shown in Case A, the sidewalk may be depressed longitudinally as in Case B, or C or may be widened as in Case D.
3. When ramp is located in center of curb return, crosswalk configuration must be similar to that shown for Detail B.
4. As site conditions dictate, the retaining curb side and the flared side of the Case G ramp shall be constructed in reversed position.
5. If located on a curve, the sides of the ramp need not be parallel, but the minimum width of the ramp shall be 4'-2".
6. Side slope of ramp flares vary uniformly from a maximum of 9.0% at curb to conform with longitudinal sidewalk slope adjacent to top of the ramp, except in Case C and Case F.
7. The curb ramp shall be outlined, as shown, with a 1'-0" wide border with 1/4" grooves approximately 3/4" on center. See grooving detail.
8. Transitions from ramps and landing to walks, gutters or streets shall be flush (no lip) and free of abrupt changes.
9. Counter slopes of adjoining gutters and road surfaces immediately adjacent to and within 24 inches of the curb ramp shall not be steeper than 1:20 (5.0%). Gutter pan slope shall not exceed 1" of depth for each 2'-0" of width.
10. Curb ramps shall have a detectable warning surface that extends the full width and 3'-0" depth of the ramp. Detectable Warning Surfaces shall conform to the details on this plan and the requirements in the Standard Specifications.
11. The edge of the detectable warning surface nearest the street shall be between 6" and 8" from the gutter flowline.
12. Sidewalk and ramp thickness, "T", shall be 3 1/2" minimum.
13. Utility pull boxes, manholes, vaults and all other utility facilities within the boundaries of the curb ramp will be relocated or adjusted to grade by the owner prior to, or in conjunction with, curb ramp construction.
14. Detectable warning surface may have to be cut to allow removal of utility covers while maintaining full detectable warning width and depth.

RAISED TRUNCATED DOME PATTERN (IN-LINE)

DETECTABLE WARNING SURFACE
See Note 10

STATE OF CALIFORNIA
DEPARTMENT OF TRANSPORTATION

CURB RAMP DETAILS

NO SCALE

RSP A88A DATED JULY 19, 2013 SUPERSEDES STANDARD PLAN A88A
DATED MAY 20, 2011 - PAGE 121 OF THE STANDARD PLANS BOOK DATED 2010.

REVISED STANDARD PLAN RSP A88A

2010 REVISED STANDARD PLAN RSP A88A

7-8-13

Dist	COUNTY	ROUTE	POST MILES TOTAL PROJECT	SHEET No.	TOTAL SHEETS
07	LA	5	19.2/28.9	185	217

REGISTERED CIVIL ENGINEER

July 19, 2013
PLANS APPROVAL DATE

REGISTERED PROFESSIONAL ENGINEER Hector David Cordova No. C41957 Exp. 3-31-14 CIVIL STATE OF CALIFORNIA

THE STATE OF CALIFORNIA OR ITS OFFICERS OR AGENTS SHALL NOT BE RESPONSIBLE FOR THE ACCURACY OR COMPLETENESS OF SCANNED COPIES OF THIS PLAN SHEET.

TO ACCOMPANY PLANS DATED 2-10-14

Gutter not shown

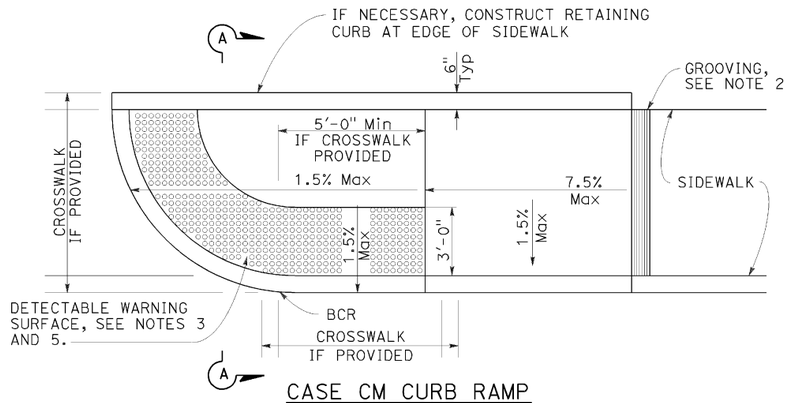

CASE CM CURB RAMP

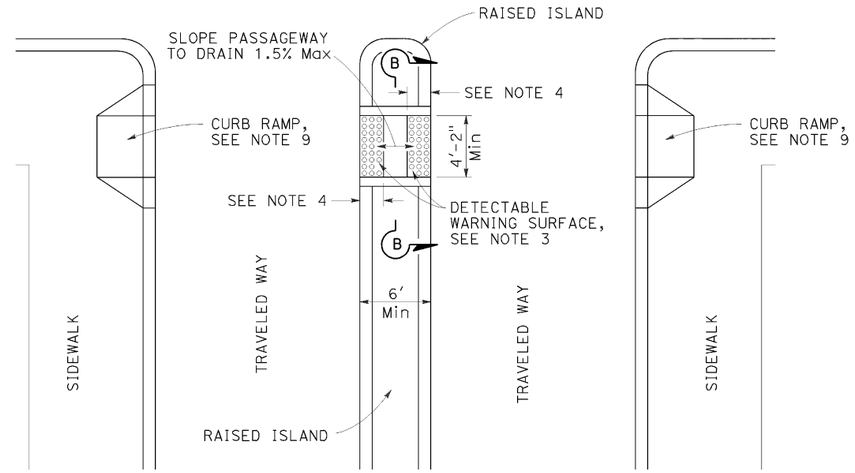

TYPE A PASSAGEWAY

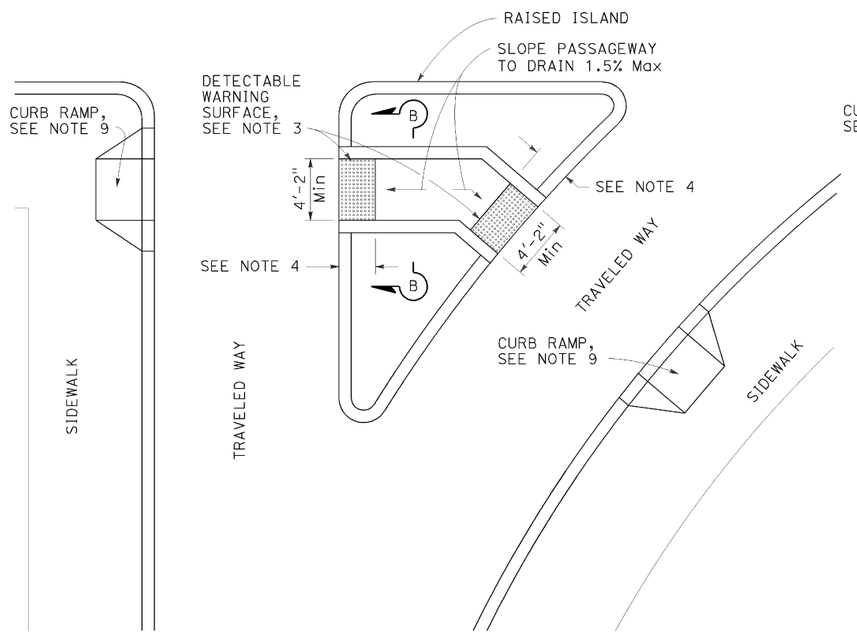

TYPE B PASSAGEWAY

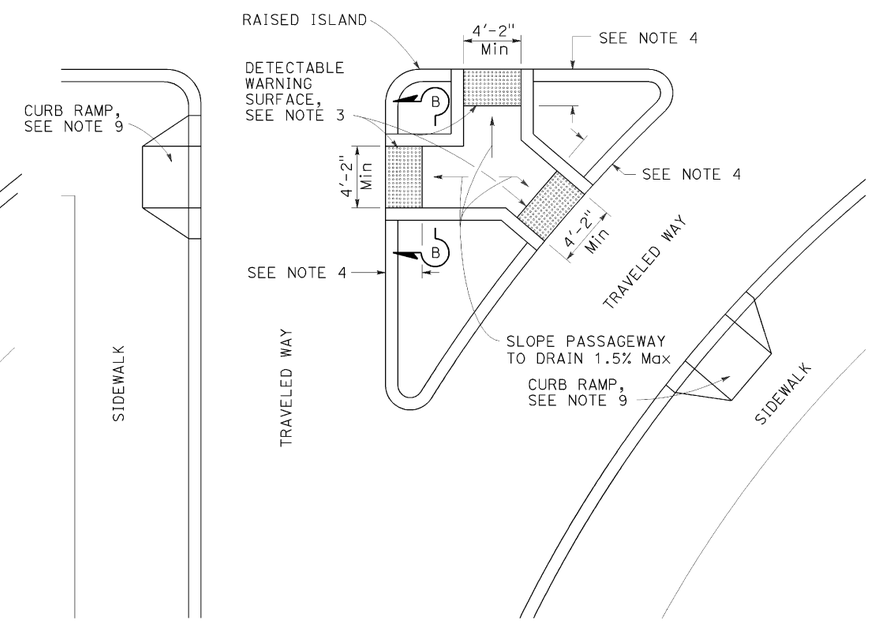

TYPE C PASSAGEWAY

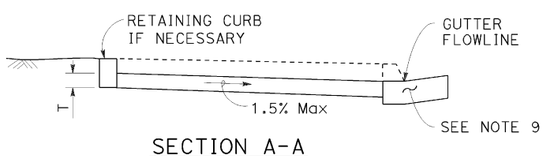

SECTION A-A

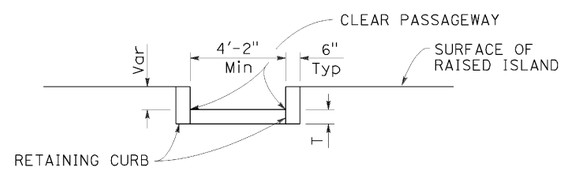

SECTION B-B

NOTES:

1. Sidewalk, ramp and passageway thickness, "T", shall be 3½" minimum.
2. For details of grooving used with Case CM curb ramp, see Revised Standard Plan RSP A88A.
3. For details of detectable warning surfaces, see Revised Standard Plan RSP A88A.
4. Where an island passageway length is greater than or equal to 6'-0", but less than 8'-0", each detectable warning surface shall extend the full width and 2'-0" depth of the passageway length. Where an island passageway length is greater than or equal to 8'-0", each detectable warning surface shall extend the full width and 3'-0" depth of the passageway length.
5. For Case CM curb ramp, the edge of the detectable warning surface nearest the street shall be between 6" and 8" from the gutter flowline.
6. Transitions from ramps to walks, gutters or streets shall be flush (no lip) and free of abrupt changes.
7. Utility pull boxes, manholes, vaults and all other utility facilities within the boundaries of the curb ramp will be relocated or adjusted to grade by the owner prior to, or in conjunction with, curb ramp construction.
8. Detectable warning surface may have to be cut to allow removal of utility covers while maintaining full detectable warning width and depth.
9. For additional curb ramp details, see Revised Standard Plan RSP A88A.

STATE OF CALIFORNIA
DEPARTMENT OF TRANSPORTATION

CURB RAMP AND ISLAND PASSAGEWAY DETAILS

NO SCALE

RSP A88B DATED JULY 19, 2013 SUPERSEDES STANDARD PLAN A88B
DATED MAY 20, 2011 - PAGE 122 OF THE STANDARD PLANS BOOK DATED 2010.

REVISED STANDARD PLAN RSP A88B

2010 REVISED STANDARD PLAN RSP A88B

6-25-13

Dist	COUNTY	ROUTE	POST MILES TOTAL PROJECT	SHEET No.	TOTAL SHEETS
07	LA	5	19.2/28.9	186	217

William K. Farnbach
REGISTERED CIVIL ENGINEER

July 19, 2013
PLANS APPROVAL DATE

REGISTERED PROFESSIONAL ENGINEER
William K. Farnbach
No. C49042
Exp. 9-30-14
CIVIL
STATE OF CALIFORNIA

THE STATE OF CALIFORNIA OR ITS OFFICERS OR AGENTS SHALL NOT BE RESPONSIBLE FOR THE ACCURACY OR COMPLETENESS OF SCANNED COPIES OF THIS PLAN SHEET.

TO ACCOMPANY PLANS DATED 2-10-14

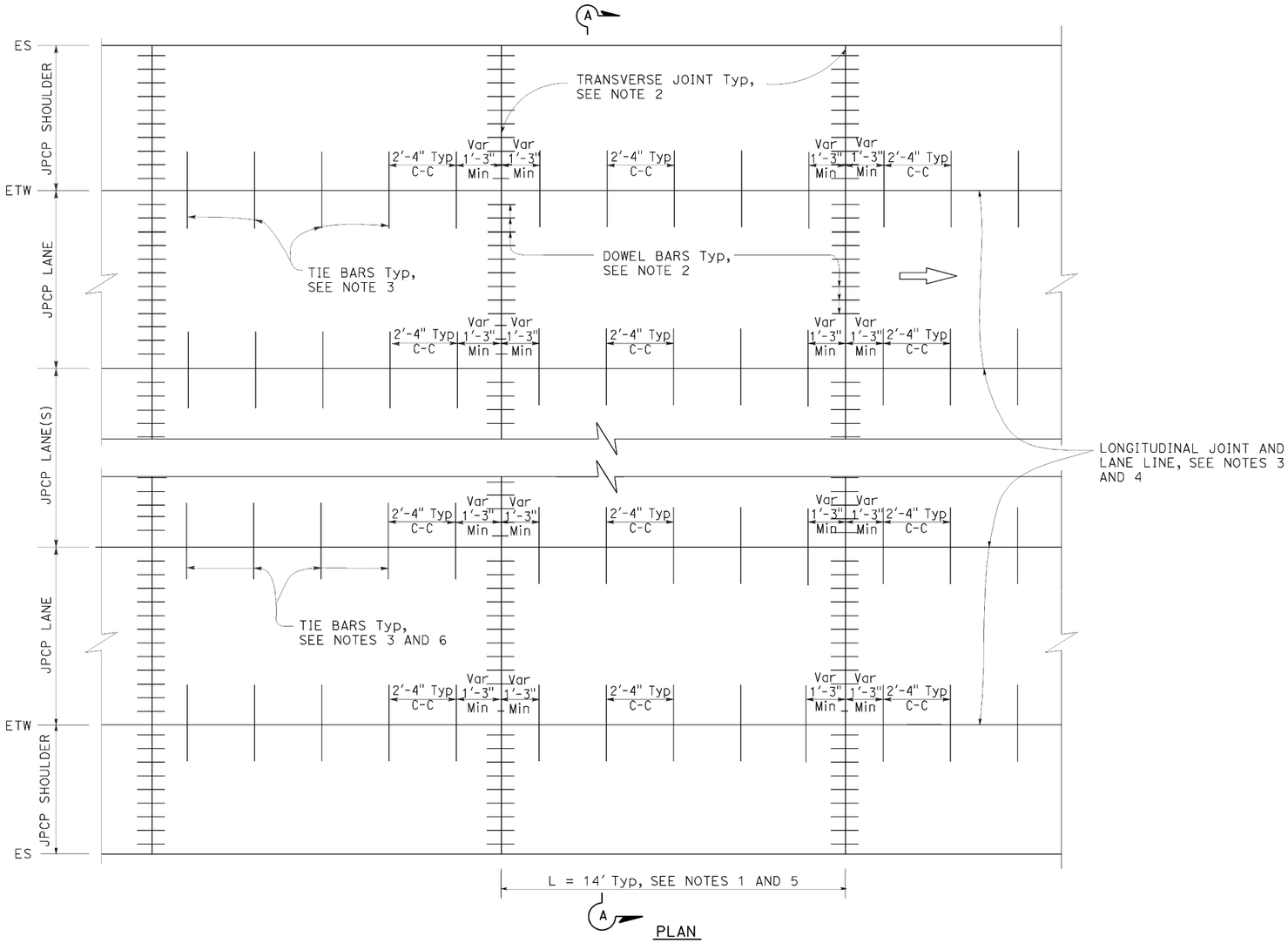

PLAN

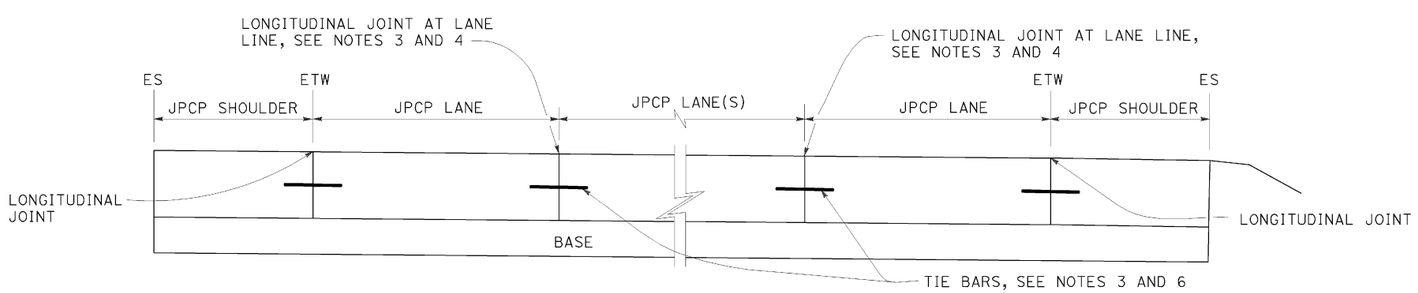

SECTION A-A

NOTES:

1. Transverse joint spacing may be adjusted to no less than 10' and no more than 14' to conform to bridges, change in pavement type, and hardened concrete pavement.
2. For transverse joint and dowel bar details not shown, see Revised Standard Plan RSP P10.
3. For longitudinal joint and tie bar details not shown, see Revised Standard Plan RSP P15.
4. For additional longitudinal joint layout details, see Revised Standard Plan RSP P18.
5. For joint layout at intersections, see Project Plans.
6. For dowel bars at longitudinal joint. see Revised Standard Plan RSP P18.

STATE OF CALIFORNIA
DEPARTMENT OF TRANSPORTATION

JOINTED PLAIN CONCRETE PAVEMENT NEW CONSTRUCTION

NO SCALE

RSP P1 DATED JULY 19, 2013 SUPERSEDES STANDARD PLAN P1
DATED MAY 20, 2011 - PAGE 125 OF THE STANDARD PLANS BOOK DATED 2010.

REVISED STANDARD PLAN RSP P1

2010 REVISED STANDARD PLAN RSP P1

5-31-13

Dist	COUNTY	ROUTE	POST MILES TOTAL PROJECT	SHEET No.	TOTAL SHEETS
07	LA	5	19.2/28.9	187	217

REGISTERED CIVIL ENGINEER

July 19, 2013
PLANS APPROVAL DATE

REGISTERED PROFESSIONAL ENGINEER — William K. Farnbach — No. C49042 — Exp. 9-30-14 — CIVIL — STATE OF CALIFORNIA

THE STATE OF CALIFORNIA OR ITS OFFICERS OR AGENTS SHALL NOT BE RESPONSIBLE FOR THE ACCURACY OR COMPLETENESS OF SCANNED COPIES OF THIS PLAN SHEET.

TO ACCOMPANY PLANS DATED 2-10-14

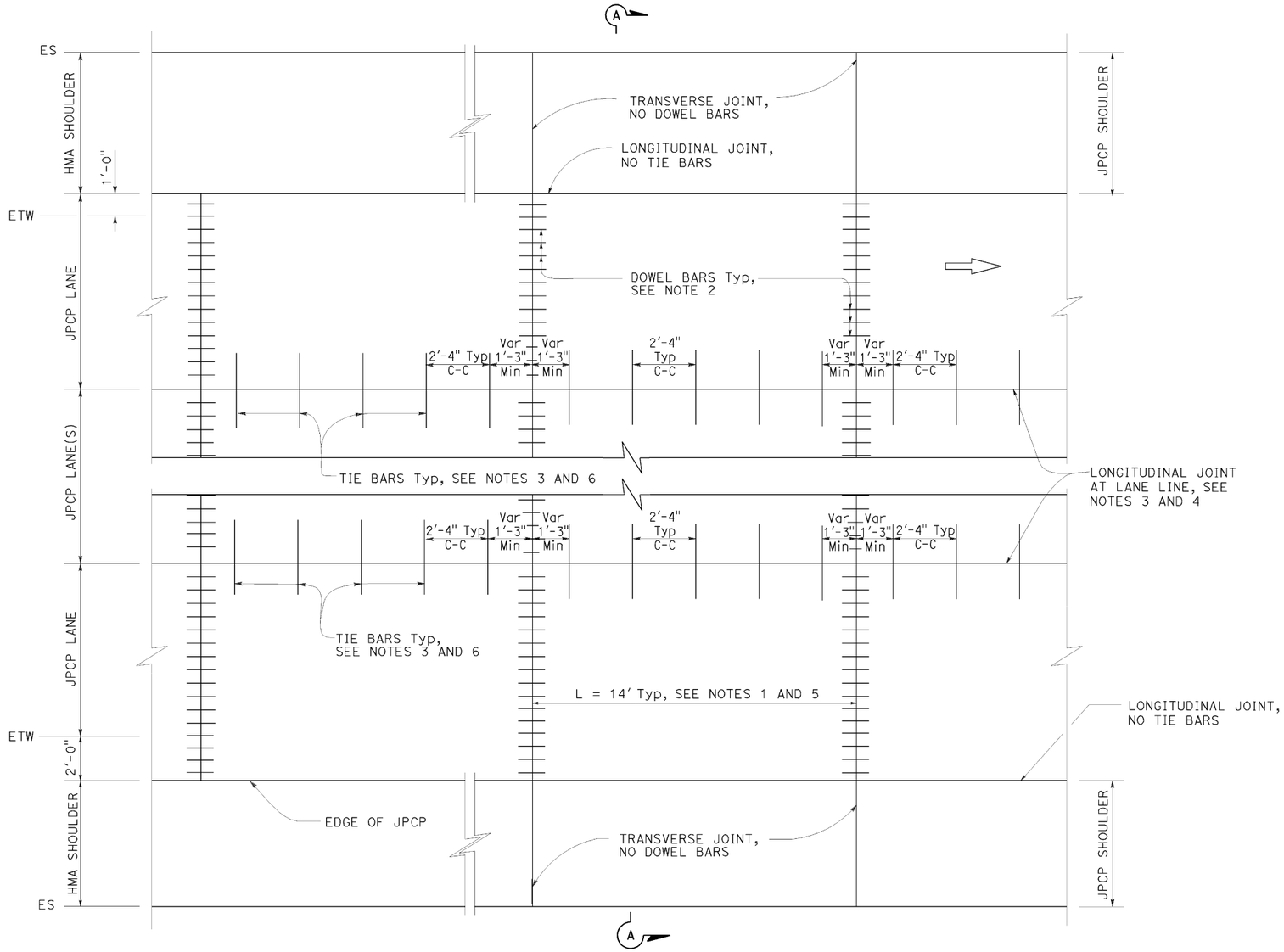

PLAN

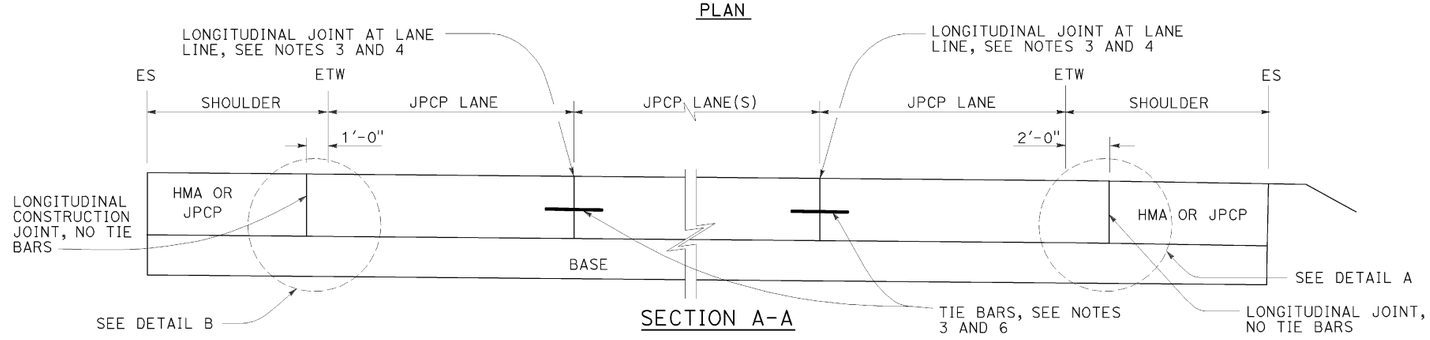

SECTION A-A

NOTES:

1. Transverse joint spacing may be adjusted to no less than 10' and no more than 14' to conform to bridges, change in pavement type, and hardened concrete pavement.
2. For transverse joint and dowel bar details not shown, see Revised Standard Plan RSP P10.
3. For longitudinal joint and tie bar details not shown, see Revised Standard Plan RSP P15.
4. For additional longitudinal joint layout details, see Revised Standard Plan RSP P18.
5. For joint layout at intersections, see Project Plans.
6. For dowel bars at longitudinal joint. see Revised Standard Plan RSP P18.
7. For limits of rumble strips, see Projects Plans.

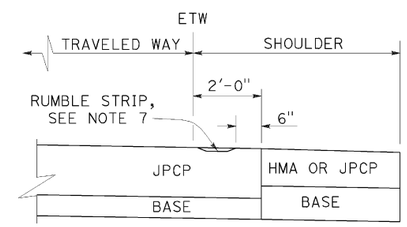

DETAIL A

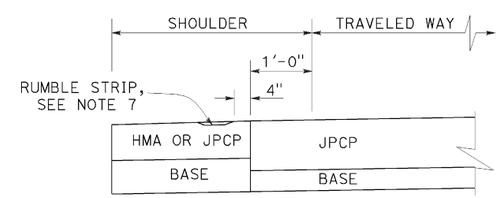

DETAIL B

STATE OF CALIFORNIA
DEPARTMENT OF TRANSPORTATION

JOINTED PLAIN CONCRETE PAVEMENT (WIDENED LANE) NEW CONSTRUCTION

NO SCALE

RSP P2 DATED JULY 19, 2013 SUPERSEDES STANDARD PLAN P2 DATED MAY 20, 2011 - PAGE 126 OF THE STANDARD PLANS BOOK DATED 2010.

REVISED STANDARD PLAN RSP P2

2010 REVISED STANDARD PLAN RSP P2

5-31-13

Dist	COUNTY	ROUTE	POST MILES TOTAL PROJECT	SHEET No.	TOTAL SHEETS
07	LA	5	19.2/28.9	188	217

REGISTERED CIVIL ENGINEER

July 19, 2013
PLANS APPROVAL DATE

REGISTERED PROFESSIONAL ENGINEER William K. Farnbach No. C49042 Exp. 9-30-14 CIVIL STATE OF CALIFORNIA

THE STATE OF CALIFORNIA OR ITS OFFICERS OR AGENTS SHALL NOT BE RESPONSIBLE FOR THE ACCURACY OR COMPLETENESS OF SCANNED COPIES OF THIS PLAN SHEET.

TO ACCOMPANY PLANS DATED 2-10-14

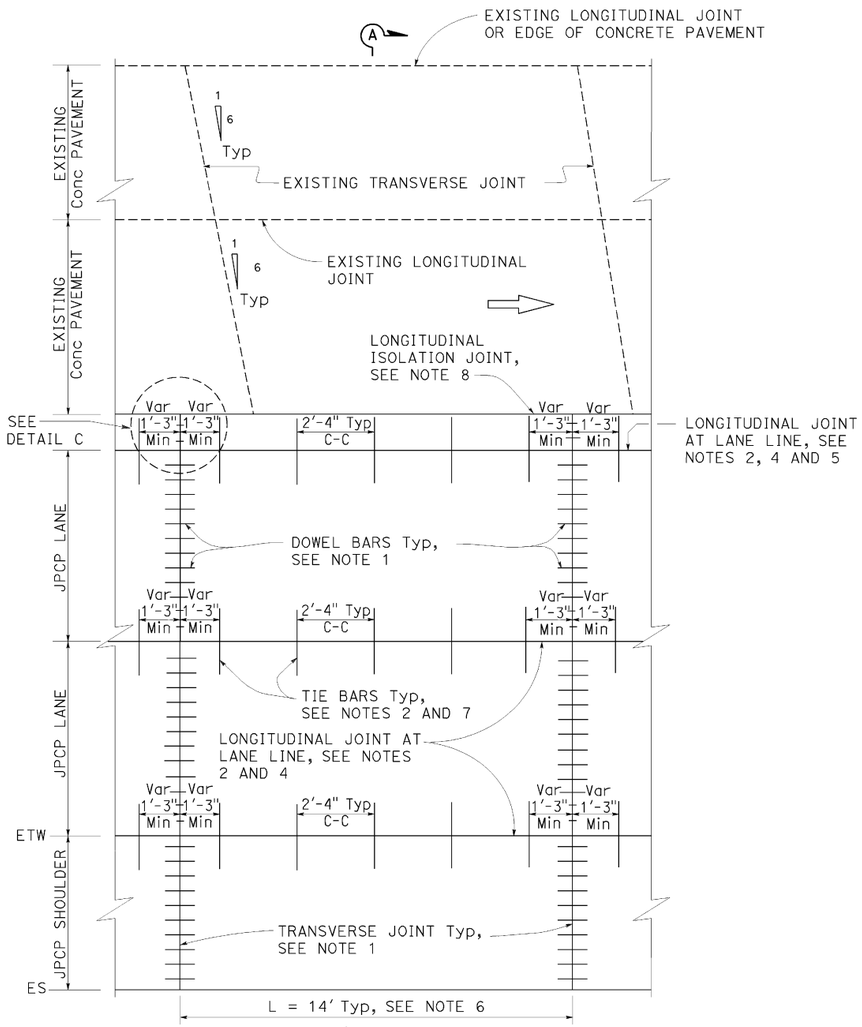

A PLAN
ISOLATED
See Note 3

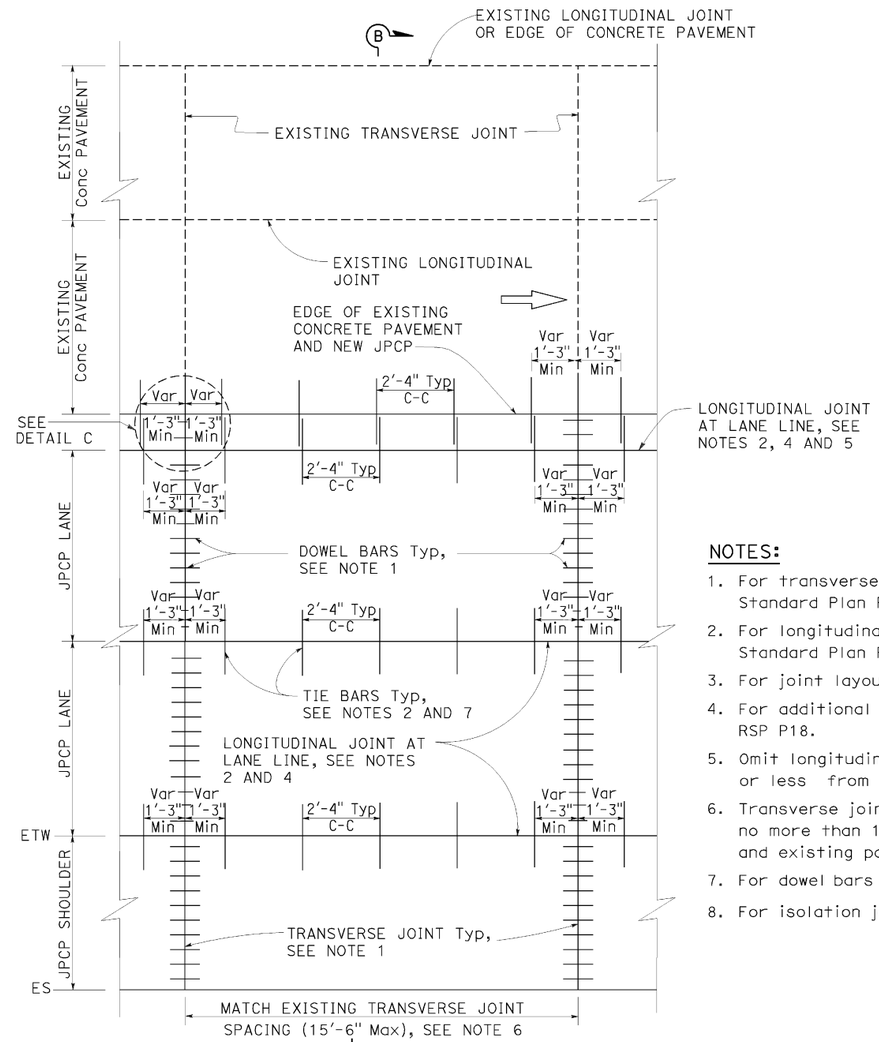

B PLAN
TIED
See Note 3

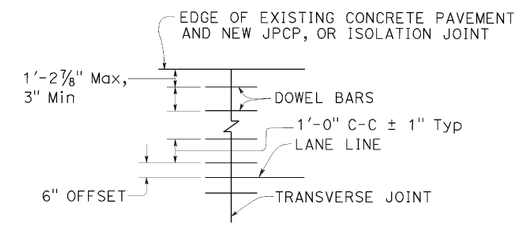

DETAIL C

NOTES:

1. For transverse joint and dowel bar details not shown, see Revised Standard Plan RSP P10.
2. For longitudinal joint and tie bar details not shown, see Revised Standard Plan RSP P15.
3. For joint layout at intersections, see Project Plans.
4. For additional longitudinal joint details, see Revised Standard Plan RSP P18.
5. Omit longitudinal joint when edge of new concrete pavement is 3'-3" or less from JPCP lane line.
6. Transverse joint spacing may be adjusted to no less than 10' and no more than 15'-6" to conform to bridges, change in pavement type and existing pavement.
7. For dowel bars at longitudinal joint. see Revised Standard Plan RSP P18.
8. For isolation joints, see Detail A on Revised Standard Plan RSP P18.

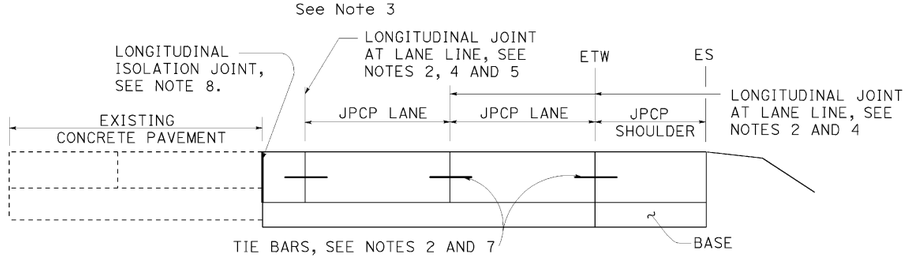

SECTION A-A

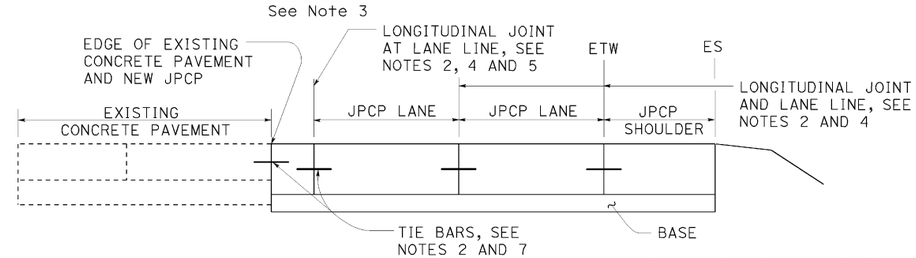

SECTION B-B

STATE OF CALIFORNIA
DEPARTMENT OF TRANSPORTATION

JOINTED PLAIN CONCRETE PAVEMENT LANE & SHOULDER ADDITION OR REPLACEMENT

NO SCALE

RSP P3A DATED JULY 19, 2013 SUPPLEMENTS THE STANDARD PLANS BOOK DATED 2010.

REVISED STANDARD PLAN RSP P3A

2010 REVISED STANDARD PLAN RSP P3A

5-31-13

Dist	COUNTY	ROUTE	POST MILES TOTAL PROJECT	SHEET No.	TOTAL SHEETS
07	LA	5	19.2/28.9	189	217

William K. Farnbach
REGISTERED CIVIL ENGINEER

July 19, 2013
PLANS APPROVAL DATE

REGISTERED PROFESSIONAL ENGINEER — William K. Farnbach — No. C49042 — Exp. 9-30-14 — CIVIL — STATE OF CALIFORNIA

THE STATE OF CALIFORNIA OR ITS OFFICERS OR AGENTS SHALL NOT BE RESPONSIBLE FOR THE ACCURACY OR COMPLETENESS OF SCANNED COPIES OF THIS PLAN SHEET.

TO ACCOMPANY PLANS DATED 2-10-14

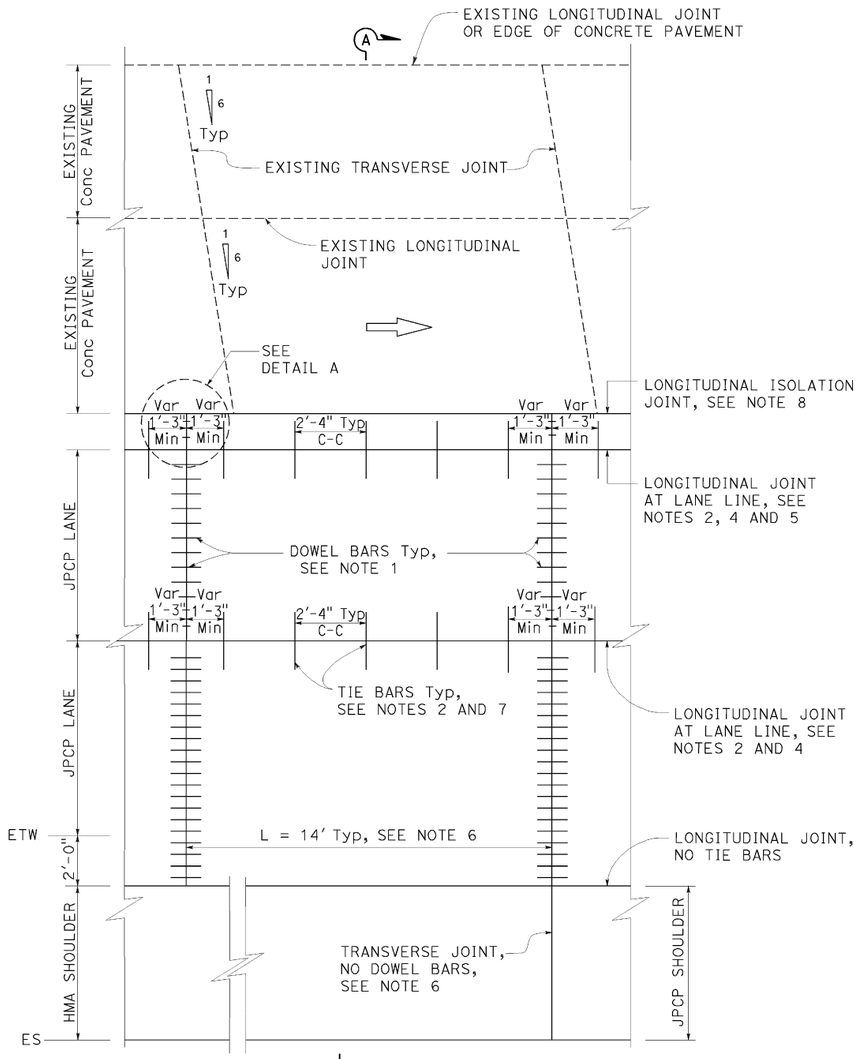

A PLAN
ISOLATED
See Note 3

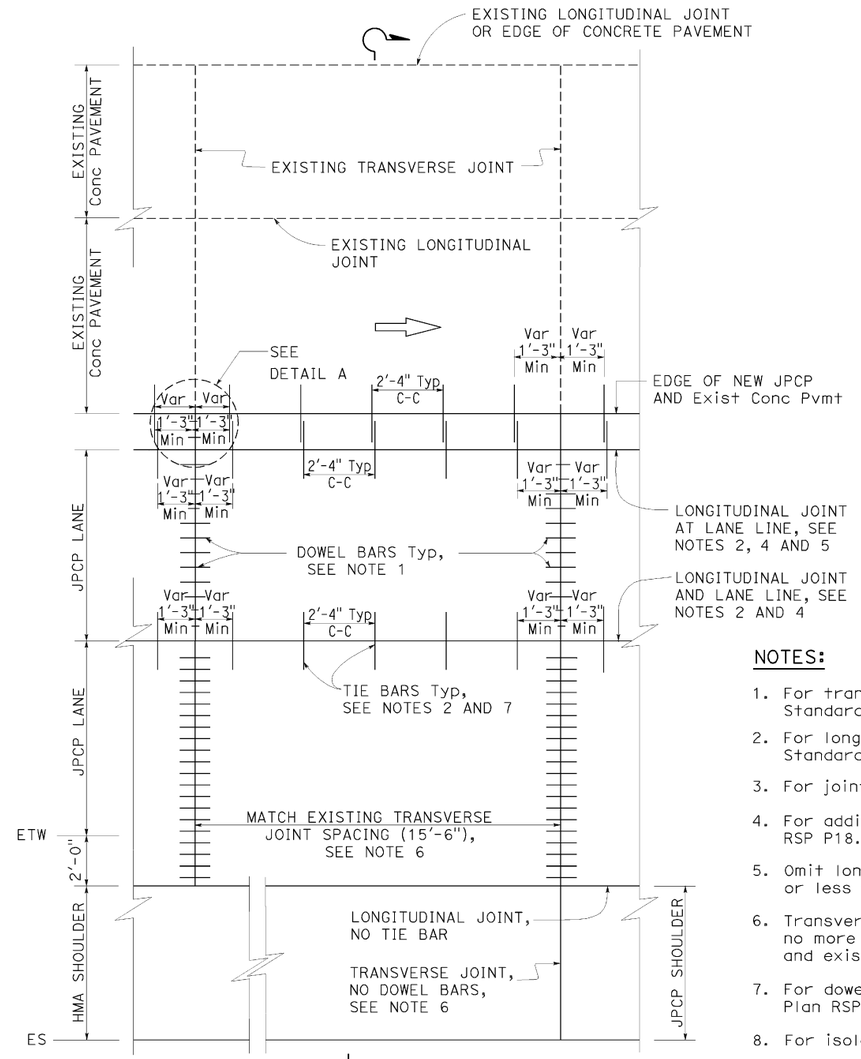

B PLAN
TIED
See Note 3

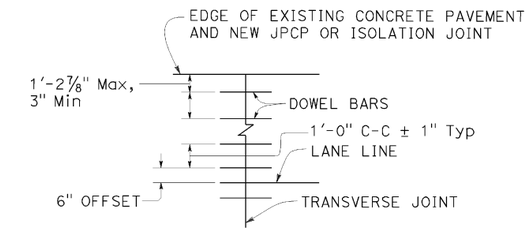

DETAIL A

NOTES:

1. For transverse joint and dowel bar details not shown, see Revised Standard Plan RSP P10.
2. For longitudinal joint and tie bar details not shown, see Revised Standard Plan RSP P15.
3. For joint layout at intersections, see Project Plans.
4. For additional longitudinal joint details, see Revised Standard Plan RSP P18.
5. Omit longitudinal joint when edge of new concrete pavement is 3'-3" or less from JPCP lane line.
6. Transverse joint spacing may be adjusted to no less than 10' and no more than 15'-6" to conform to bridges, change in pavement type and existing pavement.
7. For dowel bars at longitudinal joint. see Revised Standard Plan RSP P18.
8. For isolation joints, see Detail A on Revised Standard Plan RSP P18.

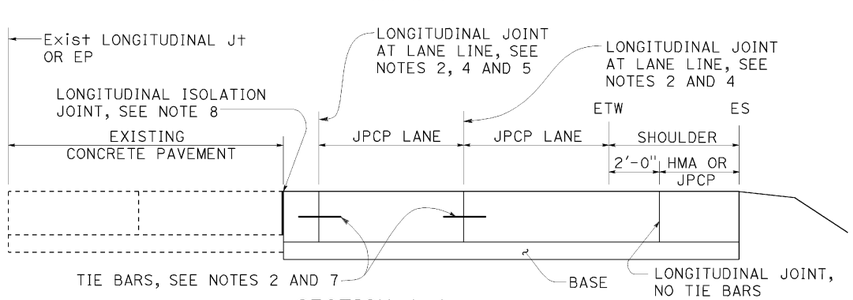

SECTION A-A

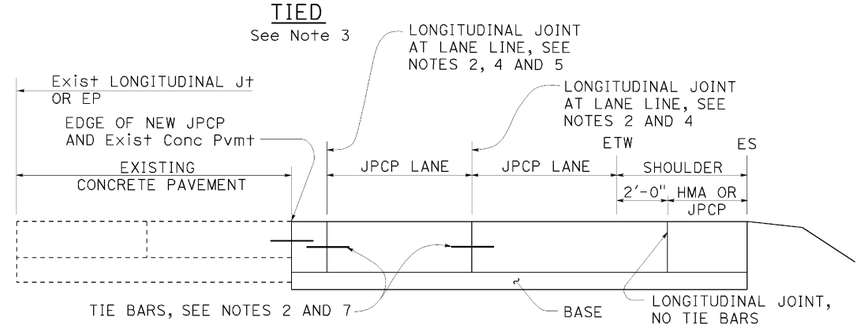

SECTION B-B

STATE OF CALIFORNIA
DEPARTMENT OF TRANSPORTATION

JOINTED PLAIN CONCRETE PAVEMENT (WIDENED LANE) LANE AND SHOULDER ADDITION OR REPLACEMENT

NO SCALE

RSP P3B DATED JULY 19, 2013 SUPPLEMENTS THE STANDARD PLANS BOOK DATED 2010.

REVISED STANDARD PLAN RSP P3B

2010 REVISED STANDARD PLAN RSP P3B

5-31-13

Dist	COUNTY	ROUTE	POST MILES TOTAL PROJECT	SHEET No.	TOTAL SHEETS
07	LA	5	19.2/28.9	190	217

REGISTERED CIVIL ENGINEER

July 19, 2013
PLANS APPROVAL DATE

THE STATE OF CALIFORNIA OR ITS OFFICERS OR AGENTS SHALL NOT BE RESPONSIBLE FOR THE ACCURACY OR COMPLETENESS OF SCANNED COPIES OF THIS PLAN SHEET.

REGISTERED PROFESSIONAL ENGINEER — William K. Farnbach — No. C49042 — Exp. 9-30-14 — CIVIL — STATE OF CALIFORNIA

TO ACCOMPANY PLANS DATED 2-10-14

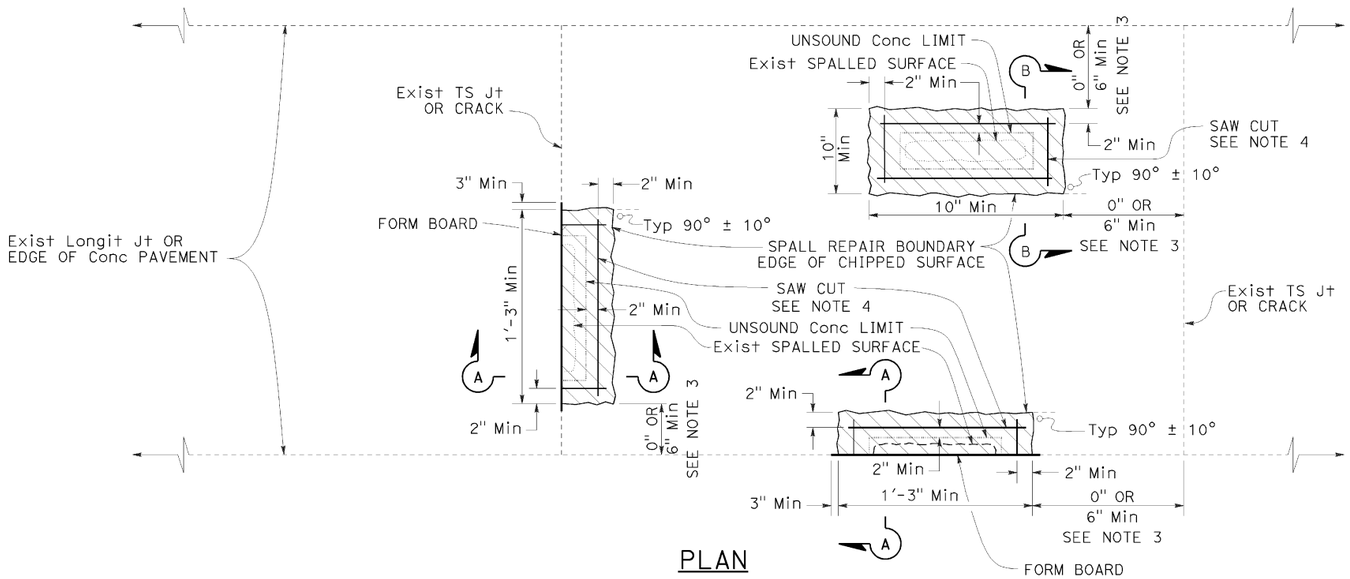

PLAN

LEGEND

SPALL REPAIR

NOTES:

1. See Project Plans for spall repair locations.
2. Combine spall repair areas closer than 2' apart.
3. If the spall repair area is less than 6" from a joint, extend the repair to the joint.
4. Cut at least 2" beyond the rectangular limits of unsound concrete determined by the Engineer. Determine the saw cut depth using the following table:

Conc MATERIAL	SAW CUT DEPTH	
	Min	Max
FAST-SETTING	2"	3½"
POLYESTER	1½"	3½"

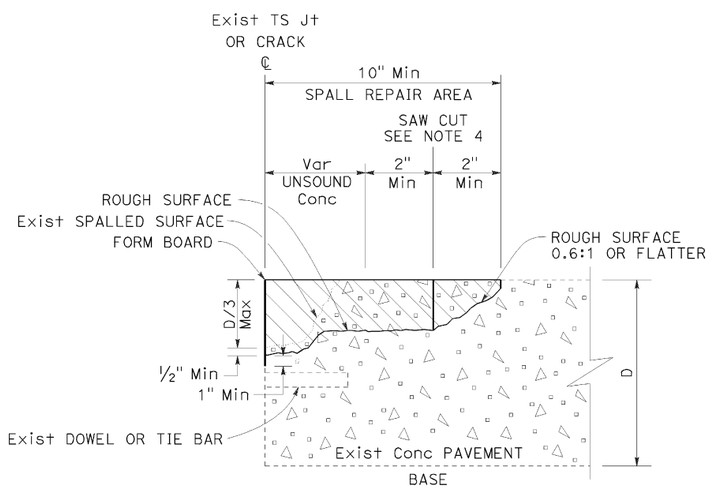

SECTION A-A

JOINT, CRACK, OR EDGE OF CONCRETE PAVEMENT REPAIR

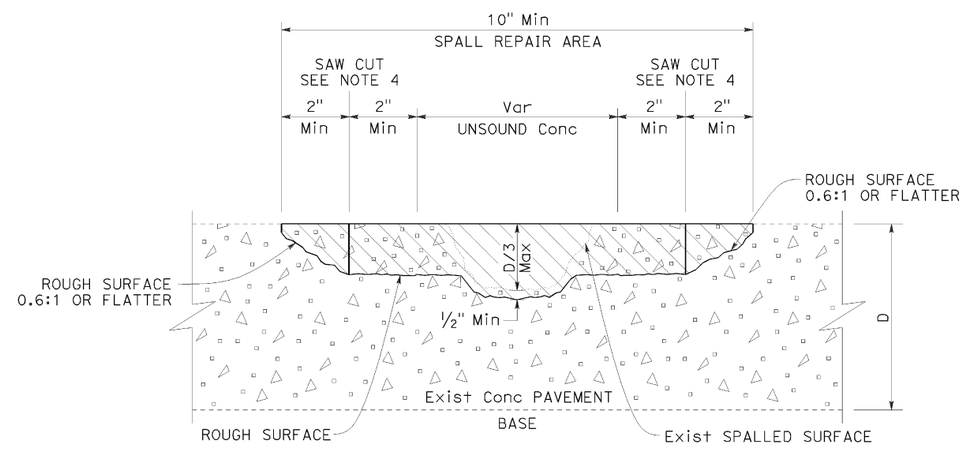

SECTION B-B

MISCELLANEOUS SPALL REPAIR

STATE OF CALIFORNIA
DEPARTMENT OF TRANSPORTATION

SPALL REPAIR

NO SCALE

RSP P6 DATED JULY 19, 2013 SUPPLEMENTS THE STANDARD PLANS BOOK DATED 2010.

REVISED STANDARD PLAN RSP P6

2010 REVISED STANDARD PLAN RSP P6

5-31-13

Dist	COUNTY	ROUTE	POST MILES TOTAL PROJECT	SHEET No.	TOTAL SHEETS
07	LA	5	19.2/28.9	191	217

William K. Farnbach
REGISTERED CIVIL ENGINEER

July 19, 2013
PLANS APPROVAL DATE

REGISTERED PROFESSIONAL ENGINEER — William K. Farnbach — No. C49042 — Exp. 9-30-14 — CIVIL — STATE OF CALIFORNIA

THE STATE OF CALIFORNIA OR ITS OFFICERS OR AGENTS SHALL NOT BE RESPONSIBLE FOR THE ACCURACY OR COMPLETENESS OF SCANNED COPIES OF THIS PLAN SHEET.

TO ACCOMPANY PLANS DATED 2-10-14

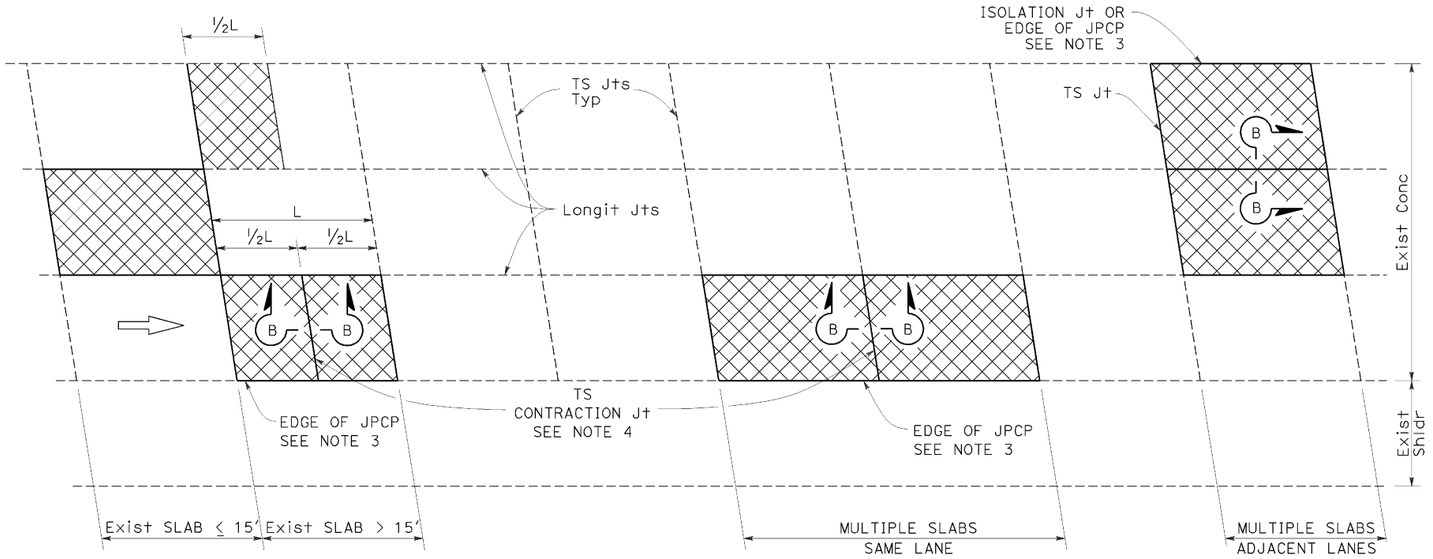

PLAN

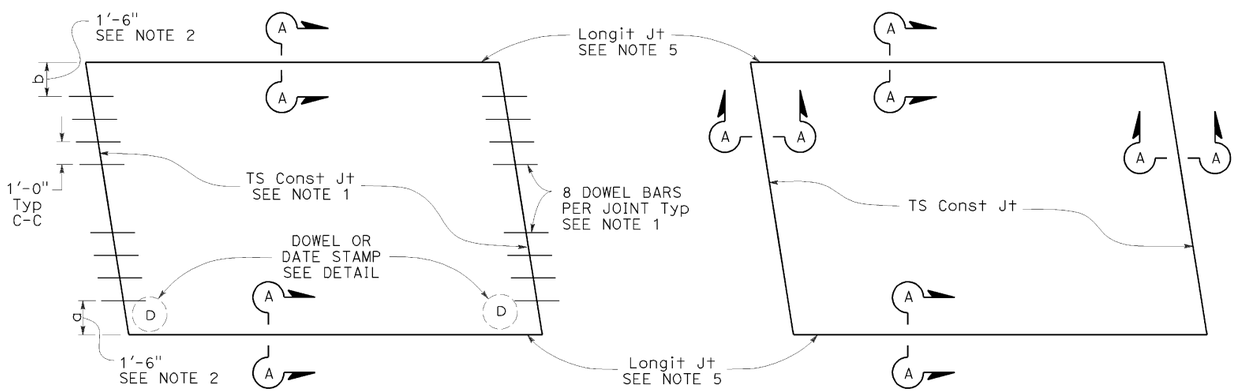

TYPE I
See Design Note 1

TYPE II
See Design Note 2

SLAB LAYOUT

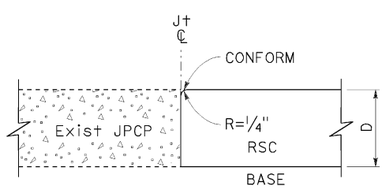

SECTION A-A

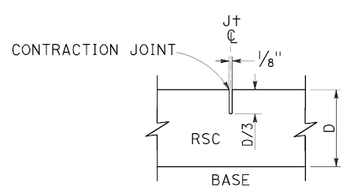

SECTION B-B

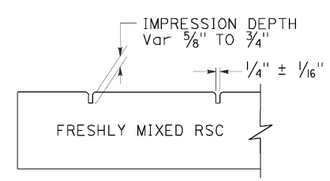

SECTION C-C

LEGEND:

RSC RAPID STRENGTH CONCRETE

INDIVIDUAL SLAB REPLACEMENT WITH RSC

NOTES:

1. For details not shown, see Revised Standard Plan RSP P10.
2. Where the existing outside shoulder is asphalt concrete pavement, "a" = 1'-0" and "b" = 2'-0".
3. Use side forms where edge of RSC pavement is adjacent to asphalt concrete.
4. Transverse contraction joint to match skew of existing joint. Omit dowel bars.
5. Do not place tie bars at longitudinal joints.

DESIGN NOTES:

1. For concrete slab repair with at least 5 years design life.
2. For short term repairs < 5 yrs design life or for slab replacements with cracking and seating.

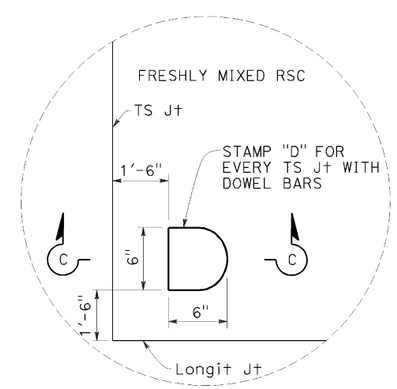

DOWEL STAMP DETAIL

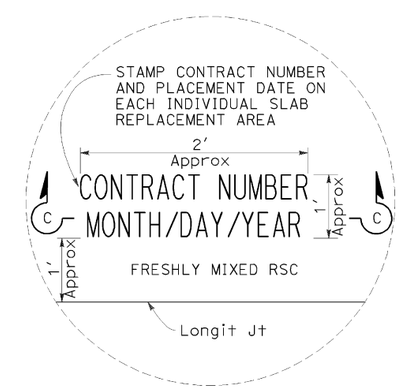

DATE STAMP DETAIL

STATE OF CALIFORNIA
DEPARTMENT OF TRANSPORTATION

INDIVIDUAL SLAB REPLACEMENT WITH RAPID STRENGTH CONCRETE

NO SCALE

RSP P8 DATED JULY 19, 2013 SUPERSEDES RSP P8 DATED APRIL 20, 2012 AND STANDARD PLAN P8 DATED MAY 20, 2011 - PAGE 130 OF THE STANDARD PLANS BOOK DATED 2010.

REVISED STANDARD PLAN RSP P8

2010 REVISED STANDARD PLAN RSP P8

5-31-13

Dist	COUNTY	ROUTE	POST MILES TOTAL PROJECT	SHEET No.	TOTAL SHEETS
07	LA	5	19.2/28.9	192	217

REGISTERED CIVIL ENGINEER

July 19, 2013
PLANS APPROVAL DATE

THE STATE OF CALIFORNIA OR ITS OFFICERS OR AGENTS SHALL NOT BE RESPONSIBLE FOR THE ACCURACY OR COMPLETENESS OF SCANNED COPIES OF THIS PLAN SHEET.

REGISTERED PROFESSIONAL ENGINEER — William K. Farnbach — No. C49042 — Exp. 9-30-14 — CIVIL — STATE OF CALIFORNIA

TO ACCOMPANY PLANS DATED 2-10-14

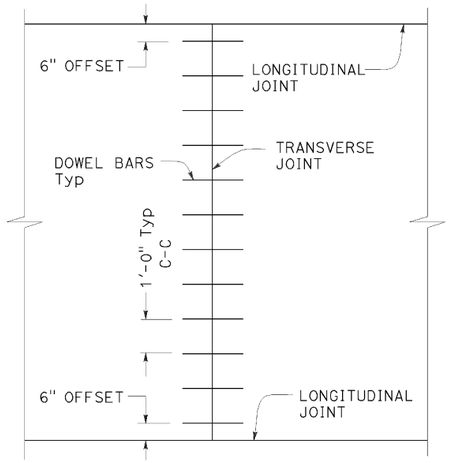

TRANSVERSE JOINT DOWEL BAR LAYOUT

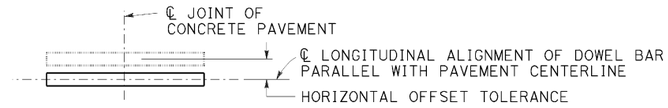

PLAN

HORIZONTAL OFFSET TOLERANCE

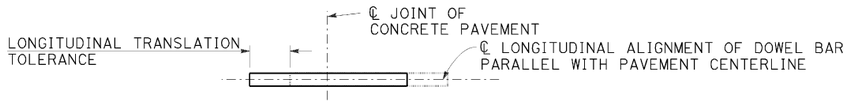

PLAN

LONGITUDINAL TRANSLATION TOLERANCE

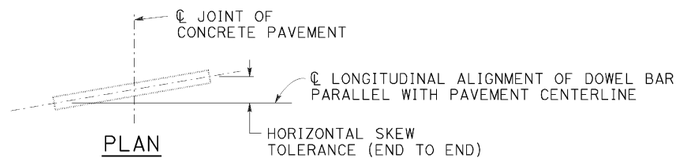

PLAN

HORIZONTAL SKEW TOLERANCE

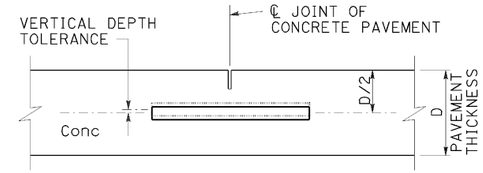

ELEVATION

VERTICAL DEPTH TOLERANCE

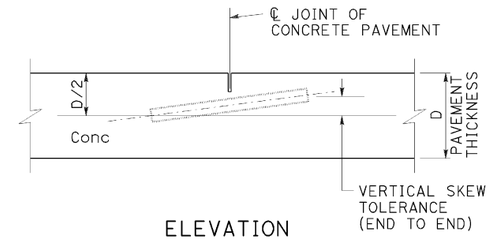

ELEVATION

VERTICAL SKEW TOLERANCE

NOTES:

1. See Revised Standard Plan RSP P1 for typical dowel bar placement and locations.
2. Where fresh concrete pavement is placed against new concrete or existing concrete pavement, rounding the corner of the existing concrete pavement is not required.
3. May also use ¾" Dia dowel bars 2'-4" ± ¼" in length. Center the length of dowel bars at the centerline of longitudinal joint.

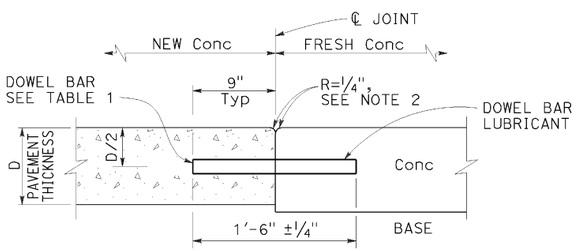

TRANSVERSE CONSTRUCTION JOINT DETAIL

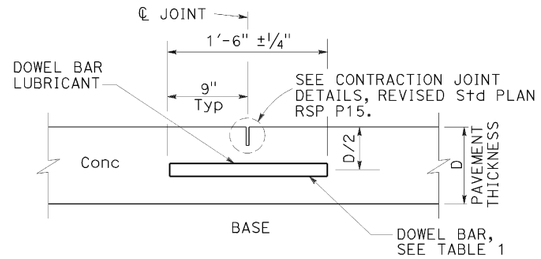

TRANSVERSE CONTRACTION JOINT

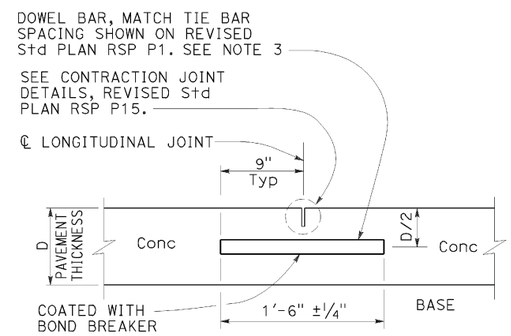

LONGITUDINAL CONTRACTION JOINT WITH DOWEL BARS

See Revised Std Plan RSP P18

TABLE 1

DOWEL BAR DIAMETER TABLE			
PAVEMENT THICKNESS	0.65'	> 0.65' - 0.85'	> 0.85'
MINIMUM DOWEL * BAR DIAMETER	1"	1¼"	1½"

* The drilled hole diameter must be ⅛" to 3/16" larger than the bar diameter.

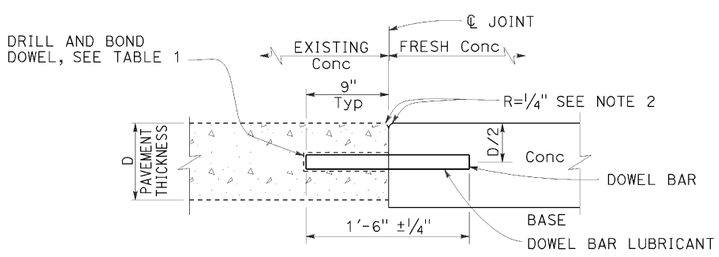

TRANSVERSE CONSTRUCTION JOINT FOR EXISTING CONCRETE PAVEMENT

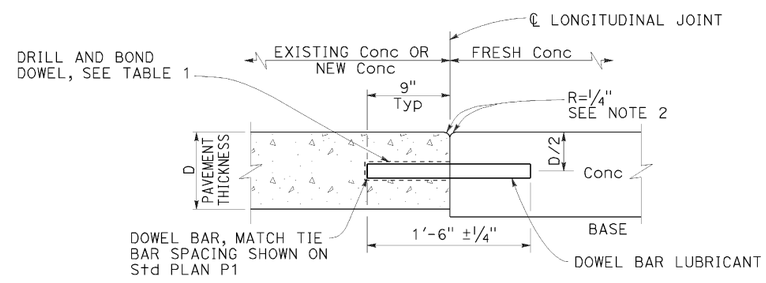

LONGITUDINAL CONSTRUCTION JOINT WITH DOWEL BARS

See Revised Std Plan RSP P18

STATE OF CALIFORNIA
DEPARTMENT OF TRANSPORTATION

CONCRETE PAVEMENT DOWEL BAR DETAILS

NO SCALE

RSP P10 DATED JULY 19, 2013 SUPERSEDES RSP P10 DATED APRIL 20, 2012 AND STANDARD PLAN P10 DATED MAY 20, 2011 - PAGE 131 OF THE STANDARD PLANS BOOK DATED 2010.

REVISED STANDARD PLAN RSP P10

2010 REVISED STANDARD PLAN RSP P10

5-31-13

Dist	COUNTY	ROUTE	POST MILES TOTAL PROJECT	SHEET No.	TOTAL SHEETS
07	LA	5	19.2/28.9	193	217

William K. Farnbach
REGISTERED CIVIL ENGINEER

July 19, 2013
PLANS APPROVAL DATE

REGISTERED PROFESSIONAL ENGINEER William K. Farnbach No. C49042 Exp. 9-30-14 CIVIL STATE OF CALIFORNIA

THE STATE OF CALIFORNIA OR ITS OFFICERS OR AGENTS SHALL NOT BE RESPONSIBLE FOR THE ACCURACY OR COMPLETENESS OF SCANNED COPIES OF THIS PLAN SHEET.

TO ACCOMPANY PLANS DATED 2-10-14

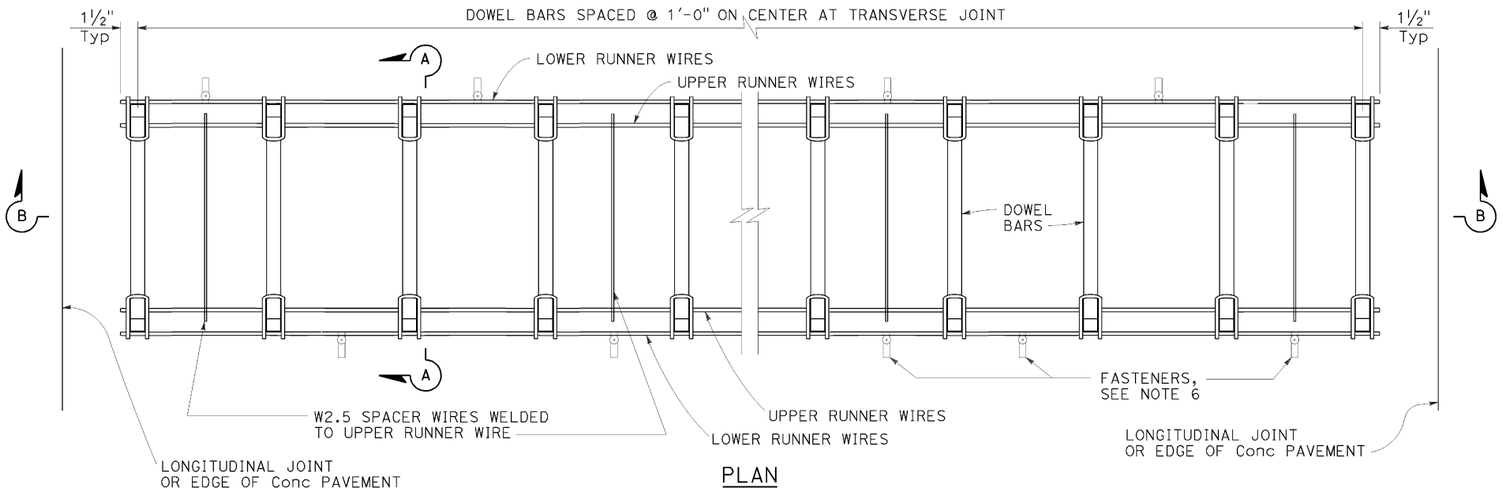

PLAN

DOWEL BAR BASKET (TRANSVERSE JOINT)

See Note 1

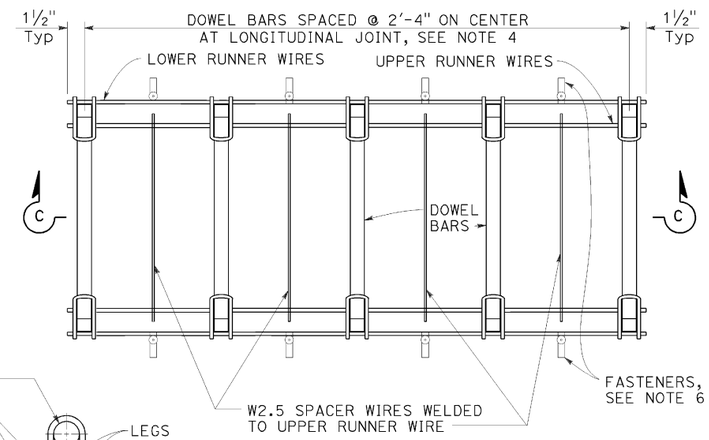

PLAN

DOWEL BAR BASKET (LONGITUDINAL JOINT)

See Note 1

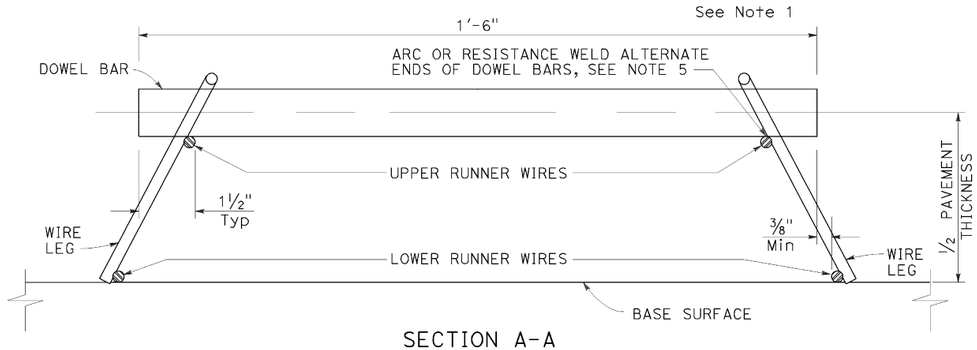

SECTION A-A

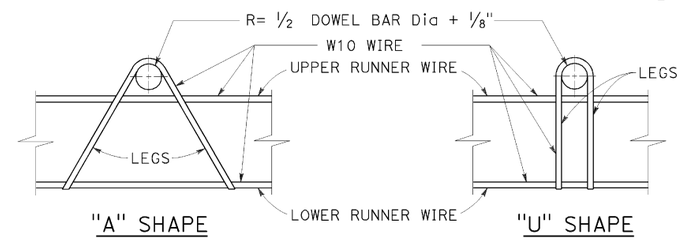

ASSEMBLY FRAME DETAILS

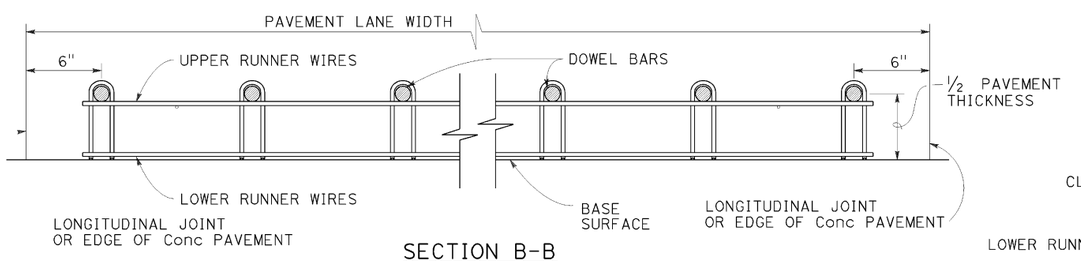

SECTION B-B

See Note 1

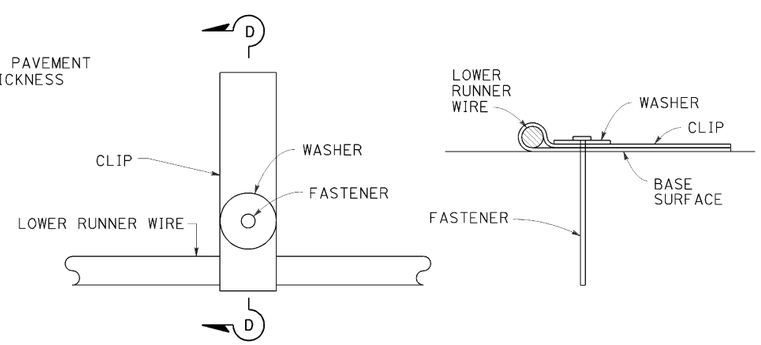

PLAN

SECTION D-D

FASTENER DETAIL

See Note 6

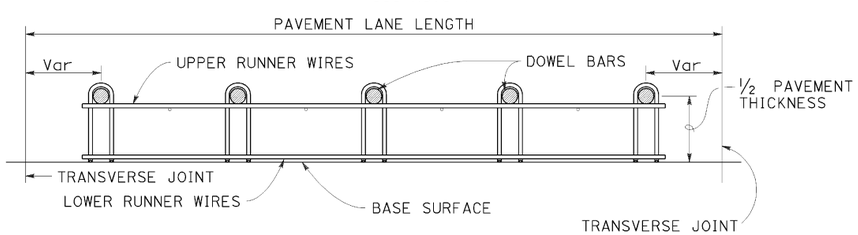

SECTION C-C

See Notes 1 and 4

NOTES:

1. "U" frame shape assembly shown. Use either "U" frame shape or "A" frame shape.
2. Wire sizes shown are the minimum required.
3. All wire intersections must be resistance welded.
4. Use tie bar spacing for longitudinal dowel bar locations. See Revised Standard Plans RSP P1, RSP P2, RSP P3A, and RSP P3B for tie bar requirements.
5. Weld may be at the top or bottom of the dowel bar.
6. Use anchor pins where soil or granular base is used. See Revised Standard Plan RSP P17 for Anchor Pin Detail.

STATE OF CALIFORNIA
DEPARTMENT OF TRANSPORTATION

CONCRETE PAVEMENT DOWEL BAR BASKET DETAILS

NO SCALE

RSP P12 DATED JULY 19, 2013 SUPERSEDES STANDARD PLAN P12
DATED MAY 20, 2011 - PAGE 132 OF THE STANDARD PLANS BOOK DATED 2010.

REVISED STANDARD PLAN RSP P12

2010 REVISED STANDARD PLAN RSP P12

5-31-13

Dist	COUNTY	ROUTE	POST MILES TOTAL PROJECT	SHEET No.	TOTAL SHEETS
07	LA	5	19.2/28.9	194	217

REGISTERED CIVIL ENGINEER

July 19, 2013
PLANS APPROVAL DATE

REGISTERED PROFESSIONAL ENGINEER — William K. Farnbach — No. C49042 — Exp. 9-30-14 — CIVIL — STATE OF CALIFORNIA

THE STATE OF CALIFORNIA OR ITS OFFICERS OR AGENTS SHALL NOT BE RESPONSIBLE FOR THE ACCURACY OR COMPLETENESS OF SCANNED COPIES OF THIS PLAN SHEET.

TO ACCOMPANY PLANS DATED 2-10-14

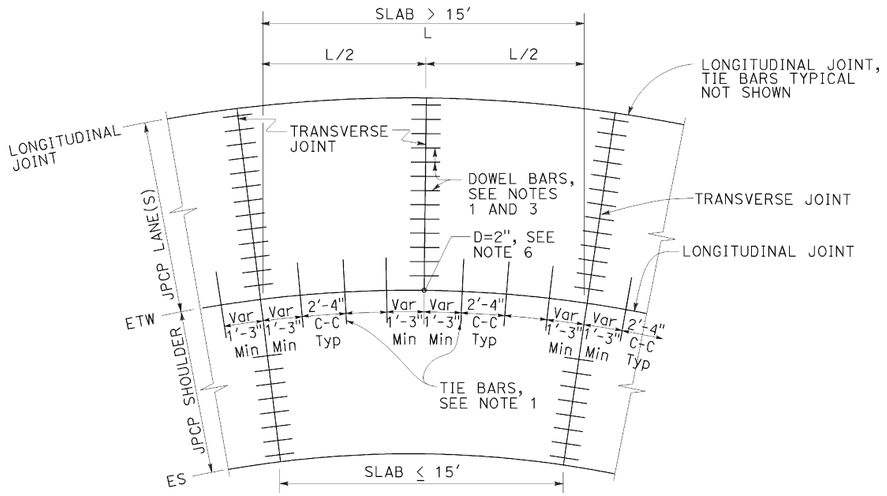

TIE BAR LAYOUT IN CURVED LANES

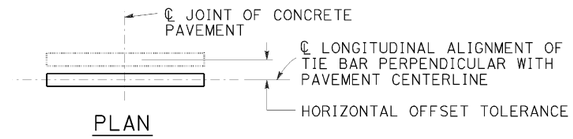

PLAN

HORIZONTAL OFFSET TOLERANCE

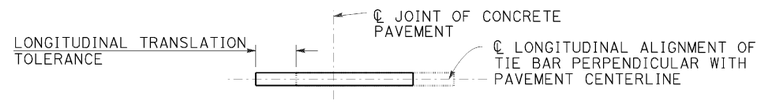

PLAN

LONGITUDINAL TRANSLATION TOLERANCE

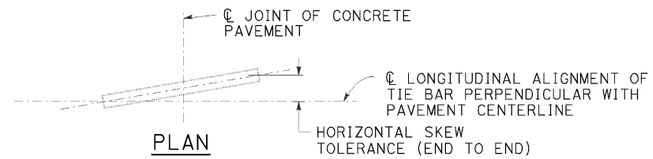

PLAN

HORIZONTAL SKEW TOLERANCE

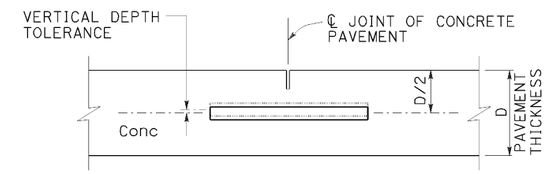

ELEVATION

VERTICAL DEPTH TOLERANCE

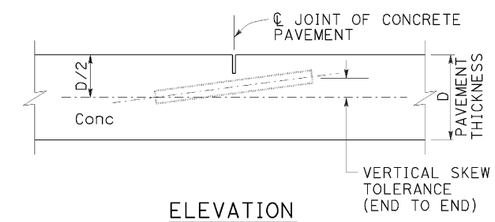

ELEVATION

VERTICAL SKEW TOLERANCE

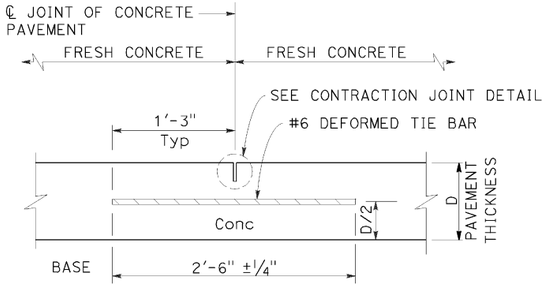

LONGITUDINAL CONTRACTION JOINT

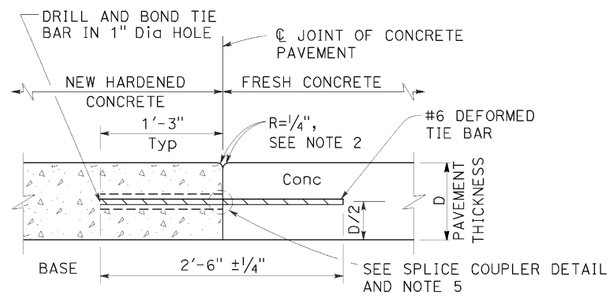

LONGITUDINAL CONSTRUCTION JOINT

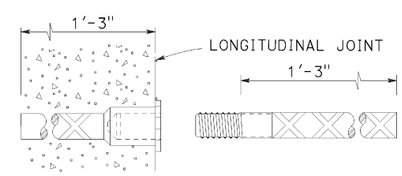

ALTERNATIVE SPLICE COUPLER

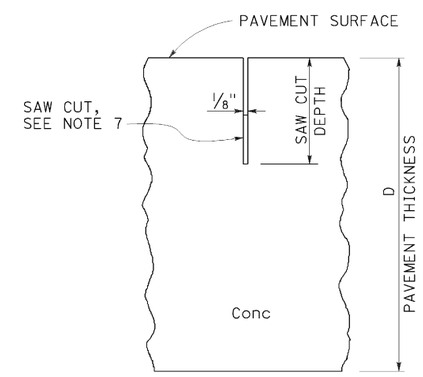

CONTRACTION JOINT DETAIL

NOTES:

1. See Revised Standard Plan RSP P1 for typical dowel bar and tie bar placement and locations.
2. Where new pavement is placed against existing concrete pavement, rounding the corner is not required.
3. For dowel bar sizes, See Revised Standard Plan RSP P10.
4. Tie bar details apply to inside widenings.
5. Use either drill and bond or splice couplers.
6. Full depth drilled hole. Fill hole with filler material.
7. The bottom of the saw cut must be at least 0.5" clear of any dowel bar, tie bar and bar reinforcement.

STATE OF CALIFORNIA
DEPARTMENT OF TRANSPORTATION

CONCRETE PAVEMENT-TIE BAR DETAILS

NO SCALE

RSP P15 DATED JULY 19, 2013 SUPPLEMENTS THE STANDARD PLANS BOOK DATED 2010.

REVISED STANDARD PLAN RSP P15

2010 REVISED STANDARD PLAN RSP P15

5-31-13

Dist	COUNTY	ROUTE	POST MILES TOTAL PROJECT	SHEET No.	TOTAL SHEETS
07	LA	5	19.2/28.9	195	217

William K. Farnbach
REGISTERED CIVIL ENGINEER

July 19, 2013
PLANS APPROVAL DATE

REGISTERED PROFESSIONAL ENGINEER William K. Farnbach No. C49042 Exp. 9-30-14 CIVIL STATE OF CALIFORNIA

THE STATE OF CALIFORNIA OR ITS OFFICERS OR AGENTS SHALL NOT BE RESPONSIBLE FOR THE ACCURACY OR COMPLETENESS OF SCANNED COPIES OF THIS PLAN SHEET.

TO ACCOMPANY PLANS DATED 2-10-14

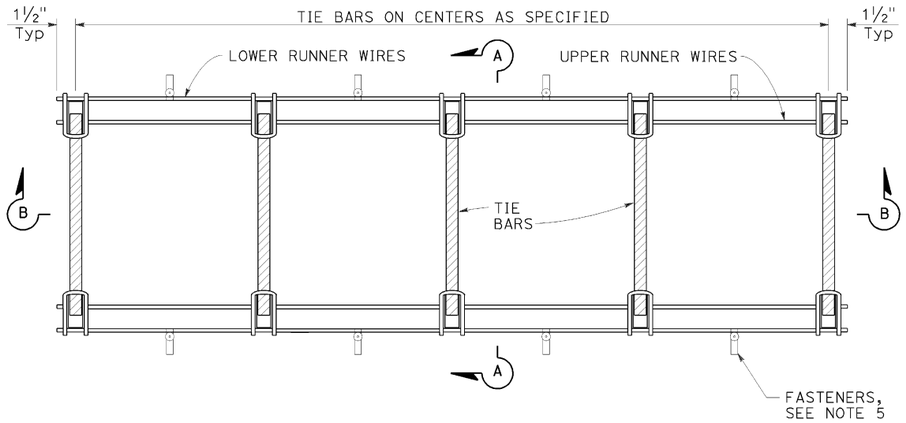

PLAN

TIE BAR BASKET

(Tie bars at longitudinal joint)
See Note 1

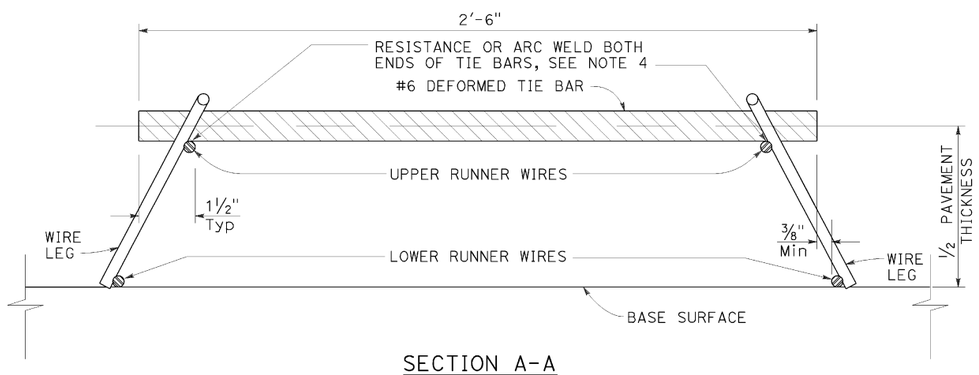

SECTION A-A

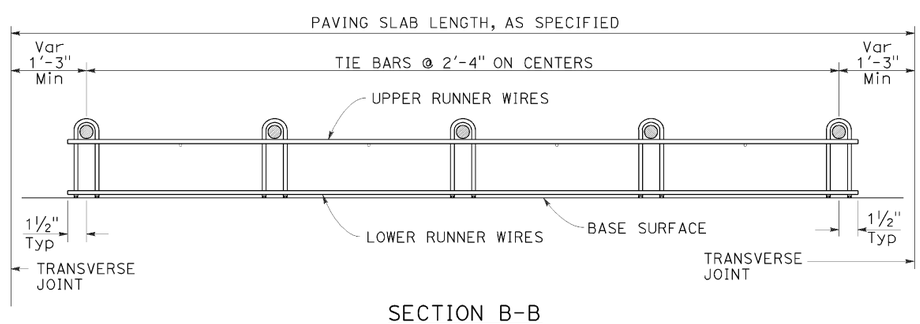

SECTION B-B
See Note 1

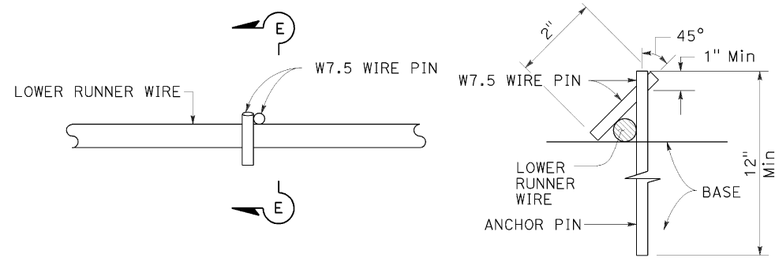

PLAN

SECTION E-E

ANCHOR PIN DETAIL

See Note 5

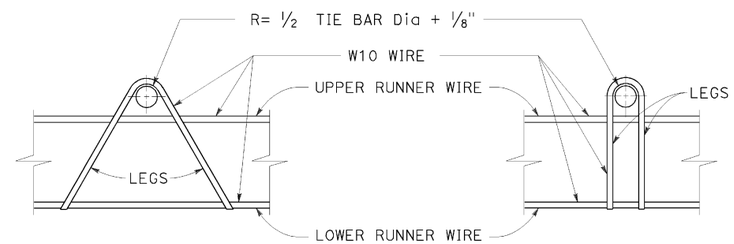

"A" SHAPE

"U" SHAPE

ASSEMBLY FRAME DETAILS

See Note 1

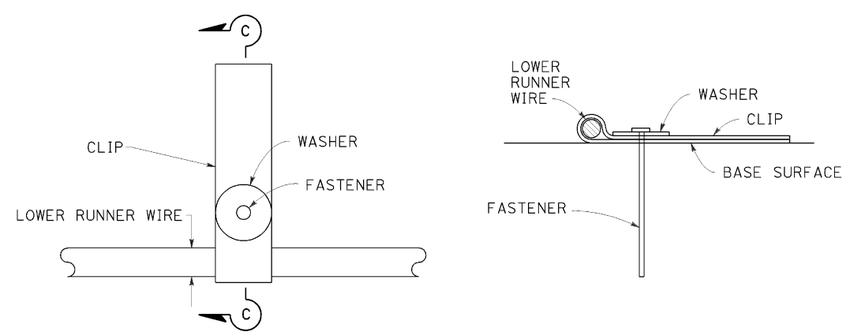

PLAN

SECTION C-C

FASTENER DETAIL

NOTES:

1. "U" frame shape assembly shown. Use either "U" frame shape or "A" frame shape.
2. Wire sizes shown are the minimum required.
3. All wire intersections must be resistance welded.
4. Weld may be at top or bottom of tie bars.
5. Use anchor pins where soil or granular base is used.

STATE OF CALIFORNIA
DEPARTMENT OF TRANSPORTATION

CONCRETE PAVEMENT TIE BAR BASKET DETAILS

NO SCALE

RSP P17 DATED JULY 19, 2013 SUPERSEDES STANDARD PLAN P17
DATED MAY 20, 2011 - PAGE 134 OF THE STANDARD PLANS BOOK DATED 2010.

REVISED STANDARD PLAN RSP P17

2010 REVISED STANDARD PLAN RSP P17

5-31-13

Dist	COUNTY	ROUTE	POST MILES TOTAL PROJECT	SHEET No.	TOTAL SHEETS
07	LA	5	19.2/28.9	196	217

William K. Farnbach
REGISTERED CIVIL ENGINEER

July 19, 2013
PLANS APPROVAL DATE

REGISTERED PROFESSIONAL ENGINEER — William K. Farnbach — No. C49042 — Exp. 9-30-14 — CIVIL — STATE OF CALIFORNIA

THE STATE OF CALIFORNIA OR ITS OFFICERS OR AGENTS SHALL NOT BE RESPONSIBLE FOR THE ACCURACY OR COMPLETENESS OF SCANNED COPIES OF THIS PLAN SHEET.

TO ACCOMPANY PLANS DATED 2-10-14

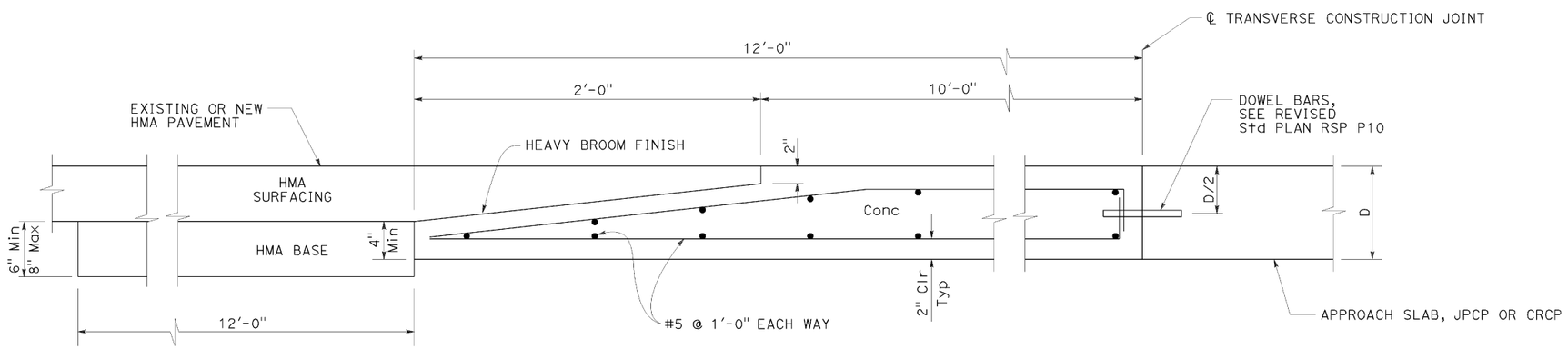

ELEVATION

CONCRETE PAVEMENT TRANSITION PANEL

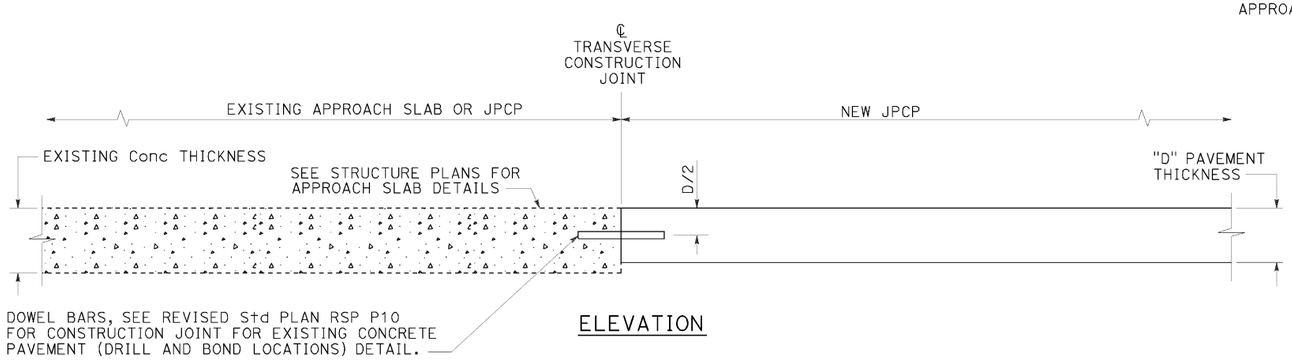

ELEVATION

TERMINAL JOINT TYPE 1

For Exist JPCP or Approach Slab

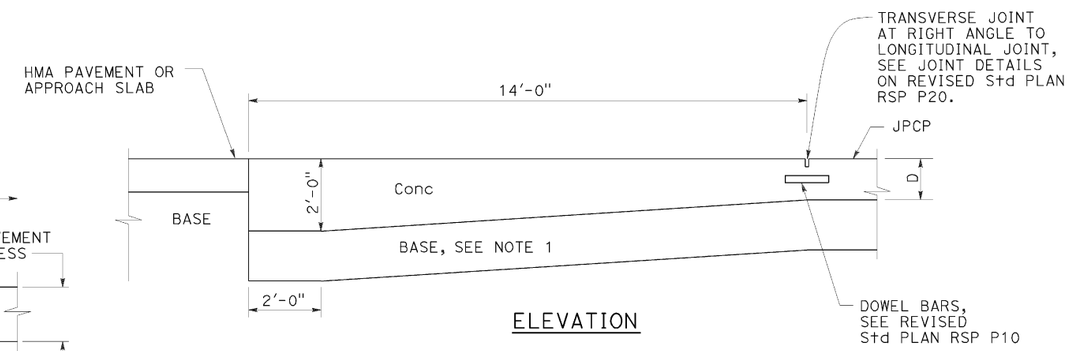

ELEVATION

PAVEMENT END ANCHOR

For HMA Pvmt or Approach Slab

NOTE:

1. Maintain same base thickness as JPCP.

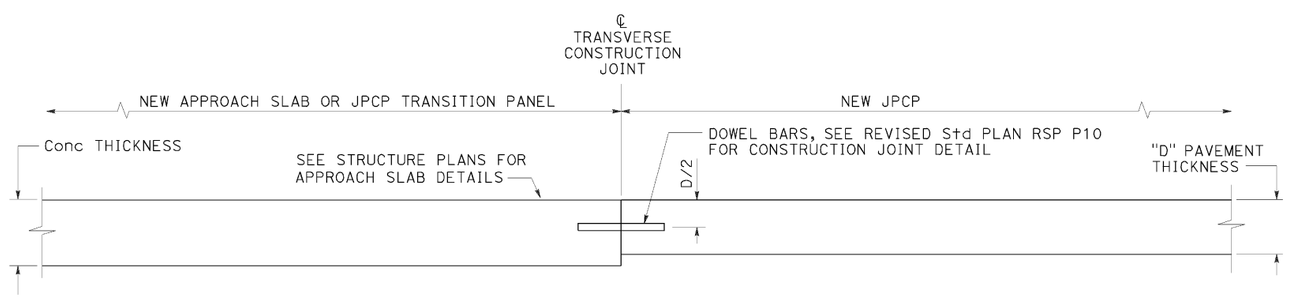

ELEVATION

TERMINAL JOINT TYPE 2

For JPCP Transition Panel or Approach Slab

STATE OF CALIFORNIA
DEPARTMENT OF TRANSPORTATION

CONCRETE PAVEMENT-END PANEL PAVEMENT TRANSITIONS

NO SCALE

RSP P30 DATED JULY 19, 2013 SUPERSEDES RSP P30 DATED APRIL 20, 2012 AND STANDARD PLAN P30 DATED MAY 20, 2011 - PAGE 137 OF THE STANDARD PLANS BOOK DATED 2010.

REVISED STANDARD PLAN RSP P30

2010 REVISED STANDARD PLAN RSP P30

3-26-13

Dist	COUNTY	ROUTE	POST MILES TOTAL PROJECT	SHEET No.	TOTAL SHEETS
07	LA	5	19.2/28.9	197	217

LICENSED LANDSCAPE ARCHITECT

July 19, 2013
PLANS APPROVAL DATE

LICENSED LANDSCAPE ARCHITECT Gregory A. Balzer 2578 STATE OF CALIFORNIA
07-19-13 Renewal Date
2-28-15 Previous Date
7-19-13 Date

THE STATE OF CALIFORNIA OR ITS OFFICERS OR AGENTS SHALL NOT BE RESPONSIBLE FOR THE ACCURACY OR COMPLETENESS OF SCANNED COPIES OF THIS PLAN SHEET.

TO ACCOMPANY PLANS DATED 2-10-14

A

AB	AGGREGATE BASE
ABS	ACRYLONITRILE-BUTADIENE-STYRENE
AC	ASPHALT CONCRETE
ACC	ARMOR-CLAD CONDUCTORS
Adj	ADJACENT/ADJUSTABLE
AIC	AUXILIARY IRRIGATION CONTROLLER
Alt	ALTERNATIVE
AMEND	AMENDMENT
ARV	AIR RELEASE VALVE
AUTO	AUTOMATIC
AUX	AUXILIARY
AVB	ATMOSPHERIC VACUUM BREAKER

B

B&B	BALLED AND BURLAPPED
B/B	BRASS/BRONZE
B/B/PL	BRASS/BRONZE/PLASTIC
B/PL	BRASS/PLASTIC
BFM	BONDED FIBER MATRIX
Bit Ctd	BITUMINOUS COATED
BP	BOOSTER PUMP
BPA	BACKFLOW PREVENTER ASSEMBLY
BPE	BACKFLOW PREVENTER ENCLOSURE
BV	BALL VALVE

C

C	CONDUIT
CAP	CORRUGATED ALUMINUM PIPE
CARV	COMBINATION AIR RELEASE VALVE
CB	COUPLING BAND
CCA	CAM COUPLER ASSEMBLY
CEC	CONTROLLER ENCLOSURE CABINET
CHDPE	CORRUGATED HIGH DENSITY POLYETHYLENE
CL	CHAIN LINK
CNC	CONTROL AND NEUTRAL CONDUCTORS
Conc	CONCRETE
CP	COPPER PIPE
CS	COMPOST SOCK
CSP	CORRUGATED STEEL PIPE
CST	CENTER STRIP
CV	CHECK VALVE

D

Dia	DIAMETER
DIP	DUCTILE IRON PIPE
DIT	DRIP IRRIGATION TUBING
DG	DECOMPOSED GRANITE
DN	DIAMETER NOMINAL
DVA	DRIP VALVE ASSEMBLY

E

EC	EROSION CONTROL
ECTC	EROSION CONTROL TECHNOLOGY COUNCIL
Elect	ELECTRIC/ELECTRICAL
Elev	ELEVATION
ELL	ELBOW
ENCL	ENCLOSURE
EP	EDGE OF PAVEMENT
ES	EDGE OF SHOULDER
EST	END STRIP
ESTB	ESTABLISHMENT
ETW	EDGE OF TRAVELED WAY

F

F	FULL CIRCLE
F/P	FULL/PART CIRCLE
FCV	FLOW CONTROL VALVE
FERT	FERTILIZER
FG	FINISHED GRADE
FH	FLEXIBLE HOSE
FIPT	FEMALE IRON PIPE THREAD
FIS	FERTILIZER INJECTOR SYSTEM
FL	FLOW LINE
FR	FIBER ROLL
FS	FLOW SENSOR
FSC	FLOW SENSOR CABLE
FV	FLUSH VALVE

G

Galv	GALVANIZED
GARV	GARDEN VALVE
GARVA	GARDEN VALVE ASSEMBLY
GM	GRAVEL MULCH
GPH	GALLONS PER HOUR
GPM	GALLONS PER MINUTE
GSP	GALVANIZED STEEL PIPE
GV	GATE VALVE

H

H	HALF CIRCLE
HDPE	HIGH DENSITY POLYETHYLENE
HP	HORSEPOWER/HINGE POINT
HPL	HIGH PRESSURE LINE
Hwy	HIGHWAY

I

IC	IRRIGATION CONTROLLER
ICC	IRRIGATION CONTROLLER(S) IN CONTROLLER ENCLOSURE CABINET
ID	INSIDE DIAMETER
IFS	IRRIGATION FILTRATION SYSTEM
IPS	IRON PIPE SIZE
IPT	IRON PIPE THREAD
Irr	IRRIGATION

L

L	LENGTH

M

Max	MAXIMUM
MBGR	METAL BEAM GUARD RAILING
MCV	MANUAL CONTROL VALVE
MIC	MASTER IRRIGATION CONTROLLER
Min	MINIMUM
MIPT	MALE IRON PIPE THREAD
Misc	MISCELLANEOUS
Mtl	MATERIAL
MVP	MAINTENANCE VEHICLE PULLOUT

N

NCN	NO COMMON NAME
NL	NOZZLE LINE
No.	NUMBER
NPT	NATIONAL PIPE THREAD

O

O/C	ON CENTER
OD	OUTSIDE DIAMETER
OL	OVERLAP

P

P	PART CIRCLE
PB	PULL BOX
PCC	PORTLAND CEMENT CONCRETE
PE	POLYETHYLENE
Pkt	PACKET
PL	PLASTIC
PLS	PURE LIVE SEED
PLT	PLANT/PLANTING
PLT ESTB	PLANT ESTABLISHMENT
PM	POST MILE
PR	PRESSURE RATED
PRLV	PRESSURE RELIEF VALVE
PRV	PRESSURE REGULATING VALVE
PVC	POLYVINYL CHLORIDE
Pvmt	PAVEMENT

Q

Q	QUARTER CIRCLE
QCV	QUICK COUPLING VALVE

R

R	RADIUS
RCP	REINFORCED CONCRETE PIPE
RCV	REMOTE CONTROL VALVE
RCVM	REMOTE CONTROL VALVE (MASTER)
RCVMF	REMOTE CONTROL VALVE (MASTER) W/FLOW SENSOR
RCVP	REMOTE CONTROL VALVE W/PRESSURE REGULATOR
RCW	RECYCLED WATER
RECP	ROLLED EROSION CONTROL PRODUCT
REQ	REQUIRED
RICS	REMOTE IRRIGATION CONTROL SYSTEM
R/W	RIGHT OF WAY

S

S	SLIP
SCH	SCHEDULE
SF	STATE-FURNISHED
Shld	SHOULDER
Sq	SQUARE
SST	SIDE STRIP
Sta	STATION
Std	STANDARD
SW	SIDEWALK/SOUND WALL

T

T	THIRD CIRCLE/THREAD
TLS	TRUCK LOADING STANDPIPE
TQ	THREE QUARTER CIRCLE
TRM	TURF REINFORCEMENT MAT
TT	TWO-THIRDS CIRCLE
TWSA	TREE WELL SPRINKLER ASSEMBLY
Typ	TYPICAL

U

UG	UNDERGROUND

W

W	WIDTH
W/	WITH
WM	WATER METER
WS	WYE STRAINER
WSA	WYE STRAINER ASSEMBLY
WSP	WELDED STEEL PIPE
WWM	WELDED WIRE MESH

NOTE:

For additional abbreviations, see Standard Plans A10A and A10B.

STATE OF CALIFORNIA
DEPARTMENT OF TRANSPORTATION

LANDSCAPE AND EROSION CONTROL ABBREVIATIONS

NO SCALE

RSP H1 DATED JULY 19, 2013 SUPERSEDES STANDARD PLAN H1 DATED MAY 20, 2011 - PAGE 218 OF THE STANDARD PLANS BOOK DATED 2010.

REVISED STANDARD PLAN RSP H1

2010 REVISED STANDARD PLAN RSP H1

6-28-13

EXISTING	NEW	ITEM DESCRIPTION
		WATER METER (WM)
		BACKFLOW PREVENTER ASSEMBLY (BPA)
		BACKFLOW PREVENTER ENCLOSURE (BPE)
		BOOSTER PUMP (BP)
		TRUCK LOADING STANDPIPE (TLS)
	FS	FLOW SENSOR (FS)
		MASTER IRRIGATION CONTROLLER (MIC)
		AUXILIARY IRRIGATION CONTROLLER (AIC)
		IRRIGATION CONTROLLER (IC) IRRIGATION CONTROLLER (IC) (BATTERY) IRRIGATION CONTROLLER (IC) (SOLAR) IRRIGATION CONTROLLER (IC) (TWO WIRE) IRRIGATION CONTROLLER(S) IN CONTROLLER ENCLOSURE CABINET (ICC)
acc	ACC	ARMOR-CLAD CONDUCTORS (ACC)
cnc	CNC	CONTROL AND NEUTRAL CONDUCTORS (CNC)
		IRRIGATION CONDUIT
		EXTEND IRRIGATION CONDUIT
dip	DIP	DUCTILE IRON PIPE (SUPPLY LINE) (MAIN) (DIP)
		GALVANIZED STEEL PIPE (SUPPLY LINE) (MAIN) (GSP)
		GALVANIZED STEEL PIPE (SUPPLY LINE) (LATERAL) (GSP)
		PLASTIC PIPE (SUPPLY LINE) (MAIN)
		PLASTIC PIPE (SUPPLY LINE) (LATERAL)
cp	CP	COPPER PIPE (SUPPLY LINE)
dit	DIT	DRIP IRRIGATION TUBING
		REMOTE CONTROL VALVE (RCV) REMOTE CONTROL VALVE (MASTER) (RCVM) REMOTE CONTROL VALVE (MASTER) W/FLOW METER (RCVMF)
	P	REMOTE CONTROL VALVE W/PRESSURE REGULATOR (RCVP)
		EXISTING MANUAL CONTROL VALVE (MCV)
	V	DRIP VALVE ASSEMBLY (DVA)
	Y	WYE STRAINER ASSEMBLY (WSA)

EXISTING	NEW	ITEM DESCRIPTION
		GATE VALVE (GV)
		BALL VALVE (BV)
		QUICK COUPLING VALVE (QCV)
		CAM COUPLER ASSEMBLY (CCA)
		GARDEN VALVE ASSEMBLY (GARVA)
		PRESSURE REGULATING VALVE (PRV)
		PRESSURE RELIEF VALVE (PRLV)
		FLOW CONTROL VALVE (FCV)
		COMBINATION AIR RELEASE VALVE (CARV)
		CHECK VALVE (CV)
		FLUSH VALVE (FV)
		EXISTING NOZZLE LINE W/TURNING UNION
		EXISTING IRRIGATION SYSTEM
		EXISTING IRRIGATION SYSTEM TO BE REMOVED
		CHAIN LINK GATE
		QUICK COUPLING VALVE W/SPRINKLER PROTECTOR
3	3	SPRINKLER W/SPRINKLER PROTECTOR
	C	CONNECT TO EXISTING SYSTEM
		CAP
		CAP EXISTING
	\\\FR\\\	FIBER ROLL
	\\\CS\\\	COMPOST SOCK

RCV SIZE
IRRIGATION CONTROLLER
CONTROLLER STATION
VALVE IN PARALLEL (IF APPLICABLE)
GPM
QUANTITY OF SPRINKLERS (WHEN SHOWN)

* 2½"-A-2b-40-60

VALVE CODE

* VALVE CODES FOR EXISTING VALVES ARE SHOWN IN A DASHED ENCLOSURE.

Dist	COUNTY	ROUTE	POST MILES TOTAL PROJECT	SHEET No.	TOTAL SHEETS
07	LA	5	19.2/28.9	198	217

LICENSED LANDSCAPE ARCHITECT

November 15, 2013
PLANS APPROVAL DATE

LICENSED LANDSCAPE ARCHITECT
Gregory A. Balzer #2178
2-28-15
Renewal Date
11-15-13
Date
STATE OF CALIFORNIA

THE STATE OF CALIFORNIA OR ITS OFFICERS OR AGENTS SHALL NOT BE RESPONSIBLE FOR THE ACCURACY OR COMPLETENESS OF SCANNED COPIES OF THIS PLAN SHEET.

TO ACCOMPANY PLANS DATED 2-10-14

2010 REVISED STANDARD PLAN RSP H2

STATE OF CALIFORNIA
DEPARTMENT OF TRANSPORTATION

LANDSCAPE AND EROSION CONTROL SYMBOLS

NO SCALE

RSP H2 DATED NOVEMBER 15, 2013 SUPERSEDES RSP H2 DATED JULY 19, 2013 AND STANDARD PLAN H2 DATED MAY 20, 2011 - PAGE 219 OF THE STANDARD PLANS BOOK DATED 2010.

REVISED STANDARD PLAN RSP H2

10-9-13

Dist	COUNTY	ROUTE	POST MILES TOTAL PROJECT	SHEET No.	TOTAL SHEETS
07	LA	5	19.2/28.9	199	217

LICENSED LANDSCAPE ARCHITECT

July 19, 2013
PLANS APPROVAL DATE

THE STATE OF CALIFORNIA OR ITS OFFICERS OR AGENTS SHALL NOT BE RESPONSIBLE FOR THE ACCURACY OR COMPLETENESS OF SCANNED COPIES OF THIS PLAN SHEET.

LICENSED LANDSCAPE ARCHITECT Gregory A. Balzer 4578 2-28-15 Expiration Date 7-19-13 Date STATE OF CALIFORNIA

TO ACCOMPANY PLANS DATED 2-10-14

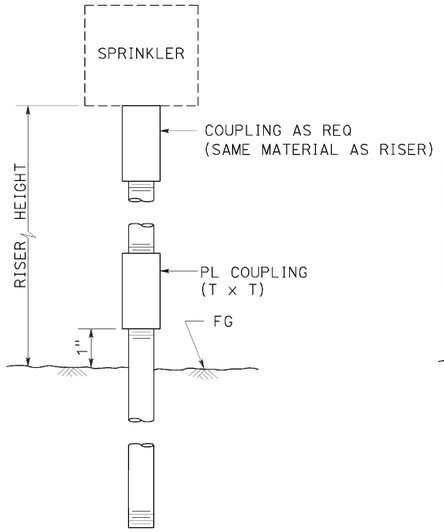

ELEVATION

RISER SPRINKLER ASSEMBLY TYPE I

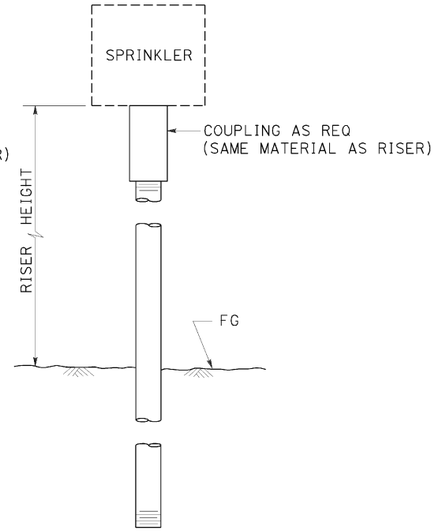

ELEVATION

RISER SPRINKLER ASSEMBLY TYPE II

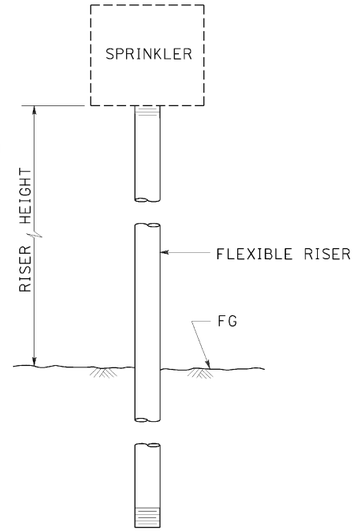

ELEVATION

RISER SPRINKLER ASSEMBLY TYPE III

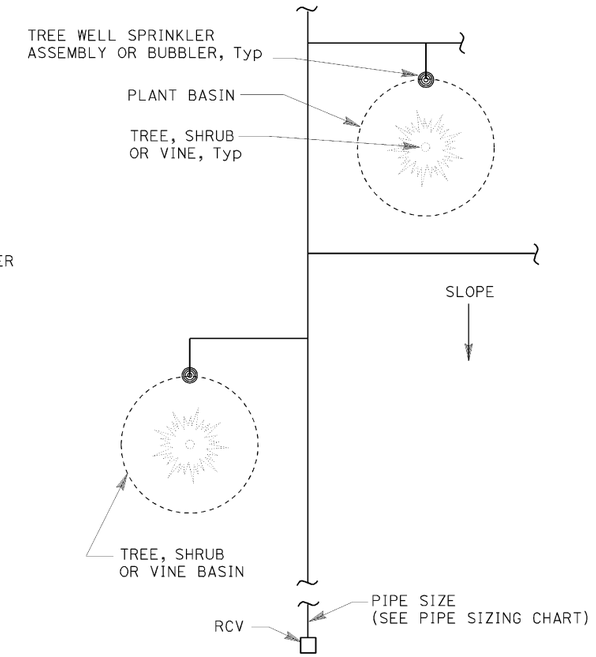

PLAN

NOTES:

1. Install tree well sprinkler assembly on up-hill side of plant when on slope.
2. Install bubbler within basin.

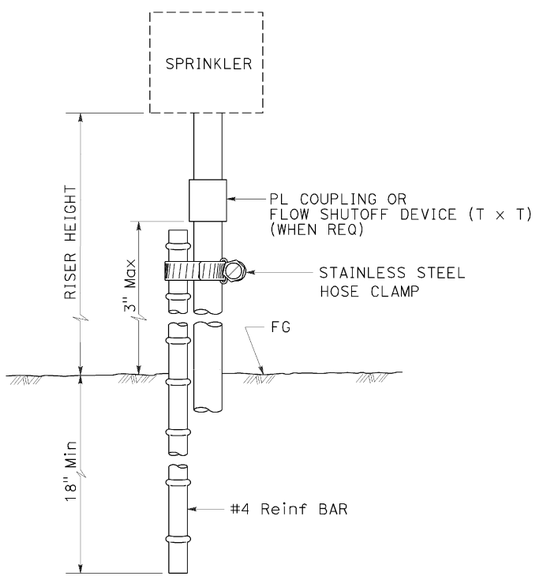

ELEVATION

RISER SPRINKLER ASSEMBLY TYPE IV

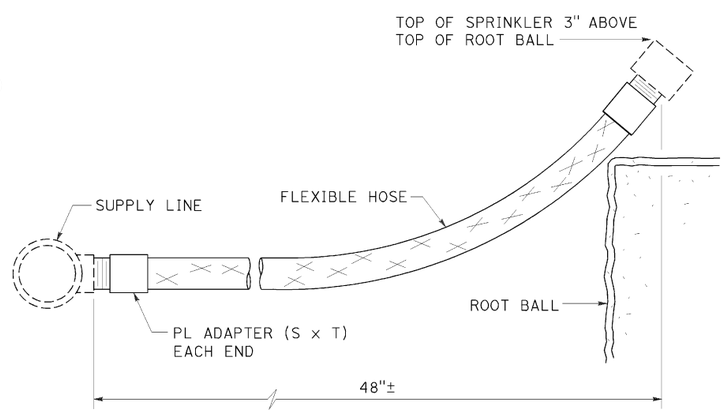

ELEVATION

RISER SPRINKLER ASSEMBLY TYPE V

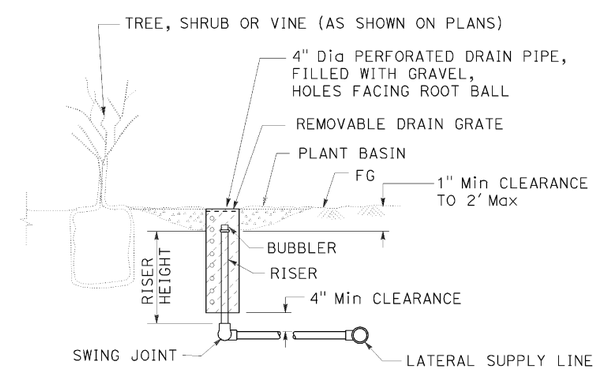

SECTION

TREE WELL SPRINKLER ASSEMBLY

STATE OF CALIFORNIA
DEPARTMENT OF TRANSPORTATION

LANDSCAPE DETAILS

NO SCALE

RSP H5 DATED JULY 19, 2013 SUPERSEDES STANDARD PLAN H5
DATED MAY 20, 2011 - PAGE 222 OF THE STANDARD PLANS BOOK DATED 2010.

REVISED STANDARD PLAN RSP H5

2010 REVISED STANDARD PLAN RSP H5

6-28-13

Dist	COUNTY	ROUTE	POST MILES TOTAL PROJECT	SHEET No.	TOTAL SHEETS
07	LA	5	19.2/28.9	200	217

LICENSED LANDSCAPE ARCHITECT

July 19, 2013
PLANS APPROVAL DATE

THE STATE OF CALIFORNIA OR ITS OFFICERS OR AGENTS SHALL NOT BE RESPONSIBLE FOR THE ACCURACY OR COMPLETENESS OF SCANNED COPIES OF THIS PLAN SHEET.

LICENSED LANDSCAPE ARCHITECT — Gregory A. Balzer 4578 — 02-28-15 Renewal Date — 7-19-13 Date — STATE OF CALIFORNIA

TO ACCOMPANY PLANS DATED 2-10-14

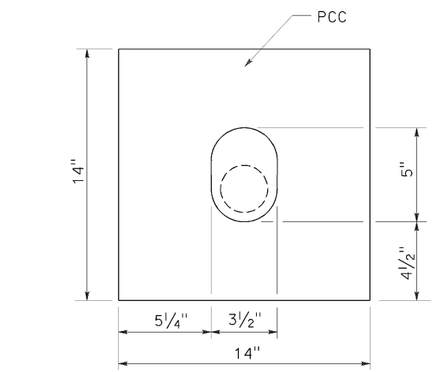

PLAN

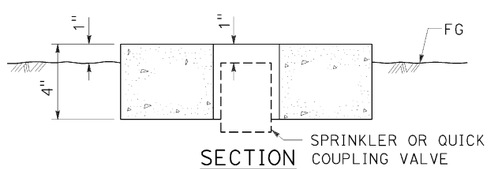

SECTION

SPRINKLER PROTECTOR TYPE I

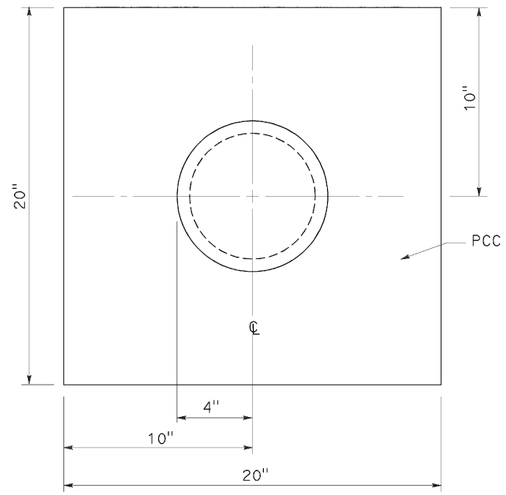

PLAN

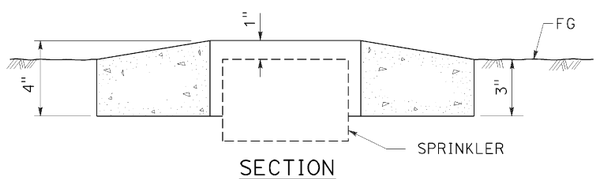

SECTION

SPRINKLER PROTECTOR TYPE II

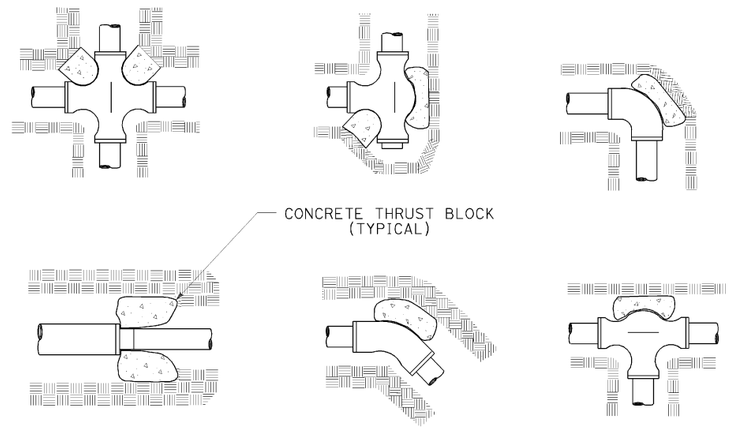

TYPICAL THRUST BLOCKS

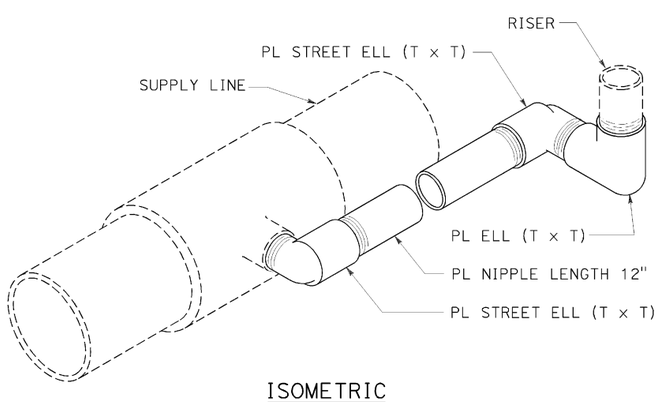

ISOMETRIC

POP-UP SPRINKLER ASSEMBLY TYPE I

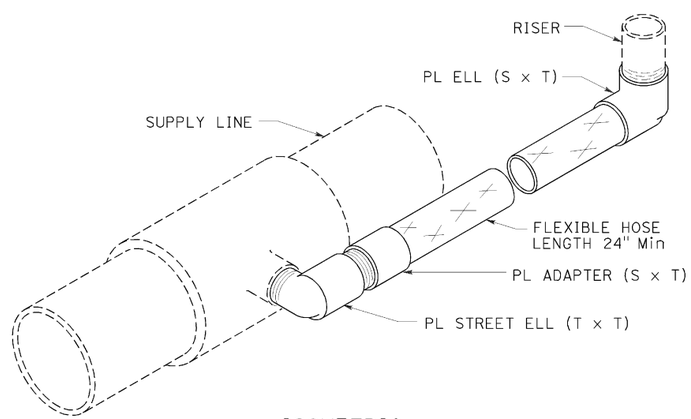

ISOMETRIC

POP-UP SPRINKLER ASSEMBLY TYPE II

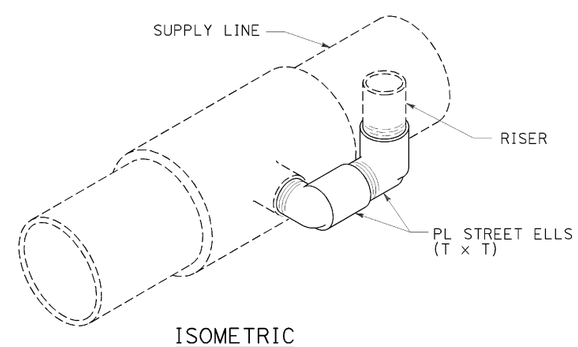

ISOMETRIC

POP-UP SPRINKLER ASSEMBLY TYPE III

STATE OF CALIFORNIA
DEPARTMENT OF TRANSPORTATION

LANDSCAPE DETAILS

NO SCALE

RSP H6 DATED JULY 19, 2013 SUPERSEDES STANDARD PLAN H6
DATED MAY 20, 2011 - PAGE 223 OF THE STANDARD PLANS BOOK DATED 2010.

REVISED STANDARD PLAN RSP H6

2010 REVISED STANDARD PLAN RSP H6

6-28-13