Dist	COUNTY	ROUTE	POST MILES TOTAL PROJECT	SHEET No.	TOTAL SHEETS
07	LA	5	6.8/13.8	101	176

Jennifer Nguyen 12-3-13
REGISTERED CIVIL ENGINEER DATE

1-21-14
PLANS APPROVAL DATE

REGISTERED PROFESSIONAL ENGINEER JENNIFER NGUYEN No. C65953 Exp 6/30/14 CIVIL STATE OF CALIFORNIA

THE STATE OF CALIFORNIA OR ITS OFFICERS OR AGENTS SHALL NOT BE RESPONSIBLE FOR THE ACCURACY OR COMPLETENESS OF SCANNED COPIES OF THIS PLAN SHEET.

ROADSIDE SIGNS

SIGN No.	SIGN CODE	PANEL SIZE (in X in)	POST DATA SIZE (in X in)	SINGLE FACED	DOUBLE FACED	SIGN FACING MATERIAL: BACKGROUND SHEETING COLOR	BACKGROUND RETRO - REFLECTIVE ASTM TYPE	LEGEND SHEETING COLOR	LEGEND RETRO - REFLECTIVE ASTM TYPE	LEGEND NON - REFLECTIVE ASTM TYPE	GRAFFITI FILM PREMIUM	FURNISH SINGLE SHEET ALUMINUM SIGN (SQFT): UNFRAMED ALUMINUM 0.063"	UNFRAMED ALUMINUM 0.080"	FRAMED ALUMINUM 0.063"	FRAMED ALUMINUM 0.080"	FURNISH LAMINATED SIGN TYPE B (2½" THICK)	ROADSIDE SIGN (WOOD): ONE POST	ROADSIDE SIGN (WOOD): TWO POST	REMOVE ROADSIDE SIGN	TREATED WOOD * WASTE	INSTALL SIGN (STRAP & SADDLE BRACKET METHOD)	INSTALL SIGN PANEL (SOUND WALL/ BARRIER MOUNTED)	REMARKS
																	SQFT	EA	EA	EA	LB	EA	EA	
S2-1	W13-3																		1				REMOVE SIGN PANEL ONLY
S2-2	W13-3	36" X 48"		X		W	III	B		X	X	12.0									1		STRAP TO ELECTROLIER (UNBALANCE MOUNTING)
S2-3	R18A(CA)	66" X 48"		X		W	III	B		X	X			22.0							1		STRAP TO EXISTING SOUNDWALL MOUNTED POST
S2-4	R18A(CA)																		1				REMOVE SIGN PANEL ONLY
S2-5	R6-3(CA)	48" X 60"		X		W	III	B		X	X			20.0							1		STRAP TO ELECTROLIER
	R48-1(CA)	48" X 24"		X		W	III	B		X	X		8.0								1		STRAP TO ELECTROLIER
S2-6	R6-1(CA)																		1				
	R48-1(CA)																		1				
S2-7	M3-1	30" X 15"		X		Y	III	B	IV	X	X	3.12									1		STRAP TO ELECTROLIER
	G27-2(CA)	36" X 36"		X		Y	III	B	IV	X	X	9.0									1		STRAP TO ELECTROLIER
S2-8	M3-1																		1				
	G27-2(CA)																		1				
S2-9	R6-4(CA)	48" X 60"	6" X 6"	X		W	III	B		X	X			20.0			1						
S3-1	S32(CA)																		1	80			
	S32-1CA)																						
S3-2	S32(CA)	36" X 30"	4" X 6"	X		Y	III	B		X	X	7.5					1						
	S32-1CA)	18" X 15"		X		Y	III	B		X	X	1.8											
S3-3	W12-2	48" X 48"	6" X 8"	X		W	III	B		X	X		16.0					1					
	W34A(CA)	60" X 48"		X		W	III	B		X	X			20.0									
S3-4	W12-2																		1	498			
	W34A(CA)																						
S3-5	G86-12(CA)	156" X 70"	6" X 6"	X		Y	III	B	IV	X	X					75.79		1					
S3-6	G86-12(CA)																		1	294			
S3-7	G9-5(CA)	84" X 48"	6" X 6"	X		Y	III	B	IV	X	X				28.0			1					
	G81-61(CA)	84" X 18"		X		Y	III	B	IV	X	X				10.5								
S3-8	G9-5(CA)																		1	288			
	G81-61(CA)																						
SUB TOTAL												33.42	24.0	82.0	38.5	75.79	2	3	10	1,160	6		

* FOR ADDITIONAL QUANTITIES, SEE SHEET Q-3.

SIGN QUANTITIES
SQ-3

REVISED BY | DATE REVISED
JENNIFER NGUYEN | VINCENT NGUYEN
CALCULATED-DESIGNED BY | CHECKED BY
FUNCTIONAL SUPERVISOR: GRISH BIGLARIAN

STATE OF CALIFORNIA - DEPARTMENT OF TRANSPORTATION
Caltrans® TRAFFIC DESIGN

S:\projects\294901\07-294901\729490od003.dgn

LAST REVISION 00-00-00 | DATE PLOTTED => 14-APR-2014 | TIME PLOTTED => 09:12

Dist	COUNTY	ROUTE	POST MILES TOTAL PROJECT	SHEET No.	TOTAL SHEETS
07	LA	5	6.8/13.8	102	176

REGISTERED CIVIL ENGINEER 12-3-13 DATE

1-21-14
PLANS APPROVAL DATE

REGISTERED PROFESSIONAL ENGINEER JENNIFER NGUYEN No. C65953 Exp 6/30/14 CIVIL STATE OF CALIFORNIA

THE STATE OF CALIFORNIA OR ITS OFFICERS OR AGENTS SHALL NOT BE RESPONSIBLE FOR THE ACCURACY OR COMPLETENESS OF SCANNED COPIES OF THIS PLAN SHEET.

ROADSIDE SIGNS

SIGN No.	SIGN CODE	PANEL SIZE (in X in)	POST DATA SIZE (in X in)	SINGLE FACED	DOUBLE FACED	SIGN FACING MATERIAL: BACKGROUND SHEETING COLOR	BACKGROUND RETRO - REFLECTIVE ASTM TYPE	LEGEND SHEETING COLOR	LEGEND RETRO - REFLECTIVE ASTM TYPE	LEGEND NON - REFLECTIVE ASTM TYPE	GRAFFITI FILM PREMIUM	FURNISH SINGLE SHEET ALUMINUM SIGN (SQFT): UNFRAMED ALUMINUM 0.063"	UNFRAMED ALUMINUM 0.080"	FRAMED ALUMINUM 0.063"	FRAMED ALUMINUM 0.080"	FURNISH LAMINATED SIGN TYPE B (2/2" THICK)	ROADSIDE SIGN (WOOD): ONE POST	ROADSIDE SIGN (WOOD): TWO POST	REMOVE ROADSIDE SIGN	TREATED WOOD * WASTE	INSTALL SIGN (STRAP & SADDLE BRACKET METHOD)	INSTALL SIGN PANEL (SOUND WALL/ BARRIER MOUNTED)	REMARKS
												SQFT					EA	EA	EA	LB	EA	EA	
S3-9	G95B(CA)																		1	363			
S3-10	G95B(CA)	108" X 72"	6" X 8"	X		G	III	W	IV	X	X				54.0			1					
S4-1	W74(CA)	60" X 60"	4" X 6"	X		Y	III	B		X	X			25.0				1					
S4-2	W74(CA)													8.0					1	171			
S4-3	R6-3(CA)	48" X 60"	6" X 6"	X		W	III	B		X	X			20.0			1						
	R48-1(CA)	48" X 24"		X		W	III	B		X	X			8.0									
S4-4	R6-1(CA)																		1	145			
	R48-1(CA)																						
S4-5	R6-4(CA)	48" X 60"	6" X 6"	X		W	III	B		X	X			20.0			1						
S5-1	G11-5(CA)	44" X 24"	4" X 6"	X		W	III	B		X	X	7.3					1						
S5-2	G11-5(CA)																		1	69			
S5-3	G66-56(CA)	30" X 30"											6.25					1					
	G20(CA)	120" X 54"	6" X 6"	X		G	III	W	IV	X	X				45.0								
S5-4	G66-56(CA)																		1	290			
	G20(CA)																						
S5-5	G11-5(CA)																		1	69			
S5-6	G11-5(CA)	44" X 24"	4" X 6"	X		W	III	B		X	X	7.3					1						
S6-1	W4-1	48" X 48"	6" X 6"	X		W	III	B		X	X			16.0			1						
S6-2	W4-1																		1	120			
S6-3	W13-3																		1				
S6-4	W13-3	36" X 48"	4" X 6"	X		Y	III	B		X	X	12.0									1		STRAP TO ELECTROLIER
S6-5	G84-3(CA)	48" X 60"	6" X 6"	X		G	III	W	IV	X	X		20.0				1						
S6-6	G84-3(CA)																		1	128			
S6-7	SG-19(CA)(Mod)	90" X 54"	6" X 6"	X		BLU	III	W	IV	X	X				33.75			1					
S6-8	SG-19(CA)(Mod)																		1	248			
S6-9	W4-1	48" X 48"	6" X 6"	X		W	III	B		X	X			16.0			1						
S6-10	W4-1																		1	120			
SUB TOTAL												26.6	26.3	113.0	132.75		7	4	11	1,723	1		

* FOR ADDITIONAL QUANTITIES, SEE SHEET Q-3.

SIGN QUANTITIES
SQ-4

REVISED BY | DATE REVISED
JENNIFER NGUYEN | VINCENT NGUYEN
CALCULATED-DESIGNED BY | CHECKED BY
FUNCTIONAL SUPERVISOR: GRISH BIGLARIAN
STATE OF CALIFORNIA - DEPARTMENT OF TRANSPORTATION
Caltrans® TRAFFIC DESIGN

S:\projects\294901\07-294901\729490od004.dgn

LAST REVISION 00-00-00 | DATE PLOTTED => 14-APR-2014 | TIME PLOTTED => 09:12

Dist	COUNTY	ROUTE	POST MILES TOTAL PROJECT	SHEET No.	TOTAL SHEETS
07	LA	5	6.8/13.8	103	176

Jennifer Nguyen 12-3-13
REGISTERED CIVIL ENGINEER DATE

1-21-14
PLANS APPROVAL DATE

REGISTERED PROFESSIONAL ENGINEER JENNIFER NGUYEN No. C65953 Exp 6/30/14 CIVIL STATE OF CALIFORNIA

THE STATE OF CALIFORNIA OR ITS OFFICERS OR AGENTS SHALL NOT BE RESPONSIBLE FOR THE ACCURACY OR COMPLETENESS OF SCANNED COPIES OF THIS PLAN SHEET.

ROADSIDE SIGNS

SIGN No.	SIGN CODE	PANEL SIZE (in X in)	POST DATA SIZE (in X in)	SINGLE FACED	DOUBLE FACED	SIGN FACING MATERIAL: BACKGROUND SHEETING COLOR	BACKGROUND RETRO - REFLECTIVE ASTM TYPE	LEGEND SHEETING COLOR	LEGEND RETRO - REFLECTIVE ASTM TYPE	LEGEND NON - REFLECTIVE ASTM TYPE	GRAFFITI FILM PREMIUM	FURNISH SINGLE SHEET ALUMINUM SIGN (SQFT): UNFRAMED ALUMINUM 0.063"	UNFRAMED ALUMINUM 0.080"	FRAMED ALUMINUM 0.063"	FRAMED ALUMINUM 0.080"	FURNISH LAMINATED SIGN TYPE B (2½" THICK)	ROADSIDE SIGN (WOOD): ONE POST	ROADSIDE SIGN (WOOD): TWO POST	REMOVE ROADSIDE SIGN	TREATED WOOD * WASTE	INSTALL SIGN (STRAP & SADDLE BRACKET METHOD)	INSTALL SIGN PANEL (SOUND WALL/ BARRIER MOUNTED)	REMARKS
												0.063"	0.080"	0.063"	0.080"	SQFT	EA	EA	EA	LB	EA	EA	
S7-1	G11-4.1(CA)	44" X 18"	4" X 4"	X		W	III	B		X	X	5.5									1		STRAP TO ELECTROLIER
S7-2	G11-4.1(CA)																		1				
S7-3	W4-1	48" X 48"	6" X 6"	X		Y	III	B		X	X		16.0				1						
S7-4	W4-1																		1	120			
S7-5	G11-5(CA)	44" X 24"	4" X 6"	X		W	III	B		X	X	7.3									1		STRAP TO ELECTROLIER
S7-6	G11-5(CA)																		1				
S7-7	G11-4.1(CA)																		1	44			
S7-8	G11-4.1(CA)	44" X 18"	4" X 4"	X		W	III	B		X	X	5.5					1						
S7-9	W4-1	48" X 48"	6" X 6"	X		Y	III	B		X	X		16.0				1						
S7-10	W4-1																		1	120			
S8-1	M3-3	44" X 24"		X		Y	III	B		X	X	7.3							1				
	G27-2(CA)																						
S8-2	M3-3	30" X 15"	4" X 6"	X		G	III	W	IV	X	X	3.125									1		
	G27-2(CA)	36" X 36"		X		BLU/R	III	W	IV	X	X	9.0											
S9-1	G11-5(CA)																		1				
S9-2	G11-5(CA)	44" X 24"	4" X 6"	X		W	III	B		X	X	7.3										1	
S9-3	W4-1																		1	120			
S9-4	W4-1	48" X 48"	6" X 6"	X		W	III	B		X	X			16			1						
S9-5	G11-4.1(CA)																		1	44			
S9-6	G11-4.1(CA)	44" X 18"	4" X 4"	X		W	III	B		X	X	5.5					1						
S9-7	G84-3																		1	120			
S9-8	G84-3	60" X 48"	6" X 6"	X		Y	III	B	IV	X	X			20			1						
S9-9	W4-18(CA) (15)																		1	120			
S9-10	W4-18(CA) (15)	48" X 48"	6" X 6"	X		W	III	B		X	X			16				1					
S9-11	W4-1																		1	120			
S9-12	W4-1	48" X 48"	6" X 6"	X		W	III	B		X	X			16			1						
S9-13	G87(CA)																		1	124			
S9-14	G87(CA)	132" X 54"	6" X 6"	X		W	III	B	IV	X	X				49.5			1					
SUB TOTAL												50.53	32.0	68	49.5		7	2	13	932	3	1	

* FOR ADDITIONAL QUANTITIES, SEE SHEET Q-3.

SIGN QUANTITIES
SQ-5

REVISED BY | DATE REVISED
JENNIFER NGUYEN | VINCENT NGUYEN
CALCULATED-DESIGNED BY | CHECKED BY
FUNCTIONAL SUPERVISOR: GRISH BIGLARIAN

STATE OF CALIFORNIA - DEPARTMENT OF TRANSPORTATION
Caltrans® TRAFFIC DESIGN

S:\projects\294901\07-294901\729490od005.dgn

LAST REVISION 00-00-00 | DATE PLOTTED => 14-APR-2014 | TIME PLOTTED => 09:12

Dist	COUNTY	ROUTE	POST MILES TOTAL PROJECT	SHEET No.	TOTAL SHEETS
07	LA	5	6.8/13.8	104	176

REGISTERED CIVIL ENGINEER 12-3-13 DATE

1-21-14
PLANS APPROVAL DATE

REGISTERED PROFESSIONAL ENGINEER JENNIFER NGUYEN No. C65953 Exp 6/30/14 CIVIL STATE OF CALIFORNIA

THE STATE OF CALIFORNIA OR ITS OFFICERS OR AGENTS SHALL NOT BE RESPONSIBLE FOR THE ACCURACY OR COMPLETENESS OF SCANNED COPIES OF THIS PLAN SHEET.

ROADSIDE SIGNS

SIGN No.	SIGN CODE	PANEL SIZE (in X in)	POST DATA SIZE (in X in)	SINGLE FACED	DOUBLE FACED	SIGN FACING MATERIAL: BACKGROUND SHEETING COLOR	BACKGROUND RETRO - REFLECTIVE ASTM TYPE	LEGEND SHEETING COLOR	LEGEND RETRO - REFLECTIVE ASTM TYPE	LEGEND NON - REFLECTIVE ASTM TYPE	GRAFFITI FILM PREMIUM	FURNISH SINGLE SHEET ALUMINUM SIGN (SQFT): UNFRAMED ALUMINUM 0.063"	UNFRAMED ALUMINUM 0.080"	FRAMED ALUMINUM 0.063"	FRAMED ALUMINUM 0.080"	FURNISH LAMINATED SIGN TYPE B (2½" THICK)	ROADSIDE SIGN (WOOD): ONE POST	ROADSIDE SIGN (WOOD): TWO POST	REMOVE ROADSIDE SIGN	TREATED WOOD * WASTE	INSTALL SIGN (STRAP & SADDLE BRACKET METHOD)	INSTALL SIGN PANEL (SOUND WALL/ BARRIER MOUNTED)	REMARKS
												0.063"	0.080"	0.063"	0.080"	SQFT	EA	EA	EA	LB	EA	EA	
S9-15	G11-4.1(CA)																		1	44			
S9-16	G11-4.1(CA)	44" X 18"	4" X 4"	X		W	III	B		X	X	5.5					1						
S9-17	M3-1	48" X 48"		X		Y	III	B		X	X						1		1				
	G27-2(CA)																						
S9-18	M3-3	44" X 24"		X		Y	III	B	IV	X	X	7.3									1		STRAP TO ELECTROLIER
	G27-2(CA)	36" X 36"		X		Y	III	B	IV	X	X	9.0											
S10-1	G84-3(CA)																		1	128			
S10-2	G84-3(CA)	48" X 60"	6" X 6"	X		W	III	B	IV	X	X			20.0			1						
S10-3	R6-4(CA)	48" X 60"	6" X 6"	X		W	III	B		X	X			20.0			1						
S10-4	G11-4.1(CA)																		1				
S10-5	G11-4.1(CA)	44" X 18"	4" X 4"	X		W	III	B		X	X	5.5										1	
S11-1	R6-1(CA)	36" X 45"	6" X 6"	X		Y	III	B		X	X			20.0			1						
	R48-1(CA)	36" X 18"											8										
S11-2	R6-1(CA)																		1	142			
	R48-1(CA)																						
S11-3	G9-5(CA)																		1	288			
	G81-61(CA)																						
S11-4	G9-5(CA)	84" X 48"	6" X 6"	X		Y	III	B	IV	X	X				28.0			1					
	G81-61(CA)	84" X 18"		X		Y	III	B	IV	X	X				10.5								
S11-5	G86-1(CA)																		1	272			
S11-6	G86-1(CA)	144" X 54"	6" X 6"	X		G	III	B	IV	X	X					54.0		1					
S12-1	G9-51																		1	240			
S12-2	G9-51	108" X 48"	6" X 6"	X		B	III	W	IV	X	X				36.0			1					
S13-1	W4-1	48" X 48"	6" X 6"	X		Y	III	B		X	X			16			1						
S13-2	W4-1																		1	120			
S13-3	R26A(CA)	24" X 30"	4" X 4"	X		W	III	B		X	X	5					1						
S13-4	R26A(CA)																		1	48			
S13-5	R26A(CA)	24" X 30"	4" X 4"	X		W	III	B		X	X	5					1						
S13-6	G26A(CA)																		1	48			
SUB TOTAL												37.3	8.0	76.0	74.5	54.0	8	3	11	1,330	1	1	

* FOR ADDITIONAL QUANTITIES, SEE SHEET Q-3.

SIGN QUANTITIES
SQ-6

REVISED BY | DATE REVISED
JENNIFER NGUYEN | VINCENT NGUYEN
CALCULATED-DESIGNED BY | CHECKED BY
FUNCTIONAL SUPERVISOR: GRISH BIGLARIAN

STATE OF CALIFORNIA - DEPARTMENT OF TRANSPORTATION
Caltrans® TRAFFIC DESIGN

S:\projects\294901\07-294901\729490od006.dgn

LAST REVISION 00-00-00 | DATE PLOTTED => 14-APR-2014 | TIME PLOTTED => 09:12

Dist	COUNTY	ROUTE	POST MILES TOTAL PROJECT	SHEET No.	TOTAL SHEETS
07	LA	5	6.8/13.8	105	176

Jennifer Nguyen 12-3-13
REGISTERED CIVIL ENGINEER DATE

1-21-14
PLANS APPROVAL DATE

REGISTERED PROFESSIONAL ENGINEER JENNIFER NGUYEN No. C65953 Exp 6/30/14 CIVIL STATE OF CALIFORNIA

THE STATE OF CALIFORNIA OR ITS OFFICERS OR AGENTS SHALL NOT BE RESPONSIBLE FOR THE ACCURACY OR COMPLETENESS OF SCANNED COPIES OF THIS PLAN SHEET.

ROADSIDE SIGNS

SIGN No.	SIGN CODE	PANEL SIZE (in X in)	POST DATA SIZE (in X in)	SINGLE FACED	DOUBLE FACED	SIGN FACING MATERIAL: BACKGROUND SHEETING COLOR	BACKGROUND RETRO-REFLECTIVE ASTM TYPE	LEGEND SHEETING COLOR	LEGEND RETRO-REFLECTIVE ASTM TYPE	LEGEND NON-REFLECTIVE ASTM TYPE	GRAFFITI FILM PREMIUM	FURNISH SINGLE SHEET ALUMINUM SIGN (SQFT): UNFRAMED ALUMINUM 0.063"	UNFRAMED ALUMINUM 0.080"	FRAMED ALUMINUM 0.063"	FRAMED ALUMINUM 0.080"	FURNISH LAMINATED SIGN TYPE B (2½" THICK)	ROADSIDE SIGN (WOOD): ONE POST	ROADSIDE SIGN (WOOD): TWO POST	REMOVE ROADSIDE SIGN	TREATED WOOD * WASTE	INSTALL SIGN (STRAP & SADDLE BRACKET METHOD)	INSTALL SIGN PANEL (SOUND WALL/ BARRIER MOUNTED)	REMARKS
												0.063"	0.080"	0.063"	0.080"	SQFT	EA	EA	EA	LB	EA	EA	
S13-7	W3-3																		1	120			
S13-8	W3-3	48" X 48"	6" X 6"	X		Y	III	B		X	X		16				1						
S13-9	G66-55																		1				
	M6-1																		1				
S13-10	G66-55	24" X 24"		X		B/Y	III	B	IV	X	X	4									1		STRAP TO ELECTROLIER
	M6-1	30" X 21"		X		W	III	B	IV	X	X										1		STRAP TO ELECTROLIER
S13-11	G84-3(CA)																		1	128			
S13-12	G84-3(CA)	48" X 60"	6" X 6"	X		W	III	B	IV	X	X			20			1						
S13-13	G84-3(CA)																		1	128			
S13-14	G84-3(CA)	48" X 60"	6" X 6"	X		W	III	B	IV	X	X			20			1						
S14-1	W13-2																		1				
S14-2	W13-2	48" X 48"	6" X 6"	X		Y	III	B		X	X		16								1		
S14-3	G11-5(CA)																		1				
S14-4	G11-5(CA)	44" X 24"		X		W	III	B		X	X	7.33										1	
S14-5	G95F(CA)(Mod)																		1	256			
S14-6	G95F(CA)(Mod)	96" X 60"	6" X 6"	X		BLU	III	B		X	X				40.0			1					
S16-1	M3-3																		1				
	G27-2(CA)																		1				
S16-2	M3-3	44" X 24"		X		BLU	III	Y	IV	X	X	4.5									1		STRAP TO ELECTROLIER
	G27-2(CA)	36" X 36"		X		BLU/R	III	Y	IV	X	X	9.0									1		STRAP TO ELECTROLIER
S16-3	W12-2																		1				
S16-4	W12-2	48" X 48"		X		Y	III	B		X	X		16								1		STRAP TO OVERHEAD SIGN Sta 558+26.56
S16-5	W34A(CA)																		1				
S16-6	W34A(CA)	48" X 36"		X		Y	III	B		X	X		12								1		STRAP TO OVERHEAD SIGN Sta 558+26.56
S16-7	W3-3																		1				
S16-8	W3-3	48" X 48"		X		Y	III	B		X	X		16								1		
SUB TOTAL												24.83	76	40.0	40.0		3	1	13	632	8	1	STRAP TO ELECTROLIER

* FOR ADDITIONAL QUANTITIES, SEE SHEET Q-3.

SIGN QUANTITIES
SQ-7

REVISED BY | DATE REVISED
JENNIFER NGUYEN | VINCENT NGUYEN
CALCULATED-DESIGNED BY | CHECKED BY
FUNCTIONAL SUPERVISOR: GRISH BIGLARIAN
STATE OF CALIFORNIA - DEPARTMENT OF TRANSPORTATION
Caltrans® TRAFFIC DESIGN

S:\projects\294901\07-294901\729490od007.dgn

LAST REVISION 00-00-00 | DATE PLOTTED => 14-APR-2014 | TIME PLOTTED => 09:12

Dist	COUNTY	ROUTE	POST MILES TOTAL PROJECT	SHEET No.	TOTAL SHEETS
07	LA	5	6.8/13.8	106	176

Jennifer Nguyen 12-3-13
REGISTERED CIVIL ENGINEER DATE

1-21-14
PLANS APPROVAL DATE

REGISTERED PROFESSIONAL ENGINEER JENNIFER NGUYEN No. C65953 Exp 6/30/14 CIVIL STATE OF CALIFORNIA

THE STATE OF CALIFORNIA OR ITS OFFICERS OR AGENTS SHALL NOT BE RESPONSIBLE FOR THE ACCURACY OR COMPLETENESS OF SCANNED COPIES OF THIS PLAN SHEET.

ROADSIDE SIGNS

SIGN No.	SIGN CODE	PANEL SIZE (in X in)	POST DATA SIZE (in X in)	SINGLE FACED	DOUBLE FACED	SIGN FACING MATERIAL: BACKGROUND SHEETING COLOR	BACKGROUND RETRO - REFLECTIVE ASTM TYPE	LEGEND SHEETING COLOR	LEGEND RETRO - REFLECTIVE ASTM TYPE	LEGEND NON - REFLECTIVE ASTM TYPE	GRAFFITI FILM PREMIUM	FURNISH SINGLE SHEET ALUMINUM SIGN (SQFT): UNFRAMED ALUMINUM 0.063"	UNFRAMED ALUMINUM 0.080"	FRAMED ALUMINUM 0.063"	FRAMED ALUMINUM 0.080"	FURNISH LAMINATED SIGN TYPE B (2/2" THICK)	ROADSIDE SIGN (WOOD): ONE POST	ROADSIDE SIGN (WOOD): TWO POST	REMOVE ROADSIDE SIGN	TREATED WOOD * WASTE	INSTALL SIGN (STRAP & SADDLE BRACKET METHOD)	INSTALL SIGN PANEL (SOUND WALL/ BARRIER MOUNTED)	REMARKS
												0.063"	0.080"	0.063"	0.080"	SQFT	EA	EA	EA	LB	EA	EA	
S16-9	W3-3	36" X 30"		X		Y	III	B		X	X	7.5									1		STRAP TO ELECTROLIER
S16-10	W3-3																		1				
S16-11	G84-3(CA)																		1	128			
S16-12	G84-3(CA)	48" X 60"	6" X 6"	X		Y	III	B	IV	X	X		20				1						
S16-13	W4-1																		1	120			
S16-14	W4-1	48" X 48"		X		Y	III	B		X	X		16				1						
S16-15	W1-8(R)	36" X 48"		X		Y	III	B		X	X	12					1						
S16-16	W1-8(R)																		1	80			
S16-17	W1-8(R)	36" X 48"	4" X 6"	X		Y	III	B		X	X	12					1						
S16-18	W1-8(R)																		1	80			
S16-19	W1-8(R)	36" X 48"	4" X 6"	X		Y	III	B		X	X	12					1						
S16-20	W1-8(R)																		1	80			
S16-21	W1-8(R)	36" X 48"	4" X 6"	X		Y	III	B		X	X	12							1	80			
S16-22	W1-8(R)																1						
S16-23	S32(CA)	54" X 42"	6" X 6"	X		PA	III	Y	IV	X	X		15.75				1						
S16-24	S32(CA)																		1	116			
S17-1	W1-6	60" X 30"	6" X 6"	X		Y	III	B		X	X			12.5			1						
	OM1-3	18" X 18"		X		Y	III	B		X	X	2.25											
S17-2	W1-6																		1	120			
	OM1-3																						
S17-3	G84-3(CA)																		1	160			
S17-4	G84-3(CA)	48" X 60"	6" X 6"	X		Y	III	B	IV	X	X		20				1						
SUB TOTAL												57.75	71.75	12.5			9		10	964	1		

* FOR ADDITIONAL QUANTITIES, SEE SHEET Q-3.

SIGN QUANTITIES
SQ-8

REVISED BY | DATE REVISED
JENNIFER NGUYEN | VINCENT NGUYEN
CALCULATED-DESIGNED BY | CHECKED BY
FUNCTIONAL SUPERVISOR: GRISH BIGLARIAN
STATE OF CALIFORNIA - DEPARTMENT OF TRANSPORTATION
Caltrans® TRAFFIC DESIGN
S:\projects\294901\07-294901\729490od008.dgn

LAST REVISION 00-00-00 | DATE PLOTTED => 14-APR-2014 | TIME PLOTTED => 09:12

Dist	COUNTY	ROUTE	POST MILES TOTAL PROJECT	SHEET No.	TOTAL SHEETS
07	LA	5	6.8/13.8	107	176

Jennifer Nguyen 12-3-13
REGISTERED CIVIL ENGINEER DATE

1-21-14
PLANS APPROVAL DATE

REGISTERED PROFESSIONAL ENGINEER JENNIFER NGUYEN No. C65953 Exp 6/30/14 CIVIL STATE OF CALIFORNIA

THE STATE OF CALIFORNIA OR ITS OFFICERS OR AGENTS SHALL NOT BE RESPONSIBLE FOR THE ACCURACY OR COMPLETENESS OF SCANNED COPIES OF THIS PLAN SHEET.

ROADSIDE SIGNS

SIGN No.	SIGN CODE	PANEL SIZE (in X in)	POST DATA SIZE (in X in)	SINGLE FACED	SIGN FACING MATERIAL: DOUBLE FACED	BACKGROUND: SHEETING COLOR	BACKGROUND: RETRO - REFLECTIVE ASTM TYPE	LEGEND: SHEETING COLOR	LEGEND: RETRO - REFLECTIVE ASTM TYPE	LEGEND: NON - REFLECTIVE ASTM TYPE	GRAFFITI FILM PREMIUM	FURNISH SINGLE SHEET ALUMINUM SIGN (SQFT): UNFRAMED ALUMINUM 0.063"	UNFRAMED ALUMINUM 0.080"	FRAMED ALUMINUM 0.063"	FRAMED ALUMINUM 0.080"	FURNISH LAMINATED SIGN TYPE B (2/2" THICK)	ROADSIDE SIGN (WOOD): ONE POST	ROADSIDE SIGN (WOOD): TWO POST	REMOVE SIGN PANEL	REMOVE ROADSIDE SIGN	TREATED WOOD * WASTE	INSTALL SIGN (STRAP & SADDLE BRACKET METHOD)	INSTALL SIGN PANEL (SOUND WALL/ BARRIER MOUNTED)	REMARKS
																SQFT	EA	EA	EA	EA	LB	EA	EA	
S17-5	W3-1	48" X 48"	6" X 6"	X		Y	III	B		X	X		16									1		
S17-6	W3-1																			1				
S17-7	W13-2	36" X 48"	4" X 6"	X		Y	III	B		X	X		12									1		
S17-8	W13-2																			1				
S17-9	G11-4.1(CA)	44" X 18"	4" X 4"	X		W	III	B		X	X	5.5					1							
S17-10	G11-4.1(CA)																			1	44			
S17-11	G11-4.1(CA)	44" X 18"	4" X 4"	X		W	III	B		X	X	5.5											1	
S17-12	G11-4.1(CA)																			1				
S18-1	G11-5(CA)																			1				
S18-2	G11-5(CA)	44" X 24"	4" X 6"	X		W	III	B		X	X	7.3											1	
S18-3	G95F(CA)(Mod)											12								1	256			
S18-4	G95F(CA)(Mod)	84" X 60"	6" X 6"	X		G	III	W		X	X				35.0			1						
S18-5	SG19(CA)											12								1	248			
S18-6	SG19(CA)	90" X 54"	6" X 6"	X		BLU	III	Y	IV	X	X							1						
S18-7	G86-5(Mod)																			1	284			
S18-8	G86-5(Mod)	156" X 80"		X		G	III	W	IV	X	X					86.7		1						
S18-9	G11-5(CA)																			1				
S18-10	G11-5(CA)	44" X 24"	4" X 6"	X		W	III	B		X	X	7.3											1	
S18-11	G95B(CA)(Mod)	120" X 72"	TYPE M	X		G	III	W		X	X				60.0			1						
	G95B-1(CA)(Mod)	120" X 24"		X		G	III	W		X	X				20.0									
S18-12	G95B(CA)(Mod)																			1	263			LAMINATED WOOD BOX
	G95B-1(CA)(Mod)																							
S19-1	G66-55(CA)																			1	83			
	M6-2																							
S19-2	G66-55(CA)	30" X 30"	4" X 6"	X		BLU	III	W		X	X	6.25					1							
	M6-2	30" X 21"		X		BLU	III	Y		X	X	4.38	20											
S19-3	M3-3																			1				
	G27-2(CA)																			1				
S19-4	M3-3	44" X 24"		X		BLU	III	Y	IV	X	X	4.5										1		STRAP TO ELECTROLIER
	G27-2(CA)	36" X 36"		X		BLU/R	III	Y	IV	X	X	9.0										1		STRAP TO ELECTROLIER
SUB TOTAL												73.73	48		115.0	86.7	2	4		13	1,178	4	3	

* FOR ADDITIONAL QUANTITIES, SEE SHEET Q-3.

SIGN QUANTITIES
SQ-9

REVISED BY | DATE REVISED
JENNIFER NGUYEN | VINCENT NGUYEN
CALCULATED-DESIGNED BY | CHECKED BY
FUNCTIONAL SUPERVISOR: GRISH BIGLARIAN

STATE OF CALIFORNIA - DEPARTMENT OF TRANSPORTATION
Caltrans® TRAFFIC DESIGN

S:\projects\294901\07-294901\729490od009.dgn

LAST REVISION 00-00-00 | DATE PLOTTED => 14-APR-2014 | TIME PLOTTED => 09:12

Dist	COUNTY	ROUTE	POST MILES TOTAL PROJECT	SHEET No.	TOTAL SHEETS
07	LA	5	6.8/13.8	108	176

Jennifer Nguyen 12-3-13
REGISTERED CIVIL ENGINEER DATE

1-21-14
PLANS APPROVAL DATE

REGISTERED PROFESSIONAL ENGINEER JENNIFER NGUYEN No. C65953 Exp 6/30/14 CIVIL STATE OF CALIFORNIA

THE STATE OF CALIFORNIA OR ITS OFFICERS OR AGENTS SHALL NOT BE RESPONSIBLE FOR THE ACCURACY OR COMPLETENESS OF SCANNED COPIES OF THIS PLAN SHEET.

ROADSIDE SIGNS

SIGN No.	SIGN CODE	PANEL SIZE (in X in)	POST DATA SIZE (in X in)	SINGLE FACED	DOUBLE FACED	SIGN FACING MATERIAL: BACKGROUND SHEETING COLOR	BACKGROUND RETRO - REFLECTIVE ASTM TYPE	LEGEND SHEETING COLOR	LEGEND RETRO - REFLECTIVE ASTM TYPE	LEGEND NON - REFLECTIVE ASTM TYPE	GRAFFITI FILM PREMIUM	FURNISH SINGLE SHEET ALUMINUM SIGN (SQFT): UNFRAMED ALUMINUM 0.063"	UNFRAMED ALUMINUM 0.080"	FRAMED ALUMINUM 0.063"	FRAMED ALUMINUM 0.080"	FURNISH LAMINATED SIGN TYPE B (2½" THICK)	ROADSIDE SIGN (WOOD): ONE POST	ROADSIDE SIGN (WOOD): TWO POST	REMOVE ROADSIDE SIGN	TREATED WOOD * WASTE	INSTALL SIGN (STRAP & SADDLE BRACKET METHOD)	INSTALL SIGN PANEL (SOUND WALL/ BARRIER MOUNTED)	REMARKS
												SQFT					EA	EA	EA	LB	EA	EA	
S20-1	G11-4.1(CA)																		1	44			
S20-2	G11-4.1(CA)	44" X 18"	4" X 4"	X		W	III	B		X	X	5.5					1						
S20-3	W13-2																		1				
S20-4	W13-2	36" X 48"		X		Y	III	B		X	X		12								1		STRAP TO ELECTROLIER (UNBALANCE MOUNTING)
S20-5	W3-3																		1				
S20-6	W3-3	48" X 48"	6" X 6"	X		Y	III	B		X	X		16								1		STRAP TO ELECTROLIER
S20-7	G84-3																		1	128			
S20-8	G84-3	48" X 60"	6" X 6"	X		G	III	W		X	X		20				1						
S20-9	R61-5(CA)																		1	72			
S20-10	R61-5(CA)	36" X 30"	4" X 6"	X		W	III	B		X	X	7.5					1						
S21-1	G84-3																		1	128			
S21-2	G84-3	48" X 60"	6" X 6"	X		G	III	W	IV	X	X		20				1						
S21-3	W12-2																		1	290			
	W34A(CA)																						
S21-4	W12-2	48" X 48"	6" X 6"	X		Y	III	B		X	X		16					1					
	W34A(CA)	48" X 36"		X		Y	III	B		X	X		12										
S21-5	SW26(CA)																		1	274			
S21-6	SW26(CA)	72" X 72"	6" X 6"	X		Y	III	B		X	X			6				1					
S21-7	W4-1	48" X 48"	6" X 6"	X		Y	III	B		X	X		16				1						
S21-8	W4-1																		1	120			
S21-9	R61-7	36" X 30"	4" X 6"	X		W	III	B		X	X	7.5					1						
S21-10	R61-7																		1	72			
S21-11	G8-22(CA)																		1	116			
S21-12	G8-22(CA)	84" X 42"	6" X 6"	X		G	III	W	IV	X	X				24.5			1					
S21-13	M3-1																		1				
	G27-2(CA)																		1				
S21-14	M3-1	36" X 18"		X		G	III	W	IV	X	X	4.5									1		STRAP TO ELECTROLIER
	G27-2(CA)	36" X 36"	6" X 6"	X		BLU/R	III	W	IV	X	X	9									1		STRAP TO ELECTROLIER
SUB TOTAL												34.0	112	6	24.5		6	3	13	1,244	4		

* FOR ADDITIONAL QUANTITIES, SEE SHEET Q-3.

SIGN QUANTITIES
SQ-10

REVISED BY | DATE REVISED
JENNIFER NGUYEN | VINCENT NGUYEN
CALCULATED-DESIGNED BY | CHECKED BY
FUNCTIONAL SUPERVISOR: GRISH BIGLARIAN

STATE OF CALIFORNIA - DEPARTMENT OF TRANSPORTATION
Caltrans® TRAFFIC DESIGN

S:\projects\294901\07-294901\729490od010.dgn

LAST REVISION 00-00-00 | DATE PLOTTED => 14-APR-2014 | TIME PLOTTED => 09:12

Dist	COUNTY	ROUTE	POST MILES TOTAL PROJECT	SHEET No.	TOTAL SHEETS
07	LA	5	6.8/13.8	109	176

Jennifer Nguyen 12-3-13
REGISTERED CIVIL ENGINEER DATE

1-21-14
PLANS APPROVAL DATE

REGISTERED PROFESSIONAL ENGINEER JENNIFER NGUYEN No. C65953 Exp 6/30/14 CIVIL STATE OF CALIFORNIA

THE STATE OF CALIFORNIA OR ITS OFFICERS OR AGENTS SHALL NOT BE RESPONSIBLE FOR THE ACCURACY OR COMPLETENESS OF SCANNED COPIES OF THIS PLAN SHEET.

ROADSIDE SIGNS

SIGN No.	SIGN CODE	PANEL SIZE (in X in)	POST DATA SIZE (in X in)	SINGLE FACED	DOUBLE FACED	SIGN FACING MATERIAL: BACKGROUND SHEETING COLOR	BACKGROUND RETRO - REFLECTIVE ASTM TYPE	LEGEND SHEETING COLOR	LEGEND RETRO - REFLECTIVE ASTM TYPE	LEGEND NON - REFLECTIVE ASTM TYPE	GRAFFITI FILM PREMIUM	FURNISH SINGLE SHEET ALUMINUM SIGN (SQFT): UNFRAMED ALUMINUM 0.063"	UNFRAMED ALUMINUM 0.080"	FRAMED ALUMINUM 0.063"	FRAMED ALUMINUM 0.080"	FURNISH LAMINATED SIGN TYPE B (2/2" THICK)	ROADSIDE SIGN (WOOD): ONE POST	ROADSIDE SIGN (WOOD): TWO POST	REMOVE ROADSIDE SIGN	TREATED WOOD * WASTE	INSTALL SIGN (STRAP & SADDLE BRACKET METHOD)	INSTALL SIGN PANEL (SOUND WALL/ BARRIER MOUNTED)	REMARKS
												0.063"	0.080"	0.063"	0.080"	SQFT	EA	EA	EA	LB	EA	EA	
S24-1	W4-1																		1	120			
S24-2	W4-1	48" X 48"	6" X 6"	X		Y	III	B		X	X		16				1						
S24-3	G84-3																		1	128			
S24-4	G84-3	48" X 60"	6" X 6"	X		G	III	W	IV	X	X		20				1						
S24-5	W4-10(CA)																		1	274			
S24-6	W4-10(CA)	72" X 72"	6" X 6"	X		Y	III	B		X	X		16					1					
S24-7	W3-3																		1				
S24-8	W3-3	48" X 48"	6" X 6"	X		Y	III	B		X	X		16								1		
S24-9	W12-2																		1				
	W34A(CA)																		1				
S24-10	W12-2	48" X 48"		X		Y	III	B		X	X		16								1		
	W34A(CA)	48" X 36"		X		Y	III	B		X	X		12								1		
S24-11	W3-3																		1				
S24-12	W3-3	48" X 48"	6" X 6"	X		Y	III	B		X	X		16								1		
S24-13	G84-3																		1	128			
S24-14	G84-3	48" X 60"	6" X 6"	X		G	III	W	IV	X	X		20				1						
S24-15	R61-32(CA)																		1	72			
S24-16	R61-32(CA)																		1	72			
S24-17	R61-32(CA)	36" X 30"	4" X 6"	X		W	III	B		X	X	7.5					1						
S24-18	R61-32(CA)	36" X 30"	4" X 6"	X		W	III	B		X	X	7.5					1						
S24-19																			1	72			
S24-20	R61-32(CA)	36" X 30"	4" X 6"	X		W	III	B		X	X	7.5					1						
S24-21	W4-1	48" X 48"	6" X 6"	X		Y	III	B		X	X		16				1						
S24-22	W4-1																		1	120			
S25-1	W13-2																				1		STRAP TO ELECTROLIER
S25-2	W13-2	36" X 48"		X		Y	III	B		X	X	12							1				
SUB TOTAL												34.5	148				7	1	13	986	5		

* FOR ADDITIONAL QUANTITIES, SEE SHEET Q-3.

SIGN QUANTITIES
SQ-11

REVISED BY | DATE REVISED
JENNIFER NGUYEN | VINCENT NGUYEN
CALCULATED-DESIGNED BY | CHECKED BY
FUNCTIONAL SUPERVISOR: GRISH BIGLARIAN

STATE OF CALIFORNIA - DEPARTMENT OF TRANSPORTATION
Caltrans® TRAFFIC DESIGN

S:\projects\294901\07-294901\729490od011.dgn

LAST REVISION 00-00-00 | DATE PLOTTED => 14-APR-2014 | TIME PLOTTED => 09:12

Dist	COUNTY	ROUTE	POST MILES TOTAL PROJECT	SHEET No.	TOTAL SHEETS
07	LA	5	6.8/13.8	110	176

Jennifer Nguyen 12-3-13
REGISTERED CIVIL ENGINEER DATE

1-21-14
PLANS APPROVAL DATE

REGISTERED PROFESSIONAL ENGINEER JENNIFER NGUYEN No. C65953 Exp 6/30/14 CIVIL STATE OF CALIFORNIA

THE STATE OF CALIFORNIA OR ITS OFFICERS OR AGENTS SHALL NOT BE RESPONSIBLE FOR THE ACCURACY OR COMPLETENESS OF SCANNED COPIES OF THIS PLAN SHEET.

ROADSIDE SIGNS

SIGN No.	SIGN CODE	PANEL SIZE (in X in)	POST DATA SIZE (in X in)	SINGLE FACED	DOUBLE FACED	SIGN FACING MATERIAL: BACKGROUND SHEETING COLOR	BACKGROUND RETRO - REFLECTIVE ASTM TYPE	LEGEND SHEETING COLOR	LEGEND RETRO - REFLECTIVE ASTM TYPE	LEGEND NON - REFLECTIVE ASTM TYPE	GRAFFITI FILM PREMIUM	FURNISH SINGLE SHEET ALUMINUM SIGN (SQFT): UNFRAMED ALUMINUM 0.063"	UNFRAMED ALUMINUM 0.080"	FRAMED ALUMINUM 0.063"	FRAMED ALUMINUM 0.080"	FURNISH LAMINATED SIGN TYPE B (2/2" THICK)	ROADSIDE SIGN (WOOD): ONE POST	ROADSIDE SIGN (WOOD): TWO POST	REMOVE ROADSIDE SIGN	TREATED WOOD * WASTE	INSTALL SIGN (STRAP & SADDLE BRACKET METHOD)	INSTALL SIGN PANEL (SOUND WALL/ BARRIER MOUNTED)	REMARKS
												SQFT					EA	EA	EA	LB	EA	EA	
S25-3	G11-4.1(CA)	44" X 18"	4" X 4"	X		W	III	B		X	X	5.5					1						
S25-4	G11-4.1(CA)																		1	88			
S25-5	G95B(CA)(Mod)																		1	994			
	G95-1(CA)																						
S25-6	G95B(CA)(Mod)	120" X 72"	TYPE M	X		G	III	W	IV	X	X				60.0			1					
	G95-1(CA)	120" X 24"		X		G	III	W	IV	X	X				20.0								
S25-7	G11-4.1(CA)																		1				
S25-8	G11-4.1(CA)	44" X 24"		X		W	III	B		X	X	5.5										1	
S25-9	W12-2																		1				
	M3-1																		1				
	G27-2(CA)																		1				
S25-10	W12-2	48" X 48"		X		Y	III	B		X	X		16								1		STRAP TO ELECTROLIER
	M3-1	36" X 18"		X		G	III	W	IV	X	X	4.5									1		STRAP TO ELECTROLIER
	G27-2(CA)	36" X 36"		X		BLU/R	III	W	IV	X	X	9									1		STRAP TO ELECTROLIER
S25-11	W12-2a																		1				
S25-12	W12-2a	78" X 24"		X		Y	III	B		X	X			13								1	
S25-13	W13-2																		1				
S25-14	W13-2	36" X 48"		X		Y	III	B		X	X	12									1		
S25-15	W13-3	36" X 48"	4" X 6"	X		Y	III	B		X	X	12					1						
S25-16	W13-3																		1	80			
S25-17	G84-3(CA)																		1	128			
S25-18	G84-3(CA)	48" X 60"	6" X 6"	X		Y	III	B	IV	X	X		20				1						
S26-1	G27-2(CA)																		1	75			
S26-2	G27-2(CA)	36" X 36"	4" X 6"	X		BLU/R	III	W	IV	X	X	9					1						
S26-3	SW26(CA)(Mod)																		1	274			
S26-4	SW26(CA)(Mod)	72" X 72"	6" X 6"	X		Y	III	B		X	X			36				1					
SUB TOTAL												57.5	36	49	80.0		4	2	12	1,639	4	2	

* FOR ADDITIONAL QUANTITIES, SEE SHEET Q-3.

SIGN QUANTITIES
SQ-12

REVISED BY | DATE REVISED
JENNIFER NGUYEN | VINCENT NGUYEN
CALCULATED-DESIGNED BY | CHECKED BY
FUNCTIONAL SUPERVISOR: GRISH BIGLARIAN
STATE OF CALIFORNIA - DEPARTMENT OF TRANSPORTATION
Caltrans® TRAFFIC DESIGN

S:\projects\294901\07-294901\729490od012.dgn

LAST REVISION 00-00-00 | DATE PLOTTED => 14-APR-2014 | TIME PLOTTED => 09:12

Dist	COUNTY	ROUTE	POST MILES TOTAL PROJECT	SHEET No.	TOTAL SHEETS
07	LA	5	6.8/13.8	111	176

Jennifer Nguyen 12-3-13
REGISTERED CIVIL ENGINEER DATE

1-21-14
PLANS APPROVAL DATE

REGISTERED PROFESSIONAL ENGINEER JENNIFER NGUYEN No. C65953 Exp 6/30/14 CIVIL STATE OF CALIFORNIA

THE STATE OF CALIFORNIA OR ITS OFFICERS OR AGENTS SHALL NOT BE RESPONSIBLE FOR THE ACCURACY OR COMPLETENESS OF SCANNED COPIES OF THIS PLAN SHEET.

ROADSIDE SIGNS

SIGN No.	SIGN CODE	PANEL SIZE (in X in)	POST DATA SIZE (in X in)	SINGLE FACED	DOUBLE FACED	SIGN FACING MATERIAL: BACKGROUND SHEETING COLOR	BACKGROUND RETRO - REFLECTIVE ASTM TYPE	LEGEND SHEETING COLOR	LEGEND RETRO - REFLECTIVE ASTM TYPE	LEGEND NON - REFLECTIVE ASTM TYPE	GRAFFITI FILM PREMIUM	FURNISH SINGLE SHEET ALUMINUM SIGN (SQFT): UNFRAMED ALUMINUM 0.063"	UNFRAMED ALUMINUM 0.080"	FRAMED ALUMINUM 0.063"	FRAMED ALUMINUM 0.080"	FURNISH LAMINATED SIGN TYPE B (2/2" THICK)	ROADSIDE SIGN (WOOD): ONE POST	ROADSIDE SIGN (WOOD): TWO POST	REMOVE ROADSIDE SIGN	TREATED WOOD * WASTE	INSTALL SIGN (STRAP & SADDLE BRACKET METHOD)	INSTALL SIGN PANEL (SOUND WALL/ BARRIER MOUNTED)	REMARKS
												0.063"	0.080"	0.063"	0.080"	SQFT	EA	EA	EA	LB	EA	EA	
S26-5	W4-1	48" X 48"	6" X 6"	X		Y	III	B		X	X		16				1						
S26-6	W4-1																		1	240			
S26-7	W12-2	48" X 48"	6" X 6"	X		Y	III	B		X	X		16					1					
	W34A(CA)	48" X 36"		X		Y	III	B		X	X		12										
S26-8	W12-2																		1	145			
	W34A(CA)																						
S26-9	R61-19(CA)																		1	46			
S26-10	R61-19(CA)	30" X 24"	4" X 4"	X		Y	III	B		X	X	5					1						
S26-11	R61-19(CA)																		1	46			
S26-12	R61-19(CA)	30" X 24"	4" X 4"	X		Y	III	B		X	X	5					1						
S26-13	G84-3(CA)																		1	128			
S26-14	G84-3(CA)	48" X 60"	6" X 6"	X		Y	III	B	IV	X	X		20				1						
S26-15	W1-1																		1	88			
	W13-1P																						
S26-16	W1-1	36" X 36"	4" X 6"	X		Y	III	B		X	X	9					1						
	W13-1P	30" X 30"		X		Y	III	B		X	X	6.25											
S26-17	W13-2																		1				
S26-18	W13-2	36" X 48"		X		Y	III	B		X	X	12									1		
S26-19	W1-1	36" X 36"	4" X 6"	X		Y	III	B		X	X	9					1						
	W13-1P	30" X 30"		X		Y	III	B		X	X	6.25											
S26-20																			1	88			
S26-21	G24-3(CA)																		1	284			
S26-22	G24-3(CA)	240" X 80"	6" X 6"	X		G	III	W	IV	X	X					133.3		1					
S26-23	W1-8																		1	80			
S26-24	W1-8	36" X 48"	4" X 6"	X		Y	III	B		X	X	12					1						
SUB TOTAL												64.5	64			133.3	7	2	10	1,145	1		

* FOR ADDITIONAL QUANTITIES, SEE SHEET Q-3.

SIGN QUANTITIES
SQ-13

REVISED BY | DATE REVISED
JENNIFER NGUYEN | VINCENT NGUYEN
CALCULATED-DESIGNED BY | CHECKED BY
FUNCTIONAL SUPERVISOR: GRISH BIGLARIAN
STATE OF CALIFORNIA - DEPARTMENT OF TRANSPORTATION
Caltrans® TRAFFIC DESIGN

S:\projects\294901\07-294901\729490od013.dgn

LAST REVISION 00-00-00 | DATE PLOTTED => 14-APR-2014 | TIME PLOTTED => 09:12

Dist	COUNTY	ROUTE	POST MILES TOTAL PROJECT	SHEET No.	TOTAL SHEETS
07	LA	5	6.8/13.8	112	176

Jennifer Nguyen 12-3-13
REGISTERED CIVIL ENGINEER DATE

1-21-14
PLANS APPROVAL DATE

REGISTERED PROFESSIONAL ENGINEER JENNIFER NGUYEN No. C65953 Exp 6/30/14 CIVIL STATE OF CALIFORNIA

THE STATE OF CALIFORNIA OR ITS OFFICERS OR AGENTS SHALL NOT BE RESPONSIBLE FOR THE ACCURACY OR COMPLETENESS OF SCANNED COPIES OF THIS PLAN SHEET.

ROADSIDE SIGNS

SIGN No.	SIGN CODE	PANEL SIZE (in X in)	POST DATA SIZE (in X in)	SINGLE FACED	DOUBLE FACED	SIGN FACING MATERIAL BACKGROUND SHEETING COLOR	BACKGROUND RETRO - REFLECTIVE ASTM TYPE	LEGEND SHEETING COLOR	LEGEND RETRO - REFLECTIVE ASTM TYPE	LEGEND NON - REFLECTIVE ASTM TYPE	GRAFFITI FILM PREMIUM	FURNISH SINGLE SHEET ALUMINUM SIGN (SQFT) UNFRAMED ALUMINUM 0.063"	UNFRAMED ALUMINUM 0.080"	FRAMED ALUMINUM 0.063"	FRAMED ALUMINUM 0.080"	FURNISH LAMINATED SIGN TYPE B (2/2" THICK)	ROADSIDE SIGN (WOOD) ONE POST	ROADSIDE SIGN (WOOD) TWO POST	REMOVE ROADSIDE SIGN	TREATED WOOD * WASTE	INSTALL SIGN (STRAP & SADDLE BRACKET METHOD)	INSTALL SIGN PANEL (SOUND WALL/ BARRIER MOUNTED)	REMARKS
												0.063"	0.080"	0.063"	0.080"	SQFT	EA	EA	EA	LB	EA	EA	
S26-25	W1-8																		1	80			
S26-26	W1-8	36" X 48"	4" X 6"	X		Y	III	B		X	X	12					1						
S26-27	W1-8	36" X 48"	4" X 6"	X		Y	III	B		X	X	12					1						
S26-28	W1-8																		1	80			
S26-29	W1-8																		1	80			
S26-30	W1-8	36" X 48"	4" X 6"	X		Y	III	B		X	X	12					1						
S26-31	W4-1	48" X 48"	4" X 6"	X		Y	III	B		X	X		16				1						
S26-32	W4-1																		1	80			
S26-33	M3-1																		1				
	G27-2(CA)																		1				
S26-34	M3-1	36" X 18"	4" X 6"	X		G	III	W	IV	X	X	4.5									1		
	G27-2(CA)	36" X 36"		X		BLU/R	III	B	IV	X	X	9									1		
S27-1	W34A(CA)																		1				
S27-2	W34A(CA)	48" X 36"		X		Y	III	B		X	X		12								1		STRAP TO OVERHEAD SIGN Sta 707+28.11
S27-3	G70-5(CA)	54" X 42"		X		G	III	W	IV	X	X		15.75								1		
S28-1	G11-5(CA)																		1	69			
S28-2	G11-5(CA)	44" X 24"	4" X 6"	X		W	III	B		X	X	7.3					1						
S28-3	W12-2a																		1				
S28-4	W12-2a	78" X 24"		X		Y	III	B		X	X		13								1		
S28-5	W12-2	36" X 36"		X		Y	III	B		X	X	9					1						
S28-6	W12-2	30" X 30"		X		Y	III	B		X	X	6.25							1	48			
S28-7	M3-3	36" X 18"		X		G	III	W	IV	X	X	4.5									1		STRAP TO ELECTROLIER
	G27-2(CA)	36" X 36"		X		BLU/R	III	B	IV	X	X	9									1		STRAP TO ELECTROLIER
S28-8	M3-3	36" X 18"																	1				
	G27-2(CA)	36" X 36"																	1				
S28-9	G87(CA)																		1	240			
S28-10	G87(CA)	120" X 54"		X		G	III	Y	IV	X	X	12			45.0			1					
SUB TOTAL												97.55	56.75		45.0		6	1	13	677	7		

* FOR ADDITIONAL QUANTITIES, SEE SHEET Q-3.

SIGN QUANTITIES
SQ-14

REVISED BY | DATE REVISED
JENNIFER NGUYEN | VINCENT NGUYEN
CALCULATED-DESIGNED BY | CHECKED BY
FUNCTIONAL SUPERVISOR
GRISH BIGLARIAN

Caltrans® TRAFFIC DESIGN
STATE OF CALIFORNIA - DEPARTMENT OF TRANSPORTATION

S:\projects\294901\07-294901\729490od014.dgn

LAST REVISION 00-00-00 | DATE PLOTTED => 14-APR-2014 | TIME PLOTTED => 09:12

Dist	COUNTY	ROUTE	POST MILES TOTAL PROJECT	SHEET No.	TOTAL SHEETS
07	LA	5	6.8/13.8	113	176

Jennifer Nguyen 12-3-13
REGISTERED CIVIL ENGINEER DATE

1-21-14
PLANS APPROVAL DATE

REGISTERED PROFESSIONAL ENGINEER JENNIFER NGUYEN No. C65953 Exp 6/30/14 CIVIL STATE OF CALIFORNIA

THE STATE OF CALIFORNIA OR ITS OFFICERS OR AGENTS SHALL NOT BE RESPONSIBLE FOR THE ACCURACY OR COMPLETENESS OF SCANNED COPIES OF THIS PLAN SHEET.

ROADSIDE SIGNS

SIGN No.	SIGN CODE	PANEL SIZE (in X in)	POST DATA SIZE (in X in)	SINGLE FACED	DOUBLE FACED	SIGN FACING MATERIAL: BACKGROUND SHEETING COLOR	BACKGROUND RETRO - REFLECTIVE ASTM TYPE	LEGEND SHEETING COLOR	LEGEND RETRO - REFLECTIVE ASTM TYPE	LEGEND NON - REFLECTIVE ASTM TYPE	GRAFFITI FILM PREMIUM	FURNISH SINGLE SHEET ALUMINUM SIGN (SQFT): UNFRAMED ALUMINUM 0.063"	UNFRAMED ALUMINUM 0.080"	FRAMED ALUMINUM 0.063"	FRAMED ALUMINUM 0.080"	FURNISH LAMINATED SIGN TYPE B (2½" THICK)	ROADSIDE SIGN (WOOD): ONE POST	ROADSIDE SIGN (WOOD): TWO POST	REMOVE ROADSIDE SIGN	TREATED WOOD * WASTE	INSTALL SIGN (STRAP & SADDLE BRACKET METHOD)	INSTALL SIGN PANEL (SOUND WALL/ BARRIER MOUNTED)	REMARKS
												0.063"	0.080"	0.063"	0.080"	SQFT	EA	EA	EA	LB	EA	EA	
S28-11	R2-1(55)																		1				
	R48-1(CA)																		1				
S28-12	R2-1(55)	36" X 18"		X		Y	III	B		X	X	4.5									1		STRAP TO ELECTROLIER
	R48-1(CA)	48" X 60"		X		Y	III	B		X	X		20								1		STRAP TO ELECTROLIER
S28-13	W4-3	48" X 48"	6" X 6"	X		Y	III	B		X	X		16				1						
S28-14	W4-3			X		Y	III	B		X	X	12							1	120			
S28-15	W12-2																		1				
S28-16	W12-2	36" X 36"		X		Y	III	B		X	X	9									1		STRAP TO ELECTROLIER
S28-17	W3-1																		1				
S28-18	W3-1	48" X 48"		X		Y	III	B		X	X		16								1		STRAP TO ELECTROLIER
S28-19	G84-3(CA)																		1	128			
S28-20	G84-3(CA)	48" X 60"	6" X 6"	X		G	III	W	IV	X	X		20				1						
S28-21	W12-2	36" X 36"		X		Y	III	B		X	X	9						1					
	W34A(CA)	48" X 36"		X		Y	III	B		X	X		12										
S28-22	W12-2																		1	274			
	W34A(CA)																		1				
S28-23	W12-2																		1				
S28-24	W12-2	36" X 36"		X		Y	III	B		X	X	9									1		STRAP TO ELECTROLIER
S28-25	G20(CA)	84" X 42"		X		G	III	W	IV	X	X				24.5			1					
S28-26	G20(CA)																		1	232			
S29-1	W1-2	36" X 36"	6" X 6"	X		Y	III	B		X	X	9					1						
	W13-1P	30" X 30"		X		Y	III	B		X	X	6.25											
S29-2	W1-2																		1	132			
	W13-1P																		1				
SUB TOTAL												58.75	84		24.5		3	2	12	886	5		
GRAND TOTAL												687.9	840.8	484.5	624.3	349.8	78	29	165	15,212	52	9	

* FOR ADDITIONAL QUANTITIES, SEE SHEET Q-3.

SIGN QUANTITIES
SQ-15

REVISED BY | DATE REVISED
JENNIFER NGUYEN | VINCENT NGUYEN
CALCULATED-DESIGNED BY | CHECKED BY
FUNCTIONAL SUPERVISOR: GRISH BIGLARIAN
STATE OF CALIFORNIA - DEPARTMENT OF TRANSPORTATION
Caltrans® TRAFFIC DESIGN

S:\projects\294901\07-294901\729490od015.dgn

LAST REVISION 00-00-00 | DATE PLOTTED => 14-APR-2014 | TIME PLOTTED => 09:12

Dist	COUNTY	ROUTE	POST MILES TOTAL PROJECT	SHEET No.	TOTAL SHEETS
07	LA	5	6.8/13.8	114	176

REGISTERED CIVIL ENGINEER 1-7-14 DATE

1-21-14
PLANS APPROVAL DATE

REGISTERED PROFESSIONAL ENGINEER RICHARD TRAN No. C68250 Exp. 9-30-15 CIVIL STATE OF CALIFORNIA

THE STATE OF CALIFORNIA OR ITS OFFICERS OR AGENTS SHALL NOT BE RESPONSIBLE FOR THE ACCURACY OR COMPLETENESS OF SCANNED COPIES OF THIS PLAN SHEET.

MAINLINE ROADWAY QUANTITIES

MAINLINE LOCATION				NUMBER OF SLABS (N) (EACH)				ENTRANCE GORE (N)	EXIT GORE (N)	INDIVIDUAL SLAB REPLACEMENT (RSC) *	REPLACE UNDERLYING BASE *	JOINTED PLAIN CONCRETE PAVEMENT (RSC)	ALTERNATE TREATED BASE *	CLASS 3 AGGREGATE BASE	SPALL REPAIR (POLYESTER CONCRETE)	CRACK TREATMENT	COLD PLANE ASPHALT CONCRETE PAVEMENT *		TACK COAT *	RUBBERIZED HOT MIX ASPHALT, SUPERPAVE (GAP GRADED) *	HOT MIX ASPHALT, SUPERPAVED (TYPE A) *
				MIXED FLOW LANE 1	MIXED FLOW LANE 2	MIXED FLOW LANE 3	MIXED FLOW LANE 4										TRAVELED WAY	SHOULDER			
DESCRIPTION	FROM	TO	DIRECTION					EA	EA	CY	CY	CY	CY	CY	SQYD	LNMI	SQYD	SQYD	TON	TON	TON
Rte 605 TO LAKEWOOD Blvd	PM 6.80	PM 8.28	NB	5	5	20	10	2		178.67	53.6							5,120	1.52	501	15
			SB	5	5	10	15			156.33	46.9						4,383	4,529	2.62	1,015	13
LAKEWOOD Blvd TO PARAMOUNT Blvd	PM 8.28	PM 8.95	NB	5	5	10	10	2	1	134.00	40.2							2,405	0.71	235	7
			SB	5	5	20	5	2	1	156.33	46.9							2,621	0.77	256	8
PARAMOUNT Blvd TO SLAUSON Ave	PM 8.95	PM 9.75	NB	5	5	10	10	1	1	134.00	40.2							2,772	0.82	271	8
			SB	5	5	10	5	1	1	111.67	33.5							3,121	0.92	305	9
SLAUSON Ave TO GARFIELD Ave	PM 9.75	PM 10.85	NB	5	5	10	10		1	134.00	40.2							4,857	1.44	475	14
			SB	5	5	20	20	1	1	223.33	67							3,108	0.92	304	9
GARFIELD Ave TO WASHINGTON Blvd	PM 10.85	PM 11.55	NB	5	5	10	20	1	1	178.67	53.6						3,516	3,581	2.07	809	11
			SB	5	5	20	10	1	1	178.67	53.6				938			2,821	0.83	276	10
WASHINGTON Blvd TO ATLANTIC Blvd	PM 11.55	PM 12.78	NB					1	1								27,380	4,531	9.31	4,017	16
			SB					1									32,781	3,868	10.69	4,656	13
ATLANTIC Blvd OC	PM 12.78	PM 12.78	NB	9	9					80.40	24.12	53.74	18.81	37.62							
			SB	9	9					80.40	24.12	60.48	21.17	42.34							
ATLANTIC Blvd - EAST LA STATION UP/TRIGGS St	PM 12.78	PM 12.88	NB													24	2,282		0.67	298	
			SB														3,312		0.97	432	
EAST LA STATION UP/TRIGGS St	PM 12.88	PM 12.88	NB	13	13					116.13	34.84	133.37	46.68	93.36							
			SB	15	15					134.00	40.2	122.89	43.01	86.02							
EAST LA STATION UP/TRIGGS St OC - Rte 710	PM 12.88	PM 13.80	NB														30,177	2,835	9.63	4,216	10
			SB														24,412	4,283	8.37	3,605	15
			TOTAL	447				13	9	1,996.60	598.98	370.48	129.67	259.34	938	24	178,697		52.26	21,674	157

(N) NOT A SEPARATE PAY ITEM, FOR INFORMATION ONLY.

* SEE ADDITIONAL QUANTITIES ON SHEET Q-2

SUMMARY OF QUANTITIES
Q-1

STATE OF CALIFORNIA - DEPARTMENT OF TRANSPORTATION
Caltrans DESIGN

FUNCTIONAL SUPERVISOR: ASADOUR TERTERIAN
CALCULATED-DESIGNED BY: HUNG TIEU
CHECKED BY: RICHARD TRAN
REVISED BY
DATE REVISED

LAST REVISION 00-00-00
DATE PLOTTED => 14-APR-2014
TIME PLOTTED => 09:12

Dist	COUNTY	ROUTE	POST MILES TOTAL PROJECT	SHEET No.	TOTAL SHEETS
07	LA	5	6.8/13.8	115	176

REGISTERED CIVIL ENGINEER 1-7-14 DATE

1-21-14
PLANS APPROVAL DATE

REGISTERED PROFESSIONAL ENGINEER RICHARD TRAN No. C68250 Exp. 9-30-15 CIVIL STATE OF CALIFORNIA

THE STATE OF CALIFORNIA OR ITS OFFICERS OR AGENTS SHALL NOT BE RESPONSIBLE FOR THE ACCURACY OR COMPLETENESS OF SCANNED COPIES OF THIS PLAN SHEET.

RAMP QUANTITIES

PM	RAMP LOCATION DESCRIPTION	COLD PLANE ASPHALT CONCRETE PAVEMENT SQYD	RUBBERIZED HOT MIX ASPHALT, SUPERPAVE (GAP GRADED) TON	TACK COAT TON	ROADWAY EXCAVATION CY	ALTERNATE TREATED BASE CY	JOINED PLAIN CONCRETE PAVEMENT (RAMP TERMINI WITH RSC) CY	BASE BOND BREAKER SQYD	HOT MIX ASPHALT, SUPERPAVE (TYPE A) TON	LEAN CONCRETE BASE RAPID SETTING CY	INDIVIDUAL SLAB REPLACEMENT (RSC) CY	REPLACE BASE CY
8.1 TO 8.5	NB OFF RAMP TO LAKEWOOD Blvd	3,467	452	1.01							213.56	64.07
	NB ON RAMP FROM LAKEWOOD Blvd	3,487	455	1.02					46	55		
	NB ON RAMP FROM LAKEWOOD Blvd (LOOP)	2,297	300	0.67								
	SB OFF RAMP TO LAKEWOOD Blvd	7,517	981	2.19								
	SB ON RAMP FROM LAKEWOOD Blvd	6,123	799	1.79								
	SB ON RAMP FROM LAKEWOOD Blvd (LOOP)	1,977	258	0.58					46	55		
8.8 TO 9.1	NB OFF RAMP TO PARAMOUNT Blvd	2,661	347	0.78								
	NB ON RAMP FROM PARAMOUNT Blvd	2,673	349	0.78								
	SB OFF RAMP TO PARAMOUNT Blvd	4,638	605	1.35								
	SB ON RAMP FROM PARAMOUNT Blvd	3,211	419	0.94								
9.7 TO 10.0	NB OFF RAMP TO SLAUSON Ave	995	130	0.29							200.22	60.07
	SB OFF RAMP TO SLAUSON Ave	2,965	387	0.86	315.07	91.89	223.17	787.67				
	SB ON RAMP FROM SLAUSON Ave	3,543	462	1.03								
10.55 TO 10.85	NB OFF RAMP TO GARFIELD Ave	2,048	267	0.60							199.36	59.81
	NB ON RAMP FROM GARFIELD Ave	2,795	365	0.82								
	SB OFF RAMP TO GARFIELD Ave	1,878	245	0.55							148.01	44.40
	SB ON RAMP FROM GARFIELD Ave	2,695	352	0.79								
11.4 TO 11.8	NB OFF RAMP TO WASHINGTON Blvd	2,398	313	0.70							196.47	58.94
	NB ON RAMP FROM WASHINGTON Blvd	2,564	335	0.75								
	SB OFF RAMP TO WASHINGTON Blvd	2,396	313	0.70							261.47	78.44
	SB ON RAMP FROM WASHINGTON Blvd	6,385	833	1.86					46	55		
12.5 TO 13.0	NB OFF RAMP TO TELEGRAPH Rd/CAMFIELD Ave	1,560	204	0.45								
	NB ON RAMP FROM TELEGRAPH Rd/CAMFIELD Ave	1,844	241	0.54								
	NB OFF RAMP TO TELEGRAPH Rd/WOODS Ave	458	60	0.13								
	NB ON RAMP FROM TELEGRAPH Rd/WOODS Ave	1,119	146	0.33								
	SB OFF RAMP TO STEVENS PLACE	3,364	439	0.98							179.04	53.71
	SB ON RAMP FROM STEVENS PLACE	5,116	668	1.49								
12.9 TO 13.1	SB OFF RAMP TO TRIGGS St	1,592	208	0.46								
	SB ON RAMP FROM TRIGGS St	1,927	252	0.56								
13.5	NB OFF RAMP TO EASTERN Ave	3,335	435	0.97								
13.7	NB Rte 5 TO NB Rte 710 CONNECTOR	1,995	260	0.58								
	TOTAL FROM Q-1	178,697	21,674	52.26		129.67			157		1,996.60	595.98
	TOTAL FROM Q-3								3.2			
	TOTAL	269,723	33,553	78.81	315.07	221.56	223.17	787.67	298	165	3,394.73	1,015.42

AERIALLY DEPOSITED LEAD

LOCATION	ROADWAY EXCAVATION (TYPE Z-2) (ADL) CY
C-10	59
C-11	215
C-13	45
C-14	22
TOTAL	341

TEMPORARY WATER POLLUTION CONTROL ITEMS

LOCATION	TEMPORARY DRAINAGE INLET PROTECTION EA	TEMPORARY FIBER ROLL LF
PM 6.8 TO 13.8	20	3000
TOTAL	20	3000

SUMMARY OF QUANTITIES

Q-2

REVISED BY | DATE REVISED
HUNG TIEU | RICHARD TRAN
CALCULATED-DESIGNED BY | CHECKED BY
FUNCTIONAL SUPERVISOR
ASADOUR TERTERIAN

STATE OF CALIFORNIA - DEPARTMENT OF TRANSPORTATION
Caltrans®
DESIGN

LAST REVISION 00-00-00 | DATE PLOTTED => 14-APR-2014 | TIME PLOTTED => 09:12

Dist	COUNTY	ROUTE	POST MILES TOTAL PROJECT	SHEET No.	TOTAL SHEETS
07	LA	5	6.8/13.8	116	176

REGISTERED CIVIL ENGINEER 1-7-14 DATE

1-21-14
PLANS APPROVAL DATE

REGISTERED PROFESSIONAL ENGINEER RICHARD TRAN No. C68250 Exp. 9-30-15 CIVIL STATE OF CALIFORNIA

THE STATE OF CALIFORNIA OR ITS OFFICERS OR AGENTS SHALL NOT BE RESPONSIBLE FOR THE ACCURACY OR COMPLETENESS OF SCANNED COPIES OF THIS PLAN SHEET.

MIDWEST GUARDRAIL SYSTEM QUANTITIES

LOCATION	MIDWEST GUARDRAIL SYSTEM (WOOD POST)	TRANSITION RAILING (TYPE WB-31)	ALTERNATIVE IN-LINE TERMINAL SYSTEM	ALTERNATIVE FLARED TERMINAL SYSTEM	END ANCHOR ASSEMBLY (TYPE SFT)	PLACE HMA DIKE (TYPE C)	PLACE HMA DIKE (TYPE F)	HOT MIXED ASPHALT, SUPERPAVE (TYPE A)	VEGETATION CONTROL (MINOR CONCRETE)	MINOR CONCRETE (STAMPED CONCRETE)	REMOVE GUARDRAIL	REMOVE ASPHALT CONCRETE DIKE	REMOVE CONCRETE	REMOVE AC SURFACING	* TREATED WOOD WASTE
	LF	EA	EA	EA	EA	LF	LF	TON	SQYD	SQFT	LF	LF	SQFT	SQFT	LB
SOUTHBOUND															
ARIZONA Ave Ped OC	87.5	1		1		62.5	112.5	0.073	89.3		143				1,941
TRIGGS St OFF RAMP	125.0			1	1	62.5	150.0	0.077	122.3		190	205			2,505
TRIGGS St ON RAMP	12.5	1		1		62.5	37.5	0.036	59.8		63	85			1,050
ATLANTIC Blvd ON/OFF RAMP										14,927				11,432	
ATLANTIC Blvd OC	12.5	1		1		62.5	37.5	0.036	47.7		63	85			1,050
WASHINGTON Blvd UC	225.0	1	1			62.5	250.0	0.142	177.8		280	290			3,585
WASHINGTON Blvd OFF RAMP	12.5			1	1	62.5	37.5	0.036	47.7		77	90			1,149
WASHINGTON Blvd ON RAMP	325.0			2	2	62.5	375.0	0.204	270.0		456	462			4,947
SIMON UP	25.0	1		1		62.5	50.0	0.042	54.6		87	100			1,269
GARFIELD Ave UC	37.5	1		1		62.5	62.5	0.049	61.5		100				1,425
SLAUSON Ave UC	12.5	1	1			62.5	37.5	0.036	59.8		77	77			1,149
PARAMOUNT Blvd UC	87.5	1		1		62.5	112.5	0.073	89.3		153				2,061
SB LAKEWOOD Blvd ON RAMP	12.5	1		1		62.5	37.5	0.036	47.7		65				1,050
NB LAKEWOOD Blvd ON RAMP	12.5	1		1		62.5	37.5	0.036	47.7		60				1,050
SB/NB SPLIT Conn	25.0			2	2	125.0	75.0	0.055	95.2		77	77			1,179
SB ROUTE 5 Conn TO SB ROUTE 605	75.0			1	1	62.5	100.0	0.068	82.4		65				1,857
SB ROUTE 5 Conn TO NB ROUTE 605	137.5			1	1	62.5	162.5	0.098	117.1		60				3,387
SUBTOTAL	1,225	10	2	16	8	1,062.5	1,337.5	1.097	1,469.9	14,927	2,016	1,394		11,432	30,654
NORTHBOUND															
SB ROUTE 605 Conn TO ROUTE 5 (LEFT)	125.0			1	1	62.5	187.5	0.111	262.9		180	190			5,745
SB ROUTE 605 Conn TO ROUTE 5 (RIGHT)	125.0	1		1		62.5	187.5	0.111	118.1		180	190			2,385
LAKEWOOD/ROSEMEAD Blvd ¾ MILE OH SIGN	12.5			1	1	62.5	37.5	0.036	47.7		67				1,050
LEMORA Ave PED OC	1,387.5			1	1	62.5	1,412.5	0.717	811.5		1,445				17,565
LAKEWOOD/ROSEMEAD Blvd OH SIGN EXIT	12.5			1	1	62.5	37.5	0.036	47.7		77				1,050
NB LAKEWOOD Blvd OFF RAMP	412.5		1		1	62.5	437.5	0.234	59.8		475		8,154		1,149
NB LAKEWOOD Blvd ON RAMP	112.5			1	1	62.5	137.5	0.086	115.3		168	180			2,241
ROUTE 5/19 Sep	12.5	1	1			62.5	37.5	0.036	47.7		65	75			1,050
PARAMOUNT Blvd ON RAMP	37.5	1	1			62.5	62.5	0.049	73.6		97	107			1,389
AFTER SLAUSON Ave OFF RAMP	12.5	1		1		62.5	37.5	0.036	47.7		64	80			1,050
GARFIELD Ave ON RAMP	25.0	1		1		62.5	50.0	0.043	54.6	4,787	88	100		2,459	1,281
SIMON UP	12.5	1		1		62.5	37.5	0.036	47.7		58				1,050
PRECEDING WASHINGTON Blvd OFF RAMP	12.5	1		1		62.5	37.5	0.036	47.7		63	75			1,050
TELEGRAPH Rd/WASHINGTON Blvd ON RAMP	12.5	1		1		62.5	37.5	0.036	47.7		63	75			1,050
ATLANTIC Blvd ON RAMP	12.5	1		1		62.5	37.5	0.036	47.7		63	75			1,050
ADJACENT TO ATLANTIC Blvd OFF RAMP	37.5	1	1			62.5	62.5	0.049	73.6		100				1,425
ATLANTIC Blvd SOUTH OFF RAMP	137.5		1		1	62.5	162.5	0.099	117.1		201				2,637
ATLANTIC Blvd SOUTH ON RAMP	62.5	1	1			62.5	87.5	0.061	87.5	2,160	116			2,160	1,617
ARIZONA Ave Ped OC	12.5	1		1		62.5	37.5	0.036	47.7		75	85			1,125
EASTERN Ave OFF RAMP	287.5		1		1	62.5	312.5	0.173	212.5		345	355			4,365
SUBTOTAL	2,862.5	12	7	13	8	1,250	3,446.5	2.057	2,415.8	6,947	3,990	1,587		4,619	51,324
TOTAL	4,087.5	22	9	29	16	2,312.5	4,784.0	3.154	3,885.7	21,874	6,006	2,981	8,154	16,051	81,978

* FOR ADDITIONAL QUANTITIES, SEE SHEET SQ-15.

SUMMARY OF QUANTITIES

Q-3

STATE OF CALIFORNIA - DEPARTMENT OF TRANSPORTATION
DESIGN
FUNCTIONAL SUPERVISOR: ASADOUR TERTERIAN
CALCULATED-DESIGNED BY: MARCELO DE LA FUENTE
CHECKED BY: RICHARD T TRAN
REVISED BY
DATE REVISED

LAST REVISION 00-00-00
DATE PLOTTED => 14-APR-2014
TIME PLOTTED => 09:12

Dist	COUNTY	ROUTE	POST MILES TOTAL PROJECT	SHEET No.	TOTAL SHEETS
07	LA	5	6.8/13.8	116	176

REGISTERED CIVIL ENGINEER 1-7-14 DATE

1-21-14
PLANS APPROVAL DATE

REGISTERED PROFESSIONAL ENGINEER RICHARD TRAN No. C68250 Exp. 9-30-15 CIVIL STATE OF CALIFORNIA

THE STATE OF CALIFORNIA OR ITS OFFICERS OR AGENTS SHALL NOT BE RESPONSIBLE FOR THE ACCURACY OR COMPLETENESS OF SCANNED COPIES OF THIS PLAN SHEET.

CURB RAMP QUANTITIES

No.	Loc. NAME	LOCATION DESCRIPTION	POSTMILE	REMOVE CONCRETE (MISCELLANEOUS)	REMOVE CHAIN LINK FENCE	MINOR CONCRETE (CURBS, SIDEWALK AND CURB RAMP)		DETECTABLE WARNING SURFACE	PRE/POST Const SURVEYS	RELOCATE ROADSIDE SIGN	CHAIN LINK FENCE (TYPE CL-6)	ADJUST PULL BOX
						SIDEWALK AND CURB RAMP	CURB (A2-8)					
				SQFT	LF	CY	CY	SQFT	EA	EA	LF	EA
1	1-Lt	NB OFF RAMP TO LAKEWOOD Blvd	8.18	162		1.65	2.11	12.7	1			
2	1-Rt	NB OFF RAMP TO LAKEWOOD Blvd	8.18	391		4.40	2.23	12.7	1			
3	2a-Lt	SB ON RAMP FROM NB LAKEWOOD Blvd	8.21	176		1.47	3.06	14.4	1			
4	2a-Rt	SB ON RAMP FROM NB LAKEWOOD Blvd	8.21	245		3.02	1.34	12.7	1			1
5	2b-ISLAND	SB ON RAMP FROM NB LAKEWOOD Blvd ISLAND	8.21	217		2.88	4.85	41.5	1			
6	3-Lt	NB ON RAMP FROM NB LAKEWOOD Blvd (LOOP)	8.27	150		1.85	3.64	12.7	1			1
7	3-Rt	NB ON RAMP FROM NB LAKEWOOD Blvd (LOOP)	8.27	178		2.20	1.85	12.7	1			
8	4-Lt	SB ON RAMP FROM SB LAKEWOOD Blvd (LOOP)	8.32	135		1.67	3.76	22.7	1			
9	4-Rt	SB ON RAMP FROM SB LAKEWOOD Blvd (LOOP)	8.32	182		2.25	1.59	12.7	1			1
10	5-Lt	NB ON RAMP FROM SB LAKEWOOD Blvd	8.4	228		2.81	4.02	21.5	1			
11	5-Rt	NB ON RAMP FROM SB LAKEWOOD Blvd	8.4	164		2.02	1.59	15.1	1			2
12	6a	SB OFF RAMP TO BROOKSHIRE Ave	8.44	254		3.14	2.23	12.7	1			
13	6b-Lt	SB OFF RAMP TO LAKEWOOD Blvd	8.29	163		1.49	2.11	12.7	1	3		
14	6b-Rt	SB OFF RAMP TO LAKEWOOD Blvd	8.29	128		1.99	1.40	15.1	1	1		1
15	7	SB ON RAMP FROM SLAUSON Ave	9.88	166		2.05	3.00	15.1	1			
16	8	SB OFF RAMP TO SLAUSON Ave	9.94	228		2.81	1.40	12.7	1			1
17	9	NB ON RAMP FROM TELEGRAPH Rd/TUBEWAY St	11.77	132		1.63	1.72	12.7	1			2
18	10	SB ON RAMP FROM STEVENS PLACE	12.69	218		2.69	1.40	12.7	1			
19	11	SB OFF RAMP TO STEVENS PLACE	12.7	124	35	1.53	3.06	15.1	1		63.2	1
20	12	SB ON RAMP FROM TRIGGS St	13.02	156	25	1.93	1.79	12.7	1		29.7	
21	13	SB OFF RAMP TO TRIGGS St	13.07	145		1.79	1.72	12.7	1			
		SUBTOTAL				47.27	49.88					
		TOTAL		3,942	60	97.15		325.6	21	4	92.9	10

SUMMARY OF QUANTITIES

Q-4

STATE OF CALIFORNIA - DEPARTMENT OF TRANSPORTATION
Caltrans
DESIGN

FUNCTIONAL SUPERVISOR: ASADOUR TERTERIAN
CALCULATED-DESIGNED BY: MARCELO DE LA FUENTE
CHECKED BY: RICHARD T TRAN
REVISED BY
DATE REVISED

LAST REVISION 00-00-00
DATE PLOTTED => 14-APR-2014
TIME PLOTTED => 09:12

Dist	COUNTY	ROUTE	POST MILES TOTAL PROJECT	SHEET No.	TOTAL SHEETS
07	LA	5	6.8/13.8	118	176

REGISTERED ELECTRICAL ENGINEER 1-14-14 DATE

1-21-14
PLANS APPROVAL DATE

REGISTERED PROFESSIONAL ENGINEER STANLEY L. JOHNSON No. E16761 Exp. 09/30/14 ELECTRICAL STATE OF CALIFORNIA

THE STATE OF CALIFORNIA OR ITS OFFICERS OR AGENTS SHALL NOT BE RESPONSIBLE FOR THE ACCURACY OR COMPLETENESS OF SCANNED COPIES OF THIS PLAN SHEET.

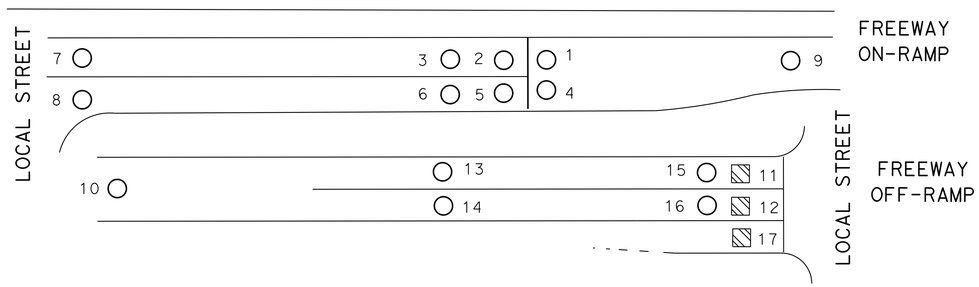

DETAIL "A"

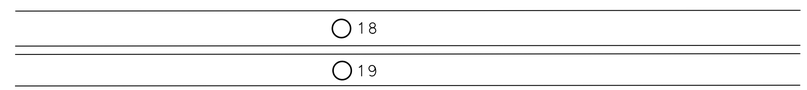

ROUTE 5 AND ROUTE 710 CONNECTORS

LOOP # 18 - ON CONNECTOR FROM SB 710 TO SB 5.
LOOP # 19 - ON CONNECTOR FROM NB 5 TO NB 710.

GENERAL NOTES: (SHEETS E-1, E-2)

1. INSTALL 2" INDUCTIVE DETECTOR TERMINATION CONDUITS FOR NEW INDUCTIVE LOOP DETECTORS. ABANDON EXISTING DETECTOR TERMINATION CONDUITS.
2. PRIOR TO CONSTRUCTION, CONTRACTOR SHALL LOCATE ALL EXISTING INDUCTIVE LOOP DETECTORS.
3. SPLICE NEW INDUCTIVE LOOP DETECTORS TO EXISTING DLC in ADJACENT PULL BOX.
4. TAG EXISTING DLC IN ADJACENT PULL BOX AND AT CONTROLLER CABINET.
5. ABANDON EXISTING INDUCTIVE LOOP DETECTORS. INSTALL NEW INDUCTIVE LOOP DETECTORS AT THE SAME LOCATION.

SUMMARY OF RAMPS/CONNECTORS INDUCTIVE LOOPS

Loc	PM	WORK LOCATION ON ROUTE 5	FOR TYPICAL LOCATION OF LOOP SEE DETAIL "A" (THIS SHEET)																		
			1	2	3	4	5	6	7	8	9	10	11	12	13	14	15	16	17	18	19
1	8.2	NB OFF TO ROSEMEAD Blvd											X	X	X		X	X	X		
2	8.2	NB ON FROM SB ROSEMEAD Blvd	X	X	X		X				X										
3	8.2	SB ON FROM NB ROSEMEAD Blvd	X	X	X				X												
4	8.3	NB ON FROM NB ROSEMEAD Blvd	X	X	X	X	X	X			X										
5	8.3	SB ON FROM SB ROSEMEAD Blvd	X	X	X				X												
6	8.4	SB OFF TO ROSEMEAD Blvd										X									
7	8.9	NB OFF TO PARAMOUNT Blvd										X	X	X							
8	8.9	SB ON FROM NB PARAMOUNT Blvd		X		X	X	X													
9	8.9	NB ON FROM NB PARAMOUNT Blvd	X	X	X	X	X	X			X										
10	9.9	SB ON FROM SLAUSON/GAGE	X	X	X	X	X	X			X										
11	9.9	SB OFF TO SLAUSON/GAGE													X						
12	10.7	SB ON FROM BANDINI/GARFIELD	X	X	X	X	X	X													
13	11.5	SB ON FROM WASHINGTON Blvd	X	X	X	X	X	X	X	X											
14	11.7	NB OFF TO TELEGRAPH/WASHINGTON													X						
15	11.8	NB ON FROM TELEGRAPH/WASHINGTON													X						
16	12.6	SB ON FROM ATLANTIC Blvd	X	X	X	X	X	X	X	X	X										
17	12.6	NB OFF TO NB ATLANTIC Blvd													X						
18	12.7	SB OFF TO ATLANTIC Blvd													X	X					
19	12.7	NB ON FROM ATLANTIC Blvd							X	X											
20	12.9	NB OFF TO SB ATLANTIC/TRIGGS St											X	X	X						
21	13.0	SB ON FROM TRIGGS St													X	X					
22	13.1	SB OFF TO TRIGGS St													X						
23	13.7	CONNECTOR FROM SB 710 TO SB 5																		X	
24	13.7	CONNECTOR FROM NB 5 TO NB 710																			X

X - INSTALL TYPE D OR E INDUCTIVE LOOP DETECTOR.

INDUCTIVE LOOP DETECTOR

NO SCALE

E-1

STATE OF CALIFORNIA - DEPARTMENT OF TRANSPORTATION
Caltrans TRAFFIC DESIGN

FUNCTIONAL SUPERVISOR: HASSAN MANNAA
CALCULATED-DESIGNED BY: MARTY MORTAZEVI
CHECKED BY: STANLEY L. JOHNSON
REVISED BY
DATE REVISED

LAST REVISION 09-27-10
DATE PLOTTED => 14-APR-2014
TIME PLOTTED => 09:12

Dist	COUNTY	ROUTE	POST MILES TOTAL PROJECT	SHEET No.	TOTAL SHEETS
07	LA	5	6.8/13.8	119	176

REGISTERED ELECTRICAL ENGINEER 1-14-14 DATE

1-21-14
PLANS APPROVAL DATE

REGISTERED PROFESSIONAL ENGINEER STANLEY L. JOHNSON No. E16761 Exp. 09/30/14 ELECTRICAL STATE OF CALIFORNIA

THE STATE OF CALIFORNIA OR ITS OFFICERS OR AGENTS SHALL NOT BE RESPONSIBLE FOR THE ACCURACY OR COMPLETENESS OF SCANNED COPIES OF THIS PLAN SHEET.

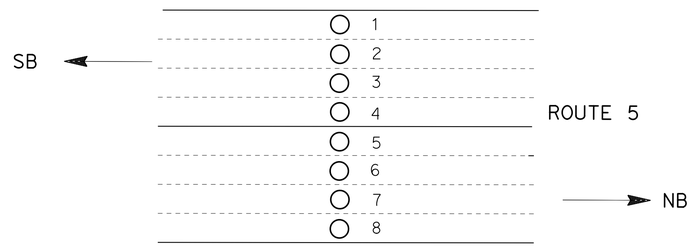

DETAIL "A"

TYPICAL LOOP DETECTOR INSTALLATION ON MAINLINE.

SUMMARY OF MAINLINE INDUCTIVE LOOPS

Loc	PM	WORK LOCATION ON ROUTE 5	SEE DETAIL "A" ON THIS SHEET FOR TYPICAL LOCATION OF INDUCTIVE LOOP DETECTORS							
			1	2	3	4	5	6	7	8
1	7.8	South of Lemoran Ave	X	X	X	X	X	X	X	X
2	8.2	South of Lakewood Blvd	X	X	X	X				
3	8.3	South of Lakewood Blvd					X	X	X	X
4	8.3	North of Tweety Blvd	X	X	X	X				
5	8.3	North of Tweety Blvd					X	X	X	X
6	8.9	south of Paramount Blvd	X	X	X	X	X	X	X	X
7	9.2	Rives Ave	X	X	X	X	X	X	X	X
8	9.8	North of Gage road	X	X	X	X	X	X	X	X
9	9.9	North of Volmer Ave	X	X	X	X	X	X	X	X
10	10.7	North of Church Ave					X	X	X	X
11	10.7	North of Church Ave	X	X	X	X				
12	11.2	Office Depot sign	X	X	X	X	X	X	X	X
13	11.5	Washington Blv	X	X	X	X	X	X	X	X
14	12.2	South of Gaspar Ave	X	X	X	X	X	X	X	X
15	12.6	South of Camfield Ave	X	X	X	X				
16	13.0	North of Woods Ave					X	X	X	X
17	13.1	North of Woods Ave	X	X	X	X				
18	13.4	Ferris Ave	X	X	X	X	X	X	X	X
19	13.7	North of McBride Ave		X	X	X	X	X	X	X

X - INSTALL TYPE E INDUCTIVE LOOP DETECTOR.

INDUCTIVE LOOP DETECTOR

NO SCALE

E-2

STATE OF CALIFORNIA - DEPARTMENT OF TRANSPORTATION
Caltrans TRAFFIC DESIGN

FUNCTIONAL SUPERVISOR: HASSAN MANNAA
CALCULATED-DESIGNED BY: MARTY MORTAZEVI
CHECKED BY: STANLEY L. JOHNSON
REVISED BY
DATE REVISED

LAST REVISION 09-27-10
DATE PLOTTED => 14-APR-2014
TIME PLOTTED => 09:12

Dist	COUNTY	ROUTE	POST MILES TOTAL PROJECT	SHEET No.	TOTAL SHEETS
07	LA	5	6.8/13.8	120	176

Stanley L. Johnson 1-14-14
REGISTERED ELECTRICAL ENGINEER DATE

1-21-14
PLANS APPROVAL DATE

REGISTERED PROFESSIONAL ENGINEER STANLEY L. JOHNSON No. E16761 Exp. 09/30/14 ELECTRICAL STATE OF CALIFORNIA

THE STATE OF CALIFORNIA OR ITS OFFICERS OR AGENTS SHALL NOT BE RESPONSIBLE FOR THE ACCURACY OR COMPLETENESS OF SCANNED COPIES OF THIS PLAN SHEET.

NOTE:

FOR ACCURATE RIGHT OF WAY DATA, CONTACT RIGHT OF WAY ENGINEERING AT THE DISTRICT OFFICE.

LEGEND: (THIS SHEET)

1 RL Exist PPB POST.

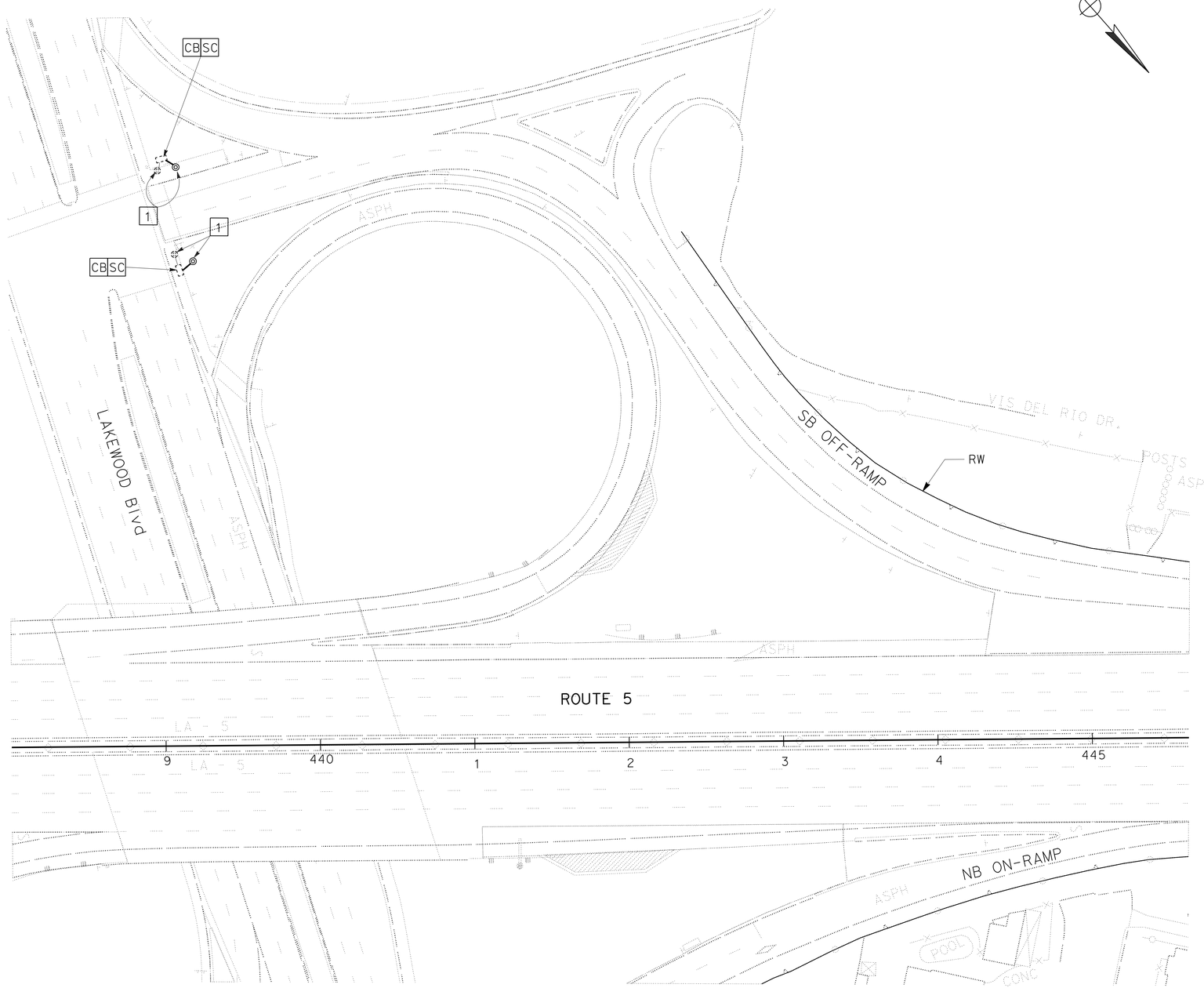

MODIFY SIGNAL

NO SCALE

E-3

APPROVED FOR ELECTRICAL WORK ONLY

STATE OF CALIFORNIA - DEPARTMENT OF TRANSPORTATION

Caltrans® TRAFFIC DESIGN

FUNCTIONAL SUPERVISOR: HASSAN MANNAA

CALCULATED-DESIGNED BY: STANLEY L. JOHNSON

CHECKED BY: STANLEY L. JOHNSON

REVISED BY

DATE REVISED

LAST REVISION 00-00-00

DATE PLOTTED => 14-APR-2014
TIME PLOTTED => 09:12

Dist	COUNTY	ROUTE	POST MILES TOTAL PROJECT	SHEET No.	TOTAL SHEETS
07	LA	5	6.8/13.8	121	176

Stanley L. Johnson 1-14-14
REGISTERED ELECTRICAL ENGINEER DATE

1-21-14
PLANS APPROVAL DATE

REGISTERED PROFESSIONAL ENGINEER
STANLEY L. JOHNSON
No. E16761
Exp. 09/30/14
ELECTRICAL
STATE OF CALIFORNIA

THE STATE OF CALIFORNIA OR ITS OFFICERS OR AGENTS SHALL NOT BE RESPONSIBLE FOR THE ACCURACY OR COMPLETENESS OF SCANNED COPIES OF THIS PLAN SHEET.

INDUCTIVE LOOP DETECTOR

SHEET No.	(N) No. OF LOOPS	(N) DETECTOR TERMINATION CONDUIT
	EA	EA
E-1	87	38
E-2	115	29

MODIFY SIGNAL

SHEET No.	(N) RELOCATE Exist PPB POST
	EA
E-3	2

(N) - NOT A SEPARATE PAY ITEM, FOR INFORMATION ONLY

ELECTRICAL QUANTITIES

E-4

STATE OF CALIFORNIA - DEPARTMENT OF TRANSPORTATION
Caltrans® TRAFFIC DESIGN

FUNCTIONAL SUPERVISOR: HASSAN MANNAA
CALCULATED-DESIGNED BY: STANLEY L. JOHNSON
CHECKED BY: STANLEY L. JOHNSON
REVISED BY
DATE REVISED

LAST REVISION 00-00-00
DATE PLOTTED => 14-APR-2014
TIME PLOTTED => 09:12

M

Maint	MAINTENANCE
Max	MAXIMUM
MB	METAL BEAM
MBB	METAL BEAM BARRIER
MBGR	METAL BEAM GUARD RAILING
Med	MEDIAN
MGS	MIDWEST GUARDRAIL SYSTEM
MH	MANHOLE
Min	MINIMUM
Misc	MISCELLANEOUS
Misc I & S	MISCELLANEOUS IRON AND STEEL
Mkr	MARKER
Mod	MODIFIED,
	MODIFY
Mon	MONUMENT
MP	METAL PLATE
MPGR	METAL PLATE GUARD RAILING
MR	MOVEMENT RATING
MSE	MECHANICALLY STABILIZED EMBANKMENT
Mt	MOUNTAIN, MOUNT
Mtl	MATERIAL
MVP	MAINTENANCE VEHICLE PULLOUT

N

N	NORTH
NB	NORTHBOUND
No.	NUMBER (MUST HAVE PERIOD)
Nos.	NUMBERS (MUST HAVE PERIOD)
NPS	NOMINAL PIPE SIZE
NS	NEAR SIDE
NSP	NEW STANDARD PLAN
NTS	NOT TO SCALE

O

Oblr	OBLITERATE
OC	OVERCROSSING
OD	OUTSIDE DIAMETER
OF	OUTSIDE FACE
OG	ORIGINAL GROUND
OGAC	OPEN GRADED ASPHALT CONCRETE
OGFC	OPEN GRADED FRICTION COURSE
OH	OVERHEAD
OHWM	ORDINARY HIGH WATER MARK
O-O	OUT TO OUT
Opp	OPPOSITE
OSD	OVERSIDE DRAIN

P

P	PAGE
PAP	PERFORATED ALUMINUM PIPE
PB	PULL BOX
PC	POINT OF CURVATURE,
	PRECAST
PCC	POINT OF COMPOUND CURVE,
	PORTLAND CEMENT CONCRETE
PCMS	PORTABLE CHANGEABLE MESSAGE SIGN
PCP	PERFORATED CONCRETE PIPE,
	PRESTRESSED CONCRETE PIPE
PCVC	POINT OF COMPOUND VERTICAL CURVE
PEC	PERMIT TO ENTER AND CONSTRUCT
Ped	PEDESTRIAN
Ped OC	PEDESTRIAN OVERCROSSING
Ped UC	PEDESTRIAN UNDERCROSSING
Perm Mtl	PERMEABLE MATERIAL

P continued

PG	PROFILE GRADE
PI	POINT OF INTERSECTION
PJP	PARTIAL JOINT PENETRATION
Pkwy	PARKWAY
ℙ,PL	PLATE
P/L	PROPERTY LINE
PM	POST MILE,
	TIME FROM NOON TO MIDNIGHT
PN	PAVING NOTCH
POC	POINT OF HORIZONTAL CURVE
POT	POINT OF TANGENT
POVC	POINT OF VERTICAL CURVE
PP	PIPE PILE,
	PLASTIC PIPE,
	POWER POLE
PPL	PREFORMED PERMEABLE LINER
PPP	PERFORATED PLASTIC PIPE
PRC	POINT OF REVERSE CURVE
PRF	PAVEMENT REINFORCING FABRIC
PRVC	POINT OF REVERSE VERTICAL CURVE
PS&E	PLANS, SPECIFICATIONS AND ESTIMATES
PS, P/S	PRESTRESSED
PSP	PERFORATED STEEL PIPE
PT	POINT OF TANGENCY
PVC	POLYVINYL CHLORIDE
Pvmt	PAVEMENT

Q

Qty	QUANTITY

R

R	RADIUS
R & D	REMOVE AND DISPOSE
R & S	REMOVE AND SALVAGE
R/C	RATE OF CHANGE
RCA	REINFORCED CONCRETE ARCH
RCB	REINFORCED CONCRETE BOX
RCP	REINFORCED CONCRETE PIPE
RCPA	REINFORCED CONCRETE PIPE ARCH
Rd	ROAD
Reinf	REINFORCED,
	REINFORCEMENT,
	REINFORCING
Rel	RELOCATE
Repl	REPLACEMENT
Ret	RETAINING
Rev	REVISED, REVISION
Rdwy	ROADWAY
RHMA	RUBBERIZED HOT MIX ASPHALT
Riv	RIVER
RM	ROAD-MIXED
RP	RADIUS POINT,
	REFERENCE POINT
RR	RAILROAD
RSP	ROCK SLOPE PROTECTION,
	REVISED STANDARD PLAN
Rt	RIGHT
Rte	ROUTE
RW	REDWOOD,
	RETAINING WALL
R/W	RIGHT OF WAY
Rwy	RAILWAY

S

S	SOUTH,
	SUPPLEMENT
SAE	STRUCTURE APPROACH EMBANKMENT
Salv	SALVAGE
SAPP	STRUCTURAL ALUMINUM PLATE PIPE
SB	SOUTHBOUND
SC	SAND CUSHION
SCSP	SLOTTED CORRUGATED STEEL PIPE
SD	STORM DRAIN
Sec	SECOND,
	SECTION
Sep	SEPARATION
SG	SUBGRADE
Shld	SHOULDER
Sht	SHEET
Sim	SIMILAR
℄	STATION LINE
SM	SELECTED MATERIAL
Spec	SPECIAL,
	SPECIFICATIONS
SPP	SLOTTED PLASTIC PIPE
SS	SLOPE STAKE
SSBM	STRAP AND SADDLE BRACKET METHOD
SSD	STRUCTURAL SECTION DRAIN
SSPA	STRUCTURAL STEEL PLATE ARCH
SSPP	STRUCTURAL STEEL PLATE PIPE
SSPPA	STRUCTURAL STEEL PLATE PIPE ARCH
SSRP	STEEL SPIRAL RIB PIPE
St	STREET
Sta	STATION
STBB	SINGLE THRIE BEAM BARRIER
Std	STANDARD
Str	STRUCTURE
Surf	SURFACING
SW	SIDEWALK,
	SOUND WALL
Swr	SEWER
Sym	SYMMETRICAL
S4S	SURFACE 4 SIDES

T

T	SEMI-TANGENT
Tan	TANGENT
TBB	THRIE BEAM BARRIER
Tbr	TIMBER
TC	TOP OF CURB
TCB	TRAFFIC CONTROL BOX
TCE	TEMPORARY CONSTRUCTION EASEMENT
Tel	TELEPHONE
Temp	TEMPORARY
TG	TOP OF GRADE
Tot	TOTAL
TP	TELEPHONE POLE
TPB	TREATED PERMEABLE BASE
TPM	TREATED PERMEABLE MATERIAL
Trans	TRANSITION

T continued

TS	TRANSVERSE,
	TRAFFIC SIGNAL,
	TUBULAR STEEL
Typ	TYPICAL

U

UC	UNDERCROSSING
UD	UNDERDRAIN
UG	UNDERGROUND
UON	UNLESS OTHERWISE NOTED
UP	UNDERPASS

V

V	VALVE,
	DESIGN SPEED
Var	VARIABLE,
	VARIES
VC	VERTICAL CURVE
VCP	VITRIFIED CLAY PIPE
Vert	VERTICAL
Via	VIADUCT
Vol	VOLUME

W

W	WEST,
	WIDTH
WB	WESTBOUND
WH	WEEP HOLE
WM	WIRE MESH
WS	WATER SURFACE
WSP	WELDED STEEL PIPE
Wt	WEIGHT
WV	WATER VALVE
WW	WINGWALL
WWLOL	WINGWALL LAYOUT LINE

X

X Sec	CROSS SECTION
Xing	CROSSING

Y

Yr	YEAR
Yrs	YEARS

Dist	COUNTY	ROUTE	POST MILES TOTAL PROJECT	SHEET No.	TOTAL SHEETS
07	LA	5	6.8/13.8	122	176

Grace M. Tsushima
REGISTERED CIVIL ENGINEER

July 19, 2013
PLANS APPROVAL DATE

REGISTERED PROFESSIONAL ENGINEER
Grace M. Tsushima
No. C49814
Exp. 9-30-14
CIVIL
STATE OF CALIFORNIA

THE STATE OF CALIFORNIA OR ITS OFFICERS OR AGENTS SHALL NOT BE RESPONSIBLE FOR THE ACCURACY OR COMPLETENESS OF SCANNED COPIES OF THIS PLAN SHEET.

TO ACCOMPANY PLANS DATED 1-21-14

UNIT OF MEASUREMENT SYMBOLS:

Some of the symbols used in the project plan quantity tables and in the Bid Item List are:

TABLE A

SYMBOL USED	DEFINITIONS
ACRE	ACRE
CF	CUBIC FOOT
CY	CUBIC YARD
EA	EACH
GAL	GALLON
LB	POUND
LF	LINEAR FOOT
SQFT	SQUARE FOOT
SQYD	SQUARE YARD
STA	100 FEET
TAB	TABLET
TON	2,000 POUNDS

Some of the symbols used in the plans other than in the project plan quantity tables are:

TABLE B

SYMBOL USED	DEFINITIONS
ksi	KIPS PER SQUARE INCH
ksf	KIPS PER SQUARE FOOT
psi	POUNDS PER SQUARE INCH
psf	POUNDS PER SQUARE FOOT
lb/ft^3, pcf	POUNDS PER CUBIC FOOT
tsf	TONS PER SQUARE FOOT
mph, MPH *	MILES PER HOUR
ø	NOMINAL DIAMETER
oz	OUNCE
lb	POUND
kip	1,000 POUNDS
cal	CALORIE
ft	FOOT OR FEET
gal	GALLON

* For use on a sign panel only

STATE OF CALIFORNIA
DEPARTMENT OF TRANSPORTATION

ABBREVIATIONS (SHEET 2 OF 2)

NO SCALE

RSP A10B DATED JULY 19, 2013 SUPERSEDES STANDARD PLAN A10B DATED MAY 20, 2011 - PAGE 2 OF THE STANDARD PLANS BOOK DATED 2010.

REVISED STANDARD PLAN RSP A10B

2010 REVISED STANDARD PLAN RSP A10B

6-7-13

Dist	COUNTY	ROUTE	POST MILES TOTAL PROJECT	SHEET No.	TOTAL SHEETS
07	LA	5	6.8/13.8	123	176

REGISTERED CIVIL ENGINEER

July 19, 2013
PLANS APPROVAL DATE

REGISTERED PROFESSIONAL ENGINEER Roberta L. McLaughlin No. C40375 Exp. 3-31-15 CIVIL STATE OF CALIFORNIA

THE STATE OF CALIFORNIA OR ITS OFFICERS OR AGENTS SHALL NOT BE RESPONSIBLE FOR THE ACCURACY OR COMPLETENESS OF SCANNED COPIES OF THIS PLAN SHEET.

TO ACCOMPANY PLANS DATED 1-21-14

EXIT RAMP NEUTRAL AREA (GORE) TREATMENT

DETAIL 36

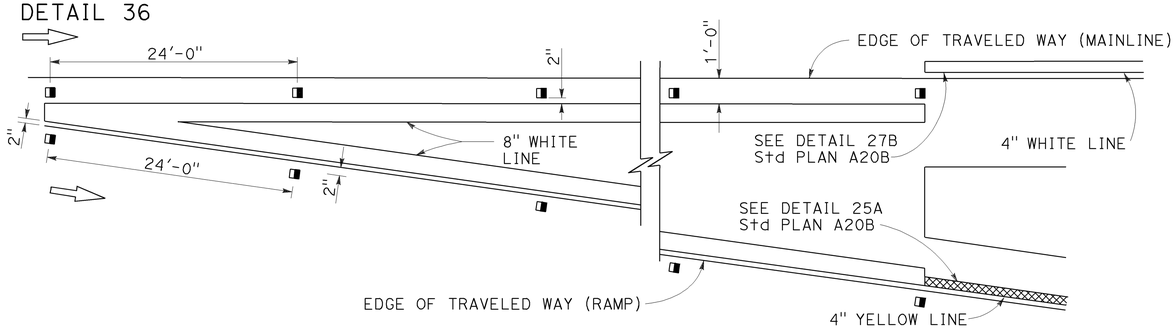

ENTRANCE RAMP NEUTRAL AREA (MERGE) TREATMENT

DETAIL 36A

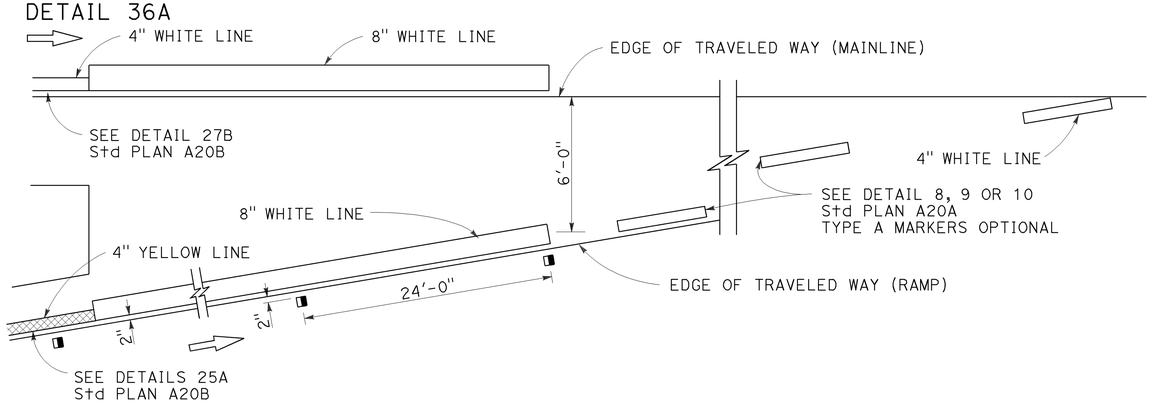

ENTRANCE RAMP NEUTRAL AREA (ACCELERATION LANE) TREATMENT

DETAIL 36B

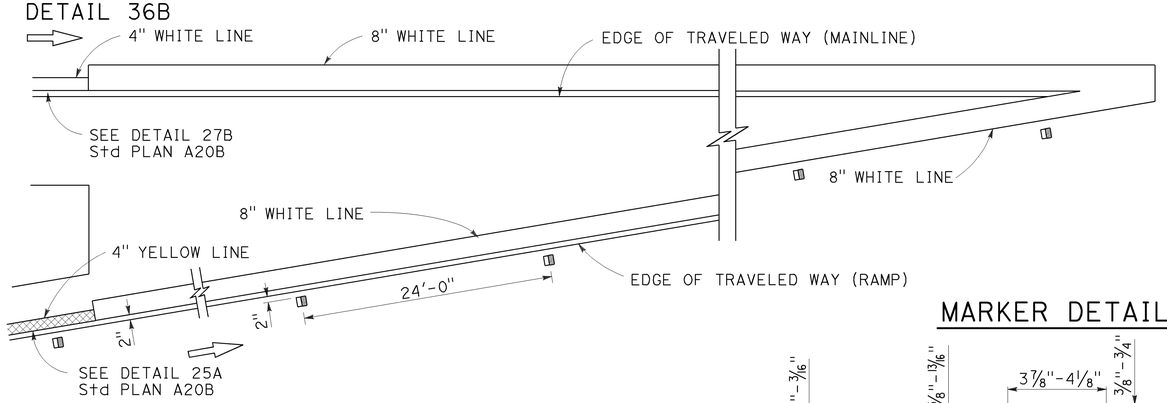

LANE DROP AT EXIT RAMPS

DETAIL 37

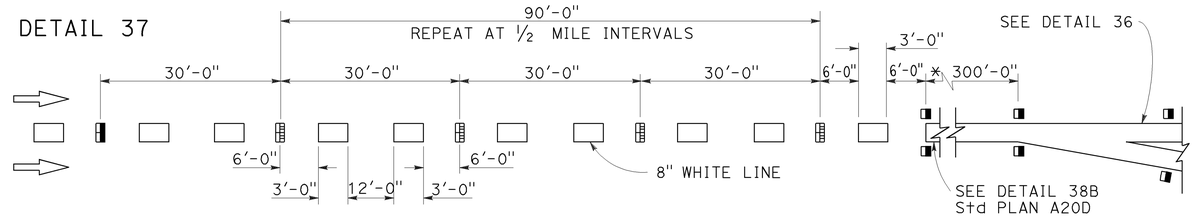

DETAIL 37A

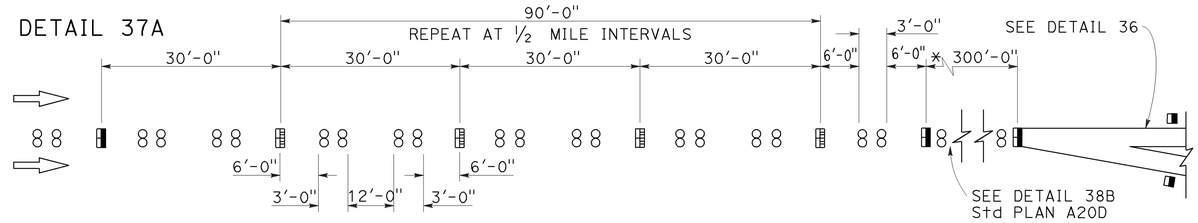

* The solid channelizing line shown may be omitted on short auxiliary lanes where weaving length is critical.

LANE DROP AT INTERSECTIONS

DETAIL 37B

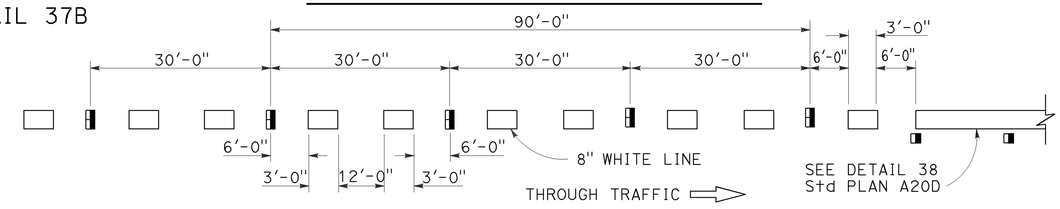

DETAIL 37C

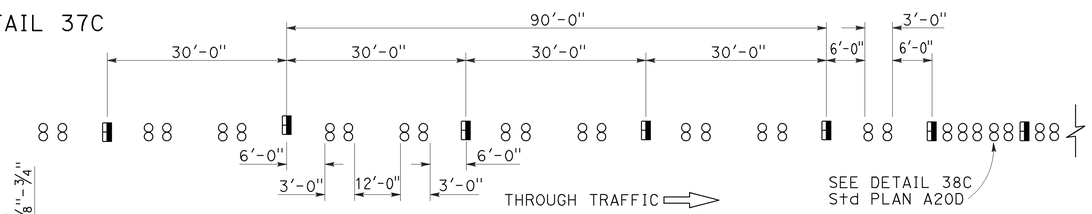

MARKER DETAILS

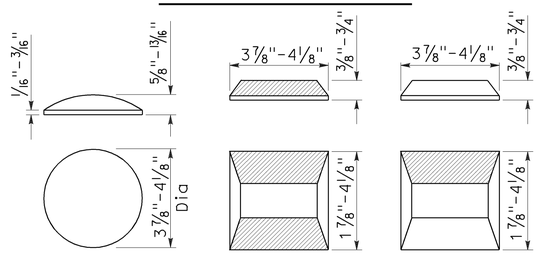

LEGEND:

MARKERS

- ○ TYPE A WHITE NON-REFLECTIVE
- ⊟ TYPE C RED-CLEAR RETROREFLECTIVE
- ◨ TYPE G ONE-WAY CLEAR RETROREFLECTIVE

STATE OF CALIFORNIA
DEPARTMENT OF TRANSPORTATION

PAVEMENT MARKERS AND TRAFFIC LINE TYPICAL DETAILS

NO SCALE

RSP A20C DATED JULY 19, 2013 SUPERSEDES STANDARD PLAN A20C DATED MAY 20, 2011 - PAGE 11 OF THE STANDARD PLANS BOOK DATED 2010.

REVISED STANDARD PLAN RSP A20C

2010 REVISED STANDARD PLAN RSP A20C

4-29-13

Dist	COUNTY	ROUTE	POST MILES TOTAL PROJECT	SHEET No.	TOTAL SHEETS
07	LA	5	6.8/13.8	124	176

REGISTERED CIVIL ENGINEER

April 20, 2012
PLANS APPROVAL DATE

REGISTERED PROFESSIONAL ENGINEER
Roberta L. McLaughlin
No. C40375
Exp. 3-31-13
CIVIL
STATE OF CALIFORNIA

THE STATE OF CALIFORNIA OR ITS OFFICERS OR AGENTS SHALL NOT BE RESPONSIBLE FOR THE ACCURACY OR COMPLETENESS OF SCANNED COPIES OF THIS PLAN SHEET.

TO ACCOMPANY PLANS DATED 1-21-14

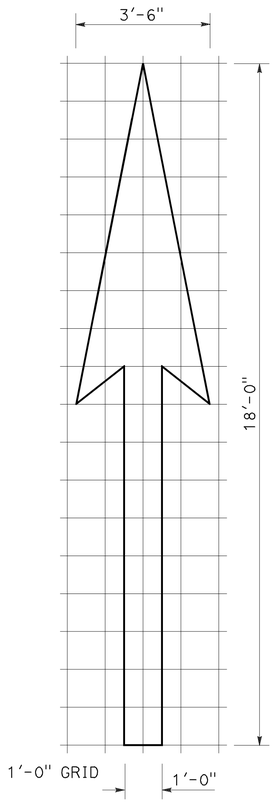

A=25 ft^2

TYPE I 18'-0" ARROW

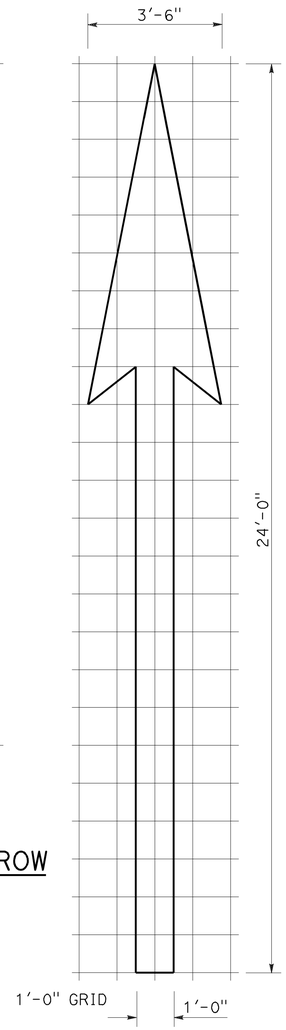

A=31 ft^2

TYPE I 24'-0" ARROW

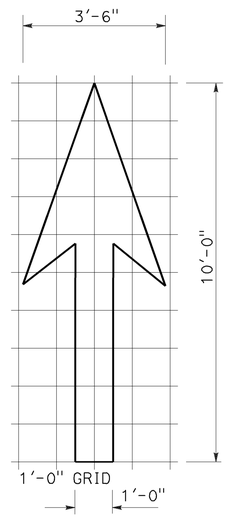

A=14 ft^2

TYPE I 10'-0" ARROW

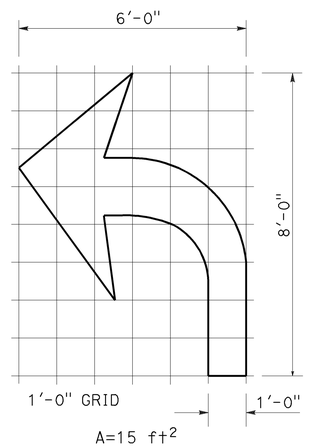

A=15 ft^2

TYPE IV (L) ARROW

(For Type IV (R) arrow, use mirror image)

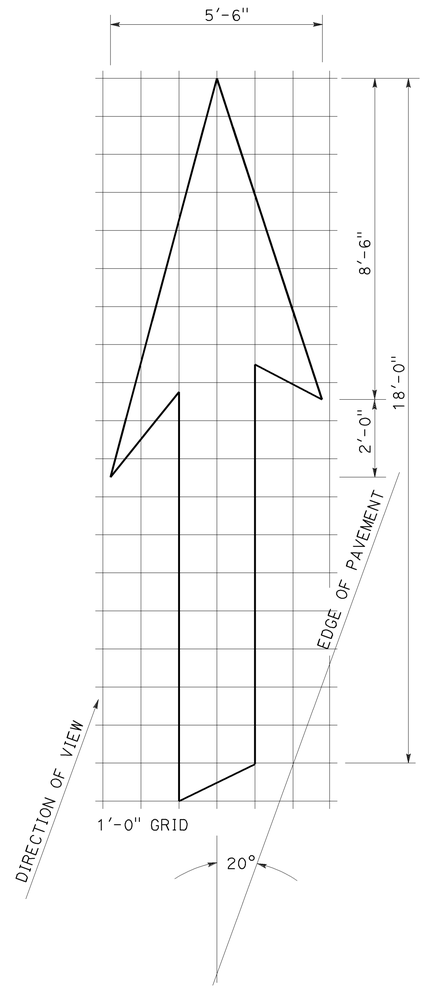

A=42 ft^2

TYPE VI ARROW

Right lane drop arrow
(For left lane, use mirror image)

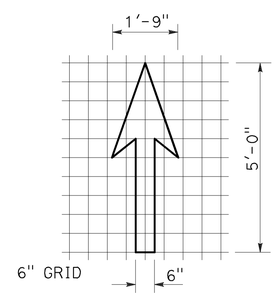

A=3.5 ft^2

BIKE LANE ARROW

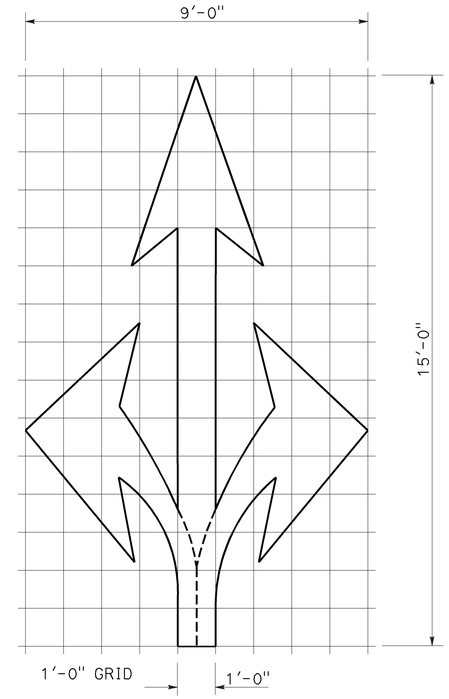

A=36 ft^2

TYPE VIII ARROW

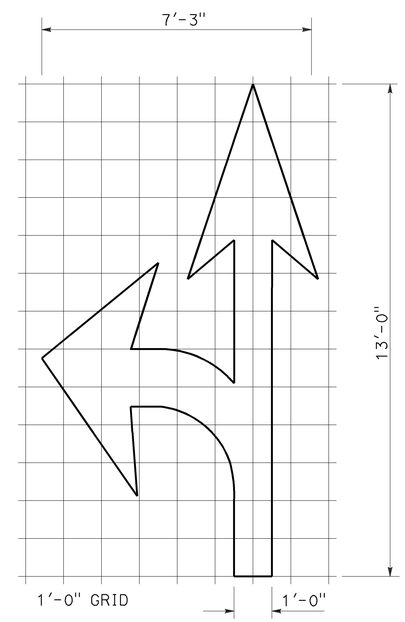

A=27 ft^2

TYPE VII (L) ARROW

(For Type VII (R) arrow, use mirror image)

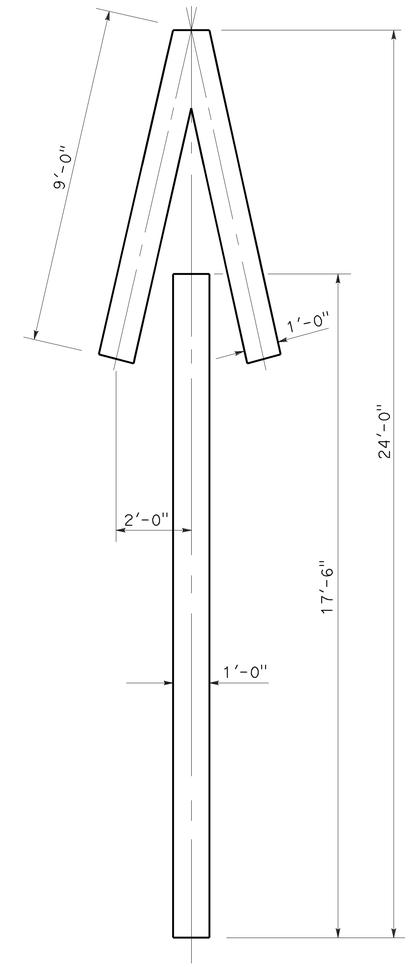

A=33 ft^2

TYPE V ARROW

NOTE:
Minor variations in dimensions may be accepted by the Engineer.

STATE OF CALIFORNIA
DEPARTMENT OF TRANSPORTATION

PAVEMENT MARKINGS ARROWS

NO SCALE

RSP A24A DATED APRIL 20, 2012 SUPERSEDES STANDARD PLAN A24A DATED MAY 20, 2011 - PAGE 13 OF THE STANDARD PLANS BOOK DATED 2010.

REVISED STANDARD PLAN RSP A24A

2010 REVISED STANDARD PLAN RSP A24A

3-14-12

Dist	COUNTY	ROUTE	POST MILES TOTAL PROJECT	SHEET No.	TOTAL SHEETS
07	LA	5	6.8/13.8	125	176

REGISTERED CIVIL ENGINEER

October 19, 2012
PLANS APPROVAL DATE

REGISTERED PROFESSIONAL ENGINEER
Roberta L. McLaughlin
No. C40375
Exp. 3-31-13
CIVIL
STATE OF CALIFORNIA

THE STATE OF CALIFORNIA OR ITS OFFICERS OR AGENTS SHALL NOT BE RESPONSIBLE FOR THE ACCURACY OR COMPLETENESS OF SCANNED COPIES OF THIS PLAN SHEET.

NOTE: TO ACCOMPANY PLANS DATED 1-21-14

Minor variations in dimensions may be accepted by the Engineer.

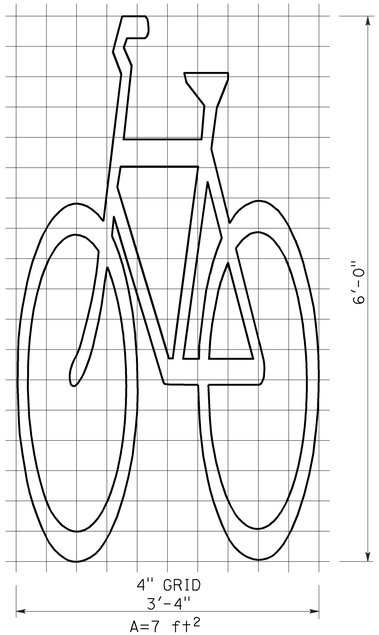

BIKE LANE SYMBOL WITHOUT PERSON

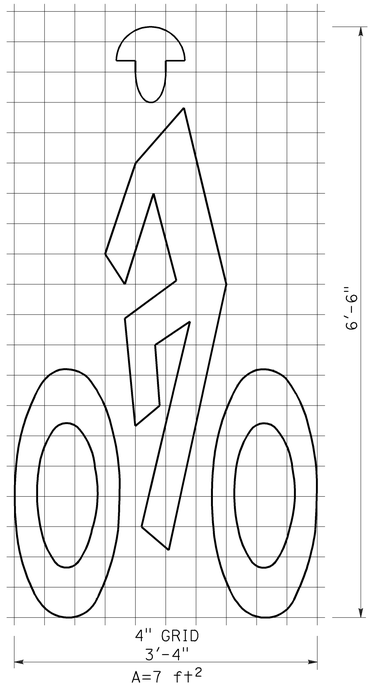

BIKE LANE SYMBOL WITH PERSON

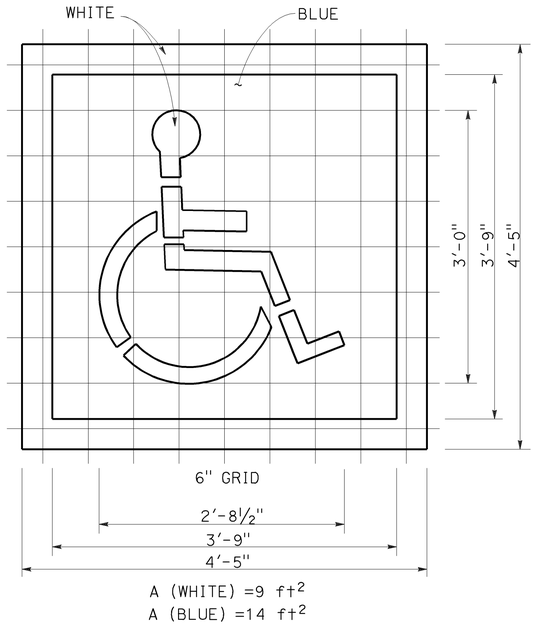

INTERNATIONAL SYMBOL OF ACCESSIBILITY (ISA) MARKING

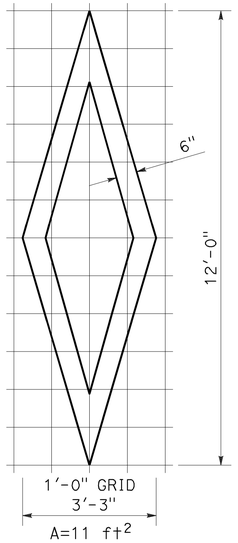

DIAMOND SYMBOL

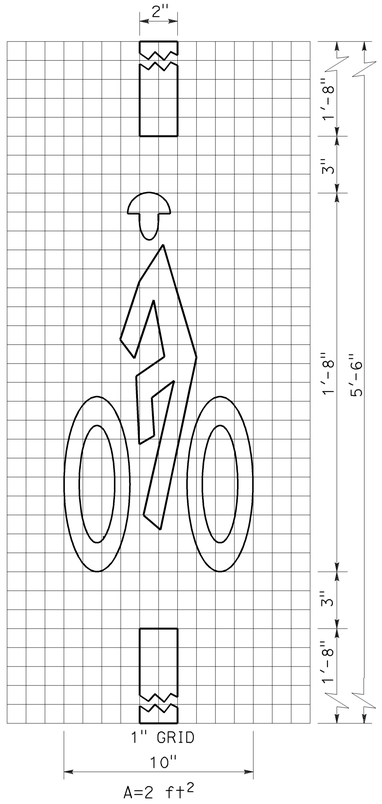

BICYCLE LOOP DETECTOR SYMBOL

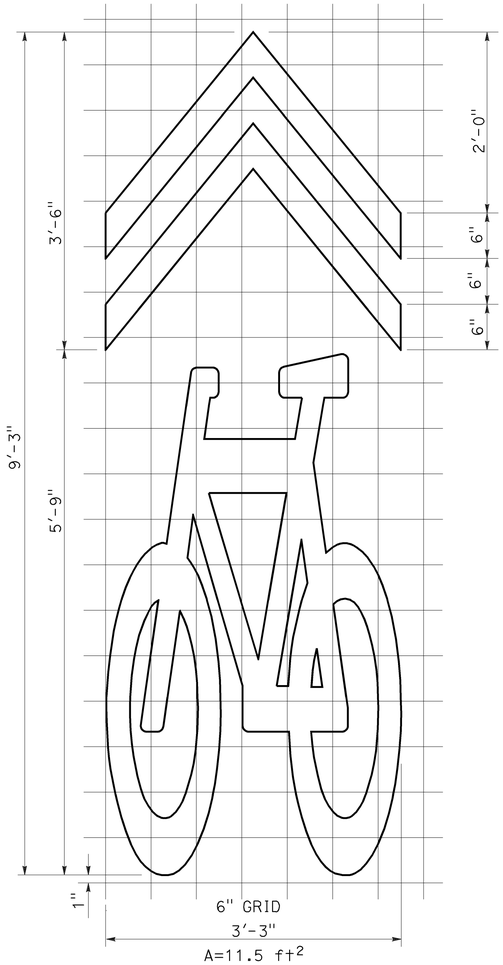

SHARED ROADWAY BICYCLE MARKING

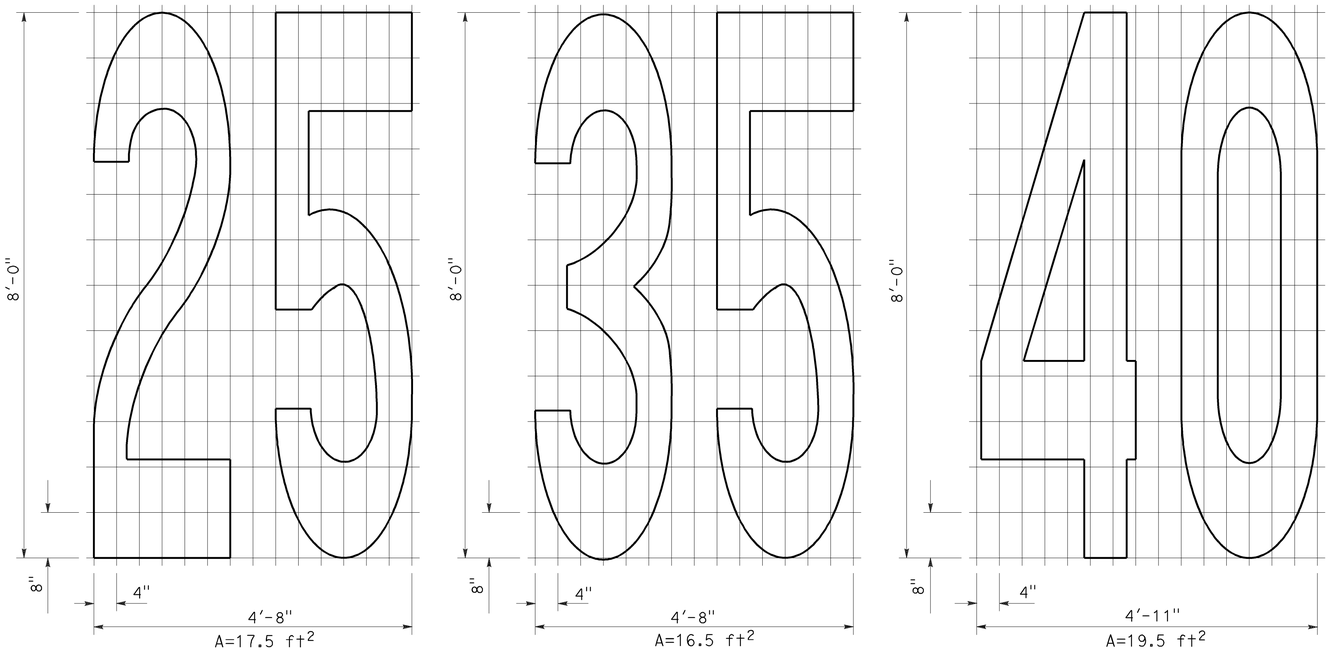

NUMERALS

STATE OF CALIFORNIA
DEPARTMENT OF TRANSPORTATION

PAVEMENT MARKINGS SYMBOLS AND NUMERALS

NO SCALE

RSP A24C DATED OCTOBER 19, 2012 SUPERSEDES STANDARD PLAN A24C DATED MAY 20, 2011 - PAGE 15 OF THE STANDARD PLANS BOOK DATED 2010.

REVISED STANDARD PLAN RSP A24C

2010 REVISED STANDARD PLAN RSP A24C

6-28-12

Dist	COUNTY	ROUTE	POST MILES TOTAL PROJECT	SHEET No.	TOTAL SHEETS
07	LA	5	6.8/13.8	126	176

REGISTERED CIVIL ENGINEER

July 20, 2012
PLANS APPROVAL DATE

REGISTERED PROFESSIONAL ENGINEER
Roberta L. McLaughlin
No. C40375
Exp. 3-31-13
CIVIL
STATE OF CALIFORNIA

THE STATE OF CALIFORNIA OR ITS OFFICERS OR AGENTS SHALL NOT BE RESPONSIBLE FOR THE ACCURACY OR COMPLETENESS OF SCANNED COPIES OF THIS PLAN SHEET.

TO ACCOMPANY PLANS DATED 1-21-14

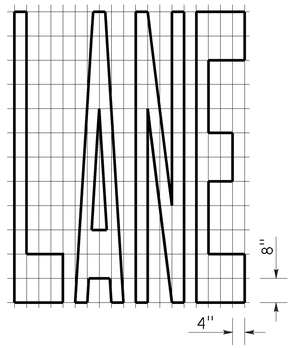

A=24 ft^2

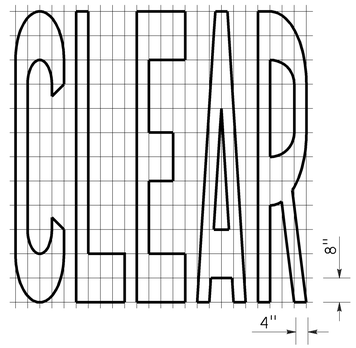

A=27 ft^2

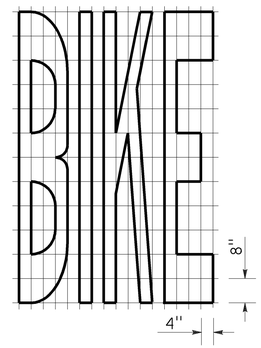

A=21 ft^2

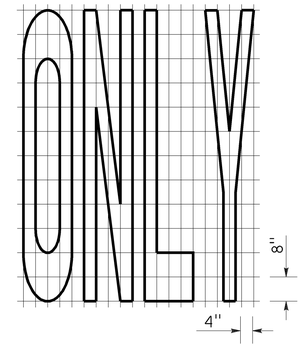

A=22 ft^2

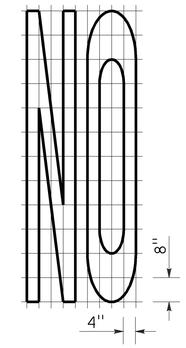

A=14 ft^2

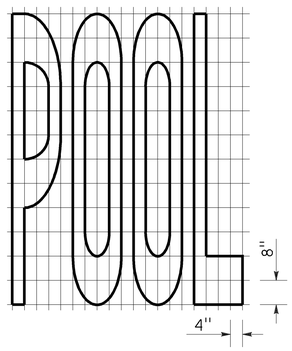

A=23 ft^2

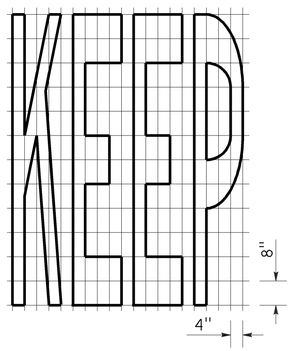

A=24 ft^2

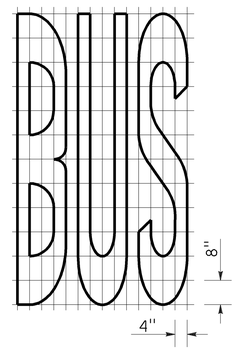

A=20 ft^2

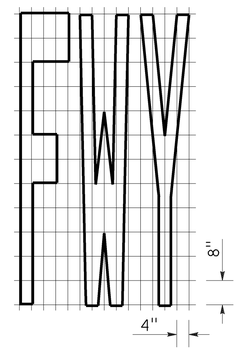

A=16 ft^2

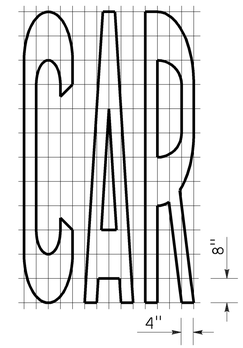

A=17 ft^2

WORD MARKINGS			
ITEM	ft^2	ITEM	ft^2
LANE	24	NO	14
POOL	23	BIKE	21
CAR	17	BUS	20
CLEAR	27	ONLY	22
KEEP	24	FWY	16

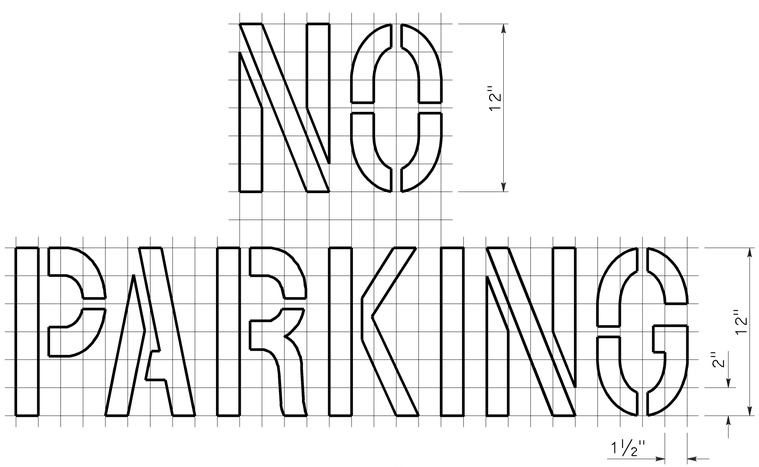

A=2 ft^2
See Notes 6 and 7

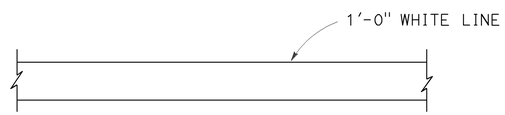

LIMIT LINE (STOP LINE)

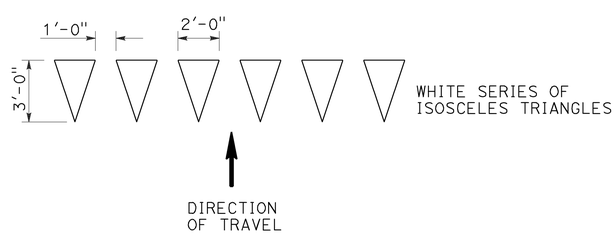

YIELD LINE

NOTES:

1. If a message consists of more than one word, it should read "UP", i.e., the first word should be nearest the driver.
2. The space between words should be at least four times the height of the characters for low speed roads, but not more than ten times the height of the characters. The space may be reduced appropriately where there is limited space because of local conditions.
3. Minor variations in dimensions may be accepted by the Engineer.
4. Portions of a letter, number or symbol may be separated by connecting segments not to exceed 2" in width.
5. The words "NO PARKING" pavement marking is to be used for parking facilities. For typical locations of markings, see Standard Plans A90A and A90B.
6. The words "NO PARKING", shall be painted in white letters no less than 1'-0" high on a contrasting background and located so that it is visible to traffic enforcement officials.

STATE OF CALIFORNIA
DEPARTMENT OF TRANSPORTATION

PAVEMENT MARKINGS WORDS, LIMIT AND YIELD LINES

NO SCALE

RSP A24E DATED JULY 20, 2012 SUPERSEDES STANDARD PLAN A24E
DATED MAY 20, 2011 - PAGE 17 OF THE STANDARD PLANS BOOK DATED 2010.

REVISED STANDARD PLAN RSP A24E

2010 REVISED STANDARD PLAN RSP A24E

6-12-12

Dist	COUNTY	ROUTE	POST MILES TOTAL PROJECT	SHEET No.	TOTAL SHEETS
07	LA	5	6.8/13.8	127	176

REGISTERED CIVIL ENGINEER

July 20, 2012
PLANS APPROVAL DATE

REGISTERED PROFESSIONAL ENGINEER
Roberta L. McLaughlin
No. C40375
Exp. 3-31-13
CIVIL
STATE OF CALIFORNIA

THE STATE OF CALIFORNIA OR ITS OFFICERS OR AGENTS SHALL NOT BE RESPONSIBLE FOR THE ACCURACY OR COMPLETENESS OF SCANNED COPIES OF THIS PLAN SHEET.

TO ACCOMPANY PLANS DATED 1-21-14

2010 REVISED STANDARD PLAN RSP A24F

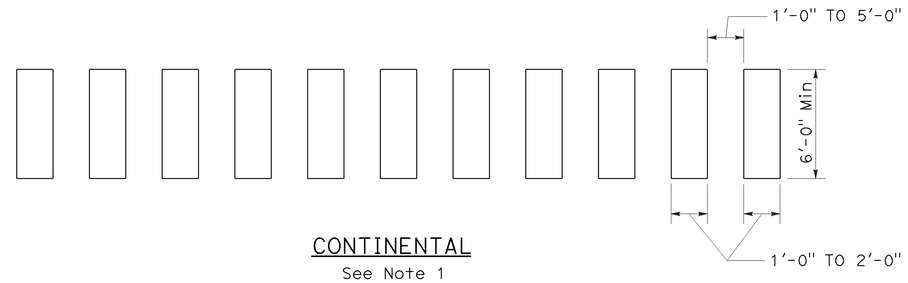

CONTINENTAL
See Note 1

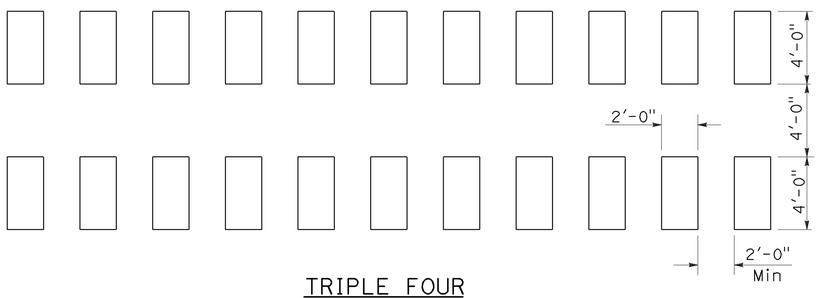

TRIPLE FOUR
See Note 1

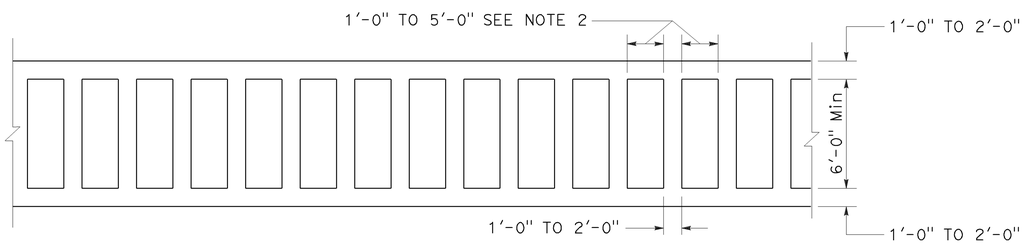

LADDER

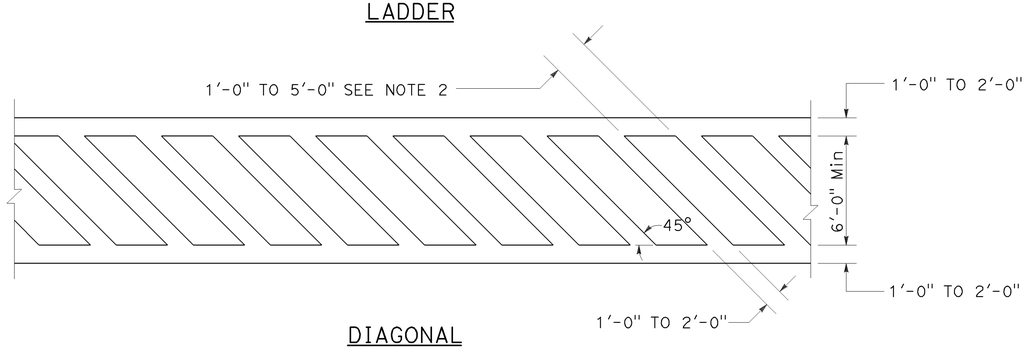

DIAGONAL

HIGHER VISIBILITY CROSSWALKS

NOTES:

1. Spaces between markings should be placed in wheel tracks of each lane.
2. Spacings not to exceed 2.5 times width of longitudinal line.
3. All crosswalk markings must be white except for those near schools must be yellow.

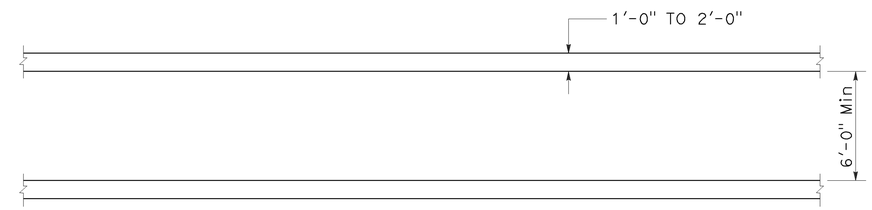

BASIC

STATE OF CALIFORNIA
DEPARTMENT OF TRANSPORTATION

PAVEMENT MARKINGS CROSSWALKS

NO SCALE

RSP A24F DATED JULY 20, 2012 SUPPLEMENTS THE STANDARD PLANS BOOK DATED 2010.

REVISED STANDARD PLAN RSP A24F

6-28-12

Dist	COUNTY	ROUTE	POST MILES TOTAL PROJECT	SHEET No.	TOTAL SHEETS
07	LA	5	6.8/13.8	128	176

Randell D. Hiatt
REGISTERED CIVIL ENGINEER

July 19, 2013
PLANS APPROVAL DATE

REGISTERED PROFESSIONAL ENGINEER
Randell D. Hiatt
No. C50200
Exp. 6-30-15
CIVIL
STATE OF CALIFORNIA

THE STATE OF CALIFORNIA OR ITS OFFICERS OR AGENTS SHALL NOT BE RESPONSIBLE FOR THE ACCURACY OR COMPLETENESS OF SCANNED COPIES OF THIS PLAN SHEET.

TO ACCOMPANY PLANS DATED 1-21-14

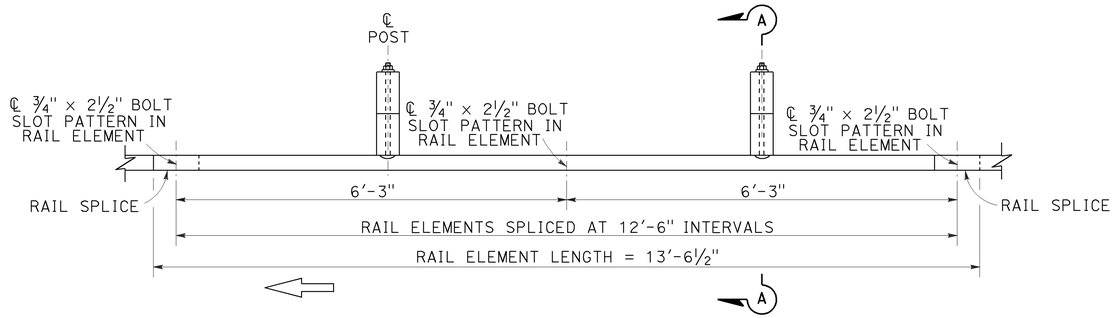

PLAN

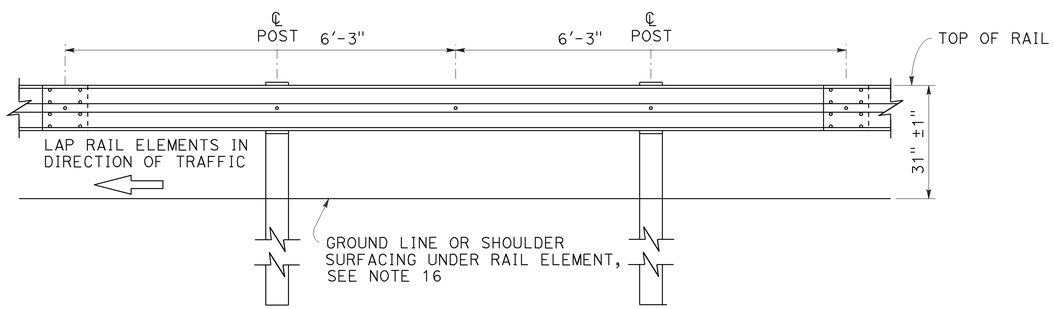

ELEVATION

MIDWEST GUARDRAIL SYSTEM WITH WOOD POST AND BLOCKS

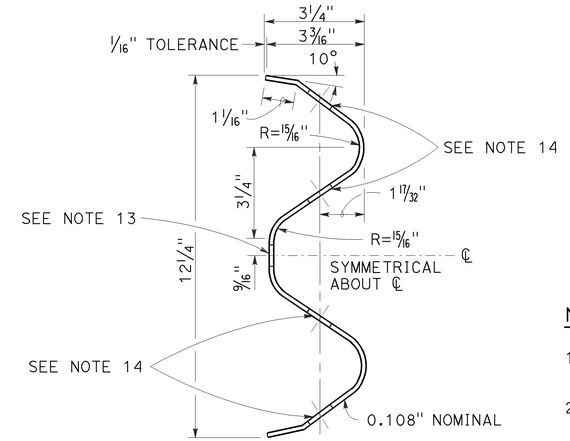

SECTION THRU RAIL ELEMENT

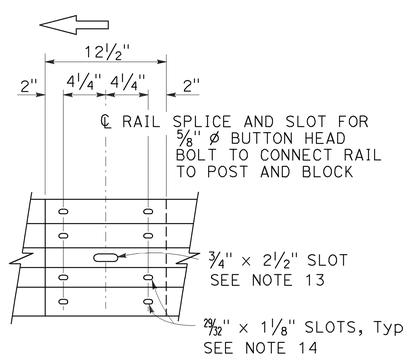

ELEVATION

RAIL ELEMENT SPLICE DETAIL

a) Connect the over lapped end of the rail elements with ⅝" ø × 1⅜" button head oval shoulder splice bolts inserted into the 29⁄32" × 1⅛" slots and bolted together with ⅝" ø recessed hex nuts. Recess of hex nut points toward rail element. A total of 8 bolts and nuts are to be used at each rail splice connection.

b) The ends of the rail elements are to be overlapped in the direction of traffic (see details).

c) Where end cap is to be attached to the end of a rail element, a total of 4 of the above described splice bolts and nuts are to be used.

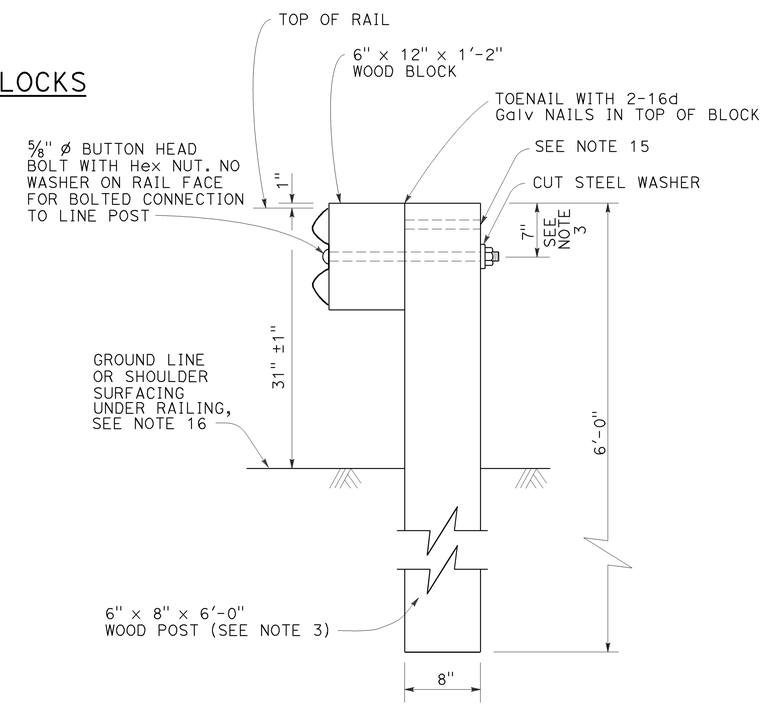

SECTION A-A

TYPICAL WOOD LINE POST INSTALLATION

See Note 4

NOTES:

1. For details of steel post installations, see Revised Standard Plan RSP A77L2.
2. For details of standard hardware used to construct MGS, see Revised Standard Plan RSP A77M1.
3. For details of wood posts and wood blocks used to construct MGS, see Revised Standard Plan RSP A77N1.
4. For additional installation details, see Revised Standard Plan RSP A77N3.
5. MGS post spacing to be 6'-3" center to center, except as otherwise noted.
6. For MGS typical layouts, see the A77P, A77Q and A77R Series of Standard Plans.
7. If railing is connected to terminal system end treatment, use 31" height terminal system end treatment.
8. For MGS end anchor details, see Revised Standard Plans RSP A77S1 and RSP A77T2.
9. For details of MGS transition to bridge railing, see Revised Standard Plan RSP A77U4.
10. For additional details of MSG connection to bridge railing, see Revised Standard Plans RSP A77U1, RSP A77U2 and RSP A77V1.
11. For MGS connection details to abutments and walls, see Revised Standard Plan RSP A77U3.
12. For typical MGS delineation and dike positioning details, see Revised Standard Plan RSP A77N4.
13. Slotted hole for bolted connection of rail element to block and post. See "Section Thru Rail Element".
14. Slotted holes for splice bolts to overlap ends of rail element. See "Section Thru Rail Element".
15. Additional hole in uppermost portion of line post is for potential future adjustments of railing height. See Revised Standard Plan RSP A77N1.
16. Install posts in soil.

STATE OF CALIFORNIA
DEPARTMENT OF TRANSPORTATION

MIDWEST GUARDRAIL SYSTEM STANDARD RAILING SECTION (WOOD POST WITH WOOD BLOCK)

NO SCALE

RSP A77L1 DATED JULY 19, 2013 SUPPLEMENTS STANDARD PLANS BOOK DATED 2010.

REVISED STANDARD PLAN RSP A77L1

2010 REVISED STANDARD PLAN RSP A77L1

Dist	COUNTY	ROUTE	POST MILES TOTAL PROJECT	SHEET No.	TOTAL SHEETS
07	LA	5	6.8/13.8	129	176

Randell D. Hiatt
REGISTERED CIVIL ENGINEER

July 19, 2013
PLANS APPROVAL DATE

REGISTERED PROFESSIONAL ENGINEER
Randell D. Hiatt
No. C50200
Exp. 6-30-15
CIVIL
STATE OF CALIFORNIA

THE STATE OF CALIFORNIA OR ITS OFFICERS OR AGENTS SHALL NOT BE RESPONSIBLE FOR THE ACCURACY OR COMPLETENESS OF SCANNED COPIES OF THIS PLAN SHEET.

TO ACCOMPANY PLANS DATED 1-21-14

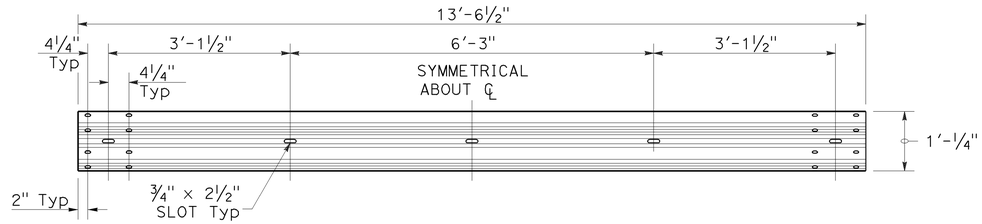

TYPICAL RAIL ELEMENT

NOTE:

1. Slotted holes for splice bolts to overlap ends of rail element.

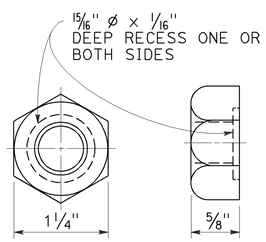

⅝" ø RECESS NUT

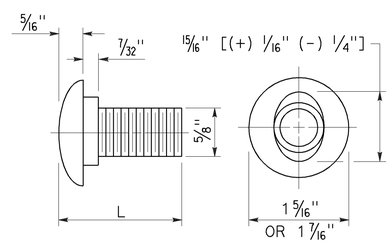

⅝" ø BUTTON HEAD BOLT

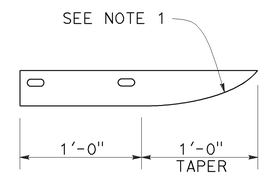

PLAN

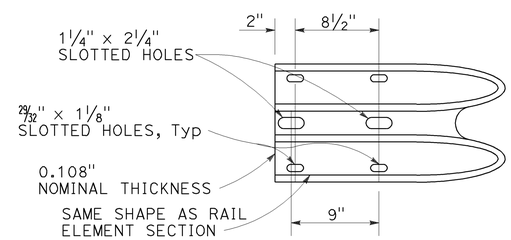

ELEVATION

END CAP
(TYPE A)

BUTTON HEAD BOLT

L	THREAD LENGTH
1⅜"	FULL THREAD LENGTH
2"	FULL THREAD LENGTH
10"	4" Min THREAD LENGTH
18"	4" Min THREAD LENGTH
20"	4" Min THREAD LENGTH
22"	4" Min THREAD LENGTH
26"	4" Min THREAD LENGTH
36"	4" Min THREAD LENGTH
** 2¾"	2" Min THREAD LENGTH
** 19"	4" Min THREAD LENGTH

** For nested rail applications.

STATE OF CALIFORNIA
DEPARTMENT OF TRANSPORTATION

MIDWEST GUARDRAIL SYSTEM STANDARD HARDWARE

NO SCALE

RSP A77M1 DATED JULY 19, 2013 SUPPLEMENTS THE STANDARD PLANS BOOK DATED 2010.

REVISED STANDARD PLAN RSP A77M1

2010 REVISED STANDARD PLAN RSP A77M1

Dist	COUNTY	ROUTE	POST MILES TOTAL PROJECT	SHEET No.	TOTAL SHEETS
07	LA	5	6.8/13.8	130	176

Randell D. Hiatt
REGISTERED CIVIL ENGINEER

July 19, 2013
PLANS APPROVAL DATE

REGISTERED PROFESSIONAL ENGINEER
Randell D. Hiatt
No. C50200
Exp. 6-30-15
CIVIL
STATE OF CALIFORNIA

THE STATE OF CALIFORNIA OR ITS OFFICERS OR AGENTS SHALL NOT BE RESPONSIBLE FOR THE ACCURACY OR COMPLETENESS OF SCANNED COPIES OF THIS PLAN SHEET.

TO ACCOMPANY PLANS DATED 1-21-14

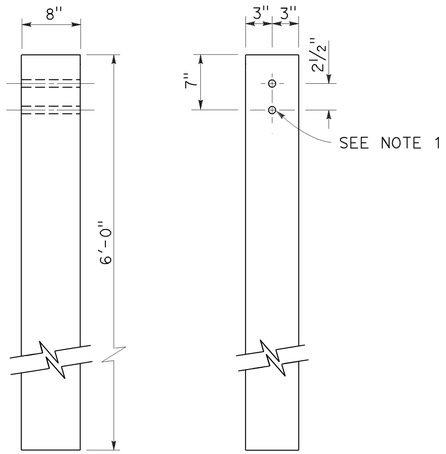

SIDE FRONT

6" x 8" WOOD POST
See Note 3

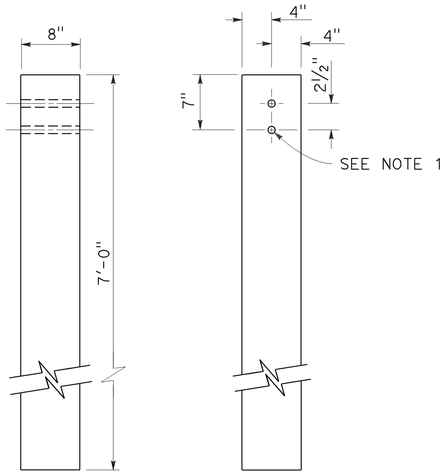

SIDE FRONT

8" x 8" WOOD POST
See Note 4

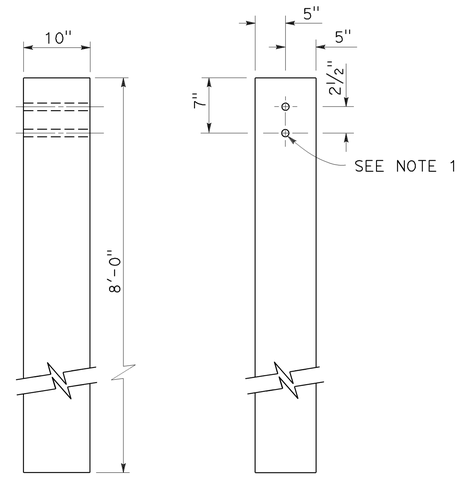

SIDE FRONT

10" x 10" WOOD POST
See Note 5

NOTES:

1. All holes in wood posts and blocks shall be 3/4" Dia ± 1/16".
2. Dimensions shown for wood post are nominal.
3. This post and block combination used for standard line post sections of MGS.
4. This post and 8" x 12" block combination used for line post sections of MGS on narrow roadways.
5. This post and 8" x 12" block combination is typically used where strengthened line post sections of MGS are warranted to shield fixed objects.
6. See Revised Standard Plan RSP A77L3 for use of 6" x 8" and 8" x 8" wood blocks.

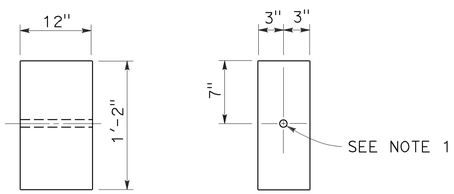

SIDE FRONT

6" x 12" WOOD BLOCK
See Note 3

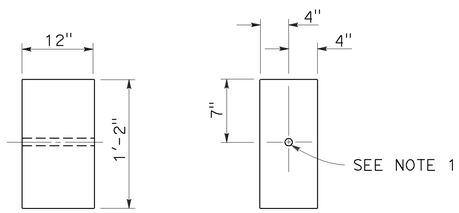

SIDE FRONT

8" x 12" WOOD BLOCK

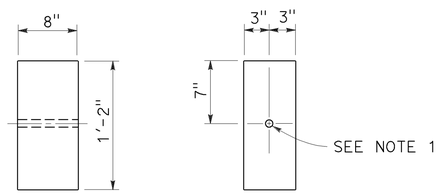

SIDE FRONT

6" x 8" WOOD BLOCK
Only for use with metal beam guard rail see Note 6

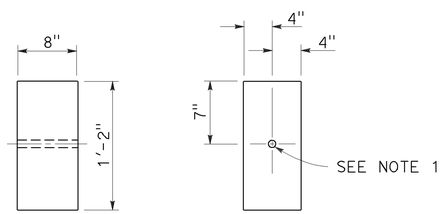

SIDE FRONT

8" x 8" WOOD BLOCK
Only for use with metal beam guard rail see Note 6

STATE OF CALIFORNIA
DEPARTMENT OF TRANSPORTATION

MIDWEST GUARDRAIL SYSTEM WOOD POST AND WOOD BLOCK DETAILS

NO SCALE

RSP A77N1 DATED JULY 19, 2013 SUPPLEMENTS THE STANDARD PLANS BOOK DATED 2010.

REVISED STANDARD PLAN RSP A77N1

2010 REVISED STANDARD PLAN RSP A77N1

7-3-13

Dist	COUNTY	ROUTE	POST MILES TOTAL PROJECT	SHEET No.	TOTAL SHEETS
07	LA	5	6.8/13.8	131	176

Randell D. Hiatt
REGISTERED CIVIL ENGINEER

November 15, 2013
PLANS APPROVAL DATE

REGISTERED PROFESSIONAL ENGINEER
Randell D. Hiatt
No. C50200
Exp. 6-30-15
CIVIL
STATE OF CALIFORNIA

THE STATE OF CALIFORNIA OR ITS OFFICERS OR AGENTS SHALL NOT BE RESPONSIBLE FOR THE ACCURACY OR COMPLETENESS OF SCANNED COPIES OF THIS PLAN SHEET.

TO ACCOMPANY PLANS DATED 1-21-14

2010 REVISED STANDARD PLAN RSP A77N3

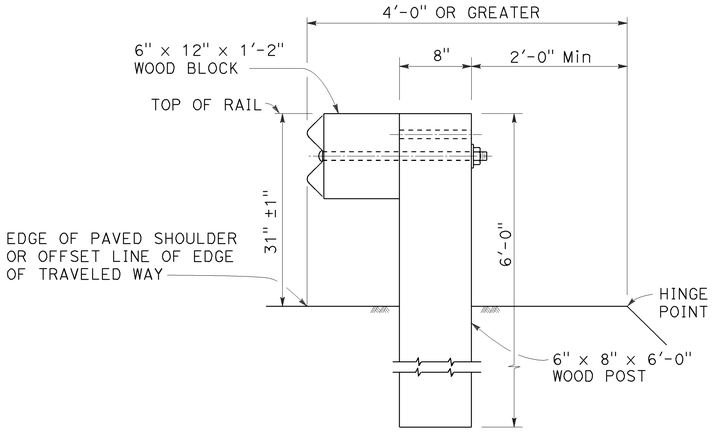

DETAIL A

TYPICAL ROADWAY INSTALLATION

See Note 1

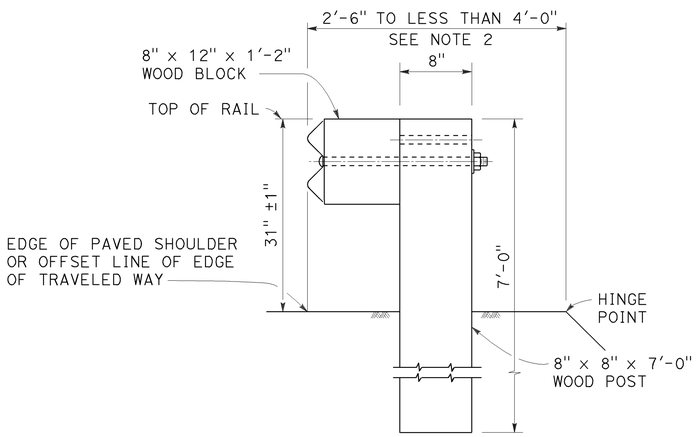

DETAIL B

NARROW ROADWAY INSTALLATION

See Note 1

POST EMBEDMENT

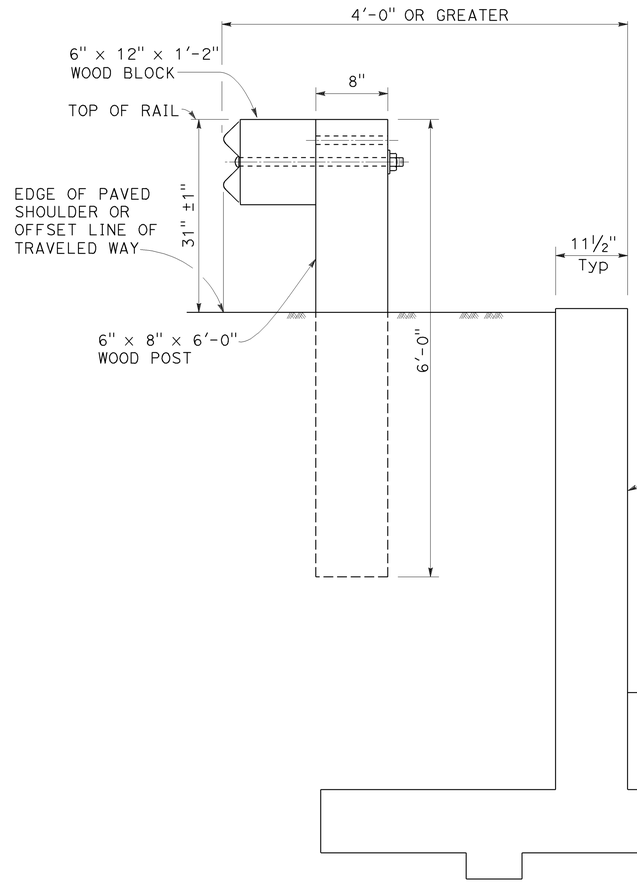

DETAIL C

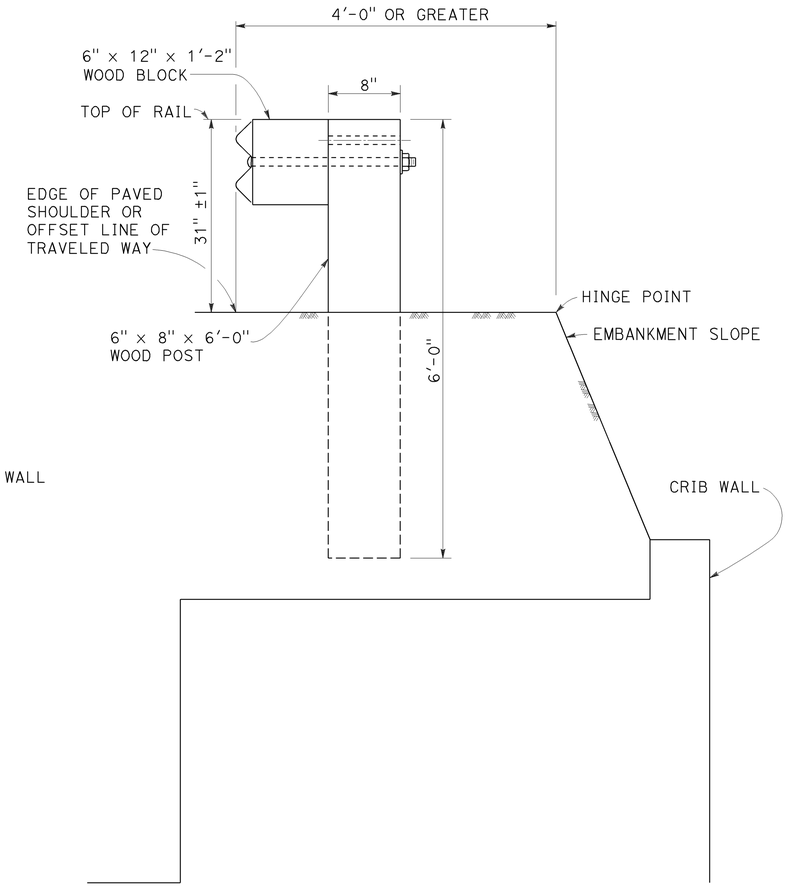

DETAIL D

INSTALLATION AT EARTH RETAINING WALLS

NOTES:

1. These installation details also applicable to steel line post installations. For Detail A, C, and D, where steel line post installations are constructed, W6 x 8.5 or W6 x 9 steel post, 6'-0" in length, with 6" x 12" x 1'-2" notched wood blocks or notched recycled plastic blocks are to be used in place of the size of wood post and wood block shown. For Detail B, where steel line post installations are constructed, W6 x 15 steel post, 8'-0" in length, with 8" x 12" x 1'-2" notched wood blocks or notched recycled plastic blocks are to be used in place of the size of wood post and wood block shown. For additional installation details, see Revised Standard Plan RSP A77L1 and RSP A77L2.
2. Where the distance between the face of the rail and the hinge point is less than 2'-6", see the Project Plans for special details.
3. For dike positioning with MGS installations, see Revised Standard Plan RSP A77N4.

STATE OF CALIFORNIA
DEPARTMENT OF TRANSPORTATION

MIDWEST GUARDRAIL SYSTEM TYPICAL LINE POST EMBEDMENT AND HINGE POINT OFFSET DETAILS

NO SCALE

RSP A77N3 DATED NOVEMBER 15, 2013 SUPERSEDES RSP A77N3
DATED JULY 19, 2013 THAT SUPPLEMENTS THE STANDARD PLANS BOOK DATED 2010.

REVISED STANDARD PLAN RSP A77N3

10-29-13

Dist	COUNTY	ROUTE	POST MILES TOTAL PROJECT	SHEET No.	TOTAL SHEETS
07	LA	5	6.8/13.8	132	176

Randell D. Hiatt
REGISTERED CIVIL ENGINEER

July 19, 2013
PLANS APPROVAL DATE

REGISTERED PROFESSIONAL ENGINEER
Randell D. Hiatt
No. C50200
Exp. 6-30-15
CIVIL
STATE OF CALIFORNIA

THE STATE OF CALIFORNIA OR ITS OFFICERS OR AGENTS SHALL NOT BE RESPONSIBLE FOR THE ACCURACY OR COMPLETENESS OF SCANNED COPIES OF THIS PLAN SHEET.

TO ACCOMPANY PLANS DATED 1-21-14

NOTES:

1. When necessary to place dike more than 7" in front of face of MGS, only Type C dike may be used. For dike details, see Revised Standard Plan RSP A87B.
2. For standard railing post embedment, see Revised Standard Plan RSP A77N3.
3. MGS delineation to be used where shown on the Project Plans.
4. When dike or curb is placed under MGS, the maximum height of the dike or curb shall be 6". Mountable dike should not be used. For dike and curb details, see Revised Standard Plans RSP A87A and RSP A87B.
5. For details of typical distance between the face of rail and hinge point, see Revised Standard Plan RSP A77N3.
6. For steel line posts, use 1/4 - 20 self-tapping screws in 0.22" diameter holes or 1/4" bolts in 9/32" diameter holes.

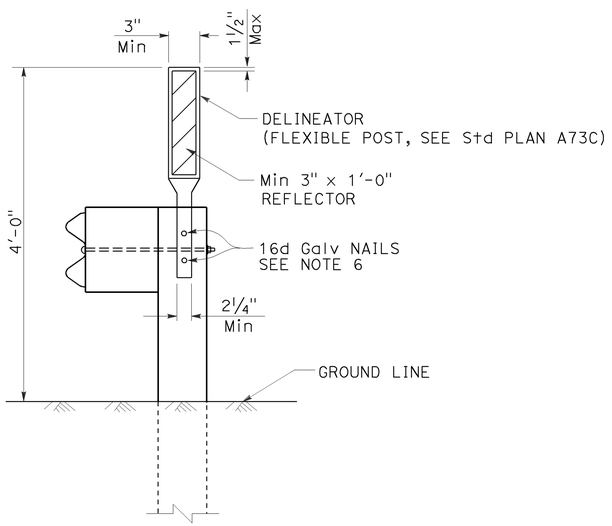

MGS DELINEATION

See Note 3

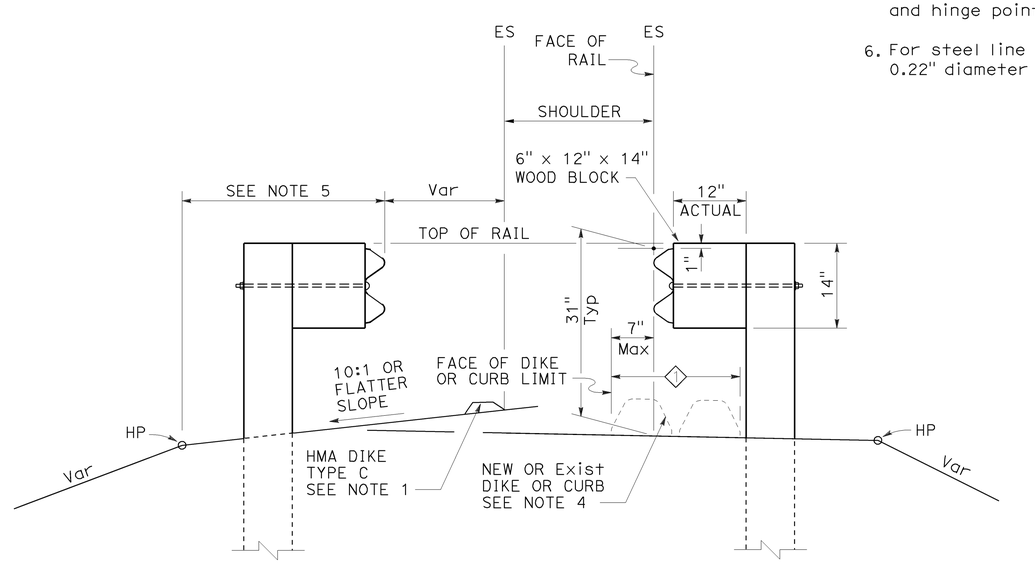

DIKE POSITIONING

See Note 1

1 PERMISSIBLE DIKE OR CURB PLACEMENT AREA

STATE OF CALIFORNIA
DEPARTMENT OF TRANSPORTATION

MIDWEST GUARDRAIL SYSTEM TYPICAL RAILING DELINEATION AND DIKE POSITIONING DETAILS

NO SCALE

RSP A77N4 DATED JULY 19, 2013 SUPPLEMENTS THE STANDARD PLANS BOOK DATED 2010.

REVISED STANDARD PLAN RSP A77N4

2010 REVISED STANDARD PLAN RSP A77N4

7-10-13

Dist	COUNTY	ROUTE	POST MILES TOTAL PROJECT	SHEET No.	TOTAL SHEETS
07	LA	5	6.8/13.8	133	176

Randell D. Hiatt
REGISTERED CIVIL ENGINEER

July 19, 2013
PLANS APPROVAL DATE

REGISTERED PROFESSIONAL ENGINEER
Randell D. Hiatt
No. C50200
Exp. 6-30-15
CIVIL
STATE OF CALIFORNIA

THE STATE OF CALIFORNIA OR ITS OFFICERS OR AGENTS SHALL NOT BE RESPONSIBLE FOR THE ACCURACY OR COMPLETENESS OF SCANNED COPIES OF THIS PLAN SHEET.

TO ACCOMPANY PLANS DATED 1-21-14

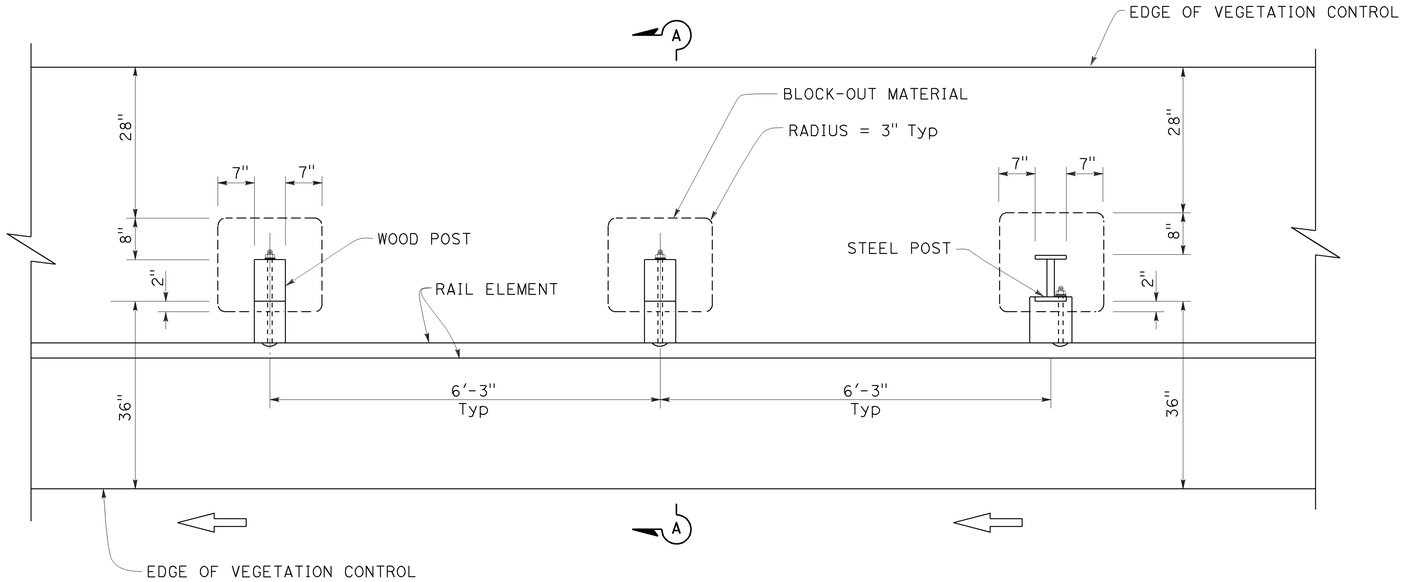

PLAN

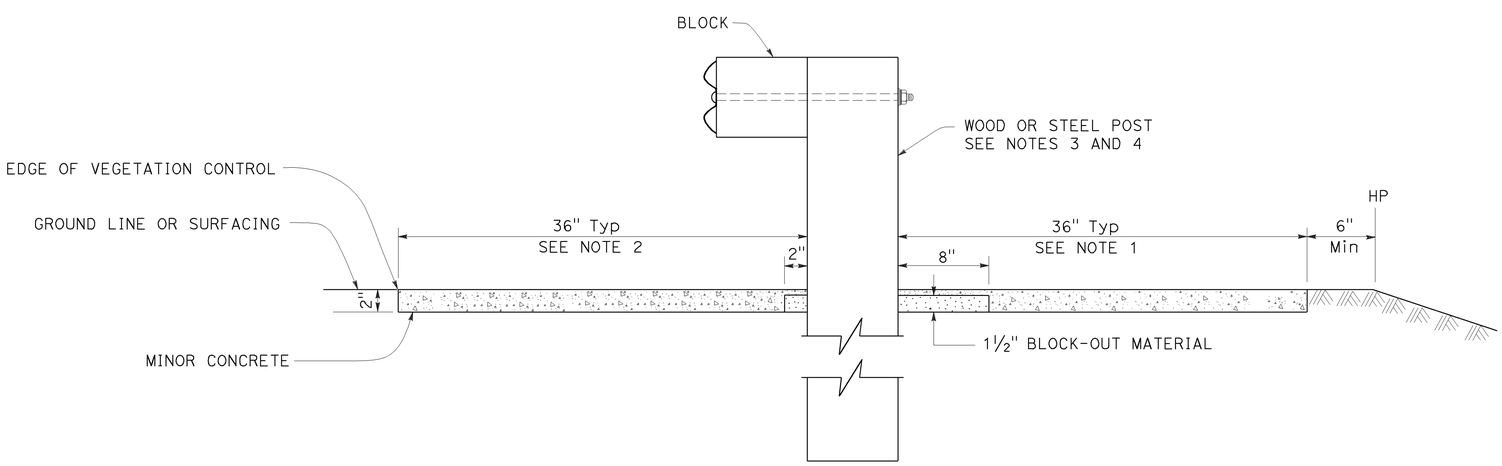

SECTION A-A

NOTES:

1. Where the distance between back of post and hinge point is less than 42", construct vegetation control to 6" from hinge point while maintaining the 8" block-out at back of post. If the 8" block-out at back of post can not be maintained, construct vegetation control flush with the back edge of post.
2. Where dike is constructed under railing, construct vegetation control to back edge of dike. Where paved shoulder is constructed within 36" in front of the post, construct vegetation control to the edge of paved shoulder.
3. For wood post sizes, see Revised Standard Plan RSP A77N1.
4. For steel post sizes, see Revised Standard Plan RSP A77N2.
5. For details not shown, see Revised Standard Plans RSP A77L1 and RSP A77L2.

STATE OF CALIFORNIA
DEPARTMENT OF TRANSPORTATION

MIDWEST GUARDRAIL SYSTEM TYPICAL VEGETATION CONTROL STANDARD RAILING SECTION

NO SCALE

RSP A77N5 DATED JULY 19, 2013 SUPPLEMENTS THE STANDARD PLANS BOOK DATED 2010.

REVISED STANDARD PLAN RSP A77N5

2010 REVISED STANDARD PLAN RSP A77N5

7-3-13

Dist	COUNTY	ROUTE	POST MILES TOTAL PROJECT	SHEET No.	TOTAL SHEETS
07	LA	5	6.8/13.8	134	176

Randell D. Hiatt
REGISTERED CIVIL ENGINEER

July 19, 2013
PLANS APPROVAL DATE

REGISTERED PROFESSIONAL ENGINEER
Randell D. Hiatt
No. C50200
Exp. 6-30-15
CIVIL
STATE OF CALIFORNIA

THE STATE OF CALIFORNIA OR ITS OFFICERS OR AGENTS SHALL NOT BE RESPONSIBLE FOR THE ACCURACY OR COMPLETENESS OF SCANNED COPIES OF THIS PLAN SHEET.

TO ACCOMPANY PLANS DATED 1-21-14

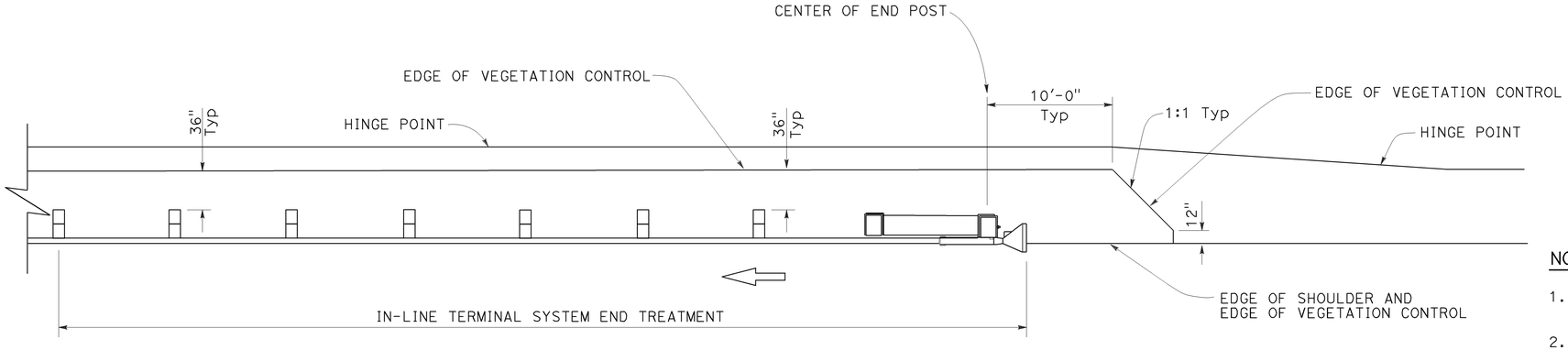

PLAN

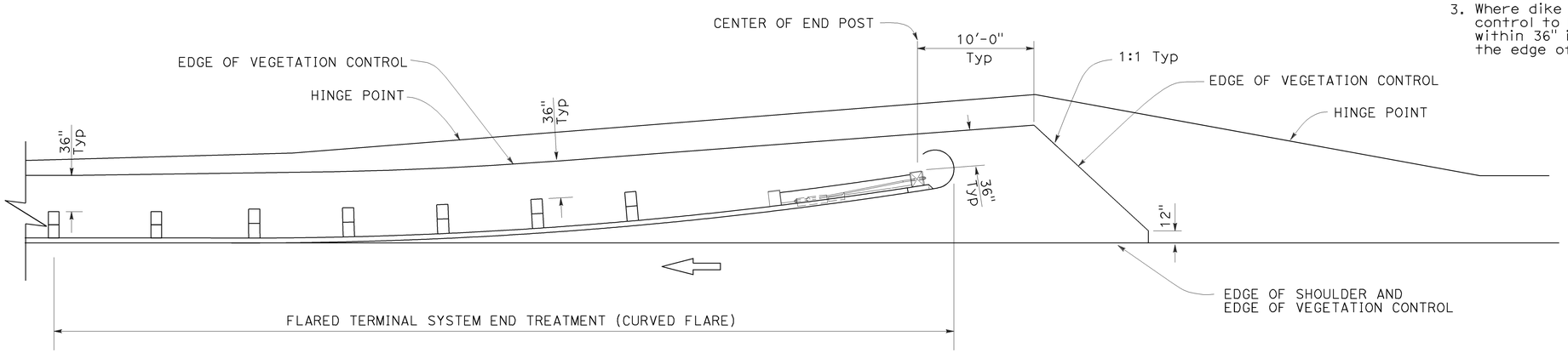

PLAN

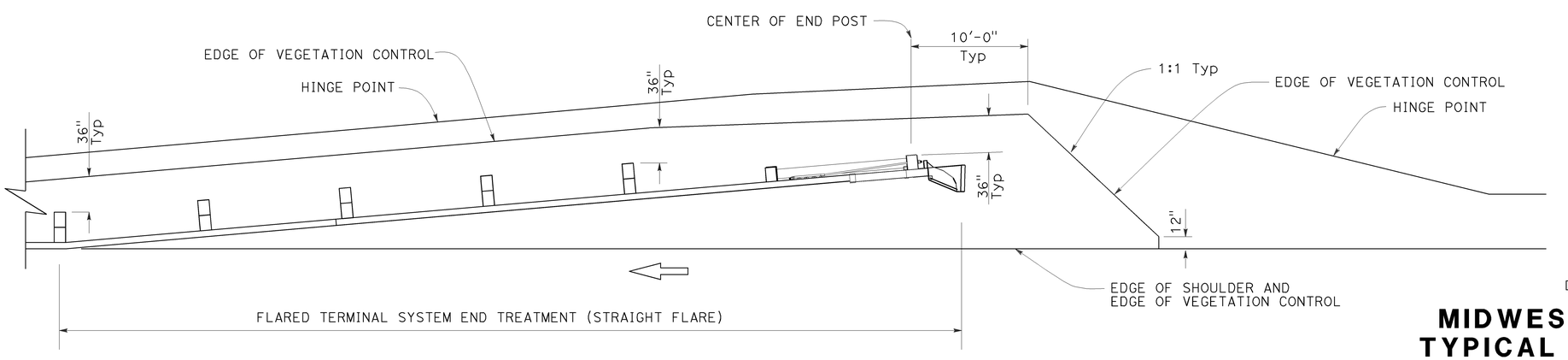

PLAN

NOTES:

1. See Revised Standard Plan RSP A77N5 for additional vegetation control details.
2. Where the distance between back of post and hinge point is less than 42", construct vegetation control to 6" from hinge point while maintaining the 8" block-out at back of post. If the 8" block-out at back of post can not be maintained, construct vegetation control flush with the back edge of post.
3. Where dike is constructed under railing, construct vegetation control to back edge of dike. Where paved shoulder is constructed within 36" in front of the post, construct vegetation control to the edge of paved shoulder.

STATE OF CALIFORNIA
DEPARTMENT OF TRANSPORTATION

MIDWEST GUARDRAIL SYSTEM TYPICAL VEGETATION CONTROL FOR TERMINAL SYSTEM END TREATMENTS

NO SCALE

RSP A77N6 DATED JULY 19, 2013 SUPPLEMENTS THE STANDARD PLANS BOOK DATED 2010.

REVISED STANDARD PLAN RSP A77N6

2010 REVISED STANDARD PLAN RSP A77N6

6-12-13

Dist	COUNTY	ROUTE	POST MILES TOTAL PROJECT	SHEET No.	TOTAL SHEETS
07	LA	5	6.8/13.8	135	176

Randell D. Hiatt
REGISTERED CIVIL ENGINEER

July 19, 2013
PLANS APPROVAL DATE

REGISTERED PROFESSIONAL ENGINEER
Randell D. Hiatt
No. C50200
Exp. 6-30-15
CIVIL
STATE OF CALIFORNIA

THE STATE OF CALIFORNIA OR ITS OFFICERS OR AGENTS SHALL NOT BE RESPONSIBLE FOR THE ACCURACY OR COMPLETENESS OF SCANNED COPIES OF THIS PLAN SHEET.

TO ACCOMPANY PLANS DATED 1-21-14

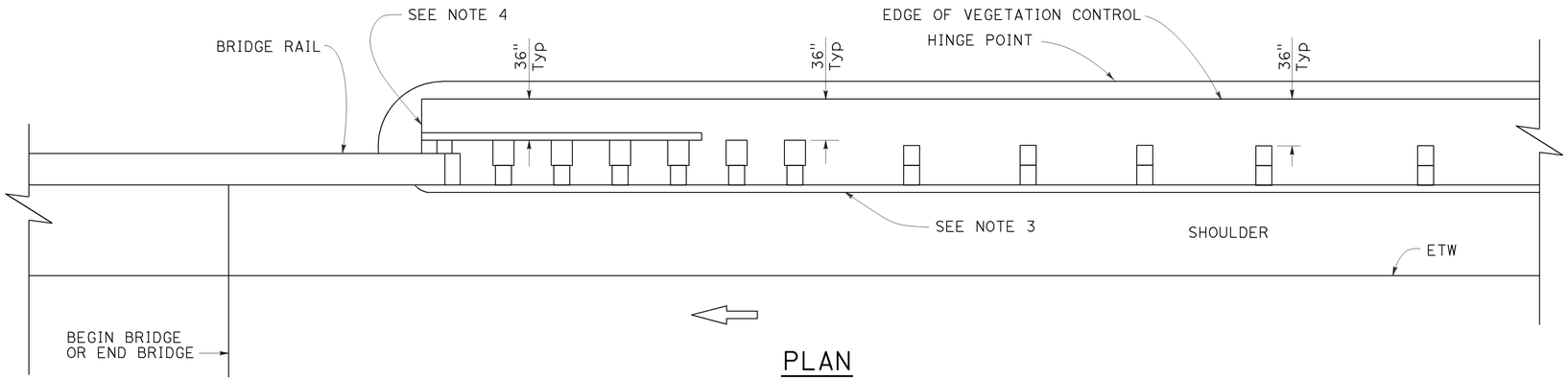

PLAN

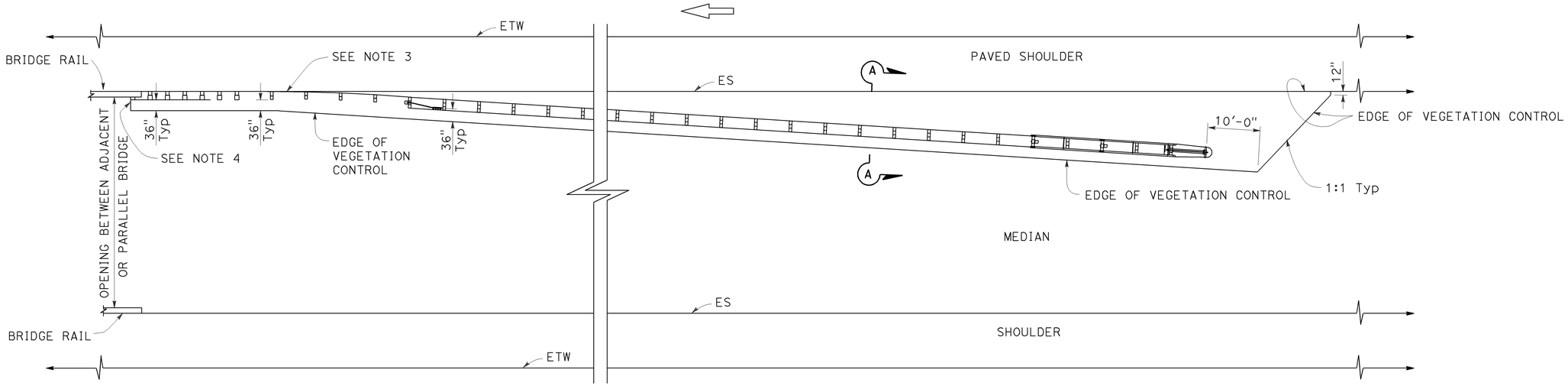

PLAN

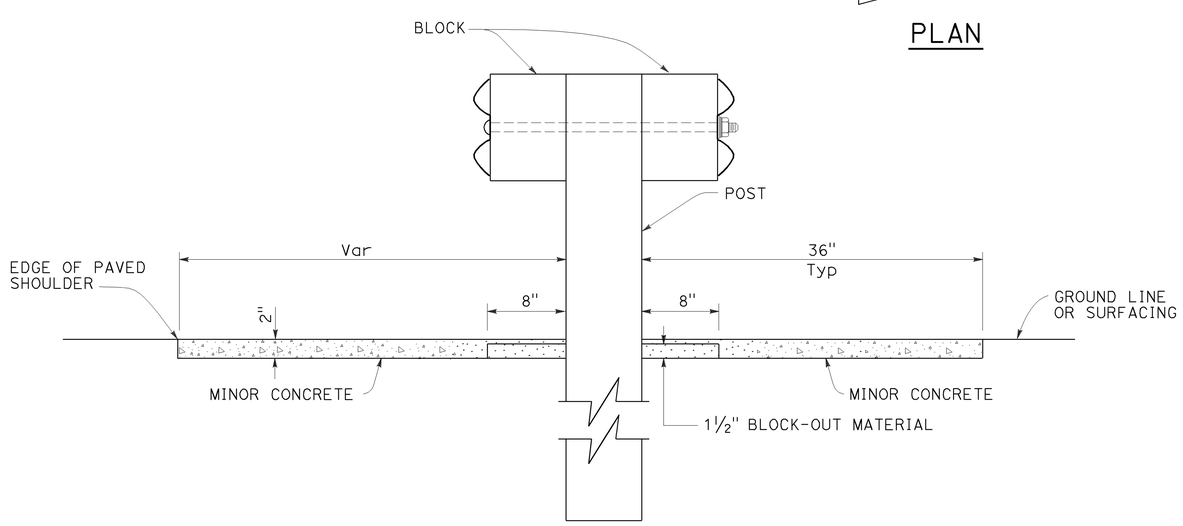

SECTION A-A

NOTES:

1. See Revised Standard Plan RSP A77N5 for additional vegetation control details.
2. Where the distance between back of post and hinge point is less than 42", construct vegetation control to 6" from hinge point while maintaining the 8" block-out at back of post. If the 8" block-out at back of post can not be maintained, construct vegetation control flush with the back edge of post.
3. Where dike is constructed under railing, construct vegetation control to back edge of dike. Where paved shoulder is constructed within 36" in front of the post, construct vegetation control to the edge of paved shoulder.
4. End vegetation control at end of backside rail element.

STATE OF CALIFORNIA
DEPARTMENT OF TRANSPORTATION

MIDWEST GUARDRAIL SYSTEM TYPICAL VEGETATION CONTROL AT STRUCTURE APPROACH

NO SCALE

RSP A77N7 DATED JULY 19, 2013 SUPPLEMENTS THE STANDARD PLANS BOOK DATED 2010.

REVISED STANDARD PLAN RSP A77N7

2010 REVISED STANDARD PLAN RSP A77N7

6-12-13

Dist	COUNTY	ROUTE	POST MILES TOTAL PROJECT	SHEET No.	TOTAL SHEETS
07	LA	5	6.8/13.8	136	176

Randell D. Hiatt
REGISTERED CIVIL ENGINEER

July 19, 2013
PLANS APPROVAL DATE

REGISTERED PROFESSIONAL ENGINEER
Randell D. Hiatt
No. C50200
Exp. 6-30-15
CIVIL
STATE OF CALIFORNIA

THE STATE OF CALIFORNIA OR ITS OFFICERS OR AGENTS SHALL NOT BE RESPONSIBLE FOR THE ACCURACY OR COMPLETENESS OF SCANNED COPIES OF THIS PLAN SHEET.

TO ACCOMPANY PLANS DATED 1-21-14

NOTES:

1. See Revised Standard Plan RSP A77N5 for additional vegetation control details.
2. Where the distance between back of post and hinge point is less than 42", construct vegetation control to 6" from hinge point while maintaining the 8" block-out at back of post. If the 8" block-out at back of post can not be maintained, construct vegetation control flush with the back edge of post.
3. Where dike is constructed under railing, construct vegetation control to back edge of dike. Where paved shoulder is constructed within 36" in front of the post, construct vegetation control to the edge of paved shoulder.

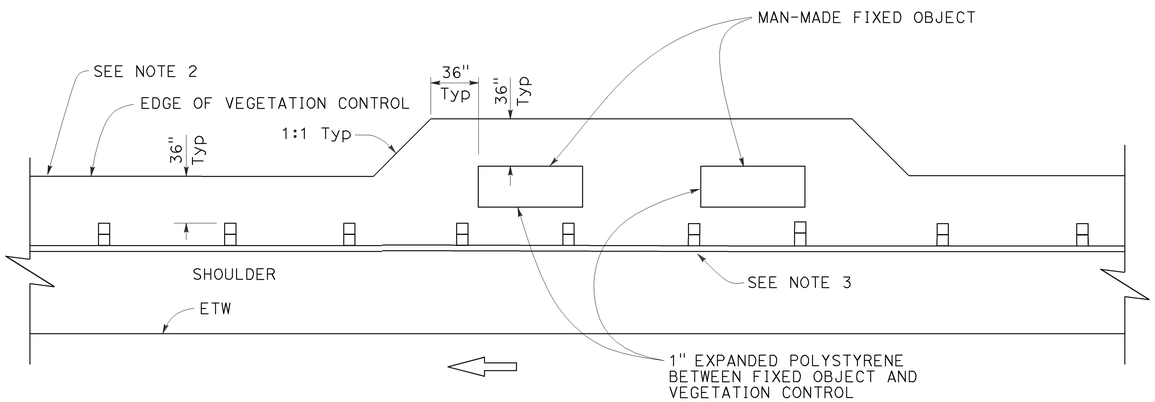

PLAN

Fixed object(s) on shoulder

STATE OF CALIFORNIA
DEPARTMENT OF TRANSPORTATION

MIDWEST GUARDRAIL SYSTEM TYPICAL VEGETATION CONTROL AT FIXED OBJECT

NO SCALE

RSP A77N8 DATED JULY 19, 2013 SUPPLEMENTS THE STANDARD PLANS BOOK DATED 2010.

REVISED STANDARD PLAN RSP A77N8

2010 REVISED STANDARD PLAN RSP A77N8

6-12-13

Dist	COUNTY	ROUTE	POST MILES TOTAL PROJECT	SHEET No.	TOTAL SHEETS
07	LA	5	6.8/13.8	137	176

Randell D. Hiatt
REGISTERED CIVIL ENGINEER

July 19, 2013
PLANS APPROVAL DATE

REGISTERED PROFESSIONAL ENGINEER
Randell D. Hiatt
No. C50200
Exp. 6-30-15
CIVIL
STATE OF CALIFORNIA

THE STATE OF CALIFORNIA OR ITS OFFICERS OR AGENTS SHALL NOT BE RESPONSIBLE FOR THE ACCURACY OR COMPLETENESS OF SCANNED COPIES OF THIS PLAN SHEET.

TO ACCOMPANY PLANS DATED 1-21-14

2010 REVISED STANDARD PLAN RSP A77N9

NOTES:

1. See Revised Standard Plan RSP A77N5 for additional vegetation control details.
2. Where dike is constructed under railing, construct vegetation control to back edge of dike. Where paved shoulder is constructed within 36" in front of the post, construct vegetation control to the edge of paved shoulder.

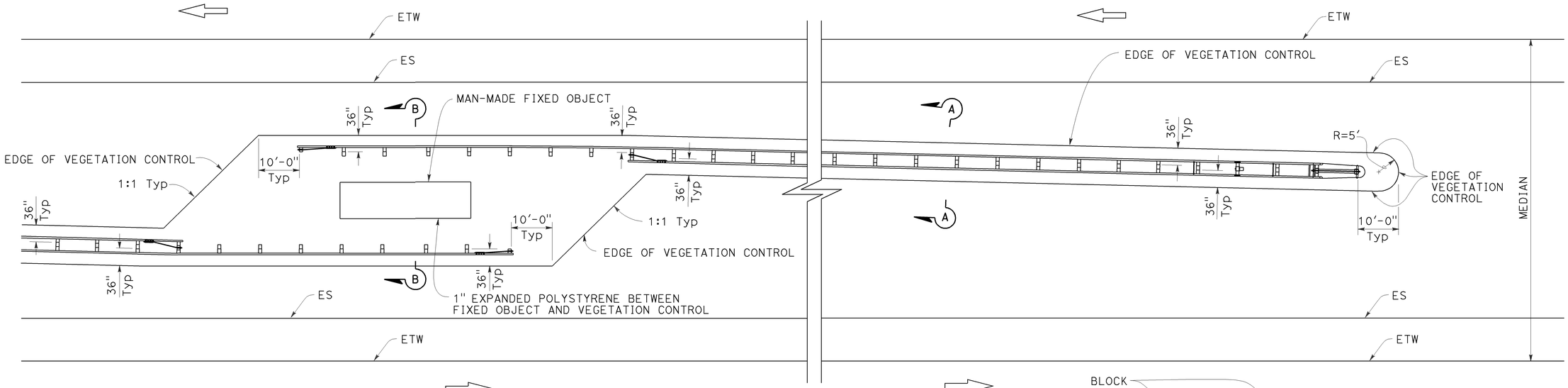

PLAN

Fixed object(s) in median

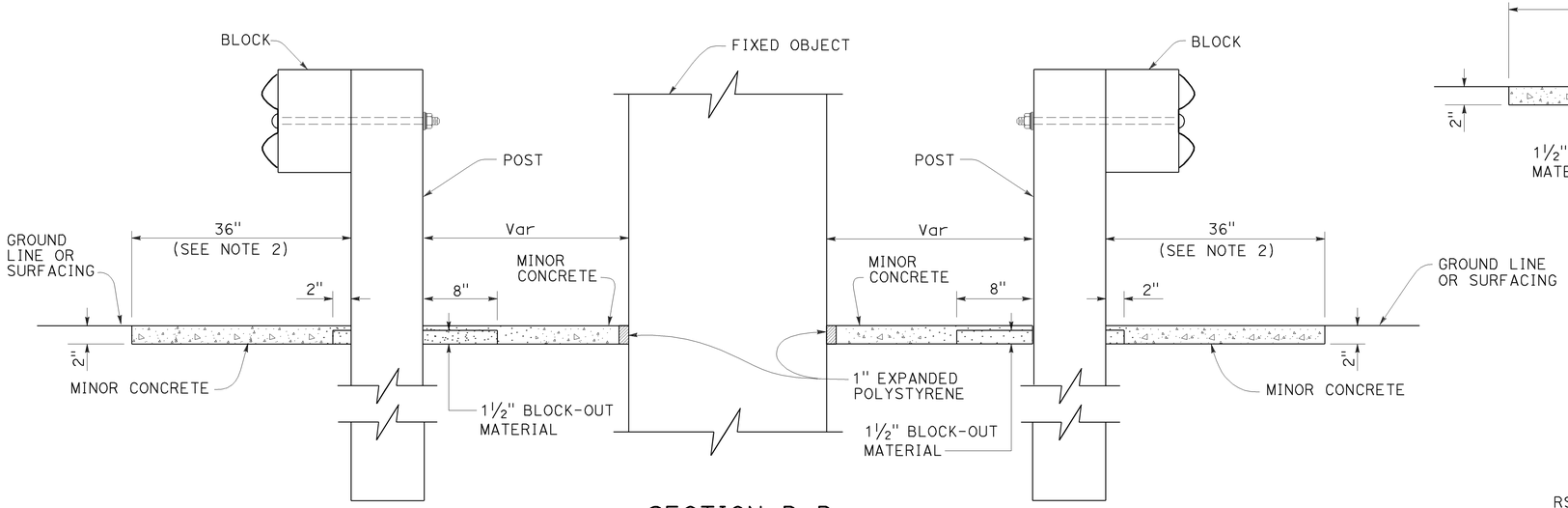

SECTION B-B

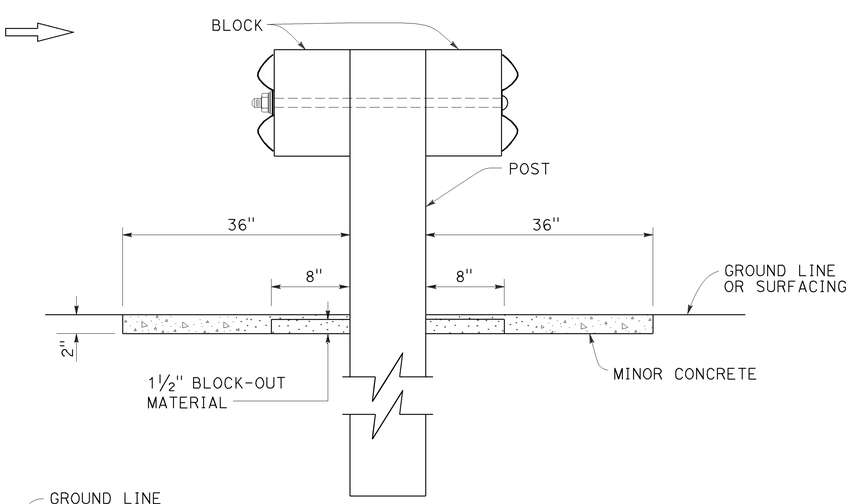

SECTION A-A

STATE OF CALIFORNIA
DEPARTMENT OF TRANSPORTATION

MIDWEST GUARDRAIL SYSTEM TYPICAL VEGETATION CONTROL AT FIXED OBJECT

NO SCALE

RSP A77N9 DATED JULY 19, 2013 SUPPLEMENTS THE STANDARD PLANS BOOK DATED 2010.

REVISED STANDARD PLAN RSP A77N9

6-12-13

Dist	COUNTY	ROUTE	POST MILES TOTAL PROJECT	SHEET No.	TOTAL SHEETS
07	LA	5	6.8/13.8	138	176

Randell D. Hiatt
REGISTERED CIVIL ENGINEER

July 19, 2013
PLANS APPROVAL DATE

REGISTERED PROFESSIONAL ENGINEER
Randell D. Hiatt
No. C50200
Exp. 6-30-15
CIVIL
STATE OF CALIFORNIA

THE STATE OF CALIFORNIA OR ITS OFFICERS OR AGENTS SHALL NOT BE RESPONSIBLE FOR THE ACCURACY OR COMPLETENESS OF SCANNED COPIES OF THIS PLAN SHEET.

TO ACCOMPANY PLANS DATED 1-21-14

2010 REVISED STANDARD PLAN RSP A77N10

NOTES:

1. See Revised Standard Plan RSP A77N5 for additional vegetation control details.
2. Where dike is constructed under railing, construct vegetation control to back edge of dike. Where paved shoulder is constructed within 36" in front of the post, construct vegetation control to the edge of paved shoulder.

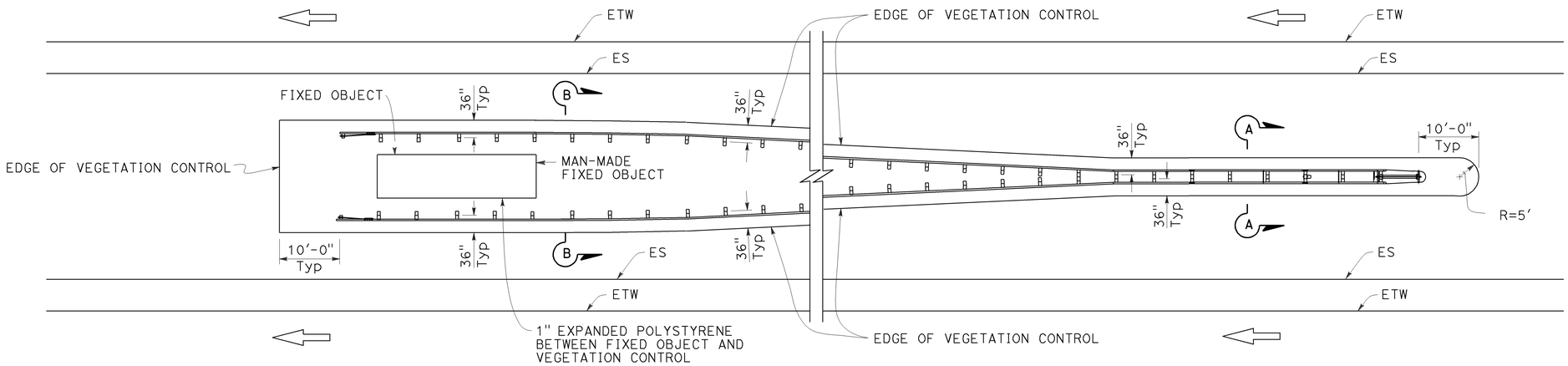

PLAN

Fixed object(s) between separate roadbeds
(One-Way Traffic)

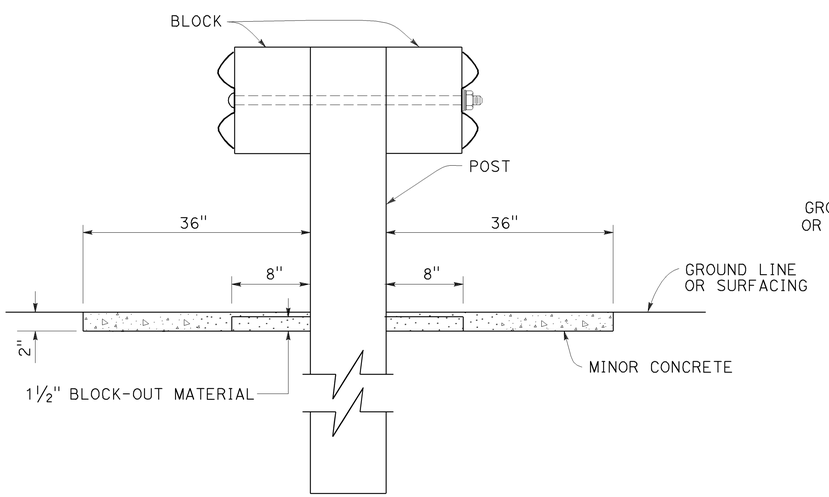

SECTION A-A

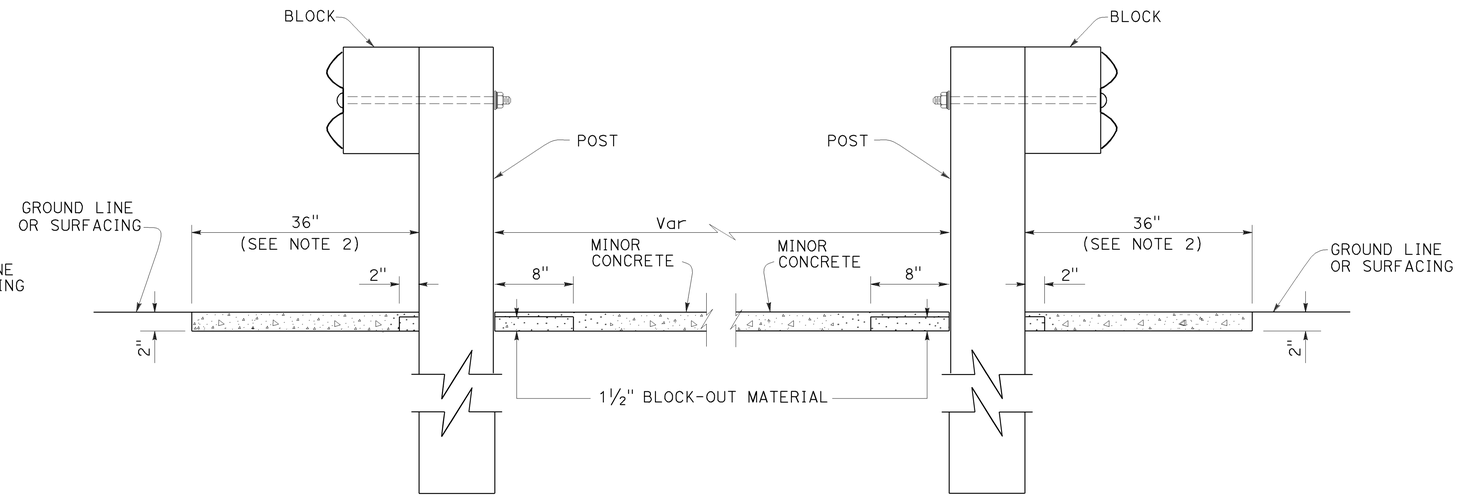

SECTION B-B

STATE OF CALIFORNIA
DEPARTMENT OF TRANSPORTATION

MIDWEST GUARDRAIL SYSTEM TYPICAL VEGETATION CONTROL AT FIXED OBJECT

NO SCALE

RSP A77N10 DATED JULY 19, 2013 SUPPLEMENTS THE STANDARD PLANS BOOK DATED 2010.

REVISED STANDARD PLAN RSP A77N10

6-12-13

Dist	COUNTY	ROUTE	POST MILES TOTAL PROJECT	SHEET No.	TOTAL SHEETS
07	LA	5	6.8/13.8	139	176

Randell D. Hiatt
REGISTERED CIVIL ENGINEER

November 15, 2013
PLANS APPROVAL DATE

REGISTERED PROFESSIONAL ENGINEER
Randell D. Hiatt
No. C50200
Exp. 6-30-15
CIVIL
STATE OF CALIFORNIA

THE STATE OF CALIFORNIA OR ITS OFFICERS OR AGENTS SHALL NOT BE RESPONSIBLE FOR THE ACCURACY OR COMPLETENESS OF SCANNED COPIES OF THIS PLAN SHEET.

TO ACCOMPANY PLANS DATED 1-21-14

2010 REVISED STANDARD PLAN RSP A77P1

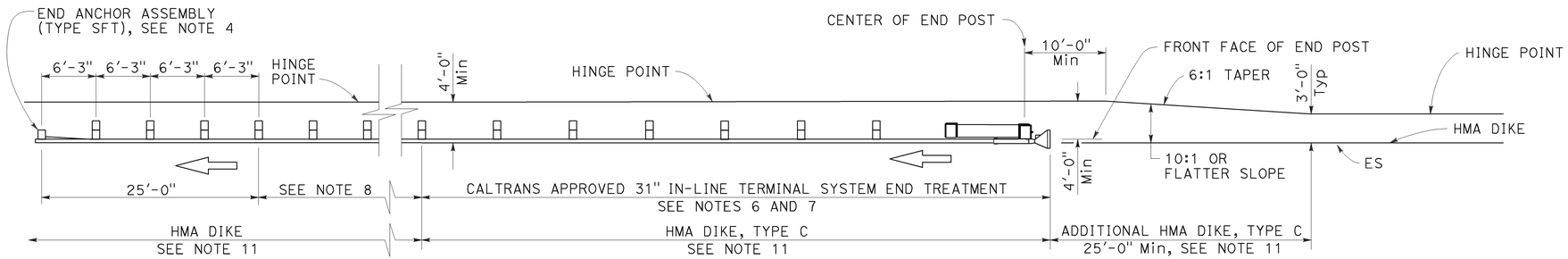

TYPE 11A LAYOUT

(Embankment MGS installation with 31" in-line end treatment at traffic approach end of railing) see Note 5

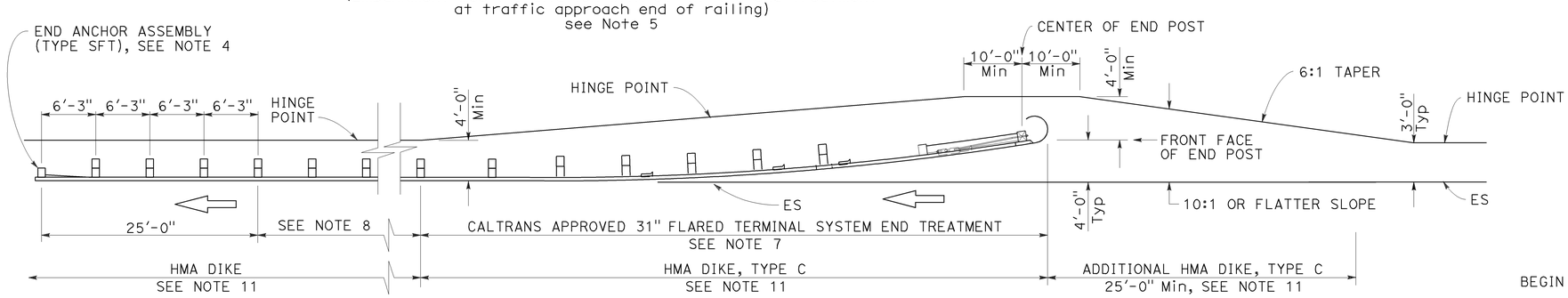

TYPE 11B LAYOUT

(Embankment MGS installation with 31" flared end treatment at traffic approach end of railing) see Note 5

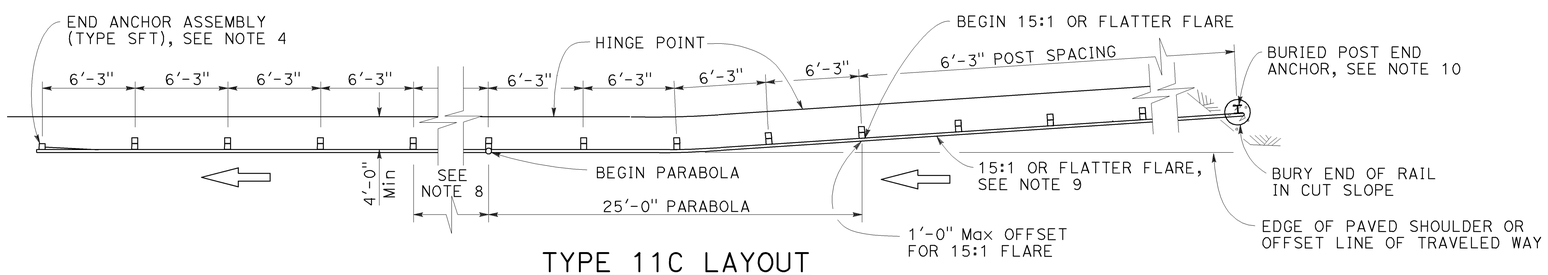

TYPE 11C LAYOUT

(Embankment MGS installation with buried end anchor treatment at traffic approach end of railing) see Notes 5 and 11

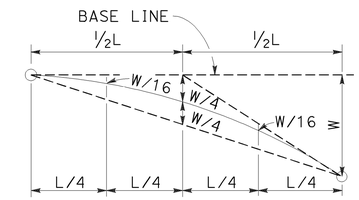

TYPICAL PARABOLIC LAYOUT

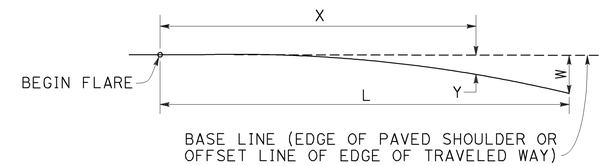

$$Y = \frac{WX^2}{L^2}$$

Y = OFFSET FROM BASE LINE
W = MAXIMUM OFFSET
X = DISTANCE ALONG BASE LINE
L = LENGTH OF FLARE

PARABOLIC FLARE OFFSETS

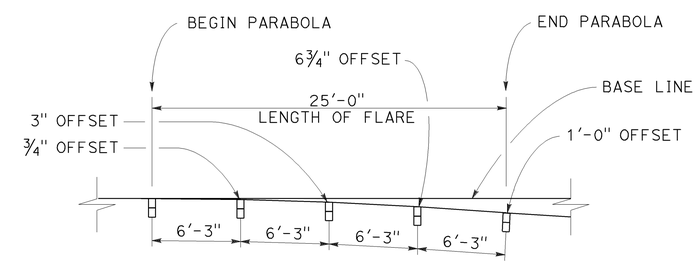

TYPICAL FLARE OFFSETS FOR 1 FOOT Max END OFFSET

NOTES:

1. Line post, blocks and hardware to be used are shown on Revised Standard Plans RSP A77L1, RSP A77L2, RSP A77M1, RSP A77N1 and RSP A77N2.
2. MGS post spacing to be 6'-3" center to center, except as otherwise noted.
3. Except as noted, line posts are 6" x 8" x 6'-0" wood with 6" x 12" x 1'-2" wood blocks. W6 x 8.5 or W6 x 9 steel posts, 6'-0" in length, with 6" x 12" x 1'-2" notched wood blocks or recycled plastic blocks may be used for 6" x 8" x 6'-0" wood post with 6" x 12" x 1'-2" wood blocks where applicable and when specified.
4. For End Anchor Assembly (Type SFT) details, see Revised Standard Plan RSP A77S1.
5. Layout Types 11A, 11B or 11C are typically used where MGS is recommended to shield embankment slopes and a crashworthy end treatment is required for only one direction of traffic.
6. 31" in-line terminal system end treatments are used where site conditions will not accommodate a flared end treatment.
7. The type of 31" terminal system end treatment to be used will be shown on the Project Plans.
8. Dependent on site conditions (embankment height and side slope), construction of additional MGS (length equal to multiples of 12'-6" with 6'-3" post spacing) may be advisable.
9. The 15:1 or flatter flare used with buried end anchors is based on the edge of the paved shoulder or offset line of edge of the traveled way. The length of MGS within the 15:1 or flatter flare is based on site conditions and should be a length equal to multiples of 12'-6".
10. For details of the buried post end anchor used with Type 11C Layout, see Revised Standard Plan RSP A77T2.
11. Where placement of dike is required with MGS installations, see Revised Standard Plan RSP A77N4 for dike positioning details.

STATE OF CALIFORNIA
DEPARTMENT OF TRANSPORTATION

MIDWEST GUARDRAIL SYSTEM TYPICAL LAYOUTS FOR EMBANKMENTS

NO SCALE

RSP A77P1 DATED NOVEMBER 15, 2013 SUPERSEDES RSP A77P1 DATED JULY 19, 2013 THAT SUPPLEMENTS THE STANDARD PLANS BOOK DATED 2010.

REVISED STANDARD PLAN RSP A77P1

10-4-13

Dist	COUNTY	ROUTE	POST MILES TOTAL PROJECT	SHEET No.	TOTAL SHEETS
07	LA	5	6.8/13.8	140	176

Randell D. Hiatt
REGISTERED CIVIL ENGINEER

July 19, 2013
PLANS APPROVAL DATE

REGISTERED PROFESSIONAL ENGINEER
Randell D. Hiatt
No. C50200
Exp. 6-30-15
CIVIL
STATE OF CALIFORNIA

THE STATE OF CALIFORNIA OR ITS OFFICERS OR AGENTS SHALL NOT BE RESPONSIBLE FOR THE ACCURACY OR COMPLETENESS OF SCANNED COPIES OF THIS PLAN SHEET.

TO ACCOMPANY PLANS DATED 1-21-14

2010 REVISED STANDARD PLAN RSP A77Q1

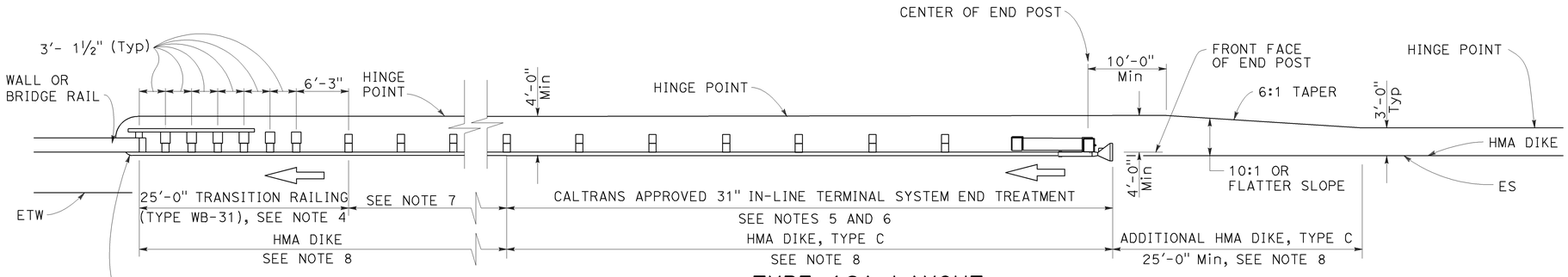

TYPE 12A LAYOUT

(MGS installation at structure approach with
31" In-line end treatment at traffic approach end of railing)
See Notes 9

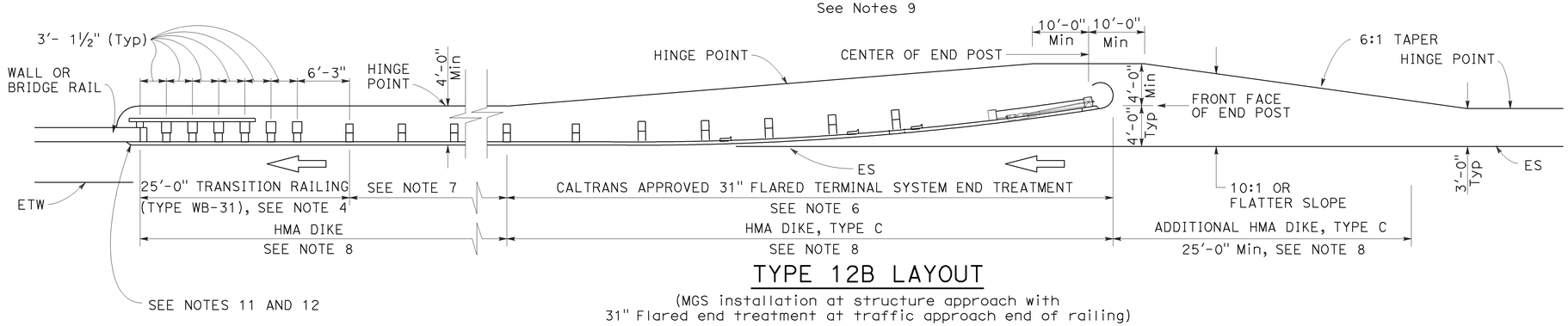

TYPE 12B LAYOUT

(MGS installation at structure approach with
31" Flared end treatment at traffic approach end of railing)
See Notes 9

NOTES:

1. Line post, blocks and hardware to be used are shown on Revised Standard Plans RSP A77L1, RSP A77L2, RSP A77M1, RSP A77N1 and RSP A77N2.
2. MGS post spacing to be 6'-3" center to center, except as otherwise noted.
3. Except as noted, line posts are 6" x 8" x 6'-0" wood with 6" x 12" x 1'-2" wood blocks. W6 x 8.5 or W6 x 9 steel posts, 6'-0" in length, with 6" x 12" x 1'-2" notched wood blocks or plastic blocks may be used for 6" x 8" x 6'-0" wood posts with 6" x 12" x 1'-2" wood blocks where applicable and when specified.
4. For Transition Railing (Type WB-31) details for Types 12A and 12B Layouts, see Revised Standard Plan RSP A77U4.
5. 31" in-line terminal system end treatments are used where site conditions will not accommodate a 31" flared end treatment.
6. The type 31" of terminal system end treatment to be used will be shown on the Project Plans.
7. Dependent on site conditions (embankment height, side slopes, or other fixed objects), it may be advisable to construct additional guard railing (a length equal to multiples of 12'-6" with 6'-3" post spacing) between the transition railing and end treatment. A 12.5 degree angle of departure can be drawn on the Project Plans from the edge of traveled way through the outer most point of the fixed object to determine the additional length of railing needed.
8. Where placement of dike is required with guard railing installations, see Revised Standard Plan RSP A77N4 for dike positioning details.
9. Type 12A or Type 12B Layouts are typically used:
   a. To the right of approaching traffic, at the end of a structure, on two-lane conventional highway where the roadbed width across the structure is less than 40 feet.
   b. To the left of approaching traffic, at the end of a structure, on two-lane conventional highway where the roadbed width across the structure is less than 40 feet.
   c. To the right of approaching traffic at the end of each structure on multilane freeways or expressways with separate adjacent or parallel bridges.
   d. To the right of approaching traffic at the end of the structure on multilane freeways or expressways with decked median on the bridge.
10. See Revised Standard Plan RSP A77Q3 for typical layout used left of approaching traffic at the ends of each structure on multilane freeways or expressways with separate adjacent or parallel bridges.
11. For additional details of typical connections to bridge rail, see Connection Detail AA on Revised Standard Plans RSP A77U1 and RSP A77U2 and Connection Detail FF on Revised Standard Plans RSP A77V1 and RSP A77V2.
12. For additional details of a typical connection to walls or abutments, see Revised Standard Plan RSP A77U3.

STATE OF CALIFORNIA
DEPARTMENT OF TRANSPORTATION

MIDWEST GUARDRAIL SYSTEM TYPICAL LAYOUTS FOR STRUCTURE APPROACH

NO SCALE

RSP A77Q1 DATED JULY 19, 2013 SUPPLEMENTS THE STANDARD PLANS BOOK DATED 2010.

REVISED STANDARD PLAN RSP A77Q1

Dist	COUNTY	ROUTE	POST MILES TOTAL PROJECT	SHEET No.	TOTAL SHEETS
07	LA	5	6.8/13.8	141	176

Randell D. Hiatt
REGISTERED CIVIL ENGINEER

July 19, 2013
PLANS APPROVAL DATE

REGISTERED PROFESSIONAL ENGINEER
Randell D. Hiatt
No. C50200
Exp. 6-30-15
CIVIL
STATE OF CALIFORNIA

THE STATE OF CALIFORNIA OR ITS OFFICERS OR AGENTS SHALL NOT BE RESPONSIBLE FOR THE ACCURACY OR COMPLETENESS OF SCANNED COPIES OF THIS PLAN SHEET.

TO ACCOMPANY PLANS DATED 1-21-14

2010 REVISED STANDARD PLAN RSP A77Q2

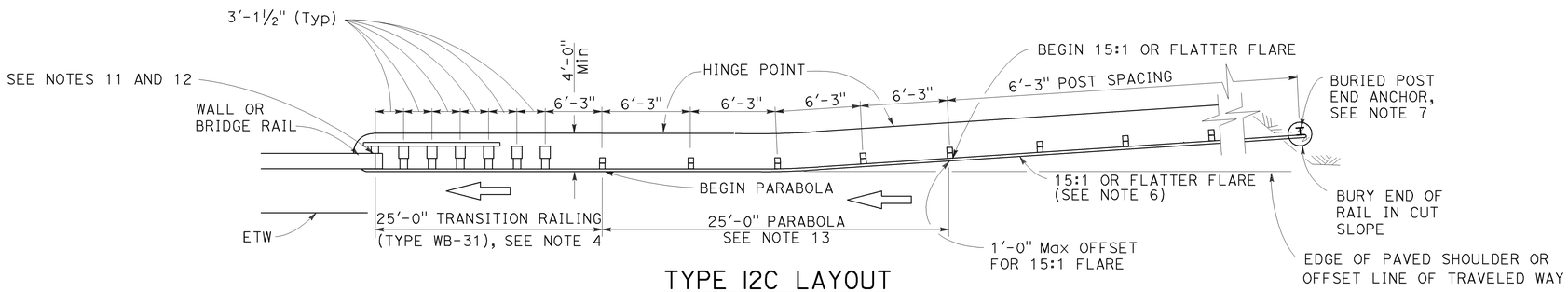

TYPE 12C LAYOUT

(MGS installation at structure approach with a Buried end anchor treatment at traffic approach end of railing)
See Notes 8 and 9

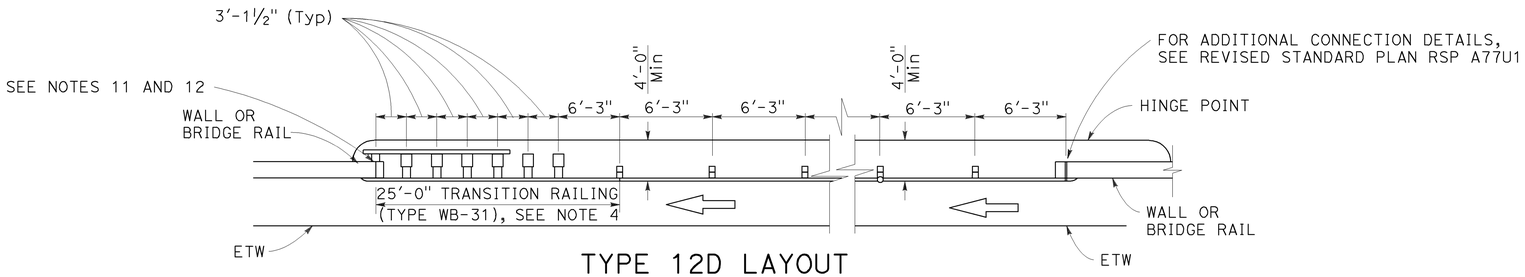

TYPE 12D LAYOUT

(Continuous MGS installation between structures)
See Notes 5 and 9

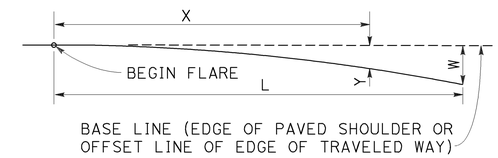

BASE LINE (EDGE OF PAVED SHOULDER OR OFFSET LINE OF EDGE OF TRAVELED WAY)

$$Y = \frac{WX^2}{L^2}$$

Y = OFFSET FROM BASE LINE
W = MAXIMUM OFFSET
X = DISTANCE ALONG BASE LINE
L = LENGTH OF FLARE

PARABOLIC FLARE OFFSETS

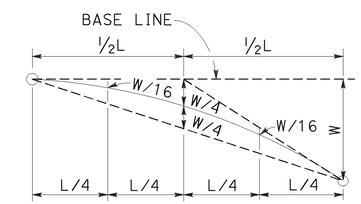

TYPICAL PARABOLIC LAYOUT

NOTES:

1. Line post, blocks and hardware to be used are shown on Revised Standard Plans RSP A77L1, RSP A77L2, RSP A77M1, RSP A77N1 and RSP A77N2.
2. MGS post spacing to be 6'-3" center to center, except as otherwise noted.
3. Except as noted, line posts are 6" x 8" x 6'-0" m wood with 6" x 12" x 1'-2" wood blocks. W6 x 8.5 or W6 x 9 steel posts, 6'-0" in length, with 6" x 12" x 1'-2" notched wood blocks or plastic blocks may be used for 6" x 8" x 6'-0" wood posts with 6" x 12" x 1'-2" wood blocks where applicable and when specified.
4. For Transition Railing (Type WB-31) details for Types 12C and 12D Layouts, see Revised Standard Plan RSP A77U4.
5. Type 12D layout is typically used where continous MGS is recommended between structures.
6. The 15:1 or flatter flare for Type 12C Layout is based on the edge of the paved shoulder or offset line of edge of the traveled way. The length of MGS with the 15:1 or flatter flare is based on site conditions and should be a length equal to multiples of 12'-6".
7. For details of the buried post end anchor used with Type 12C Layout, see Revised Standard Plan RSP A77T2.
8. Where placement of dike is required with MGS installations, see Revised Standard Plan RSP A77N4 for dike positioning details.
9. Type 12C Layout is typically used:
   a. To the right of approaching traffic, at the end of the structure, on two-lane conventional highway where the roadbed width across the structure is less than 40 feet.
   b. To the left of approaching traffic, at each of a structure, on two-lane conventional highway where the roadbed width across the structure is less than 40 feet.
   c. To the right of approaching traffic at the end of each structure on multilane freeways or expressways with separate adjacent or parallel bridges.
   d. To the right of approaching traffic at the end of the structure on multilane freeways or expressways with decked median on the bridge.
10. See Revised Standard Plan RSP A77Q3 for typical layout used left of approaching traffic at the ends of each structure on multilane freeways or expressways with separate adjacent or parallel bridges.
11. For additional details of typical connections to bridge rail, see Connection Detail AA on Revised Standard Plans RSP A77U1 and RSP A77U2 and Connection Detail FF on Revised Standard Plans RSP A77V1 and RSP A77V2.
12. For additional details of a typical connection to walls or abutments, see Revised Standard Plan RSP A77U3.
13. For typical flare offsets for 25'-0" length parabola with maximum offset of 1'-0", see Revised Standard Plan RSP A77P1.

STATE OF CALIFORNIA
DEPARTMENT OF TRANSPORTATION

MIDWEST GUARDRAIL SYSTEM TYPICAL LAYOUTS FOR STRUCTURE APPROACH AND BETWEEN STRUCTURES

NO SCALE

RSP A77Q2 DATED JULY 19, 2013 SUPPLEMENTS THE STANDARD PLANS BOOK DATED 2010.

REVISED STANDARD PLAN RSP A77Q2

Dist	COUNTY	ROUTE	POST MILES TOTAL PROJECT	SHEET No.	TOTAL SHEETS
07	LA	5	6.8/13.8	142	176

Randell D. Hiatt
REGISTERED CIVIL ENGINEER

July 19, 2013
PLANS APPROVAL DATE

REGISTERED PROFESSIONAL ENGINEER
Randell D. Hiatt
No. C50200
Exp. 6-30-15
CIVIL
STATE OF CALIFORNIA

THE STATE OF CALIFORNIA OR ITS OFFICERS OR AGENTS SHALL NOT BE RESPONSIBLE FOR THE ACCURACY OR COMPLETENESS OF SCANNED COPIES OF THIS PLAN SHEET.

TO ACCOMPANY PLANS DATED 1-21-14

NOTES:

1. Line post, blocks and hardware to be used are shown on Revised Standard Plans RSP A77L1, RSP A77L2, RSP A77M1, RSP A77N1 and RSP A77N2.
2. MGS post spacing to be 6'-3" center to center, except as otherwise noted.
3. Except as noted, line posts are 6" x 8" x 6'-0" wood with 6" x 12" x 1'-2" wood blocks. W6 x 8.5 or W6 x 9 steel posts, 6'-0" in length, with 6" x 12" x 1'-2" notched wood blocks or notched recycled plastic blocks may be used for 6" x 8" x 6'-0" wood line posts with 6" x 12" x 1'-2" wood blocks where applicable and when specified.
4. A 4'-0" minimum clearance is required between the face of the railing and the face of a fixed object located directly behind MGS section with post spacing of 6'-3". Construct MGS as shown in the detail "Strengthened Midwest Guardrail System Sections for Fixed Object" on this plan, where the clearance between the face of the railing and the face of a fixed object is less than 4'-0", but not less than 3'-0". Where the clearance is less than 3'-0", a concrete wall or barrier should be constructed to shield the fixed object(s).
5. For End Anchor Assembly (Type SFT) details, see Standard Plan RSP A77S1.
6. Type of crash cushion to be used will be shown on the Project Plans.
7. Type 15A layout is typically used on multilane freeways or expressways to shield fixed objects in the area between separated one-way roadbeds.
8. For typical flare offsets for 25'-0" length parabola with maximum offset of 1'-0", see Revised Standard Plan RSP A77P1.
9. The 15:1 or flatter flare is measured off of the edge of the traveled way.
10. W6 x 15 steel post, 8'-0" in length, with 8" x 12" x 1'-2" notched wood block or notched recycled plastic blocks may be used in place of the 10" x 10" x 8'-0" wood post with 8" x 12" x 1'-2" wood block shown in the detail "Strengthened Midwest Guardrail System Sections for Fixed Object".

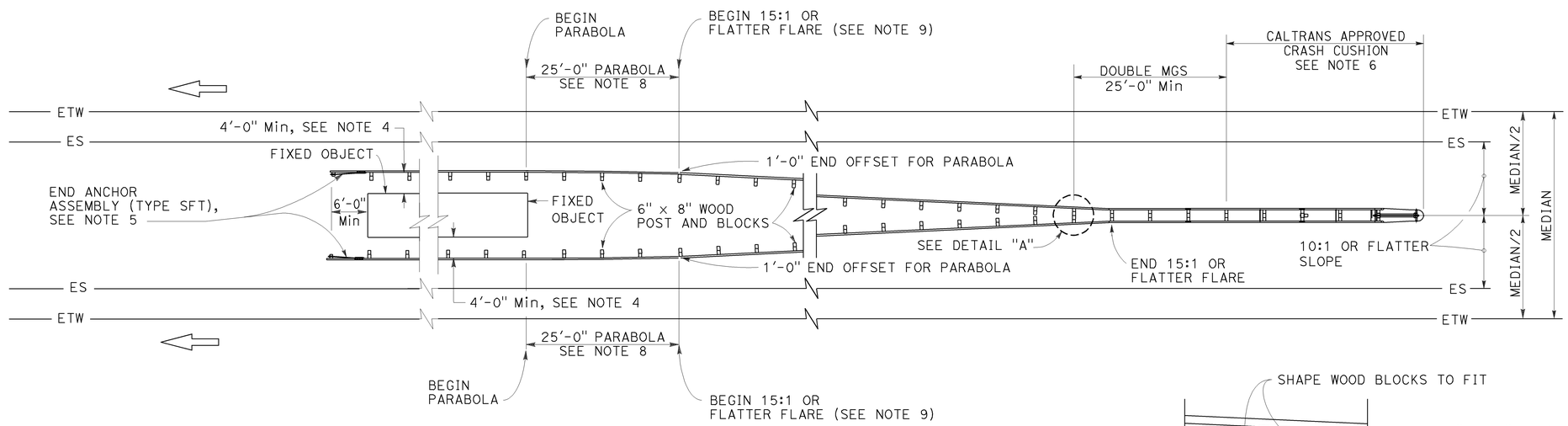

TYPE 15A LAYOUT

See Note 7

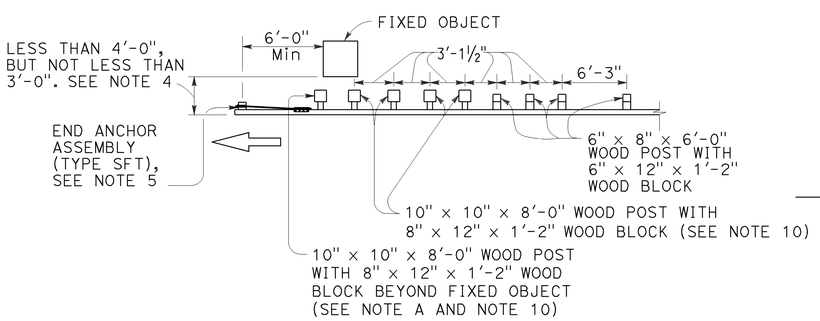

NOTE A: For a series of fixed objects (bridge columns, overhead sign supports, etc.) additional 10" x 10" x 8'-0" wood post with 8" x 12" x 1'-2" wood blocks at 3'-1½" center to center spacing are to be used between fixed objects.

STRENGTHENED MIDWEST GUARDRAIL SYSTEM SECTIONS FOR FIXED OBJECT

Use strengthened MGS sections with Type 15A layout where minimum clearance between the face of the MGS and the fixed object(s) is less than 4'-0", but not less than 3'-0". See Note 4.

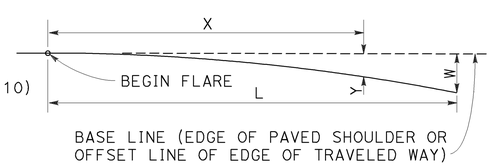

$$Y = \frac{WX^2}{L^2}$$

Y = OFFSET FROM BASE LINE
W = MAXIMUM OFFSET
X = DISTANCE ALONG BASE LINE
L = LENGTH OF FLARE

PARABOLIC FLARE OFFSETS

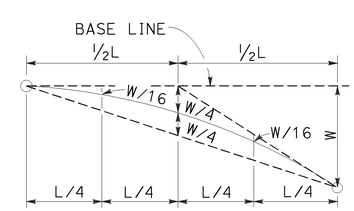

TYPICAL PARABOLIC LAYOUT

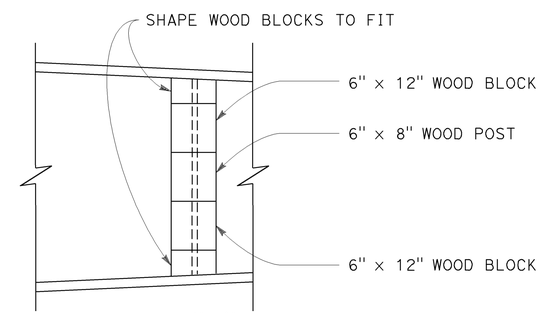

DETAIL "A"

STATE OF CALIFORNIA
DEPARTMENT OF TRANSPORTATION

MIDWEST GUARDRAIL SYSTEM TYPICAL LAYOUTS FOR FIXED OBJECTS BETWEEN SEPARATE ROADBEDS (ONE-WAY TRAFFIC)

NO SCALE

RSP A77R2 DATED JULY 19, 2013 SUPPLEMENTS THE STANDARD PLANS BOOK DATED 2010.

REVISED STANDARD PLAN RSP A77R2

2010 REVISED STANDARD PLAN RSP A77R2

6-20-13

Dist	COUNTY	ROUTE	POST MILES TOTAL PROJECT	SHEET No.	TOTAL SHEETS
07	LA	5	6.8/13.8	143	176

Randell D. Hiatt
REGISTERED CIVIL ENGINEER

July 19, 2013
PLANS APPROVAL DATE

REGISTERED PROFESSIONAL ENGINEER Randell D. Hiatt No. C50200 Exp. 6-30-15 CIVIL STATE OF CALIFORNIA

THE STATE OF CALIFORNIA OR ITS OFFICERS OR AGENTS SHALL NOT BE RESPONSIBLE FOR THE ACCURACY OR COMPLETENESS OF SCANNED COPIES OF THIS PLAN SHEET.

TO ACCOMPANY PLANS DATED 1-21-14

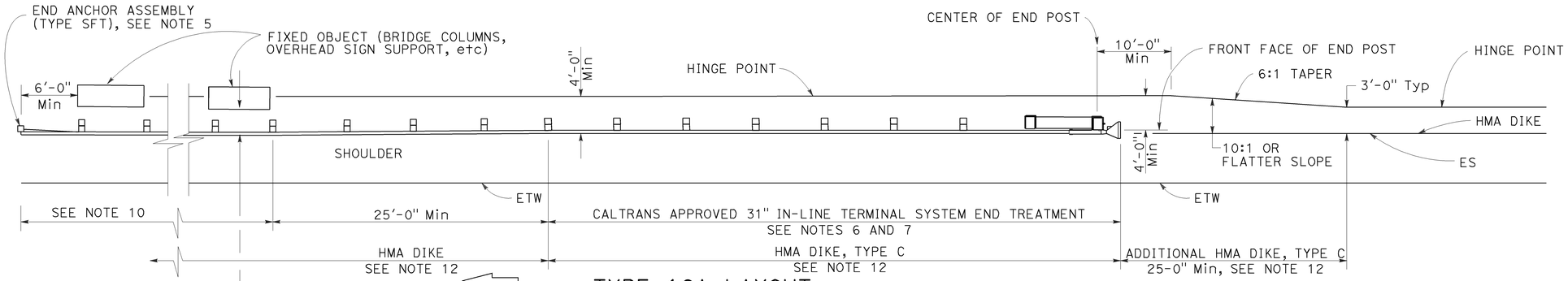

TYPE 16A LAYOUT

(MGS installation at roadside fixed object or objects with 31" in-line end treatment at traffic approach end of railing)
See Notes 11 and 12

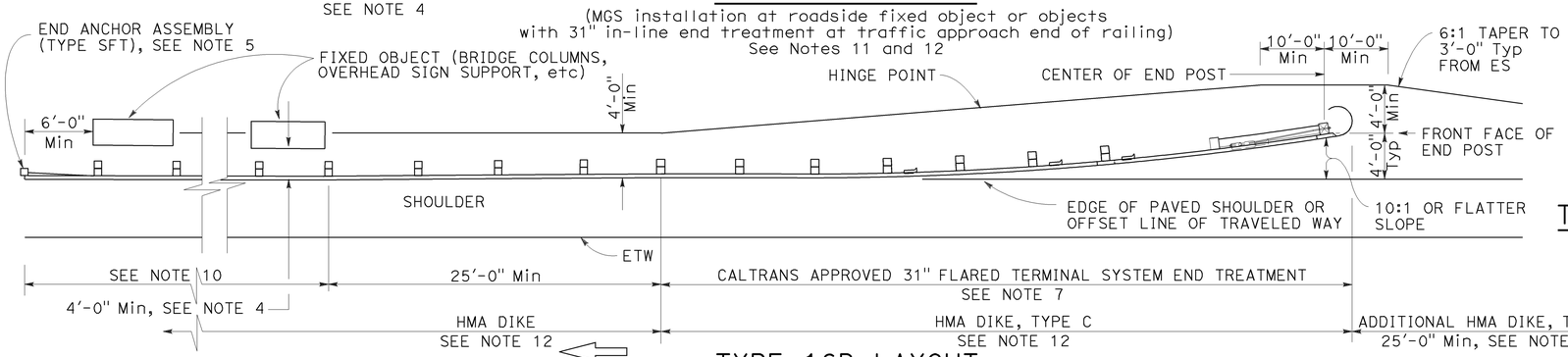

TYPE 16B LAYOUT

(MGS installation at roadside fixed object or objects with 31' flared end treatment at traffic approach end of railing)
See Notes 11 and 12

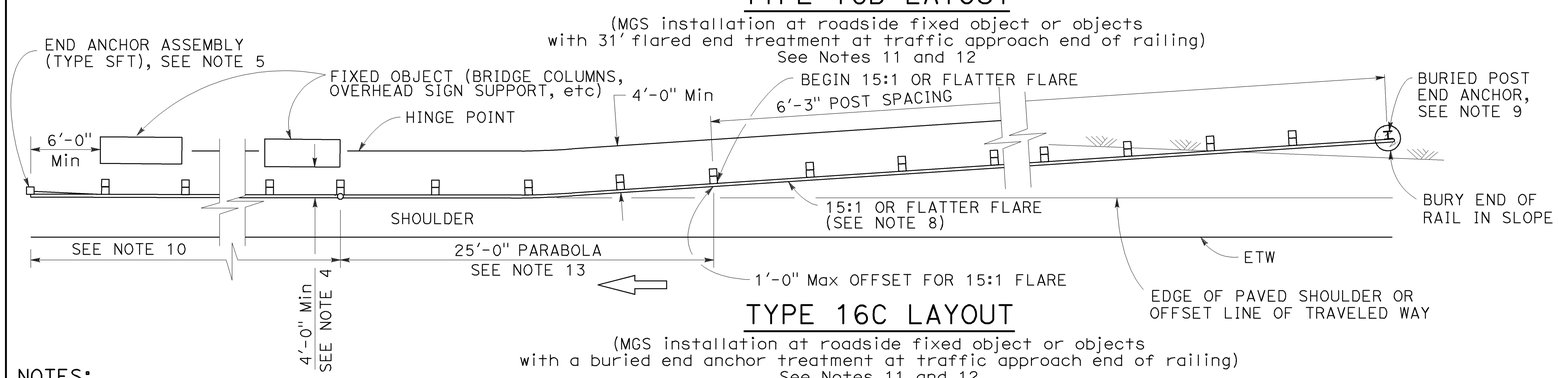

TYPE 16C LAYOUT

(MGS installation at roadside fixed object or objects with a buried end anchor treatment at traffic approach end of railing)
See Notes 11 and 12

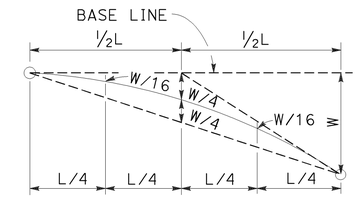

TYPIC AL PARABOLIC LAYOUT

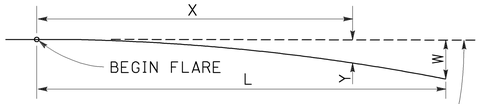

BASE LINE (EDGE OF PAVED SHOULDER OR OFFSET LINE OF EDGE OF TRAVELED WAY)

$$Y = \frac{WX^2}{L^2}$$

Y = OFFSET FROM BASE LINE
W = MAXIMUM OFFSET
X = DISTANCE ALONG BASE LINE
L = LENGTH OF FLARE

PARABOLIC FLARE OFFSETS

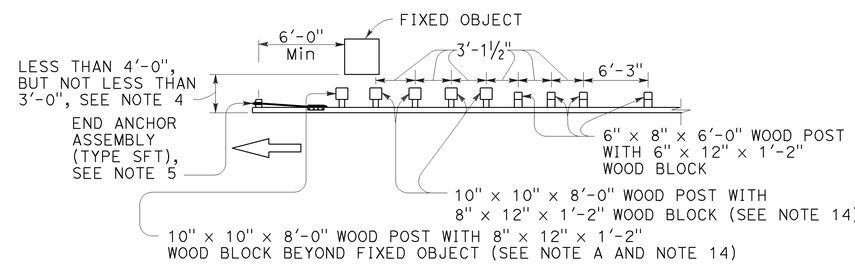

NOTE A: For a series of fixed objects (bridge columns, overhead sign supports, etc.) additional 10" x 10" x 8'-0" wood post with 8" x 12" x 1'-2" wood blocks at 3'-1½" center to center spacing are to be used between fixed objects.

STRENGTHENED MIDWEST GUARDRAIL SYSTEM SECTIONS FOR FIXED OBJECT

Use strengthened MGS sections with Types 16A, 16B or 16C layouts where minimum clearance between the face of the railing and fixed object(s) is less than 4'-0", but not less than 3'-0". See Note 4

NOTES:

1. Line post, blocks and hardware to be used are shown on Revised Standard Plans RSP A77L1, RSP A77L2, RSP A77M1, RSP A77N1 and RSP A77N2.
2. MGS post spacing to be 6'-3" center to center, except as otherwise noted.
3. Except as noted, line posts are 6" x 8" x 6'-0" wood with 6" x 12" x 1'-2" wood blocks. W6 x 8.5 or W6 x 9 steel posts, 6'-0" in length, with 6" x 12" x 1'-2" notched wood blocks or notched recycled plastic blocks may be used for 6" x 8" x 6'-0" wood line posts with 6" x 12" x 1'-2" wood blocks where applicable and when specified.
4. A 4'-0" minimum clearance is required between the face of the railing and the face of a fixed object located directly behind MGS sections with post spacing of 6'-3". Construct MGS as shown in the detail "Strengthened Midwest Guardrail System Sections for Fixed Object" on this plan, where the clearance between the face of the railing and the face of a fixed object is less than 4'-0", but not less than 3'-0". Where the clearance is less than 3'-0", a concrete wall or barrier should be constructed to shield the fixed object(s).
5. For End Anchor Assembly (Type SFT) details, see Revised Standard Plan RSP A77S1.
6. 31" in-line terminal system end treatments are used where site conditions will not accommodate a 31" flared end treatment.
7. The type of 31" terminal system to be used will be shown on the Project Plans.
8. The 15:1 or flatter flare used with Type 16C Layout is based on the edge of the paved shoulder or offset line of edge of the traveled way. The length of MGS within the 15:1 or flatter flare is based on site conditions and should be a length equal to multiples of 12'-6".
9. For details of the Buried Post End Anchor used with Type 16C Layout, see Revised Standard Plan RSP A77T2.
10. As site conditions dictate, construct additional MGS to shield fixed object(s). Additional MGS length equal to multiples of 12'-6". Post spacing at 6'-3" except as specified in Note 4.
11. Layout Types 16A, 16B or 16C are typically used where MGS is recommended to shield roadside fixed object(s) and a crashworthy 31" end treatment is required for only one direction of traffic.
12. Where placement of dike is required with MGS, see Revised Standard Plan RSP A77N4 for dike positioning details.
13. For typical flare offsets for 25'-0" length parabola with maximum offset of 1'-0", see Revised Standard Plan RSP A77P1.
14. W6 x 15 steel post, 8'-0" in length, with 8" x 12" x 1'-2" notched wood block or notched recycled plastic blocks may be used in place of the 10" x 10" x 8'-0" wood post with 8" x 12" x 1'-2" wood block shown in the detail "Strengthened Midwest Guardrail System Sections for Fixed Object".

STATE OF CALIFORNIA
DEPARTMENT OF TRANSPORTATION

MIDWEST GUARDRAIL SYSTEM TYPICAL LAYOUTS FOR ROADSIDE FIXED OBJECTS

NO SCALE

RSP A77R3 DATED JULY 19, 2013 SUPPLEMENTS THE STANDARD PLANS BOOK DATED 2010.

REVISED STANDARD PLAN RSP A77R3

2010 REVISED STANDARD PLAN RSP A77R3

6-20-13

Dist	COUNTY	ROUTE	POST MILES TOTAL PROJECT	SHEET No.	TOTAL SHEETS
07	LA	5	6.8/13.8	144	176

Randell D. Hiatt
REGISTERED CIVIL ENGINEER

July 19, 2013
PLANS APPROVAL DATE

REGISTERED PROFESSIONAL ENGINEER
Randell D. Hiatt
No. C50200
Exp. 6-30-15
CIVIL
STATE OF CALIFORNIA

THE STATE OF CALIFORNIA OR ITS OFFICERS OR AGENTS SHALL NOT BE RESPONSIBLE FOR THE ACCURACY OR COMPLETENESS OF SCANNED COPIES OF THIS PLAN SHEET.

TO ACCOMPANY PLANS DATED 1-21-14

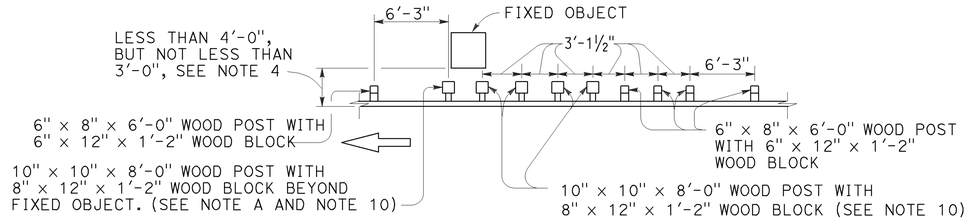

NOTE A: For a series of fixed objects (bridge columns, overhead sign supports, etc.) additional 10" x 10" x 8'-0" wood post with 8" x 12" x 1'-2" wood blocks at 3'-1½" center to center spacing are to be used between fixed object(s).

STRENGTHENED MIDWEST GUARDRAIL SYSTEM SECTIONS FOR FIXED OBJECT

Use strengthened MGS sections with layout Types 16D or 16E where minimum clearance between the face of the MGS and fixed object(s) is less than 4'-0", but not less than 3'-0". See Note 4.

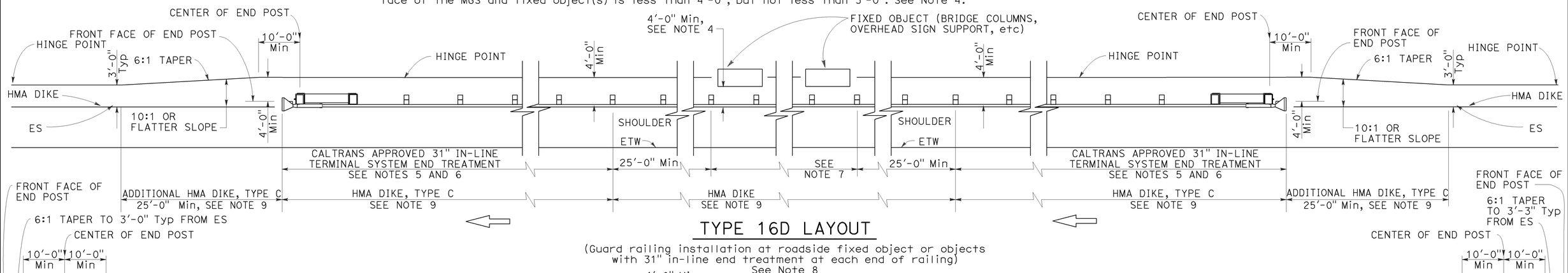

TYPE 16D LAYOUT

(Guard railing installation at roadside fixed object or objects with 31" in-line end treatment at each end of railing)
See Note 8

TYPE 16E LAYOUT

(MGS installation at roadside fixed object or objects with 31" flared end treatment at each end of railing)
See Note 8

NOTES:

1. Line post, blocks and hardware to be used are shown on Revised Standard Plans RSP A77L1, RSP A77L2, RSP A77M1, RSP A77N1 and RSP A77N2.
2. MGS post spacing to be 6'-3" center to center, except as otherwise noted.
3. Except as noted, line posts are 6" x 8" x 6'-0" wood with 6" x 12" x 1'-2" wood blocks. W6 x 8.5 or W6 x 9 steel posts, 6'-0" in length, with 6" x 12" x 1'-2" notched wood blocks or notched recycled plastic blocks may be used for 6" x 8" x 6'-0" wood line posts with 6" x 12" x 1'-2" wood blocks where applicable and when specified.
4. A 4'-0" minimum clearance is required between the face of the railing and the face of a fixed object located directly behind MGS sections with post spacing at 6'-3". Construct MGS as shown in the detail "Strengthened Midwest Guardrail System Sections for Fixed Object". on this plan, where the clearance between the face of the railing and the face of a fixed object is less than 4'-0", but not less than 3'-0". Where the clearance is less than 3'-0", a concrete wall or barrier should be constructed to shield the fixed object(s).
5. 31" in-line terminal system end treatments are used where site conditions will not accommodate a 31" flared end treatment.
6. The type of 31" terminal system to be used will be shown on the Project Plans.
7. As site conditions dictate, construct additional MGS to shield fixed object(s). Additional MGS length equal to multiples of 12'-6". Post spacing at 6'-3", except as specified in Note 4.
8. Layout Types 16D through 16L, shown on the A77R Series of Standard Plans, are typically used where MGS is recommended to shield roadside fixed object(s) and a crashworthy 31" end treatment is required for both directions of traffic.
9. Where placement of dike is required with MGS, see Revised Standard Plan RSP A77N4 for dike positioning details.
10. W6 x 15 steel post, 8'-0" in length, with 8" x 12" x 1'-2" notched wood block or notched recycled plastic block may be used in place of the 10" x 10" x 8'-0" wood post with 8" x 12" x 1'-2" wood block shown in the detail "Strengthened Midwest Guardrail System Sections for Fixed Object".

STATE OF CALIFORNIA
DEPARTMENT OF TRANSPORTATION

MIDWEST GUARDRAIL SYSTEM TYPICAL LAYOUTS FOR ROADSIDE FIXED OBJECTS

NO SCALE

RSP A77R4 DATED JULY 19, 2013 SUPPLEMENTS THE STANDARD PLANS BOOK DATED 2010.

REVISED STANDARD PLAN RSP A77R4

2010 REVISED STANDARD PLAN RSP A77R4

6-12-13

Dist	COUNTY	ROUTE	POST MILES TOTAL PROJECT	SHEET No.	TOTAL SHEETS
07	LA	5	6.8/13.8	145	176

Randell D. Hiatt
REGISTERED CIVIL ENGINEER

July 19, 2013
PLANS APPROVAL DATE

REGISTERED PROFESSIONAL ENGINEER
Randell D. Hiatt
No. C50200
Exp. 6-30-15
CIVIL
STATE OF CALIFORNIA

THE STATE OF CALIFORNIA OR ITS OFFICERS OR AGENTS SHALL NOT BE RESPONSIBLE FOR THE ACCURACY OR COMPLETENESS OF SCANNED COPIES OF THIS PLAN SHEET.

TO ACCOMPANY PLANS DATED 1-21-14

2010 REVISED STANDARD PLAN RSP A77R6

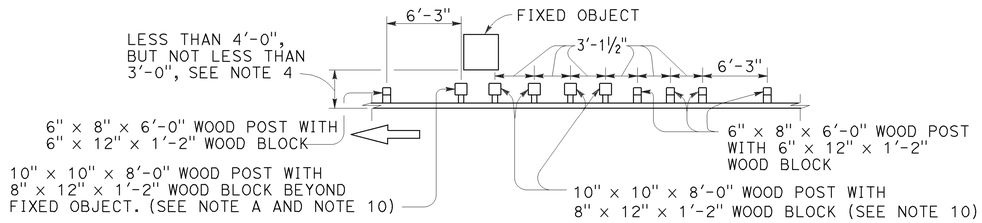

NOTE A: For a series of fixed objects (bridge columns, overhead sign supports, etc.) additional 10" x 10" x 8'-0" wood post with 8" x 12" x 1'-2" wood blocks at 3'-1½" center to center spacing are to be used between fixed object(s).

STRENGTHENED MIDWEST GUARDRAIL SYSTEM SECTIONS FOR FIXED OBJECT

Use strengthened MGS sections with layout Type 16H where minimum clearance between the face of the MGS and fixed object(s) is less than 4'-0", but not less than 3'-0". See Note 4.

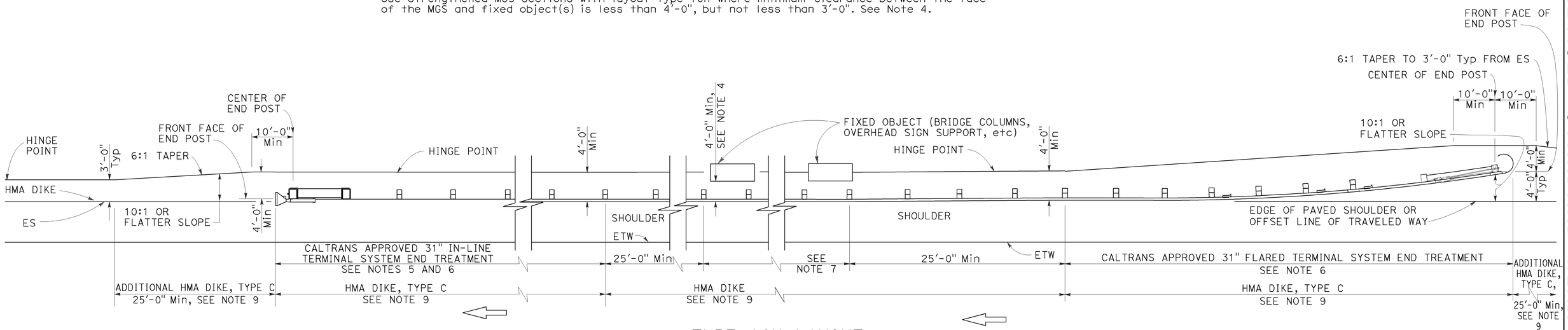

TYPE 16H LAYOUT

(MGS installation at roadside fixed object or objects with 31" flared end treatment and 31" in-line end treatment at the ends of railing)
See Note 8

NOTES:

1. Line post, blocks and hardware to be used are shown on Revised Standard Plans RSP A77L1, RSP A77L2, RSP A77M1, RSP A77N1 and RSP A77N2.
2. MGS post spacing to be 6'-3" center to center, except as otherwise noted.
3. Except as noted, line posts are 6" x 8" x 6'-0" wood with 6" x 12" x 1'-2" wood blocks. W6 x 8.5 or W6 x 9 steel posts, 6'-0" in length, with 6" x 12" x 1'-2" notched wood blocks or notched recycled plastic blocks may be used for 6" x 8" x 6'-0" wood posts with 6" x 12" x 1'-2" wood blocks where applicable and when specified.
4. A 4'-0" minimum clearance is required between the face of the railing and the face of a fixed object located directly behind MGS sections with post spacing at 6'-3". Construct MGS as shown in the detail "Strengthened Midwest Guardrail System Sections for Fixed Objects" on this plan, where the clearance between the face of the railing and the face of a fixed object is less than 4'-0", but not less than 3'-0". Where the clearance is less than 3'-0", a concrete wall or barrier should be constructed to shield the fixed object(s).
5. 31" in-line terminal system end treatments are used where site conditions will not accommodate a 31" flared end treatment.
6. The type of 31" terminal system to be used will be shown on the Project Plans.
7. As site conditions dictate, construct additional MGS to shield fixed object(s). Additional MGS length equal to multiples of 12'-6". Post spacing at 6'-3", except as specified in Note 4.
8. Layout Types 16D through 16L, shown on the A77R Series of Standard PLans, typically used where MGS is recommended to shield roadside fixed object(s) and a crashworthy 31" end treatment is required for both directions of traffic.
9. Where placement of dike is required with MGS, see Revised Standard Plan RSP A77N4 for dike positioning details.
10. W6 x 15 steel post, 8'-0" in length, with 8" x 12" x 1'-2" notched wood block or notched recycled plastic blocks may be used in place of the 10" x 10" x 8'-0" wood post with 8" x 12" x 1'-2" wood block shown in the detail "Strengthened Midwest Guardrail System Sections for Fixed Object".

STATE OF CALIFORNIA
DEPARTMENT OF TRANSPORTATION

MIDWEST GUARDRAIL SYSTEM TYPICAL LAYOUTS FOR ROADSIDE FIXED OBJECTS

NO SCALE

RSP A77R6 DATED JULY 19, 2013 SUPPLEMENTS THE STANDARD PLANS BOOK DATED 2010.

REVISED STANDARD PLAN RSP A77R6

6-19-13

Dist	COUNTY	ROUTE	POST MILES TOTAL PROJECT	SHEET No.	TOTAL SHEETS
07	LA	5	6.8/13.8	146	176

Randell D. Hiatt
REGISTERED CIVIL ENGINEER

November 15, 2013
PLANS APPROVAL DATE

REGISTERED PROFESSIONAL ENGINEER
Randell D. Hiatt
No. C50200
Exp. 6-30-15
CIVIL
STATE OF CALIFORNIA

THE STATE OF CALIFORNIA OR ITS OFFICERS OR AGENTS SHALL NOT BE RESPONSIBLE FOR THE ACCURACY OR COMPLETENESS OF SCANNED COPIES OF THIS PLAN SHEET.

TO ACCOMPANY PLANS DATED 1-21-14

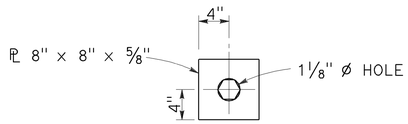

DETAIL "A"
CABLE CONNECTION
END PLATE

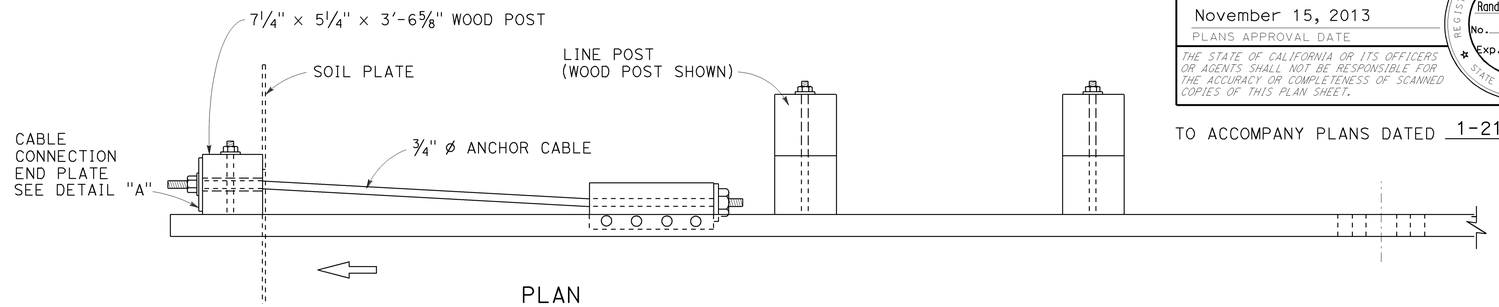

PLAN

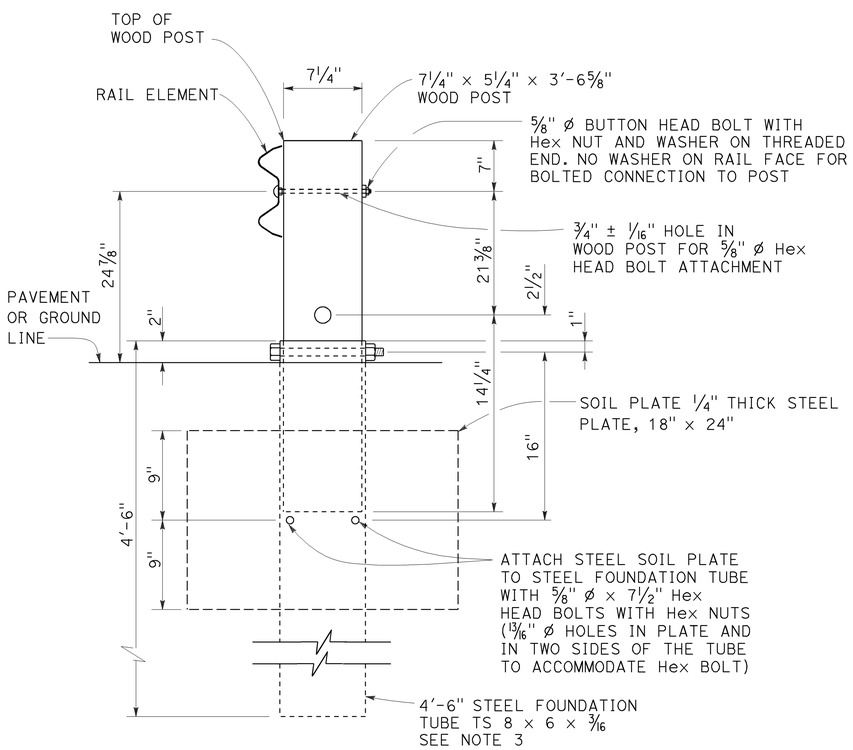

SECTION A-A

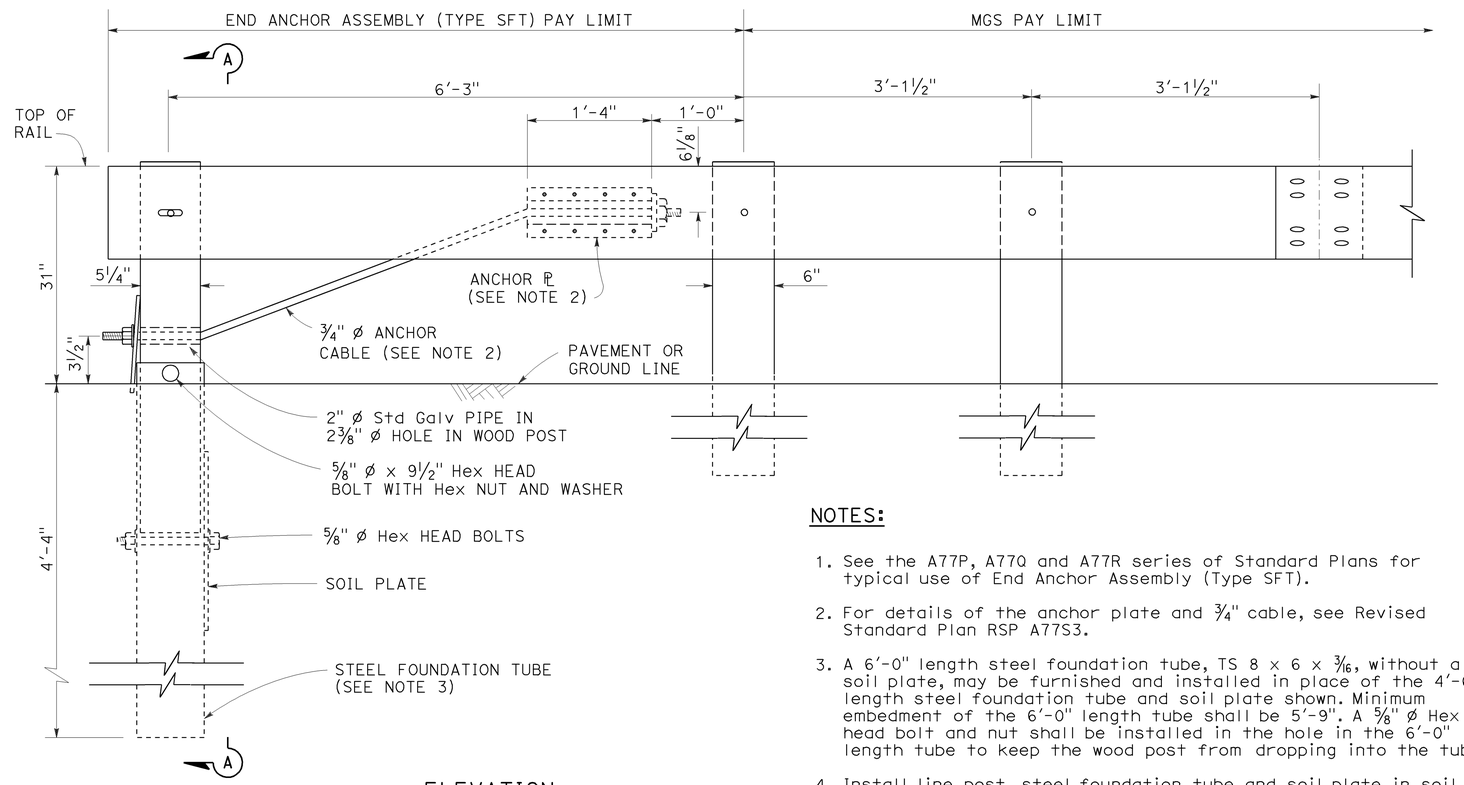

ELEVATION

END ANCHOR
ASSEMBLY (TYPE SFT)
See Note 1

NOTES:

1. See the A77P, A77Q and A77R series of Standard Plans for typical use of End Anchor Assembly (Type SFT).
2. For details of the anchor plate and 3/4" cable, see Revised Standard Plan RSP A77S3.
3. A 6'-0" length steel foundation tube, TS 8 x 6 x 3/16, without a soil plate, may be furnished and installed in place of the 4'-6" length steel foundation tube and soil plate shown. Minimum embedment of the 6'-0" length tube shall be 5'-9". A 5/8" ø Hex head bolt and nut shall be installed in the hole in the 6'-0" length tube to keep the wood post from dropping into the tube.
4. Install line post, steel foundation tube and soil plate in soil.

STATE OF CALIFORNIA
DEPARTMENT OF TRANSPORTATION

MIDWEST GUARDRAIL SYSTEM END ANCHOR ASSEMBLY (TYPE SFT)

NO SCALE

RSP A77S1 DATED NOVEMBER 15, 2013 SUPERSEDES RSP A77S1
DATED JULY 19, 2013 THAT SUPPLEMENTS THE STANDARD PLANS BOOK DATED 2010.

REVISED STANDARD PLAN RSP A77S1

2010 REVISED STANDARD PLAN RSP A77S1

10-4-13

Dist	COUNTY	ROUTE	POST MILES TOTAL PROJECT	SHEET No.	TOTAL SHEETS
07	LA	5	6.8/13.8	147	176

Randell D. Hiatt
REGISTERED CIVIL ENGINEER

November 15, 2013
PLANS APPROVAL DATE

REGISTERED PROFESSIONAL ENGINEER
Randell D. Hiatt
No. C50200
Exp. 6-30-15
CIVIL
STATE OF CALIFORNIA

THE STATE OF CALIFORNIA OR ITS OFFICERS OR AGENTS SHALL NOT BE RESPONSIBLE FOR THE ACCURACY OR COMPLETENESS OF SCANNED COPIES OF THIS PLAN SHEET.

TO ACCOMPANY PLANS DATED 1-21-14

2010 REVISED STANDARD PLAN RSP A77S3

NOTE:

See Revised Standard Plans RSP A77S1, RSP A77S2 and RSP A77T1 for typical use of anchor cable and anchor plate.

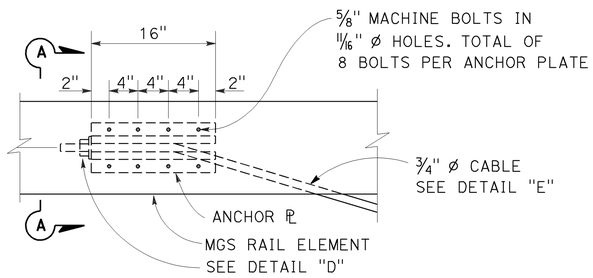

ANCHOR PLATE DETAIL
(MGS shown, TBB similar)

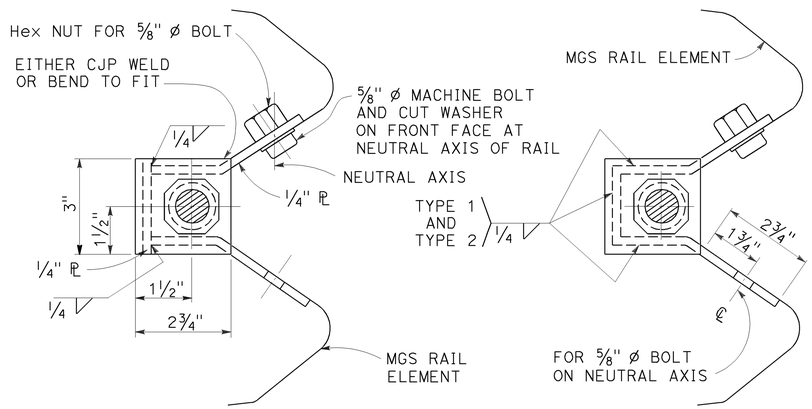

NOTE:
Dimensioning applies to both types.

SECTION A-A
(ALTERNATIVE TYPE 1)

SECTION A-A
(ALTERNATIVE TYPE 2)

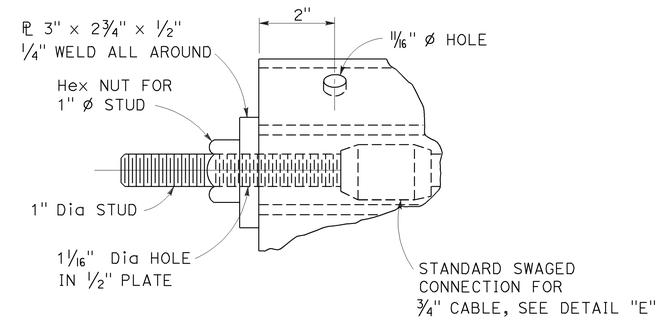

DETAIL "D"

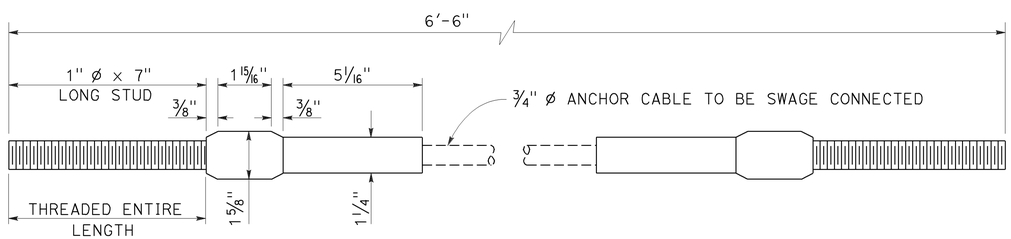

ANCHOR CABLE WITH
SWAGED FITTING AND STUD
DETAIL "E"

STATE OF CALIFORNIA
DEPARTMENT OF TRANSPORTATION

METAL RAILING ANCHOR CABLE AND ANCHOR PLATE DETAILS

NO SCALE

RSP A77S3 DATED NOVEMBER 15, 2013 SUPERSEDES RSP A77S3
DATED JULY 19, 2013 THAT SUPPLEMENTS THE STANDARD PLANS BOOK DATED 2010.

REVISED STANDARD PLAN RSP A77S3

10-4-13

Dist	COUNTY	ROUTE	POST MILES TOTAL PROJECT	SHEET No.	TOTAL SHEETS
07	LA	5	6.8/13.8	148	176

Randell D. Hiatt
REGISTERED CIVIL ENGINEER

July 19, 2013
PLANS APPROVAL DATE

REGISTERED PROFESSIONAL ENGINEER
Randell D. Hiatt
No. C50200
Exp. 6-30-15
CIVIL
STATE OF CALIFORNIA

THE STATE OF CALIFORNIA OR ITS OFFICERS OR AGENTS SHALL NOT BE RESPONSIBLE FOR THE ACCURACY OR COMPLETENESS OF SCANNED COPIES OF THIS PLAN SHEET.

TO ACCOMPANY PLANS DATED 1-21-14

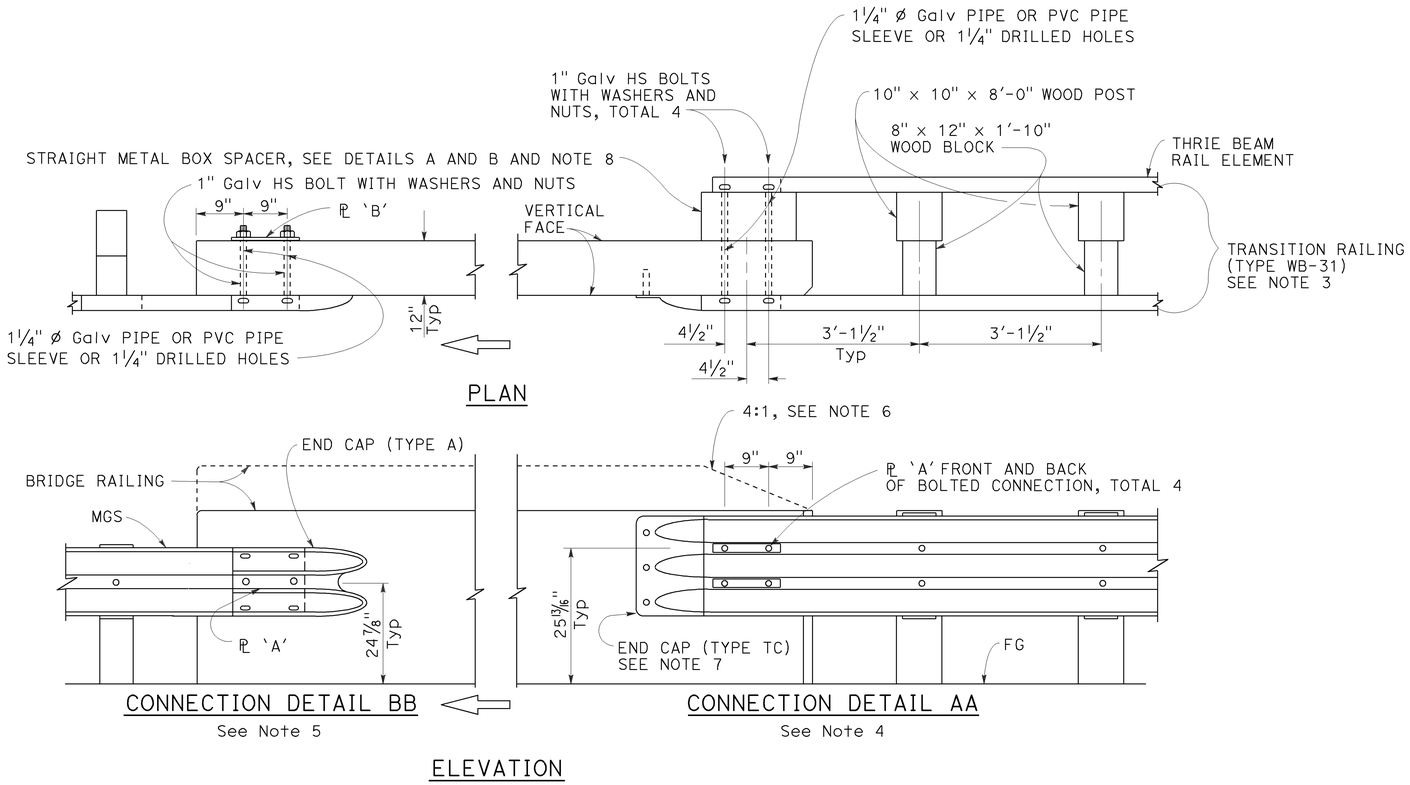

MIDWEST GUARDRAIL SYSTEM CONNECTION TO BRIDGE RAILING WITHOUT SIDEWALK

NOTES:

1. See Revised Standard Plan RSP A77U2 for additional connection details to bridges without sidewalks.
2. Additional details of posts, blocks and hardware are shown on Revised Standard Plans RSP A77M1, RSP A77N1 and RSP A77N2.
3. For additional details of Transition Railing (Type WB-31), see Revised Standard Plan RSP A77U4. Transition Railing (Type WB-31) transitions the 12 gauge MGS railing section to a heavier gage nested thrie beam railing section which is connected to the concrete bridge railing.
4. For typical use of Connection Detail AA, see Layout Types 12A and 12B on Revised Standard Plan RSP A77Q1, Layout Types 12C and 12D on Revised Standard Plan RSP A77Q2, and Layout Type 12E on Revised Standard Plan RSP A77Q3.
5. For typical use of Connection Detail BB, see Layout Type 12D (structure departure railing connection) on Revised Standard Plan RSP A77Q2 and Layout Type 12DD on Revised Standard Plan RSP A77Q5.
6. Where the height of the bridge railing exceeds the height of the thrie beam railing by more than 1" at Connection Detail AA, taper the top of the end of the bridge railing at 4:1 to match the top elevation of the thrie beam rail.
7. For details of End Cap (Type TC), see Revised Standard Plan RSP A77U4.
8. See Revised Standard Plan RSP A77U4 for additional details regarding depth dimension for straight metal box spacer.

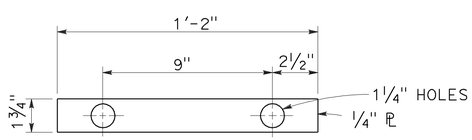

PLATE 'A'

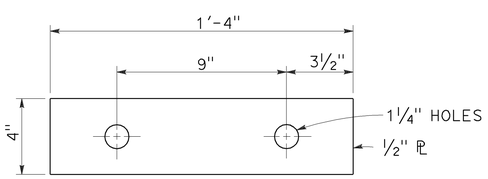

PLATE 'B'
(For backside of connection BB)

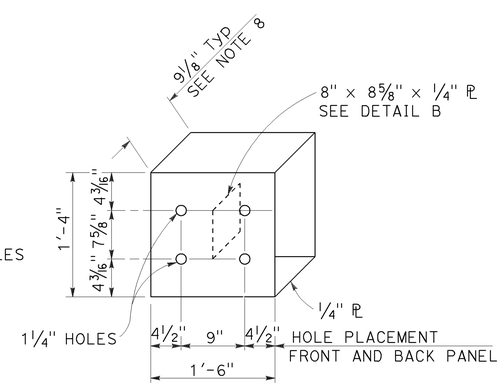

DETAIL A

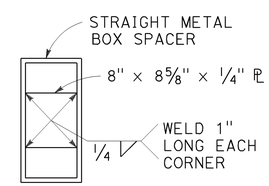

DETAIL B

STRAIGHT METAL BOX SPACER

STATE OF CALIFORNIA
DEPARTMENT OF TRANSPORTATION

MIDWEST GUARDRAIL SYSTEM CONNECTIONS TO BRIDGE RAILINGS WITHOUT SIDEWALKS DETAILS No. 1

NO SCALE

RSP A77U1 DATED JULY 19, 2013 SUPPLEMENTS THE STANDARD PLANS BOOK DATED 2010.

REVISED STANDARD PLAN RSP A77U1

2010 REVISED STANDARD PLAN RSP A77U1

7-8-13

Dist	COUNTY	ROUTE	POST MILES TOTAL PROJECT	SHEET No.	TOTAL SHEETS
07	LA	5	6.8/13.8	149	176

Randell D. Hiatt
REGISTERED CIVIL ENGINEER

July 19, 2013
PLANS APPROVAL DATE

REGISTERED PROFESSIONAL ENGINEER
Randell D. Hiatt
No. C50200
Exp. 6-30-15
CIVIL
STATE OF CALIFORNIA

THE STATE OF CALIFORNIA OR ITS OFFICERS OR AGENTS SHALL NOT BE RESPONSIBLE FOR THE ACCURACY OR COMPLETENESS OF SCANNED COPIES OF THIS PLAN SHEET.

TO ACCOMPANY PLANS DATED 1-21-14

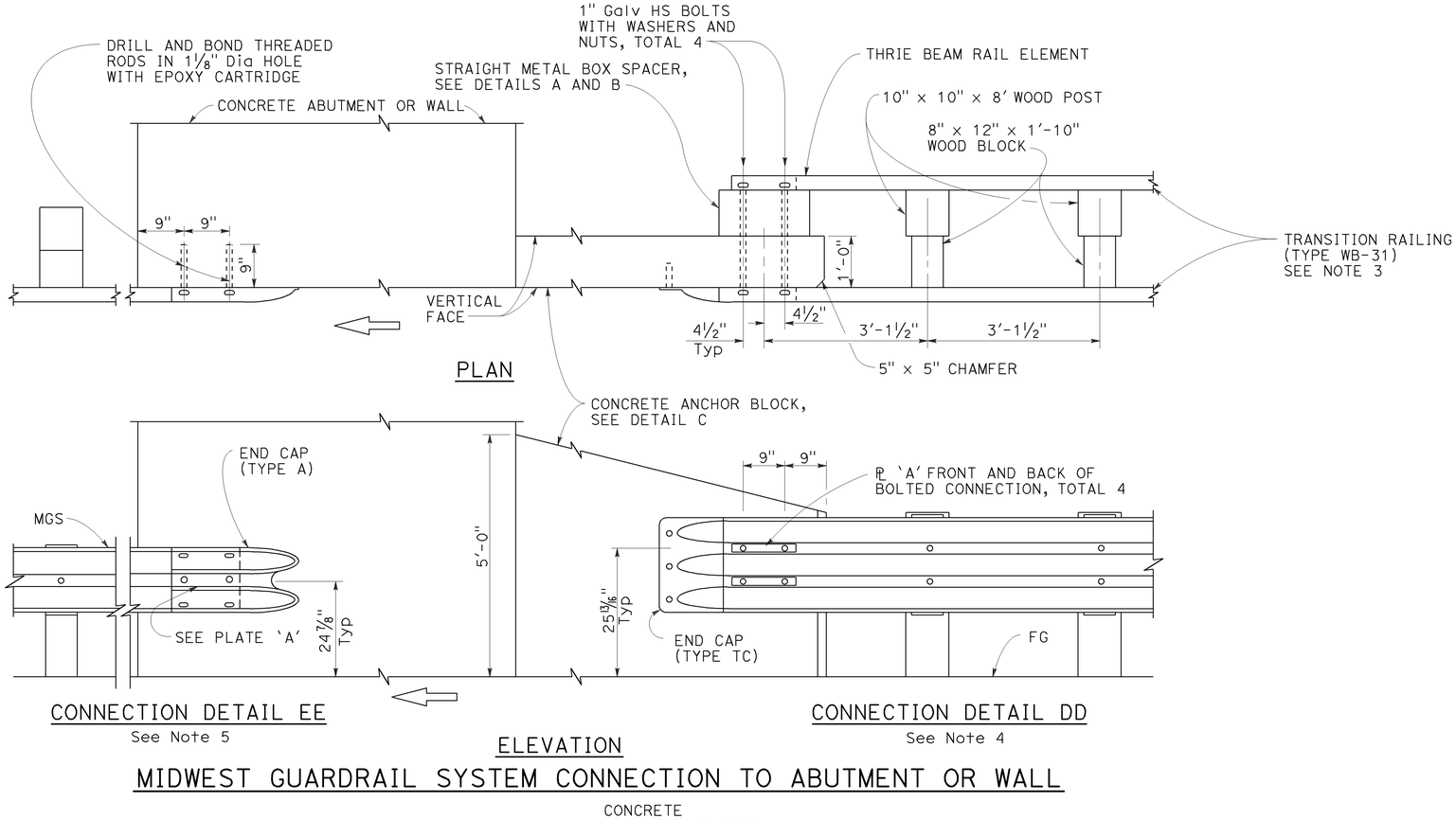

MIDWEST GUARDRAIL SYSTEM CONNECTION TO ABUTMENT OR WALL

NOTES:

1. These connection details apply to abutments and walls.
2. Additional details of posts, blocks and hardware are shown on Revised Standard Plans RSP A77M1, RSP A77N1 and RSP A77N2.
3. For additional details of Transition Railing (Type WB-31), see Revised Standard Plan RSP A77U4. Transition Railing (Type WB-31) transitions the 12 gauge MGS railing section to a heavier gage nested thrie beam railingsection which is connected to the concrete anchor block.
4. For typical use of Connection Details DD, see Layout Types 12A and 12B on Revised Standard Plan RSP A77Q1 and Layout Types 12C and 12D on Revised Standard Plan RSP A77Q2.
5. For typical use of Connection Detail EE, see Layout Type 12D on Revised Standard Plan RSP A77Q2 and Layout Type 12DD on Revised Standard Plan RSP A77Q5.

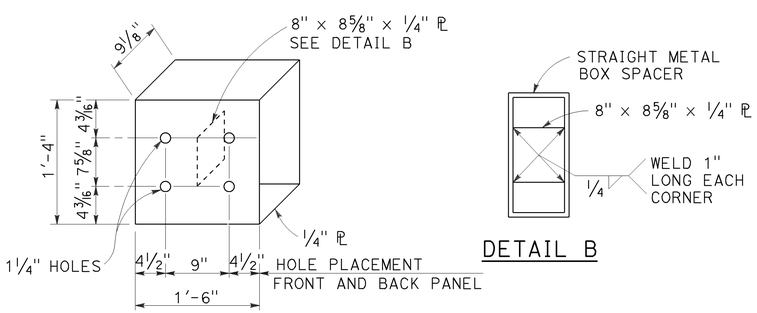

STRAIGHT METAL BOX SPACER

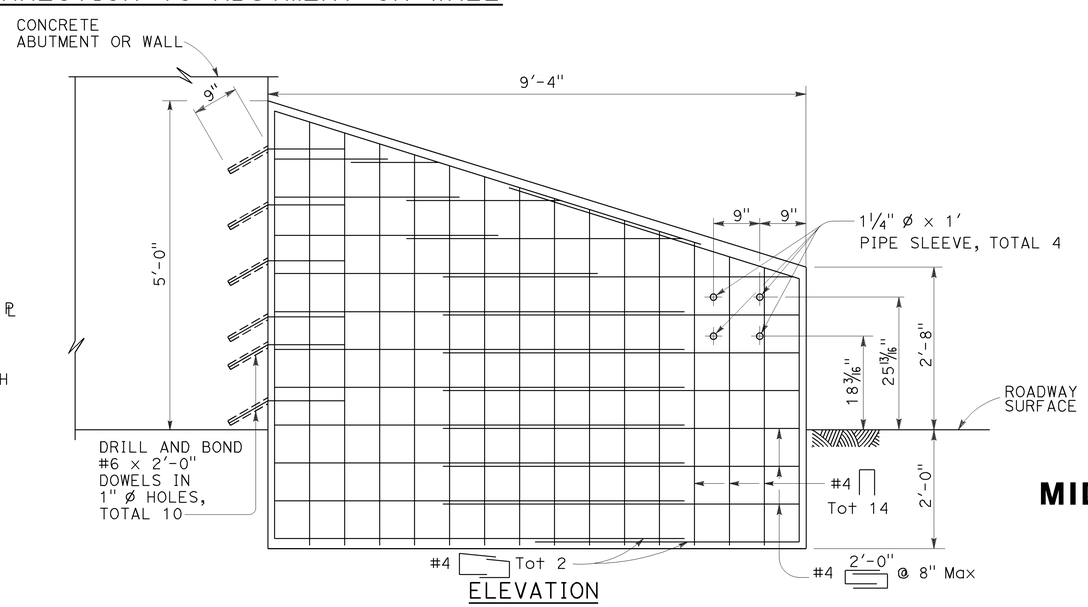

ANCHOR BLOCK FOR TRANSITION RAILING CONNECTION

DETAIL C

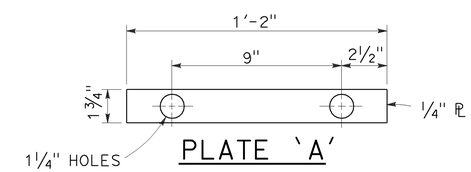

STATE OF CALIFORNIA
DEPARTMENT OF TRANSPORTATION

MIDWEST GUARDRAIL SYSTEM CONNECTIONS TO ABUTMENTS AND WALLS

NO SCALE

RSP A77U3 DATED JULY 19, 2013 SUPPLEMENTS THE STANDARD PLANS BOOK DATED 2010.

REVISED STANDARD PLAN RSP A77U3

2010 REVISED STANDARD PLAN RSP A77U3

7-8-13

Dist	COUNTY	ROUTE	POST MILES TOTAL PROJECT	SHEET No.	TOTAL SHEETS
07	LA	5	6.8/13.8	150	176

Randell D. Hiatt
REGISTERED CIVIL ENGINEER

November 15, 2013
PLANS APPROVAL DATE

REGISTERED PROFESSIONAL ENGINEER
Randell D. Hiatt
No. C50200
Exp. 6-30-15
CIVIL
STATE OF CALIFORNIA

THE STATE OF CALIFORNIA OR ITS OFFICERS OR AGENTS SHALL NOT BE RESPONSIBLE FOR THE ACCURACY OR COMPLETENESS OF SCANNED COPIES OF THIS PLAN SHEET.

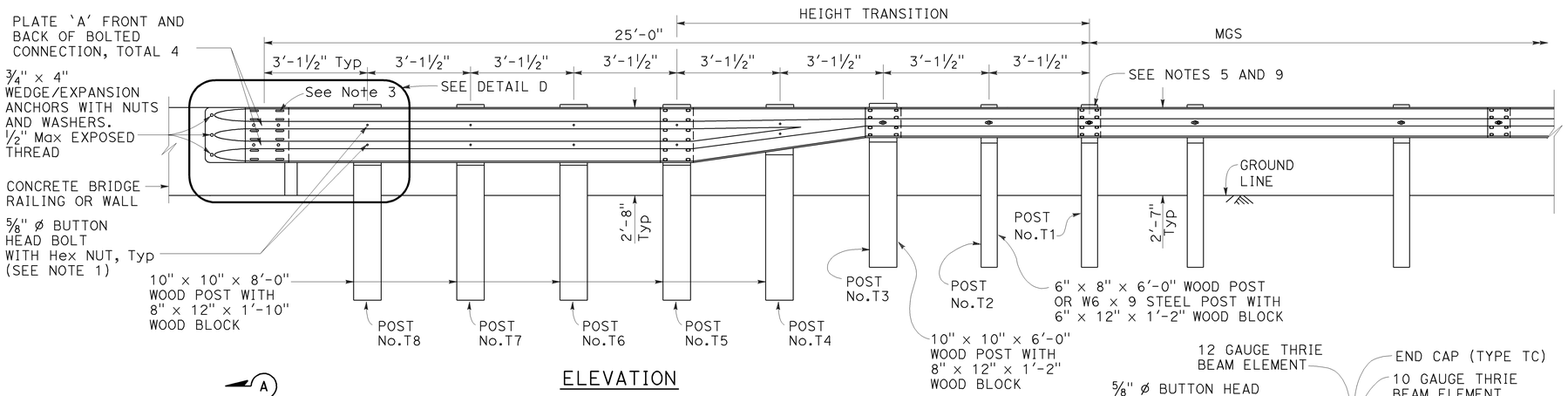

ELEVATION

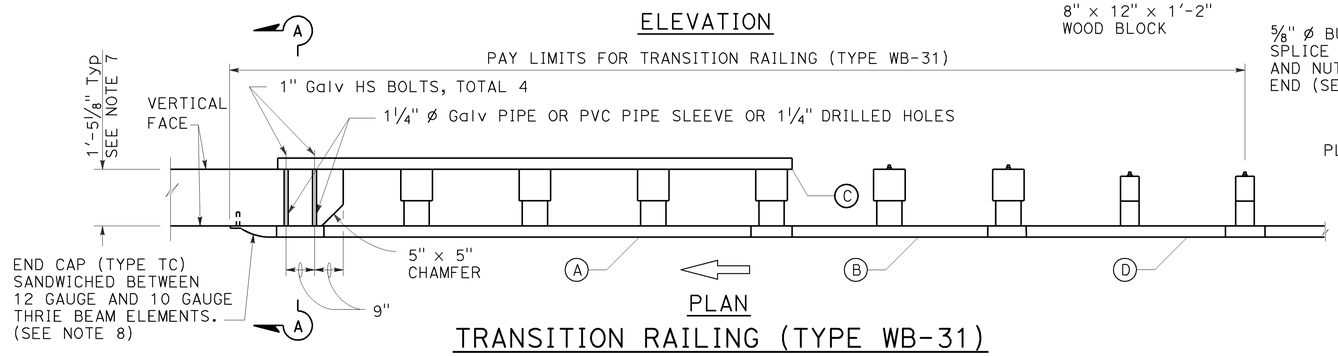

PLAN

TRANSITION RAILING (TYPE WB-31)

(No Blockout Attachment)

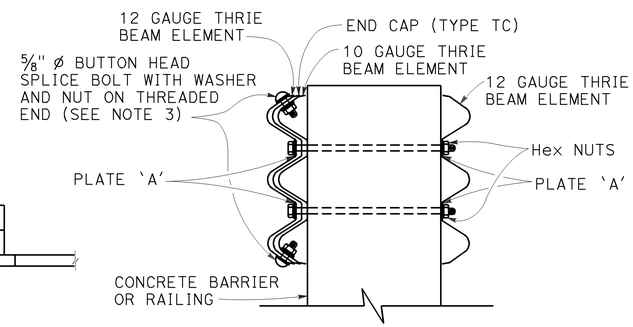

SECTION A-A

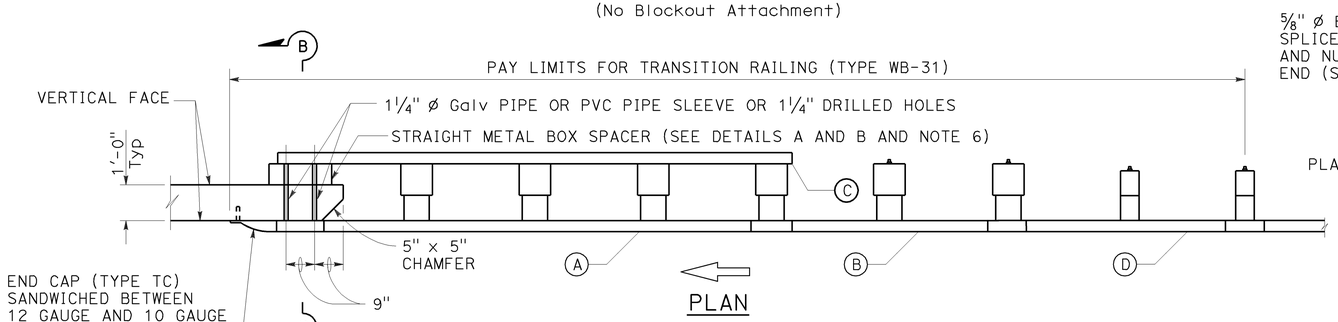

PLAN

TRANSITION RAILING (TYPE WB-31)

(Blockout Attachment)

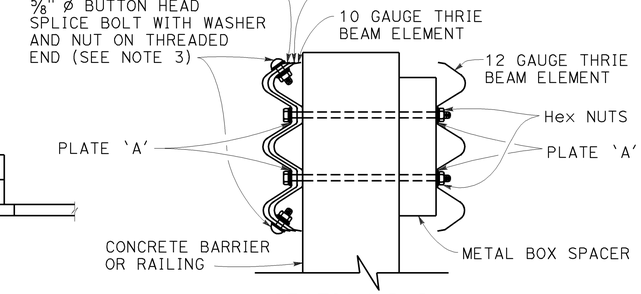

SECTION B-B

NOTES:

TO ACCOMPANY PLANS DATED 1-21-14

1. Use 5/8" ø Button head bolts and hex nuts for connections to posts. No washer on rail face for bolted connections to post.
2. The nested rail elements, end cap, and 'W' beam to thrie beam element may be spliced together prior to bolting the elements to the wood post and concrete barrier or railing.
3. Exterior splice bolt holes for rail element splices at Post No. T5 and the connection to the concrete barrier or railing shall be the standard 29/32" x 1 1/8" slot size. Interior splice bolt holes at these locations may be increased up to 1 1/4" ø. Only the top 4 and the bottom 4 splice bolts with washers and nuts are required for rail splices at Post No. T5 and the connection to the concrete barrier or railing.
4. The top elevation of Posts No. T2 through No. T7 shall not project more than 1" above the top elevation of the rail element.
5. Typically, the railing connected to Transition Railing (Type WB-31) will be either standard railing section of MGS with height transition ratio of 150:1 or a Caltrans approved 31" end treatment attached to Post No. T1.
6. The depth of the metal box spacer varies from the 9 1/8" to 1 1/2" and is dependent on the width of the concrete railing or wall. The combined dimension for the depth of the metal box spacer plus the width of railing or wall is typically 21 1/8". Where the space between the backside of the concrete railing or wall and the rear thrie beam element is less than 1 1/2", metal plates similar to Plate 'A' are to be used as spacers.
7. Where the width of the concrete railing or wall is greater than 17 1/8", wood blocks are to be used to fill the space created between the backside of Posts No. T5 through No. T8 and the rear thrie beam element. These wood blocks shall be 8" in width and 1'-2" in length. The dimension between the front thrie beam element and the rear thrie beam element is to match the width of the concrete railing or wall.
8. End cap may be installed over 12 gauge and 10 gauge thrie beam elements where transition railing is installed on the departure end of bridge railing.
9. Conform standard railing section height to 31" at Post No. T1 using height transition ratio of 150:1.

LEGEND:

(A) NESTED THRIE BEAM ELEMENTS (ONE 12 GAUGE ELEMENT NESTED OVER ONE 10 GAUGE ELEMENT).

(B) ONE ASYMMETRICAL 10 GAUGE "W" BEAM TO THRIE BEAM ELEMENT.

(C) ONE 12 GAUGE THRIE BEAM ELEMENT.

(D) ONE 10 GAUGE "W" BEAM RAIL ELEMENT (7'-3 1/2" LENGTH)

10 GAUGE = 0.138" THICK
12 GAUGE = 0.108" THICK

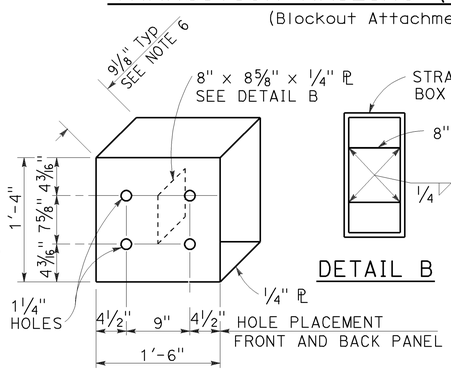

DETAIL A

STRAIGHT METAL BOX SPACER

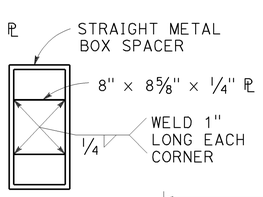

DETAIL B

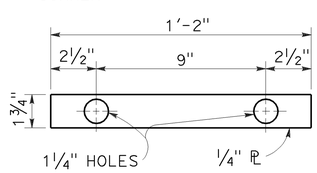

DETAIL C

PLATE 'A'

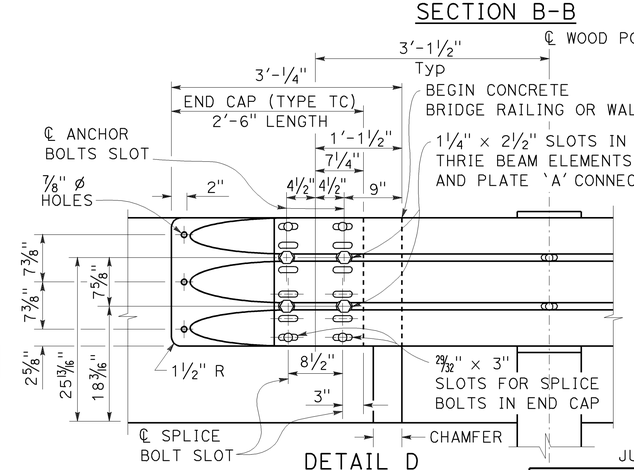

DETAIL D

STATE OF CALIFORNIA
DEPARTMENT OF TRANSPORTATION

MIDWEST GUARDRAIL SYSTEM TRANSITION RAILING (TYPE WB-31)

NO SCALE

RSP A77U4 DATED NOVEMBER 15, 2013 SUPERSEDES RSP A77U4 DATED JULY 19, 2013 THAT SUPPLEMENTS THE STANDARD PLANS BOOK DATED 2010.

REVISED STANDARD PLAN RSP A77U4

2010 REVISED STANDARD PLAN RSP A77U4

10-4-13

Dist	COUNTY	ROUTE	POST MILES TOTAL PROJECT	SHEET No.	TOTAL SHEETS
07	LA	5	6.8/13.8	151	176

Glenn DeCou
REGISTERED CIVIL ENGINEER

October 19, 2012
PLANS APPROVAL DATE

REGISTERED PROFESSIONAL ENGINEER
Glenn DeCou
No. C34547
Exp. 9-30-13
CIVIL
STATE OF CALIFORNIA

THE STATE OF CALIFORNIA OR ITS OFFICERS OR AGENTS SHALL NOT BE RESPONSIBLE FOR THE ACCURACY OR COMPLETENESS OF SCANNED COPIES OF THIS PLAN SHEET.

TO ACCOMPANY PLANS DATED 1-21-14

2010 REVISED STANDARD PLAN RSP A85B

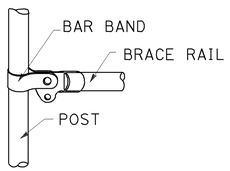

BRACE RAIL

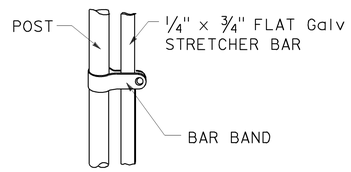

STRETCHER BAR

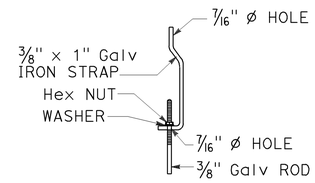

TRUSS TIGHTENER

NOTES:

1. All material for abutment connection to be galvanized.
2. The chain link fabric shall be replaced by barbed wire strands at 12" maximum centers between the double posts.
3. When the width of the culvert makes it necessary to anchor a post to the top of the culvert, a cast iron shoe or other device approved by the Engineer shall be used.
4. Fencing over stream and around headwall may also use Barbed Wire or Wire Mesh fencing with either wood post or steel post installation.
5. See Standard Plan A85 for Chain Link fence dimensions. See Standard Plan A86 for Barbed Wire and Wire Mesh fence dimensions and for wood post and steel post installation.

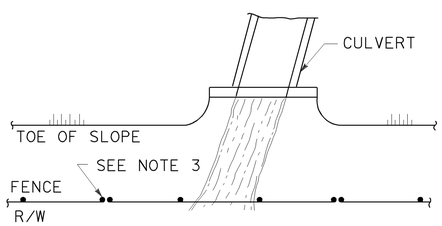

PLAN

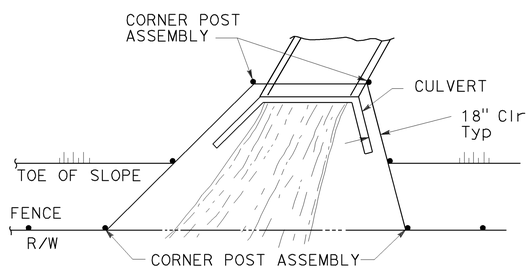

PLAN

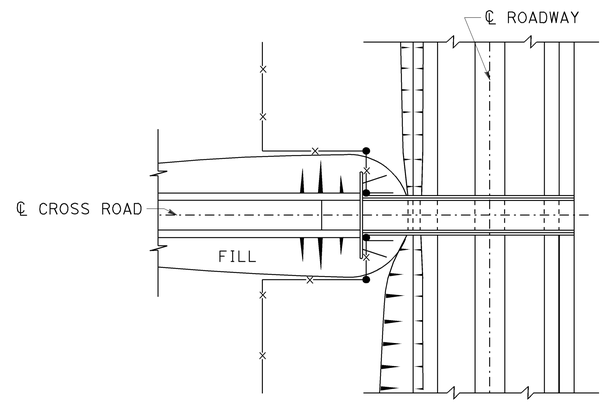

PLAN OF ROADWAY - OVERCROSSING

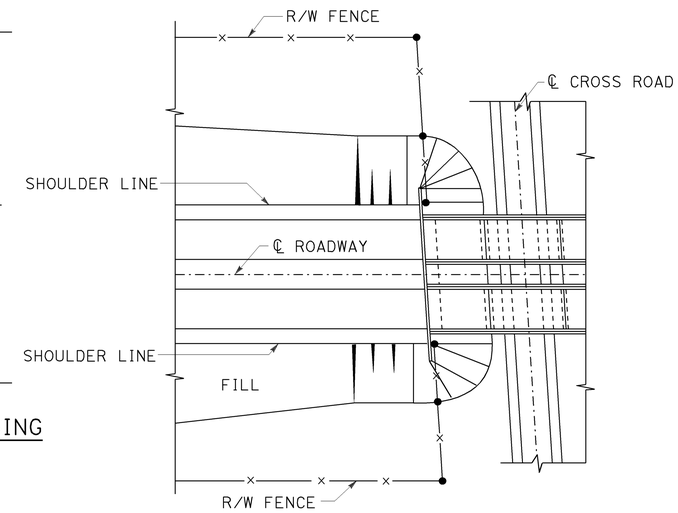

PLAN OF ROADWAY - UNDERCROSSING

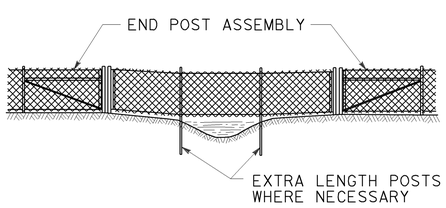

ELEVATION

INSTALLATION OVER STREAM

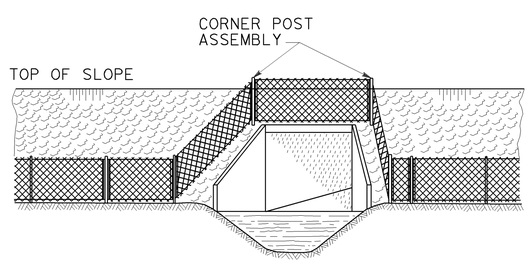

ELEVATION

INSTALLATION AROUND HEADWALL

See Note 4

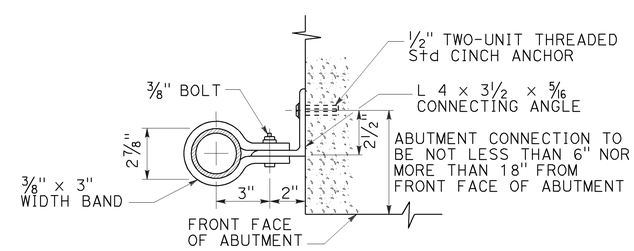

ABUTMENT CONNECTION

TYPICAL INSTALLATION AT BRIDGES

STATE OF CALIFORNIA
DEPARTMENT OF TRANSPORTATION

CHAIN LINK FENCE DETAILS

NO SCALE

RSP A85B DATED OCTOBER 19, 2012 SUPERSEDES STANDARD PLAN A85B
DATED MAY 20, 2011 - PAGE 114 OF THE STANDARD PLANS BOOK DATED 2010.

REVISED STANDARD PLAN RSP A85B

7-19-12

Dist	COUNTY	ROUTE	POST MILES TOTAL PROJECT	SHEET No.	TOTAL SHEETS
07	LA	5	6.8/13.8	152	176

REGISTERED CIVIL ENGINEER

July 19, 2013
PLANS APPROVAL DATE

REGISTERED PROFESSIONAL ENGINEER Michael Janzen No. 44788 Exp. 03-31-14 CIVIL STATE OF CALIFORNIA

THE STATE OF CALIFORNIA OR ITS OFFICERS OR AGENTS SHALL NOT BE RESPONSIBLE FOR THE ACCURACY OR COMPLETENESS OF SCANNED COPIES OF THIS PLAN SHEET.

TO ACCOMPANY PLANS DATED 1-21-14

2010 REVISED STANDARD PLAN RSP A87A

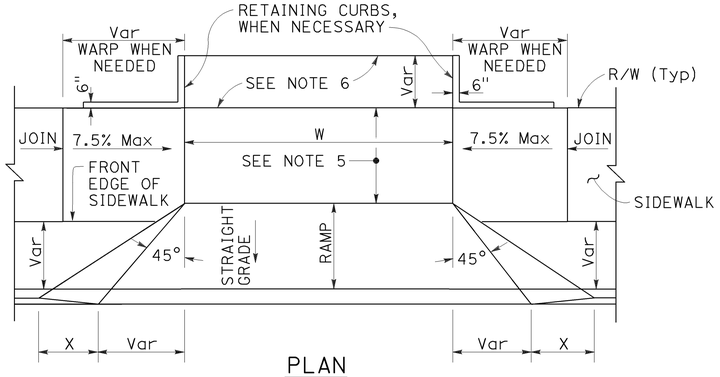

PLAN

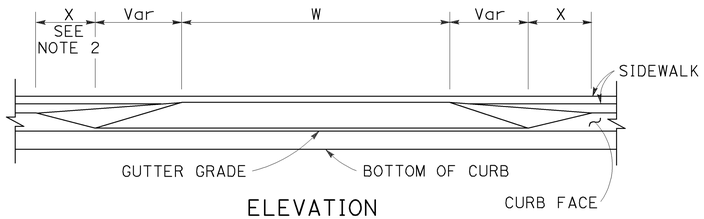

ELEVATION

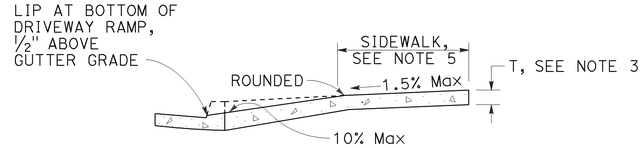

CASE A

Typical driveway, sidewalk not depressed

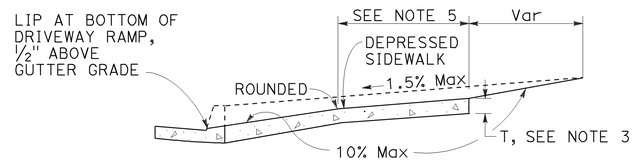

CASE B

Driveway with depressed sidewalk

SECTIONS

DRIVEWAYS

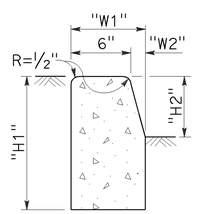

TYPE A1 CURBS

See Table A

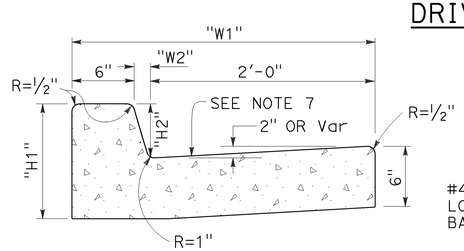

TYPE A2 CURBS

See Table A

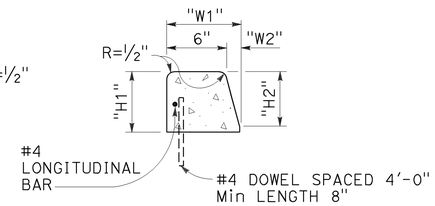

TYPE A3 CURBS

Superimposed on existing pavement
See Table A

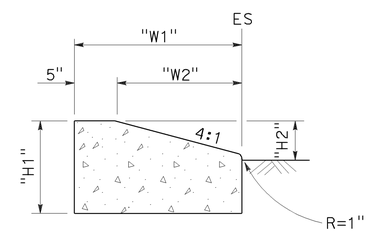

TYPE D CURBS

See Table A

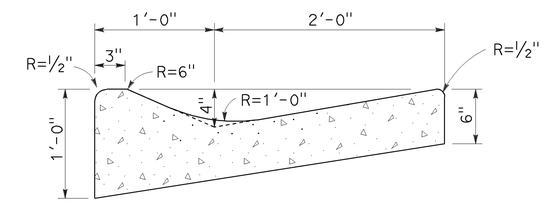

TYPE E CURB

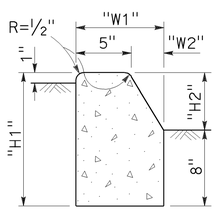

TYPE B1 CURBS

See Table A

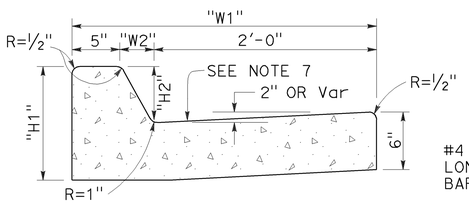

TYPE B2 CURBS

See Table A

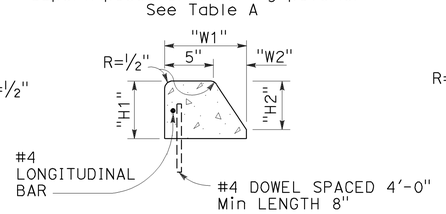

TYPE B3 CURBS

Superimposed on existing pavement
See Table A

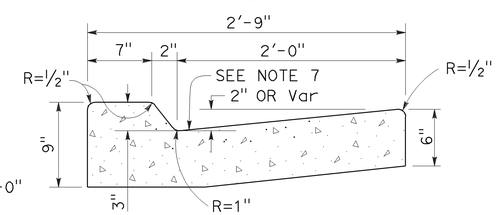

TYPE B4 CURBS

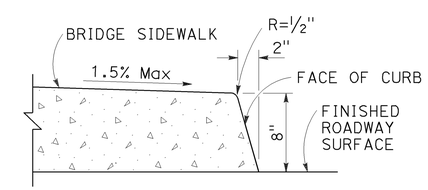

TYPE H CURB

On Bridges

CURBS

TABLE A

CURB TYPE	DIMENSIONS			
	"H1"	"H2"	"W1"	"W2"
A1-6	1'-2"	6"	7½"	1½"
A1-8	1'-4"	8"	8"	2"
A2-6	1'-0"	6"	2'-7½"	1½"
A2-8	1'-2"	8"	2'-8"	2"
A3-6	6"	5"	7¼"	1¼"
A3-8	8"	7"	7¾"	1¾"
B1-4	1'-0"	4"	7½"	2½"
B1-6	1'-2"	6"	9"	4"
B2-4	10"	4"	2'-7½"	2½"
B2-6	1'-0"	6"	2'-9"	4"
B3-4	4"	3"	7"	2"
B3-6	6"	5"	8½"	3½"
D-4	10"	4"	1'-6"	1'-1"
D-6	1'-0"	6"	2'-2"	1'-9"

CURB QUANTITIES

TYPE	CUBIC YARDS PER LINEAR FOOT
A1-6	0.02585
A1-8	0.03084
A2-6	0.05903
A2-8	0.06379
A3-6	0.01036
A3-8	0.01435
B1-4	0.02185
B1-6	0.02930
B2-4	0.05515
B2-6	0.06171
B3-4	0.00641
B3-6	0.01074
B4	0.05709
D-4	0.04083
D-6	0.06804
E	0.06661

NOTES:

1. Case A driveway section typically applies.
2. X=3'-0" except for curb heights over 10" where 4:1 slopes shall be used on curb slope.
3. Sidewalk and ramp thickness "T" at driveway shall be 4" for residental and 6" for commercial.
4. Difference in slope of the driveway ramp and the slope of a line between the gutter and a point on the roadway 5'-0" from gutter line shall not exceed 15%. Reduce driveway ramp slope, not gutter slope, where required.
5. Minimum width of clear passageway for sidewalk shall be 4'-2".
6. Retaining curbs and acquisition of construction easement may be necessary for narrow sidewalks or curb heights in excess of 6".
7. Across the pedestrian route at curb ramp locations, the gutter pan slope shall not exceed 1" of depth for each 2'-0" of width.

STATE OF CALIFORNIA
DEPARTMENT OF TRANSPORTATION

CURBS AND DRIVEWAYS

NO SCALE

RSP A87A DATED JULY 19, 2013 SUPERSEDES STANDARD PLAN A87A
DATED MAY 20, 2011 - PAGE 119 OF THE STANDARD PLANS BOOK DATED 2010.

REVISED STANDARD PLAN RSP A87A

7-8-13

Dist	COUNTY	ROUTE	POST MILES TOTAL PROJECT	SHEET No.	TOTAL SHEETS
07	LA	5	6.8/13.8	153	176

REGISTERED CIVIL ENGINEER

July 19, 2013
PLANS APPROVAL DATE

REGISTERED PROFESSIONAL ENGINEER
Michael Janzen
No. 44788
Exp. 03-31-14
CIVIL
STATE OF CALIFORNIA

THE STATE OF CALIFORNIA OR ITS OFFICERS OR AGENTS SHALL NOT BE RESPONSIBLE FOR THE ACCURACY OR COMPLETENESS OF SCANNED COPIES OF THIS PLAN SHEET.

TO ACCOMPANY PLANS DATED 1-21-14

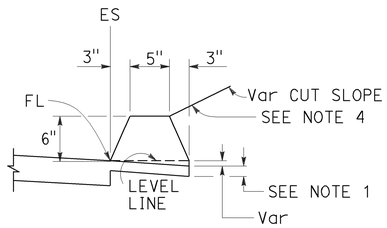

TYPE A
See Note 3

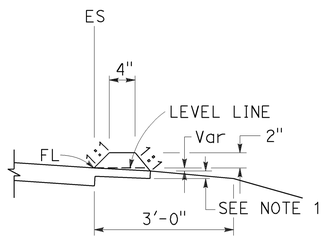

TYPE C

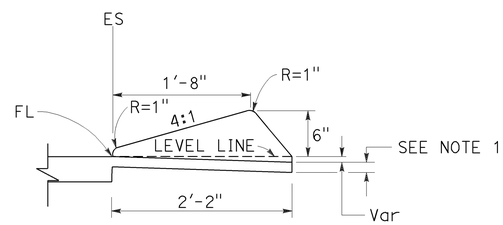

TYPE D

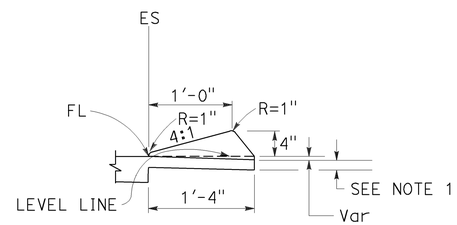

TYPE E

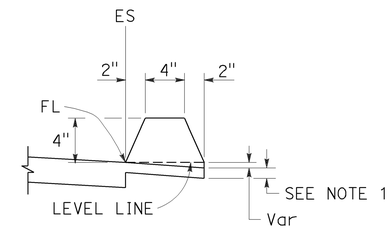

TYPE F
See Note 5

DIKES

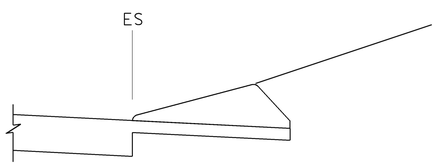

CASE C-1
Cut Slope

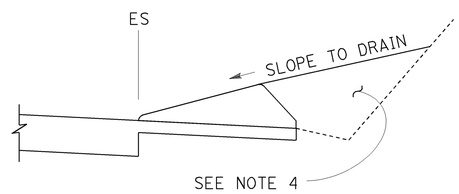

CASE C-2
Cut Slope

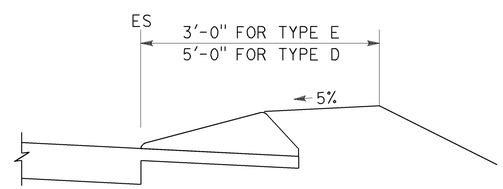

CASE F

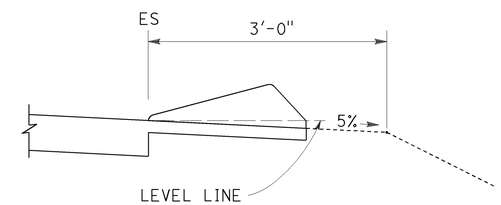

CASE R
See Note 2

TYPE D AND E BACKFILL DETAILS

NOTES:

1. For HMA shoulders only, extend top layer of HMA placed on the shoulder under dike with no joint at the ES. For projects with OGFC shoulders, do not extend OGFC under dike. See project plans for modified dike detail.
2. Case R applies to retrofit only projects where restrictive conditions do not provide enough width for Case F backfill.
3. Type A dike only to be used where restrictive slope conditions do not provide enough width to use Type D or Type E dike.
4. Fill and compact with excavated material to top of dike.
5. Use Type F dike, where dike is required with guard railing installations. See Revised Standard Plan RSP A77N4 for dike positioning details.

DIKE QUANTITIES

TYPE	CUBIC YARDS PER LINEAR FOOT
A	0.0135
C	0.0038
D	0.0293
E	0.0130
F	0.0066

Quantities based on 5% cross slope.

STATE OF CALIFORNIA
DEPARTMENT OF TRANSPORTATION

HOT MIX ASPHALT DIKES

NO SCALE

RSP A87B DATED JULY 19, 2013 SUPERSEDES STANDARD PLAN A87B DATED MAY 20, 2011 - PAGE 120 OF THE STANDARD PLANS BOOK DATED 2010.

REVISED STANDARD PLAN RSP A87B

2010 REVISED STANDARD PLAN RSP A87B

6-27-13

Dist	COUNTY	ROUTE	POST MILES TOTAL PROJECT	SHEET No.	TOTAL SHEETS
07	LA	5	6.8/13.8	154	176

REGISTERED CIVIL ENGINEER

July 19, 2013
PLANS APPROVAL DATE

REGISTERED PROFESSIONAL ENGINEER Hector David Cordova No. C41957 Exp. 3-31-14 CIVIL STATE OF CALIFORNIA

THE STATE OF CALIFORNIA OR ITS OFFICERS OR AGENTS SHALL NOT BE RESPONSIBLE FOR THE ACCURACY OR COMPLETENESS OF SCANNED COPIES OF THIS PLAN SHEET.

TO ACCOMPANY PLANS DATED 1-21-14

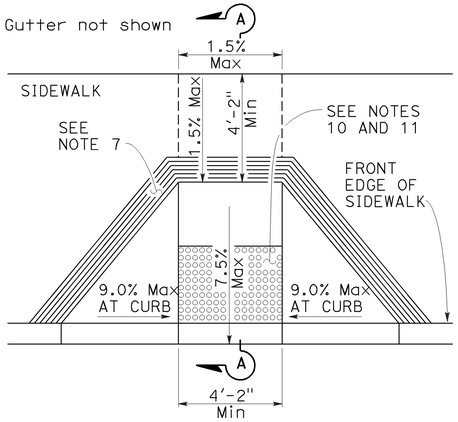

CASE A

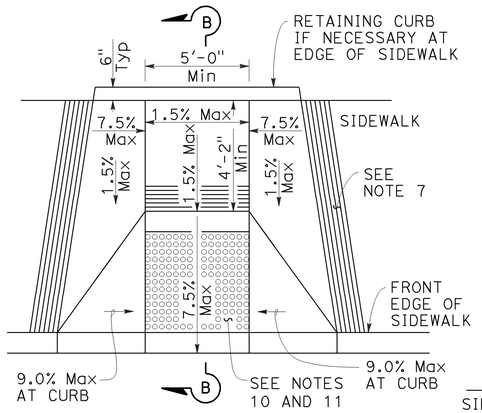

CASE B

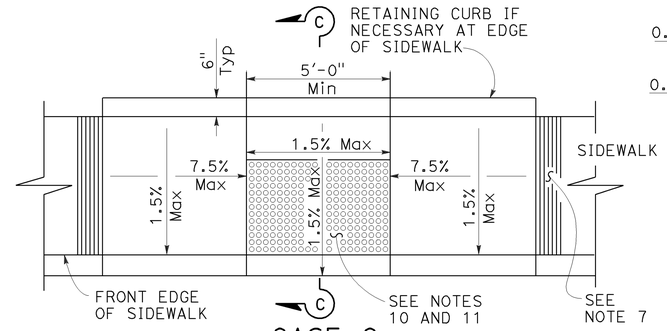

CASE C

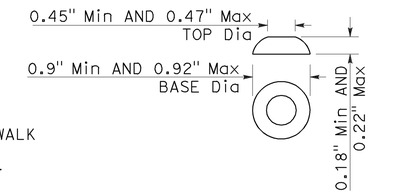

RAISED TRUNCATED DOME

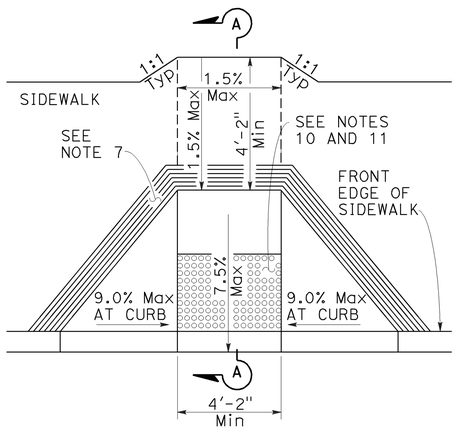

CASE D

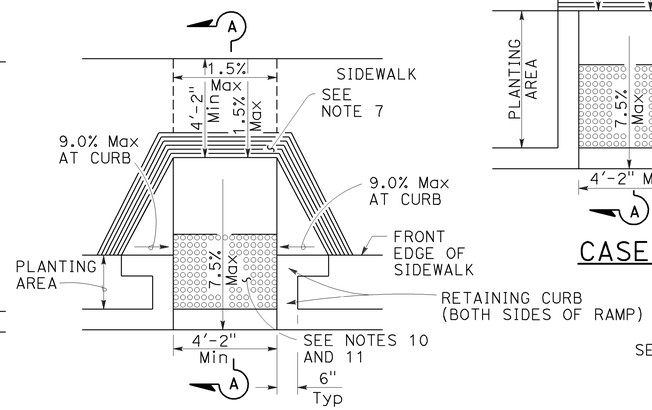

CASE E

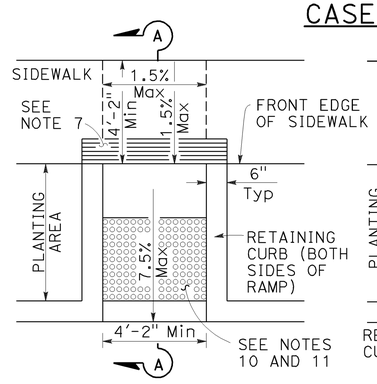

CASE F

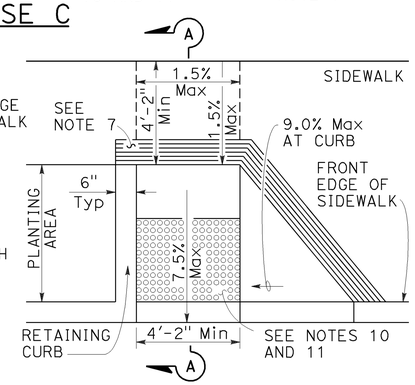

CASE G

See Note 4

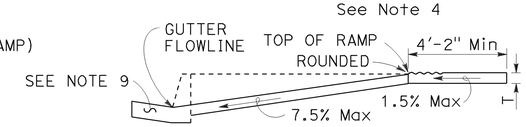

SECTION A-A

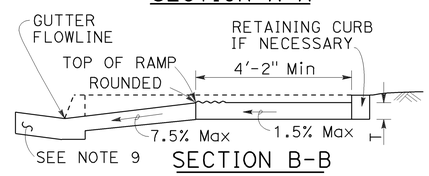

SECTION B-B

Depress entire sidewalk as required

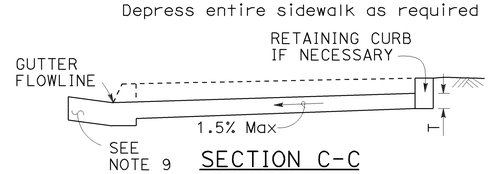

SECTION C-C

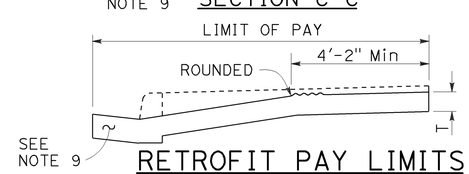

RETROFIT PAY LIMITS

Existing curb and sidewalk

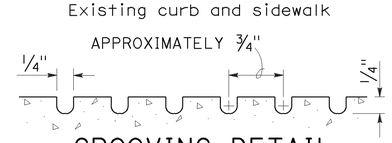

GROOVING DETAIL

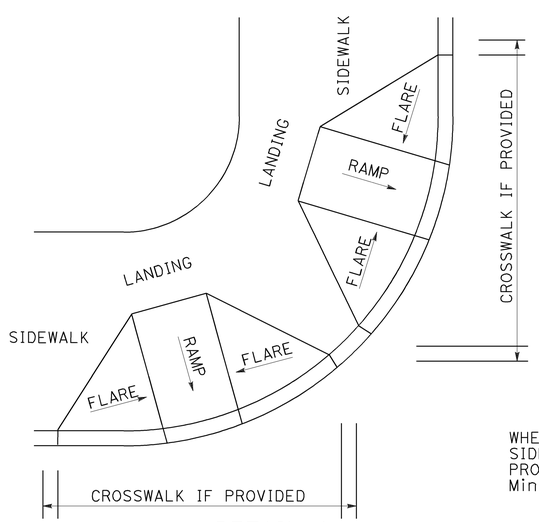

DETAIL A

TYPICAL TWO-RAMP CORNER INSTALLATION

See Note 1

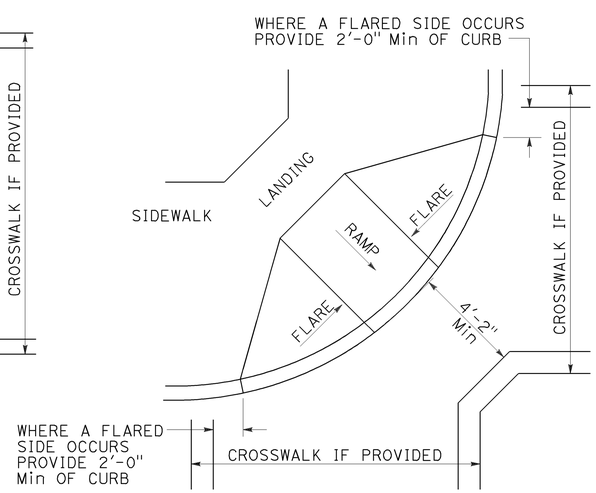

DETAIL B

TYPICAL ONE-RAMP CORNER INSTALLATION

See Notes 1 and 3

NOTES:

1. As site conditions dictate, Case A through Case G curb ramps may be used for corner installations similar to those shown in Detail A and Detail B. The case of curb ramps used in Detail A do not have to be the same. Case A through Case G curb ramps also may be used at mid block locations, as site conditions dictate.
2. If distance from curb to back of sidewalk is too short to accommodate ramp and 4'-2" platform (landing) as shown in Case A, the sidewalk may be depressed longitudinally as in Case B, or C or may be widened as in Case D.
3. When ramp is located in center of curb return, crosswalk configuration must be similar to that shown for Detail B.
4. As site conditions dictate, the retaining curb side and the flared side of the Case G ramp shall be constructed in reversed position.
5. If located on a curve, the sides of the ramp need not be parallel, but the minimum width of the ramp shall be 4'-2".
6. Side slope of ramp flares vary uniformly from a maximum of 9.0% at curb to conform with longitudinal sidewalk slope adjacent to top of the ramp, except in Case C and Case F.
7. The curb ramp shall be outlined, as shown, with a 1'-0" wide border with 1/4" grooves approximately 3/4" on center. See grooving detail.
8. Transitions from ramps and landing to walks, gutters or streets shall be flush (no lip) and free of abrupt changes.
9. Counter slopes of adjoining gutters and road surfaces immediately adjacent to and within 24 inches of the curb ramp shall not be steeper than 1:20 (5.0%). Gutter pan slope shall not exceed 1" of depth for each 2'-0" of width.
10. Curb ramps shall have a detectable warning surface that extends the full width and 3'-0" depth of the ramp. Detectable Warning Surfaces shall conform to the details on this plan and the requirements in the Standard Specifications.
11. The edge of the detectable warning surface nearest the street shall be between 6" and 8" from the gutter flowline.
12. Sidewalk and ramp thickness, "T", shall be 3 1/2" minimum.
13. Utility pull boxes, manholes, vaults and all other utility facilities within the boundaries of the curb ramp will be relocated or adjusted to grade by the owner prior to, or in conjunction with, curb ramp construction.
14. Detectable warning surface may have to be cut to allow removal of utility covers while maintaining full detectable warning width and depth.

RAISED TRUNCATED DOME PATTERN (IN-LINE)

DETECTABLE WARNING SURFACE

See Note 10

STATE OF CALIFORNIA
DEPARTMENT OF TRANSPORTATION

CURB RAMP DETAILS

NO SCALE

RSP A88A DATED JULY 19, 2013 SUPERSEDES STANDARD PLAN A88A
DATED MAY 20, 2011 - PAGE 121 OF THE STANDARD PLANS BOOK DATED 2010.

REVISED STANDARD PLAN RSP A88A

2010 REVISED STANDARD PLAN RSP A88A

7-8-13

Dist	COUNTY	ROUTE	POST MILES TOTAL PROJECT	SHEET No.	TOTAL SHEETS
07	LA	5	6.8/13.8	155	176

REGISTERED CIVIL ENGINEER

July 19, 2013
PLANS APPROVAL DATE

REGISTERED PROFESSIONAL ENGINEER
Hector David Cordova
No. C41957
Exp. 3-31-14
CIVIL
STATE OF CALIFORNIA

THE STATE OF CALIFORNIA OR ITS OFFICERS OR AGENTS SHALL NOT BE RESPONSIBLE FOR THE ACCURACY OR COMPLETENESS OF SCANNED COPIES OF THIS PLAN SHEET.

TO ACCOMPANY PLANS DATED 1-21-14

Gutter not shown

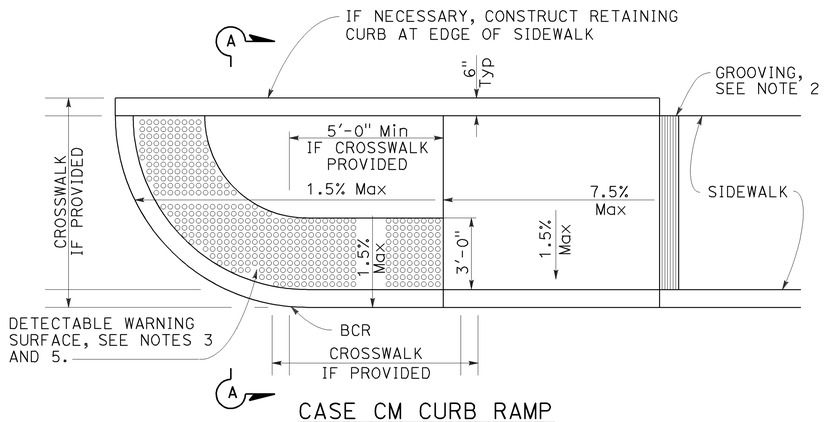

CASE CM CURB RAMP

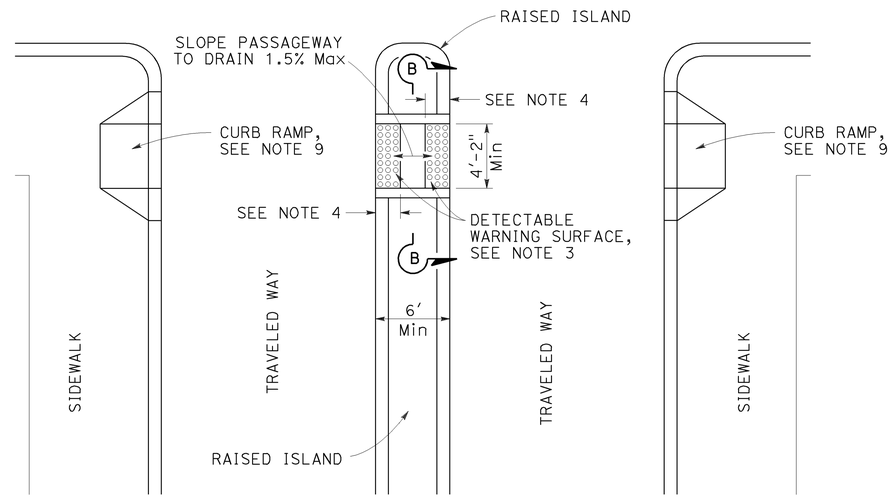

TYPE A PASSAGEWAY

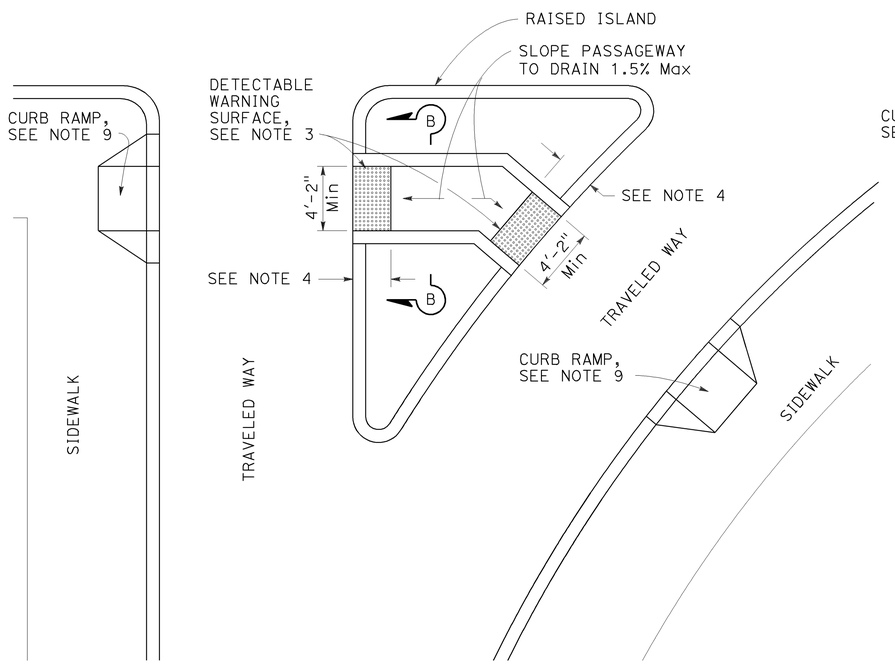

TYPE B PASSAGEWAY

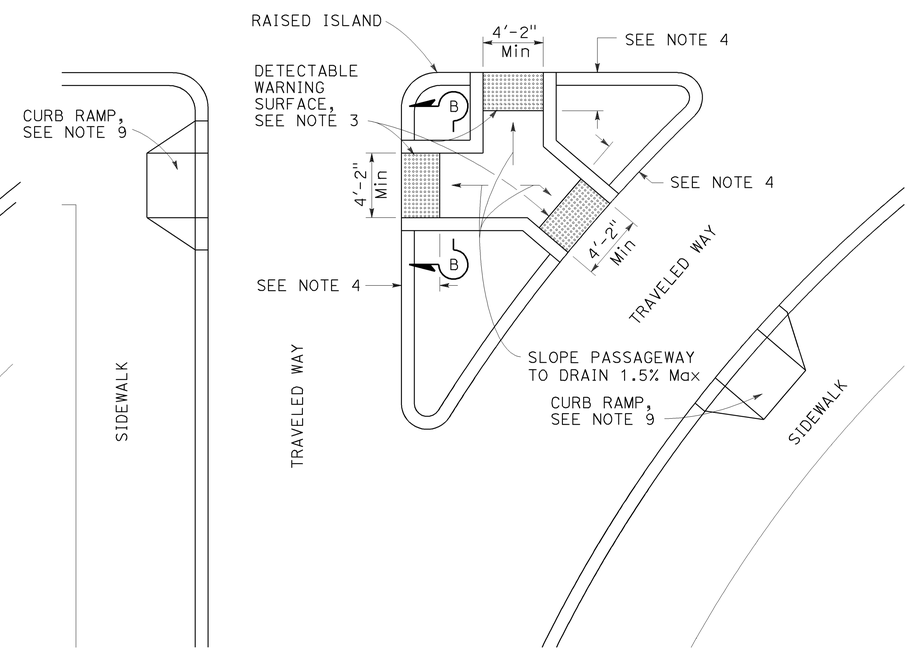

TYPE C PASSAGEWAY

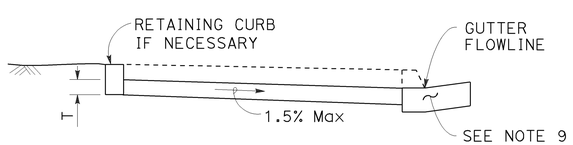

SECTION A-A

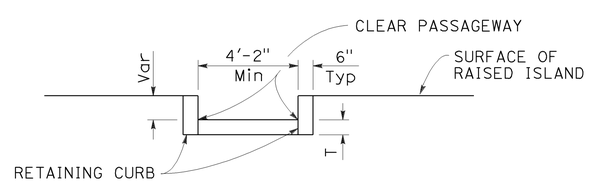

SECTION B-B

NOTES:

1. Sidewalk, ramp and passageway thickness, "T", shall be 3½" minimum.
2. For details of grooving used with Case CM curb ramp, see Revised Standard Plan RSP A88A.
3. For details of detectable warning surfaces, see Revised Standard Plan RSP A88A.
4. Where an island passageway length is greater than or equal to 6'-0", but less than 8'-0", each detectable warning surface shall extend the full width and 2'-0" depth of the passageway length. Where an island passageway length is greater than or equal to 8'-0", each detectable warning surface shall extend the full width and 3'-0" depth of the passageway length.
5. For Case CM curb ramp, the edge of the detectable warning surface nearest the street shall be between 6" and 8" from the gutter flowline.
6. Transitions from ramps to walks, gutters or streets shall be flush (no lip) and free of abrupt changes.
7. Utility pull boxes, manholes, vaults and all other utility facilities within the boundaries of the curb ramp will be relocated or adjusted to grade by the owner prior to, or in conjunction with, curb ramp construction.
8. Detectable warning surface may have to be cut to allow removal of utility covers while maintaining full detectable warning width and depth.
9. For additional curb ramp details, see Revised Standard Plan RSP A88A.

STATE OF CALIFORNIA
DEPARTMENT OF TRANSPORTATION

CURB RAMP AND ISLAND PASSAGEWAY DETAILS

NO SCALE

RSP A88B DATED JULY 19, 2013 SUPERSEDES STANDARD PLAN A88B DATED MAY 20, 2011 - PAGE 122 OF THE STANDARD PLANS BOOK DATED 2010.

REVISED STANDARD PLAN RSP A88B

2010 REVISED STANDARD PLAN RSP A88B

6-25-13

Dist	COUNTY	ROUTE	POST MILES TOTAL PROJECT	SHEET No.	TOTAL SHEETS
07	LA	5	6.8/13.8	156	176

William K. Farnbach
REGISTERED CIVIL ENGINEER

July 19, 2013
PLANS APPROVAL DATE

REGISTERED PROFESSIONAL ENGINEER William K. Farnbach No. C49042 Exp. 9-30-14 CIVIL STATE OF CALIFORNIA

THE STATE OF CALIFORNIA OR ITS OFFICERS OR AGENTS SHALL NOT BE RESPONSIBLE FOR THE ACCURACY OR COMPLETENESS OF SCANNED COPIES OF THIS PLAN SHEET.

TO ACCOMPANY PLANS DATED 1-21-14

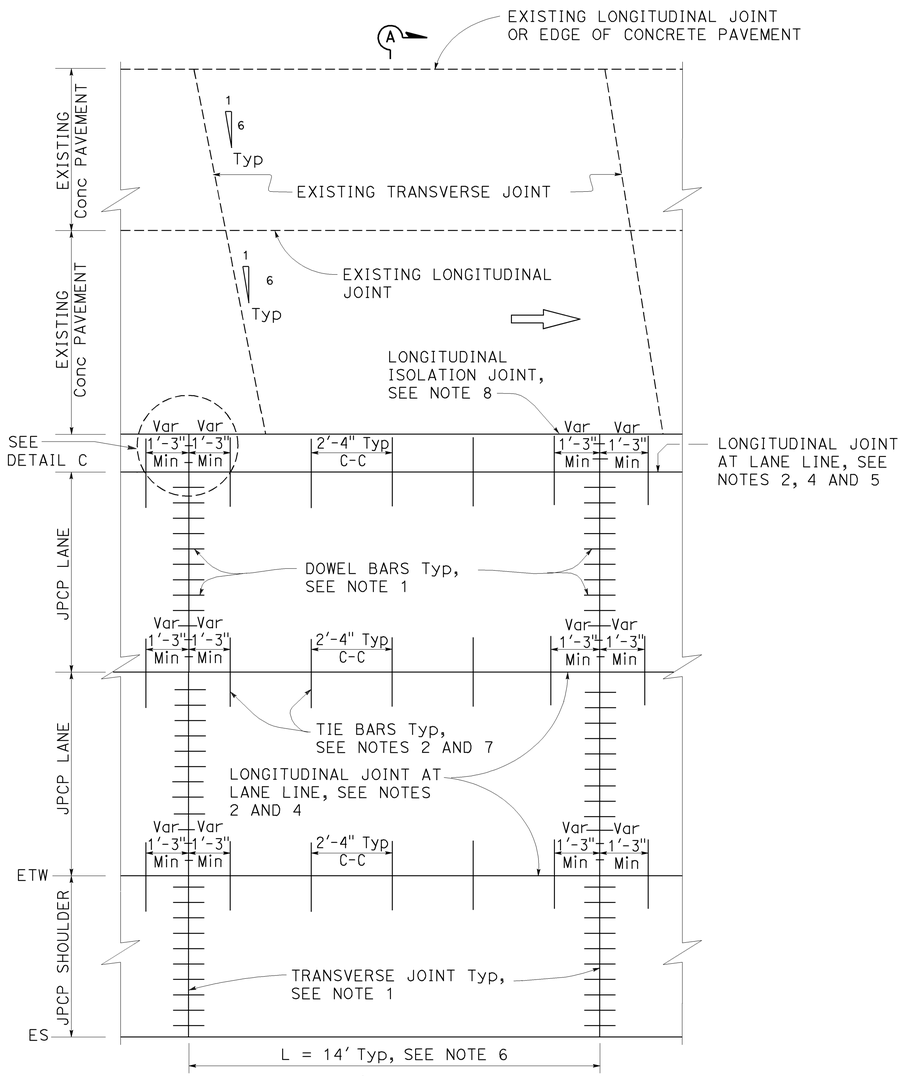

PLAN
ISOLATED
See Note 3

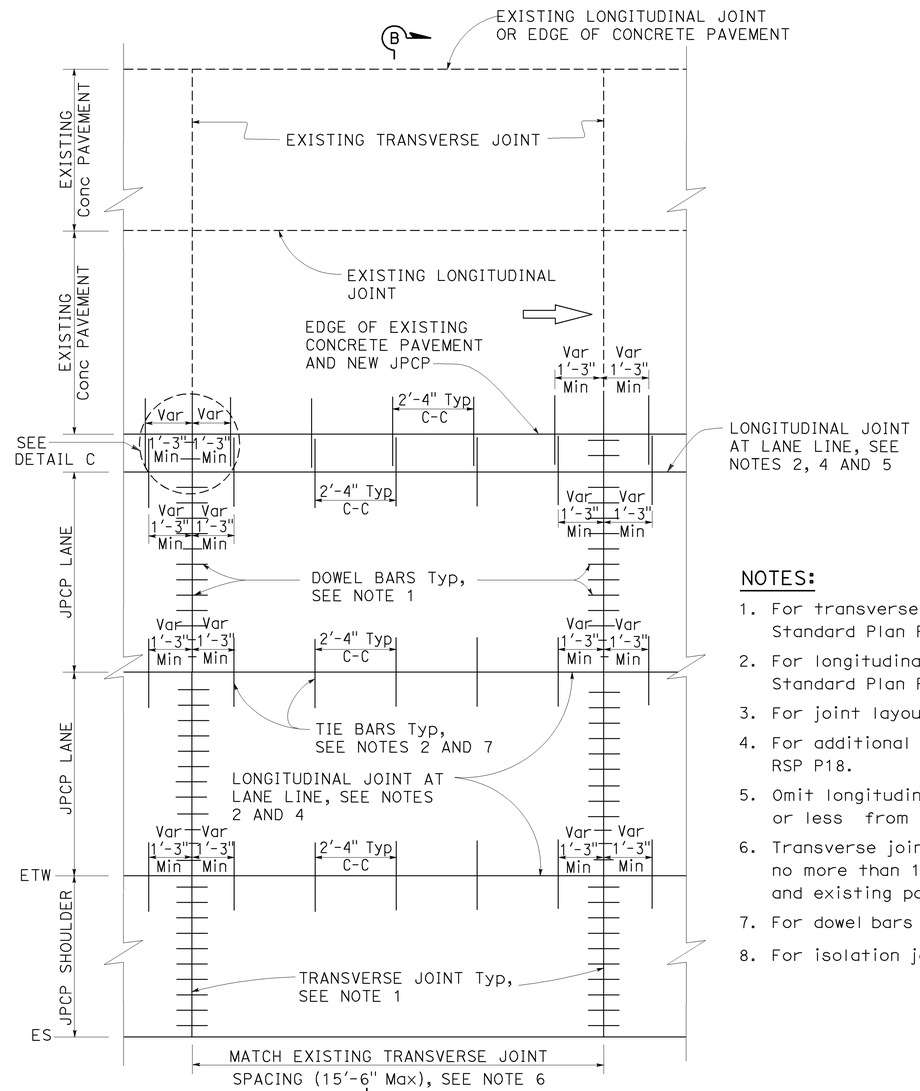

PLAN
TIED
See Note 3

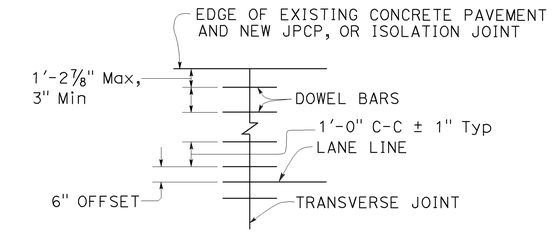

DETAIL C

NOTES:

1. For transverse joint and dowel bar details not shown, see Revised Standard Plan RSP P10.
2. For longitudinal joint and tie bar details not shown, see Revised Standard Plan RSP P15.
3. For joint layout at intersections, see Project Plans.
4. For additional longitudinal joint details, see Revised Standard Plan RSP P18.
5. Omit longitudinal joint when edge of new concrete pavement is 3'-3" or less from JPCP lane line.
6. Transverse joint spacing may be adjusted to no less than 10' and no more than 15'-6" to conform to bridges, change in pavement type and existing pavement.
7. For dowel bars at longitudinal joint. see Revised Standard Plan RSP P18.
8. For isolation joints, see Detail A on Revised Standard Plan RSP P18.

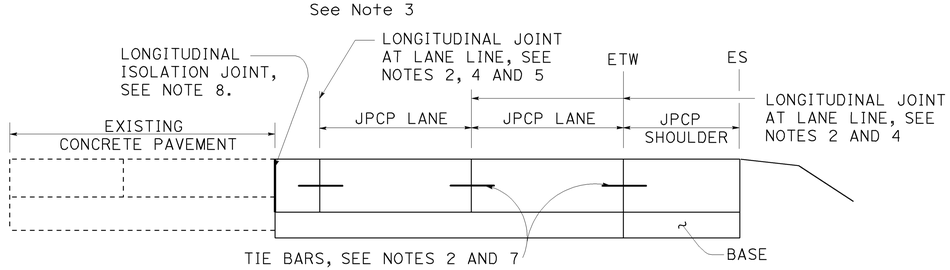

SECTION A-A

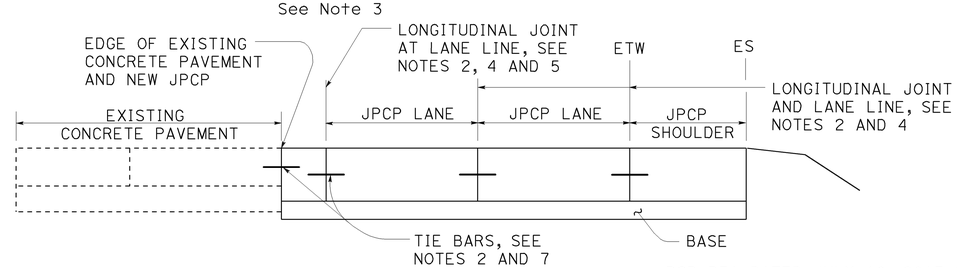

SECTION B-B

STATE OF CALIFORNIA
DEPARTMENT OF TRANSPORTATION

JOINTED PLAIN CONCRETE PAVEMENT LANE & SHOULDER ADDITION OR REPLACEMENT

NO SCALE

RSP P3A DATED JULY 19, 2013 SUPPLEMENTS THE STANDARD PLANS BOOK DATED 2010.

REVISED STANDARD PLAN RSP P3A

2010 REVISED STANDARD PLAN RSP P3A

5-31-13

Dist	COUNTY	ROUTE	POST MILES TOTAL PROJECT	SHEET No.	TOTAL SHEETS
07	LA	5	6.8/13.8	157	176

William K. Farnbach
REGISTERED CIVIL ENGINEER

July 19, 2013
PLANS APPROVAL DATE

REGISTERED PROFESSIONAL ENGINEER
William K. Farnbach
No. C49042
Exp. 9-30-14
CIVIL
STATE OF CALIFORNIA

THE STATE OF CALIFORNIA OR ITS OFFICERS OR AGENTS SHALL NOT BE RESPONSIBLE FOR THE ACCURACY OR COMPLETENESS OF SCANNED COPIES OF THIS PLAN SHEET.

TO ACCOMPANY PLANS DATED 1-21-14

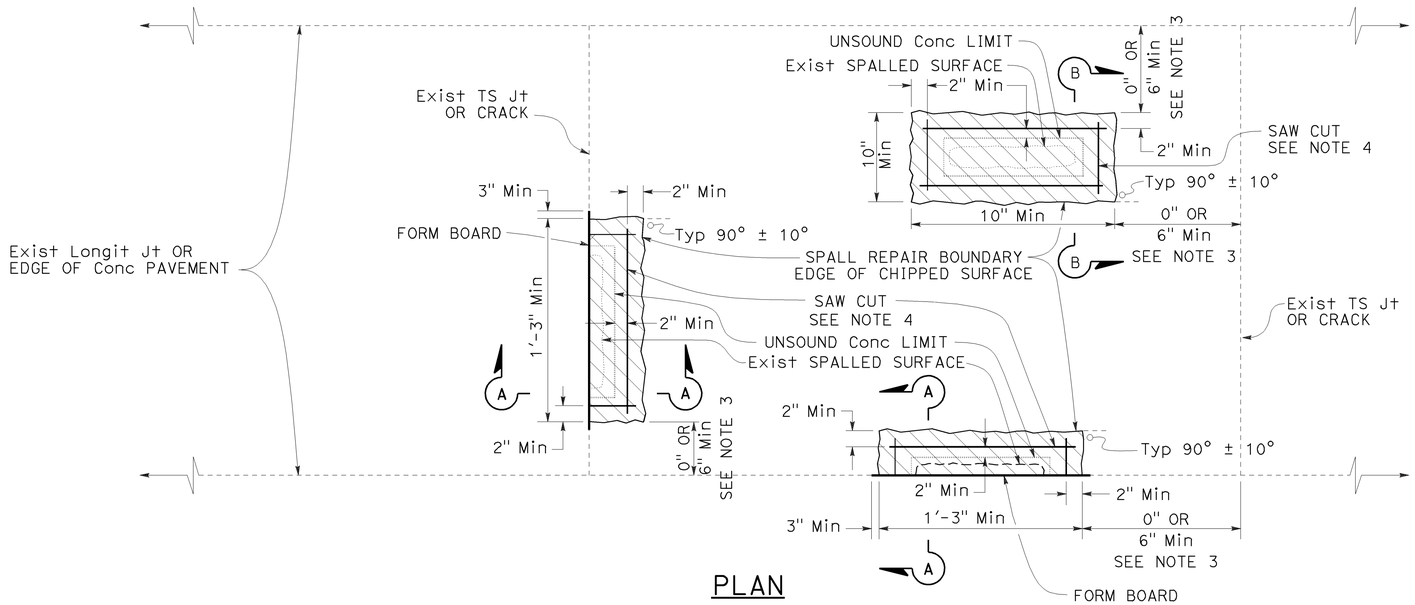

PLAN

LEGEND

SPALL REPAIR

NOTES:

1. See Project Plans for spall repair locations.
2. Combine spall repair areas closer than 2' apart.
3. If the spall repair area is less than 6" from a joint, extend the repair to the joint.
4. Cut at least 2" beyond the rectangular limits of unsound concrete determined by the Engineer. Determine the saw cut depth using the following table:

Conc MATERIAL	SAW CUT DEPTH	
	Min	Max
FAST-SETTING	2"	3½"
POLYESTER	1½"	3½"

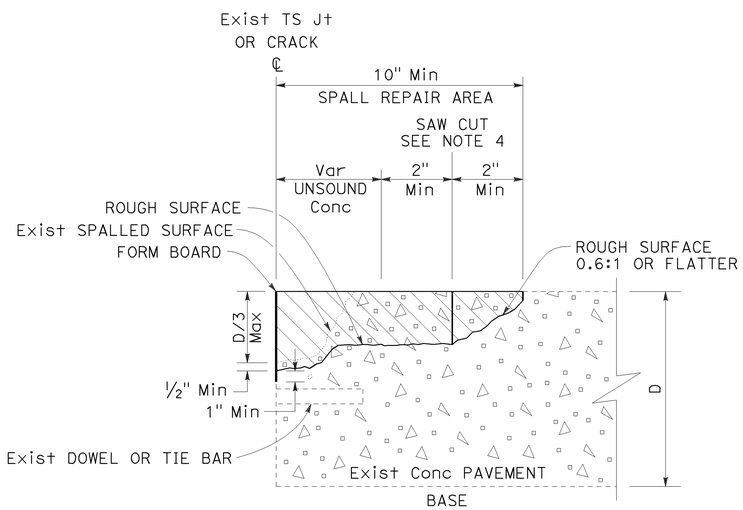

SECTION A-A

JOINT, CRACK, OR EDGE OF CONCRETE PAVEMENT REPAIR

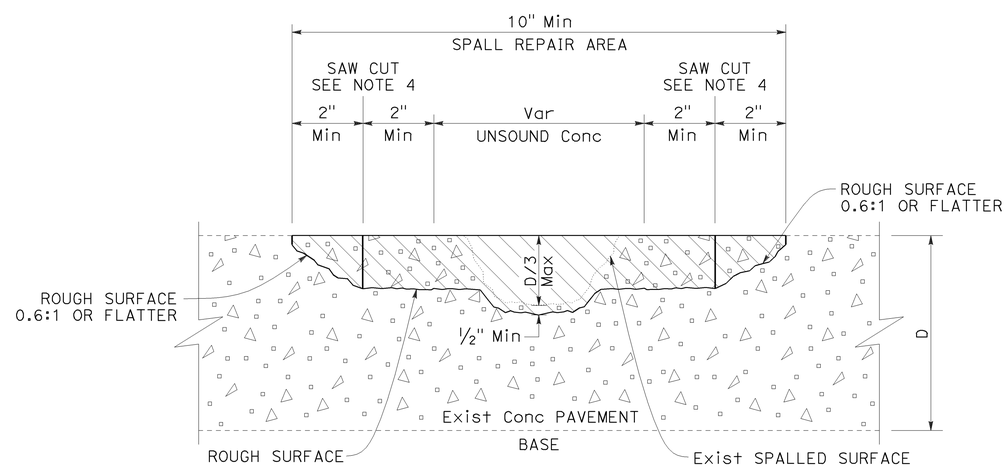

SECTION B-B

MISCELLANEOUS SPALL REPAIR

STATE OF CALIFORNIA
DEPARTMENT OF TRANSPORTATION

SPALL REPAIR

NO SCALE

RSP P6 DATED JULY 19, 2013 SUPPLEMENTS THE STANDARD PLANS BOOK DATED 2010.

REVISED STANDARD PLAN RSP P6

2010 REVISED STANDARD PLAN RSP P6

5-31-13

Dist	COUNTY	ROUTE	POST MILES TOTAL PROJECT	SHEET No.	TOTAL SHEETS
07	LA	5	6.8/13.8	158	176

William K. Farnbach
REGISTERED CIVIL ENGINEER

July 19, 2013
PLANS APPROVAL DATE

REGISTERED PROFESSIONAL ENGINEER William K. Farnbach No. C49042 Exp. 9-30-14 CIVIL STATE OF CALIFORNIA

THE STATE OF CALIFORNIA OR ITS OFFICERS OR AGENTS SHALL NOT BE RESPONSIBLE FOR THE ACCURACY OR COMPLETENESS OF SCANNED COPIES OF THIS PLAN SHEET.

TO ACCOMPANY PLANS DATED 1-21-14

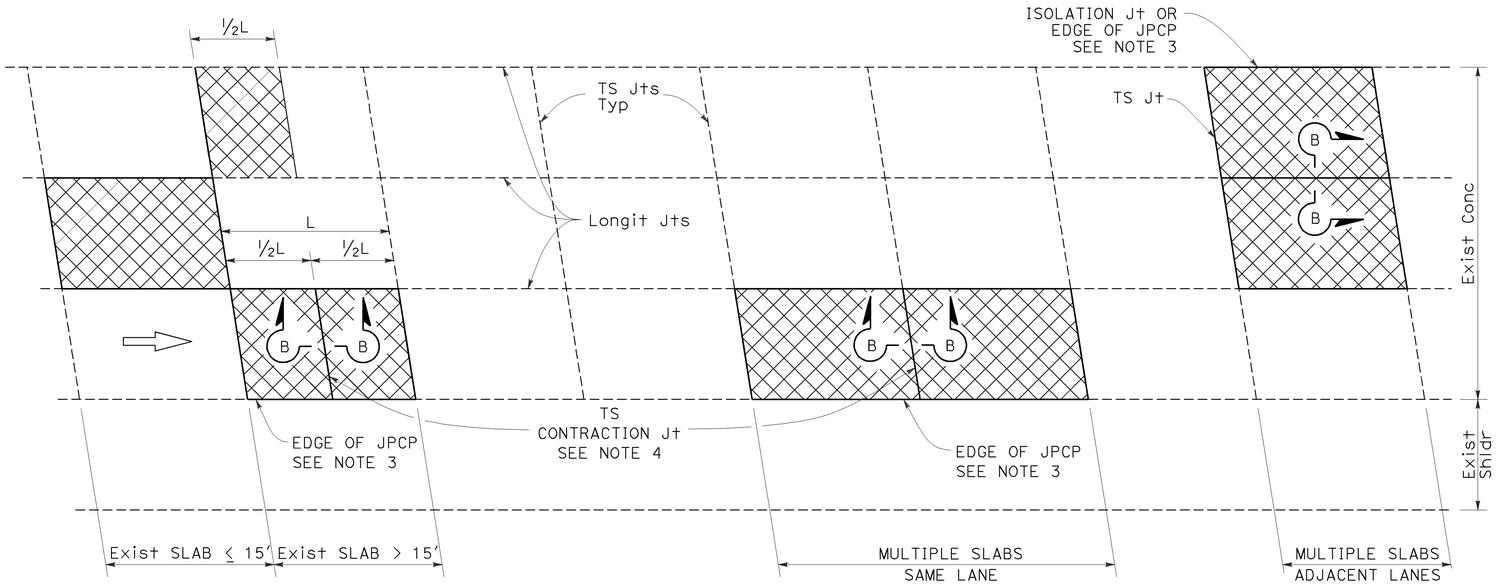

PLAN

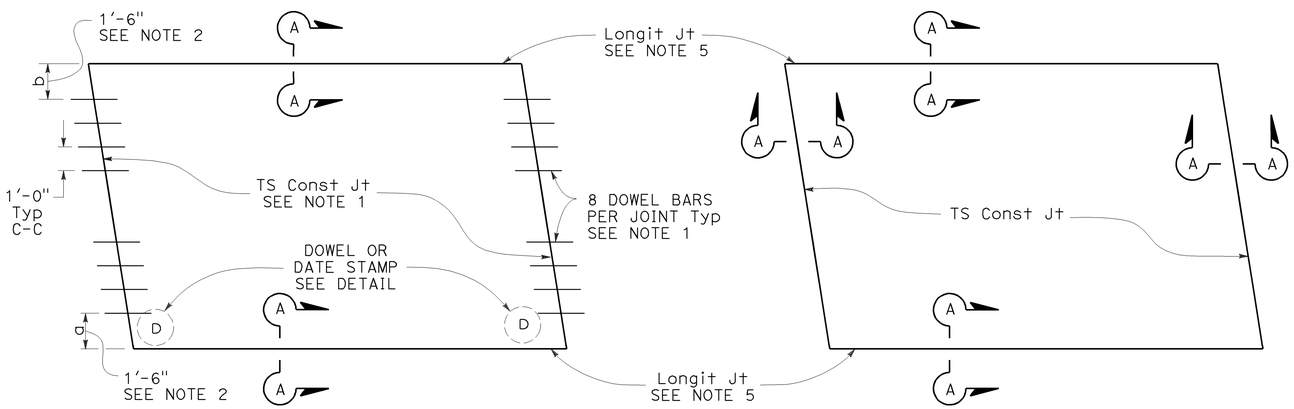

TYPE I
See Design Note 1

TYPE II
See Design Note 2

SLAB LAYOUT

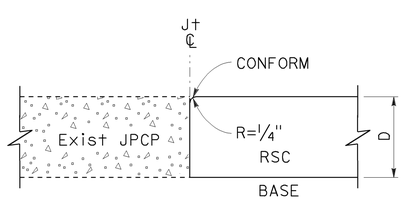

SECTION A-A

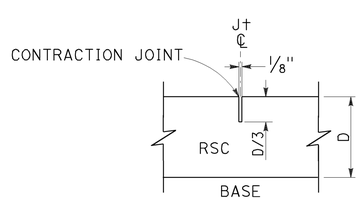

SECTION B-B

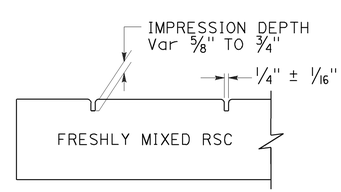

SECTION C-C

LEGEND:

RSC RAPID STRENGTH CONCRETE

INDIVIDUAL SLAB REPLACEMENT WITH RSC

NOTES:

1. For details not shown, see Revised Standard Plan RSP P10.
2. Where the existing outside shoulder is asphalt concrete pavement, "a" = 1'-0" and "b" = 2'-0".
3. Use side forms where edge of RSC pavement is adjacent to asphalt concrete.
4. Transverse contraction joint to match skew of existing joint. Omit dowel bars.
5. Do not place tie bars at longitudinal joints.

DESIGN NOTES:

1. For concrete slab repair with at least 5 years design life.
2. For short term repairs < 5 yrs design life or for slab replacements with cracking and seating.

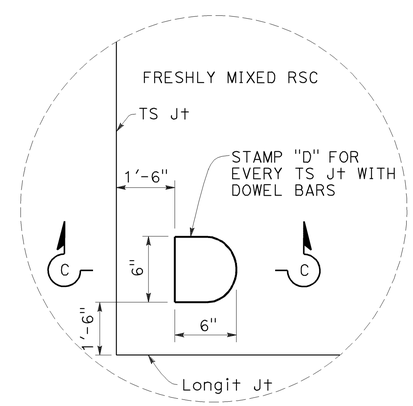

DOWEL STAMP DETAIL

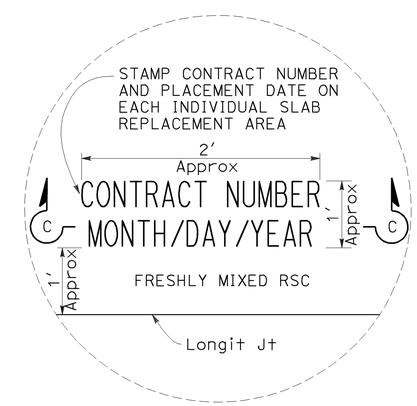

DATE STAMP DETAIL

STATE OF CALIFORNIA
DEPARTMENT OF TRANSPORTATION

INDIVIDUAL SLAB REPLACEMENT WITH RAPID STRENGTH CONCRETE

NO SCALE

RSP P8 DATED JULY 19, 2013 SUPERSEDES RSP P8 DATED APRIL 20, 2012 AND STANDARD PLAN P8 DATED MAY 20, 2011 - PAGE 130 OF THE STANDARD PLANS BOOK DATED 2010.

REVISED STANDARD PLAN RSP P8

2010 REVISED STANDARD PLAN RSP P8

5-31-13

Dist	COUNTY	ROUTE	POST MILES TOTAL PROJECT	SHEET No.	TOTAL SHEETS
07	LA	5	6.8/13.8	159	176

William K. Farnbach
REGISTERED CIVIL ENGINEER

July 19, 2013
PLANS APPROVAL DATE

REGISTERED PROFESSIONAL ENGINEER William K. Farnbach No. C49042 Exp. 9-30-14 CIVIL STATE OF CALIFORNIA

THE STATE OF CALIFORNIA OR ITS OFFICERS OR AGENTS SHALL NOT BE RESPONSIBLE FOR THE ACCURACY OR COMPLETENESS OF SCANNED COPIES OF THIS PLAN SHEET.

TO ACCOMPANY PLANS DATED 1-21-14

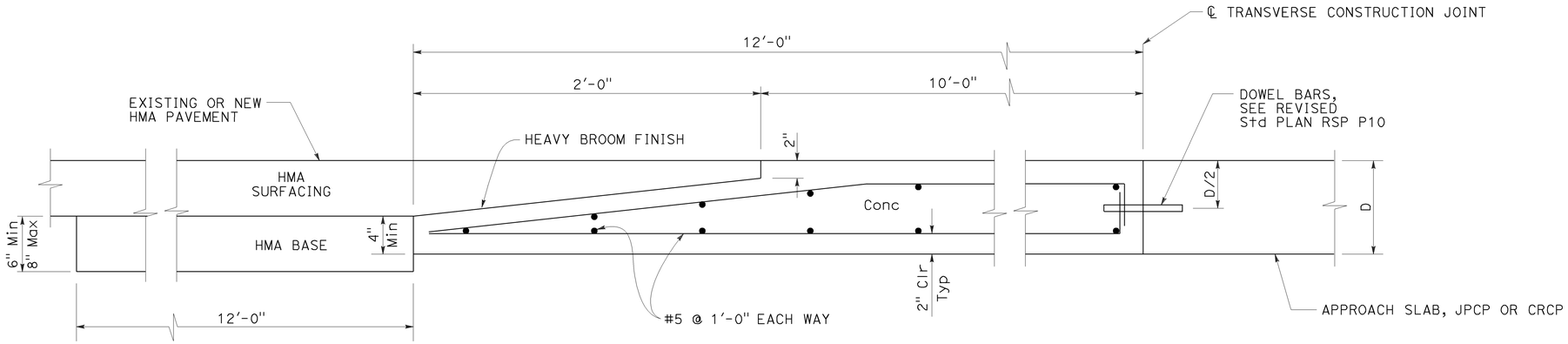

ELEVATION

CONCRETE PAVEMENT TRANSITION PANEL

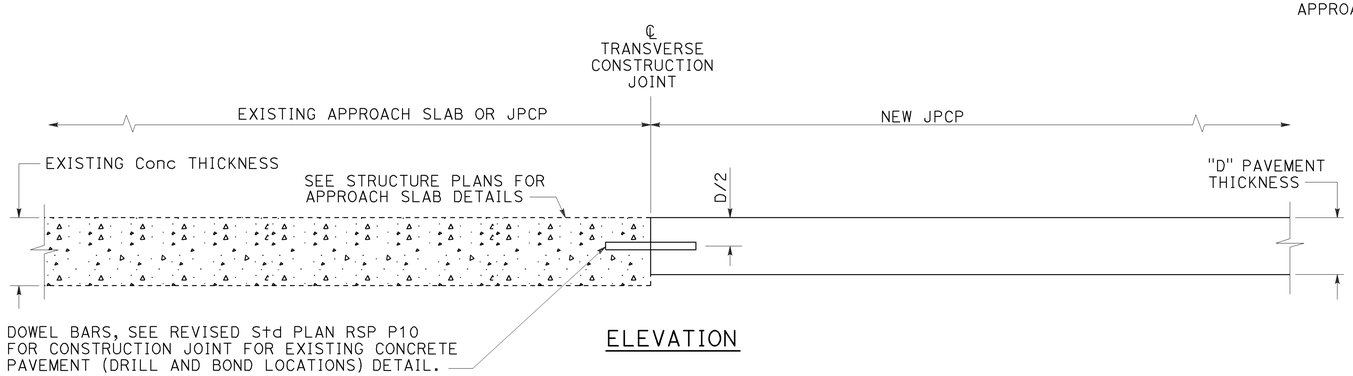

ELEVATION

TERMINAL JOINT TYPE 1

For Exist JPCP or Approach Slab

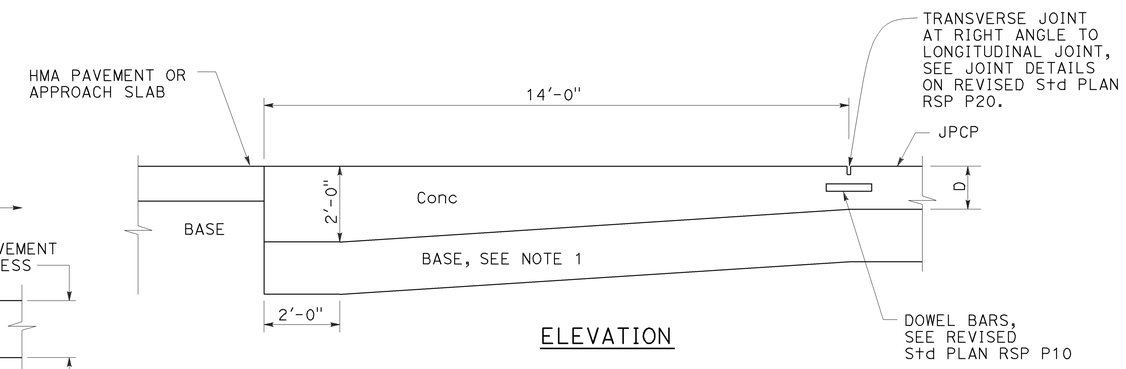

ELEVATION

PAVEMENT END ANCHOR

For HMA Pvmt or Approach Slab

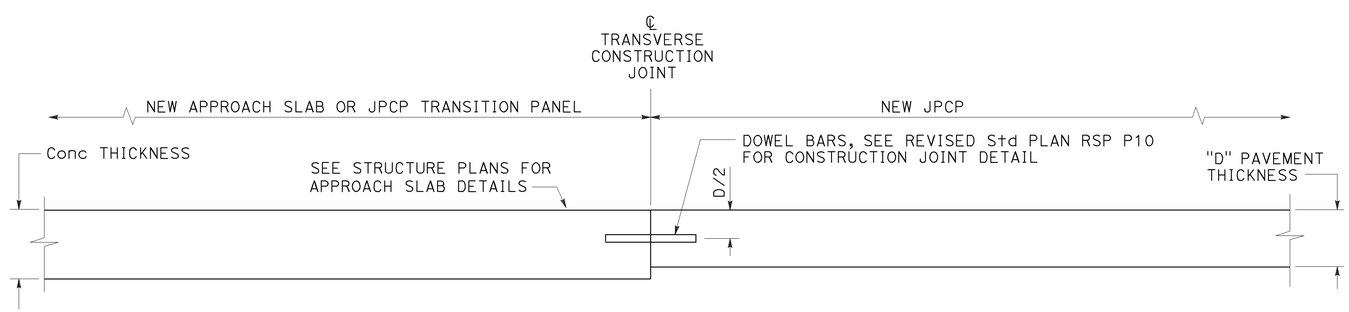

ELEVATION

TERMINAL JOINT TYPE 2

For JPCP Transition Panel or Approach Slab

NOTE:

1. Maintain same base thickness as JPCP.

STATE OF CALIFORNIA
DEPARTMENT OF TRANSPORTATION

CONCRETE PAVEMENT-END PANEL PAVEMENT TRANSITIONS

NO SCALE

RSP P30 DATED JULY 19, 2013 SUPERSEDES RSP P30 DATED APRIL 20, 2012 AND STANDARD PLAN P30 DATED MAY 20, 2011 - PAGE 137 OF THE STANDARD PLANS BOOK DATED 2010.

REVISED STANDARD PLAN RSP P30

2010 REVISED STANDARD PLAN RSP P30

3-26-13

Dist	COUNTY	ROUTE	POST MILES TOTAL PROJECT	SHEET No.	TOTAL SHEETS
07	LA	5	6.8/13.8	160	176

LICENSED LANDSCAPE ARCHITECT

July 19, 2013
PLANS APPROVAL DATE

THE STATE OF CALIFORNIA OR ITS OFFICERS OR AGENTS SHALL NOT BE RESPONSIBLE FOR THE ACCURACY OR COMPLETENESS OF SCANNED COPIES OF THIS PLAN SHEET.

LICENSED LANDSCAPE ARCHITECT
Gregory A. Balzer 2576
Renewal Date 2-28-15
7-19-13
Date
STATE OF CALIFORNIA

TO ACCOMPANY PLANS DATED 1-21-14

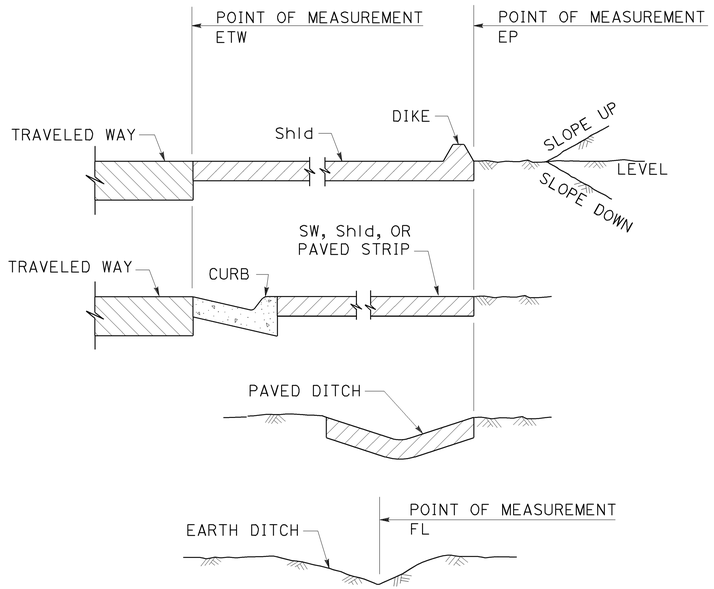

SECTION
POINTS OF MEASUREMENT

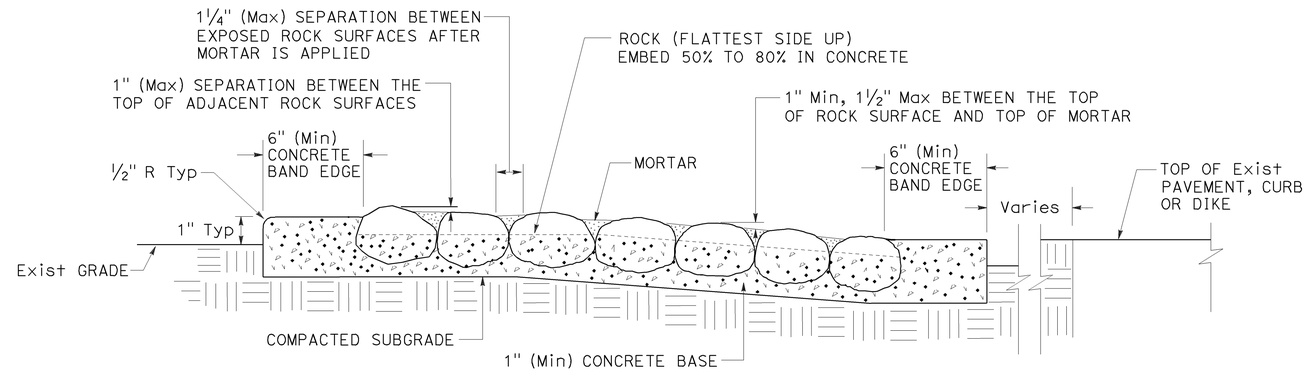

SECTION
ROCK BLANKET

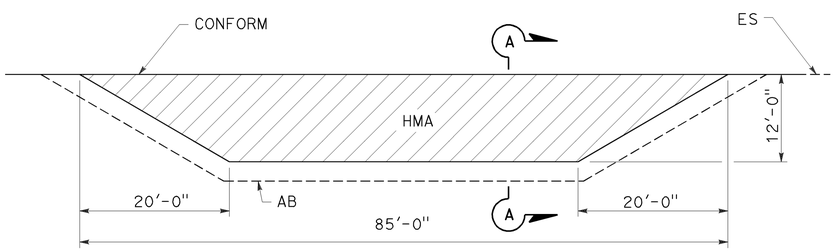

PLAN

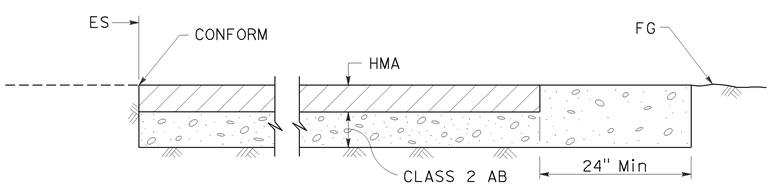

SECTION A-A
MAINTENANCE VEHICLE PULLOUT

STATE OF CALIFORNIA
DEPARTMENT OF TRANSPORTATION

LANDSCAPE DETAILS

NO SCALE

RSP H9A DATED JULY 19, 2013 SUPPLEMENTS THE STANDARD PLANS BOOK DATED 2010.

REVISED STANDARD PLAN RSP H9A

2010 REVISED STANDARD PLAN RSP H9A

6-21-13

Dist	COUNTY	ROUTE	POST MILES TOTAL PROJECT	SHEET No.	TOTAL SHEETS
07	LA	5	6.8/13.8	161	176

REGISTERED CIVIL ENGINEER

July 19, 2013
PLANS APPROVAL DATE

REGISTERED PROFESSIONAL ENGINEER
Gurinderpal Bhullar
No. C48815
Exp. 9-30-14
CIVIL
STATE OF CALIFORNIA

THE STATE OF CALIFORNIA OR ITS OFFICERS OR AGENTS SHALL NOT BE RESPONSIBLE FOR THE ACCURACY OR COMPLETENESS OF SCANNED COPIES OF THIS PLAN SHEET.

TO ACCOMPANY PLANS DATED 1-21-14

2010 REVISED STANDARD PLAN RSP T9

TABLE 1

TAPER LENGTH CRITERIA AND CHANNELIZING DEVICE SPACING

SPEED (S)	MINIMUM TAPER LENGTH * FOR WIDTH OF OFFSET 12 FEET (W)				MAXIMUM CHANNELIZING DEVICE SPACING		
					X	Y	Z **
	TANGENT 2L	MERGING L	SHIFTING L/2	SHOULDER L/3	TAPER	TANGENT	CONFLICT
mph	ft	ft	ft	ft	ft	ft	ft
20	160	80	40	27	20	40	10
25	250	125	63	42	25	50	12
30	360	180	90	60	30	60	15
35	490	245	123	82	35	70	17
40	640	320	160	107	40	80	20
45	1080	540	270	180	45	90	22
50	1200	600	300	200	50	100	25
55	1320	660	330	220	55	110	27
60	1440	720	360	240	60	120	30
65	1560	780	390	260	65	130	32
70	1680	840	420	280	70	140	35

* - For other offsets, use the following merging taper length formula for L:
For speed of 40 mph or less, $L = WS^2/60$
For speed of 45 mph or more, $L = WS$

Where: L = Taper length in feet
W = Width of offset in feet
S = Posted speed limit, off-peak 85th-percentile speed prior to work starting, or the anticipated operating speed in mph

** - Use for taper and tangent sections where there are no pavement markings or where there is a conflict between existing pavement markings and channelizers (CA).

TABLE 2

LONGITUDINAL BUFFER SPACE AND FLAGGER STATION SPACING

SPEED *	Min D **	DOWNGRADE Min D ***		
		-3%	-6%	-9%
mph	ft	ft	ft	ft
20	115	116	120	126
25	155	158	165	173
30	200	205	215	227
35	250	257	271	287
40	305	315	333	354
45	360	378	400	427
50	425	446	474	507
55	495	520	553	593
60	570	598	638	686
65	645	682	728	785
70	730	771	825	891

* - Speed is posted speed limit, off-peak 85th-percentile speed prior to work starting, or the anticipated operating speed in mph

** - Longitudinal buffer space or flagger station spacing

*** - Use on sustained downgrade steeper than -3 percent and longer than 1 mile.

TABLE 3

ADVANCE WARNING SIGN SPACING

ROAD TYPE	DISTANCE BETWEEN SIGNS *		
	A	B	C
	ft	ft	ft
URBAN - 25 mph OR LESS	100	100	100
URBAN - MORE THAN 25 mph TO 40 mph	250	250	250
URBAN - MORE THAN 40 mph	350	350	350
RURAL	500	500	500
EXPRESSWAY / FREEWAY	1000	1500	2640

* - The distances are approximate, are intended for guidance purposes only, and should be applied with engineering judgment. These distances should be adjusted by the Engineer for field conditions, if necessary, by increasing or decreasing the recommmended distances.

STATE OF CALIFORNIA
DEPARTMENT OF TRANSPORTATION

TRAFFIC CONTROL SYSTEM TABLES FOR LANE AND RAMP CLOSURES

NO SCALE

RSP T9 DATED JULY 19, 2013 SUPERSEDES RSP T9 DATED APRIL 19, 2013 THAT SUPPLEMENTS THE STANDARD PLANS BOOK DATED 2010.

REVISED STANDARD PLAN RSP T9

4-30-13

TO ACCOMPANY PLANS DATED 1-21-14

Dist	COUNTY	ROUTE	POST MILES TOTAL PROJECT	SHEET No.	TOTAL SHEETS
07	LA	5	6.8/13.8	162	176

REGISTERED CIVIL ENGINEER

April 19, 2013
PLANS APPROVAL DATE

REGISTERED PROFESSIONAL ENGINEER Gurinderpal Bhullar No. C48815 Exp. 9-30-14 CIVIL STATE OF CALIFORNIA

THE STATE OF CALIFORNIA OR ITS OFFICERS OR AGENTS SHALL NOT BE RESPONSIBLE FOR THE ACCURACY OR COMPLETENESS OF SCANNED COPIES OF THIS PLAN SHEET.

NOTES:

See Revised Standard Plan RSP T9 for tables.

Use cone spacing X for taper segment, Y for tangent segment or Z for conflict situations, as approriate, per Table 1, unless X, Y, or Z cone spacing is shown on this sheet.

Unless otherwise specified in the special provisions, all temporary warning signs shall have black legend on fluorescent orange background.

California codes are designated by (CA). Otherwise, Federal (MUTCD) codes are shown.

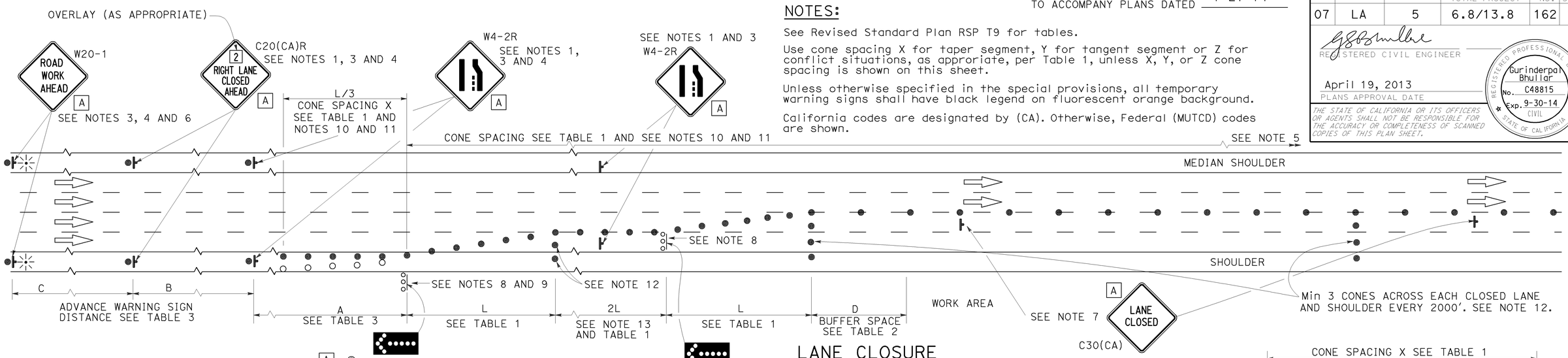

LANE CLOSURE

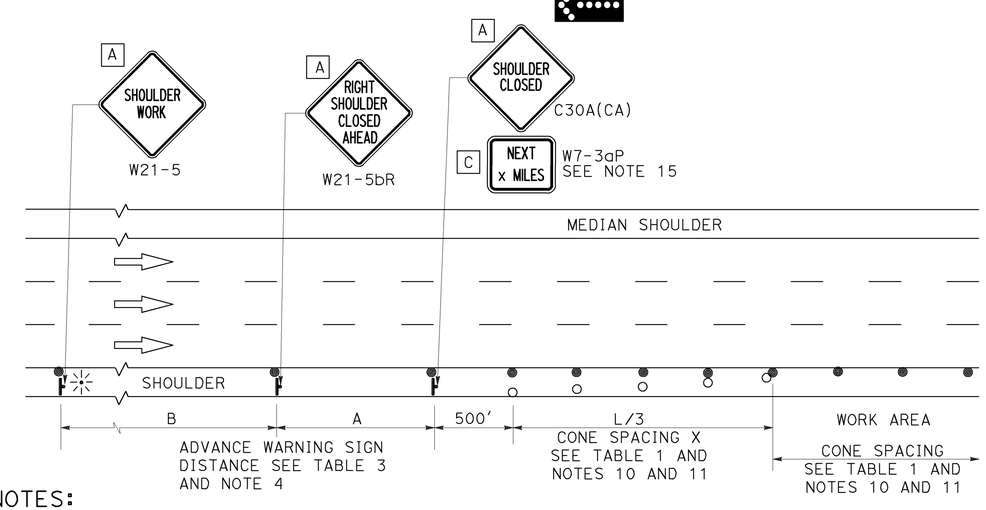

SHOULDER CLOSURE

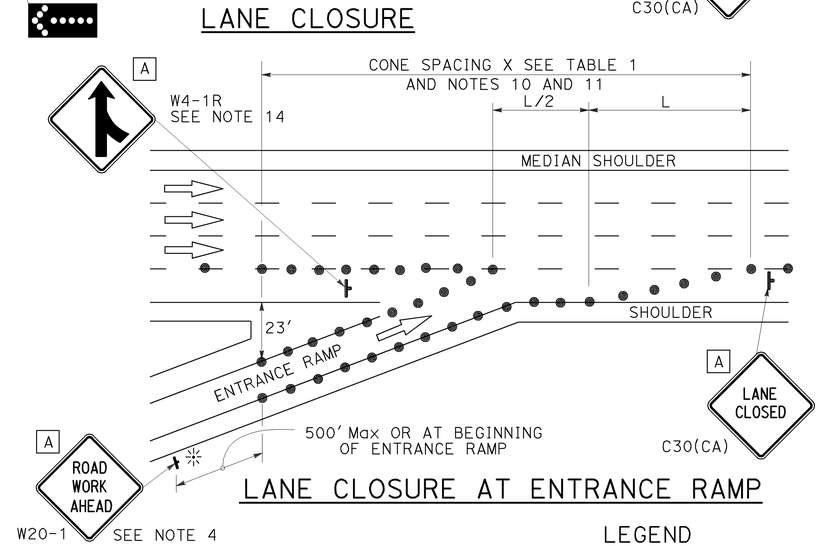

LANE CLOSURE AT ENTRANCE RAMP

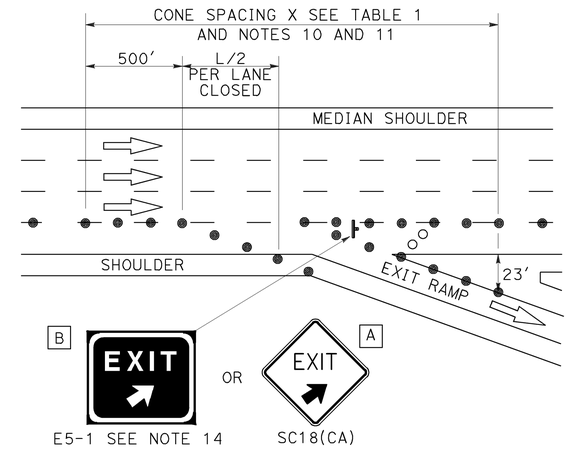

LANE CLOSURE AT EXIT RAMP

NOTES:

1. Median lane closures shall conform to the details as shown except that C20(CA)L and W4-2L signs shall be used.
2. At least one person shall be assigned to provide full time maintenance of traffic control devices for lane closures.
3. Duplicate sign installations are not required:
   a) On opposite shoulder if at least one-half of the available lanes remain open to traffic.
   b) In the median if the width of the median shoulder is less than 8' and the outside lanes are to be closed.
4. Each advance warning sign on each side of the roadway shall be equipped with at least two flags for daytime closure. Each flag shall be at least 16" x 16" in size and shall be orange or fluorescent red-orange in color. Flashing beacons shall be placed at the locations indicated for lane closure during hours of darkness.
5. A G20-2 "END ROAD WORK" sign, with minimum size of 48" x 24" as appropriate, shall be placed at the end of the lane closure unless the end of work area is obvious or ends within a larger project's limits.
6. If the W20-1 sign would follow within 2000' of a stationary W20-1 or G20-1 "ROAD WORK NEXT _____ MILES", use a C20(CA) sign for the first advance warning sign.
7. Place a C30(CA) sign every 2000' throughout length of lane closure.
8. One flashing arrow sign for each lane closed. The flashing arrow signs shall be Type I.
9. A minimum 1500' of sight distance shall be provided where possible for vehicles approaching the first flashing arrow sign. Lane closures shall not begin at top of crest vertical curve or on a horizontal curve.
10. All cones used for lane closures during the hours of darkness shall be fitted with retroreflective bands (or sleeves) as specified in the specifications.
11. Portable delineators, placed at one-half the spacing indicated for traffic cones may be used instead of cones for daytime closures only.
12. Unless otherwise specified in the special provisions, a minimum of 3 cones shall be placed transversely across each closed lane and shoulder at each location where a taper across a traffic lane ends and every 2000' as shown on the "Lane Closure" detail. Two Type II barricades may be used instead of the 3 cones. The transverse alignment of the cones or barricades on the closed shoulder may be shifted from the transverse alignment to provide access to the work.
13. Unless otherwise specified in the special provisions, the 2L tangent shown along lane lines shall be used between the L tapers required for each closed traffic lane.
14. Unless otherwise specified in the special provisions, the E5-1 or SC18(CA) and W4-1 signs shall be used as shown.
15. A W7-3aP "NEXT____ MILES" plaque must be used if theshoulder closure extends beyond the distance that can be perceived by road users.

LEGEND

- TRAFFIC CONE
- TRAFFIC CONE (OPTIONAL TAPER)
- TEMPORARY TRAFFIC CONTROL SIGN
- FLASHING ARROW SIGN (FAS)
- FAS SUPPORT OR TRAILER
- PORTABLE FLASHING BEACON

SIGN PANEL SIZE (Min)

A	48" x 48"
B	72" x 60"
C	36" x 30"

STATE OF CALIFORNIA
DEPARTMENT OF TRANSPORTATION

TRAFFIC CONTROL SYSTEM FOR LANE CLOSURE ON FREEWAYS AND EXPRESSWAYS

NO SCALE

RSP T10 DATED APRIL 19, 2013 SUPERSEDES STANDARD PLAN T10 DATED MAY 20, 2011 - PAGE 237 OF THE STANDARD PLANS BOOK DATED 2010.

REVISED STANDARD PLAN RSP T10

2010 REVISED STANDARD PLAN RSP T10

12-18-12

TO ACCOMPANY PLANS DATED 1-21-14

Dist	COUNTY	ROUTE	POST MILES TOTAL PROJECT	SHEET No.	TOTAL SHEETS
07	LA	5	6.8/13.8	163	176

REGISTERED CIVIL ENGINEER

April 19, 2013
PLANS APPROVAL DATE

REGISTERED PROFESSIONAL ENGINEER Gurinderpal Bhullar No. C48815 Exp. 9-30-14 CIVIL STATE OF CALIFORNIA

THE STATE OF CALIFORNIA OR ITS OFFICERS OR AGENTS SHALL NOT BE RESPONSIBLE FOR THE ACCURACY OR COMPLETENESS OF SCANNED COPIES OF THIS PLAN SHEET.

NOTES: See Revised Standard Plan RSP T9 for tables.

Use cone spacing X for taper segment, Y for tangent segment or Z for conflict situations, as approriate, per Table 1, unless X, Y, or Z cone spacing is shown on this sheet.

Unless otherwise specified in the special provisions, all temporary warning signs shall have black legend on fluorescent orange background.

California codes are designated by (CA). Otherwise, Federal (MUTCD) codes are shown.

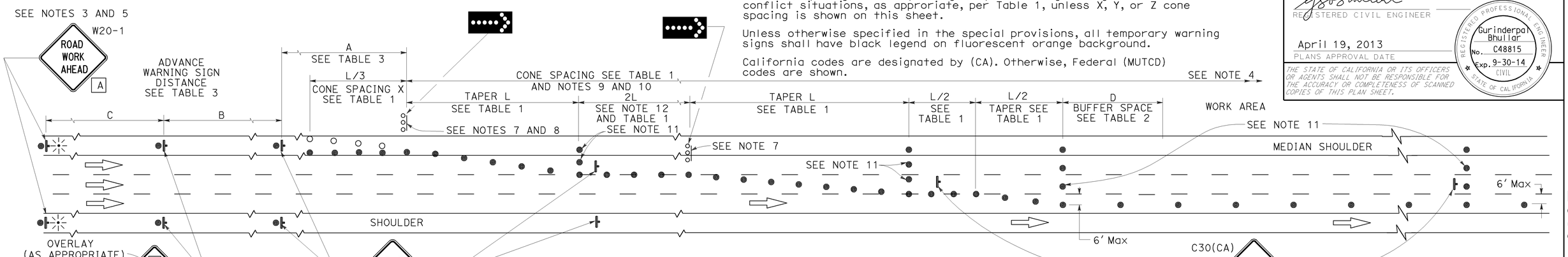

LANE CLOSURE WITH PARTIAL SHOULDER USE

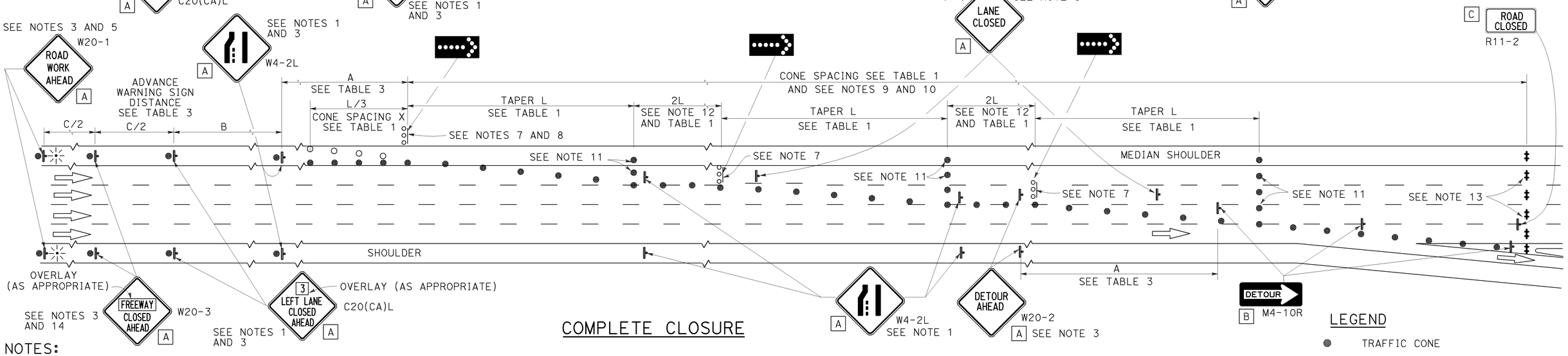

COMPLETE CLOSURE

NOTES:

1. Lane closures on the right side using partial median shoulder as a traffic lane shall conform to the details as shown except that C20(CA)R and W4-2R signs shall be used.
2. At least one person shall be assigned to provide full time maintenance of traffic control devices for lane closures.
3. Each advance warning sign on each side of the roadway shall be equipped with at least two flags for daytime closure. Each flag shall be at least 16" X 16" in size and shall be orange or fluorescent red-orange in color. Flashing beacons shall be placed at the locations indicated for lane closure during hours of darkness.
4. A G20-2 "END ROAD WORK" sign, with minimum size of 48" x 24" as appropriate, shall be placed at the end of the lane closure unless the end of work area is obvious or ends within a larger project's limits.
5. If the W20-1 sign would follow within 2000' of a stationary W20-1 or G20-1 "ROAD WORK NEXT ___ MILES", use a C20(CA) sign for the first advance warning sign.
6. Place a C30(CA) sign every 2000' throughout length of lane closure.
7. One flashing arrow sign for each lane closed. The flashing arrow signs shall be Type I.
8. A minimum 1500' of sight distance shall be provided where possible for vehicles approaching the first flashing arrow sign. Lane closures shall not begin at the top of crest vertical curve or on a horizontal curve.
9. All cones used for lane closures during the hours of darkness shall be fitted with retroreflective bands (or sleeves) as specified in the specifications.
10. Portable delineators, placed at one-half the spacing indicated for traffic cones, may be used instead of cones for daytime closures only.
11. Unless otherwise specified in the special provisions, a minimum of 3 cones shall be placed transversely across each closed lane and shoulder at each location where a taper across a traffic lane ends and every 2000' as shown on the "Lane Closure With Partial Shoulder Use" detail. Two Type II barricades may be used instead of the 3 cones. The transverse alignment of the cones or barricades on the closed shoulder may be shifted from the transverse alignment to provide access to the work.
12. Unless otherwise specified in the special provisions, the 2L tangent shown along lane lines shall be used between the L tapers required for each closed traffic lane.
13. A minimum of Two Type II or III barricades shall be placed across each closed lane and shoulder at the location shown and every 2000' within the complete closure area. Within the complete closure area, the transverse alignment of the barricades on the closed shoulder may be shifted from the transverse alignment to provide access to the work.
14. When specified in the special provisions, a W20-2 "DETOUR AHEAD" sign is to be used in place of the W20-3 "FREEWAY CLOSED AHEAD" sign.

SIGN PANEL SIZE (Min)

A	48" x 48"
B	48" x 18"
C	48" x 30"

LEGEND

- TRAFFIC CONE
- TRAFFIC CONE (OPTIONAL TAPER)
- TEMPORARY TRAFFIC CONTROL SIGN
- FLASHING ARROW SIGN (FAS)
- FAS SUPPORT OR TRAILER
- PORTABLE FLASHING BEACON

STATE OF CALIFORNIA
DEPARTMENT OF TRANSPORTATION

TRAFFIC CONTROL SYSTEM FOR LANE CLOSURES ON FREEWAYS AND EXPRESSWAYS

NO SCALE

RSP T10A DATED APRIL 19, 2013 SUPERSEDES STANDARD PLAN T10A DATED MAY 20, 2011 - PAGE 238 OF THE STANDARD PLANS BOOK DATED 2010.

REVISED STANDARD PLAN RSP T10A

2010 REVISED STANDARD PLAN RSP T10A

12-18-12

Dist	COUNTY	ROUTE	POST MILES TOTAL PROJECT	SHEET No.	TOTAL SHEETS
07	LA	5	6.8/13.8	164	176

REGISTERED CIVIL ENGINEER

April 19, 2013
PLANS APPROVAL DATE

REGISTERED PROFESSIONAL ENGINEER
Gurinderpal Bhullar
No. C48815
Exp. 9-30-14
CIVIL
STATE OF CALIFORNIA

THE STATE OF CALIFORNIA OR ITS OFFICERS OR AGENTS SHALL NOT BE RESPONSIBLE FOR THE ACCURACY OR COMPLETENESS OF SCANNED COPIES OF THIS PLAN SHEET.

TO ACCOMPANY PLANS DATED 1-21-14

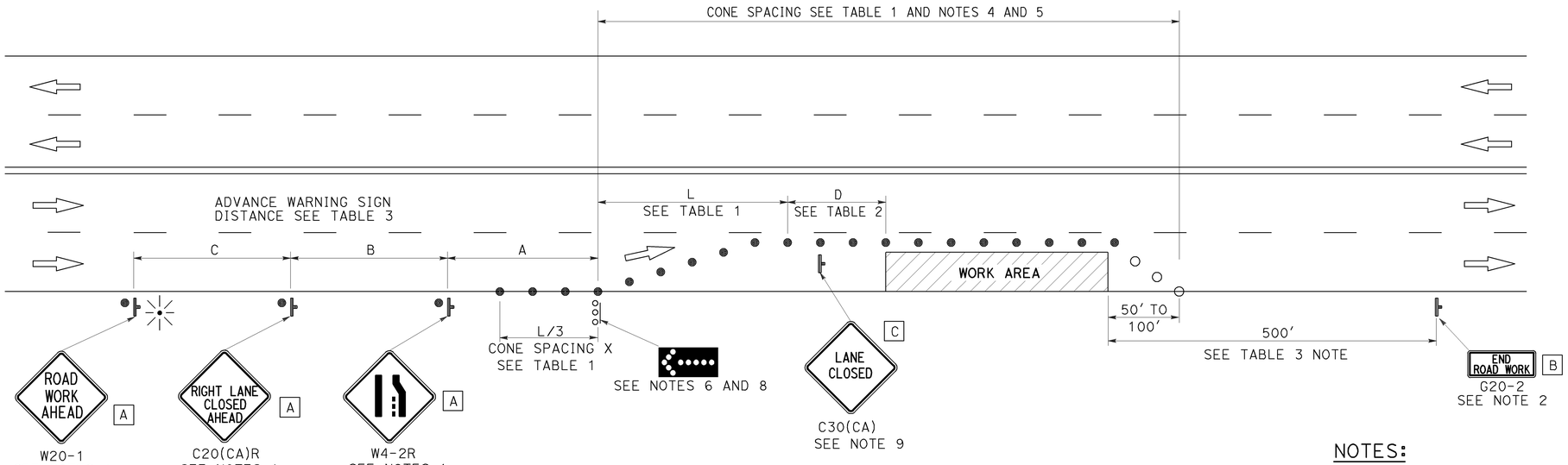

TYPICAL LANE CLOSURE

NOTES:

See Revised Standard Plan RSP T9 for tables.

Use cone spacing X for taper segment, Y for tangent segment or Z for conflict situations, as approriate, per Table 1, unless X, Y, or Z cone spacing is shown on this sheet.

Unless otherwise specified in the special provisions, all temporary warning signs shall have black legend on fluorescent orange background.

California codes are designated by (CA). Otherwise, Federal (MUTCD) codes are shown.

LEGEND

- ● TRAFFIC CONE
- ○ TRAFFIC CONE (OPTIONAL TAPER)
- TEMPORARY TRAFFIC CONTROL SIGN
- FLASHING ARROW SIGN (FAS)
- FAS SUPPORT OR TRAILER
- PORTABLE FLASHING BEACON

SIGN PANEL SIZE (Min)

A	48" x 48"
B	36" x 18"
C	30" x 30"

NOTES:

1. Each advance warning sign shall be equipped with at least two flags for daytime closure. Each flag shall be at least 16" x 16" in size and shall be orange or fluorescent red-orange in color. Flashing beacons shall be placed at the locations indicated for lane closure during hours of darkness.
2. A G20-2 "END ROAD WORK" sign, as appropriate, shall be placed at the end of the lane closure unless the end of work area is obvious, or ends within a larger project's limits.
3. If the W20-1 sign would follow within 2000' of a stationary W20-1 or G20-1 "ROAD WORK NEXT _____ MILES", use a C20(CA) sign for the first advance warning sign.
4. All cones used for lane closures during the hours of darkness shall be fitted with retroreflective bands (or sleeves) as specified in the specifications.
5. Portable delineators, placed at one-half the spacing indicated for traffic cones, may be used instead of cones for daytime closures only.
6. Flashing arrow sign shall be either Type I or Type II.
7. For approach speeds over 50 mph, use the "Traffic Control System for Lane Closure On Freeways And Expressways" plan for lane closure details and requirements.
8. A minimum 1500' of sight distance shall be provided where possible for vehicles approaching the first flashing arrow sign. Lane closures shall not begin at the top of crest vertical curve or on a horizontal curve.
9. Place a C30(CA) sign every 2000' throughout length of lane closure.
10. Median lane closures shall conform to the details as shown except that C20(CA)L and W4-2L signs shall be used.
11. At least one person shall be assigned to provide full time maintenance of traffic control devices for lane closure unless, otherwise directed by the Engineer.

STATE OF CALIFORNIA
DEPARTMENT OF TRANSPORTATION

TRAFFIC CONTROL SYSTEM FOR LANE CLOSURE ON MULTILANE CONVENTIONAL HIGHWAYS

NO SCALE

RSP T11 DATED APRIL 19, 2013 SUPERSEDES STANDARD PLAN T11
DATED MAY 20, 2011 - PAGE 239 OF THE STANDARD PLANS BOOK DATED 2010.

REVISED STANDARD PLAN RSP T11

2010 REVISED STANDARD PLAN RSP T11

4-2-13

Dist	COUNTY	ROUTE	POST MILES TOTAL PROJECT	SHEET No.	TOTAL SHEETS
07	LA	5	6.8/13.8	165	176

REGISTERED CIVIL ENGINEER

April 19, 2013
PLANS APPROVAL DATE

REGISTERED PROFESSIONAL ENGINEER Gurinderpal Bhullar No. C48815 Exp. 9-30-14 CIVIL STATE OF CALIFORNIA

THE STATE OF CALIFORNIA OR ITS OFFICERS OR AGENTS SHALL NOT BE RESPONSIBLE FOR THE ACCURACY OR COMPLETENESS OF SCANNED COPIES OF THIS PLAN SHEET.

TO ACCOMPANY PLANS DATED 1-21-14

TYPICAL RAMP CLOSURES

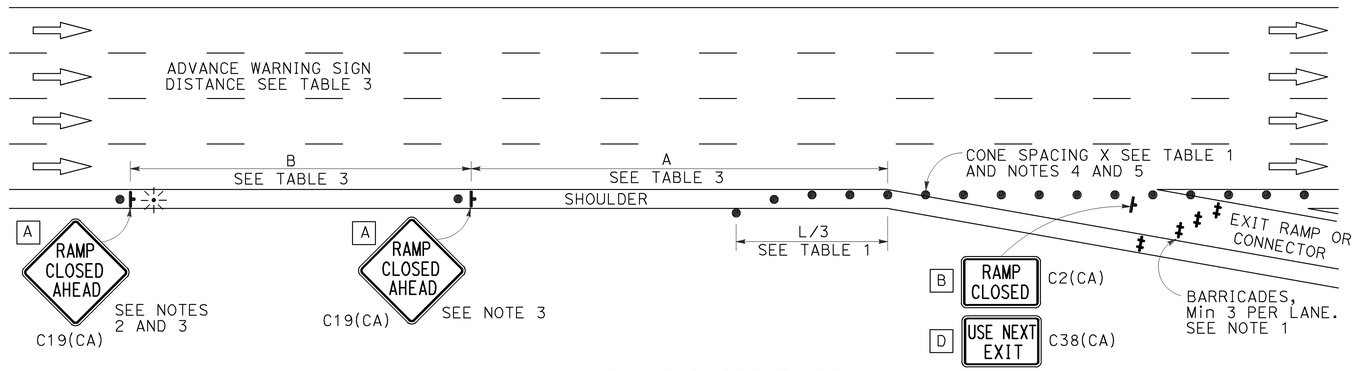

EXIT RAMP OR CONNECTOR

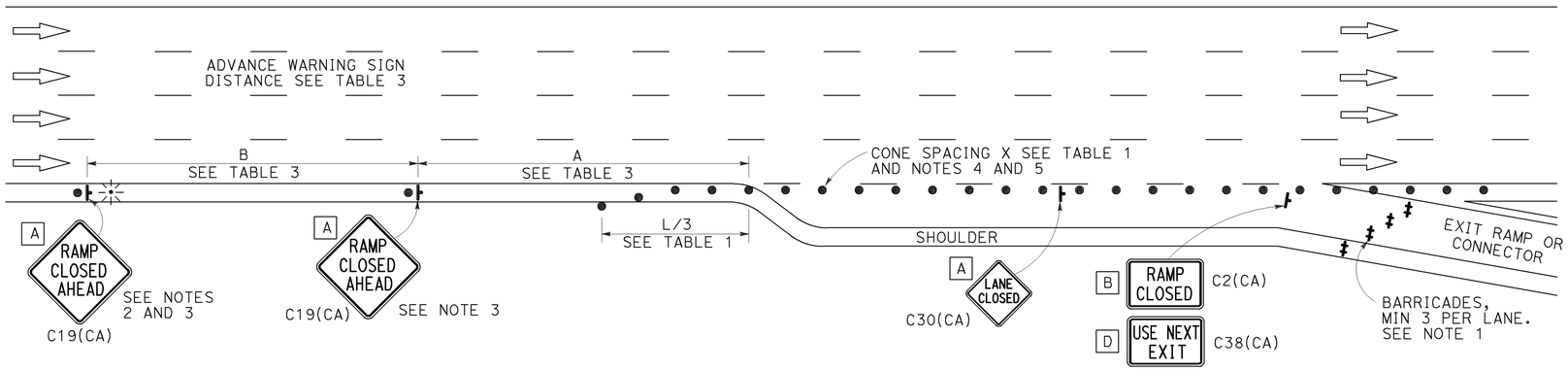

EXIT RAMP OR CONNECTOR WITH ADDITIONAL LANE

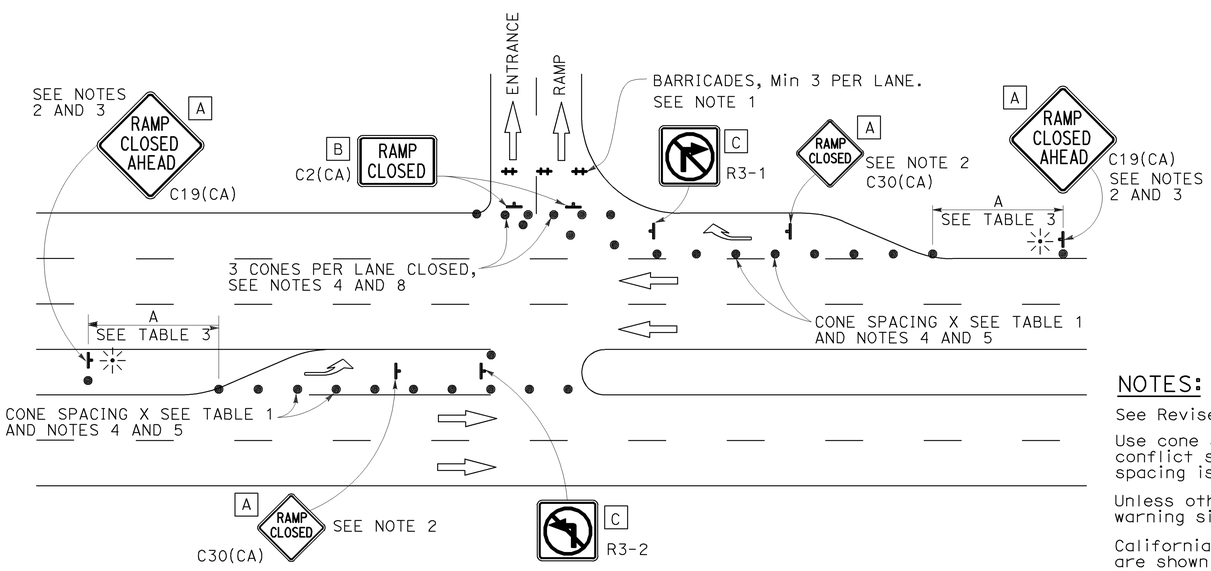

ENTRANCE RAMP WITH TURNING POCKETS

SIGN PANEL SIZE (Min)

- A 48" × 48"
- B 48" × 30"
- C 36" × 36"
- D 48" × 36"

LEGEND

- TRAFFIC CONE
- TEMPORARY TRAFFIC CONTROL SIGN
- BARRICADES
- PORTABLE FLASHING BEACON

NOTES:

1. Barricades shall be Type I, II, or III for closures lasting one week or less and Type III for closures lasting longer than one week.
2. In addition to placing the C19(CA) "RAMP CLOSED AHEAD" and C30(CA) "RAMP CLOSED" signs, black on orange overlay plates with the word "CLOSED" may be mounted, as directed by the Engineer, on all guide signs that refer to the closed ramp. The letter size on the overlay shall be the same as the guide sign.
3. Each advance C19(CA) "RAMP CLOSED AHEAD" sign shall be equipped with at least two flags for daytime closure. Each flag shall be at least 16" × 16" in size and shall be orange or fluorescent red-orange in color. A flashing beacon shall be placed on top of the first C19(CA) sign during hours of darkness.
4. All cones used for ramp closures during the hours of darkness shall be fitted with retroreflective bands (or sleeves) as specified in the specifications.
5. Portable delineators, placed at one-half the spacing indicated for traffic cones, may be used instead of cones for daytime ramp closures only.
6. At least one person shall be assigned to provide full time maintenance of traffic control devices, unless otherwise directed by the Engineer.
7. The existing "EXIT" signs shall be covered during ramp closures.
8. A minimum of 3 cones shall be placed transversely across each closed lane and shoulder.

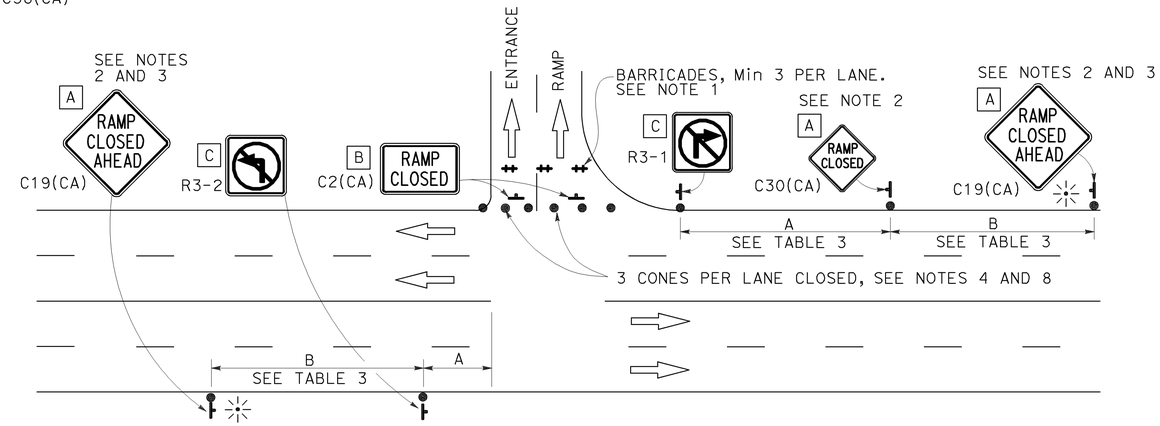

ENTRANCE RAMP WITHOUT TURNING POCKETS

NOTES:

See Revised Standard Plan RSP T9 for tables.

Use cone spacing X for taper segment, Y for tangent segment or Z for conflict situations, as approriate, per Table 1, unless X, Y, or Z cone spacing is shown on this sheet.

Unless otherwise specified in the special provisions, all temporary warning signs shall have black legend on fluorescent orange background.

California codes are designated by (CA). Otherwise, Federal (MUTCD) codes are shown.

STATE OF CALIFORNIA
DEPARTMENT OF TRANSPORTATION

TRAFFIC CONTROL SYSTEM FOR RAMP CLOSURE

NO SCALE

RSP T14 DATED APRIL 19, 2013 SUPERSEDES STANDARD PLAN T14
DATED MAY 20, 2011 - PAGE 242 OF THE STANDARD PLANS BOOK DATED 2010.

REVISED STANDARD PLAN RSP T14

2010 REVISED STANDARD PLAN RSP T14

12-18-12

Dist	COUNTY	ROUTE	POST MILES TOTAL PROJECT	SHEET No.	TOTAL SHEETS
07	LA	5	6.8/13.8	166	176

REGISTERED CIVIL ENGINEER

April 19, 2013
PLANS APPROVAL DATE

REGISTERED PROFESSIONAL ENGINEER Gurinderpal Bhullar No. C48815 Exp. 9-30-14 CIVIL STATE OF CALIFORNIA

THE STATE OF CALIFORNIA OR ITS OFFICERS OR AGENTS SHALL NOT BE RESPONSIBLE FOR THE ACCURACY OR COMPLETENESS OF SCANNED COPIES OF THIS PLAN SHEET.

TO ACCOMPANY PLANS DATED 1-21-14

2010 REVISED STANDARD PLAN RSP T15

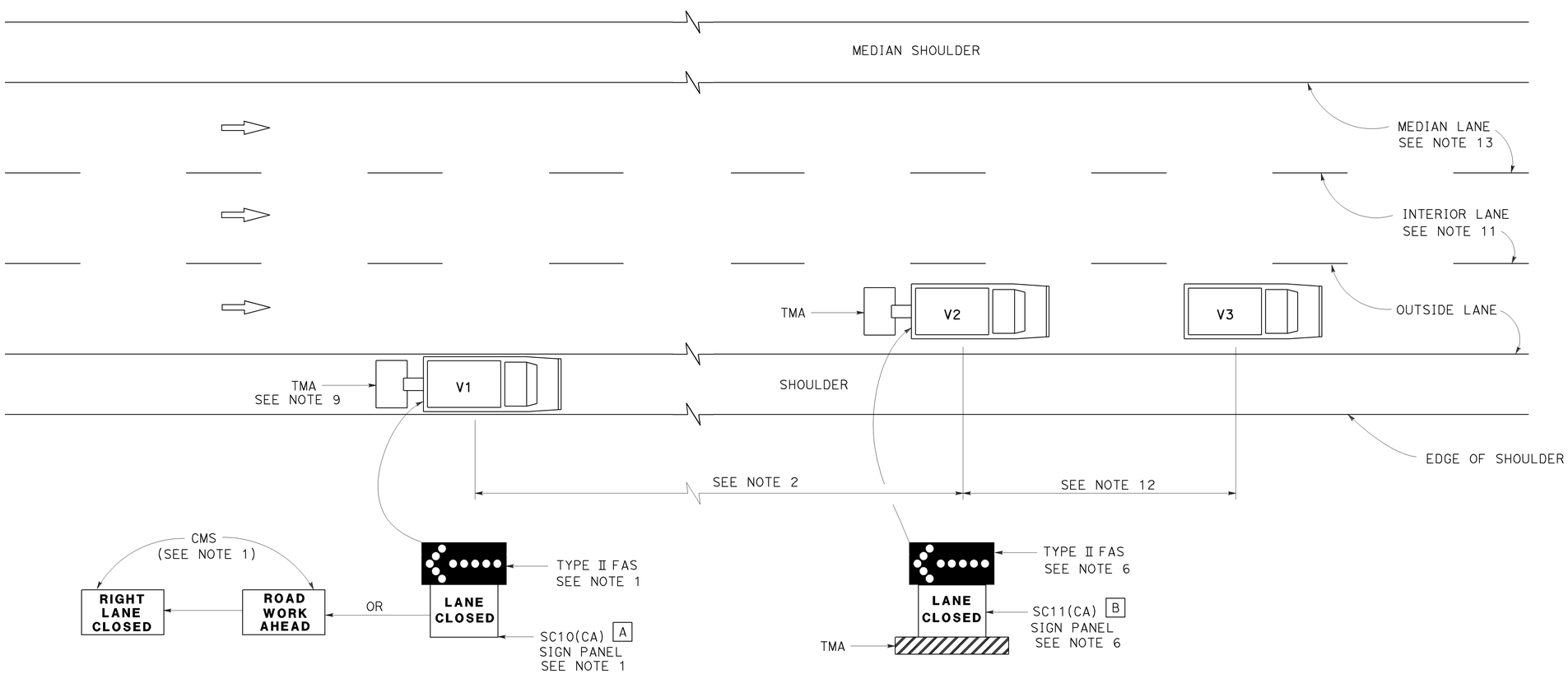

MOVING LANE CLOSURE ON MEDIAN LANE OR OUTSIDE LANE OF MULTILANE HIGHWAYS

SIGN PANEL SIZE (Min)

A 66" x 36"

B 54" x 42"

LEGEND

V1	SIGN VEHICLE
V2	SHADOW VEHICLE
V3	WORK/APPLICATION VEHICLE
	FLASHING ARROW SIGN (FAS)
CMS	CHANGEABLE MESSAGE SIGN
TMA	TRUCK-MOUNTED ATTENUATOR

NOTES:

1. Either a changeable message sign or a SC10(CA) sign panel and a Type II flashing arrow sign shall be mounted on the rear of sign vehicle V1. The changeable message sign shall be sequenced to show the "ROAD WORK AHEAD" message first, followed by the "RIGHT LANE CLOSED" message. For median lane closure, the flashing arrow symbol shall be reversed with the arrowhead on the right and the changeable message sign shall show "LEFT LANE CLOSED".
2. If traffic queues develop, sign vehicle V1 should be positioned upstream from the end of queue. Sign vehicle V1 shall be positioned where highly visible when shoulders are not available.
3. A minimum sight distance of 1500′ should be provided in advance of sign vehicle V1.
4. Sign vehicle V1 should remain at the beginning of horizontal or vertical curves until the other vehicles (V2 and V3) are far enough beyond the curve to resume the minimum sight distance of 1500′.
5. Vehicle-mounted sign panels shall have Type III or above retroreflective sheeting, black on white, or black on fluorescent orange, with 6" minimum series D letters per Caltrans sign specifications.
6. Shadow vehicle V2 shall be equipped with a truck-mounted attenuator. The sign panel shown and a Type II flashing arrow sign shall be mounted on the rear of shadow vehicle V2. For median lane closure the flashing arrow sign symbol shall be displayed with the arrowhead on the right.
7. All vehicles used for lane closures shall be equipped with two-way radios, and the vehicle operators shall maintain communication during the work or application operation.
8. All vehicles shall be equipped with flashing or rotating amber lights.
9. If sign vehicle V1 encroaches into the traffic lane due to insufficient shoulder width, sign vehicle V1 shall be equipped with a truck-mounted attenuator. Sign vehicle V1 shall stay as close to the edge of shoulder as practicable.
10. Where workers would be on foot in the work area, a stationary type lane closure (Revised Standard Plan T10, T11, etc., as applicable) shall be used instead of this plan.
11. For moving lane closure on interior lane of multilane highways, use Revised Standard Plan T16.
12. The spacing between work vehicle(s) and the shadow vehicles, and between each shadow vehicle should be minimized to deter road users from driving in between.
13. When the work/application vehicle V3 occupies the median lane, sign vehicle V1 should drive in the median shoulder and indicate left lane closed ahead.

STATE OF CALIFORNIA
DEPARTMENT OF TRANSPORTATION

TRAFFIC CONTROL SYSTEM FOR MOVING LANE CLOSURE ON MULTILANE HIGHWAYS

NO SCALE

RSP T15 DATED APRIL 19, 2013 SUPERSEDES STANDARD PLAN T15
DATED MAY 20, 2011 - PAGE 243 OF THE STANDARD PLANS BOOK DATED 2010.

REVISED STANDARD PLAN RSP T15

12-18-12

Dist	COUNTY	ROUTE	POST MILES TOTAL PROJECT	SHEET No.	TOTAL SHEETS
07	LA	5	6.8/13.8	167	176

REGISTERED CIVIL ENGINEER

April 19, 2013
PLANS APPROVAL DATE

REGISTERED PROFESSIONAL ENGINEER Gurinderpal Bhullar No. C48815 Exp. 9-30-14 CIVIL STATE OF CALIFORNIA

THE STATE OF CALIFORNIA OR ITS OFFICERS OR AGENTS SHALL NOT BE RESPONSIBLE FOR THE ACCURACY OR COMPLETENESS OF SCANNED COPIES OF THIS PLAN SHEET.

TO ACCOMPANY PLANS DATED 1-21-14

2010 REVISED STANDARD PLAN RSP T16

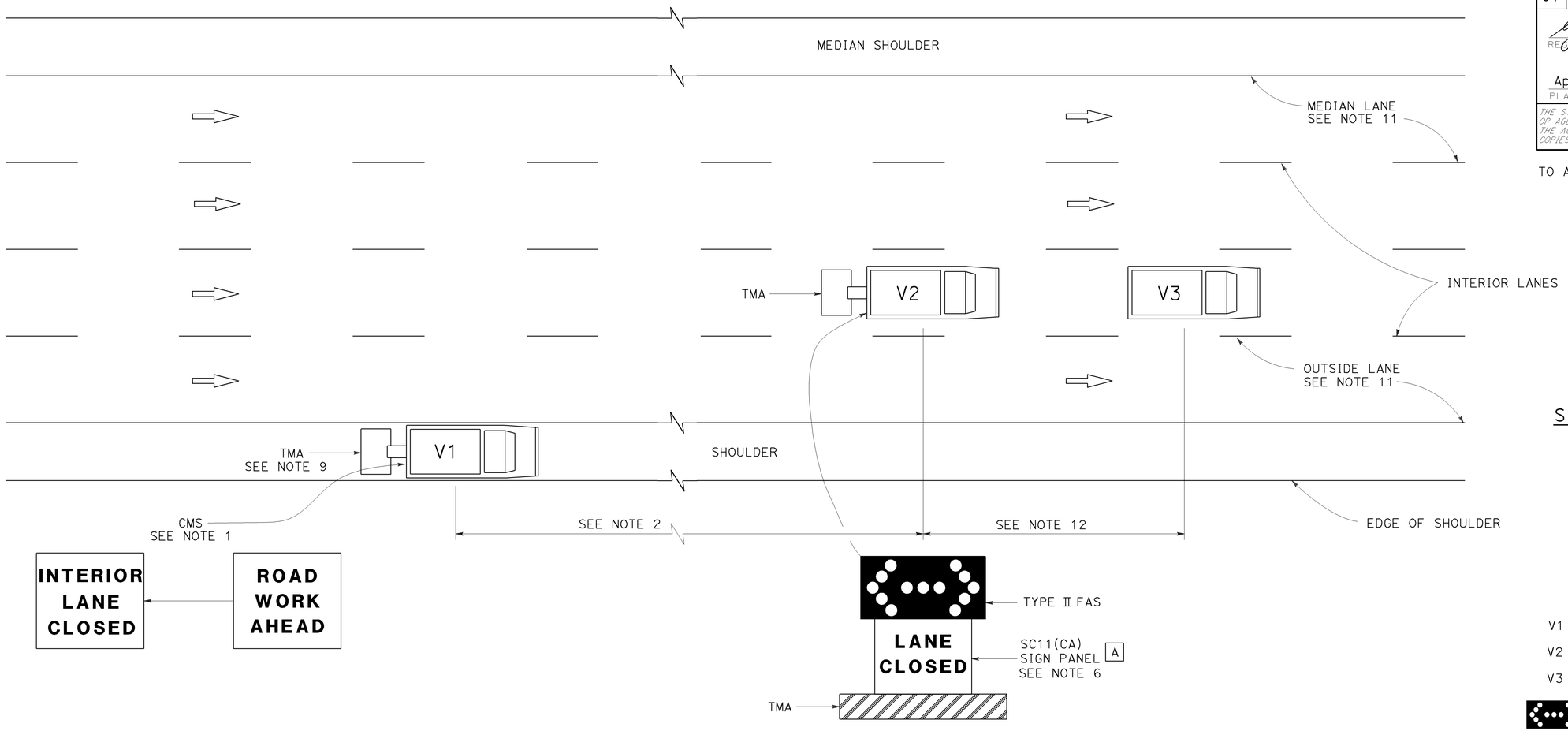

SIGN PANEL SIZE (Min)

A 54" x 42"

LEGEND

V1	SIGN VEHICLE
V2	SHADOW VEHICLE
V3	WORK/APPLICATION VEHICLE
	FLASHING ARROW SIGN (FAS) IN FLASHING DOUBLE ARROW MODE
CMS	CHANGEABLE MESSAGE SIGN
TMA	TRUCK-MOUNTED ATTENUATOR

MOVING LANE CLOSURE ON INTERIOR LANE OF MULTILANE HIGHWAYS

NOTES:

1. A changeable message sign shall be mounted on the rear of sign vehicle V1. The changeable message sign shall be sequenced to show the "ROAD WORK AHEAD" message first, followed by the "INTERIOR LANE CLOSED" message. The message "CENTER LANE CLOSED" may be used in place of the "INTERIOR LANE CLOSED" message.
2. If traffic queues develop, sign vehicle V1 should be positioned upstream from the end of queue. Sign vehicle V1 shall be positioned where highly visible when shoulders are not available.
3. A minimum sight distance of 1500′ should be provided in advance of sign vehicle V1.
4. Sign vehicle V1 should remain at the beginning of horizontal or vertical curves until the other vehicles (V2 and V3) are far enough beyond the curve to resume the minimum sight distance of 1500′.
5. Vehicle-mounted sign panels shall have Type III or above retroreflective sheeting, black on white, or black on fluorescent orange, with 6" minimum series D letters per Caltrans sign specifications.
6. Shadow vehicle V2 shall be equipped with a truck-mounted attenuator. The sign panel shown and a Type II flashing arrow sign shall be mounted on the rear of shadow vehicle V2.
7. All vehicles used for lane closures shall be equipped with two-way radios, and the vehicle operators shall maintain communication during the work or application operation.
8. All vehicles shall be equipped with flashing or rotating amber lights.
9. If sign vehicle V1 encroaches into the traffic lane due to insufficient shoulder width, sign vehicle V1 shall be equipped with a truck-mounted attenuator. Sign vehicle V1 shall stay as close to the edge of shoulder as practicable.
10. Where workers would be on foot in the work area, a stationary type lane closure (Revised Standard Plan T10, T11 etc., as applicable) shall be used instead of this plan.
11. For moving lane closure on median lane or outside lane of multilane highways, use Revised Standard Plan T15.
12. The spacing between work vehicle(s) and the shadow vehicles, and between each shadow vehicle should be minimized to deter road users from driving in between.

STATE OF CALIFORNIA
DEPARTMENT OF TRANSPORTATION

TRAFFIC CONTROL SYSTEM FOR MOVING LANE CLOSURE ON MULTILANE HIGHWAYS

NO SCALE

RSP T16 DATED APRIL 19, 2013 SUPERSEDES STANDARD PLAN T16
DATED MAY 20, 2011 - PAGE 244 OF THE STANDARD PLANS BOOK DATED 2010.

REVISED STANDARD PLAN RSP T16

12-18-12

Dist	COUNTY	ROUTE	POST MILES TOTAL PROJECT	SHEET No.	TOTAL SHEETS
07	LA	5	6.8/13.8	168	176

Theresa Gabriel
REGISTERED ELECTRICAL ENGINEER

July 19, 2013
PLANS APPROVAL DATE

REGISTERED PROFESSIONAL ENGINEER Theresa Aziz Gabriel No. E15129 Exp. 6-30-14 ELECTRICAL STATE OF CALIFORNIA

THE STATE OF CALIFORNIA OR ITS OFFICERS OR AGENTS SHALL NOT BE RESPONSIBLE FOR THE ACCURACY OR COMPLETENESS OF SCANNED COPIES OF THIS PLAN SHEET.

TO ACCOMPANY PLANS DATED 1-21-14

LEGEND:

AB	ABANDON. IF APPLIED TO CONDUIT, REMOVE CONDUCTORS
BC	INSTALL PULL BOX IN EXISTING CONDUIT RUN
BP	PEDESTRIAN BARRICADE, TYPE AS INDICATED ON PLAN
CB	INSTALL CONDUIT INTO EXISTING PULL BOX
CC	CONNECT NEW AND EXISTING CONDUIT. REMOVE EXISTING CONDUCTORS AND INSTALL CONDUCTORS AS INDICATED
CF	CONDUIT TO REMAIN FOR FUTURE USE. REMOVE CONDUCTORS. INSTALL PULL TAPE
DH	DETECTOR HANDHOLE
FA	FOUNDATION TO BE ABANDONED
IS	INSTALL SIGN ON SIGNAL MAST ARM
NS	NO SLIP BASE ON STANDARD
PEC	PHOTOELECTRIC CONTROL
PEU	PHOTOELECTRIC UNIT
RC	EQUIPMENT OR MATERIAL TO BE REMOVED AND BECOME THE PROPERTY OF THE CONTRACTOR
RE	REMOVE ELECTROLIER, FUSES AND BALLAST. TAPE ENDS OF CONDUCTORS
RL	RELOCATE EQUIPMENT
RR	REMOVE AND REUSE EQUIPMENT
RS	REMOVE AND SALVAGE EQUIPMENT
SC	SPLICE NEW TO EXISTING CONDUCTORS
SD	SERVICE DISCONNECT
TSP	TELEPHONE SERVICE POINT

ABBREVIATIONS

APS	ACCESSIBLE PEDESTRIAN SIGNAL
BBS	BATTERY BACKUP SYSTEM
BC	BOLT CIRCLE
BPB	BICYCLE PUSH BUTTON
C	CONDUIT
CB	CIRCUIT BREAKER
CCTV	CLOSED CIRCUIT TELEVISION
Ckt	CIRCUIT
CMS	CHANGEABLE MESSAGE SIGN
Ctid	CALTRANS IDENTIFICATION
Comm	COMMUNICATION
DLC	LOOP DETECTOR LEAD-IN CABLE
EMS	EXTINGUISHABLE MESSAGE SIGN
EVUC	EMERGENCY VEHICLE UNIT CABLE
EVUD	EMERGENCY VEHICLE UNIT DETECTOR
FB	FLASHING BEACON
FBCA	FLASHING BEACON CONTROL ASSEMBLY
FBS	FLASHING BEACON WITH SLIP BASE
FO	FIBER OPTIC
G	EQUIPMENT GROUNDING CONDUCTOR
GB	GROUND BUS
GFCI	GROUND FAULT CIRCUIT INTERRUPTER
HAR	HIGHWAY ADVISORY RADIO
Hex	HEXAGONAL
HPS	HIGH PRESSURE SODIUM
IISNS	INTERNALLY ILLUMINATED STREET NAME SIGN
ISL	INDUCTION SIGN LIGHTING
LED	LIGHT EMITTING DIODE
LMA	LUMINAIRE MAST ARM
LPS	LOW PRESSURE SODIUM
Ltg	LIGHTING
Lum	LUMINAIRE
M	METERED
MAT	MAST ARM MOUNTING TOP ATTACHMENT
MAS	MAST ARM MOUNTING SIDE ATTACHMENT
M/M	MULTIPLE TO MULTIPLE TRANSFORMER
Mtg	MOUNTING
MV	MERCURY VAPOR LIGHTING FIXTURE
MVDS	MICROWAVE VEHICLE DETECTION SYSTEM
N	NEUTRAL (GROUNDED CONDUCTOR)
NB	NEUTRAL BUS
NC	NORMALLY CLOSE
NO	NORMALLY OPEN
P	CIRCUIT BREAKER'S POLE
PB	PULL BOX
PBA	PUSH BUTTON ASSEMBLY
PEC	PHOTOELECTRIC CONTROL
Ped	PEDESTRIAN
PEU	PHOTOELECTRIC UNIT
PT	CONDUIT WITH PULL TAPE
RE	RELOCATED EQUIPMENT
RM	RAMP METERING
RWIS	ROADSIDE WEATHER INFORMATION SYSTEM
SB	SLIP BASE
SIC	SIGNAL INTERCONNECT CABLE
Sig	SIGNAL
SMA	SIGNAL MAST ARM
SNS	STREET NAME SIGN
SP	SERVICE POINT
TDC	TELEPHONE DEMARCATION CABINET
TMS	TRAFFIC MONITORING STATION
TOS	TRAFFIC OPERATIONS SYSTEM
Veh	VEHICLE
VIVDS	VIDEO IMAGE VEHICLE DETECTION SYSTEM
WIM	WEIGH-IN-MOTION
Xfmr	TRANSFORMER

SOFFIT AND WALL MOUNTED LUMINAIRES

PENDANT, 70 W HPS UNLESS OTHERWISE SPECIFIED

FLUSH, 70 W HPS UNLESS OTHERWISE SPECIFIED

WALL SURFACE, 70 W HPS UNLESS OTHERWISE SPECIFIED

EXISTING SOFFIT OR WALL LUMINAIRE TO REMAIN UNMODIFIED

EXISTING SOFFIT OR WALL LUMINAIRE TO BE MODIFIED AS SPECIFIED

NOTE:

Arrow indicates "street side" of luminaire.

COMMONLY USED SYMBOLS FOR UNITED STATES CUSTOMARY UNITS OF MEASUREMENT:

SYMBOL USED	DEFINITIONS
Ω	OHMS
min	MINUTE
s	SECOND
bps	BITS PER SECOND
Bps	BYTES PER SECOND
A	AMPERE
V	VOLT
V(dc)	VOLT (DIRECT CURRENT)
V(ac)	VOLT (ALTERNATING CURRENT)
FC	FOOT - CANDLE
W	WATTS
VA	VOLT-AMPERE
M	MEGA
k	KILO
m	MILLI
μ	MICRO
P	PICO
Hz	HERTZ

MISCELLANEOUS ELECTROLIERS

NEW	EXISTING	
		LUMINAIRE ON WOOD POLE
		NON-STANDARD ELECTROLIER (SEE PROJECT NOTES OR PROJECT PLANS)
		CITY ELECTROLIER
		ELECTROLIER FOUNDATION (FUTURE INSTALLATION)

NOTES:

1. HPS luminaires shall be 310 W HPS when installed on Type 21, 21D, 30, 31 and 32 Standards, unless otherwise specified. HPS luminaires shall be 200 W when installed on other type standards or poles, unless otherwise specified.
2. LED luminaires shall be 235 W when installed on Type 21, 21D, 30, 31 and 32 Standards, unless otherwise specified. LED luminaires shall be 165 W when installed on other type standards or poles, unless otherwise specified.
3. Luminaires shall be the cutoff type, ANSI Type III medium cutoff lighting distribution, unless otherwise specified.

STANDARD ELECTROLIER

NEW	EXISTING	STANDARD TYPE
		15
		15D
		15 STRUCTURE
		15D STRUCTURE
		21
		21D
		21 STRUCTURE
		21D STRUCTURE
		30
		31
		32

STATE OF CALIFORNIA
DEPARTMENT OF TRANSPORTATION

ELECTRICAL SYSTEMS (LEGEND AND ABBREVIATIONS)

NO SCALE

RSP ES-1A DATED JULY 19, 2013 SUPERSEDES STANDARD PLAN ES-1A DATED MAY 20, 2011 - PAGE 425 OF THE STANDARD PLANS BOOK DATED 2010.

REVISED STANDARD PLAN RSP ES-1A

2010 REVISED STANDARD PLAN RSP ES-1A

Dist	COUNTY	ROUTE	POST MILES TOTAL PROJECT	SHEET No.	TOTAL SHEETS
07	LA	5	6.8/13.8	169	176

Theresa Gabriel
REGISTERED ELECTRICAL ENGINEER

July 19, 2013
PLANS APPROVAL DATE

REGISTERED PROFESSIONAL ENGINEER
Theresa Aziz Gabriel
No. E15129
Exp. 6-30-14
ELECTRICAL
STATE OF CALIFORNIA

THE STATE OF CALIFORNIA OR ITS OFFICERS OR AGENTS SHALL NOT BE RESPONSIBLE FOR THE ACCURACY OR COMPLETENESS OF SCANNED COPIES OF THIS PLAN SHEET.

TO ACCOMPANY PLANS DATED 1-21-14

CONDUIT

NEW	EXISTING	
		LIGHTING CONDUIT, UNLESS OTHERWISE INDICATED OR NOTED
		TRAFFIC SIGNAL CONDUIT
C	c	COMMUNICATION CONDUIT
T	t	TELEPHONE CONDUIT
F	f	FIRE ALARM CONDUIT
FO	fo	FIBER OPTIC CONDUIT
		CONDUIT TERMINATION
R	r	CONDUIT RISER ATTACHED TO THE STRUCTURE OR SERVICE POLE

SERVICE EQUIPMENT

NEW	EXISTING	
OH	oh	OVERHEAD LINES
U	U	WOOD POLE, "U" INDICATES UTILITY OWNED
		POLE GUY WITH ANCHOR
		UTILITY TRANSFORMER - GROUND MOUNTED
III	III	SERVICE EQUIPMENT ENCLOSURE TYPE. DOOR INDICATES FRONT OF ENCLOSURE
T	t	TELEPHONE DEMARCATION CABINET

POLE-MOUNTED SERVICE DESIGNATION

TYPE H SERVICE, 28'-10" — TYPE OF INSTALLATION AND POLE HEIGHT ABOVE GRADE

FLASHING BEACON

NEW	EXISTING	
R	R	FLASHING BEACON (ONE VEHICLE SIGNAL HEAD WITH BACKPLATE AND VISOR) "R" INDICATES RED INDICATION, "Y" INDICATES YELLOW INDICATION
Y Y	Y Y	FLASHING BEACON WITH TYPE 15-FBS STANDARD AND A SIGN.
R R	R R	FLASHING BEACON WITH TYPES 9, 9A OR 9B SIGN UNLESS OTHERWISE SPECIFIED OR INDICATED

SIGNAL EQUIPMENT

NEW	EXISTING	
C	C	PEDESTRIAN SIGNAL HEAD "C" INDICATES COUNTDOWN PEDESTRIAN HEAD
		PUSH BUTTON ASSEMBLY POST
		PEDESTRIAN BARRICADE
		VEHICLE SIGNAL HEAD (WITH BACKPLATE AND 3-SECTIONS: RED, YELLOW AND GREEN)
		VEHICLE SIGNAL HEAD WITH ANGLE VISOR
PV	PV	MODIFICATIONS OF BASIC SYMBOL: "L" INDICATES ALL NON-ARROW SECTIONS LOUVERED "LG" INDICATES LOUVERED GREEN SECTION ONLY "PV" INDICATES ALL 12" SECTIONS PROGRAMMED VISIBILITY "8" INDICATES ALL 8" SECTIONS (ONLY WHEN SPECIFIED)
		VEHICLE SIGNAL HEAD CONSISTING OF RED, YELLOW AND GREEN LEFT ARROW SECTIONS
		VEHICLE SIGNAL HEAD CONSISTING OF RED AND YELLOW SECTIONS WITH AN UP GREEN ARROW SECTION
		VEHICLE SIGNAL HEAD (5 SECTION) CONSISTING OF RED, YELLOW AND GREEN SECTIONS WITH YELLOW AND GREEN RIGHT ARROW SECTIONS
		TYPE 15TS STANDARD WITH VEHICLE SIGNAL HEAD AND LUMINAIRE
		TYPE 21TS STANDARD WITH VEHICLE SIGNAL HEAD AND LUMINAIRE
		STANDARD WITH LUMINAIRE AND SIGNAL MAST ARMS AND ATTACHED VEHICLE SIGNAL HEADS
		TYPE 1 STANDARD WITH ATTACHED VEHICLE SIGNAL HEADS
		STANDARD WITH A SIGNAL MAST ARM, ATTACHED VEHICLE SIGNAL HEADS AND INTERNALLY ILLUMINATED STREET NAME SIGN
		CONTROLLER ASSEMBLY. DOOR INDICATES FRONT OF CABINET

SIGNAL EQUIPMENT Cont

NEW	EXISTING	
		GUARD POST
		TYPE 1 STANDARD WITH RAMP METERING SIGN
		OPTICAL DETECTOR FOR THE EMERGENCY VEHICLE DETECTION SYSTEM

NOTES:

1. All signal sections shall be 12" unless shown otherwise.
2. Signal heads shall be provided with backplates unless shown otherwise.

ILLUMINATED OVERHEAD SIGN

NEW	EXISTING	
		SINGLE POST, SINGLE ILLUMINATED SIGN, BALANCED BUTTERFLY
		SINGLE POST, DOUBLE ILLUMINATED SIGN, BALANCED BUTTERFLY
		SINGLE POST, SINGLE ILLUMINATED SIGN, FULL CANTILEVER
		DOUBLE POST, SINGLE ILLUMINATED SIGN
		SINGLE ILLUMINATED SIGN MOUNTED ON STRUCTURE
		DOUBLE POST, SINGLE ILLUMINATED SIGN WITH ELECTROLIER

STATE OF CALIFORNIA
DEPARTMENT OF TRANSPORTATION

ELECTRICAL SYSTEMS (LEGEND AND ABBREVIATIONS)

NO SCALE

RSP ES-1B DATED JULY 19, 2013 SUPERSEDES STANDARD PLAN ES-1B DATED MAY 20, 2011 - PAGE 426 OF THE STANDARD PLANS BOOK DATED 2010.

REVISED STANDARD PLAN RSP ES-1B

2010 REVISED STANDARD PLAN RSP ES-1B

7-15-13

Dist	COUNTY	ROUTE	POST MILES TOTAL PROJECT	SHEET No.	TOTAL SHEETS
07	LA	5	6.8/13.8	170	176

Theresa Gabriel
REGISTERED ELECTRICAL ENGINEER

July 19, 2013
PLANS APPROVAL DATE

REGISTERED PROFESSIONAL ENGINEER
Theresa Aziz Gabriel
No. E15129
Exp. 6-30-14
ELECTRICAL
STATE OF CALIFORNIA

THE STATE OF CALIFORNIA OR ITS OFFICERS OR AGENTS SHALL NOT BE RESPONSIBLE FOR THE ACCURACY OR COMPLETENESS OF SCANNED COPIES OF THIS PLAN SHEET.

TO ACCOMPANY PLANS DATED 1-21-14

EQUIPMENT IDENTIFICATION

ILLUMINATED SIGN IDENTIFICATION NUMBER:

SIGN No. 12345
10 ISL SCI 1.0

- SIGN NUMBER - PLACE ON POST OR STRUCTURE
- TRANSFORMER RATING (kVA)
- LIGHTING CONTROL TYPE
- NUMBER AND TYPE OF FIXTURES

DO NOT PLACE ON STANDARD OR STRUCTURE

ELECTROLIER OR EQUIPMENT IDENTIFICATION NUMBER:

12345 - 15'-0"

- MAST ARM LENGTH, IF SHOWN. DO NOT PLACE ON STANDARD OR STRUCTURE
- EQUIPMENT NUMBER - PLACE ON STANDARD OR STRUCTURE. EXISTING EQUIPMENT NUMBERS ARE SHOWN IN PARENTHESIS

CONDUIT AND CONDUCTOR IDENTIFICATION:

1½"C, 2#10, 15#14, 2 DLC, 12P#18

- PAIR
- NUMBER AND SIZE OF CONDUCTORS AND CABLES
- SIZE OF CONDUIT IN INCHES

ø1, ø2, ø2P, etc.	TRAFFIC PHASE IDENTIFICATION FOR SIGNAL FACES, DETECTORS AND PHASE DIAGRAMS
1 2 3	LEGEND NUMBERS
A B C	EQUIPMENT, SIGNAL POLES, INSTALLATION OR ITEMS
1 2 3	CONDUIT RUN NUMBERS

SIGNAL AND LIGHTING STANDARD (TYPICAL DESIGNATION):

19A - 3 - 100

- WIND VELOCITY = 100 mph
- CASE 3 ARM LOADING
- STANDARD TYPE
- STANDARD PLAN SHEET NUMBER
- DETAIL, NUMBER, SECTION, TYPE OR ELEVATION

MISCELLANEOUS EQUIPMENT

NEW	EXISTING	
CMS	cms	CHANGEABLE MESSAGE SIGN
		CLOSED CIRCUIT TELEVISION CAMERA
		HIGHWAY ADVISORY RADIO POLE AND ANTENNA
EMS	ems	EXTINGUISHABLE MESSAGE SIGN
M V	m v	DETECTION DEVICE M = MICROWAVE SENSOR V = VIDEO IMAGE SENSOR

WIRING DIAGRAM LEGEND

- EXTERNAL CONDUCTOR
- CONDUCTOR OR BUS
- TIE POINT
- CONTACTOR COIL
- CONTACTOR, NO CONTACT
- TERMINAL BLOCKS
- CONTACTOR, NC CONTACT
- ENCLOSURE BOND
- GROUNDING ELECTRODE
- CIRCUIT BREAKER
- RECEPTACLE

PULL BOXES

NEW	EXISTING	
		PULL BOX, No. 5 UNLESS OTHERWISE INDICATED OR NOTED
3	9A(21)	PULL BOX, ADDITIONAL DESIGNATIONS OR DESCRIPTIONS

3 No. 3½ PULL BOX
5 No. 5 PULL BOX
6 No. 6 PULL BOX
7 No. 7 (CEILING PULL BOX)
8 No. 8 (PENDANT SOFFIT PULL BOX)
9 No. 9 PULL BOX
9A No. 9A PULL BOX

(C) COMMUNICATIONS PULL BOX
(E) PULL BOX WITH EXTENSION
(S) SPRINKLER CONTROL PULL BOX
(21) ANCHOR BOLTS AND CONDUIT FOR FUTURE INSTALLATION OF TYPE 21 STANDARD
(T) TRAFFIC PULL BOX

VEHICLE DETECTORS

5 J 9 U

- VEHICLE DETECTOR DESIGNATION
- U = UPPER
  L = LOWER
- SLOT NUMBER IN INPUT FILE
- INPUT FILE (I OR J)
- PHASE

NEW	EXISTING	
		TYPE A DETECTOR LOOP. OUTLINE OF SAWCUT SHOWN
		TYPE B DETECTOR LOOP. OUTLINE OF SAWCUT SHOWN
		TYPE C DETECTOR LOOP. OUTLINE OF SAWCUT SHOWN
		TYPE D DETECTOR LOOP. OUTLINE OF SAWCUT SHOWN
		TYPE E DETECTOR LOOP. OUTLINE OF SAWCUT SHOWN
		TYPE Q DETECTOR LOOP. OUTLINE OF SAWCUT SHOWN
		MAGNETIC DETECTOR
DH	dh	DETECTOR HANDHOLE
		MICROWAVE OR VIDEO DETECTION ZONE

STATE OF CALIFORNIA
DEPARTMENT OF TRANSPORTATION

ELECTRICAL SYSTEMS (LEGEND AND ABBREVIATIONS)

NO SCALE

RSP ES-1C DATED JULY 19, 2013 SUPERSEDES STANDARD PLAN ES-1C DATED MAY 20, 2011 - PAGE 427 OF THE STANDARD PLANS BOOK DATED 2010.

REVISED STANDARD PLAN RSP ES-1C

2010 REVISED STANDARD PLAN RSP ES-1C

7-11-13

Dist	COUNTY	ROUTE	POST MILES TOTAL PROJECT	SHEET No.	TOTAL SHEETS
07	LA	5	6.8/13.8	171	176

Theresa Gabriel
REGISTERED ELECTRICAL ENGINEER

July 19, 2013
PLANS APPROVAL DATE

REGISTERED PROFESSIONAL ENGINEER Theresa Aziz Gabriel No. E15129 Exp. 6-30-14 ELECTRICAL STATE OF CALIFORNIA

THE STATE OF CALIFORNIA OR ITS OFFICERS OR AGENTS SHALL NOT BE RESPONSIBLE FOR THE ACCURACY OR COMPLETENESS OF SCANNED COPIES OF THIS PLAN SHEET.

TO ACCOMPANY PLANS DATED 1-21-14

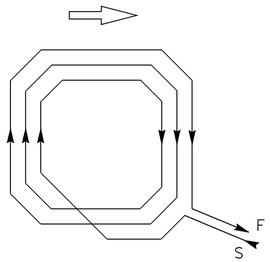

WINDING DETAIL

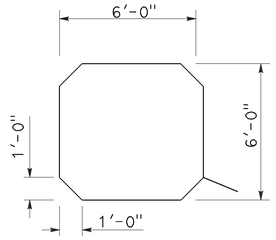

SAWCUT DETAIL

TYPE A LOOP DETECTOR CONFIGURATION

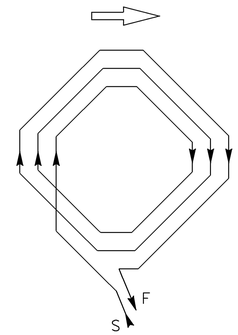

WINDING DETAIL

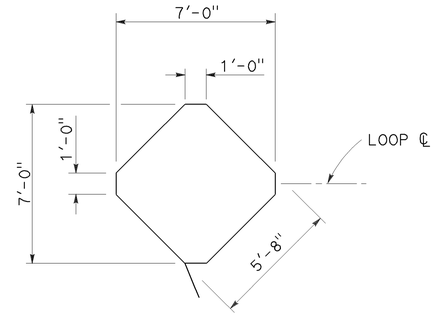

SAWCUT DETAIL

TYPE B LOOP DETECTOR CONFIGURATION

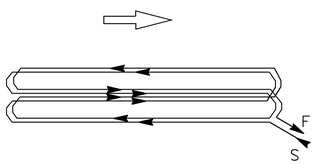

WINDING DETAIL

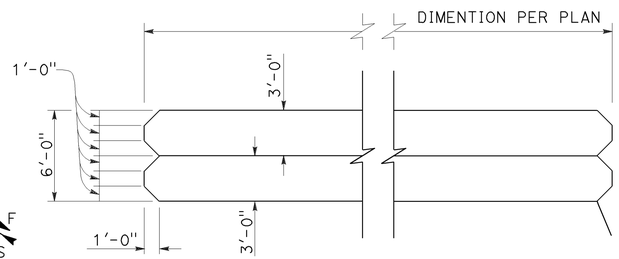

SAWCUT DETAIL

TYPE C LOOP DETECTOR CONFIGURATION

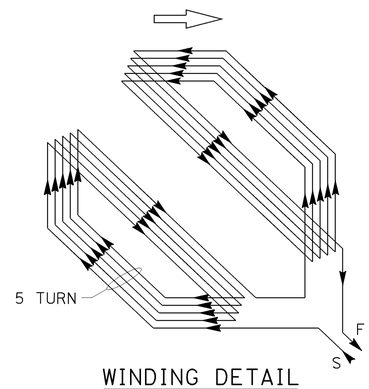

WINDING DETAIL

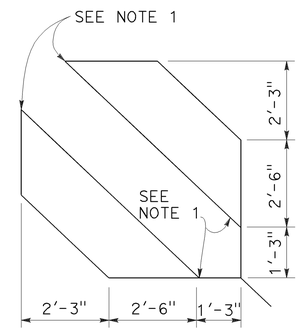

SAWCUT DETAIL

TYPE D LOOP DETECTOR CONFIGURATION

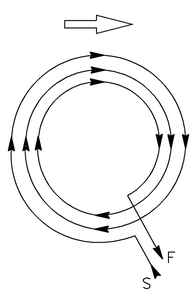

WINDING DETAIL

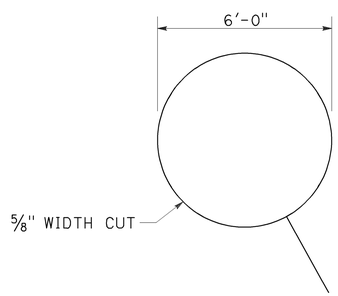

SAWCUT DETAIL

TYPE E LOOP DETECTOR CONFIGURATION

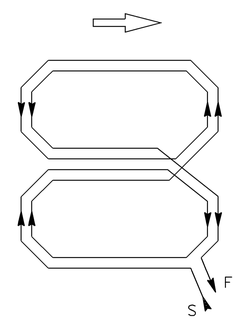

WINDING DETAIL

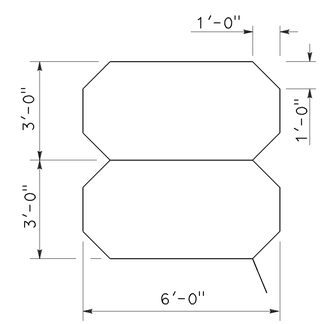

SAWCUT DETAIL

TYPE Q LOOP DETECTOR CONFIGURATION

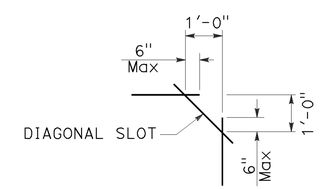

PLAN VIEW OF DIAGONAL SLOT AT CORNERS

NOTES:

1. Round corners of acute angle sawcuts to prevent damage to conductors.
2. Typical distance separating loops from edge to edge is 10' for Type A, B, D and E installation in single lane.

STATE OF CALIFORNIA
DEPARTMENT OF TRANSPORTATION

ELECTRICAL SYSTEMS (DETECTORS)

NO SCALE

RSP ES-5B DATED JULY 19, 2013 SUPERSEDES STANDARD PLAN ES-5B DATED MAY 20, 2011 - PAGE 449 OF THE STANDARD PLANS BOOK DATED 2010.

REVISED STANDARD PLAN RSP ES-5B

2010 REVISED STANDARD PLAN RSP ES-5B

7-9-13

Dist	COUNTY	ROUTE	POST MILES TOTAL PROJECT	SHEET No.	TOTAL SHEETS
07	LA	5	6.8/13.8	172	176

Theresa Gabriel
REGISTERED ELECTRICAL ENGINEER

July 19, 2013
PLANS APPROVAL DATE

REGISTERED PROFESSIONAL ENGINEER Theresa Aziz Gabriel No. E15129 Exp. 6-30-14 ELECTRICAL STATE OF CALIFORNIA

THE STATE OF CALIFORNIA OR ITS OFFICERS OR AGENTS SHALL NOT BE RESPONSIBLE FOR THE ACCURACY OR COMPLETENESS OF SCANNED COPIES OF THIS PLAN SHEET.

TO ACCOMPANY PLANS DATED 1-21-14

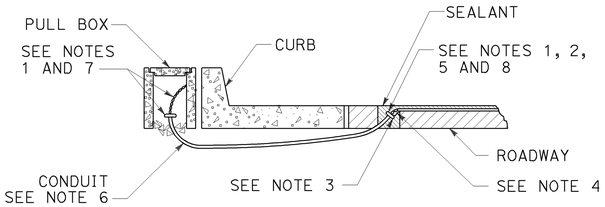

TYPE A
CURB TERMINATION DETAIL

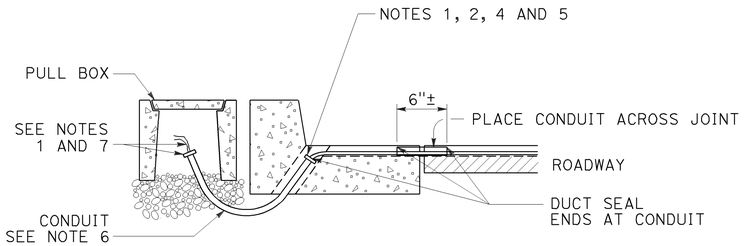

CROSS SECTION

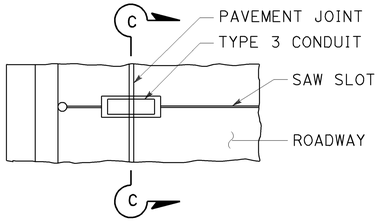

PLAN VIEW

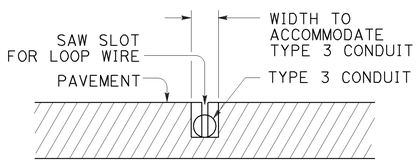

SECTION C-C

TYPE B
CURB TERMINATION DETAIL

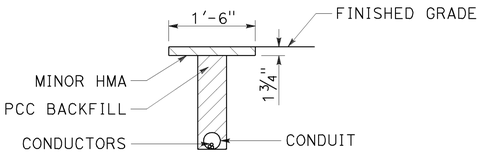

"T" TRENCH
DETAIL T

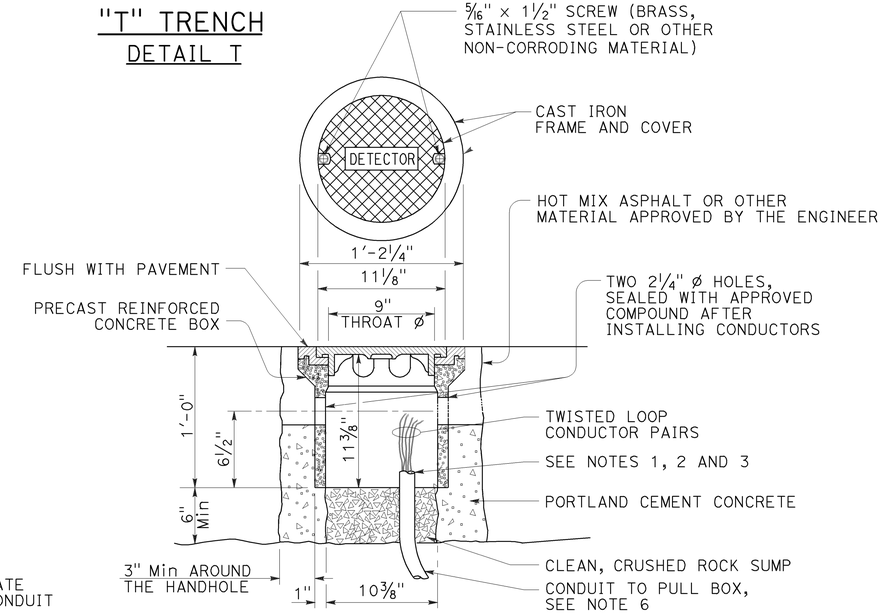

DETECTOR HANDHOLE DETAIL

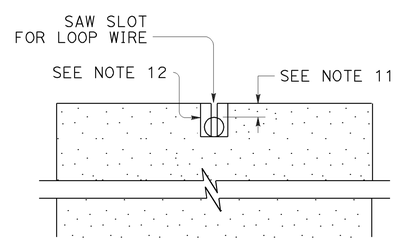

SECTION A-A

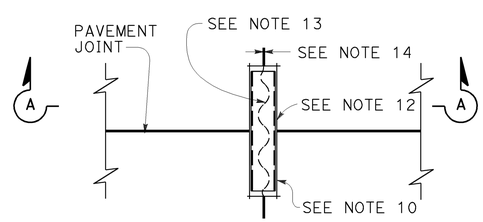

PLAN VIEW

TYPICAL LOOP LEAD-IN DETAIL AT PAVEMENT JOINT

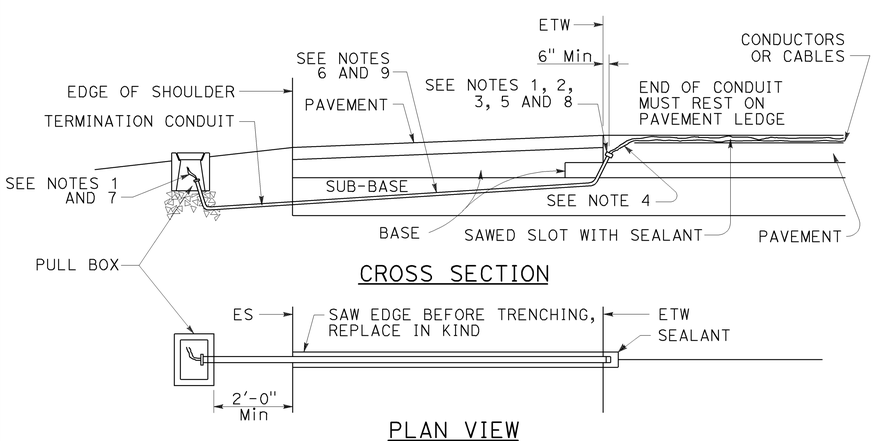

CROSS SECTION

PLAN VIEW

SHOULDER TERMINATION DETAILS

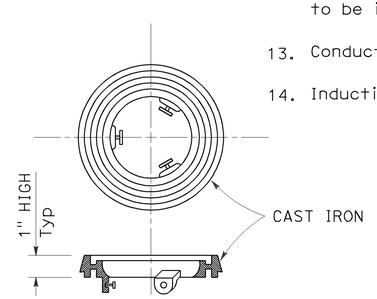

LOCKING GRADE RING

NOTES:

1. Bushing shall be used at end of conduit.
2. Tape detector conductors or cables 3" each side of bushings.
3. Install duct seal compound to each end of termination conduit before installing sealant.
4. Round all sharp edges where detector conductors or cables have to pass.
5. End of conduit shall be 3⅛" below roadway surface.
6. Conduit size / Loop conductors
   - 1"C minimum — 1 to 2 pairs
   - 1½"C minimum — 3 to 4 pairs
   - 2"C minimum — 5 or more pairs
7. Splice detector conductors or cables to detector lead-in-cable.
8. Location of detector handhole when shown on plans.
9. When the shoulder and traveled way are paved with the same material and there is no joint between them, the conduit shall extend only 2'-0" into the shoulder pavement.
10. ¾"C, Type 3 conduit 6" long minimum, plug both ends with duct compound to keep out sealant.
11. ½" Minimum between top of conduit and pavement surface.
12. Sawcut shall not exceed 1" in width and ⅛" longer than conduit to be installed.
13. Conductors with ½" minimum slack inside conduit.
14. Inductive loop detector saw slot.

STATE OF CALIFORNIA
DEPARTMENT OF TRANSPORTATION

ELECTRICAL SYSTEMS (CURB TERMINATION AND HANDHOLE)

NO SCALE

RSP ES-5D DATED JULY 19, 2013 SUPERSEDES STANDARD PLAN ES-5D DATED MAY 20, 2011 - PAGE 451 OF THE STANDARD PLANS BOOK DATED 2010.

REVISED STANDARD PLAN RSP ES-5D

2010 REVISED STANDARD PLAN RSP ES-5D

7-9-13

DIST	COUNTY	ROUTE	POST MILES TOTAL PROJECT	SHEET No.	TOTAL SHEETS
07	LA	5	6.8/13.8	173	176

REGISTERED CIVIL ENGINEER 10-09-13 DATE

1-21-14
PLANS APPROVAL DATE

REGISTERED PROFESSIONAL ENGINEER FAYEK TANNOUS No. C50501 Exp. 06-30-15 CIVIL STATE OF CALIFORNIA

The State of California or its officers or agents shall not be responsible for the accuracy or completeness of scanned copies of this plan sheet.

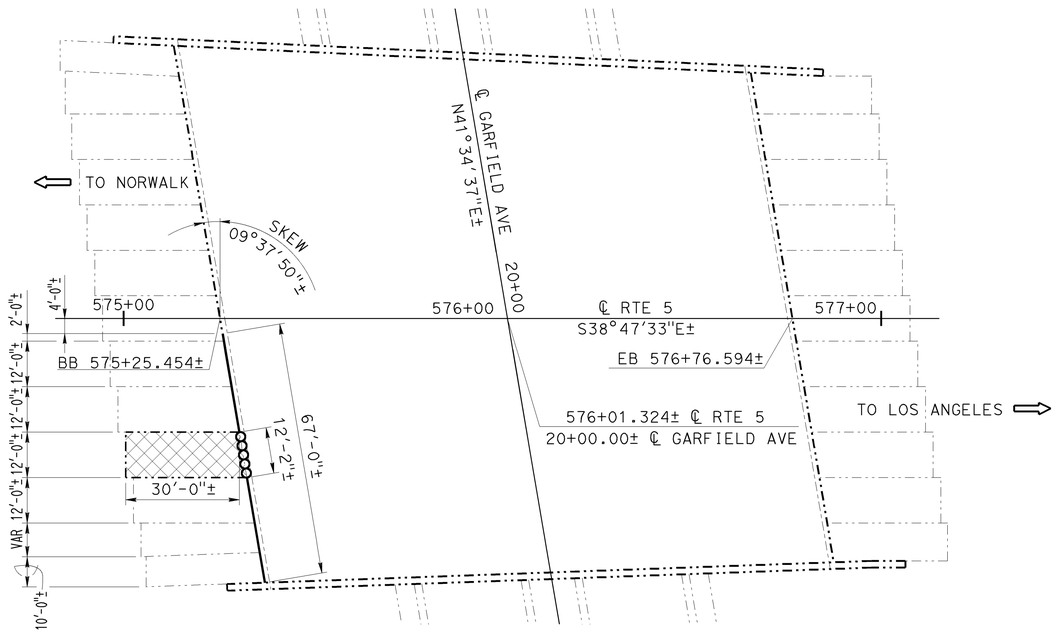

PLAN
1"=20'-0"

GARFIELD AVE UC
BR NO. 53-0637, RTE 5

INDEX TO PLANS

SHEET NO.:	TITLE:
1.	GENERAL PLAN NO. 1
2.	GENERAL PLAN NO. 2
3.	JOINT SEAL DETAILS
4.	STRUCTURE APPROACH TYPE R (30D)

STANDARD PLANS DATED 2010

	A10A	ACRONYMS AND ABBREVIATIONS (SHEET 1 OF 2)
RSP	A10B	ACRONYMS AND ABBREVIATIONS (SHEET 2 OF 2)
	B6-21	JOINT SEALS (MAXIMUM MOVEMENT RATING=2")

LEGEND:

- Indicates existing structure
- Indicates limits of remove existing joint seal, clean expansion joint and place new joint seal
- Indicates limits of paving notch extension and place new joint seal
- Indicates limits of existing structure approach slab removal and place new Structure Concrete Approach Slab Type R (30D)

GARFIELD AVENUE UC — BRIDGE NO. 53-0637

QUANTITIES

AGGREGATE BASE (APPROACH SLAB)	2	CY
STRUCTURAL CONCRETE, APPROACH SLAB (TYPE R)	14	CY
PAVING NOTCH EXTENSION	9	CF
CLEAN EXPANSION JOINT	55	LF
JOINT SEAL (MR 1")	67	LF

NOTE:
THE CONTRACTOR SHALL VERIFY ALL CONTROLLING FIELD DIMENSIONS BEFORE ORDERING OR FABRICATING ANY MATERIAL.

MATT HOLM
DESIGN ENGINEER

	BY	CHECKED
DESIGN	FAYEK TANNOUS	JEFF KLIEBY
DETAILS	TON DOAN	FAYEK TANNOUS
QUANTITIES	FAYEK TANNOUS	JEFF KLIEBY

LOAD & RESISTANCE FACTOR DESIGN — LIVE LOADING: HL93 W/"LOW-BOY"; PERMIT DESIGN VEHICLE

	BY	CHECKED
LAYOUT	TON DOAN	FAYEK TANNOUS
SPECIFICATIONS	JAMES CHOI	PLANS AND SPECS COMPARED: JAMES CHOI

ORIGINAL SCALE IN INCHES FOR REDUCED PLANS 0 1 2 3

STATE OF CALIFORNIA
DEPARTMENT OF TRANSPORTATION

DIVISION OF ENGINEERING SERVICES
STRUCTURE DESIGN
DESIGN BRANCH 12

BRIDGE NO.: VARIOUS
POST MILE: VARIOUS

STRUCTURE APPROACH SLAB REPLACEMENT
GENERAL PLAN NO. 1

UNIT: 3606
PROJECT NUMBER & PHASE: 0713000002
CONTRACT NO.: 07-294901

DISREGARD PRINTS BEARING EARLIER REVISION DATES

REVISION DATES: 08-22-13 10-14-13 11-04-13 09-26-13

SHEET 1 OF 4

USERNAME => s129972 DATE PLOTTED => 08-APR-2014 TIME PLOTTED => 14:43

STRUCTURES DESIGN GENERAL PLAN SHEET (ENGLISH) (REV.09-01-10)

FILE => 53-0637-a-gp01.dgn

DIST	COUNTY	ROUTE	POST MILES TOTAL PROJECT	SHEET No.	TOTAL SHEETS
07	LA	5	6.8/13.8	174	176

REGISTERED CIVIL ENGINEER — DATE 10-09-13

1-21-14
PLANS APPROVAL DATE

REGISTERED PROFESSIONAL ENGINEER — FAYEK TANNOUS — No. C50501 — Exp. 06-30-15 — CIVIL — STATE OF CALIFORNIA

The State of California or its officers or agents shall not be responsible for the accuracy or completeness of scanned copies of this plan sheet.

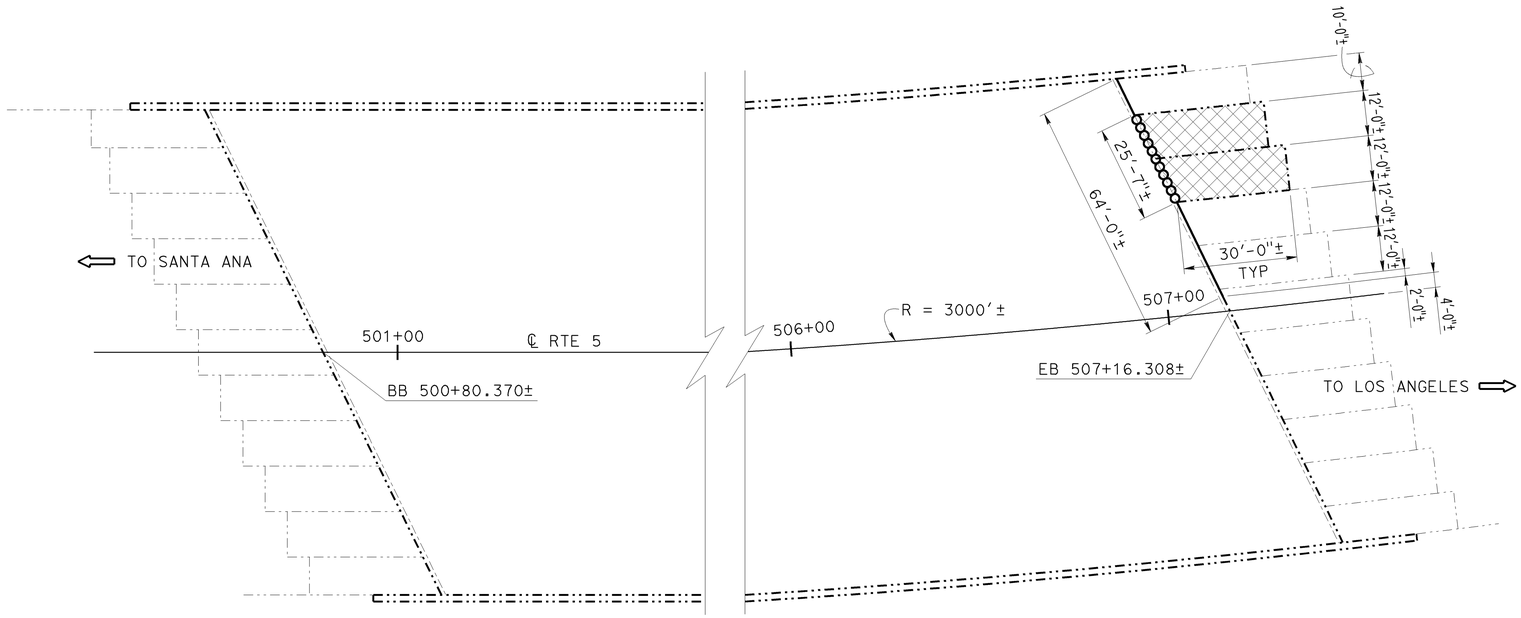

PARTIAL PLAN

1"=20'-0"

RIO HONDO BRIDGE
BR NO. 53-0639, RTE 5

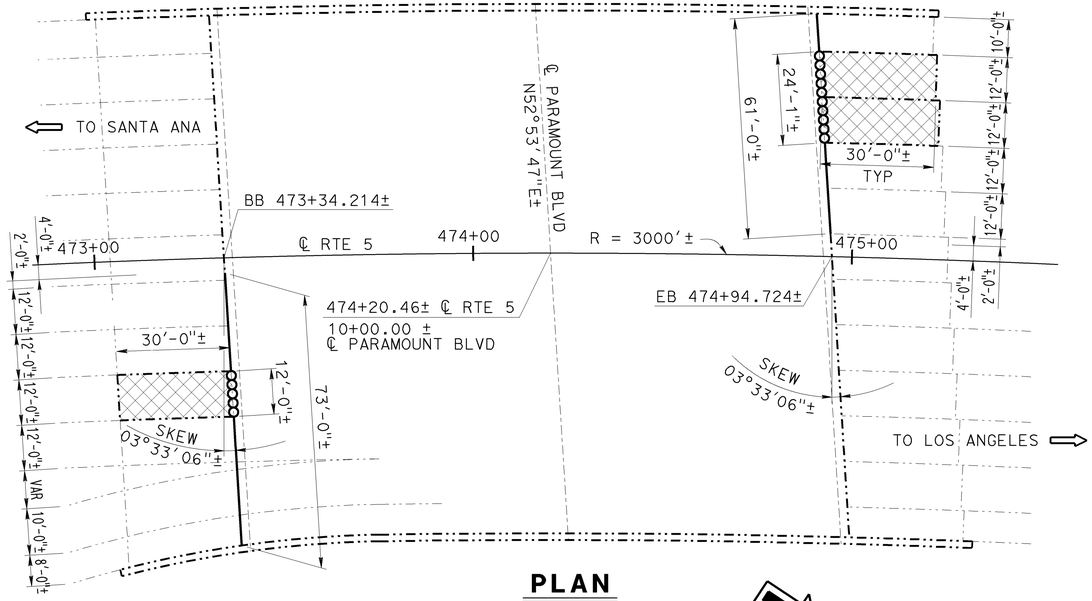

PLAN

1"=20'-0"

PARAMOUNT BLVD UC
BR NO. 53-0765, RTE 5

LEGEND:

- Indicates existing structure
- Indicates limits of remove existing joint seal, clean expansion joint and place new joint seal
- Indicates limits of paving notch extension and place new joint seal
- Indicates limits of existing structure approach slab removal and place new Structure Concrete Approach Slab Type R (30D)

RIO HONDO BRIDGE — BRIDGE NO. 53-0639

QUANTITIES

AGGREGATE BASE (APPROACH SLAB)	3	CY
STRUCTURAL CONCRETE, APPROACH SLAB (TYPE R)	29	CY
PAVING NOTCH EXTENSION	20	CF
CLEAN EXPANSION JOINT	39	LF
JOINT SEAL (TYPE A)	64	LF

PARAMOUNT BLVD UC — BRIDGE NO. 53-0765

QUANTITIES

AGGREGATE BASE (APPROACH SLAB)	4	CY
STRUCTURAL CONCRETE, APPROACH SLAB (TYPE R)	41	CY
PAVING NOTCH EXTENSION	27	CF
CLEAN EXPANSION JOINT	98	LF
JOINT SEAL (MR 1/2")	134	LF

NOTE:
THE CONTRACTOR SHALL VERIFY ALL CONTROLLING FIELD DIMENSIONS BEFORE ORDERING OR FABRICATING ANY MATERIAL.

MATT HOLM
DESIGN ENGINEER

	BY	CHECKED			
DESIGN	FAYEK TANNOUS	JEFF KLIEBY	LOAD & RESISTANCE FACTOR DESIGN	LIVE LOADING: HL93 W/"LOW-BOY"; PERMIT DESIGN VEHICLE	
DETAILS	TON DOAN	FAYEK TANNOUS	LAYOUT	TON DOAN	FAYEK TANNOUS
QUANTITIES	FAYEK TANNOUS	JEFF KLIEBY	SPECIFICATIONS	JAMES CHOI	JAMES CHOI

ORIGINAL SCALE IN INCHES FOR REDUCED PLANS 0 1 2 3

STATE OF CALIFORNIA
DEPARTMENT OF TRANSPORTATION

DIVISION OF ENGINEERING SERVICES
STRUCTURE DESIGN
DESIGN BRANCH 12

BRIDGE NO. VARIOUS
POST MILE VARIOUS

STRUCTURE APRROACH SLAB REPLACEMENT
GENERAL PLAN NO. 2

UNIT: 3606
PROJECT NUMBER & PHASE: 0713000002
CONTRACT NO.: 07-294901

DISREGARD PRINTS BEARING EARLIER REVISION DATES

REVISION DATES: 08-22-13 09-26-13 10-14-13 11-04-13

SHEET 2 OF 4

USERNAME => s128912 DATE PLOTTED => 08-APR-2014 TIME PLOTTED => 14:44

STRUCTURES DESIGN GENERAL PLAN SHEET (ENGLISH) (REV.09-01-10)

FILE => 53-0637-a-gp02.dgn

DIST	COUNTY	ROUTE	POST MILES TOTAL PROJECT	SHEET No.	TOTAL SHEETS
07	LA	5	6.8/13.8	175	176

REGISTERED CIVIL ENGINEER 10-09-13 DATE

1-21-14
PLANS APPROVAL DATE

REGISTERED PROFESSIONAL ENGINEER FAYEK TANNOUS No. C50501 Exp. 06-30-15 CIVIL STATE OF CALIFORNIA

The State of California or its officers or agents shall not be responsible for the accuracy or completeness of electronic copies of this plan sheet.

JOINT SEAL TABLE

BRIDGE NAME	BRIDGE NUMBER	LOCATION		MINIMUM "MR" (IN)	APPROX LENGTH (FT)	EXISTING WATERSTOP	CLEAN JOINT LENGTH (FT)	APPROXIMATE DEPTH TO CLEAN EXPENTION JOINT (IN)
GARFIELD AVE UC	53-0637	ABUT 1 BB	PN	1	67	NO	55	12
RIO HONDO	53-0639	ABUT 9 EB	PN	½ *	64	NO	39	12
PARAMOUNT BLVD UC	53-0765	ABUT 1 BB	PN	½	73	NO	61	12
		ABUT 4 EB	PN	½	61	NO	37	12

LEGEND:

BB - Beginning of bridge

EB - End of bridge

PN - Paving notch

* - Use silicon seal only

NOTES:

The following notes apply to JOINT SEAL TYPE A:

Install Joint Seal (MR = ½") or silicon joint seal 3" up into curb or barrier rail on the low side of the deck where deck joint aligns with curb or barrier rail joint.

For details not shown see B6-21

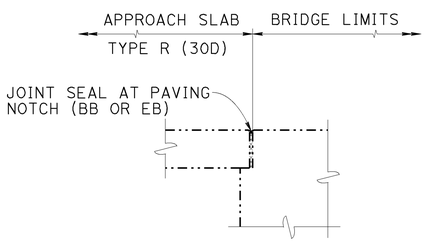

DIAPHRAGM ABUTMENT

NO SCALE

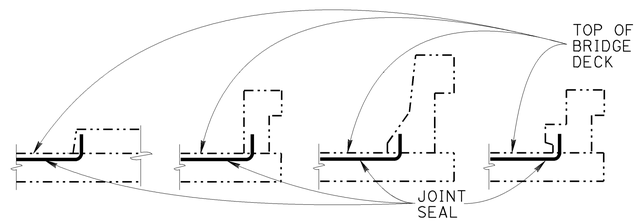

BARRIER RAIL

JOINT SEAL AT LOW SIDE OF DECK

NOTE: DETAILS SHOWN FOR ILLUSTRATION PURPOSES ONLY.

FOR USE ONLY WHERE DECK JOINT MATCHES THE SIDEWALK, CURB OR BARRIER RAIL JOINT.

NOTE:
THE CONTRACTOR SHALL VERIFY ALL CONTROLLING FIELD DIMENSIONS BEFORE ORDERING OR FABRICATING ANY MATERIAL.

	BY	CHECKED
DESIGN	FAYEK TANNOUS	JEFF KLIEBY
DETAILS	TON DOAN	FAYEK TANNOUS
QUANTITIES	FAYEK TANNOUS	JEFF KLIEBY

STATE OF CALIFORNIA
DEPARTMENT OF TRANSPORTATION

DIVISION OF ENGINEERING SERVICES
STRUCTURE DESIGN
DESIGN BRANCH 12

BRIDGE NO. VARIES
POST MILE VARIES

STRUCTURE APPROACH SLAB REPLACEMENT
JOINT SEAL DETAILS

STRUCTURES DESIGN DETAIL SHEET (ENGLISH) (REV. 09-01-10)

ORIGINAL SCALE IN INCHES FOR REDUCED PLANS 0 1 2 3

UNIT: 3606
PROJECT NUMBER & PHASE: 0713000002
CONTRACT NO.: 07-294901

DISREGARD PRINTS BEARING EARLIER REVISION DATES

REVISION DATES: 08-26-13 10-16-13 11-05-13 09-26-13

SHEET 3 OF 4

FILE => 53-0637-q-jndt.dgn

USERNAME => s128972 DATE PLOTTED => 08-APR-2014 TIME PLOTTED => 14:44

DIST	COUNTY	ROUTE	POST MILES TOTAL PROJECT	SHEET No.	TOTAL SHEETS
07	LA	5	6.8/13.8	176	176

REGISTERED CIVIL ENGINEER 10-09-13 DATE

1-21-14
PLANS APPROVAL DATE

REGISTERED PROFESSIONAL ENGINEER FAYEK TANNOUS No. C50501 Exp. 06-30-15 CIVIL STATE OF CALIFORNIA

The State of California or its officers or agents shall not be responsible for the accuracy or completeness of electronic copies of this plan sheet.

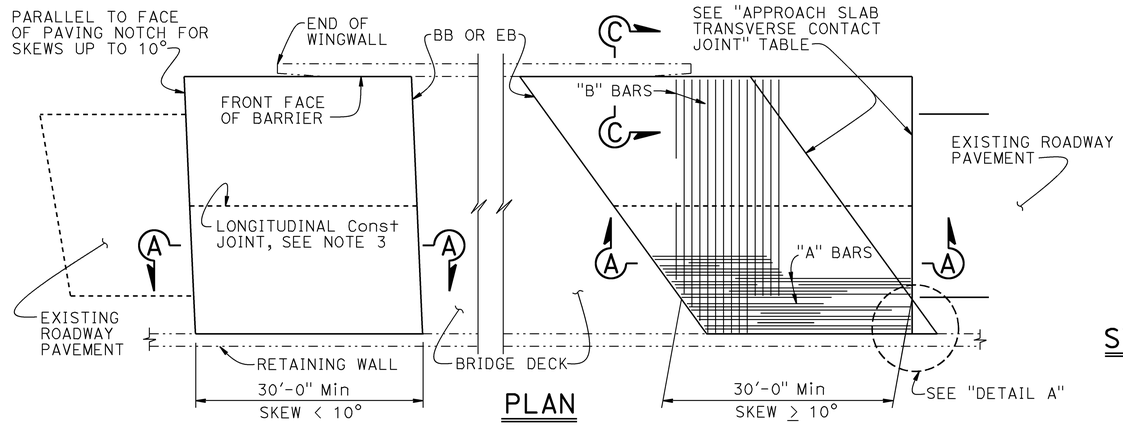

PLAN
1" = 10'

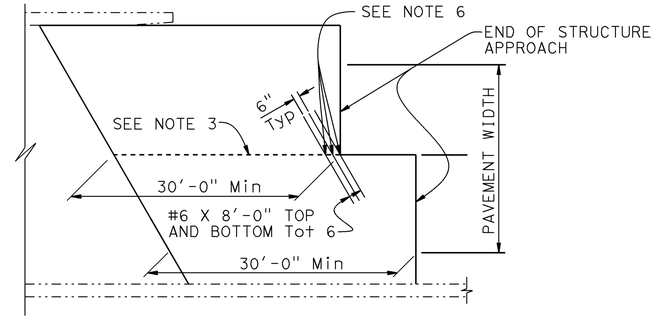

STRUCTURE APPROACH - END STAGGER DETAIL
NO SCALE

APPROACH SLAB TRANSVERSE CONTACT JOINT		
APPROACH SKEW	WITH AC ROADWAY PAVEMENT	WITH PCC ROADWAY PAVEMENT
< 10°	PARALLEL TO FACE OF PN	PARALLEL TO FACE OF PAVING NOTCH
10° - 45°	PARALLEL TO FACE OF PN USE "DETAIL A"	STAGGER LINES 24' TO 36' APART
> 45°	PARALLEL TO FACE OF PN USE "DETAIL A"	STAGGER AT EACH LANE LINE

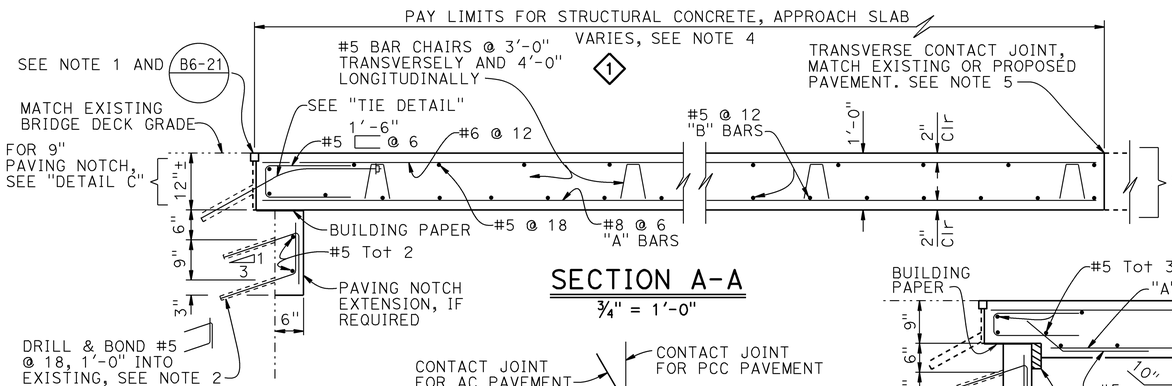

SECTION A-A
¾" = 1'-0"

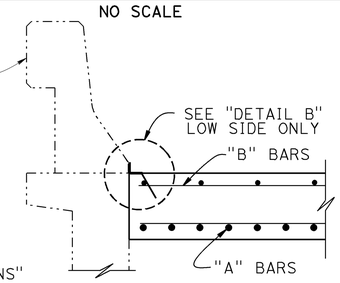

SECTION C-C
¾" = 1'-0"

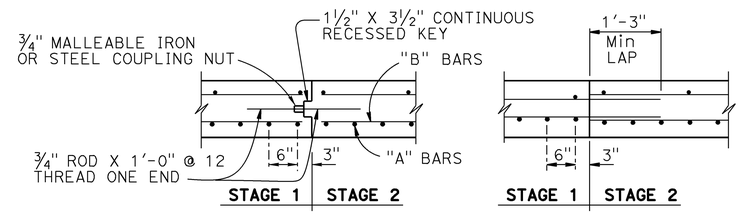

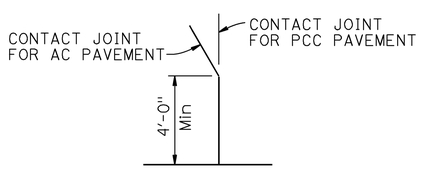

DETAIL A
No Scale

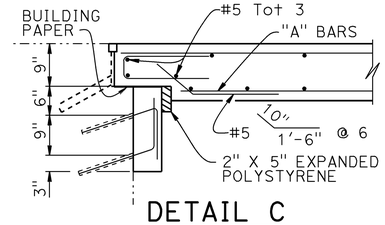

DETAIL C
¾" = 1'-0"

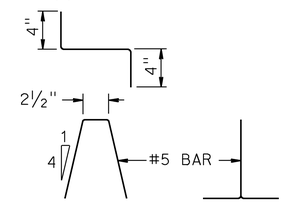

BAR CHAIR DETAIL
1½" = 1'-0"

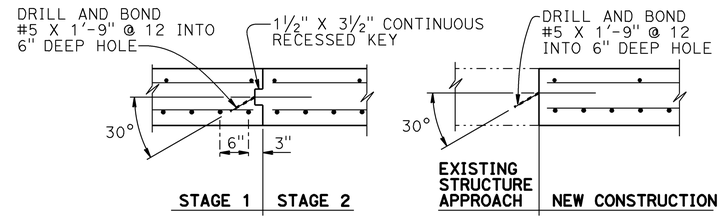

LONGITUDINAL CONSTRUCTION JOINT ALTERNATIVES
¾" = 1'-0"

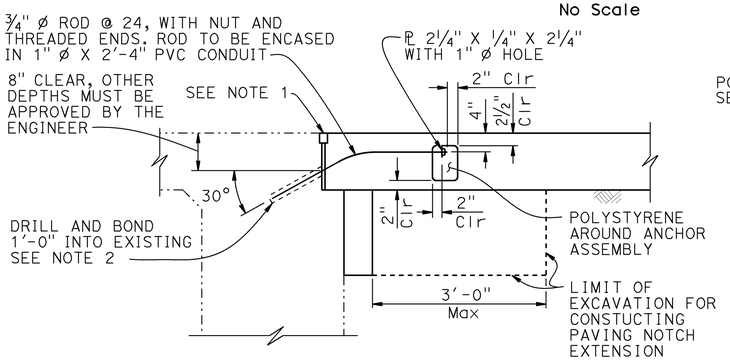

TIE DETAIL
¾" = 1'-0"

NOTE:
THE CONTRACTOR SHALL VERIFY ALL CONTROLLING FIELD DIMENSIONS BEFORE ORDERING OR FABRICATING ANY MATERIAL.

NOTE: For details not shown, see "SECTION A-A"

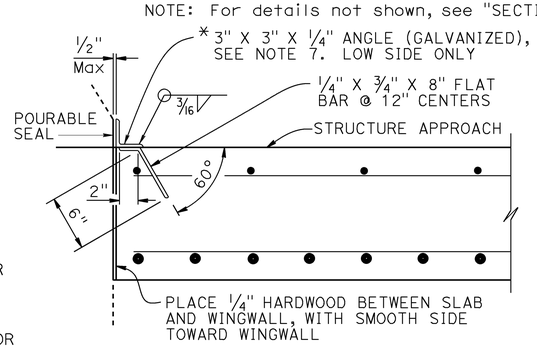

*(TO BE USED WITH CONCRETE BARRIER WITH VERTICAL FACE)

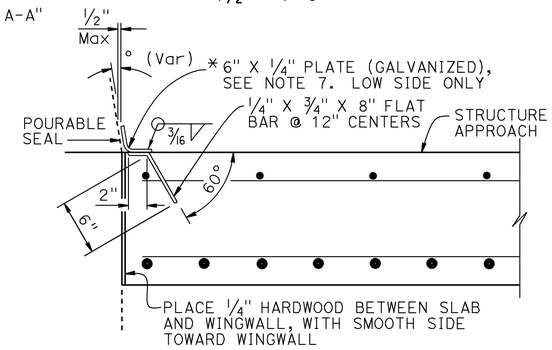

*(TO BE USED WITH CONCRETE BARRIER WITH SLOPING FACE)

DETAIL B
1½" = 1'-0"

NOTES:
1. For details not shown or noted, see Structure Plans. Adjust bar reinforcement to clear a sawcut for sealed joint, when required
2. Space to avoid existing prestress anchorages and main reinforcement
3. Longitudinal construction joints, when permitted by the Engineer, shall be located on lane lines
4. Transverse contact joint shall be a minimum of 5'-0" from an existing or constructed weakened plane joint
5. For transverse contact joint with new PCC paving. refer to Standard Plan P10
6. Couplers are required for stage construction
7. End angle or plate at beginning of barrier transition, end of wingwall or end of structure approach as applicable

RIVISED STANDARD DRAWING

FILE NO. xs3-150

APPROVAL DATE July 2011

1 Modified notes

STATE OF CALIFORNIA DEPARTMENT OF TRANSPORTATION

DIVISION OF ENGINEERING SERVICES

BRIDGE NO. VARIES

POST MILE VARIES

STRUCTURE APPROACH SLAB REPLACEMENT
STRUCTURE APPROACH TYPE R(30D)

DS OSD 2147A (ENGLISH STANDARD DRAWING "XS" BORDER REV. (02-02-11)

ORIGINAL SCALE IN INCHES FOR REDUCED PLANS 0 1 2 3

UNIT: 3606
PROJECT NUMBER & PHASE: 0713000002
CONTRACT NO.: 07-294901

DISREGARD PRINTS BEARING EARLIER REVISION DATES

REVISION DATES 08-20-13

SHEET 4 OF 4

FILE => 53-0637-s-sad.dgn

USERNAME => s128972 DATE PLOTTED => 08-APR-2014 TIME PLOTTED => 14:46