DIST	COUNTY	ROUTE	POST MILES TOTAL PROJECT	SHEET No	TOTAL SHEETS
07	Ven,SB	101	R39.8/R43.6, 0.0/2.2	701	757

REGISTERED CIVIL ENGINEER — DATE 10-18-10

6-20-11
PLANS APPROVAL DATE

The State of California or its officers or agents shall not be responsible for the accuracy or completeness of electronic copies of this plan sheet.

REGISTERED PROFESSIONAL ENGINEER — DOUGLAS C. MENZMER — No. C63498 — Exp. 09-30-12 — CIVIL — STATE OF CALIFORNIA

CURVE DATA

No.	R	Δ	T	L
Ⓐ	3917.34	59°11'30"	2224.98	4046.96
Ⓒ	2214.23	10°5'21"	195.46	389.90

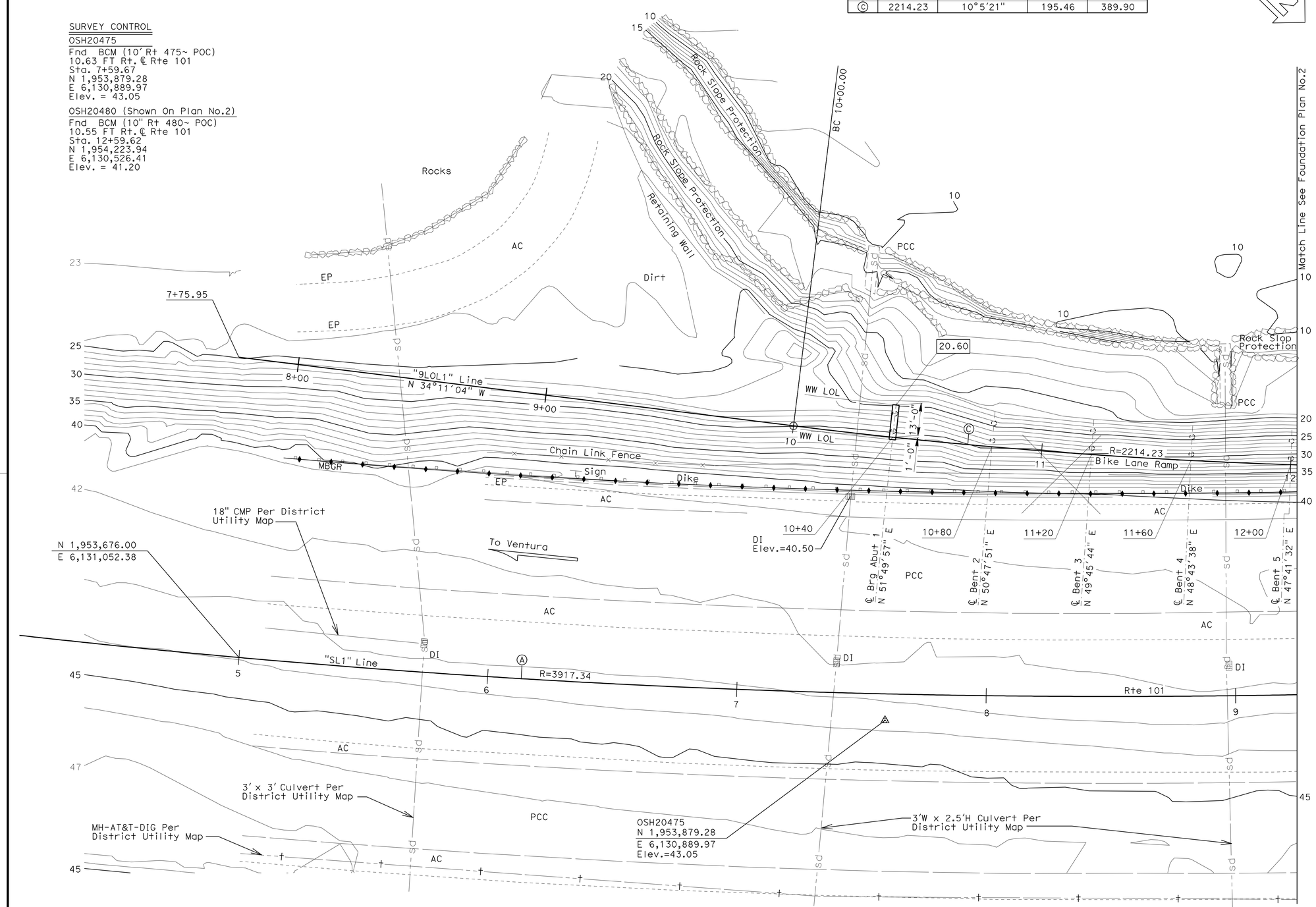

Legend:

▭ - Indicates bottom of footing elevation.

◌ - Indicates CIDH pile.

PRELIMINARY INVESTIGATION SECTION							
SCALE 1"=20'	VERT.DATUM NAVD88	PHOTOGRAMMETRY AS OF: X					
HORZ.DATUM NAD83 (1991.35)	SURVEYED	BY District	CHECKED	BY T.Mason	07/2009		
ALIGNMENT TIES Dist. Traverse Sheet	DRAFTED	BY T.Zolnikova 06/2009	CHECKED	BY S.Sou	07/2009		

	BY	CHECKED
DESIGN	P. Mak	W. Addlespurger
DETAILS	Various	P. Mak
QUANTITIES	P. Mak	L. Valla

STATE OF CALIFORNIA
DEPARTMENT OF TRANSPORTATION

DIVISION OF ENGINEERING SERVICES
STRUCTURE DESIGN
DESIGN BRANCH 12

BRIDGE NO. 52-0468
POST MILE 39.9

BIKE LANE RAMP NO. 9
FOUNDATION PLAN NO. 1

STRUCTURES FOUNDATION PLAN SHEET (ENGLISH) (REV. 10/25/05)

ORIGINAL SCALE IN INCHES FOR REDUCED PLANS 0 1 2 3

CU 07
EA 260701

DISREGARD PRINTS BEARING EARLIER REVISION DATES

REVISION DATES: 07/08/09 12-21-09 3-18-10 3-26-10 11-4-10

SHEET 4 OF 22

FILE => f-52-0468-b-fp01.dgn

USERNAME => s124196 DATE PLOTTED => 25-JUN-2011 TIME PLOTTED => 09:08

DIST	COUNTY	ROUTE	POST MILES TOTAL PROJECT	SHEET No	TOTAL SHEETS
07	Ven,SB	101	R39.8/R43.6, 0.0/2.2	702	757

REGISTERED CIVIL ENGINEER — DATE 10-18-10

6-20-11
PLANS APPROVAL DATE

The State of California or its officers or agents shall not be responsible for the accuracy or completeness of electronic copies of this plan sheet.

REGISTERED PROFESSIONAL ENGINEER — DOUGLAS C. MENZMER — No. C63498 — Exp. 09-30-12 — CIVIL — STATE OF CALIFORNIA

CURVE DATA

No.	R	Δ	T	L
Ⓓ	681.26	6°51'17"	40.80	81.50
Ⓔ	501.20	10°17'19"	45.12	90.00

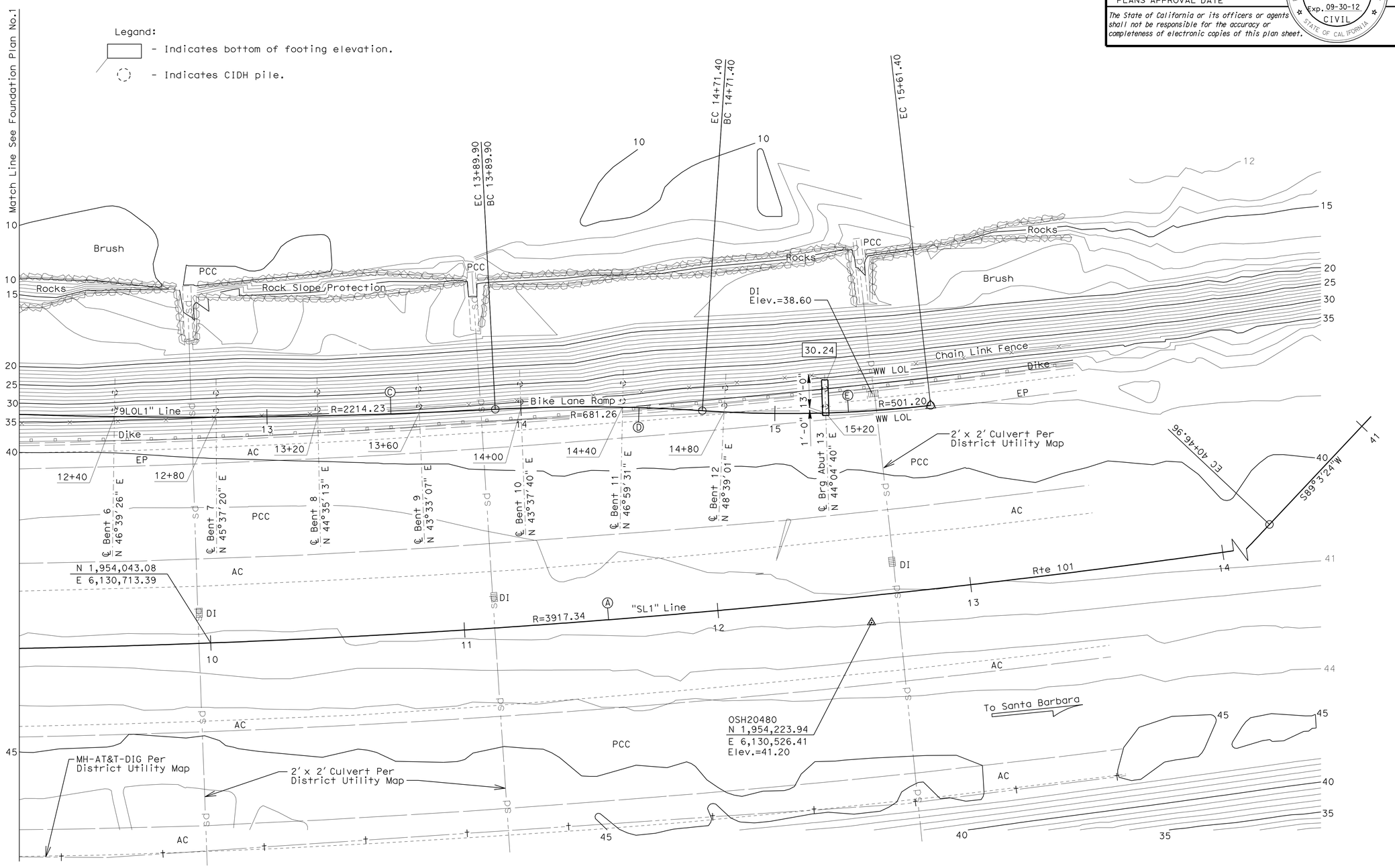

PRELIMINARY INVESTIGATION SECTION							
SCALE 1"=20'	VERT.DATUM NAVD88	PHOTOGRAMMETRY AS OF: X					
	HORZ.DATUM NAD83 (1991.35)	SURVEYED	BY District	CHECKED	BY T.Mason	07/2009	
ALIGNMENT TIES Dist. Traverse Sheet		DRAFTED	BY T.Zolnikova 06/2009	CHECKED	BY S.Sou	07/2009	

	BY	CHECKED
DESIGN	P. Mak	W. Addlespurger
DETAILS	Various	P. Mak
QUANTITIES	P. Mak	L. Valla

STATE OF CALIFORNIA
DEPARTMENT OF TRANSPORTATION

DIVISION OF ENGINEERING SERVICES
STRUCTURE DESIGN
DESIGN BRANCH 12

BRIDGE NO. 52-0468
POST MILE 39.9

BIKE LANE RAMP NO. 9
FOUNDATION PLAN NO. 2

STRUCTURES FOUNDATION PLAN SHEET (ENGLISH) (REV. 10/25/05)

ORIGINAL SCALE IN INCHES FOR REDUCED PLANS 0 1 2 3

CU 07
EA 260701

DISREGARD PRINTS BEARING EARLIER REVISION DATES

REVISION DATES: 07/06/09 12-22-09 3-18-10 3-26-10 11-4-10

SHEET 5 OF 22

FILE => f-52-0468-b-fp02.dgn

USERNAME => s124196 DATE PLOTTED => 25-JUN-2011 TIME PLOTTED => 09:08

DIST	COUNTY	ROUTE	POST MILES TOTAL PROJECT	SHEET No	TOTAL SHEETS
07	Ven,SB	101	R39.8/R43.6, 0.0/2.2	703	757

REGISTERED CIVIL ENGINEER 10-18-10 DATE

6-20-11
PLANS APPROVAL DATE

The State of California or its officers or agents shall not be responsible for the accuracy or completeness of electronic copies of this plan sheet.

REGISTERED PROFESSIONAL ENGINEER DOUGLAS C. MENZMER No. C63498 Exp. 09-30-12 CIVIL STATE OF CALIFORNIA

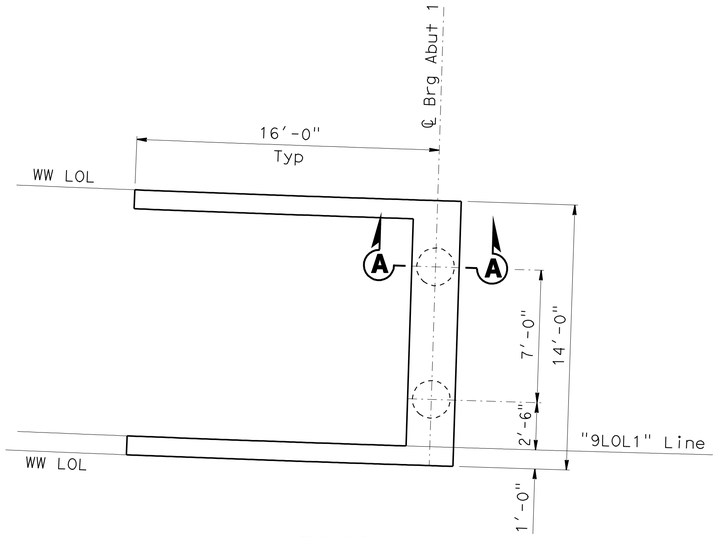

PLAN
1/4" = 1'-0"

Note:

1. Abutment 1 shown, Abutment 13 similar.

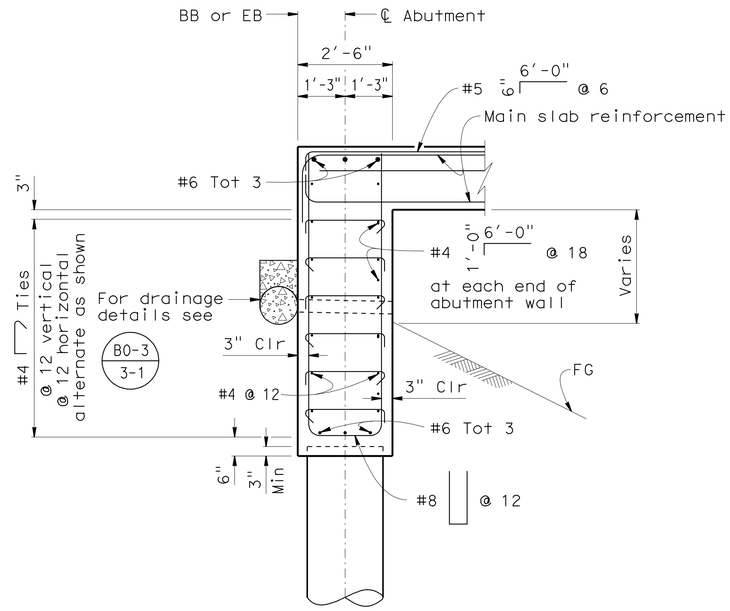

SECTION A-A
1/2" = 1'-0"

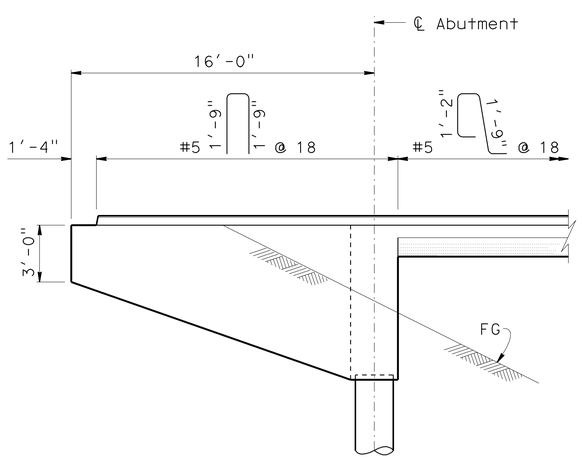

RAIL SIDE

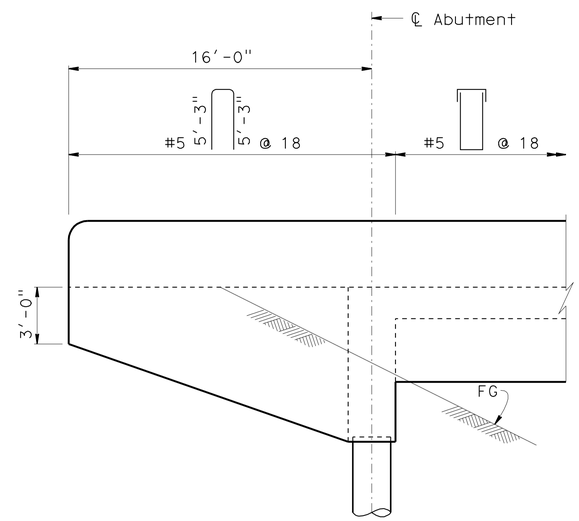

BARRIER SIDE

WINGWALL ELEVATION
1/4" = 1'-0"

B0-1
1-5

DESIGN	BY P. Mak	CHECKED W. Addlespurger	
DETAILS	BY kc	CHECKED P. Mak	
QUANTITIES	BY P. Mak	CHECKED L. Valla	

STATE OF CALIFORNIA
DEPARTMENT OF TRANSPORTATION

DIVISION OF ENGINEERING SERVICES
STRUCTURE DESIGN
DESIGN BRANCH 12

BRIDGE NO. 52-0468
POST MILE 39.9

BIKE LANE RAMP NO. 9
ABUTMENT DETAILS NO. 1

STRUCTURES DESIGN DETAIL SHEET (ENGLISH) (REV. 10/25/05)

ORIGINAL SCALE IN INCHES FOR REDUCED PLANS 0 1 2 3

CU 07
EA 260701

DISREGARD PRINTS BEARING EARLIER REVISION DATES

REVISION DATES: 6-12-09 3-2-10 3-4-10 3-18-10 5-12-10 7-9-10 8-18-10 9-7-10 11-4-10

SHEET 6 OF 22

FILE => f-52-0468-c-abt01.dgn

USERNAME => s124496 DATE PLOTTED => 25-JUN-2011 TIME PLOTTED => 09:08

DIST	COUNTY	ROUTE	POST MILES TOTAL PROJECT	SHEET No	TOTAL SHEETS
07	Ven,SB	101	R39.8/R43.6, 0.0/2.2	704	757

REGISTERED CIVIL ENGINEER 10-18-10 DATE

6-20-11
PLANS APPROVAL DATE

REGISTERED PROFESSIONAL ENGINEER DOUGLAS C. MENZMER No. C63498 Exp. 09-30-12 CIVIL STATE OF CALIFORNIA

The State of California or its officers or agents shall not be responsible for the accuracy or completeness of electronic copies of this plan sheet.

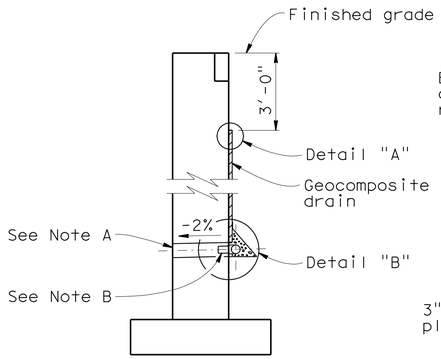

WALL SECTION

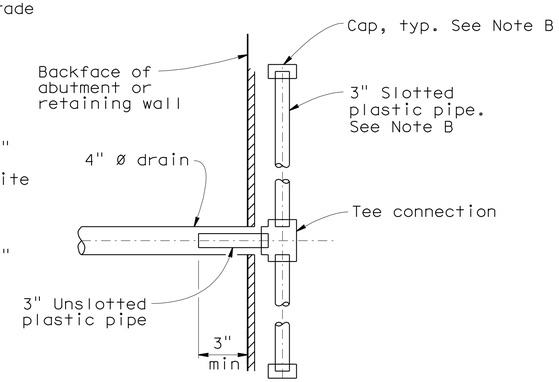

SECTION A-A

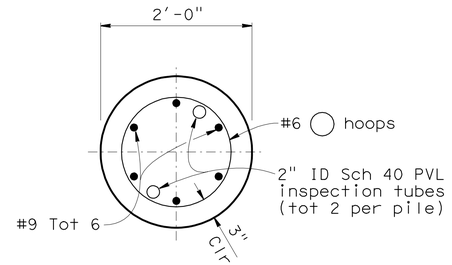

SECTION A-A

1"=1'-0"

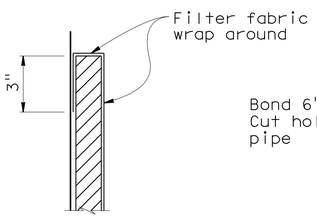

DETAIL "A"

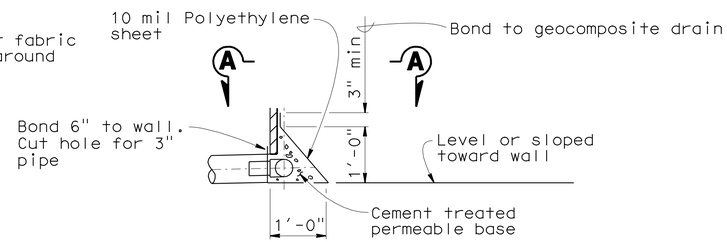

DETAIL "B"

WEEP HOLE AND GEOCOMPOSITE DRAIN

No scale

Alternative to bridge detail (B0-3 / 3-1)

Notes:

A. 4" Ø drains at intermediate sag points and at 25' max center to center (9' center to center for Type 3 and 9'-3" center to center for Type 4 retaining walls). For walls adjacent to sidewalks or curbs, provide 4" cast iron or asbestos cement pipe under the sidewalk to discharge through curb face. Exposed wall drains shall be located 3"± above finished grade.

B. Geocomposite drain, cement treated permeable base, and 3" Ø slotted plastic pipe continuous behind retaining wall or abutment. Cap ends of pipe. Provide "Tee" connection at each 4" Ø drain.

C. Connect the low end of plastic pipe to the main outlet pipe as applicable.

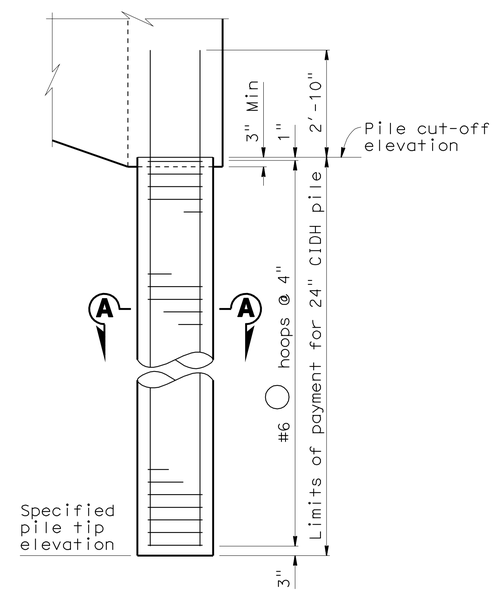

CIDH PILE ELEVATION

1/2"=1'-0"

Notes:

1. #6 Hoops to be made continuous with "ultimate" butt splices.
2. No splices allowed in main pile reinforcement.
3. For "Pile Data Table", see "Index To Plans" sheet.

DESIGN	BY P. Mak	CHECKED W. Addlespurger	
DETAILS	BY kc	CHECKED P. Mak	
QUANTITIES	BY P. Mak	CHECKED L. Valla	

STATE OF CALIFORNIA DEPARTMENT OF TRANSPORTATION

DIVISION OF ENGINEERING SERVICES STRUCTURE DESIGN DESIGN BRANCH 12

BRIDGE NO. 52-0468
POST MILE 39.9

BIKE LANE RAMP NO. 9
ABUTMENT DETAILS NO. 2

STRUCTURES DESIGN DETAIL SHEET (ENGLISH) (REV. 10/25/05)

ORIGINAL SCALE IN INCHES FOR REDUCED PLANS 0 1 2 3

CU 07
EA 260701

DISREGARD PRINTS BEARING EARLIER REVISION DATES

REVISION DATES: 6-13-09, 3-2-10, 3-4-10, 3-18-10, 5-14-10, 11-4-10, 1-20-11

SHEET 7 OF 22

FILE => f-52-0468-c-abt02.dgn

USERNAME => s124496 DATE PLOTTED => 25-JUN-2011 TIME PLOTTED => 09:08

DIST	COUNTY	ROUTE	POST MILES TOTAL PROJECT	SHEET No	TOTAL SHEETS
07	Ven,SB	101	R39.8/R43.6, 0.0/2.2	705	757

REGISTERED CIVIL ENGINEER 10-18-10 DATE

6-20-11
PLANS APPROVAL DATE

REGISTERED PROFESSIONAL ENGINEER DOUGLAS C. MENZMER No. C63498 Exp. 09-30-12 CIVIL STATE OF CALIFORNIA

The State of California or its officers or agents shall not be responsible for the accuracy or completeness of electronic copies of this plan sheet.

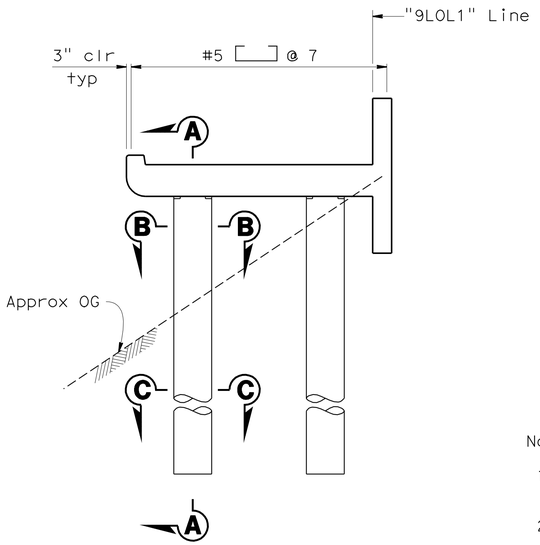

ELEVATION
1/4" = 1'-0"

Notes:

1. #6 Hoops to be made continuous with "ultimate" butt splices.
2. No splices allowed in main pile reinforcement.

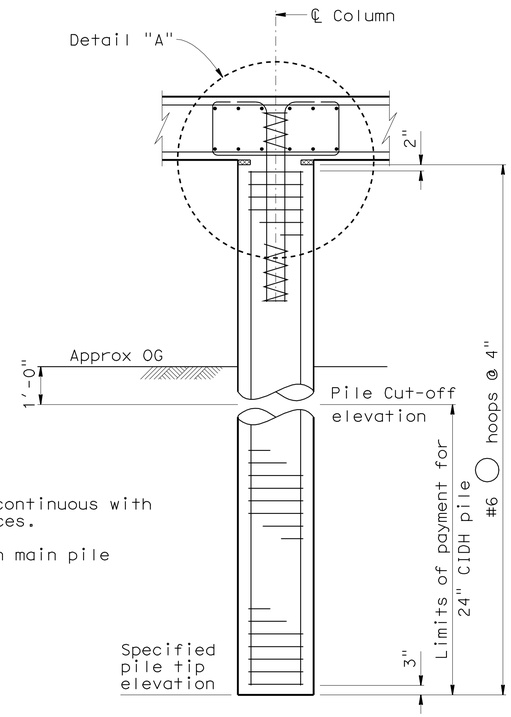

SECTION A-A
1/2" = 1'-0"

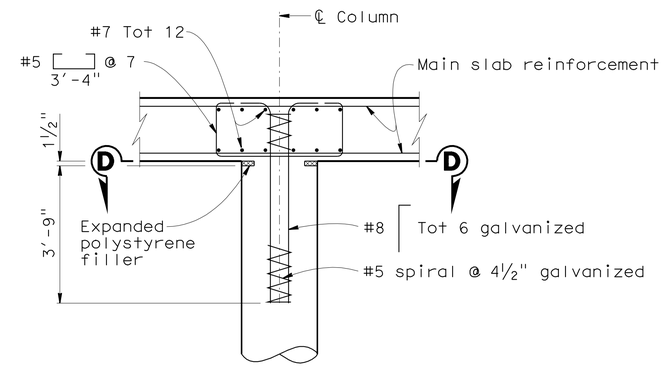

DETAIL A
1/2" = 1'-0"

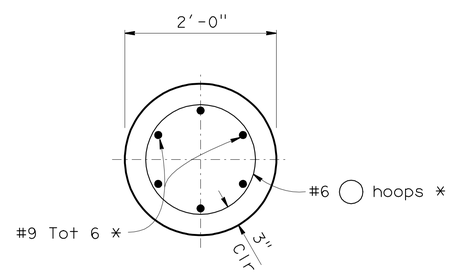

SECTION B-B
1"=1'-0"

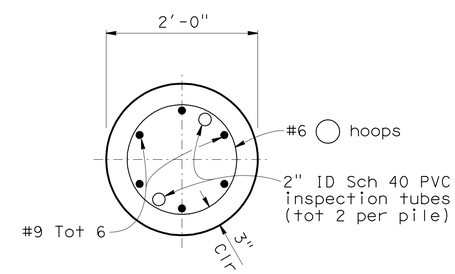

SECTION C-C
1"=1'-0"

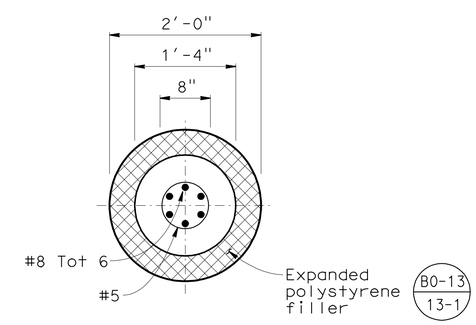

SECTION D-D
1"=1'-0"

* Indicates pre-fabricated epoxy coated reinforcement.

DESIGN	BY P. Mak	CHECKED W. Addlespurger	
DETAILS	BY kc	CHECKED P. Mak	
QUANTITIES	BY P. Mak	CHECKED L. Valla	

STATE OF CALIFORNIA
DEPARTMENT OF TRANSPORTATION

DIVISION OF ENGINEERING SERVICES
STRUCTURE DESIGN
DESIGN BRANCH 12

BRIDGE NO. 52-0468
POST MILE 39.9

BIKE LANE RAMP NO. 9
BENT DETAILS

STRUCTURES DESIGN DETAIL SHEET (ENGLISH) (REV. 10/25/05)

ORIGINAL SCALE IN INCHES FOR REDUCED PLANS 0 1 2 3

CU 07
EA 260701

DISREGARD PRINTS BEARING EARLIER REVISION DATES

REVISION DATES: 12-17-09, 3-2-10, 3-4-10, 3-18-10, 5-17-10, 11-4-10

SHEET 8 OF 22

FILE => f-52-0468-c-bnt.dgn

USERNAME => s124496 DATE PLOTTED => 25-JUN-2011 TIME PLOTTED => 09:08

DIST	COUNTY	ROUTE	POST MILES TOTAL PROJECT	SHEET No	TOTAL SHEETS
07	Ven,SB	101	R39.8/R43.6, 0.0/2.2	706	757

REGISTERED CIVIL ENGINEER 10-18-10 DATE

6-20-11
PLANS APPROVAL DATE

The State of California or its officers or agents shall not be responsible for the accuracy or completeness of electronic copies of this plan sheet.

REGISTERED PROFESSIONAL ENGINEER
DOUGLAS C. MENZMER
No. C63498
Exp. 09-30-12
CIVIL
STATE OF CALIFORNIA

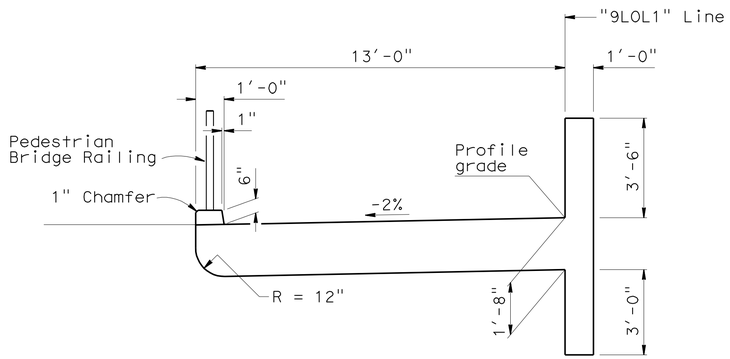

TYPICAL SECTION

3/8" = 1'-0"

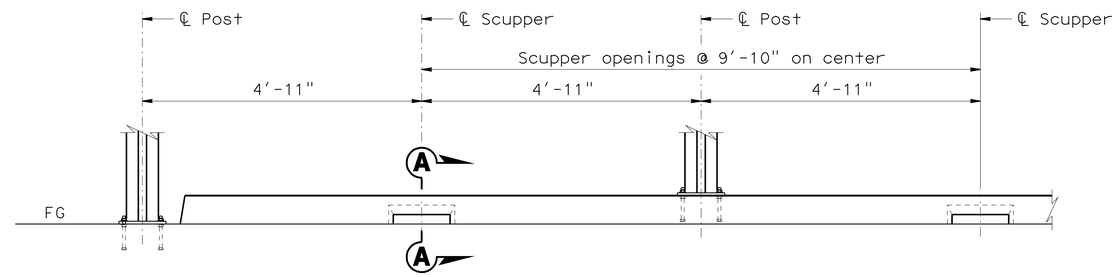

ELEVATION

3/4" = 1'-0"

Note:

Adjust reinforcement to provide 1-inch minimum concrete clear cover at openings.

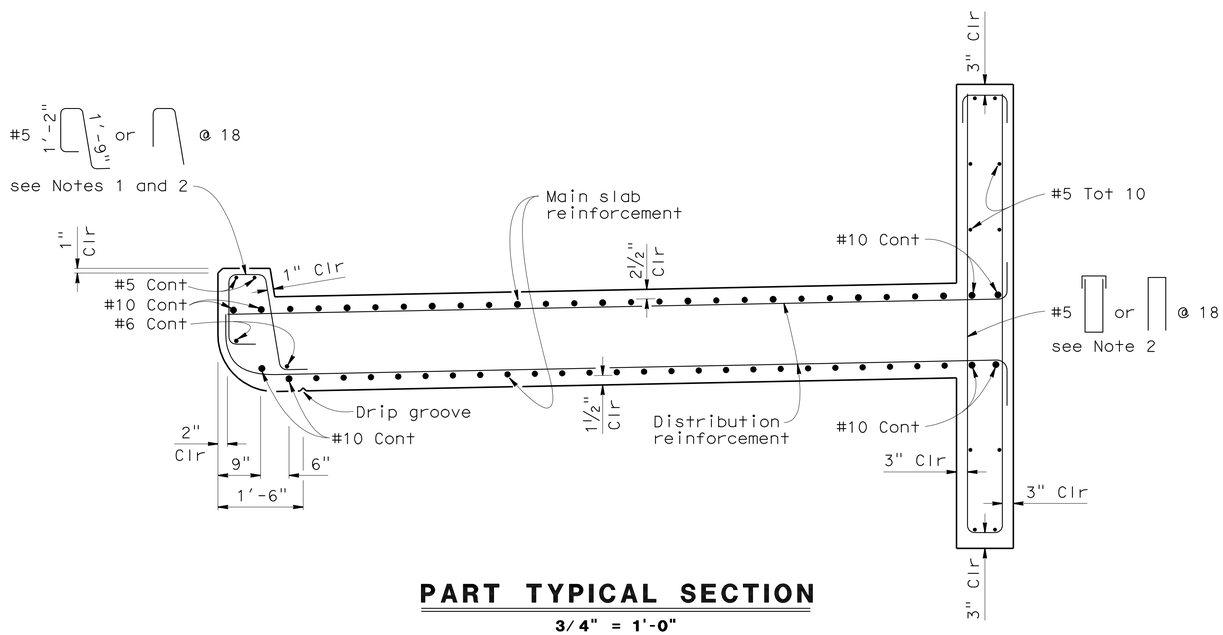

PART TYPICAL SECTION

3/4" = 1'-0"

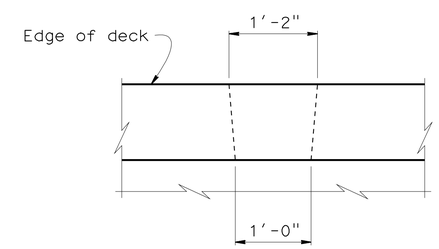

PLAN

1" = 1'-0"

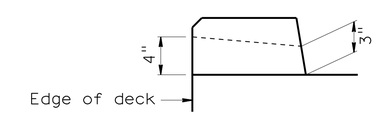

SECTION A-A

1 1/2" = 1'-0"

Notes:

1. Indicates pre-fabricated epoxy coated reinforcement.
2. For limits of reinforcement, see "Wingwall Elevations" on "Abutment Details No. 1" sheet

	BY	CHECKED
DESIGN	P. Mak	W. Addlespurger
DETAILS	kc	P. Mak
QUANTITIES	P. Mak	L. Valla

STATE OF CALIFORNIA
DEPARTMENT OF TRANSPORTATION

DIVISION OF ENGINEERING SERVICES
STRUCTURE DESIGN
DESIGN BRANCH 12

BRIDGE NO. 52-0468
POST MILE 39.9

BIKE LANE RAMP NO. 9
TYPICAL SECTION

STRUCTURES DESIGN DETAIL SHEET (ENGLISH) (REV. 10/25/05)

ORIGINAL SCALE IN INCHES FOR REDUCED PLANS 0 1 2 3

CU 07
EA 260701

DISREGARD PRINTS BEARING EARLIER REVISION DATES

REVISION DATES: 12-21-09, 3-4-10, 3-18-10, 3-24-10, 5-17-10, 7-9-10, 11-4-10, 1-20-11

SHEET 9 OF 22

FILE => f-52-0468-c-typ.dgn

USERNAME => s124196 DATE PLOTTED => 25-JUN-2011 TIME PLOTTED => 09:08

DIST	COUNTY	ROUTE	POST MILES TOTAL PROJECT	SHEET No	TOTAL SHEETS
07	Ven,SB	101	R39.8/R43.6, 0.0/2.2	707	757

REGISTERED CIVIL ENGINEER 10-18-10 DATE

6-20-11
PLANS APPROVAL DATE

REGISTERED PROFESSIONAL ENGINEER DOUGLAS C. MENZMER No. C63498 Exp. 09-30-12 CIVIL STATE OF CALIFORNIA

The State of California or its officers or agents shall not be responsible for the accuracy or completeness of electronic copies of this plan sheet.

Note:

1. All reinforcement terminating in Abutments or Hinges shall be hooked. All hooks to be placed vertical.
2. Mirror reinforcement shown at Bents 6, 10 and 12 about ℄ of respective bents in bottom slab and top slab reinforcement.

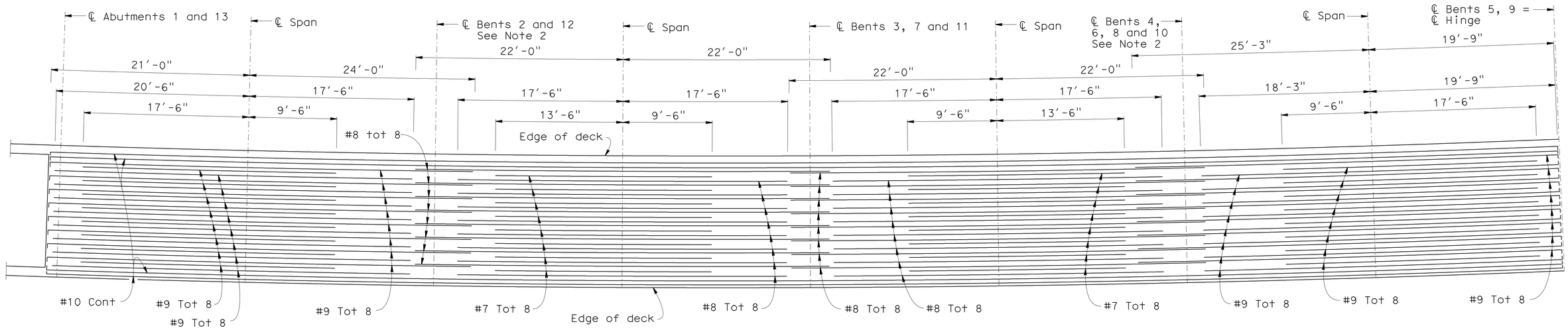

BOTTOM SLAB REINFORCEMENT

No scale

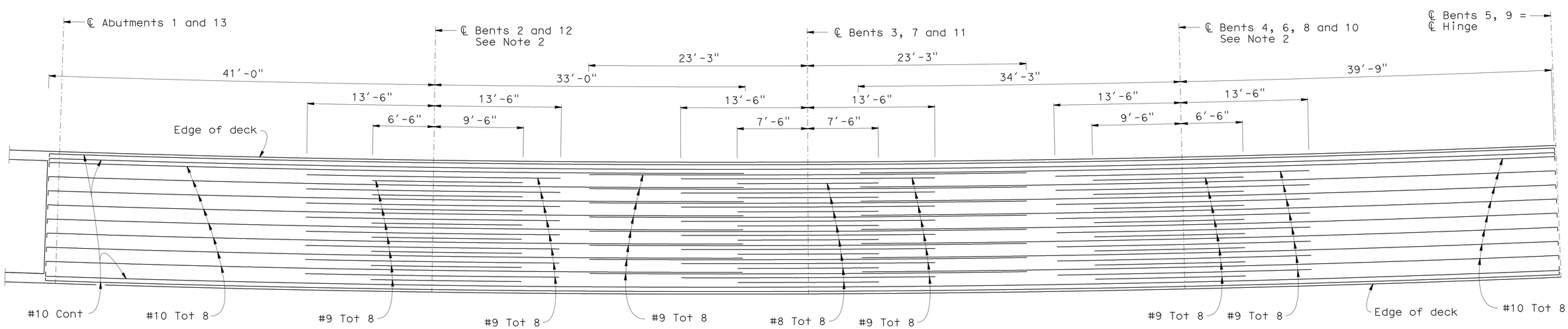

TOP SLAB REINFORCEMENT

No scale

DESIGN	BY P. Mak	CHECKED W. Addlespurger	
DETAILS	BY kc	CHECKED P. Mak	
QUANTITIES	BY P. Mak	CHECKED L. Valla	

STATE OF CALIFORNIA
DEPARTMENT OF TRANSPORTATION

DIVISION OF ENGINEERING SERVICES
STRUCTURE DESIGN
DESIGN BRANCH 12

BRIDGE NO. 52-0468
POST MILE 39.9

BIKE LANE RAMP NO. 9
SLAB REINFORCEMENT LAYOUT

STRUCTURES DESIGN DETAIL SHEET (ENGLISH) (REV. 10/25/05)

ORIGINAL SCALE IN INCHES FOR REDUCED PLANS 0 1 2 3

CU 07
EA 260701

DISREGARD PRINTS BEARING EARLIER REVISION DATES

REVISION DATES: 6-12-09, 2-4-10, 3-18-10, 5-12-10, 7-9-10, 11-4-10, 1-20-11

SHEET 10 OF 22

USERNAME => s124496 DATE PLOTTED => 25-JUN-2011 TIME PLOTTED => 09:09

FILE => f-52-0468-d-rfin01.dgn

DIST	COUNTY	ROUTE	POST MILES TOTAL PROJECT	SHEET No	TOTAL SHEETS
07	Ven,SB	101	R39.8/R43.6, 0.0/2.2	708	757

REGISTERED CIVIL ENGINEER 10-18-10 DATE

6-20-11
PLANS APPROVAL DATE

REGISTERED PROFESSIONAL ENGINEER DOUGLAS C. MENZMER No. C63498 Exp. 09-30-12 CIVIL STATE OF CALIFORNIA

The State of California or its officers or agents shall not be responsible for the accuracy or completeness of electronic copies of this plan sheet.

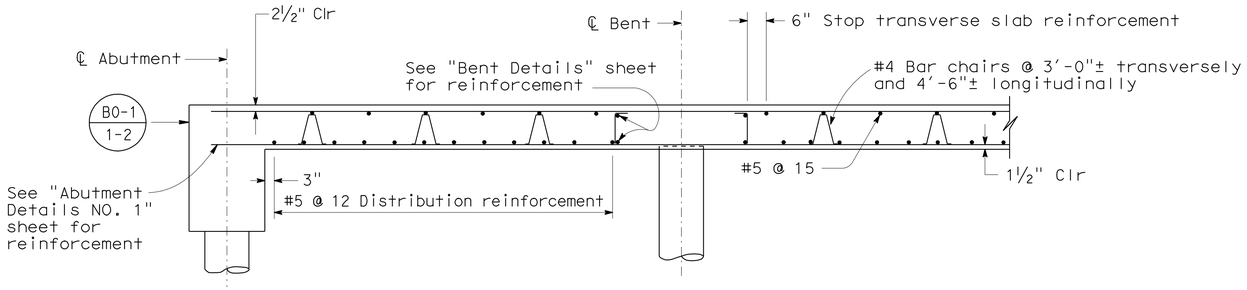

LONGITUDINAL SECTION

NO SCALE

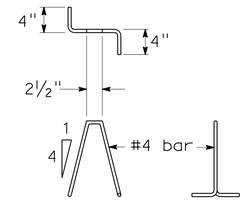

BAR CHAIR DETAIL

1" = 1'-0"

BAR SPLICE LENGTH								
Bar size	#4	#5	#6	#7	#8	#9	#10	#11
All bars, except top bars in spans over 23 ft	23"	28"	34"	39"	45"	68"	76"	85"
Top bars in spans over 23 ft	23"	28"	34"	53"	60"	77"	97"	120"

Reinforcement Notes:

Splices in top main bars to be located near center of span.
Splices in bottom main bars to be located near bent.
Spacing of all transverse bars is measured along ℄ roadway.
Skew 0° to 20°: Place all transverse bars parallel to bent.
Skew 0° to 20°: Place transverse slab bars perpendicular to ℄ bridge. See details at right and below.

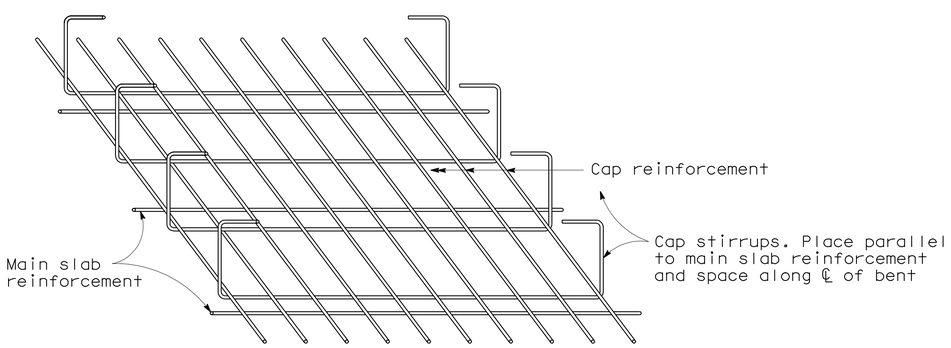

FLUSH CAP

BOTTOM SLAB REINFORCEMENT AT BENT

NO SCALE

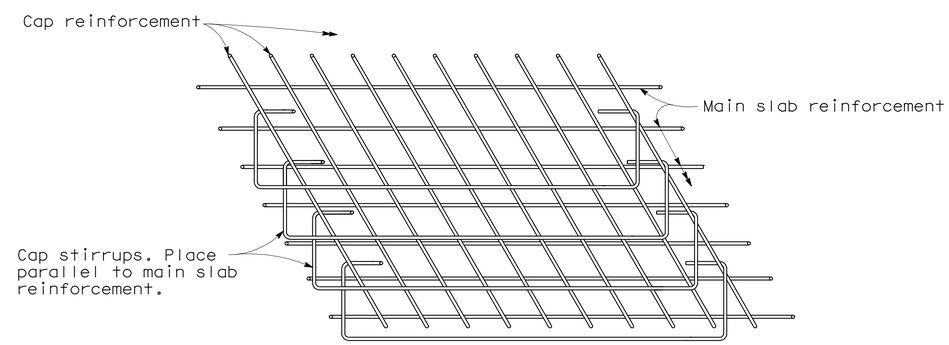

TOP SLAB REINFORCEMENT AT BENT

NO SCALE

DESIGN	BY P. Mak	CHECKED W. Addlespurger	
DETAILS	BY Varies	CHECKED P. Mak	
QUANTITIES	BY P. Mak	CHECKED L. Valla	

STATE OF CALIFORNIA
DEPARTMENT OF TRANSPORTATION

DIVISION OF ENGINEERING SERVICES
STRUCTURE DESIGN
DESIGN BRANCH 12

BRIDGE NO. 52-0468
POST MILE 39.9

BIKE LANE RAMP NO. 9
SLAB REINFORCEMENT DETAILS

STRUCTURES DESIGN DETAIL SHEET (ENGLISH) (REV. 10/25/05)

ORIGINAL SCALE IN INCHES FOR REDUCED PLANS 0 1 2 3

CU 07
EA 260701

DISREGARD PRINTS BEARING EARLIER REVISION DATES

REVISION DATES: 3-8-10 3-18-10 3-24-10 5-12-10 8-18-10 11-4-10

SHEET 11 OF 22

FILE => f-52-0468-d-rfin02.dgn

USERNAME => s124496 DATE PLOTTED => 25-JUN-2011 TIME PLOTTED => 09:09

DIST	COUNTY	ROUTE	POST MILES TOTAL PROJECT	SHEET No	TOTAL SHEETS
07	Ven,SB	101	R39.8/R43.6, 0.0/2.2	709	757

REGISTERED CIVIL ENGINEER 10-18-10 DATE

6-20-11
PLANS APPROVAL DATE

REGISTERED PROFESSIONAL ENGINEER DOUGLAS C. MENZMER No. C63498 Exp. 09-30-12 CIVIL STATE OF CALIFORNIA

The State of California or its officers or agents shall not be responsible for the accuracy or completeness of electronic copies of this plan sheet.

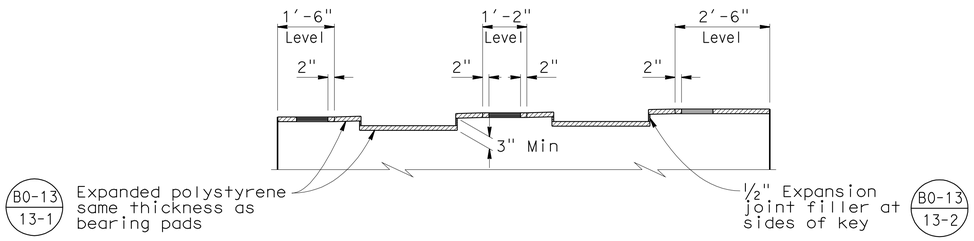

ELEVATION
1/2" = 1'-0"

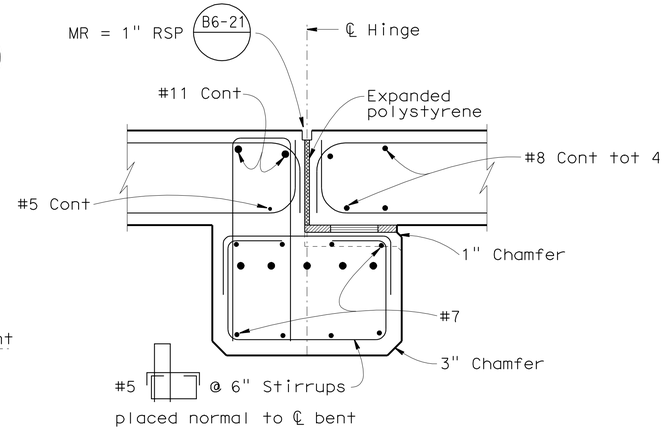

SECTION B-B
3/4" = 1'-0"

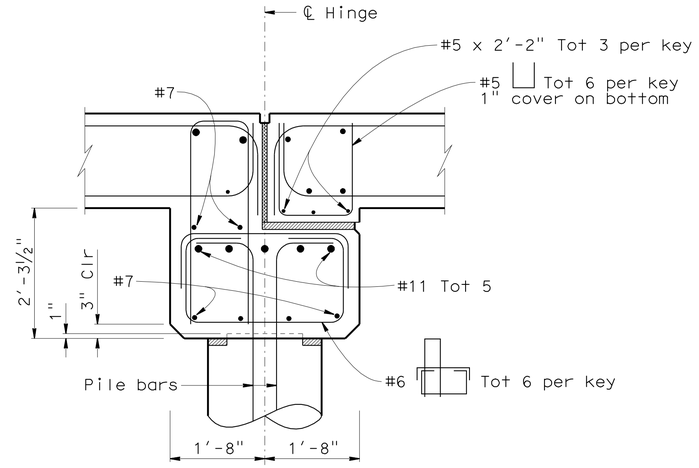

SECTION A-A
3/4" = 1'-0"

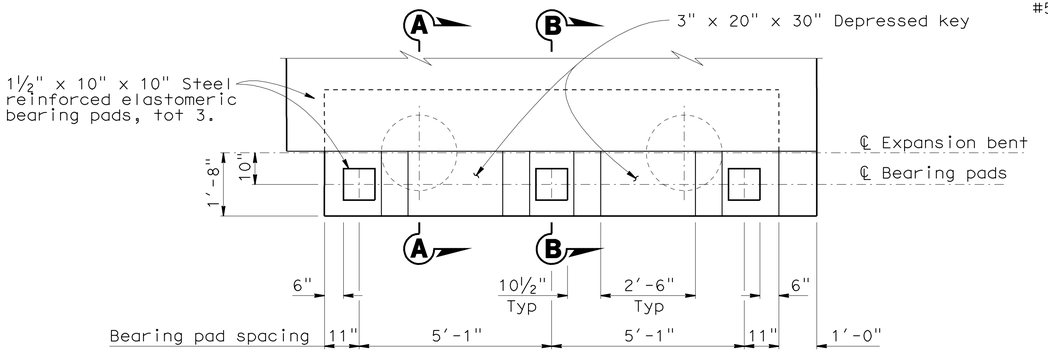

PLAN
1/2" = 1'-0"

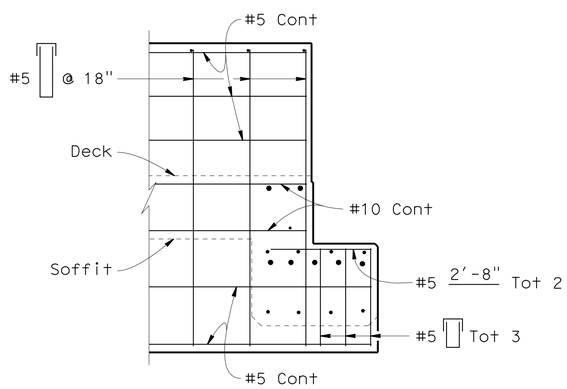

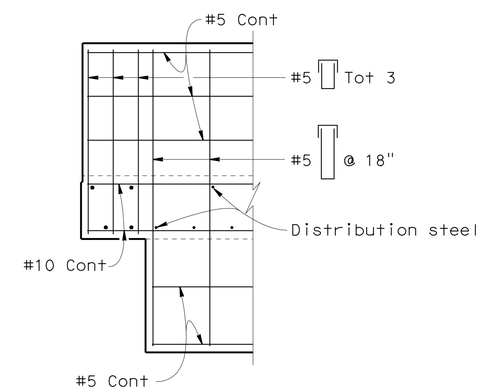

SECTION C-C
1/2" = 1'-0"

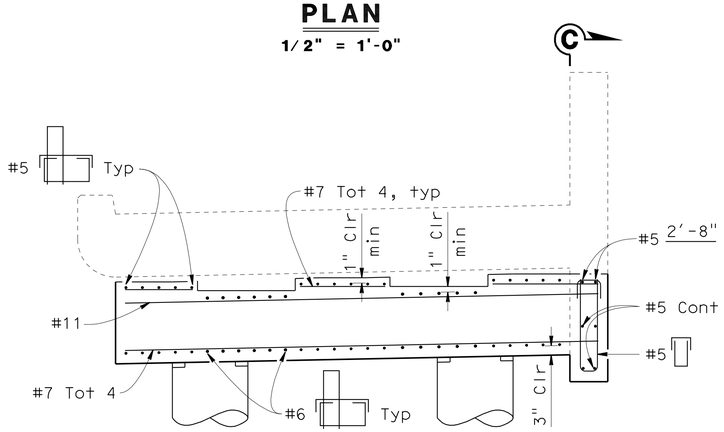

HINGE SECTION
1/2" = 1'-0"

	BY	CHECKED
DESIGN	P. Mak	W. Addlespurger
DETAILS	kc	P. Mak
QUANTITIES	P. Mak	L. Valla

STATE OF CALIFORNIA
DEPARTMENT OF TRANSPORTATION

DIVISION OF ENGINEERING SERVICES
STRUCTURE DESIGN
DESIGN BRANCH 12

BRIDGE NO. 52-0468
POST MILE 39.9

BIKE LANE RAMP NO. 9
SLAB HINGE DETAILS

STRUCTURES DESIGN DETAIL SHEET (ENGLISH) (REV. 10/25/05)

ORIGINAL SCALE IN INCHES FOR REDUCED PLANS 0 1 2 3

CU 07
EA 260701

DISREGARD PRINTS BEARING EARLIER REVISION DATES

REVISION DATES: 2-9-10, 3-1-10, 3-16-10, 3-24-10, 5-11-10, 7-9-10, 8-18-10, 11-4-10

SHEET 12 OF 22

FILE => f-52-0468-d-shd.dgn

USERNAME => s124936 DATE PLOTTED => 25-JUN-2011 TIME PLOTTED => 03:09

DIST	COUNTY	ROUTE	POST MILES TOTAL PROJECT	SHEET No	TOTAL SHEETS
07	Ven,SB	101	R39.8/R43.6, 0.0/2.2	710	757

REGISTERED CIVIL ENGINEER 10-18-10 DATE

6-20-11
PLANS APPROVAL DATE

REGISTERED PROFESSIONAL ENGINEER DOUGLAS C. MENZMER No. C63498 Exp. 09-30-12 CIVIL STATE OF CALIFORNIA

The State of California or its officers or agents shall not be responsible for the accuracy or completeness of electronic copies of this plan sheet.

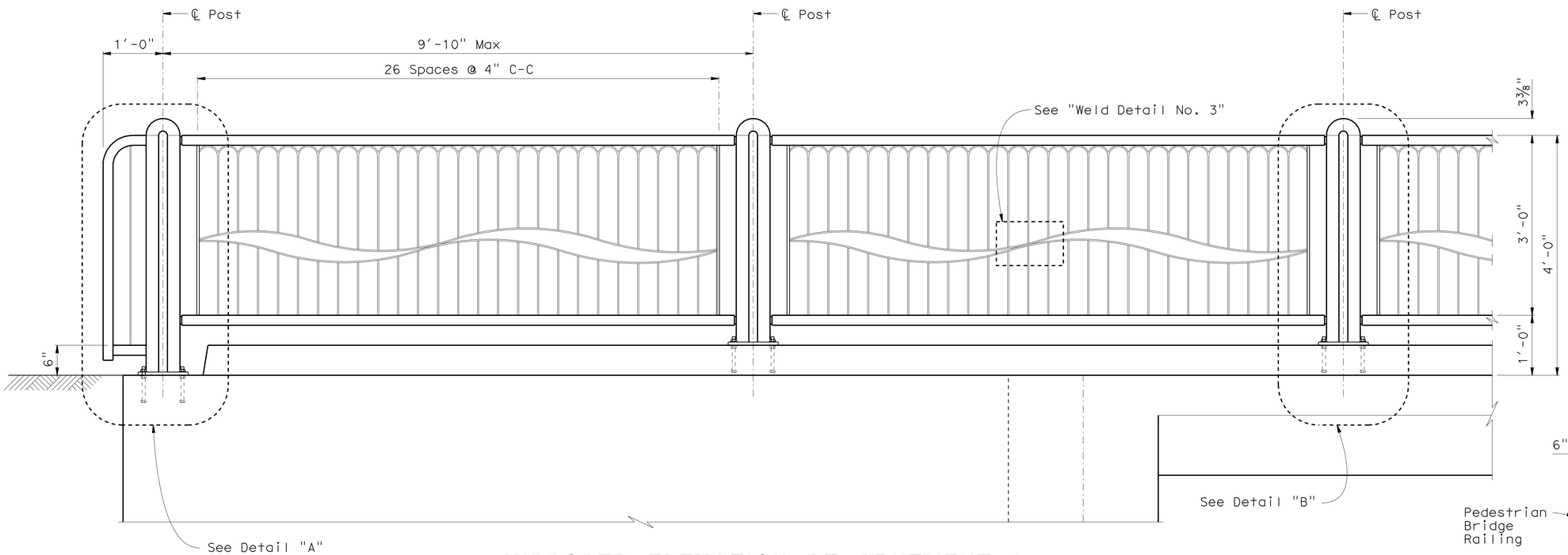

MIRRORED ELEVATION AT ABUTMENT 1

1" = 1'-0"

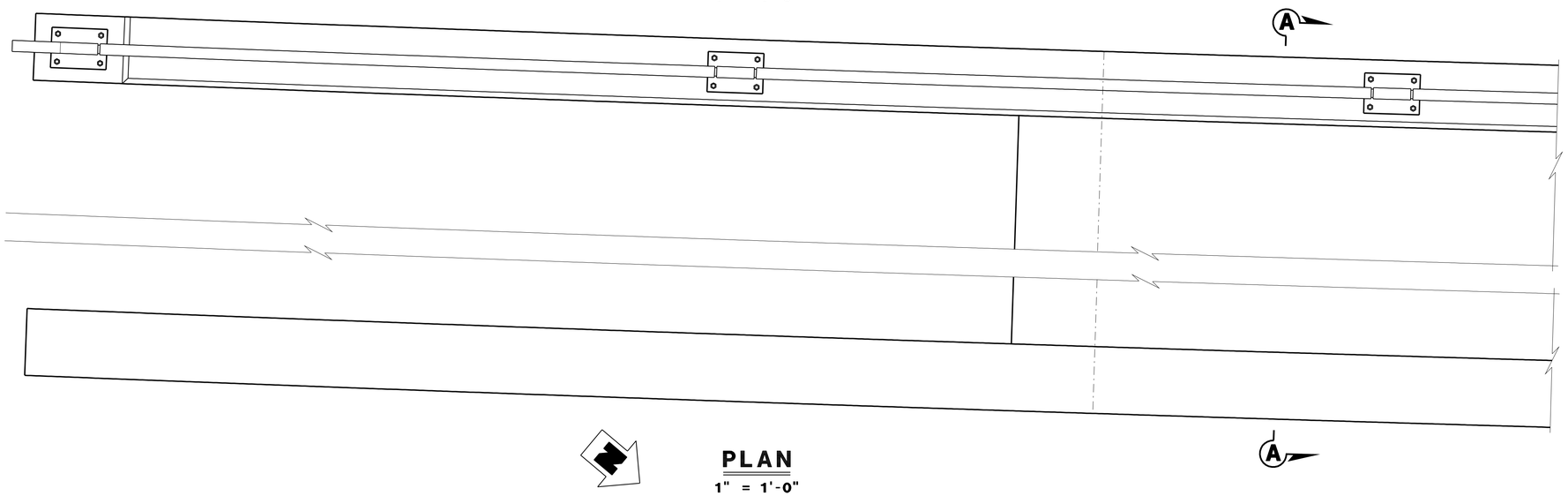

PLAN

1" = 1'-0"

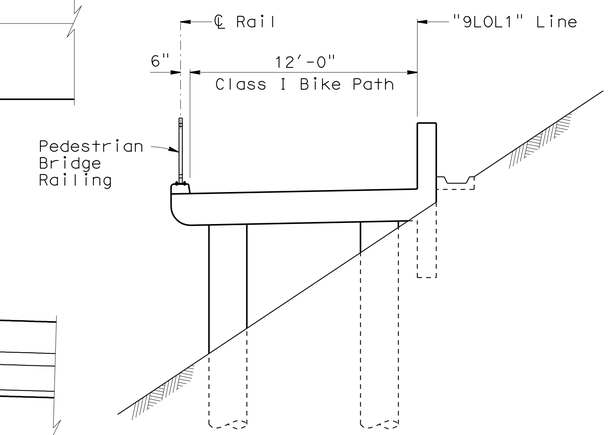

SECTION A-A

1/4" = 1'-0"

Notes:

1. Galvanize rail assembly and all components after fabrication.
2. Posts shall be normal to railing.
3. All bolts shall be A307 with thread locking system.
4. For "Detail A" and "Detail B", see "Prdestrian Bridge Railing" "Details No. 3" sheet.
5. For "Weld Detail No. 3", see "Prdestrian Bridge Railing" "Details No. 4" sheet.

BIKE LANE RAMP NO. 9
PEDESTRIAN BRIDGE RAILING
DETAILS NO. 1

	BY	CHECKED
DESIGN	D. Menzmer	W. Addlespurger
DETAILS	kc	D. Menzmer
QUANTITIES	P. Mak	L. Valla

STATE OF CALIFORNIA
DEPARTMENT OF TRANSPORTATION

DIVISION OF ENGINEERING SERVICES
STRUCTURE DESIGN
DESIGN BRANCH 12

BRIDGE NO. 52-0468
POST MILE 39.9

CU 07
EA 260701

STRUCTURES DESIGN DETAIL SHEET (ENGLISH) (REV. 10/25/05)

ORIGINAL SCALE IN INCHES FOR REDUCED PLANS 0 1 2 3

DISREGARD PRINTS BEARING EARLIER REVISION DATES

REVISION DATES: 4-23-10, 8-18-10, 11-4-10, 1-20-10

SHEET 13 OF 22

FILE => f-52-0468-f-prd01.dgn

USERNAME => s124496 DATE PLOTTED => 25-JUN-2011 TIME PLOTTED => 09:09

DIST	COUNTY	ROUTE	POST MILES TOTAL PROJECT	SHEET No	TOTAL SHEETS
07	Ven,SB	101	R39.8/R43.6, 0.0/2.2	711	757

REGISTERED CIVIL ENGINEER 10-18-10 DATE

6-20-11
PLANS APPROVAL DATE

REGISTERED PROFESSIONAL ENGINEER DOUGLAS C. MENZMER No. C63498 Exp. 09-30-12 CIVIL STATE OF CALIFORNIA

The State of California or its officers or agents shall not be responsible for the accuracy or completeness of electronic copies of this plan sheet.

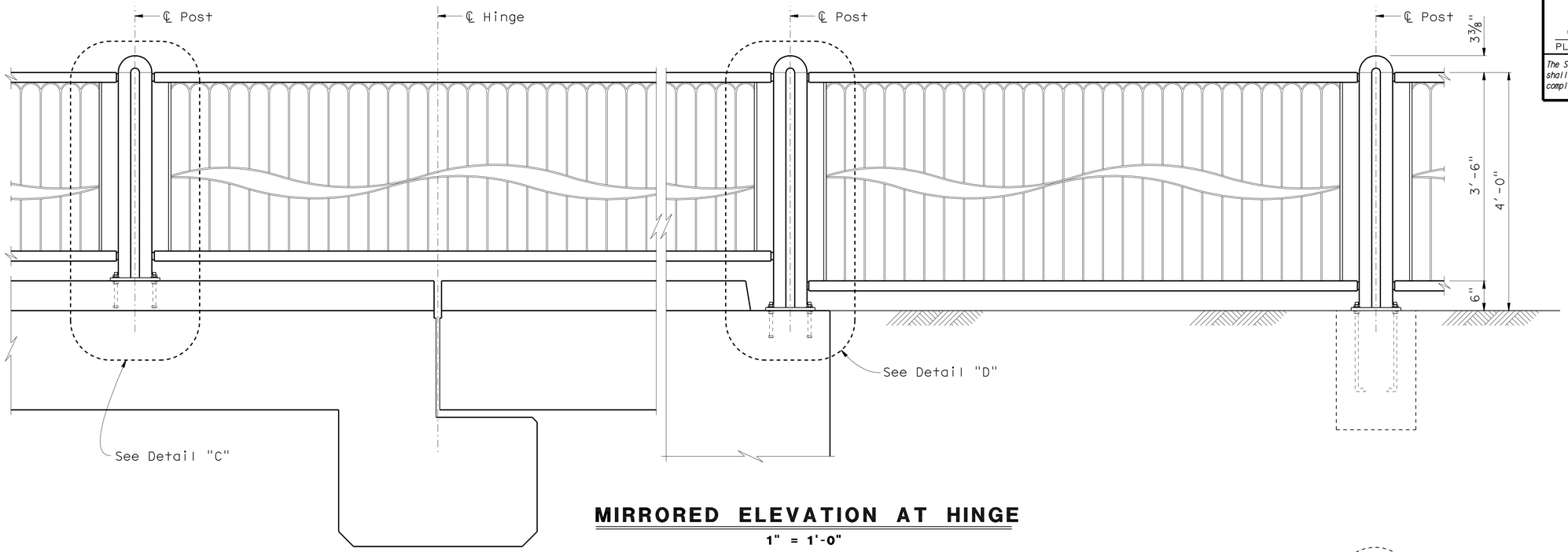

MIRRORED ELEVATION AT HINGE

1" = 1'-0"

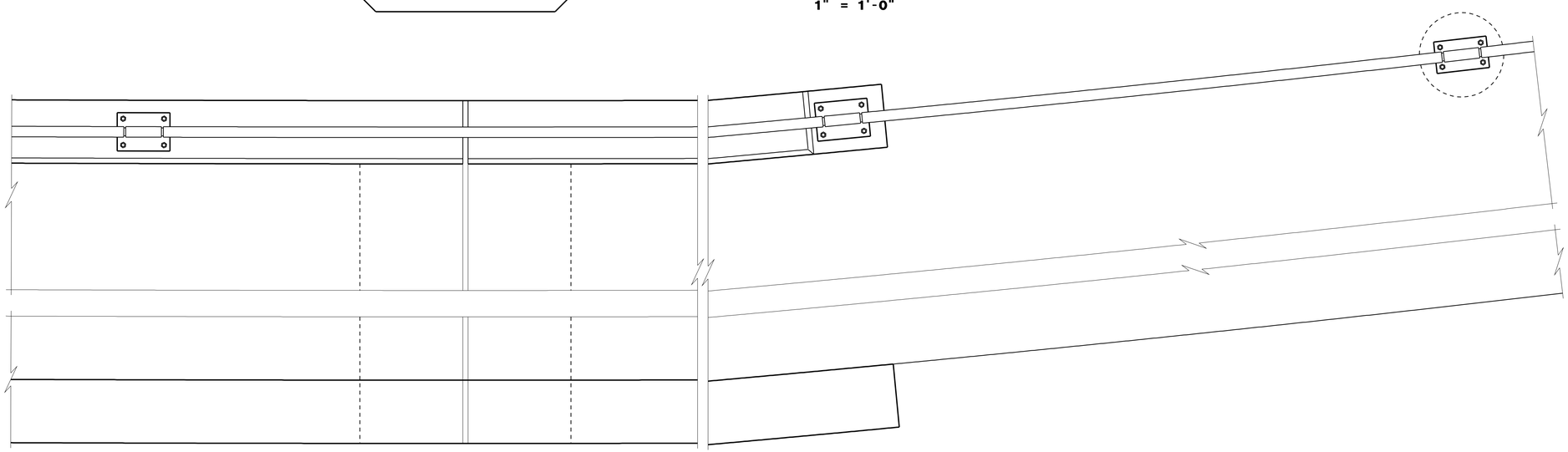

PLAN

1" = 1'-0"

Notes:

1. For "Detail C", see "Pedestrian Bridge Railing Details No. 3" sheet.
2. For "Detail D", see "Pedestrian Bridge Railing Details No. 4" sheet.

	BY	CHECKED
DESIGN	D. Menzmer	W. Addlespurger
DETAILS	kc	D. Menzmer
QUANTITIES	P. Mak	L. Valla

STATE OF CALIFORNIA
DEPARTMENT OF TRANSPORTATION

DIVISION OF ENGINEERING SERVICES
STRUCTURE DESIGN
DESIGN BRANCH 12

BRIDGE NO. 52-0468
POST MILE 39.9

BIKE LANE RAMP NO. 9
PEDESTRIAN BRIDGE RAILING
DETAILS NO. 2

STRUCTURES DESIGN DETAIL SHEET (ENGLISH) (REV. 10/25/05)

ORIGINAL SCALE IN INCHES FOR REDUCED PLANS 0 1 2 3

CU 07
EA 260701

DISREGARD PRINTS BEARING EARLIER REVISION DATES → 1-15-10 7-9-10 1-20-11

REVISION DATES

SHEET 14 OF 22

FILE => f-52-0468-f-prd02.dgn

USERNAME => s124496 DATE PLOTTED => 25-JUN-2011 TIME PLOTTED => 09:09

DIST	COUNTY	ROUTE	POST MILES TOTAL PROJECT	SHEET No	TOTAL SHEETS
07	Ven,SB	101	R39.8/R43.6, 0.0/2.2	712	757

REGISTERED CIVIL ENGINEER 10-18-10 DATE

6-20-11
PLANS APPROVAL DATE

REGISTERED PROFESSIONAL ENGINEER DOUGLAS C. MENZMER No. C63498 Exp. 09-30-12 CIVIL STATE OF CALIFORNIA

The State of California or its officers or agents shall not be responsible for the accuracy or completeness of electronic copies of this plan sheet.

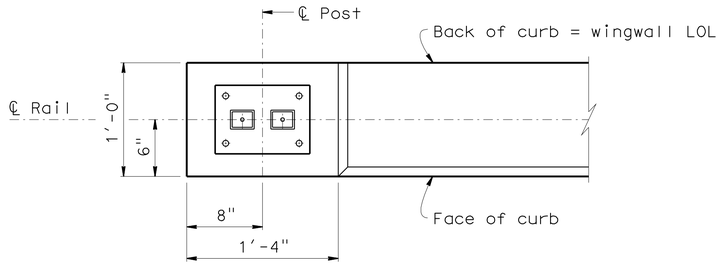

SECTION A-A

1 1/2" = 1'-0"

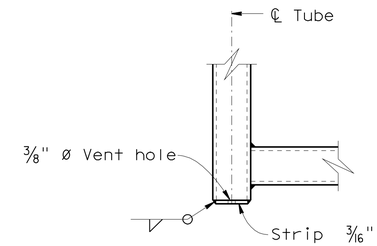

TUBE CAP DETAIL

3" = 1'-0"

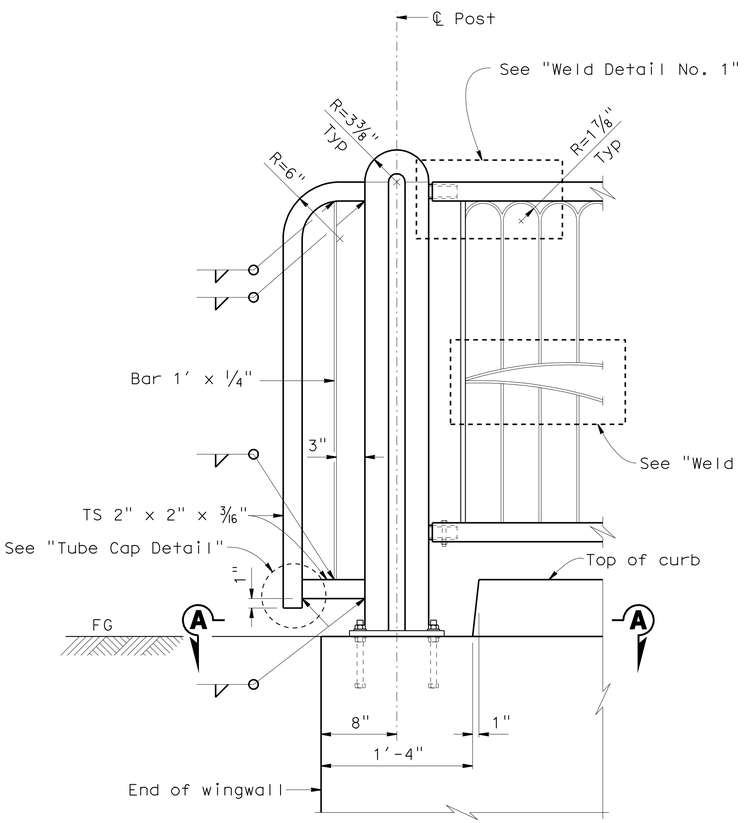

DETAIL A

1 1/2" = 1'-0"

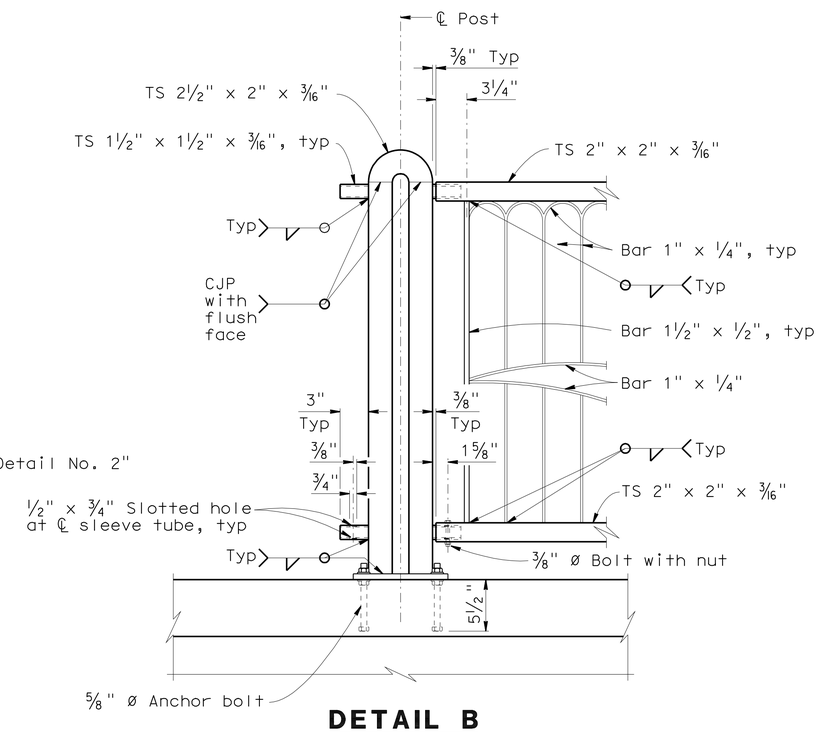

DETAIL B

1 1/2" = 1'-0"

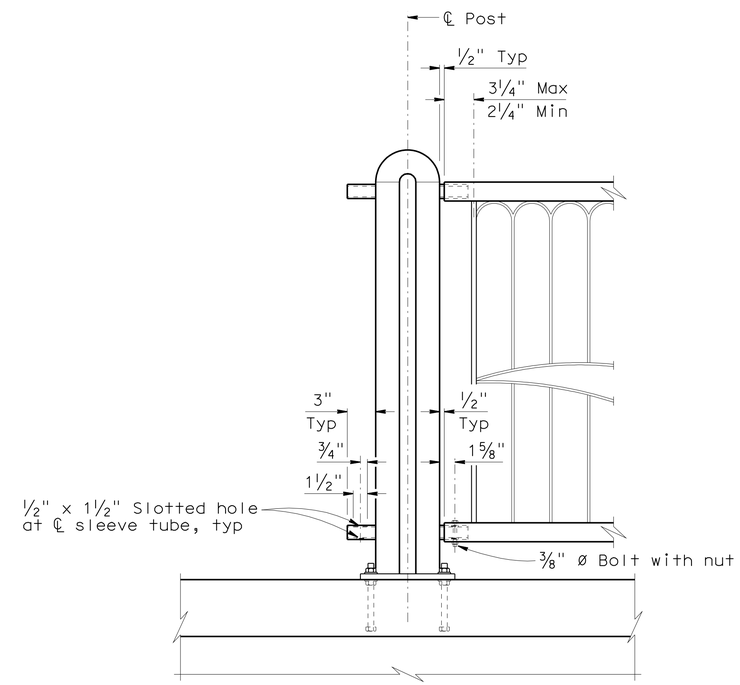

DETAIL C

1 1/2" = 1'-0"

Notes:

1. For "Weld Details No. 1" and "Weld Details No. 2", see "Pedestrian Bridge Railing" "Details No. 4" sheet.

	BY	CHECKED
DESIGN	D. Menzmer	W. Addlespurger
DETAILS	kc	D. Menzmer
QUANTITIES	P. Mak	L. Valla

STATE OF CALIFORNIA
DEPARTMENT OF TRANSPORTATION

DIVISION OF ENGINEERING SERVICES
STRUCTURE DESIGN
DESIGN BRANCH 12

BRIDGE NO. 52-0468
POST MILE 39.9

BIKE LANE RAMP NO. 9
PEDESTRIAN BRIDGE RAILING
DETAILS NO. 3

STRUCTURES DESIGN DETAIL SHEET (ENGLISH) (REV. 10/25/05)

ORIGINAL SCALE IN INCHES FOR REDUCED PLANS 0 1 2 3

CU 07
EA 260701

DISREGARD PRINTS BEARING EARLIER REVISION DATES

REVISION DATES: 4-19-10, 5-4-10, 8-13-10, 11-4-10, 12-27-10, 1-20-11

SHEET 15 OF 22

FILE => f-52-0468-f-prd03.dgn

USERNAME => s124396 DATE PLOTTED => 25-JUN-2011 TIME PLOTTED => 09:03

DIST	COUNTY	ROUTE	POST MILES TOTAL PROJECT	SHEET No	TOTAL SHEETS
07	Ven,SB	101	R39.8/R43.6, 0.0/2.2	713	757

REGISTERED CIVIL ENGINEER 10-18-10 DATE

6-20-11
PLANS APPROVAL DATE

The State of California or its officers or agents shall not be responsible for the accuracy or completeness of electronic copies of this plan sheet.

REGISTERED PROFESSIONAL ENGINEER
DOUGLAS C. MENZMER
No. C63498
Exp. 09-30-12
CIVIL
STATE OF CALIFORNIA

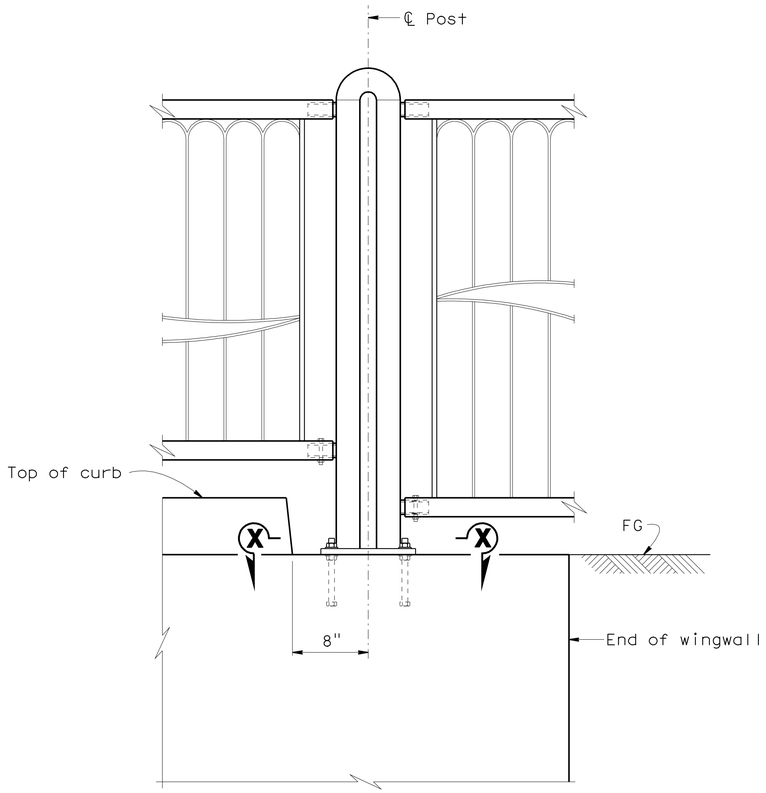

DETAIL D

1 1/2" = 1'-0"

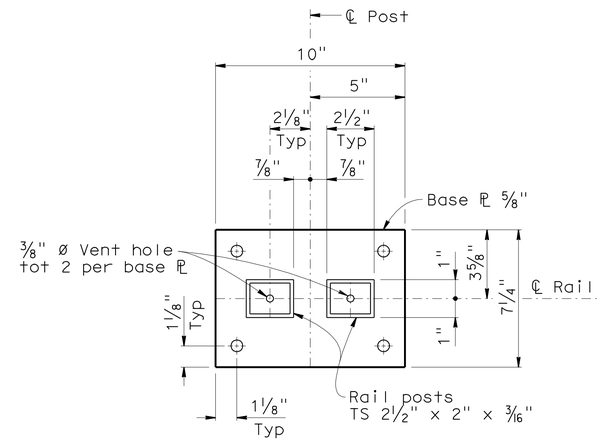

SECTION X-X

3" = 1'-0"

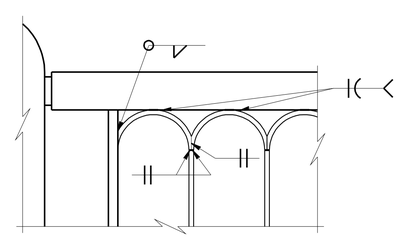

WELD DETAILS NO. 1

3" = 1'-0"

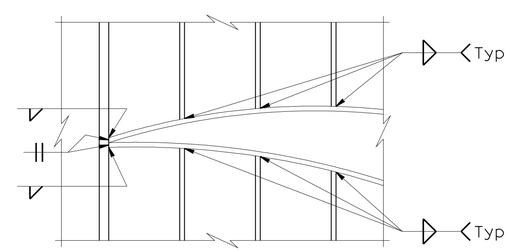

WELD DETAILS NO. 2

3" = 1'-0"

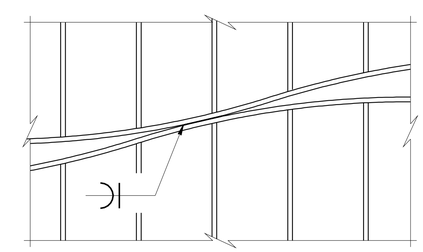

WELD DETAILS NO. 3

3" = 1'-0"

DESIGN	BY D. Menzmer	CHECKED W. Addlespurger	
DETAILS	BY kc	CHECKED D. Menzmer	
QUANTITIES	BY P. Mak	CHECKED L. Valla	

STATE OF CALIFORNIA
DEPARTMENT OF TRANSPORTATION

DIVISION OF ENGINEERING SERVICES
STRUCTURE DESIGN
DESIGN BRANCH 12

BRIDGE NO. 52-0468
POST MILE 39.9

BIKE LANE RAMP NO. 9
PEDESTRIAN BRIDGE RAILING
DETAILS NO. 4

STRUCTURES DESIGN DETAIL SHEET (ENGLISH) (REV. 10/25/05)

ORIGINAL SCALE IN INCHES FOR REDUCED PLANS 0 1 2 3

CU 07
EA 260701

DISREGARD PRINTS BEARING EARLIER REVISION DATES

REVISION DATES: 4-26-10, 5-4-10, 8-19-10, 11-4-10, 1-20-11

SHEET 16 OF 22

FILE => f-52-0468-f-prd04.dgn

USERNAME => s124496 DATE PLOTTED => 25-JUN-2011 TIME PLOTTED => 09:09

DIST	COUNTY	ROUTE	POST MILES TOTAL PROJECT	SHEET No	TOTAL SHEETS
07	Ven,SB	101	R39.8/R43.6, 0.0/2.2	714	757

REGISTERED CIVIL ENGINEER 10-18-10 DATE

6-20-11
PLANS APPROVAL DATE

REGISTERED PROFESSIONAL ENGINEER DOUGLAS C. MENZMER No. C63498 Exp. 09-30-12 CIVIL STATE OF CALIFORNIA

The State of California or its officers or agents shall not be responsible for the accuracy or completeness of electronic copies of this plan sheet.

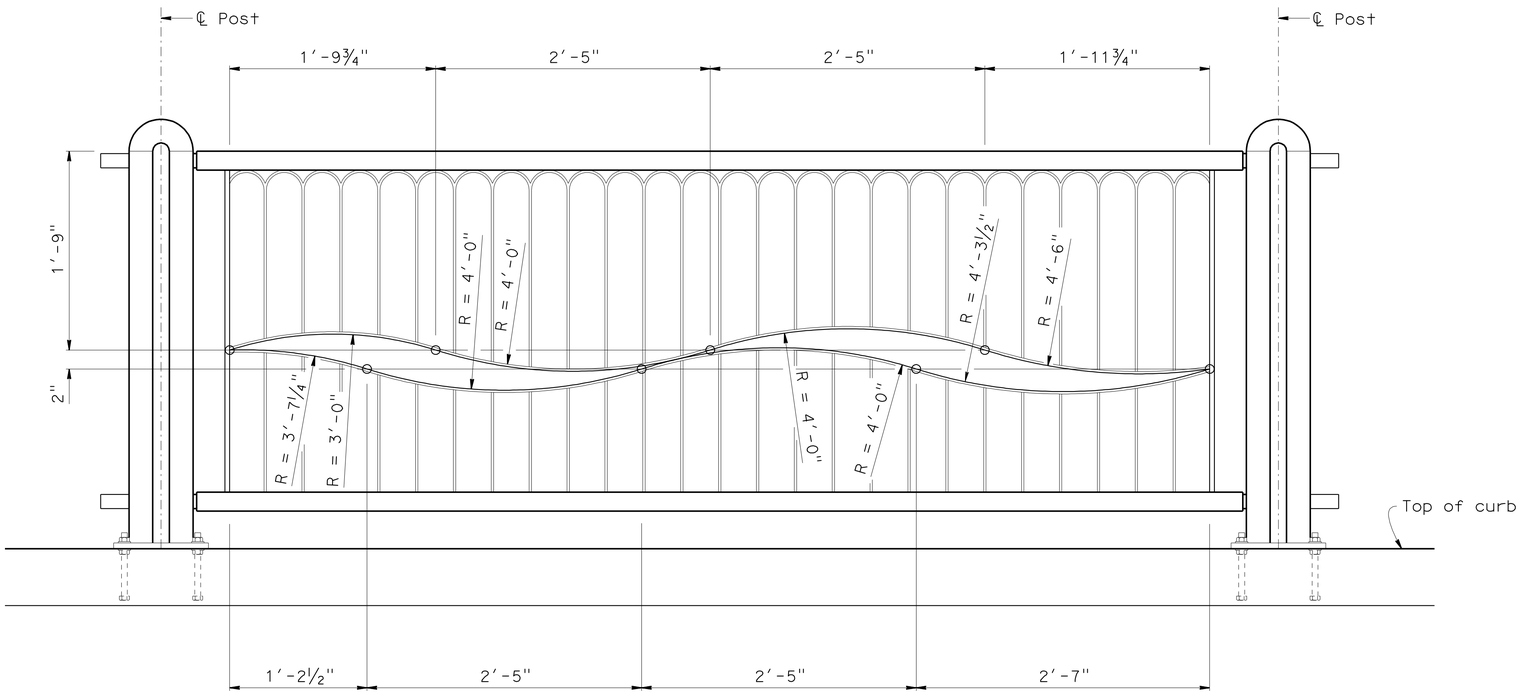

ELEVATION

1 1/2" = 1'-0"

DESIGN	BY D. Menzmer	CHECKED W. Addlespurger	
DETAILS	BY kc	CHECKED D. Menzmer	
QUANTITIES	BY P. Mak	CHECKED L. Valla	

STATE OF CALIFORNIA
DEPARTMENT OF TRANSPORTATION

DIVISION OF ENGINEERING SERVICES
STRUCTURE DESIGN
DESIGN BRANCH 12

BRIDGE NO. 52-0468
POST MILE 39.9

BIKE LANE RAMP NO. 9
PEDESTRIAN BRIDGE RAILING
DETAILS NO. 5

STRUCTURES DESIGN DETAIL SHEET (ENGLISH) (REV. 10/25/05)

ORIGINAL SCALE IN INCHES FOR REDUCED PLANS 0 1 2 3

CU 07
EA 260701

DISREGARD PRINTS BEARING EARLIER REVISION DATES

REVISION DATES: 5-3-10, 8-18-10, 11-4-10, 1-20-11

SHEET 17 OF 22

FILE => f-52-0468-f-prd05.dgn

USERNAME => s8124196 DATE PLOTTED => 25-JUN-2011 TIME PLOTTED => 09:10

DIST	COUNTY	ROUTE	POST MILES TOTAL PROJECT	SHEET No	TOTAL SHEETS
07	Ven,SB	101	R39.8/R43.6, 0.0/2.2	715	757

REGISTERED CIVIL ENGINEER 10-18-10 DATE

6-20-11
PLANS APPROVAL DATE

REGISTERED PROFESSIONAL ENGINEER DOUGLAS C. MENZMER No. C63498 Exp. 09-30-12 CIVIL STATE OF CALIFORNIA

The State of California or its officers or agents shall not be responsible for the accuracy or completeness of electronic copies of this plan sheet.

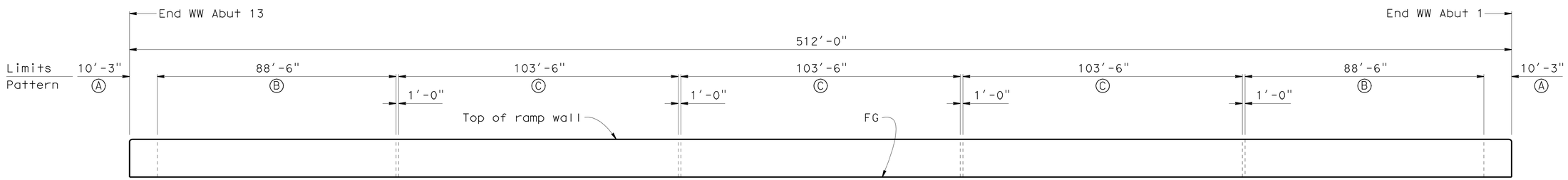

LIMITS OF ARCHITECTURAL TEXTURE (SEASIDE MOTIF)

No scale

Ⓐ - Denotes pattern limits and type

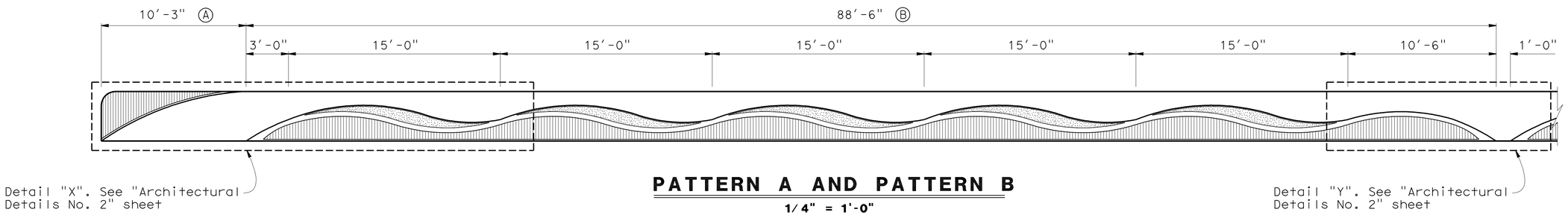

PATTERN A AND PATTERN B

1/4" = 1'-0"

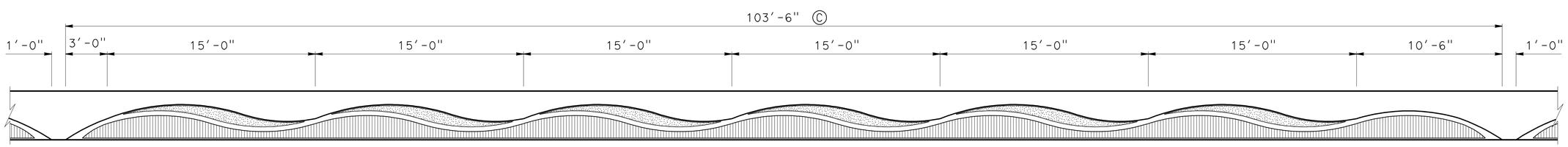

PATTERN C

1/4" = 1'-0"

DESIGN	BY P. Mak	CHECKED W. Addlespurger	
DETAILS	BY kc	CHECKED P. Mak	
QUANTITIES	BY P. Mak	CHECKED L. Valla	

STATE OF CALIFORNIA
DEPARTMENT OF TRANSPORTATION

DIVISION OF ENGINEERING SERVICES
STRUCTURE DESIGN
DESIGN BRANCH 12

BRIDGE NO. 52-0468
POST MILE 39.9

BIKE LANE RAMP NO. 9
ARCHITECTURAL TREATMENT DETAILS NO. 1

STRUCTURES DESIGN DETAIL SHEET (ENGLISH) (REV. 10/25/05)

ORIGINAL SCALE IN INCHES FOR REDUCED PLANS 0 1 2 3

CU 07
EA 260701

DISREGARD PRINTS BEARING EARLIER REVISION DATES → 10-8-10 10-11-10 11-4-10

REVISION DATES

SHEET 18 OF 22

FILE => f-52-0468-g-atd01.dgn

USERNAME => s124196 DATE PLOTTED => 25-JUN-2011 TIME PLOTTED => 09:10

DIST	COUNTY	ROUTE	POST MILES TOTAL PROJECT	SHEET No	TOTAL SHEETS
07	Ven,SB	101	R39.8/R43.6, 0.0/2.2	716	757

REGISTERED CIVIL ENGINEER 10-18-10 DATE

6-20-11
PLANS APPROVAL DATE

REGISTERED PROFESSIONAL ENGINEER DOUGLAS C. MENZMER No. C63498 Exp. 09-30-12 CIVIL STATE OF CALIFORNIA

The State of California or its officers or agents shall not be responsible for the accuracy or completeness of electronic copies of this plan sheet.

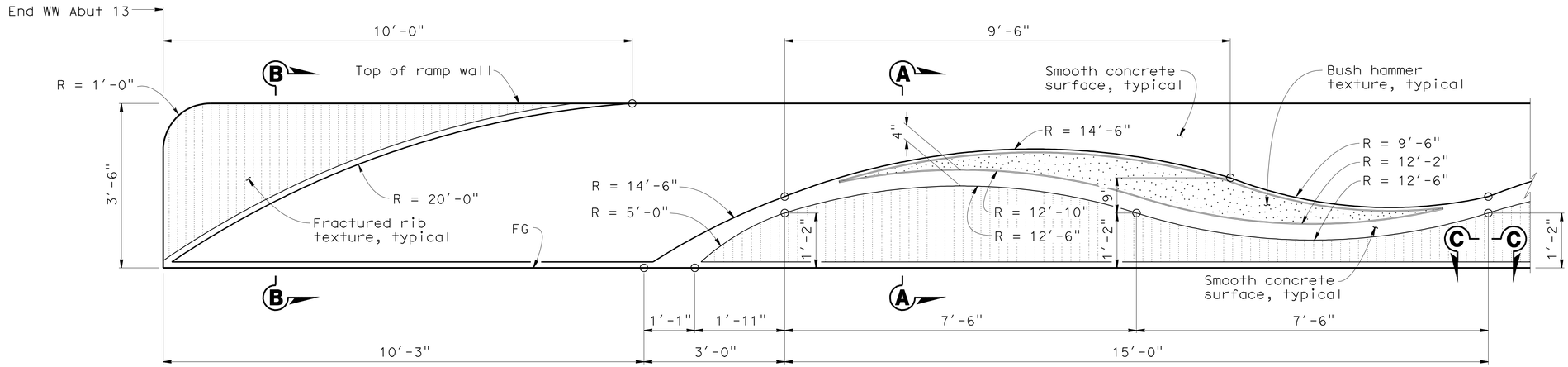

DETAIL X
3/4" = 1'-0"

Note:

Architectural texture (seaside motif) pattern shown is for end ramp wall at Abut 13. Abut 1 is similar.

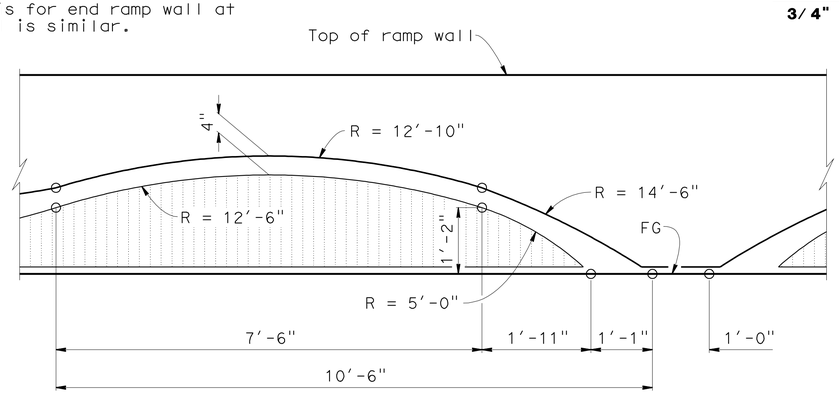

DETAIL Y
3/4" = 1'-0"

Note:

See "Architectural Details No. 1" sheet for location of "Detail X" and "Detail Y"

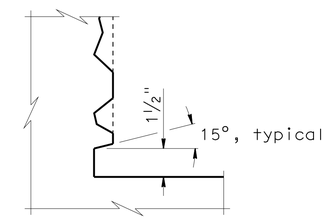

DETAIL 2
No scale

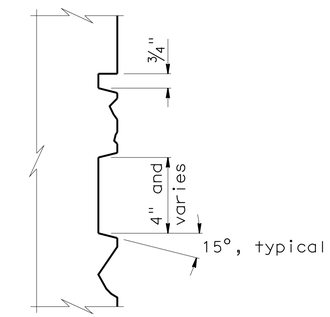

DETAIL 1
No scale

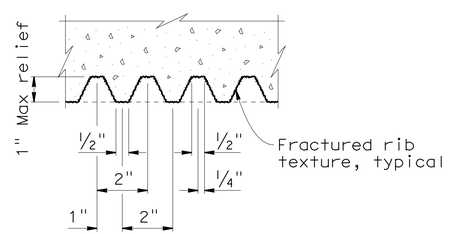

VIEW C-C
No scale

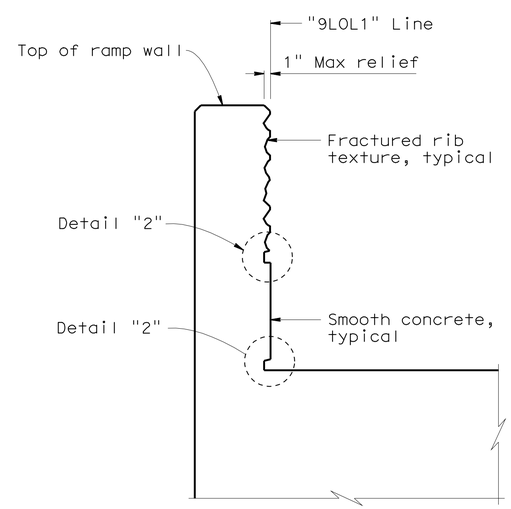

SECTION B-B
1" = 1'-0"

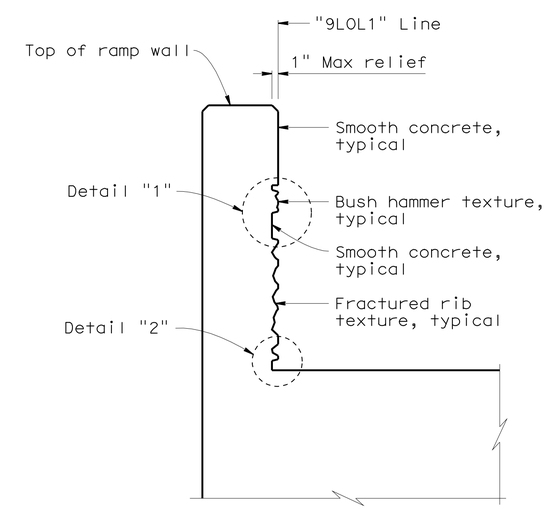

SECTION A-A
1" = 1'-0"

DESIGN	BY P. Mak	CHECKED W. Addlespurger	
DETAILS	BY kc	CHECKED P. Mak	
QUANTITIES	BY P. Mak	CHECKED L. Valla	

STATE OF CALIFORNIA
DEPARTMENT OF TRANSPORTATION

DIVISION OF ENGINEERING SERVICES
STRUCTURE DESIGN
DESIGN BRANCH 12

BRIDGE NO. 52-0468
POST MILE 39.9

BIKE LANE RAMP NO. 9
ARCHITECTURAL TREATMENT DETAILS NO. 2

STRUCTURES DESIGN DETAIL SHEET (ENGLISH) (REV. 10/25/05)

ORIGINAL SCALE IN INCHES FOR REDUCED PLANS 0 1 2 3

CU 07
EA 260701

DISREGARD PRINTS BEARING EARLIER REVISION DATES

REVISION DATES: 10-5-10 10-11-10 11-4-10 1-20-11 4-18-11

SHEET 19 OF 22

FILE => f-52-0468-g-atd02.dgn

USERNAME => s124496 DATE PLOTTED => 25-JUN-2011 TIME PLOTTED => 09:10

DIST	COUNTY	ROUTE	POST MILES TOTAL PROJECT	SHEET No	TOTAL SHEETS
07	Ven,SB	101	R39.8/R43.6, 0.0/2.2	717	757

REGISTERED CIVIL ENGINEER 4-7-10

6-20-11
PLANS APPROVAL DATE

REGISTERED PROFESSIONAL ENGINEER
Harihar Shiwakoti
No. C76035
Exp. 6-30-12
CIVIL
STATE OF CALIFORNIA

The State of California or its officers or agents shall not be responsible for the accuracy or completeness of electronic copies of this plan sheet.

This LOTB sheet was prepared in accordance with the Caltrans Soil & Rock Logging, Classification, & Presentation Manual (June 2007).

BENCH MARK

Datums: NAD '83 and NAVD '88
Well cap located at 71.42' Lt
Sta 6+12.54 Centerline Rte 101.
N 1953715.768
E 6130926.076
Elev 41.411'

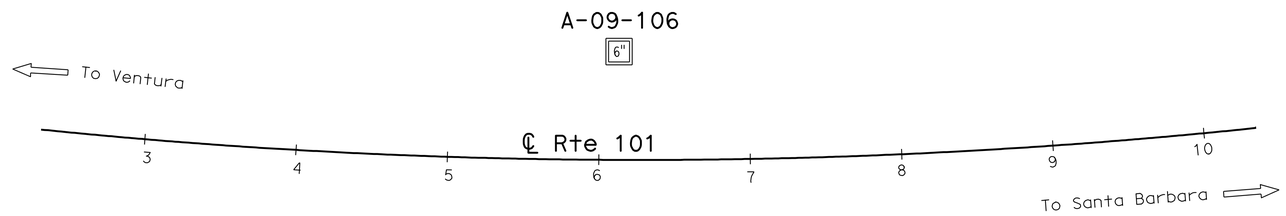

PLAN
1" = 50'

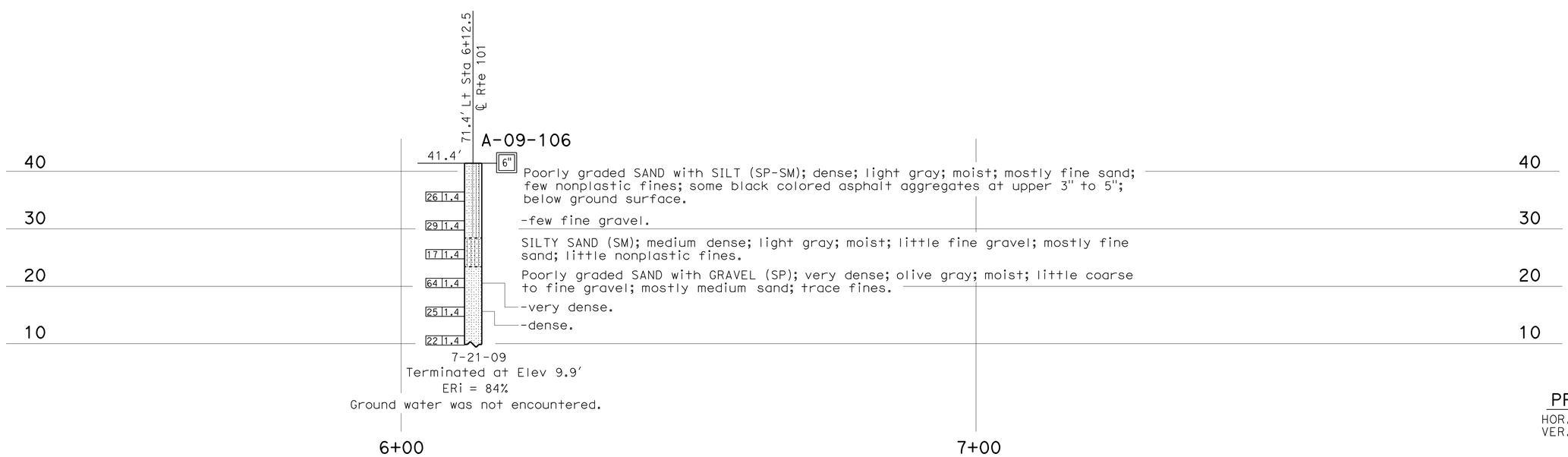

PROFILE
HOR. 1" = 10'
VER. 1" = 10'

ENGINEERING SERVICES	GEOTECHNICAL SERVICES	STATE OF CALIFORNIA DEPARTMENT OF TRANSPORTATION	DIVISION OF ENGINEERING SERVICES STRUCTURE DESIGN DESIGN BRANCH	BRIDGE NO. 52-0468 POST MILES 39.9	BIKE LANE RAMP STRUCTURE 9 LOG OF TEST BORINGS 1 OF 3
FUNCTIONAL SUPERVISOR NAME: D. Jang	DRAWN BY: C. Christian, I.G-Remmen 11/09 CHECKED BY: H. Liu	FIELD INVESTIGATION BY: H. Shiwakoti			

OGS CIVIL LOG OF TEST BORINGS SHEET

ORIGINAL SCALE IN INCHES FOR REDUCED PLANS 0 1 2 3

CU 07
EA 260701

DISREGARD PRINTS BEARING EARLIER REVISION DATES

REVISION DATES: 12-18-09 03-17-10

SHEET 20 OF 22

FILE => f-52-0468-z-lotb01.dgn

USERNAME => s124496 DATE PLOTTED => 25-JUN-2011 TIME PLOTTED => 09:10

DIST	COUNTY	ROUTE	POST MILES TOTAL PROJECT	SHEET No	TOTAL SHEETS
07	Ven,SB	101	R39.8/R43.6, 0.0/2.2	718	757

REGISTERED CIVIL ENGINEER 4-7-10

6-20-11
PLANS APPROVAL DATE

REGISTERED PROFESSIONAL ENGINEER Harihar Shiwakoti No. C76035 Exp. 6-30-12 CIVIL STATE OF CALIFORNIA

The State of California or its officers or agents shall not be responsible for the accuracy or completeness of electronic copies of this plan sheet.

REFERENCE: CALTRANS SOIL & ROCK LOGGING, CLASSIFICATION, AND PRESENTATION MANUAL (JUNE 2007)

CEMENTATION

Description	Criteria
Weak	Crumbles or breaks with handling or little finger pressure.
Moderate	Crumbles or breaks with considerable finger pressure.
Strong	Will not crumble or break with finger pressure.

CONSISTENCY OF COHESIVE SOILS

Description	Unconfined Compressive Strength (tsf)	Pocket Penetrometer Measurement (tsf)	Torvane Measurement (tsf)	Field Approximation
Very Soft	< 0.25	< 0.25	< 0.12	Easily penetrated several inches by fist
Soft	0.25 to 0.50	0.25 to 0.50	0.12 to 0.25	Easily penetrated several inches by thumb
Medium Stiff	0.50 to 1.0	0.50 to 1.0	0.25 to 0.50	Penetrated several inches by thumb with moderate effort
Stiff	1 to 2	1 to 2	0.50 to 1.0	Readily indented by thumb but penetrated only with great effort
Very Stiff	2 to 4	2 to 4	1.0 to 2.0	Readily indented by thumbnail
Hard	> 4.0	> 4.0	> 2.0	Indented by thumbnail with difficulty

BOREHOLE IDENTIFICATION

Symbol	Hole Type	Description
Size	A	Auger Boring
Size	R P	Rotary drilled boring Rotary percussion boring (air)
Size	R	Rotary drilled diamond core
Size	HD HA	Hand driven (1-inch soil tube) Hand Auger
●	D	Dynamic Cone Penetration Boring
▲	CPT	Cone Penetration Test (ASTM D 5778-95)
⬚	O	Other

Note: Size in inches.

PLASTICITY OF FINE-GRAINED SOILS

Description	Criteria
Nonplastic	A 1/8-inch thread cannot be rolled at any water content.
Low	The thread can barely be rolled and the lump cannot be formed when drier than the plastic limit.
Medium	The thread is easy to roll and not much time is required to reach the plastic limit. The thread cannot be rerolled after reaching the plastic limit. The lump crumbles when drier than the plastic limit.
High	It takes considerable time rolling and kneading to reach the plastic limit. The thread can be rerolled several times after reaching the plastic limit. The lump can be formed without crumbling when drier than the plastic limit.

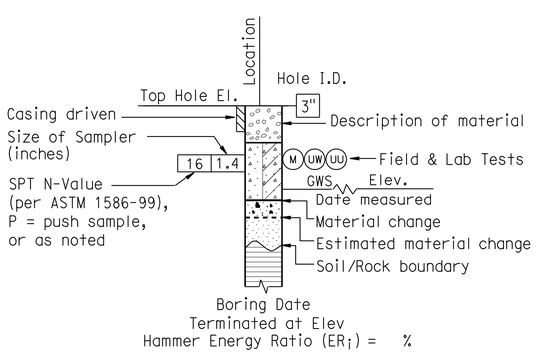

ROTARY BORING

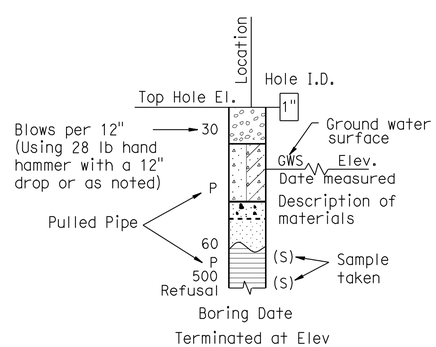

HAND BORING

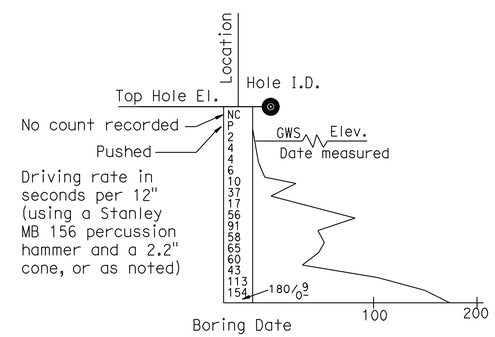

DYNAMIC CONE PENETRATION BORING

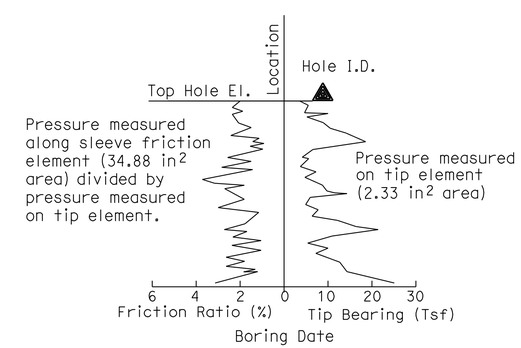

CONE PENETRATION TEST (CPT) SOUNDING

ENGINEERING SERVICES	GEOTECHNICAL SERVICES	STATE OF CALIFORNIA DEPARTMENT OF TRANSPORTATION	DIVISION OF ENGINEERING SERVICES STRUCTURE DESIGN DESIGN BRANCH	BRIDGE NO. 52-0468 / POST MILE 39.9	BIKE LANE RAMP STRUCTURE 9 LOG OF TEST BORINGS 2 OF 3
	PREPARED BY: I.G-Remmen 12/09				

GS LOTB SOIL LEGEND

ORIGINAL SCALE IN INCHES FOR REDUCED PLANS 0 1 2 3

CU 07
EA 260701

DISREGARD PRINTS BEARING EARLIER REVISION DATES → 10-19-10

REVISION DATES

SHEET 21 OF 22

FILE => f-52-0468-z-lotb02.dgn

USERNAME => s124496 DATE PLOTTED => 25-JUN-2011 TIME PLOTTED => 09:10

REFERENCE: CALTRANS SOIL & ROCK LOGGING, CLASSIFICATION, AND PRESENTATION MANUAL (JUNE 2007)

DIST	COUNTY	ROUTE	POST MILES TOTAL PROJECT	SHEET No	TOTAL SHEETS
07	Ven,SB	101	R39.8/R43.6, 0.0/2.2	719	757

REGISTERED CIVIL ENGINEER 4-7-10

6-20-11
PLANS APPROVAL DATE

REGISTERED PROFESSIONAL ENGINEER Harihar Shiwakoti No. C76035 Exp. 6-30-12 CIVIL STATE OF CALIFORNIA

The State of California or its officers or agents shall not be responsible for the accuracy or completeness of electronic copies of this plan sheet.

GROUP SYMBOLS AND NAMES

Graphic/Symbol	Group Names
GW	Well-graded GRAVEL Well-graded GRAVEL with SAND
GP	Poorly graded GRAVEL Poorly graded GRAVEL with SAND
GW-GM	Well-graded GRAVEL with SILT Well-graded GRAVEL with SILT and SAND
GW-GC	Well-graded GRAVEL with CLAY (or SILTY CLAY) Well-graded GRAVEL with CLAY and SAND (or SILTY CLAY and SAND)
GP-GM	Poorly graded GRAVEL with SILT Poorly graded GRAVEL with SILT and SAND
GP-GC	Poorly graded GRAVEL with CLAY (or SILTY CLAY) Poorly graded GRAVEL with CLAY and SAND (or SILTY CLAY and SAND)
GM	SILTY GRAVEL SILTY GRAVEL with SAND
GC	CLAYEY GRAVEL CLAYEY GRAVEL with SAND
GC-GM	SILTY, CLAYEY GRAVEL SILTY, CLAYEY GRAVEL with SAND
SW	Well-graded SAND Well-graded SAND with GRAVEL
SP	Poorly graded SAND Poorly graded SAND with GRAVEL
SW-SM	Well-graded SAND with SILT Well-graded SAND with SILT and GRAVEL
SW-SC	Well-graded SAND with CLAY (or SILTY CLAY) Well-graded SAND with CLAY and GRAVEL (or SILTY CLAY and GRAVEL)
SP-SM	Poorly graded SAND with SILT Poorly graded SAND with SILT and GRAVEL
SP-SC	Poorly graded SAND with CLAY (or SILTY CLAY) Poorly graded SAND with CLAY and GRAVEL (or SILTY CLAY and GRAVEL)
SM	SILTY SAND SILTY SAND with GRAVEL
SC	CLAYEY SAND CLAYEY SAND with GRAVEL
SC-SM	SILTY, CLAYEY SAND SILTY, CLAYEY SAND with GRAVEL
PT	PEAT
	COBBLES COBBLES and BOULDERS BOULDERS

Graphic/Symbol	Group Names
CL	Lean CLAY Lean CLAY with SAND Lean CLAY with GRAVEL SANDY lean CLAY SANDY lean CLAY with GRAVEL GRAVELLY lean CLAY GRAVELLY lean CLAY with SAND
CL-ML	SILTY CLAY SILTY CLAY with SAND SILTY CLAY with GRAVEL SANDY SILTY CLAY SANDY SILTY CLAY with GRAVEL GRAVELLY SILTY CLAY GRAVELLY SILTY CLAY with SAND
ML	SILT SILT with SAND SILT with GRAVEL SANDY SILT SANDY SILT with GRAVEL GRAVELLY SILT GRAVELLY SILT with SAND
OL	ORGANIC lean CLAY ORGANIC lean CLAY with SAND ORGANIC lean CLAY with GRAVEL SANDY ORGANIC lean CLAY SANDY ORGANIC lean CLAY with GRAVEL GRAVELLY ORGANIC lean CLAY GRAVELLY ORGANIC lean CLAY with SAND
OL	ORGANIC SILT ORGANIC SILT with SAND ORGANIC SILT with GRAVEL SANDY ORGANIC SILT SANDY ORGANIC SILT with GRAVEL GRAVELLY ORGANIC SILT GRAVELLY ORGANIC SILT with SAND
CH	Fat CLAY Fat CLAY with SAND Fat CLAY with GRAVEL SANDY fat CLAY SANDY fat CLAY with GRAVEL GRAVELLY fat CLAY GRAVELLY fat CLAY with SAND
MH	Elastic SILT Elastic SILT with SAND Elastic SILT with GRAVEL SANDY elastic SILT SANDY elastic SILT with GRAVEL GRAVELLY elastic SILT GRAVELLY elastic SILT with SAND
OH	ORGANIC fat CLAY ORGANIC fat CLAY with SAND ORGANIC fat CLAY with GRAVEL SANDY ORGANIC fat CLAY SANDY ORGANIC fat CLAY with GRAVEL GRAVELLY ORGANIC fat CLAY GRAVELLY ORGANIC fat CLAY with SAND
OH	ORGANIC elastic SILT ORGANIC elastic SILT with SAND ORGANIC elastic SILT with GRAVEL SANDY ORGANIC elastic SILT SANDY ORGANIC elastic SILT with GRAVEL GRAVELLY ORGANIC elastic SILT GRAVELLY ORGANIC elastic SILT with SAND
OL/OH	ORGANIC SOIL ORGANIC SOIL with SAND ORGANIC SOIL with GRAVEL SANDY ORGANIC SOIL SANDY ORGANIC SOIL with GRAVEL GRAVELLY ORGANIC SOIL GRAVELLY ORGANIC SOIL with SAND

FIELD AND LABORATORY TESTING

- (C) Consolidation (ASTM D 2435)
- (CL) Collapse Potential (ASTM D 5333)
- (CP) Compaction Curve (CTM 216)
- (CR) Corrosivity Testing (CTM 643, CTM 422, CTM 417)
- (CU) Consolidated Undrained Triaxial (ASTM D 4767)
- (DS) Direct Shear (ASTM D 3080)
- (EI) Expansion Index (ASTM D 4829)
- (M) Moisture Content (ASTM D 2216)
- (OC) Organic Content-% (ASTM D 2974)
- (P) Permeability (CTM 220)
- (PA) Particle Size Analysis (ASTM D 422)
- (PI) Plasticity Index (AASHTO T 90) Liquid Limit (AASHTO T 89)
- (PL) Point Load Index (ASTM D 5731)
- (PM) Pressure Meter
- (PP) Pocket Penetrometer
- (R) R-Value (CTM 301)
- (SE) Sand Equivalent (CTM 217)
- (SG) Specific Gravity (AASHTO T 100)
- (SL) Shrinkage Limit (ASTM D 427)
- (SW) Swell Potential (ASTM D 4546)
- (TV) Pocket Torvane
- (UC) Unconfined Compression-Soil (ASTM D 2166) Unconfined Compression-Rock (ASTM D 2938)
- (UU) Unconsolidated Undrained Triaxial (ASTM D 2850)
- (UW) Unit Weight (ASTM D 4767)
- (VS) Vane Shear (AASHTO T 223)

APPARENT DENSITY OF COHESIONLESS SOILS

Description	SPT N_{60} (Blows / 12 inches)
Very loose	0 - 4
Loose	5 - 10
Medium Dense	11 - 30
Dense	31 - 50
Very Dense	> 50

MOISTURE

Description	Criteria
Dry	Absence of moisture, dusty, dry to the touch
Moist	Damp but no visible water
Wet	Visible free water, usually soil is below water table

PERCENT OR PROPORTION OF SOILS

Description	Criteria
Trace	Particles are present but estimated to be less than 5%
Few	5 to 10%
Little	15 to 25%
Some	30 to 45%
Mostly	50 to 100%

PARTICLE SIZE

Description		Size
Boulder		> 12"
Cobble		3" to 12"
Gravel	Coarse	3/4" to 3"
	Fine	No. 4 to 3/4"
Sand	Coarse	No. 10 to No. 4
	Medium	No. 40 to No. 10
	Fine	No. 200 to No. 40

ENGINEERING SERVICES

GEOTECHNICAL SERVICES
PREPARED BY: I.G-Remmen 12/09

STATE OF CALIFORNIA DEPARTMENT OF TRANSPORTATION

DIVISION OF ENGINEERING SERVICES STRUCTURE DESIGN
DESIGN BRANCH

BRIDGE NO. 52-0468
POST MILE 39.9

BIKE LANE RAMP STRUCTURE 9
LOG OF TEST BORINGS 3 OF 3

GS LOTB SOIL LEGEND

ORIGINAL SCALE IN INCHES FOR REDUCED PLANS 0 1 2 3

CU 07
EA 260701

DISREGARD PRINTS BEARING EARLIER REVISION DATES 10-19-10

REVISION DATES

SHEET 22 OF 22

FILE => f-52-0468-z-lotb03.dgn

USERNAME => s124496 DATE PLOTTED => 25-JUN-2011 TIME PLOTTED => 09:10

DIST	COUNTY	ROUTE	POST MILES TOTAL PROJECT	SHEET No	TOTAL SHEETS
07	Ven,SB	101	R39.8/R43.6, 0.0/2.2	720	757

REGISTERED CIVIL ENGINEER 10-18-10 DATE

6-20-11
PLANS APPROVAL DATE

REGISTERED PROFESSIONAL ENGINEER Douglas C. Menzmer No. C63498 Exp. 09-30-12 CIVIL STATE OF CALIFORNIA

The State of California or its officers or agents shall not be responsible for the accuracy or completeness of electronic copies of this plan sheet.

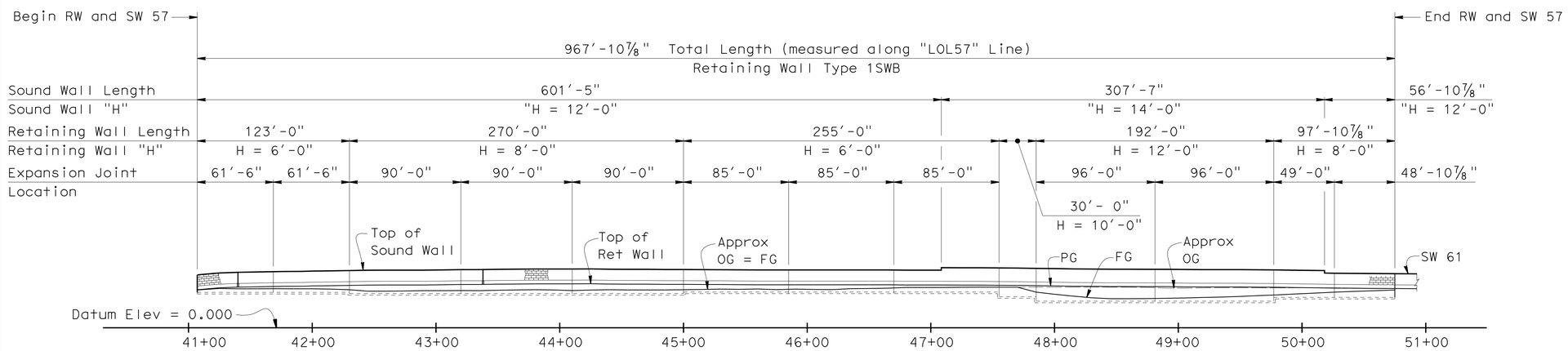

ELEVATION (DEVELOPED)

1" = 50'

Note: See "Road Plans" for Aesthetic sound wall details

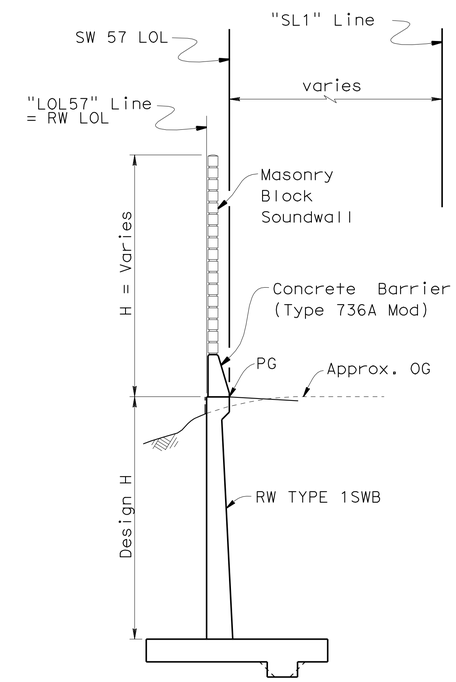

TYPICAL SECTION

No Scale

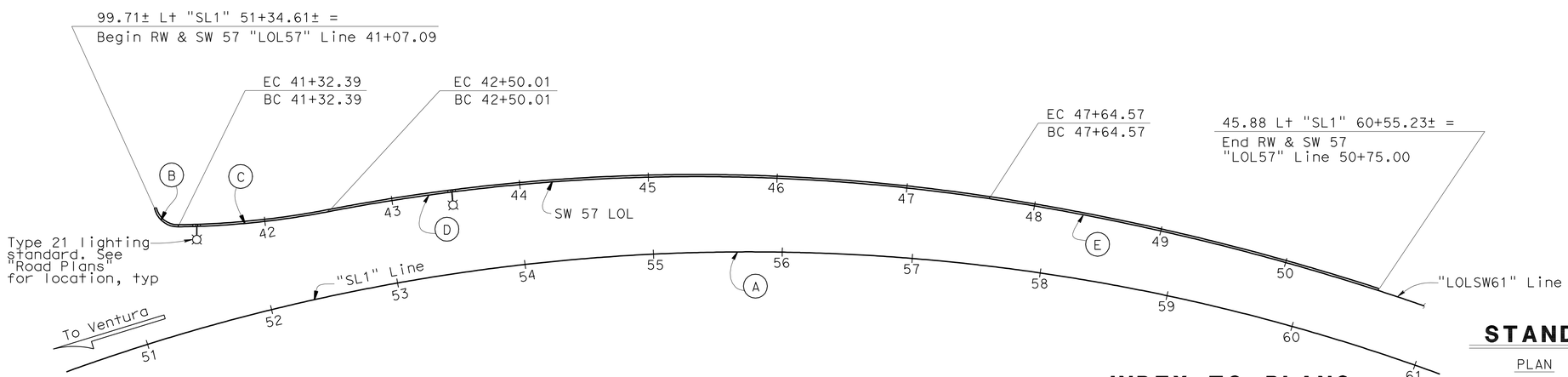

PLAN

1" = 50'

CURVE DATA

No.	R	Δ	T	L
Ⓐ	1557.22	45°31'36"	653.42	1237.35
Ⓑ	18.50	78°21'07"	15.08	25.30
Ⓒ	656.50	10°15'54"	58.97	117.62
Ⓓ	1511.50	19°30'19"	259.80	514.56
Ⓔ	1911.50	9°18'18"	155.56	310.43

QUANTITIES

STRUCTURE EXCAVATION (RETAINING WALL)	4,275	CY
STRUCTURE BACKFILL (RETAINING WALL)	3,095	CY
STRUCTURAL CONCRETE (RETAINING WALL)	738	CY
SOUND WALL (MASONRY BLOCK)	9,308	SQFT
BAR REINFORCING STEEL (EPOXY COATED) (RETAINING WALL)	77,700	LB
MISCELLANEOUS METAL (BRIDGE)	180	LB
CONCRETE BARRIER (TYPE 736A MODIFIED)	968	LF

INDEX TO PLANS

SHEET NO.	PLANS
1	GENERAL PLAN
2	FOUNDATION PLANS NO. 1
3	FOUNDATION PLANS NO. 2
4	LIGHTING STANDARD TYPE 21 ON RETAINING WALL TYPE 1SWB
5	RETAINING WALL TYPE 1SWB
6	SOUNDWALL WITH BARRIER ON RETAINING WALL MASONRY BLOCK -DETAILS NO. 1
7	SOUNDWALL WITH BARRIER ON RETAINING WALL MASONRY BLOCK -DETAILS NO. 2

STANDARD PLAN SHEET NO.

DETAIL NO.

STANDARD PLANS DATED MAY 2006

PLAN	PLAN TITLE
A10A	ACRONYMS AND ABBREVIATIONS (SHEET 1 OF 2)
A10B	ACRONYMS AND ABBREVIATIONS (SHEET 2 OF 2)
A62B	LIMITS OF PAYMENT FOR EXCAVATION AND BACKFILL BRIDGE SURCHARGE AND WALL
B3-8	RETAINING WALL DETAIL NO. 1
B3-9	RETAINING WALL DETAIL NO. 2
B11-56	CONCRETE BARRIER TYPE 736 (MOD)
ES-6A	ELECTRICAL SYSTEMS (LIGHTING STANDARD, TYPE 15 AND 21, BARRIER RAIL MOUNTED DETAILS)
ES-6B	ELECTRICAL SYSTEMS (LIGHTING STANDARD, TYPE 15D AND 21D, DOUBLE ARM)
RSP-9A	ELECTRICAL SYSTEMS (ELECTRICAL DETAILS, STRUCTURE INSTALLATION)
RSP-9B	ELECTRICAL SYSTEMS (ELECTRICAL DETAILS, STRUCTURE INSTALLATION)

Matt Holm
DESIGN ENGINEER

	BY	CHECKED
DESIGN	Leon Valla	Doug Menzmer
DETAILS	Wei Zhang	Doug Menzmer
QUANTITIES	Leon Valla	Doug Menzmer

LOAD & RESISTANCE FACTOR DESIGN — LIVE LOADING: HS20 AND ALTERNATIVE AND PERMIT DESIGN VEHICLE

LAYOUT: BY Leon Valla, CHECKED Doug Menzmer

SPECIFICATIONS: BY Erwin Rufino, PLANS AND SPECS COMPARED Erwin Rufino

ORIGINAL SCALE IN INCHES FOR REDUCED PLANS 0 1 2 3

STATE OF CALIFORNIA
DEPARTMENT OF TRANSPORTATION

DIVISION OF ENGINEERING SERVICES
STRUCTURE DESIGN
DESIGN BRANCH 12

CU 07
EA 260701

BRIDGE NO. 52-E0015
POST MILE 40.78-41.07

RETAINING WALL & SOUND WALL NO. 57
GENERAL PLAN

DISREGARD PRINTS BEARING EARLIER REVISION DATES

REVISION DATES: 8-22-09, 9-1-09, 9-9-09, 10-14-09, 10-30-09, 07-27-10, 01-26-11, 2-28-11, 4-18-11

SHEET 1 OF 7

USERNAME => s124496 DATE PLOTTED => 25-JUN-2011 TIME PLOTTED => 09:11

STRUCTURES DESIGN GENERAL PLAN SHEET (ENGLISH) (REV.07-24-06)

FILE => g-52-e0015-a-gp.dgn

DIST	COUNTY	ROUTE	POST MILES TOTAL PROJECT	SHEET No	TOTAL SHEETS
07	Ven,SB	101	R39.8/R43.6, 0.0/2.2	721	757

REGISTERED CIVIL ENGINEER 10-18-10 DATE

6-20-11
PLANS APPROVAL DATE

REGISTERED PROFESSIONAL ENGINEER Douglas C. Menzmer No. C63498 Exp. 09-30-12 CIVIL STATE OF CALIFORNIA

The State of California or its officers or agents shall not be responsible for the accuracy or completeness of electronic copies of this plan sheet.

CURVE DATA

No.	R	Δ	T	L
Ⓐ	1557.22	45°31'36"	653.42	1237.35
Ⓑ	18.50	78°21'07"	15.08	25.30
Ⓒ	656.50	10°15'54"	58.97	117.62
Ⓓ	1511.50	19°30'19"	259.80	514.56

Notes:
1. Elec Line, Gas Line, Oil Line, Tele Line, Tele Cable Line, Sewer Line, Storm Drain Line, Water Line, Per Dist. Map

XX.XX Indicates bottom of footing

SPREAD FOTTING DATA TABLE

SUPPORT LOCATION	ALLOWABLE BEARING CAPACITY	ULTIMATE BEARING CAPACITY
Retwall H=6'	N/A	12 ksf
Retwall H=8'	N/A	12 ksf
Retwall H=12'	N/A	12 ksf

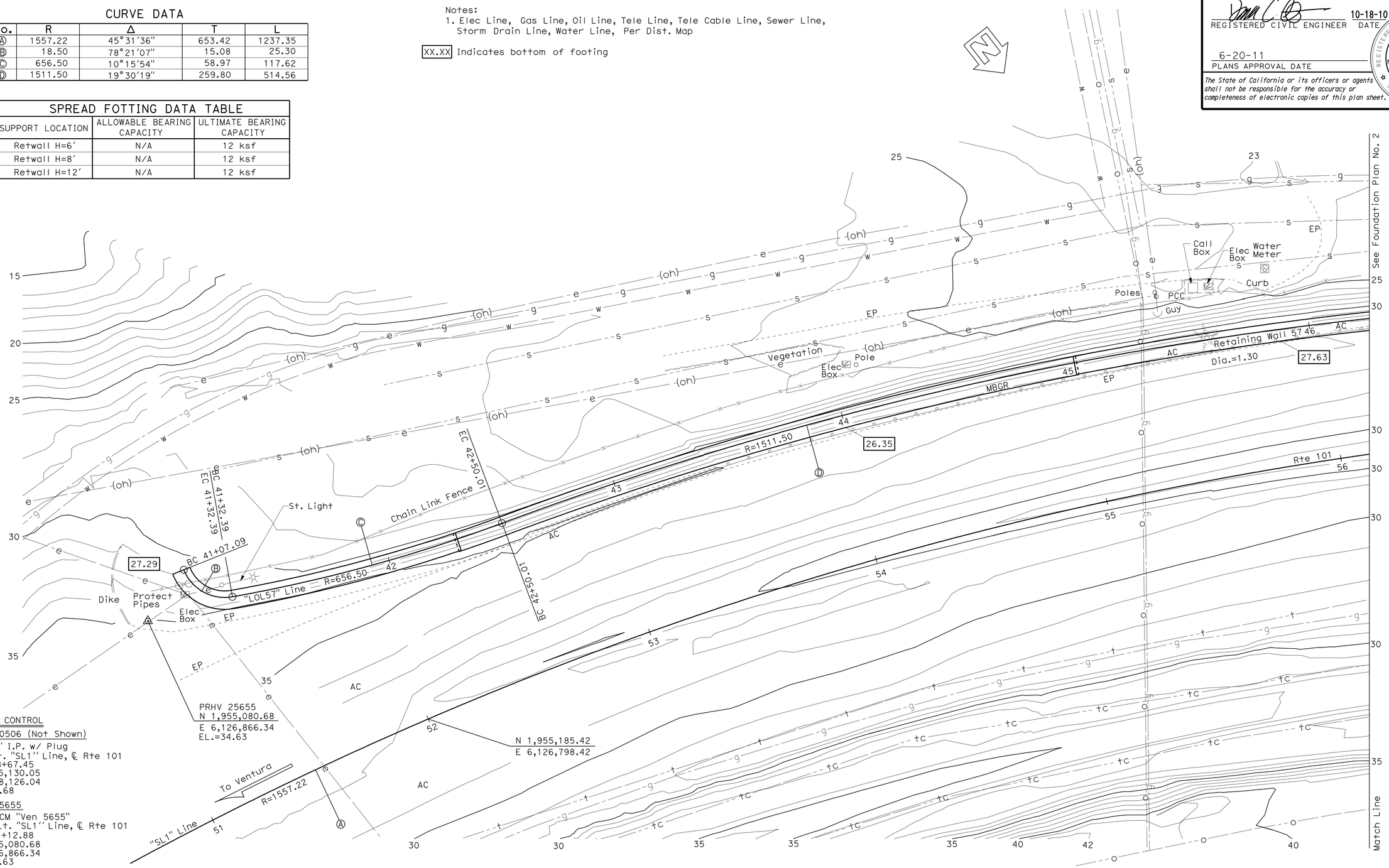

SURVEY CONTROL

PRHV 20506 (Not Shown)

Fnd 1" I.P. w/ Plug
7.11 Rt. "SL1" Line, ℄ Rte 101
Sta. 38+67.45
N 1,955,130.05
E 6,128,126.04
EL.=28.68

PRHV 25655

Fnd BCM "Ven 5655"
87.02 Lt. "SL1" Line, ℄ Rte 101
Sta. 51+12.88
N 1,955,080.68
E 6,126,866.34
EL.=34.63

PRELIMINARY INVESTIGATION SECTION							
SCALE 1"=20'	VERT.DATUM NAVD 88	PHOTOGRAMMETRY AS OF: X					
HORZ.DATUM NAD 83 (91.35)	SURVEYED	BY District	CHECKED	BY Tim Mason 7/2009			
ALIGNMENT TIES Dist. Traverse Sheet	DRAFTED	BY Sharon Zheng 7/2009	CHECKED	BY T.Zolnikova 7/2009			

	BY	CHECKED
DESIGN	Leon Valla	Doug Menzmer
DETAILS	Wei Zhang	Doug Menzmer
QUANTITIES	Leon Valla	Doug Menzmer

STATE OF CALIFORNIA
DEPARTMENT OF TRANSPORTATION

DIVISION OF ENGINEERING SERVICES
STRUCTURE DESIGN
DESIGN BRANCH 12

BRIDGE NO. 52-E0015
POST MILE 40.78-41.07

RETAINING WALL & SOUND WALL NO. 57
FOUNDATION PLAN NO. 1

STRUCTURES FOUNDATION PLAN SHEET (ENGLISH) (REV. 10/25/05)

ORIGINAL SCALE IN INCHES FOR REDUCED PLANS 0 1 2 3

CU 07
EA 260701

DISREGARD PRINTS BEARING EARLIER REVISION DATES

REVISION DATES: 7-15-09 9-2-09 10-30-09 07-27-10

SHEET 2 OF 7

FILE => g-52-e0015-g-fp101.dgn

USERNAME => s124936 DATE PLOTTED => 25-JUN-2011 TIME PLOTTED => 09:45

DIST	COUNTY	ROUTE	POST MILES TOTAL PROJECT	SHEET No	TOTAL SHEETS
07	Ven,SB	101	R39.8/R43.6, 0.0/2.2	722	757

REGISTERED CIVIL ENGINEER 10-18-10 DATE

6-20-11
PLANS APPROVAL DATE

REGISTERED PROFESSIONAL ENGINEER Douglas C. Menzmer No. C63498 Exp. 09-30-12 CIVIL STATE OF CALIFORNIA

The State of California or its officers or agents shall not be responsible for the accuracy or completeness of electronic copies of this plan sheet.

CURVE DATA

No.	R	Δ	T	L
Ⓔ	1911.50	9°18′18"	155.56	310.43
Ⓕ	1910.00	3°30′35"	58.52	117.00
Ⓖ	1926.64	4°30′16"	75.77	151.46

Notes:
1. Elec Line, Gas Line, Oil Line, Tele Line, Tele Cable Line, Sewer Line, Storm Drain Line, Water Line, Per Dist. Map
2. All dia. of tree on construction class

XX.XX Indicates bottom of footing

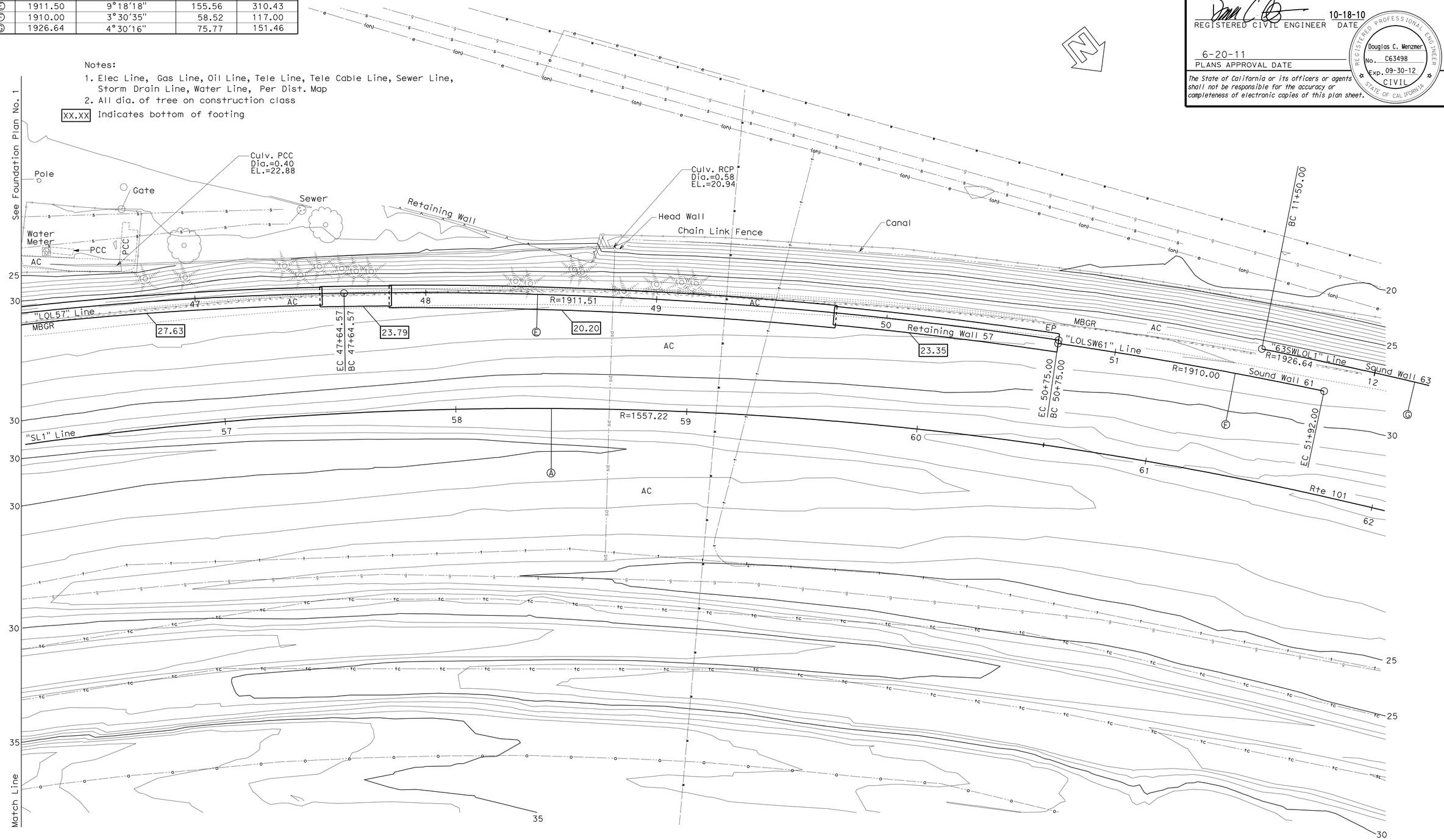

PRELIMINARY INVESTIGATION SECTION							
SCALE 1"=20′	VERT.DATUM NAVD 88	PHOTOGRAMMETRY AS OF: X					
	HORZ.DATUM NAD 83 (91.35)	SURVEYED	BY District	CHECKED	BY Tim Mason 7/2009		
ALIGNMENT TIES Dist. Traverse Sheet		DRAFTED	BY Sharon Zheng 7/2009	CHECKED	BY T.Zolnikova 7/2009		

	BY	CHECKED
DESIGN	Leon Valla	Doug Menzmer
DETAILS	Wei Zang	Doug Menzmer
QUANTITIES	Leon Valla	Doug Menzmer

STATE OF CALIFORNIA DEPARTMENT OF TRANSPORTATION

DIVISION OF ENGINEERING SERVICES STRUCTURE DESIGN DESIGN BRANCH 12

BRIDGE NO. 52-E0015
POST MILE 40.78-41.07

RETAINING WALL & SOUND WALL NO. 57
FOUNDATION PLAN NO. 2

STRUCTURES FOUNDATION PLAN SHEET (ENGLISH) (REV. 10/25/05)

ORIGINAL SCALE IN INCHES FOR REDUCED PLANS 0 1 2 3

CU 07
EA 260701

DISREGARD PRINTS BEARING EARLIER REVISION DATES → 7-15-09 9-2-09 10-26-09 07-27-10

REVISION DATES

SHEET 3 OF 7

FILE => g-52-e0015-g-fp102.dgn

USERNAME => s124496 DATE PLOTTED => 25-JUN-2011 TIME PLOTTED => 09:45

DIST	COUNTY	ROUTE	POST MILES TOTAL PROJECT	SHEET No	TOTAL SHEETS
07	Ven,SB	101	R39.8/R43.6, 0.0/2.2	723	757

REGISTERED CIVIL ENGINEER 10-18-10 DATE

6-20-11
PLANS APPROVAL DATE

REGISTERED PROFESSIONAL ENGINEER Douglas C. Menzmer No. C63498 Exp. 09-30-12 CIVIL STATE OF CALIFORNIA

The State of California or its officers or agents shall not be responsible for the accuracy or completeness of electronic copies of this plan sheet.

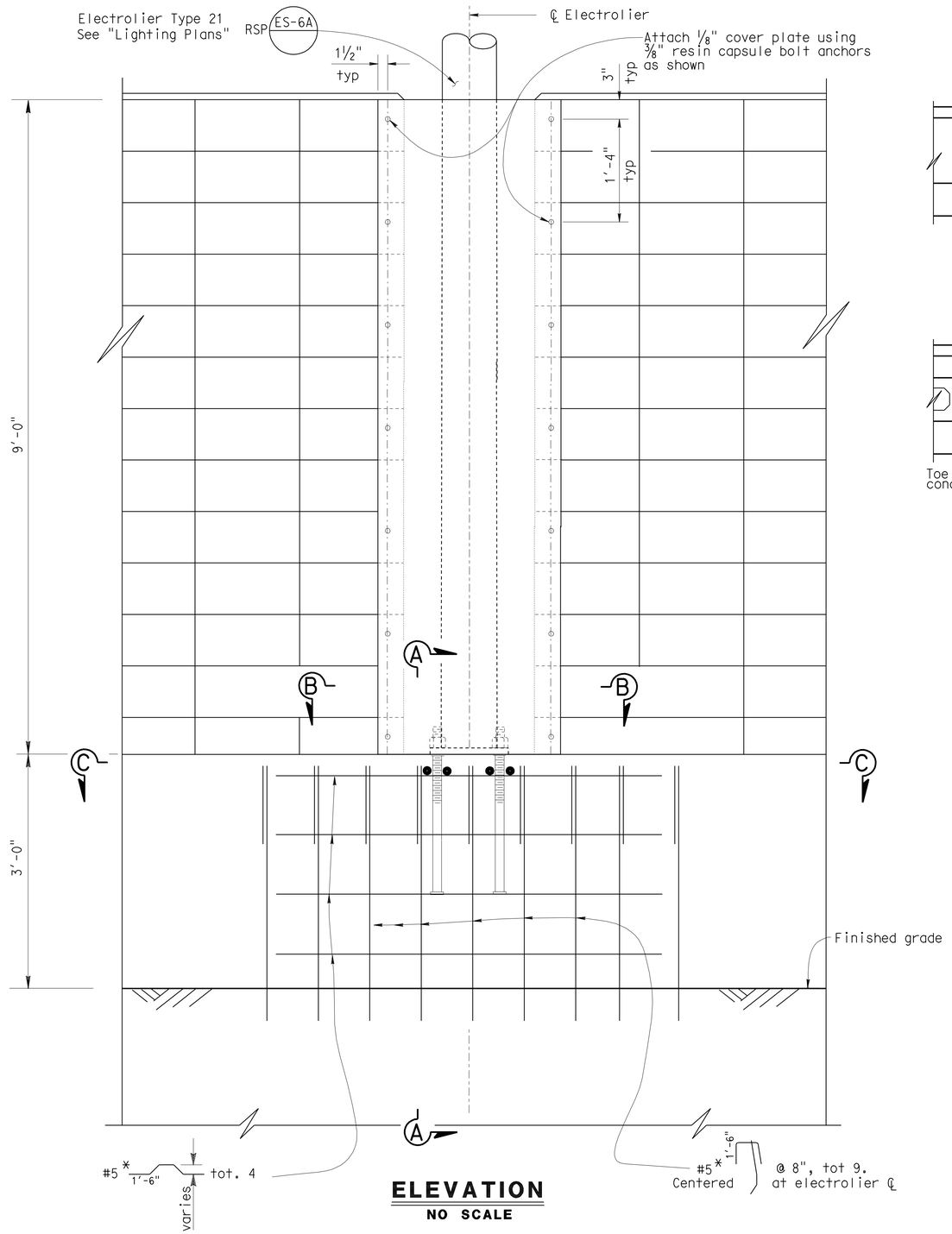

ELEVATION
NO SCALE

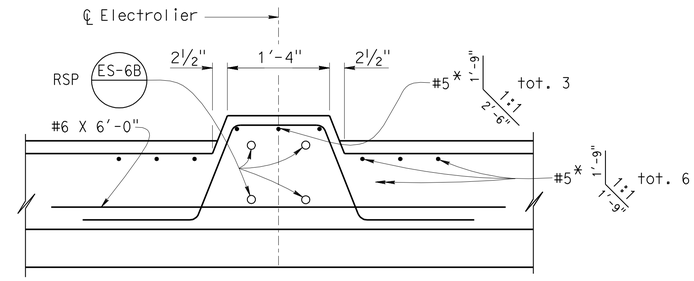

SECTION C-C
1"=1'-0"

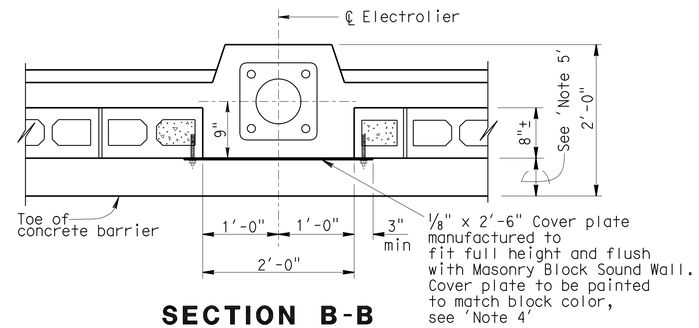

SECTION B-B
1'=1'-0"

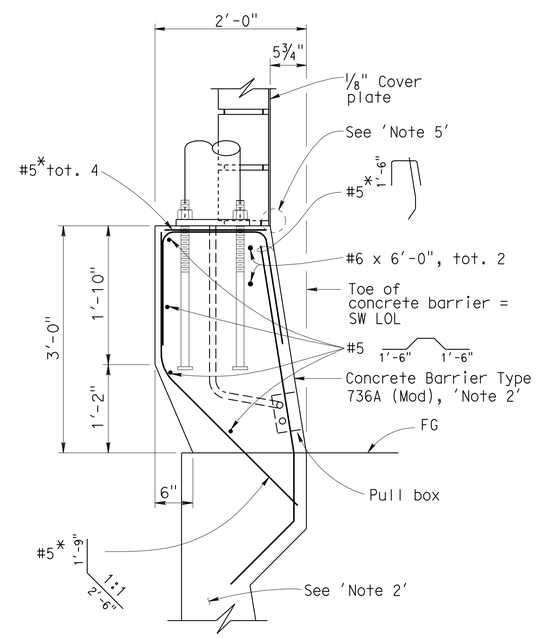

SECTION A-A
1"=1'-0"

Notes:

1. Electrolier locations shown on "Road Plans" are approximate. Bar Reinf in the barrier shall be adjusted by the Contractor as approved by the Engineer, in order that each the masonry block and the electrolier shall be both aesthetically pleasing and structurally sound.
2. All reinforcement shown is in addition to "Retaining Wall Type 1 SWB".
3. All reinforcement shown is in addition to "Sound Wall-Masonry Block With Barrier On Retaining Wall Details No. 2" sheet.
4. Replace last column of split face CMU blocks With standard CMU blocks, where they are end or terminate each side of cover plates full height of sound walls.
5. Exact location of sound wall CMU blocks to be located per "Aesthetic Sound Wall Details" sheet in "Road Plans"

* Indicates post-fabricated epoxy coated reinforcement

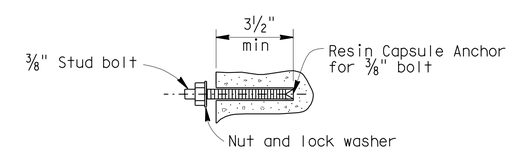

RESIN CAPSULE BOLT ANCHORAGE
NO SCALE

Note: Resin capsule anchorage is subject to approval of Engineer. Installation procedures shall comply with manufacturer's instructions.

RETAINING WALL & SOUNDWALL NO. 57

LIGHTING STANDARD TYPE 21 ON RETAINING WALL TYPE 1SWB

	BY	CHECKED
DESIGN	Leon Valla	Doug Menzmer
DETAILS	Wei Zang	Doug Menzmer
QUANTITIES	Leon Valla	Doug Menzmer

STATE OF CALIFORNIA DEPARTMENT OF TRANSPORTATION

DIVISION OF ENGINEERING SERVICES STRUCTURE DESIGN DESIGN BRANCH 12

BRIDGE NO. 52-E0015
POST MILE 40.78-41.07

STRUCTURES DESIGN DETAIL SHEET (ENGLISH) (REV. 10/25/05)

ORIGINAL SCALE IN INCHES FOR REDUCED PLANS 0 1 2 3

CU 07
EA 260701

DISREGARD PRINTS BEARING EARLIER REVISION DATES

REVISION DATES: 07-29-10 01-26-11 4-18-11

SHEET 4 OF 7

FILE => g-52-e0015-u-miscdt01.dgn

USERNAME => s124496 DATE PLOTTED => 25-JUN-2011 TIME PLOTTED => 09:46

DIST.	COUNTY	ROUTE	POST MILES TOTAL PROJECT	SHEET NO.	TOTAL SHEETS
07	Ven,SB	101	R39.8/R43.6, 0.0/2.2	724	757

REGISTERED ENGINEER - CIVIL 10-18-10

6-20-11
PLANS APPROVAL DATE

REGISTERED PROFESSIONAL ENGINEER Douglas C. Menzmer No. C63498 Exp. 09-30-12 CIVIL STATE OF CALIFORNIA

The State of California or its officers or agents shall not be responsible for the accuracy or completeness of electronic copies of this plan sheet.

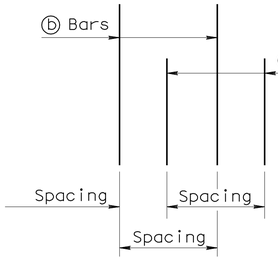

DETAIL B

No Scale

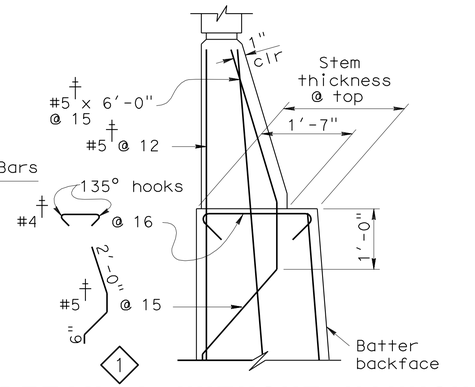

DETAIL A WITHOUT HAUNCH

No Scale

† Indicates post-fabricated epoxy-coated reinforcement.

GENERAL NOTES

1. For soundwall and retaining wall architectural finish or texture, see "Road Plans".
2. For details not shown and drainage notes, see B3-8
3. Footing cover, 1'-6" minimum.
4. Limit of no splicing rebars = 3 times the bottom thickness of the stem.
5. Placement of reinforcements :
   - ⓑ & ⓒ bars are spliced together.
   - ✳ ⓐ & ⓑ bars are bundled together.
   - ✳✳ Alternate ⓐ & ⓑ bars are shown in "Detail B".
   - Cont = Continuous.
6. For Soundwall & Barrier reinforcement, see "Soundwall Masonry Block on Barriers" sheets in Standard Plans.

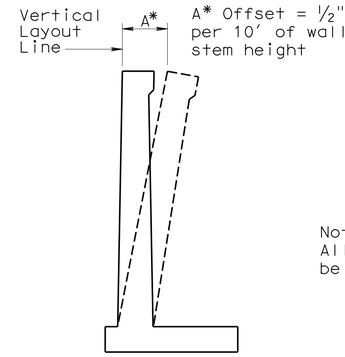

WALL OFFSET

No Scale

Values for offsetting forms to be determined by the Engineer.

Note A:
All longitudinal steel in concrete barrier to be expoxy coated reinforcement.

TABLE 1: TABLE OF REINFORCING STEEL DIMENSIONS AND DATA

	Stem With Haunch													
Design H	6'	8'	10'	12'	14'	16'	18'	20'	22'	24'	26'	28'	30'	32'
W	7'-9"	8'-0"	8'-9"	9'-9"	10'-9"	12'-0"	13'-0"	14'-3"	15'-3"	16'-6"	18'-6"	19'-9"	21'-3"	22'-6"
C	2'-9"	2'-9"	3'-0"	3'-3"	3'-6"	4'-0"	4'-3"	4'-9"	5'-0"	5'-6"	6'-3"	6'-9"	7'-3"	7'-9"
B	5'-0"	5'-3"	5'-9"	6'-6"	7'-3"	8'-0"	8'-9"	9'-6"	10'-3"	11'-0"	12'-3"	13'-0"	14'-0"	14'-9"
F Spread footing	1'-3"	1'-3"	1'-3"	1'-3"	1'-3"	1'-6"	1'-6"	1'-9"	2'-0"	2'-3"	2'-9"	3'-0"	3'-3"	3'-9"
Batter	0	:12	:12	:12	:12	:12	:12	:12	:12	:12	:12	:12	1 :12	1 :12
Stem thickn. @ Haunch	1'-0"	1'-0"	1'-0"	1'-0"	1'-0"	1'-0"	1'-0"	1'-0"	1'-0"	1'-0"	1'-0"	1'-0"	1'-0"	1'-0"
ⓐ Bars				#6 @18✳✳	#7 @18✳✳	#8 @18✳✳	#9 @18✳✳	#10 @18✳✳	#8 @ 9✳	#8 @ 9✳	#7 @ 6✳	#10 @12✳✳	#9 @ 9✳	#11@12✳✳
X				Cont	Cont	Cont	Cont	Cont	Cont	Cont	Cont	Cont	Cont	Cont
Y				8'-0"	6'-6"	7'-6"	8'-6"	9'-6"	9'-6"	11'-0"	11'-6"	13'-0"	14'-0"	15'-6"
ⓑ Bars	#5 @12	#5 @12	#5 @ 9	#6 @18✳✳	#7 @18✳✳	#8 @18✳✳	#9 @18✳✳	#10 @18✳✳	#8 @ 9✳	#8 @ 9✳	#7 @ 6✳	#10 @12✳✳	#9 @ 9✳	#11@12✳✳
X	Cont	Cont	Cont	Cont	Cont	Cont	Cont	Cont	Cont	5'-6"	6'-6"	7'-0"	8'-0"	8'-6"
Y	Cont	Cont	Cont	Cont	10'-6"	13'-0"	15'-0"	17'-6"	19'-6"	21'-0"	18'-6"	19'-0"	25'-6"	23'-6"
ⓒ Bars					#6 @18	#6 @18	#6 @18	#6 @18	#6 @18	#6 @18	#6 @12	#7 @12	#7 @18	#7 @12
ⓓ Bars	#5 @12	#5 @12	#5 @12	#5 @ 9	#6 @ 9	#6 @ 9	#6 @ 6	#8 @ 9	#8 @ 9	#8 @ 9	#7 @ 6	#7 @ 6	#9 @ 9	#9 @ 9
Ultimate Bearing Capacity Req'd k/sf	4.6	5.5	6.1	6.6	7.3	8.1	9.0	9.9	11.3	12.2	12.5	13.4	14.1	15.4

TABLE 2: TABLE OF REINFORCING STEEL DIMENSIONS AND DATA

	Stem With Haunch						Stem Without Haunch						
Design H	8'	10'	12'	14'	16'	18'	20'	22'	24'	26'	28'	30'	32'
W	8'-0"	8'-6"	9'-3"	10'-3"	11'-3"	13'-0"	13'-9"	16'-0"	16'-6"	18'-6"	20'-0"	20'-6"	21'-9"
C	2'-9"	2'-9"	3'-0"	3'-6"	3'-9"	4'-3"	4'-6"	5'-3"	5'-6"	6'-3"	6'-9"	6'-9"	7'-6"
B	5'-3"	5'-9"	6'-3"	6'-9"	7'-6"	8'-9"	9'-3"	10'-9"	11'-0"	12'-3"	13'-3"	13'-9"	14'-3"
F Spread footing	1'-3"	1'-3"	1'-3"	1'-3"	1'-6"	1'-6"	1'-9"	2'-0"	2'-3"	2'-9"	3'-0"	3'-3"	3'-6"
Batter	0	0	0	0	0	0	0	0	0	:12	:12	:12	:12
Stem thickn. @ Haunch	1'-0"	1'-0"	1'-0"	1'-0"	1'-3"	1'-3"							
Stem thickn. @ top							1'-6"	2'-0"	2'-0"	2'-0"	2'-0"	2'-0"	2'-0"
ⓐ Bars			#6 @12✳✳	#5 @ 6✳	#9 @18✳✳	#9 @12✳✳	#9 @12✳✳	#9 @12✳✳	#7 @ 6✳	#7 @ 6✳	#7 @ 6✳	#9 @ 9✳	#11@12✳✳
X			Cont	Cont	Cont	Cont	Cont	Cont	Cont	Cont	Cont	Cont	Cont
Y			5'-6"	5'-6"	8'-6"	8'-6"	8'-6"	8'-6"	9'-6"	11'-0"	12'-6"	13'-6"	14'-6"
ⓑ Bars	#5 @ 9	#6 @ 9	#6 @12✳✳	#5 @ 6✳	#9 @18✳✳	#9 @12✳✳	#9 @12✳✳	#9 @12✳✳	#7 @ 6✳	#7 @ 6✳	#7 @ 6✳	#9 @ 9✳	#11@12✳✳
X	Cont	Cont	Cont	Cont	Cont	Cont	Cont	Cont	5'-6"	6'-0"	7'-6"	7'-6"	8'-0"
Y	Cont	Cont	Cont	Cont	11'-6"	11'-6"	12'-0"	12'-0"	17'-6"	20'-0"	21'-6"	24'-0"	24'-0"
ⓒ Bars					#7 @18	#7 @12	#7 @12	#7 @12	#6 @ 12	#6 @ 12	#6 @12	#7 @18	#7 @12
ⓓ Bars	#5 @12	#5 @ 9	#5 @9	#6 @9	#6 @ 9	#9 @12	#9 @12	#7 @#7	6 @ 6	#7 @ 6	#7 @ 6	#9 @ 9	#9 @ 9
Ultimate Bearing Capacity Req'd k/sf	5.5	6.5	7.3	7.6	9.0	9.0	10.6	10.5	12.2	12.6	13.3	15.4	16.0

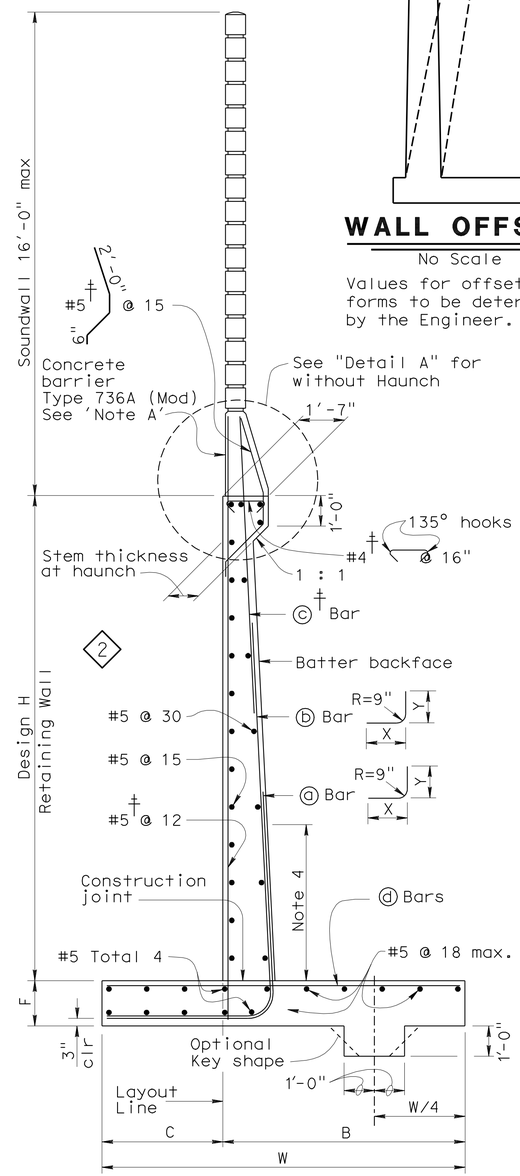

SPREAD FOOTING SECTION 1

No Scale

† Indicates post-fabricated epoxy-coated reinforcement.

DESIGN DATA

DESIGN: Load Factor Design (LFD)

CONCRETE: Reinforced Concrete, f'c = 3600 psi
fy = 60,000 psi

LOADING CASE:
Level ground with 240 psf surcharge and 16' Soundwall

Seismic Load = 0.3 Dead Load
Wind Load = 30 psf
Dead Load of Soundwall = 1414 lb/ft
Dead Load of Barrier = 372 lb/ft

SEISMIC LOAD: SOIL
Kh = 0.3g
Kv = 0.0
Kae : Mononobe-Okabe Method

SOIL: Ø = 34° γ = 120 pcf
Equivalent fluid pressure:
= 36 pcf for determination of toe pressure
= 27 pcf for determination of heel pressure

EXTERNAL STABILITY:
Group 1 : D + E + SC
Group 2 : D + E + SC + W
Group 3 : D + PYM

INTERNAL STABILITY (LFD):
Group A : βD + 1.7E + 1.7SC
Group B : βD + 1.7E + 1.3W
Group C (stem) : 1.0D + 1.0E + 1.0EQD + 1.0EQE
Group C (footing) : D + PYM

Where : β = 1.0 or 1.3 whichever controls design
D = Dead Load
E = Lateral Earth Pressure
SC = Surcharge
W = Wind load
EQD = Seismic Dead Load
EQE = Seismic Lateral Earth Pressure
PYM = Probable Yield Moment (1.3 x Nominal Yield Moment of Stem)

STANDARD DRAWING

FILE NO. xs14-220e

APPROVED BY G. WANG RESPONSIBLE TECHNICAL SPECIALIST
APPROVAL DATE 5-19-08

RELEASED BY ROBERTO LACALLE RESPONSIBLE OFFICE CHIEF
RELEASE DATE 5-19-08

1 Modified Detail
2 Removed Note

STATE OF CALIFORNIA DEPARTMENT OF TRANSPORTATION

DIVISION OF ENGINEERING SERVICES

BRIDGE NO. 52-E0015
POST MILE 40.78-41.07

RETAINING WALL & SOUND WALL NO. 57

RETAINING WALL TYPE 1SWB

DS OSD 2147A (ENGLISH STANDARD DRAWING "XS" BORDER REV. 01/11/08)

ORIGINAL SCALE IN INCHES FOR REDUCED PLANS 0 1 2 3

CU 07
EA 260701

DISREGARD PRINTS BEARING EARLIER REVISION DATES

REVISION DATES (PRELIMINARY STAGE ONLY) 9-16-09 10-30-09 07-27-10 01-20-11 4-18-11

SHEET 5 OF 7

USERNAME => s124496

g-52-e0015-u-miscdt02.dgn

DATE PLOTTED => 25-JUN-2011 TIME PLOTTED => 09:46

DIST.	COUNTY	ROUTE	POST MILES TOTAL PROJECT	SHEET NO.	TOTAL SHEETS
07	Ven,SB	101	R39.8/R43.6, 0.0/2.2	725	757

REGISTERED ENGINEER - CIVIL 10-18-10

6-20-11
PLANS APPROVAL DATE

REGISTERED PROFESSIONAL ENGINEER Douglas C. Menzmer No. C63498 Exp. 09-30-12 CIVIL STATE OF CALIFORNIA

The State of California or its officers or agents shall not be responsible for the accuracy or completeness of electronic copies of this plan sheet.

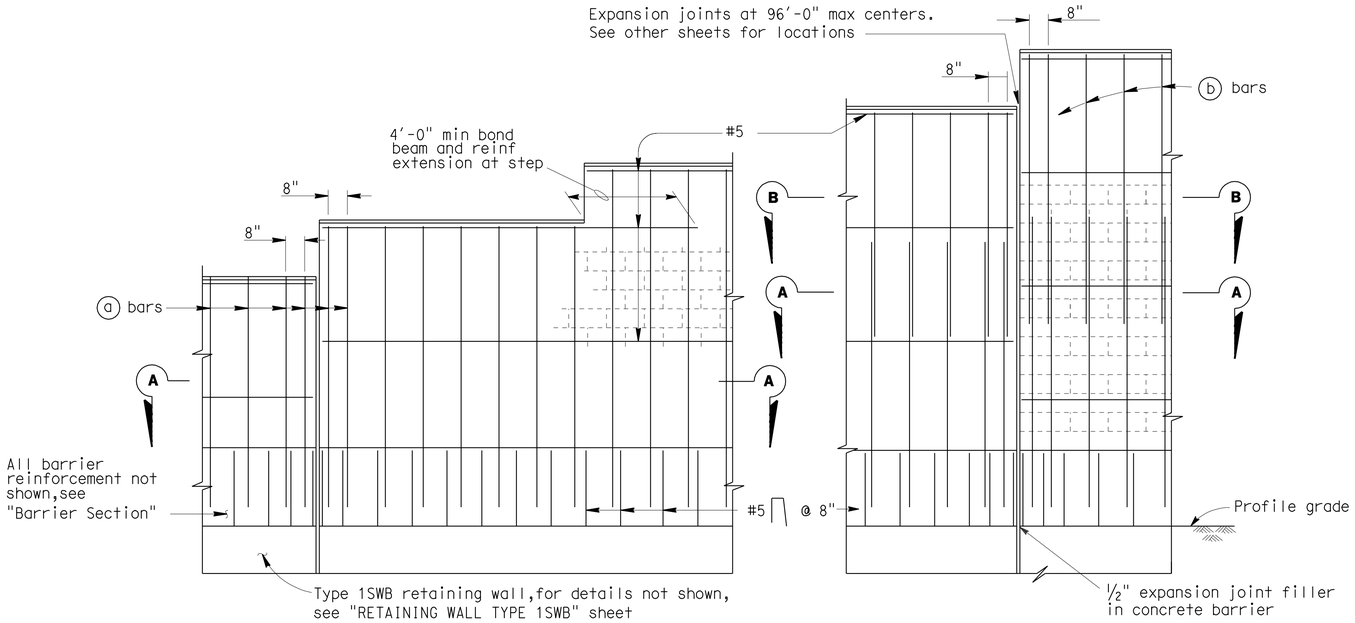

PART ELEVATIONS

SOUNDWALL REINFORCEMENT TABLE

Maximum H	ⓐ bars @ 1'-4" max	ⓑ bars @ 1'-4" max	"y"	f'm (KSI)	Compressive Strength of CMU (KSI)	Maximum H
6'-4"	# 4	———	———	1.5	1.9	6'-4"
8'-4"	# 4	———	———	1.5	1.9	8'-4"
10'-4"	# 4	———	———	1.5	1.9	10'-4"
12'-4"	# 5	# 4	5'-0"	1.5	1.9	12'-4"
14'-4"	# 6	# 4	7'-0"	1.5	1.9	14'-4"
16'-4"	# 6	# 4	9'-0"	2.5	3.7	16'-4"

Note I : For details not shown,see "SOUNDWALL - MASONRY BLOCK WITH BARRIER ON RETAINING WALL - DETAILS NO.2" sheet.

Note II : Slope ground at traffic side of barrier to drain. Maximum slope ±10%.

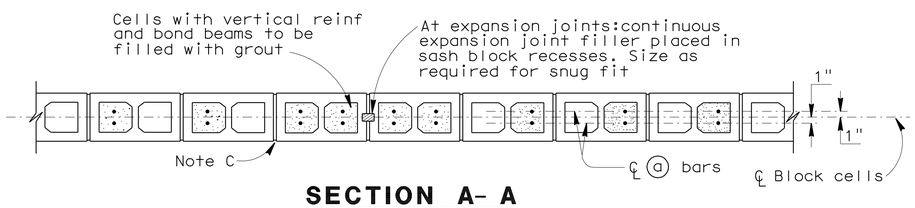

SECTION A- A

For details not shown,see other details

H=6'-4" THRU H=10'-4"

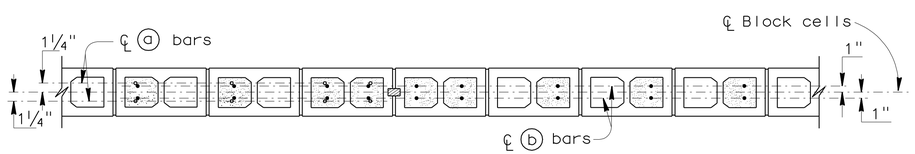

SECTION A- A

SECTION B- B

For details not shown,see other details

H=12'-4" THRU H=16'-4"

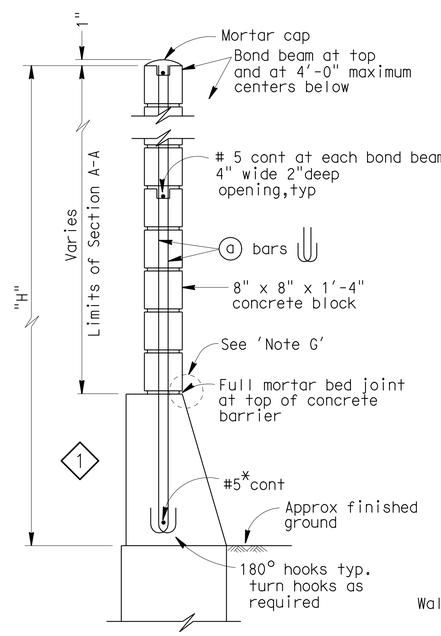

H=6'-4" THRU H=10'-4"

For details not shown,see H=12'-4" thru H=16'-4"

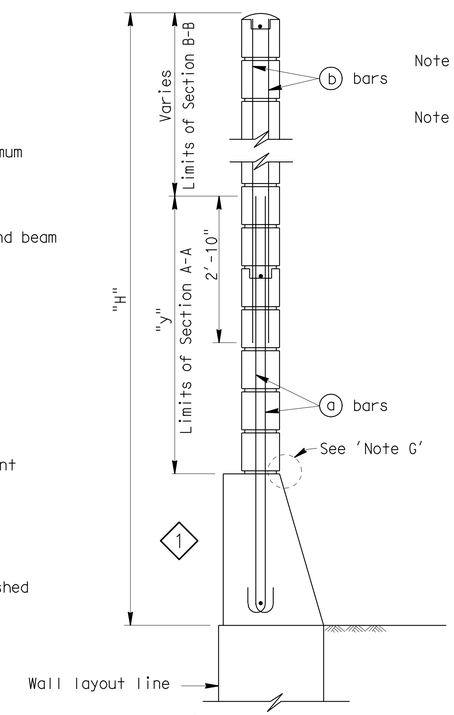

H=12'-4" THRU H=16'-4"

For details not shown,see H=6'-4" thru H=10'-4"

TYPICAL SECTIONS

* Indicates post-fabricated epoxy coated reinforcement.

GENERAL NOTES

Note A: For type of block and joint finish, see "Road Plans".

Note B: When blocks are laid in stacked bond, ladder type, galvanized joint reinforcement shall be provided. A minimum of 2-9 gauge wires continuous at 4'-0" maximum to be used. Locate reinforcement in joints that are at the approximate midpoint between bond beams.

Note C: Horizontal joints shall be tooled concave or may be weathered.
Vertical joints shall be tooled concave or may be raked.

Note D: For intermediate wall heights that are between the "H's" given. Use the tabular information for the next higher "H".

Note E: Masonry strengths are listed in "SOUNDWALL REINFORCEMENT TABLE".

Note F: Concrete to be used for the barrier shall contain not less than 590 pounds of cementitious material per cubic yard.

Note G: Exact location of sound wall CMU block to be located per "Aesthetic Sound Wall Details" sheet in "Road Plans". 2

RETAINING WALL & SOUND WALL NO. 57

STANDARD DRAWING

FILE NO. xs15-130-1e

APPROVED BY T SATTER — RESPONSIBLE TECHNICAL SPECIALIST
APPROVAL DATE 2-13-09

RELEASED BY ROBERTO LACALLE — RESPONSIBLE OFFICE CHIEF
RELEASE DATE 2-13-09

1 Modified Detail
2 Modified Notes

STATE OF CALIFORNIA DEPARTMENT OF TRANSPORTATION

DIVISION OF ENGINEERING SERVICES

BRIDGE NO. 52-E0015
POST MILE 40.78-41.07

SOUNDWALL - MASONRY BLOCK WITH BARRIER ON RETAINING WALL

DETAILS NO. 1

DS OSD 2147A (ENGLISH STANDARD DRAWING "XS" BORDER REV. 01/11/08)

ORIGINAL SCALE IN INCHES FOR REDUCED PLANS 0 1 2 3

CU 07
EA 260701

DISREGARD PRINTS BEARING EARLIER REVISION DATES

REVISION DATES (PRELIMINARY STAGE ONLY) 9-18-09 10-30-09 07-27-10 01-20-11

SHEET 6 OF 7

USERNAME => s124496

g-52-e0015-u-miscdt03.dgn

DATE PLOTTED => 25-JUN-2011 TIME PLOTTED => 09:46

DIST.	COUNTY	ROUTE	POST MILES TOTAL PROJECT	SHEET NO.	TOTAL SHEETS
07	Ven,SB	101	R39.8/R43.6, 0.0/2.2	726	757

REGISTERED ENGINEER - CIVIL 10-18-10

6-20-11
PLANS APPROVAL DATE

REGISTERED PROFESSIONAL ENGINEER Douglas C. Menzmer No. C63498 Exp. 09-30-12 CIVIL STATE OF CALIFORNIA

The State of California or its officers or agents shall not be responsible for the accuracy or completeness of electronic copies of this plan sheet.

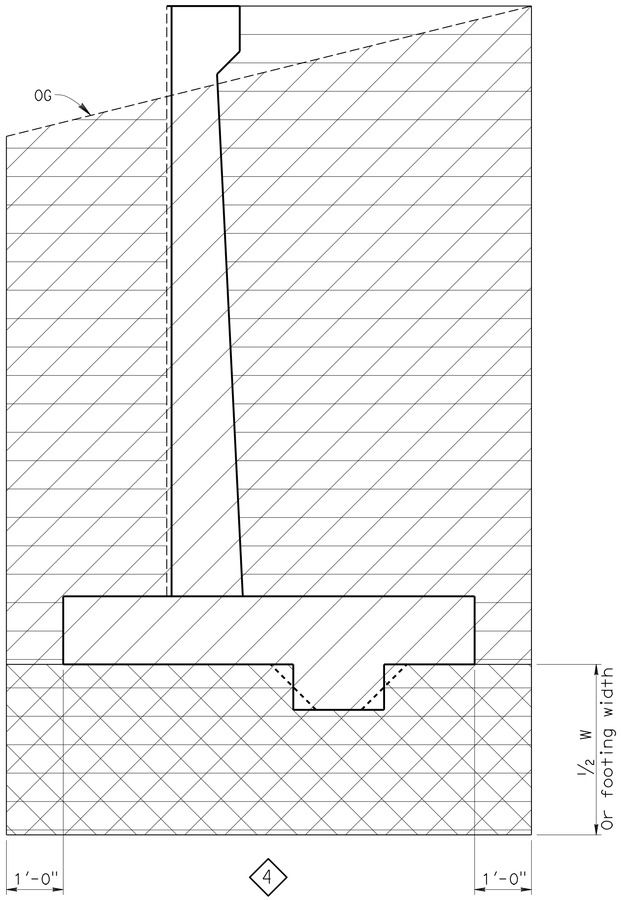

PAY LIMITS FOR STRUCTURE EXCAVATION AND BACK FILL

FOR RETAINING WALL TYPE 1 SWB

LEGEND:

- Structure Excavation (Retaining wall)
- Structure Backfill (Retaining wall)
- Relative Compaction of 95% required for structure backfill below retaining wall footing

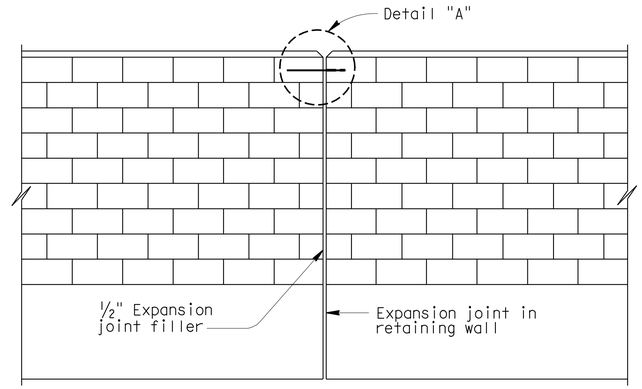

ALIGNMENT KEY DETAIL

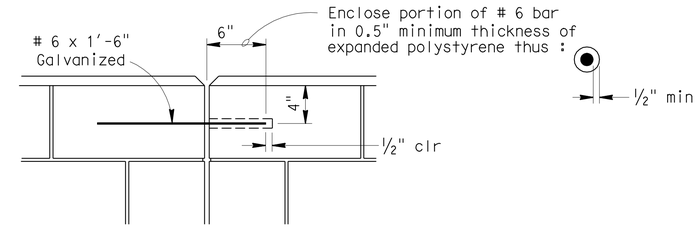

DETAIL A

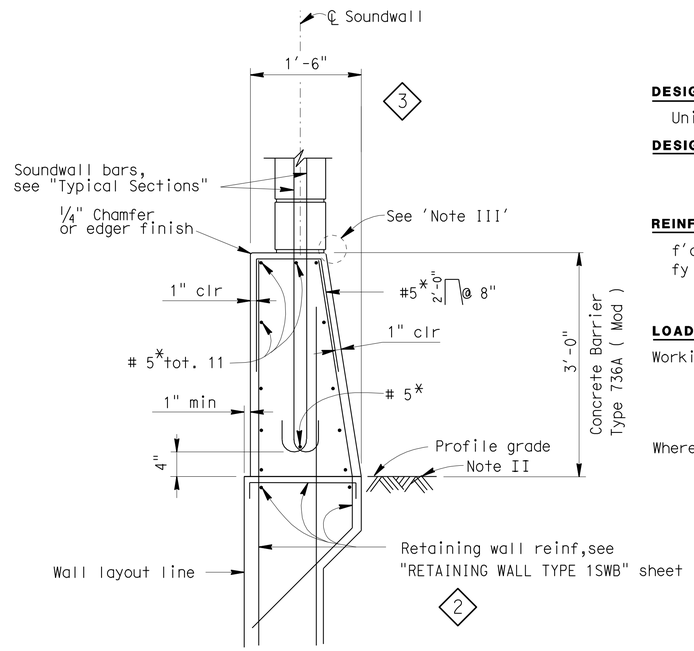

BARRIER SECTION

* Indicates post-fabricated epoxy coated reinforcement.

NOTES:

I : For details not shown, see "RETAINING WALL TYPE 1SWB" sheet.

II : Slope ground at traffic side of barrier to drain. Maximum slope ±10%. See Standard Plan B11-56, Note D.

III : Exact location of sound wall CMU block to be located per "Aesthetic Sound Wall Details" sheet in "Road Plans".

DESIGN NOTES

DESIGN

Uniform Building Code, 1997 Edition and the Bridge Design Specifications.

DESIGN WIND LOAD

33 PSF

DESIGN SEISMIC LOAD

0.57 Dead load

REINFORCED CONCRETE

f'c = 3250 PSI
fy = 60 KSI

CONCRETE MASONRY

REGULAR STRENGTH	HIGH STRENGTH	
f'm = 1500 PSI	f'm = 2000 PSI	f'm = 2500 PSI
fb = 1500 PSI	fb = 660 PSI	fb = 830 PSI
fs = 24.0 KSI	fs = 24.0 KSI	fs = 24000 PSI
n = 25.8	n = 19.3	n = 15.5

LOAD FACTORS AND LOAD COMBINATIONS

Working Stress Design (WSD) Percentage of unit stress

Group 1: D + E + SC 100%
Group 2: D + W + SC + E 100%
Group 3: D + 0.71 EQD + E 100%

Where:

D = Dead load
E = Lateral earth pressure
SC = Live load surcharge
W = Wind load
EQD = Seismic dead load

Load Factor Design (LFD)

Group A: βD +1.7 E + 1.7 SC
Group B: βD +1.7 E + 1.3 W
Group C: βD +1.3 E + 1.0 EQE
Group D: βD +1.3 E + 1.0 EQD
Group E: βD +1.1 E + 0.85 (EQE + EQD)

Where : β = 0.9 or 1.2, whichever controls in design
D = Dead load
E = Lateral earth pressure
SC = Live load surcharge
W = Wind load
EQD = Seismic dead load
EQE = Seismic earth load

STRENGTH REDUCTION FACTORS, ø

Reinforced concrete:
For flexure ø=0.90
For shear ø=0.85

Concrete masonry:
For flexure ø=0.80
For shear ø=0.60

Foundations :

See "RETAINING WALL WITH SOUNDWALL" sheets.

NO SCALE

STANDARD DRAWING

FILE NO. xs15-130-2e

APPROVED BY T SATTER (RESPONSIBLE TECHNICAL SPECIALIST) APPROVAL DATE 4-15-08

RELEASED BY ROBERTO LACALLE (RESPONSIBLE OFFICE CHIEF) RELEASE DATE 4-15-08

1 Deleted detail
2 Revised note
3 Modified detail
4 Add detail

STATE OF CALIFORNIA DEPARTMENT OF TRANSPORTATION

DIVISION OF ENGINEERING SERVICES

BRIDGE NO. 52-E0015
POST MILE 40.78-41.07

RETAINING WALL & SOUND WALL NO. 57

SOUNDWALL - MASONRY BLOCK WITH BARRIER ON RETAINING WALL

DETAILS NO. 2

DS OSD 2147A (ENGLISH STANDARD DRAWING "XS" BORDER REV. 01/11/08)

ORIGINAL SCALE IN INCHES FOR REDUCED PLANS 0 1 2 3

CU 07
EA 260701

DISREGARD PRINTS BEARING EARLIER REVISION DATES

REVISION DATES (PRELIMINARY STAGE ONLY) 9-16-09 10-30-09 07-27-10 01-20-11

SHEET 7 OF 7

USERNAME => s124496

g-52-e0015-u-miscdt04.dgn

DATE PLOTTED => 25-JUN-2011 TIME PLOTTED => 03:32:46

DIST	COUNTY	ROUTE	POST MILES TOTAL PROJECT	SHEET No	TOTAL SHEETS
07	Ven,SB	101	R39.8/R43.6, 0.0/2.2	727	757

REGISTERED CIVIL ENGINEER 10-18-10 DATE

6-20-11
PLANS APPROVAL DATE

REGISTERED PROFESSIONAL ENGINEER Douglas C. Menzmer No. C63498 Exp. 09-30-12 CIVIL STATE OF CALIFORNIA

The State of California or its officers or agents shall not be responsible for the accuracy or completeness of electronic copies of this plan sheet.

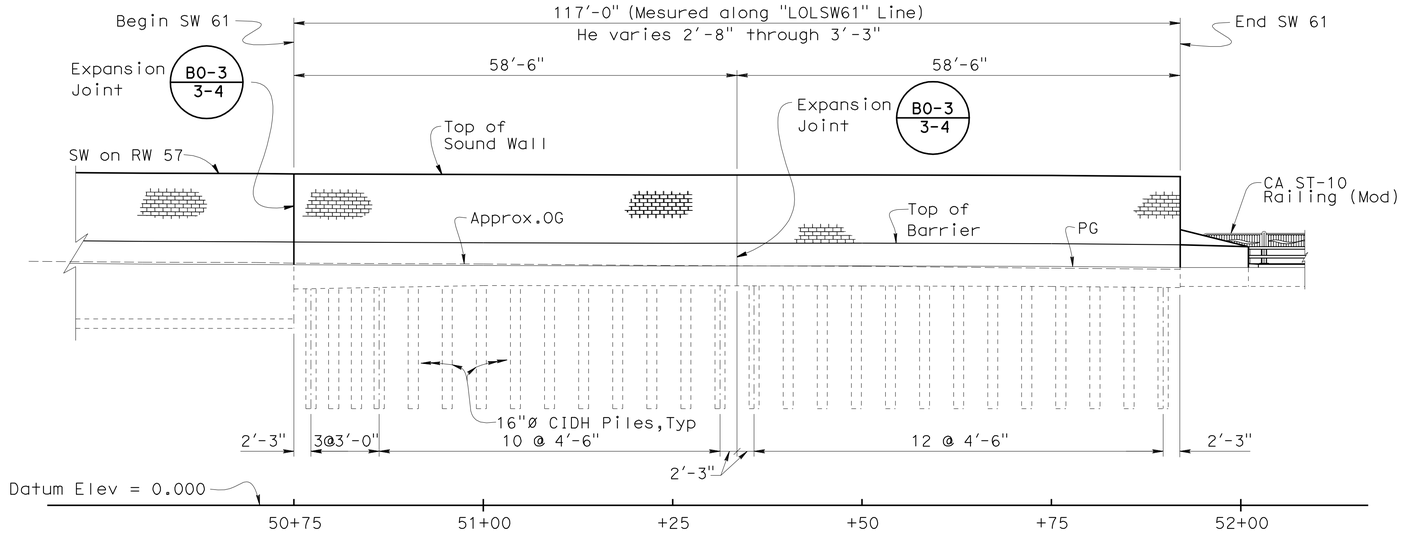

ELEVATION (DEVELOPED)

1" = 10'

B15-6 B15-7 B15-8

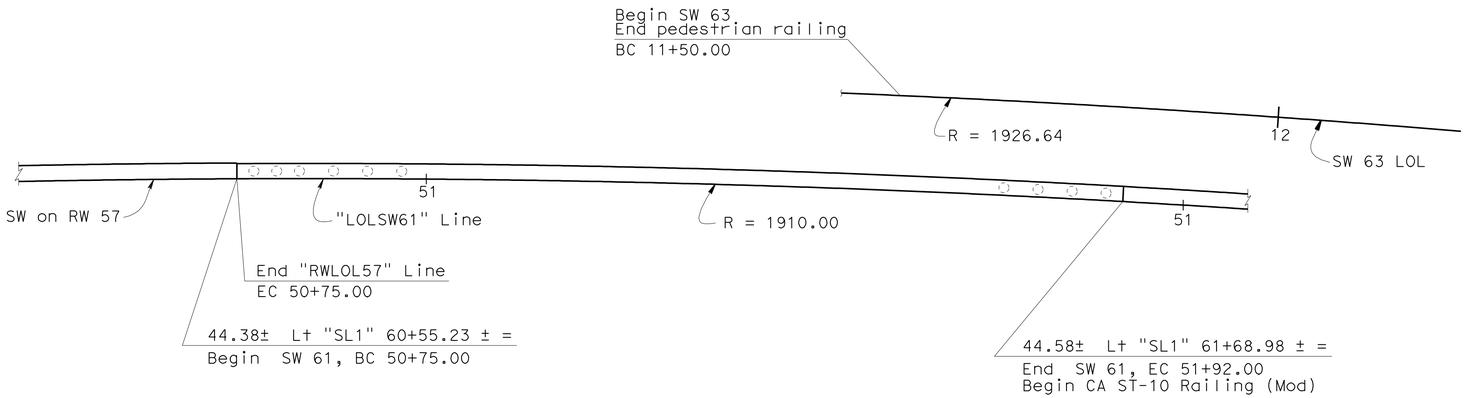

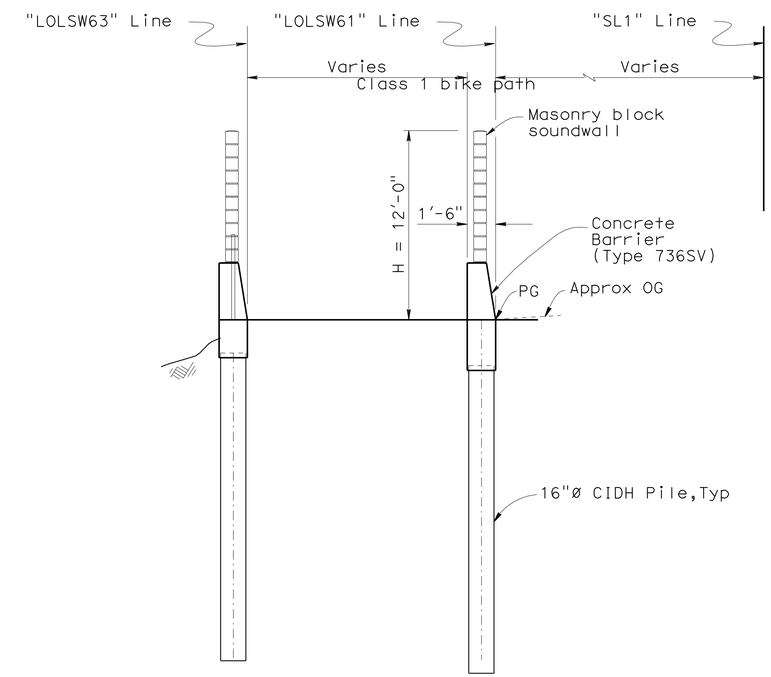

TYPICAL SECTION

1/4" = 1'

B15-6 B15-7 B15-8

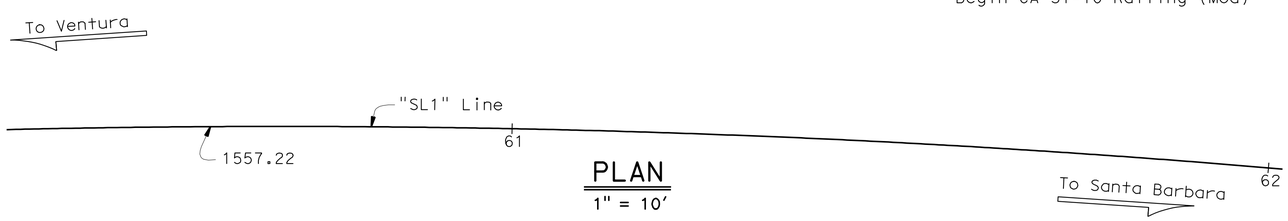

PLAN

1" = 10'

INDEX TO PLANS

SHEET NO.	PLANS
1	GENERAL PLAN
2	FOUNDATION PLAN
3	TYPICAL SECTION

STANDARD PLAN SHEET NO.

DETAIL NO.

STANDARD PLANS DATED MAY 2006

PLAN	PLAN TITLE
A10A	ACRONYMS AND ABBREVIATIONS (SHEET 1 OF 2)
A10B	ACRONYMS AND ABBREVIATIONS (SHEET 2 OF 2)
A62B	LIMITS OF PAYMENT FOR EXCAVATION AND BACKFILL BRIDGE SURCHARGE AND WALL
B15-6	SOUND WALL MASONRY BLOCK ON TYPE 736 S/SV BARRIER DETAILS (1)
B15-7	SOUND WALL MASONRY BLOCK ON TYPE 736 S/SV BARRIER DETAILS (2)
B15-8	SOUND WALL MASONRY BLOCK ON TYPE 736 S/SV BARRIER DETAILS (3)
B15-9	SOUND WALL MASONRY BLOCK MISCELLANEOUS DETAILS

"SL1" Line	"LOLSW61" Line
R = 1557.22	R = 1910.00
Δ = 45°31'36"	Δ = 3°30'35"
T = 653.42	T = 58.52
L = 1237.35	L = 117.00

Notes:

1. See "Road Plans" for aesthetic sound wall details.
2. See "Road Plans" for CA ST-10 Railing (Mod).
3. See "Road Plans" for pedestrian railing details.

QUANTITIES

16" CAST-IN-DRILLED-HOLE CONCRETE PILING	439	LF
SOUND WALL (MASONRY BLOCK)	1,053	SQFT
CONCRETE BARRIER (TYPE 736SV)	117	LF

Matt Holm
DESIGN ENGINEER

	BY	CHECKED			
DESIGN	Leon Valla	Doug Menzmer	LOAD & RESISTANCE FACTOR DESIGN		
DETAILS	Wei Zhang	Doug Menzmer	LAYOUT	Leon Valla	Doug Menzmer
QUANTITIES	Leon Valla	Doug Menzmer	SPECIFICATIONS	Erwin Rufino	PLANS AND SPECS COMPARED Erwin Rufino

ORIGINAL SCALE IN INCHES FOR REDUCED PLANS 0 1 2 3

STATE OF CALIFORNIA
DEPARTMENT OF TRANSPORTATION

DIVISION OF ENGINEERING SERVICES
STRUCTURE DESIGN
DESIGN BRANCH 12

CU 07
EA 260701

BRIDGE NO. 52-Wall61
POST MILE 40.78-41.07

SOUND WALL NO. 61
GENERAL PLAN

DISREGARD PRINTS BEARING EARLIER REVISION DATES

REVISION DATES: 9-22-09, 10-26-09, 10-30-09, 03-24-10, 04-07-10, 07-16-10, 01-21-11, 4-18-11

SHEET 1 OF 3

STRUCTURES DESIGN GENERAL PLAN SHEET (ENGLISH) (REV.07-24-06)

FILE => h-52-wall61-a-gp.dgn

USERNAME => s124496 DATE PLOTTED => 25-JUN-2011 TIME PLOTTED => 09:46

DIST	COUNTY	ROUTE	POST MILES TOTAL PROJECT	SHEET No	TOTAL SHEETS
07	Ven,SB	101	R39.8/R43.6, 0.0/2.2	728	757

REGISTERED CIVIL ENGINEER 10-18-10 DATE

6-20-11
PLANS APPROVAL DATE

The State of California or its officers or agents shall not be responsible for the accuracy or completeness of electronic copies of this plan sheet.

REGISTERED PROFESSIONAL ENGINEER
Douglas C. Menzmer
No. C63498
Exp. 09-30-12
CIVIL
STATE OF CALIFORNIA

CURVE DATA

No.	R	Δ	T	L
Ⓐ	1557.22	45°31'36"	653.42	1237.35
Ⓔ	1911.50	9°18'18"	155.56	310.43
Ⓕ	1910.00	3°30'35"	58.52	117.00
Ⓖ	1926.64	4°30'16"	75.77	151.46

Notes:

1. Elec Line, Gas Line, Oil Line, Tele Line, Tele Cable Line, Sewer Line, Storm Drain Line, Water Line, Per Dist. Map.
2. All dia. of tree on construction class.

⁘ Indicates 16"ø CIDH pile. Not all piles shown.

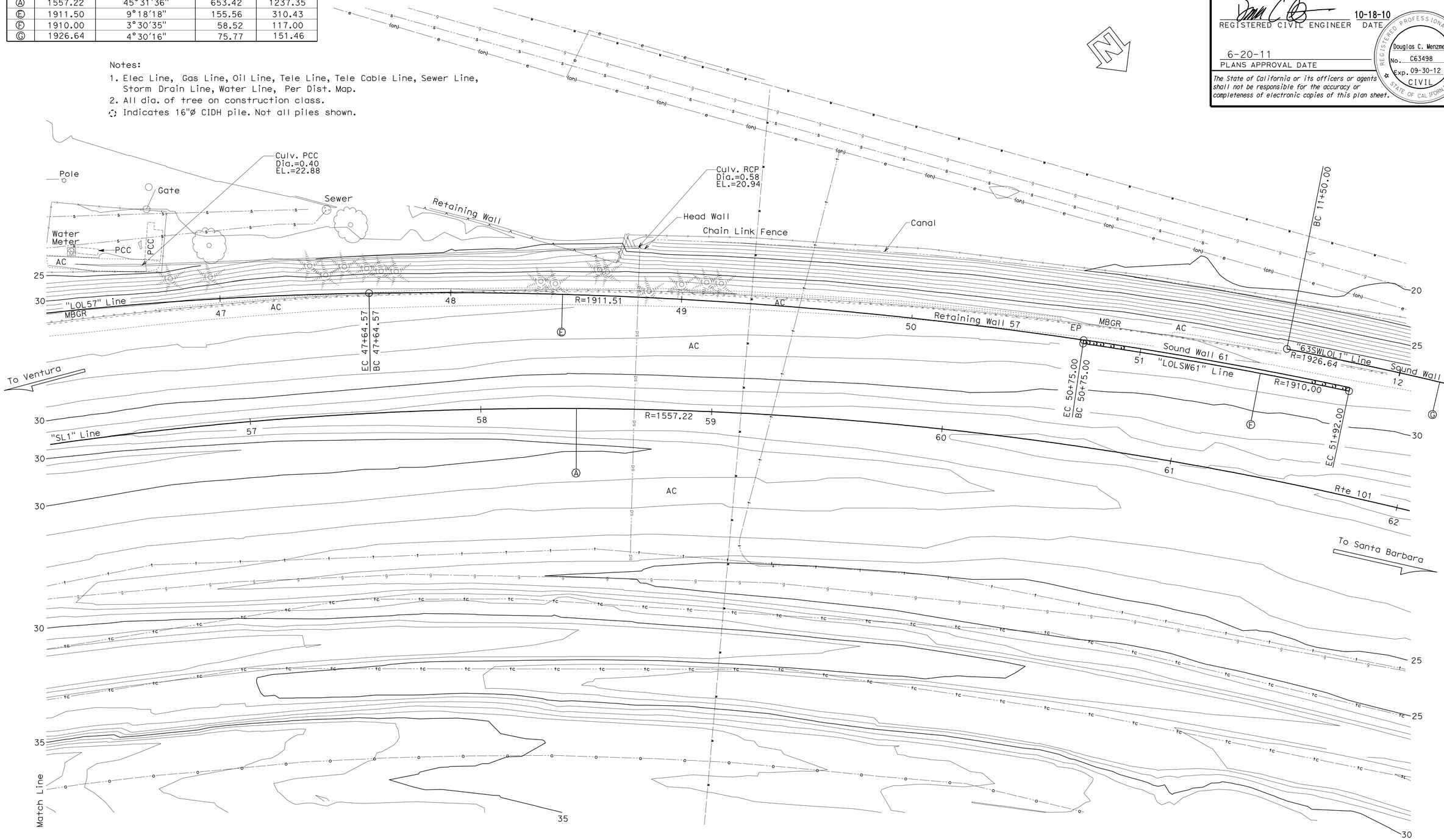

PRELIMINARY INVESTIGATION SECTION							
SCALE 1"=20'	VERT.DATUM NAVD 88	PHOTOGRAMMETRY AS OF: X					
	HORZ.DATUM NAD 83 (91.35)	SURVEYED	BY District	CHECKED	BY Tim Mason 7/2009		
	ALIGNMENT TIES Dist. Traverse Sheet	DRAFTED	BY Sharon Zheng 7/2009	CHECKED	BY T.Zolnikova 7/2009		

	BY	CHECKED
DESIGN	Leon Valla	Doug Menzmer
DETAILS	Wei Zhang	Leon Valla
QUANTITIES	Leon Valla	Doug Menzmer

STATE OF CALIFORNIA
DEPARTMENT OF TRANSPORTATION

DIVISION OF ENGINEERING SERVICES
STRUCTURE DESIGN
DESIGN BRANCH 12

BRIDGE NO. 52-Wall61
POST MILE 40.78-41.07

SOUND WALL NO. 61
FOUNDATION PLAN

STRUCTURES FOUNDATION PLAN SHEET (ENGLISH) (REV. 10/25/05)

ORIGINAL SCALE IN INCHES FOR REDUCED PLANS 0 1 2 3

CU 07
EA 260701

DISREGARD PRINTS BEARING EARLIER REVISION DATES → 9-3-09 10-30-09 03-24-10 04-07-10 07-15-10

REVISION DATES

SHEET 2 OF 3

FILE => h-52-wall61-e-hpl.dgn

USERNAME => s124496 DATE PLOTTED => 25-JUN-2011 TIME PLOTTED => 09:46

DIST	COUNTY	ROUTE	POST MILES TOTAL PROJECT	SHEET No	TOTAL SHEETS
07	Ven,SB	101	R39.8/R43.6, 0.0/2.2	729	757

REGISTERED CIVIL ENGINEER 10-18-10 DATE

6-20-11
PLANS APPROVAL DATE

The State of California or its officers or agents shall not be responsible for the accuracy or completeness of electronic copies of this plan sheet.

REGISTERED PROFESSIONAL ENGINEER
Douglas C. Menzmer
No. C63498
Exp. 09-30-12
CIVIL
STATE OF CALIFORNIA

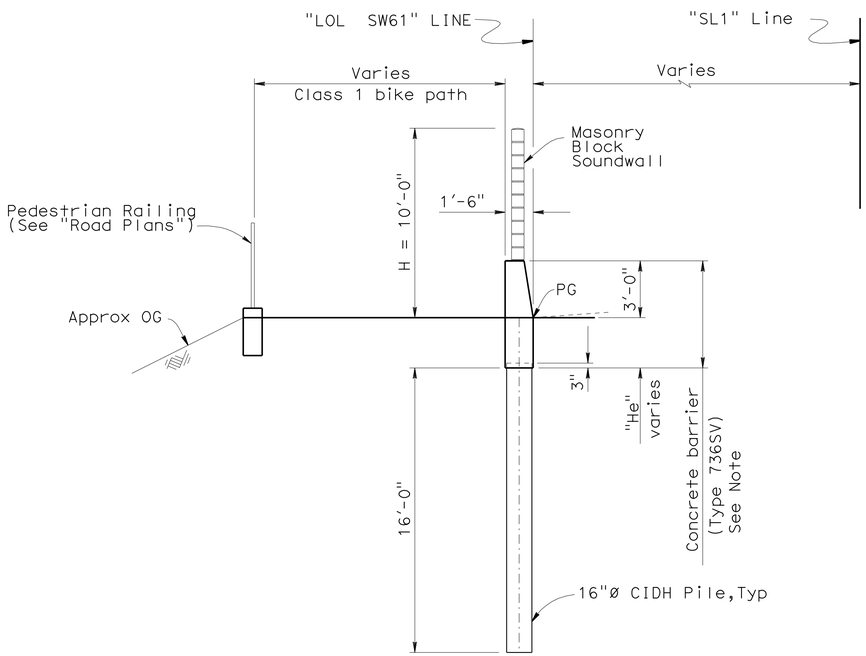

SOUND WALL - MASONRY
BLOCK ON CONCRETE BARRIER (TYPE 736SV)
TYPICAL SECTION
STA 50+75.00 TO STA 51+62.062
1/4" = 1'

B15-6 B15-7 B15-8

Note: Pre-fabricated epoxy coated reinforcement required in barrier

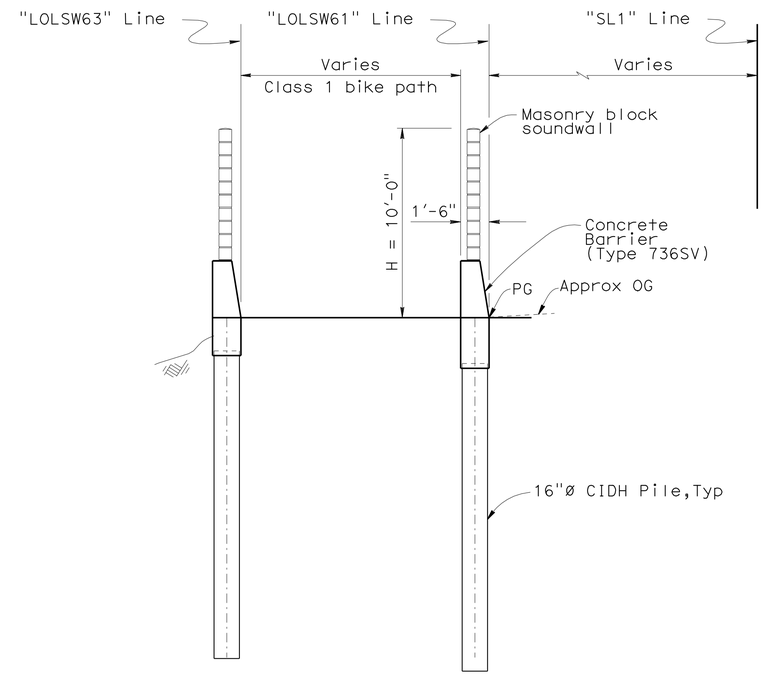

SOUND WALL - MASONRY
BLOCK ON CONCRETE BARRIER (TYPE 736SV)
TYPICAL SECTION
STA 51+62.062 TO STA 51+92.00
1/4" = 1'

B15-6 B15-7 B15-8

Note: Pre-fabricated epoxy coated reinforcement required in barrier

	Station	He
1	50+75.00	3'-3"
2	51+00.00	2'-8"
3	51+25.00	2'-8"
4	51+50.00	2'-8"
5	51+75.00	2'-8"
6	51+92.00	2'-8"

	BY	CHECKED
DESIGN	Leon Valla	Doug Menzmer
DETAILS	Wei Zhang	Leon Valla
QUANTITIES	Leon Valla	Doug Menzmer

STATE OF CALIFORNIA
DEPARTMENT OF TRANSPORTATION

DIVISION OF ENGINEERING SERVICES
STRUCTURE DESIGN
DESIGN BRANCH 12

BRIDGE NO. 52-Wall61
POST MILE 40.78-41.07

SOUND WALL NO. 61
TYPICAL SECTION

STRUCTURES DESIGN DETAIL SHEET (ENGLISH) (REV. 10/25/05)

ORIGINAL SCALE IN INCHES FOR REDUCED PLANS 0 1 2 3

CU 07
EA 260701

DISREGARD PRINTS BEARING EARLIER REVISION DATES

REVISION DATES: 09-28-09, 10-30-09, 03-24-10, 04-07-10, 07-16-10, 01-21-11

SHEET 3 OF 3

FILE => h-52-wall61-k-ts.dgn

USERNAME => s124496 DATE PLOTTED => 25-JUN-2011 TIME PLOTTED => 09:46

DIST	COUNTY	ROUTE	POST MILES TOTAL PROJECT	SHEET No	TOTAL SHEETS
07	Ven,SB	101	R39.8/R43.6, 0.0/2.2	730	757

REGISTERED CIVIL ENGINEER 10-18-10 DATE

6-20-11
PLANS APPROVAL DATE

REGISTERED PROFESSIONAL ENGINEER Douglas C. Menzmer No. C63498 Exp. 09-30-12 CIVIL STATE OF CALIFORNIA

The State of California or its officers or agents shall not be responsible for the accuracy or completeness of electronic copies of this plan sheet.

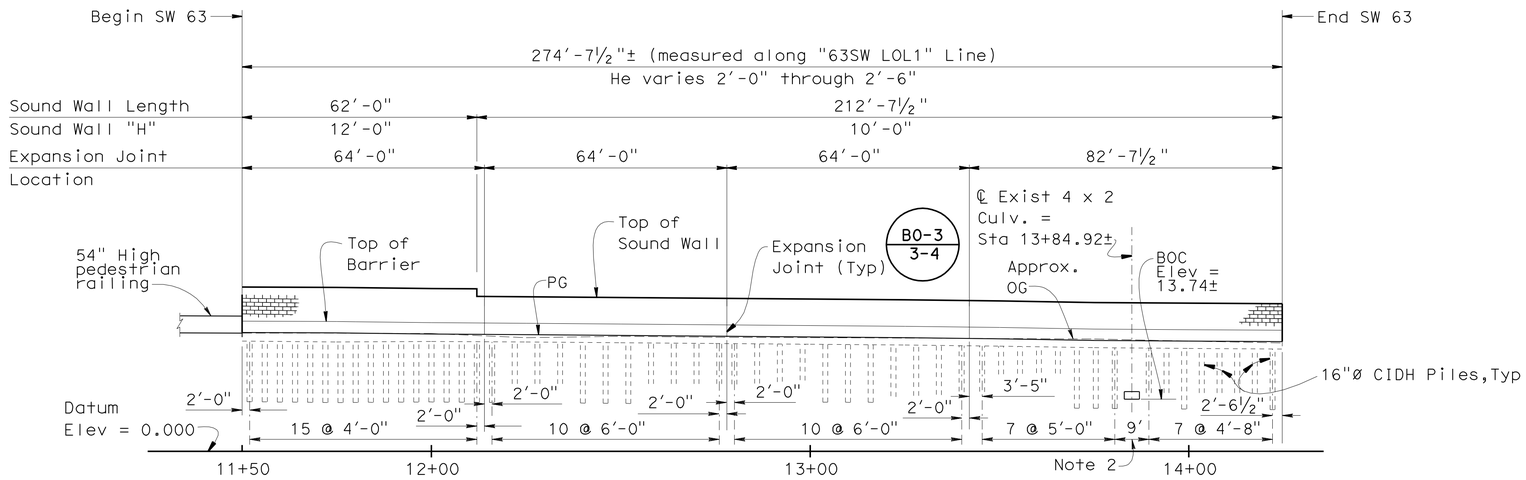

ELEVATION (DEVELOPED)

1" = 20'

B15-6 B15-7 B15-8

Notes:

1. See "Road Plans" For aesthetic sound wall details.
2. Piles must clear existing culvert by 1'-10". Adjust pile spacing each side of existing culvert in order to maintain this clearance.

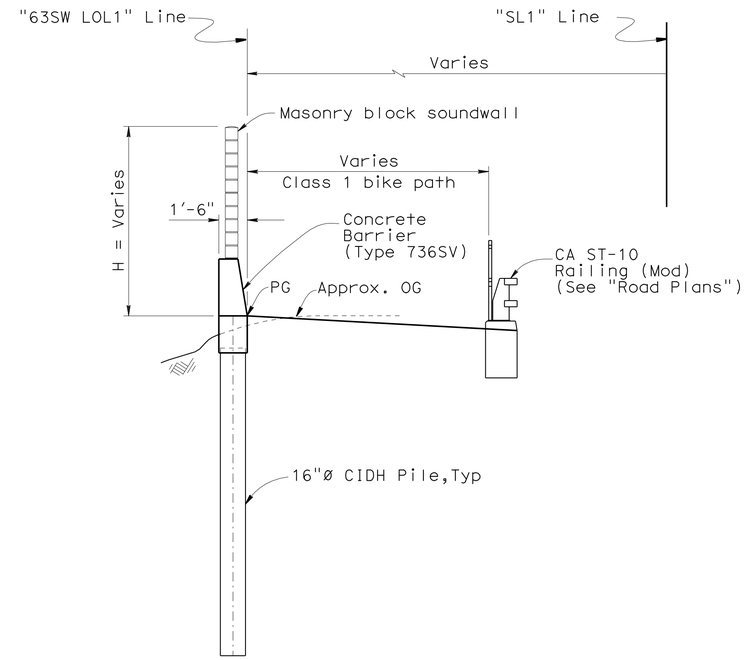

TYPICAL SECTION

¼" = 1'

B15-6 B15-7 B15-8

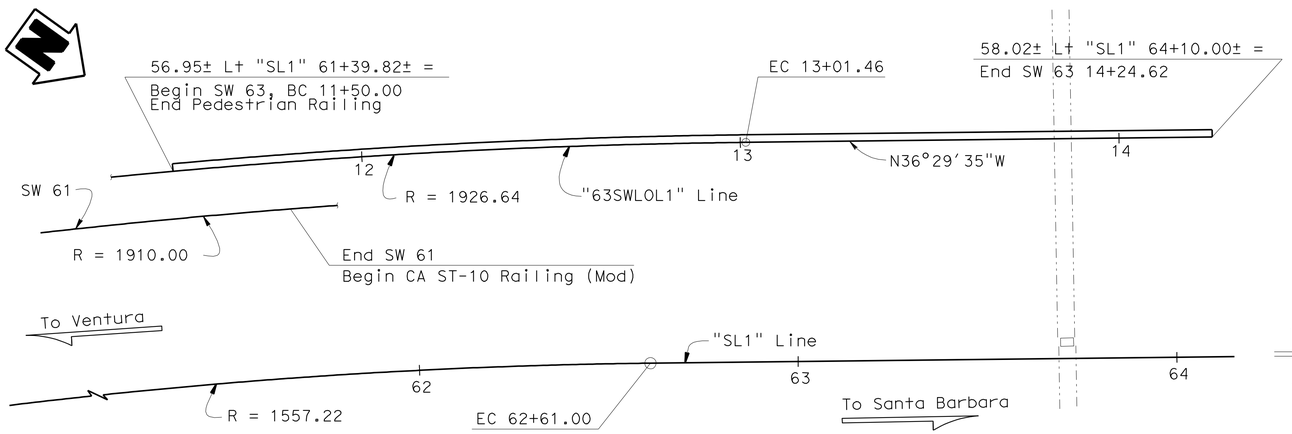

PLAN

1" = 20'

"SL1" Line	"63SWLOL1"
R = 1557.22	R = 1926.64
Δ = 45°31'36"	Δ = 4°30'16"
T = 653.42	T = 75.77
L = 1237.35	L = 151.46

QUANTITIES

16" CAST-IN-DRILLED-HOLE CONCRETE PILING	878	LF
SOUND WALL (MASONRY BLOCK)	2,046	SQFT
CONCRETE BARRIER (TYPE 736SV)	275	LF

INDEX TO PLANS

SHEET NO.	PLANS
1	GENERAL PLAN
2	FOUNDATION PLAN
3	TYPICAL SECTION

STANDARD PLAN SHEET NO.

DETAIL NO.

STANDARD PLANS DATED MAY 2006

PLAN	PLAN TITLE
A10A	ACRONYMS AND ABBREVIATIONS (SHEET 1 OF 2)
A10B	ACRONYMS AND ABBREVIATIONS (SHEET 2 OF 2)
A62B	LIMITS OF PAYMENT FOR EXCAVATION AND BACKFILL BRIDGE SURCHARGE AND WALL
B15-6	SOUND WALL MASONRY BLOCK ON TYPE 736 S/SV BARRIER DETAILS (1)
B15-7	SOUND WALL MASONRY BLOCK ON TYPE 736 S/SV BARRIER DETAILS (2)
B15-8	SOUND WALL MASONRY BLOCK ON TYPE 736 S/SV BARRIER DETAILS (3)
B15-9	SOUND WALL MASONRY BLOCK MISCELLANEOUS DETAILS

Matt Holm
DESIGN ENGINEER

	BY	CHECKED			
DESIGN	Leon Valla	Doug Menzmer	LOAD & RESISTANCE FACTOR DESIGN		
DETAILS	Wei Zhang	Doug Menzmer	LAYOUT	Leon Valla	Doug Menzmer
QUANTITIES	Leon Valla	Doug Menzmer	SPECIFICATIONS	Erwin Rufino	PLANS AND SPECS COMPARED Erwin Rufino

ORIGINAL SCALE IN INCHES FOR REDUCED PLANS 0 1 2 3

STATE OF CALIFORNIA
DEPARTMENT OF TRANSPORTATION

DIVISION OF ENGINEERING SERVICES
STRUCTURE DESIGN
DESIGN BRANCH 12

CU 07
EA 260701

BRIDGE NO. 52-Wall63
POST MILE 40.78-41.07

SOUND WALL NO. 63
GENERAL PLAN

DISREGARD PRINTS BEARING EARLIER REVISION DATES

REVISION DATES: 9-22-09 10-30-09 03-26-10 04-26-10 07-01-10 07-13-10 01-21-11 2-28-11 4-18-11

SHEET 1 OF 3

STRUCTURES DESIGN GENERAL PLAN SHEET (ENGLISH) (REV.07-24-06)

FILE => i-52-wall63-a-gp.dgn

USERNAME => s124936 DATE PLOTTED => 25-JUN-2011 TIME PLOTTED => 09:47

DIST	COUNTY	ROUTE	POST MILES TOTAL PROJECT	SHEET No	TOTAL SHEETS
07	Ven,SB	101	R39.8/R43.6, 0.0/2.2	731	757

REGISTERED CIVIL ENGINEER — DATE 10-18-10

6-20-11
PLANS APPROVAL DATE

REGISTERED PROFESSIONAL ENGINEER — Douglas C. Menzmer — No. C63498 — Exp. 09-30-12 — CIVIL — STATE OF CALIFORNIA

The State of California or its officers or agents shall not be responsible for the accuracy or completeness of electronic copies of this plan sheet.

CURVE DATA

No.	R	Δ	T	L
Ⓐ	1557.22	45°31′36"	653.42	1237.35
Ⓕ	1910.00	3°30′35"	58.52	117.00
Ⓖ	1926.64	4°30′16"	75.77	151.46

Notes:

1. All Dia. of tree and some of trees on construction class
2. Elec Line, Gas Line, Oil Line, Tele Line, Tele Cable Line, Sewer Line, Storm Drain Line, Water Line, Per Dist. Map

◌ Indicates 16"Ø CIDH pile. Not all piles shown

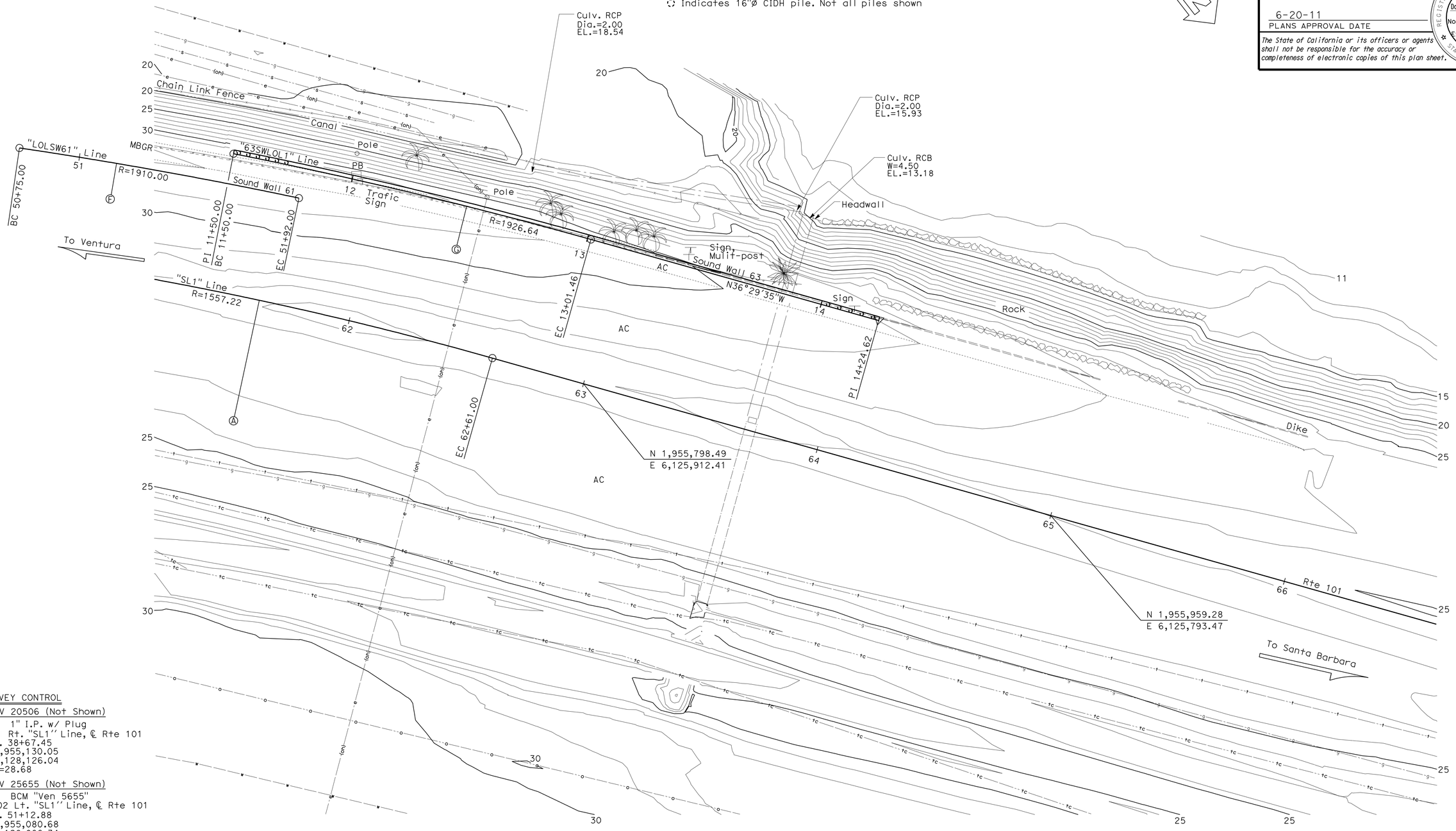

SURVEY CONTROL

PRHV 20506 (Not Shown)

Fnd 1" I.P. w/ Plug
7.11 Rt. "SL1" Line, ℄ Rte 101
Sta. 38+67.45
N 1,955,130.05
E 6,128,126.04
EL.=28.68

PRHV 25655 (Not Shown)

Fnd BCM "Ven 5655"
87.02 Lt. "SL1" Line, ℄ Rte 101
Sta. 51+12.88
N 1,955,080.68
E 6,126,866.34
EL.=34.63

PRELIMINARY INVESTIGATION SECTION

SCALE	VERT.DATUM NAVD 88	PHOTOGRAMMETRY AS OF: X			
1"=20'	HORZ.DATUM NAD 83 (91.35)	SURVEYED	BY District	CHECKED	BY Tim Mason 7/2009
ALIGNMENT TIES Dist. Traverse Sheet		DRAFTED	BY Sharon Zheng 7/2009	CHECKED	BY T.Zolnikova 7/2009

	BY	CHECKED
DESIGN	Leon Valla	Doug Menzmer
DETAILS	Wei Zhang	Leon Valla
QUANTITIES	Leon Valla	Doug Menzmer

STATE OF CALIFORNIA
DEPARTMENT OF TRANSPORTATION

DIVISION OF ENGINEERING SERVICES
STRUCTURE DESIGN
DESIGN BRANCH 12

BRIDGE NO. 52-Wall63
POST MILE 40.78-41.07

SOUND WALL NO. 63
FOUNDATION PLAN

STRUCTURES FOUNDATION PLAN SHEET (ENGLISH) (REV. 10/25/05)

ORIGINAL SCALE IN INCHES FOR REDUCED PLANS 0 1 2 3

CU 07
EA 260701

DISREGARD PRINTS BEARING EARLIER REVISION DATES

REVISION DATES: 1-23-09 8-28-09 9-3-09 10-30-09 03-26-10 04-08-10 07-07-10

SHEET 2 OF 3

FILE => i-52-wall63-e-fpl.dgn

USERNAME => s124496 DATE PLOTTED => 25-JUN-2011 TIME PLOTTED => 09:47

DIST	COUNTY	ROUTE	POST MILES TOTAL PROJECT	SHEET No	TOTAL SHEETS
07	Ven,SB	101	R39.8/R43.6, 0.0/2.2	732	757

REGISTERED CIVIL ENGINEER 10-18-10 DATE

6-20-11
PLANS APPROVAL DATE

REGISTERED PROFESSIONAL ENGINEER Douglas C. Menzmer No. C63498 Exp. 09-30-12 CIVIL STATE OF CALIFORNIA

The State of California or its officers or agents shall not be responsible for the accuracy or completeness of electronic copies of this plan sheet.

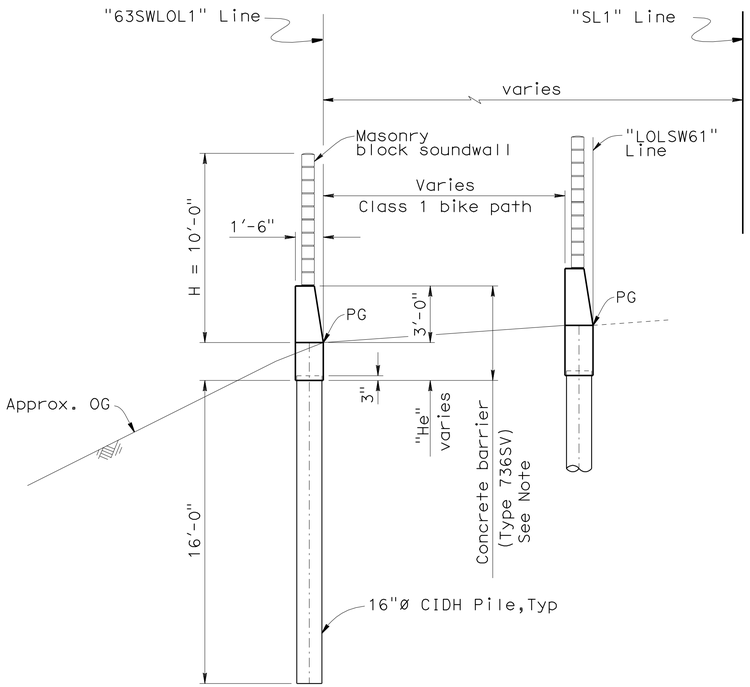

SOUND WALL - MASONRY
BLOCK ON CONCRETE BARRIER (TYPE 736SV)
TYPICAL SECTION
STA 11+50.00 TO STA 11+80.18

1/4" = 1'

B15-6 B15-7 B15-8

Note: Pre-fabricated epoxy coated reinforcement required in barrier and stem.

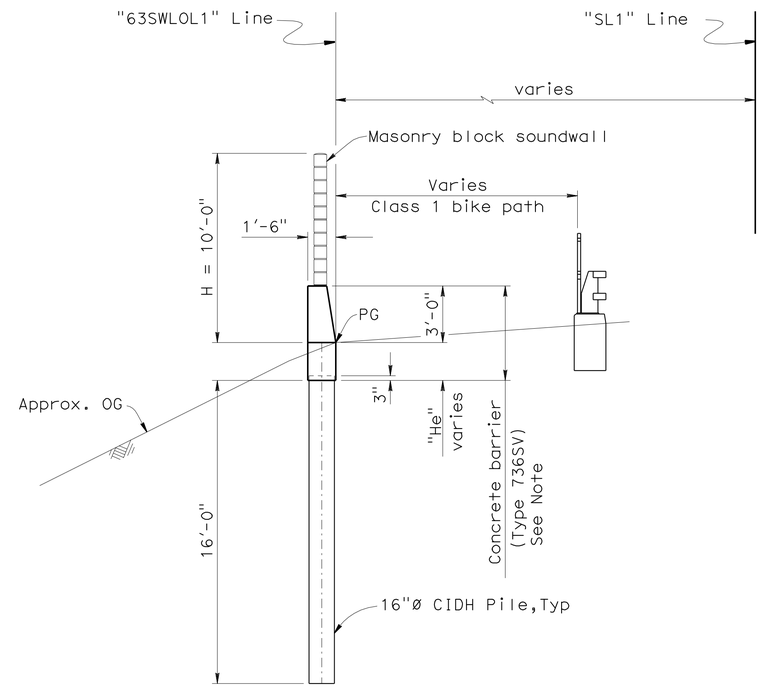

SOUND WALL - MASONRY
BLOCK ON CONCRETE BARRIER (TYPE 736SV)
TYPICAL SECTION
STA 11+80.18 TO STA 14+24.62

1/4" = 1'

B15-6 B15-7 B15-8

Note: Pre-fabricated epoxy coated reinforcement required in barrier and stem.

	Station	He
1	11+50.00	2'-3"
2	11+75.00	2'-6"
3	11+80.00	2'-4"
4	12+00.00	2'-0"
5	12+25.00	2'-0"
6	12+50.00	2'-0"
7	12+75.00	2'-0"
8	13+00.00	2'-0"
9	13+25.00	2'-0"
10	13+50.00	2'-0"
11	13+75.00	2'-0"
12	14+00.00	2'-0"
13	14+24.62	2'-0"

	BY	CHECKED
DESIGN	Leon Valla	Doug Menzmer
DETAILS	Wei Zhang	Leon Valla
QUANTITIES	Leon Valla	Doug Menzmer

STATE OF CALIFORNIA
DEPARTMENT OF TRANSPORTATION

DIVISION OF ENGINEERING SERVICES
STRUCTURE DESIGN
DESIGN BRANCH 12

BRIDGE NO. 52-Wall63
POST MILE 40.78-41.07

SOUND WALL NO. 63
TYPICAL SECTION

STRUCTURES DESIGN DETAIL SHEET (ENGLISH) (REV. 10/25/05)

ORIGINAL SCALE IN INCHES FOR REDUCED PLANS 0 1 2 3

CU 07
EA 260701

DISREGARD PRINTS BEARING EARLIER REVISION DATES

REVISION DATES: 09-22-09 10-26-09 10-30-09 03-26-10 04-08-10 07-01-10 07-13-10 01-21-11

SHEET 3 OF 3

FILE => i-52-wall63-k-ts.dgn

USERNAME => s124496 DATE PLOTTED => 25-JUN-2011 TIME PLOTTED => 09:47

DIST	COUNTY	ROUTE	POST MILES TOTAL PROJECT	SHEET No	TOTAL SHEETS
07	Ven,SB	101	R39.8/R43.6, 0.0/2.2	733	757

REGISTERED CIVIL ENGINEER 10-18-10 DATE

6-20-11
PLANS APPROVAL DATE

REGISTERED PROFESSIONAL ENGINEER Douglas C. Menzmer No. C63498 Exp. 09-30-12 CIVIL STATE OF CALIFORNIA

The State of California or its officers or agents shall not be responsible for the accuracy or completeness of electronic copies of this plan sheet.

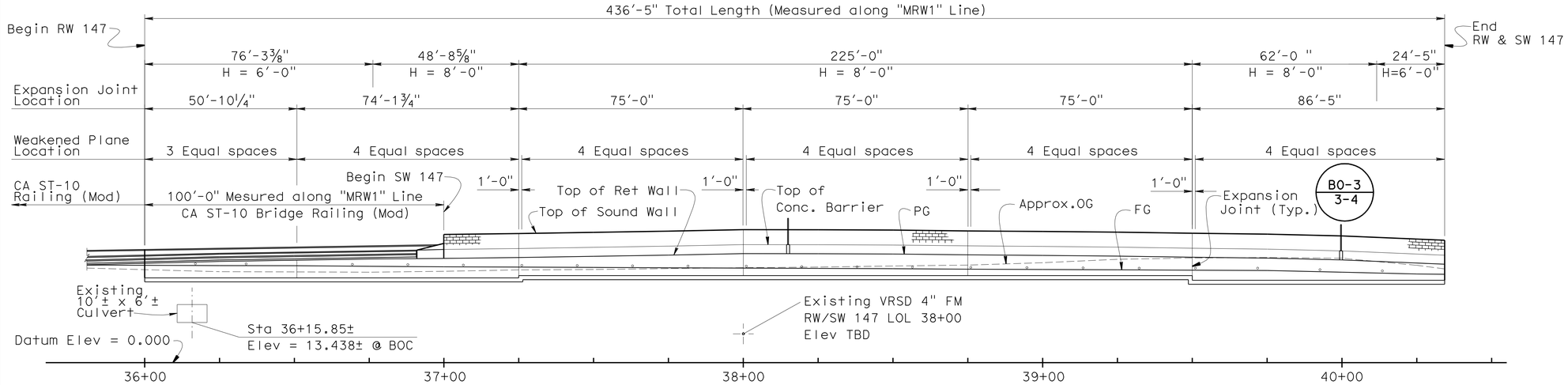

Note: For profile grade and finish grade elevations, see table on "Typical Section" sheet

ELEVATION (DEVELOPED)

1" = 20'

B3-8 | B0-3 3-2 | B0-3 3-3

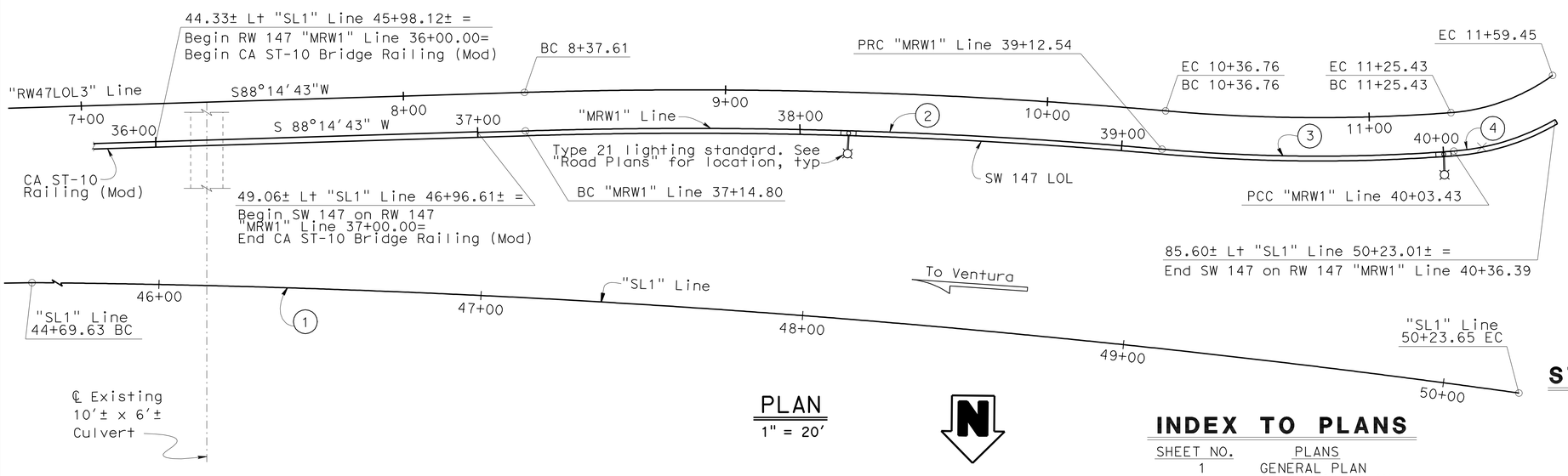

PLAN

1" = 20'

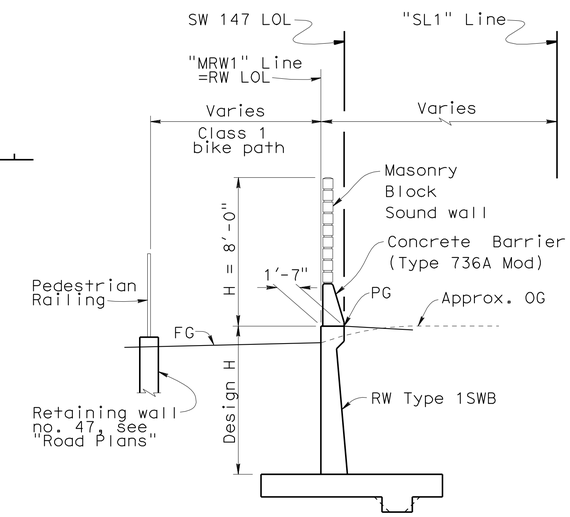

TYPICAL SECTION

No Scale

CURVE DATA

No.	R	Δ	T	L
1	3557.130	8°55'25"	277.570	554.020
2	1664.500	6°48'23"	98.983	197.732
3	553.500	-9°23'11"	45.548	90.891
4	73.500	-25°51'51"	21.590	33.179

QUANTITIES

STRUCTURE EXCAVATION (RETAINING WALL)	1,100	CY
STRUCTURE BACKFILL (RETAINING WALL)	496	CY
STRUCTURAL CONCRETE, RETAINING WALL	314	CY
SOUND WALL (MASONRY BLOCK)	1,685	SQFT
BAR REINFORCING STEEL (EPOXY COATED) (RETAINING WALL)	31,020	LB
MISCELLANEOUS METAL (BRIDGE)	180	LB
CA ST-10 BRIDGE RAILING (MOD)	100	LF
CONCRETE BARRIER (TYPE 736A MODIFIED)	337	LF

INDEX TO PLANS

SHEET NO.	PLANS
1	GENERAL PLAN
2	FOUNDATION PLAN
3	TYPICAL SECTION
4	LIGHTING STANDARD TYPE 21 ON RETAINING WALL TYPE 1SWB
5	RETAINING WALL TYPE 1SWB
6	SOUNDWALL WITH BARRIER ON RETAINING WALL MASONRY BLOCK -DETAILS NO. 1
7	SOUNDWALL WITH BARRIER ON RETAINING WALL MASONRY BLOCK -DETAILS NO. 2

STANDARD PLAN SHEET NO.

DETAIL NO.

STANDARD PLANS DATED MAY 2006

PLAN	PLAN TITLE
A10A	ACRONYMS AND ABBREVIATIONS (SHEET 1 OF 2)
A10B	ACRONYMS AND ABBREVIATIONS (SHEET 2 OF 2)
A62B	LIMITS OF PAYMENT FOR EXCAVATION AND BACKFILL BRIDGE SURCHARGE AND WALL
B0-3	BRIDGE DETAILS
B3-8	RETAINING WALL DETAIL NO. 1
B3-9	RETAINING WALL DETAIL NO. 2
B11-56	CONCRETE BARRIER TYPE 736 (MOD)
ES-6A	ELECTRICAL SYSTEMS (LIGHTING STANDARD, TYPE 15 AND 21, BARRIER RAIL MOUNTED DETAILS)
ES-6B	ELECTRICAL SYSTEMS (LIGHTING STANDARD, TYPE 15D AND 21D, DOUBLE ARM)
RSP-9A	ELECTRICAL SYSTEMS (ELECTRICAL DETAILS, STRUCTURE INSTALLATION)
RSP-9B	ELECTRICAL SYSTEMS (ELECTRICAL DETAILS, STRUCTURE INSTALLATION)

Matt Holm
DESIGN ENGINEER

	BY	CHECKED
DESIGN	Leon Valla	Doug Menzmer
DETAILS	Wei Zhang	Doug Menzmer
QUANTITIES	Leon Valla	Doug Menzmer

LOAD & RESISTANCE FACTOR DESIGN — LIVE LOADING: HS20 AND ALTERNATIVE AND PERMIT DESIGN VEHICLE

	BY	CHECKED
LAYOUT	Leon Valla	Doug Menzmer
SPECIFICATIONS	Erwin Rufino	PLANS AND SPECS COMPARED Erwin Rufino

ORIGINAL SCALE IN INCHES FOR REDUCED PLANS 0 1 2 3

STATE OF CALIFORNIA
DEPARTMENT OF TRANSPORTATION

DIVISION OF ENGINEERING SERVICES
STRUCTURE DESIGN
DESIGN BRANCH 12

CU 07
EA 260701

BRIDGE NO. 52-E0014
POST MILE 40.78-41.07

RETAINING WALL & SOUND WALL NO. 147
GENERAL PLAN

DISREGARD PRINTS BEARING EARLIER REVISION DATES

REVISION DATES: 10-2-09 10-8-09 10-28-09 10-30-09 03-24-10 07-28-10 01-20-11 2-28-11

SHEET 1 OF 7

USERNAME => s124496 DATE PLOTTED => 25-JUN-2011 TIME PLOTTED => 09:47

STRUCTURES DESIGN GENERAL PLAN SHEET (ENGLISH) (REV.07-24-06)

FILE => j-52-e0014-a-gp.dgn

DIST	COUNTY	ROUTE	POST MILES TOTAL PROJECT	SHEET No	TOTAL SHEETS
07	Ven,SB	101	R39.8/R43.6, 0.0/2.2	734	757

REGISTERED CIVIL ENGINEER 10-18-10 DATE

6-20-11
PLANS APPROVAL DATE

The State of California or its officers or agents shall not be responsible for the accuracy or completeness of electronic copies of this plan sheet.

REGISTERED PROFESSIONAL ENGINEER Douglas C. Menzmer No. C63498 Exp. 09-30-12 CIVIL STATE OF CALIFORNIA

CURVE DATA

No.	R	Δ	T	L
Ⓓ	3557.13	8°55′25"	277.57	554.02
Ⓔ	1676.48	6°48′23"	99.70	199.16
Ⓕ	541.52	9°22′53"	44.43	88.67
Ⓖ	61.52	31°41′11"	17.46	34.02
Ⓗ	1664.50	6°48′23"	98.98	197.73
Ⓘ	553.50	-9°23′11"	45.55	90.68
Ⓙ	73.50	-25°51′51"	21.59	33.18

SPREAD FOTTING DATA TABLE

SUPPORT LOCATION	ALLOWABLE BEARING CAPACITY	ULTIMATE BEARING CAPACITY
Retwall H=6′	N/A	20 ksf
Retwall H=8′	N/A	20 ksf

SURVEY CONTROL

PRHV 20506 (Not Shown)
Fnd 1" I.P. w/ Plug
7.11 Rt. "SL1" Line, ℄ Rte 101
Sta. 38+67.45
N 1,955,130.05
E 6,128,126.04
EL.=28.68

PRHV 25655 (Not Shown)
Fnd BCM "Ven 5655"
87.02 Lt. "SL1" Line, ℄ Rte 101
Sta. 51+12.88
N 1,955,080.68
E 6,126,866.34
EL.=34.63

Notes:
1. Elec Line, Gas Line, Tele Line, Tele Cable Line, Sewer Line, Water Line, Per Dist. Map

Indicates bottom of footing

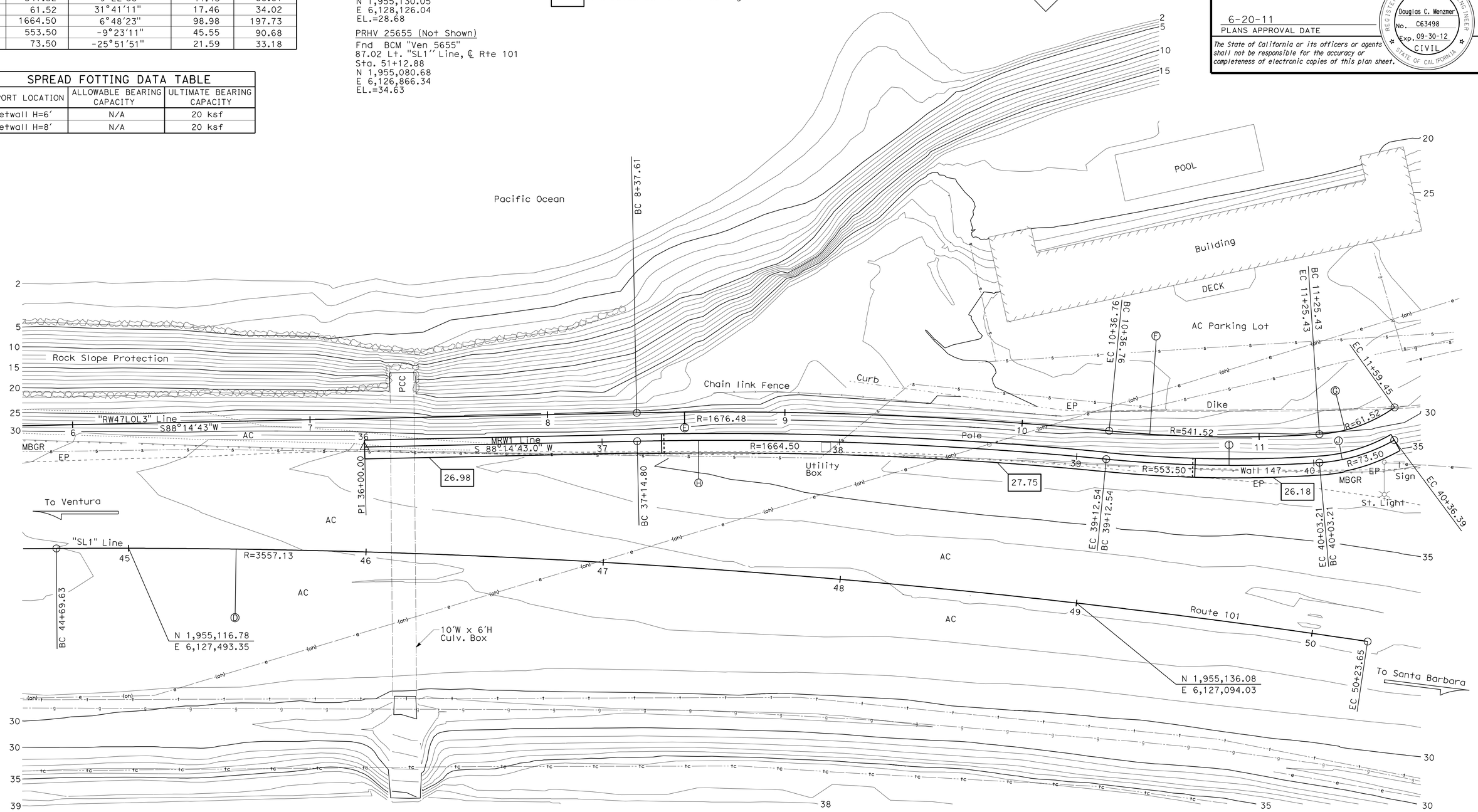

PRELIMINARY INVESTIGATION SECTION							
SCALE 1"=20′	VERT.DATUM NAVD 88	PHOTOGRAMMETRY AS OF: X					
	HORZ.DATUM NAD 83 (91.35)	SURVEYED	BY District	CHECKED	BY Tim Mason 7/2009		
	ALIGNMENT TIES Dist. Traverse Sheet	DRAFTED	BY Sharon Zheng 7/2009	CHECKED	BY T.Zolnikova 7/2009		

DESIGN	BY Leon Valla	CHECKED Doug Menzmer
DETAILS	BY Wei Zhang	CHECKED Doug Menzmer
QUANTITIES	BY Leon Valla	CHECKED Doug Menzmer

STATE OF CALIFORNIA
DEPARTMENT OF TRANSPORTATION

DIVISION OF ENGINEERING SERVICES
STRUCTURE DESIGN
DESIGN BRANCH 12

BRIDGE NO. 52-E0014
POST MILE 40.57-40.78

RETAINING WALL & SOUND WALL NO. 147
FOUNDATION PLAN

STRUCTURES FOUNDATION PLAN SHEET (ENGLISH) (REV. 10/25/05)

ORIGINAL SCALE IN INCHES FOR REDUCED PLANS 0 1 2 3

CU 07
EA 260701

DISREGARD PRINTS BEARING EARLIER REVISION DATES

REVISION DATES: 6-29-09 8-24-09 10-23-09 10-28-09 10-30-09 03-24-10 07-30-10

SHEET 2 OF 7

FILE => j-52-e0014-e-fpl.dgn

USERNAME => s124436 DATE PLOTTED => 25-JUN-2011 TIME PLOTTED => 09:47

DIST	COUNTY	ROUTE	POST MILES TOTAL PROJECT	SHEET No	TOTAL SHEETS
07	Ven,SB	101	R39.8/R43.6, 0.0/2.2	735	757

REGISTERED CIVIL ENGINEER 10-18-10 DATE

6-20-11
PLANS APPROVAL DATE

REGISTERED PROFESSIONAL ENGINEER Douglas C. Menzmer No. C63498 Exp. 09-30-12 CIVIL STATE OF CALIFORNIA

The State of California or its officers or agents shall not be responsible for the accuracy or completeness of electronic copies of this plan sheet.

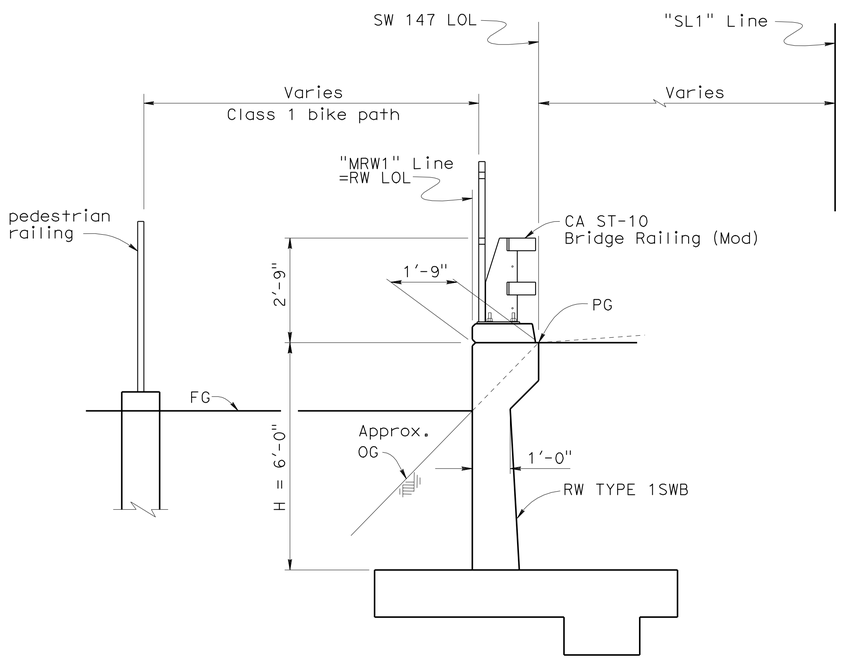

TYPICAL SECTION
STA 36+00.00 TO STA 37+00.00
½" = 1'

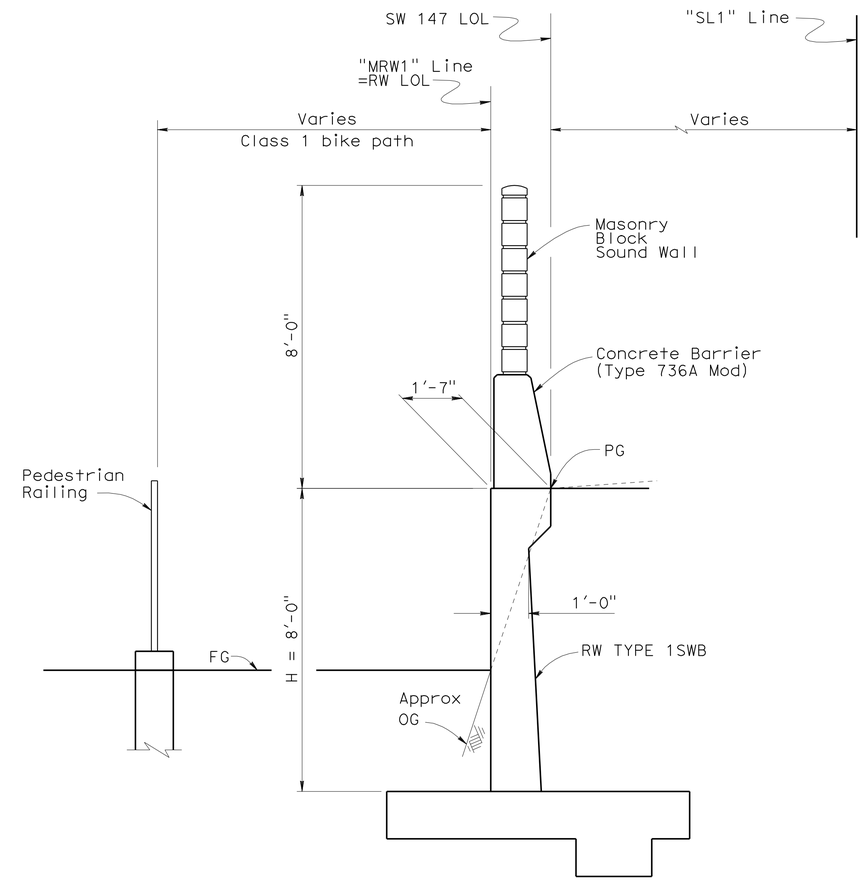

TYPICAL SECTION
STA 37+00.00 TO STA 40+36.39
½" = 1'

STA	ELEVATION (FT) TOP OF WALL	ELEVATION (FT) FG AT "MRW1" LINE
36+00	33.21	32.51
36+25	33.83	32.44
36+50	34.22	32.36
36+75	34.62	32.16
37+00	34.85	32.05
37+25	35.14	31.93
37+50	35.53	31.82
37+75	35.92	31.70
38+00	36.45	31.59
38+25	36.38	31.47
38+50	36.27	31.36
38+75	36.01	31.24
39+00	35.82	31.13
39+25	35.59	31.01
39+50	35.23	30.90
39+75	34.95	30.78
40+00	34.35	30.21
40+25	33.27	29.63
40+35	32.08	29.53

Notes:

1. For CA ST-10 Bridge Railing (Mod) details, see "CA ST-10 Railing (Mod)' plans.
2. For CA ST-10 Bridge Railing (Mod) connection to retaining wall details, see Standard Plan B11-70.
3. For CA ST-10 Bridge Railing (Mod) transition to SW 147, see "Transition To SW 61" details in "CA ST-10 Railing (Mod)' plans.

	BY	CHECKED
DESIGN	Leon Valla	Doug Menzmer
DETAILS	Wei Zhang	Doug Menzmer
QUANTITIES	Leon Valla	Doug Menzmer

STATE OF CALIFORNIA
DEPARTMENT OF TRANSPORTATION

DIVISION OF ENGINEERING SERVICES
STRUCTURE DESIGN
DESIGN BRANCH 12

BRIDGE NO. 52-E0014
POST MILE 40.78-41.07

RETAINING WALL & SOUND WALL NO. 147
TYPICAL SECTION

STRUCTURES DESIGN DETAIL SHEET (ENGLISH) (REV. 10/25/05)

ORIGINAL SCALE IN INCHES FOR REDUCED PLANS 0 1 2 3

CU 07
EA 260701

DISREGARD PRINTS BEARING EARLIER REVISION DATES

REVISION DATES: 09-22-09, 10-30-09, 10-30-09, 03-24-10, 07-30-10, 01-20-11

SHEET 3 OF 7

FILE => j-52-e0014-k-ts.dgn

USERNAME => s124196 DATE PLOTTED => 25-JUN-2011 TIME PLOTTED => 09:47

DIST	COUNTY	ROUTE	POST MILES TOTAL PROJECT	SHEET No	TOTAL SHEETS
07	Ven,SB	101	R39.8/R43.6, 0.0/2.2	736	757

REGISTERED CIVIL ENGINEER 10-18-10 DATE

6-20-11
PLANS APPROVAL DATE

REGISTERED PROFESSIONAL ENGINEER Douglas C. Menzmer No. C63498 Exp. 09-30-12 CIVIL STATE OF CALIFORNIA

The State of California or its officers or agents shall not be responsible for the accuracy or completeness of electronic copies of this plan sheet.

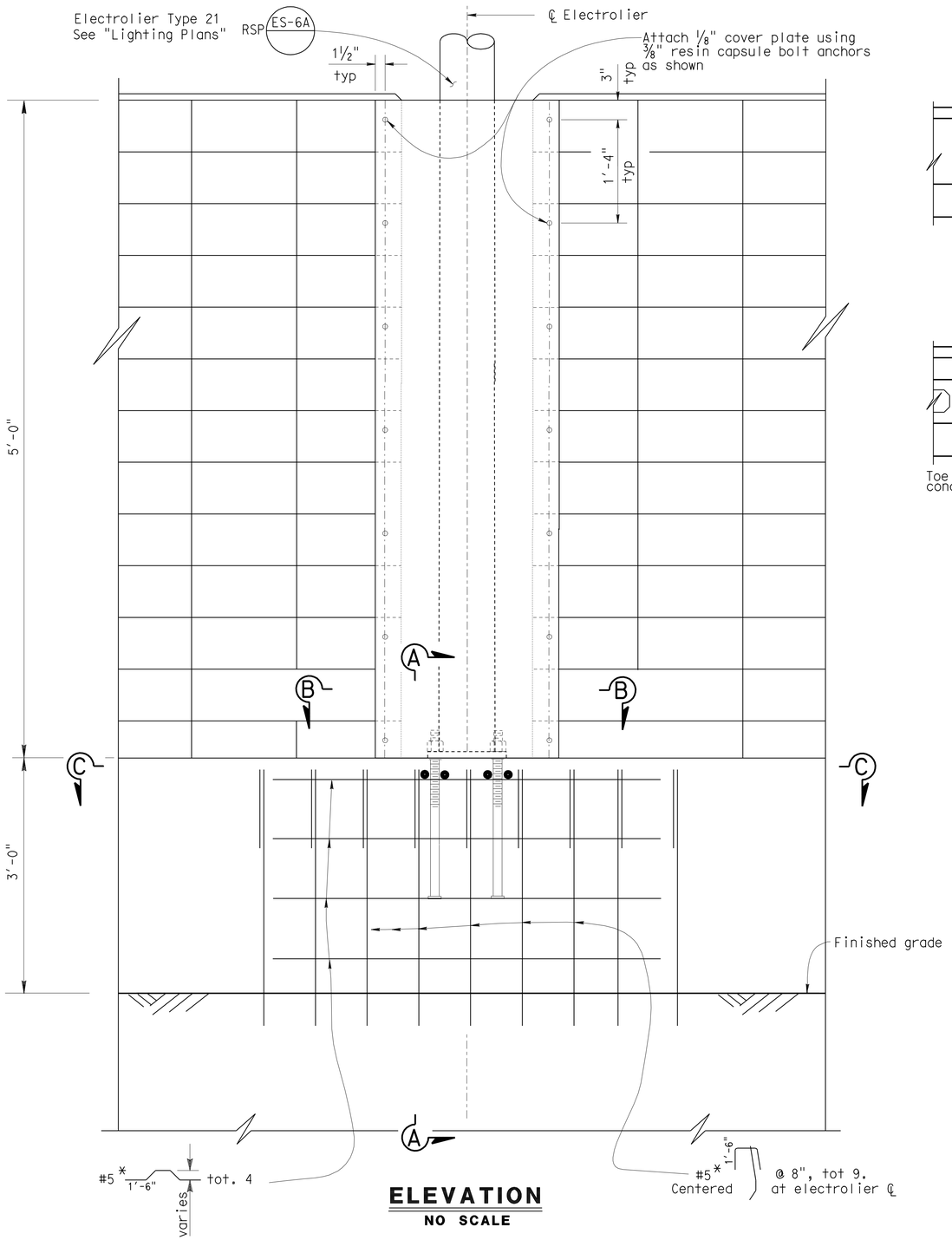

ELEVATION
NO SCALE

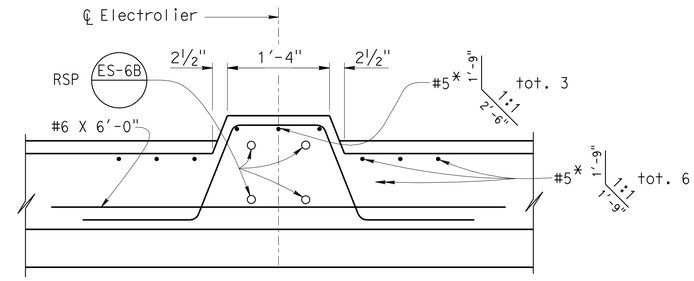

SECTION C-C
1"=1'-0"

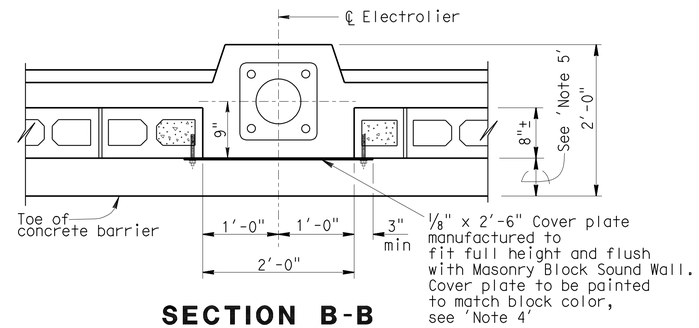

SECTION B-B
1'=1'-0"

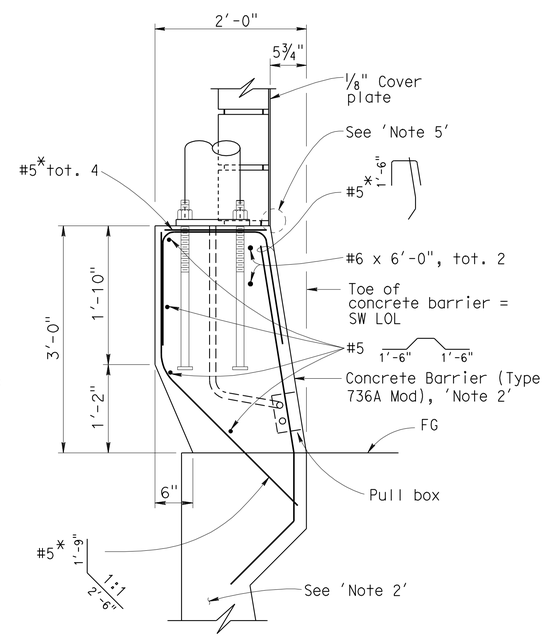

SECTION A-A
1"=1'-0"

Notes:

1. Electrolier locations shown on "Road Plans" are approximate. Bar Reinf in the barrier shall be adjusted by the Contractor as approved by the Engineer, in order that each the masonry block and the electrolier shall be both aesthetically pleasing and structurally sound.
2. All reinforcement shown is in addition to "Retaining Wall Type 1 SWB".
3. All reinforcement shown is in addition to "Sound Wall-Masonry Block With Barrier On Retaining Wall Details No. 2" sheet.
4. Replace last column of split face CMU blocks With standard CMU blocks, where they are end or terminate each side of cover plates full height of sound walls.
5. Exact location of sound wall CMU blocks to be located per "Aesthetic Sound Wall Details" sheet in "Road Plans"

* Indicates post-fabricated epoxy coated reinforcement

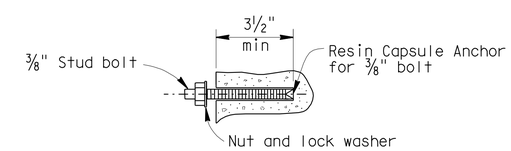

RESIN CAPSULE BOLT ANCHORAGE
NO SCALE

Note: Resin capsule anchorage is subject to approval of Engineer. Installation procedures shall comply with manufacturer's instructions.

RETAINING WALL & SOUNDWALL NO. 147

LIGHTING STANDARD TYPE 21 ON RETAINING WALL TYPE 1SWB

	BY	CHECKED
DESIGN	Leon Valla	Doug Menzmer
DETAILS	Wei Zang	Doug Menzmer
QUANTITIES	Leon Valla	Doug Menzmer

STATE OF CALIFORNIA DEPARTMENT OF TRANSPORTATION

DIVISION OF ENGINEERING SERVICES STRUCTURE DESIGN DESIGN BRANCH 12

BRIDGE NO. 52-E0014
POST MILE 40.78-41.07

STRUCTURES DESIGN DETAIL SHEET (ENGLISH) (REV. 10/25/05)

ORIGINAL SCALE IN INCHES FOR REDUCED PLANS 0 1 2 3

CU 07
EA 260701

DISREGARD PRINTS BEARING EARLIER REVISION DATES 08-02-10 01-20-11

REVISION DATES

SHEET 4 OF 7

FILE => j-52-e0014-u-miscjt01.dgn

USERNAME => s124496 DATE PLOTTED => 25-JUN-2011 TIME PLOTTED => 09:47

DIST.	COUNTY	ROUTE	POST MILES TOTAL PROJECT	SHEET NO.	TOTAL SHEETS
07	Ven,SB	101	R39.8/R43.6, 0.0/2.2	737	757

REGISTERED ENGINEER - CIVIL 10-18-10

6-20-11
PLANS APPROVAL DATE

REGISTERED PROFESSIONAL ENGINEER Douglas C. Menzmer No. C63498 Exp. 09-30-12 CIVIL STATE OF CALIFORNIA

The State of California or its officers or agents shall not be responsible for the accuracy or completeness of electronic copies of this plan sheet.

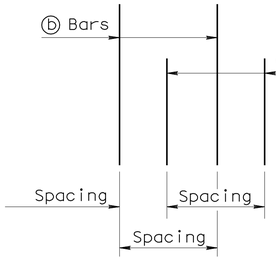

DETAIL B

No Scale

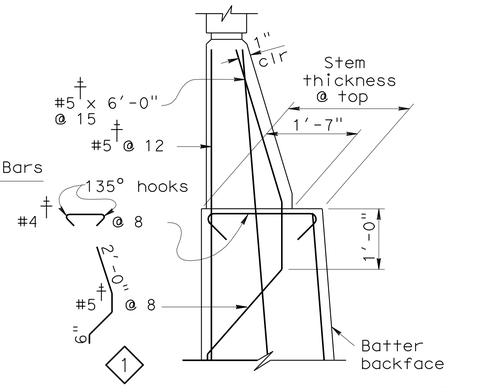

DETAIL A WITHOUT HAUNCH

No Scale

† Indicates post-fabricated epoxy-coated reinforcement.

GENERAL NOTES

1. For soundwall and retaining wall architectural finish or texture, see "Road Plans".
2. For details not shown and drainage notes, see B3-8
3. Footing cover, 1'-6" minimum.
4. Limit of no splicing rebars = 3 times the bottom thickness of the stem.
5. Placement of reinforcements :
   - ⓑ & ⓒ bars are spliced together.
   - ✳ ⓐ & ⓑ bars are bundled together.
   - ✳✳ Alternate ⓐ & ⓑ bars are shown in "Detail B".
   - Cont = Continuous.
6. For Soundwall & Barrier reinforcement, see "Soundwall Masonry Block on Barriers" sheets in Standard Plans.

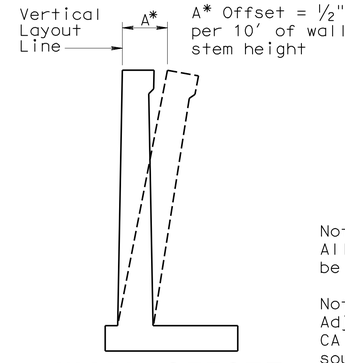

WALL OFFSET

No Scale

Values for offsetting forms to be determined by the Engineer.

Note A:
All longitudinal steel in concrete barrier to be expoxy coated reinforcement.

Note B:
Adjust dimension to 1'-9" for 54" high CA ST-10 Bicycle Rail (Mod), where sound wall not required.

TABLE 1: TABLE OF REINFORCING STEEL DIMENSIONS AND DATA

	Stem With Haunch													
Design H	6'	8'	10'	12'	14'	16'	18'	20'	22'	24'	26'	28'	30'	32'
W	7'-9"	8'-0"	8'-9"	9'-9"	10'-9"	12'-0"	13'-0"	14'-3"	15'-3"	16'-6"	18'-6"	19'-9"	21'-3"	22'-6"
C	2'-9"	2'-9"	3'-0"	3'-3"	3'-6"	4'-0"	4'-3"	4'-9"	5'-0"	5'-6"	6'-3"	6'-9"	7'-3"	7'-9"
B	5'-0"	5'-3"	5'-9"	6'-6"	7'-3"	8'-0"	8'-9"	9'-6"	10'-3"	11'-0"	12'-3"	13'-0"	14'-0"	14'-9"
F Spread footing	1'-3"	1'-3"	1'-3"	1'-3"	1'-3"	1'-6"	1'-6"	1'-9"	2'-0"	2'-3"	2'-9"	3'-0"	3'-3"	3'-9"
Batter	0	:12	:12	:12	:12	:12	:12	:12	:12	:12	:12	:12	1 :12	1 :12
Stem thickn. @ Haunch	1'-0"	1'-0"	1'-0"	1'-0"	1'-0"	1'-0"	1'-0"	1'-0"	1'-0"	1'-0"	1'-0"	1'-0"	1'-0"	1'-0"
ⓐ Bars				#6 @18✳✳	#7 @18✳✳	#8 @18✳✳	#9 @18✳✳	#10 @18✳✳	#8 @ 9✳	#8 @ 9✳	#7 @ 6✳	#10 @12✳✳	#9 @ 9✳	#11@12✳✳
X				Cont	Cont	Cont	Cont	Cont	Cont	Cont	Cont	Cont	Cont	Cont
Y				8'-0"	6'-6"	7'-6"	8'-6"	9'-6"	9'-6"	11'-0"	11'-6"	13'-0"	14'-0"	15'-6"
ⓑ Bars	#5 @12	#5 @12	#5 @ 9	#6 @18✳✳	#7 @18✳✳	#8 @18✳✳	#9 @18✳✳	#10 @18✳✳	#8 @ 9✳	#8 @ 9✳	#7 @ 6✳	#10 @12✳✳	#9 @ 9✳	#11@12✳✳
X	Cont	Cont	Cont	Cont	Cont	Cont	Cont	Cont	Cont	5'-6"	6'-6"	7'-0"	8'-0"	8'-6"
Y	Cont	Cont	Cont	Cont	10'-6"	13'-0"	15'-0"	17'-6"	19'-6"	21'-0"	18'-6"	19'-0"	25'-6"	23'-6"
ⓒ Bars					#6 @18	#6 @18	#6 @18	#6 @18	#6 @18	#6 @18	#6 @12	#7 @12	#7 @18	#7 @12
ⓓ Bars	#5 @12	#5 @12	#5 @12	#5 @ 9	#6 @ 9	#6 @ 9	#6 @ 6	#8 @ 9	#8 @ 9	#8 @ 9	#7 @ 6	#7 @ 6	#9 @ 9	#9 @ 9
Ultimate Bearing Capacity Req'd k/sf	4.6	5.5	6.1	6.6	7.3	8.1	9.0	9.9	11.3	12.2	12.5	13.4	14.1	15.4

TABLE 2: TABLE OF REINFORCING STEEL DIMENSIONS AND DATA

	Stem With Haunch						Stem Without Haunch						
Design H	8'	10'	12'	14'	16'	18'	20'	22'	24'	26'	28'	30'	32'
W	8'-0"	8'-6"	9'-3"	10'-3"	11'-3"	13'-0"	13'-9"	16'-0"	16'-6"	18'-6"	20'-0"	20'-6"	21'-9"
C	2'-9"	2'-9"	3'-0"	3'-6"	3'-9"	4'-3"	4'-6"	5'-3"	5'-6"	6'-3"	6'-9"	6'-9"	7'-6"
B	5'-3"	5'-9"	6'-3"	6'-9"	7'-6"	8'-9"	9'-3"	10'-9"	11'-0"	12'-3"	13'-3"	13'-9"	14'-3"
F Spread footing	1'-3"	1'-3"	1'-3"	1'-3"	1'-6"	1'-6"	1'-9"	2'-0"	2'-3"	2'-9"	3'-0"	3'-3"	3'-6"
Batter	0	0	0	0	0	0	0	0	0	:12	:12	:12	:12
Stem thickn. @ Haunch	1'-0"	1'-0"	1'-0"	1'-0"	1'-3"	1'-3"							
Stem thickn. @ top							1'-6"	2'-0"	2'-0"	2'-0"	2'-0"	2'-0"	2'-0"
ⓐ Bars			#6 @12✳✳	#5 @ 6✳	#9 @18✳✳	#9 @12✳✳	#9 @12✳✳	#9 @12✳✳	#7 @ 6✳	#7 @ 6✳	#7 @ 6✳	#9 @ 9✳	#11@12✳✳
X			Cont	Cont	Cont	Cont	Cont	Cont	Cont	Cont	Cont	Cont	Cont
Y			5'-6"	5'-6"	8'-6"	8'-6"	8'-6"	8'-6"	9'-6"	11'-0"	12'-6"	13'-6"	14'-6"
ⓑ Bars	#5 @ 9	#6 @ 9	#6 @12✳✳	#5 @ 6✳	#9 @18✳✳	#9 @12✳✳	#9 @12✳✳	#9 @12✳✳	#7 @ 6✳	#7 @ 6✳	#7 @ 6✳	#9 @ 9✳	#11@12✳✳
X	Cont	Cont	Cont	Cont	Cont	Cont	Cont	Cont	5'-6"	6'-0"	7'-6"	7'-6"	8'-0"
Y	Cont	Cont	Cont	Cont	11'-6"	11'-6"	12'-0"	12'-0"	17'-6"	20'-0"	21'-6"	24'-0"	24'-0"
ⓒ Bars					#7 @18	#7 @12	#7 @12	#7 @12	#6 @ 12	#6 @ 12	#6 @12	#7 @18	#7 @12
ⓓ Bars	#5 @12	#5 @ 9	#5 @9	#6 @9	#6 @ 9	#9 @12	#9 @12	#7 @#7	6 @ 6	#7 @ 6	#7 @ 6	#9 @ 9	#9 @ 9
Ultimate Bearing Capacity Req'd k/sf	5.5	6.5	7.3	7.6	9.0	9.0	10.6	10.5	12.2	12.6	13.3	15.4	16.0

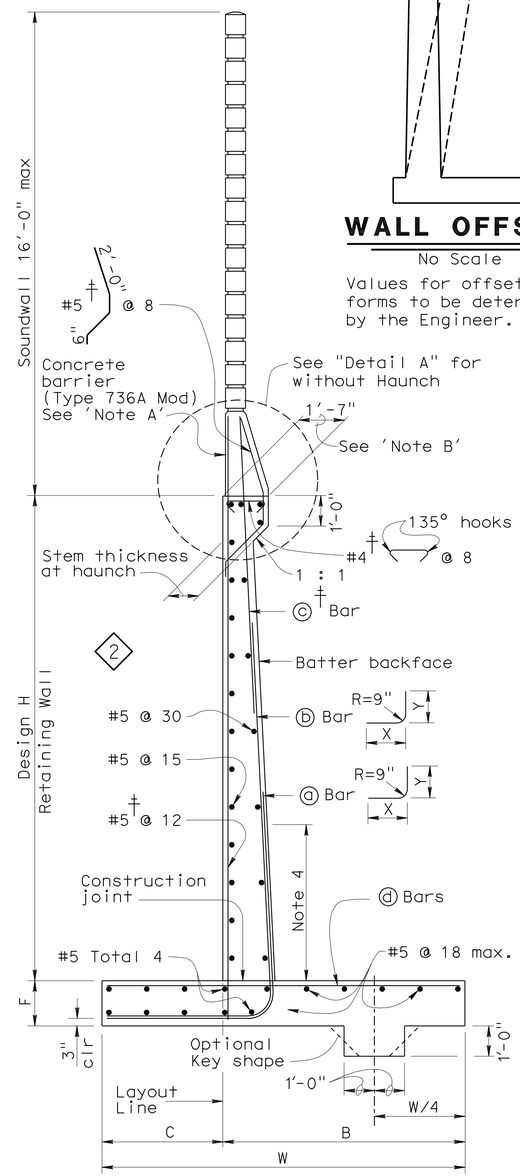

SPREAD FOOTING SECTION

No Scale

† Indicates post-fabricated epoxy-coated reinforcement.

DESIGN DATA

DESIGN: Load Factor Design (LFD)

CONCRETE: Reinforced Concrete, f'c = 3600 psi
fy = 60,000 psi

LOADING CASE:
Level ground with 240 psf surcharge and 16' Soundwall

Seismic Load = 0.3 Dead Load
Wind Load = 30 psf
Dead Load of Soundwall = 1414 lb/ft
Dead Load of Barrier = 372 lb/ft

SEISMIC LOAD: SOIL
Kh = 0.3g
Kv = 0.0
Kae : Mononobe-Okabe Method

SOIL: Ø = 34° γ = 120 pcf
Equivalent fluid pressure:
= 36 pcf for determination of toe pressure
= 27 pcf for determination of heel pressure

EXTERNAL STABILITY:
Group 1 : D + E + SC
Group 2 : D + E + SC + W
Group 3 : D + PYM

INTERNAL STABILITY (LFD):
Group A : βD + 1.7E + 1.7SC
Group B : βD + 1.7E + 1.3W
Group C (stem) : 1.0D + 1.0E + 1.0EQD + 1.0EQE
Group C (footing) : D + PYM

Where : β = 1.0 or 1.3 whichever controls design
D = Dead Load
E = Lateral Earth Pressure
SC = Surcharge
W = Wind load
EQD = Seismic Dead Load
EQE = Seismic Lateral Earth Pressure
PYM = Probable Yield Moment (1.3 x Nominal Yield Moment of Stem)

STANDARD DRAWING

FILE NO. xs14-220e

APPROVED BY G. WANG RESPONSIBLE TECHNICAL SPECIALIST
APPROVAL DATE 5-19-08

RELEASED BY ROBERTO LACALLE RESPONSIBLE OFFICE CHIEF
RELEASE DATE 5-19-08

1 Modified Detail
2 Removed Note

STATE OF CALIFORNIA DEPARTMENT OF TRANSPORTATION

DIVISION OF ENGINEERING SERVICES

BRIDGE NO. 52-E0014
POST MILE 40.78-41.07

RETAINING WALL & SOUND WALL NO. 147

RETAINING WALL TYPE 1SWB

DS OSD 2147A (ENGLISH STANDARD DRAWING "XS" BORDER REV. 01/11/08)

ORIGINAL SCALE IN INCHES FOR REDUCED PLANS 0 1 2 3

CU 07
EA 260701

DISREGARD PRINTS BEARING EARLIER REVISION DATES

REVISION DATES (PRELIMINARY STAGE ONLY) 9-16-09 10-30-09 08-02-10 01-20-11 4-18-11

SHEET 5 OF 7

USERNAME => s124496

DATE PLOTTED => 25-JUN-2011 TIME PLOTTED => 09:48

j-52-e0014-u-miscjt02

DIST.	COUNTY	ROUTE	POST MILES TOTAL PROJECT	SHEET NO.	TOTAL SHEETS
07	Ven,SB	101	R39.8/R43.6, 0.0/2.2	738	757

REGISTERED ENGINEER - CIVIL 10-18-10

PROFESSIONAL ENGINEER REGISTERED Douglas C. Menzmer No. C63498 Exp.09-30-12 CIVIL STATE OF CALIFORNIA

6-20-11
PLANS APPROVAL DATE

The State of California or its officers or agents shall not be responsible for the accuracy or completeness of electronic copies of this plan sheet.

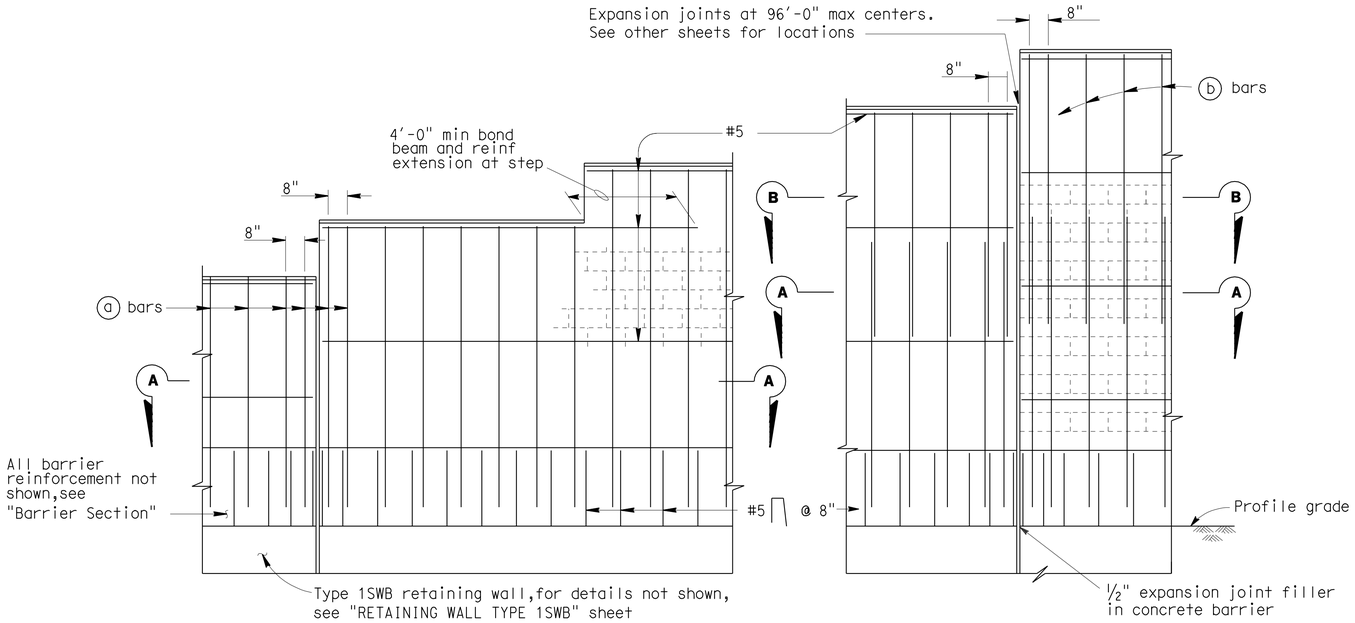

PART ELEVATIONS

SOUNDWALL REINFORCEMENT TABLE

Maximum H	(a) bars @ 1'-4" max	(b) bars @ 1'-4" max	"y"	f'm (KSI)	Compressive Strength of CMU (KSI)	Maximum H
6'-4"	# 4	———	———	1.5	1.9	6'-4"
8'-4"	# 4	———	———	1.5	1.9	8'-4"
10'-4"	# 4	———	———	1.5	1.9	10'-4"
12'-4"	# 5	# 4	5'-0"	1.5	1.9	12'-4"
14'-4"	# 6	# 4	7'-0"	1.5	1.9	14'-4"
16'-4"	# 6	# 4	9'-0"	2.5	3.7	16'-4"

Note I : For details not shown,see "SOUNDWALL - MASONRY BLOCK WITH BARRIER ON RETAINING WALL - DETAILS NO.2" sheet.

Note II : Slope ground at traffic side of barrier to drain. Maximum slope ±10%.

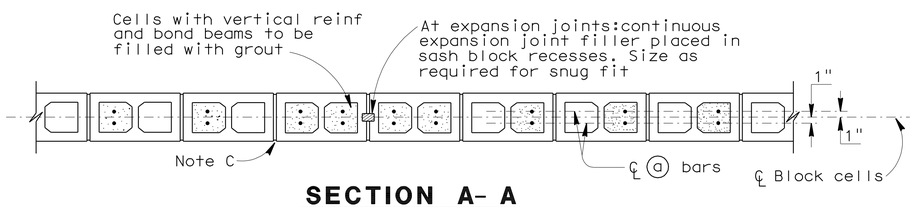

SECTION A- A

For details not shown,see other details

H=6'-4" THRU H=10'-4"

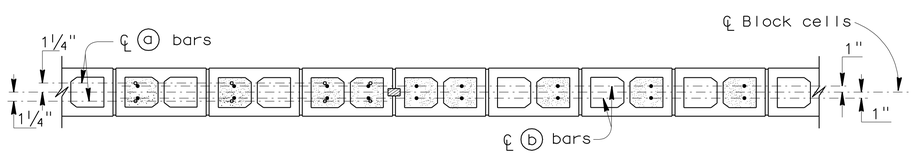

SECTION A- A

SECTION B- B

For details not shown,see other details

H=12'-4" THRU H=16'-4"

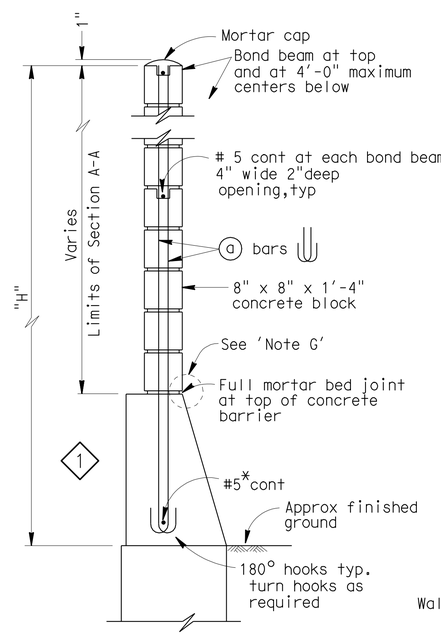

H=6'-4" THRU H=10'-4"

For details not shown,see H=12'-4" thru H=16'-4"

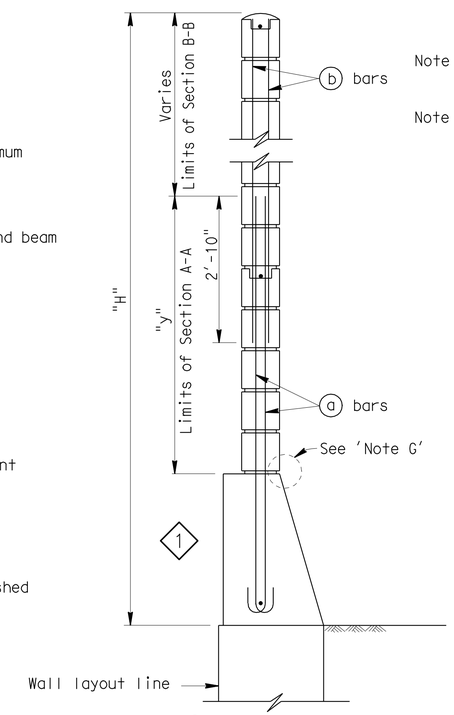

H=12'-4" THRU H=16'-4"

For details not shown,see H=6'-4" thru H=10'-4"

TYPICAL SECTIONS

* Indicates post-fabricated epoxy coated reinforcement.

GENERAL NOTES

Note A: For type of block and joint finish, see "Road Plans".

Note B: When blocks are laid in stacked bond, ladder type, galvanized joint reinforcement shall be provided. A minimum of 2-9 gauge wires continuous at 4'-0" maximum to be used. Locate reinforcement in joints that are at the approximate midpoint between bond beams.

Note C: Horizontal joints shall be tooled concave or may be weathered.
Vertical joints shall be tooled concave or may be raked.

Note D: For intermediate wall heights that are between the "H's" given. Use the tabular information for the next higher "H".

Note E: Masonry strengths are listed in "SOUNDWALL REINFORCEMENT TABLE".

Note F: Concrete to be used for the barrier shall contain not less than 590 pounds of cementitious material per cubic yard.

Note G: Exact location of sound wall CMU block to be located per "Aesthetic Sound Wall Details" sheet in "Road Plans". (2)

RETAINING WALL & SOUND WALL NO. 147

STANDARD DRAWING

FILE NO. xs15-130-1e

APPROVED BY T SATTER — RESPONSIBLE TECHNICAL SPECIALIST
APPROVAL DATE 2-13-09

RELEASED BY ROBERTO LACALLE — RESPONSIBLE OFFICE CHIEF
RELEASE DATE 2-13-09

(1) Modified Detail
(2) Modified Notes

STATE OF CALIFORNIA DEPARTMENT OF TRANSPORTATION

DIVISION OF ENGINEERING SERVICES

BRIDGE NO. 52-E0014
POST MILE 40.78-41.07

SOUNDWALL - MASONRY BLOCK WITH BARRIER ON RETAINING WALL

DETAILS NO. 1

DS OSD 2147A (ENGLISH STANDARD DRAWING "XS" BORDER REV. 01/11/08)

ORIGINAL SCALE IN INCHES FOR REDUCED PLANS 0 1 2 3

CU 07
EA 260701

DISREGARD PRINTS BEARING EARLIER REVISION DATES

REVISION DATES (PRELIMINARY STAGE ONLY) 10-10-08 02-10 01-20-11

SHEET 6 OF 7

USERNAME => s124496

j-52-e0014-u-miscjt03

DATE PLOTTED => 25-JUN-2011 TIME PLOTTED => 09:48

DIST.	COUNTY	ROUTE	POST MILES TOTAL PROJECT	SHEET NO.	TOTAL SHEETS
07	Ven,SB	101	R39.8/R43.6, 0.0/2.2	739	757

REGISTERED ENGINEER - CIVIL 10-18-10

6-20-11
PLANS APPROVAL DATE

REGISTERED PROFESSIONAL ENGINEER Douglas C. Menzmer No. C63498 Exp. 09-30-12 CIVIL STATE OF CALIFORNIA

The State of California or its officers or agents shall not be responsible for the accuracy or completeness of electronic copies of this plan sheet.

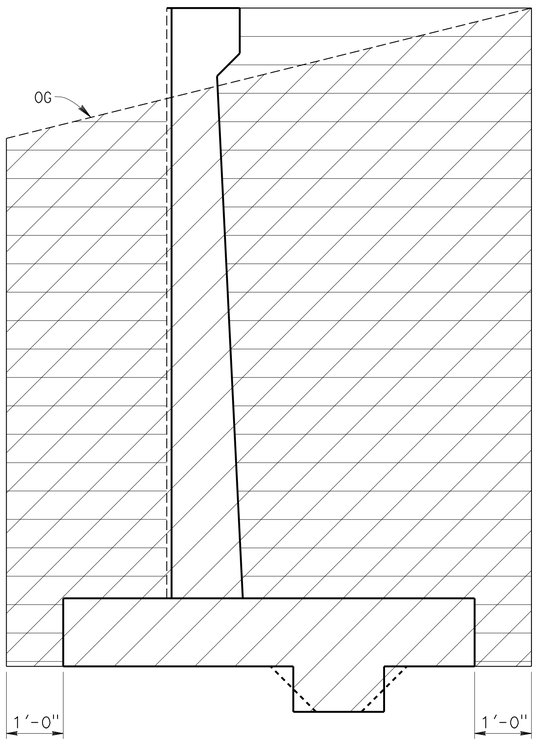

4

PAY LIMITS FOR STRUCTURE EXCAVATION AND BACK FILL

FOR RETAINING WALL TYPE 1 SWB

LEGEND:

Structure Excavation (Retaining wall)

Structure Backfill (Retaining wall)

1

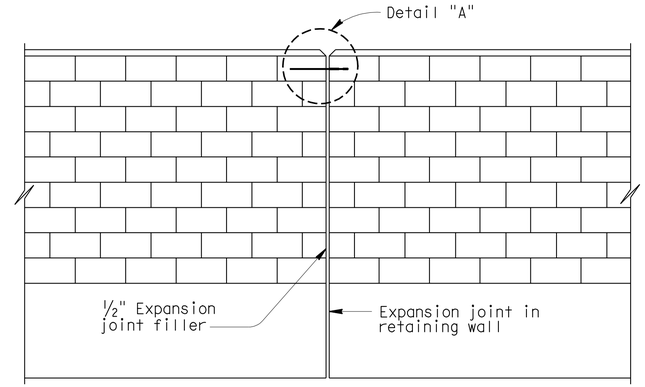

ALIGNMENT KEY DETAIL

1

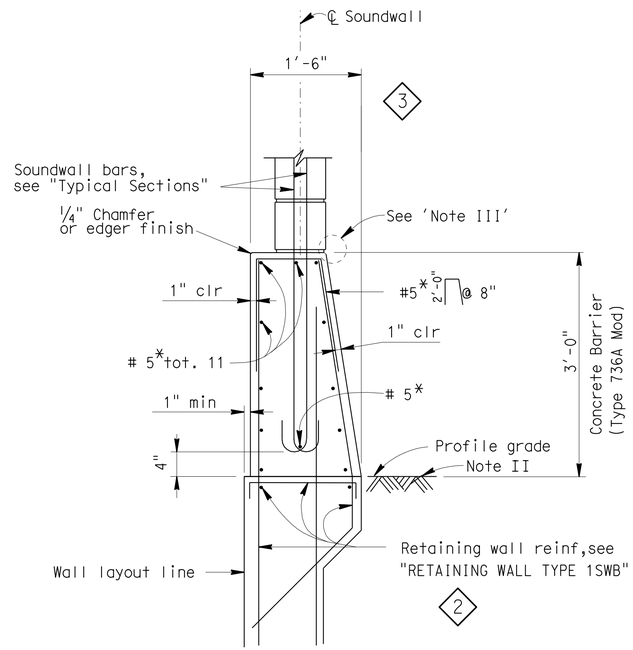

BARRIER SECTION 3

* Indicates post-fabricated epoxy coated reinforcement.

NOTES:

2

I : For details not shown, see "RETAINING WALL TYPE 1SWB" sheet.

II : Slope ground at traffic side of barrier to drain. Maximum slope ±10%. See Standard Plan B11-56, Note D.

III : Exact location of sound wall CMU block to be located per "Aesthetic Sound Wall Details" sheet in "Road Plans".

IV : Adjust dimension to 1'-9" for 54" high CA ST-10 Bicycle Rail (Mod), where sound wall is not required.

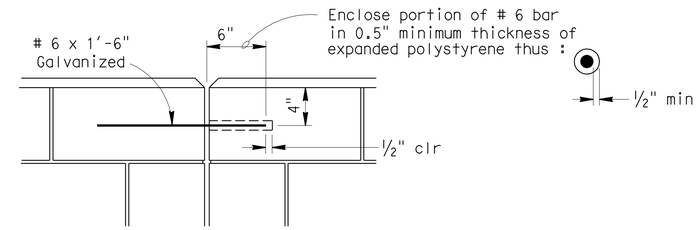

DETAIL A

DESIGN NOTES

DESIGN

Uniform Building Code, 1997 Edition and the Bridge Design Specifications.

DESIGN WIND LOAD

33 PSF

DESIGN SEISMIC LOAD

0.57 Dead load

REINFORCED CONCRETE

f'c = 3250 PSI
fy = 60 KSI

CONCRETE MASONRY

REGULAR STRENGTH	HIGH STRENGTH	
f'm = 1500 PSI	f'm = 2000 PSI	f'm = 2500 PSI
fb = 1500 PSI	fb = 660 PSI	fb = 830 PSI
fs = 24.0 KSI	fs = 24.0 KSI	fs = 24000 PSI
n = 25.8	n = 19.3	n = 15.5

LOAD FACTORS AND LOAD COMBINATIONS

Working Stress Design (WSD) Percentage of unit stress

Group 1: D + E + SC 100%
Group 2: D + W + SC + E 100%
Group 3: D + 0.71 EQD + E 100%

Where:

D = Dead load
E = Lateral earth pressure
SC = Live load surcharge
W = Wind load
EQD = Seismic dead load

Load Factor Design (LFD)

Group A: βD + 1.7 E + 1.7 SC
Group B: βD + 1.7 E + 1.3 W
Group C: βD + 1.3 E + 1.0 EQE
Group D: βD + 1.3 E + 1.0 EQD
Group E: βD + 1.1 E + 0.85 (EQE + EQD)

Where : β = 0.9 or 1.2, whichever controls in design
D = Dead load
E = Lateral earth pressure
SC = Live load surcharge
W = Wind load
EQD = Seismic dead load
EQE = Seismic earth load

STRENGTH REDUCTION FACTORS, Ø

Reinforced concrete:
For flexure ---------- Ø=0.90
For shear ---------- Ø=0.85

Concrete masonry:
For flexure ---------- Ø=0.80
For shear ---------- Ø=0.60

Foundations :

See "RETAINING WALL WITH SOUNDWALL" sheets.

NO SCALE

RETAINING WALL & SOUND WALL NO. 147

SOUNDWALL - MASONRY BLOCK WITH BARRIER ON RETAINING WALL

DETAILS NO. 2

STANDARD DRAWING

FILE NO. xs15-130-2e

APPROVED BY T SATTER (RESPONSIBLE TECHNICAL SPECIALIST) APPROVAL DATE 4-15-08

RELEASED BY ROBERTO LACALLE (RESPONSIBLE OFFICE CHIEF) RELEASE DATE 4-15-08

1 Deleted detail 3 Modified detail
2 Revised note 4 Add detail

STATE OF CALIFORNIA DEPARTMENT OF TRANSPORTATION

DIVISION OF ENGINEERING SERVICES

BRIDGE NO. 52-E0014
POST MILE 40.78-41.07

CU 07
EA 260701

DS OSD 2147A (ENGLISH STANDARD DRAWING "XS" BORDER REV. 01/11/08)

ORIGINAL SCALE IN INCHES FOR REDUCED PLANS 0 1 2 3

DISREGARD PRINTS BEARING EARLIER REVISION DATES

REVISION DATES (PRELIMINARY STAGE ONLY) 10-11-09 10-30-09 08-02-10

SHEET 7 OF 7

USERNAME => s124496

j-52-e0014-u-miscjt04

DATE PLOTTED => 25-JUN-2011 TIME PLOTTED => 09:32:48

DIST	COUNTY	ROUTE	POST MILES TOTAL PROJECT	SHEET No	TOTAL SHEETS
07	Ven,SB	101	R39.8/R43.6, 0.0/2.2	740	757

REGISTERED CIVIL ENGINEER 10-18-10 DATE

6-20-11
PLANS APPROVAL DATE

REGISTERED PROFESSIONAL ENGINEER Douglas C. Menzmer No. C 63498 Exp. 09/30/2012 CIVIL STATE OF CALIFORNIA

The State of California or its officers or agents shall not be responsible for the accuracy or completeness of electronic copies of this plan sheet.

CURVE DATA

No.	R	Δ	T	L
A	3239.54	27°13′30"	784.48	1539.32
B	2012.19	75°13′45"	1550.41	2642.00
C	2224.39	07°19′02"	142.23	284.08
D	11833.45	02°25′16"	250.05	500.03
E	1503.47	05°29′01"	72.00	143.89

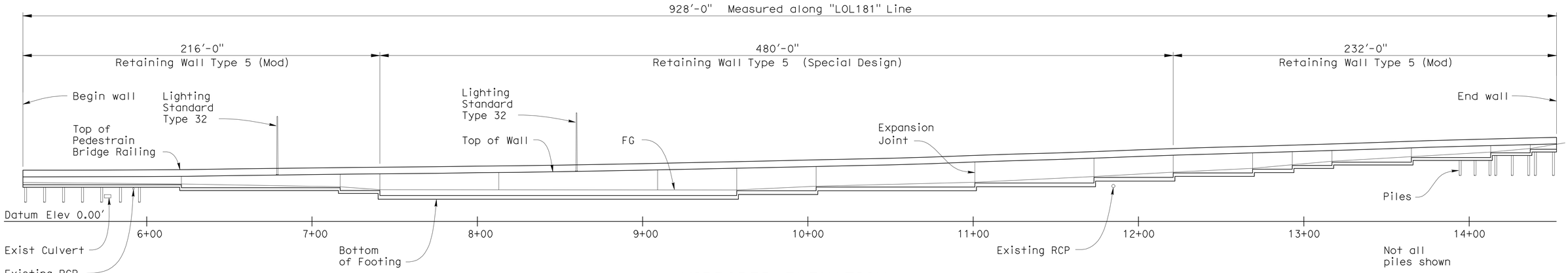

MIRRORED ELEVATION

1" = 30′

For Locations of Lighting Standard Type 32 see "Road Plans"

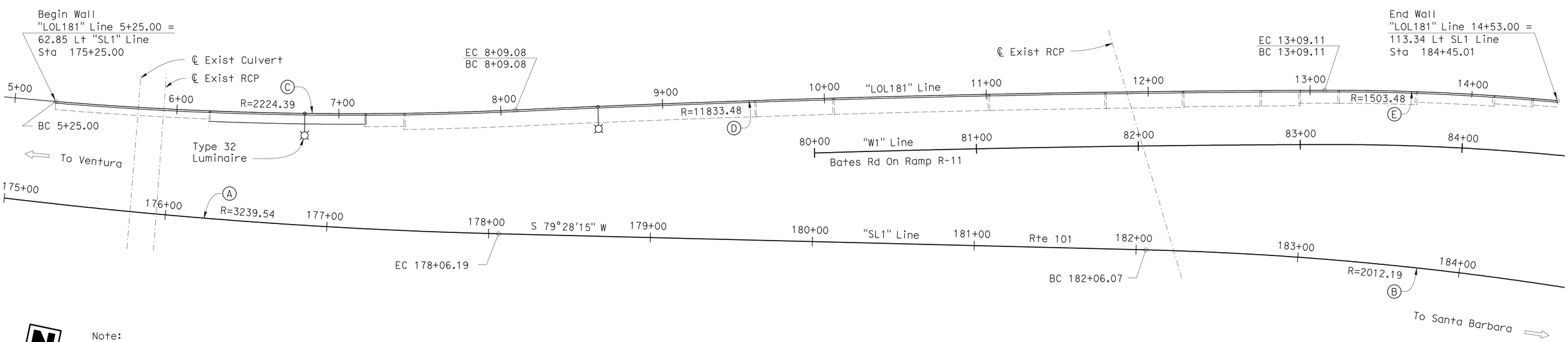

Note:
For Typical Section, Index to Plans, Standard Plan List, General Notes, and Quantities see "Index To Plans" sheet.

PLAN

1" = 30′

Matt Holm
DESIGN ENGINEER

	BY	CHECKED
DESIGN	D. Menzmer	F. Tannous
DETAILS	T. Mason	F. Tannous
QUANTITIES	F. Tannous	L. Valla

LOAD FACTOR DESIGN — LIVE LOADING: Level + 240 psf surcharge.

	BY	CHECKED
LAYOUT	D. Menzmer	F. Tannous
SPECIFICATIONS	Erwin Rufino	PLANS AND SPECS COMPARED Erwin Rufino

STATE OF CALIFORNIA
DEPARTMENT OF TRANSPORTATION

DIVISION OF ENGINEERING SERVICES
STRUCTURE DESIGN
DESIGN BRANCH 12

BRIDGE NO. 52-E0016
POST MILE 41.70

RETAINING WALL 181
GENERAL PLAN

STRUCTURES DESIGN GENERAL PLAN SHEET (ENGLISH) (REV. 10/25/05)

ORIGINAL SCALE IN INCHES FOR REDUCED PLANS 0 1 2 3

CU 07
EA 260701

DISREGARD PRINTS BEARING EARLIER REVISION DATES

REVISION DATES: 7-08-10 9-08-10 1-21-11

SHEET 1 OF 18

FILE => k-52-e0016-a-gp.dgn

USERNAME => s124936 DATE PLOTTED => 25-JUN-2011 TIME PLOTTED => 03:48

DIST	COUNTY	ROUTE	POST MILES TOTAL PROJECT	SHEET No	TOTAL SHEETS
07	Ven,SB	101	R39.8/R43.6, 0.0/2.2	741	757

REGISTERED CIVIL ENGINEER 10-18-10 DATE

6-20-11
PLANS APPROVAL DATE

REGISTERED PROFESSIONAL ENGINEER Douglas C. Menzmer No. C 63498 Exp. 09/30/2012 CIVIL STATE OF CALIFORNIA

The State of California or its officers or agents shall not be responsible for the accuracy or completeness of electronic copies of this plan sheet.

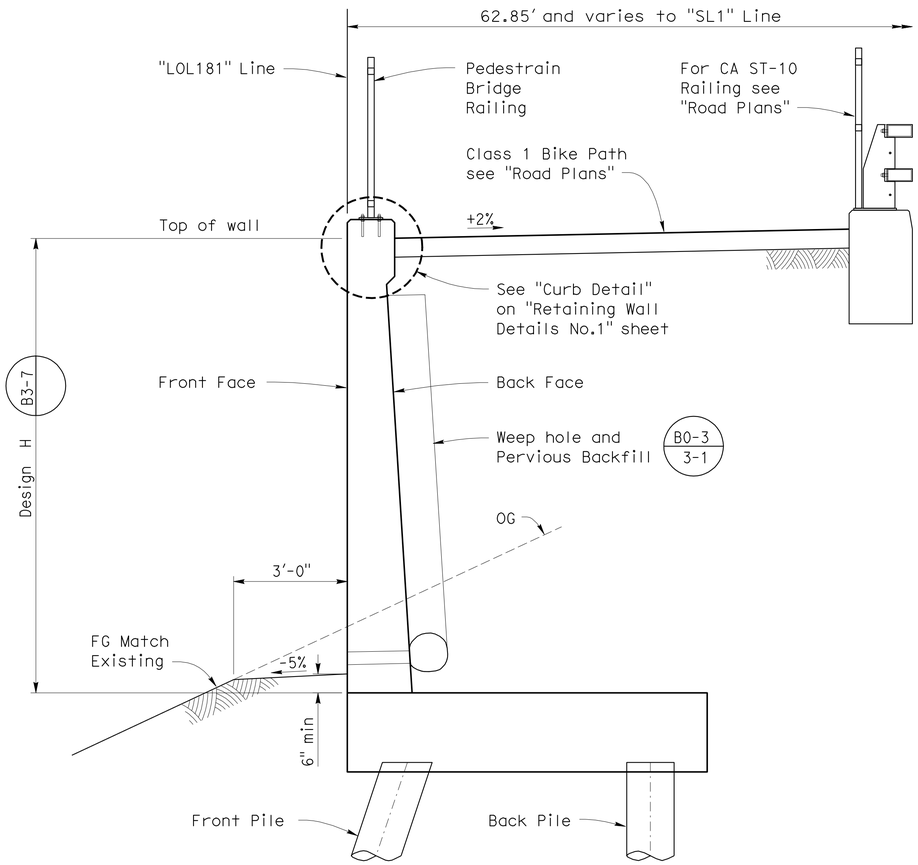

RETAINING WALL TYPE 5 (MOD) TYPICAL SECTION

1/2" = 1'-0"

Front face reinforcement shall have 3" of concrete cover.

QUANTITIES

STRUCTURE EXCAVATION (RETAINING WALL)	2,880	CY
STRUCTURE BACKFILL (RETAINING WALL)	3,050	CY
FURNISH PILING (CLASS 90)	9,838	LF
DRIVE PILE (CLASS 90)	319	EA
STRUCTURAL CONCRETE, RETAINING WALL	1,130	CY
BAR REINFORCING STEEL (EPOXY COATED) (RETAINING WALL)	100,800	LB
PEDESTRIAN BRIDGE RAILING	928	LF

INDEX TO PLANS

1. GENERAL PLAN
2. INDEX TO PLANS
3. FOUNDATION PLAN NO. 1
4. FOUNDATION PLAN NO. 2
5. RETAINING WALL LAYOUT NO. 1
6. RETAINING WALL LAYOUT NO. 2
7. RETAINING WALL LAYOUT NO. 3
8. RETAINING WALL LAYOUT NO. 4
9. RETAINING WALL LAYOUT NO. 5
10. RETAINING WALL DETAILS NO. 1
11. RETAINING WALL DETAILS NO. 2
12. PEDESTRIAN BRIDGE RAILING LAYOUT
13. PEDESTRIAN BRIDGE RAILING DETAILS
14. LUMINAIRE PEDESTAL DETAILS NO. 1
15. LUMINAIRE PEDESTAL DETAILS NO. 2
16. LOG OF TEST BORINGS 1 OF 3
17. LOG OF TEST BORINGS 2 OF 3
18. LOG OF TEST BORINGS 3 OF 3

STANDARD PLANS DATED MAY 2006

A10A	ACRONYMS AND ABBREVIATIONS (SHEET 1 OF 2)
A10B	ACRONYMS AND ABBREVIATIONS (SHEET 2 OF 2)
A62B	LIMITS OF PAYMENT FOR EXCAVATION AND BACKFILL - BRIDGE SURCHARGE AND WALL
B0-3	BRIDGE DETAILS
B2-5	PILE DETAILS CLASS 90 AND CLASS 140
B3-7	RETAINING WALL TYPE 5
B3-8	RETAINING WALL DETAILS NO. 1
B3-9	RETAINING WALL DETAILS NO. 2
ES-6G	ELECTRICAL SYSTEMS (LIGHTING STANDARD TYPE 32)
ES-9A	ELECTRICAL SYSTEMS (ELECTRICAL DETAILS STRUCTURE INSTALLATIONS)
ES-9B	ELECTRICAL SYSTEMS (ELECTRICAL DETAILS STRUCTURE INSTALLATIONS)
ES-9C	ELECTRICAL SYSTEMS (ELECTRICAL DETAILS STRUCTURE INSTALLATIONS)
ES-9D	ELECTRICAL SYSTEMS (ELECTRICAL DETAILS STRUCTURE INSTALLATIONS)

Standard Plan sheet number

Detail number

	BY	CHECKED
DESIGN	D. Menzmer	F. Tannous
DETAILS	T. Mason	F. Tannous
QUANTITIES	F. Tannous	L. Valla

STATE OF CALIFORNIA DEPARTMENT OF TRANSPORTATION

DIVISION OF ENGINEERING SERVICES STRUCTURE DESIGN DESIGN BRANCH 12

BRIDGE NO. 52-E0016
POST MILE 41.70

RETAINING WALL 181
INDEX TO PLANS

STRUCTURES DESIGN DETAIL SHEET (ENGLISH) (REV. 10/25/05)

ORIGINAL SCALE IN INCHES FOR REDUCED PLANS 0 1 2 3

CU 07
EA 260701

DISREGARD PRINTS BEARING EARLIER REVISION DATES

REVISION DATES: 7-08-10 9-07-10 1-21-11

SHEET 2 OF 18

FILE => k-52-e0016-a-itp.dgn

USERNAME => s124496 DATE PLOTTED => 25-JUN-2011 TIME PLOTTED => 09:56

DIST	COUNTY	ROUTE	POST MILES TOTAL PROJECT	SHEET No	TOTAL SHEETS
07	Ven,SB	101	R39.8/R43.6, 0.0/2.2	742	757

REGISTERED CIVIL ENGINEER 10-18-10 DATE

6-20-11
PLANS APPROVAL DATE

REGISTERED PROFESSIONAL ENGINEER Douglas C. Menzmer No. C 63498 Exp. 09/30/2010 CIVIL STATE OF CALIFORNIA

The State of California or its officers or agents shall not be responsible for the accuracy or completeness of electronic copies of this plan sheet.

PILE DATA

LOCATION "LOL181" Line Sta	PILE TYPE CLASS 90	NOMINAL RESISTANCE COMPRESSION	NOMINAL RESISTANCE TENSION	DESIGN TIP ELEVATION	SPECIFIED TIP ELEVATION	Nominal Driving Resistance
5+25 to 6+21	Alt "V", "X" or "Y"	180 kips	0	-9.41′	-9.41′	N/A
6+21 to 7+17	Alt "V", "X" or "Y"	180 kips	0	-11.33	-11.33	N/A
7+17 to 7+41	Alt "V", "X" or "Y"	180 kips	0	-13.08′	-13.08′	N/A
7+41 to 9+57	Alt "V", "X" or "Y"	180 kips	0	-16.58′	-16.58′	N/A
9+57 to 10+05	Alt "V", "X" or "Y"	180 kips	0	-13.69′	-13.69′	N/A
10+05 to 11+01	Alt "V", "X" or "Y"	180 kips	0	-11.44′	-11.44′	N/A
11+01 to 11+73	Alt "V", "X" or "Y"	180 kips	0	-9.02′	-9.02′	N/A
11+73 to 12+21	Alt "V", "X" or "Y"	180 kips	0	-5.62′	-5.62′	N/A
12+21 to 12+69	Alt "V", "X" or "Y"	180 kips	0	-2.78′	-2.78′	N/A
12+69 to 12+93	Alt "V", "X" or "Y"	180 kips	0	-0.47′	-0.47′	N/A
12+93 to 13+17	Alt "V", "X" or "Y"	180 kips	0	2.05′	2.05′	N/A
13+17 to 13+65	Alt "V", "X" or "Y"	180 kips	0	4.12′	4.12′	N/A
13+65 to 14+13	Alt "V", "X" or "Y"	180 kips	0	6.90′	6.90′	N/A
14+13 to 14+37	Alt "V", "X" or "Y"	180 kips	0	9.88′	9.88′	N/A
14+37 to 14+53	Alt "V", "X" or "Y"	180 kips	0	12.04′	12.04′	N/A

Design tip elevations are controlled by compression.

SUMMARY TABLE - HYDROLOGY/HYDRAULICS

TIDE LEVEL ELEVATIONS (1)	
Mean High High Water (MHHW)	4.91 ft
Mean Tide Level (MTL)	2.28 ft
Mean Low Low Water (MLLW)	-0.57 ft
STORM STILL WATER ELEVATIONS (1) (2)	
50-yr Return Interval	9.7 ft
100-yr Return Interval	10.1 ft
WAVE RUNUP ELEVATION (1) (3)	
Wave Runup + Water Depth	25.6 ft

ALL ELEVATIONS ARE BASED ON VERTICAL DATUM NAVD 1988

Source/Notes:
(1) From "Wave Runup and Beach Impact Study," dated June 2002.
(2) Includes 1-ft projected sea level rise.
(3) Wave runup estimated for the Pedestrian Ramp location and is assumed to be similar at the Bike Ramp location.

12.34 Indicates bottom of footing elevation.

SURVEY CONTROL

RINCON 1992 (Not Shown)
Fnd Punched Steel Rod w/Access cover, Stamped "Rincon 1992"
227.61 Lt. "SL1" Line, Rte 101
Sta. 190+96.84
N 1,962,221.94
E 6,116,052.53
EL.=40.58

PHHV 30101
Fnd Aluminum Cap on ¾" Rebar Stamped: "CT"
22.44 Rt. "SL1" Line, Rte 101
Sta. 179+61.97
N 1,962,523.77
E 6,117,242.38
EL.=30.90

Note:
Elec. Line, Tele Line, Storm Drain Line, Per Dist. Utility Map

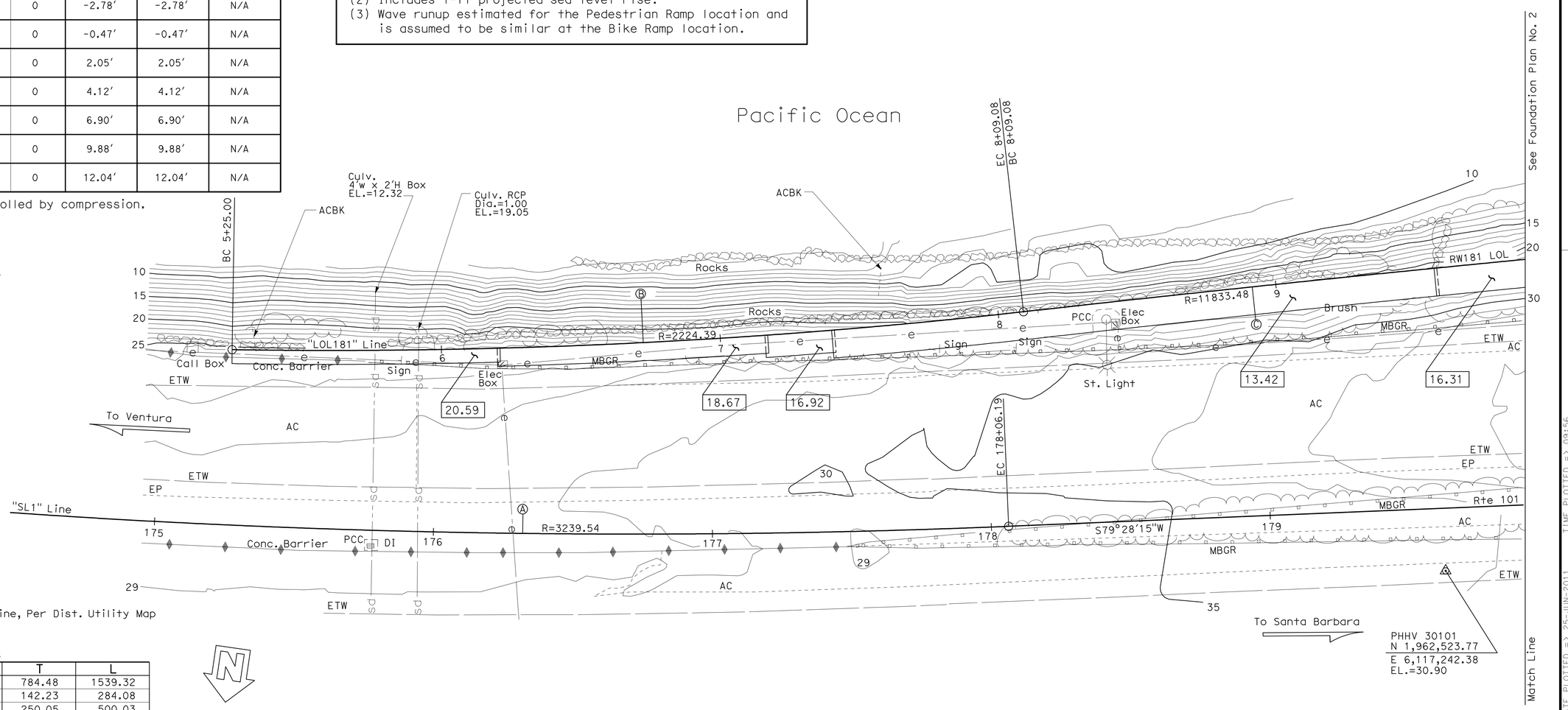

CURVE DATA

No.	R	Δ	T	L
Ⓐ	3239.54	27°13′30"	784.48	1539.32
Ⓑ	2224.39	7°19′02"	142.23	284.08
Ⓒ	11833.48	2°25′16"	250.05	500.03

PRELIMINARY INVESTIGATION SECTION

SCALE 1"=20′	VERT.DATUM NAVD 88	PHOTOGRAMMETRY AS OF: 12/06/2007		
HORZ.DATUM NAD 83	SURVEYED	BY	CHECKED	BY Chris Fassett 2/2010
ALIGNMENT TIES Dist. Traverse Sheet	DRAFTED	BY Sharon Zheng 02/2010	CHECKED	BY T. Zolnikov 2/2010

DESIGN	BY D. Menzmer	CHECKED	F. Tannous
DETAILS	BY T. Mason	CHECKED	F. Tannous
QUANTITIES	BY F. Tannous	CHECKED	L. Valla

STATE OF CALIFORNIA
DEPARTMENT OF TRANSPORTATION

DIVISION OF ENGINEERING SERVICES
STRUCTURE DESIGN
DESIGN BRANCH 12

BRIDGE NO. 52-E0016
POST MILE 41.70

RETAINING WALL 181
FOUNDATION PLAN NO. 1

STRUCTURES FOUNDATION PLAN SHEET (ENGLISH) (REV. 10/25/05)

ORIGINAL SCALE IN INCHES FOR REDUCED PLANS 0 1 2 3

CU 07
EA 260701

DISREGARD PRINTS BEARING EARLIER REVISION DATES 2/22/2010 7-08-10 1-21-11

REVISION DATES

SHEET 3 OF 18

FILE => k-52-e0016-b-fp01.dgn

USERNAME => s124436 DATE PLOTTED => 25-JUN-2011 TIME PLOTTED => 09:56

DIST	COUNTY	ROUTE	POST MILES TOTAL PROJECT	SHEET No	TOTAL SHEETS
07	Ven,SB	101	R39.8/R43.6, 0.0/2.2	743	757

REGISTERED CIVIL ENGINEER — DATE 10-18-10

6-20-11
PLANS APPROVAL DATE

REGISTERED PROFESSIONAL ENGINEER — Douglas C. Menzmer — No. C 63498 — Exp. 09/30/2010 — CIVIL — STATE OF CALIFORNIA

The State of California or its officers or agents shall not be responsible for the accuracy or completeness of electronic copies of this plan sheet.

CURVE DATA

No.	R	Δ	T	L
Ⓓ	2012.19	75°13'45"	1550.41	2642.00
Ⓔ	1503.48	5°41'05"	74.65	149.17
Ⓕ	11800.00	1°31'52"	157.67	315.32
Ⓖ	1470.00	6°34'14"	84.38	168.57
Ⓗ	3300.00	7°31'15"	216.90	433.17

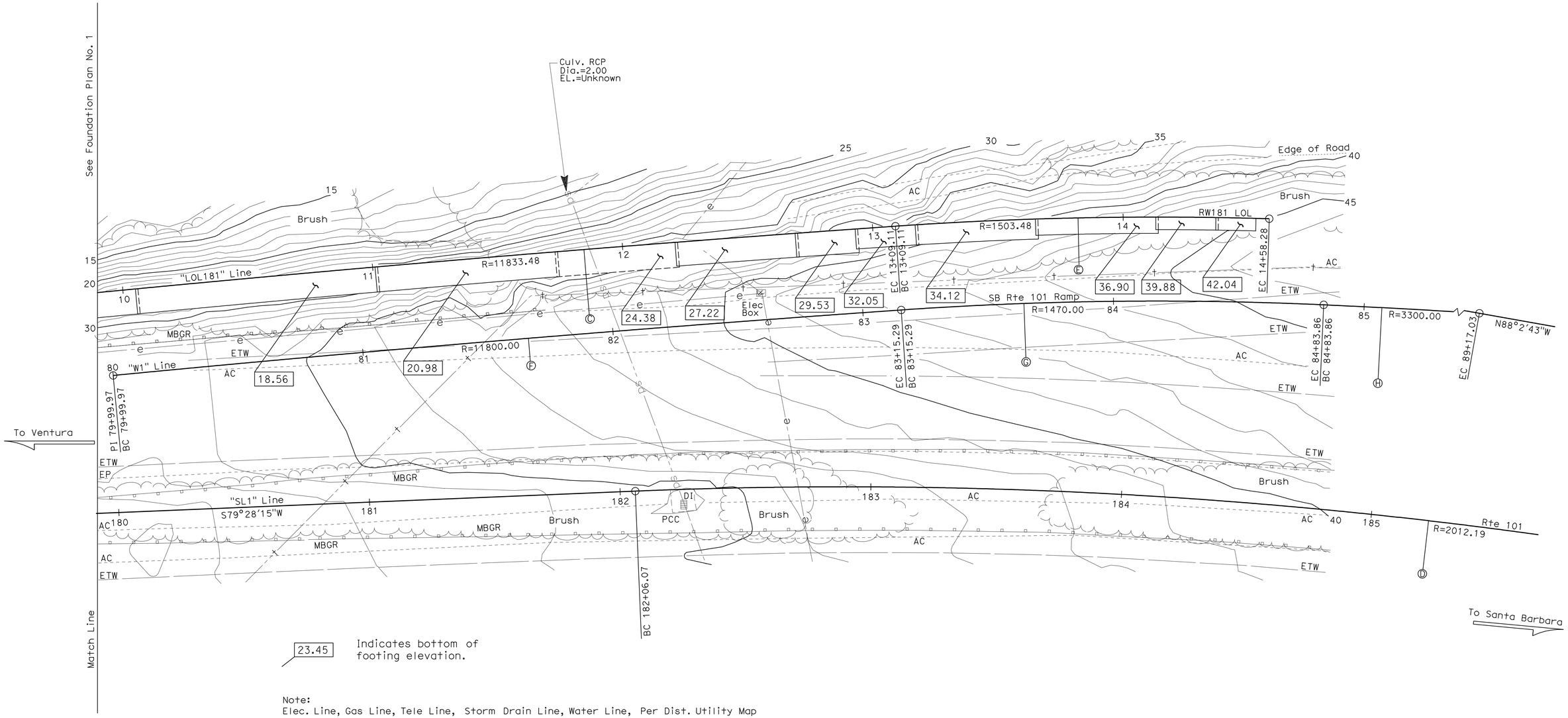

Note:
Elec. Line, Gas Line, Tele Line, Storm Drain Line, Water Line, Per Dist. Utility Map

PRELIMINARY INVESTIGATION SECTION							
SCALE 1"=20'	VERT.DATUM NAVD 88	PHOTOGRAMMETRY AS OF: 12/6/2007					
	HORZ.DATUM NAD 83	SURVEYED	BY X	CHECKED	BY Chris Fassett 2/2010		
	ALIGNMENT TIES Dist. Traverse Sheet	DRAFTED	BY Sharon Zheng 02/2010	CHECKED	BY T. Zolnikov 2/2010		

DESIGN	BY D. Menzmer	CHECKED	F. Tannous
DETAILS	BY T. Mason	CHECKED	F. Tannous
QUANTITIES	BY F. Tannous	CHECKED	L. Valla

STATE OF CALIFORNIA
DEPARTMENT OF TRANSPORTATION

DIVISION OF ENGINEERING SERVICES
STRUCTURE DESIGN
DESIGN BRANCH 12

BRIDGE NO. 52-E0016
POST MILE 41.70

RETAINING WALL 181
FOUNDATION PLAN NO. 2

STRUCTURES FOUNDATION PLAN SHEET (ENGLISH) (REV. 10/25/05)

ORIGINAL SCALE IN INCHES FOR REDUCED PLANS 0 1 2 3

CU 07
EA 260701

DISREGARD PRINTS BEARING EARLIER REVISION DATES 2/22/2010 7-08-10 1-21-11

REVISION DATES

SHEET 4 OF 18

FILE => k-52-e0016-b-fp02.dgn

USERNAME => s6124436 DATE PLOTTED => 25-JUN-2011 TIME PLOTTED => 09:56

DIST	COUNTY	ROUTE	POST MILES TOTAL PROJECT	SHEET No	TOTAL SHEETS
07	Ven,SB	101	R39.8/R43.6, 0.0/2.2	744	757

REGISTERED CIVIL ENGINEER 10-18-10 DATE

6-20-11
PLANS APPROVAL DATE

The State of California or its officers or agents shall not be responsible for the accuracy or completeness of electronic copies of this plan sheet.

REGISTERED PROFESSIONAL ENGINEER
Douglas C. Menzmer
No. C 63498
Exp. 09/30/2012
CIVIL
STATE OF CALIFORNIA

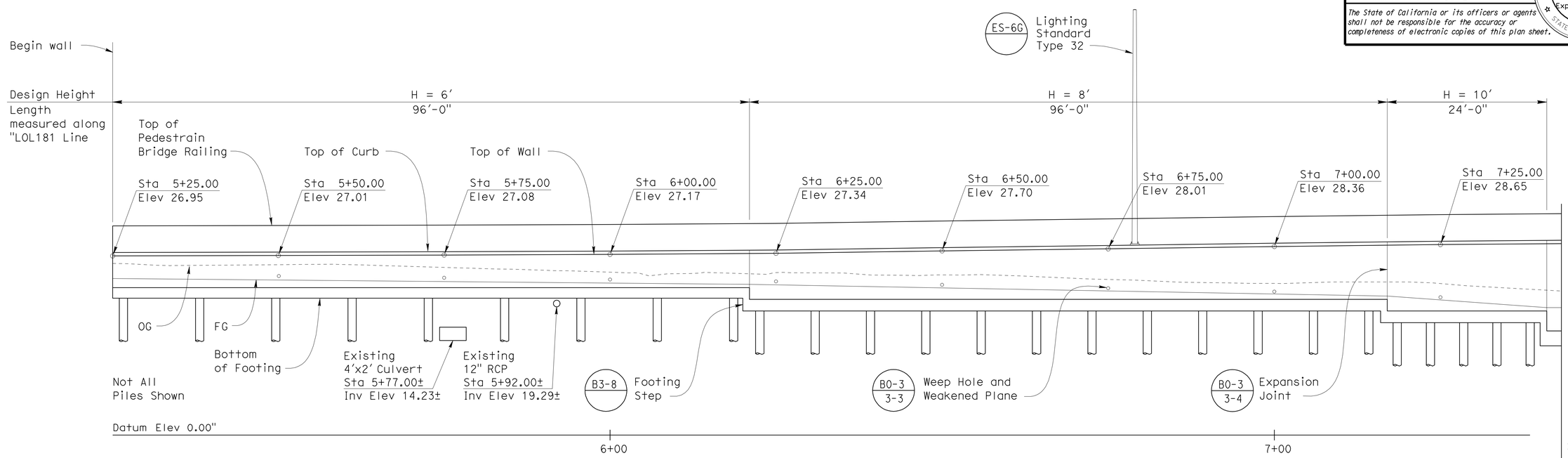

MIRRORED ELEVATION

1/8" = 1′-0"

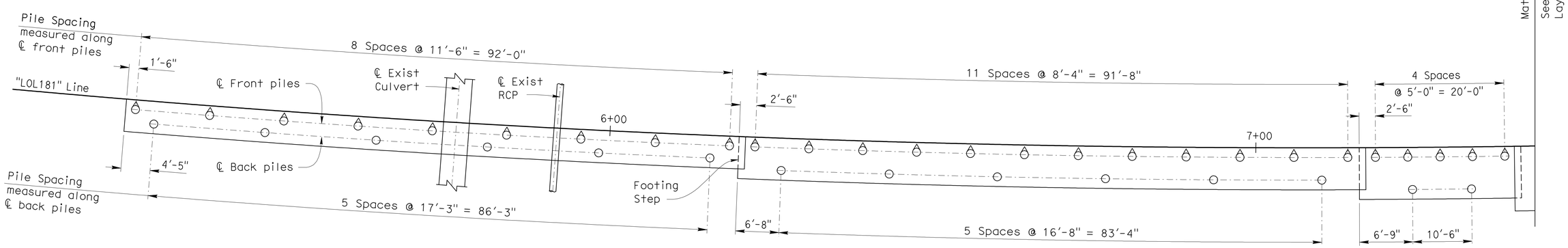

Denotes vertical piles

Denotes battered piles

Adjust piles 1′+/- as needed to clear Culvert or RCP

FOOTING PLAN

1/8" = 1′-0"

	BY	CHECKED
DESIGN	D. Menzmer	F. Tannous
DETAILS	T. Mason	F. Tannous
QUANTITIES	F. Tannous	L. Valla

STATE OF CALIFORNIA
DEPARTMENT OF TRANSPORTATION

DIVISION OF ENGINEERING SERVICES
STRUCTURE DESIGN
DESIGN BRANCH 12

BRIDGE NO. 52-E0016
POST MILE 41.70

RETAINING WALL 181
RETAINING WALL LAYOUT NO.1

STRUCTURES DESIGN DETAIL SHEET (ENGLISH) (REV. 10/25/05)

ORIGINAL SCALE IN INCHES FOR REDUCED PLANS 0 1 2 3

CU 07
EA 260701

DISREGARD PRINTS BEARING EARLIER REVISION DATES

REVISION DATES: 7-08-10 9-08-10 1-21-11

SHEET 5 OF 18

FILE => k-52-e0016-c-rwlo01.dgn

USERNAME => s124936 DATE PLOTTED => 25-JUN-2011 TIME PLOTTED => 09:56

DIST	COUNTY	ROUTE	POST MILES TOTAL PROJECT	SHEET No	TOTAL SHEETS
07	Ven,SB	101	R39.8/R43.6, 0.0/2.2	745	757

REGISTERED CIVIL ENGINEER 10-18-10 DATE

6-20-11
PLANS APPROVAL DATE

REGISTERED PROFESSIONAL ENGINEER Douglas C. Menzmer No. C 63498 Exp. 09/30/2012 CIVIL STATE OF CALIFORNIA

The State of California or its officers or agents shall not be responsible for the accuracy or completeness of electronic copies of this plan sheet.

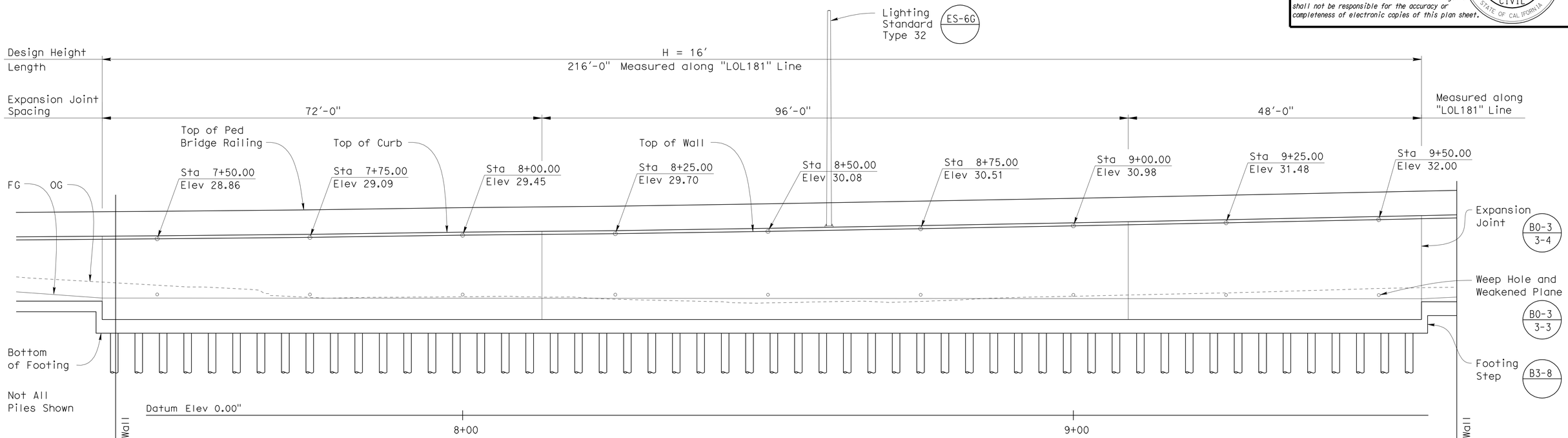

MIRRORED ELEVATION
1/8" = 1'-0"

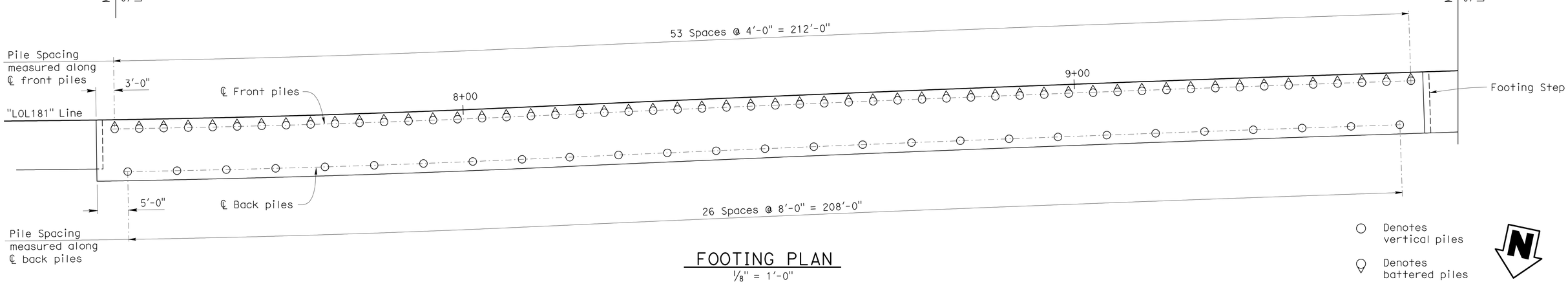

FOOTING PLAN
1/8" = 1'-0"

DESIGN	BY D. Menzmer	CHECKED F. Tannous	
DETAILS	BY T. Mason	CHECKED F. Tannous	
QUANTITIES	BY F. Tannous	CHECKED L. Valla	

STATE OF CALIFORNIA
DEPARTMENT OF TRANSPORTATION

DIVISION OF ENGINEERING SERVICES
STRUCTURE DESIGN
DESIGN BRANCH 12

BRIDGE NO. 52-E0016
POST MILE 41.70

RETAINING WALL 181
RETAINING WALL LAYOUT NO.2

STRUCTURES DESIGN DETAIL SHEET (ENGLISH) (REV. 10/25/05)

ORIGINAL SCALE IN INCHES FOR REDUCED PLANS 0 1 2 3

CU 07
EA 260701

DISREGARD PRINTS BEARING EARLIER REVISION DATES

REVISION DATES: 7-08-10 9-07-10 1-21-11

SHEET 6 OF 18

FILE => k-52-e0016-c-rwlo02.dgn

USERNAME => s1244196 DATE PLOTTED => 25-JUN-2011 TIME PLOTTED => 09:56

DIST	COUNTY	ROUTE	POST MILES TOTAL PROJECT	SHEET No	TOTAL SHEETS
07	Ven,SB	101	R39.8/R43.6, 0.0/2.2	746	757

REGISTERED CIVIL ENGINEER 10-18-10 DATE

6-20-11
PLANS APPROVAL DATE

REGISTERED PROFESSIONAL ENGINEER Douglas C. Menzmer No. C 63498 Exp. 09/30/2012 CIVIL STATE OF CALIFORNIA

The State of California or its officers or agents shall not be responsible for the accuracy or completeness of electronic copies of this plan sheet.

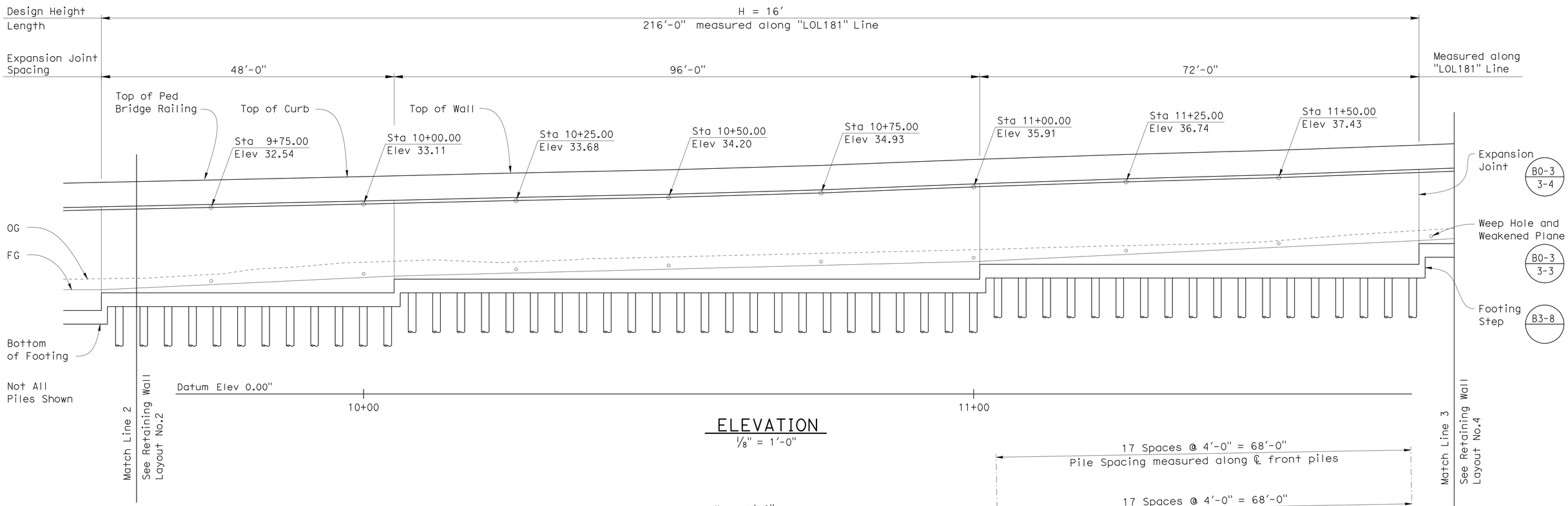

ELEVATION
1/8" = 1'-0"

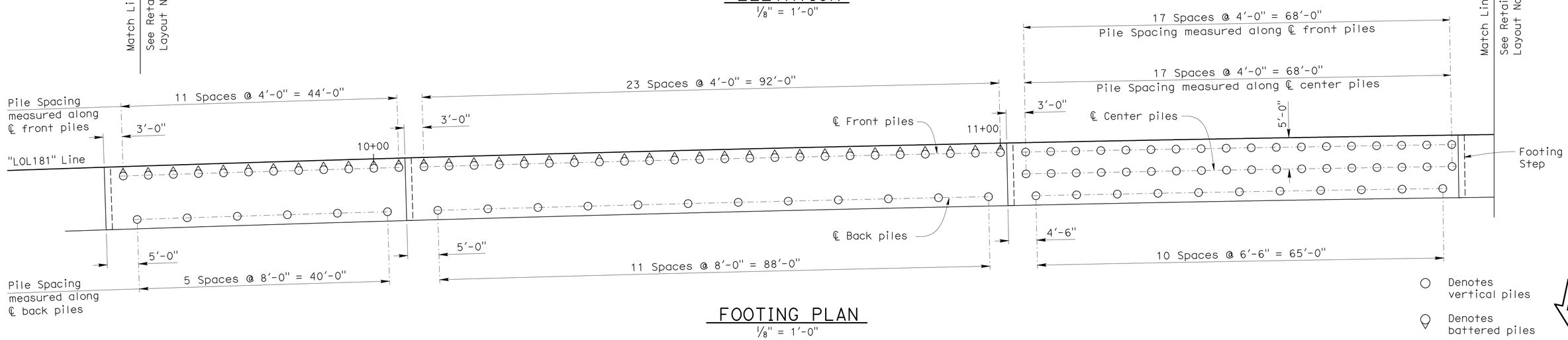

FOOTING PLAN
1/8" = 1'-0"

DESIGN	BY D. Menzmer	CHECKED F. Tannous	
DETAILS	BY T. Mason	CHECKED F. Tannous	
QUANTITIES	BY F. Tannous	CHECKED L. Valla	

STATE OF CALIFORNIA
DEPARTMENT OF TRANSPORTATION

DIVISION OF ENGINEERING SERVICES
STRUCTURE DESIGN
DESIGN BRANCH 12

BRIDGE NO. 52-E0016
POST MILE 41.70

RETAINING WALL 181
RETAINING WALL LAYOUT NO.3

STRUCTURES DESIGN DETAIL SHEET (ENGLISH) (REV. 10/25/05)

ORIGINAL SCALE IN INCHES FOR REDUCED PLANS 0 1 2 3

CU 07
EA 260701

DISREGARD PRINTS BEARING EARLIER REVISION DATES

REVISION DATES: 7-08-10 9-07-10 1-21-11

SHEET 7 OF 18

FILE => k-52-e0016-c-rwlo03.dgn

USERNAME => s124496 DATE PLOTTED => 25-JUN-2011 TIME PLOTTED => 09:56

DIST	COUNTY	ROUTE	POST MILES TOTAL PROJECT	SHEET No	TOTAL SHEETS
07	Ven,SB	101	R39.8/R43.6, 0.0/2.2	747	757

REGISTERED CIVIL ENGINEER 10-18-10 DATE

6-20-11
PLANS APPROVAL DATE

REGISTERED PROFESSIONAL ENGINEER Douglas C. Menzmer No. C 63498 Exp. 09/30/2012 CIVIL STATE OF CALIFORNIA

The State of California or its officers or agents shall not be responsible for the accuracy or completeness of electronic copies of this plan sheet.

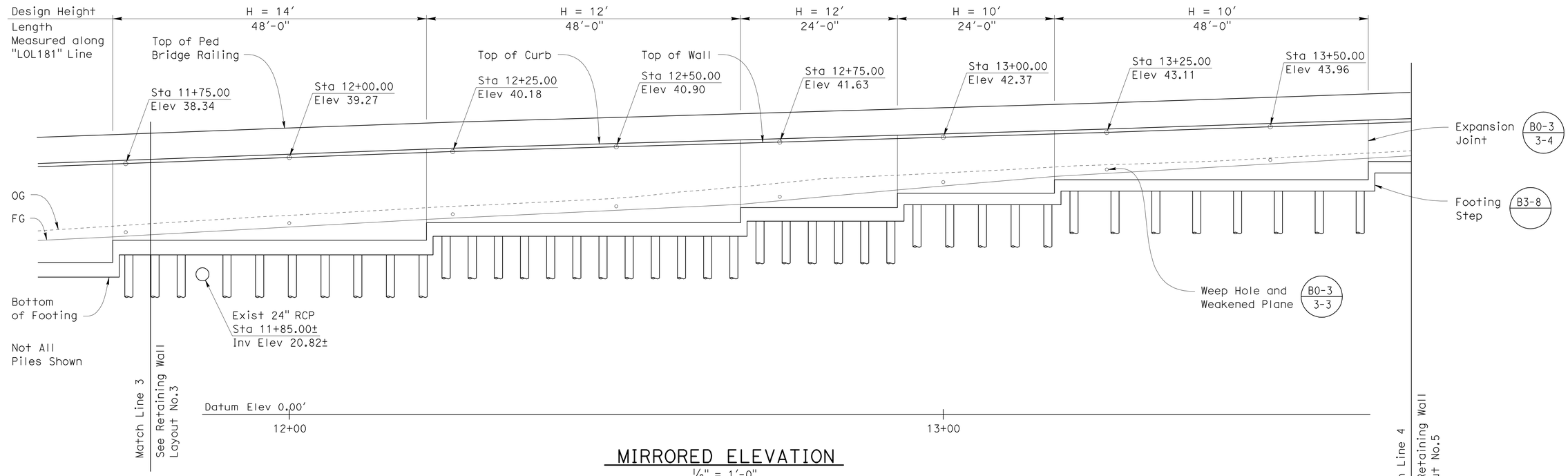

MIRRORED ELEVATION
1/8" = 1′-0"

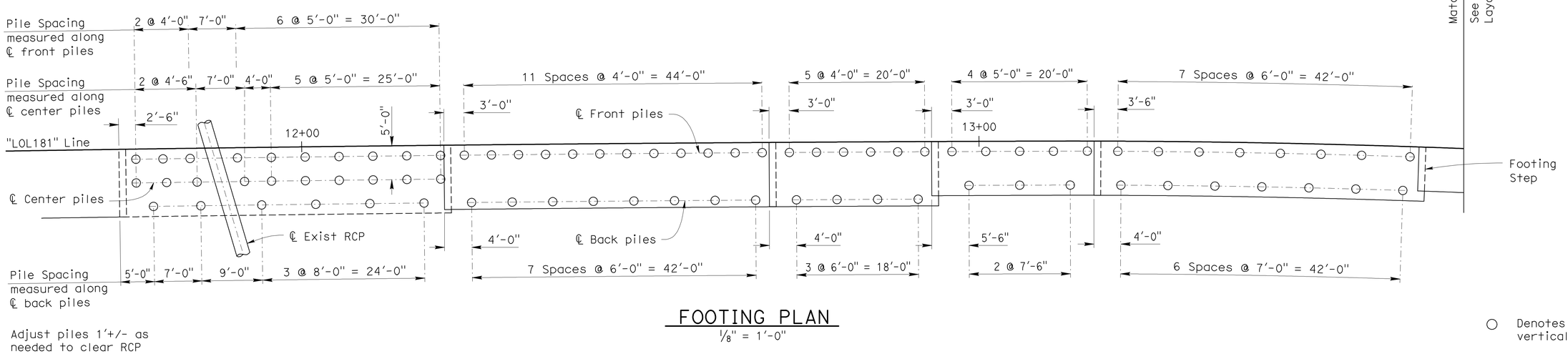

Adjust piles 1′+/- as needed to clear RCP

FOOTING PLAN
1/8" = 1′-0"

DESIGN	BY D. Menzmer	CHECKED F. Tannous	
DETAILS	BY T. Mason	CHECKED F. Tannous	
QUANTITIES	BY F. Tannous	CHECKED L. Valla	

STATE OF CALIFORNIA
DEPARTMENT OF TRANSPORTATION

DIVISION OF ENGINEERING SERVICES
STRUCTURE DESIGN
DESIGN BRANCH 12

BRIDGE NO. 52-E0016
POST MILE 41.70

RETAINING WALL 181
RETAINING WALL LAYOUT NO.4

STRUCTURES DESIGN DETAIL SHEET (ENGLISH) (REV. 10/25/05)

ORIGINAL SCALE IN INCHES FOR REDUCED PLANS 0 1 2 3

CU 07
EA 260701

DISREGARD PRINTS BEARING EARLIER REVISION DATES

REVISION DATES: 7-08-10 9-07-10 1-21-11

SHEET 8 OF 18

FILE => k-52-e0016-c-rwlo04.dgn

USERNAME => s124496 DATE PLOTTED => 25-JUN-2011 TIME PLOTTED => 09:57

DIST	COUNTY	ROUTE	POST MILES TOTAL PROJECT	SHEET No	TOTAL SHEETS
07	Ven,SB	101	R39.8/R43.6, 0.0/2.2	748	757

REGISTERED CIVIL ENGINEER 10-18-10 DATE

6-20-11
PLANS APPROVAL DATE

The State of California or its officers or agents shall not be responsible for the accuracy or completeness of electronic copies of this plan sheet.

REGISTERED PROFESSIONAL ENGINEER
Douglas C. Menzmer
No. C 63498
Exp. 09/30/2012
CIVIL
STATE OF CALIFORNIA

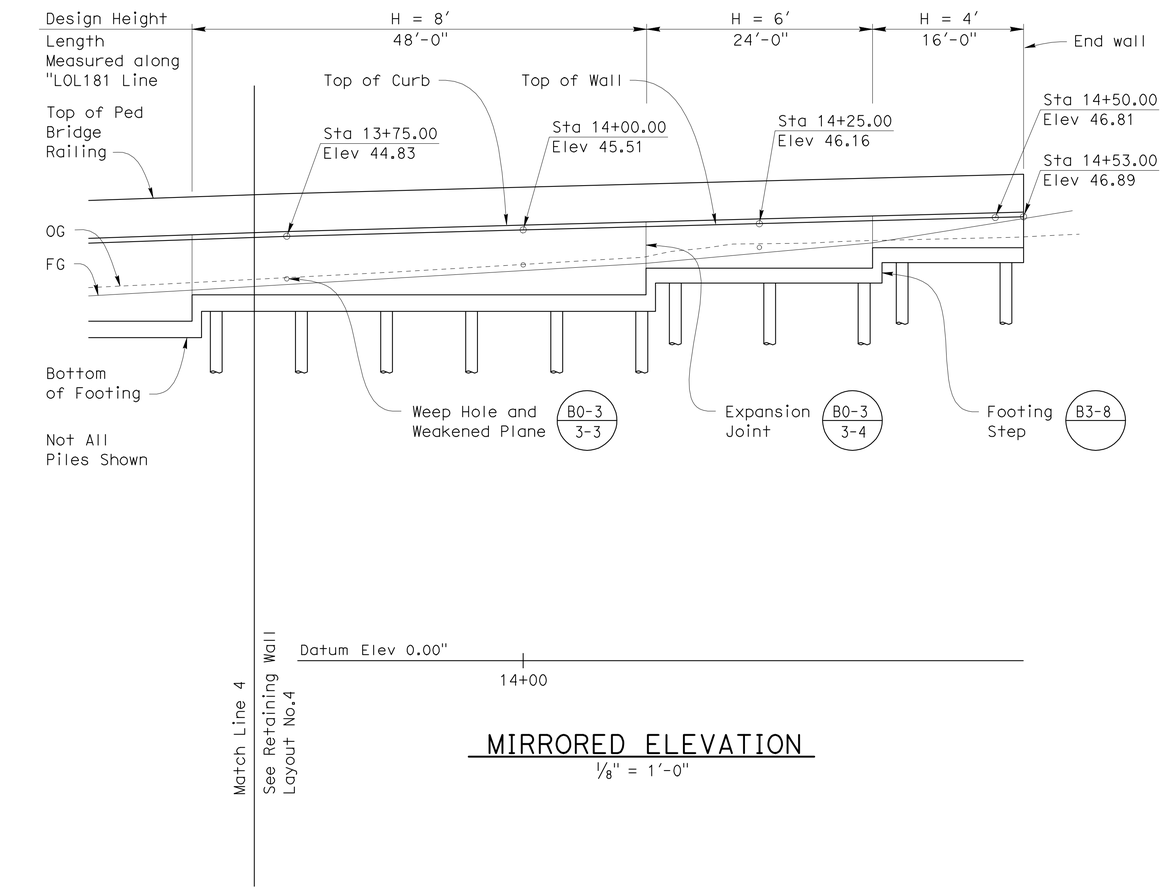

MIRRORED ELEVATION
1/8" = 1′-0"

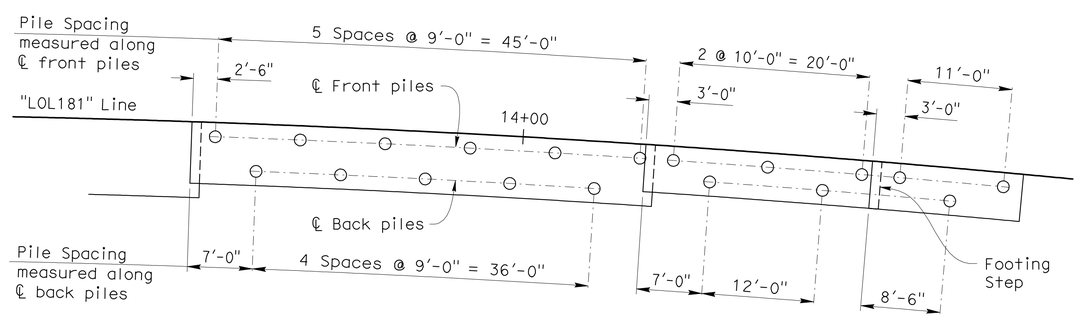

FOOTING PLAN
1/8" = 1′-0"

○ Denotes vertical piles

DESIGN	BY D. Menzmer	CHECKED F. Tannous	
DETAILS	BY T. Mason	CHECKED F. Tannous	
QUANTITIES	BY F. Tannous	CHECKED L. Valla	

STATE OF CALIFORNIA
DEPARTMENT OF TRANSPORTATION

DIVISION OF ENGINEERING SERVICES
STRUCTURE DESIGN
DESIGN BRANCH 12

BRIDGE NO. 52-E0016
POST MILE 41.70

RETAINING WALL 181
RETAINING WALL LAYOUT NO.5

STRUCTURES DESIGN DETAIL SHEET (ENGLISH) (REV. 10/25/05)

ORIGINAL SCALE IN INCHES FOR REDUCED PLANS 0 1 2 3

CU 07
EA 260701

DISREGARD PRINTS BEARING EARLIER REVISION DATES → 7-08-10 9-07-10 1-21-11

REVISION DATES

SHEET 9 OF 18

FILE => k-52-e0016-c-rw1o05.dgn

USERNAME => s124496 DATE PLOTTED => 25-JUN-2011 TIME PLOTTED => 09:57

DIST	COUNTY	ROUTE	POST MILES TOTAL PROJECT	SHEET No	TOTAL SHEETS
07	Ven,SB	101	R39.8/R43.6, 0.0/2.2	749	757

REGISTERED CIVIL ENGINEER 10-18-10 DATE

6-20-11
PLANS APPROVAL DATE

The State of California or its officers or agents shall not be responsible for the accuracy or completeness of electronic copies of this plan sheet.

REGISTERED PROFESSIONAL ENGINEER Douglas C. Menzmer No. C 63498 Exp. 09/30/2012 CIVIL STATE OF CALIFORNIA

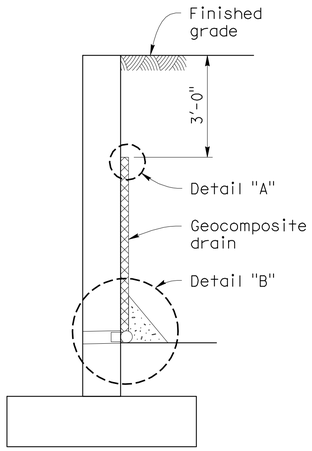

WALL SECTION

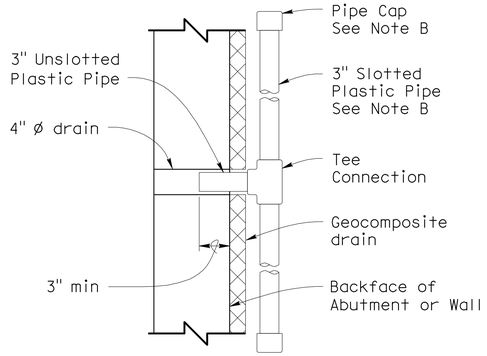

DRAIN PLAN

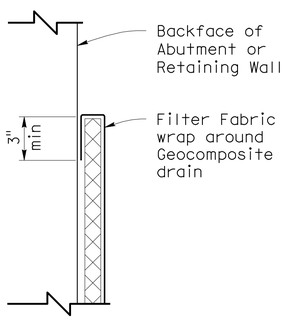

DETAIL A

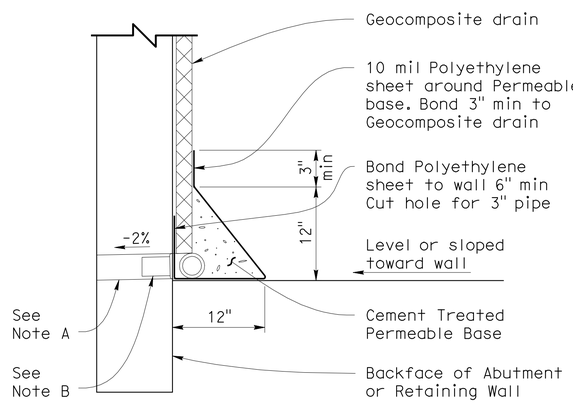

DETAIL B

Notes:

A. 4" Ø drains at intermediate sag points and at 25' max center to center. Exposed wall drains shall be located 3"± above finished grade.

B. Geocomposite drain, cement treated permeable base, and 3" Ø slotted plastic pipe continuous behind retaining wall. Cap ends of pipe. Provide "Tee" connection at each 4" Ø drain.

C. Connect the low end of plastic pipe to the main outlet pipe as applicable.

WEEP HOLE AND GEOCOMPOSITE DRAIN

no scale

Alternative to Bridge Detail B0-3 / 3-1

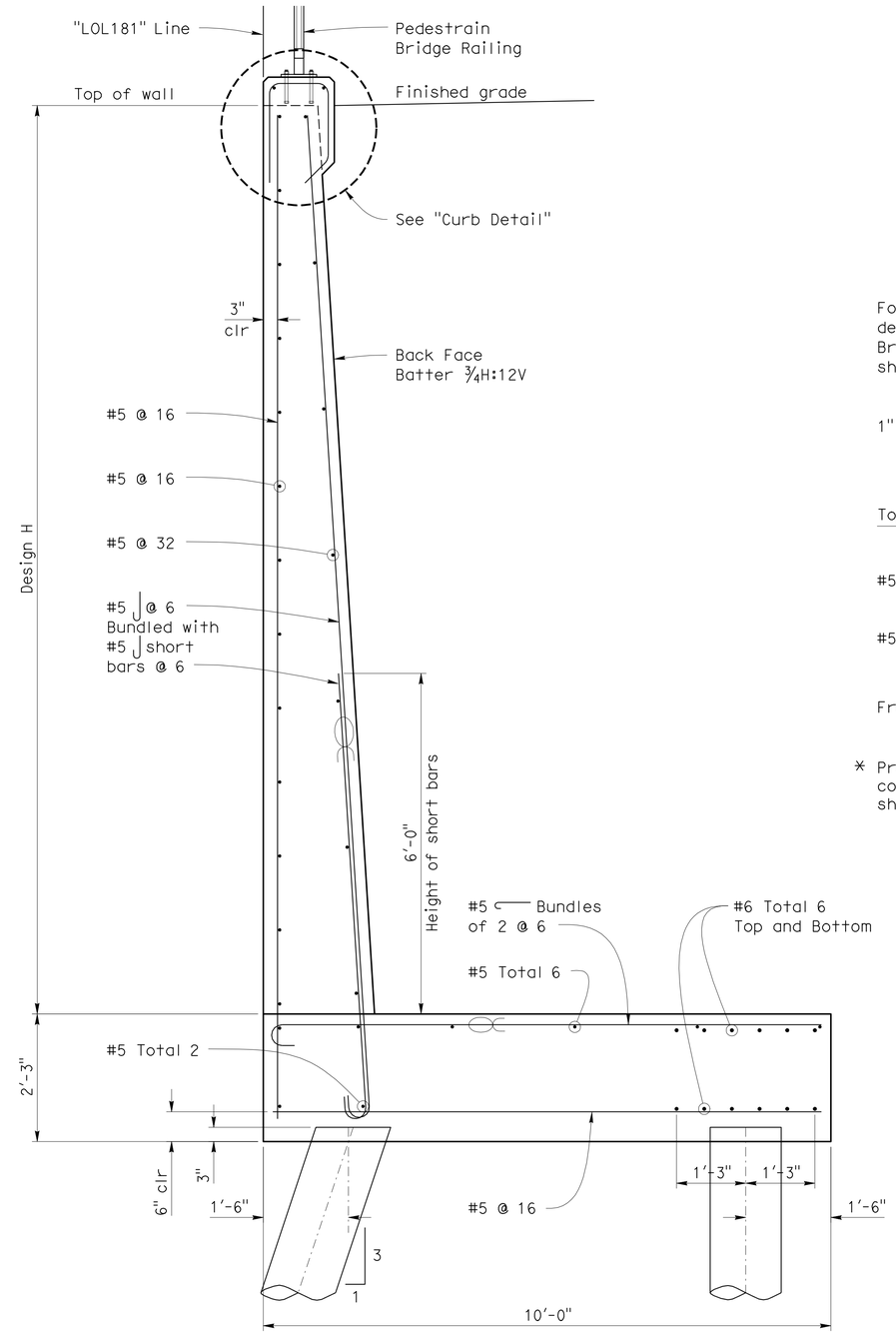

RETAINING WALL TYPE 5 (SPECIAL DESIGN)
H=14' TO 16' - TYPICAL SECTION

¾" = 1'-0"

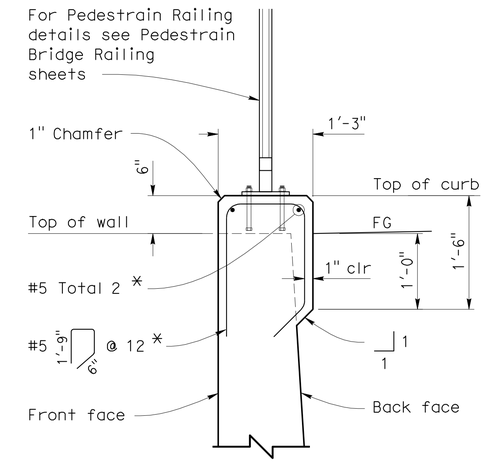

* Prefabricated epoxy coated reinforcement shall be used in curb

CURB DETAIL

1" = 1'-0"

For details not shown and other design heights refer to B3-7

Indicates bundled bars

For locations of battered Piles and center row piles, refer to "Footing Plan" on the Retaining Wall Layout sheets.

DESIGN	BY D. Menzmer	CHECKED F. Tannous	
DETAILS	BY T. Mason	CHECKED F. Tannous	
QUANTITIES	BY F. Tannous	CHECKED L. Valla	

STATE OF CALIFORNIA
DEPARTMENT OF TRANSPORTATION

DIVISION OF ENGINEERING SERVICES
STRUCTURE DESIGN
DESIGN BRANCH 12

BRIDGE NO. 52-E0016
POST MILE 41.70

RETAINING WALL 181
RETAINING WALL DETAILS NO.1

STRUCTURES DESIGN DETAIL SHEET (ENGLISH) (REV. 10/25/05)

ORIGINAL SCALE IN INCHES FOR REDUCED PLANS 0 1 2 3

CU 07
EA 260701

DISREGARD PRINTS BEARING EARLIER REVISION DATES

REVISION DATES: 7-08-10 9-07-10 1-21-11

SHEET 10 OF 18

FILE => k-52-e0016-d-rwdet01.dgn

USERNAME => s124196 DATE PLOTTED => 25-JUN-2011 TIME PLOTTED => 09:57

DIST	COUNTY	ROUTE	POST MILES TOTAL PROJECT	SHEET No	TOTAL SHEETS
07	Ven,SB	101	R39.8/R43.6, 0.0/2.2	750	757

REGISTERED CIVIL ENGINEER 10-18-10 DATE

6-20-11
PLANS APPROVAL DATE

REGISTERED PROFESSIONAL ENGINEER Douglas C. Menzmer No. C 63498 Exp. 09/30/2012 CIVIL STATE OF CALIFORNIA

The State of California or its officers or agents shall not be responsible for the accuracy or completeness of electronic copies of this plan sheet.

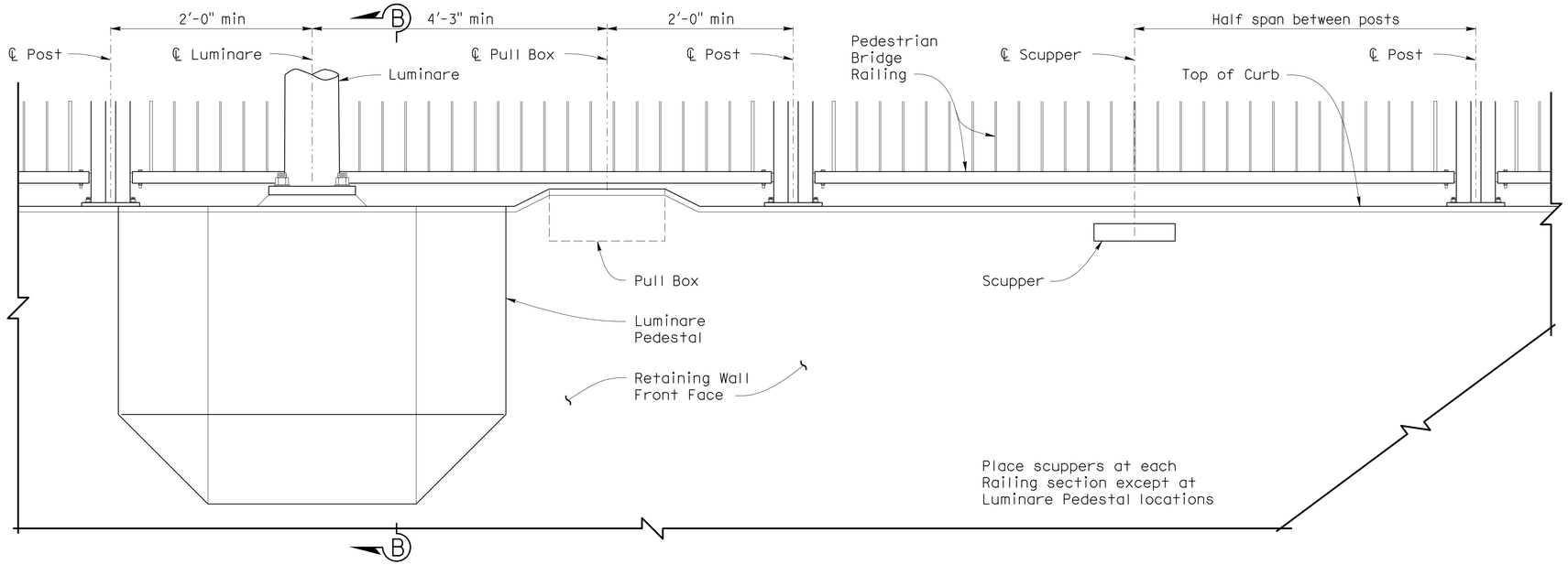

MIRRORED ELEVATION
1" = 1'-0"

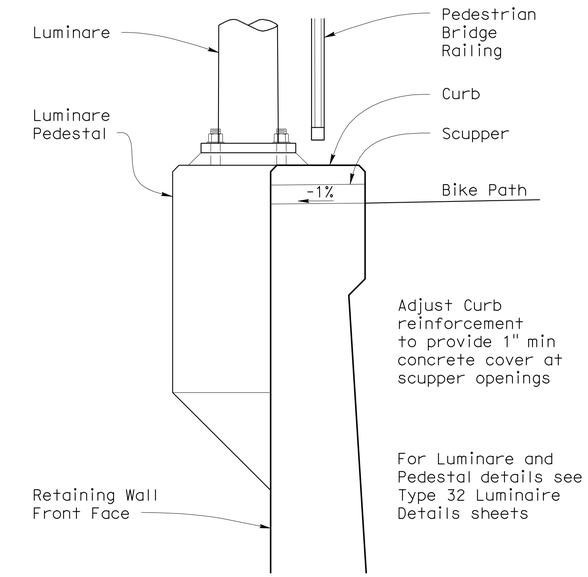

SECTION B-B
1" = 1'-0"

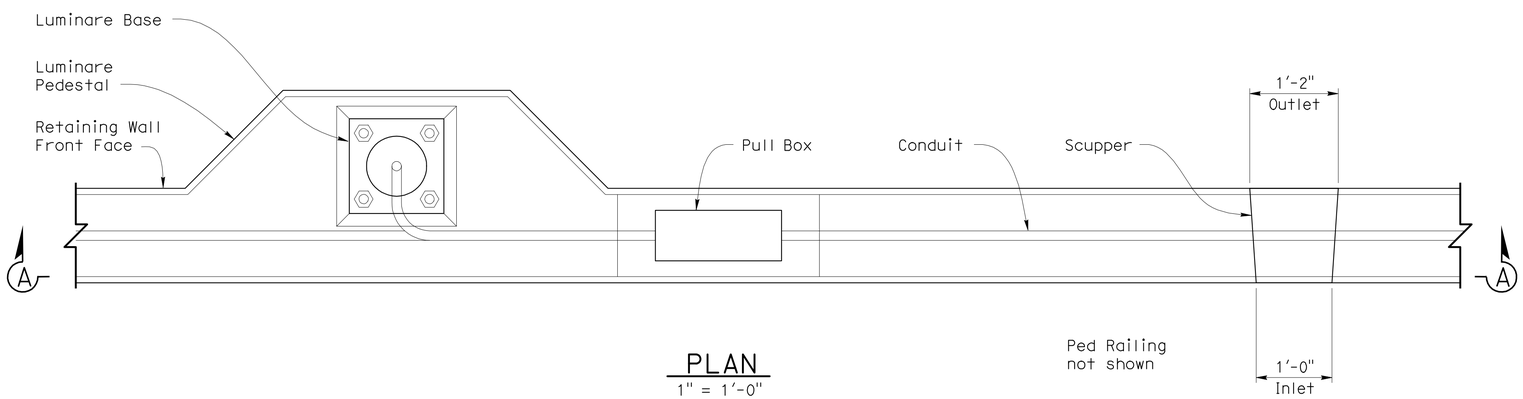

PLAN
1" = 1'-0"

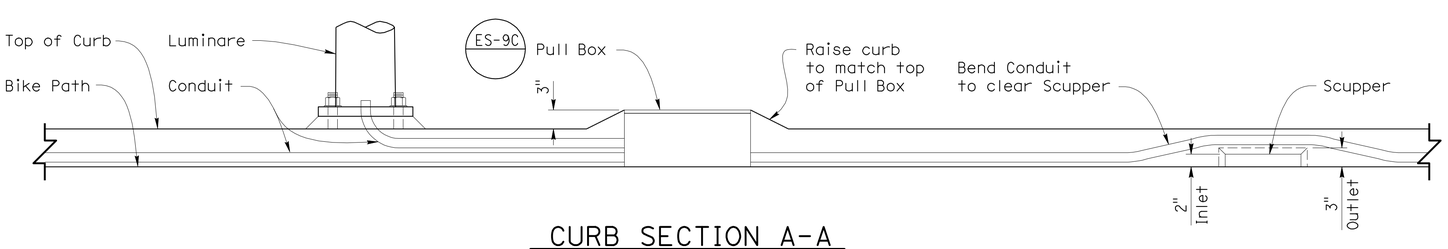

CURB SECTION A-A
1" = 1'-0"

DESIGN	BY D. Menzmer	CHECKED F. Tannous	
DETAILS	BY T. Mason	CHECKED F. Tannous	
QUANTITIES	BY F. Tannous	CHECKED L. Valla	

STATE OF CALIFORNIA
DEPARTMENT OF TRANSPORTATION

DIVISION OF ENGINEERING SERVICES
STRUCTURE DESIGN
DESIGN BRANCH 12

BRIDGE NO. 52-E0016
POST MILE 41.70

RETAINING WALL 181
RETAINING WALL DETAILS NO.2

STRUCTURES DESIGN DETAIL SHEET (ENGLISH) (REV. 10/25/05)

ORIGINAL SCALE IN INCHES FOR REDUCED PLANS 0 1 2 3

CU 07
EA 260701

DISREGARD PRINTS BEARING EARLIER REVISION DATES → 7-08-10 9-07-10 1-21-11

REVISION DATES

SHEET 11 OF 18

FILE => k-52-e0016-d-rwdet02.dgn

USERNAME => s124196 DATE PLOTTED => 25-JUN-2011 TIME PLOTTED => 09:57

DIST	COUNTY	ROUTE	POST MILES TOTAL PROJECT	SHEET No	TOTAL SHEETS
07	Ven,SB	101	R39.8/R43.6, 0.0/2.2	751	757

REGISTERED CIVIL ENGINEER — DATE 10-18-10

6-20-11
PLANS APPROVAL DATE

REGISTERED PROFESSIONAL ENGINEER — Douglas C. Menzmer — No. C 63498 — Exp. 09/30/2012 — CIVIL — STATE OF CALIFORNIA

The State of California or its officers or agents shall not be responsible for the accuracy or completeness of electronic copies of this plan sheet.

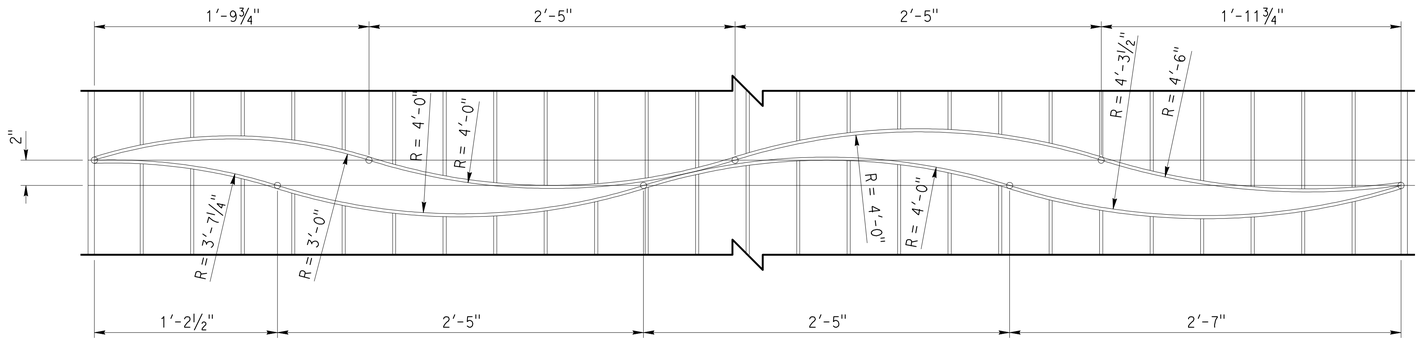

OPEN WAVE LAYOUT

½" = 1'-0"

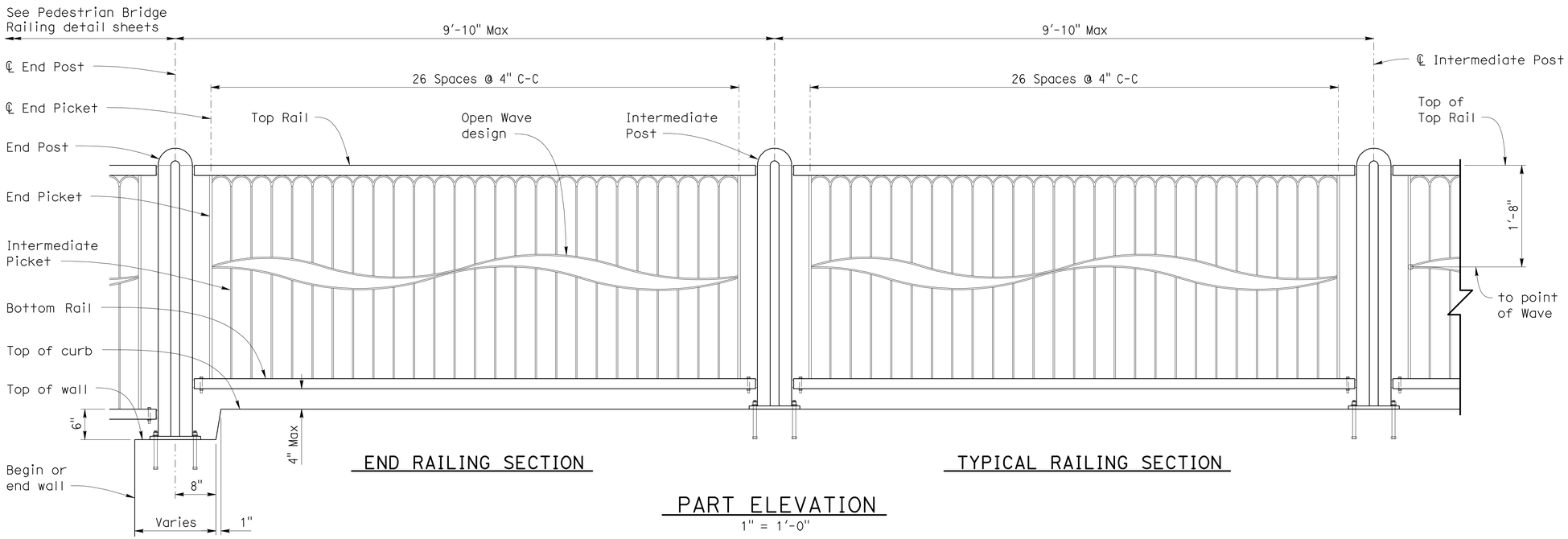

PART ELEVATION

1" = 1'-0"

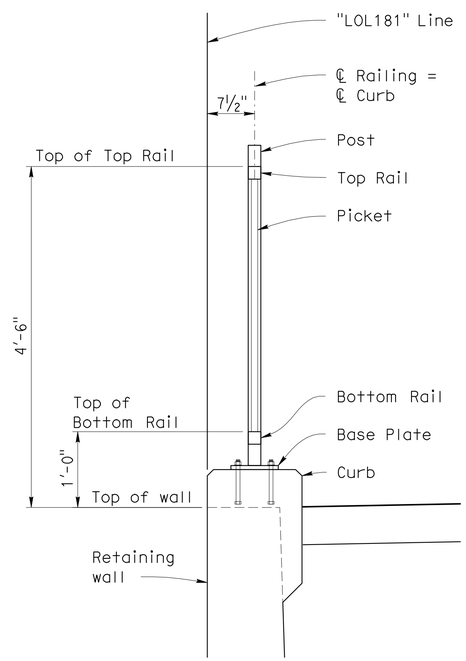

TYPICAL RAILING SECTION

1" = 1'-0"

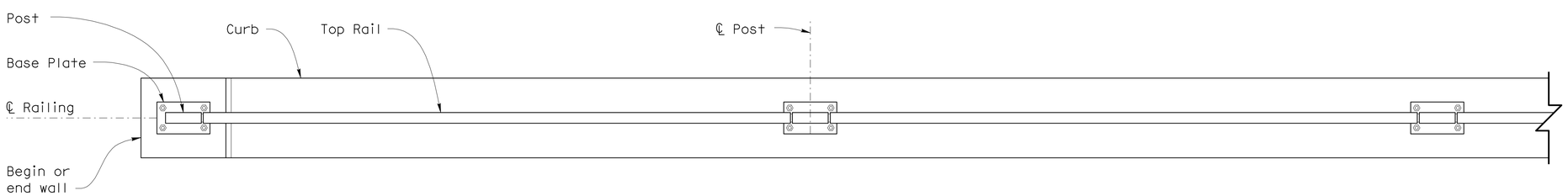

PART PLAN

1" = 1'-0"

Notes:

1. Galvanize all components after fabrication.
2. Posts shall be normal to railing.
3. All bolts shall be A307 with thread locking system.

DESIGN	BY D. Menzmer	CHECKED F. Tannous	
DETAILS	BY T. Mason	CHECKED F. Tannous	
QUANTITIES	BY F. Tannous	CHECKED L. Valla	

STATE OF CALIFORNIA
DEPARTMENT OF TRANSPORTATION

DIVISION OF ENGINEERING SERVICES
STRUCTURE DESIGN
DESIGN BRANCH 12

BRIDGE NO. 52-E0016
POST MILE 41.70

RETAINING WALL 181
PEDESTRIAN BRIDGE RAILING LAYOUT

STRUCTURES DESIGN DETAIL SHEET (ENGLISH) (REV. 10/25/05)

ORIGINAL SCALE IN INCHES FOR REDUCED PLANS 0 1 2 3

CU 07
EA 260701

DISREGARD PRINTS BEARING EARLIER REVISION DATES → 7-08-10 9-07-10 1-21-11

REVISION DATES

SHEET 12 OF 18

FILE => k-52-e0016-e-prlo.dgn

USERNAME => s124496 DATE PLOTTED => 25-JUN-2011 TIME PLOTTED => 09:57

DIST	COUNTY	ROUTE	POST MILES TOTAL PROJECT	SHEET No	TOTAL SHEETS
07	Ven,SB	101	R39.8/R43.6, 0.0/2.2	752	757

REGISTERED CIVIL ENGINEER 10-18-10 DATE

6-20-11
PLANS APPROVAL DATE

REGISTERED PROFESSIONAL ENGINEER Douglas C. Menzmer No. C 63498 Exp. 09/30/2012 CIVIL STATE OF CALIFORNIA

The State of California or its officers or agents shall not be responsible for the accuracy or completeness of electronic copies of this plan sheet.

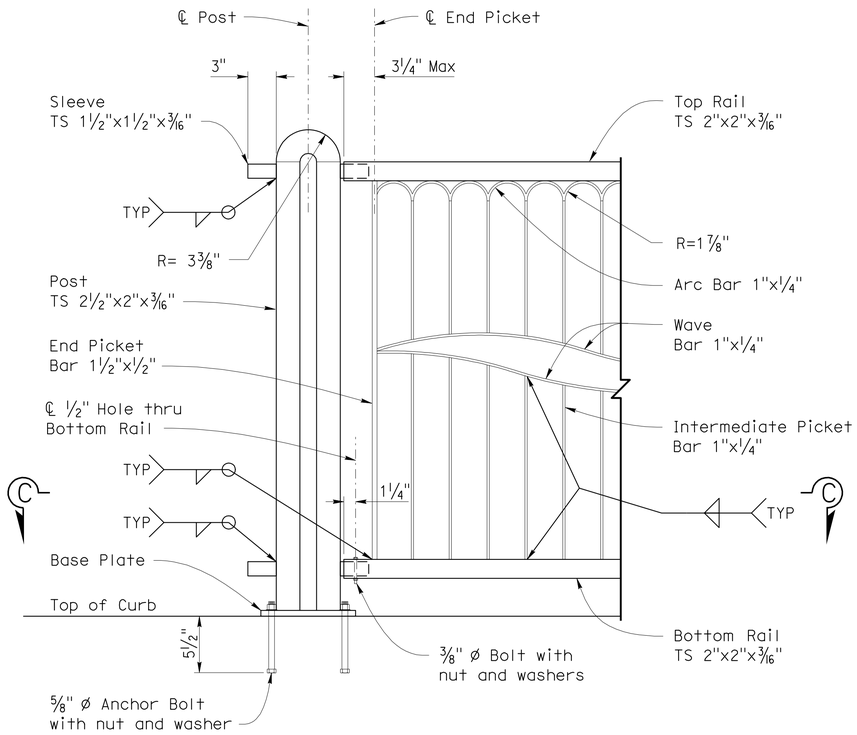

INTERMEDIATE POST PART ELEVATION

1½" = 1'-0"

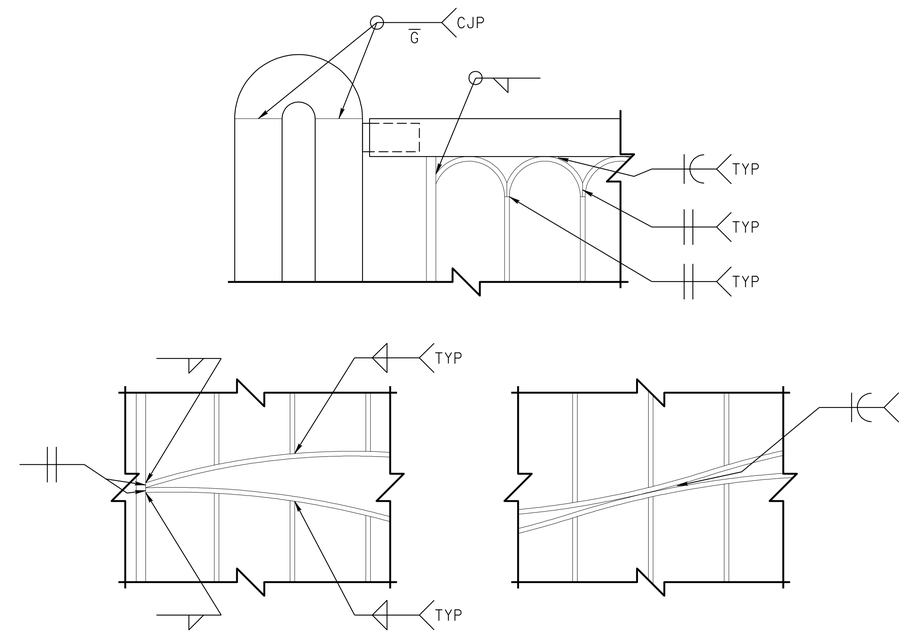

WELD DETAILS

no scale

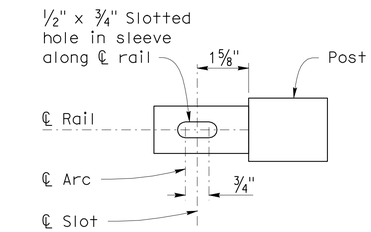

BOTTOM RAIL SLEEVE PLAN VIEW

5" = 1'-0"

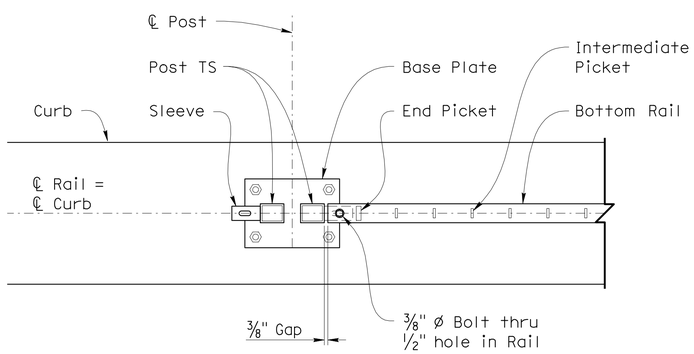

SECTION C-C

1½" = 1'-0"

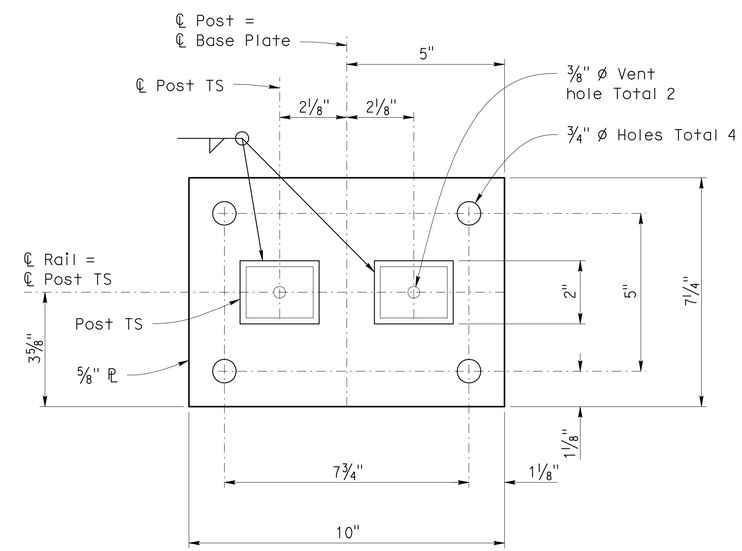

BASE PLATE

5" = 1'-0"

DESIGN	BY D. Menzmer	CHECKED F. Tannous	
DETAILS	BY T. Mason	CHECKED F. Tannous	
QUANTITIES	BY F. Tannous	CHECKED L. Valla	

STATE OF CALIFORNIA
DEPARTMENT OF TRANSPORTATION

DIVISION OF ENGINEERING SERVICES
STRUCTURE DESIGN
DESIGN BRANCH 12

BRIDGE NO. 52-E0016
POST MILE 41.70

RETAINING WALL 181
PEDESTRIAN BRIDGE RAILING DETAILS

STRUCTURES DESIGN DETAIL SHEET (ENGLISH) (REV. 10/25/05)

ORIGINAL SCALE IN INCHES FOR REDUCED PLANS 0 1 2 3

CU 07
EA 260701

DISREGARD PRINTS BEARING EARLIER REVISION DATES

REVISION DATES: 7-08-10 9-08-10 1-21-11

SHEET 13 OF 18

FILE => k-52-e0016-f-prdet.dgn

USERNAME => s124496 DATE PLOTTED => 25-JUN-2011 TIME PLOTTED => 09:57

DIST	COUNTY	ROUTE	POST MILES TOTAL PROJECT	SHEET No	TOTAL SHEETS
07	Ven SB	101	R39.8/R43.6, 0.0/2.2	753	757

REGISTERED CIVIL ENGINEER 10/18/10 DATE

6-20-11
PLANS APPROVAL DATE

REGISTERED PROFESSIONAL ENGINEER JOEL MAGANA No. C61500 Exp. 6/30/11 CIVIL STATE OF CALIFORNIA

The State of California or its officers or agents shall not be responsible for the accuracy or completeness of electronic copies of this plan sheet.

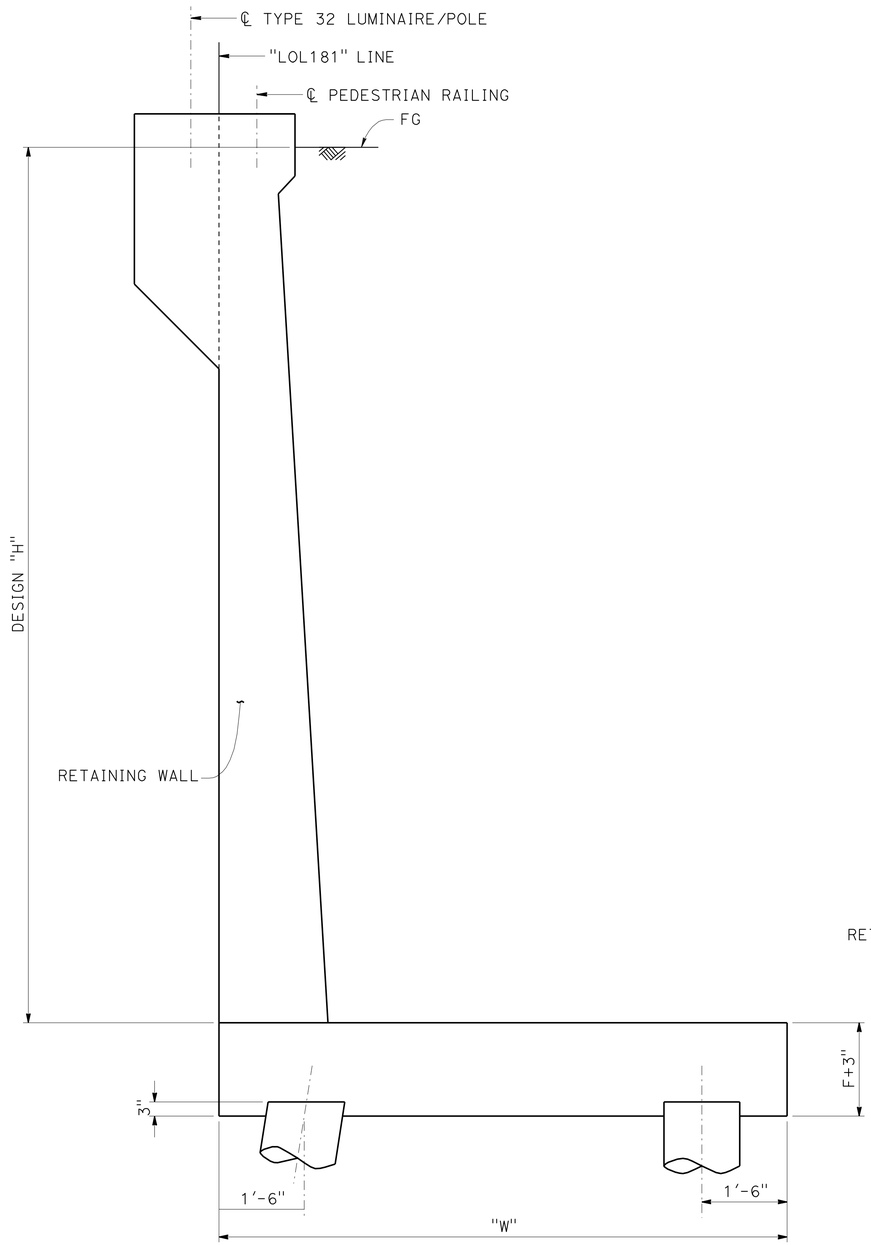

RETAINING WALL SECTION

NO SCALE

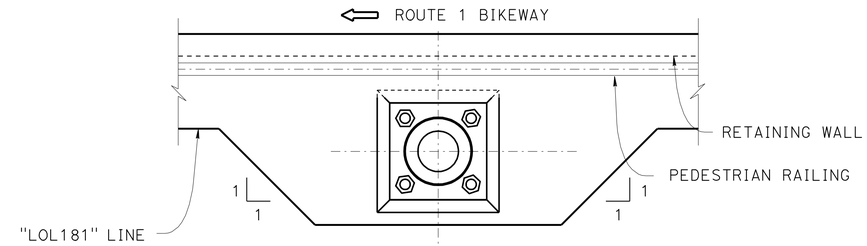

CORBEL PLAN

NO SCALE

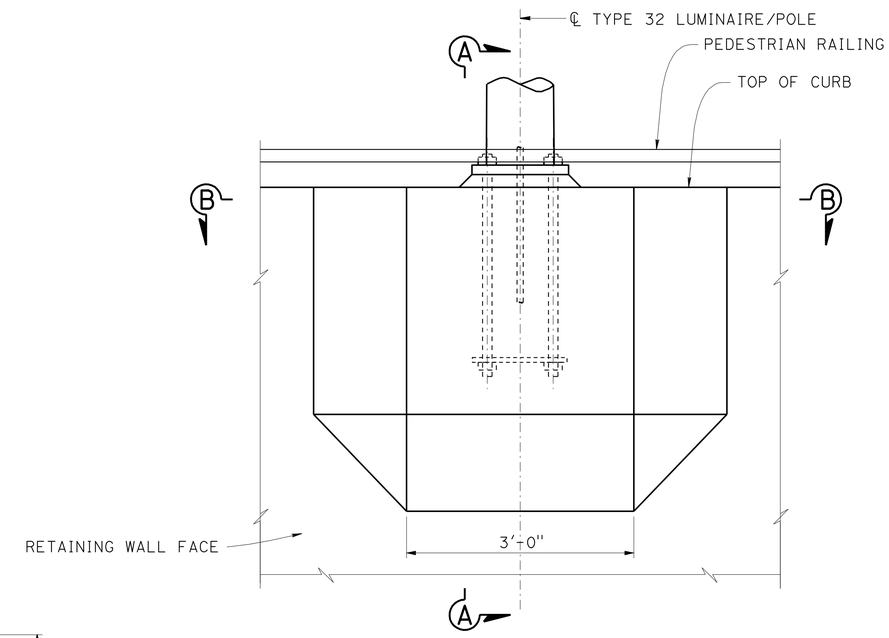

CORBEL ELEVATION

NO SCALE

DESIGN DATA

DESIGN: Load Factor Design (LFD)

CONCRETE: Reinforced Concrete, f'c = 3600 psi
fy = 60 ksi

LOADING:

Wind Load: = 85 mph (3-second gust) AASHTO

Dead Load of Luminare = 897 lbs

TABLE A

TYPE 32 LUMINAIRE	STATION	DESIGN "H"	"W"	"F"
LOCATION 1	6+79.00	8'-0"	6'-6"	1'-6"
LOCATION 2	8+60.00	16'-0"	10'-0"	2'-0"

NOTE

For Pile spacing see "Retaining Wall Layout" sheets

DESIGN	BY JOEL MAGANA	CHECKED VICTOR LOPEZ
DETAILS	BY BOB EDWARDS	CHECKED JOEL MAGANA
QUANTITIES	BY F TANNOUS	CHECKED L VALLA

STATE OF CALIFORNIA
DEPARTMENT OF TRANSPORTATION

DIVISION OF ENGINEERING SERVICES
STRUCTURE DESIGN
SPECIAL DESIGN BRANCH

BRIDGE NO. 52-E0016
POST MILE 41.70

RETAINING WALL 181
LUMINAIRE PEDESTAL DETAILS NO. 1

STRUCTURES DESIGN SPECIAL DESIGN SHEET (ENGLISH) (REV. 10-25-05)

ORIGINAL SCALE IN INCHES FOR REDUCED PLANS 0 1 2 3

CU 07
EA 260701

DISREGARD PRINTS BEARING EARLIER REVISION DATES

REVISION DATES: 7-08-10 9-07-10 1-21-11

SHEET 14 OF 18

FILE => k-52-e0016-g-lum01.dgn

USERNAME => s124196 DATE PLOTTED => 25-JUN-2011 TIME PLOTTED => 09:57

DIST	COUNTY	ROUTE	POST MILES TOTAL PROJECT	SHEET No	TOTAL SHEETS
07	Ven, SB	101	R39.8/R43.6, 0.0/2.2	754	757

REGISTERED CIVIL ENGINEER 10/18/10 DATE

6-20-11
PLANS APPROVAL DATE

REGISTERED PROFESSIONAL ENGINEER JOEL MAGANA No. C61500 Exp. 6/30/11 CIVIL STATE OF CALIFORNIA

The State of California or its officers or agents shall not be responsible for the accuracy or completeness of electronic copies of this plan sheet.

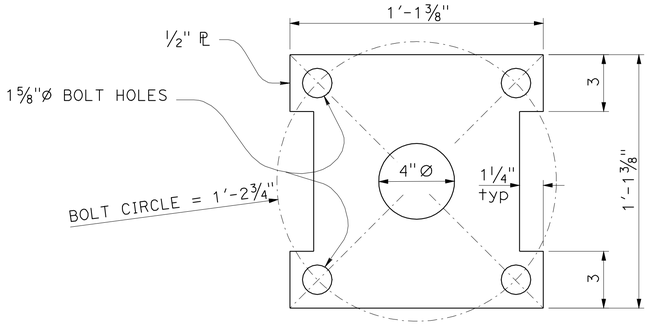

ANCHOR PLATE FOR TYPE 32 LUMINAIRE

NO SCALE

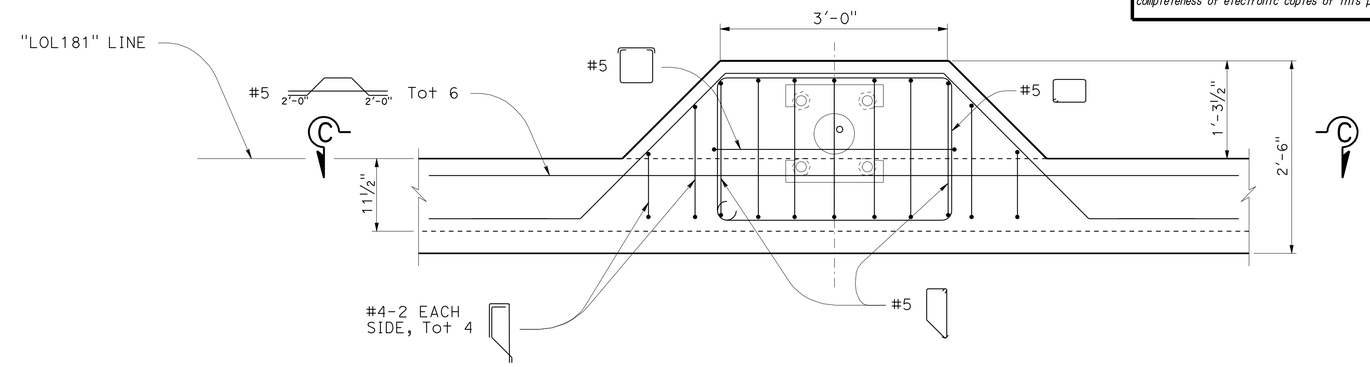

SECTION B-B

NO SCALE

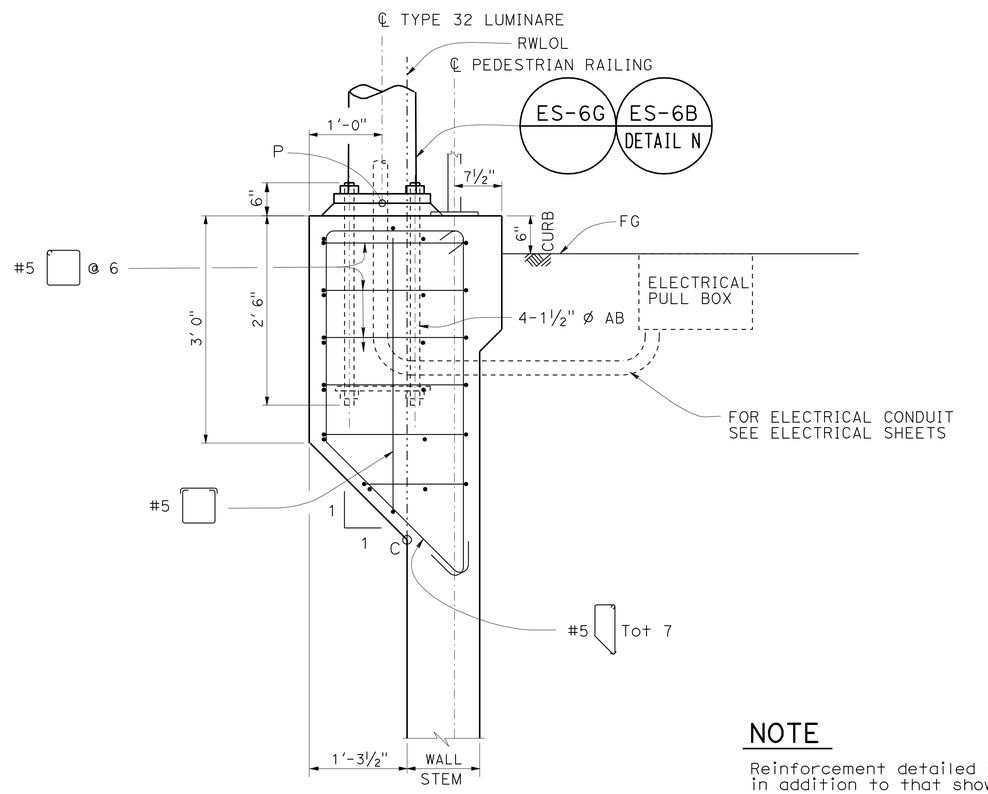

SECTION A-A

NO SCALE

NOTE

Reinforcement detailed is to be placed in addition to that shown for retaining wall.

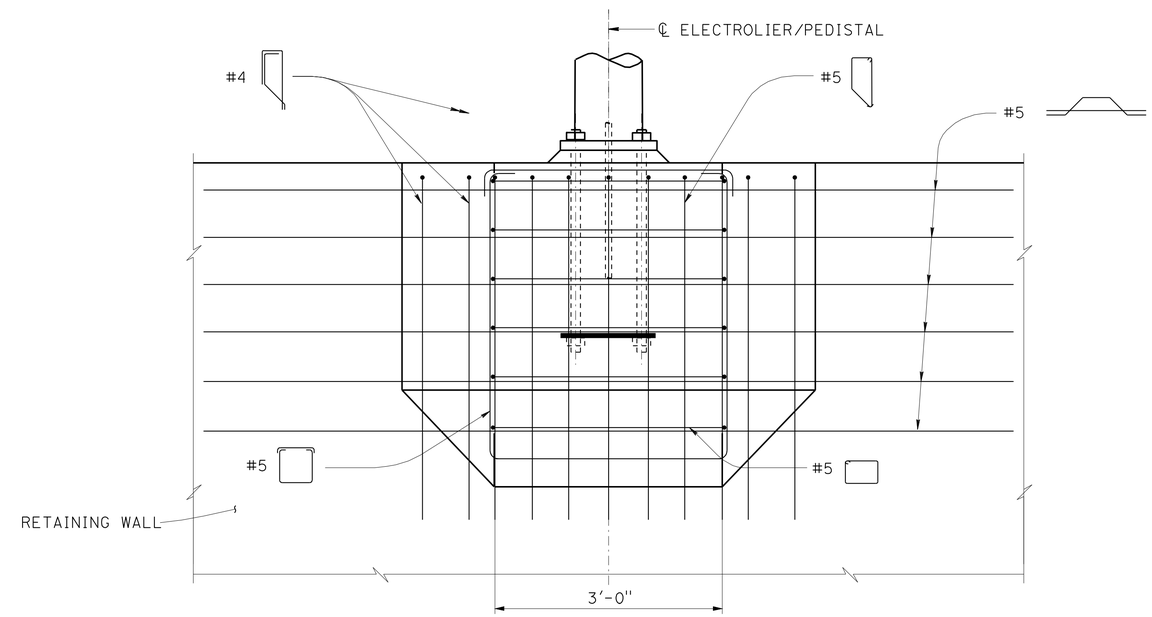

ELEVATION VIEW C-C

NO SCALE

DESIGN	BY JOEL MAGANA	CHECKED VICTOR LOPEZ	
DETAILS	BY BOB EDWARDS	CHECKED JOEL MAGANA	
QUANTITIES	BY F TANNOUS	CHECKED L VALLA	

STATE OF CALIFORNIA
DEPARTMENT OF TRANSPORTATION

DIVISION OF ENGINEERING SERVICES
STRUCTURE DESIGN
SPECIAL DESIGN BRANCH

BRIDGE NO. 52-E0016
POST MILE 41.70

RETAINING WALL 181
LUMINAIRE PEDESTAL DETAILS NO. 2

STRUCTURES DESIGN SPECIAL DESIGN SHEET (ENGLISH) (REV. 10-25-05)

ORIGINAL SCALE IN INCHES FOR REDUCED PLANS 0 1 2 3

CU 07
EA 260701

DISREGARD PRINTS BEARING EARLIER REVISION DATES

REVISION DATES: 7-08-10 9-08-10 1-21-11

SHEET 15 OF 18

FILE => k-52-e0016-g-lum02.dgn

USERNAME => s124496 DATE PLOTTED => 25-JUN-2011 TIME PLOTTED => 09:57

DIST	COUNTY	ROUTE	POST MILES TOTAL PROJECT	SHEET No	TOTAL SHEETS
07	Ven,SB	101	R39.8/R43.6, 0.0/2.2	755	757

REGISTERED CIVIL ENGINEER 4-7-10

6-20-11
PLANS APPROVAL DATE

REGISTERED PROFESSIONAL ENGINEER
Harihar Shiwakoti
No. C76035
Exp. 6-30-10
CIVIL
STATE OF CALIFORNIA

The State of California or its officers or agents shall not be responsible for the accuracy or completeness of electronic copies of this plan sheet.

This LOTB sheet was prepared in accordance with the Caltrans Soil & Rock Logging, Classification, & Presentation Manual (June 2007).

R-09-103

3"

BENCH MARK

Datums: NAD '83 and NAVD '88
Well cap located at 136.55' Lt
Sta 189+04.57' Centerline Rte 101.
N 1962315.278
E 6116289.364
Elev 41.010'

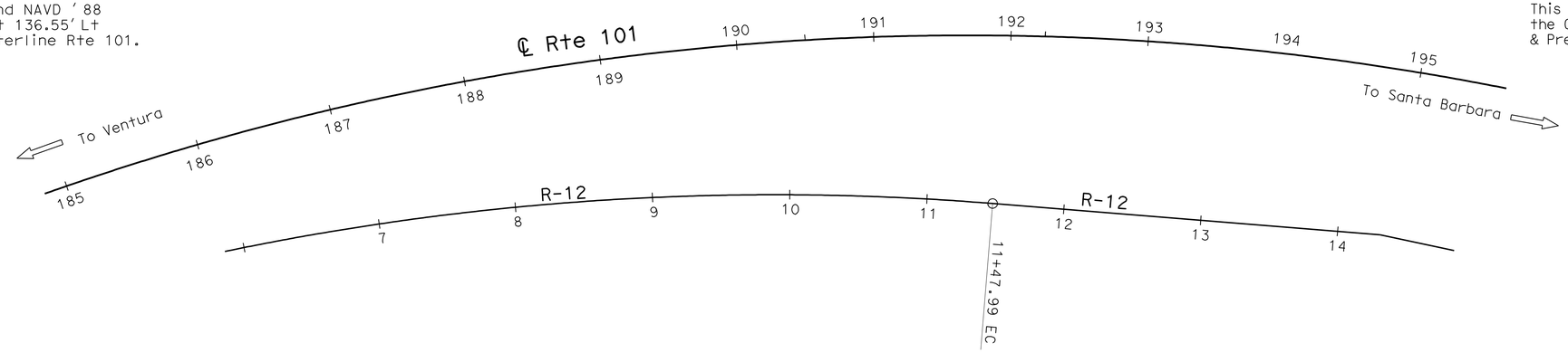

PLAN
1" = 100'

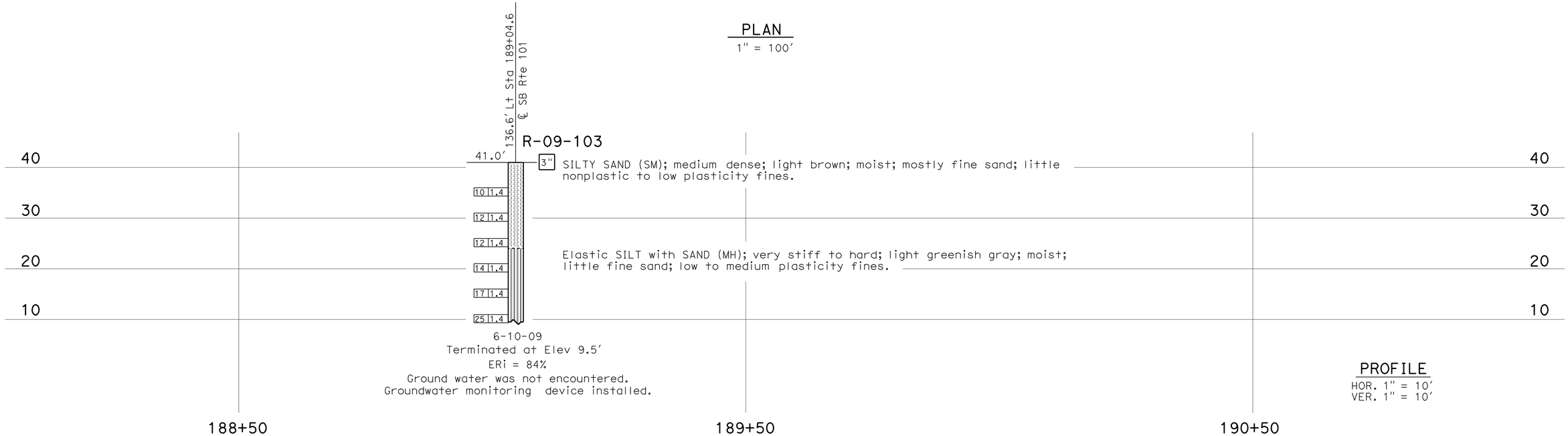

6-10-09
Terminated at Elev 9.5'
ERi = 84%
Ground water was not encountered.
Groundwater monitoring device installed.

PROFILE
HOR. 1" = 10'
VER. 1" = 10'

ENGINEERING SERVICES	GEOTECHNICAL SERVICES	STATE OF CALIFORNIA DEPARTMENT OF TRANSPORTATION	DIVISION OF ENGINEERING SERVICES STRUCTURE DESIGN DESIGN BRANCH	BRIDGE NO. 52-E0016 / POST MILES 39.8/43.6	RETAINING WALL 181 LOG OF TEST BORINGS 1 OF 3
FUNCTIONAL SUPERVISOR NAME: D. Jang	DRAWN BY: C. Christian, I.G-Remmen 11/09 CHECKED BY: H. Liu	FIELD INVESTIGATION BY: H. Shiwakoti			

OGS CIVIL LOG OF TEST BORINGS SHEET

ORIGINAL SCALE IN INCHES FOR REDUCED PLANS 0 1 2 3

CU 07
EA 260701

DISREGARD PRINTS BEARING EARLIER REVISION DATES

REVISION DATES: 12-21-09 03-17-10 04-07-10

SHEET 16 OF 18

FILE => k-52-e0016-z-lotb01.dgn

USERNAME => s124936 DATE PLOTTED => 25-JUN-2011 TIME PLOTTED => 09:58

DIST	COUNTY	ROUTE	POST MILES TOTAL PROJECT	SHEET No	TOTAL SHEETS
07	Ven,SB	101	R39.8/R43.6, 0.0/2.2	756	757

REGISTERED CIVIL ENGINEER 4-7-10

6-20-11
PLANS APPROVAL DATE

The State of California or its officers or agents shall not be responsible for the accuracy or completeness of electronic copies of this plan sheet.

REGISTERED PROFESSIONAL ENGINEER Harihar Shiwakoti No. C76035 Exp. 6-30-10 CIVIL STATE OF CALIFORNIA

REFERENCE: CALTRANS SOIL & ROCK LOGGING, CLASSIFICATION, AND PRESENTATION MANUAL (JUNE 2007)

CEMENTATION

Description	Criteria
Weak	Crumbles or breaks with handling or little finger pressure.
Moderate	Crumbles or breaks with considerable finger pressure.
Strong	Will not crumble or break with finger pressure.

CONSISTENCY OF COHESIVE SOILS

Description	Unconfined Compressive Strength (tsf)	Pocket Penetrometer Measurement (tsf)	Torvane Measurement (tsf)	Field Approximation
Very Soft	< 0.25	< 0.25	< 0.12	Easily penetrated several inches by fist
Soft	0.25 to 0.50	0.25 to 0.50	0.12 to 0.25	Easily penetrated several inches by thumb
Medium Stiff	0.50 to 1.0	0.50 to 1.0	0.25 to 0.50	Penetrated several inches by thumb with moderate effort
Stiff	1 to 2	1 to 2	0.50 to 1.0	Readily indented by thumb but penetrated only with great effort
Very Stiff	2 to 4	2 to 4	1.0 to 2.0	Readily indented by thumbnail
Hard	> 4.0	> 4.0	> 2.0	Indented by thumbnail with difficulty

BOREHOLE IDENTIFICATION

Symbol	Hole Type	Description
Size	A	Auger Boring
Size	R P	Rotary drilled boring Rotary percussion boring (air)
Size	R	Rotary drilled diamond core
Size	HD HA	Hand driven (1-inch soil tube) Hand Auger
●	D	Dynamic Cone Penetration Boring
▲	CPT	Cone Penetration Test (ASTM D 5778-95)
⬚	O	Other

Note: Size in inches.

PLASTICITY OF FINE-GRAINED SOILS

Description	Criteria
Nonplastic	A 1/8-inch thread cannot be rolled at any water content.
Low	The thread can barely be rolled and the lump cannot be formed when drier than the plastic limit.
Medium	The thread is easy to roll and not much time is required to reach the plastic limit. The thread cannot be rerolled after reaching the plastic limit. The lump crumbles when drier than the plastic limit.
High	It takes considerable time rolling and kneading to reach the plastic limit. The thread can be rerolled several times after reaching the plastic limit. The lump can be formed without crumbling when drier than the plastic limit.

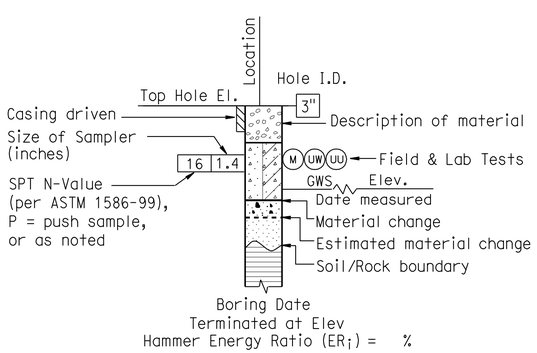

ROTARY BORING

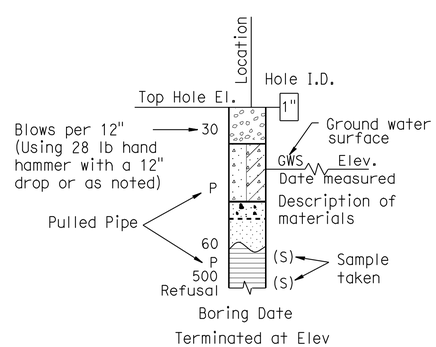

HAND BORING

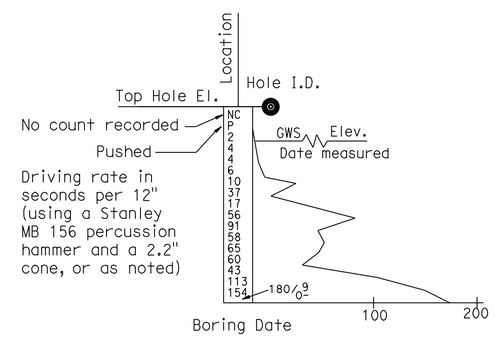

DYNAMIC CONE PENETRATION BORING

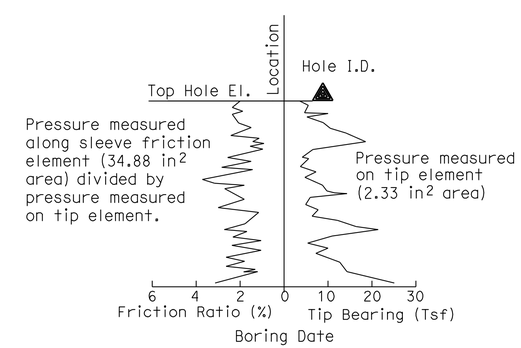

CONE PENETRATION TEST (CPT) SOUNDING

ENGINEERING SERVICES	GEOTECHNICAL SERVICES	STATE OF CALIFORNIA DEPARTMENT OF TRANSPORTATION	DIVISION OF ENGINEERING SERVICES STRUCTURE DESIGN DESIGN BRANCH	BRIDGE NO. 52-E0016 / POST MILE 39.8/43.6	RETAINING WALL 181 LOG OF TEST BORINGS 2 OF 3
	PREPARED BY: I.G-Remmen 12/09				

GS LOTB SOIL LEGEND

ORIGINAL SCALE IN INCHES FOR REDUCED PLANS 0 1 2 3

CU 07
EA 260701

DISREGARD PRINTS BEARING EARLIER REVISION DATES 12-21-09 03-17-10 04-07-10

REVISION DATES

SHEET 17 OF 18

FILE => k-52-e0016-z-lotb02.dgn

USERNAME => s124496 DATE PLOTTED => 25-JUN-2011 TIME PLOTTED => 09:58

REFERENCE: CALTRANS SOIL & ROCK LOGGING, CLASSIFICATION, AND PRESENTATION MANUAL (JUNE 2007)

DIST	COUNTY	ROUTE	POST MILES TOTAL PROJECT	SHEET	TOTAL SHEETS
07	Ven,SB	101	R39.8/R43.6, 0.0/2.2	757	757

REGISTERED CIVIL ENGINEER 4-7-10

6-20-11
PLANS APPROVAL DATE

REGISTERED PROFESSIONAL ENGINEER Harihar Shiwakoti No. C76035 Exp. 6-30-10 CIVIL STATE OF CALIFORNIA

The State of California or its officers or agents shall not be responsible for the accuracy or completeness of electronic copies of this plan sheet.

GROUP SYMBOLS AND NAMES

Graphic/Symbol	Group Names
GW	Well-graded GRAVEL Well-graded GRAVEL with SAND
GP	Poorly graded GRAVEL Poorly graded GRAVEL with SAND
GW-GM	Well-graded GRAVEL with SILT Well-graded GRAVEL with SILT and SAND
GW-GC	Well-graded GRAVEL with CLAY (or SILTY CLAY) Well-graded GRAVEL with CLAY and SAND (or SILTY CLAY and SAND)
GP-GM	Poorly graded GRAVEL with SILT Poorly graded GRAVEL with SILT and SAND
GP-GC	Poorly graded GRAVEL with CLAY (or SILTY CLAY) Poorly graded GRAVEL with CLAY and SAND (or SILTY CLAY and SAND)
GM	SILTY GRAVEL SILTY GRAVEL with SAND
GC	CLAYEY GRAVEL CLAYEY GRAVEL with SAND
GC-GM	SILTY, CLAYEY GRAVEL SILTY, CLAYEY GRAVEL with SAND
SW	Well-graded SAND Well-graded SAND with GRAVEL
SP	Poorly graded SAND Poorly graded SAND with GRAVEL
SW-SM	Well-graded SAND with SILT Well-graded SAND with SILT and GRAVEL
SW-SC	Well-graded SAND with CLAY (or SILTY CLAY) Well-graded SAND with CLAY and GRAVEL (or SILTY CLAY and GRAVEL)
SP-SM	Poorly graded SAND with SILT Poorly graded SAND with SILT and GRAVEL
SP-SC	Poorly graded SAND with CLAY (or SILTY CLAY) Poorly graded SAND with CLAY and GRAVEL (or SILTY CLAY and GRAVEL)
SM	SILTY SAND SILTY SAND with GRAVEL
SC	CLAYEY SAND CLAYEY SAND with GRAVEL
SC-SM	SILTY, CLAYEY SAND SILTY, CLAYEY SAND with GRAVEL
PT	PEAT
	COBBLES COBBLES and BOULDERS BOULDERS

Graphic/Symbol	Group Names
CL	Lean CLAY Lean CLAY with SAND Lean CLAY with GRAVEL SANDY lean CLAY SANDY lean CLAY with GRAVEL GRAVELLY lean CLAY GRAVELLY lean CLAY with SAND
CL-ML	SILTY CLAY SILTY CLAY with SAND SILTY CLAY with GRAVEL SANDY SILTY CLAY SANDY SILTY CLAY with GRAVEL GRAVELLY SILTY CLAY GRAVELLY SILTY CLAY with SAND
ML	SILT SILT with SAND SILT with GRAVEL SANDY SILT SANDY SILT with GRAVEL GRAVELLY SILT GRAVELLY SILT with SAND
OL	ORGANIC lean CLAY ORGANIC lean CLAY with SAND ORGANIC lean CLAY with GRAVEL SANDY ORGANIC lean CLAY SANDY ORGANIC lean CLAY with GRAVEL GRAVELLY ORGANIC lean CLAY GRAVELLY ORGANIC lean CLAY with SAND
OL	ORGANIC SILT ORGANIC SILT with SAND ORGANIC SILT with GRAVEL SANDY ORGANIC SILT SANDY ORGANIC SILT with GRAVEL GRAVELLY ORGANIC SILT GRAVELLY ORGANIC SILT with SAND
CH	Fat CLAY Fat CLAY with SAND Fat CLAY with GRAVEL SANDY fat CLAY SANDY fat CLAY with GRAVEL GRAVELLY fat CLAY GRAVELLY fat CLAY with SAND
MH	Elastic SILT Elastic SILT with SAND Elastic SILT with GRAVEL SANDY elastic SILT SANDY elastic SILT with GRAVEL GRAVELLY elastic SILT GRAVELLY elastic SILT with SAND
OH	ORGANIC fat CLAY ORGANIC fat CLAY with SAND ORGANIC fat CLAY with GRAVEL SANDY ORGANIC fat CLAY SANDY ORGANIC fat CLAY with GRAVEL GRAVELLY ORGANIC fat CLAY GRAVELLY ORGANIC fat CLAY with SAND
OH	ORGANIC elastic SILT ORGANIC elastic SILT with SAND ORGANIC elastic SILT with GRAVEL SANDY ORGANIC elastic SILT SANDY ORGANIC elastic SILT with GRAVEL GRAVELLY ORGANIC elastic SILT GRAVELLY ORGANIC elastic SILT with SAND
OL/OH	ORGANIC SOIL ORGANIC SOIL with SAND ORGANIC SOIL with GRAVEL SANDY ORGANIC SOIL SANDY ORGANIC SOIL with GRAVEL GRAVELLY ORGANIC SOIL GRAVELLY ORGANIC SOIL with SAND

FIELD AND LABORATORY TESTING

- (C) Consolidation (ASTM D 2435)
- (CL) Collapse Potential (ASTM D 5333)
- (CP) Compaction Curve (CTM 216)
- (CR) Corrosivity Testing (CTM 643, CTM 422, CTM 417)
- (CU) Consolidated Undrained Triaxial (ASTM D 4767)
- (DS) Direct Shear (ASTM D 3080)
- (EI) Expansion Index (ASTM D 4829)
- (M) Moisture Content (ASTM D 2216)
- (OC) Organic Content-% (ASTM D 2974)
- (P) Permeability (CTM 220)
- (PA) Particle Size Analysis (ASTM D 422)
- (PI) Plasticity Index (AASHTO T 90) Liquid Limit (AASHTO T 89)
- (PL) Point Load Index (ASTM D 5731)
- (PM) Pressure Meter
- (PP) Pocket Penetrometer
- (R) R-Value (CTM 301)
- (SE) Sand Equivalent (CTM 217)
- (SG) Specific Gravity (AASHTO T 100)
- (SL) Shrinkage Limit (ASTM D 427)
- (SW) Swell Potential (ASTM D 4546)
- (TV) Pocket Torvane
- (UC) Unconfined Compression-Soil (ASTM D 2166) Unconfined Compression-Rock (ASTM D 2938)
- (UU) Unconsolidated Undrained Triaxial (ASTM D 2850)
- (UW) Unit Weight (ASTM D 4767)
- (VS) Vane Shear (AASHTO T 223)

APPARENT DENSITY OF COHESIONLESS SOILS

Description	SPT N_{60} (Blows / 12 inches)
Very loose	0 - 4
Loose	5 - 10
Medium Dense	11 - 30
Dense	31 - 50
Very Dense	> 50

MOISTURE

Description	Criteria
Dry	Absence of moisture, dusty, dry to the touch
Moist	Damp but no visible water
Wet	Visible free water, usually soil is below water table

PERCENT OR PROPORTION OF SOILS

Description	Criteria
Trace	Particles are present but estimated to be less than 5%
Few	5 to 10%
Little	15 to 25%
Some	30 to 45%
Mostly	50 to 100%

PARTICLE SIZE

Description		Size
Boulder		> 12"
Cobble		3" to 12"
Gravel	Coarse	3/4" to 3"
	Fine	No. 4 to 3/4"
Sand	Coarse	No. 10 to No. 4
	Medium	No. 40 to No. 10
	Fine	No. 200 to No. 40

ENGINEERING SERVICES

GEOTECHNICAL SERVICES
PREPARED BY: I.G-Remmen 12/09

STATE OF CALIFORNIA DEPARTMENT OF TRANSPORTATION

DIVISION OF ENGINEERING SERVICES STRUCTURE DESIGN
DESIGN BRANCH

BRIDGE NO. 52-E0016
POST MILE 39.8/43.6

RETAINING WALL 181
LOG OF TEST BORINGS 3 OF 3

GS LOTB SOIL LEGEND

ORIGINAL SCALE IN INCHES FOR REDUCED PLANS 0 1 2 3

CU 07
EA 260701

DISREGARD PRINTS BEARING EARLIER REVISION DATES 12-21-09 03-17-10 04-07-10

REVISION DATES

SHEET 18 OF 18

FILE => k-52-e0016-z-lotb03.dgn

USERNAME => s124496 DATE PLOTTED => 25-JUN-2011 TIME PLOTTED => 09:58