DIST	COUNTY	ROUTE	POST MILES TOTAL PROJECT	SHEET No	TOTAL SHEETS
07	Ven,SB	101	R39.8/R43.6, 0.0/2.2	601	757

Mahmoud Fustok 10-18-10
REGISTERED CIVIL ENGINEER DATE

6-20-11
PLANS APPROVAL DATE

The State of California or its officers or agents shall not be responsible for the accuracy or completeness of electronic copies of this plan sheet.

REGISTERED PROFESSIONAL ENGINEER MAHMOUD FUSTOK No. C51502 Exp. 06-30-12 CIVIL STATE OF CALIFORNIA

CURVE DATA

No.	R	Δ	T	L
Ⓐ	8399.87	4°20'15"	318.10	635.89
Ⓑ	631.47	8°52'51"	49.04	97.88
Ⓒ	1000.00	8°28'7"	74.04	147.80

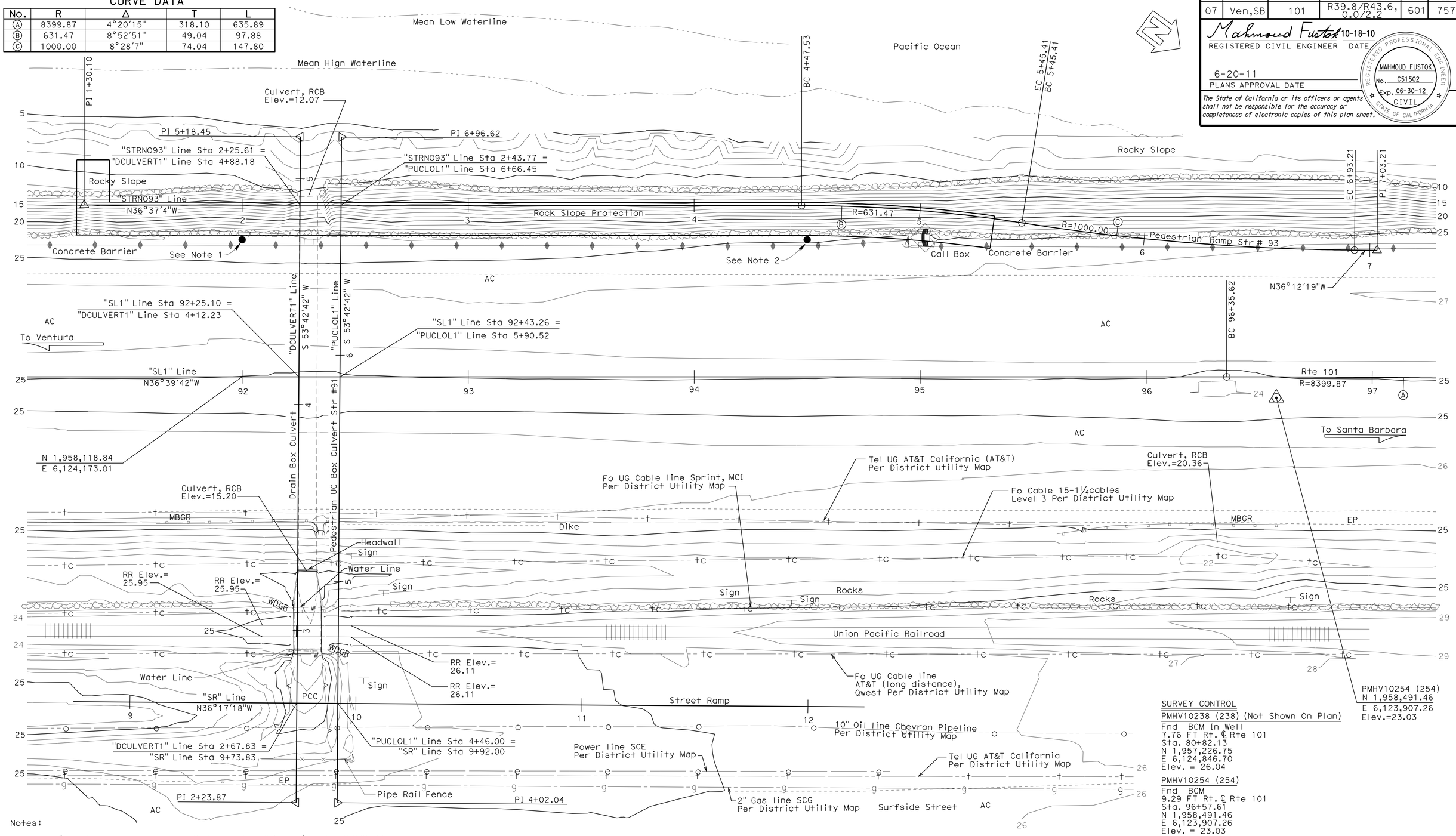

SURVEY CONTROL

PMHV10238 (238) (Not Shown On Plan)
Fnd BCM In Well
7.76 FT Rt. ℄ Rte 101
Sta. 80+82.13
N 1,957,226.75
E 6,124,846.70
Elev. = 26.04

PMHV10254 (254)
Fnd BCM
9.29 FT Rt. ℄ Rte 101
Sta. 96+57.61
N 1,958,491.46
E 6,123,907.26
Elev. = 23.03

Notes:

1. Location of bore hole, 50 to 70 feet left of SL1 Line Sta 92+00.00.
2. Location of bore hole, 50 to 70 feet left of SL1 Line Sta 94+50.00.

PRELIMINARY INVESTIGATION SECTION

SCALE	VERT.DATUM NAVD88	PHOTOGRAMMETRY AS OF: X			
1"=20'	HORZ.DATUM NAD83 (1991.35)	SURVEYED	BY District	CHECKED	BY T.Mason 06/2009
ALIGNMENT TIES Dist.Traverse Sheet		DRAFTED	BY T.Zolnikova 06/2009	CHECKED	BY S.Sou 06/2009

	BY	CHECKED
DESIGN	M. Fustok	W. Addlespurger
DETAILS	Various	M. Fustok
QUANTITIES	M. Fustok	W. Addlespurger

STATE OF CALIFORNIA
DEPARTMENT OF TRANSPORTATION

DIVISION OF ENGINEERING SERVICES
STRUCTURE DESIGN
DESIGN BRANCH 12

BRIDGE NO. 52-0469
POST MILE 41.58

PEDESTRIAN RAMP 93
FOUNDATION PLAN

STRUCTURES FOUNDATION PLAN SHEET (ENGLISH) (REV. 10/25/05)

ORIGINAL SCALE IN INCHES FOR REDUCED PLANS 0 1 2 3

CU 07
EA 260701

DISREGARD PRINTS BEARING EARLIER REVISION DATES

REVISION DATES: 07/02/09 06/02/10 07/16/10 10-13-10 3-8-11

SHEET 3 OF 50

FILE => c-52-0469-c-fp01.dgn

USERNAME => s124496 DATE PLOTTED => 25-JUN-2011 TIME PLOTTED => 05:22

DIST	COUNTY	ROUTE	POST MILES TOTAL PROJECT	SHEET No	TOTAL SHEETS
07	Ven,SB	101	R39.8/R43.6, 0.0/2.2	602	757

Mahmoud Fustok 10-18-10
REGISTERED CIVIL ENGINEER DATE

6-20-11
PLANS APPROVAL DATE

REGISTERED PROFESSIONAL ENGINEER MAHMOUD FUSTOK No. C51502 Exp. 06-30-12 CIVIL STATE OF CALIFORNIA

The State of California or its officers or agents shall not be responsible for the accuracy or completeness of electronic copies of this plan sheet.

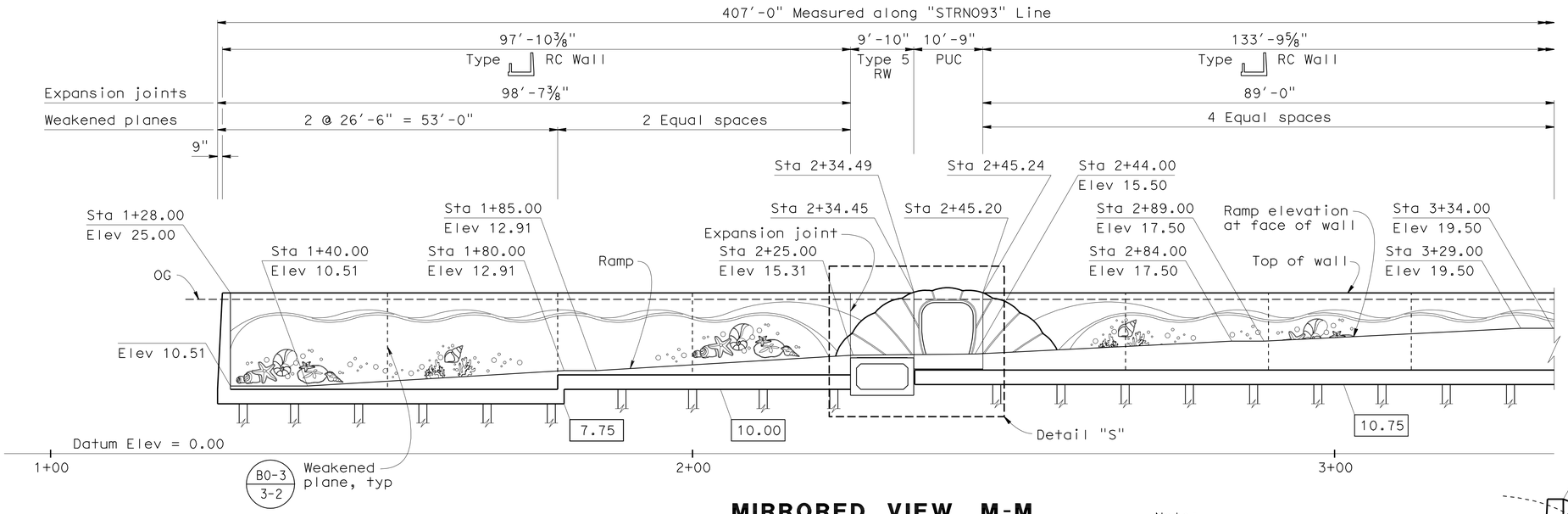

MIRRORED VIEW M-M

1" = 10'

Note:

All wall elevations are taken 12'-0" right of "STRN093" Line.

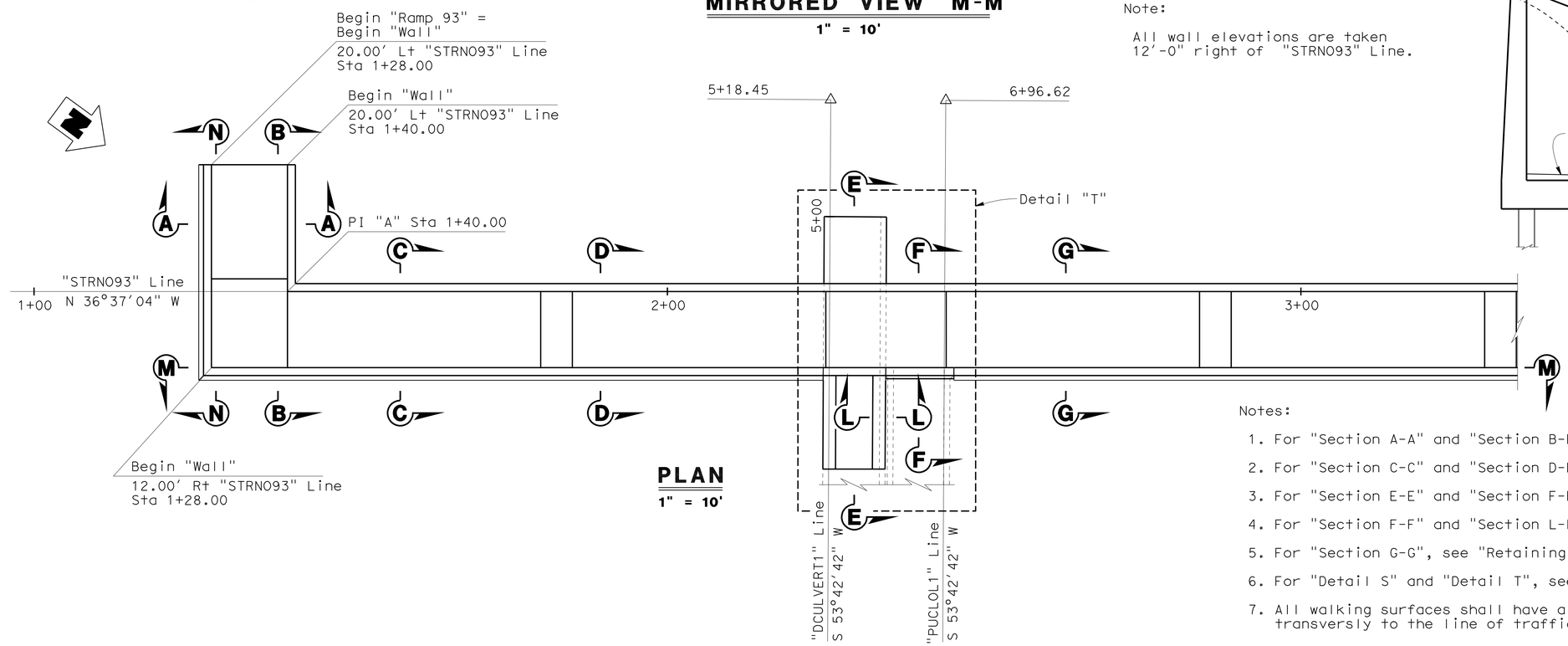

PLAN

1" = 10'

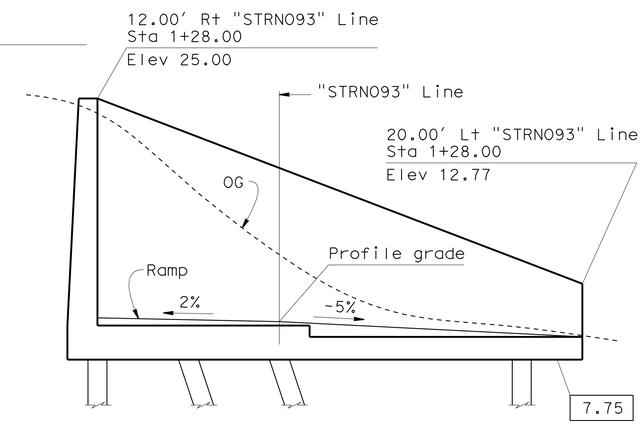

VIEW N-N

1" = 5'-0"

Notes:

1. For "Section A-A" and "Section B-B", see "Retaining Wall Details No. 1" sheet.
2. For "Section C-C" and "Section D-D", see "Retaining Wall Details No. 2" sheet.
3. For "Section E-E" and "Section F-F", see "Retaining Wall Details No. 3" sheet.
4. For "Section F-F" and "Section L-L", see "Retaining Wall Details No. 4" sheet.
5. For "Section G-G", see "Retaining Wall Details No. 5" sheet.
6. For "Detail S" and "Detail T", see "Retaining Wall Details No. 7" sheet.
7. All walking surfaces shall have a broom finish texture. Surface shall be broomed transversly to the line of traffic.

	BY	CHECKED
DESIGN	M. Fustok	W. Addlespurger
DETAILS	Various	M. Fustok
QUANTITIES	M. Fustok	W. Addlespurger

STATE OF CALIFORNIA
DEPARTMENT OF TRANSPORTATION

DIVISION OF ENGINEERING SERVICES
STRUCTURE DESIGN
DESIGN BRANCH 12

BRIDGE NO. 52-0469
POST MILE 41.58

PEDESTRIAN RAMP 93
RETAINING WALL LAYOUT NO. 1

STRUCTURES DESIGN DETAIL SHEET (ENGLISH) (REV. 10/25/05)

ORIGINAL SCALE IN INCHES FOR REDUCED PLANS 0 1 2 3

CU 07
EA 260701

DISREGARD PRINTS BEARING EARLIER REVISION DATES

REVISION DATES: 7-2-10 7-16-10 7-22-10 7-27-10 8-6-10 8-12-10 9-3-10 1-12-11

SHEET 4 OF 50

FILE => c-52-0469-c-rw01.dgn

USERNAME => s124496 DATE PLOTTED => 25-JUN-2011 TIME PLOTTED => 09:22

DIST	COUNTY	ROUTE	POST MILES TOTAL PROJECT	SHEET No	TOTAL SHEETS
07	Ven,SB	101	R39.8/R43.6, 0.0/2.2	603	757

Mahmoud Fustok 10-18-10
REGISTERED CIVIL ENGINEER DATE

6-20-11
PLANS APPROVAL DATE

The State of California or its officers or agents shall not be responsible for the accuracy or completeness of electronic copies of this plan sheet.

REGISTERED PROFESSIONAL ENGINEER
MAHMOUD FUSTOK
No. C51502
Exp. 06-30-12
CIVIL
STATE OF CALIFORNIA

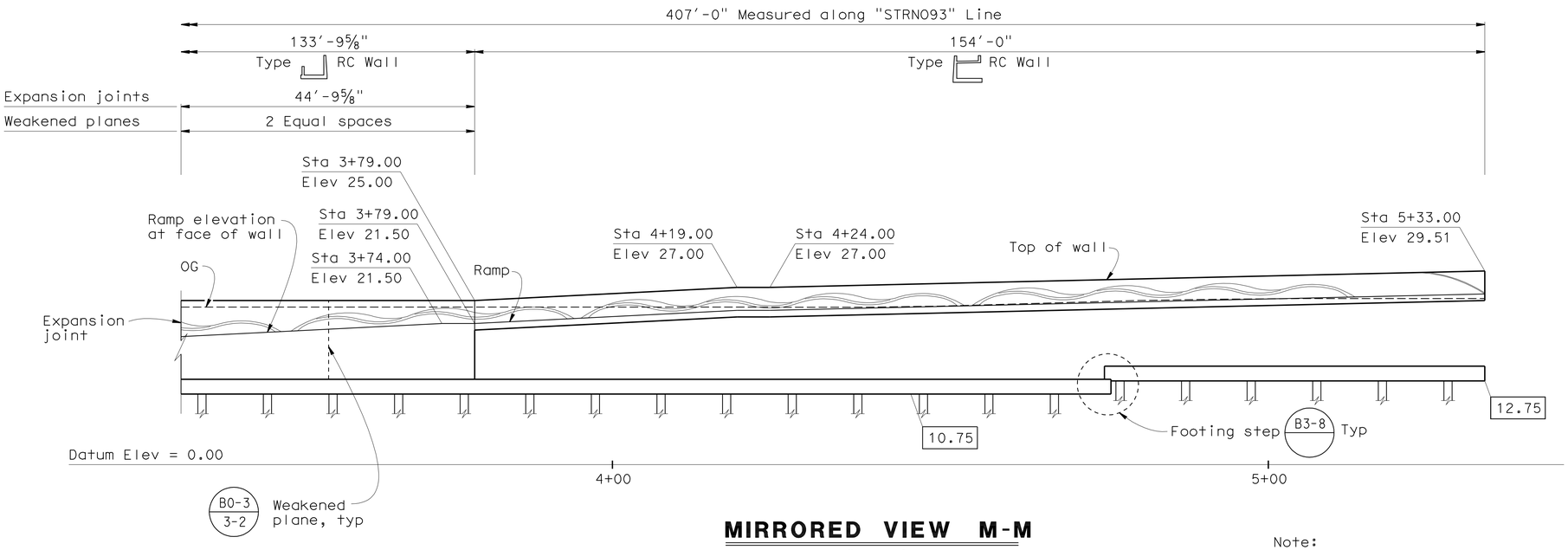

MIRRORED VIEW M-M

1" = 10'

Notes:

1. For "Section H-H" see "Retaining Wall Details No. 4" sheet.
2. For "Section I-I", "Section J-J" and "Section K-K", see "Retaining Wall Details No. 6" sheet.

Note:

All wall elevations are taken 12'-0" right of "STRN093" Line.

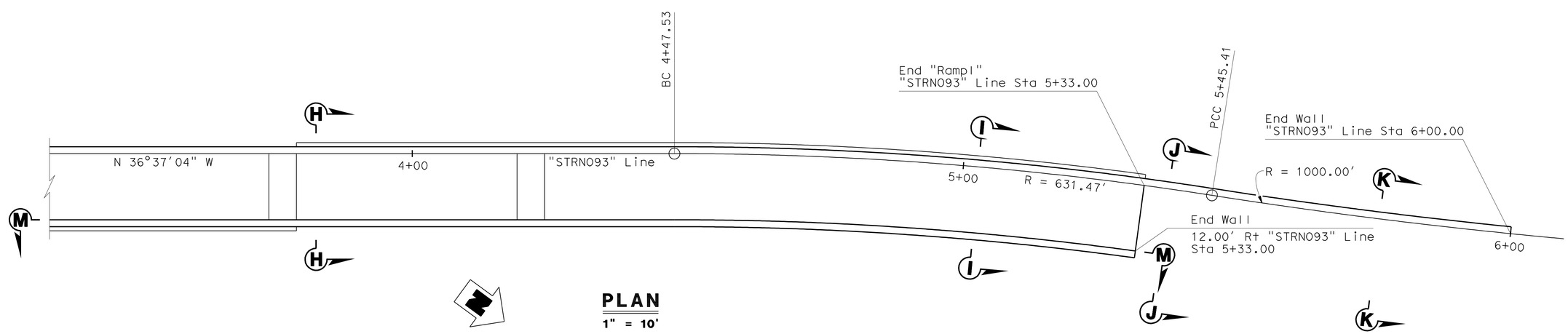

PLAN

1" = 10'

DESIGN	BY M. Fustok	CHECKED W. Addlespurger	
DETAILS	BY Various	CHECKED M. Fustok	
QUANTITIES	BY M. Fustok	CHECKED W. Addlespurger	

STATE OF CALIFORNIA
DEPARTMENT OF TRANSPORTATION

DIVISION OF ENGINEERING SERVICES
STRUCTURE DESIGN
DESIGN BRANCH 12

BRIDGE NO. 52-0469
POST MILE 41.58

PEDESTRIAN RAMP 93
RETAINING WALL LAYOUT NO. 2

STRUCTURES DESIGN DETAIL SHEET (ENGLISH) (REV. 10/25/05)

ORIGINAL SCALE IN INCHES FOR REDUCED PLANS 0 1 2 3

CU 07
EA 260701

DISREGARD PRINTS BEARING EARLIER REVISION DATES

REVISION DATES: 7-2-10 7-16-10 7-22-10 8-12-10 1-11-11

SHEET 5 OF 50

FILE => c-52-0469-c-rw02.dgn

USERNAME => s124496 DATE PLOTTED => 25-JUN-2011 TIME PLOTTED => 05:22

DIST	COUNTY	ROUTE	POST MILES TOTAL PROJECT	SHEET No	TOTAL SHEETS
07	Ven,SB	101	R39.8/R43.6, 0.0/2.2	604	757

Mahmoud Fustok 10-18-10
REGISTERED CIVIL ENGINEER DATE

6-20-11
PLANS APPROVAL DATE

REGISTERED PROFESSIONAL ENGINEER MAHMOUD FUSTOK No. C51502 Exp. 06-30-12 CIVIL STATE OF CALIFORNIA

The State of California or its officers or agents shall not be responsible for the accuracy or completeness of electronic copies of this plan sheet.

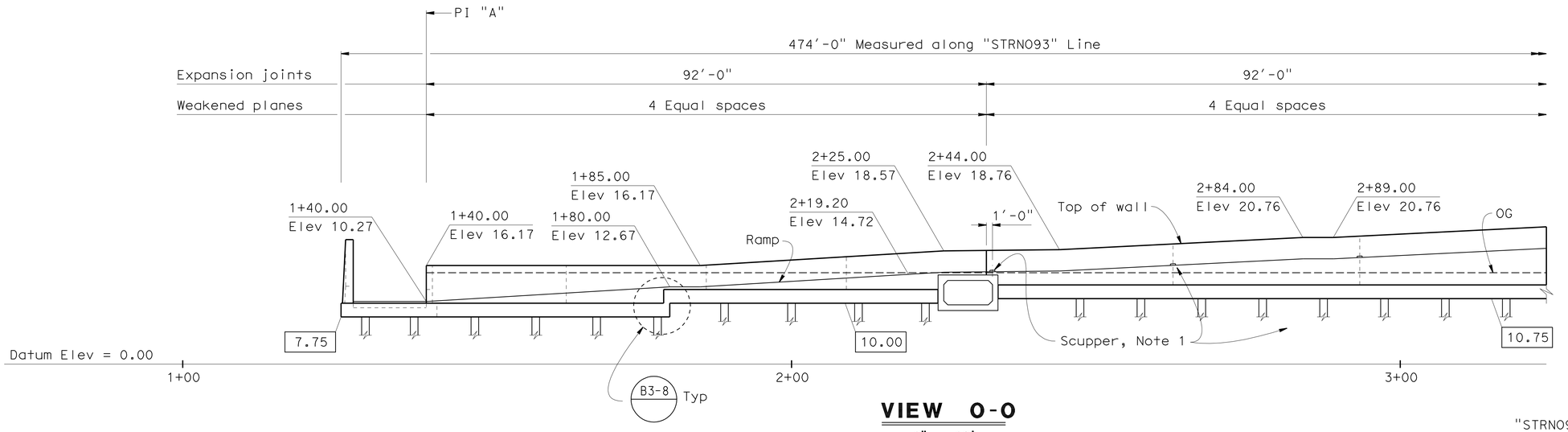

VIEW O-O

1" = 10'

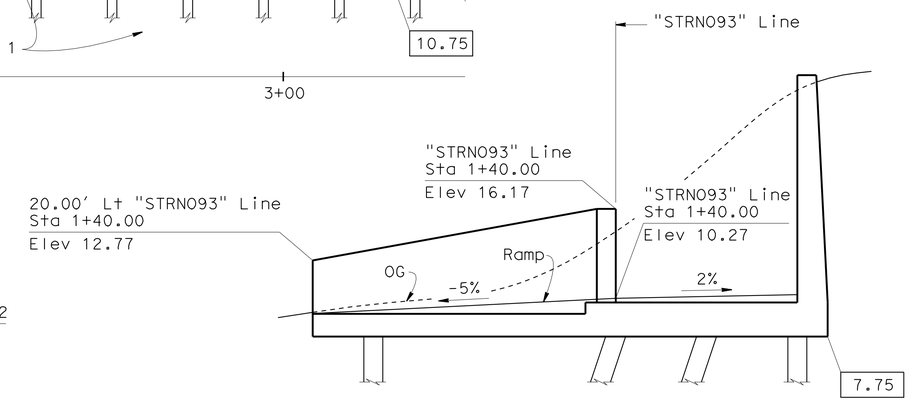

VIEW B-B

1" = 5'-0"

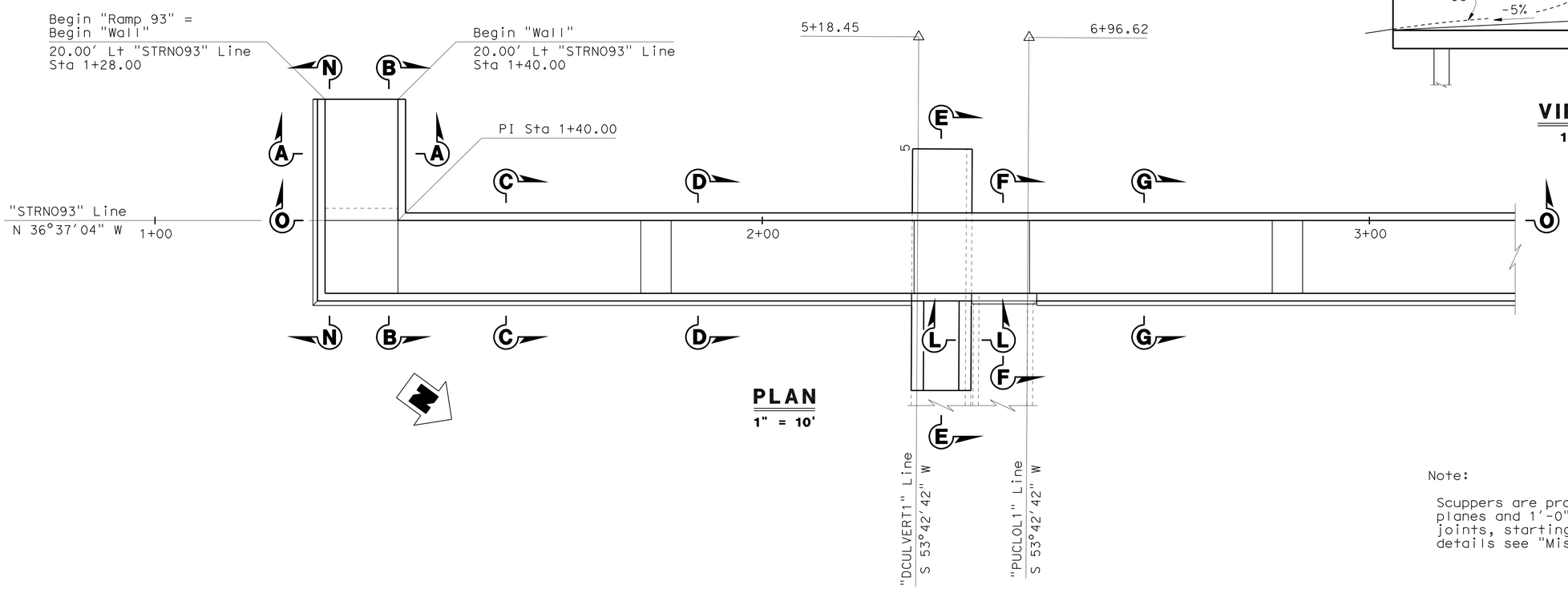

PLAN

1" = 10'

Note:

Scuppers are provided at retaining wall weakened planes and 1'-0" from retaining wall expansion joints, starting at Sta. 2+33.00. For scupper details see "Miscellaneous Details" sheet.

	BY	CHECKED
DESIGN	M. Fustok	W. Addlespurger
DETAILS	Various	M. Fustok
QUANTITIES	M. Fustok	W. Addlespurger

STATE OF CALIFORNIA
DEPARTMENT OF TRANSPORTATION

DIVISION OF ENGINEERING SERVICES
STRUCTURE DESIGN
DESIGN BRANCH 12

BRIDGE NO. 52-0469
POST MILE 41.58

PEDESTRIAN RAMP 93
RETAINING WALL LAYOUT NO. 3

STRUCTURES DESIGN DETAIL SHEET (ENGLISH) (REV. 10/25/05)

ORIGINAL SCALE IN INCHES FOR REDUCED PLANS 0 1 2 3

CU 07
EA 260701

DISREGARD PRINTS BEARING EARLIER REVISION DATES

REVISION DATES: 6-16-10, 7-16-10, 7-21-10, 7-27-10, 8-18-10, 9-3-10, 1-14-11, 2-15-11

SHEET 6 OF 50

FILE => c-52-0469-c-rw03.dgn

USERNAME => s124436 DATE PLOTTED => 25-JUN-2011 TIME PLOTTED => 08:22

DIST	COUNTY	ROUTE	POST MILES TOTAL PROJECT	SHEET No	TOTAL SHEETS
07	Ven,SB	101	R39.8/R43.6, 0.0/2.2	605	757

Mahmoud Fustok 10-18-10
REGISTERED CIVIL ENGINEER DATE

6-20-11
PLANS APPROVAL DATE

REGISTERED PROFESSIONAL ENGINEER
MAHMOUD FUSTOK
No. C51502
Exp. 06-30-12
CIVIL
STATE OF CALIFORNIA

The State of California or its officers or agents shall not be responsible for the accuracy or completeness of electronic copies of this plan sheet.

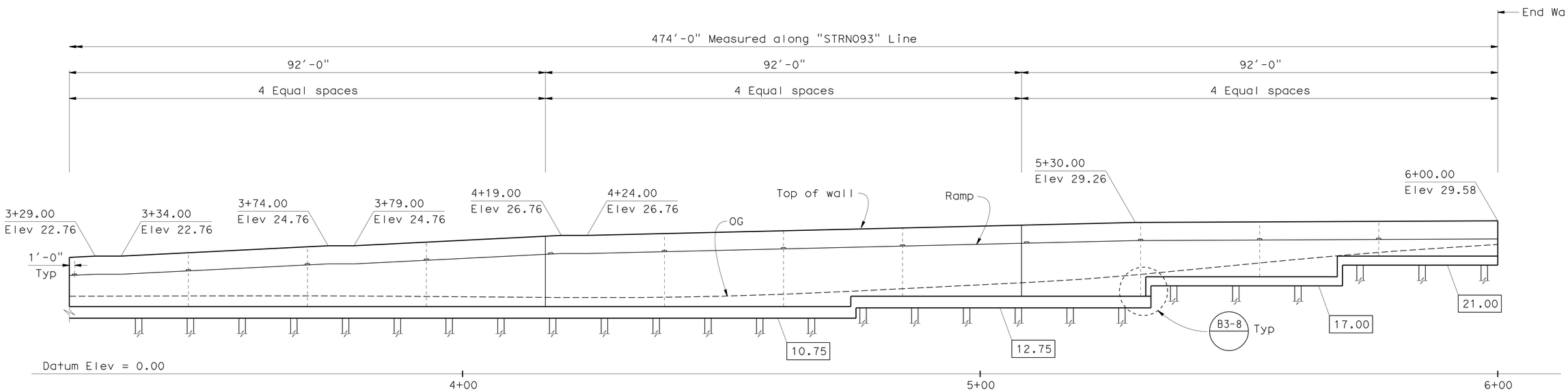

DEVELOPED VIEW O-O

1" = 10'

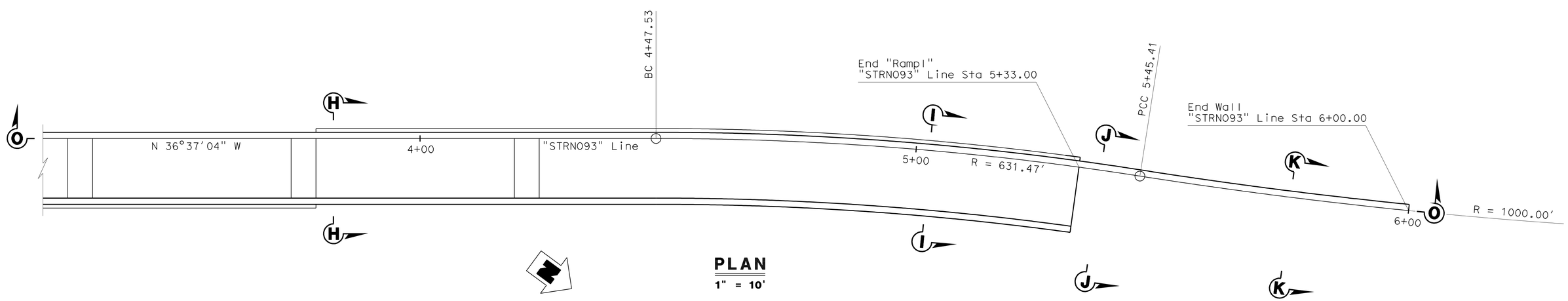

PLAN

1" = 10'

DESIGN	BY M. Fustok	CHECKED W. Addlespurger	
DETAILS	BY Various	CHECKED M. Fustok	
QUANTITIES	BY M. Fustok	CHECKED W. Addlespurger	

STATE OF CALIFORNIA
DEPARTMENT OF TRANSPORTATION

DIVISION OF ENGINEERING SERVICES
STRUCTURE DESIGN
DESIGN BRANCH 12

BRIDGE NO. 52-0469
POST MILE 41.58

PEDESTRIAN RAMP 93
RETAINING WALL LAYOUT NO. 4

STRUCTURES DESIGN DETAIL SHEET (ENGLISH) (REV. 10/25/05)

ORIGINAL SCALE IN INCHES FOR REDUCED PLANS 0 1 2 3

CU 07
EA 260701

DISREGARD PRINTS BEARING EARLIER REVISION DATES

REVISION DATES: 6-18-10 7-16-10 7-21-10 8-6-10 8-18-10 1-11-11 2-15-11

SHEET 7 OF 50

FILE => c-52-0469-c-rw04.dgn

USERNAME => s1244936 DATE PLOTTED => 25-JUN-2011 TIME PLOTTED => 05:23

DIST	COUNTY	ROUTE	POST MILES TOTAL PROJECT	SHEET No	TOTAL SHEETS
07	Ven,SB	101	R39.8/R43.6, 0.0/2.2	606	757

Mahmoud Fustok 10-18-10
REGISTERED CIVIL ENGINEER DATE

6-20-11
PLANS APPROVAL DATE

REGISTERED PROFESSIONAL ENGINEER
MAHMOUD FUSTOK
No. C51502
Exp. 06-30-12
CIVIL
STATE OF CALIFORNIA

The State of California or its officers or agents shall not be responsible for the accuracy or completeness of electronic copies of this plan sheet.

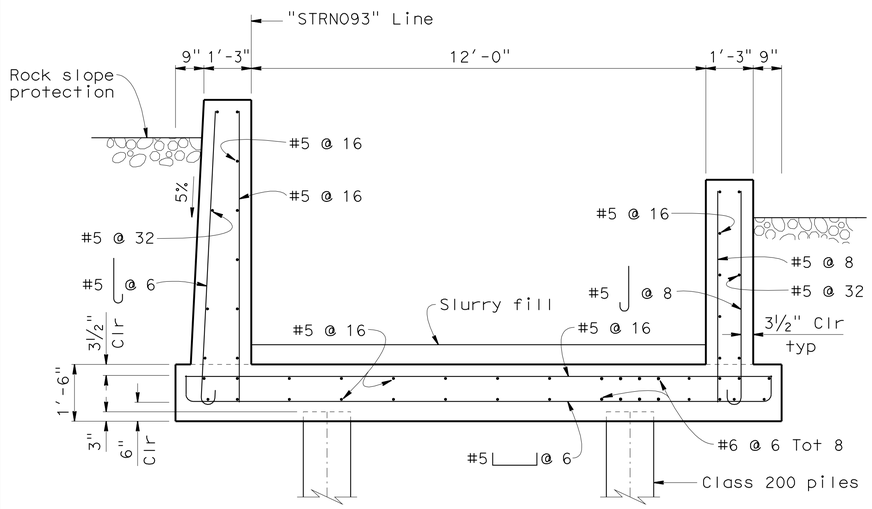

SECTION A-A

1/2" = 1'-0"

(2'-0" Left of "STR093" Line to 20'-0" left of "STR093" Line)

Note:

Reinforcement of left retaining wall 2'-0" left of "STR093" Line to 12'-0" right of "STR093" Line is similar to that of "Section B-B".

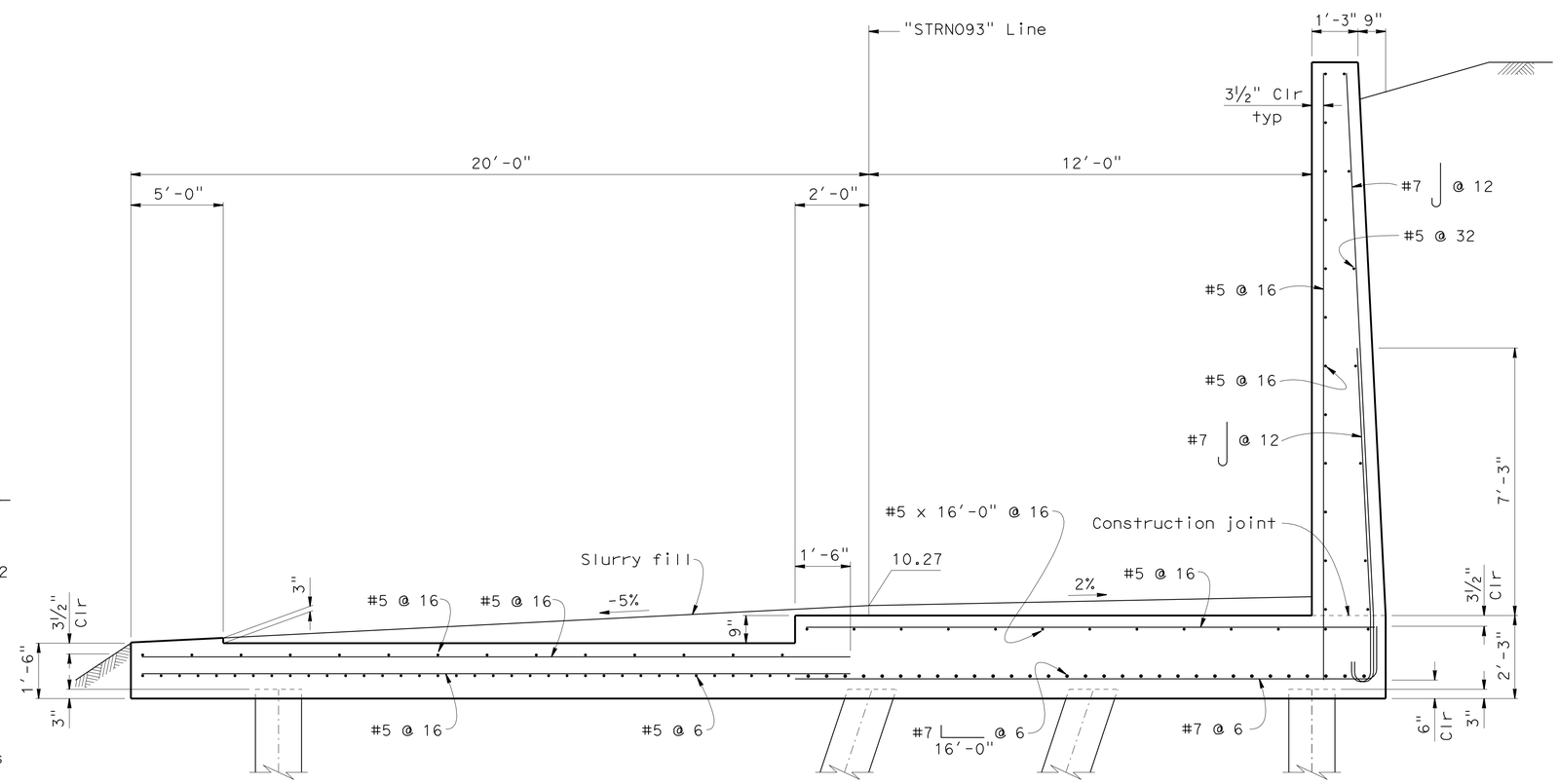

SECTION B-B

1/4" = 1'-0"

Note:

All reinforcement shall be prefabricated epoxy coated reinforcement.

DESIGN	BY M. Fustok	CHECKED W. Addlespurger	
DETAILS	BY Various	CHECKED M. Fustok	
QUANTITIES	BY M. Fustok	CHECKED W. Addlespurger	

STATE OF CALIFORNIA
DEPARTMENT OF TRANSPORTATION

DIVISION OF ENGINEERING SERVICES
STRUCTURE DESIGN
DESIGN BRANCH 12

BRIDGE NO. 52-0469
POST MILE 41.58

PEDESTRIAN RAMP 93
RETAINING WALL DETAILS NO. 1

STRUCTURES DESIGN DETAIL SHEET (ENGLISH) (REV. 10/25/05)

ORIGINAL SCALE IN INCHES FOR REDUCED PLANS 0 1 2 3

CU 07
EA 260701

DISREGARD PRINTS BEARING EARLIER REVISION DATES

REVISION DATES: 5-12-10, 7-21-10, 8-13-10, 8-18-10, 9-3-10, 1-14-11, 2-15-11

SHEET 8 OF 50

FILE => c-52-0469-c-rw05.dgn

USERNAME => s124436 DATE PLOTTED => 25-JUN-2011 TIME PLOTTED => 05:23

DIST	COUNTY	ROUTE	POST MILES TOTAL PROJECT	SHEET No	TOTAL SHEETS
07	Ven,SB	101	R39.8/R43.6, 0.0/2.2	607	757

Mahmoud Fustok 10-18-10
REGISTERED CIVIL ENGINEER DATE

6-20-11
PLANS APPROVAL DATE

REGISTERED PROFESSIONAL ENGINEER
MAHMOUD FUSTOK
No. C51502
Exp. 06-30-12
CIVIL
STATE OF CALIFORNIA

The State of California or its officers or agents shall not be responsible for the accuracy or completeness of electronic copies of this plan sheet.

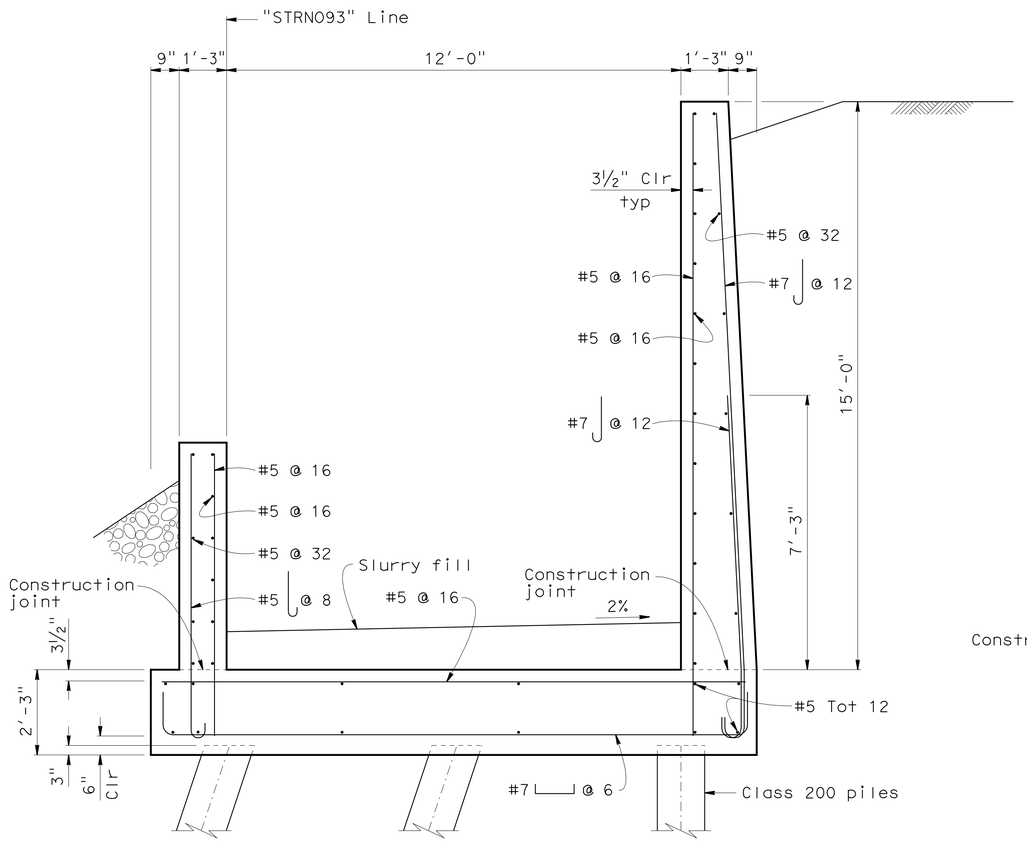

SECTION C-C

1/2" = 1'-0"

Pedestrian Ramp 93
Section Sta 1+40.00 to Sta 1+80.00

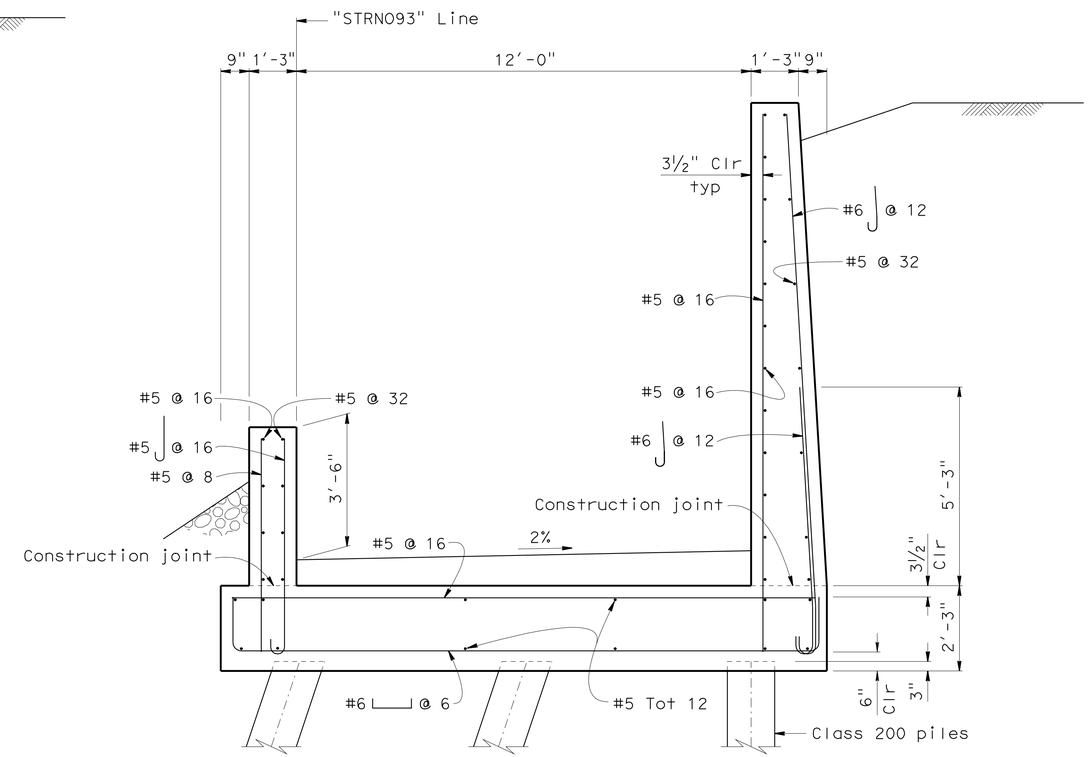

SECTION D-D

1/2" = 1'-0"

Pedestrian Ramp 93
Section Sta 1+80.00 to Sta 2+24.62

Note:

All reinforcement shall be prefabricated epoxy coated reinforcement.

	BY	CHECKED
DESIGN	M. Fustok	W. Addlespurger
DETAILS	Various	M. Fustok
QUANTITIES	M. Fustok	W. Addlespurger

STATE OF CALIFORNIA
DEPARTMENT OF TRANSPORTATION

DIVISION OF ENGINEERING SERVICES
STRUCTURE DESIGN
DESIGN BRANCH 12

BRIDGE NO. 52-0469
POST MILE 41.58

PEDESTRIAN RAMP 93
RETAINING WALL DETAILS NO. 2

STRUCTURES DESIGN DETAIL SHEET (ENGLISH) (REV. 10/25/05)

ORIGINAL SCALE IN INCHES FOR REDUCED PLANS 0 1 2 3

CU 07
EA 260701

DISREGARD PRINTS BEARING EARLIER REVISION DATES

REVISION DATES: 5-12-10, 7-28-10, 8-2-10, 8-6-10, 8-12-10, 1-11-11

SHEET 9 OF 50

FILE => c-52-0469-c-rw06.dgn

USERNAME => s124496 DATE PLOTTED => 25-JUN-2011 TIME PLOTTED => 05:23

DIST	COUNTY	ROUTE	POST MILES TOTAL PROJECT	SHEET No	TOTAL SHEETS
07	Ven,SB	101	R39.8/R43.6, 0.0/2.2	608	757

Mahmoud Fustok 10-18-10
REGISTERED CIVIL ENGINEER DATE

6-20-11
PLANS APPROVAL DATE

REGISTERED PROFESSIONAL ENGINEER
MAHMOUD FUSTOK
No. C51502
Exp. 06-30-12
CIVIL
STATE OF CALIFORNIA

The State of California or its officers or agents shall not be responsible for the accuracy or completeness of electronic copies of this plan sheet.

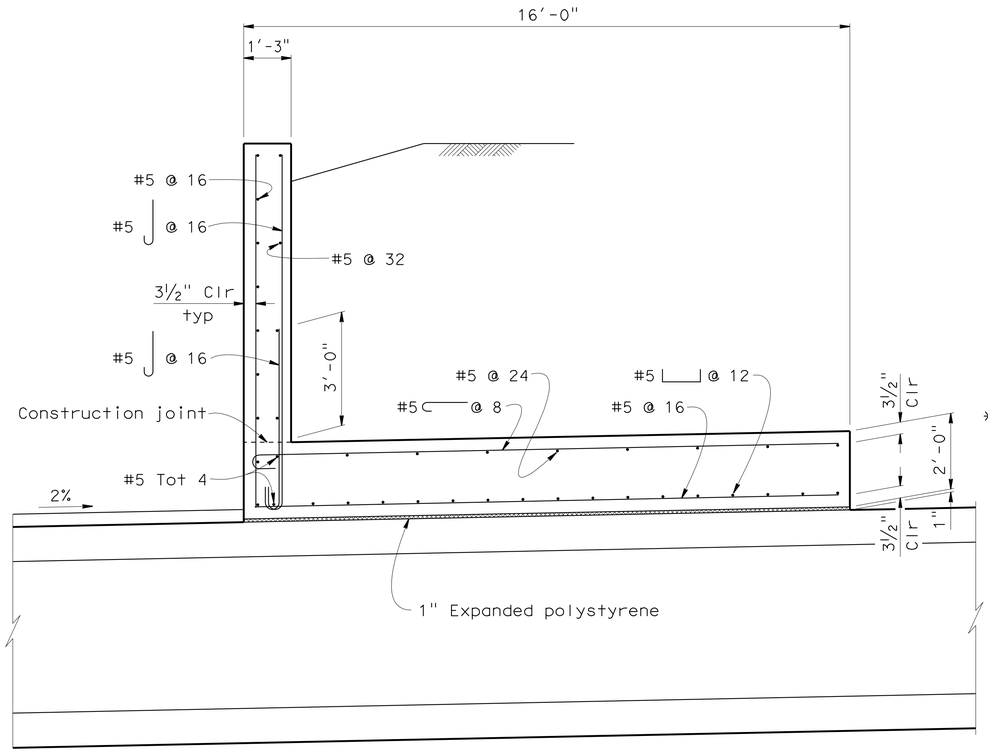

BETWEEN SUPPORTING BEAMS

* Bars to be extended 10'-0" minimum from expansion joint

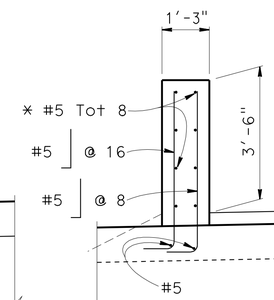

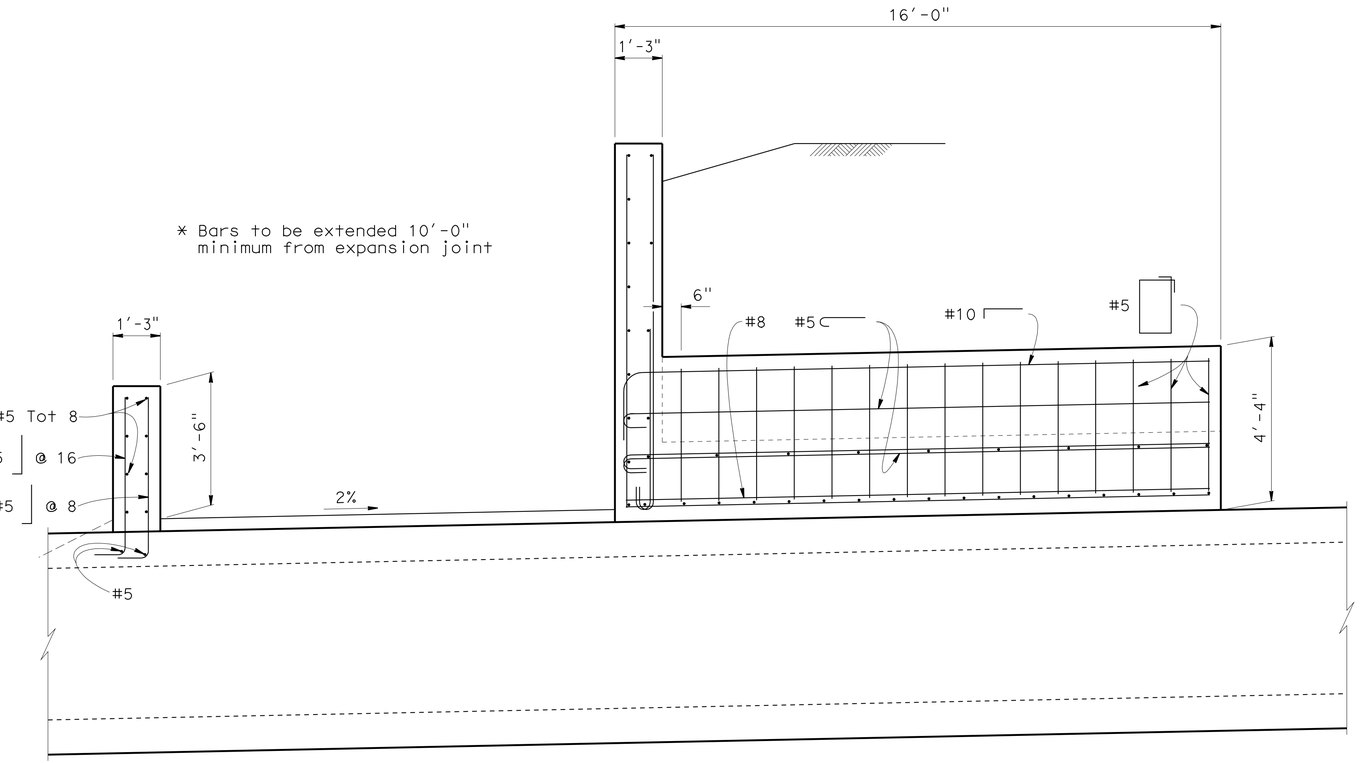

AT SUPPORTING BEAMS

SECTION E-E

1/2" = 1'-0"

Pedestrian Ramp 93
Section Sta 2+24.62 to Sta 2+34.45

Note:

All reinforcement shall be prefabricated epoxy coated reinforcement.

DESIGN	BY M. Fustok	CHECKED W. Addlespurger	
DETAILS	BY Various	CHECKED M. Fustok	
QUANTITIES	BY M. Fustok	CHECKED W. Addlespurger	

STATE OF CALIFORNIA
DEPARTMENT OF TRANSPORTATION

DIVISION OF ENGINEERING SERVICES
STRUCTURE DESIGN
DESIGN BRANCH 12

BRIDGE NO. 52-0469
POST MILE 41.58

PEDESTRIAN RAMP 93
RETAINING WALL DETAILS NO. 3

STRUCTURES DESIGN DETAIL SHEET (ENGLISH) (REV. 10/25/05)

ORIGINAL SCALE IN INCHES FOR REDUCED PLANS 0 1 2 3

CU 07
EA 260701

DISREGARD PRINTS BEARING EARLIER REVISION DATES

REVISION DATES: ~~7-30-10~~ ~~8-6-10~~ ~~8-18-10~~ 1-11-11

SHEET 10 OF 50

FILE => c-52-0469-c-rw07.dgn

USERNAME => s6124436 DATE PLOTTED => 25-JUN-2011 TIME PLOTTED => 05:23

DIST	COUNTY	ROUTE	POST MILES TOTAL PROJECT	SHEET No	TOTAL SHEETS
07	Ven,SB	101	R39.8/R43.6, 0.0/2.2	609	757

Mahmoud Fustok 10-18-10
REGISTERED CIVIL ENGINEER DATE

6-20-11
PLANS APPROVAL DATE

REGISTERED PROFESSIONAL ENGINEER
MAHMOUD FUSTOK
No. C51502
Exp. 06-30-12
CIVIL
STATE OF CALIFORNIA

The State of California or its officers or agents shall not be responsible for the accuracy or completeness of electronic copies of this plan sheet.

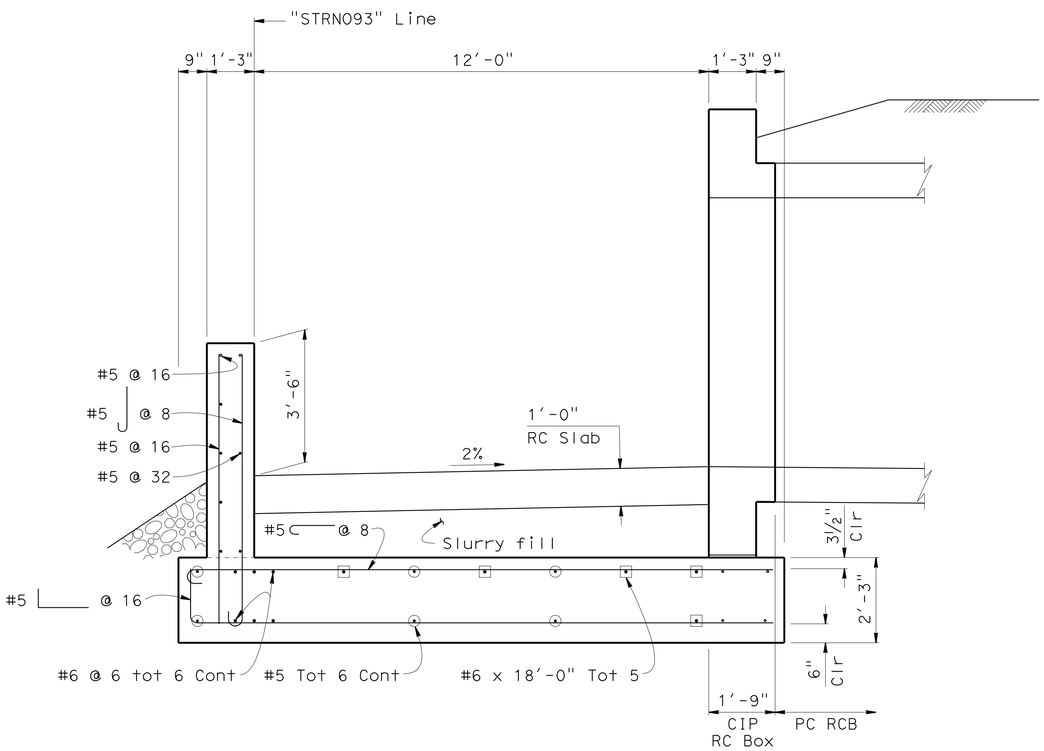

SECTION F-F

1/2" = 1'-0"

Pedestrian Ramp 93
Section Sta 2+34.45 to Sta 2+45.20

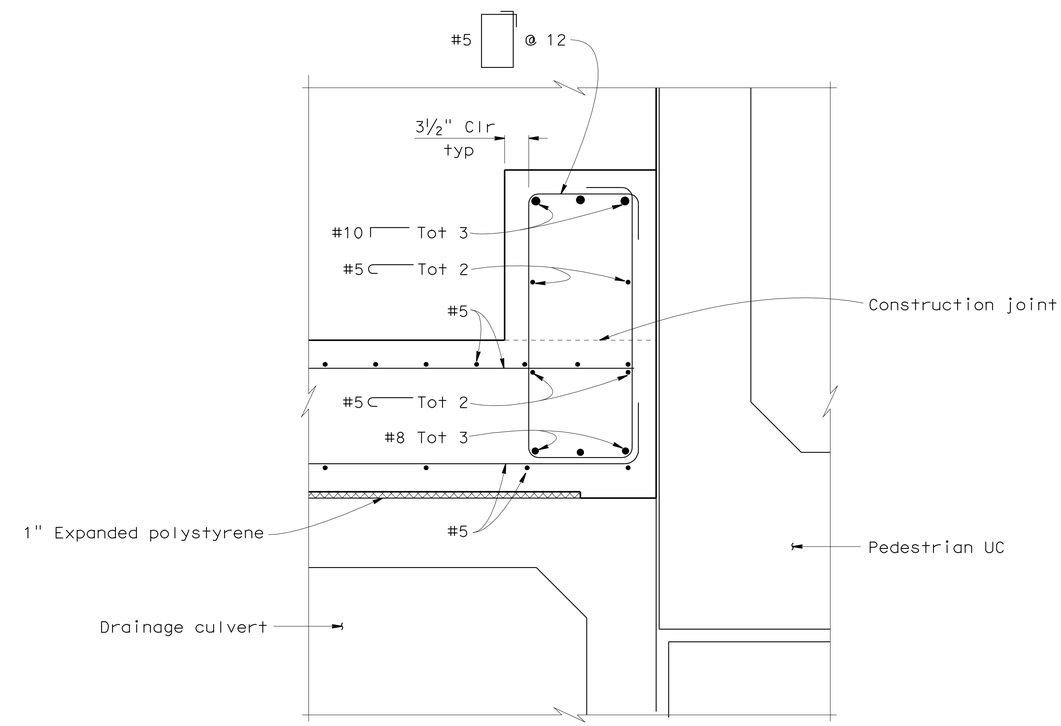

SECTION L-L

1" = 1'-0"

Note:

All reinforcement shall be prefabricated epoxy coated reinforcement.

DESIGN	BY M. Fustok	CHECKED W. Addlespurger	
DETAILS	BY Various	CHECKED M. Fustok	
QUANTITIES	BY M. Fustok	CHECKED W. Addlespurger	

STATE OF CALIFORNIA
DEPARTMENT OF TRANSPORTATION

DIVISION OF ENGINEERING SERVICES
STRUCTURE DESIGN
DESIGN BRANCH 12

BRIDGE NO. 52-0469
POST MILE 41.58

PEDESTRIAN RAMP 93
RETAINING WALL DETAILS NO. 4

STRUCTURES DESIGN DETAIL SHEET (ENGLISH) (REV. 10/25/05)

ORIGINAL SCALE IN INCHES FOR REDUCED PLANS 0 1 2 3

CU 07
EA 260701

DISREGARD PRINTS BEARING EARLIER REVISION DATES

REVISION DATES: 7-30-10, 8-16-10, 9-3-10, 1-11-11

SHEET 11 OF 50

FILE => c-52-0469-c-rw08.dgn

USERNAME => s124496 DATE PLOTTED => 25-JUN-2011 TIME PLOTTED => 05:23

DIST	COUNTY	ROUTE	POST MILES TOTAL PROJECT	SHEET No	TOTAL SHEETS
07	Ven,SB	101	R39.8/R43.6, 0.0/2.2	610	757

Mahmoud Fustok 10-18-10
REGISTERED CIVIL ENGINEER DATE

6-20-11
PLANS APPROVAL DATE

REGISTERED PROFESSIONAL ENGINEER
MAHMOUD FUSTOK
No. C51502
Exp. 06-30-12
CIVIL
STATE OF CALIFORNIA

The State of California or its officers or agents shall not be responsible for the accuracy or completeness of electronic copies of this plan sheet.

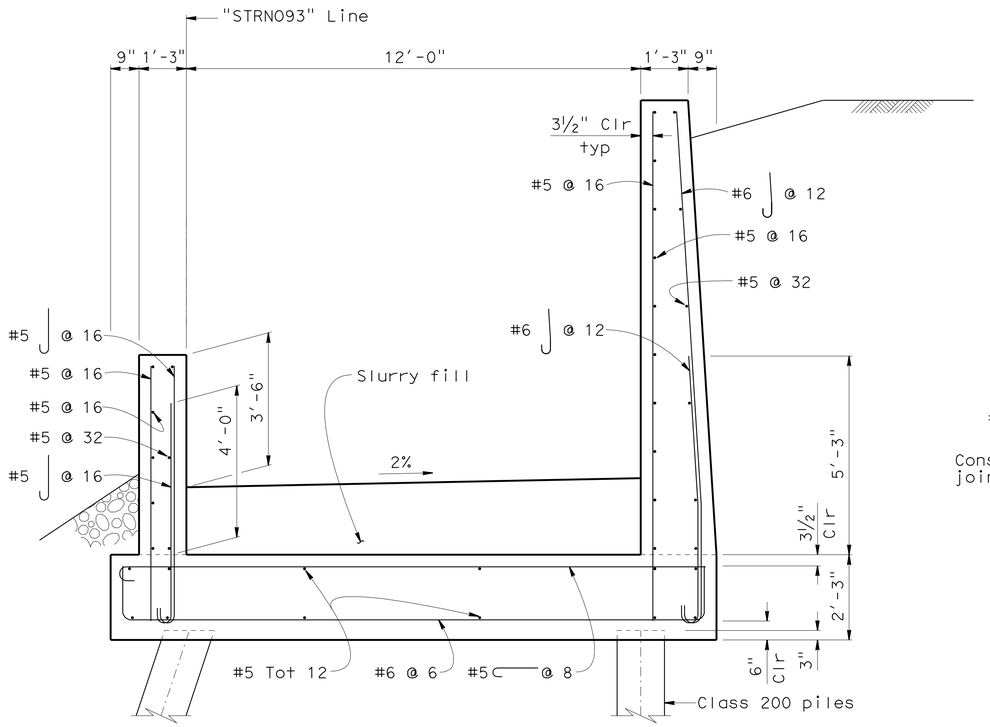

SECTION G-G

1/2" = 1'-0"

Pedestrian Ramp 93
Section Sta 2+45.20 to Sta 3+79.00

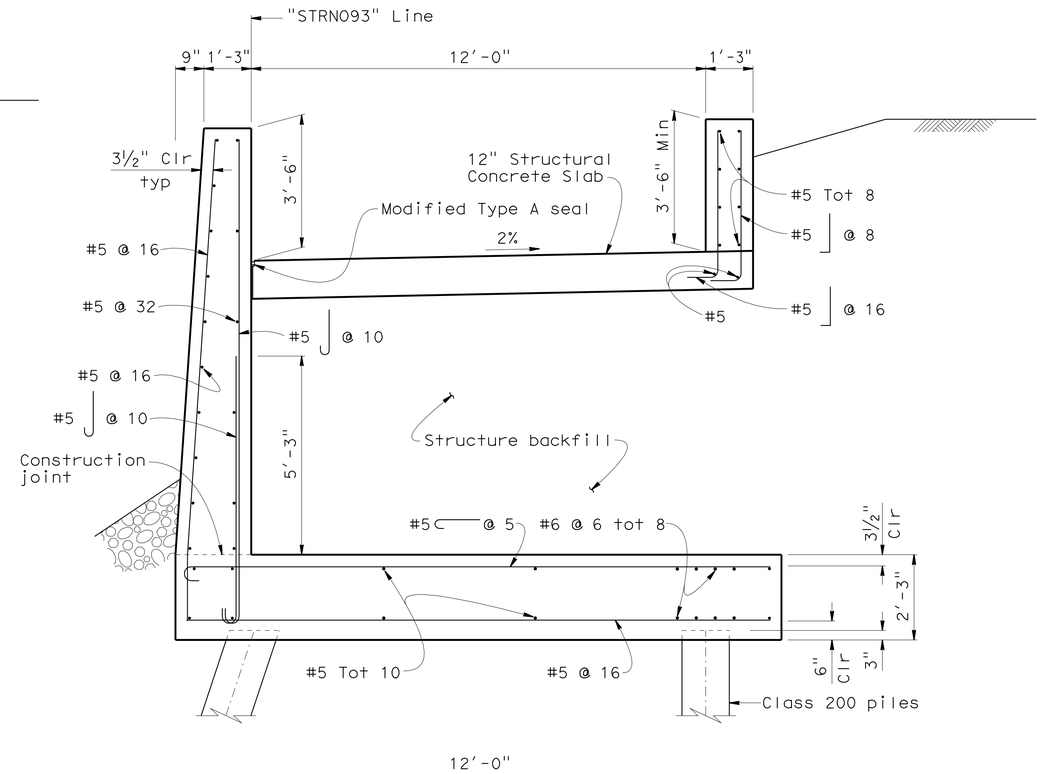

SECTION H-H

1/2" = 1'-0"

Pedestrian Ramp 93
Section Sta 3+79.00 to Sta 4+76.00

Note:

All reinforcement shall be prefabricated epoxy coated reinforcement.

DESIGN	BY M. Fustok	CHECKED W. Addlespurger	
DETAILS	BY kc	CHECKED M. Fustok	
QUANTITIES	BY M. Fustok	CHECKED W. Addlespurger	

STATE OF CALIFORNIA
DEPARTMENT OF TRANSPORTATION

DIVISION OF ENGINEERING SERVICES
STRUCTURE DESIGN
DESIGN BRANCH 12

BRIDGE NO. 52-0469
POST MILE 41.58

PEDESTRIAN RAMP 93
RETAINING WALL DETAILS NO. 5

STRUCTURES DESIGN DETAIL SHEET (ENGLISH) (REV. 10/25/05)

ORIGINAL SCALE IN INCHES FOR REDUCED PLANS 0 1 2 3

CU 07
EA 260701

DISREGARD PRINTS BEARING EARLIER REVISION DATES

REVISION DATES: 5-12-10, 7-23-10, 7-28-10, 8-9-10, 8-13-10, 9-3-10, 1-14-11, 3-7-11

SHEET 12 OF 50

FILE => c-52-0469-c-rw09.dgn

USERNAME => s124496 DATE PLOTTED => 25-JUN-2011 TIME PLOTTED => 05:23

DIST	COUNTY	ROUTE	POST MILES TOTAL PROJECT	SHEET No	TOTAL SHEETS
07	Ven,SB	101	R39.8/R43.6, 0.0/2.2	611	757

Mahmoud Fustok 10-18-10
REGISTERED CIVIL ENGINEER DATE

6-20-11
PLANS APPROVAL DATE

REGISTERED PROFESSIONAL ENGINEER
MAHMOUD FUSTOK
No. C51502
Exp. 06-30-12
CIVIL
STATE OF CALIFORNIA

The State of California or its officers or agents shall not be responsible for the accuracy or completeness of electronic copies of this plan sheet.

Notes:

1. All reinforcement shall be prefabricated epoxy coated reinforcement.
2. For "Modified Type A Seal" see "Retaining Wall Details No. 5" sheet.

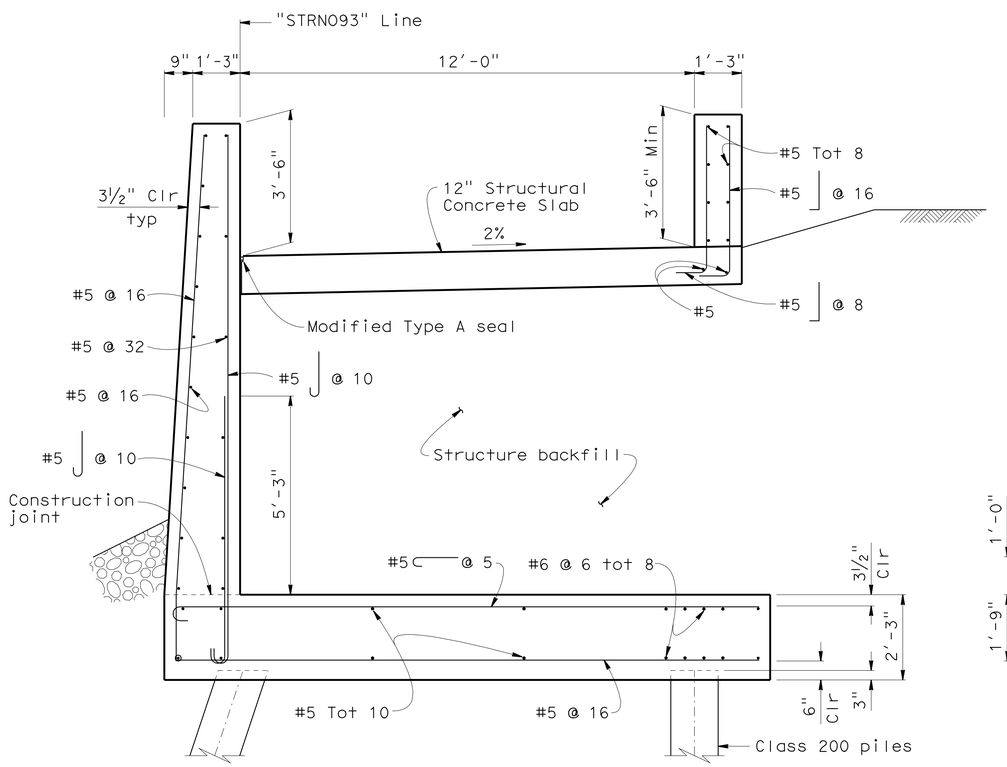

SECTION I-I

1/2" = 1'-0"

Pedestrian Ramp 93
Section Sta 4+76.00 to Sta 5+33.00

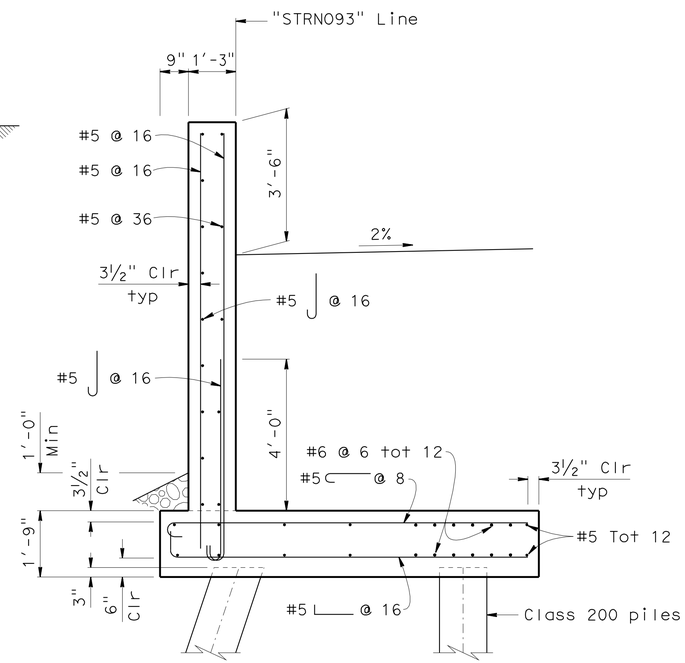

SECTION J-J

1/2" = 1'-0"

Pedestrian Ramp 93
Section Sta 5+33.00 to Sta 5+70.00

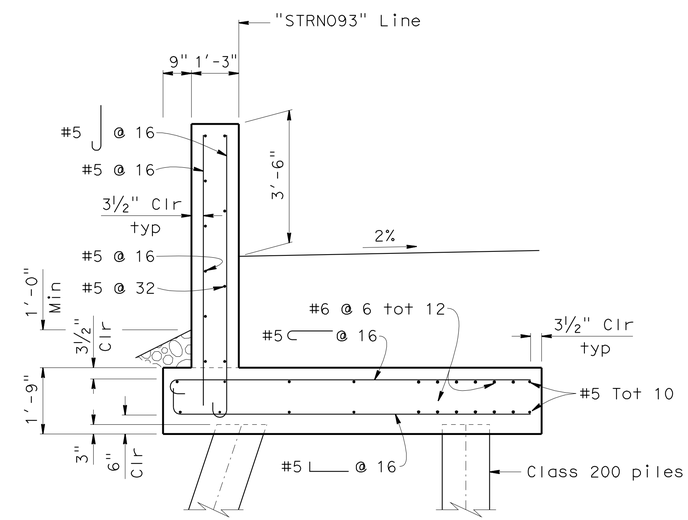

SECTION K-K

1/2" = 1'-0"

Pedestrian Ramp 93
Section Sta 5+70.00 to Sta 6+00.00

DESIGN	BY M. Fustok	CHECKED W. Addlespurger	
DETAILS	BY Various	CHECKED M. Fustok	
QUANTITIES	BY M. Fustok	CHECKED W. Addlespurger	

STATE OF CALIFORNIA
DEPARTMENT OF TRANSPORTATION

DIVISION OF ENGINEERING SERVICES
STRUCTURE DESIGN
DESIGN BRANCH 12

BRIDGE NO. 52-0469
POST MILE 41.58

PEDESTRIAN RAMP 93
RETAINING WALL DETAILS NO. 6

STRUCTURES DESIGN DETAIL SHEET (ENGLISH) (REV. 10/25/05)

ORIGINAL SCALE IN INCHES FOR REDUCED PLANS 0 1 2 3

CU 07
EA 260701

DISREGARD PRINTS BEARING EARLIER REVISION DATES

REVISION DATES: 5-28-10 7-23-10 7-28-10 8-6-10 8-16-10 1-11-11

SHEET 13 OF 50

FILE => c-52-0469-c-rw10.dgn

USERNAME => s124496 DATE PLOTTED => 25-JUN-2011 TIME PLOTTED => 05:23

DIST	COUNTY	ROUTE	POST MILES TOTAL PROJECT	SHEET No	TOTAL SHEETS
07	Ven,SB	101	R39.8/R43.6, 0.0/2.2	612	757

Mahmoud Fustok 10-18-10
REGISTERED CIVIL ENGINEER DATE

6-20-11
PLANS APPROVAL DATE

REGISTERED PROFESSIONAL ENGINEER
MAHMOUD FUSTOK
No. C51502
Exp. 06-30-12
CIVIL
STATE OF CALIFORNIA

The State of California or its officers or agents shall not be responsible for the accuracy or completeness of electronic copies of this plan sheet.

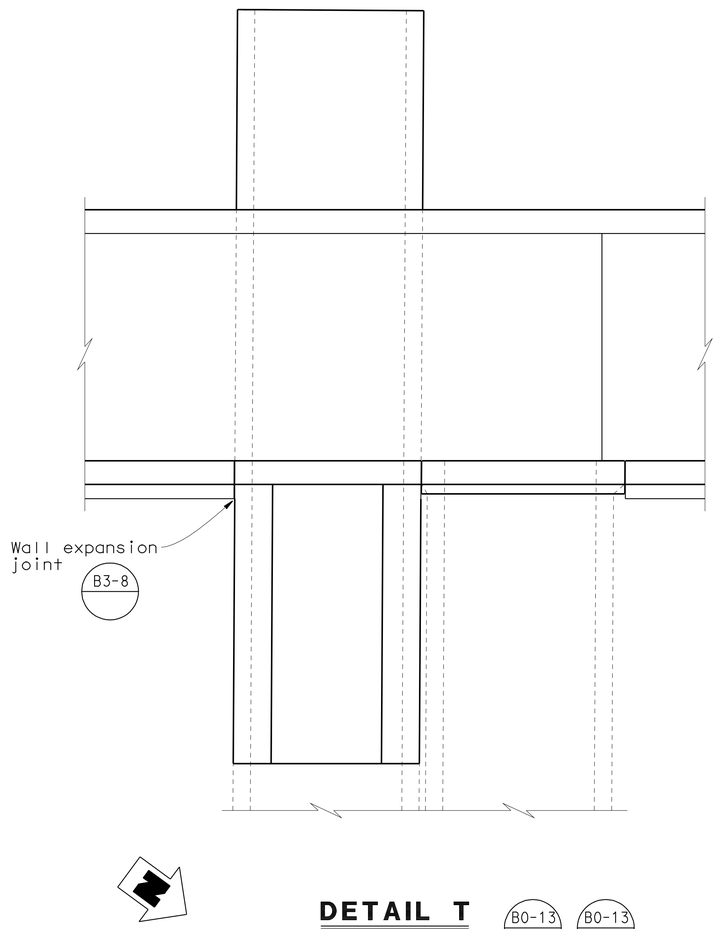

DETAIL T
1/4" = 1'-0"

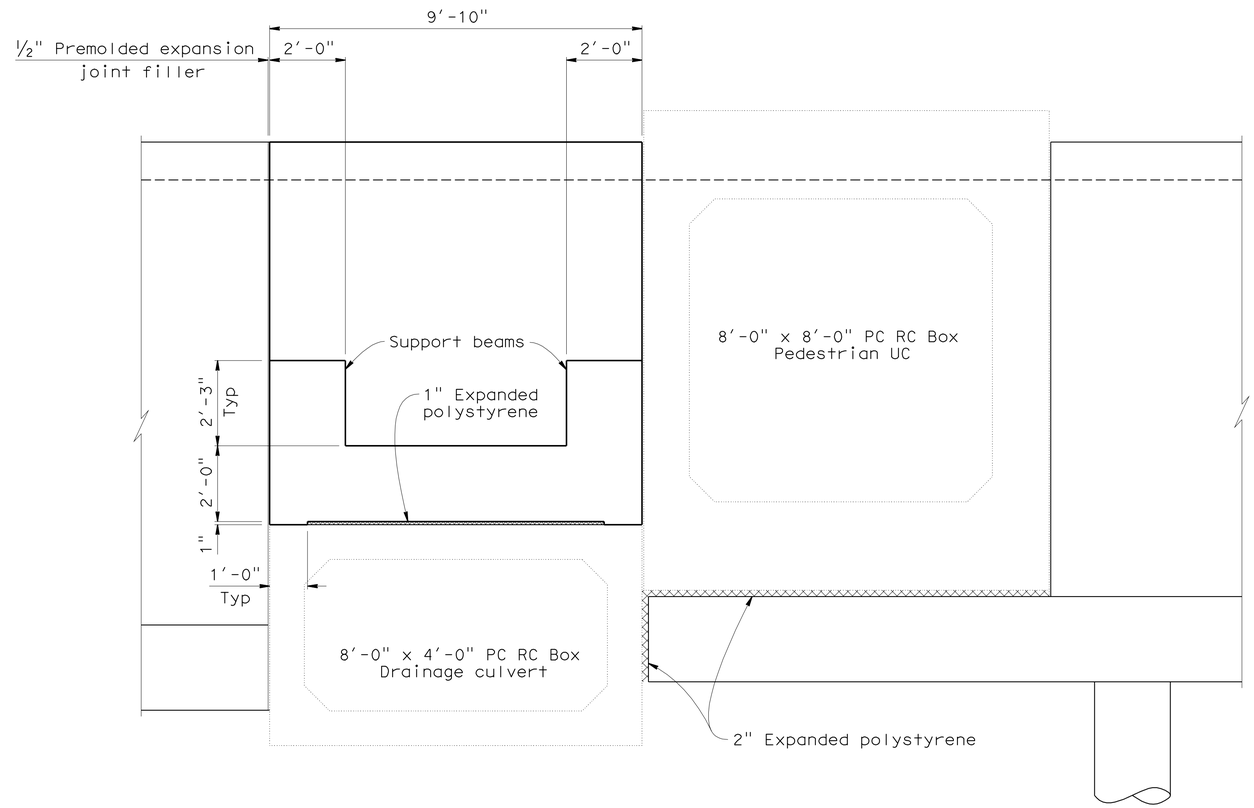

DETAIL S
1/2" = 1'-0"

	BY	CHECKED
DESIGN	M. Fustok	W. Addlespurger
DETAILS	Various	M. Fustok
QUANTITIES	M. Fustok	W. Addlespurger

STATE OF CALIFORNIA
DEPARTMENT OF TRANSPORTATION

DIVISION OF ENGINEERING SERVICES
STRUCTURE DESIGN
DESIGN BRANCH 12

BRIDGE NO. 52-0469
POST MILE 41.58

PEDESTRIAN RAMP 93
RETAINING WALL DETAILS NO. 7

STRUCTURES DESIGN DETAIL SHEET (ENGLISH) (REV. 10/25/05)

ORIGINAL SCALE IN INCHES FOR REDUCED PLANS 0 1 2 3

CU 07
EA 260701

DISREGARD PRINTS BEARING EARLIER REVISION DATES

REVISION DATES: ~~7-30-10~~ ~~8-13-10~~ 4-14-11

SHEET 14 OF 50

FILE => c-52-0469-c-rw11.dgn

USERNAME => s124436 DATE PLOTTED => 25-JUN-2011 TIME PLOTTED => 05:23

DIST	COUNTY	ROUTE	POST MILES TOTAL PROJECT	SHEET No	TOTAL SHEETS
07	Ven,SB	101	R39.8/R43.6, 0.0/2.2	613	757

Mahmoud Fustok 10-18-10
REGISTERED CIVIL ENGINEER DATE

6-20-11
PLANS APPROVAL DATE

REGISTERED PROFESSIONAL ENGINEER
MAHMOUD FUSTOK
No. C51502
Exp. 06-30-12
CIVIL
STATE OF CALIFORNIA

The State of California or its officers or agents shall not be responsible for the accuracy or completeness of electronic copies of this plan sheet.

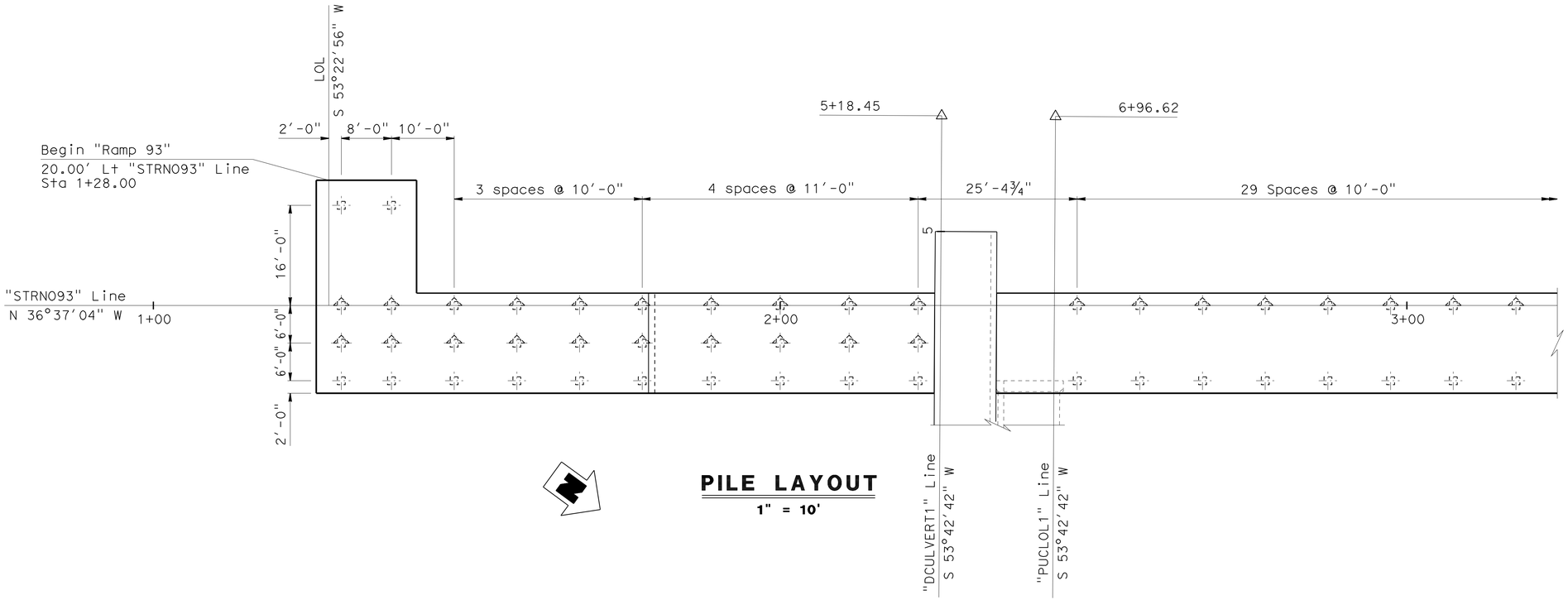

PILE LAYOUT
1" = 10'

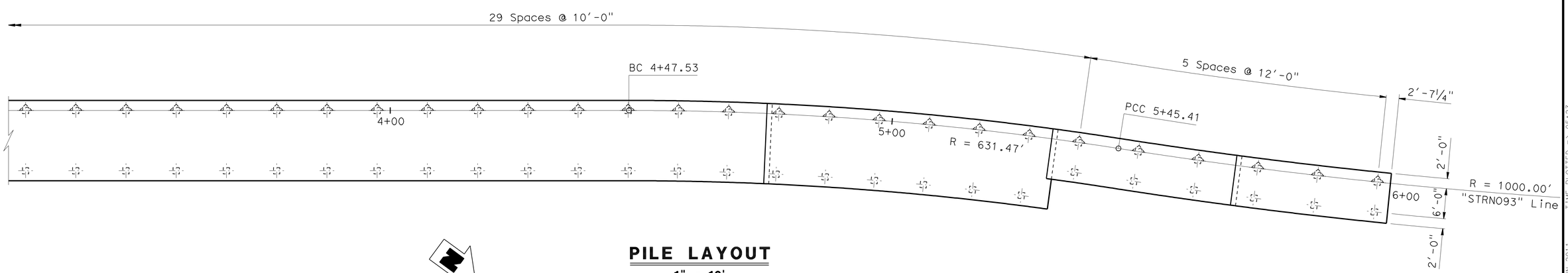

PILE LAYOUT
1" = 10'

DESIGN	BY M. Fustok	CHECKED W. Addlespurger	
DETAILS	BY Various	CHECKED M. Fustok	
QUANTITIES	BY M. Fustok	CHECKED W. Addlespurger	

STATE OF CALIFORNIA
DEPARTMENT OF TRANSPORTATION

DIVISION OF ENGINEERING SERVICES
STRUCTURE DESIGN
DESIGN BRANCH 12

BRIDGE NO. 52-0469
POST MILE 41.58

PEDESTRIAN RAMP 93
PILE LAYOUT

STRUCTURES DESIGN DETAIL SHEET (ENGLISH) (REV. 10/25/05)

ORIGINAL SCALE IN INCHES FOR REDUCED PLANS 0 1 2 3

CU 07
EA 260701

DISREGARD PRINTS BEARING EARLIER REVISION DATES

REVISION DATES: 6-18-10 | 7-28-10 | 8-12-10 | 1-13-11 | 2-18-11 | 3-7/11

SHEET 15 OF 50

FILE => c-52-0469-p-pl01.dgn

USERNAME => s124496 DATE PLOTTED => 25-JUN-2011 TIME PLOTTED => 05:23

DIST	COUNTY	ROUTE	POST MILES TOTAL PROJECT	SHEET No	TOTAL SHEETS
07	Ven,SB	101	R39.8/R43.6, 0.0/2.2	614	757

Mahmoud Fustok 10-18-10
REGISTERED CIVIL ENGINEER DATE

6-20-11
PLANS APPROVAL DATE

REGISTERED PROFESSIONAL ENGINEER
MAHMOUD FUSTOK
No. C51502
Exp. 06-30-12
CIVIL
STATE OF CALIFORNIA

The State of California or its officers or agents shall not be responsible for the accuracy or completeness of electronic copies of this plan sheet.

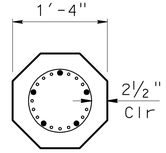

ALTERNATIVE "Y"
1"=1'-0"

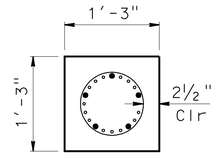

ALTERNATIVE "X"
1"=1'-0"

Notes:

1. For prestressing steel and reinforcement details see B2-8
2. All pile reinforcement shall be prefabricated epoxy coated reinforcement bars.

PILE DATA TABLE

Support Location	Pile Type	Nominal Resistance (kips)		Design Tip Elevation (ft)	Specified Tip Elevation (ft)
		Compression	Tension		
Station 1+28.00 to 1+80.00	Class 200	170	0	-17 (a)	-17
Station 1+80.00 to 2+24.60	Class 200	170	0	-17 (a)	-17
Station 2+44.00 to 3+79.00	Class 200	320	0	-17 (a)	-17
Station 3+79.00 to 4+74.00	Class 200	400	0	-17 (a)	-17
Station 4+74.00 to 5+30.00	Class 200	360	0	-17 (a)	-17
Station 5+30.00 to 5+70.00	Class 200	200	0	-17 (a)	-17
Station 5+70.00 to 6+00.00	Class 200	110	0	-17 (a)	-17

Design tip elevations are controlled by (a) compression.

	BY	CHECKED
DESIGN	M. Fustok	W. Addlespurger
DETAILS	Various	M. Fustok
QUANTITIES	M. Fustok	W. Addlespurger

STATE OF CALIFORNIA
DEPARTMENT OF TRANSPORTATION

DIVISION OF ENGINEERING SERVICES
STRUCTURE DESIGN
DESIGN BRANCH 12

BRIDGE NO. 52-0469
POST MILE 41.58

PEDESTRIAN RAMP 93
PILE DETAILS

STRUCTURES DESIGN DETAIL SHEET (ENGLISH) (REV. 10/25/05)

ORIGINAL SCALE IN INCHES FOR REDUCED PLANS 0 1 2 3

CU 07
EA 260701

DISREGARD PRINTS BEARING EARLIER REVISION DATES

REVISION DATES: 7-28-10 8-12-10 9-28-10 2-14-11 2-22-11

SHEET 16 OF 50

FILE => c-52-0469-p-pl02.dgn

USERNAME => s124496 DATE PLOTTED => 25-JUN-2011 TIME PLOTTED => 05:23

DIST	COUNTY	ROUTE	POST MILES TOTAL PROJECT	SHEET No	TOTAL SHEETS
07	Ven,SB	101	R39.8/R43.6, 0.0/2.2	615	757

Mahmoud Fustok 10-18-10
REGISTERED CIVIL ENGINEER DATE

6-20-11
PLANS APPROVAL DATE

REGISTERED PROFESSIONAL ENGINEER MAHMOUD FUSTOK No. C51502 Exp. 06-30-12 CIVIL STATE OF CALIFORNIA

The State of California or its officers or agents shall not be responsible for the accuracy or completeness of electronic copies of this plan sheet.

NOTES:

1. See Retaining Wall Detail Sheets for fill or backfill required under RC slab or above footing
2. Place RSP Fabric between piles on cut slope. Middle pile will only be constructed from Sta 1+40 to Sta 2+24.62.
3. See Road Plans.
4. Place 0.40′ Hot Mix Asphalt (Type B)
5. Place RSP Fabric on all cut slopes after excavation to provide slope protection during construction operations. Cut 2.5′ diameter holes in RSP Fabric at pile locations prior to pile driving. Another layer of RSP Fabric shall be placed on top of the constructed structure backfill and trimmed as necessary to fit around footing and piles.
6. Conform top of Reset RSP to top of existing RSP revetment

LEGEND

- RSP Excavation and Set RSP
- RSP Excavation
- RSP Fabric
- RSP Excavation and Structure Backfill
- RSP Excavation and Native Backfill

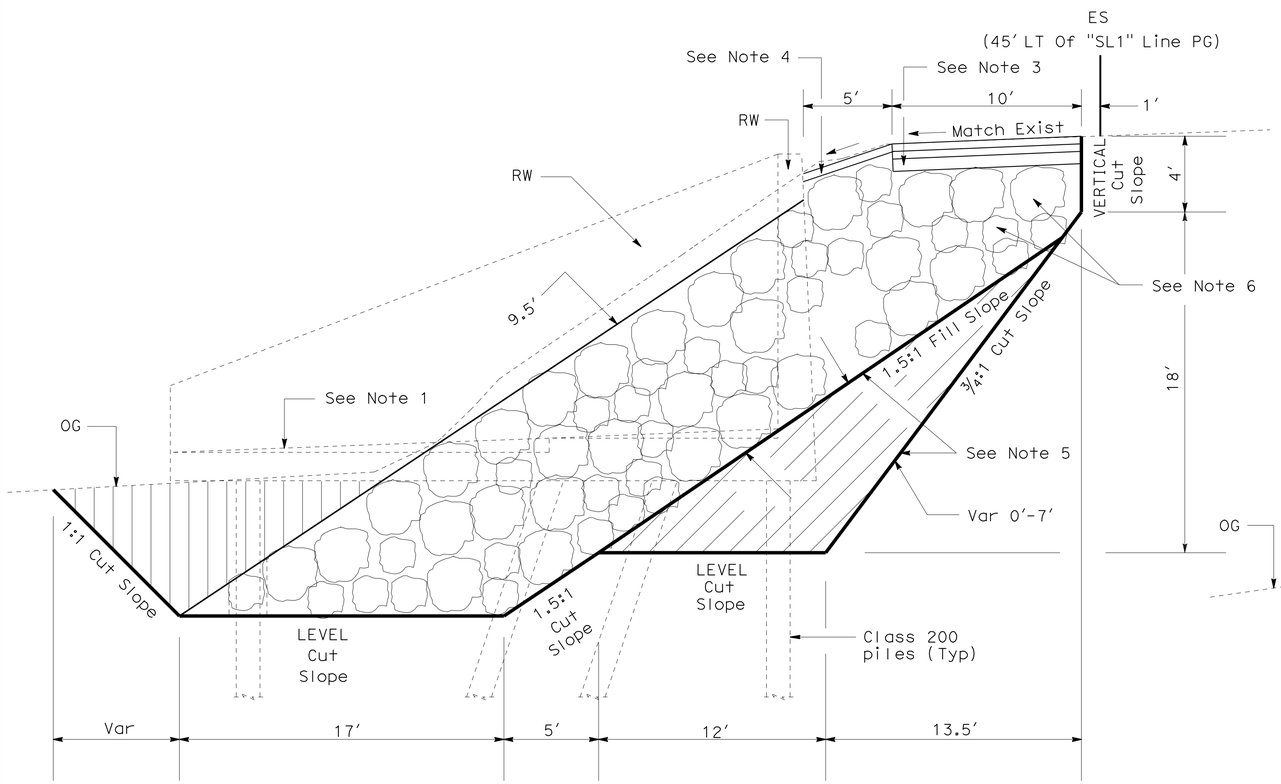

RSP & EXCAVATION SECTION
NO SCALE

Pedestrian Ramp 93
Sta 1+26.75

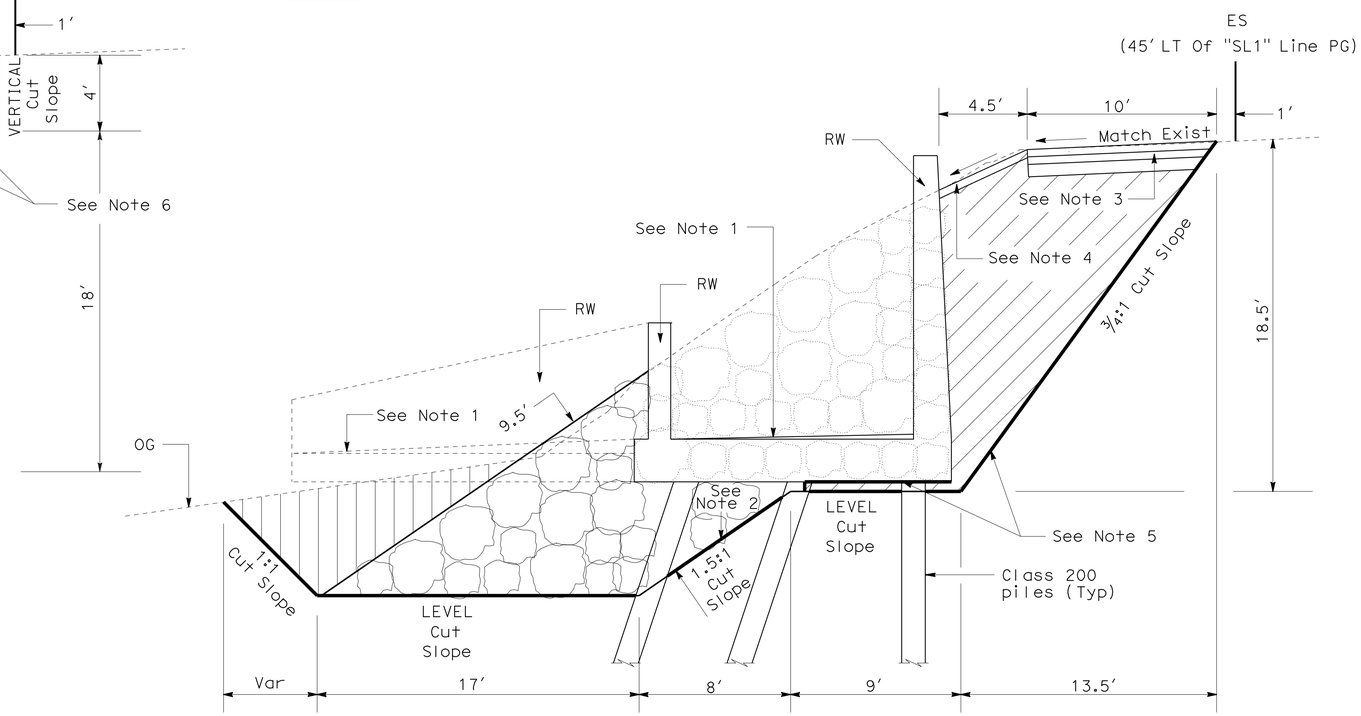

RSP & EXCAVATION SECTION
NO SCALE

Pedestrian Ramp 93
Sta 1+41.25

DESIGN	BY M. Fustok	CHECKED W. Addlespurger	
DETAILS	BY Various	CHECKED M. Fustok	
QUANTITIES	BY M. Fustok	CHECKED W. Addlespurger	

STATE OF CALIFORNIA
DEPARTMENT OF TRANSPORTATION

DIVISION OF ENGINEERING SERVICES
STRUCTURE DESIGN
DESIGN BRANCH 12

BRIDGE NO. 52-0469
POST MILE 41.58

PEDESTRIAN RAMP 93
ROCK SLOPE PROTECTION DETAILS NO. 1

STRUCTURES DESIGN DETAIL SHEET (ENGLISH) (REV. 10/25/05)

ORIGINAL SCALE IN INCHES FOR REDUCED PLANS 0 1 2 3

CU 07
EA 260701

DISREGARD PRINTS BEARING EARLIER REVISION DATES → 11-1-10 11-1-10 4-15-11

REVISION DATES

SHEET 17 OF 50

FILE => c-52-0469-q- rsp01.dgn

USERNAME => s124496 DATE PLOTTED => 25-JUN-2011 TIME PLOTTED => 05:23

DIST	COUNTY	ROUTE	POST MILES TOTAL PROJECT	SHEET No	TOTAL SHEETS
07	Ven,SB	101	R39.8/R43.6, 0.0/2.2	616	757

Mahmoud Fustok 10-18-10
REGISTERED CIVIL ENGINEER DATE

6-20-11
PLANS APPROVAL DATE

REGISTERED PROFESSIONAL ENGINEER
MAHMOUD FUSTOK
No. C51502
Exp. 06-30-12
CIVIL
STATE OF CALIFORNIA

The State of California or its officers or agents shall not be responsible for the accuracy or completeness of electronic copies of this plan sheet.

NOTES:

1. See Retaining Wall Detail Sheets for fill or backfill required under RC slab or above footing.
2. Place RSP Fabric between piles on cut slope.
3. See "Road Plans".
4. Place 0.40′ Hot Mix Asphalt (Type B).
5. Place RSP Fabric on all cut slopes after excavation to provide slope protection during construction operations. Cut 2.5′ diameter holes in RSP Fabric at pile locations prior to pile driving. Another layer of RSP Fabric shall be placed on top of the constructed structure backfill and trimmed as necessary to fit around footing and piles.
6. Conform to top of existing RSP revetment.
7. Reset RSP below footing and between piles after pile driving and prior to footing construction.

LEGEND

- RSP Excavation and Set RSP
- RSP Excavation
- RSP Fabric
- RSP Excavation and Structure Backfill
- RSP Excavation and Native Backfill

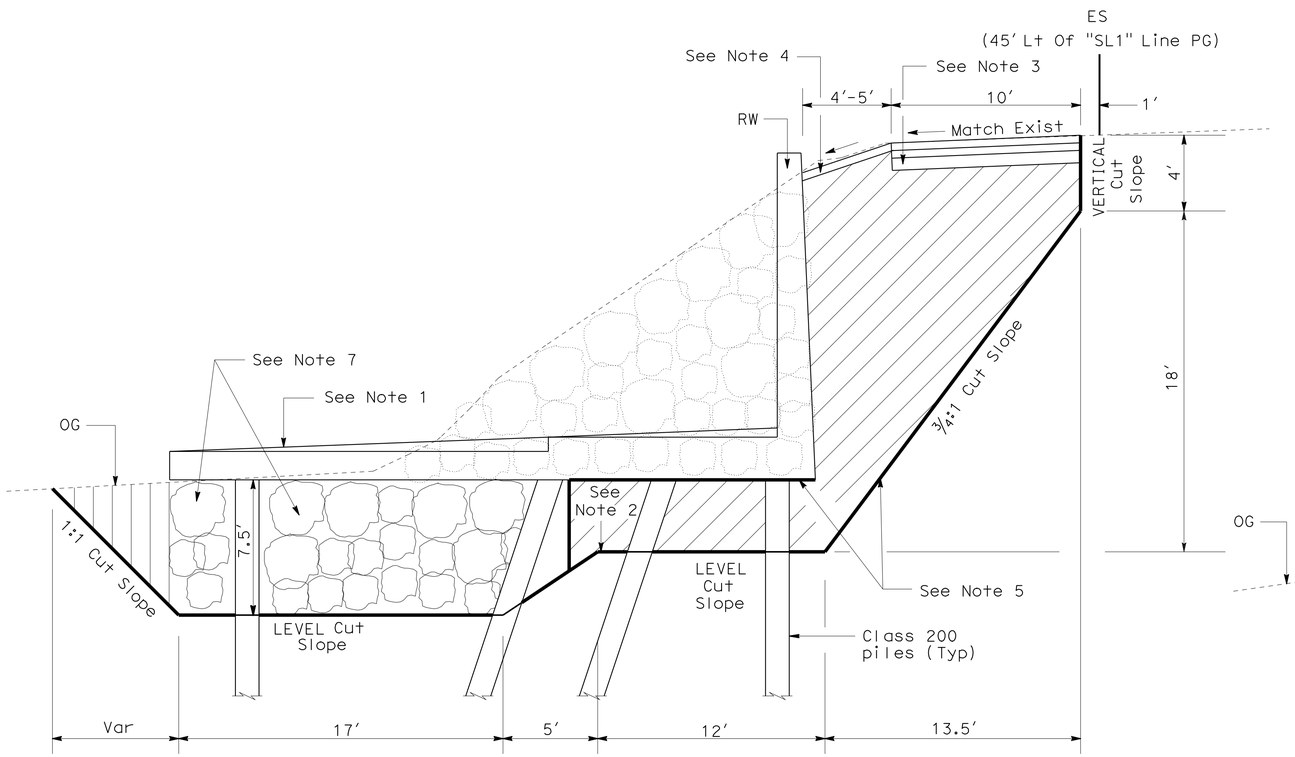

RSP & EXCAVATION SECTION
NO SCALE

Pedestrian Ramp 93
Sta 1+28 To Sta 1+40

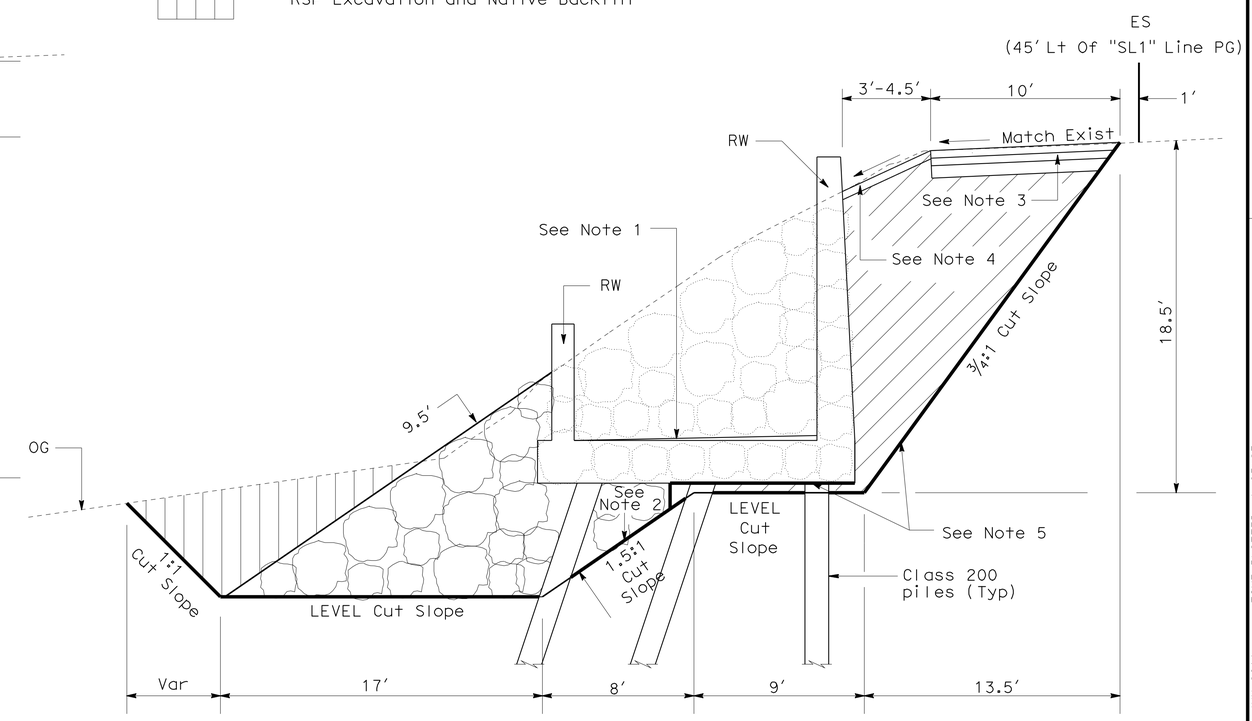

RSP & EXCAVATION SECTION
NO SCALE

Pedestrian Ramp 93
Sta 1+41.25 To 1+80

DESIGN	BY M. Fustok	CHECKED W. Addlespurger
DETAILS	BY Various	CHECKED M. Fustok
QUANTITIES	BY M. Fustok	CHECKED W. Addlespurger

STATE OF CALIFORNIA
DEPARTMENT OF TRANSPORTATION

DIVISION OF ENGINEERING SERVICES
STRUCTURE DESIGN
DESIGN BRANCH 12

BRIDGE NO. 52-0469
POST MILE 41.58

PEDESTRIAN RAMP 93
ROCK SLOPE PROTECTION DETAILS NO. 2

STRUCTURES DESIGN DETAIL SHEET (ENGLISH) (REV. 10/25/05)

ORIGINAL SCALE IN INCHES FOR REDUCED PLANS 0 1 2 3

CU 07
EA 260701

DISREGARD PRINTS BEARING EARLIER REVISION DATES

REVISION DATES: 11-1-10 2-28-11 4-15-11

SHEET 18 OF 50

FILE => c-52-0469-q- rsp02.dgn

USERNAME => s124496 DATE PLOTTED => 25-JUN-2011 TIME PLOTTED => 05:23

DIST	COUNTY	ROUTE	POST MILES TOTAL PROJECT	SHEET No	TOTAL SHEETS
07	Ven,SB	101	R39.8/R43.6, 0.0/2.2	617	757

Mahmoud Fustok 10-18-10
REGISTERED CIVIL ENGINEER DATE

6-20-11
PLANS APPROVAL DATE

REGISTERED PROFESSIONAL ENGINEER
MAHMOUD FUSTOK
No. C51502
Exp. 06-30-12
CIVIL
STATE OF CALIFORNIA

The State of California or its officers or agents shall not be responsible for the accuracy or completeness of electronic copies of this plan sheet.

NOTES:

1. See Retaining Wall Detail Sheets for fill or backfill required under RC slab or above footing.
2. Place RSP Fabric between piles on cut slope. Middle pile will only be constructed from Sta 1+40 to Sta 2+24.62.
3. See "Road Plans".
4. Place 0.40′ Hot Mix Asphalt (Type B).
5. Place RSP Fabric on all cut slopes after excavation to provide slope protection during construction operations. Cut 2.5′ diameter holes in RSP Fabric at pile locations prior to pile driving. Another layer of RSP Fabric shall be placed on top of the constructed structure backfill and trimmed as necessary to fit around footing and piles.

LEGEND

- RSP Excavation and Set RSP
- RSP Excavation
- RSP Fabric
- RSP Excavation and Structure Backfill
- RSP Excavation and Native Backfill

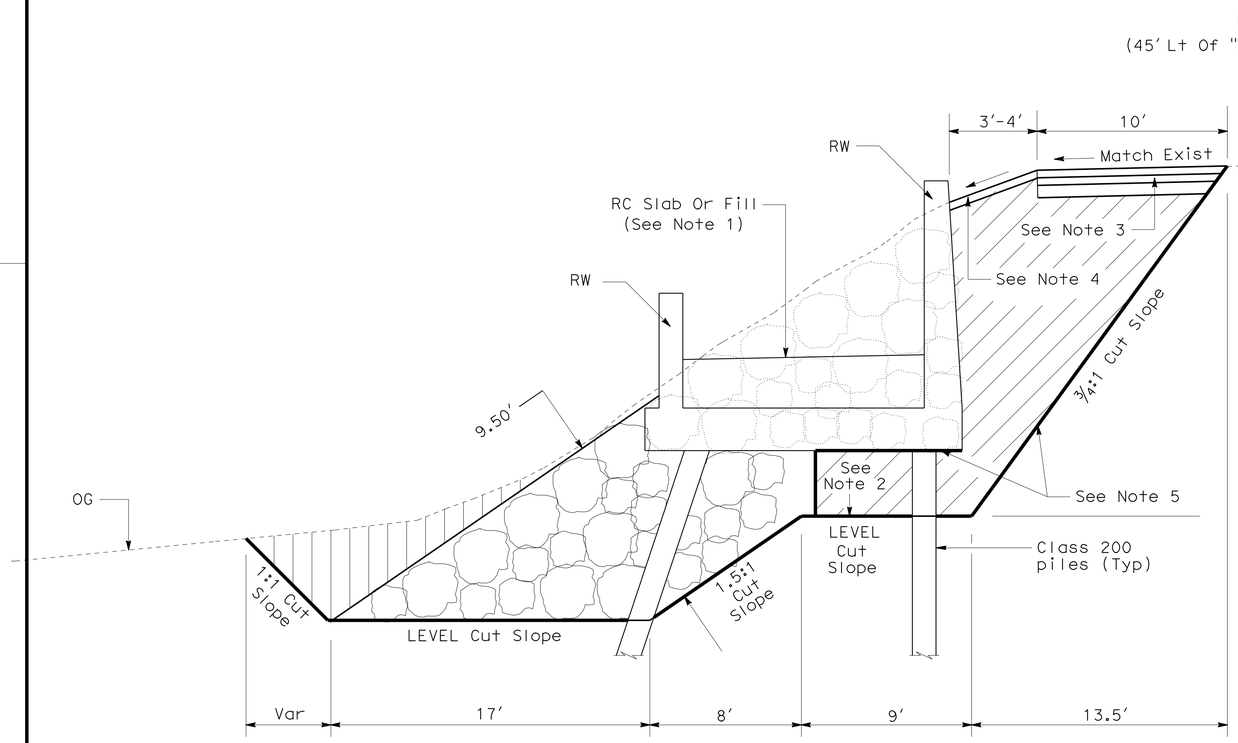

RSP & EXCAVATION SECTION

NO SCALE

Pedestrian Ramp 93
Sta 1+80 To Sta 5+33

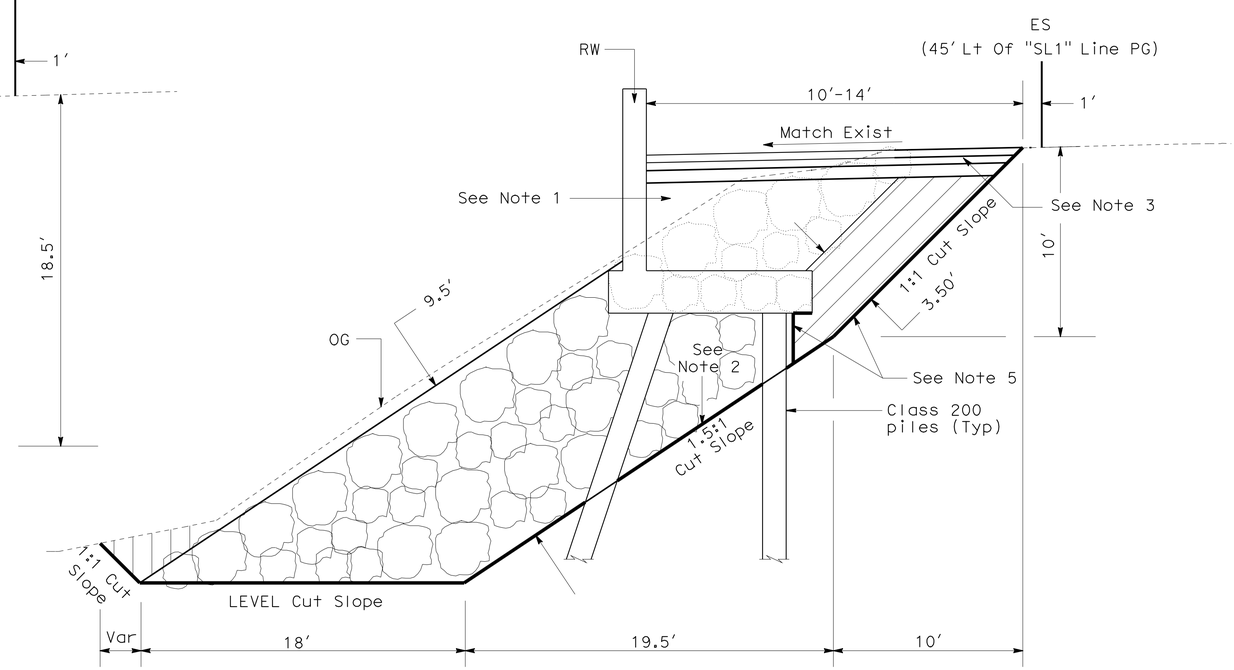

RSP & EXCAVATION SECTION

NO SCALE

Pedestrian Ramp 93
Sta 5+33 To Sta 6+00

DESIGN	BY M. Fustok	CHECKED W. Addlespurger	
DETAILS	BY Various	CHECKED M. Fustok	
QUANTITIES	BY M. Fustok	CHECKED W. Addlespurger	

STATE OF CALIFORNIA
DEPARTMENT OF TRANSPORTATION

DIVISION OF ENGINEERING SERVICES
STRUCTURE DESIGN
DESIGN BRANCH 12

BRIDGE NO. 52-0469
POST MILE 41.58

PEDESTRIAN RAMP 93
ROCK SLOPE PROTECTION DETAILS NO. 3

STRUCTURES DESIGN DETAIL SHEET (ENGLISH) (REV. 10/25/05)

ORIGINAL SCALE IN INCHES FOR REDUCED PLANS 0 1 2 3

CU 07
EA 260701

DISREGARD PRINTS BEARING EARLIER REVISION DATES

REVISION DATES: 11-1-10 11-1-10 4-15-11

SHEET 19 OF 50

FILE => c-52-0469-q- rsp03.dgn

USERNAME => s124496 DATE PLOTTED => 25-JUN-2011 TIME PLOTTED => 05:24

DIST	COUNTY	ROUTE	POST MILES TOTAL PROJECT	SHEET No	TOTAL SHEETS
07	Ven,SB	101	R39.8/R43.6, 0.0/2.2	618	757

Mahmoud Fustok 10-18-10
REGISTERED CIVIL ENGINEER DATE

6-20-11
PLANS APPROVAL DATE

REGISTERED PROFESSIONAL ENGINEER
MAHMOUD FUSTOK
No. C51502
Exp. 06-30-12
CIVIL
STATE OF CALIFORNIA

The State of California or its officers or agents shall not be responsible for the accuracy or completeness of electronic copies of this plan sheet.

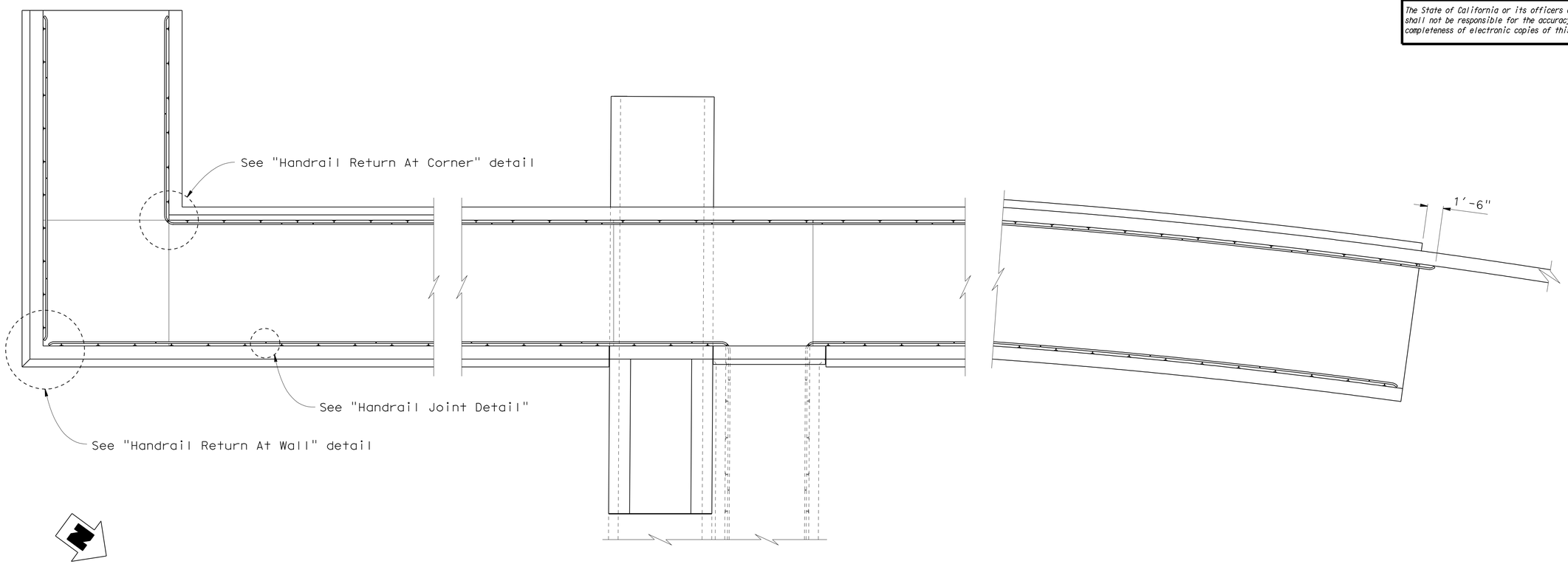

PLAN
3/16" = 1'-0"

DESIGN	BY M. Fustok	CHECKED W. Addlespurger	
DETAILS	BY kc	CHECKED M. Fustok	
QUANTITIES	BY M. Fustok	CHECKED W. Addlespurger	

STATE OF CALIFORNIA
DEPARTMENT OF TRANSPORTATION

DIVISION OF ENGINEERING SERVICES
STRUCTURE DESIGN
DESIGN BRANCH 12

BRIDGE NO. 52-0469
POST MILE 41.58

PEDESTRIAN RAMP 93
HANDRAIL DETAILS NO. 1

STRUCTURES DESIGN DETAIL SHEET (ENGLISH) (REV. 10/25/05)

ORIGINAL SCALE IN INCHES FOR REDUCED PLANS 0 1 2 3

CU 07
EA 260701

DISREGARD PRINTS BEARING EARLIER REVISION DATES → ~~9-23-10~~ ~~9-3-10~~ 4-18-11

REVISION DATES

SHEET 20 OF 50

FILE => c-52-0469-t-hrd01.dgn

USERNAME => s124496 DATE PLOTTED => 25-JUN-2011 TIME PLOTTED => 05:24

DIST	COUNTY	ROUTE	POST MILES TOTAL PROJECT	SHEET No	TOTAL SHEETS
07	Ven,SB	101	R39.8/R43.6, 0.0/2.2	619	757

Mahmoud Fustok 10-18-10
REGISTERED CIVIL ENGINEER DATE

6-20-11
PLANS APPROVAL DATE

REGISTERED PROFESSIONAL ENGINEER
MAHMOUD FUSTOK
No. C51502
Exp. 06-30-12
CIVIL
STATE OF CALIFORNIA

The State of California or its officers or agents shall not be responsible for the accuracy or completeness of electronic copies of this plan sheet.

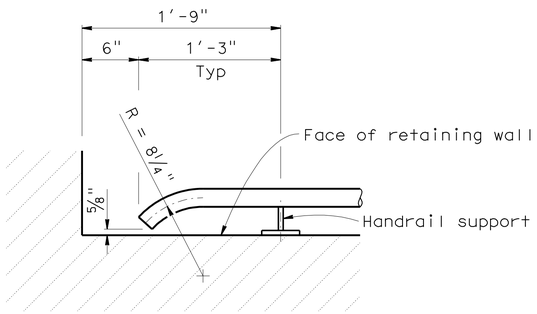

HANDRAIL RETURN AT WALL

1 1/2" = 1'-0"

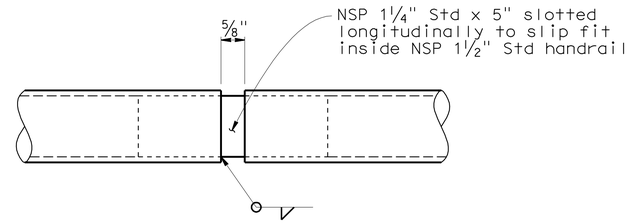

HANDRAIL JOINT DETAIL

6" = 1'-0"

Note:

Handrail expansion joint shall be spaced at 10'-6" maximum.

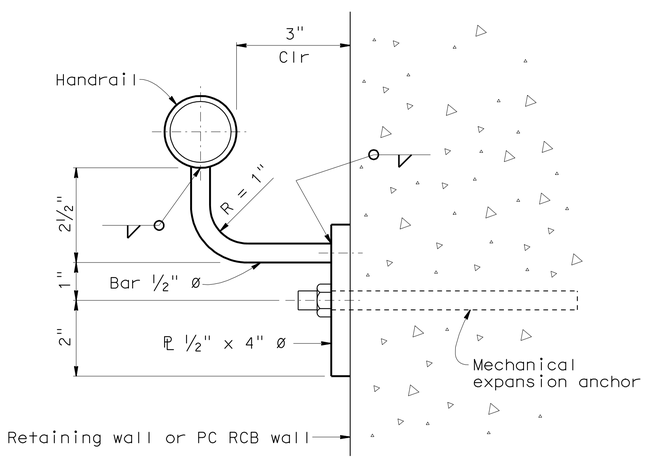

HANDRAIL SUPPORT DETAIL

6" = 1'-0"

Note:

Mechanilal expansion anchors shall be ½" ø and have 6" minimum embedment and shall be stainless steel.

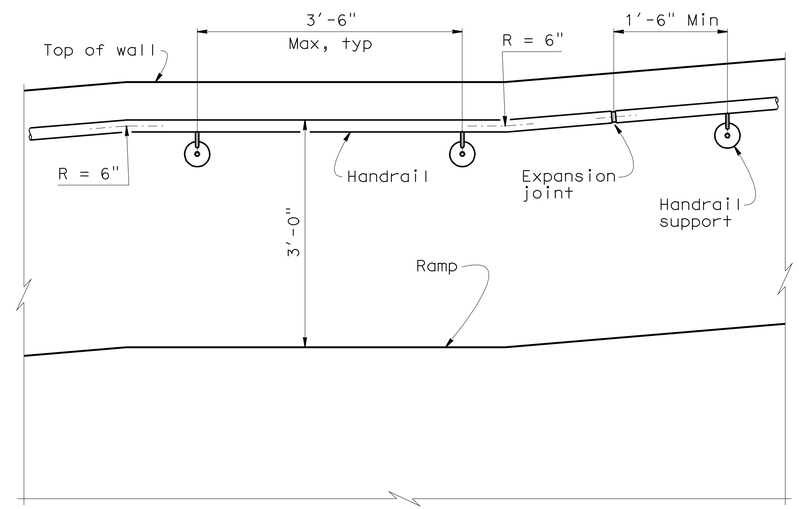

HANDRAIL DETAILS

1" = 1'-0"

Note:

Handrail and post shall be 1½" ø Std pipe.

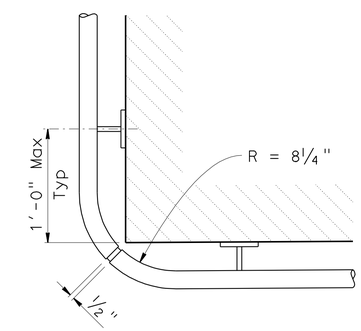

HANDRAIL RETURN AT CORNER DETAIL

1 1/2" = 1'-0"

DESIGN	BY M. Fustok	CHECKED W. Addlespurger	
DETAILS	BY Kc	CHECKED M. Fustok	
QUANTITIES	BY M. Fustok	CHECKED W. Addlespurger	

STATE OF CALIFORNIA
DEPARTMENT OF TRANSPORTATION

DIVISION OF ENGINEERING SERVICES
STRUCTURE DESIGN
DESIGN BRANCH 12

BRIDGE NO. 52-0469
POST MILE 41.58

PEDESTRIAN RAMP 93
HANDRAIL DETAILS NO. 2

STRUCTURES DESIGN DETAIL SHEET (ENGLISH) (REV. 10/25/05)

ORIGINAL SCALE IN INCHES FOR REDUCED PLANS 0 1 2 3

CU 07
EA 260701

DISREGARD PRINTS BEARING EARLIER REVISION DATES

REVISION DATES: 8-18-10, 9-1-10, 4-18-11

SHEET 21 OF 50

FILE => c-52-0469-t-hrd02.dgn

USERNAME => s124496 DATE PLOTTED => 25-JUN-2011 TIME PLOTTED => 05:24

DIST	COUNTY	ROUTE	POST MILES TOTAL PROJECT	SHEET No	TOTAL SHEETS
07	Ven,SB	101	R39.8/R43.6, 0.0/2.2	620	757

Mahmoud Fustok 10-18-10
REGISTERED CIVIL ENGINEER DATE

6-20-11
PLANS APPROVAL DATE

REGISTERED PROFESSIONAL ENGINEER
MAHMOUD FUSTOK
No. C51502
Exp. 06-30-12
CIVIL
STATE OF CALIFORNIA

The State of California or its officers or agents shall not be responsible for the accuracy or completeness of electronic copies of this plan sheet.

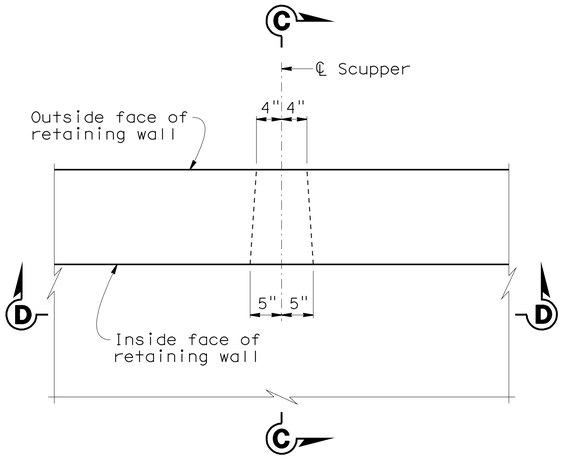

PLAN

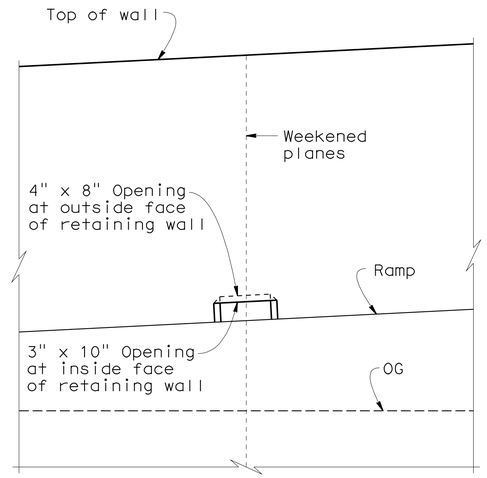

VIEW D-D

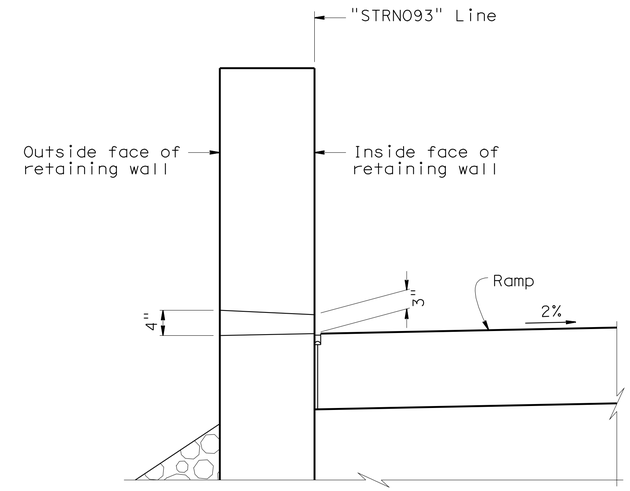

SECTION C-C

SCUPPER DETAIL

1" = 1'-0"

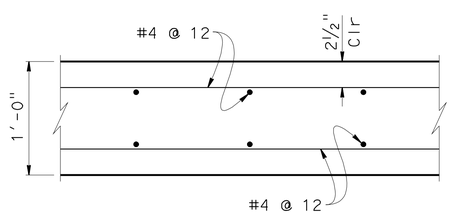

CONCRETE SLAB AT PEDESTRIAN RAMP 93

1 1/2" = 1'-0"

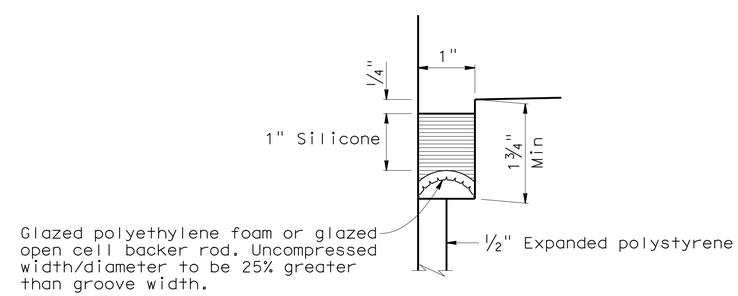

MODIFIED TYPE A SEAL

6" = 1'-0"

Note:

All reinforcement shall be prefabricated epoxy coated reinforcement.

	BY	CHECKED
DESIGN	M. Fustok	W. Addlespurger
DETAILS	Various	M. Fustok
QUANTITIES	M. Fustok	W. Addlespurger

STATE OF CALIFORNIA
DEPARTMENT OF TRANSPORTATION

DIVISION OF ENGINEERING SERVICES
STRUCTURE DESIGN
DESIGN BRANCH 12

BRIDGE NO. 52-0469
POST MILE 41.58

PEDESTRIAN RAMP 93
MISCELLANEOUS DETAILS

STRUCTURES DESIGN DETAIL SHEET (ENGLISH) (REV. 10/25/05)

ORIGINAL SCALE IN INCHES FOR REDUCED PLANS 0 1 2 3

CU 07
EA 260701

DISREGARD PRINTS BEARING EARLIER REVISION DATES

REVISION DATES: 8-18-10 9-3-10 1-11-11

SHEET 22 OF 50

FILE => c-52-0469-t-misc.dgn

USERNAME => s124496 DATE PLOTTED => 25-JUN-2011 TIME PLOTTED => 05:24

DIST	COUNTY	ROUTE	POST MILES TOTAL PROJECT	SHEET No	TOTAL SHEETS
07	Ven,SB	101	R39.8/R43.6, 0.0/2.2	621	757

Mahmoud Fustok 10-18-10
REGISTERED CIVIL ENGINEER DATE

6-20-11
PLANS APPROVAL DATE

REGISTERED PROFESSIONAL ENGINEER
MAHMOUD FUSTOK
No. C51502
Exp. 06-30-12
CIVIL
STATE OF CALIFORNIA

The State of California or its officers or agents shall not be responsible for the accuracy or completeness of electronic copies of this plan sheet.

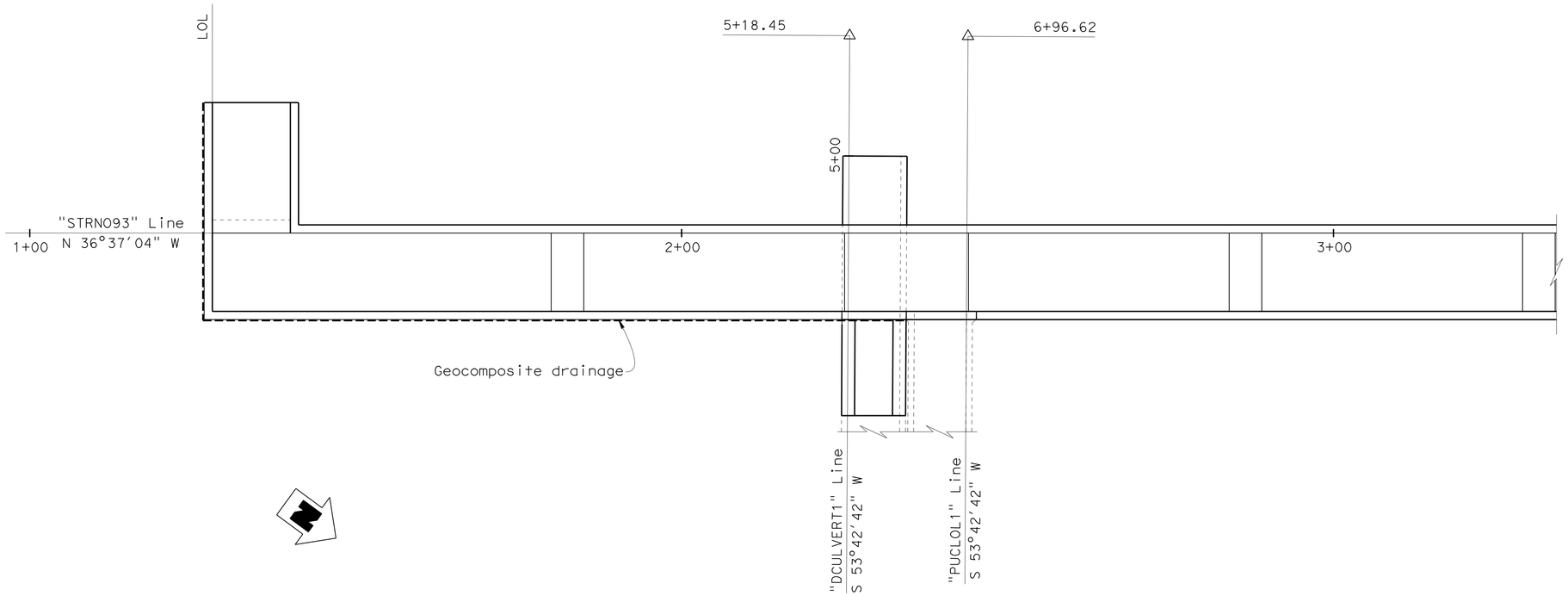

PLAN
1" = 10'

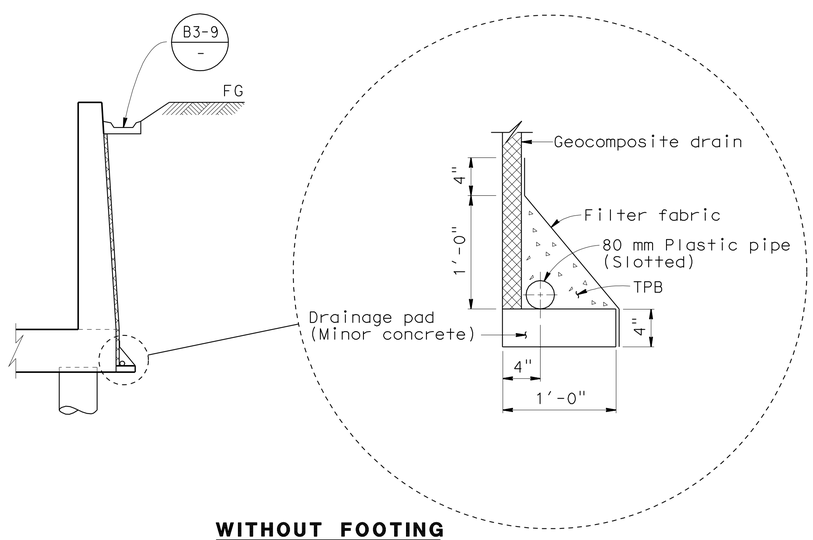

WITHOUT FOOTING
GEOCOMPOSIT DRAINAGE
No scale

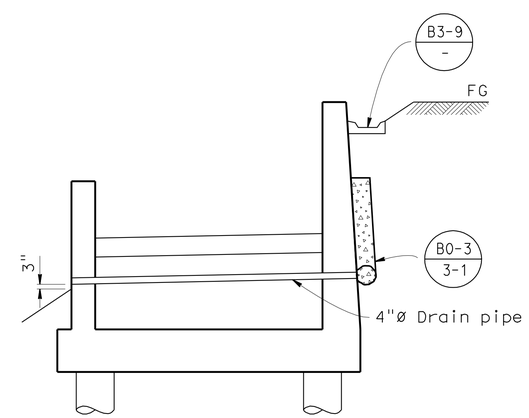

Sta 2+84.00 to Sta 3+79.00

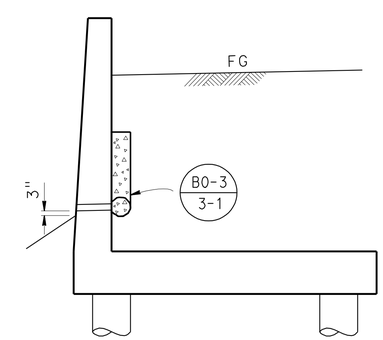

Sta 3+79.00 to Sta 6+00.00

WEEP HOLE AND PERVIOUS BACKFILL
1/4" = 1'-0"

DESIGN	BY M. Fustok	CHECKED W. Addlespurger	
DETAILS	BY Various	CHECKED M. Fustok	
QUANTITIES	BY M. Fustok	CHECKED W. Addlespurger	

STATE OF CALIFORNIA
DEPARTMENT OF TRANSPORTATION

DIVISION OF ENGINEERING SERVICES
STRUCTURE DESIGN
DESIGN BRANCH 12

BRIDGE NO. 52-0469
POST MILE 41.58

PEDESTRIAN RAMP 93
RETAINING WALL DRAINAGE DETAILS

STRUCTURES DESIGN DETAIL SHEET (ENGLISH) (REV. 10/25/05)

ORIGINAL SCALE IN INCHES FOR REDUCED PLANS 0 1 2 3

CU 07
EA 260701

DISREGARD PRINTS BEARING EARLIER REVISION DATES 8-3-10 8-12-10

REVISION DATES

SHEET 23 OF 50

FILE => c-52-0469-u-rwd.dgn

USERNAME => s124496 DATE PLOTTED => 25-JUN-2011 TIME PLOTTED => 05:38

DIST	COUNTY	ROUTE	POST MILES TOTAL PROJECT	SHEET No	TOTAL SHEETS
07	Ven,SB	101	R39.8/R43.6, 0.0/2.2	622	757

Mahmoud Fustok 10-18-10
REGISTERED CIVIL ENGINEER DATE

6-20-11
PLANS APPROVAL DATE

REGISTERED PROFESSIONAL ENGINEER MAHMOUD FUSTOK No. C51502 Exp. 06-30-12 CIVIL STATE OF CALIFORNIA

The State of California or its officers or agents shall not be responsible for the accuracy or completeness of electronic copies of this plan sheet.

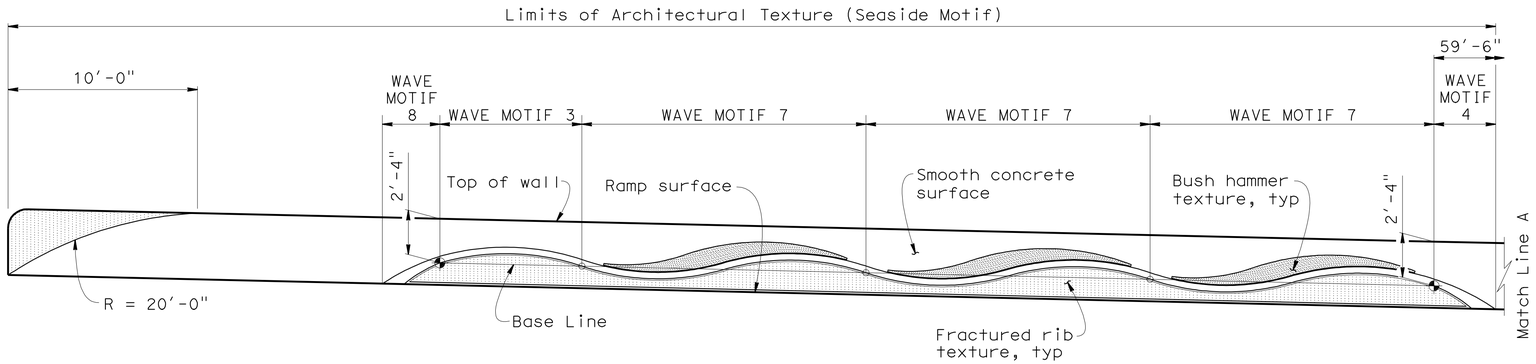

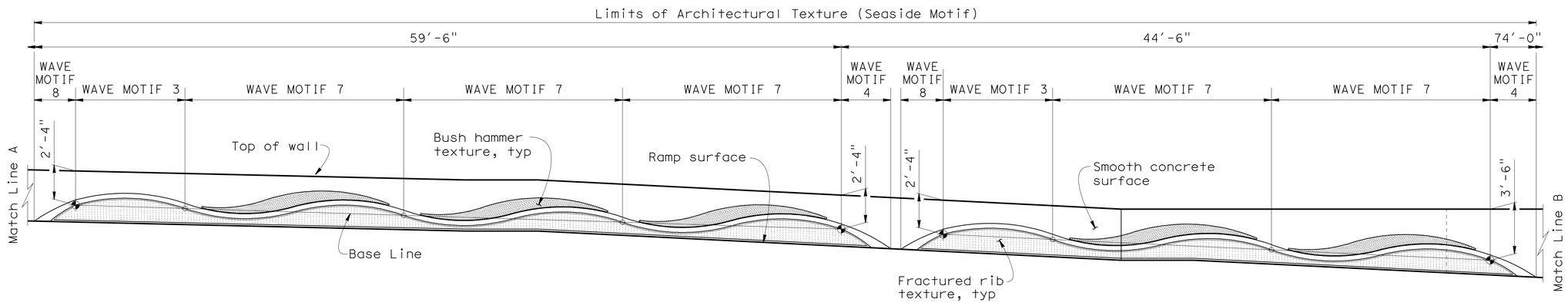

VIEW A-A

1/4" = 1'-0"

Note:

1. For "Wave Motif" details see "Architectural Treatment Details No. 4" and "Architectural Treatment Details No. 5" sheets.

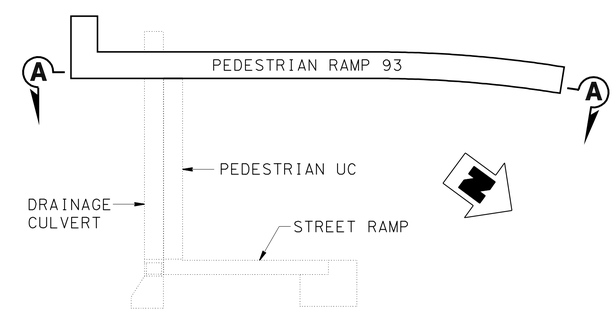

Indicates Working Point

PLAN

No scale

DESIGN	BY M. Fustok	CHECKED W. Addlespurger	
DETAILS	BY Various	CHECKED M. Fustok	
QUANTITIES	BY M. Fustok	CHECKED W. Addlespurger	

STATE OF CALIFORNIA
DEPARTMENT OF TRANSPORTATION

DIVISION OF ENGINEERING SERVICES
STRUCTURE DESIGN
DESIGN BRANCH 12

BRIDGE NO. 52-0469
POST MILE 41.58

PEDESTRIAN RAMP 93
ARCHITECTURAL TREATMENT DETAILS NO. 1

STRUCTURES DESIGN DETAIL SHEET (ENGLISH) (REV. 10/25/05)

ORIGINAL SCALE IN INCHES FOR REDUCED PLANS 0 1 2 3

CU 07
EA 260701

DISREGARD PRINTS BEARING EARLIER REVISION DATES 3-28-11 4-14-11

REVISION DATES

SHEET 24 OF 50

FILE => c-52-0469-x-arch01.dgn

USERNAME => s124496 DATE PLOTTED => 25-JUN-2011 TIME PLOTTED => 05:38

DIST	COUNTY	ROUTE	POST MILES TOTAL PROJECT	SHEET No	TOTAL SHEETS
07	Ven,SB	101	R39.8/R43.6, 0.0/2.2	623	757

Mahmoud Fustok 10-18-10
REGISTERED CIVIL ENGINEER DATE

6-20-11
PLANS APPROVAL DATE

REGISTERED PROFESSIONAL ENGINEER
MAHMOUD FUSTOK
No. C51502
Exp. 06-30-12
CIVIL
STATE OF CALIFORNIA

The State of California or its officers or agents shall not be responsible for the accuracy or completeness of electronic copies of this plan sheet.

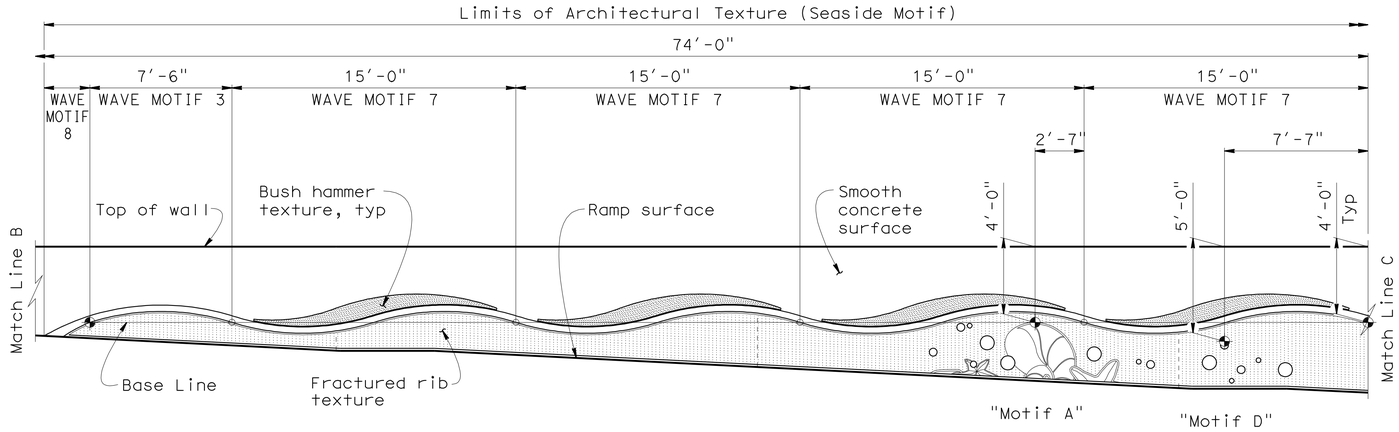

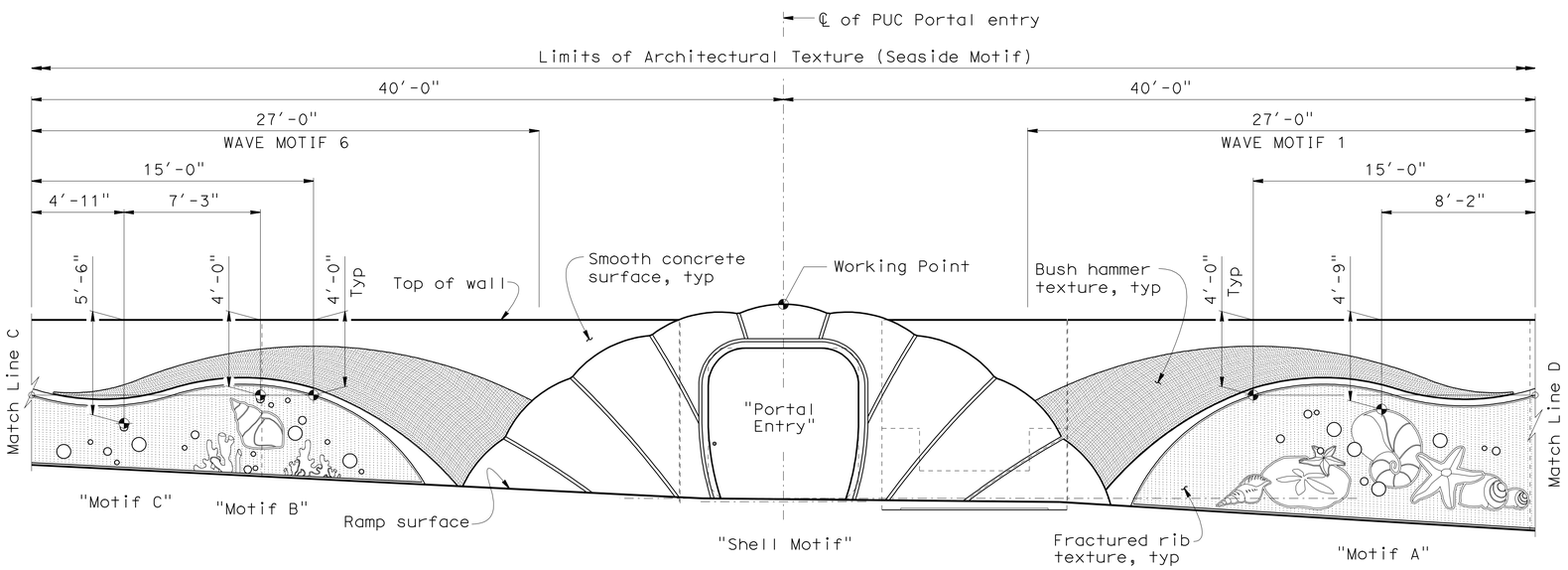

Notes:

1. For "Wave Motif" details see "ArchitecturalTreatment Details No. 4" and "Architectural Treatment Details No. 5" sheets.
2. For "Shell Motif" details see "Architectural Treatment Details No. 8" and "Architectural Treatment Details No. 9" sheets.
3. For "Portal Entry" details see "Architectural Treatment Details No. 6" and "Architectural Treatment Details No. 7" sheets.
4. For "Motif A", "Motif B", "Motif C" and "Motif D" see "Architectural Treatment Details No. 20" sheet.

VIEW A-A

1/4" = 1'-0"

Indicates Working Point

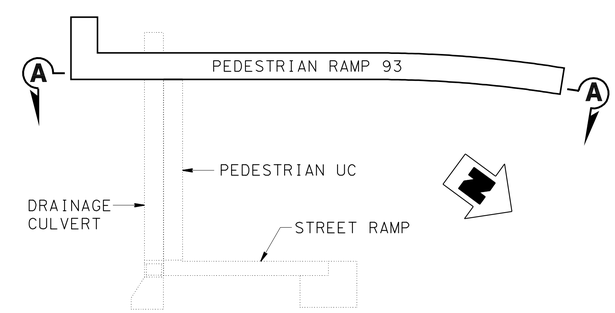

PLAN

No scale

DESIGN	BY M. Fustok	CHECKED W. Addlespurger	
DETAILS	BY Various	CHECKED M. Fustok	
QUANTITIES	BY M. Fustok	CHECKED W. Addlespurger	

STATE OF CALIFORNIA
DEPARTMENT OF TRANSPORTATION

DIVISION OF ENGINEERING SERVICES
STRUCTURE DESIGN
DESIGN BRANCH 12

BRIDGE NO. 52-0469
POST MILE 41.58

PEDESTRIAN RAMP 93
ARCHITECTURAL TREATMENT DETAILS NO. 2

STRUCTURES DESIGN DETAIL SHEET (ENGLISH) (REV. 10/25/05)

ORIGINAL SCALE IN INCHES FOR REDUCED PLANS 0 1 2 3

CU 07
EA 260701

DISREGARD PRINTS BEARING EARLIER REVISION DATES

REVISION DATES: 4-7-11 4-14-11

SHEET 25 OF 50

FILE => c-52-0469-x-arch02.dgn

USERNAME => s124196 DATE PLOTTED => 25-JUN-2011 TIME PLOTTED => 05:38

DIST	COUNTY	ROUTE	POST MILES TOTAL PROJECT	SHEET No	TOTAL SHEETS
07	Ven,SB	101	R39.8/R43.6, 0.0/2.2	624	757

Mahmoud Fustok 10-18-10
REGISTERED CIVIL ENGINEER DATE

6-20-11
PLANS APPROVAL DATE

REGISTERED PROFESSIONAL ENGINEER
MAHMOUD FUSTOK
No. C51502
Exp. 06-30-12
CIVIL
STATE OF CALIFORNIA

The State of California or its officers or agents shall not be responsible for the accuracy or completeness of electronic copies of this plan sheet.

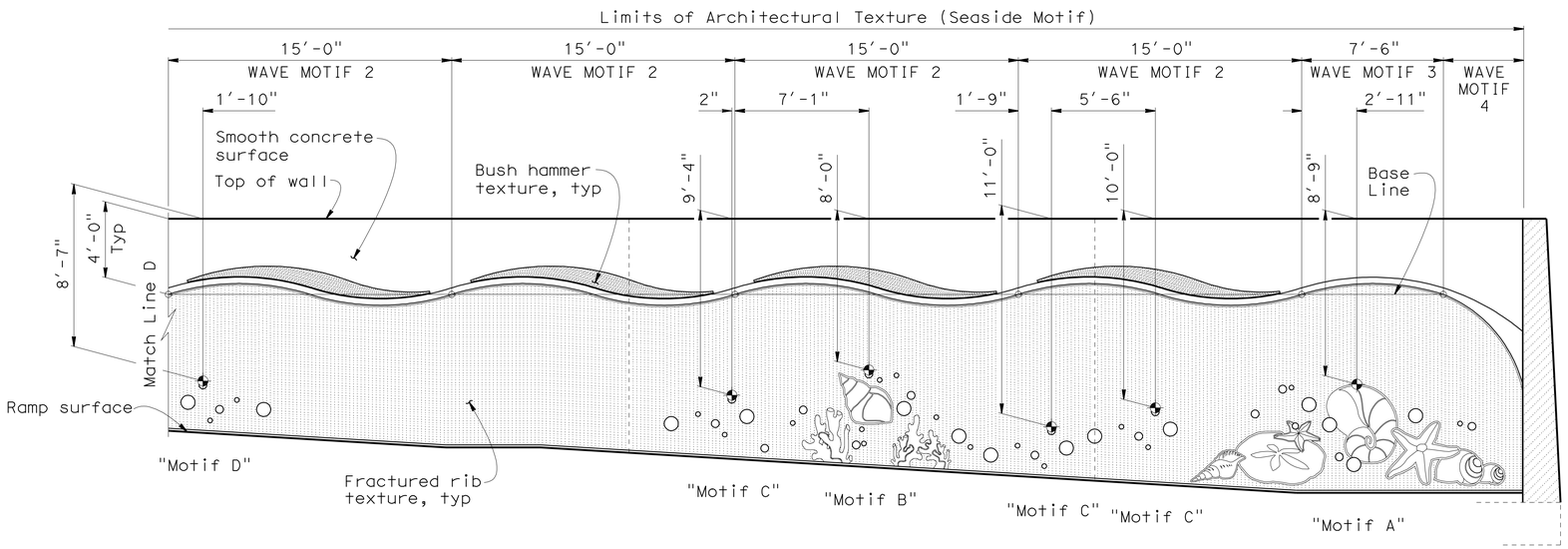

VIEW A-A

1/4" = 1'-0"

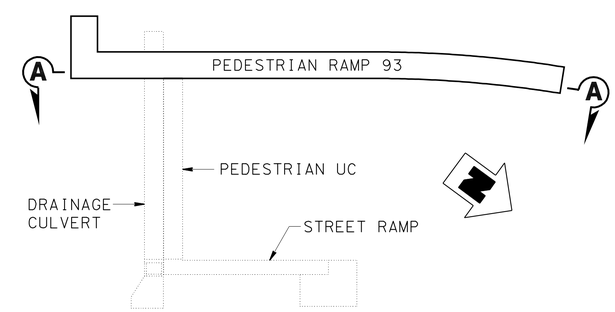

PLAN

No scale

Notes:

1. For "Wave Motif" details see "Architectural Treatment Details No. 4" sheet.
2. For "Motif A", "Motif B", "Motif C" and "Motif D" see "Architectural Treatment Details No. 20" sheet.

Indicates Working Point

	BY	CHECKED
DESIGN	M. Fustok	W. Addlespurger
DETAILS	Various	M. Fustok
QUANTITIES	M. Fustok	W. Addlespurger

STATE OF CALIFORNIA
DEPARTMENT OF TRANSPORTATION

DIVISION OF ENGINEERING SERVICES
STRUCTURE DESIGN
DESIGN BRANCH 12

BRIDGE NO. 52-0469
POST MILE 41.58

PEDESTRIAN RAMP 93
ARCHITECTURAL TREATMENT DETAILS NO. 3

STRUCTURES DESIGN DETAIL SHEET (ENGLISH) (REV. 10/25/05)

ORIGINAL SCALE IN INCHES FOR REDUCED PLANS 0 1 2 3

CU 07
EA 260701

DISREGARD PRINTS BEARING EARLIER REVISION DATES

REVISION DATES: 3-28-11 4-14-11

SHEET 26 OF 50

FILE => c-52-0469-x-arch03.dgn

USERNAME => s124496 DATE PLOTTED => 25-JUN-2011 TIME PLOTTED => 05:38

DIST	COUNTY	ROUTE	POST MILES TOTAL PROJECT	SHEET No	TOTAL SHEETS
07	Ven,SB	101	R39.8/R43.6, 0.0/2.2	625	757

Mahmoud Fustok 10-18-10
REGISTERED CIVIL ENGINEER DATE

6-20-11
PLANS APPROVAL DATE

REGISTERED PROFESSIONAL ENGINEER
MAHMOUD FUSTOK
No. C51502
Exp. 06-30-12
CIVIL
STATE OF CALIFORNIA

The State of California or its officers or agents shall not be responsible for the accuracy or completeness of electronic copies of this plan sheet.

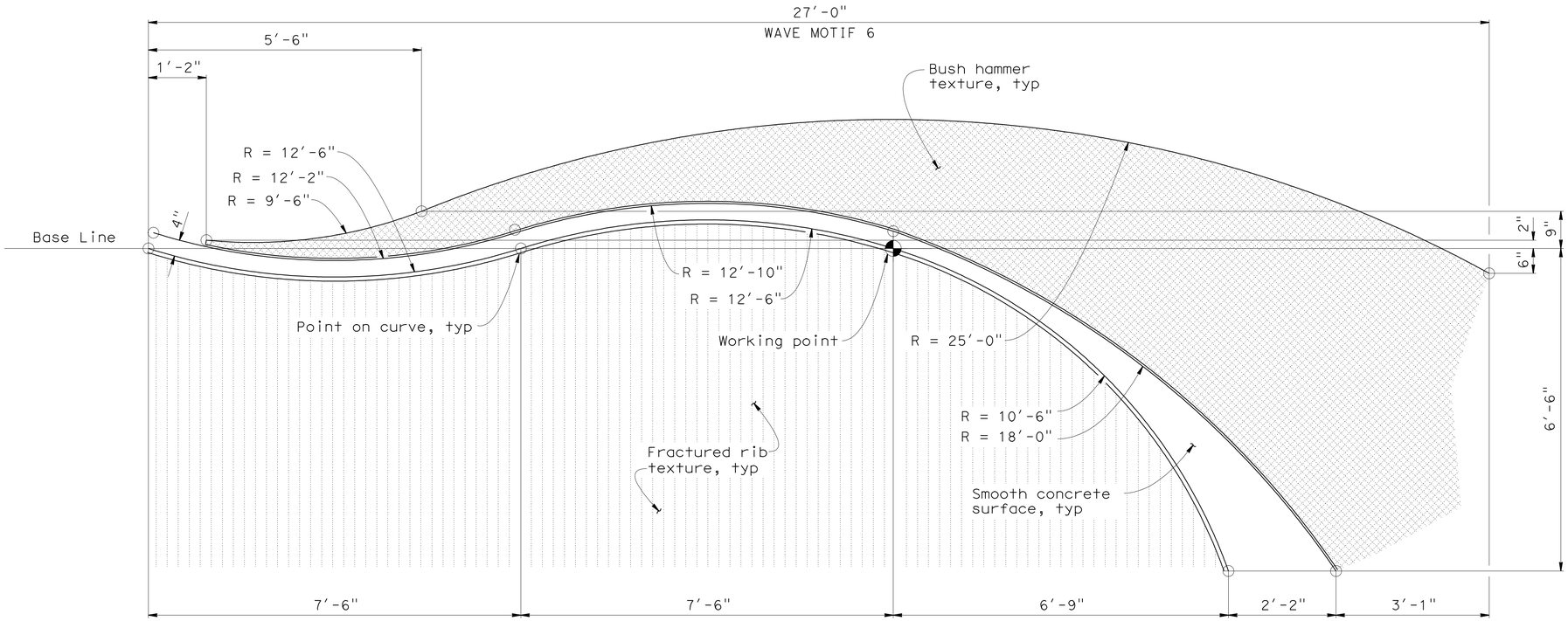

WAVE MOTIF 6

3/4" = 1'-0"

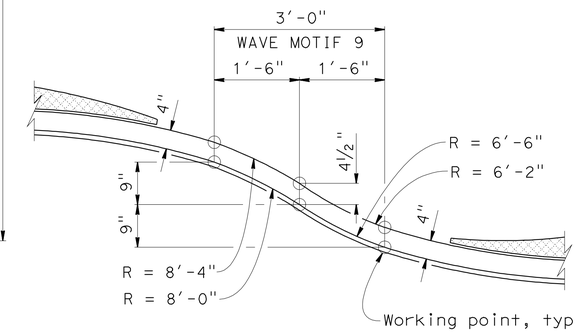

WAVE MOTIF 9

3/4" = 1'-0"

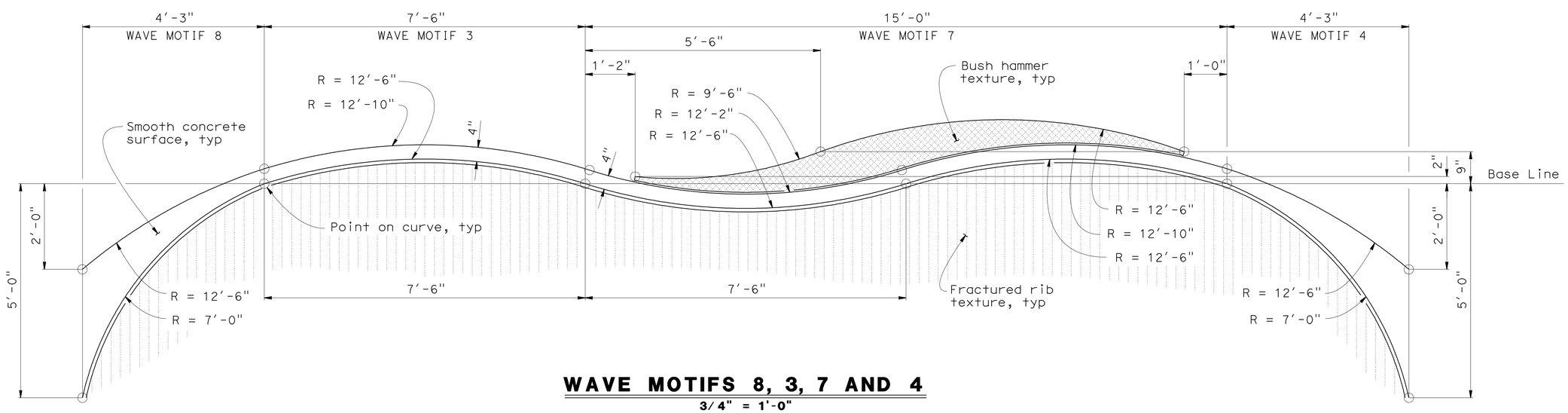

WAVE MOTIFS 8, 3, 7 AND 4

3/4" = 1'-0"

DESIGN	BY M. Fustok	CHECKED W. Addlespurger	
DETAILS	BY Various	CHECKED M. Fustok	
QUANTITIES	BY M. Fustok	CHECKED W. Addlespurger	

STATE OF CALIFORNIA
DEPARTMENT OF TRANSPORTATION

DIVISION OF ENGINEERING SERVICES
STRUCTURE DESIGN
DESIGN BRANCH 12

BRIDGE NO. 52-0469
POST MILE 41.58

PEDESTRIAN RAMP 93
ARCHITECTURAL TREATMENT DETAILS NO. 4

STRUCTURES DESIGN DETAIL SHEET (ENGLISH) (REV. 10/25/05)

ORIGINAL SCALE IN INCHES FOR REDUCED PLANS 0 1 2 3

CU 07
EA 260701

DISREGARD PRINTS BEARING EARLIER REVISION DATES → 4-7-11

REVISION DATES

SHEET 27 OF 50

FILE => c-52-0469-x-arch04.dgn

USERNAME => s124896 DATE PLOTTED => 25-JUN-2011 TIME PLOTTED => 05:38

DIST	COUNTY	ROUTE	POST MILES TOTAL PROJECT	SHEET No	TOTAL SHEETS
07	Ven,SB	101	R39.8/R43.6, 0.0/2.2	626	757

Mahmoud Fustok 10-18-10
REGISTERED CIVIL ENGINEER DATE

6-20-11
PLANS APPROVAL DATE

REGISTERED PROFESSIONAL ENGINEER
MAHMOUD FUSTOK
No. C51502
Exp. 06-30-12
CIVIL
STATE OF CALIFORNIA

The State of California or its officers or agents shall not be responsible for the accuracy or completeness of electronic copies of this plan sheet.

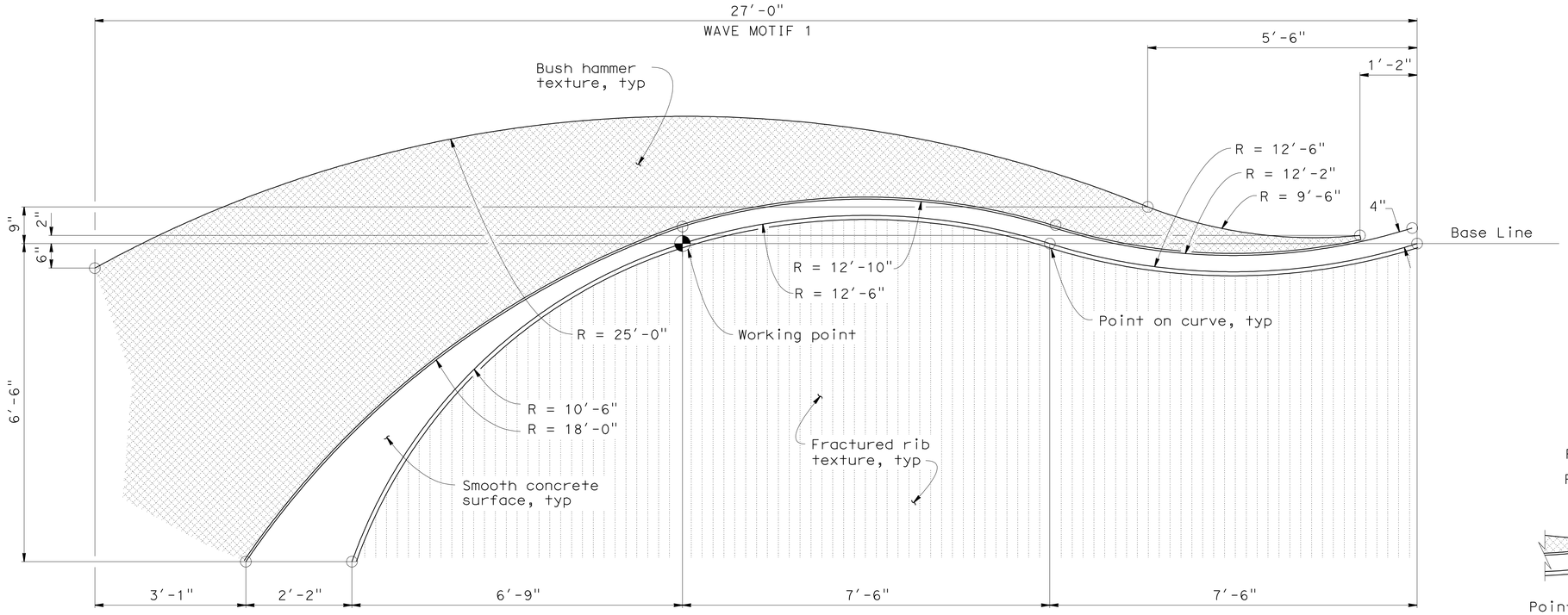

WAVE MOTIF 1

3/4" = 1'-0"

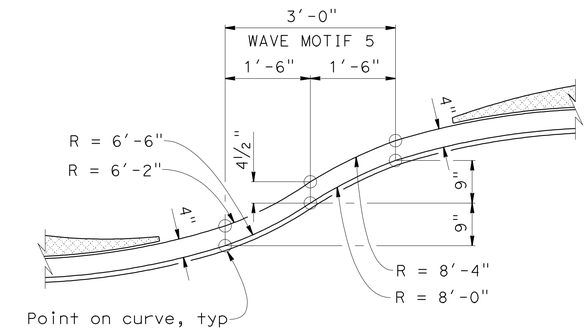

WAVE MOTIF 5

3/4" = 1'-0"

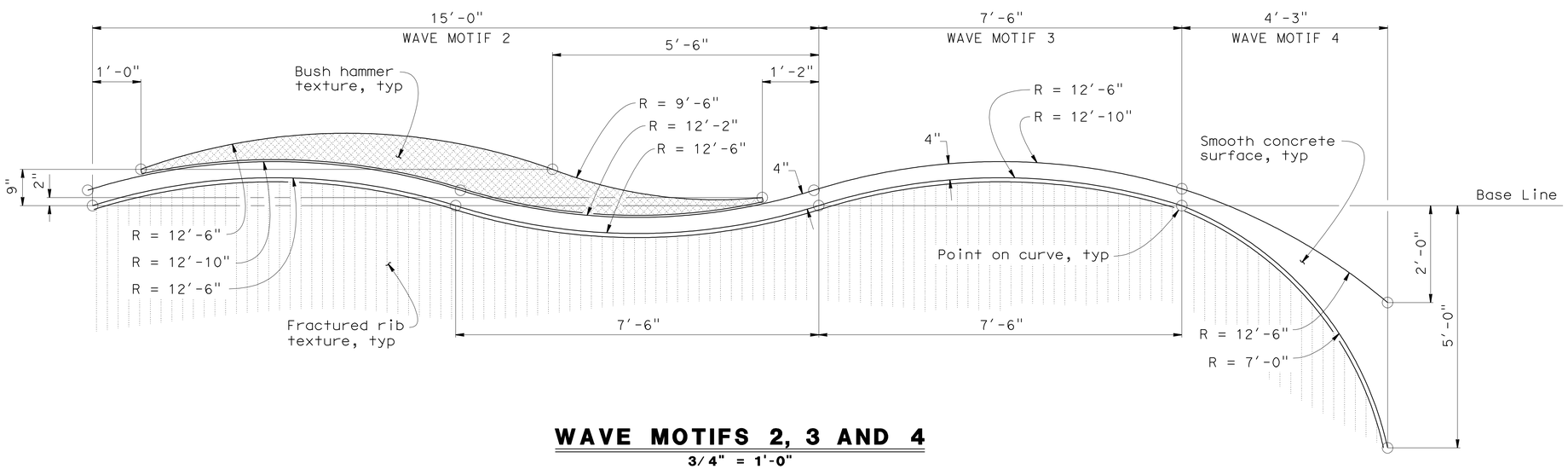

WAVE MOTIFS 2, 3 AND 4

3/4" = 1'-0"

DESIGN	BY W. Fustok	CHECKED W. Addlespurger	
DETAILS	BY Various	CHECKED M. Fustok	
QUANTITIES	BY M. Fustok	CHECKED W. Addlespurger	

STATE OF CALIFORNIA
DEPARTMENT OF TRANSPORTATION

DIVISION OF ENGINEERING SERVICES
STRUCTURE DESIGN
DESIGN BRANCH 12

BRIDGE NO. 52-0469
POST MILE 41.58

PEDESTRIAN RAMP 93

ARCHITECTURAL TREATMENT DETAILS NO. 5

STRUCTURES DESIGN DETAIL SHEET (ENGLISH) (REV. 10/25/05)

ORIGINAL SCALE IN INCHES FOR REDUCED PLANS 0 1 2 3

CU 07
EA 260701

DISREGARD PRINTS BEARING EARLIER REVISION DATES 4-7-11

REVISION DATES

SHEET 28 OF 50

FILE => c-52-0469-x-arch05.dgn

USERNAME => s124196 DATE PLOTTED => 25-JUN-2011 TIME PLOTTED => 05:38

DIST	COUNTY	ROUTE	POST MILES TOTAL PROJECT	SHEET No	TOTAL SHEETS
07	Ven,SB	101	R39.8/R43.6, 0.0/2.2	627	757

Mahmoud Fustok 10-18-10
REGISTERED CIVIL ENGINEER DATE

6-20-11
PLANS APPROVAL DATE

REGISTERED PROFESSIONAL ENGINEER
MAHMOUD FUSTOK
No. C51502
Exp. 06-30-12
CIVIL
STATE OF CALIFORNIA

The State of California or its officers or agents shall not be responsible for the accuracy or completeness of electronic copies of this plan sheet.

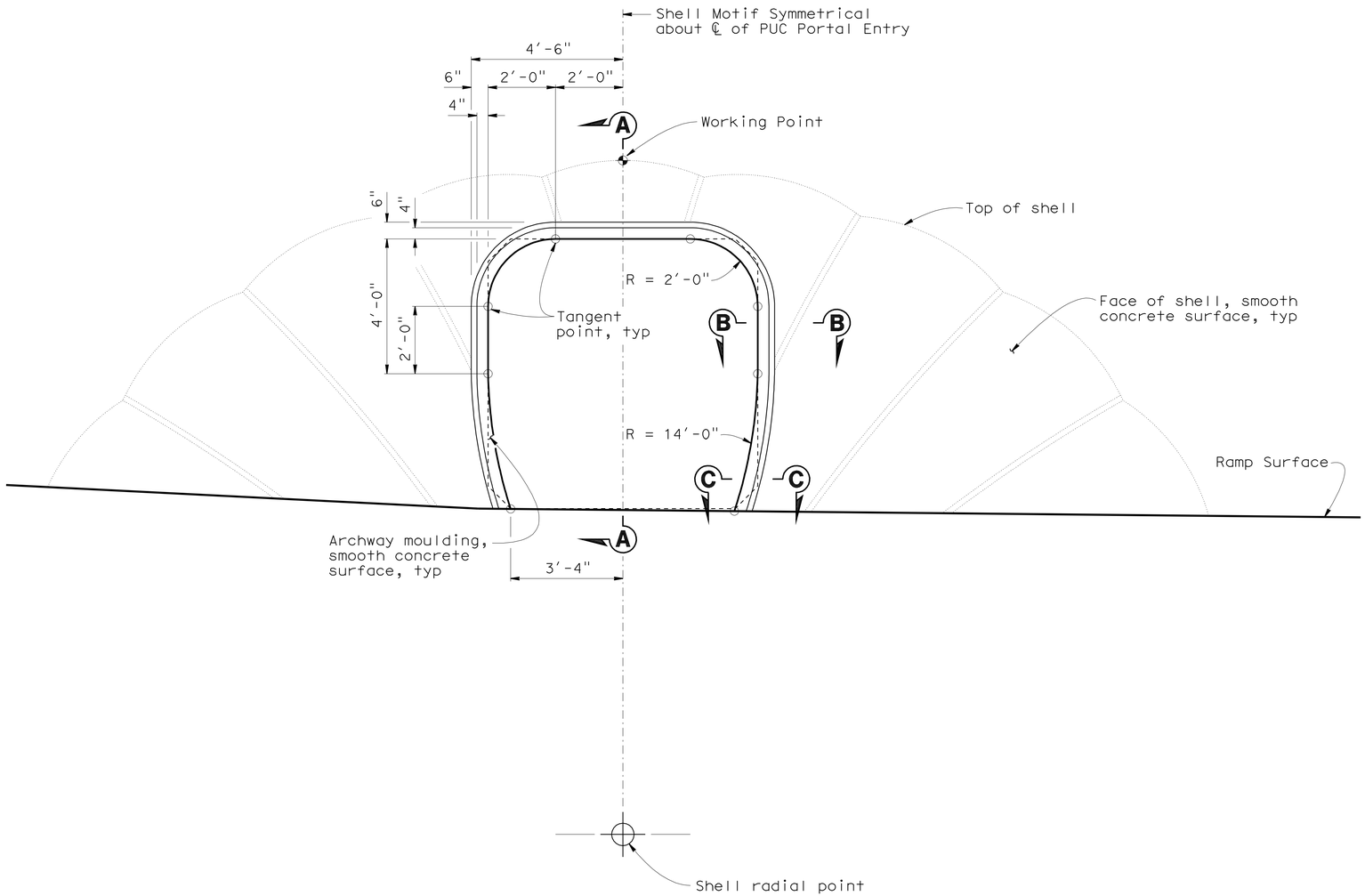

ARCHWAY LAYOUT

1/2" = 1'-0"

DESIGN	BY M. Fustok	CHECKED W. Addlespurger	
DETAILS	BY Various	CHECKED M. Fustok	
QUANTITIES	BY M. Fustok	CHECKED W. Addlespurger	

STATE OF CALIFORNIA
DEPARTMENT OF TRANSPORTATION

DIVISION OF ENGINEERING SERVICES
STRUCTURE DESIGN
DESIGN BRANCH 12

BRIDGE NO. 52-0469
POST MILE 41.58

PEDESTRIAN RAMP 93
ARCHITECTURAL TREATMENT DETAILS NO. 6

STRUCTURES DESIGN DETAIL SHEET (ENGLISH) (REV. 10/25/05)

ORIGINAL SCALE IN INCHES FOR REDUCED PLANS 0 1 2 3

CU 07
EA 260701

DISREGARD PRINTS BEARING EARLIER REVISION DATES → 3-31-11 4-14-11

REVISION DATES

SHEET 29 OF 50

FILE => c-52-0469-x-arch06.dgn

USERNAME => s124936 DATE PLOTTED => 25-JUN-2011 TIME PLOTTED => 05:38

DIST	COUNTY	ROUTE	POST MILES TOTAL PROJECT	SHEET No	TOTAL SHEETS
07	Ven,SB	101	R39.8/R43.6, 0.0/2.2	628	757

Mahmoud Fustok 10-18-10
REGISTERED CIVIL ENGINEER DATE

6-20-11
PLANS APPROVAL DATE

REGISTERED PROFESSIONAL ENGINEER
MAHMOUD FUSTOK
No. C51502
Exp. 06-30-12
CIVIL
STATE OF CALIFORNIA

The State of California or its officers or agents shall not be responsible for the accuracy or completeness of electronic copies of this plan sheet.

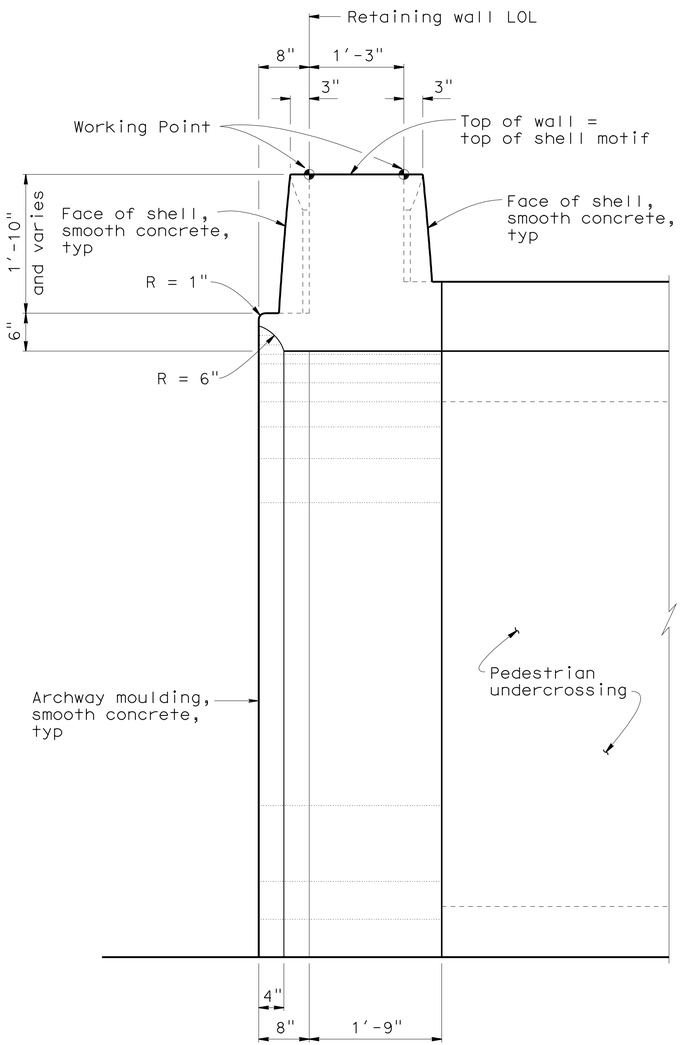

SECTION A-A

1" = 1'-0"

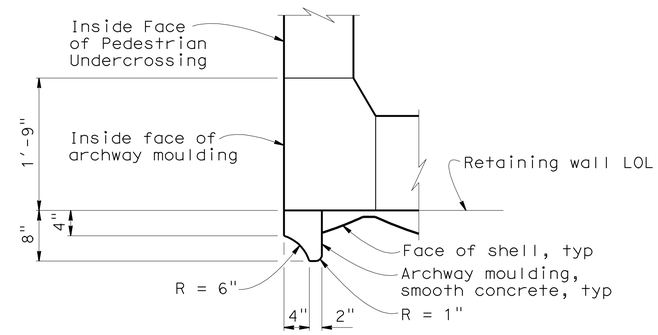

SECTION B-B

No scale

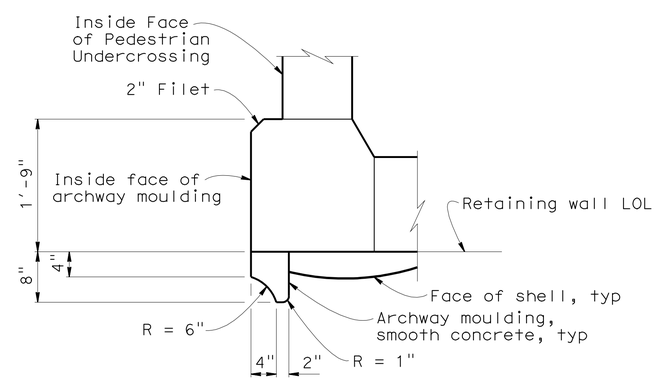

SECTION C-C

No scale

DESIGN	BY M. Fustok	CHECKED W. Addlespurger	
DETAILS	BY Various	CHECKED M. Fustok	
QUANTITIES	BY M. Fustok	CHECKED W. Addlespurger	

STATE OF CALIFORNIA
DEPARTMENT OF TRANSPORTATION

DIVISION OF ENGINEERING SERVICES
STRUCTURE DESIGN
DESIGN BRANCH 12

BRIDGE NO. 52-0469
POST MILE 41.58

PEDESTRIAN RAMP 93

ARCHITECTURAL TREATMENT DETAILS NO. 7

STRUCTURES DESIGN DETAIL SHEET (ENGLISH) (REV. 10/25/05)

ORIGINAL SCALE IN INCHES FOR REDUCED PLANS 0 1 2 3

CU 07
EA 260701

DISREGARD PRINTS BEARING EARLIER REVISION DATES → 3-31-11 4-14-11

REVISION DATES

SHEET 30 OF 50

FILE => c-52-0469-x-arch07.dgn

USERNAME => s124496 DATE PLOTTED => 25-JUN-2011 TIME PLOTTED => 05:38

DIST	COUNTY	ROUTE	POST MILES TOTAL PROJECT	SHEET No	TOTAL SHEETS
07	Ven,SB	101	R39.8/R43.6, 0.0/2.2	629	757

Mahmoud Fustok 10-18-10
REGISTERED CIVIL ENGINEER DATE

6-20-11
PLANS APPROVAL DATE

REGISTERED PROFESSIONAL ENGINEER
MAHMOUD FUSTOK
No. C51502
Exp. 06-30-12
CIVIL
STATE OF CALIFORNIA

The State of California or its officers or agents shall not be responsible for the accuracy or completeness of electronic copies of this plan sheet.

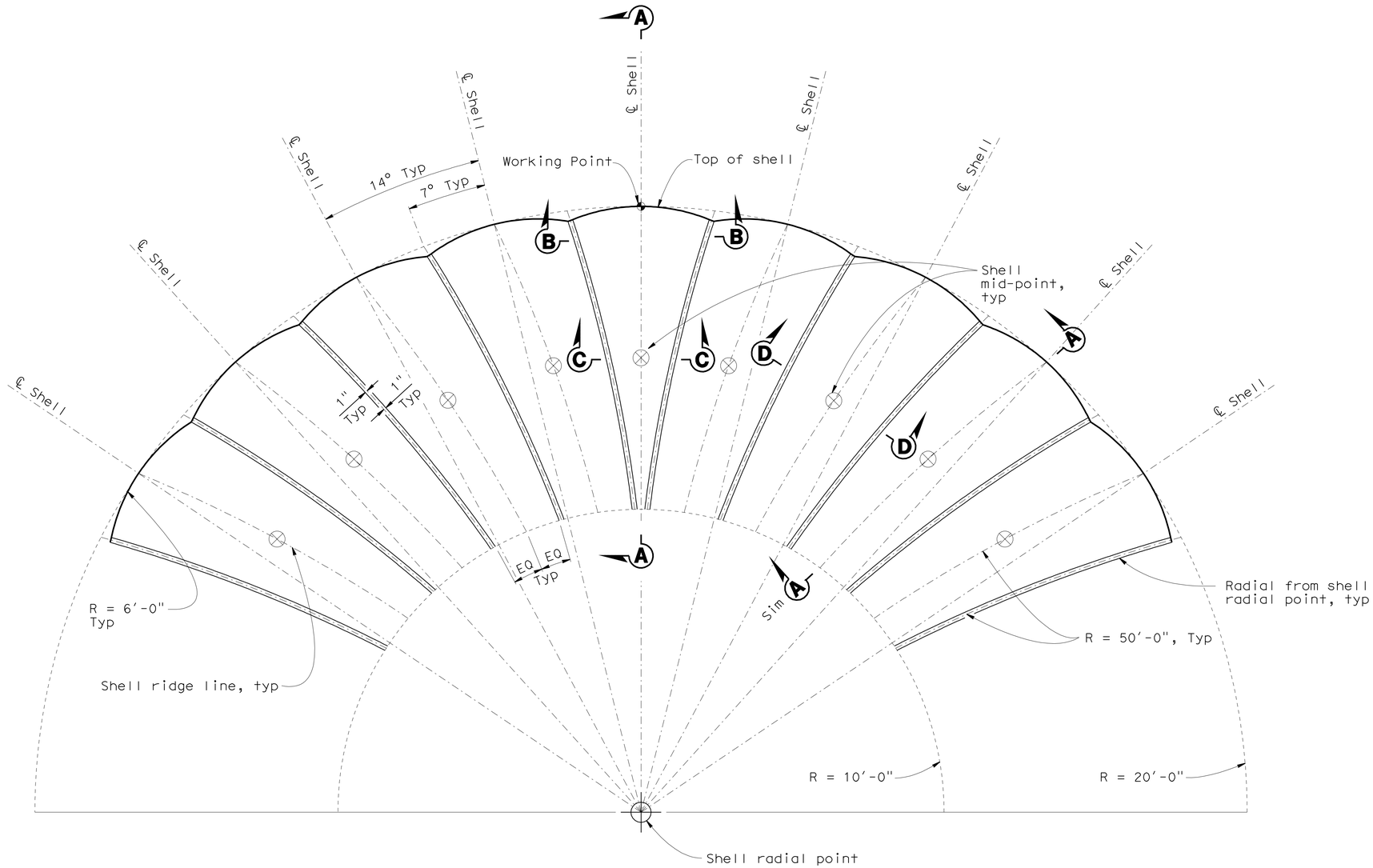

SHELL MOTIF LAYOUT

1/2" = 1'-0"

DESIGN	BY M. Fustok	CHECKED W. Addlespurger	
DETAILS	BY Various	CHECKED M. Fustok	
QUANTITIES	BY M. Fustok	CHECKED W. Addlespurger	

STATE OF CALIFORNIA
DEPARTMENT OF TRANSPORTATION

DIVISION OF ENGINEERING SERVICES
STRUCTURE DESIGN
DESIGN BRANCH 12

BRIDGE NO. 52-0469
POST MILE 41.58

PEDESTRIAN RAMP 93
ARCHITECTURAL TREATMENT DETAILS NO. 8

STRUCTURES DESIGN DETAIL SHEET (ENGLISH) (REV. 10/25/05)

ORIGINAL SCALE IN INCHES FOR REDUCED PLANS 0 1 2 3

CU 07
EA 260701

DISREGARD PRINTS BEARING EARLIER REVISION DATES

REVISION DATES: 3-31-11 4-14-11

SHEET 31 OF 50

FILE => c-52-0469-x-arch08.dgn

USERNAME => s124496 DATE PLOTTED => 25-JUN-2011 TIME PLOTTED => 05:38

DIST	COUNTY	ROUTE	POST MILES TOTAL PROJECT	SHEET No	TOTAL SHEETS
07	Ven,SB	101	R39.8/R43.6, 0.0/2.2	630	757

Mahmoud Fustok 10-18-10
REGISTERED CIVIL ENGINEER DATE

6-20-11
PLANS APPROVAL DATE

REGISTERED PROFESSIONAL ENGINEER
MAHMOUD FUSTOK
No. C51502
Exp. 06-30-12
CIVIL
STATE OF CALIFORNIA

The State of California or its officers or agents shall not be responsible for the accuracy or completeness of electronic copies of this plan sheet.

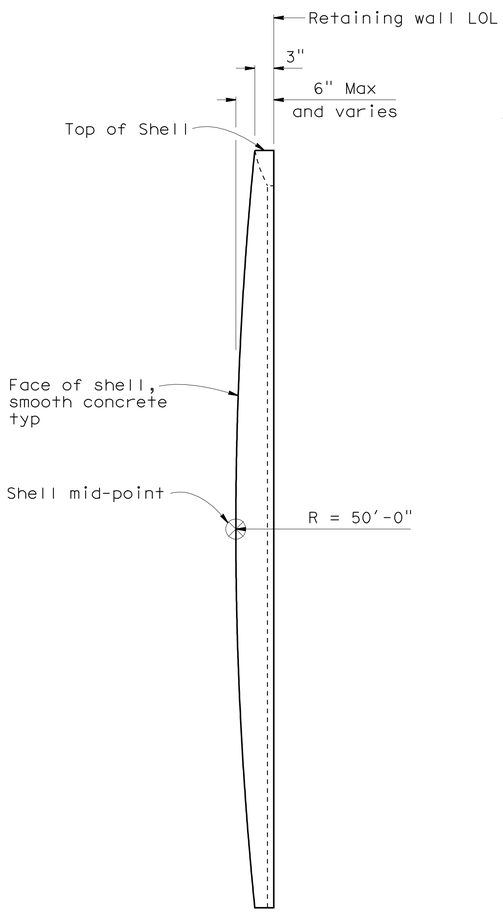

SECTION A-A
1" = 1'-0"

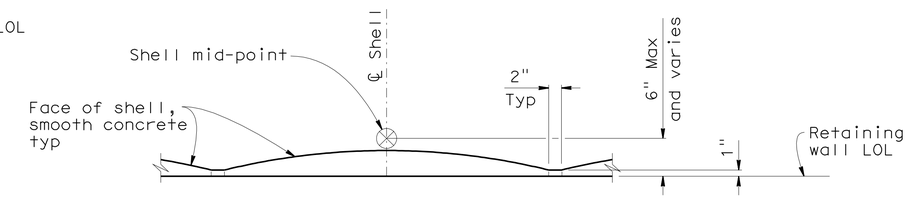

SECTION B-B
1" = 1'-0"

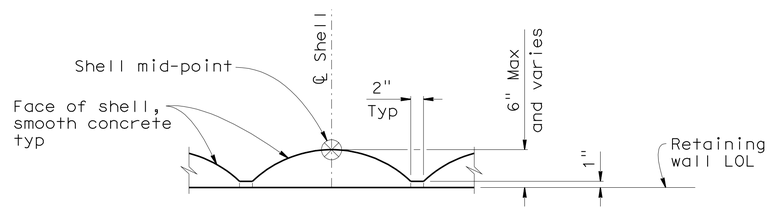

SECTION C-C
1" = 1'-0"

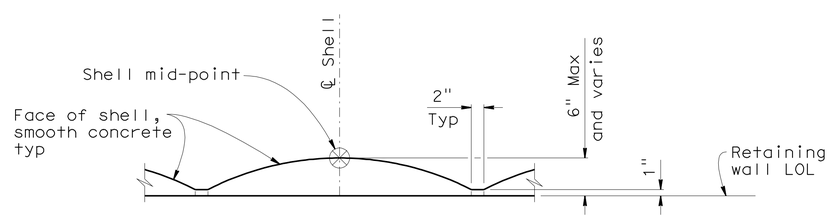

SECTION D-D
1" = 1'-0"

DESIGN	BY M. Fustok	CHECKED W. Addlespurger	
DETAILS	BY Various	CHECKED M. Fustok	
QUANTITIES	BY M. Fustok	CHECKED W. Addlespurger	

STATE OF CALIFORNIA
DEPARTMENT OF TRANSPORTATION

DIVISION OF ENGINEERING SERVICES
STRUCTURE DESIGN
DESIGN BRANCH 12

BRIDGE NO. 52-0469
POST MILE 41.58

PEDESTRIAN RAMP 93
ARCHITECTURAL TREATMENT DETAILS NO. 9

STRUCTURES DESIGN DETAIL SHEET (ENGLISH) (REV. 10/25/05)

ORIGINAL SCALE IN INCHES FOR REDUCED PLANS 0 1 2 3

CU 07
EA 260701

DISREGARD PRINTS BEARING EARLIER REVISION DATES → 3-31-11 4-14-11

REVISION DATES

SHEET 32 OF 50

FILE => c-52-0469-x-arch09.dgn

USERNAME => s124936 DATE PLOTTED => 25-JUN-2011 TIME PLOTTED => 05:39

DIST	COUNTY	ROUTE	POST MILES TOTAL PROJECT	SHEET No	TOTAL SHEETS
07	Ven,SB	101	R39.8/R43.6, 0.0/2.2	631	757

Mahmoud Fustok 10-18-10
REGISTERED CIVIL ENGINEER DATE

6-20-11
PLANS APPROVAL DATE

REGISTERED PROFESSIONAL ENGINEER MAHMOUD FUSTOK No. C51502 Exp. 06-30-12 CIVIL STATE OF CALIFORNIA

The State of California or its officers or agents shall not be responsible for the accuracy or completeness of electronic copies of this plan sheet.

Notes:

1. For "Section A-A", "Section B-B" and "Section C-C", see "Architectural Treatment Details No. 13" sheet.
2. For "Motif A", "Motif B", "Motif C" and "Motif D" details, see "Architectural Treatment Details No. 20" sheet.
3. For "Wave Motif" details see "Architectural Treatment Details No. 14" sheet.

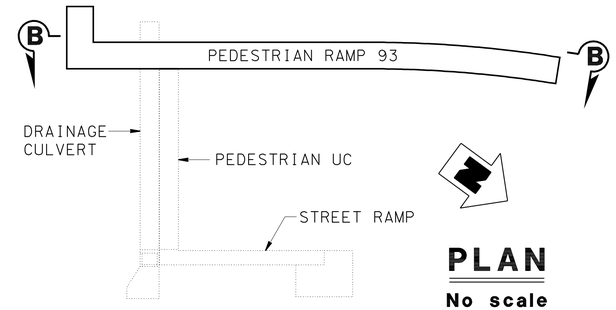

PLAN
No scale

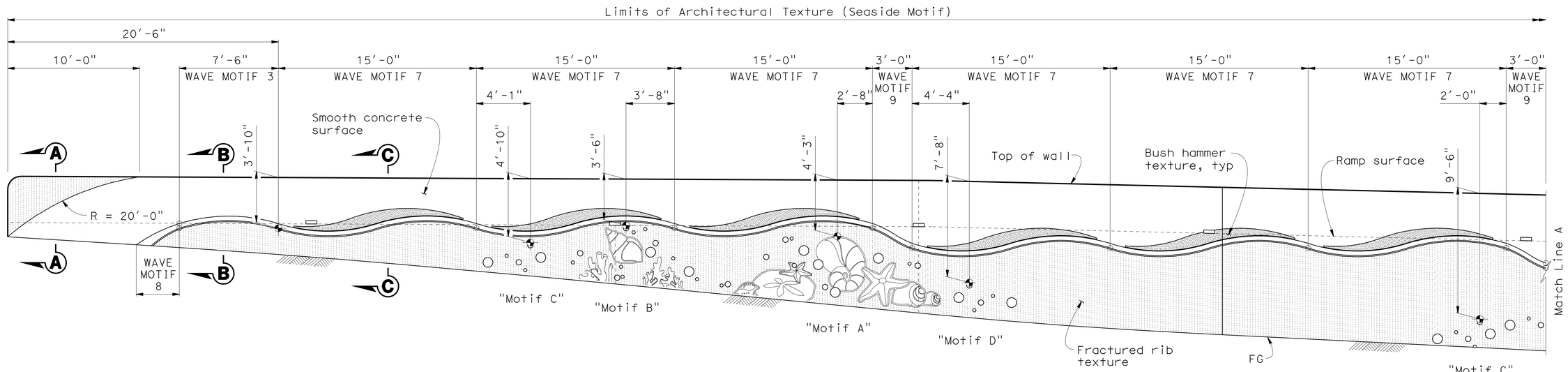

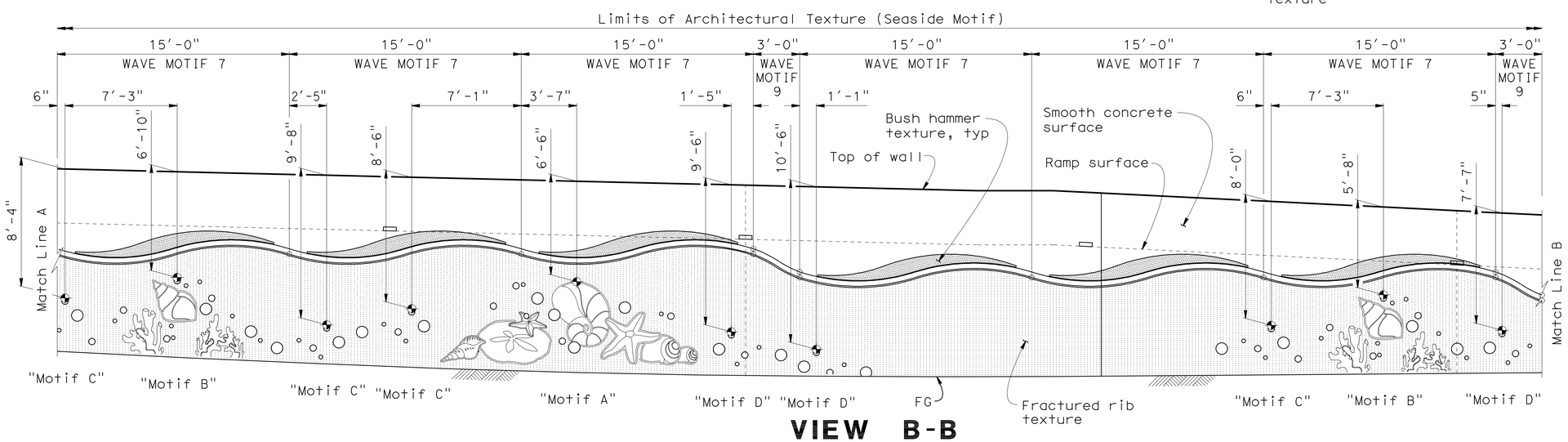

VIEW B-B
1/4" = 1'-0"

Indicates Working Point

DESIGN	BY M. Fustok	CHECKED W. Addlespurger	
DETAILS	BY Various	CHECKED M. Fustok	
QUANTITIES	BY M. Fustok	CHECKED W. Addlespurger	

STATE OF CALIFORNIA
DEPARTMENT OF TRANSPORTATION

DIVISION OF ENGINEERING SERVICES
STRUCTURE DESIGN
DESIGN BRANCH 12

BRIDGE NO. 52-0469
POST MILE 41.58

PEDESTRIAN RAMP 93
ARCHITECTURAL TREATMENT DETAILS NO. 10

STRUCTURES DESIGN DETAIL SHEET (ENGLISH) (REV. 10/25/05)

ORIGINAL SCALE IN INCHES FOR REDUCED PLANS 0 1 2 3

CU 07
EA 260701

DISREGARD PRINTS BEARING EARLIER REVISION DATES

REVISION DATES: 3-9-11 4-14-11

SHEET 33 OF 50

FILE => c-52-0469-x-arch10.dgn

USERNAME => s124496 DATE PLOTTED => 25-JUN-2011 TIME PLOTTED => 05:39

DIST	COUNTY	ROUTE	POST MILES TOTAL PROJECT	SHEET No	TOTAL SHEETS
07	Ven,SB	101	R39.8/R43.6, 0.0/2.2	632	757

Mahmoud Fustok 10-18-10
REGISTERED CIVIL ENGINEER DATE

6-20-11
PLANS APPROVAL DATE

REGISTERED PROFESSIONAL ENGINEER MAHMOUD FUSTOK No. C51502 Exp. 06-30-12 CIVIL STATE OF CALIFORNIA

The State of California or its officers or agents shall not be responsible for the accuracy or completeness of electronic copies of this plan sheet.

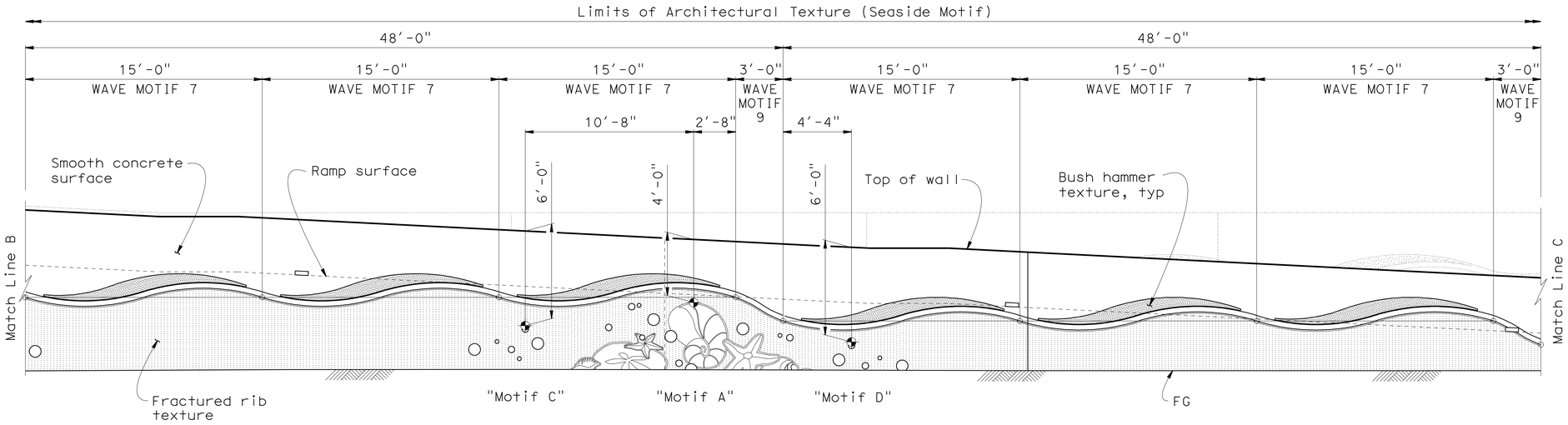

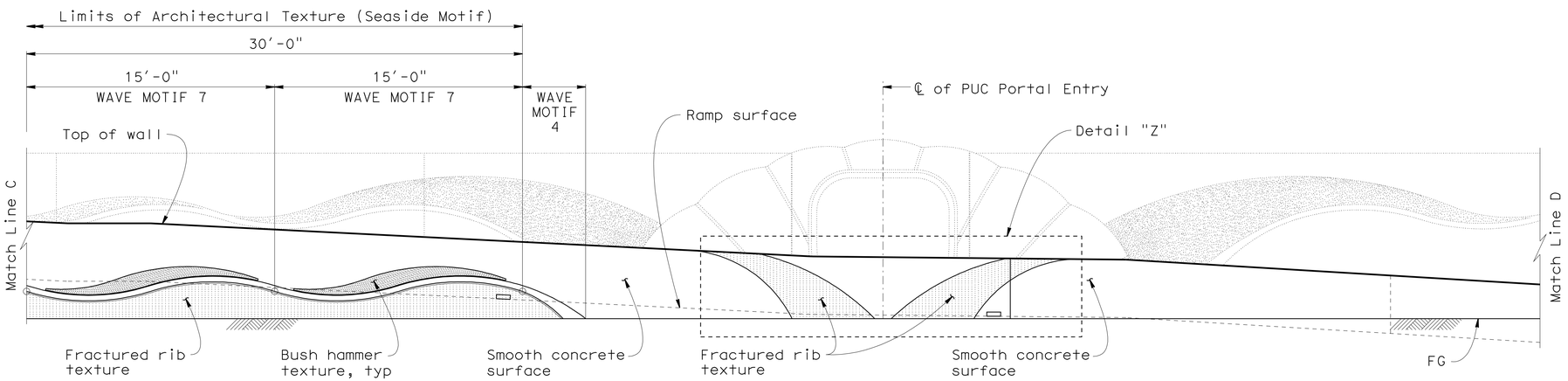

Indicates Working Point

VIEW B-B

1/4" = 1'-0"

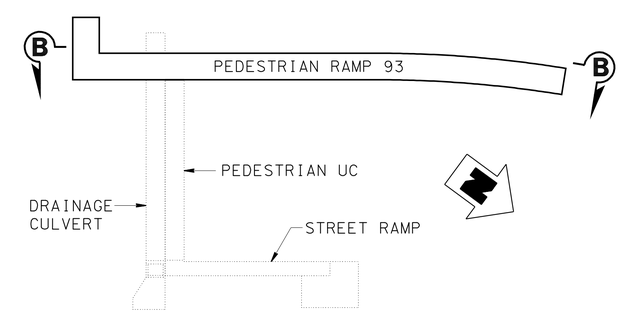

PLAN

No scale

Notes:

1. For "Motif A", "Motif C" and "Motif D" details, see "Architectural Treatment Details No. 20" sheet.
2. For "Wave Motif" details see "Architectural Treatment Details No. 14" sheet.
3. For "Detail Z" see "Architectural Treatment Details No. 12" sheet.

	BY	CHECKED
DESIGN	M. Fustok	W. Addlespurger
DETAILS	Various	M. Fustok
QUANTITIES	M. Fustok	W. Addlespurger

STATE OF CALIFORNIA
DEPARTMENT OF TRANSPORTATION

DIVISION OF ENGINEERING SERVICES
STRUCTURE DESIGN
DESIGN BRANCH 12

BRIDGE NO. 52-0469
POST MILE 41.58

PEDESTRIAN RAMP 93
ARCHITECTURAL TREATMENT DETAILS NO. 11

STRUCTURES DESIGN DETAIL SHEET (ENGLISH) (REV. 10/25/05)

ORIGINAL SCALE IN INCHES FOR REDUCED PLANS 0 1 2 3

CU 07
EA 260701

DISREGARD PRINTS BEARING EARLIER REVISION DATES 3-22-11 4-14-11

REVISION DATES

SHEET 34 OF 50

FILE => c-52-0469-x-arch11.dgn

USERNAME => s124496 DATE PLOTTED => 25-JUN-2011 TIME PLOTTED => 05:39

DIST	COUNTY	ROUTE	POST MILES TOTAL PROJECT	SHEET No	TOTAL SHEETS
07	Ven,SB	101	R39.8/R43.6, 0.0/2.2	633	757

Mahmoud Fustok 10-18-10
REGISTERED CIVIL ENGINEER DATE

6-20-11
PLANS APPROVAL DATE

REGISTERED PROFESSIONAL ENGINEER
MAHMOUD FUSTOK
No. C51502
Exp. 06-30-12
CIVIL
STATE OF CALIFORNIA

The State of California or its officers or agents shall not be responsible for the accuracy or completeness of electronic copies of this plan sheet.

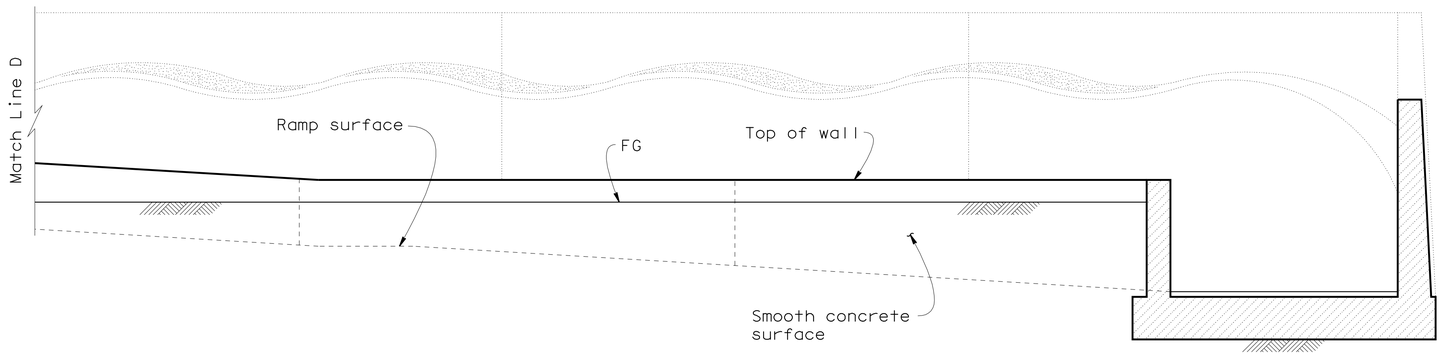

VIEW B-B

1/4" = 1'-0"

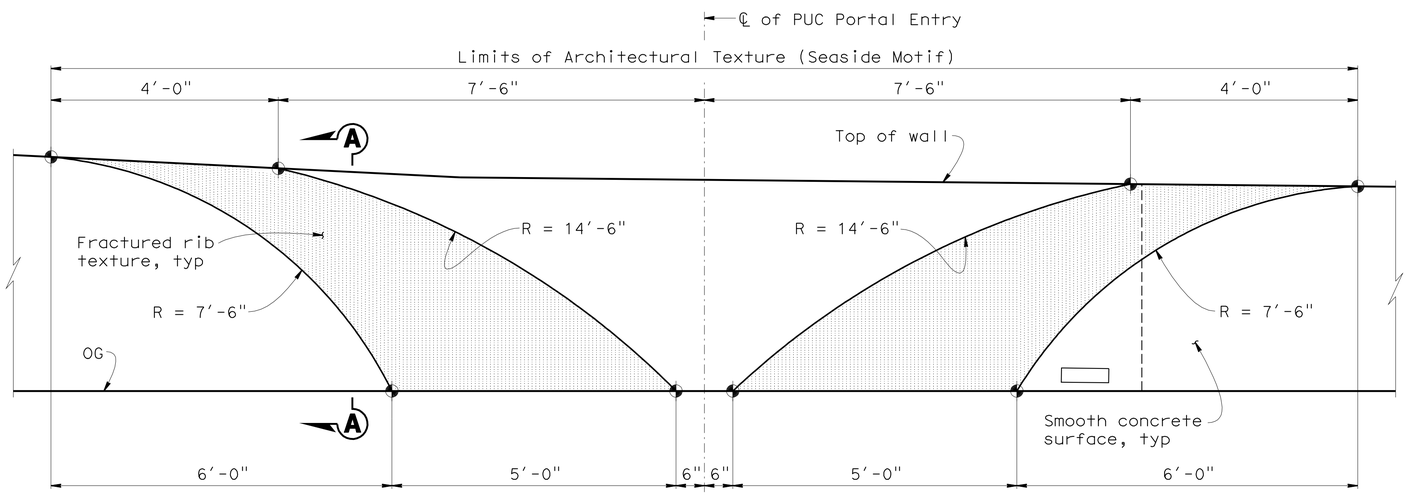

DETAIL Z

1" = 1'-0"

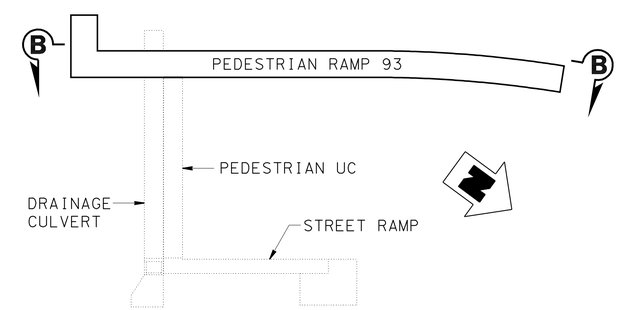

PLAN

No scale

Indicates Working Point

DESIGN	BY M. Fustok	CHECKED W. Addlespurger	
DETAILS	BY Various	CHECKED M. Fustok	
QUANTITIES	BY M. Fustok	CHECKED W. Addlespurger	

STATE OF CALIFORNIA
DEPARTMENT OF TRANSPORTATION

DIVISION OF ENGINEERING SERVICES
STRUCTURE DESIGN
DESIGN BRANCH 12

BRIDGE NO. 52-0469
POST MILE 41.58

PEDESTRIAN RAMP 93
ARCHITECTURAL TREATMENT DETAILS NO. 12

STRUCTURES DESIGN DETAIL SHEET (ENGLISH) (REV. 10/25/05)

ORIGINAL SCALE IN INCHES FOR REDUCED PLANS 0 1 2 3

CU 07
EA 260701

DISREGARD PRINTS BEARING EARLIER REVISION DATES 3-22-11 4-14-11

REVISION DATES

SHEET 35 OF 50

FILE => c-52-0469-x-arch12.dgn

USERNAME => s124496 DATE PLOTTED => 25-JUN-2011 TIME PLOTTED => 06:39

DIST	COUNTY	ROUTE	POST MILES TOTAL PROJECT	SHEET No	TOTAL SHEETS
07	Ven,SB	101	R39.8/R43.6, 0.0/2.2	634	757

Mahmoud Fustok 10-18-10
REGISTERED CIVIL ENGINEER DATE

6-20-11
PLANS APPROVAL DATE

REGISTERED PROFESSIONAL ENGINEER
MAHMOUD FUSTOK
No. C51502
Exp. 06-30-12
CIVIL
STATE OF CALIFORNIA

The State of California or its officers or agents shall not be responsible for the accuracy or completeness of electronic copies of this plan sheet.

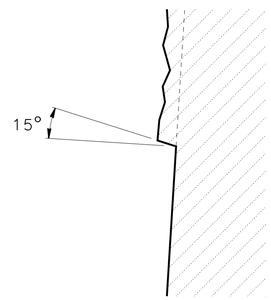

DETAIL A
No scale

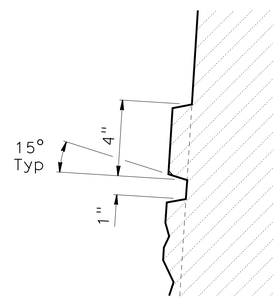

DETAIL B
No scale

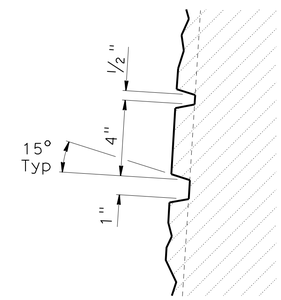

DETAIL C
No scale

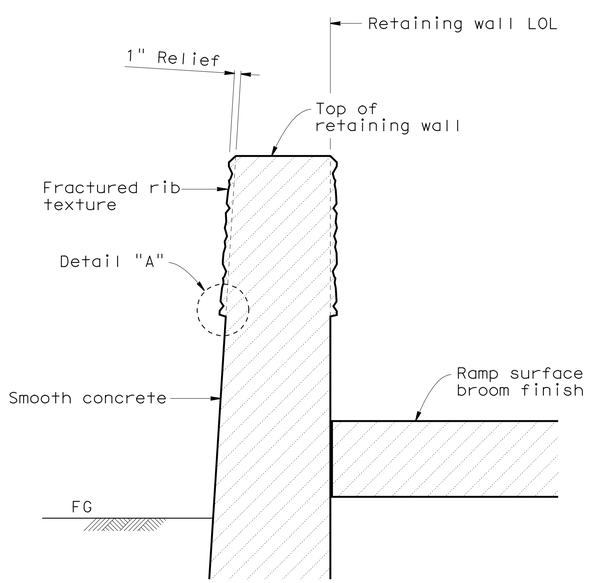

SECTION A-A
No scale

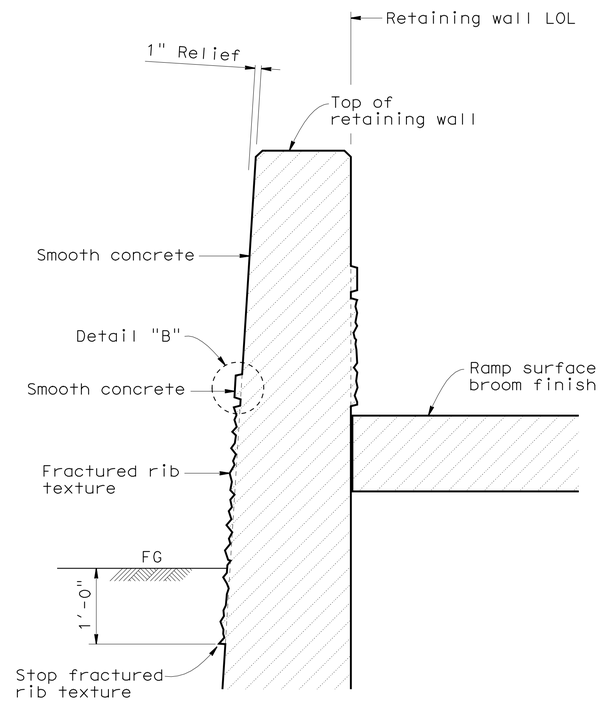

SECTION B-B
No scale

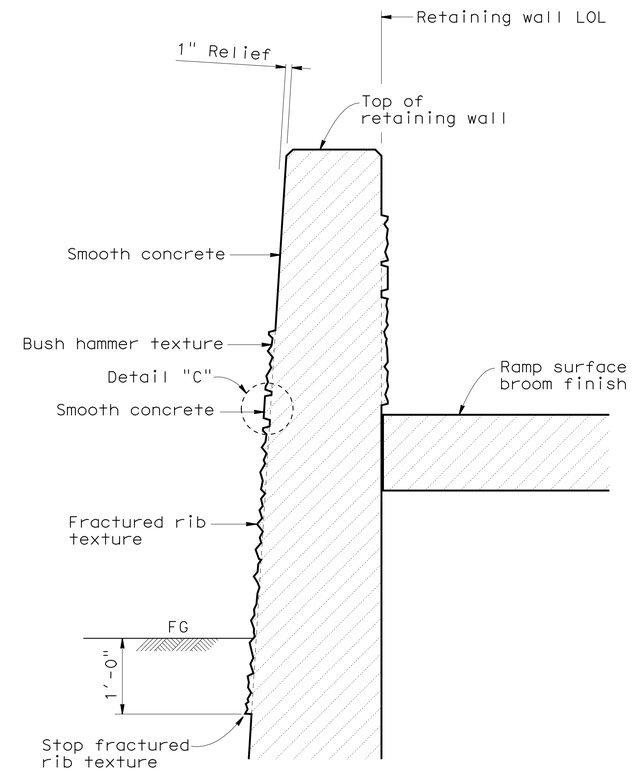

SECTION C-C
No scale

DESIGN	BY M. Fustok	CHECKED W. Addlespurger	
DETAILS	BY Various	CHECKED M. Fustok	
QUANTITIES	BY M. Fustok	CHECKED W. Addlespurger	

STATE OF CALIFORNIA
DEPARTMENT OF TRANSPORTATION

DIVISION OF ENGINEERING SERVICES
STRUCTURE DESIGN
DESIGN BRANCH 12

BRIDGE NO. 52-0469
POST MILE 41.58

PEDESTRIAN RAMP 93
ARCHITECTURAL TREATMENT DETAILS NO. 13

STRUCTURES DESIGN DETAIL SHEET (ENGLISH) (REV. 10/25/05)

ORIGINAL SCALE IN INCHES FOR REDUCED PLANS 0 1 2 3

CU 07
EA 260701

DISREGARD PRINTS BEARING EARLIER REVISION DATES → 5-24-11 6-14-11

REVISION DATES

SHEET 36 OF 50

FILE => c-52-0469-x-arch13.dgn

USERNAME => s124496 DATE PLOTTED => 25-JUN-2011 TIME PLOTTED => 05:39

DIST	COUNTY	ROUTE	POST MILES TOTAL PROJECT	SHEET No	TOTAL SHEETS
07	Ven,SB	101	R39.8/R43.6, 0.0/2.2	635	757

Mahmoud Fustok 10-18-10
REGISTERED CIVIL ENGINEER DATE

6-20-11
PLANS APPROVAL DATE

REGISTERED PROFESSIONAL ENGINEER
MAHMOUD FUSTOK
No. C51502
Exp. 06-30-12
CIVIL
STATE OF CALIFORNIA

The State of California or its officers or agents shall not be responsible for the accuracy or completeness of electronic copies of this plan sheet.

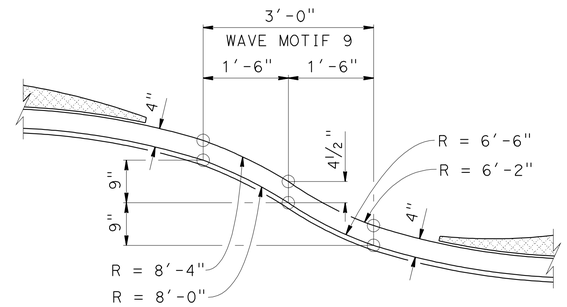

WAVE MOTIF 9

3/4" = 1'-0"

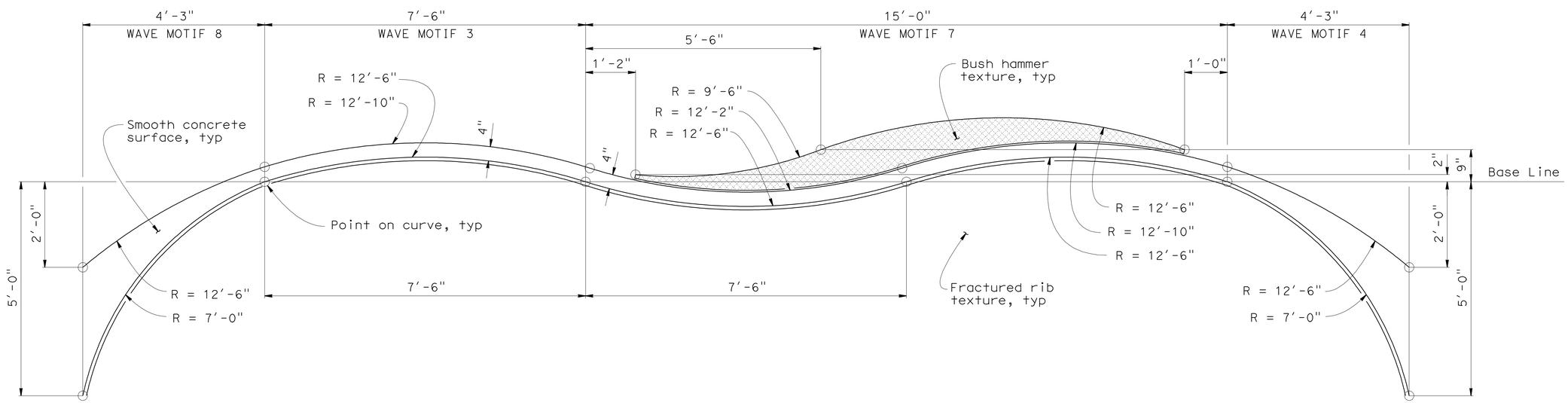

WAVE MOTIFS 8, 3, 7 AND 4

3/4" = 1'-0"

	BY	CHECKED
DESIGN	M. Fustok	W. Addlespurger
DETAILS	Various	M. Fustok
QUANTITIES	M. Fustok	W. Addlespurger

STATE OF CALIFORNIA
DEPARTMENT OF TRANSPORTATION

DIVISION OF ENGINEERING SERVICES
STRUCTURE DESIGN
DESIGN BRANCH 12

BRIDGE NO. 52-0469
POST MILE 41.58

PEDESTRIAN RAMP 93
ARCHITECTURAL TREATMENT DETAILS NO. 14

STRUCTURES DESIGN DETAIL SHEET (ENGLISH) (REV. 10/25/05)

ORIGINAL SCALE IN INCHES FOR REDUCED PLANS 0 1 2 3

CU 07
EA 260701

DISREGARD PRINTS BEARING EARLIER REVISION DATES

REVISION DATES: ~~3-22-11~~ 4-14-11

SHEET 37 OF 50

FILE => c-52-0469-x-arch14.dgn

USERNAME => s124496 DATE PLOTTED => 25-JUN-2011 TIME PLOTTED => 05:33

DIST	COUNTY	ROUTE	POST MILES TOTAL PROJECT	SHEET No	TOTAL SHEETS
07	Ven,SB	101	R39.8/R43.6, 0.0/2.2	636	757

Mahmoud Fustok 10-18-10
REGISTERED CIVIL ENGINEER DATE

6-20-11
PLANS APPROVAL DATE

REGISTERED PROFESSIONAL ENGINEER MAHMOUD FUSTOK No. C51502 Exp. 06-30-12 CIVIL STATE OF CALIFORNIA

The State of California or its officers or agents shall not be responsible for the accuracy or completeness of electronic copies of this plan sheet.

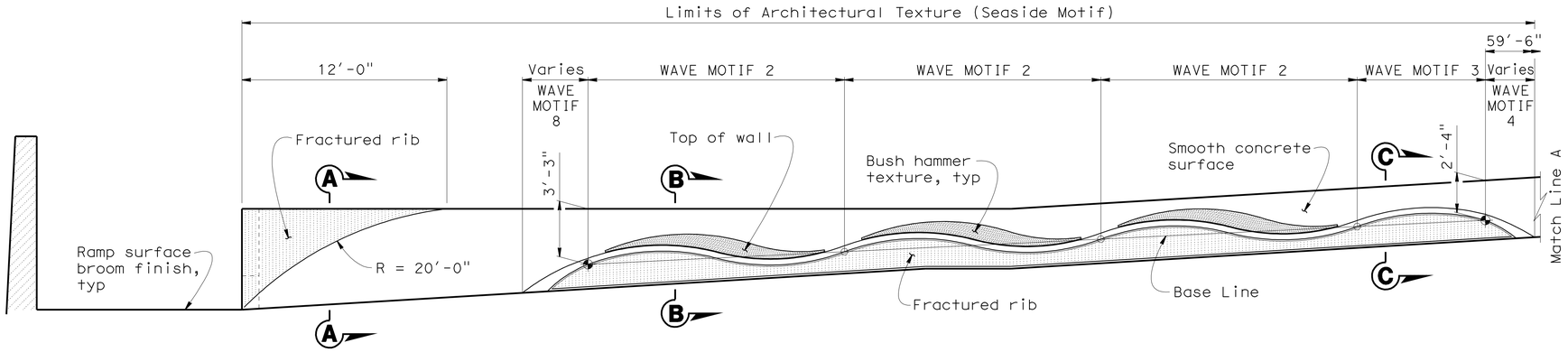

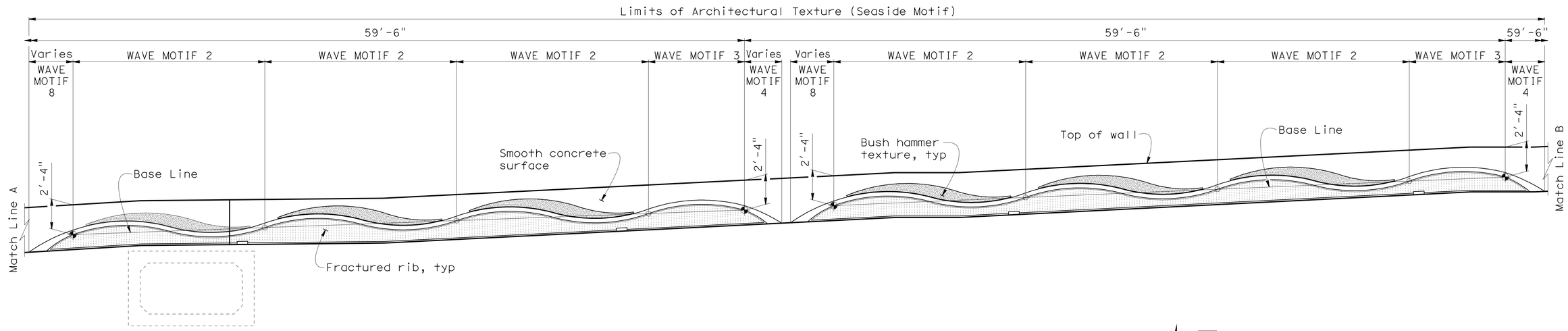

VIEW C-C

1/4" = 1'-0"

Indicates Working Point

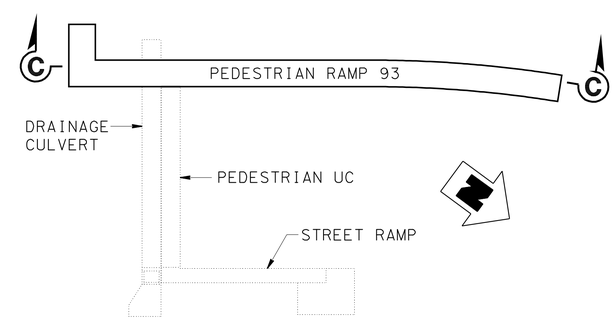

PLAN

No scale

Notes:

1. For "Section A-A", "Section B-B" and "Section C-C", see "Architectural Treatment Details No. 14" sheet.
2. For "Wave Motif" details see "Architectural Treatment Details No. 18" sheet.

	BY	CHECKED
DESIGN	M. Fustok	W. Addlespurger
DETAILS	Various	M. Fustok
QUANTITIES	M. Fustok	W. Addlespurger

STATE OF CALIFORNIA
DEPARTMENT OF TRANSPORTATION

DIVISION OF ENGINEERING SERVICES
STRUCTURE DESIGN
DESIGN BRANCH 12

BRIDGE NO. 52-0469
POST MILE 41.58

PEDESTRIAN RAMP 93
ARCHITECTURAL TREATMENT DETAILS NO. 15

STRUCTURES DESIGN DETAIL SHEET (ENGLISH) (REV. 10/25/05)

ORIGINAL SCALE IN INCHES FOR REDUCED PLANS 0 1 2 3

CU 07
EA 260701

DISREGARD PRINTS BEARING EARLIER REVISION DATES

REVISION DATES: 3-15-11 4-14-11

SHEET 38 OF 50

FILE => c-52-0469-x-arch15.dgn

USERNAME => s124196 DATE PLOTTED => 25-JUN-2011 TIME PLOTTED => 06:39

DIST	COUNTY	ROUTE	POST MILES TOTAL PROJECT	SHEET No	TOTAL SHEETS
07	Ven,SB	101	R39.8/R43.6, 0.0/2.2	637	757

Mahmoud Fustok 10-18-10
REGISTERED CIVIL ENGINEER DATE

6-20-11
PLANS APPROVAL DATE

REGISTERED PROFESSIONAL ENGINEER MAHMOUD FUSTOK No. C51502 Exp. 06-30-12 CIVIL STATE OF CALIFORNIA

The State of California or its officers or agents shall not be responsible for the accuracy or completeness of electronic copies of this plan sheet.

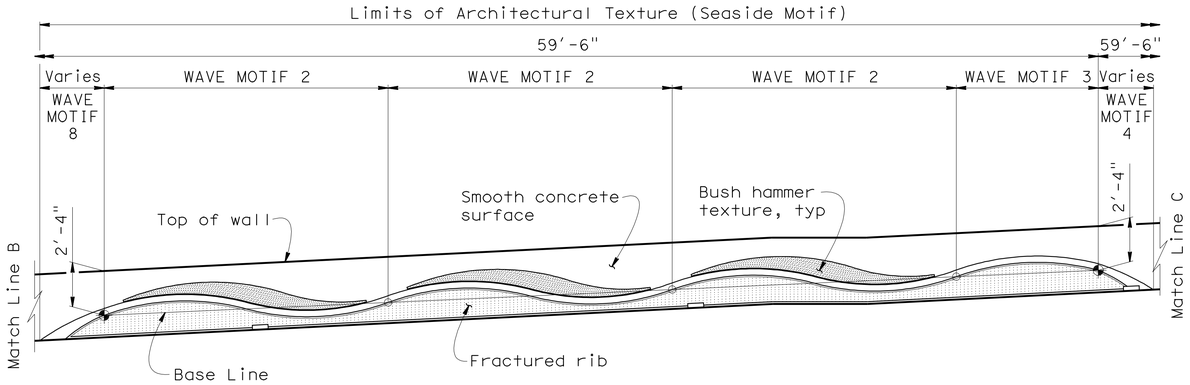

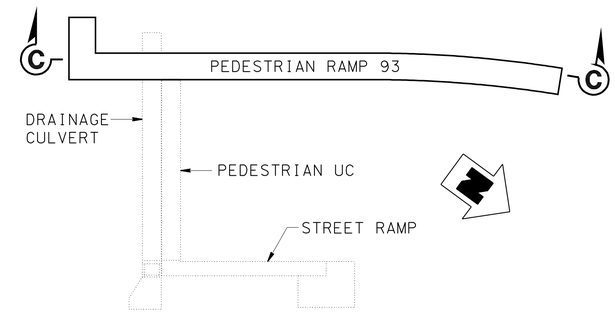

PLAN

No scale

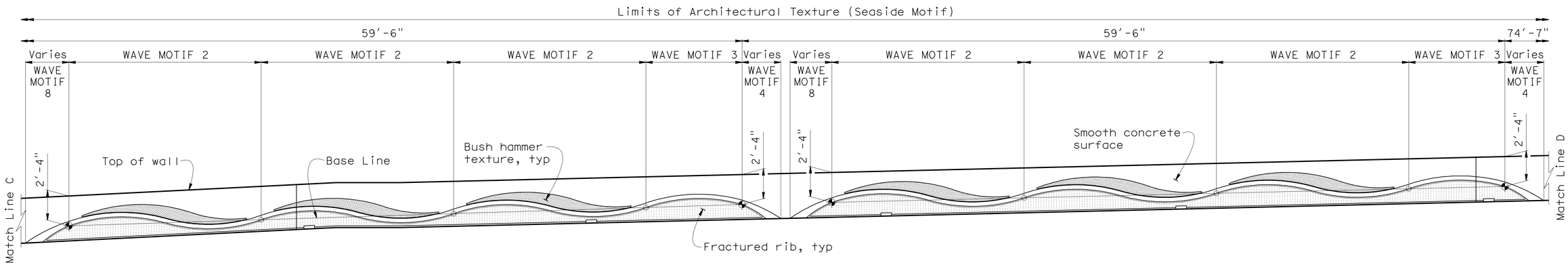

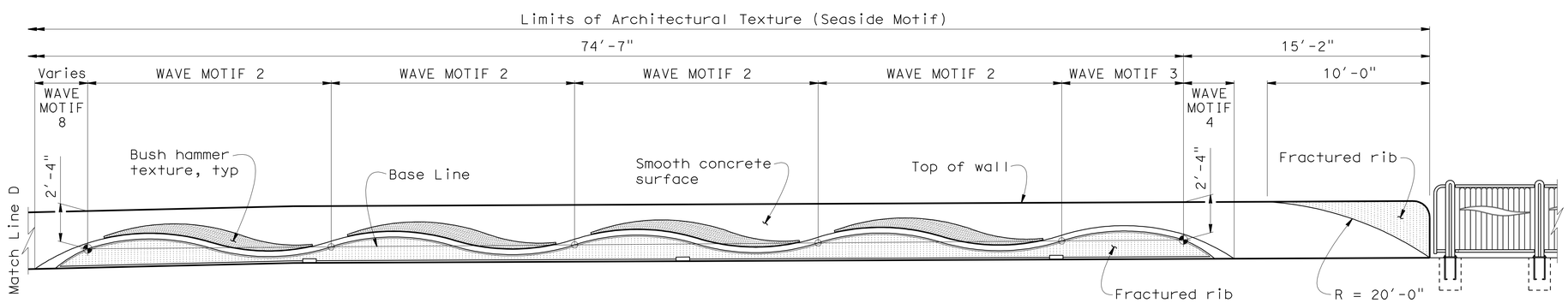

VIEW C-C

1/4" = 1'-0"

Indicates Working Point

DESIGN	BY M. Fustok	CHECKED W. Addlespurger	
DETAILS	BY Various	CHECKED M. Fustok	
QUANTITIES	BY M. Fustok	CHECKED W. Addlespurger	

STATE OF CALIFORNIA
DEPARTMENT OF TRANSPORTATION

DIVISION OF ENGINEERING SERVICES
STRUCTURE DESIGN
DESIGN BRANCH 12

BRIDGE NO. 52-0469
POST MILE 41.58

PEDESTRIAN RAMP 93

ARCHITECTURAL TREATMENT DETAILS NO. 16

STRUCTURES DESIGN DETAIL SHEET (ENGLISH) (REV. 10/25/05)

ORIGINAL SCALE IN INCHES FOR REDUCED PLANS 0 1 2 3

CU 07
EA 260701

DISREGARD PRINTS BEARING EARLIER REVISION DATES → 4-14-11

REVISION DATES

SHEET 39 OF 50

FILE => c-52-0469-x-arch16.dgn

USERNAME => s124496 DATE PLOTTED => 25-JUN-2011 TIME PLOTTED => 05:39

DIST	COUNTY	ROUTE	POST MILES TOTAL PROJECT	SHEET No	TOTAL SHEETS
07	Ven,SB	101	R39.8/R43.6, 0.0/2.2	638	757

Mahmoud Fustok 10-18-10
REGISTERED CIVIL ENGINEER DATE

6-20-11
PLANS APPROVAL DATE

REGISTERED PROFESSIONAL ENGINEER
MAHMOUD FUSTOK
No. C51502
Exp. 06-30-12
CIVIL
STATE OF CALIFORNIA

The State of California or its officers or agents shall not be responsible for the accuracy or completeness of electronic copies of this plan sheet.

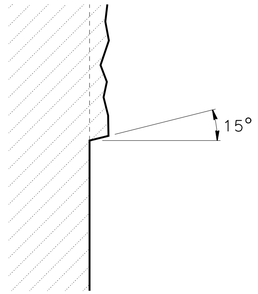

DETAIL A
No scale

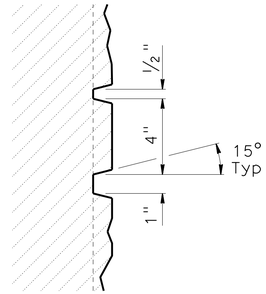

DETAIL B
No scale

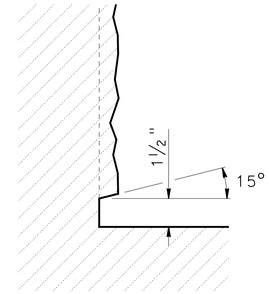

DETAIL C
No scale

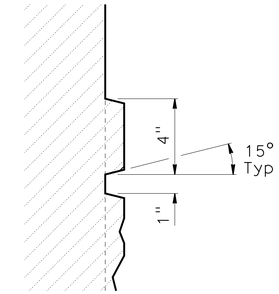

DETAIL D
No scale

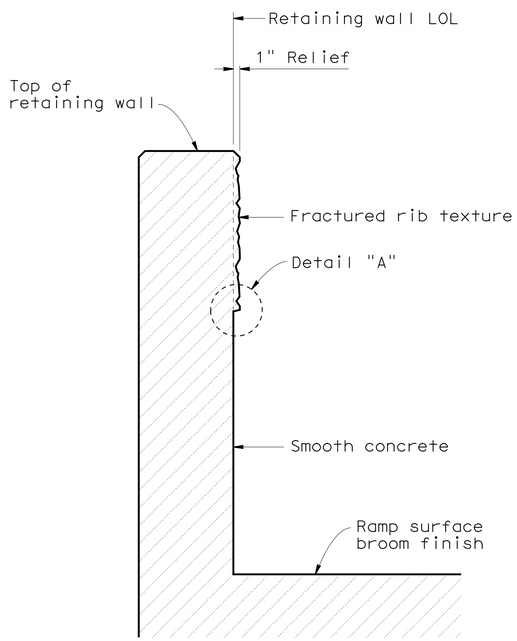

SECTION A-A
No scale

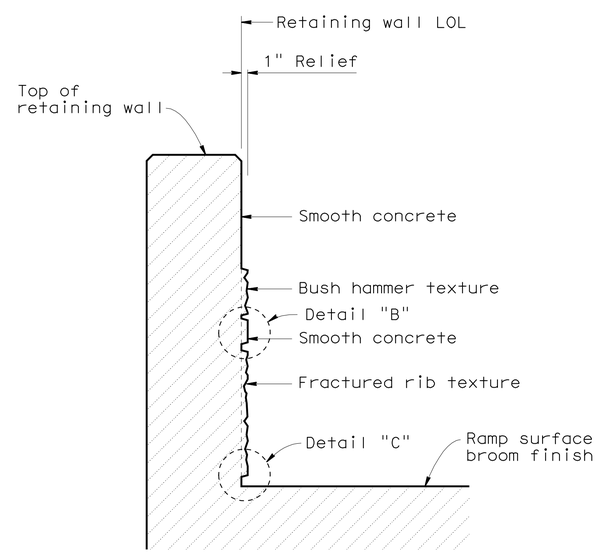

SECTION B-B
No scale

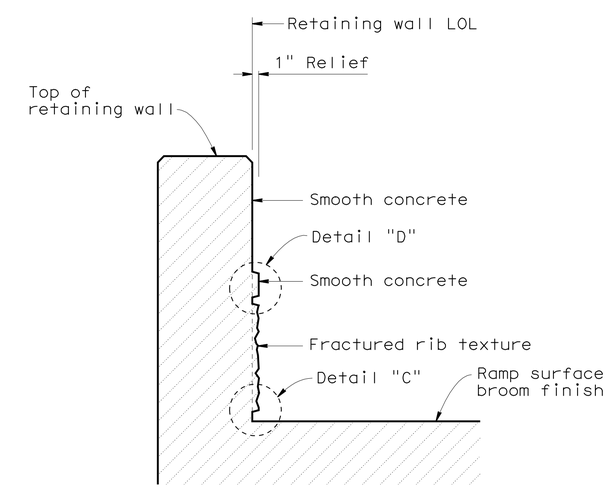

SECTION C-C
No scale

DESIGN	BY M. Fustok	CHECKED W. Addlespurger	
DETAILS	BY Various	CHECKED M. Fustok	
QUANTITIES	BY M. Fustok	CHECKED W. Addlespurger	

STATE OF CALIFORNIA
DEPARTMENT OF TRANSPORTATION

DIVISION OF ENGINEERING SERVICES
STRUCTURE DESIGN
DESIGN BRANCH 12

BRIDGE NO. 52-0469
POST MILE 41.58

PEDESTRIAN RAMP 93
ARCHITECTURAL TREATMENT DETAILS NO. 17

STRUCTURES DESIGN DETAIL SHEET (ENGLISH) (REV. 10/25/05)

ORIGINAL SCALE IN INCHES FOR REDUCED PLANS 0 1 2 3

CU 07
EA 260701

DISREGARD PRINTS BEARING EARLIER REVISION DATES → 3-29-11 4-14-11

REVISION DATES

SHEET 40 OF 50

FILE => c-52-0469-x-arch17.dgn

USERNAME => s124496 DATE PLOTTED => 25-JUN-2011 TIME PLOTTED => 05:39

DIST	COUNTY	ROUTE	POST MILES TOTAL PROJECT	SHEET No	TOTAL SHEETS
07	Ven,SB	101	R39.8/R43.6, 0.0/2.2	639	757

Mahmoud Fustok 10-18-10
REGISTERED CIVIL ENGINEER DATE

6-20-11
PLANS APPROVAL DATE

REGISTERED PROFESSIONAL ENGINEER
MAHMOUD FUSTOK
No. C51502
Exp. 06-30-12
CIVIL
STATE OF CALIFORNIA

The State of California or its officers or agents shall not be responsible for the accuracy or completeness of electronic copies of this plan sheet.

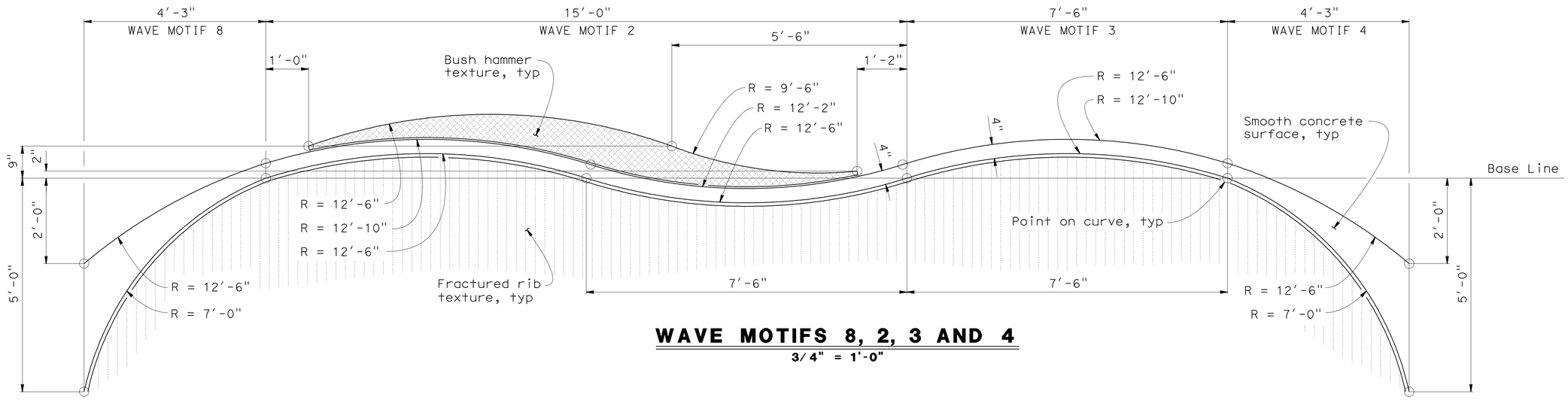

WAVE MOTIFS 8, 2, 3 AND 4

3/4" = 1'-0"

DESIGN	BY M. Fustok	CHECKED W. Addlespurger	
DETAILS	BY Various	CHECKED M. Fustok	
QUANTITIES	BY M. Fustok	CHECKED W. Addlespurger	

STATE OF CALIFORNIA
DEPARTMENT OF TRANSPORTATION

DIVISION OF ENGINEERING SERVICES
STRUCTURE DESIGN
DESIGN BRANCH 12

BRIDGE NO. 52-0469
POST MILE 41.58

PEDESTRIAN RAMP 93

ARCHITECTURAL TREATMENT DETAILS NO. 18

STRUCTURES DESIGN DETAIL SHEET (ENGLISH) (REV. 10/25/05)

ORIGINAL SCALE IN INCHES FOR REDUCED PLANS 0 1 2 3

CU 07
EA 260701

DISREGARD PRINTS BEARING EARLIER REVISION DATES → 3-21-11 4-14-11

REVISION DATES

SHEET 41 OF 50

FILE => c-52-0469-x-arch18.dgn

USERNAME => s124196 DATE PLOTTED => 25-JUN-2011 TIME PLOTTED => 05:39

DIST	COUNTY	ROUTE	POST MILES TOTAL PROJECT	SHEET No	TOTAL SHEETS
07	Ven,SB	101	R39.8/R43.6, 0.0/2.2	640	757

Mahmoud Fustok 10-18-10
REGISTERED CIVIL ENGINEER DATE

6-20-11
PLANS APPROVAL DATE

REGISTERED PROFESSIONAL ENGINEER
MAHMOUD FUSTOK
No. C51502
Exp. 06-30-12
CIVIL
STATE OF CALIFORNIA

The State of California or its officers or agents shall not be responsible for the accuracy or completeness of electronic copies of this plan sheet.

Notes:

1. For "Wave Motif" details see "Architectural Treatment Details No. 14" sheet.
2. For "Motif A", "Motif B", "Motif C" and "Motif D" details, see "Architectural Treatment Details No. 20" sheet.

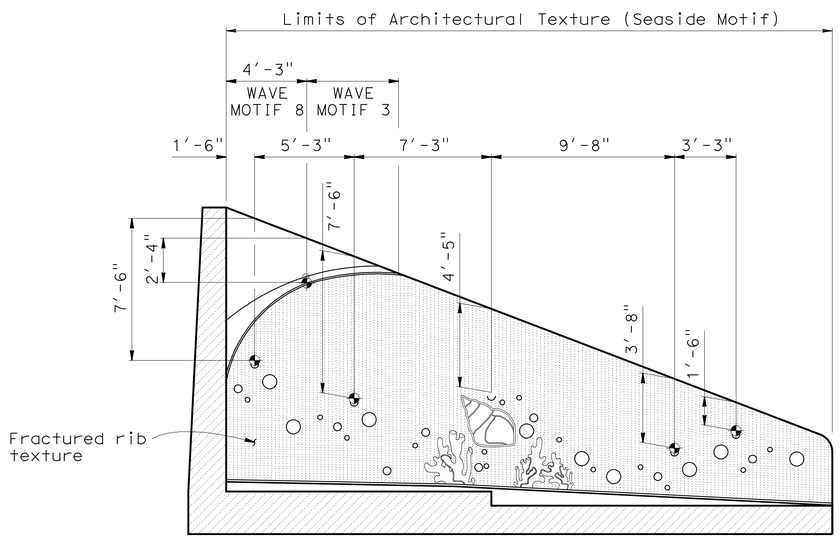

VIEW D-D

1/4" = 1'-0"

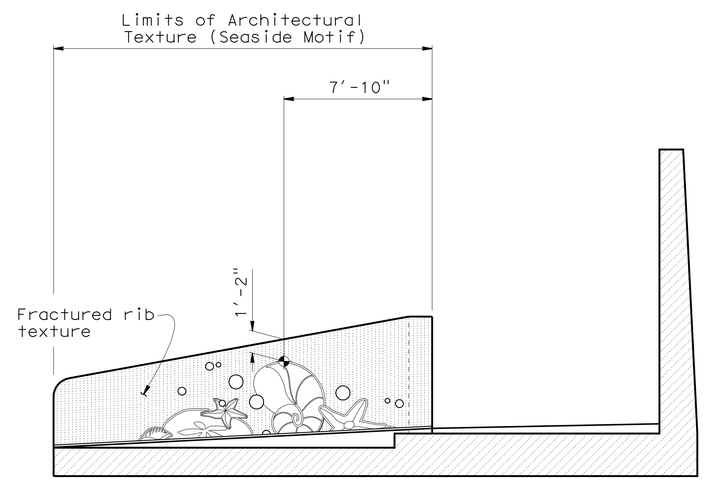

VIEW E-E

1/4" = 1'-0"

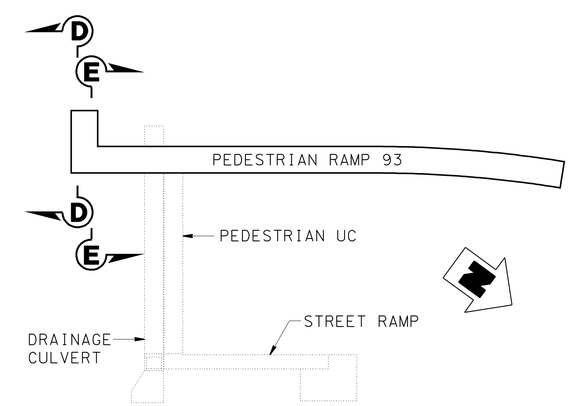

PLAN

No scale

Indicates Working Point

DESIGN	BY M. Fustok	CHECKED W. Addlespurger	
DETAILS	BY Various	CHECKED M. Fustok	
QUANTITIES	BY M. Fustok	CHECKED W. Addlespurger	

STATE OF CALIFORNIA
DEPARTMENT OF TRANSPORTATION

DIVISION OF ENGINEERING SERVICES
STRUCTURE DESIGN
DESIGN BRANCH 12

BRIDGE NO. 52-0469
POST MILE 41.58

PEDESTRIAN RAMP 93
ARCHITECTURAL TREATMENT DETAILS NO. 19

STRUCTURES DESIGN DETAIL SHEET (ENGLISH) (REV. 10/25/05)

ORIGINAL SCALE IN INCHES FOR REDUCED PLANS 0 1 2 3

CU 07
EA 260701

DISREGARD PRINTS BEARING EARLIER REVISION DATES 3-14-11 4-14-11

REVISION DATES

SHEET 42 OF 50

FILE => c-52-0469-x-arch19.dgn

USERNAME => s124496 DATE PLOTTED => 25-JUN-2011 TIME PLOTTED => 05:40

DIST	COUNTY	ROUTE	POST MILES TOTAL PROJECT	SHEET No	TOTAL SHEETS
07	Ven,SB	101	R39.8/R43.6, 0.0/2.2	641	757

Mahmoud Fustok 10-18-10
REGISTERED CIVIL ENGINEER DATE

6-20-11
PLANS APPROVAL DATE

REGISTERED PROFESSIONAL ENGINEER MAHMOUD FUSTOK No. C51502 Exp. 06-30-12 CIVIL STATE OF CALIFORNIA

The State of California or its officers or agents shall not be responsible for the accuracy or completeness of electronic copies of this plan sheet.

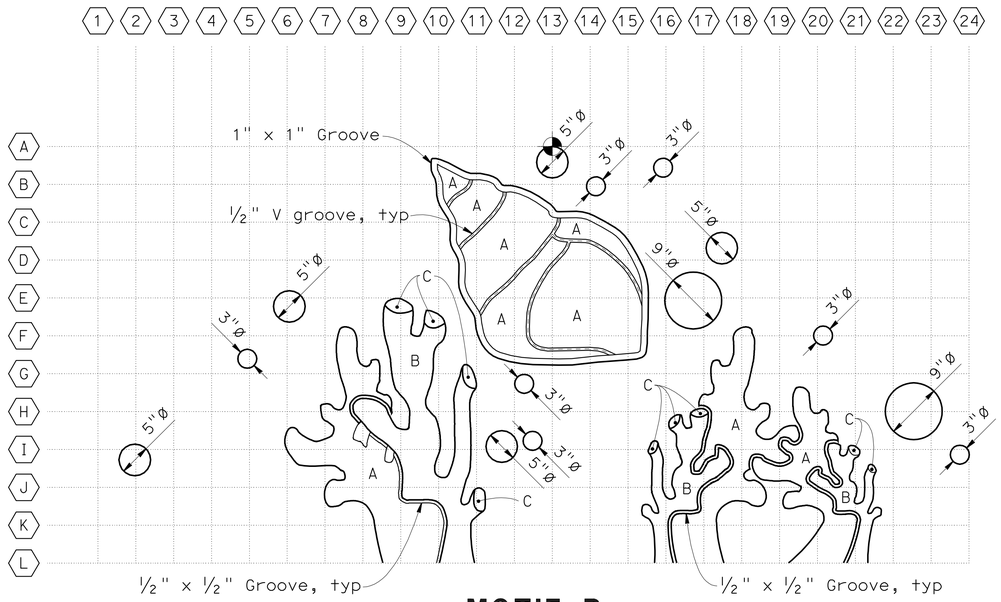

Grid = 6" X 6"

MOTIF B
1" = 1'-0"

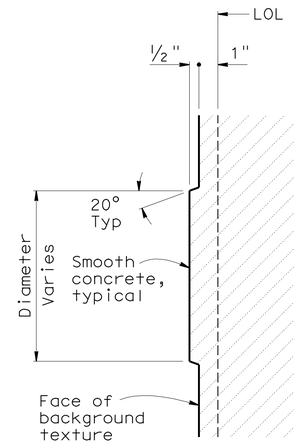

SECTION A-A
3" = 1'-0"

Applies to all bubbles

RELIEF LEGEND

0 = LOL
A = 1"
B = 2"
C = Chamfer surface from surface B to LOL.

NOTE:
MOTIF A, B, C, AND D ARE FORMED RELIEF TYEXTURE.

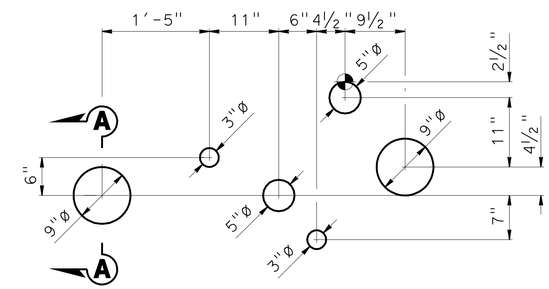

MOTIF C
1" = 1'-0"

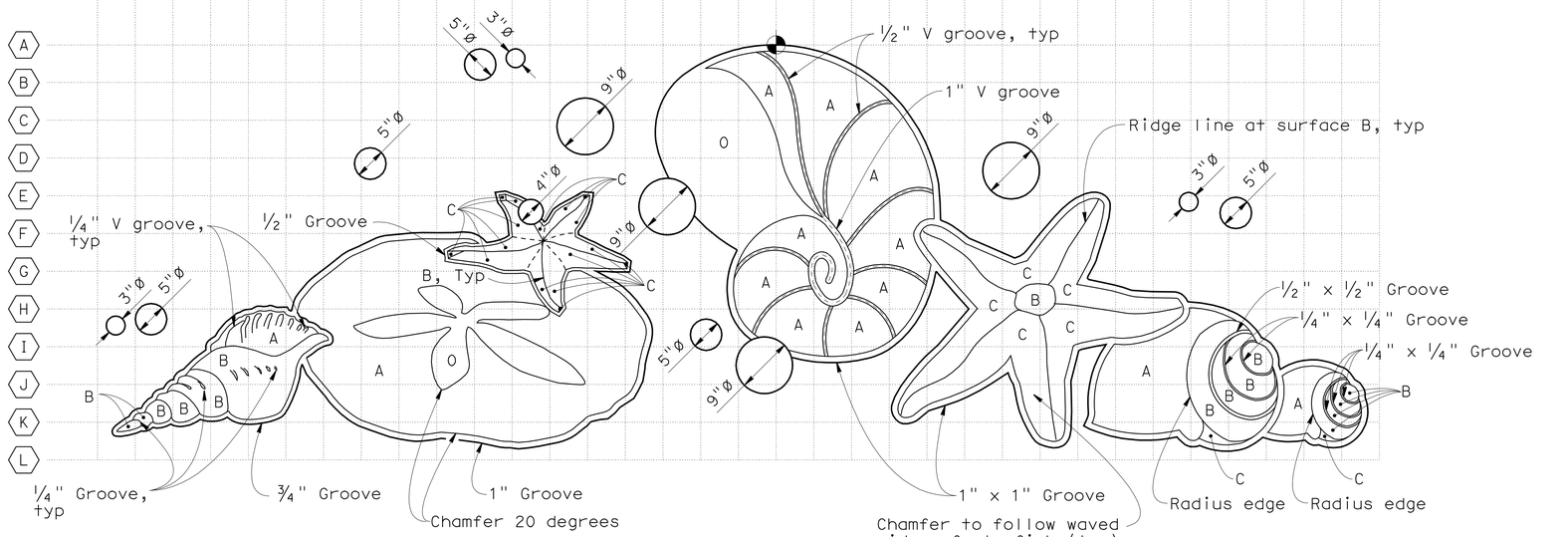

Grid = 6" X 6"

MOTIF A
1" = 1'-0"

Indicates Working point

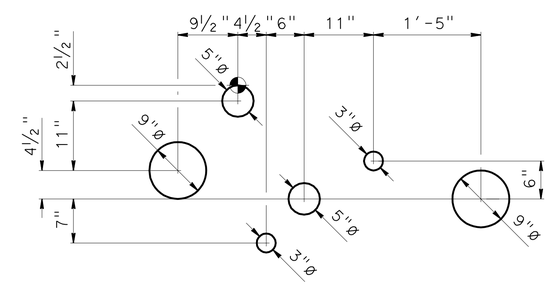

MOTIF D
1" = 1'-0"

DESIGN	BY M. Fustok	CHECKED W. Addlespurger	
DETAILS	BY Various	CHECKED M. Fustok	
QUANTITIES	BY M. Fustok	CHECKED W. Addlespurger	

STATE OF CALIFORNIA
DEPARTMENT OF TRANSPORTATION

DIVISION OF ENGINEERING SERVICES
STRUCTURE DESIGN
DESIGN BRANCH 12

BRIDGE NO. 52-0469
POST MILE 41.58

PEDESTRIAN RAMP 93
ARCHITECTURAL TREATMENT DETAILS NO. 20

STRUCTURES DESIGN DETAIL SHEET (ENGLISH) (REV. 10/25/05)

ORIGINAL SCALE IN INCHES FOR REDUCED PLANS 0 1 2 3

CU 07
EA 260701

DISREGARD PRINTS BEARING EARLIER REVISION DATES

REVISION DATES: 4-6-11

SHEET 43 OF 50

FILE => c-52-0469-x-arch20.dgn

USERNAME => trmikest DATE PLOTTED => 29-JUN-2011 TIME PLOTTED => 14:00

DIST	COUNTY	ROUTE	POST MILES TOTAL PROJECT	SHEET No	TOTAL SHEETS
07	Ven,SB	101	R39.8/R43.6, 0.0/2.2	642	757

PROFESSIONAL GEOLOGIST 1-21-11

6-20-11
PLANS APPROVAL DATE

PROFESSIONAL GEOLOGIST Hector Valencia No. 7776 Exp. 2-29-12 PROFESSIONAL GEOLOGIST STATE OF CALIFORNIA

The State of California or its officers or agents shall not be responsible for the accuracy or completeness of electronic copies of this plan sheet.

This LOTB sheet was prepared in accordance with the Caltrans Soil & Rock Logging, Classification, & Presentation Manual (2010 Edition).

BENCH MARK

PMHV10254
Elev = 23.03′
Vertical Datum : NAVD88
Location : 9.29′ Rt Sta 96+57.61 ℄ Rte 101
Northing : 1958491.46
Easting : 6123907.26

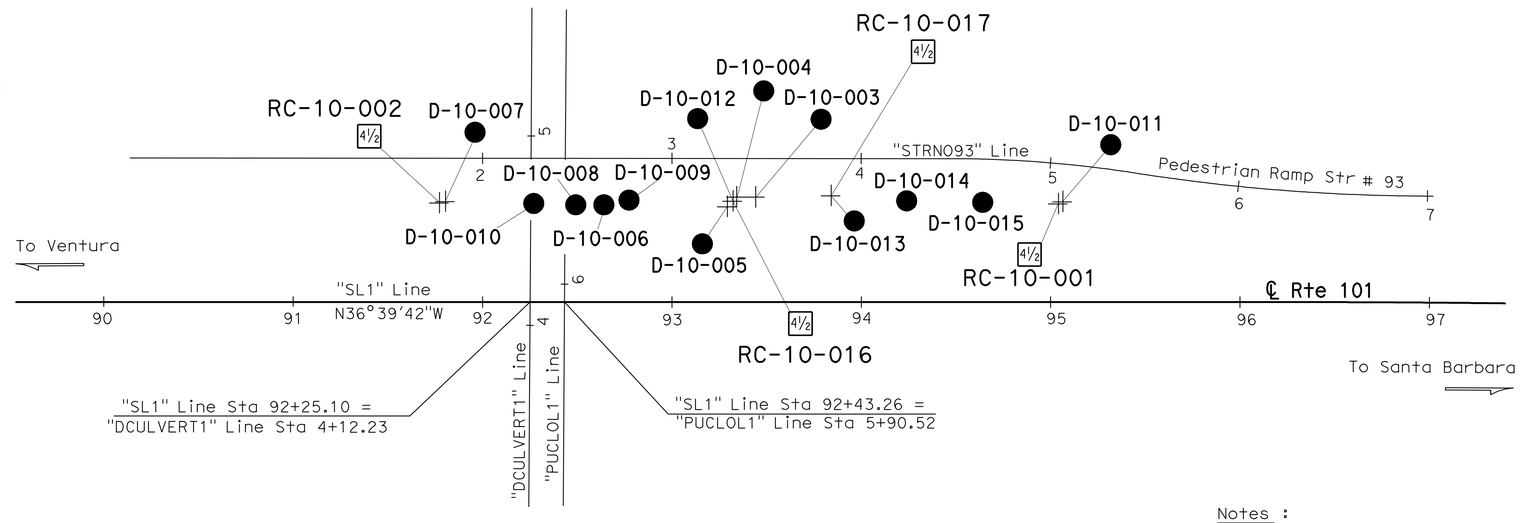

PLAN

1" = 40′

Notes :

1. Groundwater was measured in Boring RC-10-001.
2. Groundwater was encounted but not measured in Boring RC-10-002.
3. No attempt was made to measure groundwater in all other borings.
4. RC-10-16 and RC-10-17 were advanced through open holes that remained from borings D-10-12 AND D-10-13.
5. Rock Quality Designation (RQD) values with an "*" indicate that the rock from the core run was weak and not sound (D.U. Deere, 1989: GL-89-1).

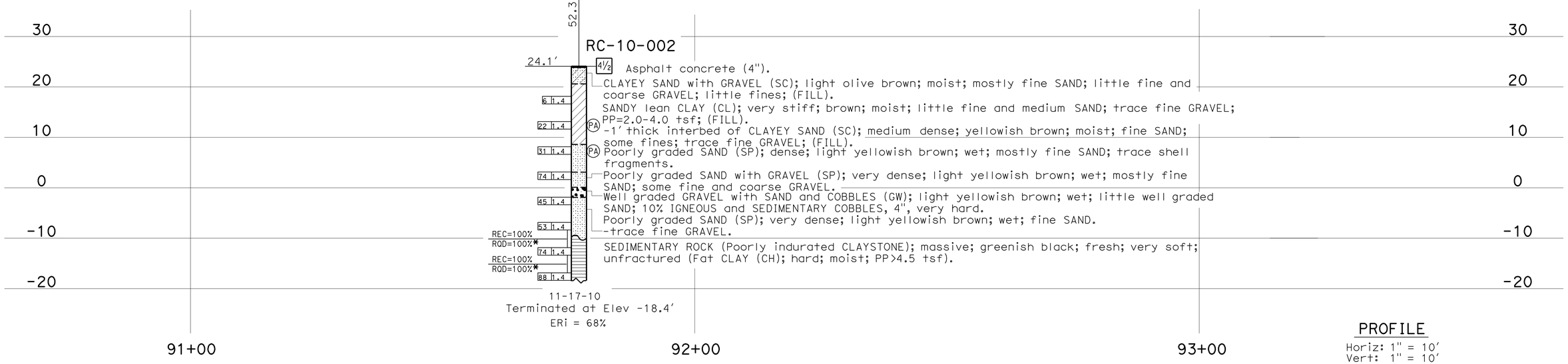

PROFILE

Horiz: 1" = 10′
Vert: 1" = 10′

ENGINEERING SERVICES	GEOTECHNICAL SERVICES	STATE OF CALIFORNIA DEPARTMENT OF TRANSPORTATION	DIVISION OF ENGINEERING SERVICES STRUCTURE DESIGN	BRIDGE NO. 52-0469	PEDESTRIAN RAMP 93
FUNCTIONAL SUPERVISOR	DRAWN BY: W. Tang 12/10	FIELD INVESTIGATION BY:	DESIGN BRANCH 12	POST MILES 41.58	LOG OF TEST BORINGS 1 OF 7
NAME: M. DeSalvatore	CHECKED BY: F. De Haro	H. Valencia / T.M. Liao			

OGS GEOLOGIST LOG OF TEST BORINGS SHEET

ORIGINAL SCALE IN INCHES FOR REDUCED PLANS 0 1 2 3

CU 07
EA 260701

DISREGARD PRINTS BEARING EARLIER REVISION DATES 01-18-11 01-20-11 01-21-11

REVISION DATES

SHEET 44 OF 50

FILE => c-52-0469-z-lotb01.dgn

USERNAME => s124936 DATE PLOTTED => 25-JUN-2011 TIME PLOTTED => 05:53

DIST	COUNTY	ROUTE	POST MILES TOTAL PROJECT	SHEET No	TOTAL SHEETS
07	Ven,SB	101	R39.8/R43.6, 0.0/2.2	643	757

PROFESSIONAL GEOLOGIST 1-21-11

6-20-11
PLANS APPROVAL DATE

PROFESSIONAL GEOLOGIST
Hector Valencia
No. 7776
Exp. 2-29-12
PROFESSIONAL GEOLOGIST
STATE OF CALIFORNIA

The State of California or its officers or agents shall not be responsible for the accuracy or completeness of electronic copies of this plan sheet.

This LOTB sheet was prepared in accordance with the Caltrans Soil & Rock Logging, Classification, & Presentation Manual (2010 Edition).

FOR PLAN VIEW, SEE
"LOG OF TEST BORINGS 1 OF 7"

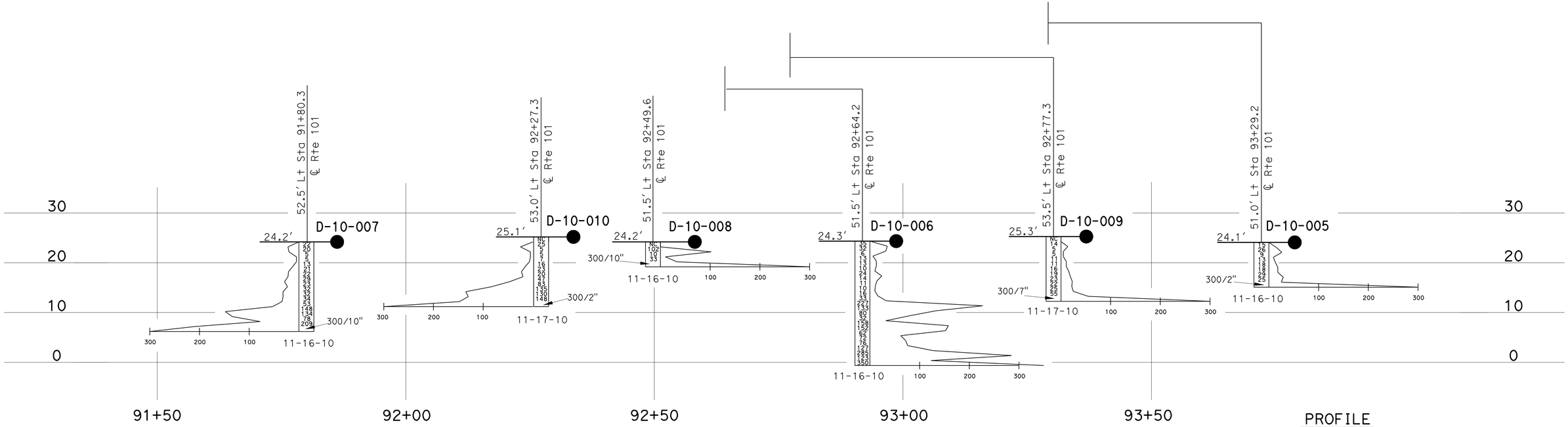

PROFILE
Horiz: 1" = 10'
Vert: 1" = 10'

ENGINEERING SERVICES	GEOTECHNICAL SERVICES	STATE OF CALIFORNIA DEPARTMENT OF TRANSPORTATION	DIVISION OF ENGINEERING SERVICES STRUCTURE DESIGN DESIGN BRANCH 12	BRIDGE NO. 52-0469 POST MILES 41.58	PEDESTRIAN RAMP 93 LOG OF TEST BORINGS 2 OF 7
FUNCTIONAL SUPERVISOR NAME: M. DeSalvatore	DRAWN BY: I. Gamarra-Remmen 12/10 CHECKED BY: F. De Haro	FIELD INVESTIGATION BY: H. Valencia / T.M. Liao			
OGS GEOLOGIST LOG OF TEST BORINGS SHEET	ORIGINAL SCALE IN INCHES FOR REDUCED PLANS 0 1 2 3	CU 07 EA 260701	DISREGARD PRINTS BEARING EARLIER REVISION DATES	REVISION DATES 01-18-11	SHEET 45 OF 50

FILE => c-52-0469-z-lotb02.dgn

USERNAME => s124496 DATE PLOTTED => 25-JUN-2011 TIME PLOTTED => 05:53

DIST	COUNTY	ROUTE	POST MILES TOTAL PROJECT	SHEET No	TOTAL SHEETS
07	Ven,SB	101	R39.8/R43.6, 0.0/2.2	644	757

PROFESSIONAL GEOLOGIST 1-21-11

6-20-11
PLANS APPROVAL DATE

PROFESSIONAL GEOLOGIST Hector Valencia No. 7776 Exp. 2-29-12 PROFESSIONAL GEOLOGIST STATE OF CALIFORNIA

The State of California or its officers or agents shall not be responsible for the accuracy or completeness of electronic copies of this plan sheet.

This LOTB sheet was prepared in accordance with the Caltrans Soil & Rock Logging, Classification, & Presentation Manual (2010 Edition).

FOR PLAN VIEW, SEE
"LOG OF TEST BORINGS 1 OF 7"

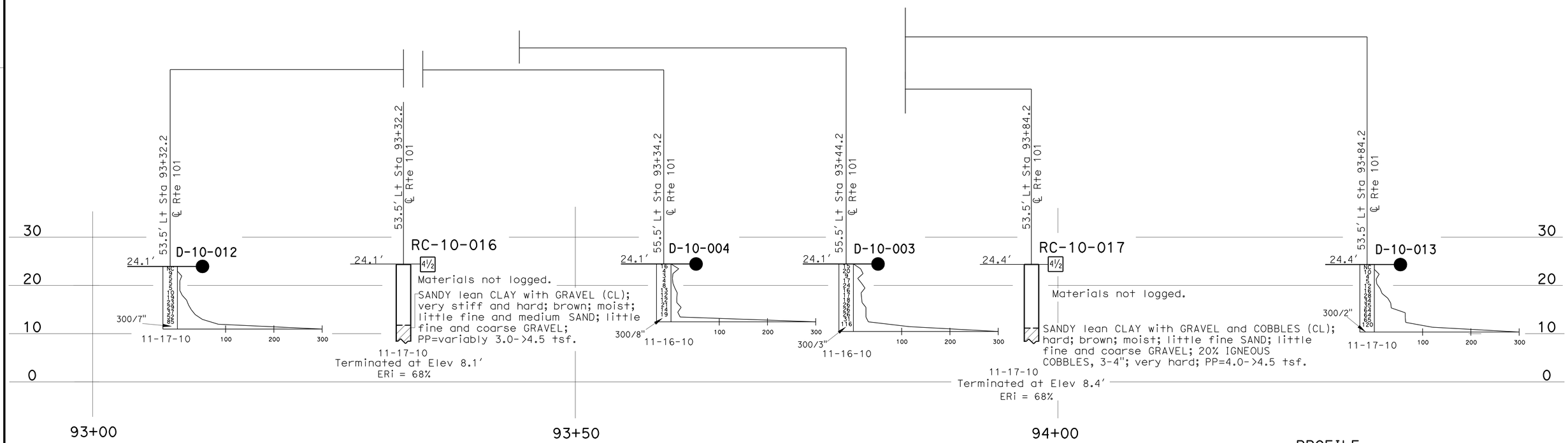

PROFILE
Horiz: 1" = 5'
Vert: 1" = 10'

ENGINEERING SERVICES	GEOTECHNICAL SERVICES	STATE OF CALIFORNIA DEPARTMENT OF TRANSPORTATION	DIVISION OF ENGINEERING SERVICES STRUCTURE DESIGN DESIGN BRANCH 12	BRIDGE NO. 52-0469 POST MILES 41.58	PEDESTRIAN RAMP 93 LOG OF TEST BORINGS 3 OF 7
FUNCTIONAL SUPERVISOR NAME: M. DeSalvatore	DRAWN BY: W. Tang/I. Gamarra-Remmen 12/10 CHECKED BY: F. De Haro	FIELD INVESTIGATION BY: H. Valencia / T.M. Liao			
OGS GEOLOGIST LOG OF TEST BORINGS SHEET	ORIGINAL SCALE IN INCHES FOR REDUCED PLANS 0 1 2 3	CU 07 EA 260701	DISREGARD PRINTS BEARING EARLIER REVISION DATES	REVISION DATES 01-18-11 01-20-11	SHEET 46 OF 50

FILE => c-52-0469-z-lotb03.dgn

USERNAME => s124436 DATE PLOTTED => 25-JUN-2011 TIME PLOTTED => 08:54

DIST	COUNTY	ROUTE	POST MILES TOTAL PROJECT	SHEET No	TOTAL SHEETS
07	Ven,SB	101	R39.8/R43.6, 0.0/2.2	645	757

PROFESSIONAL GEOLOGIST 1-21-11

6-20-11
PLANS APPROVAL DATE

PROFESSIONAL GEOLOGIST Hector Valencia No. 7776 Exp. 2-29-12 PROFESSIONAL GEOLOGIST STATE OF CALIFORNIA

The State of California or its officers or agents shall not be responsible for the accuracy or completeness of electronic copies of this plan sheet.

This LOTB sheet was prepared in accordance with the Caltrans Soil & Rock Logging, Classification, & Presentation Manual (2010 Edition).

FOR PLAN VIEW, SEE
"LOG OF TEST BORINGS 1 OF 7"

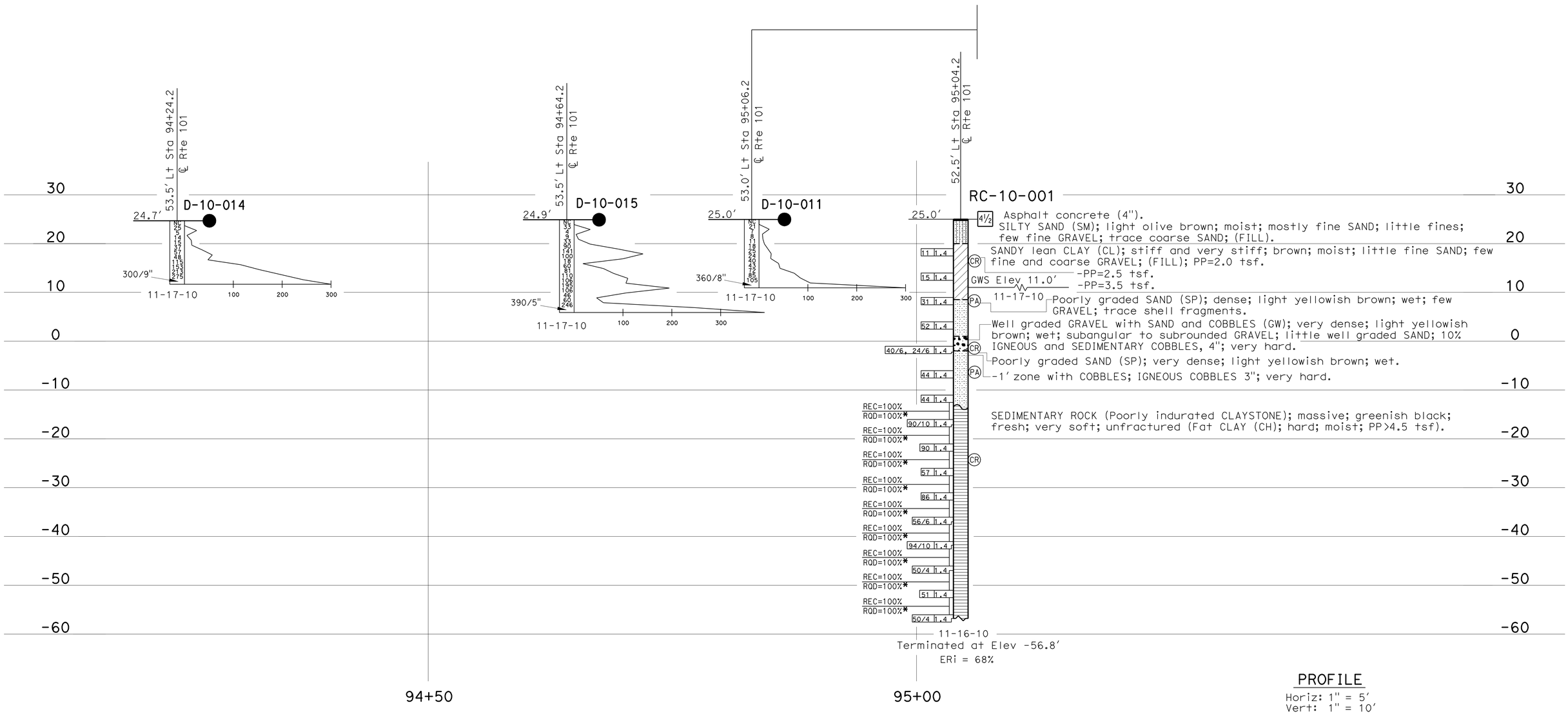

ENGINEERING SERVICES	GEOTECHNICAL SERVICES	STATE OF CALIFORNIA DEPARTMENT OF TRANSPORTATION	DIVISION OF ENGINEERING SERVICES STRUCTURE DESIGN	BRIDGE NO. 52-0469	PEDESTRIAN RAMP 93
FUNCTIONAL SUPERVISOR	DRAWN BY: W. Tang/I. Gamarra-Remmen 12/10	FIELD INVESTIGATION BY:	DESIGN BRANCH 12	POST MILES 41.58	LOG OF TEST BORINGS 4 OF 7
NAME: M. DeSalvatore	CHECKED BY: F. De Haro	H. Valencia / T.M. Liao			

OGS GEOLOGIST LOG OF TEST BORINGS SHEET

ORIGINAL SCALE IN INCHES FOR REDUCED PLANS 0 1 2 3

CU 07
EA 260701

DISREGARD PRINTS BEARING EARLIER REVISION DATES → 01-18-11 01-20-11

REVISION DATES

SHEET 47 OF 50

FILE => c-52-0469-z-lotb04.dgn

USERNAME => s124496 DATE PLOTTED => 25-JUN-2011 TIME PLOTTED => 05:54

REFERENCE: CALTRANS SOIL & ROCK LOGGING, CLASSIFICATION, AND PRESENTATION MANUAL (2010)

DIST	COUNTY	ROUTE	POST MILES TOTAL PROJECT	SHEET No	TOTAL SHEETS
07	Ven,SB	101	R39.8/R43.6, 0.0/2.2	646	757

PROFESSIONAL GEOLOGIST 1-21-11

6-20-11
PLANS APPROVAL DATE

PROFESSIONAL GEOLOGIST Hector Valencia No. 7776 Exp. 2-29-12 PROFESSIONAL GEOLOGIST STATE OF CALIFORNIA

The State of California or its officers or agents shall not be responsible for the accuracy or completeness of electronic copies of this plan sheet.

CEMENTATION

Description	Criteria
Weak	Crumbles or breaks with handling or little finger pressure.
Moderate	Crumbles or breaks with considerable finger pressure.
Strong	Will not crumble or break with finger pressure.

BOREHOLE IDENTIFICATION

Symbol	Hole Type	Description
Size	A	Auger Boring (hollow or solid stem bucket)
Size	R RW RC P	Rotary drilled boring (conventional) Rotary drilled with self-casing wire-line Rotary core with continuously-sampled, self-casing wire-line Rotary percussion boring (air)
Size	R	Rotary drilled diamond core
Size	HD HA	Hand driven (1-inch soil tube) Hand Auger
●	D	Dynamic Cone Penetration Boring
▲	CPT	Cone Penetration Test (ASTM D 5778)
⬚	O	Other (note on LOTB)

Note: Size in inches.

CONSISTENCY OF COHESIVE SOILS

Description	Shear Strength (tsf)	Pocket Penetrometer Measurement, PP, (tsf)	Torvane Measurement, TV, (tsf)	Vane Shear Measurement, VS, (tsf)
Very Soft	Less than 0.12	Less than 0.25	Less than 0.12	Less than 0.12
Soft	0.12 - 0.25	0.25 - 0.5	0.12 - 0.25	0.12 - 0.25
Medium Stiff	0.25 - 0.5	0.5 - 1	0.25 - 0.5	0.25 - 0.5
Stiff	0.5 - 1	1 - 2	0.5 - 1	0.5 - 1
Very Stiff	1 - 2	2 - 4	1 - 2	1 - 2
Hard	Greater than 2	Greater than 4	Greater than 2	Greater than 2

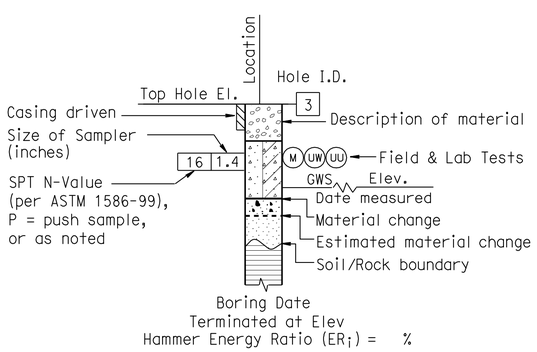

ROTARY BORING

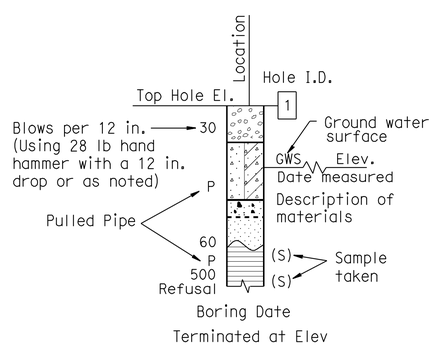

HAND BORING

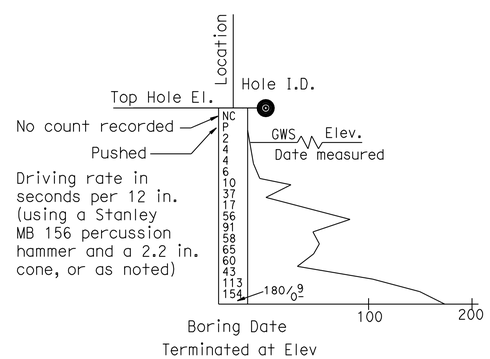

DYNAMIC CONE PENETRATION BORING

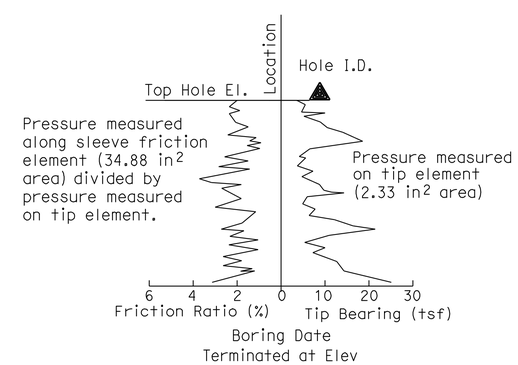

CONE PENETRATION TEST (CPT) BORING

ENGINEERING SERVICES	GEOTECHNICAL SERVICES	STATE OF CALIFORNIA DEPARTMENT OF TRANSPORTATION	DIVISION OF ENGINEERING SERVICES STRUCTURE DESIGN DESIGN BRANCH 12	BRIDGE NO. 52-0469 POST MILE 41.58	PEDESTRIAN RAMP 93 LOG OF TEST BORINGS 5 OF 7
	PREPARED BY: W. Tang 12/10				

GS LOTB SOIL LEGEND

ORIGINAL SCALE IN INCHES FOR REDUCED PLANS 0 1 2 3

CU 07
EA 260701

DISREGARD PRINTS BEARING EARLIER REVISION DATES 4-14-11

REVISION DATES

SHEET 48 OF 50

FILE => c-52-0469-z-lotb05.dgn

USERNAME => s124496 DATE PLOTTED => 25-JUN-2011 TIME PLOTTED => 05:54

REFERENCE: CALTRANS SOIL & ROCK LOGGING, CLASSIFICATION, AND PRESENTATION MANUAL (2010)

DIST	COUNTY	ROUTE	POST MILES TOTAL PROJECT	SHEET No	TOTAL SHEETS
07	Ven,SB	101	R39.8/R43.6, 0.0/2.2	647	757

PROFESSIONAL GEOLOGIST 1-21-11

6-20-11
PLANS APPROVAL DATE

PROFESSIONAL GEOLOGIST Hector Valencia No. 7776 Exp. 2-29-12 PROFESSIONAL GEOLOGIST STATE OF CALIFORNIA

The State of California or its officers or agents shall not be responsible for the accuracy or completeness of electronic copies of this plan sheet.

GROUP SYMBOLS AND NAMES

Graphic/Symbol	Group Names	Graphic/Symbol	Group Names
GW	Well-graded GRAVEL Well-graded GRAVEL with SAND	CL	Lean CLAY Lean CLAY with SAND Lean CLAY with GRAVEL SANDY lean CLAY SANDY lean CLAY with GRAVEL GRAVELLY lean CLAY GRAVELLY lean CLAY with SAND
GP	Poorly-graded GRAVEL Poorly-graded GRAVEL with SAND		
GW-GM	Well-graded GRAVEL with SILT Well-graded GRAVEL with SILT and SAND	CL-ML	SILTY CLAY SILTY CLAY with SAND SILTY CLAY with GRAVEL SANDY SILTY CLAY SANDY SILTY CLAY with GRAVEL GRAVELLY SILTY CLAY GRAVELLY SILTY CLAY with SAND
GW-GC	Well-graded GRAVEL with CLAY (or SILTY CLAY) Well-graded GRAVEL with CLAY and SAND (or SILTY CLAY and SAND)		
GP-GM	Poorly-graded GRAVEL with SILT Poorly-graded GRAVEL with SILT and SAND	ML	SILT SILT with SAND SILT with GRAVEL SANDY SILT SANDY SILT with GRAVEL GRAVELLY SILT GRAVELLY SILT with SAND
GP-GC	Poorly-graded GRAVEL with CLAY (or SILTY CLAY) Poorly-graded GRAVEL with CLAY and SAND (or SILTY CLAY and SAND)		
GM	SILTY GRAVEL SILTY GRAVEL with SAND	OL	ORGANIC lean CLAY ORGANIC lean CLAY with SAND ORGANIC lean CLAY with GRAVEL SANDY ORGANIC lean CLAY SANDY ORGANIC lean CLAY with GRAVEL GRAVELLY ORGANIC lean CLAY GRAVELLY ORGANIC lean CLAY with SAND
GC	CLAYEY GRAVEL CLAYEY GRAVEL with SAND		
GC-GM	SILTY, CLAYEY GRAVEL SILTY, CLAYEY GRAVEL with SAND	OL	ORGANIC SILT ORGANIC SILT with SAND ORGANIC SILT with GRAVEL SANDY ORGANIC SILT SANDY ORGANIC SILT with GRAVEL GRAVELLY ORGANIC SILT GRAVELLY ORGANIC SILT with SAND
SW	Well-graded SAND Well-graded SAND with GRAVEL		
SP	Poorly-graded SAND Poorly-graded SAND with GRAVEL	CH	Fat CLAY Fat CLAY with SAND Fat CLAY with GRAVEL SANDY fat CLAY SANDY fat CLAY with GRAVEL GRAVELLY fat CLAY GRAVELLY fat CLAY with SAND
SW-SM	Well-graded SAND with SILT Well-graded SAND with SILT and GRAVEL		
SW-SC	Well-graded SAND with CLAY (or SILTY CLAY) Well-graded SAND with CLAY and GRAVEL (or SILTY CLAY and GRAVEL)	MH	Elastic SILT Elastic SILT with SAND Elastic SILT with GRAVEL SANDY elastic SILT SANDY elastic SILT with GRAVEL GRAVELLY elastic SILT GRAVELLY elastic SILT with SAND
SP-SM	Poorly-graded SAND with SILT Poorly-graded SAND with SILT and GRAVEL		
SP-SC	Poorly-graded SAND with CLAY (or SILTY CLAY) Poorly-graded SAND with CLAY and GRAVEL (or SILTY CLAY and GRAVEL)	OH	ORGANIC fat CLAY ORGANIC fat CLAY with SAND ORGANIC fat CLAY with GRAVEL SANDY ORGANIC fat CLAY SANDY ORGANIC fat CLAY with GRAVEL GRAVELLY ORGANIC fat CLAY GRAVELLY ORGANIC fat CLAY with SAND
SM	SILTY SAND SILTY SAND with GRAVEL		
SC	CLAYEY SAND CLAYEY SAND with GRAVEL	OH	ORGANIC elastic SILT ORGANIC elastic SILT with SAND ORGANIC elastic SILT with GRAVEL SANDY ORGANIC elastic SILT SANDY ORGANIC elastic SILT with GRAVEL GRAVELLY ORGANIC elastic SILT GRAVELLY ORGANIC elastic SILT with SAND
SC-SM	SILTY, CLAYEY SAND SILTY, CLAYEY SAND with GRAVEL		
PT	PEAT	OL/OH	ORGANIC SOIL ORGANIC SOIL with SAND ORGANIC SOIL with GRAVEL SANDY ORGANIC SOIL SANDY ORGANIC SOIL with GRAVEL GRAVELLY ORGANIC SOIL GRAVELLY ORGANIC SOIL with SAND
	COBBLES COBBLES and BOULDERS BOULDERS		

FIELD AND LABORATORY TESTING

- (C) Consolidation (ASTM D 2435)
- (CL) Collapse Potential (ASTM D 5333)
- (CP) Compaction Curve (CTM 216)
- (CR) Corrosivity Testing (CTM 643, CTM 422, CTM 417)
- (CU) Consolidated Undrained Triaxial (ASTM D 4767)
- (DS) Direct Shear (ASTM D 3080)
- (EI) Expansion Index (ASTM D 4829)
- (M) Moisture Content (ASTM D 2216)
- (OC) Organic Content-% (ASTM D 2974)
- (P) Permeability (CTM 220)
- (PA) Particle Size Analysis (ASTM D 422)
- (PI) Plasticity Index (AASHTO T 90) Liquid Limit (AASHTO T 89)
- (PL) Point Load Index (ASTM D 5731)
- (PM) Pressure Meter
- (R) R-Value (CTM 301)
- (SE) Sand Equivalent (CTM 217)
- (SG) Specific Gravity (AASHTO T 100)
- (SL) Shrinkage Limit (ASTM D 427)
- (SW) Swell Potential (ASTM D 4546)
- (UC) Unconfined Compression-Soil (ASTM D 2166) Unconfined Compression-Rock (ASTM D 2938)
- (UU) Unconsolidated Undrained Triaxial (ASTM D 2850)
- (UW) Unit Weight (ASTM D 4767)

APPARENT DENSITY OF COHESIONLESS SOILS

Description	SPT N_{60} (Blows / 12 in.)
Very Loose	0 - 5
Loose	5 - 10
Medium Dense	10 - 30
Dense	30 - 50
Very Dense	Greater than 50

MOISTURE

Description	Criteria
Dry	No discernable moisture
Moist	Moisture present, but no free water
Wet	Visible free water

PERCENT OR PROPORTION OF SOILS

Description	Criteria
Trace	Particles are present but estimated to be less than 5%
Few	5% - 10%
Little	15% - 25%
Some	30% - 45%
Mostly	50% - 100%

PARTICLE SIZE

Description		Size (in.)
Boulder		Greater than 12
Cobble		3 - 12
Gravel	Coarse	3/4 - 3
	Fine	1/5 - 3/4
Sand	Coarse	1/16 - 1/5
	Medium	1/64 - 1/16
	Fine	1/300 - 1/64
Silt and Clay		Less than 1/300

ENGINEERING SERVICES

GEOTECHNICAL SERVICES
PREPARED BY: W. Tang 12/10

STATE OF CALIFORNIA DEPARTMENT OF TRANSPORTATION

DIVISION OF ENGINEERING SERVICES STRUCTURE DESIGN
DESIGN BRANCH 12

BRIDGE NO. 52-0469
POST MILE 41.58

PEDESTRIAN RAMP 93
LOG OF TEST BORINGS 6 OF 7

GS LOTB SOIL LEGEND

ORIGINAL SCALE IN INCHES FOR REDUCED PLANS 0 1 2 3

CU 07
EA 260701

DISREGARD PRINTS BEARING EARLIER REVISION DATES 4-14-11

REVISION DATES

SHEET 49 OF 50

FILE => c-52-0469-z-lotb06.dgn

USERNAME => s124096 DATE PLOTTED => 25-JUN-2011 TIME PLOTTED => 05:54

DIST	COUNTY	ROUTE	POST MILES TOTAL PROJECT	SHEET No	TOTAL SHEETS
07	Ven,SB	101	R39.8/R43.6, 0.0/2.2	648	757

PROFESSIONAL GEOLOGIST 1-21-11

6-20-11
PLANS APPROVAL DATE

PROFESSIONAL GEOLOGIST Hector Valencia No. 7776 Exp. 2-29-12 PROFESSIONAL GEOLOGIST STATE OF CALIFORNIA

The State of California or its officers or agents shall not be responsible for the accuracy or completeness of electronic copies of this plan sheet.

This LOTB sheet was prepared in accordance with the Caltrans Soil & Rock Logging, Classification, & Presentation Manual (2010 Edition).

BENCH MARK

PMHV10254
Elev = 23.03′
Vertical Datum : NAVD88
Location : 9.29′ Rt Sta 96+57.61 ℄ Rte 101
Northing : 1958491.46
Easting : 6123907.26

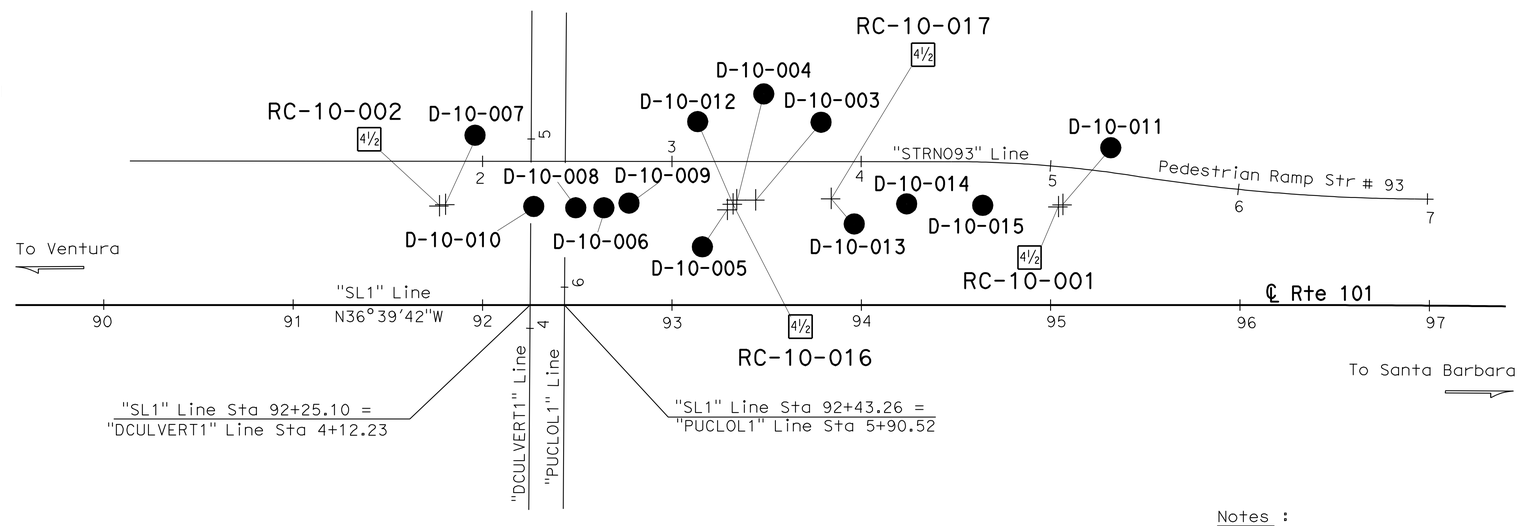

PLAN

1" = 40′

Notes :

1. Groundwater was measured in Boring RC-10-001.
2. Groundwater was encounted but not measured in Boring RC-10-002.
3. No attempt was made to measure groundwater in all other borings.
4. RC-10-16 and RC-10-17 were advanced through open holes that remained from borings D-10-12 AND D-10-13.
5. Rock Quality Designation (RQD) values with an "*" indicate that the rock from the core run was weak and not sound (D.U. Deere, 1989: GL-89-1).

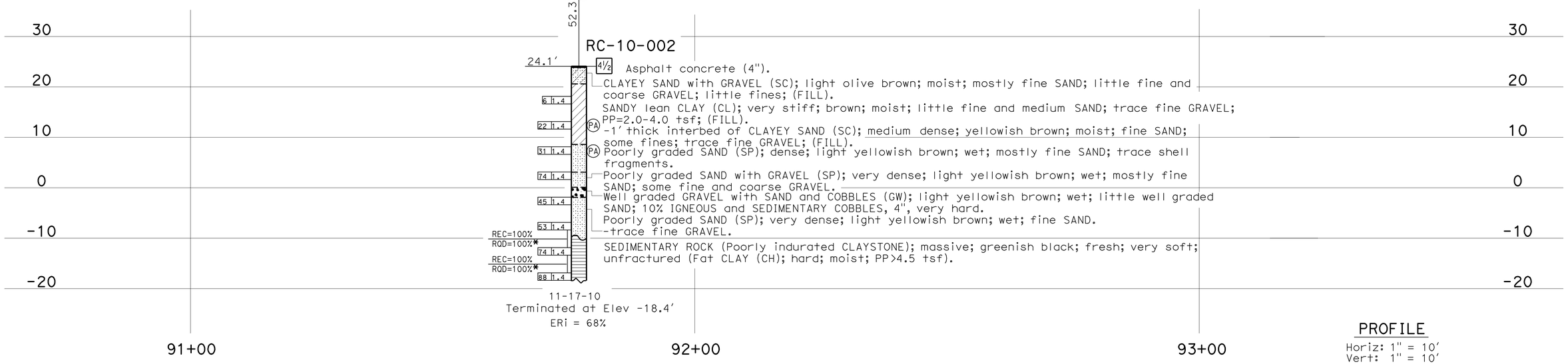

PROFILE

Horiz: 1" = 10′
Vert: 1" = 10′

ENGINEERING SERVICES	GEOTECHNICAL SERVICES	STATE OF CALIFORNIA DEPARTMENT OF TRANSPORTATION	DIVISION OF ENGINEERING SERVICES STRUCTURE DESIGN	BRIDGE NO. 52-0469	PEDESTRIAN RAMP 93
FUNCTIONAL SUPERVISOR	DRAWN BY: W. Tang 12/10	FIELD INVESTIGATION BY:	DESIGN BRANCH 12	POST MILES 41.58	LOG OF TEST BORINGS 7 OF 7
NAME: M. DeSalvatore	CHECKED BY: F. De Haro	H. Valencia / T.M. Liao			

OGS GEOLOGIST LOG OF TEST BORINGS SHEET

ORIGINAL SCALE IN INCHES FOR REDUCED PLANS 0 1 2 3

CU 07
EA 260701

DISREGARD PRINTS BEARING EARLIER REVISION DATES 01-18-11 01-20-11 01-21-11

REVISION DATES

SHEET 50 OF 50

FILE => c-52-0469-z-lotb07.dgn

USERNAME => s124936 DATE PLOTTED => 25-JUN-2011 TIME PLOTTED => 05:54

DIST	COUNTY	ROUTE	POST MILES TOTAL PROJECT	SHEET No	TOTAL SHEETS
07	Ven,SB	101	R39.8/R43.6, 0.0/2.2	649	757

Mahmoud Fustok 10-18-10
REGISTERED CIVIL ENGINEER DATE

6-20-11
PLANS APPROVAL DATE

REGISTERED PROFESSIONAL ENGINEER MAHMOUD FUSTOK No. C51502 Exp. 06-30-12 CIVIL STATE OF CALIFORNIA

The State of California or its officers or agents shall not be responsible for the accuracy or completeness of electronic copies of this plan sheet.

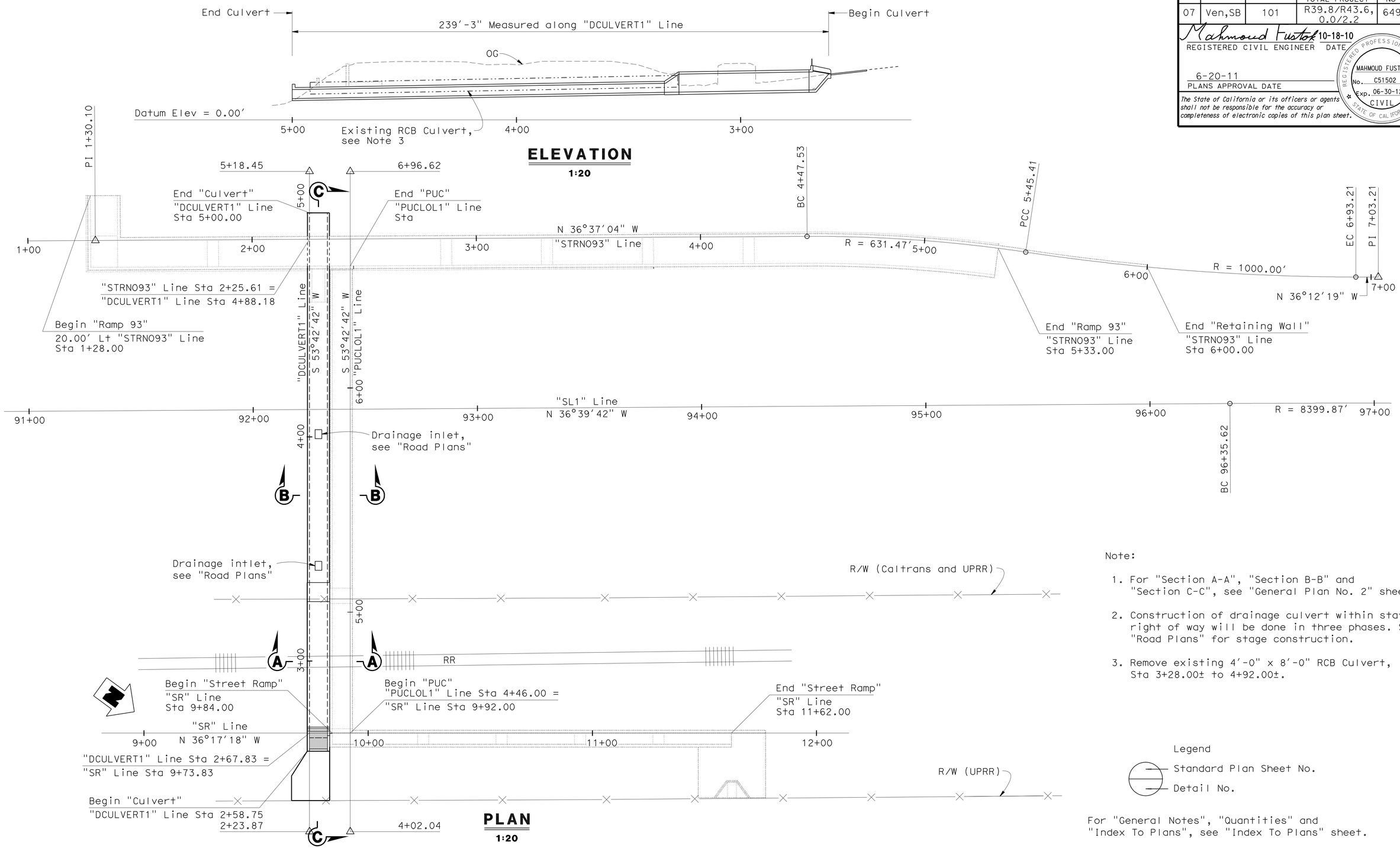

Note:

1. For "Section A-A", "Section B-B" and "Section C-C", see "General Plan No. 2" sheet
2. Construction of drainage culvert within state right of way will be done in three phases. See "Road Plans" for stage construction.
3. Remove existing 4'-0" x 8'-0" RCB Culvert, Sta 3+28.00± to 4+92.00±.

Legend

Standard Plan Sheet No.

Detail No.

For "General Notes", "Quantities" and "Index To Plans", see "Index To Plans" sheet.

Matt Holm
DESIGN ENGINEER

	BY	CHECKED			
DESIGN	M. Fustok	W. Addlespurger	LOAD FACTOR DESIGN	LIVE LOADING: HS20-44 AND ALTERNATIVE DESIGN LOAD	
DETAILS	Various	M. Fustok	LAYOUT	F. Fustok	W. Addlespurger
QUANTITIES	M. Fustok	W. Addlespurger	SPECIFICATIONS	Erwin Rufino	PLANS AND SPECS COMPARED Erwin Rufino

ORIGINAL SCALE IN INCHES FOR REDUCED PLANS 0 1 2 3

STATE OF CALIFORNIA
DEPARTMENT OF TRANSPORTATION

DIVISION OF ENGINEERING SERVICES
STRUCTURE DESIGN
DESIGN BRANCH 12

CU 07
EA 260701

BRIDGE NO. 52-0466
POST MILE 41.58

DRAINAGE CULVERT
GENERAL PLAN NO. 1

DISREGARD PRINTS BEARING EARLIER REVISION DATES

REVISION DATES: 2-1-10, 2-18-11, 2-22-11, 4-18-11, 8-30-10, 9-2-10, 10-14-10, 1-3-11, 1-28-11

SHEET 1 OF 12

STRUCTURES DESIGN GENERAL PLAN SHEET (ENGLISH) (REV.07-24-06)

FILE => d-52-0466-a-gp01.dgn

USERNAME => s124496 DATE PLOTTED => 25-JUN-2011 TIME PLOTTED => 05:54

DIST	COUNTY	ROUTE	POST MILES TOTAL PROJECT	SHEET No	TOTAL SHEETS
07	Ven,SB	101	R39.8/R43.6, 0.0/2.2	650	757

Mahmoud Fustok 10-18-10
REGISTERED CIVIL ENGINEER DATE

6-20-11
PLANS APPROVAL DATE

REGISTERED PROFESSIONAL ENGINEER MAHMOUD FUSTOK No. C51502 Exp. 06-30-12 CIVIL STATE OF CALIFORNIA

The State of California or its officers or agents shall not be responsible for the accuracy or completeness of electronic copies of this plan sheet.

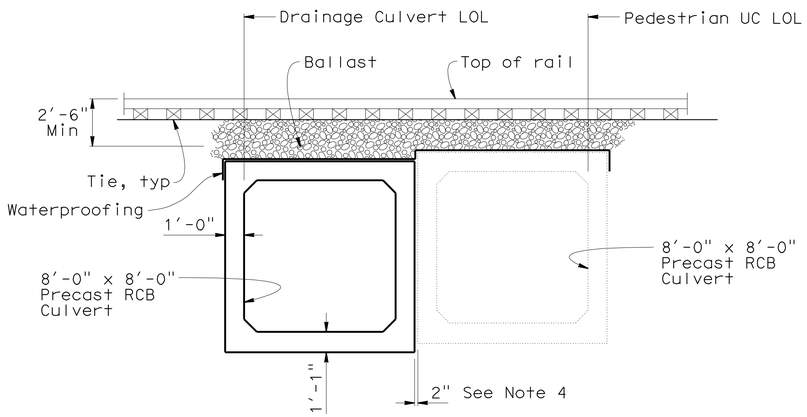

SECTION A-A

1/4" = 1'-0"

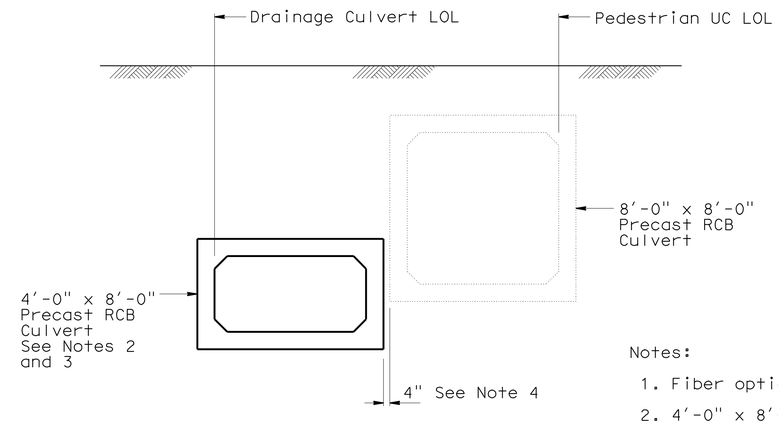

SECTION B-B

1/4" = 1'-0"

Notes:

1. Fiber optic conduits to be relocated below ground.
2. 4'-0" x 8'-0" CIP RCB, Sta 4+76.00 to Sta 5+00.00.
3. Transition from 8'-0" x 8'-0" Precast RCB to 4'-0" x 8'-0" Precast RCB Sta 3+27.50 to Sta 3+34.00.
4. Gaps between culverts to be filled with slurry cement backfill.
5. Rail, fasteners, ties and ballast to be removed and replaced per UPRR.
6. For "Detail E, see "Culvert Cross Section No. 2" sheet.
7. Remove asphalt surfacing and aggregate base.

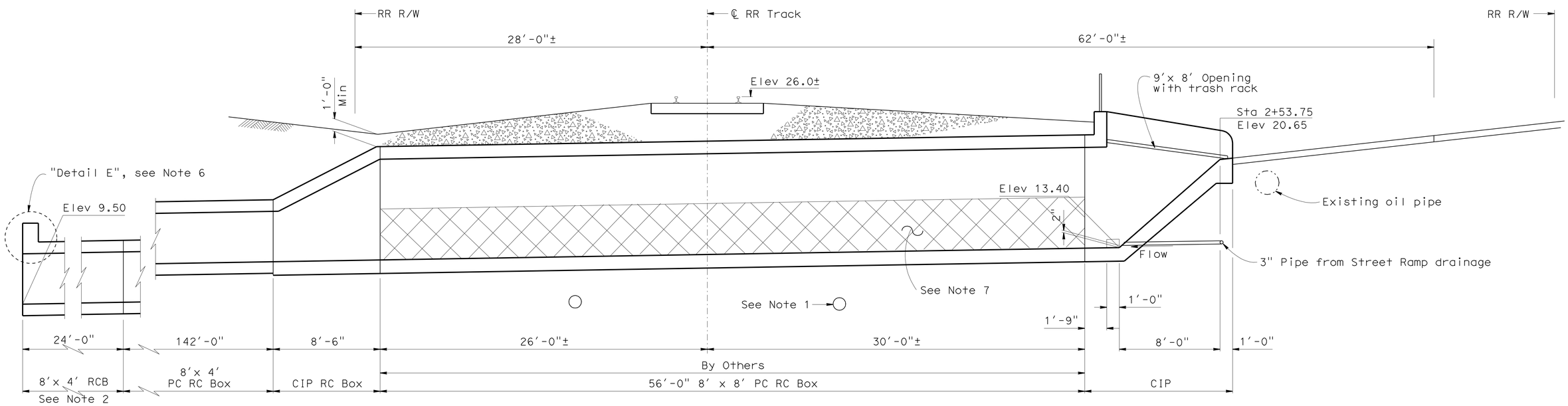

SECTION C-C

1/4" = 1'-0"

(Along drainage culvert)

Matt Holm DESIGN ENGINEER	DESIGN	BY M. Fustok	CHECKED W. Addlespurger	LOAD FACTOR DESIGN	LIVE LOADING: HS20-44 AND ALTERNATIVE DESIGN LOAD	
	DETAILS	BY Various	CHECKED M. Fustok	LAYOUT	BY F. Fustok	CHECKED W. Addlespurger
	QUANTITIES	BY M. Fustok	CHECKED W. Addlespurger	SPECIFICATIONS	BY Erwin Rufino	PLANS AND SPECS COMPARED Erwin Rufino

ORIGINAL SCALE IN INCHES FOR REDUCED PLANS 0 1 2 3

STATE OF CALIFORNIA DEPARTMENT OF TRANSPORTATION

DIVISION OF ENGINEERING SERVICES STRUCTURE DESIGN DESIGN BRANCH 12

CU 07
EA 260701

BRIDGE NO. 52-0466
POST MILE 41.58

DRAINAGE CULVERT
GENERAL PLAN NO. 2

DISREGARD PRINTS BEARING EARLIER REVISION DATES

REVISION DATES: 7-23-10 8-30-10 9-2-10 1-6-11 1-26-11 2-18-11 2-22-11 4-19-11

SHEET 2 OF 12

STRUCTURES DESIGN GENERAL PLAN SHEET (ENGLISH) (REV.07-24-06)

FILE => d-52-0466-a-gp02.dgn

USERNAME => s124496 DATE PLOTTED => 25-JUN-2011 TIME PLOTTED => 06:54

DIST	COUNTY	ROUTE	POST MILES TOTAL PROJECT	SHEET No	TOTAL SHEETS
07	Ven,SB	101	R39.8/R43.6, 0.0/2.2	651	757

Mahmoud Fustok 10-18-10
REGISTERED CIVIL ENGINEER DATE

6-20-11
PLANS APPROVAL DATE

REGISTERED PROFESSIONAL ENGINEER
MAHMOUD FUSTOK
No. C51502
Exp. 06-30-12
CIVIL
STATE OF CALIFORNIA

The State of California or its officers or agents shall not be responsible for the accuracy or completeness of electronic copies of this plan sheet.

GENERAL NOTES
LOAD FACTOR DESIGN

DESIGN: CALTRANS BRIDGE DESIGN SPECIFICATIONS - April 2000 (LFD)
(1996 AASHTO with Interims and Revisions by CALTRANS)

REINFORCED CONCRETE: f_y = 60,000 psi

f'_c = 3,600 psi

FOR CAST-IN-PLACE RCB CULVERT

DESIGN: BRIDGE DESIGN SPECIFICATIONS
(1983 AASHTO specifications with Revisions by CALTRANS)

FOR LOADS AND LOAD FACTORS SEE: D82

ALLOWABLE FOOTING PRESSURE: 9.2 kips per Sq Ft

QUANTITIES

REMOVE ASPHALT CONCRETE SURFACING AND AGGREGATE BASE	56	CY
REMOVE CULVERT	165	LF
4'X8' PRECAST REINFORCED CONCRETE BOX CULVERT	142	LF
STRUCTURAL CONCRETE, BOX CULVERT	45	CY
MINOR CONCRETE (APRON)	6	CY
BAR REINFORCING STEEL (EPOXY COATED) (BOX CULVERT)	8,670	LB
WATERPROOFING	616	SQFT
MISCELLANEOUS METAL (BRIDGE)	762	LB
CABLE RAILING	10	LF

INDEX TO PLANS

SHEET NO.	TITLE
1.	GENERAL PLAN NO. 1
2.	GENERAL PLAN NO. 2
3.	INDEX TO PLANS
4.	FOUNDATION PLAN
5.	CULVERT CROSS SECTION NO. 1
6.	CULVERT CROSS SECTION NO. 2
7.	DRAINAGE INLET DETAILS NO. 1
8.	DRAINAGE INLET DETAILS NO. 2
9.	TRASH RACK DETAILS NO. 1
10.	TRASH RACK DETAILS NO. 2
11.	MISCELLANEOUS DETAILS
12.	PRECAST RCB CULVERT - EXCAVATION AND BACKFILL DETAILS

STANDARD PLANS DATED MAY 2006

A10A	ACRONYMS AND ABBREVIATIONS (A-L)
A10B	ACRONYMS AND ABBREVIATIONS (M-Z)
D82	CAST-IN-PLACE REINFORCED CONCRETE BOX CULVERT MISCELLANEOUS DETAILS

	BY	CHECKED
DESIGN	M. Fustok	C. Hensel
DETAILS	Various	M. Fustok
QUANTITIES	C. Hensel	M. Fustok

STATE OF CALIFORNIA
DEPARTMENT OF TRANSPORTATION

DIVISION OF ENGINEERING SERVICES
STRUCTURE DESIGN
DESIGN BRANCH 12

BRIDGE NO. 52-0466
POST MILE 41.58

DRAINAGE CULVERT
INDEX TO PLANS

STRUCTURES DESIGN DETAIL SHEET (ENGLISH) (REV. 10/25/05)

ORIGINAL SCALE IN INCHES FOR REDUCED PLANS 0 1 2 3

CU 07
EA 260701

DISREGARD PRINTS BEARING EARLIER REVISION DATES

REVISION DATES: 8-12-10 8-18-10 9-2-10 2-28-11 2-28-11

SHEET 3 OF 12

FILE => d-52-0466-b-itp.dgn

USERNAME => s124936 DATE PLOTTED => 25-JUN-2011 TIME PLOTTED => 05:54

DIST	COUNTY	ROUTE	POST MILES TOTAL PROJECT	SHEET No	TOTAL SHEETS
07	Ven,SB	101	R39.8/R43.6, 0.0/2.2	652	757

Mahmoud Fustok 10-18-10
REGISTERED CIVIL ENGINEER DATE

6-20-11
PLANS APPROVAL DATE

The State of California or its officers or agents shall not be responsible for the accuracy or completeness of electronic copies of this plan sheet.

REGISTERED PROFESSIONAL ENGINEER MAHMOUD FUSTOK No. C51502 Exp. 06-30-12 CIVIL STATE OF CALIFORNIA

CURVE DATA

No.	R	Δ	T	L
Ⓐ	8399.87	4°20'15"	318.10	635.89
Ⓑ	631.47	8°52'51"	49.04	97.88
Ⓒ	1000.00	8°28'7"	74.04	147.80

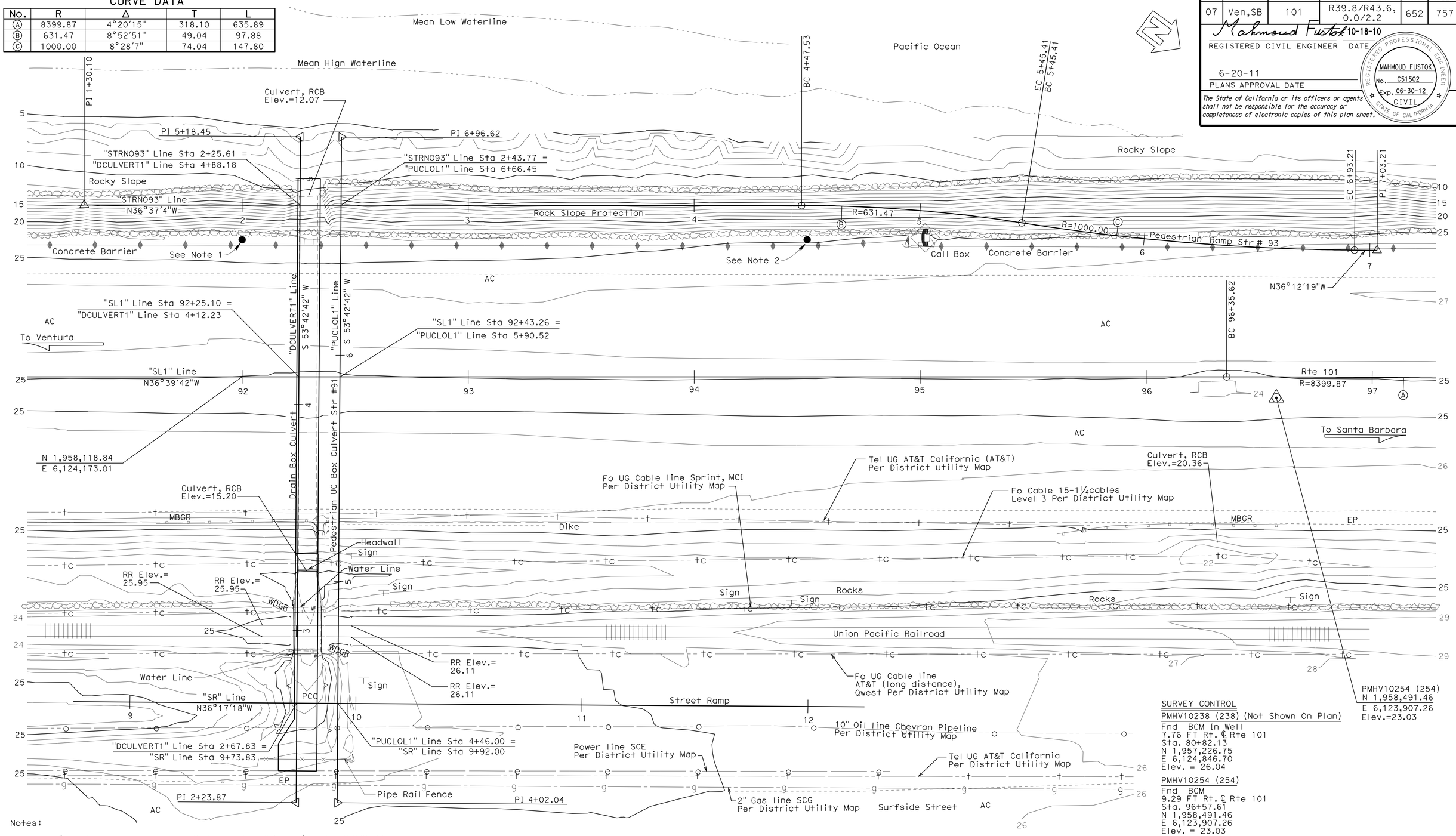

SURVEY CONTROL

PMHV10238 (238) (Not Shown On Plan)
Fnd BCM In Well
7.76 FT Rt. ℄ Rte 101
Sta. 80+82.13
N 1,957,226.75
E 6,124,846.70
Elev. = 26.04

PMHV10254 (254)
Fnd BCM
9.29 FT Rt. ℄ Rte 101
Sta. 96+57.61
N 1,958,491.46
E 6,123,907.26
Elev. = 23.03

Notes:

1. Location of bore hole, 50 to 70 feet left of SL1 Line Sta 92+00.00.
2. Location of bore hole, 50 to 70 feet left of SL1 Line Sta 94+50.00.

PRELIMINARY INVESTIGATION SECTION

SCALE	VERT.DATUM NAVD88	PHOTOGRAMMETRY AS OF: X			
1"=20'	HORZ.DATUM NAD83 (1991.35)	SURVEYED	BY District	CHECKED	BY T.Mason 06/2009
ALIGNMENT TIES Dist.Traverse Sheet		DRAFTED	BY T.Zolnikova 06/2009	CHECKED	BY S.Sou 06/2009

	BY	CHECKED
DESIGN	M. Fustok	W. Addlespurger
DETAILS	Various	M. Fustok
QUANTITIES	M. Fustok	W. Addlespurger

STATE OF CALIFORNIA
DEPARTMENT OF TRANSPORTATION

DIVISION OF ENGINEERING SERVICES
STRUCTURE DESIGN
DESIGN BRANCH 12

BRIDGE NO. 52-0469
POST MILE 41.58

DRAINAGE CULVERT FOUNDATION PLAN

STRUCTURES FOUNDATION PLAN SHEET (ENGLISH) (REV. 10/25/05)

ORIGINAL SCALE IN INCHES FOR REDUCED PLANS 0 1 2 3

CU 07
EA 260701

DISREGARD PRINTS BEARING EARLIER REVISION DATES

REVISION DATES: 07/02/09 06/02/10 07/16/10 10-13-10 1-5-11

SHEET 4 OF 12

FILE => d-52-0466-c-fp01.dgn

USERNAME => s124396 DATE PLOTTED => 25-JUN-2011 TIME PLOTTED => 05:54

DIST	COUNTY	ROUTE	POST MILES TOTAL PROJECT	SHEET No	TOTAL SHEETS
07	Ven,SB	101	R39.8/R43.6, 0.0/2.2	653	757

Mahmoud Fustok 10-18-10
REGISTERED CIVIL ENGINEER DATE

6-20-11
PLANS APPROVAL DATE

REGISTERED PROFESSIONAL ENGINEER
MAHMOUD FUSTOK
No. C51502
Exp. 06-30-12
CIVIL
STATE OF CALIFORNIA

The State of California or its officers or agents shall not be responsible for the accuracy or completeness of electronic copies of this plan sheet.

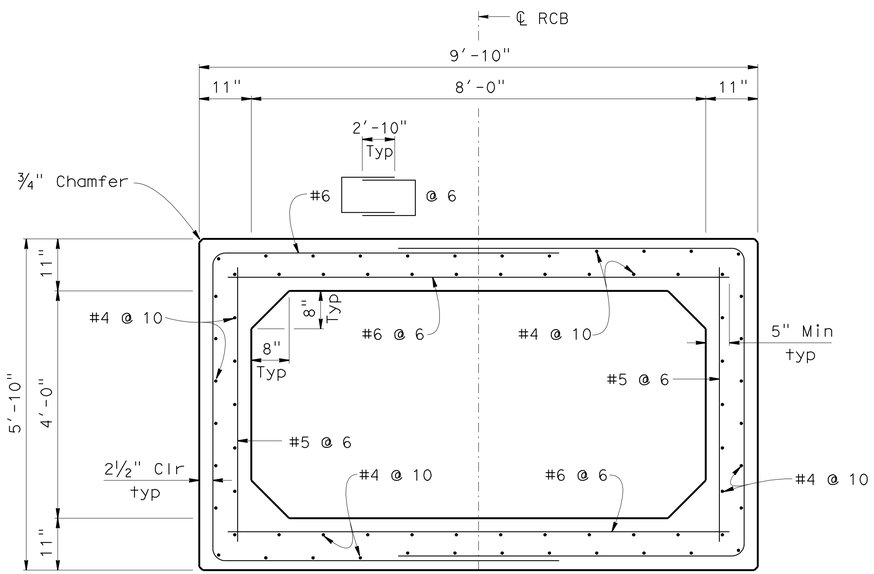

4'-0" x 8'-0" PC RCB

3/4" = 1'-0"

Sta 3+34.00 to 4+76.00

Note:

All reinforcement shall be prefabricated epoxy coated reinforcement.

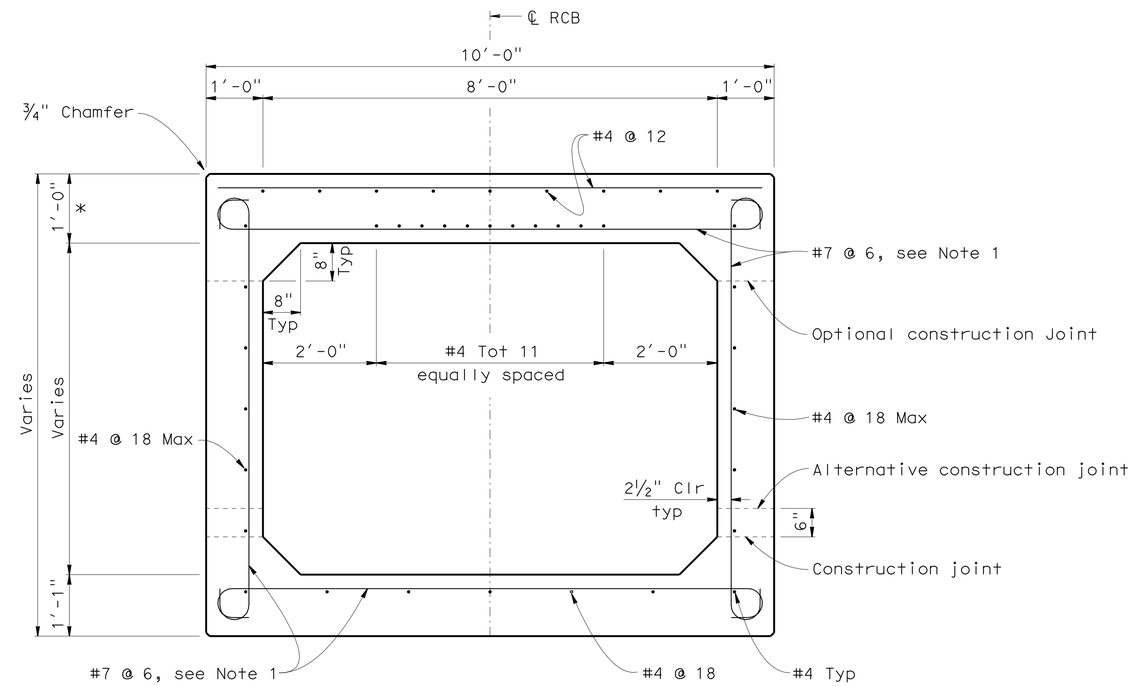

CULVERT CIP RCB

3/4" = 1'-0"

Sta 3+25.50 to 3+34.00

(Transition from 8'-0" x 8'-0" Precast RCB to 4'-0" x 8'-0" Precast RCB)

* 1'-0" Measured perpendicular to the slope.

Note:

1. It is permissible to eliminate the 180° hooks on every other bar.

DESIGN	BY W. Fustok	CHECKED W. Addlespurger	
DETAILS	BY kc	CHECKED M. Fustok	
QUANTITIES	BY W. Fustok	CHECKED W. Addlespurger	

STATE OF CALIFORNIA
DEPARTMENT OF TRANSPORTATION

DIVISION OF ENGINEERING SERVICES
STRUCTURE DESIGN
DESIGN BRANCH 12

BRIDGE NO. 52-0466
POST MILE 41.58

DRAINAGE CULVERT
CULVERT CROSS SECTION NO. 1

STRUCTURES DESIGN DETAIL SHEET (ENGLISH) (REV. 10/25/05)

ORIGINAL SCALE IN INCHES FOR REDUCED PLANS 0 1 2 3

CU 07
EA 260701

DISREGARD PRINTS BEARING EARLIER REVISION DATES

REVISION DATES: 5-26-10 7-21-10 8-24-10 1-4-11 2-18-11 4-19-11

SHEET 5 OF 12

FILE => d-52-0466-d-ccs01.dgn

USERNAME => s124196 DATE PLOTTED => 25-JUN-2011 TIME PLOTTED => 05:55

DIST	COUNTY	ROUTE	POST MILES TOTAL PROJECT	SHEET No	TOTAL SHEETS
07	Ven,SB	101	R39.8/R43.6, 0.0/2.2	654	757

Mahmoud Fustok 10-18-10
REGISTERED CIVIL ENGINEER DATE

6-20-11
PLANS APPROVAL DATE

REGISTERED PROFESSIONAL ENGINEER
MAHMOUD FUSTOK
No. C51502
Exp. 06-30-12
CIVIL
STATE OF CALIFORNIA

The State of California or its officers or agents shall not be responsible for the accuracy or completeness of electronic copies of this plan sheet.

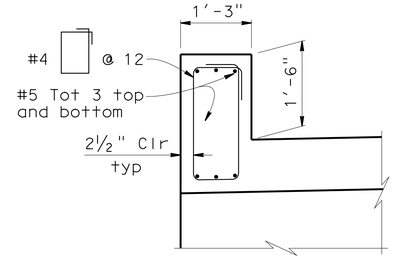

DETAIL E

3/4" = 1'-0"

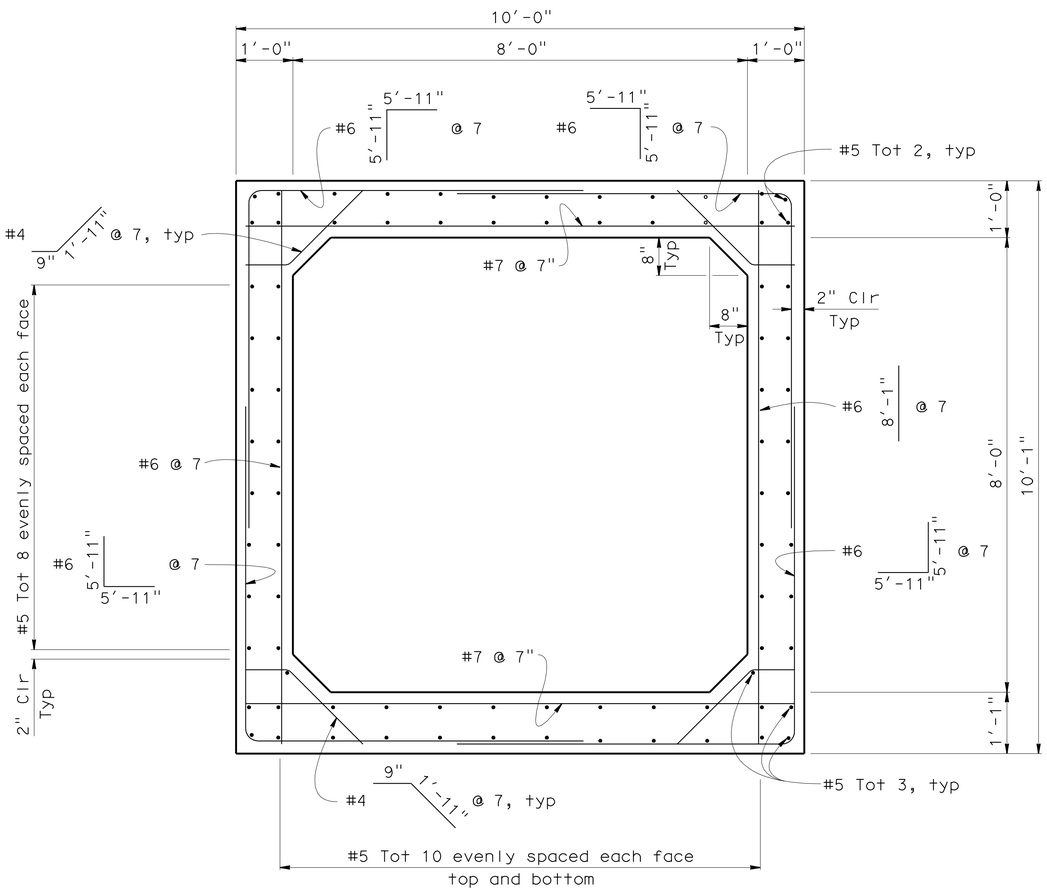

PC RCB UNDER RAILROAD SECTION

3/4" = 1'-0"

Sta 2+69.50 to 3+25.50
(By Others)

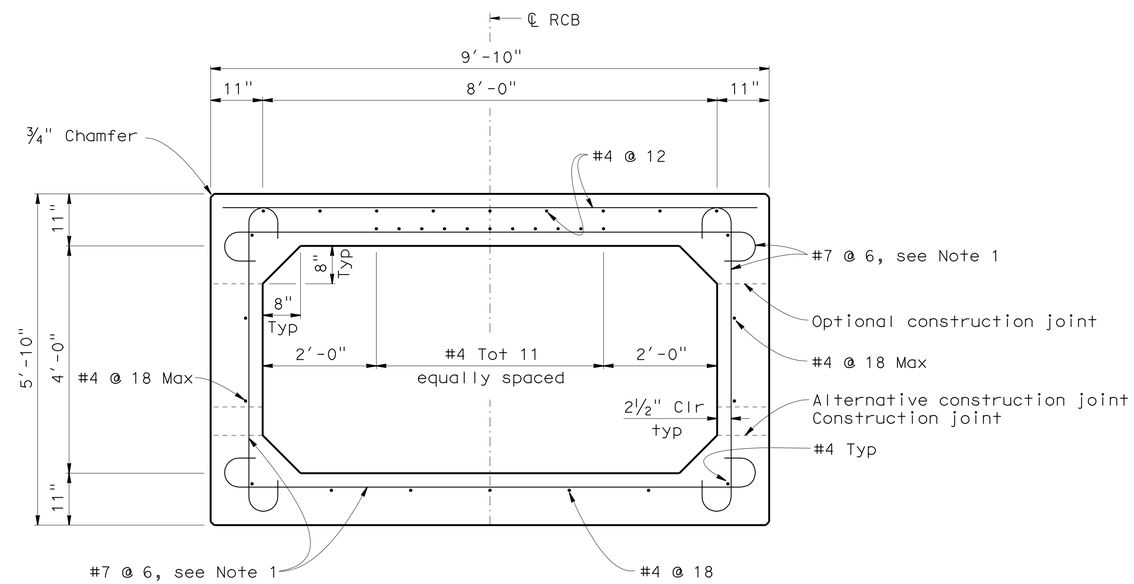

4'-0" x 8'-0" CULVERT CIP RCB

3/4" = 1'-0"

Sta 4+76.00 to 5+00.00

Note:

1. It is permissible to eliminate the 180° hooks on every other bar.
2. All reinforcement shall be prefabricated epoxy coated reinforcement.
3. For location of "Detail E", see "General Plan No. 2" sheet.

	BY	CHECKED
DESIGN	M. Fustok	W. Addlespurger
DETAILS	Various	M. Fustok
QUANTITIES	M. Fustok	W. Addlespurger

STATE OF CALIFORNIA
DEPARTMENT OF TRANSPORTATION

DIVISION OF ENGINEERING SERVICES
STRUCTURE DESIGN
DESIGN BRANCH 12

BRIDGE NO. 52-0466
POST MILE 41.58

DRAINAGE CULVERT
CULVERT CROSS SECTION NO. 2

STRUCTURES DESIGN DETAIL SHEET (ENGLISH) (REV. 10/25/05)

ORIGINAL SCALE IN INCHES FOR REDUCED PLANS 0 1 2 3

CU 07
EA 260701

DISREGARD PRINTS BEARING EARLIER REVISION DATES

REVISION DATES: 9-2-09, 7-24-10, 8-24-10, 8-30-10, 7-2-10, 1-5-11, 4-19-11

SHEET 6 OF 12

FILE => d-52-0466-d-ccs02.dgn

USERNAME => s124196 DATE PLOTTED => 25-JUN-2011 TIME PLOTTED => 05:55

DIST	COUNTY	ROUTE	POST MILES TOTAL PROJECT	SHEET No	TOTAL SHEETS
07	Ven,SB	101	R39.8/R43.6, 0.0/2.2	655	757

Mahmoud Fustok 10-18-10
REGISTERED CIVIL ENGINEER DATE

6-20-11
PLANS APPROVAL DATE

REGISTERED PROFESSIONAL ENGINEER MAHMOUD FUSTOK No. C51502 Exp. 06-30-12 CIVIL STATE OF CALIFORNIA

The State of California or its officers or agents shall not be responsible for the accuracy or completeness of electronic copies of this plan sheet.

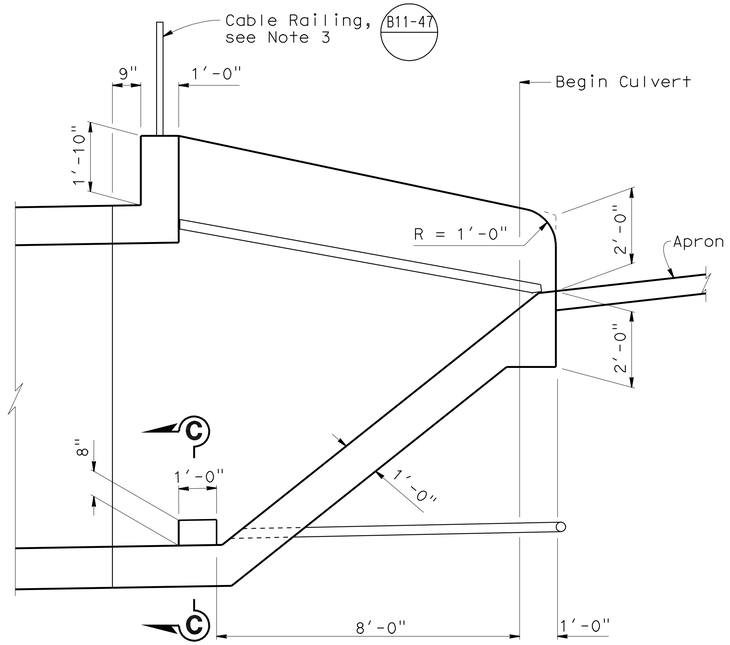

INLET ELEVATION

1/2" = 1'-0"

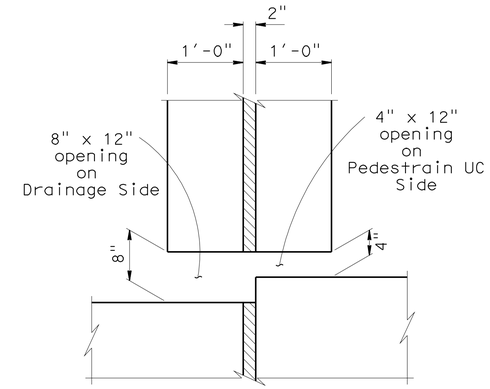

SECTION C-C

1" = 1'-0"

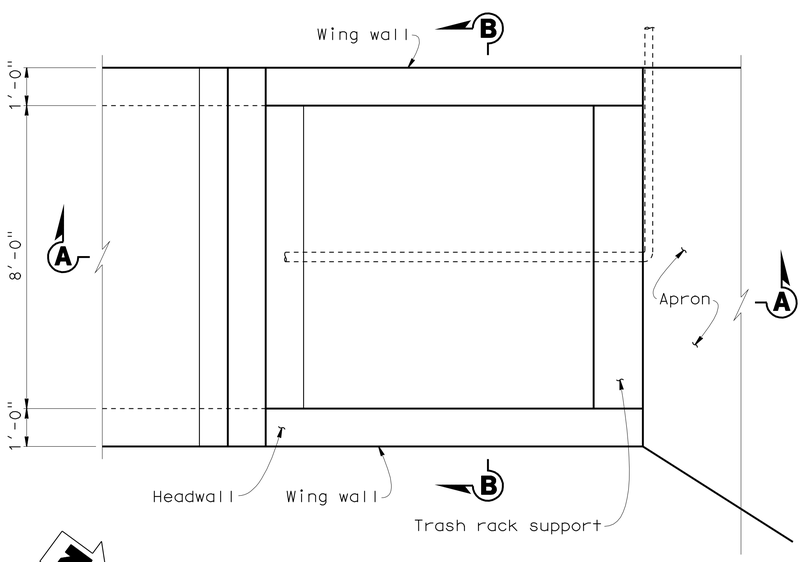

INLET PLAN

1/2" = 1'-0"

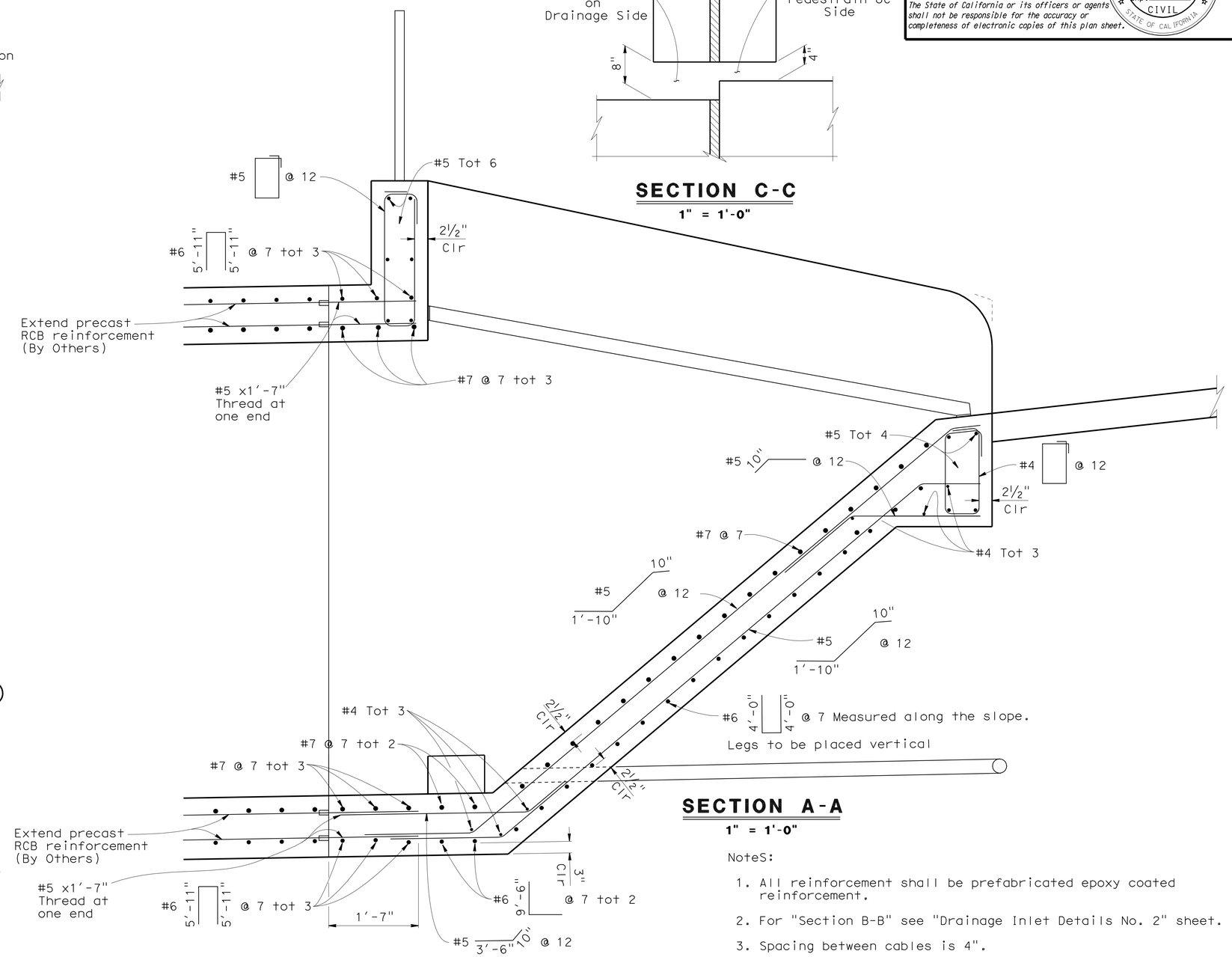

SECTION A-A

1" = 1'-0"

NoteS:

1. All reinforcement shall be prefabricated epoxy coated reinforcement.
2. For "Section B-B" see "Drainage Inlet Details No. 2" sheet.
3. Spacing between cables is 4".

	BY	CHECKED
DESIGN	M. Fustok	W. Addlespurger
DETAILS	Various	M. Fustok
QUANTITIES	M. Fustok	W. Addlespurger

STATE OF CALIFORNIA
DEPARTMENT OF TRANSPORTATION

DIVISION OF ENGINEERING SERVICES
STRUCTURE DESIGN
DESIGN BRANCH 12

BRIDGE NO. 52-0466
POST MILE 41.58

DRAINAGE CULVERT
DRAINAGE INLET DETAILS NO. 1

STRUCTURES DESIGN DETAIL SHEET (ENGLISH) (REV. 10/25/05)

ORIGINAL SCALE IN INCHES FOR REDUCED PLANS 0 1 2 3

CU 07
EA 260701

DISREGARD PRINTS BEARING EARLIER REVISION DATES

REVISION DATES: 9-2-09 7-23-10 8-3-10 8-30-10 1-5-11 1-26-11 2-18-11 2-22-11

SHEET 7 OF 12

FILE => d-52-0466-r-dit01.dgn

USERNAME => s124496 DATE PLOTTED => 25-JUN-2011 TIME PLOTTED => 08:55

DIST	COUNTY	ROUTE	POST MILES TOTAL PROJECT	SHEET No	TOTAL SHEETS
07	Ven,SB	101	R39.8/R43.6, 0.0/2.2	656	757

Mahmoud Fustok 10-18-10
REGISTERED CIVIL ENGINEER DATE

6-20-11
PLANS APPROVAL DATE

REGISTERED PROFESSIONAL ENGINEER
MAHMOUD FUSTOK
No. C51502
Exp. 06-30-12
CIVIL
STATE OF CALIFORNIA

The State of California or its officers or agents shall not be responsible for the accuracy or completeness of electronic copies of this plan sheet.

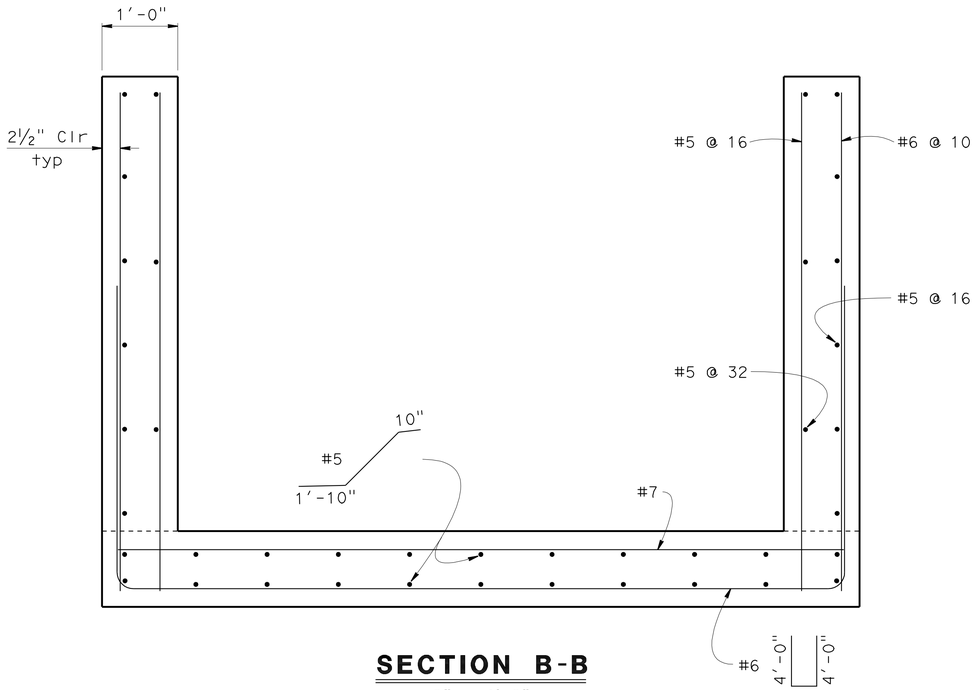

SECTION B-B

3" = 1'-0"

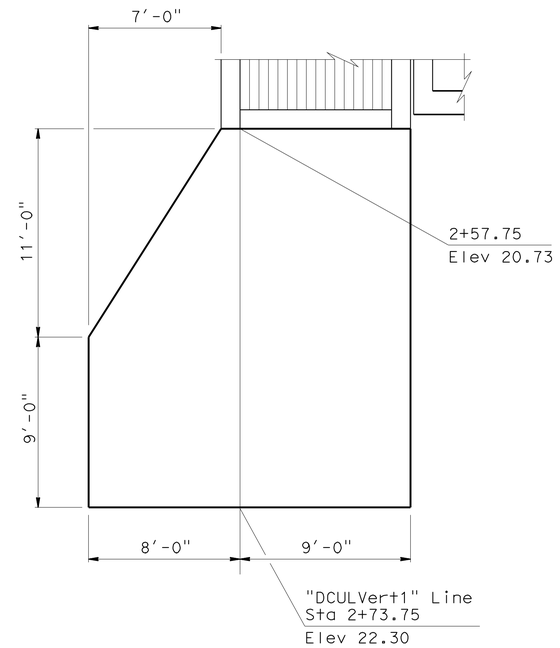

APRON LAYOUT AT DRAINAGE CULVERT INLET

1/4" = 1'-0"

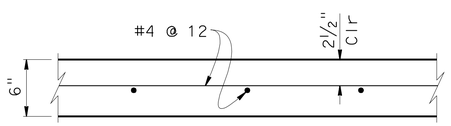

APRON AT DRAINAGE CULVERT INLET

1 1/2" = 1'-0"

Note:

All reinforcement shall be prefabricated epoxy coated reinforcement.

DESIGN	BY M. Fustok	CHECKED W. Addlespurger	
DETAILS	BY Various	CHECKED M. Fustok	
QUANTITIES	BY M. Fustok	CHECKED W. Addlespurger	

STATE OF CALIFORNIA
DEPARTMENT OF TRANSPORTATION

DIVISION OF ENGINEERING SERVICES
STRUCTURE DESIGN
DESIGN BRANCH 12

BRIDGE NO. 52-0466
POST MILE 41.58

DRAINAGE CULVERT
DRAINAGE INLET DETAILS NO. 2

STRUCTURES DESIGN DETAIL SHEET (ENGLISH) (REV. 10/25/05)

ORIGINAL SCALE IN INCHES FOR REDUCED PLANS 0 1 2 3

CU 07
EA 260701

DISREGARD PRINTS BEARING EARLIER REVISION DATES

REVISION DATES: 8-4-10, 8-30-10, 8-31-10, 9-2-10, 1-5-11, 1-28-11, 2-15-11

SHEET 8 OF 12

FILE => d-52-0466-r-dit02.dgn

USERNAME => s1244936 DATE PLOTTED => 25-JUN-2011 TIME PLOTTED => 05:55

DIST	COUNTY	ROUTE	POST MILES TOTAL PROJECT	SHEET No	TOTAL SHEETS
07	Ven,SB	101	R39.8/R43.6, 0.0/2.2	657	757

Mahmoud Fustok 10-18-10
REGISTERED CIVIL ENGINEER DATE

6-20-11
PLANS APPROVAL DATE

REGISTERED PROFESSIONAL ENGINEER MAHMOUD FUSTOK No. C51502 Exp. 06-30-12 CIVIL STATE OF CALIFORNIA

The State of California or its officers or agents shall not be responsible for the accuracy or completeness of electronic copies of this plan sheet.

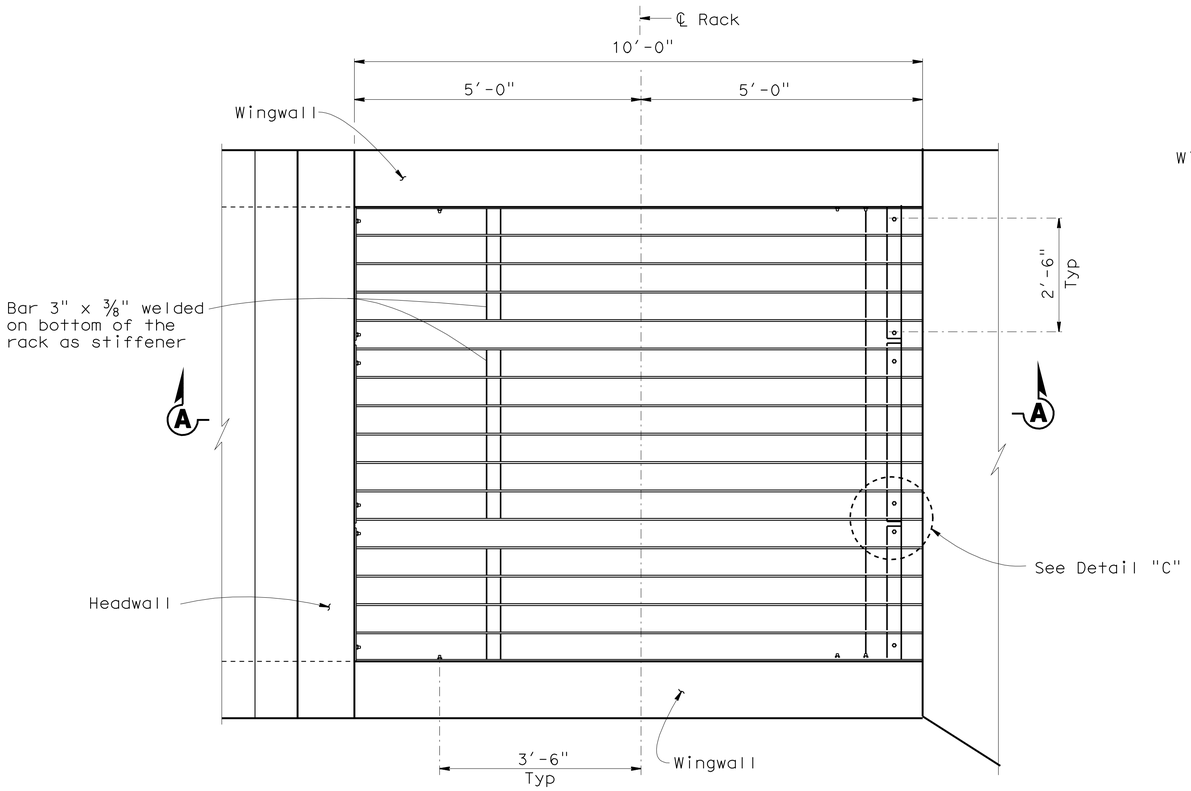

PLAN
3/4" = 1'-0"

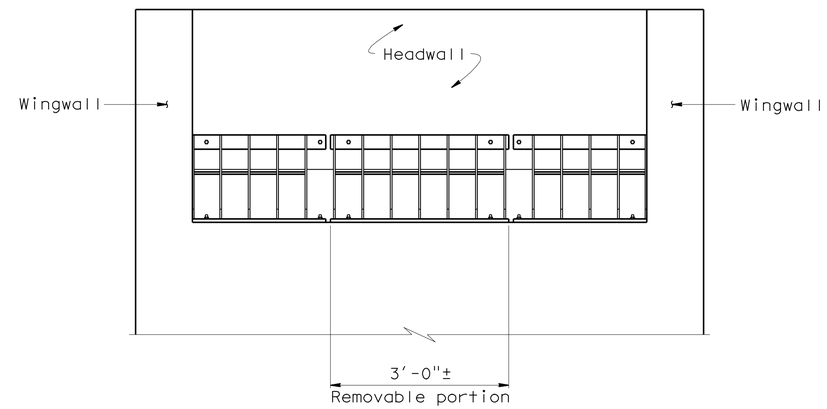

ELEVATION
3/4" = 1'-0"

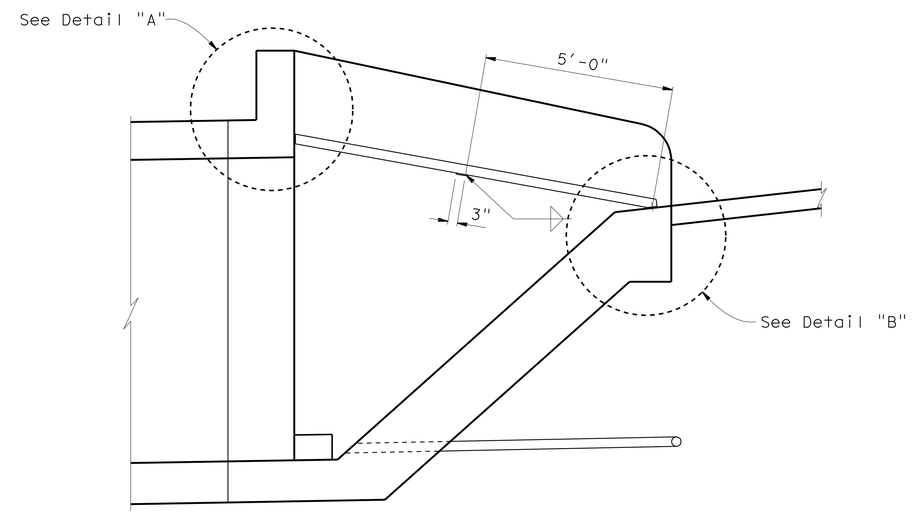

SECTION A-A
1/2" = 1'-0"

Notes:

1. Galvanize entire assembly after fabrication.
2. If field welds are necessary, use Galvicon, Galalloy or agency approved equal for coating.
3. All bolts shall be 1/2" in diameter and 7" in length. On removal portion of the rack, use 300 series stainless steel bolts and nuts. For wingwall bolts for case A, and where headwall and wingwall are existing, Hilti Kwik-Bolt or equivalent can be used.
4. For Details "A", "B" and "C", See "Trash Rack Details No. 2" sheet.

	BY	CHECKED
DESIGN	M. Fustok	W. Addlespurger
DETAILS	Various	M. Fustok
QUANTITIES	M. Fustok	W. Addlespurger

STATE OF CALIFORNIA
DEPARTMENT OF TRANSPORTATION

DIVISION OF ENGINEERING SERVICES
STRUCTURE DESIGN
DESIGN BRANCH 12

BRIDGE NO. 52-0466
POST MILE 41.58

DRAINAGE CULVERT
TRASH RACK DETAILS NO. 1

STRUCTURES DESIGN DETAIL SHEET (ENGLISH) (REV. 10/25/05)

ORIGINAL SCALE IN INCHES FOR REDUCED PLANS 0 1 2 3

CU 07
EA 260701

DISREGARD PRINTS BEARING EARLIER REVISION DATES

REVISION DATES: 9-2-09 7-21-10 1-5-11 1-26-11

SHEET 9 OF 12

FILE => d-52-0466-t-trd01.dgn

USERNAME => s124496 DATE PLOTTED => 25-JUN-2011 TIME PLOTTED => 05:55

DIST	COUNTY	ROUTE	POST MILES TOTAL PROJECT	SHEET No	TOTAL SHEETS
07	Ven,SB	101	R39.8/R43.6, 0.0/2.2	658	757

Mahmoud Fustok 10-18-10
REGISTERED CIVIL ENGINEER DATE

6-20-11
PLANS APPROVAL DATE

The State of California or its officers or agents shall not be responsible for the accuracy or completeness of electronic copies of this plan sheet.

REGISTERED PROFESSIONAL ENGINEER
MAHMOUD FUSTOK
No. C51502
Exp. 06-30-12
CIVIL
STATE OF CALIFORNIA

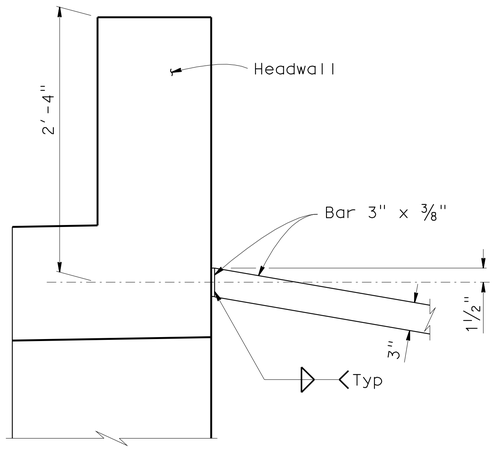

DETAIL "A"
1 1/2" = 1'-0"

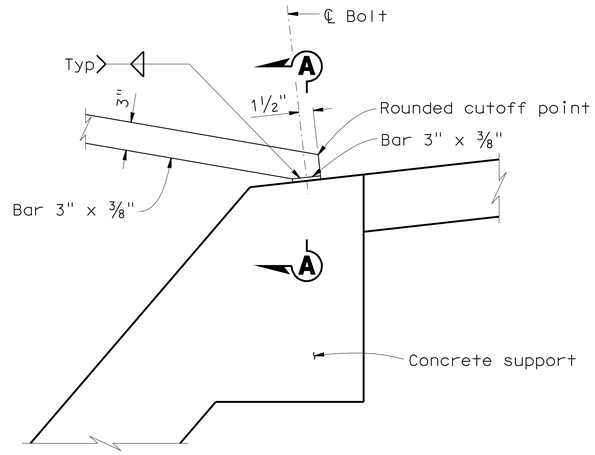

DETAIL "B"
1 1/2" = 1'-0"

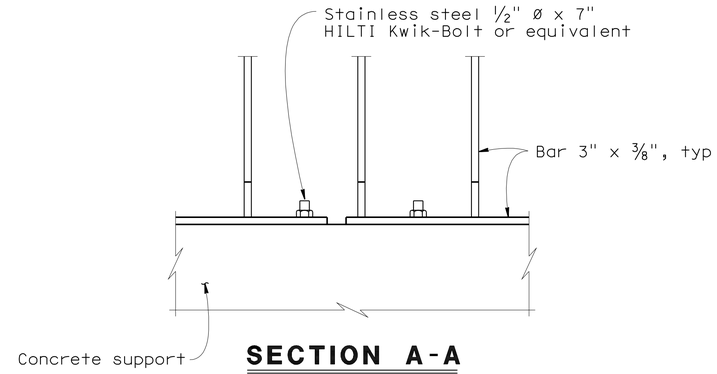

SECTION A-A
3" = 1'-0"

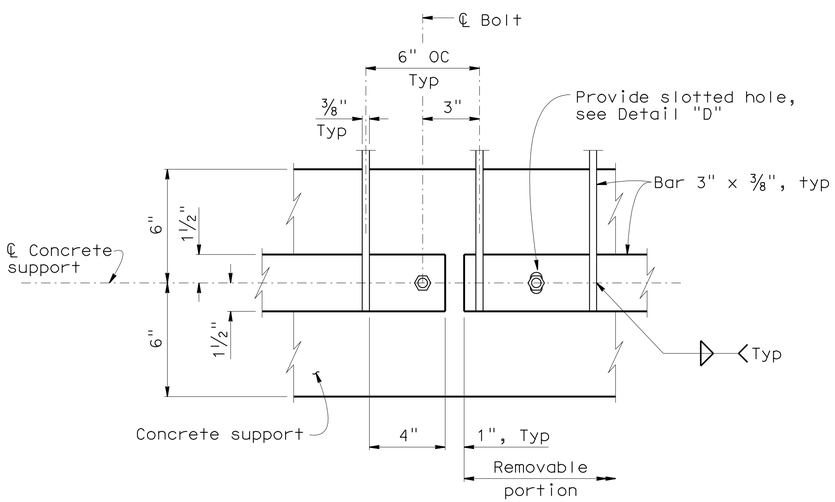

DETAIL "C"
3" = 1'-0"

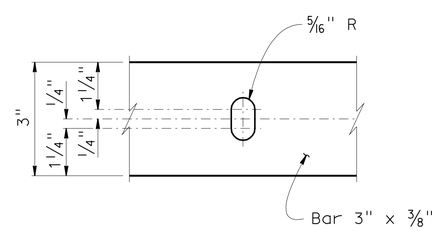

DETAIL "D"
6" = 1'-0"

Applies to the top and bottom bars
of the removable portion only

DESIGN	BY M. Fustok	CHECKED W. Addlespurger	
DETAILS	BY Various	CHECKED M. Fustok	
QUANTITIES	BY M. Fustok	CHECKED W. Addlespurger	

STATE OF CALIFORNIA
DEPARTMENT OF TRANSPORTATION

DIVISION OF ENGINEERING SERVICES
STRUCTURE DESIGN
DESIGN BRANCH 12

BRIDGE NO. 52-0466
POST MILE 41.58

DRAINAGE CULVERT
TRASH RACK DETAILS NO. 2

STRUCTURES DESIGN DETAIL SHEET (ENGLISH) (REV. 10/25/05)

ORIGINAL SCALE IN INCHES FOR REDUCED PLANS 0 1 2 3

CU 07
EA 260701

DISREGARD PRINTS BEARING EARLIER REVISION DATES

REVISION DATES: 9-2-09, 1-21-10, 1-5-11, 1-26-11, 3-1-11

SHEET 10 OF 12

FILE => d-52-0466-t-trd02.dgn

USERNAME => s124936 DATE PLOTTED => 25-JUN-2011 TIME PLOTTED => 05:55

DIST	COUNTY	ROUTE	POST MILES TOTAL PROJECT	SHEET No	TOTAL SHEETS
07	Ven,SB	101	R39.8/R43.6, 0.0/2.2	659	757

Mahmoud Fustok 10-18-10
REGISTERED CIVIL ENGINEER DATE

6-20-11
PLANS APPROVAL DATE

REGISTERED PROFESSIONAL ENGINEER MAHMOUD FUSTOK No. C51502 Exp. 06-30-12 CIVIL STATE OF CALIFORNIA

The State of California or its officers or agents shall not be responsible for the accuracy or completeness of electronic copies of this plan sheet.

DESIGN NOTES

Specifications:

Design: Bridge Design Specifications (1983 AASHTO Specifications with revisions by Caltrans). Depth of cover is assumed to be uniform.

Earth Load:

Earth pressures for two conditions:
-140 lb/cf vert, 42 lb/cf horiz
-140 lb/cf vert, 140 lb/cf horiz

Unit Stresses:

f'c = 5.0 KSI
f'y = 65.0 KSI for weld wire fabric
n = 7

Shear:

Maximum allowable shear, $v=3.5\sqrt{f'c}$, PSI

Exclusion:

Axial loading on the members has not been considered.

Earthwork:

See "Precast RCB Culvert, Excavation and Backfill Details" sheet.

GENERAL NOTES

Designation:

Standard single or multiple precast box culverts are shown on the plans as span times height with maximum cover over roof thus: 8' x 5' RCB with 10'-0" or double 10' x 5' RCB with 20'-0", followed by alternatives.

Alternatives:

Single cell:

Standard dimensions of AASHTO Material Specification 'M259' or 'M273'.

Multiple Cell:

Constructed by placing single cells adjacent to each other. Inlet and outlet ends of culvert will be rounded unless square ends are designated. Parapet will be shown unless designated in plans. Such designation may be different for inlet and outlet ends.

Limitations:

Where the overfill is less than 12", Precast RCB culverts are not to be used. Precast RCB culverts are not to be used in siphon or pressurized installations unless appropriate "watertight" jointing is provided.

Special Reinforcement Coverage:

Precast RCB culvert standard details are not to be used in a corrosive environment or where there is a severe abrasive flow condition or freeze-thaw locations.

Special design:

Required for culvert with different conditions, or loads or design bearing pressures greater than those given on these plans. Required for culverts where end details need higher skew angles or higher parapets or barrier sections.

CONSTRUCTION NOTES

Earthwork:

See "Precast RCB Culvert, Excavation and Backfill Details" sheet.

Construction Loads:

Strutting may be required near temporary ends. For construction loads on culverts, See Standard Plan D88.

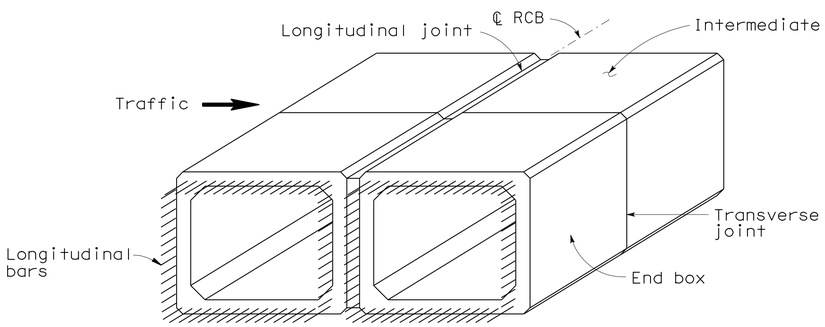

PRECAST RCB TERMINOLOGY

Note: Inner and outer reinforcement to be exposed as required to tie to cast -in-place construction. A minimum of two cross wires shall be exposed on all sides.

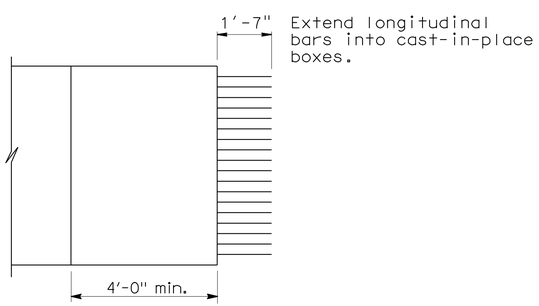

PARTIAL PLAN VIEW

For illustrative purposes only.
For correct skew direction see plans.

	BY	CHECKED
DESIGN	M. Fustok	W. Addlespurger
DETAILS	Various	M. Fustok
QUANTITIES	M. Fustok	W. Addlespurger

STATE OF CALIFORNIA
DEPARTMENT OF TRANSPORTATION

DIVISION OF ENGINEERING SERVICES
STRUCTURE DESIGN
DESIGN BRANCH 12

BRIDGE NO. 52-0466
POST MILE 41.58

DRAINAGE CULVERT
CULVERT - PRECAST RCB
MISCELLANEOUS DETAILS

STRUCTURES DESIGN DETAIL SHEET (ENGLISH) (REV. 10/25/05)

ORIGINAL SCALE IN INCHES FOR REDUCED PLANS 0 1 2 3

CU 07
EA 260701

DISREGARD PRINTS BEARING EARLIER REVISION DATES

REVISION DATES: ~~9-30-10~~ ~~9-2-10~~ 3-7-11

SHEET 11 OF 12

FILE => d-52-0466-w-misc.dgn

USERNAME => s124496 DATE PLOTTED => 25-JUN-2011 TIME PLOTTED => 05:55

DIST.	COUNTY	ROUTE	POST MILES TOTAL PROJECT	SHEET NO.	TOTAL SHEETS
07	Ven,SB	101	R39.8/R43.6, 0.0/2.2	660	757

Mahmoud Fustok 10-18-10

REGISTERED ENGINEER - CIVIL

6-20-11

PLANS APPROVAL DATE

REGISTERED PROFESSIONAL ENGINEER MAHMOUD FUSTOK No. C51502 Exp. 06-30-12 CIVIL STATE OF CALIFORNIA

The State of California or its officers or agents shall not be responsible for the accuracy or completeness of electronic copies of this plan sheet.

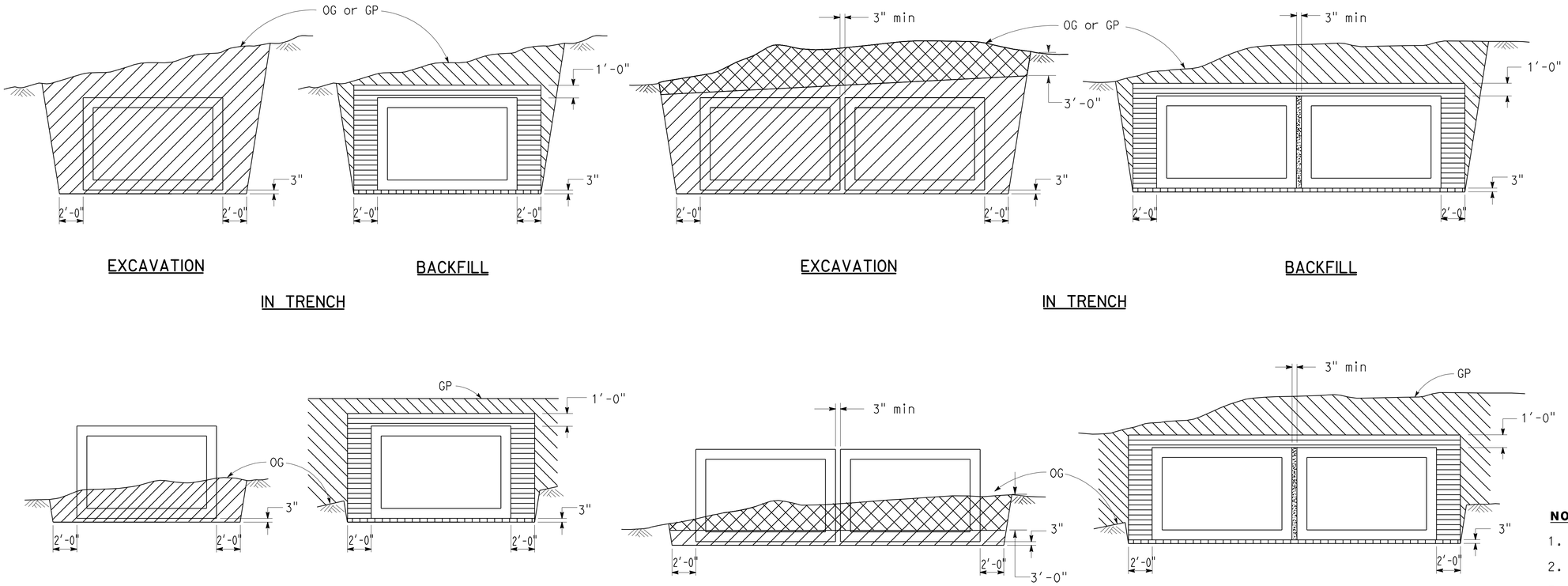

FILL HEIGHT GREATER THAN 2'-0"

LEGEND:

- Structure excavation (Culvert)
- Structure backfill (Culvert) 95% relative compaction
- Roadway embankment
- Slurry cement backfill
- Sand bedding (Culvert)
- Roadway structural section
- Original ground
- Structure Excavation (Petroleum Hydrocarbon) Sta 2+57.75 to 3+27.50

NOTES:

1. Slope or shore excavation sides as necessary.
2. Dimensions shown are minimum.
3. Method 2 and 3 for single or multiple boxes requires an approved external sealing band. See "Precast RCB Culvert, Reinforcement and Design Tables" sheet.
4. Construction of Roadway Structural Section in Method 2 or Method 3 shall not disturb the external sealing band installation.

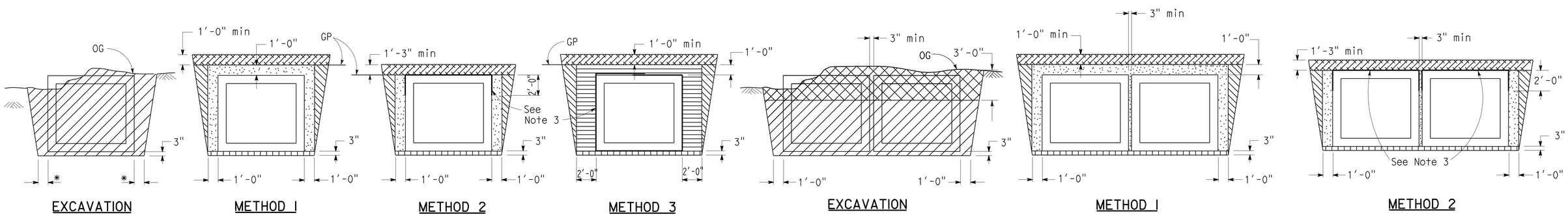

FILL HEIGHT 2'-0" OR LESS

* 1'-0" Where Method 1 or 2 Backfill is used.
2'-0" Where Method 3 Backfill is used.

STANDARD DRAWING		
FILE NO. xs17-040e	APPROVED BY D FORESTER (RESPONSIBLE TECHNICAL SPECIALIST)	RELEASED BY ROBERTO LACALLE (RESPONSIBLE OFFICE CHIEF)
	APPROVAL DATE 5-1-08	RELEASE DATE 5-1-08

STATE OF CALIFORNIA DEPARTMENT OF TRANSPORTATION

DIVISION OF ENGINEERING SERVICES

BRIDGE NO. 52-0466

POST MILE 41.58

DRAINAGE CULVERT

PRECAST RCB CULVERT EXCAVATION AND BACKFILL DETAILS

DS OSD 2147A (ENGLISH STANDARD DRAWING "XS" BORDER REV. 01/11/08)

ORIGINAL SCALE IN INCHES FOR REDUCED PLANS 0 1 2 3

CU
EA

DISREGARD PRINTS BEARING EARLIER REVISION DATES 8-30-10

REVISION DATES (PRELIMINARY STAGE ONLY)

SHEET 12 OF 12

USERNAME => s124496

d-52-0466-x-dbd.dgn

DATE PLOTTED => 25-JUN-2011 TIME PLOTTED => 05:55

DIST	COUNTY	ROUTE	POST MILES TOTAL PROJECT	SHEET No	TOTAL SHEETS
07	Ven,SB	101	R39.8/R43.6, 0.0/2.2	661	757

REGISTERED CIVIL ENGINEER 10-18-10 DATE

6-20-11
PLANS APPROVAL DATE

REGISTERED PROFESSIONAL ENGINEER DOUGLAS C. MENZMER No. C63498 Exp. 09-30-12 CIVIL STATE OF CALIFORNIA

The State of California or its officers or agents shall not be responsible for the accuracy or completeness of electronic copies of this plan sheet.

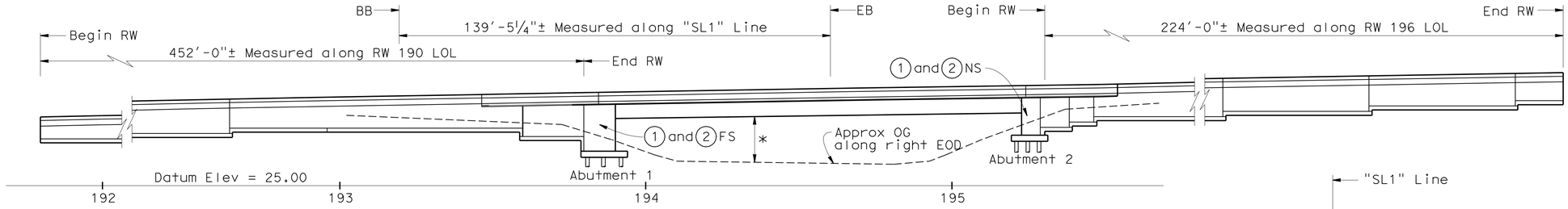

* 15'-6"± minimum vertical clearance

ELEVATION

1" = 20'

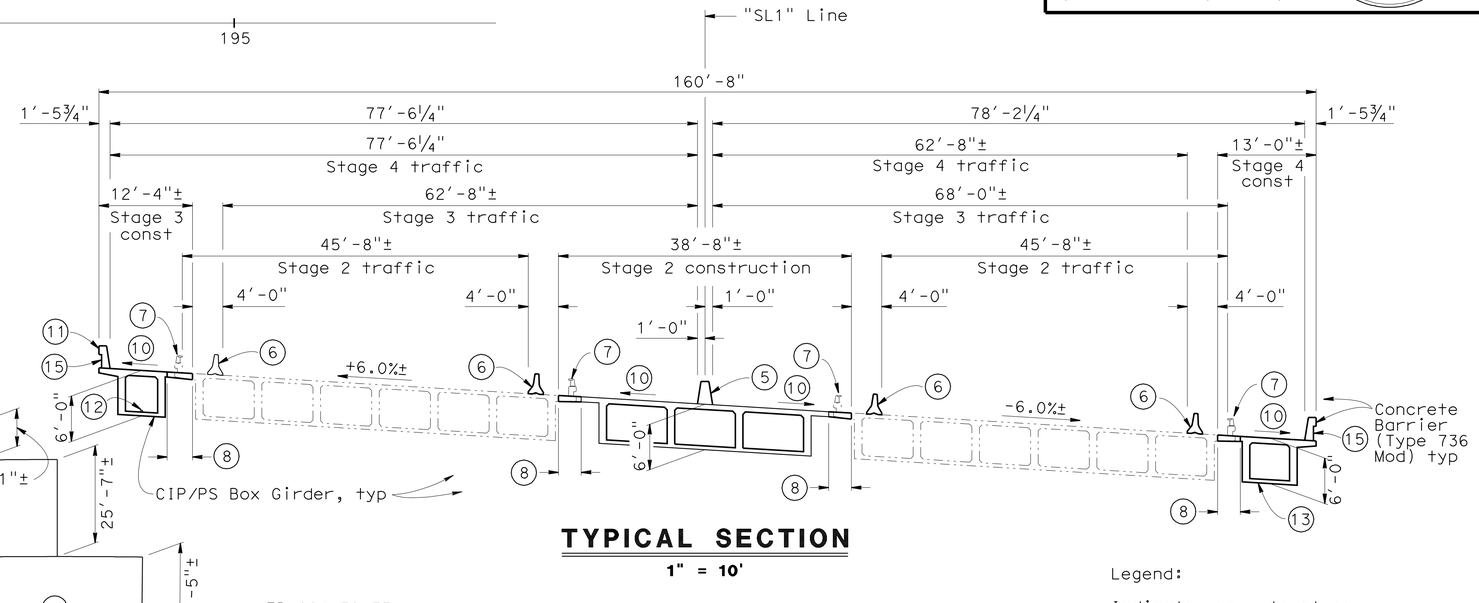

TYPICAL SECTION

1" = 10'

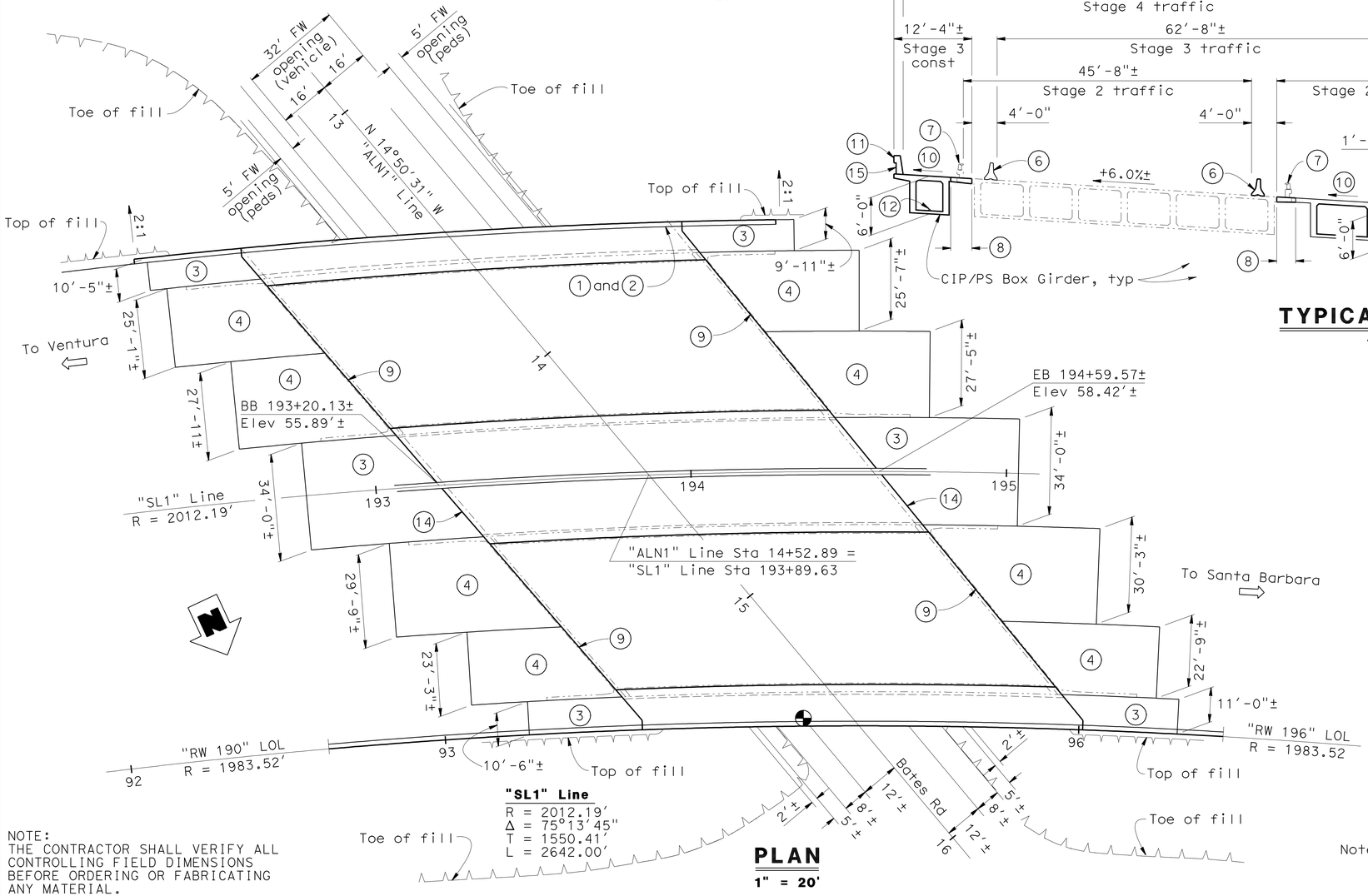

"SL1" Line
R = 2012.19'
Δ = 75°13'45"
T = 1550.41'
L = 2642.00'

PLAN

1" = 20'

Legend:

——— Indicates new structure

-·-·- Indicates existing structure

⊕ Indicates location of minimum vertical clearance

1. Paint "Bates Rd UC"
2. Paint "Br. No. 52-0279"
3. Structure Approach Type N(30D)
4. Structure Approach Type R(30D)
5. Concrete Barrier Type 60A (Mod) (3" concrete clear cover, see "Road Plans")
6. Temporary Concrete Barrier Type K, see "Road Plans"
7. Remove existing overhang and barrier (salvage metal bridge railing)
8. Closure pour
9. Paving notch extension
10. Match existing grade and cross slope
11. 2" Sprinkler control conduit
12. Water supply line (NPS 3 galvanized pipe)
13. Build on falsework elevated 2'-0". Lower into final position after prestressing is complete.
14. Joint Seal (MR = 1")
15. Architectural treatment - exterior face of Concrete Barrier Type 736 (Mod)

Note: For "Index To Plans", "Standard Plans", "Quantities" and "Pile Data Table", see "Index To Plans" sheet. For "General Notes" see "General Notes" sheet.

NOTE:
THE CONTRACTOR SHALL VERIFY ALL CONTROLLING FIELD DIMENSIONS BEFORE ORDERING OR FABRICATING ANY MATERIAL.

MATT HOLM
DESIGN ENGINEER

	BY	CHECKED			
DESIGN	D. Menzmer	C. Hensel	LOAD & RESISTANCE FACTOR DESIGN	LIVE LOADING: HL93 W/"LOW-BOY"; PERMIT DESIGN VEHICLE	
DETAILS	kc	D. Menzmer	LAYOUT	D. Menzmer	C. Hensel
QUANTITIES	C. Hensel	D. Menzmer	SPECIFICATIONS	Erwin Rufino	PLANS AND SPECS COMPARED Erwin Rufino

ORIGINAL SCALE IN INCHES FOR REDUCED PLANS 0 1 2 3

STATE OF CALIFORNIA
DEPARTMENT OF TRANSPORTATION

DIVISION OF ENGINEERING SERVICES
STRUCTURE DESIGN
DESIGN BRANCH 12

CU 07
EA 260701

BRIDGE NO. 52-0279
POST MILE 43.6

BATES ROAD UNDERCROSSING (WIDEN)
GENERAL PLAN

DISREGARD PRINTS BEARING EARLIER REVISION DATES

REVISION DATES: ~~9-28-10~~ ~~2-1-11~~ 2-4-11

SHEET 1 OF 37

STRUCTURES DESIGN GENERAL PLAN SHEET (ENGLISH) (REV.07-24-06)

FILE => e-52-0279-a-gp.dgn

USERNAME => s8124196 DATE PLOTTED => 25-JUN-2011 TIME PLOTTED => 08:43

DIST	COUNTY	ROUTE	POST MILES TOTAL PROJECT	SHEET No	TOTAL SHEETS
07	Ven,SB	101	R39.8/R43.6, 0.0/2.2	662	757

REGISTERED CIVIL ENGINEER 10-18-10 DATE

6-20-11
PLANS APPROVAL DATE

REGISTERED PROFESSIONAL ENGINEER DOUGLAS C. MENZMER No. C63498 Exp. 09-30-12 CIVIL STATE OF CALIFORNIA

The State of California or its officers or agents shall not be responsible for the accuracy or completeness of electronic copies of this plan sheet.

PILE DATA TABLE

Support Location	Pile Type Alt "x" or "y"	Cut-off Elevation (ft)	Nominal Resistance Per Pile (kips)		Design Tip Elevation (ft)	Specified Tip Elevation (ft)	Nominal Driving Resistance Required (kips)
			Compression	Tension			
Abutment 1 Left	Class 200	42.55	310	0	-5	-5	310
Abutment 1 Median	Class 200	38.75	390	0	-5	-5	390
Abutment 1 Right	Class 200	35.75	360	0	-7	-7	360
Abutment 2 Left	Class 200	41.75	320	0	-5	-5	320
Abutment 2 Median	Class 200	42.25	390	0	-5	-5	390
Abutment 2 Right	Class 200	39.25	340	0	-5	-5	340

QUANTITIES

BRIDGE REMOVAL (PORTION)	LUMP	SUM
STRUCTURE EXCAVATION (BRIDGE)	487	CY
STRUCTURE EXCAVATION (RETAINING WALL)	1,065	CY
STRUCTURE BACKFILL (BRIDGE)	360	CY
STRUCTURE BACKFILL (RETAINING WALL)	670	CY
NPS 3 SUPPLY LINE (BRIDGE)	216	LF
AGGREGATE BASE (APPROACH SLAB)	32	CY
FURNISH PILE (CLASS 200)	1,996	LF
DRIVE PILING (CLASS 200)	44	EA
PRESTRESSING CAST-IN-PLACE CONCRETE	LUMP	SUM
STRUCTURAL CONCRETE, BRIDGE FOOTING	90	CY
STRUCTURAL CONCRETE, BRIDGE	890	CY
STRUCTURAL CONCRETE, RETAINING WALL	410	CY
STRUCTURAL CONCRETE, APPROACH SLAB (TYPE N)	162	CY
STRUCTURAL CONCRETE, APPROACH SLAB (TYPE R)	318	CY
PAVING NOTCH EXTENSION	189	CF
JACKING SUPERSTRUCTURE	LUMP	SUM
JOINT SEAL (MR 1")	410	LF
BAR REINFORCING STEEL (BRIDGE)	249,400	LB
BAR REINFORCING STEEL (RETAINING WALL)	25,120	LB
CONCRETE BARRIER (TYPE 60A)	226	LF
CONCRETE BARRIER (TYPE 736 MODIFIED)	410	LF
CONCRETE BARRIER (TYPE 736A MODIFIED)	615	LF

LEGEND

Standard Plan Sheet No.

Detail No.

STANDARD PLANS DATED MAY 2006

A10A	ACRONYMS AND ABBREVIATIONS (SHEET 1 OF 2)
A10B	ACRONYMS AND ABBREVIATIONS (SHEET 2 OF 2)
A62C	LIMITS OF PAYMENT FOR EXCAVATION AND BACKFILL BRIDGE
RSP A76A	CONCRETE BARRIER TYPE 60
B0-1	BRIDGE DETAILS
B0-3	BRIDGE DETAILS
B0-5	BRIDGE DETAILS
B0-13	BRIDGE DETAILS
RSP B2-8	PILE DETAILS CLASS 200
B3-1	RETAINING WALL TYPE 1 - H = 4' THROUGH 30'
B3-8	RETAINING WALL DETAILS No. 1
B3-9	RETAINING WALL DETAILS No. 2
RSP B6-21	JOINT SEAL (MAXIMUM MOVEMENT RATING = 2")
B7-1	BOX GIRDER DETAILS
B8-5	CAST-IN-PLACE PRESTRESSED GIRDER DETAILS
B11-56	CONCRETE BARRIER TYPE 736
B14-3	COMMUNICATION AND SPRINKLER CONTROL CONDUITS (CONDUIT LESS THAN 4")
B14-4	WATER SUPPLY LINE (BRIDGE) (PIPE SIZES LESS THAN 4")
B14-5	WATER SUPPLY LINE (DETAILS) (PIPE SIZES LESS THAN 4")

INDEX TO PLANS

SHEET No.	TITLE
1.	GENERAL PLAN
2.	INDEX TO PLANS
3.	GENERAL NOTES
4.	FOUNDATION PLAN No. 1
5.	FOUNDATION PLAN No. 2
6.	FOUNDATION PLAN No. 3
7.	ABUTMENT 1 LAYOUT LEFT WIDENING
8.	ABUTMENT 1 LAYOUT MEDIAN WIDENING
9.	ABUTMENT 1 LAYOUT RIGHT WIDENING
10.	ABUTMENT 2 LAYOUT LEFT WIDENING
11.	ABUTMENT 2 LAYOUT MEDIAN WIDENING
12.	ABUTMENT 2 LAYOUT RIGHT WIDENING
13.	ABUTMENT DETAILS No. 1
14.	ABUTMENT DETAILS No. 2
15.	ABUTMENT DETAILS No. 3
16.	ABUTMENT DETAILS No. 4
17.	RETAINING WALL 190 LAYOUT No. 1
18.	RETAINING WALL 190 LAYOUT No. 2
19.	RETAINING WALL 196 LAYOUT
20.	RETAINING WALL DETAILS
21.	TYPICAL SECTION No. 1
22.	TYPICAL SECTION No. 2
23.	GIRDER LAYOUT LEFT WIDENING
24.	GIRDER LAYOUT MEDIAN WIDENING
25.	GIRDER LAYOUT RIGHT WIDENING
26.	GIRDER REINFORCEMENT No. 1
27.	GIRDER REINFORCEMENT No. 2
28.	BRIDGE REMOVAL (PORTION) DETAILS
29.	STRUCTURE APPROACH TYPE R(30D)
30.	STRUCTURE APPROACH TYPE N(30D)
31.	STRUCTURE APPROACH DRAINAGE DETAILS
32.	ARCHITECTURAL TREATMENT DETAILS
33.	LOG OF TEST BORINGS 1 OF 5
34.	LOG OF TEST BORINGS 2 OF 5
35.	LOG OF TEST BORINGS 3 OF 5
36.	LOG OF TEST BORINGS 4 OF 5
37.	LOG OF TEST BORINGS 5 OF 5

DIST	COUNTY	ROUTE	POST MILES TOTAL PROJECT	SHEET No	TOTAL SHEETS
07	Ven,SB	101	R39.8/R43.6, 0.0/2.2	663	757

REGISTERED CIVIL ENGINEER 10-18-10 DATE

6-20-11
PLANS APPROVAL DATE

REGISTERED PROFESSIONAL ENGINEER DOUGLAS C. MENZMER No. C63498 Exp. 09-30-12 CIVIL STATE OF CALIFORNIA

The State of California or its officers or agents shall not be responsible for the accuracy or completeness of electronic copies of this plan sheet.

GENERAL NOTES
LOAD AND RESISTANCE FACTOR DESIGN

DESIGN:
AASHTO LRFD Bridge Design Specifications, 4th edition with California Amendments.

SEISMIC DESIGN:
Caltrans Seismic Design Criteria (SDC), Version 1.4 dated June 2006.

DEAD LOAD:
Includes 35 psf for future wearing surface.

LIVE LOADING:
HL93 and permit design load.

SEISMIC LOADING:
See "Site-Specific Acceleration Response Spectra Curve".

REINFORCED CONCRETE:
f_y = 60 ksi

f'_c = 3.6 ksi

n = 8

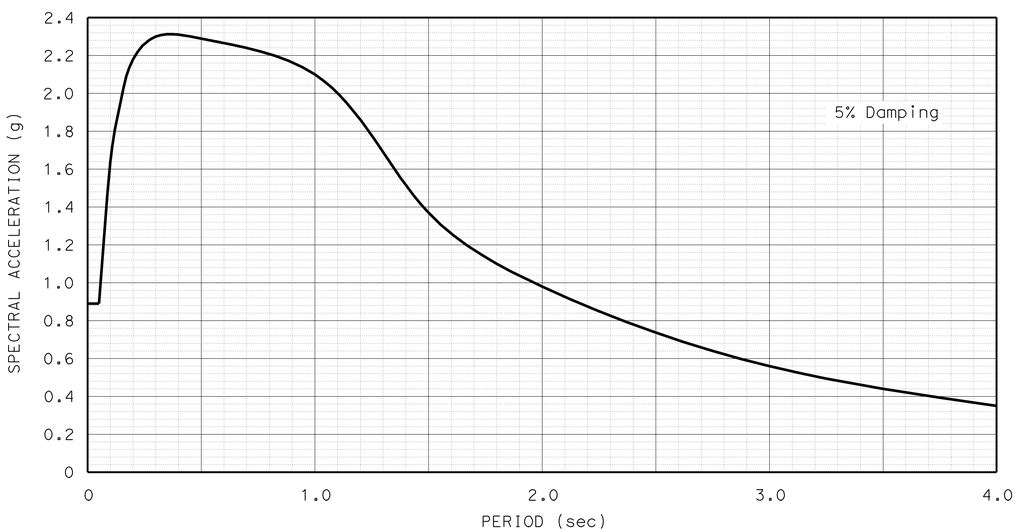

SITE SPECIFIC ACCELERATION RESPONSE SPECTRA CURVE

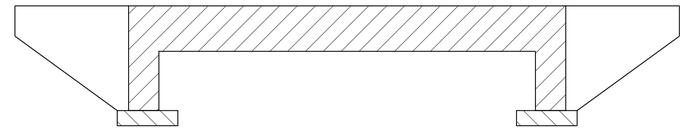

CONCRETE STRENGTH AND TYPE LIMITS

No scale

Structural Concrete, Bridge (6.0 ksi @ 28 days)

Structural Concrete, Bridge

Structural Concrete, Bridge Footing

Falsework Release

Alternative 1:
Falsework shall be released as soon as permitted by the specifications. Closure pour shall not be placed sooner than 60 days after the falsework has been released.

Alternative 2:
Falsework shall not be released less than 28 days after the last concrete has been placed. Closure pour shall not be placed sooner than 14 days after the falsework has been released.

When Falsework Release Alternative 2 is used, camber values are 0.75 times those shown.

	BY	CHECKED
DESIGN	D. Menzmer	C. Hensel
DETAILS	kc	D. Menzmer
QUANTITIES	C. Hensel	D. Menzmer

STATE OF CALIFORNIA
DEPARTMENT OF TRANSPORTATION

DIVISION OF ENGINEERING SERVICES
STRUCTURE DESIGN
DESIGN BRANCH 12

BRIDGE NO. 52-0279
POST MILE 43.6

BATES ROAD UNDERCROSSING (WIDEN)
GENERAL NOTES

STRUCTURES DESIGN DETAIL SHEET (ENGLISH) (REV. 10/25/05)

ORIGINAL SCALE IN INCHES FOR REDUCED PLANS 0 1 2 3

CU 07
EA 260701

DISREGARD PRINTS BEARING EARLIER REVISION DATES 10-12-10

REVISION DATES

SHEET 3 OF 37

FILE => e-52-0279-b-xgn.dgn

USERNAME => s124496 DATE PLOTTED => 25-JUN-2011 TIME PLOTTED => 08:49

DIST	COUNTY	ROUTE	POST MILES TOTAL PROJECT	SHEET No	TOTAL SHEETS
07	Ven,SB	101	R39.8/R43.6, 0.0/2.2	664	757

REGISTERED CIVIL ENGINEER — DATE: 10-18-10

6-20-11
PLANS APPROVAL DATE

The State of California or its officers or agents shall not be responsible for the accuracy or completeness of electronic copies of this plan sheet.

REGISTERED PROFESSIONAL ENGINEER — DOUGLAS C. MENZMER — No. C63498 — Exp. 09-30-12 — CIVIL — STATE OF CALIFORNIA

CURVE DATA

No.	R	Δ	T	L
A	2012.19	75°13'45"	1550.41	2642.00
B	1960.00	28°11'58"	492.31	964.66
C	1983.52	13°22'28"	232.56	463.01

SURVEY CONTROL

PMHV500 (SB101 PMR 0.02)
Fnd 1" IP w/Red Plastic Cap
98.02 FT Rt. "SL1" Line
Sta. 194+20.79
N 1,962,687.54
E 6,115,858.43
Elev. = 31.79

PMHV501 (Not Shown On Plan)
Fnd PK Nail w/Large Brass Washer
178.49 FT Lt. "SL1" Line
Sta. 192+32.94
N 1,962,360.51
E 6,115,936.06
Elev. = 32.12

00.00 Denotes bottom of footing elevation.

Note:
* All Utility Lines Are Per District Utility Plan

PRELIMINARY INVESTIGATION SECTION

SCALE	VERT.DATUM NAVD88	PHOTOGRAMMETRY AS OF: X					
1"=20'	HORZ.DATUM NAD83 (1991.35)	SURVEYED	BY District	04/2009	CHECKED	BY T.Mason	10/2009
ALIGNMENT TIES Dist. Traverse Sheet		DRAFTED	BY J.Martinez	10/2009	CHECKED	BY T.Mason	10/2009

DESIGN	BY D. Menzmer	CHECKED C. Hensel
DETAILS	BY kc	CHECKED D. Menzmer
QUANTITIES	BY C. Hensel	CHECKED D. Menzmer

STATE OF CALIFORNIA
DEPARTMENT OF TRANSPORTATION

DIVISION OF ENGINEERING SERVICES
STRUCTURE DESIGN
DESIGN BRANCH 12

CU 07
EA 260701

BRIDGE NO. 52-0279
POST MILE 43.6

BATES ROAD UNDERCROSSING (WIDEN)
FOUNDATION PLAN NO. 1

STRUCTURES FOUNDATION PLAN SHEET (ENGLISH) (REV. 10/25/05)

ORIGINAL SCALE IN INCHES FOR REDUCED PLANS 0 1 2 3

DISREGARD PRINTS BEARING EARLIER REVISION DATES — REVISION DATES: 10/19/09 10/20/09 10-21-10

SHEET 4 OF 37

FILE => e-52-0279-c-fp01.dgn

USERNAME => s124436 DATE PLOTTED => 25-JUN-2011 TIME PLOTTED => 08:49

DIST	COUNTY	ROUTE	POST MILES TOTAL PROJECT	SHEET No	TOTAL SHEETS
07	Ven,SB	101	R39.8/R43.6, 0.0/2.2	665	757

REGISTERED CIVIL ENGINEER — DATE 10-18-10

6-20-11
PLANS APPROVAL DATE

REGISTERED PROFESSIONAL ENGINEER — DOUGLAS C. MENZMER — No. C63498 — Exp. 09-30-12 — CIVIL — STATE OF CALIFORNIA

The State of California or its officers or agents shall not be responsible for the accuracy or completeness of electronic copies of this plan sheet.

CURVE DATA

No.	R	Δ	T	L
A	2012.19	75°13′45″	1550.41	2642.00
B	1960.00	28°11′58″	492.31	964.66
C	1983.52	13°22′28″	232.56	463.01
D	1983.51	6°54′38″	119.76	239.24

Soffit Elevations
Br # 52-0279L

1 - 53.28
2 - 53.93
3 - 54.53
4 - 55.05
5 - 55.56
6 - 51.00
7 - 51.72
8 - 52.38
9 - 52.88
10 - 53.37

Soffit Elevations
Br # 52-0279R

11 - 49.15
12 - 49.82
13 - 50.21
14 - 50.85
15 - 51.59
16 - 47.05
17 - 47.81
18 - 48.37
19 - 48.93
20 - 49.50

PMHV501
N 1,962,360.51
E 6,115,936.06
Elev.=32.12

Bridge Location # 52-0279L
1 - 69.32 Lt. "SL1" Line, Sta.192+69.56, Elev.=59.28 ±
2 - 18.49 Lt. "SL1" Line, Sta.193+05.42, Elev.=56.80 ±
3 - 69.14 Lt. "SL1" Line, Sta.194+03.76, Elev.=61.68 ±
4 - 18.58 Lt. "SL1" Line, Sta.194+42.73, Elev.=59.32 ±

Bridge Location # 52-0279R
5 - 18.26 Rt. "SL1" Line, Sta.193+32.98, Elev.=54.99 ±
6 - 68.70 Rt. "SL1" Line, Sta.193+73.60, Elev.=52.88 ±
7 - 17.96 Rt. "SL1" Line, Sta.194+73.01, Elev.=57.55 ±
8 - 68.65 Rt. "SL1" Line, Sta.195+16.38, Elev.=55.35 ±

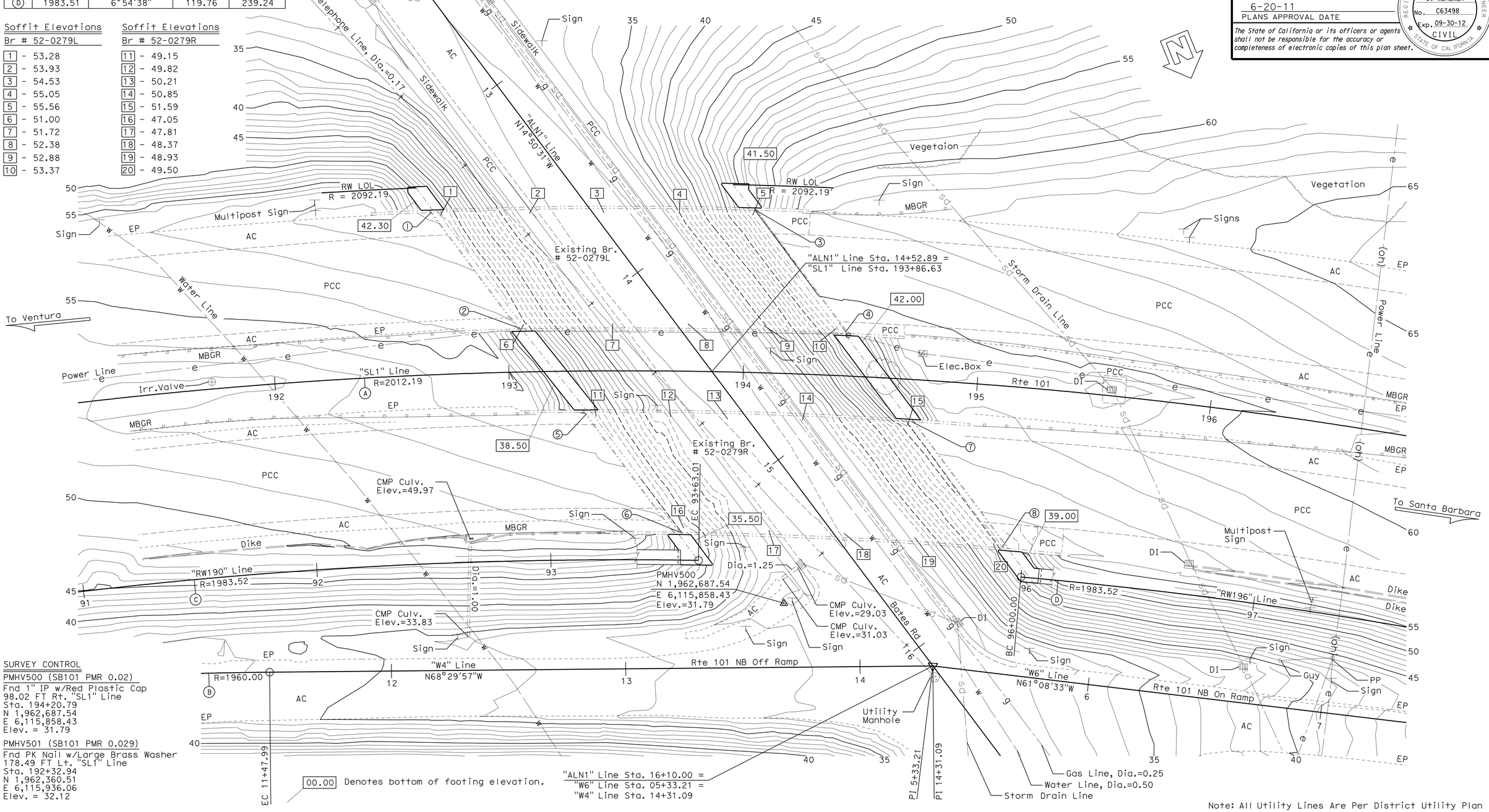

SURVEY CONTROL

PMHV500 (SB101 PMR 0.02)
Fnd 1" IP w/Red Plastic Cap
98.02 FT Rt. "SL1" Line
Sta. 194+20.79
N 1,962,687.54
E 6,115,858.43
Elev. = 31.79

PMHV501 (SB101 PMR 0.029)
Fnd PK Nail w/Large Brass Washer
178.49 FT Lt. "SL1" Line
Sta. 192+32.94
N 1,962,360.51
E 6,115,936.06
Elev. = 32.12

00.00 Denotes bottom of footing elevation.

Note: All Utility Lines Are Per District Utility Plan

PRELIMINARY INVESTIGATION SECTION							
SCALE	VERT.DATUM NAVD88	PHOTOGRAMMETRY AS OF: X					
1"=20′	HORZ.DATUM NAD83 (1991.35)	SURVEYED	BY District 04/2009	CHECKED	BY T.Mason 10/2009		
ALIGNMENT TIES Dist.Traverse Sheet		DRAFTED	BY J.Martinez 10/2009	CHECKED	BY T.Mason 10/2009		

DESIGN	BY D. Menzmer	CHECKED C. Hensel
DETAILS	BY kc	CHECKED D. Menzmer
QUANTITIES	BY C. Hensel	CHECKED D. Menzmer

STATE OF CALIFORNIA
DEPARTMENT OF TRANSPORTATION

DIVISION OF ENGINEERING SERVICES
STRUCTURE DESIGN
DESIGN BRANCH 12

BRIDGE NO. 52-0279
POST MILE 43.6

BATES ROAD UNDERCROSSING (WIDEN)
FOUNDATION PLAN NO. 2

STRUCTURES FOUNDATION PLAN SHEET (ENGLISH) (REV. 10/25/05)

ORIGINAL SCALE IN INCHES FOR REDUCED PLANS 0 1 2 3

CU 07
EA 260701

DISREGARD PRINTS BEARING EARLIER REVISION DATES

REVISION DATES: 7-9-09 10-19-09 10-28-09 9-22-10

SHEET 5 OF 37

FILE => e-52-0279-c-fp02.dgn

USERNAME => s1224396 DATE PLOTTED => 25-JUN-2011 TIME PLOTTED => 08:50

DIST	COUNTY	ROUTE	POST MILES TOTAL PROJECT	SHEET No	TOTAL SHEETS
07	Ven,SB	101	R39.8/R43.6, 0.0/2.2	666	757

REGISTERED CIVIL ENGINEER 10-18-10 DATE

6-20-11
PLANS APPROVAL DATE

The State of California or its officers or agents shall not be responsible for the accuracy or completeness of electronic copies of this plan sheet.

REGISTERED PROFESSIONAL ENGINEER DOUGLAS C. MENZMER No. C63498 Exp. 09-30-12 CIVIL STATE OF CALIFORNIA

CURVE DATA

No.	R	Δ	T	L
A	2012.19	75°13'45"	1550.41	2642.00
D	1983.52	6°54'38"	119.76	239.24
E	1150.00	30°00'52"	308.30	602.43

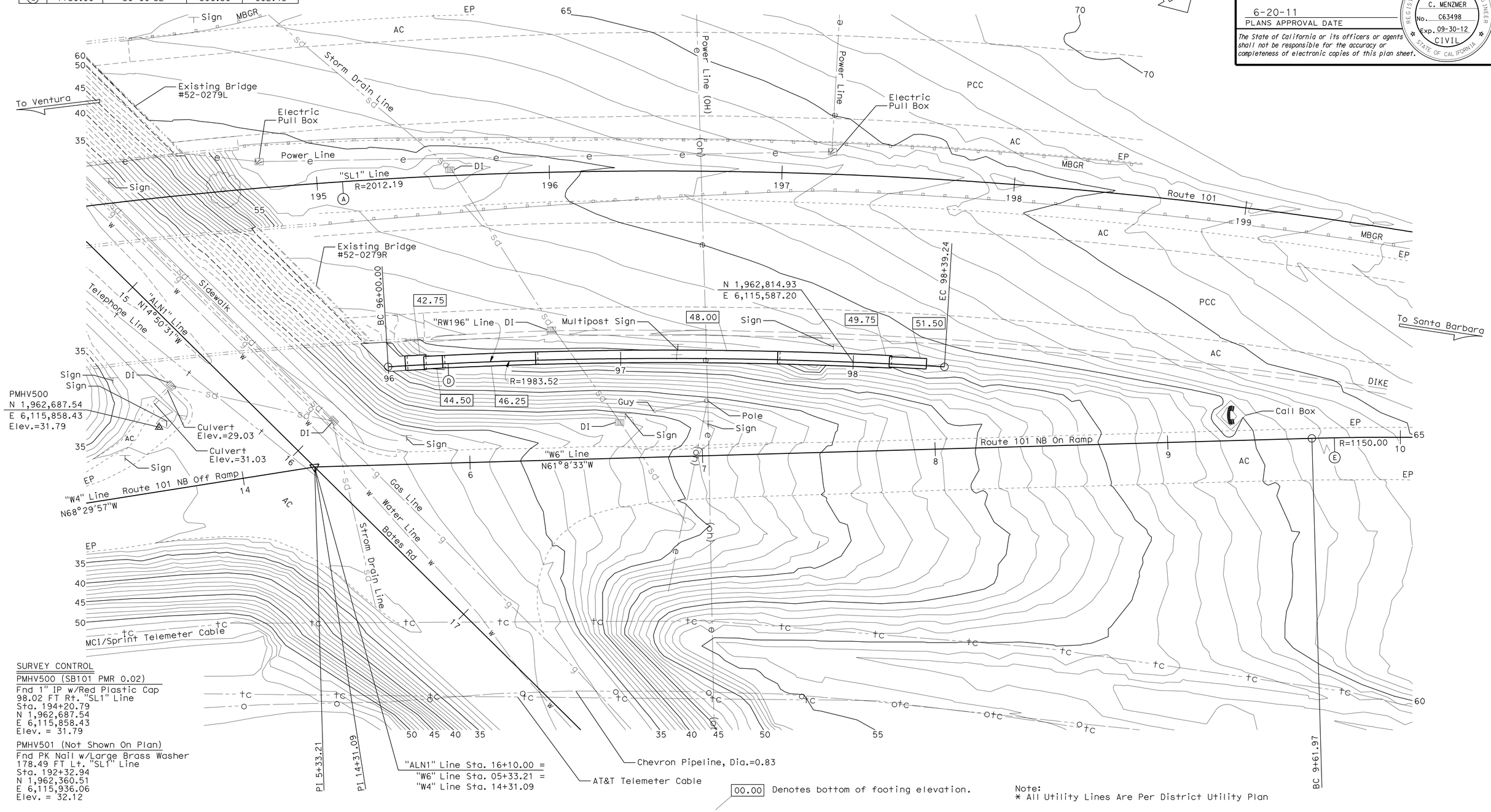

SURVEY CONTROL

PMHV500 (SB101 PMR 0.02)
Fnd 1" IP w/Red Plastic Cap
98.02 FT Rt. "SL1" Line
Sta. 194+20.79
N 1,962,687.54
E 6,115,858.43
Elev. = 31.79

PMHV501 (Not Shown On Plan)
Fnd PK Nail w/Large Brass Washer
178.49 FT Lt. "SL1" Line
Sta. 192+32.94
N 1,962,360.51
E 6,115,936.06
Elev. = 32.12

00.00 Denotes bottom of footing elevation.

Note:
* All Utility Lines Are Per District Utility Plan

PRELIMINARY INVESTIGATION SECTION

SCALE	VERT.DATUM NAVD88	PHOTOGRAMMETRY AS OF: X				
1"=20'	HORZ.DATUM NAD83	SURVEYED	BY District 04/2009	CHECKED	BY T.Mason 10/2009	
ALIGNMENT TIES Dist. Traverse Sheet		DRAFTED	BY J.Martinez 10/2009	CHECKED	BY T.Mason 10/2009	

	BY	CHECKED
DESIGN	D. Menzmer	C. Hensel
DETAILS	various	D. Menzmer
QUANTITIES	C. Hensel	D. Menzmer

STATE OF CALIFORNIA
DEPARTMENT OF TRANSPORTATION

DIVISION OF ENGINEERING SERVICES
STRUCTURE DESIGN
DESIGN BRANCH 12

BRIDGE NO. 52-0279
POST MILE 43.6

BATES ROAD UNDERCROSSING (WIDEN)
FOUNDATION PLAN NO. 3

STRUCTURES FOUNDATION PLAN SHEET (ENGLISH) (REV. 10/25/05)

ORIGINAL SCALE IN INCHES FOR REDUCED PLANS 0 1 2 3

CU 07
EA 260701

DISREGARD PRINTS BEARING EARLIER REVISION DATES

REVISION DATES: 10/19/09 10/20/09 9-20-10

SHEET 6 OF 37

FILE => e-52-0279-c-fp03.dgn

USERNAME => s124396 DATE PLOTTED => 25-JUN-2011 TIME PLOTTED => 08:50

DIST	COUNTY	ROUTE	POST MILES TOTAL PROJECT	SHEET No	TOTAL SHEETS
07	Ven,SB	101	R39.8/R43.6, 0.0/2.2	667	757

REGISTERED CIVIL ENGINEER 10-18-10 DATE

6-20-11
PLANS APPROVAL DATE

REGISTERED PROFESSIONAL ENGINEER DOUGLAS C. MENZMER No. C63498 Exp. 09-30-12 CIVIL STATE OF CALIFORNIA

The State of California or its officers or agents shall not be responsible for the accuracy or completeness of electronic copies of this plan sheet.

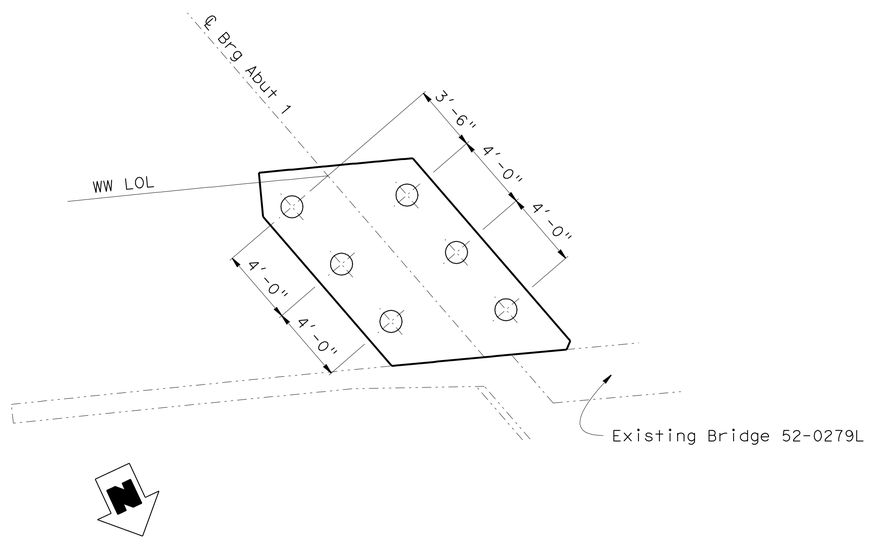

ABUTMENT 1
LEFT WIDENING PILE LAYOUT
1/4" = 1'-0"

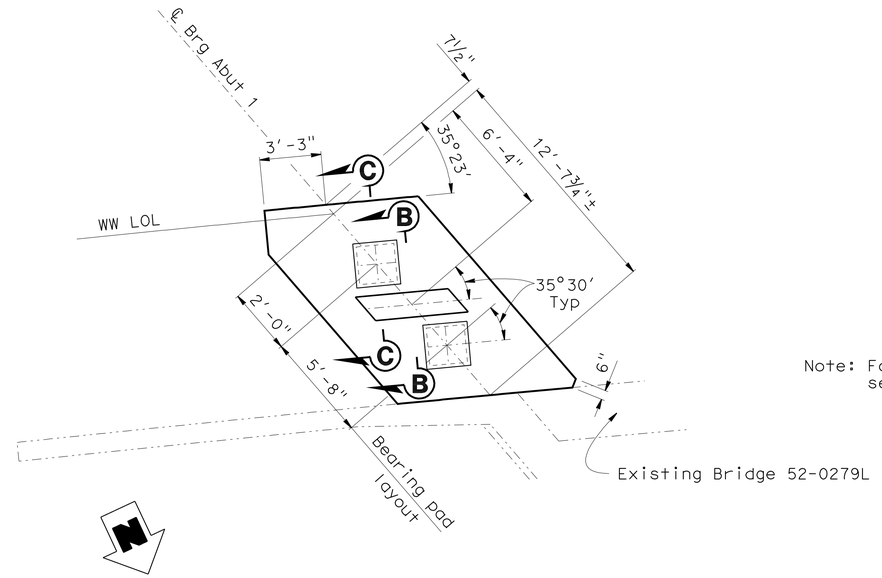

Note: For Sections "A-A", "B-B" and "C-C", see "Abutment Details No. 1" sheet.

ABUTMENT 1
LEFT WIDENING KEY AND BEARING PAD LAYOUT
1/4" = 1'-0"

Indicates abutment closure pour.
See "Abutment Details No. 4" sheet.

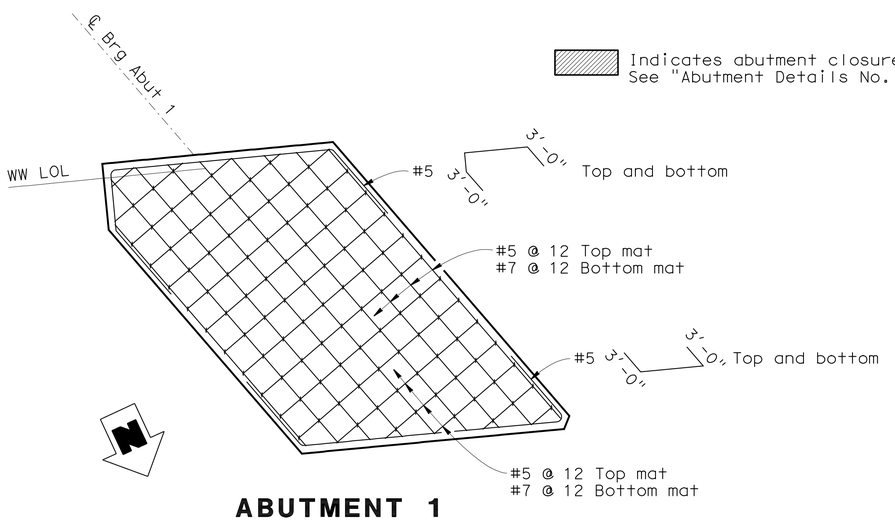

ABUTMENT 1
FOOTING STEEL
3/8" = 1'-0"

NOTE:
THE CONTRACTOR SHALL VERIFY ALL CONTROLLING FIELD DIMENSIONS BEFORE ORDERING OR FABRICATING ANY MATERIAL.

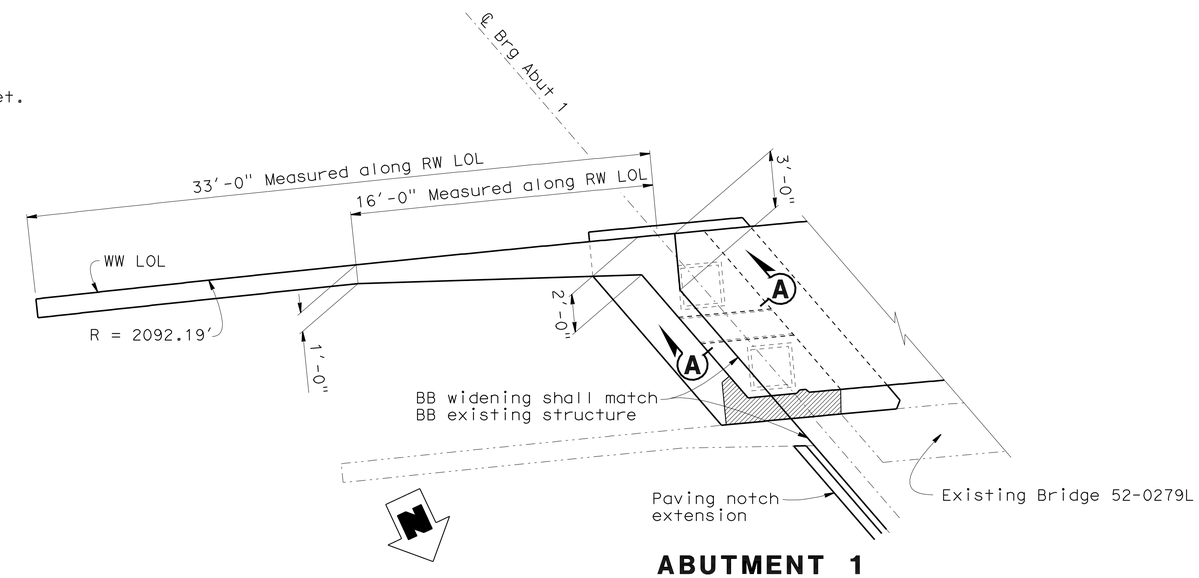

ABUTMENT 1
LEFT WIDENING END DIAPHRAGM LAYOUT
1/4" = 1'-0"

	BY	CHECKED
DESIGN	D. Menzmer	C. Hensel
DETAILS	kc	D. Menzmer
QUANTITIES	C. Hensel	D. Menzmer

STATE OF CALIFORNIA
DEPARTMENT OF TRANSPORTATION

DIVISION OF ENGINEERING SERVICES
STRUCTURE DESIGN
DESIGN BRANCH 12

BRIDGE NO. 52-0279
POST MILE 43.6

BATES ROAD UNDERCROSSING (WIDEN)
ABUTMENT 1 LAYOUT LEFT WIDENING

STRUCTURES DESIGN DETAIL SHEET (ENGLISH) (REV. 10/25/05)

ORIGINAL SCALE IN INCHES FOR REDUCED PLANS 0 1 2 3

CU 07
EA 260701

DISREGARD PRINTS BEARING EARLIER REVISION DATES

REVISION DATES: ~~1-4-10~~ ~~1-22-10~~ ~~3-8-10~~ ~~9-30-10~~ ~~2-9-11~~ 2-15-11

SHEET 7 OF 37

FILE => e-52-0279-d-abt01.dgn

USERNAME => s124436 DATE PLOTTED => 25-JUN-2011 TIME PLOTTED => 08:50

DIST	COUNTY	ROUTE	POST MILES TOTAL PROJECT	SHEET No	TOTAL SHEETS
07	Ven,SB	101	R39.8/R43.6, 0.0/2.2	668	757

REGISTERED CIVIL ENGINEER 10-18-10 DATE

6-20-11
PLANS APPROVAL DATE

REGISTERED PROFESSIONAL ENGINEER DOUGLAS C. MENZMER No. C63498 Exp. 09-30-12 CIVIL STATE OF CALIFORNIA

The State of California or its officers or agents shall not be responsible for the accuracy or completeness of electronic copies of this plan sheet.

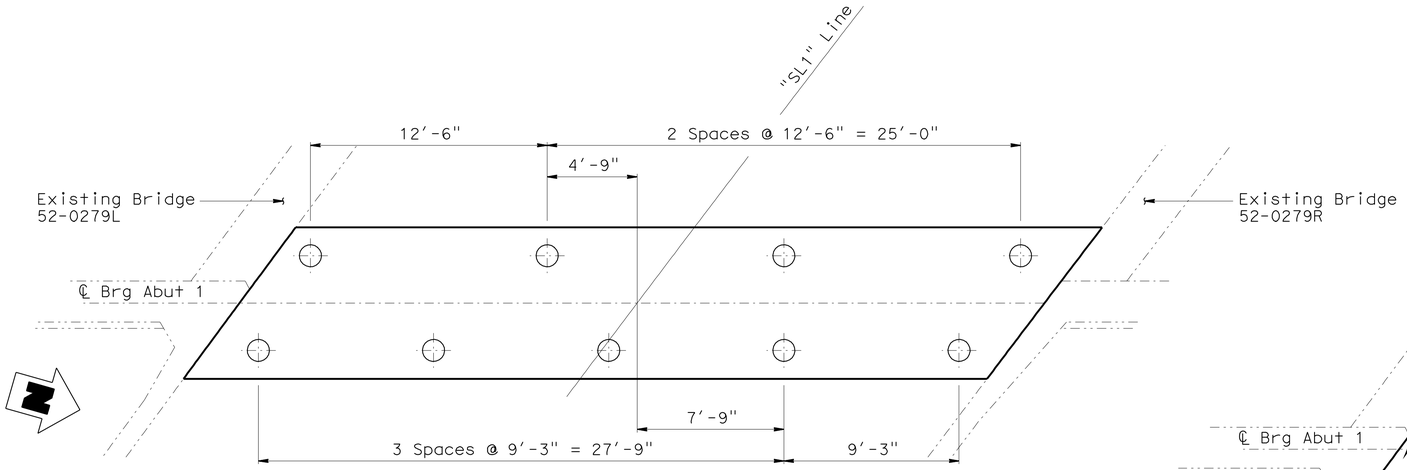

ABUTMENT 1 - MEDIAN WIDENING FOOTING PLAN AND PILE LAYOUT

1/4" = 1'-0"

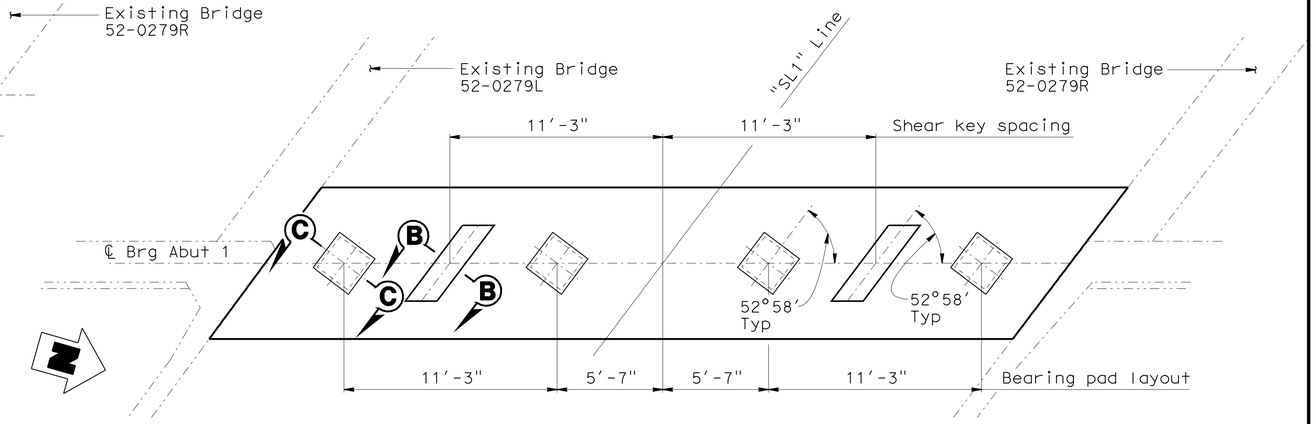

ABUTMENT 1 - MEDIAN WIDENING SHEAR KEY AND BEARING PAD LAYOUT

1/4" = 1'-0"

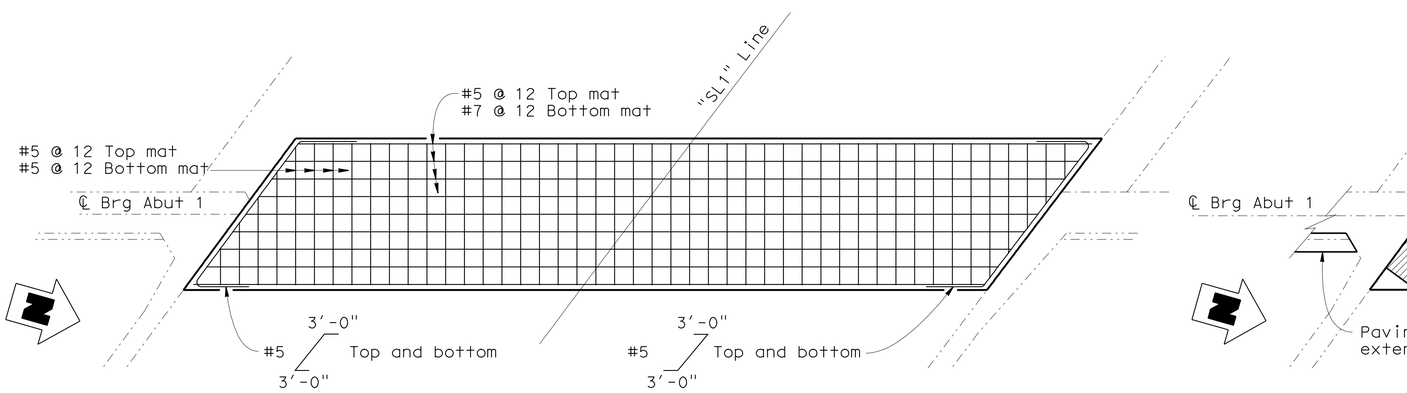

ABUTMENT 1 - MEDIAN WIDENING FOOTING STEEL

1/4" = 1'-0"

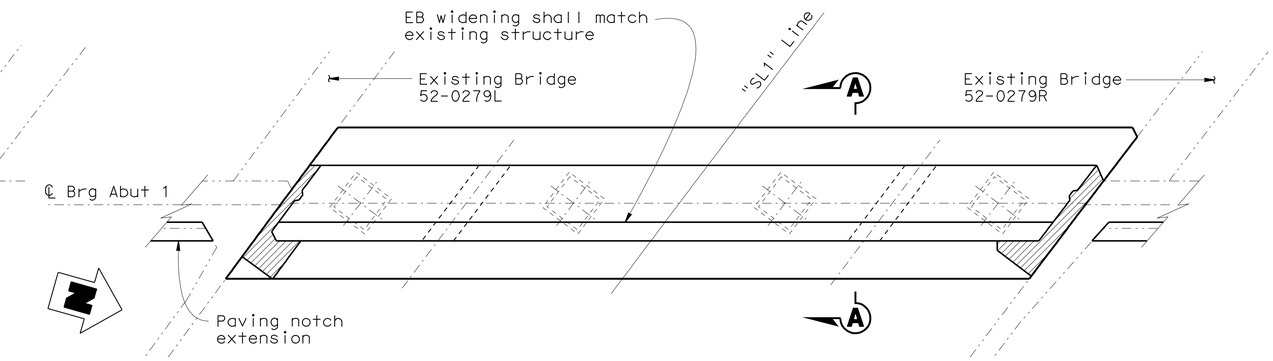

ABUTMENT 1 - MEDIAN WIDENING END DIAPHRAGM LAYOUT

1/4" = 1'-0"

Note:

For Sections "A-A", "B-B" and "C-C", see "Abutment Details No. 1" sheet.

NOTE:
THE CONTRACTOR SHALL VERIFY ALL CONTROLLING FIELD DIMENSIONS BEFORE ORDERING OR FABRICATING ANY MATERIAL.

Indicates abutment cloursure pour see, "Abutment Details No. 4" sheet.

	BY	CHECKED
DESIGN	D. Menzmer	C. Hensel
DETAILS	kc	D. Menzmer
QUANTITIES	C. Hensel	D. Menzmer

STATE OF CALIFORNIA DEPARTMENT OF TRANSPORTATION

DIVISION OF ENGINEERING SERVICES STRUCTURE DESIGN DESIGN BRANCH 12

BRIDGE NO. 52-0279
POST MILE 43.6

BATES ROAD UNDERCROSSING (WIDEN)
ABUTMENT 1 LAYOUT MEDIAN WIDENING

STRUCTURES DESIGN DETAIL SHEET (ENGLISH) (REV. 10/25/05)

ORIGINAL SCALE IN INCHES FOR REDUCED PLANS 0 1 2 3

CU 07
EA 260701

DISREGARD PRINTS BEARING EARLIER REVISION DATES

REVISION DATES: 1-18-10 1-28-10 3-24-10 9-29-10 2-22-11

SHEET 8 OF 37

FILE => e-52-0279-d-abt02.dgn

USERNAME => s124496 DATE PLOTTED => 25-JUN-2011 TIME PLOTTED => 08:50

DIST	COUNTY	ROUTE	POST MILES TOTAL PROJECT	SHEET No	TOTAL SHEETS
07	Ven,SB	101	R39.8/R43.6, 0.0/2.2	669	757

REGISTERED CIVIL ENGINEER 10-18-10 DATE

6-20-11
PLANS APPROVAL DATE

REGISTERED PROFESSIONAL ENGINEER DOUGLAS C. MENZMER No. C63498 Exp. 09-30-12 CIVIL STATE OF CALIFORNIA

The State of California or its officers or agents shall not be responsible for the accuracy or completeness of electronic copies of this plan sheet.

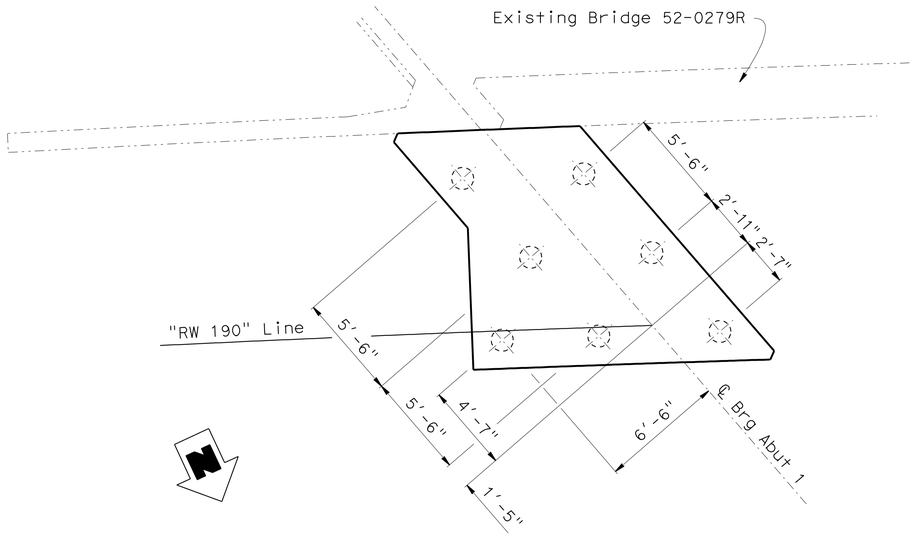

ABUTMENT 1
RIGHT WIDENING PILE LAYOUT
1/4" = 1'-0"

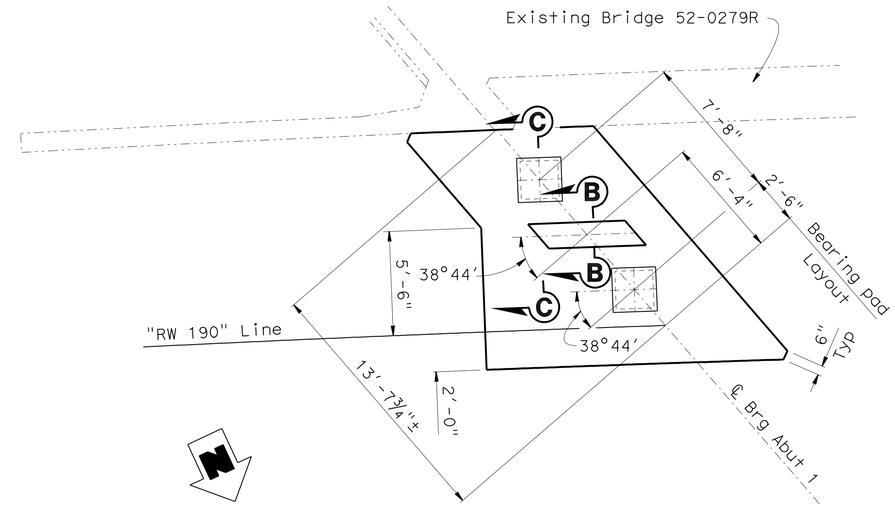

Note: For Sections "A-A", "B-B" and "C-C", see "Abutment Details No. 1" sheet.

ABUTMENT 1
RIGHT WIDENING KEY AND BEARING PAD LAYOUT
1/4" = 1'-0"

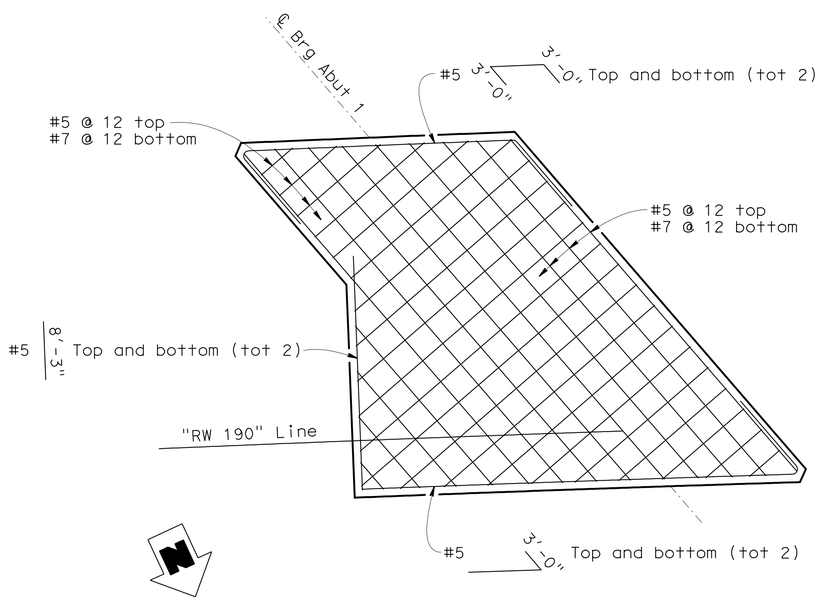

NOTE:
THE CONTRACTOR SHALL VERIFY ALL CONTROLLING FIELD DIMENSIONS BEFORE ORDERING OR FABRICATING ANY MATERIAL.

ABUTMENT 1
FOOTING STEEL
3/8" = 1'-0"

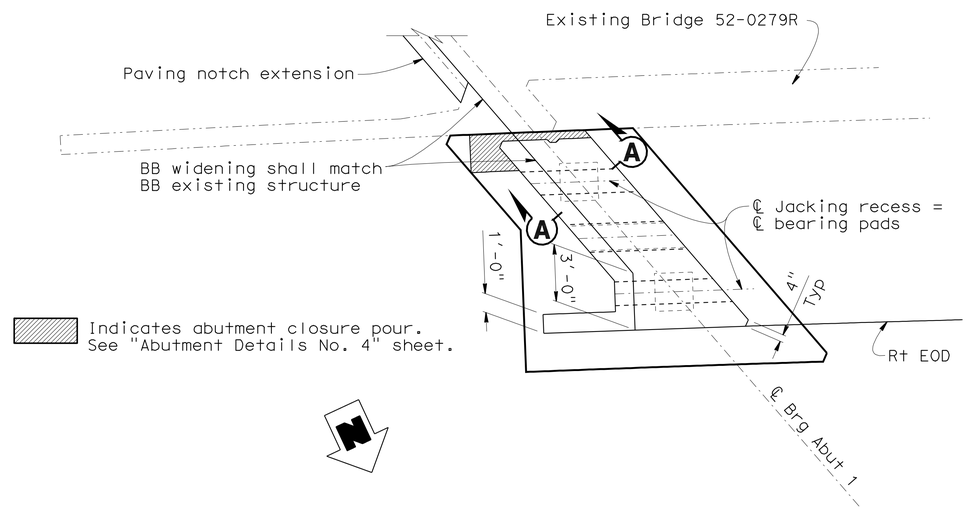

ABUTMENT 1
RIGHT WIDENING END DIAPHRAGM LAYOUT
1/4" = 1'-0"

DESIGN	BY D. Menzmer	CHECKED C. Hensel	
DETAILS	BY kc	CHECKED D. Menzmer	
QUANTITIES	BY C. Hensel	CHECKED D. Menzmer	

STATE OF CALIFORNIA
DEPARTMENT OF TRANSPORTATION

DIVISION OF ENGINEERING SERVICES
STRUCTURE DESIGN
DESIGN BRANCH 12

BRIDGE NO. 52-0279
POST MILE 43.6

BATES ROAD UNDERCROSSING (WIDEN)
ABUTMENT 1 LAYOUT RIGHT WIDENING

STRUCTURES DESIGN DETAIL SHEET (ENGLISH) (REV. 10/25/05)

ORIGINAL SCALE IN INCHES FOR REDUCED PLANS 0 1 2 3

CU 07
EA 260701

DISREGARD PRINTS BEARING EARLIER REVISION DATES

REVISION DATES: 1-19-10 1-28-10 10-28-10 10-29-10 2-9-11 2-15-11

SHEET 9 OF 37

FILE => e-52-0279-d-abt03.dgn

USERNAME => s8124196 DATE PLOTTED => 25-JUN-2011 TIME PLOTTED => 08:50

DIST	COUNTY	ROUTE	POST MILES TOTAL PROJECT	SHEET No	TOTAL SHEETS
07	Ven,SB	101	R39.8/R43.6, 0.0/2.2	670	757

REGISTERED CIVIL ENGINEER 10-18-10 DATE

6-20-11
PLANS APPROVAL DATE

The State of California or its officers or agents shall not be responsible for the accuracy or completeness of electronic copies of this plan sheet.

REGISTERED PROFESSIONAL ENGINEER DOUGLAS C. MENZMER No. C63498 Exp. 09-30-12 CIVIL STATE OF CALIFORNIA

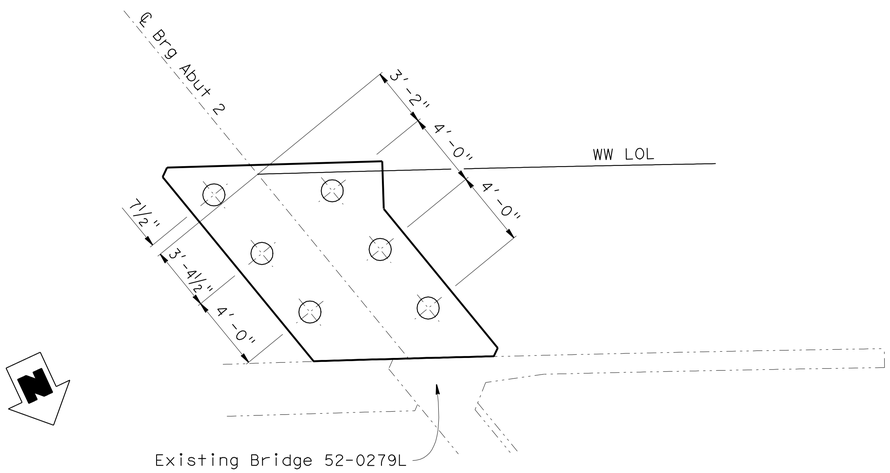

ABUTMENT 2
LEFT WIDENING PILE LAYOUT
1/4" = 1'-0"

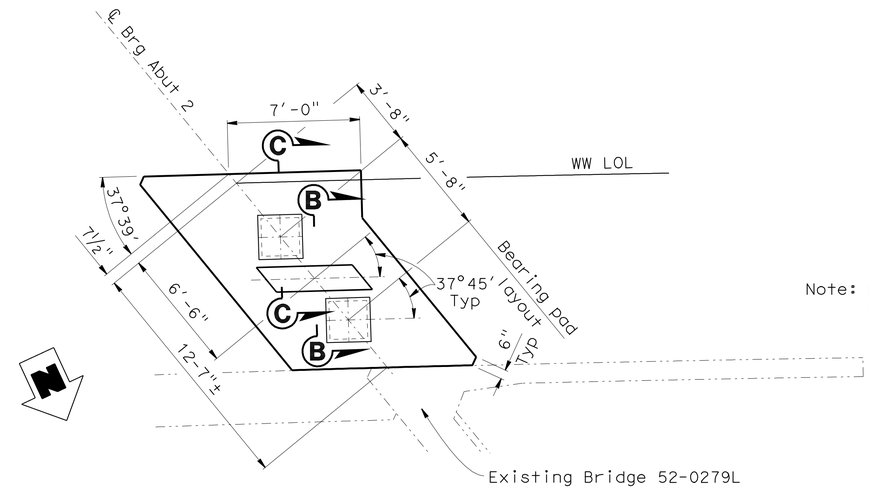

Note: For Sections "A-A", "B-B" and "C-C", see "Abutment Details No. 1" sheet.

ABUTMENT 2
LEFT WIDENING KEY AND BEARING PAD LAYOUT
1/4" = 1'-0"

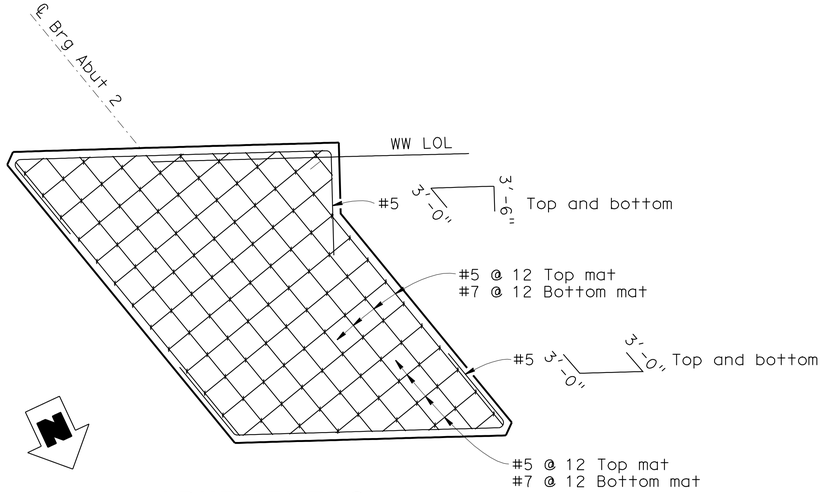

ABUTMENT 2
FOOTING STEEL
3/8" = 1'-0"

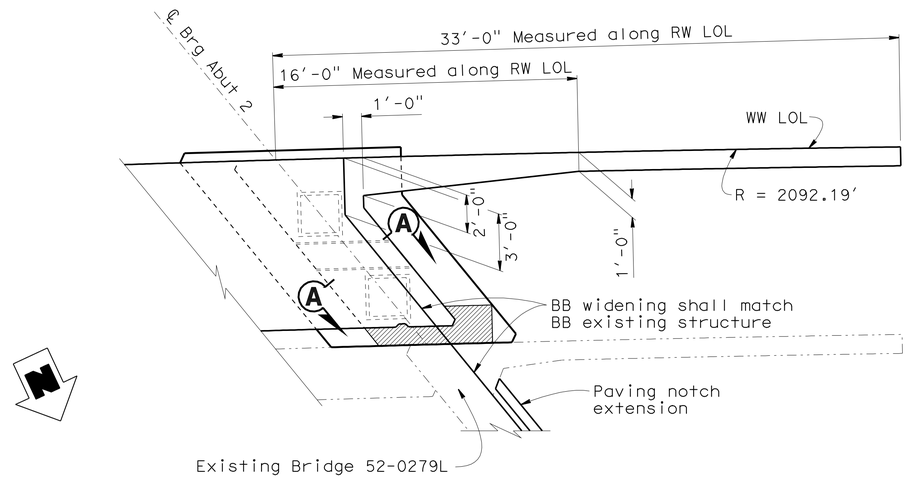

ABUTMENT 2
LEFT WIDENING END DIAPHRAGM LAYOUT
1/4" = 1'-0"

Indicates abutment closure pour.
See "Abutment Details No. 4" sheet.

NOTE:
THE CONTRACTOR SHALL VERIFY ALL CONTROLLING FIELD DIMENSIONS BEFORE ORDERING OR FABRICATING ANY MATERIAL.

	BY	CHECKED
DESIGN	D. Menzmer	C. Hensel
DETAILS	kc	D. Menzmer
QUANTITIES	C. Hensel	D. Menzmer

STATE OF CALIFORNIA
DEPARTMENT OF TRANSPORTATION

DIVISION OF ENGINEERING SERVICES
STRUCTURE DESIGN
DESIGN BRANCH 12

BRIDGE NO. 52-0279
POST MILE 43.6

BATES ROAD UNDERCROSSING (WIDEN)
ABUTMENT 2 LAYOUT LEFT WIDENING

STRUCTURES DESIGN DETAIL SHEET (ENGLISH) (REV. 10/25/05)

ORIGINAL SCALE IN INCHES FOR REDUCED PLANS 0 1 2 3

CU 07
EA 260701

DISREGARD PRINTS BEARING EARLIER REVISION DATES

REVISION DATES: 1-4-10 1-27-09 3-8-10 9-30-10 2-9-11 2-15-11

SHEET 10 OF 37

FILE => e-52-0279-d-abt04.dgn

USERNAME => s8124196 DATE PLOTTED => 25-JUN-2011 TIME PLOTTED => 08:50

DIST	COUNTY	ROUTE	POST MILES TOTAL PROJECT	SHEET No	TOTAL SHEETS
07	Ven,SB	101	R39.8/R43.6, 0.0/2.2	671	757

REGISTERED CIVIL ENGINEER 10-18-10 DATE

6-20-11
PLANS APPROVAL DATE

REGISTERED PROFESSIONAL ENGINEER DOUGLAS C. MENZMER No. C63498 Exp. 09-30-12 CIVIL STATE OF CALIFORNIA

The State of California or its officers or agents shall not be responsible for the accuracy or completeness of electronic copies of this plan sheet.

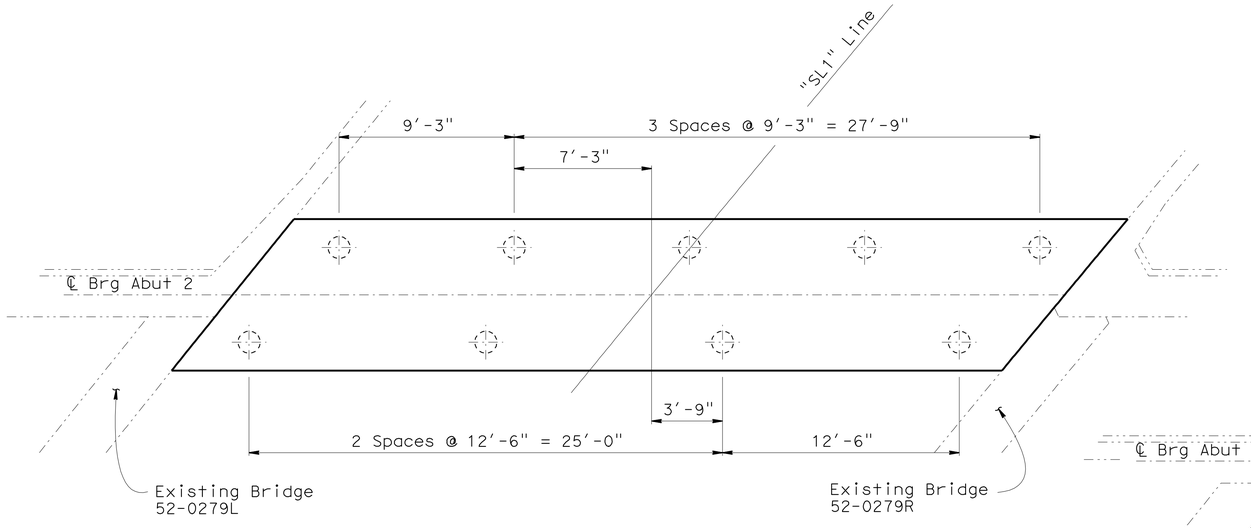

ABUTMENT 2 - MEDIAN WIDENING
FOOTING PLAN AND PILE LAYOUT

1/4" = 1'-0"

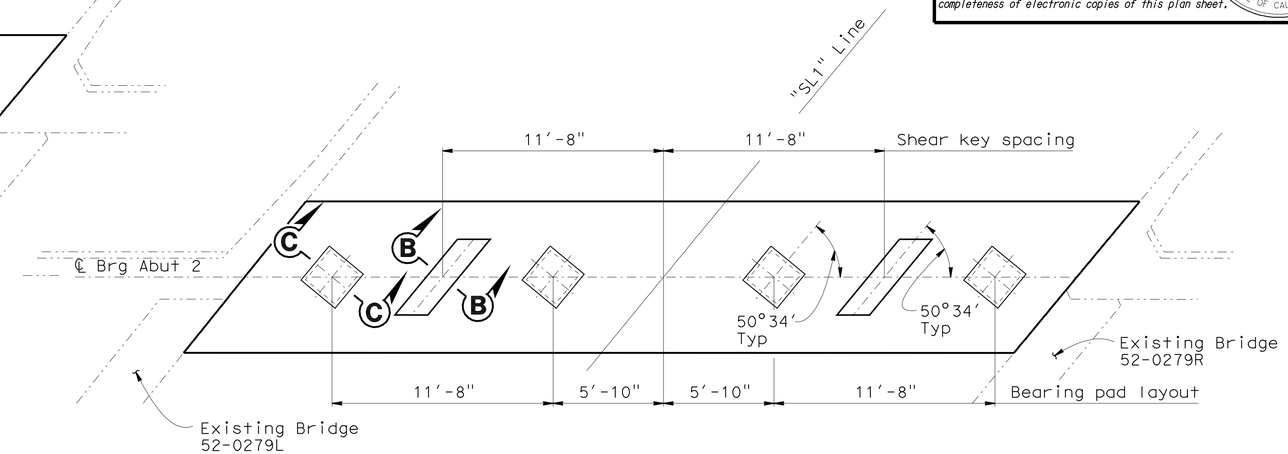

ABUTMENT 2 - MEDIAN WIDENING
SHEAR KEY AND BEARING PAD LAYOUT

1/4" = 1'-0"

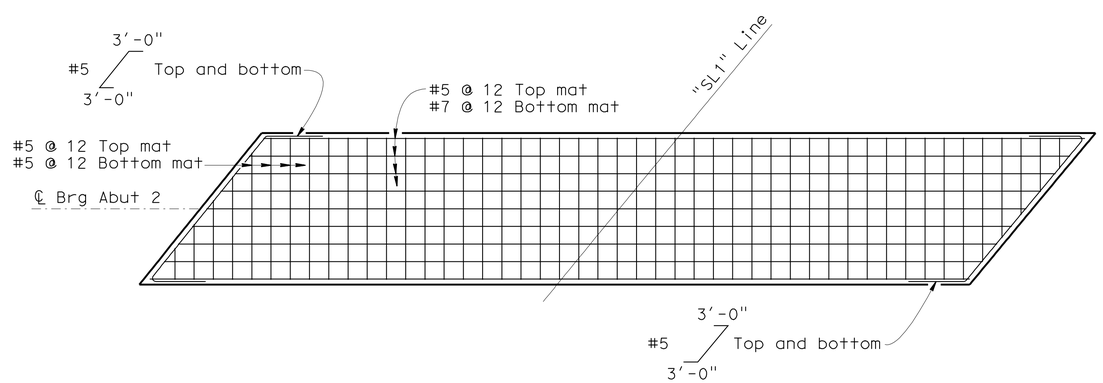

ABUTMENT 2 - MEDIAN WIDENING
FOOTING STEEL

1/4" = 1'-0"

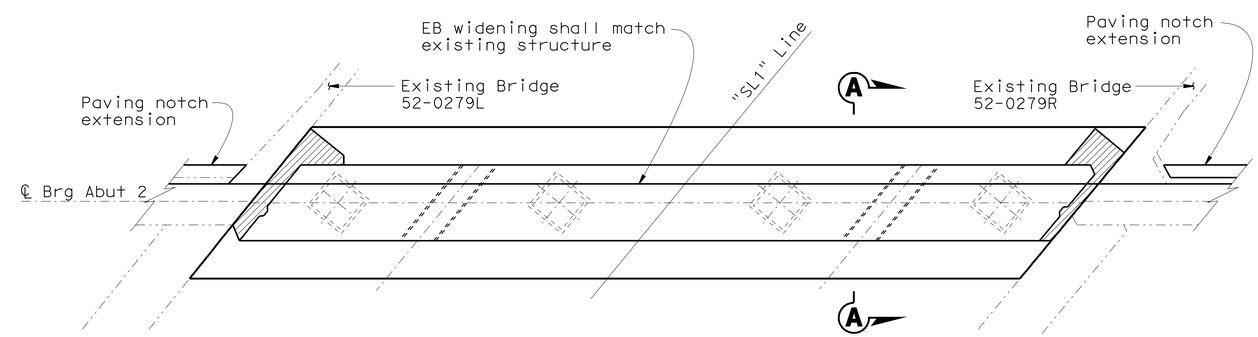

ABUTMENT 2 - MEDIAN WIDENING
END DIAPHRAGM LAYOUT

1/4" = 1'-0"

Note:

For Sections "A-A", "B-B" and "C-C", see "Abutment Details No. 1" sheet.

NOTE:
THE CONTRACTOR SHALL VERIFY ALL CONTROLLING FIELD DIMENSIONS BEFORE ORDERING OR FABRICATING ANY MATERIAL.

Indicates abutment cloursure pour see, "Abutment Details No. 4" sheet.

	BY	CHECKED
DESIGN	D. Menzmer	C. Hensel
DETAILS	kc	D. Menzmer
QUANTITIES	C. Hensel	D. Menzmer

STATE OF CALIFORNIA
DEPARTMENT OF TRANSPORTATION

DIVISION OF ENGINEERING SERVICES
STRUCTURE DESIGN
DESIGN BRANCH 12

BRIDGE NO. 52-0279
POST MILE 43.6

BATES ROAD UNDERCROSSING (WIDEN)
ABUTMENT 2 LAYOUT MEDIAN WIDENING

STRUCTURES DESIGN DETAIL SHEET (ENGLISH) (REV. 10/25/05)

ORIGINAL SCALE IN INCHES FOR REDUCED PLANS 0 1 2 3

CU 07
EA 260701

DISREGARD PRINTS BEARING EARLIER REVISION DATES

REVISION DATES: 1-4-10 1-3-10 9-29-10 2-22-11

SHEET 11 OF 37

FILE => e-52-0279-d-abt05.dgn

USERNAME => s124496 DATE PLOTTED => 25-JUN-2011 TIME PLOTTED => 08:50

DIST	COUNTY	ROUTE	POST MILES TOTAL PROJECT	SHEET No	TOTAL SHEETS
07	Ven,SB	101	R39.8/R43.6, 0.0/2.2	672	757

REGISTERED CIVIL ENGINEER 10-18-10 DATE

6-20-11
PLANS APPROVAL DATE

The State of California or its officers or agents shall not be responsible for the accuracy or completeness of electronic copies of this plan sheet.

REGISTERED PROFESSIONAL ENGINEER DOUGLAS C. MENZMER No. C63498 Exp. 09-30-12 CIVIL STATE OF CALIFORNIA

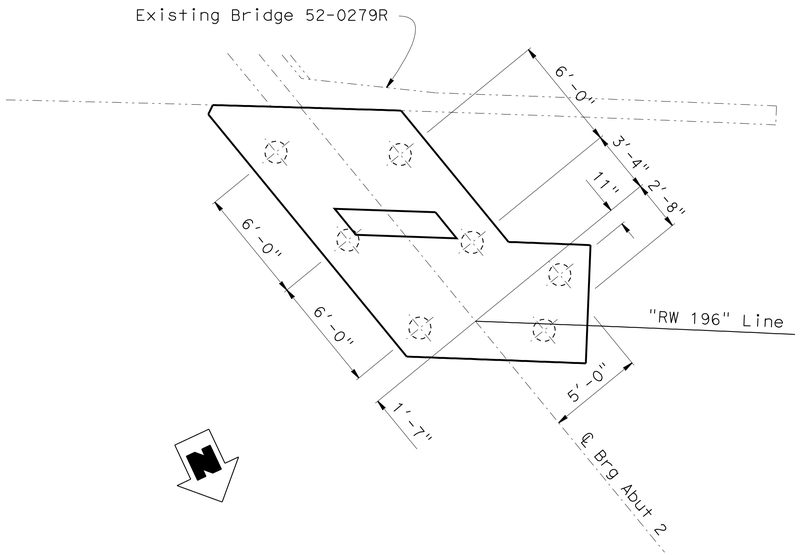

ABUTMENT 2
RIGHT WIDENING PILE LAYOUT
1/4" = 1'-0"

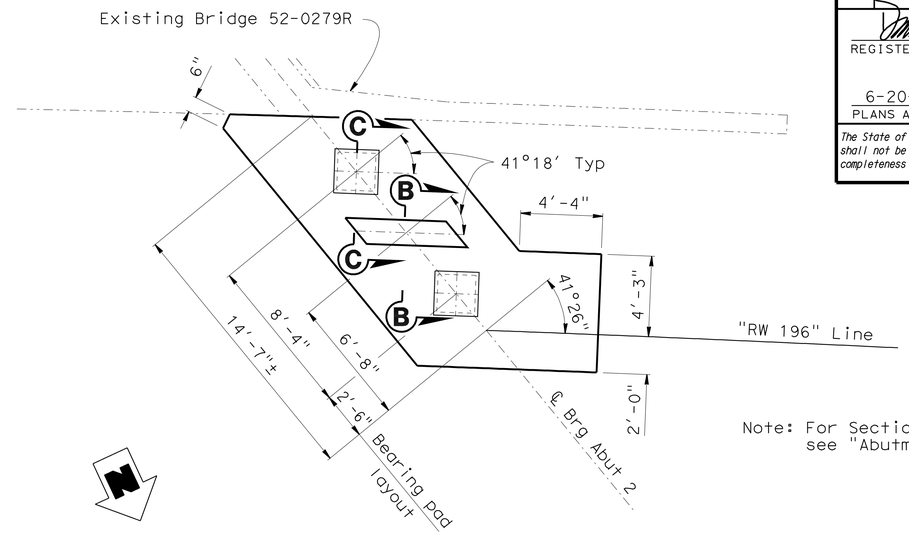

Note: For Sections "A-A", "B-B" and "C-C", see "Abutment Details No. 1" sheet.

ABUTMENT 2
RIGHT WIDENING KEY AND BEARING PAD LAYOUT
1/4" = 1'-0"

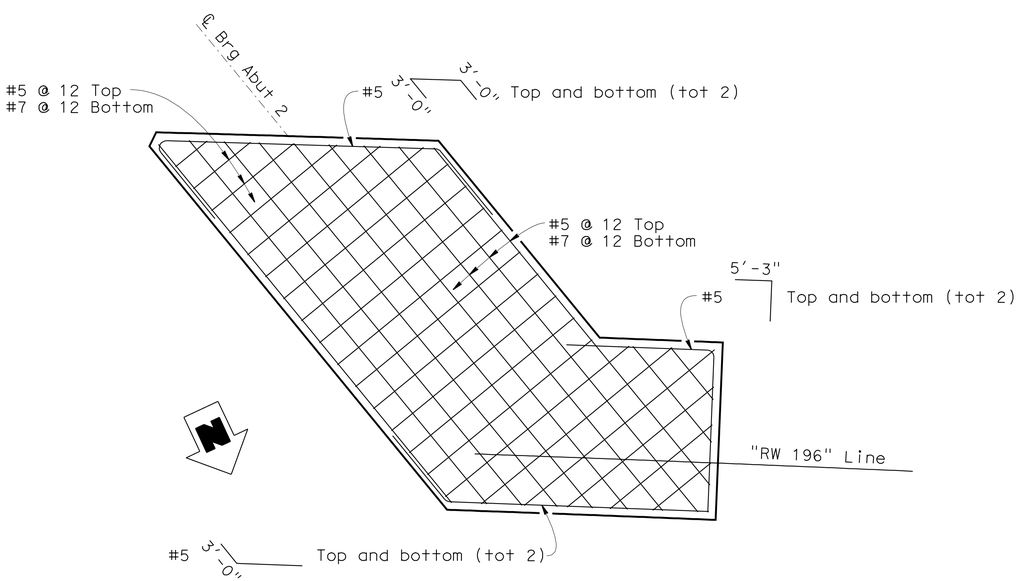

NOTE:
THE CONTRACTOR SHALL VERIFY ALL CONTROLLING FIELD DIMENSIONS BEFORE ORDERING OR FABRICATING ANY MATERIAL.

ABUTMENT 2
FOOTING STEEL
3/8" = 1'-0"

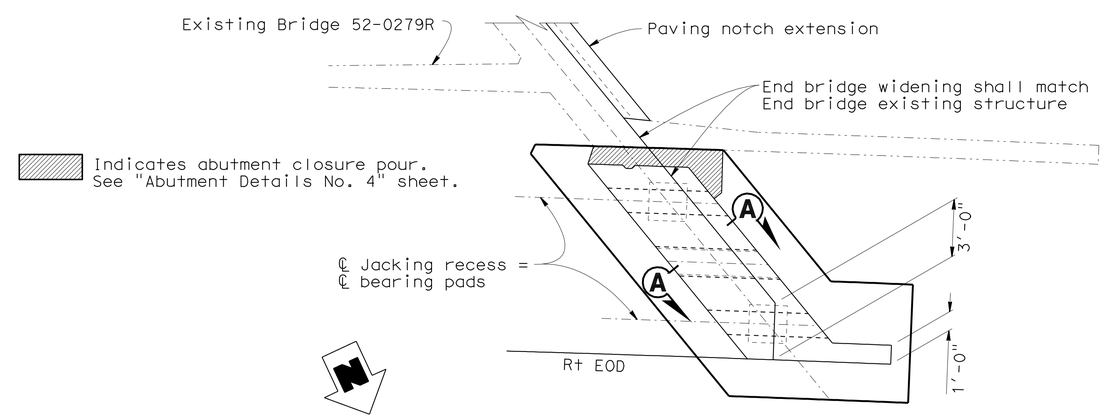

ABUTMENT 2
RIGHT WIDENING END DIAPHRAGM LAYOUT
1/4" = 1'-0"

DESIGN	BY D. Menzmer	CHECKED C. Hensel	
DETAILS	BY kc	CHECKED D. Menzmer	
QUANTITIES	BY C. Hensel	CHECKED D. Menzmer	

STATE OF CALIFORNIA
DEPARTMENT OF TRANSPORTATION

DIVISION OF ENGINEERING SERVICES
STRUCTURE DESIGN
DESIGN BRANCH 12

BRIDGE NO. 52-0279
POST MILE 43.6

BATES ROAD UNDERCROSSING (WIDEN)
ABUTMENT 2 LAYOUT RIGHT WIDENING

STRUCTURES DESIGN DETAIL SHEET (ENGLISH) (REV. 10/25/05)

ORIGINAL SCALE IN INCHES FOR REDUCED PLANS 0 1 2 3

CU 07
EA 260701

DISREGARD PRINTS BEARING EARLIER REVISION DATES

REVISION DATES: 1-18-10 1-28-10 10-25-10 2-3-11 2-15-11

SHEET 12 OF 37

FILE => e-52-0279-d-abt06.dgn

USERNAME => s124436 DATE PLOTTED => 25-JUN-2011 TIME PLOTTED => 08:51

DIST	COUNTY	ROUTE	POST MILES TOTAL PROJECT	SHEET No	TOTAL SHEETS
07	Ven,SB	101	R39.8/R43.6, 0.0/2.2	673	757

REGISTERED CIVIL ENGINEER 10-18-10 DATE

6-20-11
PLANS APPROVAL DATE

REGISTERED PROFESSIONAL ENGINEER DOUGLAS C. MENZMER No. C63498 Exp. 09-30-12 CIVIL STATE OF CALIFORNIA

The State of California or its officers or agents shall not be responsible for the accuracy or completeness of electronic copies of this plan sheet.

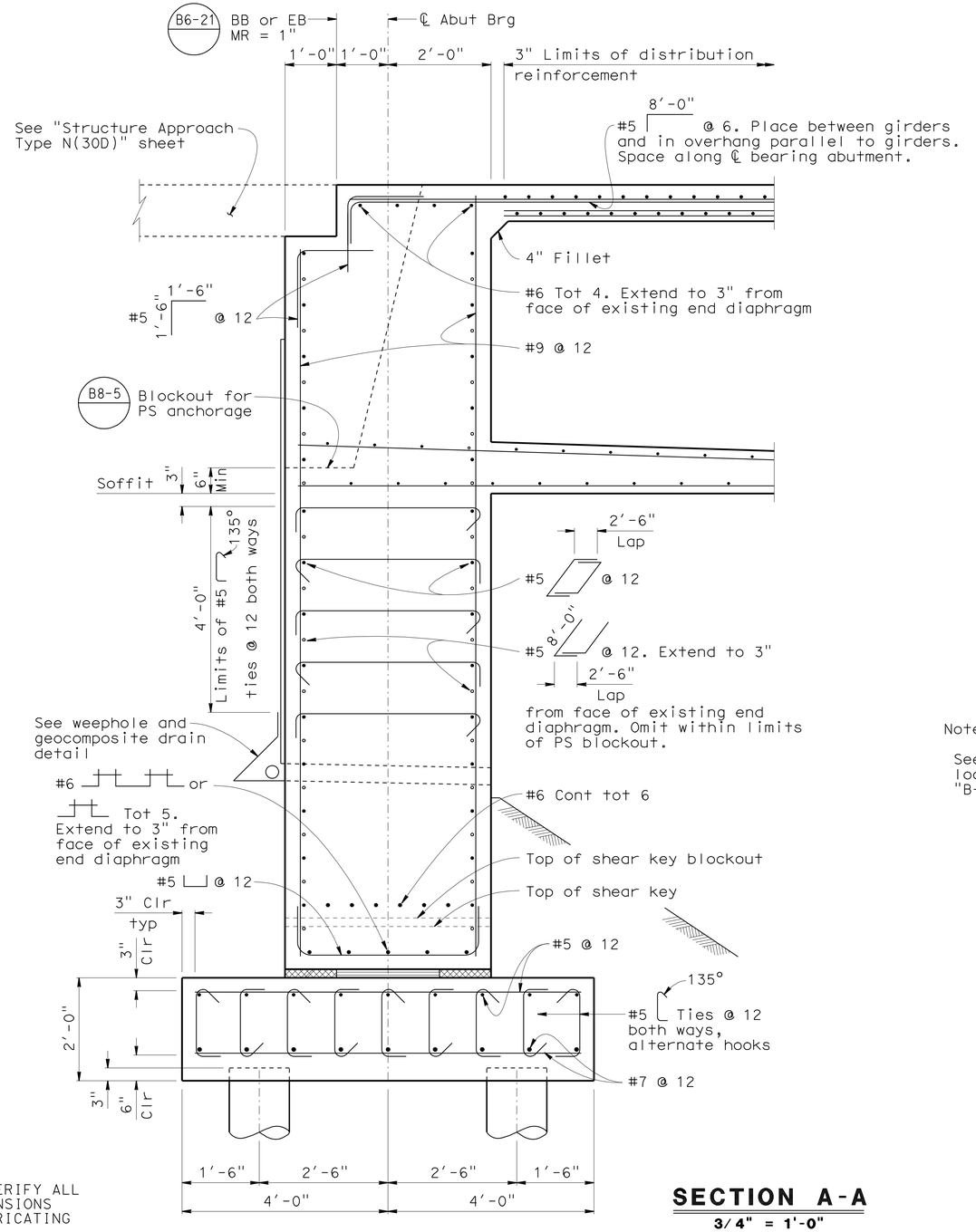

SECTION A-A

3/4" = 1'-0"

NOTE:
THE CONTRACTOR SHALL VERIFY ALL CONTROLLING FIELD DIMENSIONS BEFORE ORDERING OR FABRICATING ANY MATERIAL.

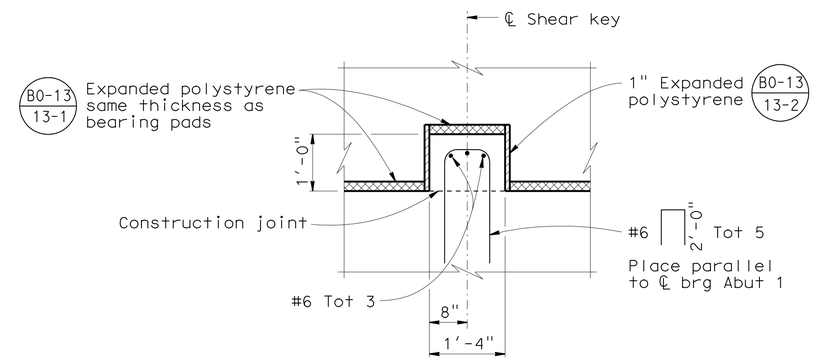

SECTION B-B

SHEAR KEY DETAIL

3/4" = 1'-0"

Notes:

See Abutment Layout sheets for locations of Sections "A-A", "B-B" and "C-C".

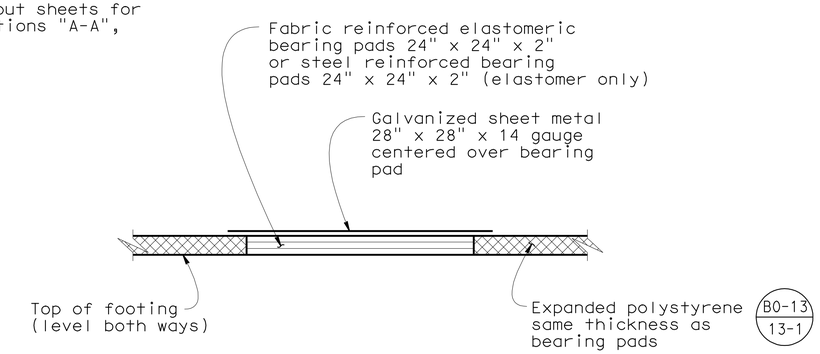

SECTION C-C

No scale

Note: Coat top of bearing pad with silicone grease prior to placing sheet metal

DESIGN	BY D. Menzmer	CHECKED C. Hensel	
DETAILS	BY kc	CHECKED D. Menzmer	
QUANTITIES	BY C. Hensel	CHECKED D. Menzmer	

STATE OF CALIFORNIA
DEPARTMENT OF TRANSPORTATION

DIVISION OF ENGINEERING SERVICES
STRUCTURE DESIGN
DESIGN BRANCH 12

BRIDGE NO. 52-0279
POST MILE 43.6

BATES ROAD UNDERCROSSING (WIDEN)
ABUTMENT DETAILS NO. 1

STRUCTURES DESIGN DETAIL SHEET (ENGLISH) (REV. 10/25/05)

ORIGINAL SCALE IN INCHES FOR REDUCED PLANS 0 1 2 3

CU 07
EA 260701

DISREGARD PRINTS BEARING EARLIER REVISION DATES → 3-22-10 9-29-10 2-9-11

REVISION DATES

SHEET 13 OF 37

FILE => e-52-0279-d-abt07.dgn

USERNAME => s124496 DATE PLOTTED => 25-JUN-2011 TIME PLOTTED => 08:51

DIST	COUNTY	ROUTE	POST MILES TOTAL PROJECT	SHEET No	TOTAL SHEETS
07	Ven,SB	101	R39.8/R43.6, 0.0/2.2	674	757

REGISTERED CIVIL ENGINEER 10-18-10 DATE

6-20-11
PLANS APPROVAL DATE

REGISTERED PROFESSIONAL ENGINEER DOUGLAS C. MENZMER No. C63498 Exp. 09-30-12 CIVIL STATE OF CALIFORNIA

The State of California or its officers or agents shall not be responsible for the accuracy or completeness of electronic copies of this plan sheet.

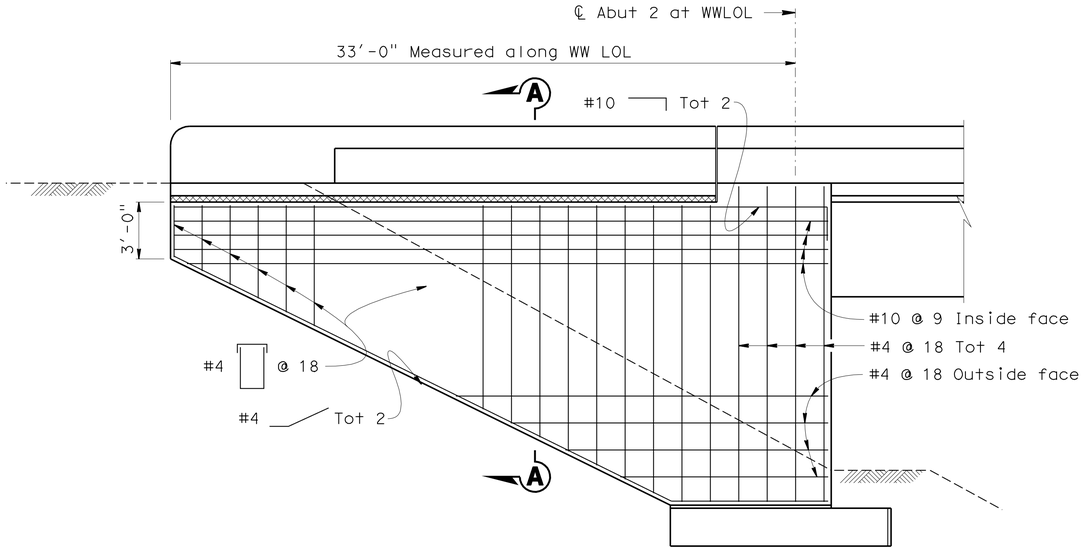

ABUTMENT 2 LEFT WIDENING WINGWALL ELEVATION

1/4" = 1'

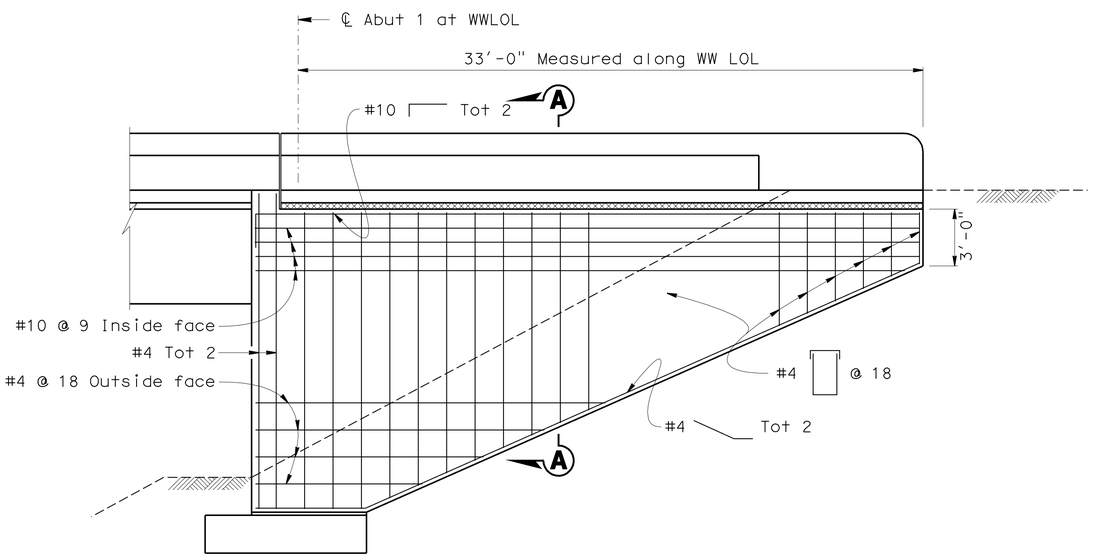

ABUTMENT 1 LEFT WIDENING WINGWALL ELEVATION

1/4" = 1'

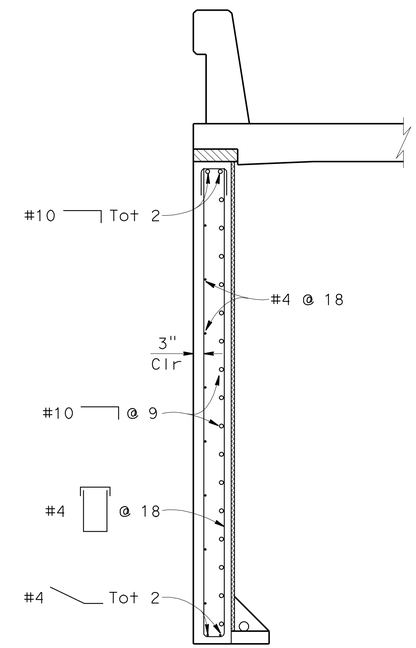

SECTION A-A

1/2" = 1'

NOTE:
THE CONTRACTOR SHALL VERIFY ALL CONTROLLING FIELD DIMENSIONS BEFORE ORDERING OR FABRICATING ANY MATERIAL.

	BY	CHECKED
DESIGN	D. Menzmer	C. Hensel
DETAILS	kc	D. Menzmer
QUANTITIES	C. Hensel	D. Menzmer

STATE OF CALIFORNIA DEPARTMENT OF TRANSPORTATION

DIVISION OF ENGINEERING SERVICES STRUCTURE DESIGN DESIGN BRANCH 12

BRIDGE NO. 52-0279
POST MILE 43.6

BATES ROAD UNDERCROSSING (WIDEN)
ABUTMENT DETAILS NO. 2

STRUCTURES DESIGN DETAIL SHEET (ENGLISH) (REV. 10/25/05)

ORIGINAL SCALE IN INCHES FOR REDUCED PLANS 0 1 2 3

CU 07
EA 260701

DISREGARD PRINTS BEARING EARLIER REVISION DATES → 1-4-10 1-28-10 2-15-11

REVISION DATES

SHEET 14 OF 37

FILE => e-52-0279-d-abt08.dgn

USERNAME => s124936 DATE PLOTTED => 25-JUN-2011 TIME PLOTTED => 08:51

DIST	COUNTY	ROUTE	POST MILES TOTAL PROJECT	SHEET No	TOTAL SHEETS
07	Ven,SB	101	R39.8/R43.6, 0.0/2.2	675	757

REGISTERED CIVIL ENGINEER 10-18-10 DATE

6-20-11
PLANS APPROVAL DATE

REGISTERED PROFESSIONAL ENGINEER DOUGLAS C. MENZMER No. C63498 Exp. 09-30-12 CIVIL STATE OF CALIFORNIA

The State of California or its officers or agents shall not be responsible for the accuracy or completeness of electronic copies of this plan sheet.

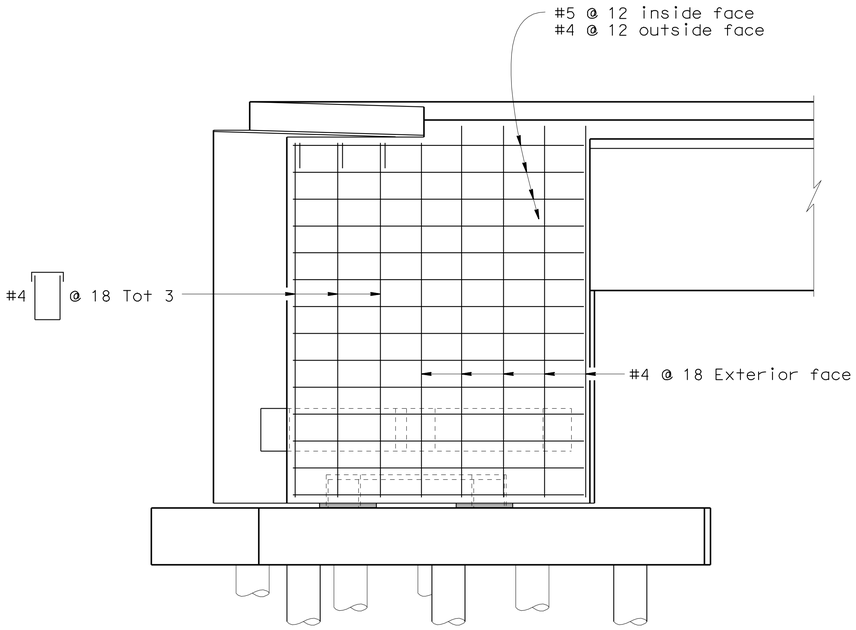

ABUTMENT 1 - RIGHT WIDENING ELEVATION
3/8" = 1'-0"

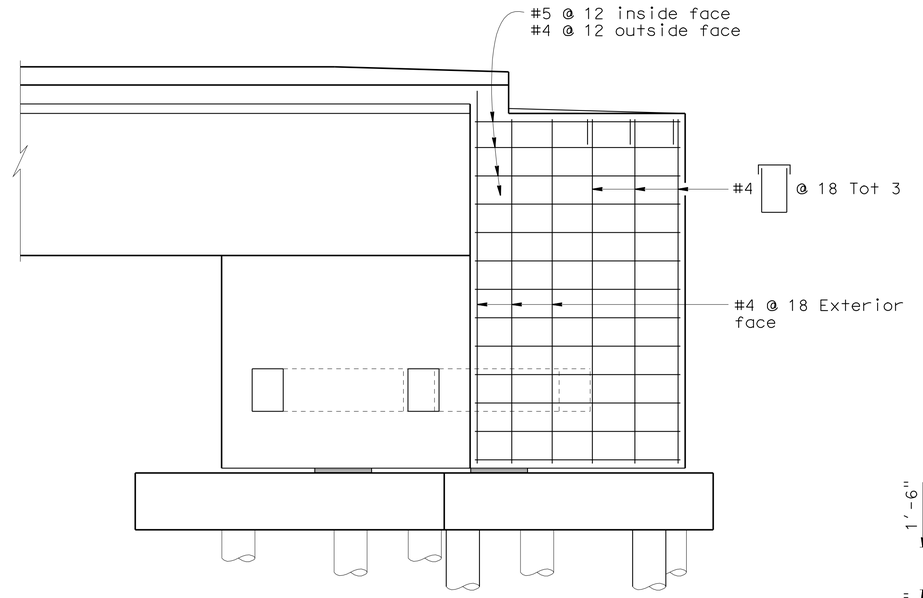

ABUTMENT 2 - RIGHT WIDENING ELEVATION
3/8" = 1'-0"

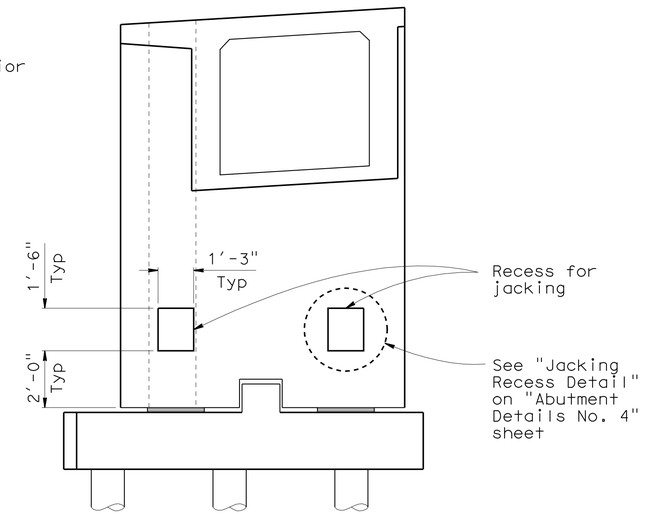

VIEW A-A
3/8" = 1'-0"

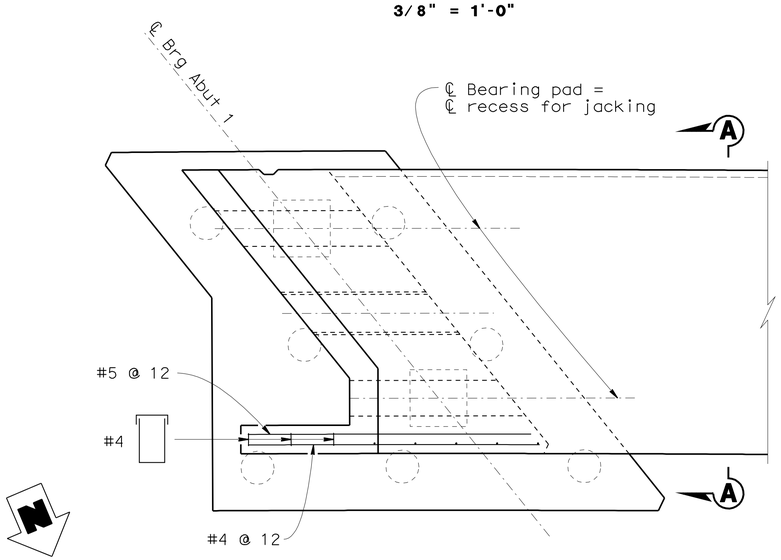

ABUTMENT 1 - RIGHT WIDENING PLAN
3/8" = 1'-0"

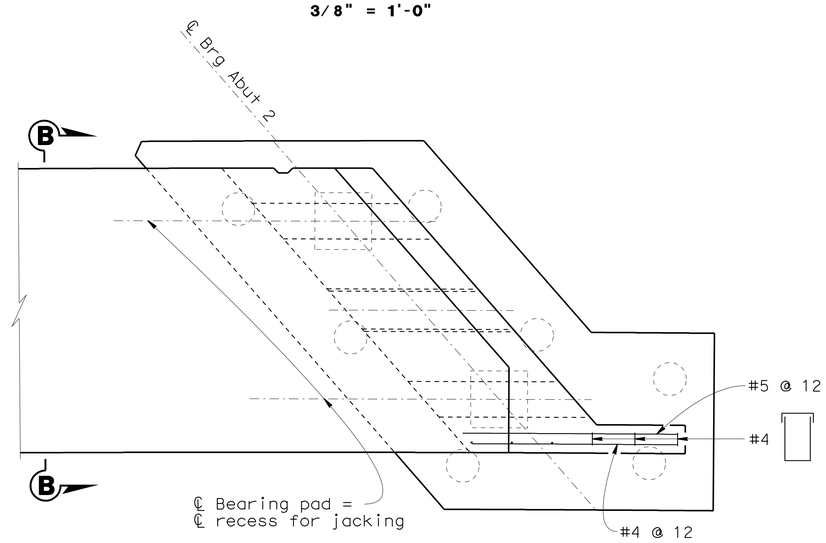

ABUTMENT 2 - RIGHT WIDENING PLAN
3/8" = 1'-0"

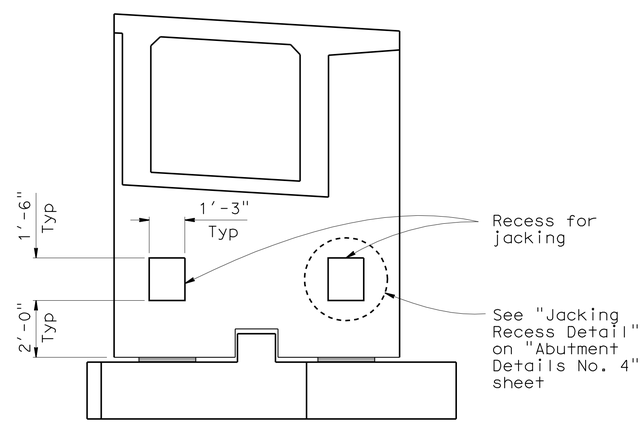

VIEW B-B
3/8" = 1'-0"

NOTE:
THE CONTRACTOR SHALL VERIFY ALL CONTROLLING FIELD DIMENSIONS BEFORE ORDERING OR FABRICATING ANY MATERIAL.

Note:

Abutment closure pour, existing structures and retaining walls not shown.

	BY	CHECKED
DESIGN	D. Menzmer	C. Hensel
DETAILS	kc	D. Menzmer
QUANTITIES	C. Hensel	D. Menzmer

STATE OF CALIFORNIA
DEPARTMENT OF TRANSPORTATION

DIVISION OF ENGINEERING SERVICES
STRUCTURE DESIGN
DESIGN BRANCH 12

BRIDGE NO. 52-0279
POST MILE 43.6

BATES ROAD UNDERCROSSING (WIDEN)
ABUTMENT DETAILS NO. 3

STRUCTURES DESIGN DETAIL SHEET (ENGLISH) (REV. 10/25/05)

ORIGINAL SCALE IN INCHES FOR REDUCED PLANS 0 1 2 3

CU 07
EA 260701

DISREGARD PRINTS BEARING EARLIER REVISION DATES 10-28-10 2-17-11

REVISION DATES

SHEET 15 OF 37

FILE => e-52-0279-d-abt09.dgn

USERNAME => s124496 DATE PLOTTED => 25-JUN-2011 TIME PLOTTED => 08:51

DIST	COUNTY	ROUTE	POST MILES TOTAL PROJECT	SHEET No	TOTAL SHEETS
07	Ven,SB	101	R39.8/R43.6, 0.0/2.2	676	757

REGISTERED CIVIL ENGINEER 10-18-10 DATE

6-20-11
PLANS APPROVAL DATE

REGISTERED PROFESSIONAL ENGINEER DOUGLAS C. MENZMER No. C63498 Exp. 09-30-12 CIVIL STATE OF CALIFORNIA

The State of California or its officers or agents shall not be responsible for the accuracy or completeness of electronic copies of this plan sheet.

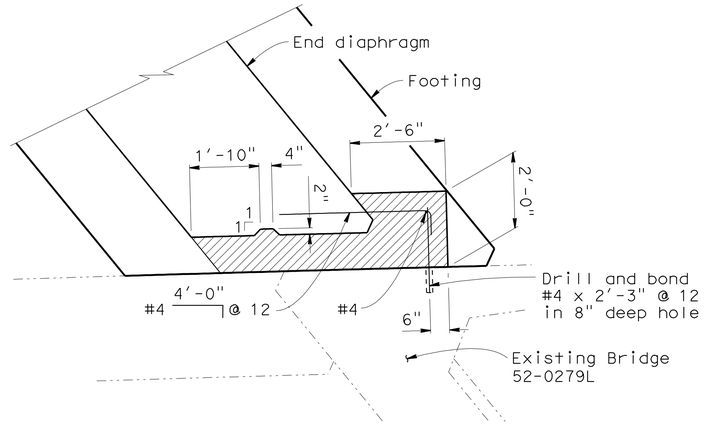

ACUTE CORNER OF EXISTING STRUCTURE

Denotes abutment closure pour

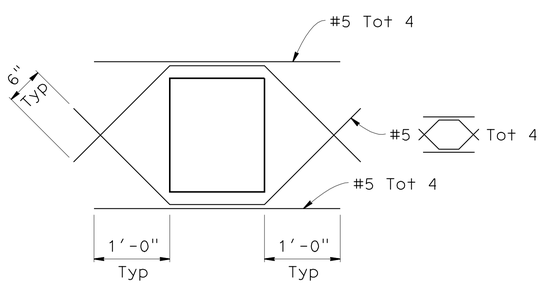

JACKING RECESS DETAIL

1" = 1'-0"

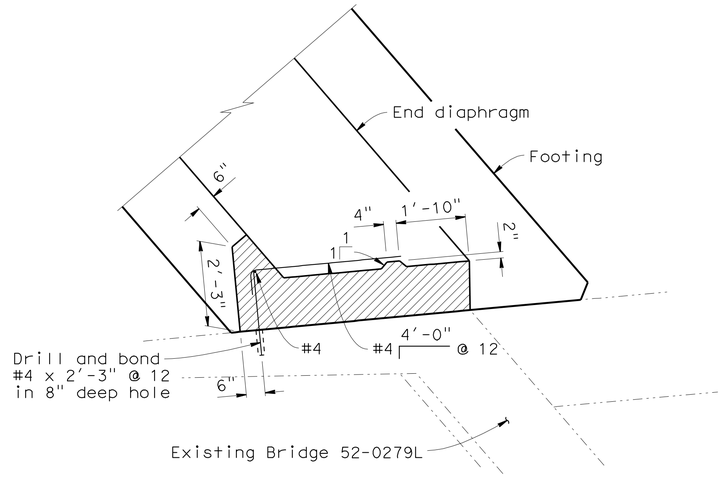

OBTUSE CORNER OF EXISTING STRUCTURE

TYPICAL ABUTMENT CLOSURE POUR

1/2" = 1'-0"

NOTE:
THE CONTRACTOR SHALL VERIFY ALL CONTROLLING FIELD DIMENSIONS BEFORE ORDERING OR FABRICATING ANY MATERIAL.

Suggested Construction Sequence

1. Cast footings and allow concrete strength to reach 80% of f'c (min) prior to jacking.
2. Cast abutment diaphragms and superstructure in elevated position.
3. Stress presstress tendons and grout prestress ducts.
4. Complete lowering operation.
5. Remove jacks and jacking equipment. Fill jacking recesses with concrete.
6. Place closure pours.
7. Place barrier.

Jacking Notes

1. The theoretical dead load reactions shown are based on superstructure and abutment diaphragm dead loads only, and do not include barrier, future AC overlay, live loads, falsework or construction loads.
2. Jacks shall be used only for elevation adjustments. Separate load bearing elements shall be used for carrying construction loads.
3. Jacks shall be capable of sustaining twice the anticipated reactions.
4. Maximum concrete bearing pressure under any jack shall not exceed 2.0 ksi.
5. The structure shall be lowered uniformly. The differential vertical movement between abutments shall not exceed 1".
6. Temporary supports shall be provided to ensure the lateral stability of the jacking system.
7. Four point independent jacking shall be provided at each abutment.

Location	Dead Load Reaction (kips)	Number of Jacks Required	Jack Reaction (kips per jack)
Abutment 1	336	4	84
Abutment 2	328	4	82

Note:

A specialized falsework system may be used in lieu of jacking the structure into place, provided a minimum vertical clearance of 15 feet is maintained at all times.

DESIGN	BY D. Menzmer	CHECKED C. Hensel	
DETAILS	BY kc	CHECKED D. Menzmer	
QUANTITIES	BY C. Hensel	CHECKED D. Menzmer	

STATE OF CALIFORNIA DEPARTMENT OF TRANSPORTATION

DIVISION OF ENGINEERING SERVICES STRUCTURE DESIGN DESIGN BRANCH 12

BRIDGE NO. 52-0279
POST MILE 43.6

BATES ROAD UNDERCROSSING (WIDEN)
ABUTMENT DETAILS NO. 4

STRUCTURES DESIGN DETAIL SHEET (ENGLISH) (REV. 10/25/05)

ORIGINAL SCALE IN INCHES FOR REDUCED PLANS 0 1 2 3

CU 07
EA 260701

DISREGARD PRINTS BEARING EARLIER REVISION DATES 2-15-11

REVISION DATES

SHEET 16 OF 37

FILE => e-52-0279-d-abt10.dgn

USERNAME => s124496 DATE PLOTTED => 25-JUN-2011 TIME PLOTTED => 08:51

DIST	COUNTY	ROUTE	POST MILES TOTAL PROJECT	SHEET No	TOTAL SHEETS
07	Ven,SB	101	R39.8/R43.6, 0.0/2.2	677	757

REGISTERED CIVIL ENGINEER 10-18-10 DATE

6-20-11
PLANS APPROVAL DATE

REGISTERED PROFESSIONAL ENGINEER DOUGLAS C. MENZMER No. C63498 Exp. 09-30-12 CIVIL STATE OF CALIFORNIA

The State of California or its officers or agents shall not be responsible for the accuracy or completeness of electronic copies of this plan sheet.

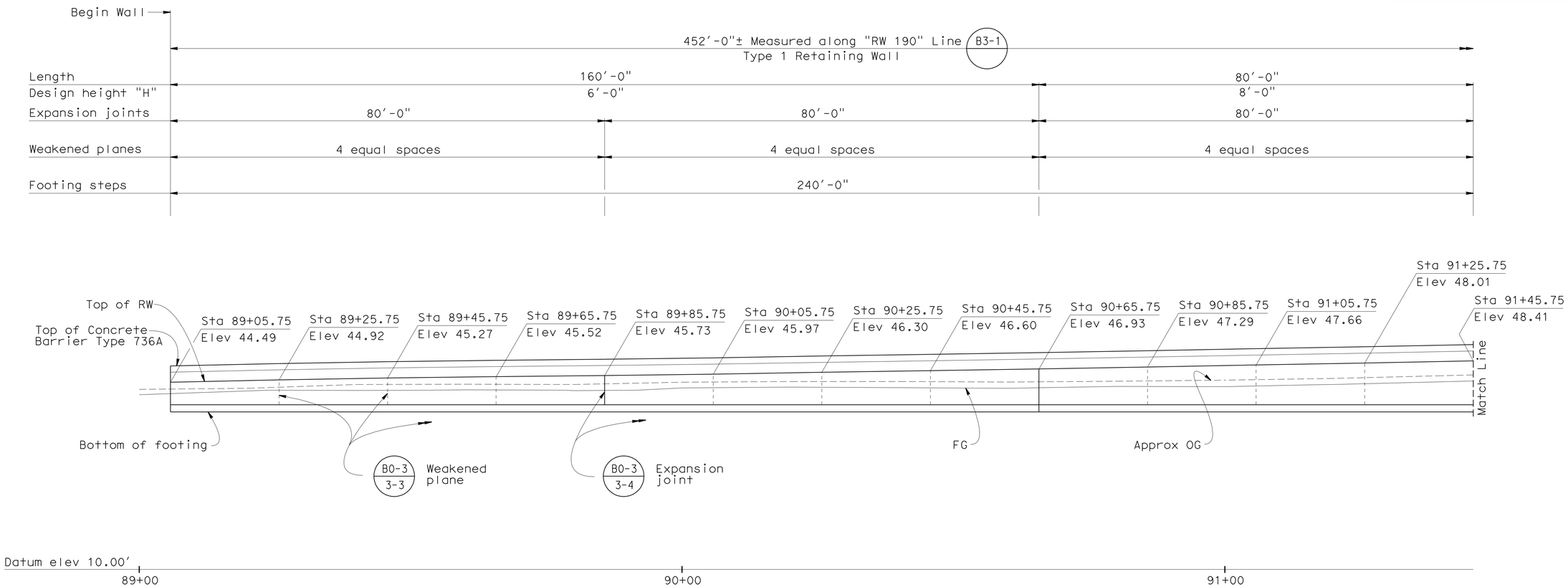

DEVELOPED ELEVATION

1" = 10'

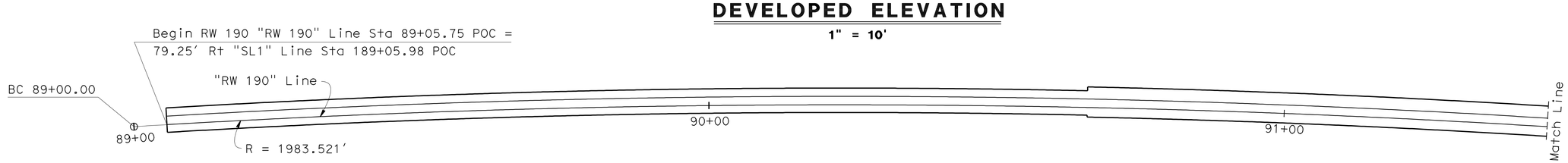

Curve Data

R = 1983.521'
Δ = 13°22'28"
T = 232.56'
L = 463.01'

PLAN

1" = 10'

DESIGN	BY D. Menzmer	CHECKED C. Hensel	
DETAILS	BY kc	CHECKED D. Menzmer	
QUANTITIES	BY C. Hensel	CHECKED D. Menzmer	

STATE OF CALIFORNIA
DEPARTMENT OF TRANSPORTATION

DIVISION OF ENGINEERING SERVICES
STRUCTURE DESIGN
DESIGN BRANCH 12

BRIDGE NO. 52-0279
POST MILE 43.6

BATES ROAD UNDERCROSSING (WIDEN)
RETAINING WALL 190 LAYOUT NO. 1

STRUCTURES DESIGN DETAIL SHEET (ENGLISH) (REV. 10/25/05)

ORIGINAL SCALE IN INCHES FOR REDUCED PLANS 0 1 2 3

CU 07
EA 260701

DISREGARD PRINTS BEARING EARLIER REVISION DATES

REVISION DATES: ~~9-2-09~~ ~~9-16-10~~ 9-27-10

SHEET 17 OF 37

FILE => e-52-0279-e-rw01.dgn

USERNAME => s124196 DATE PLOTTED => 25-JUN-2011 TIME PLOTTED => 08:51

DIST	COUNTY	ROUTE	POST MILES TOTAL PROJECT	SHEET No	TOTAL SHEETS
07	Ven,SB	101	R39.8/R43.6, 0.0/2.2	678	757

REGISTERED CIVIL ENGINEER 10-18-10 DATE

6-20-11
PLANS APPROVAL DATE

REGISTERED PROFESSIONAL ENGINEER DOUGLAS C. MENZMER No. C63498 Exp. 09-30-12 CIVIL STATE OF CALIFORNIA

The State of California or its officers or agents shall not be responsible for the accuracy or completeness of electronic copies of this plan sheet.

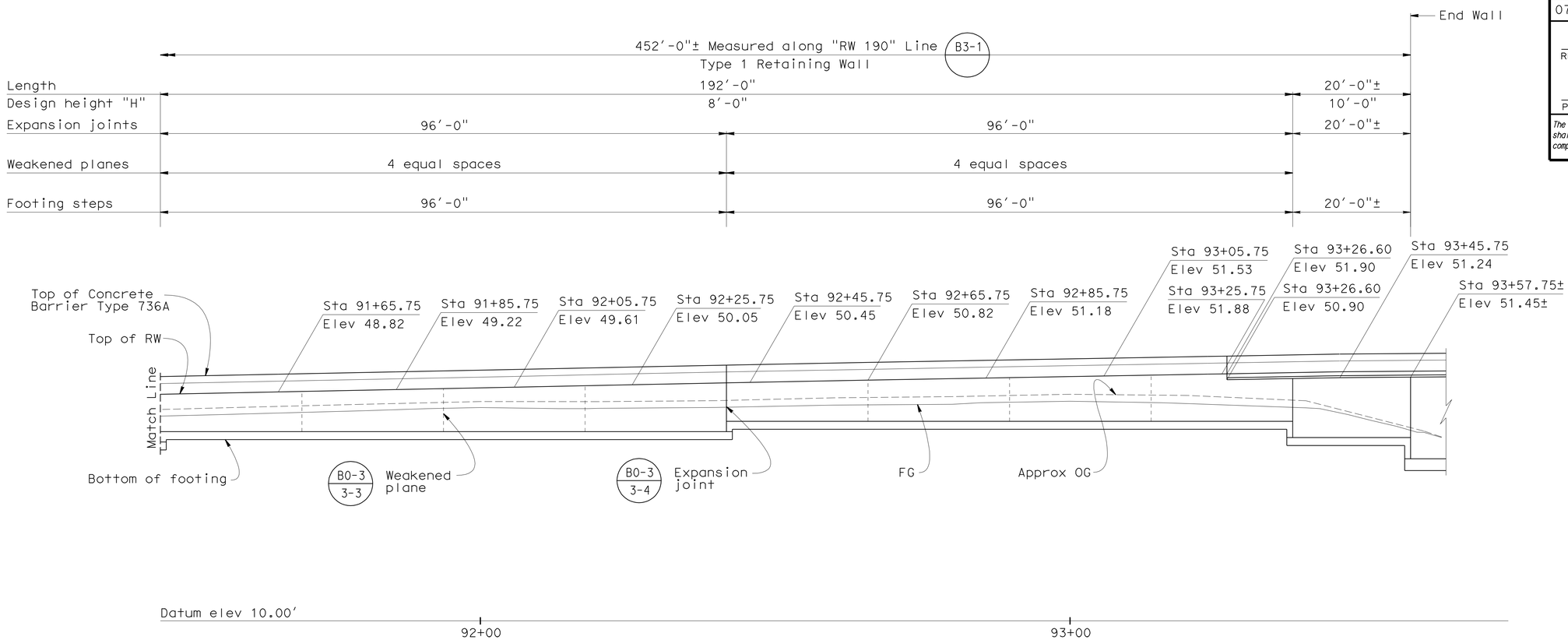

DEVELOPED ELEVATION

1" = 10'

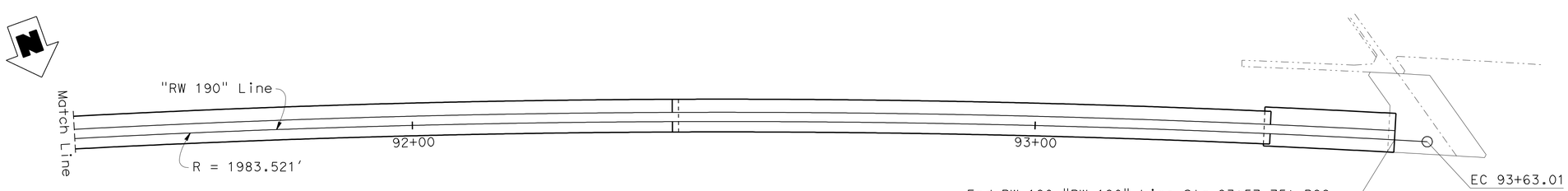

PLAN

1" = 10'

	BY	CHECKED
DESIGN	D. Menzmer	C. Hensel
DETAILS	kc	D. Menzmer
QUANTITIES	C. Hensel	D. Menzmer

STATE OF CALIFORNIA DEPARTMENT OF TRANSPORTATION

DIVISION OF ENGINEERING SERVICES STRUCTURE DESIGN DESIGN BRANCH 12

BRIDGE NO. 52-0279
POST MILE 43.6

BATES ROAD UNDERCROSSING (WIDEN)
RETAINING WALL 190 LAYOUT NO. 2

STRUCTURES DESIGN DETAIL SHEET (ENGLISH) (REV. 10/25/05)

ORIGINAL SCALE IN INCHES FOR REDUCED PLANS 0 1 2 3

CU 07
EA 260701

DISREGARD PRINTS BEARING EARLIER REVISION DATES

REVISION DATES: ~~9-2-09~~ ~~9-16-10~~ 9-28-10

SHEET 18 OF 37

FILE => e-52-0279-e-rw02.dgn

USERNAME => s124496 DATE PLOTTED => 25-JUN-2011 TIME PLOTTED => 08:51

DIST	COUNTY	ROUTE	POST MILES TOTAL PROJECT	SHEET No	TOTAL SHEETS
07	Ven,SB	101	R39.8/R43.6, 0.0/2.2	679	757

REGISTERED CIVIL ENGINEER 10-18-10 DATE

6-20-11
PLANS APPROVAL DATE

REGISTERED PROFESSIONAL ENGINEER DOUGLAS C. MENZMER No. C63498 Exp. 09-30-12 CIVIL STATE OF CALIFORNIA

The State of California or its officers or agents shall not be responsible for the accuracy or completeness of electronic copies of this plan sheet.

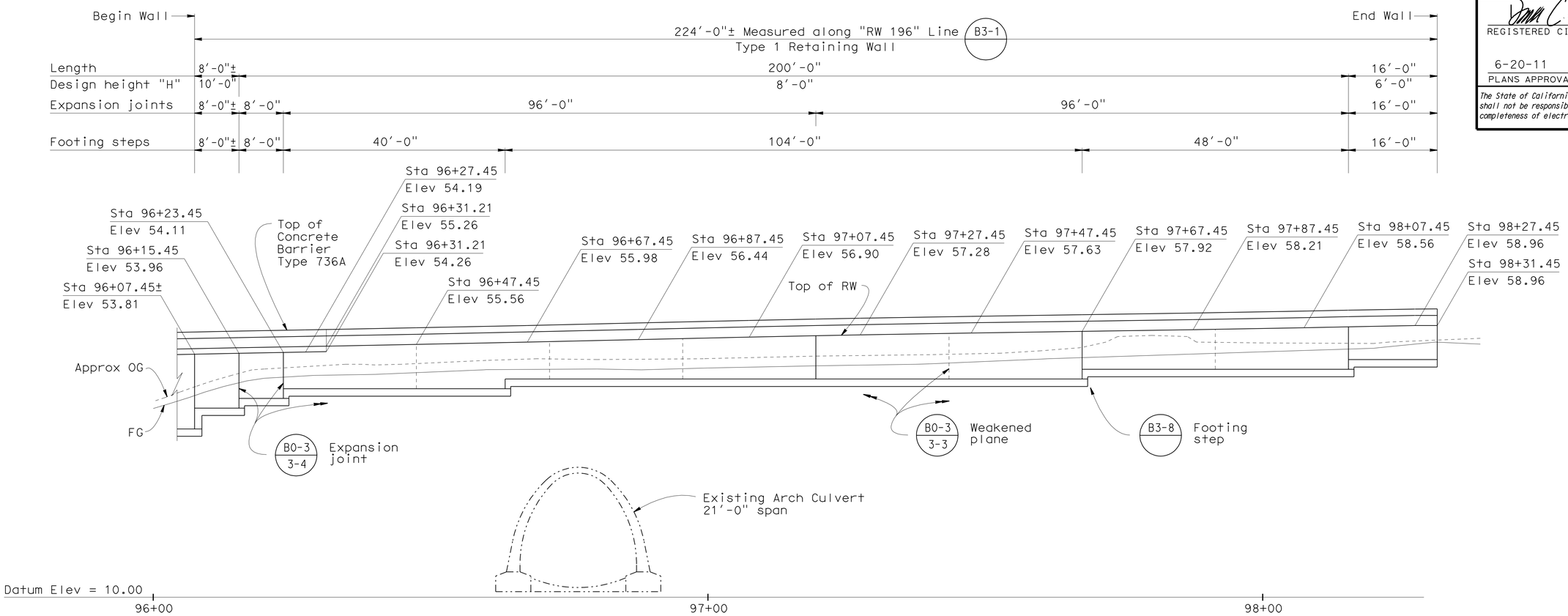

DEVELOPED ELEVATION

1" = 10'

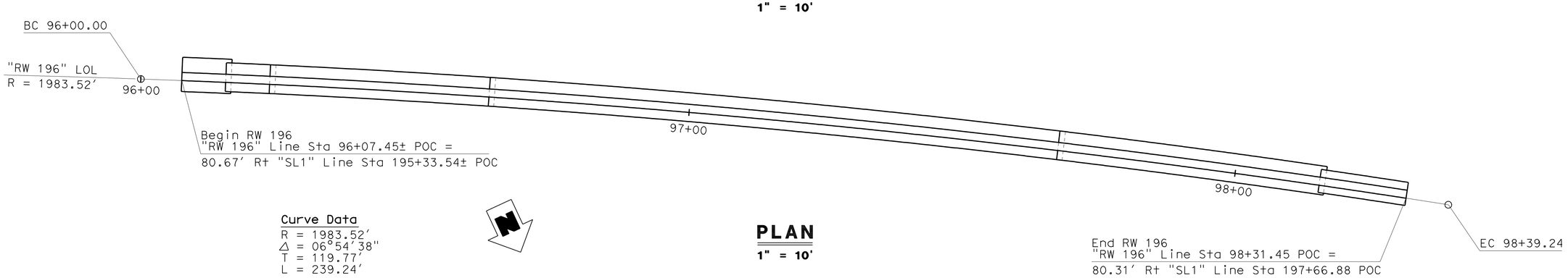

Curve Data
R = 1983.52'
Δ = 06°54'38"
T = 119.77'
L = 239.24'

PLAN

1" = 10'

	BY	CHECKED
DESIGN	D. Menzmer	C. Hensel
DETAILS	kc	D. Menzmer
QUANTITIES	C. Hensel	D. Menzmer

STATE OF CALIFORNIA
DEPARTMENT OF TRANSPORTATION

DIVISION OF ENGINEERING SERVICES
STRUCTURE DESIGN
DESIGN BRANCH 12

BRIDGE NO. 52-0279
POST MILE 43.6

BATES ROAD UNDERCROSSING (WIDEN)
RETAINING WALL 196 LAYOUT

STRUCTURES DESIGN DETAIL SHEET (ENGLISH) (REV. 10/25/05)

ORIGINAL SCALE IN INCHES FOR REDUCED PLANS 0 1 2 3

CU 07
EA 260701

DISREGARD PRINTS BEARING EARLIER REVISION DATES

REVISION DATES: ~~9-2-09~~ ~~9-15-10~~ 9-29-10

SHEET 19 OF 37

FILE => e-52-0279-e-rw03.dgn

USERNAME => s124436 DATE PLOTTED => 25-JUN-2011 TIME PLOTTED => 08:52

DIST	COUNTY	ROUTE	POST MILES TOTAL PROJECT	SHEET No	TOTAL SHEETS
07	Ven,SB	101	R39.8/R43.6, 0.0/2.2	680	757

REGISTERED CIVIL ENGINEER 10-18-10 DATE

6-20-11
PLANS APPROVAL DATE

REGISTERED PROFESSIONAL ENGINEER DOUGLAS C. MENZMER No. C63498 Exp. 09-30-12 CIVIL STATE OF CALIFORNIA

The State of California or its officers or agents shall not be responsible for the accuracy or completeness of electronic copies of this plan sheet.

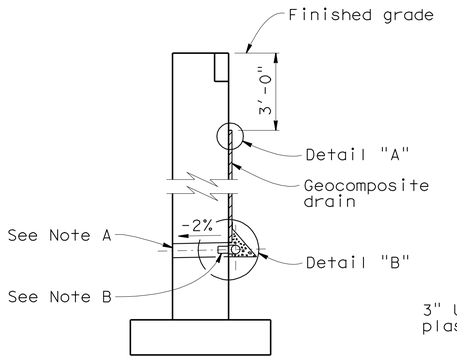

WALL SECTION

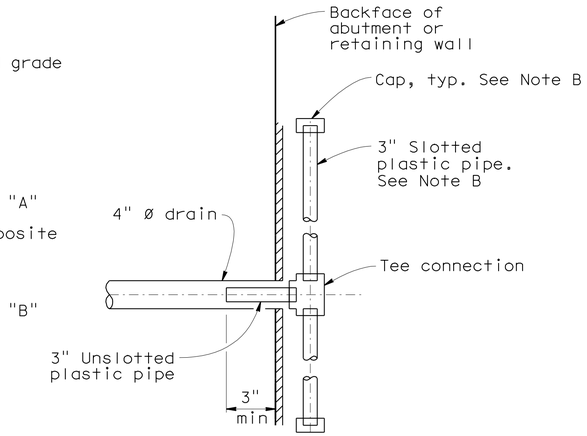

SECTION A-A

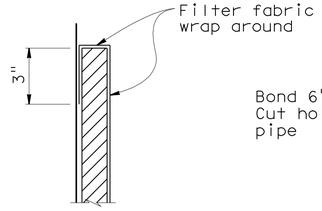

DETAIL "A"

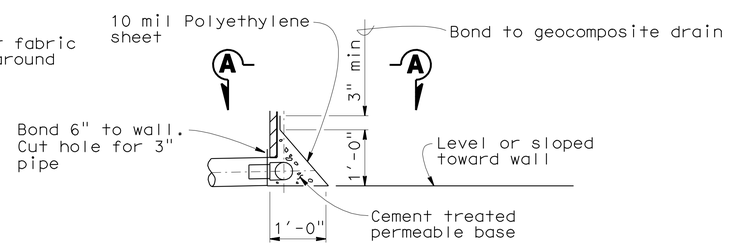

DETAIL "B"

WEEP HOLE AND GEOCOMPOSITE DRAIN

No scale

Alternative to bridge detail B0-3 / 3-1

Notes:

A. 4" ø drains at 25' max center to center. Exposed wall drains shall be located 3"± above finished grade.

B. Geocomposite drain, cement treated permeable base, and 3" ø slotted plastic pipe continuous behind retaining wall or abutment. Cap ends of pipe. Provide "Tee" connection at each 4" ø drain.

C. Connect the low end of plastic pipe to the main outlet pipe as applicable.

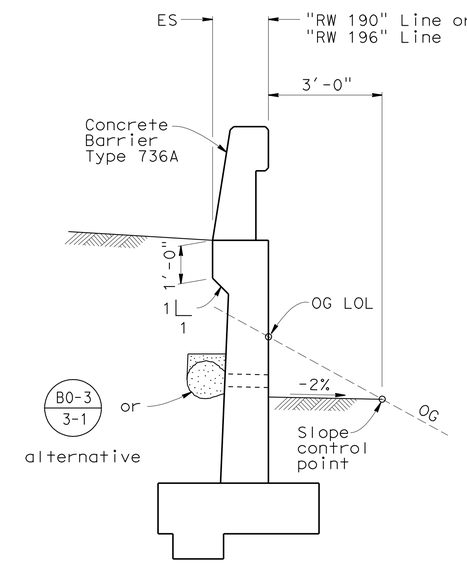

WITHOUT APPROACH SLAB

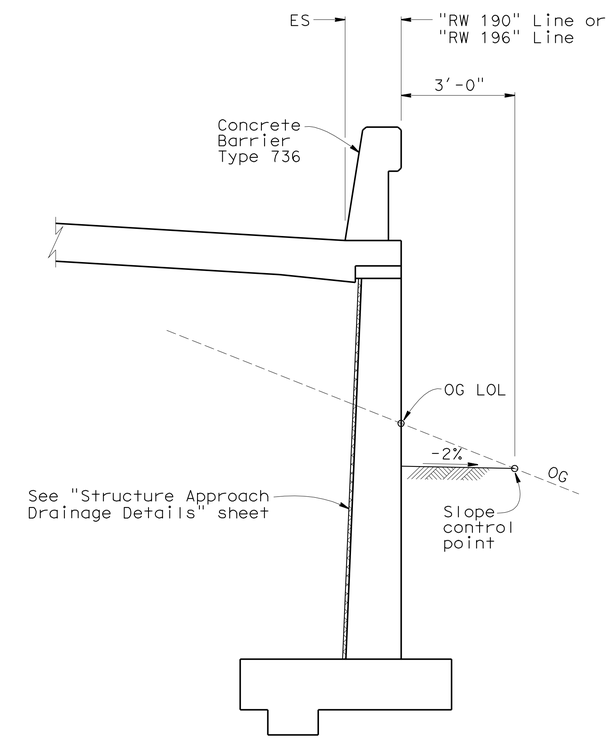

WITH APPROACH SLAB

TYPICAL SECTION

1/2" = 1'

	BY	CHECKED
DESIGN	D. Menzmer	C. Hensel
DETAILS	Kc	D. Menzmer
QUANTITIES	C. Hensel	D. Menzmer

STATE OF CALIFORNIA DEPARTMENT OF TRANSPORTATION

DIVISION OF ENGINEERING SERVICES STRUCTURE DESIGN DESIGN BRANCH 12

BRIDGE NO. 52-0279 POST MILE 43.6

BATES ROAD UNDERCROSSING (WIDEN)
RETAINING WALL DETAILS

STRUCTURES DESIGN DETAIL SHEET (ENGLISH) (REV. 10/25/05)

ORIGINAL SCALE IN INCHES FOR REDUCED PLANS 0 1 2 3

CU 07
EA 260701

DISREGARD PRINTS BEARING EARLIER REVISION DATES 9-2-09 9-15-10 2-4-11

REVISION DATES

SHEET 20 OF 37

FILE => e-52-0279-e-rw04.dgn

USERNAME => s6124436 DATE PLOTTED => 25-JUN-2011 TIME PLOTTED => 08:52

DIST	COUNTY	ROUTE	POST MILES TOTAL PROJECT	SHEET No	TOTAL SHEETS
07	Ven,SB	101	R39.8/R43.6, 0.0/2.2	681	757

REGISTERED CIVIL ENGINEER 10-18-10 DATE

6-20-11
PLANS APPROVAL DATE

REGISTERED PROFESSIONAL ENGINEER DOUGLAS C. MENZMER No. C63498 Exp. 09-30-12 CIVIL STATE OF CALIFORNIA

The State of California or its officers or agents shall not be responsible for the accuracy or completeness of electronic copies of this plan sheet.

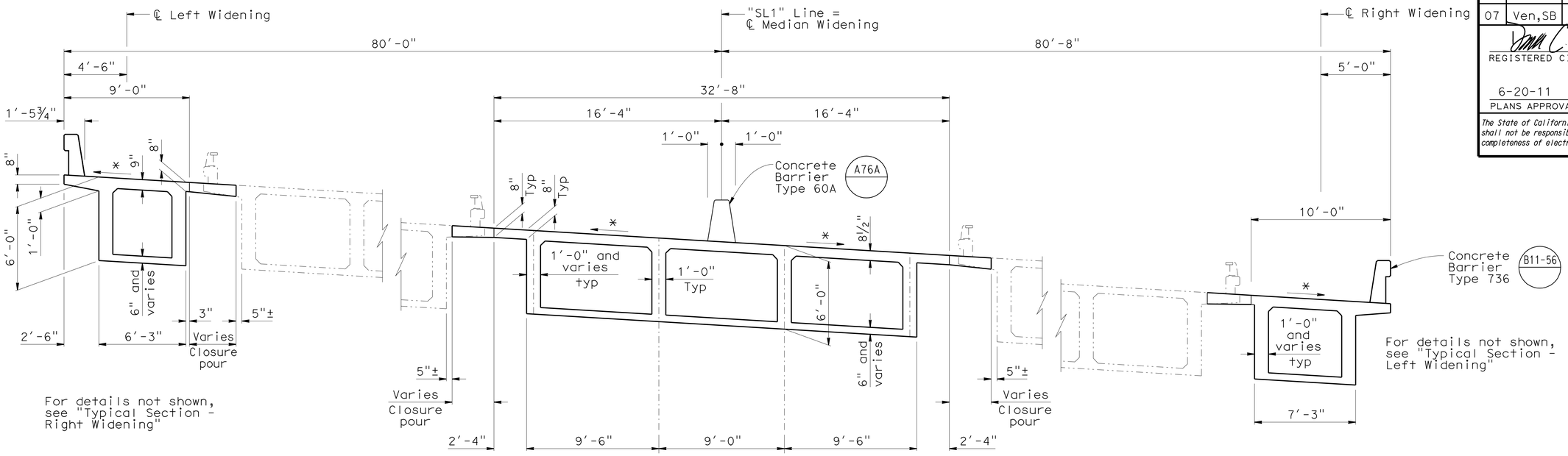

LEFT WIDENING **MEDIAN WIDENING** **RIGHT WIDENING**

TYPICAL SECTION

B7-1

1/4" = 1'-0"

* Match existing cross slope

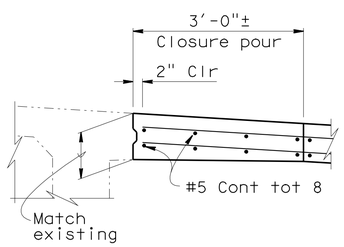

DETAIL A

3/4" = 1'-0"

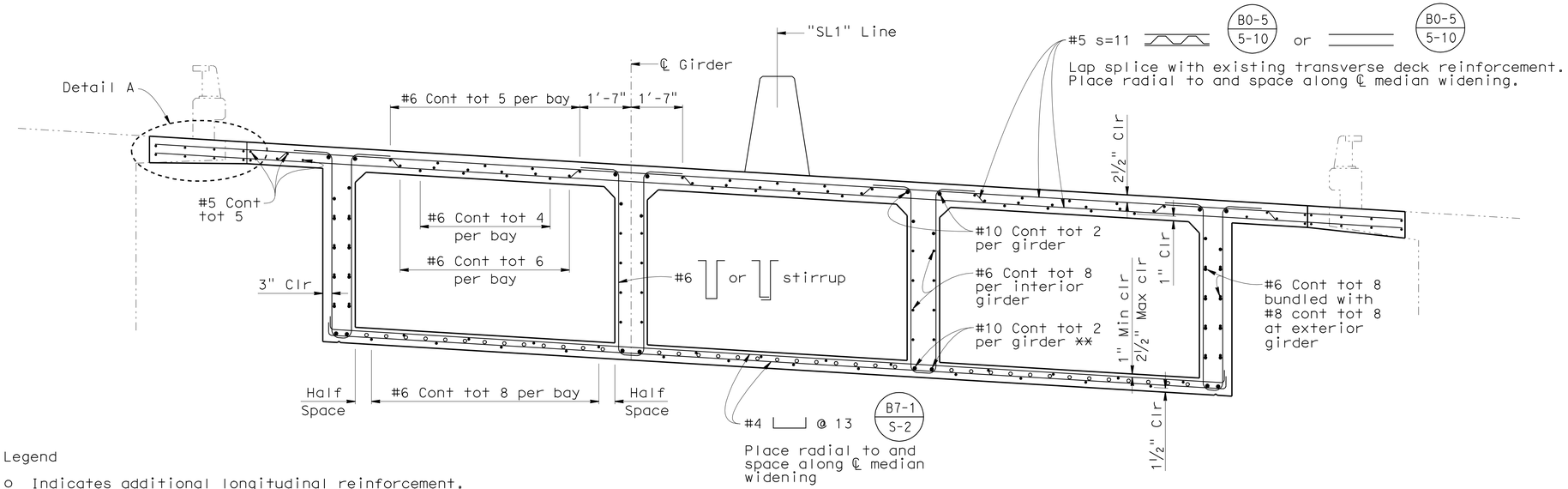

Legend

o Indicates additional longitudinal reinforcement. See "Girder Reinforcement" sheet.

** Only "Service Level" splices allowed in #10 girder reinforcement.

PART TYPICAL SECTION

B7-1

1/2" = 1'-0"

NOTE:
THE CONTRACTOR SHALL VERIFY ALL CONTROLLING FIELD DIMENSIONS BEFORE ORDERING OR FABRICATING ANY MATERIAL.

	BY	CHECKED
DESIGN	D. Menzmer	C. Hensel
DETAILS	kc	D. Menzmer
QUANTITIES	C. Hensel	D. Menzmer

STATE OF CALIFORNIA DEPARTMENT OF TRANSPORTATION

DIVISION OF ENGINEERING SERVICES STRUCTURE DESIGN DESIGN BRANCH 12

BRIDGE NO. 52-0279
POST MILE 43.6

BATES ROAD UNDERCROSSING (WIDEN)
TYPICAL SECTION NO. 1

STRUCTURES DESIGN DETAIL SHEET (ENGLISH) (REV. 10/25/05)

ORIGINAL SCALE IN INCHES FOR REDUCED PLANS 0 1 2 3

CU 07
EA 260701

DISREGARD PRINTS BEARING EARLIER REVISION DATES

REVISION DATES: 8-31-09 10-14-09 9-9-10 2-4-11

SHEET 21 OF 37

FILE => e-52-0279-k-typ01.dgn

USERNAME => s124496 DATE PLOTTED => 25-JUN-2011 TIME PLOTTED => 08:57

DIST	COUNTY	ROUTE	POST MILES TOTAL PROJECT	SHEET No	TOTAL SHEETS
07	Ven,SB	101	R39.8/R43.6, 0.0/2.2	682	757

REGISTERED CIVIL ENGINEER 10-18-10 DATE

6-20-11
PLANS APPROVAL DATE

REGISTERED PROFESSIONAL ENGINEER DOUGLAS C. MENZMER No. C63498 Exp. 09-30-12 CIVIL STATE OF CALIFORNIA

The State of California or its officers or agents shall not be responsible for the accuracy or completeness of electronic copies of this plan sheet.

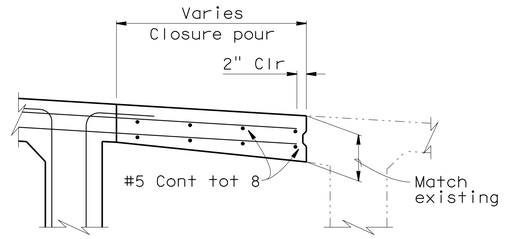

DETAIL B

3/4" = 1'-0"

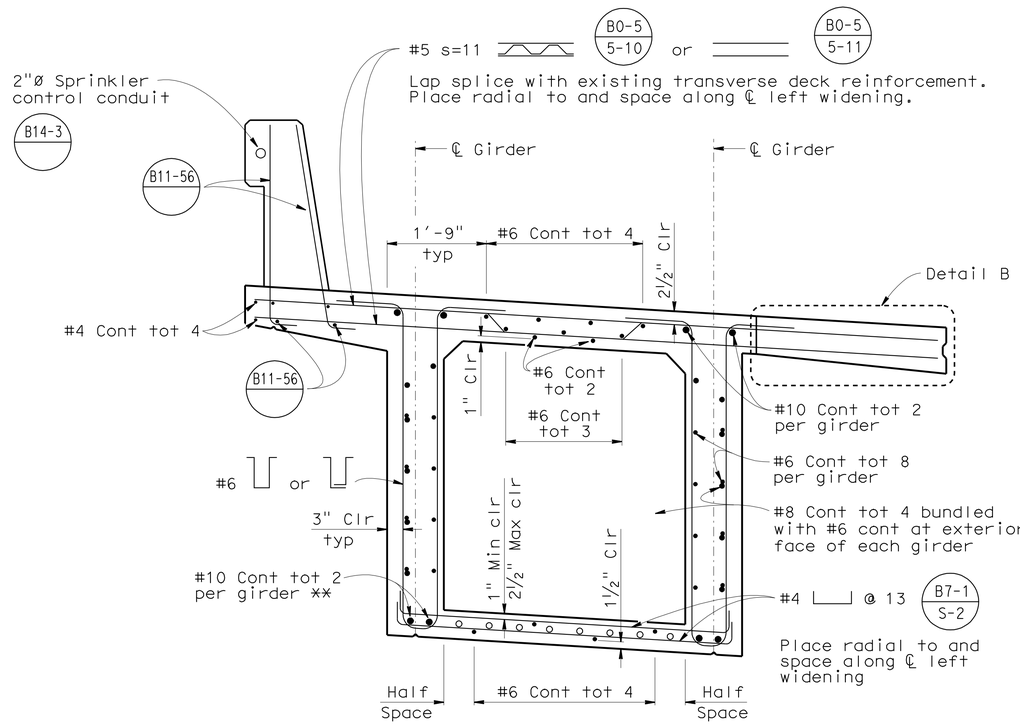

LEFT WIDENING

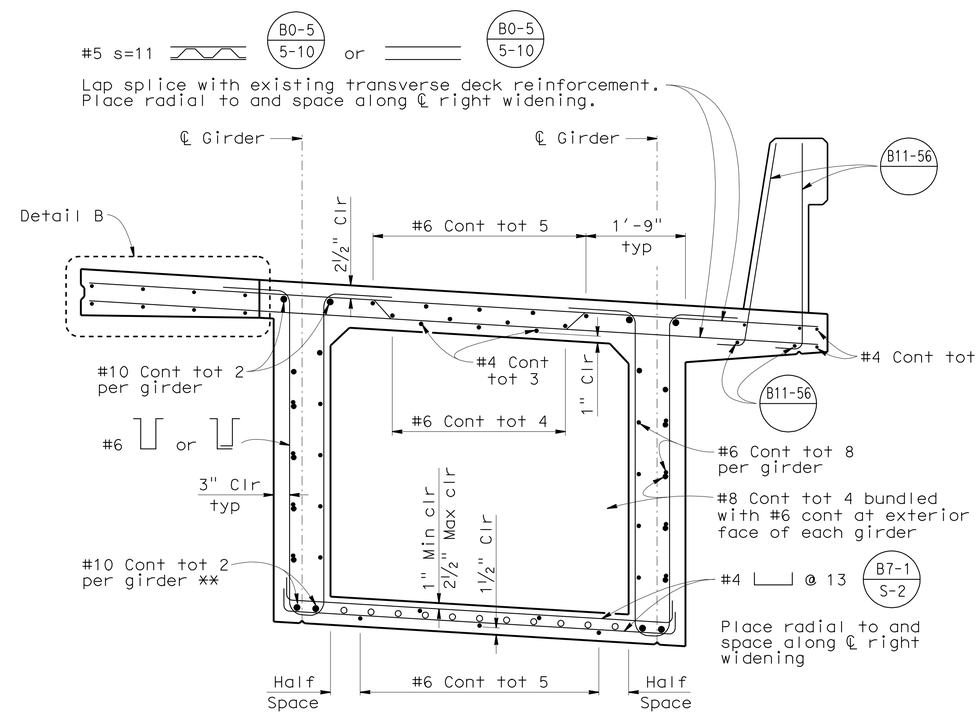

RIGHT WIDENING

PART TYPICAL SECTION

B7-1

3/4" = 1'-0"

NOTE:
THE CONTRACTOR SHALL VERIFY ALL CONTROLLING FIELD DIMENSIONS BEFORE ORDERING OR FABRICATING ANY MATERIAL.

Legend

o Indicates additional longitudinal reinforcement. See "Girder Reinforcement" sheet.

** Only "Service Level" splices allowed in #10 girder reinforcement.

	BY	CHECKED
DESIGN	D. Menzmer	C. Hensel
DETAILS	kc	D. Menzmer
QUANTITIES	C. Hensel	D. Menzmer

STATE OF CALIFORNIA
DEPARTMENT OF TRANSPORTATION

DIVISION OF ENGINEERING SERVICES
STRUCTURE DESIGN
DESIGN BRANCH 12

BRIDGE NO. 52-0279
POST MILE 43.6

BATES ROAD UNDERCROSSING (WIDEN)

TYPICAL SECTION NO. 2

STRUCTURES DESIGN DETAIL SHEET (ENGLISH) (REV. 10/25/05)

ORIGINAL SCALE IN INCHES FOR REDUCED PLANS 0 1 2 3

CU 07
EA 260701

DISREGARD PRINTS BEARING EARLIER REVISION DATES

REVISION DATES: 8-31-09 10-14-09 9-14-10 9-28-10

SHEET 22 OF 37

FILE => e-52-0279-k-typ02.dgn

USERNAME => s124436 DATE PLOTTED => 25-JUN-2011 TIME PLOTTED => 08:58

DIST	COUNTY	ROUTE	POST MILES TOTAL PROJECT	SHEET No	TOTAL SHEETS
07	Ven,SB	101	R39.8/R43.6, 0.0/2.2	683	757

REGISTERED CIVIL ENGINEER 10-18-10 DATE

6-20-11
PLANS APPROVAL DATE

REGISTERED PROFESSIONAL ENGINEER DOUGLAS C. MENZMER No. C63498 Exp. 09-30-12 CIVIL STATE OF CALIFORNIA

The State of California or its officers or agents shall not be responsible for the accuracy or completeness of electronic copies of this plan sheet.

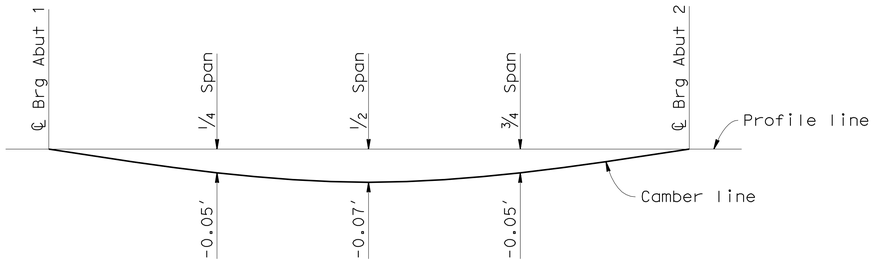

CAMBER DIAGRAM

Does not include allowance for falsework settlement.

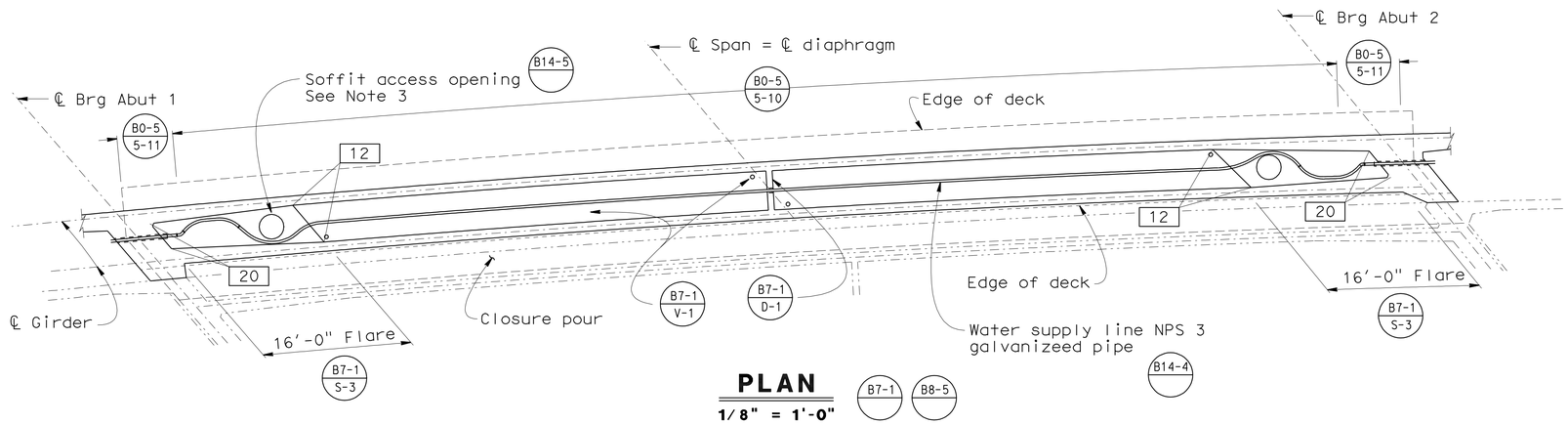

PLAN

1/8" = 1'-0"

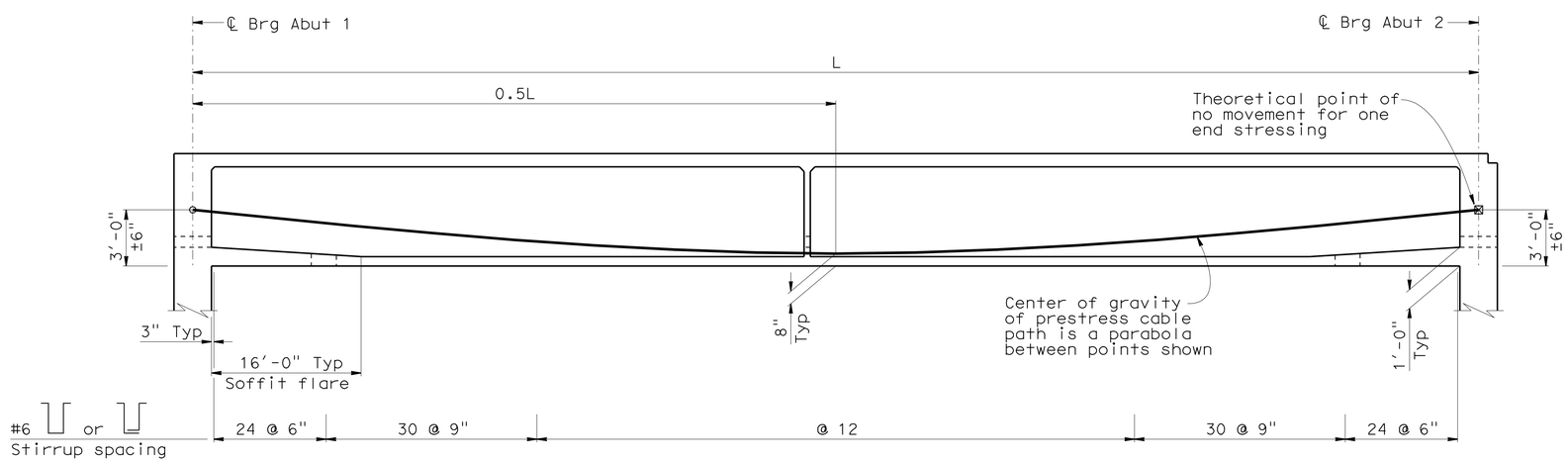

LONGITUDINAL SECTION

No scale

NOTE:
THE CONTRACTOR SHALL VERIFY ALL CONTROLLING FIELD DIMENSIONS BEFORE ORDERING OR FABRICATING ANY MATERIAL.

PRESTRESSING NOTES

270 KSI Low Relaxation Strand:

P_{jack} = 3850 kips

Anchor Set = 3/8 in

Total Number of Girders = 2

Distribution of prestress force (Pjack) between girders shall not exceed the ratio of 3:2. Maximum final force variation between girders shall not exceed 725 kips.

Concrete: f'_c = 6.0 ksi @ 28 days

f'_{ci} = 3.5 ksi @ time of stressing

Contractor shall submit elongation calculations based on initial stress at

☒ = 0.952 times jacking stress.

One end stressing shall be performed from Abutment 1 end.

Notes:

1. For "End Diaphragm", see "Abutment Details No. 1" sheet.
2. ▭ Indicates girder stem width in inches.
3. Soffit access openings to be located 12 '-0" from interior faces of end diaphragms and centered between girders.
4. Place water supply line to avoid conflict with soffit access opening.

	BY	CHECKED
DESIGN	D. Menzmer	C. Hensel
DETAILS	kc	D. Menzmer
QUANTITIES	C. Hensel	D. Menzmer

STATE OF CALIFORNIA
DEPARTMENT OF TRANSPORTATION

DIVISION OF ENGINEERING SERVICES
STRUCTURE DESIGN
DESIGN BRANCH 12

BRIDGE NO. 52-0279
POST MILE 43.6

BATES ROAD UNDERCROSSING (WIDEN)
GIRDER LAYOUT LEFT WIDENING

STRUCTURES DESIGN DETAIL SHEET (ENGLISH) (REV. 10/25/05)

ORIGINAL SCALE IN INCHES FOR REDUCED PLANS 0 1 2 3

CU 07
EA 260701

DISREGARD PRINTS BEARING EARLIER REVISION DATES

REVISION DATES: 6-17-09 8-24-09 10-14-09 9-28-10 2-4-11

SHEET 23 OF 37

FILE => e-52-0279-m-gir01.dgn

USERNAME => s124496 DATE PLOTTED => 25-JUN-2011 TIME PLOTTED => 08:58

DIST	COUNTY	ROUTE	POST MILES TOTAL PROJECT	SHEET No	TOTAL SHEETS
07	Ven,SB	101	R39.8/R43.6, 0.0/2.2	684	757

REGISTERED CIVIL ENGINEER 10-18-10 DATE

6-20-11
PLANS APPROVAL DATE

REGISTERED PROFESSIONAL ENGINEER DOUGLAS C. MENZMER No. C63498 Exp. 09-30-12 CIVIL STATE OF CALIFORNIA

The State of California or its officers or agents shall not be responsible for the accuracy or completeness of electronic copies of this plan sheet.

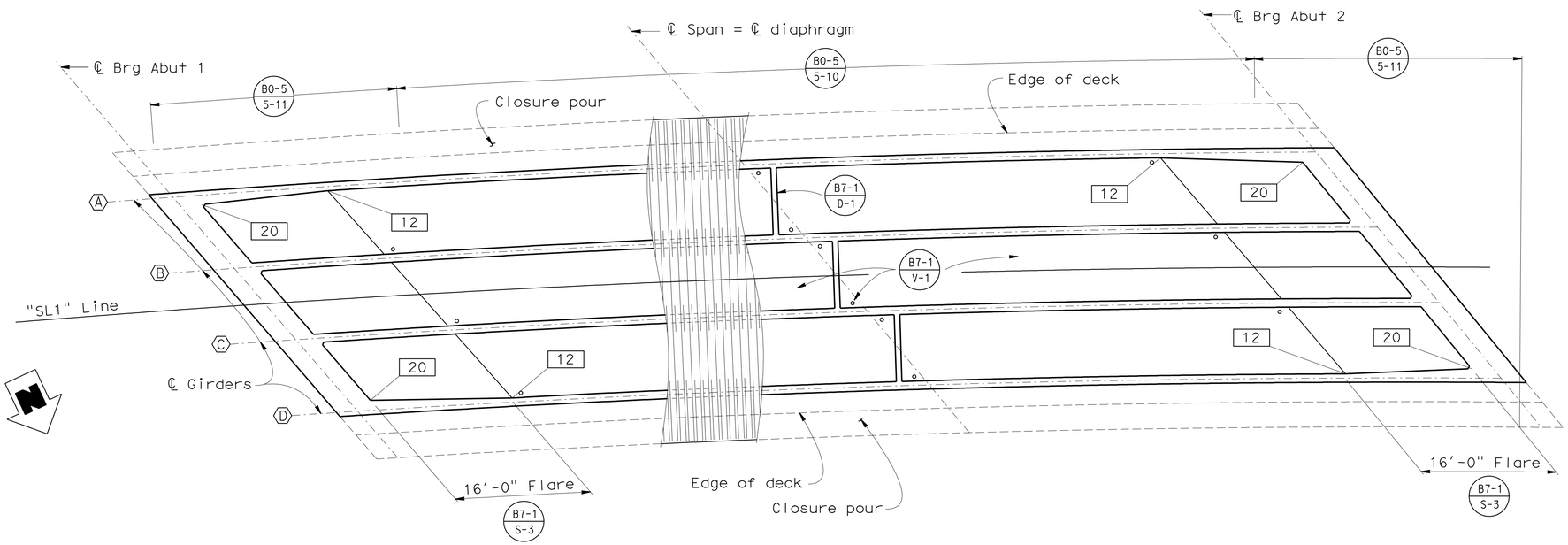

PLAN

1/8" = 1'-0" B7-1 B8-5

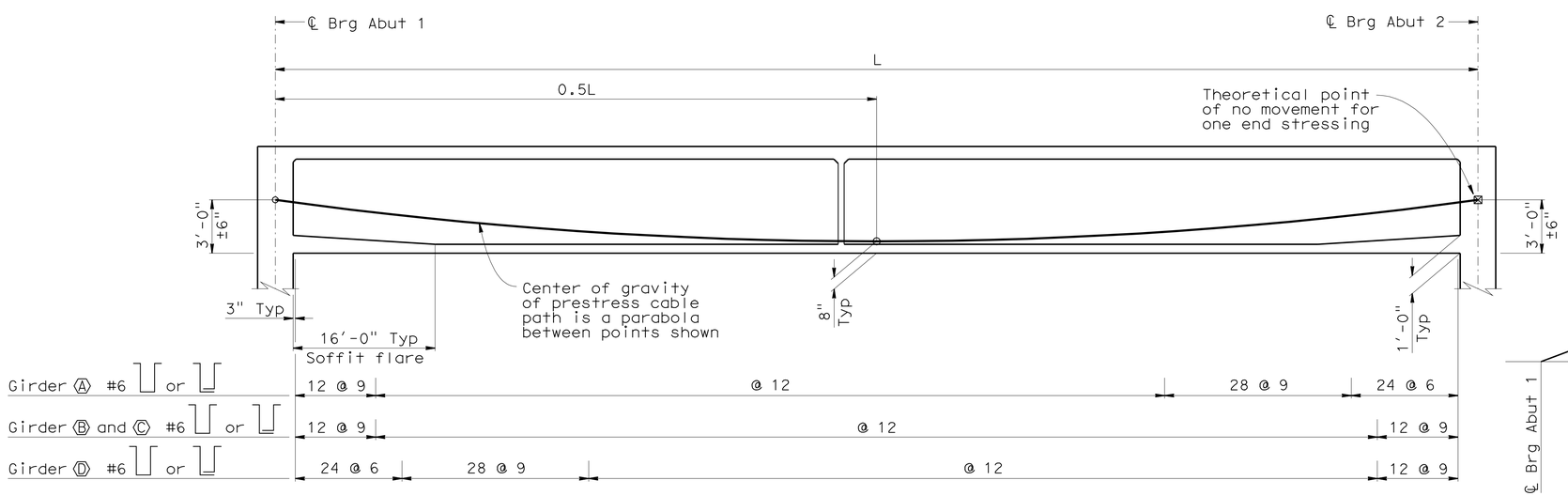

NOTE:
THE CONTRACTOR SHALL VERIFY ALL CONTROLLING FIELD DIMENSIONS BEFORE ORDERING OR FABRICATING ANY MATERIAL.

LONGITUDINAL SECTION

No scale

PRESTRESSING NOTES

270 KSI Low Relaxation Strand:

P_{jack} = 8400 kips

Anchor Set = 3/8 in

Total Number of Girders = 4

Distribution of prestress force (Pjack) between girders shall not exceed the ratio of 3:2. Maximum final force variation between girders shall not exceed 725 kips.

Concrete: f'_c = 6.0 ksi @ 28 days

f'_{ci} = 3.5 ksi @ time of stressing

Contractor shall submit elongation calculations based on initial stress at

☒ = 0.951 times jacking stress.

One end stressing shall be performed from Abutment 1 end.

Notes:

1. For "End Diaphragm", see "Abutment Details No. 1" sheet.
2. ▭ Indicates top of girder stem width in inches.

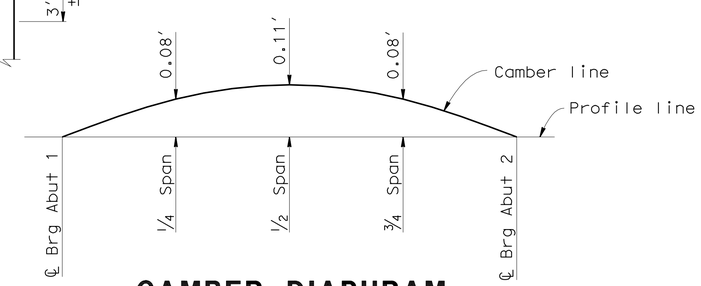

CAMBER DIAPHRAM

Does not include allowance for falsework settlement.

DESIGN	BY D. Menzmer	CHECKED C. Hensel	
DETAILS	BY kc	CHECKED D. Menzmer	
QUANTITIES	BY C. Hensel	CHECKED D. Menzmer	

STATE OF CALIFORNIA DEPARTMENT OF TRANSPORTATION

DIVISION OF ENGINEERING SERVICES STRUCTURE DESIGN DESIGN BRANCH 12

BRIDGE NO. 52-0279
POST MILE 43.6

BATES ROAD UNDERCROSSING (WIDEN)
GIRDER LAYOUT MEDIAN WIDENING

STRUCTURES DESIGN DETAIL SHEET (ENGLISH) (REV. 10/25/05)

ORIGINAL SCALE IN INCHES FOR REDUCED PLANS 0 1 2 3

CU 07
EA 260701

DISREGARD PRINTS BEARING EARLIER REVISION DATES 6-13-09 1-4-10 2-4-11

REVISION DATES

SHEET 24 OF 37

FILE => e-52-0279-m-gir02.dgn

USERNAME => s124436 DATE PLOTTED => 25-JUN-2011 TIME PLOTTED => 08:58

DIST	COUNTY	ROUTE	POST MILES TOTAL PROJECT	SHEET No	TOTAL SHEETS
07	Ven,SB	101	R39.8/R43.6, 0.0/2.2	685	757

REGISTERED CIVIL ENGINEER 10-18-10 DATE

6-20-11
PLANS APPROVAL DATE

REGISTERED PROFESSIONAL ENGINEER DOUGLAS C. MENZMER No. C63498 Exp. 09-30-12 CIVIL STATE OF CALIFORNIA

The State of California or its officers or agents shall not be responsible for the accuracy or completeness of electronic copies of this plan sheet.

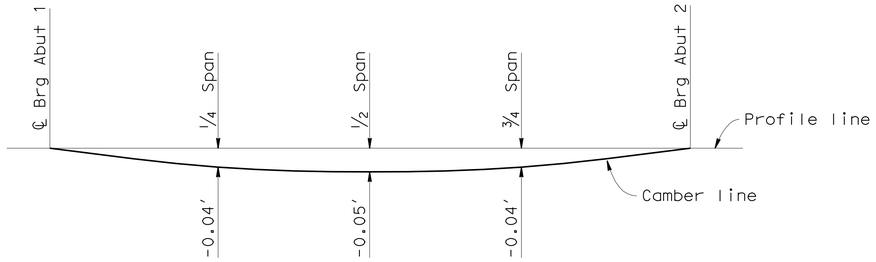

CAMBER DIAGRAM

Does not include allowance for falsework settlement.

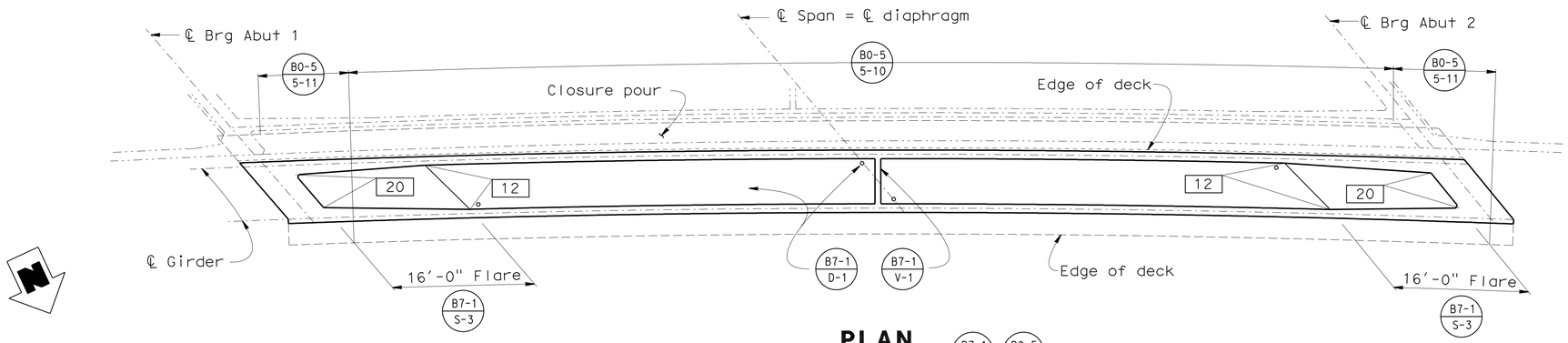

PLAN

1/8" = 1'-0"

B7-1 B8-5

PRESTRESSING NOTES

270 KSI Low Relaxation Strand:

P_{jack} = 4000 kips

Anchor Set = 3/8 in

Total Number of Girders = 2

Distribution of prestress force (Pjack) between girders shall not exceed the ratio of 3:2. Maximum final force variation between girders shall not exceed 725 kips.

Concrete: f'_c = 6.0 ksi @ 28 days

f'_{ci} = 3.5 ksi @ time of stressing

Contractor shall submit elongation calculations based on initial stress at

☒ = 0.952 times jacking stress.

One end stressing shall be performed from Abutment 1 end.

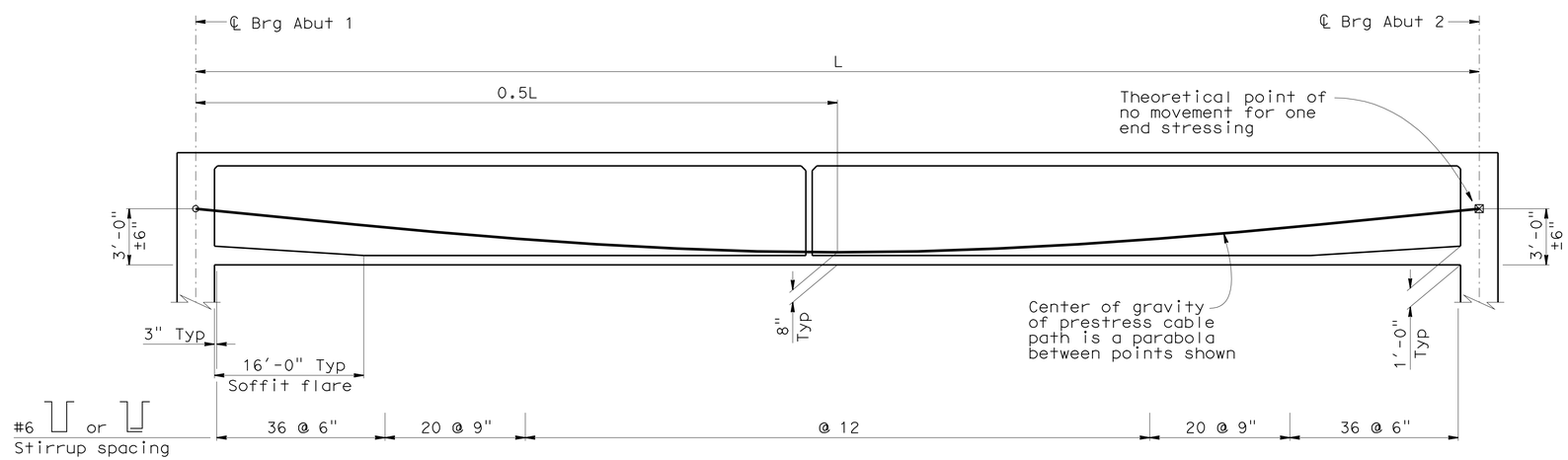

LONGITUDINAL SECTION

No scale

Notes:

1. For "End Diaphragm", see "Abutment Details No. 1" sheet.
2. ▭ Indicates girder stem width in inches.

NOTE:
THE CONTRACTOR SHALL VERIFY ALL CONTROLLING FIELD DIMENSIONS BEFORE ORDERING OR FABRICATING ANY MATERIAL.

	BY	CHECKED
DESIGN	D. Menzmer	C. Hensel
DETAILS	kc	D. Menzmer
QUANTITIES	C. Hensel	D. Menzmer

STATE OF CALIFORNIA DEPARTMENT OF TRANSPORTATION

DIVISION OF ENGINEERING SERVICES STRUCTURE DESIGN DESIGN BRANCH 12

BRIDGE NO. 52-0279
POST MILE 43.6

BATES ROAD UNDERCROSSING (WIDEN)
GIRDER LAYOUT RIGHT WIDENING

STRUCTURES DESIGN DETAIL SHEET (ENGLISH) (REV. 10/25/05)

ORIGINAL SCALE IN INCHES FOR REDUCED PLANS 0 1 2 3

CU 07
EA 260701

DISREGARD PRINTS BEARING EARLIER REVISION DATES

REVISION DATES: 6-17-09 8-28-09 10-14-09 10-29-10

SHEET 25 OF 37

FILE => e-52-0279-m-gir03.dgn

USERNAME => s124196 DATE PLOTTED => 25-JUN-2011 TIME PLOTTED => 08:58

DIST	COUNTY	ROUTE	POST MILES TOTAL PROJECT	SHEET No	TOTAL SHEETS
07	Ven,SB	101	R39.8/R43.6, 0.0/2.2	686	757

REGISTERED CIVIL ENGINEER 10-18-10 DATE

6-20-11
PLANS APPROVAL DATE

REGISTERED PROFESSIONAL ENGINEER DOUGLAS C. MENZMER No. C63498 Exp. 09-30-12 CIVIL STATE OF CALIFORNIA

The State of California or its officers or agents shall not be responsible for the accuracy or completeness of electronic copies of this plan sheet.

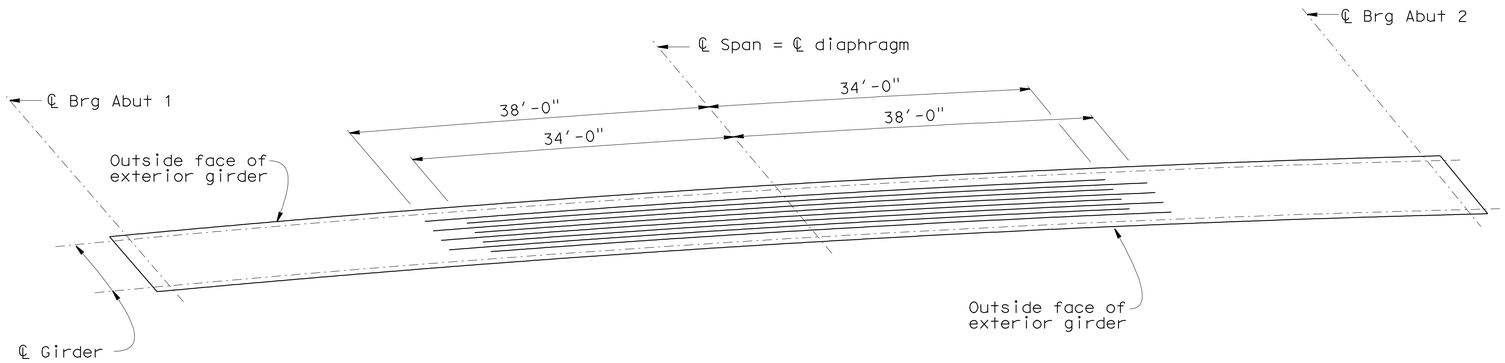

ADDITIONAL BOTTOM SLAB REINFORCEMENT - LEFT WIDENING

No scale

Notes:

1. All additional bottom slab reinforcement #10:
   total 8 bars in left widening
   total 11 bars in right widening
2. Only "Service Level" splices allowed in additional bottom slab reinforcement.
3. Space additional bottom slab reinforcement evenly within bay.

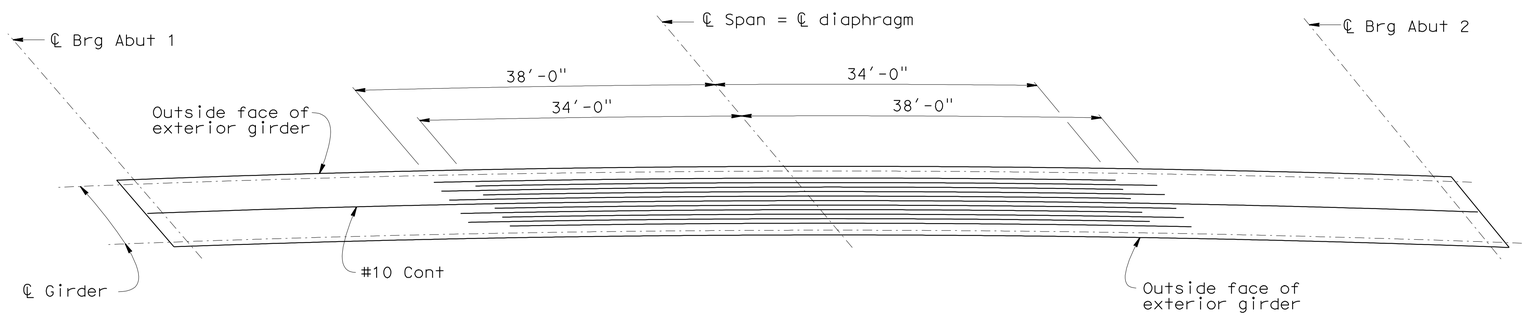

ADDITIONAL BOTTOM SLAB REINFORCEMENT - RIGHT WIDENING

No scale

NOTE:
THE CONTRACTOR SHALL VERIFY ALL CONTROLLING FIELD DIMENSIONS BEFORE ORDERING OR FABRICATING ANY MATERIAL.

	BY	CHECKED
DESIGN	D. Menzmer	C. Hensel
DETAILS	kc	D. Menzmer
QUANTITIES	C. Hensel	D. Menzmer

STATE OF CALIFORNIA
DEPARTMENT OF TRANSPORTATION

DIVISION OF ENGINEERING SERVICES
STRUCTURE DESIGN
DESIGN BRANCH 12

BRIDGE NO. 52-0279
POST MILE 43.6

BATES ROAD UNDERCROSSING (WIDEN)
GIRDER REINFORCEMENT NO. 1

STRUCTURES DESIGN DETAIL SHEET (ENGLISH) (REV. 10/25/05)

ORIGINAL SCALE IN INCHES FOR REDUCED PLANS 0 1 2 3

CU 07
EA 260701

DISREGARD PRINTS BEARING EARLIER REVISION DATES → ~~8-26-09~~ 10-14-09

REVISION DATES

SHEET 26 OF 37

FILE => e-52-0279-m-gir04.dgn

USERNAME => s124496 DATE PLOTTED => 25-JUN-2011 TIME PLOTTED => 08:58

DIST	COUNTY	ROUTE	POST MILES TOTAL PROJECT	SHEET No	TOTAL SHEETS
07	Ven,SB	101	R39.8/R43.6, 0.0/2.2	687	757

REGISTERED CIVIL ENGINEER 10-18-10 DATE

6-20-11
PLANS APPROVAL DATE

REGISTERED PROFESSIONAL ENGINEER DOUGLAS C. MENZMER No. C63498 Exp. 09-30-12 CIVIL STATE OF CALIFORNIA

The State of California or its officers or agents shall not be responsible for the accuracy or completeness of electronic copies of this plan sheet.

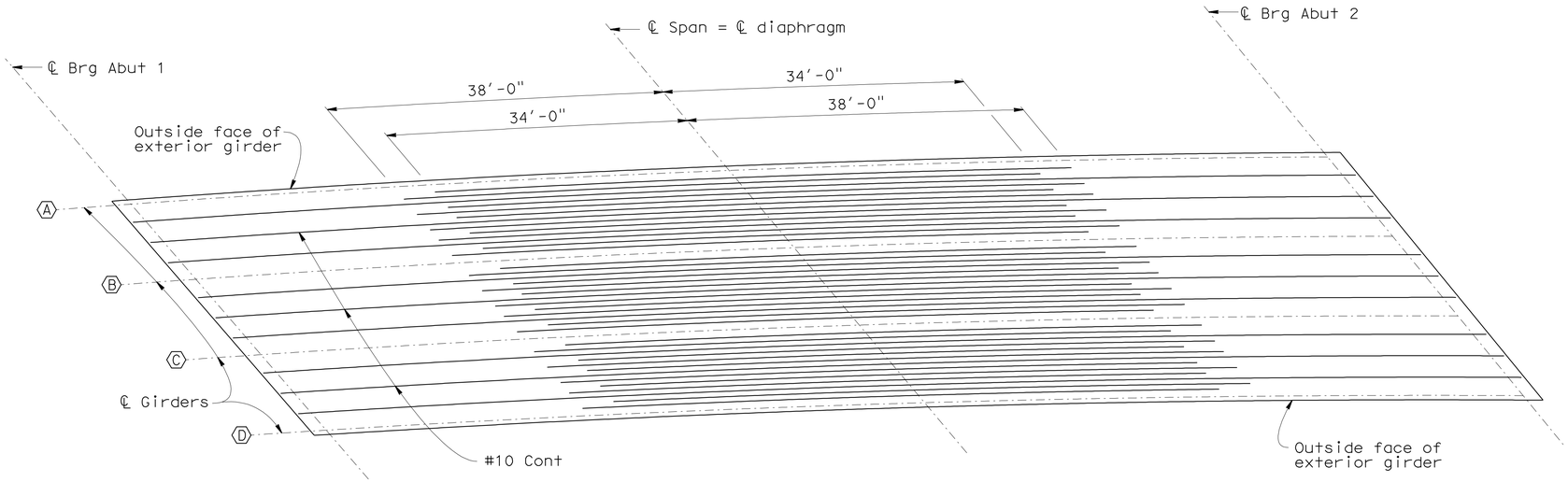

ADDITIONAL BOTTOM SLAB REINFORCEMENT - MEDIAN WIDENING

No scale

Notes:

A. All additional bottom slab reinforcement #10 total 13 bars per bay in median widening.

B. Only "Service Level" splices allowed in additional bottom slab reinforcement.

C. Space additional bottom slab reinforcement evenly within bay.

Notes:

1. Bars may be spliced or bent to clear prestress anchorage as permitted by the Engineer.
2. Extend top end diaphragm bars to 7" from face of exterior girder of existing structures and to edge of deck at left and right widening.
3. Bend soffit steel to clear end diaphragm steel.
4. End diaphragm section is cut normal to ℄ bearing abutment.

NOTE:
THE CONTRACTOR SHALL VERIFY ALL CONTROLLING FIELD DIMENSIONS BEFORE ORDERING OR FABRICATING ANY MATERIAL.

	BY	CHECKED
DESIGN	D. Menzmer	C. Hensel
DETAILS	kc	D. Menzmer
QUANTITIES	C. Hensel	D. Menzmer

STATE OF CALIFORNIA
DEPARTMENT OF TRANSPORTATION

DIVISION OF ENGINEERING SERVICES
STRUCTURE DESIGN
DESIGN BRANCH 12

BRIDGE NO. 52-0279
POST MILE 43.6

BATES ROAD UNDERCROSSING (WIDEN)
GIRDER REINFORCEMENT NO. 2

STRUCTURES DESIGN DETAIL SHEET (ENGLISH) (REV. 10/25/05)

ORIGINAL SCALE IN INCHES FOR REDUCED PLANS 0 1 2 3

CU 07
EA 260701

DISREGARD PRINTS BEARING EARLIER REVISION DATES

REVISION DATES: ~~1-5-10~~ ~~2-1-10~~ 9-14-10

SHEET 27 OF 37

FILE => e-52-0279-m-gir05.dgn

USERNAME => s124436 DATE PLOTTED => 25-JUN-2011 TIME PLOTTED => 08:58

DIST	COUNTY	ROUTE	POST MILES TOTAL PROJECT	SHEET No	TOTAL SHEETS
07	Ven,SB	101	R39.8/R43.6, 0.0/2.2	688	757

REGISTERED CIVIL ENGINEER 10-18-10 DATE

6-20-11
PLANS APPROVAL DATE

REGISTERED PROFESSIONAL ENGINEER DOUG MENZMER No. C63498 Exp. 09-30-12 CIVIL STATE OF CALIFORNIA

The State of California or its officers or agents shall not be responsible for the accuracy or completeness of electronic copies of this plan sheet.

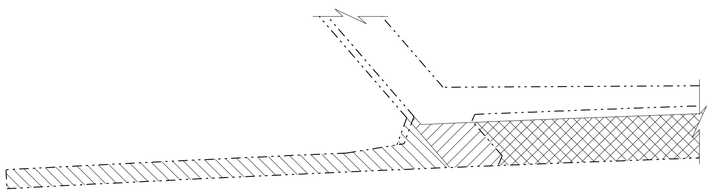

PLAN

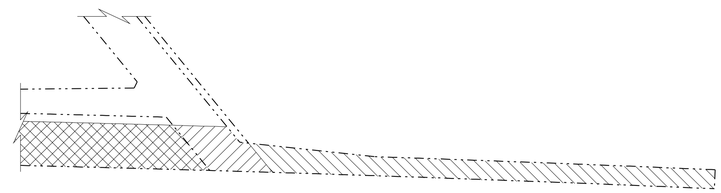

PLAN

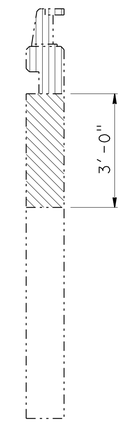

SECTION A-A

1/2" = 1'-0"

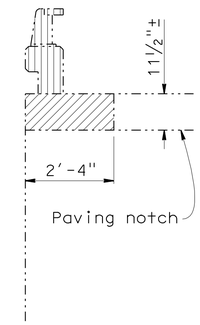

SECTION B-B

1/2" = 1'-0"

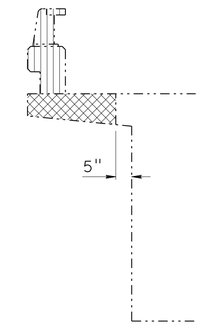

SECTION C-C

1/2" = 1'-0"

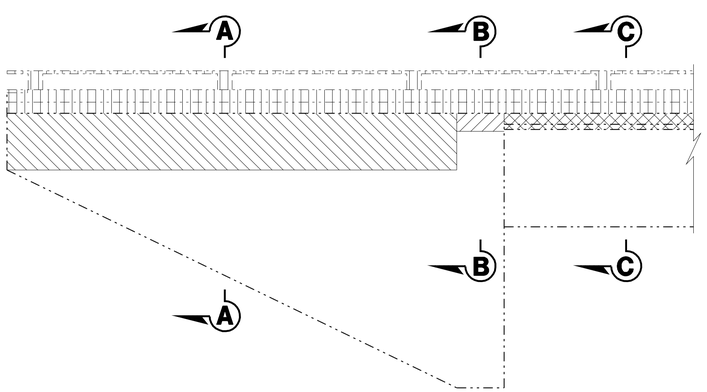

ELEVATION

TYPICAL ACUTE CORNER

1/4" = 1'-0"

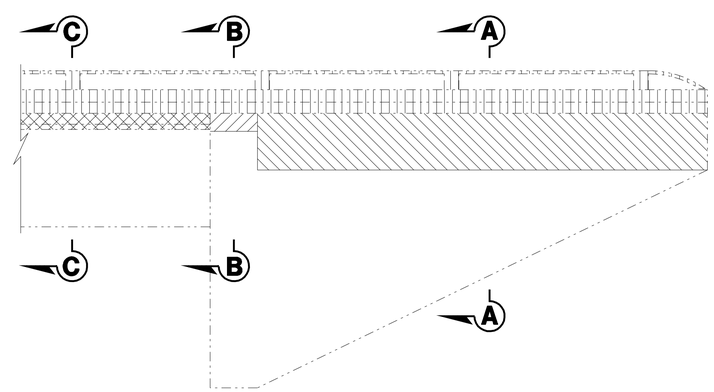

ELEVATION

TYPICAL OBTUSE CORNER

1/4" = 1'-0"

NOTE:
THE CONTRACTOR SHALL VERIFY ALL CONTROLLING FIELD DIMENSIONS BEFORE ORDERING OR FABRICATING ANY MATERIAL.

Notes:

1. Bridge removal (portion) details shown are for right side of left and right structures. Removal details are similar for left side of left and right structures.
2. Where existing bar reinforcing steel is cut at limits of bridge removal (portion), remove exposed steel to 1" inside limits of removal and coat steel with zinc rich primer. Patch hole with concrete.

Legend

- Indicates remove existing barrier railing and salvage metal bridge railing.
- Indicates existing overhang bridge removal (portion). Existing transverse deck bar reinforcing steel to remain.
- Indicates existing end diaphragm bridge removal (portion). Existing #6 tot 4 top diaphragm bar reinforcing steel to remain. See Note 2.
- Indicates existing wingwall bridge removal (portion). See Note 2.

	BY	CHECKED
DESIGN	D. Menzmer	C. Hensel
DETAILS	kc	D. Menzmer
QUANTITIES	C. Hensel	D. Menzmer

STATE OF CALIFORNIA
DEPARTMENT OF TRANSPORTATION

DIVISION OF ENGINEERING SERVICES
STRUCTURE DESIGN
DESIGN BRANCH 12

BRIDGE NO. 52-0279
POST MILE 43.6

BATES ROAD UNDERCROSSING (WIDEN)
BRIDGE REMOVAL (PORTION) DETAILS

STRUCTURES DESIGN DETAIL SHEET (ENGLISH) (REV. 10/25/05)

ORIGINAL SCALE IN INCHES FOR REDUCED PLANS 0 1 2 3

CU 07
EA 260701

DISREGARD PRINTS BEARING EARLIER REVISION DATES

REVISION DATES: ~~2-11-10~~ 2-4-11

SHEET 28 OF 37

FILE => e-52-0279-n-brd.dgn

USERNAME => s124436 DATE PLOTTED => 25-JUN-2011 TIME PLOTTED => 08:58

DIST.	COUNTY	ROUTE	MILE POST TOTAL PROJECT	SHEET NO.	TOTAL SHEETS
07	Ven,SB	101	R39.8/R43.6, 0.0/2.2	689	757

REGISTERED ENGINEER - CIVIL 10-18-10

6-20-11
PLANS APPROVAL DATE

REGISTERED PROFESSIONAL ENGINEER DOUGLAS C. MENZMER No. C63498 Exp. 09-30-12 CIVIL STATE OF CALIFORNIA

The State of California or its officers or agents shall not be responsible for the accuracy or completeness of electronic copies of this plan sheet.

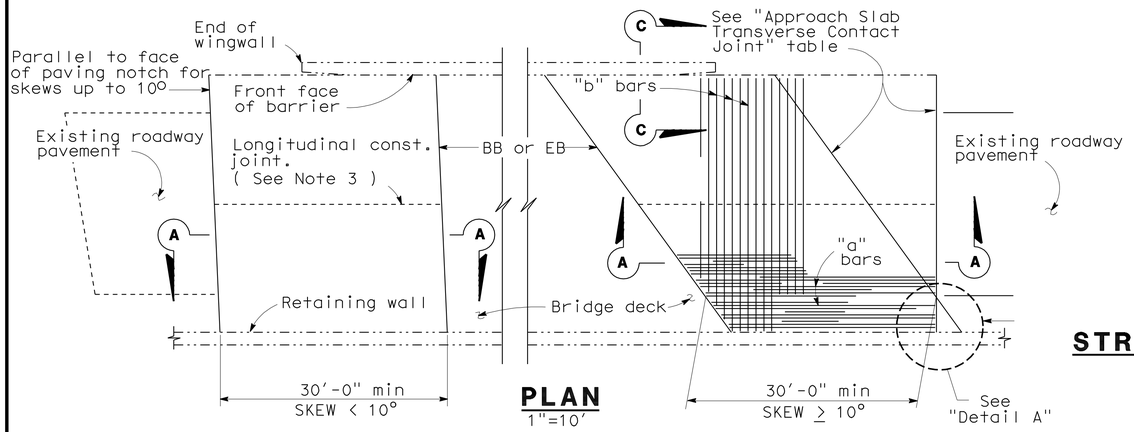

PLAN
1"=10'

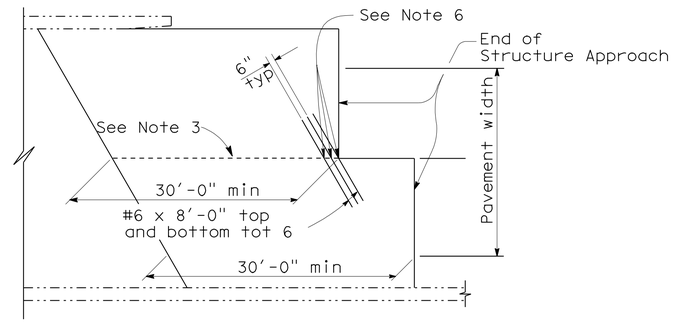

STRUCTURE APPROACH - END STAGGER DETAIL
No Scale

APPROACH SLAB TRANSVERSE CONTACT JOINT		
APPROACH SKEW	WITH AC ROADWAY PAVEMENT	WITH PCC ROADWAY PAVEMENT
< 10°	Parallel to face of paving notch	Parallel to face of paving notch
10° - 45°	Parallel to face of P N use (Detail A)	Stagger lines 24' to 36' apart
> 45°	Parallel to face of P N use (Detail A)	Stagger at each lane line

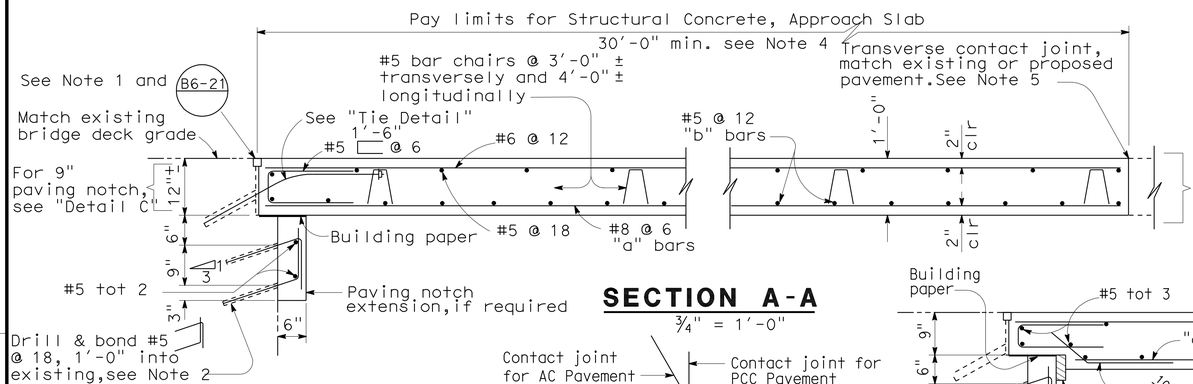

SECTION A-A
¾" = 1'-0"

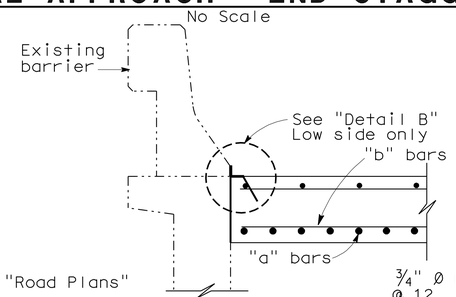

SECTION C-C
¾" = 1'-0"

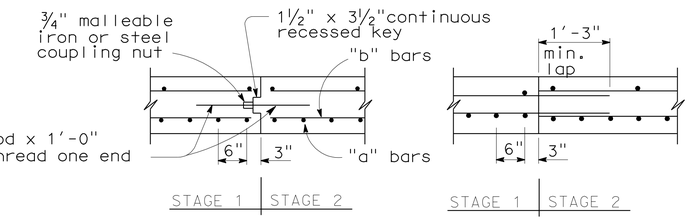

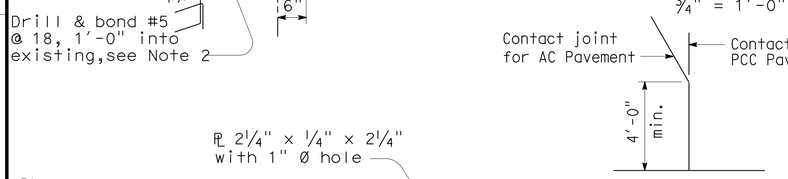

DETAIL A
No Scale

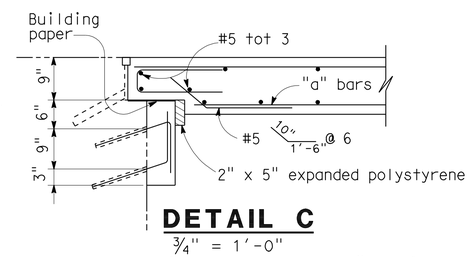

DETAIL C
¾" = 1'-0"

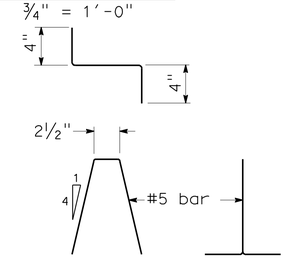

BAR CHAIR DETAIL
1½" = 1'-0"

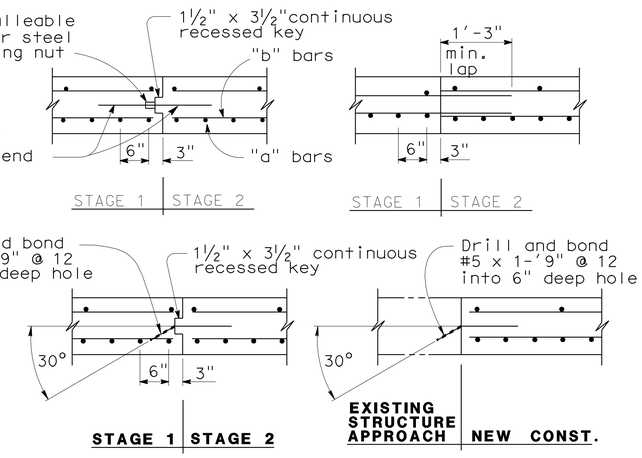

LONGITUDINAL CONSTRUCTION JOINT ALTERNATIVES
¾" = 1'-0"

NOTES:

1. For details not shown or noted, see Structure Plans. Adjust bar reinforcement to clear a sawcut for sealed joint, when required.
2. Space to avoid existing prestress anchorages and main reinforcement.
3. Longitudinal construction joints, when permitted by the Engineer, shall be located on lane lines.
4. Transverse contact joint shall be a minimum of 5'-0" from an existing or constructed weakened plane joint.
5. For transverse contact joint with new PCC paving, refer to Standard Plan P10.
6. Couplers are required for stage construction.
7. End angle or plate at beginning of barrier transition, end of wingwall or end of structure approach as applicable.

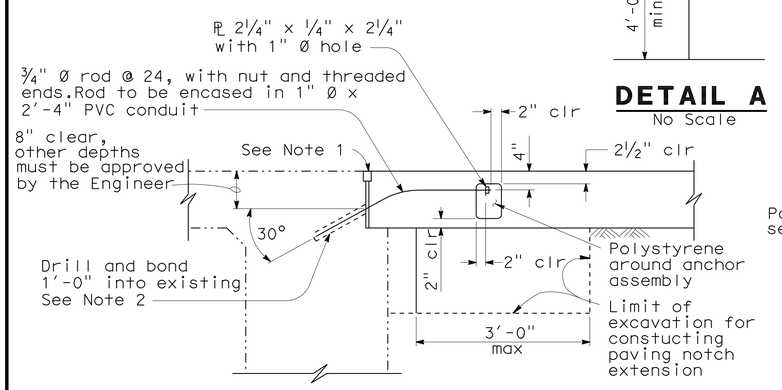

TIE DETAIL
¾" = 1'-0"

NOTE:
THE CONTRACTOR SHALL VERIFY ALL CONTROLLING FIELD DIMENSIONS BEFORE ORDERING OR FABRICATING ANY MATERIAL.

NOTE: For details not shown, see "Section A-A".

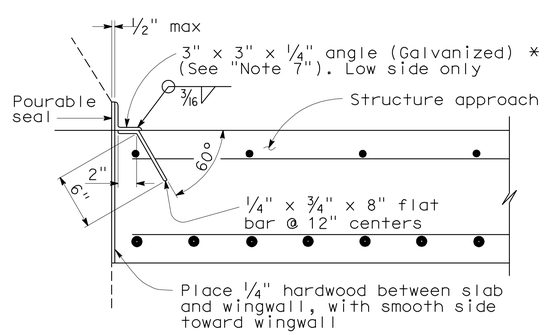

*(TO BE USED WITH TYPE 25 OR TYPE 27 CONCRETE BARRIER)

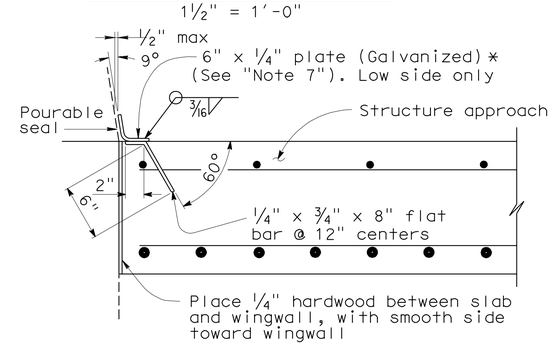

*(TO BE USED WITH TYPE 732 OR TYPE 736 CONCRETE BARRIER)

DETAIL B
1½" = 1'-0"

STANDARD DRAWING				
RELEASE DATE 3/14/05	DESIGN	BY M.TRAFFALIS	CHECKED E.THORKILDSEN	RELEASED BY
FILE NO. xs3-140e	DETAILS	BY R.YEE	CHECKED E.THORKILDSEN	
	SUBMITTED	BY M.HA	DRAWING DATE 8/92	OFFICE CHIEF

STATE OF CALIFORNIA DEPARTMENT OF TRANSPORTATION

DIVISION OF ENGINEERING SERVICES

BRIDGE NO. 52-0279
MILE POST 43.6

BATES ROAD UNDERCROSSING (WIDEN)
STRUCTURE APPROACH TYPE R(30D)

DS OSD 2147A (ENGLISH) (REV. X/XX/XX)

ORIGINAL SCALE IN INCHES FOR REDUCED PLANS 0 1 2 3

CU 07
EA 260701

DISREGARD PRINTS BEARING EARLIER REVISION DATES 6-11-09

REVISION DATES (PRELIMINARY STAGE ONLY)

SHEET 29 OF 37

USERNAME => s124496

DATE PLOTTED => 25-JUN-2011 TIME PLOTTED => 08:58

e-52-0279-s-sa01.dg

DIST.	COUNTY	ROUTE	POST MILES TOTAL PROJECT	SHEET NO.	TOTAL SHEETS
07	Ven,SB	101	R39.8/R43.6, 0.0/2.2	690	757

REGISTERED ENGINEER - CIVIL 10-18-10

6-20-11
PLANS APPROVAL DATE

REGISTERED PROFESSIONAL ENGINEER DOUGLAS C. MENZMER No. C63498 Exp. 09-30-12 CIVIL STATE OF CALIFORNIA

The State of California or its officers or agents shall not be responsible for the accuracy or completeness of electronic copies of this plan sheet.

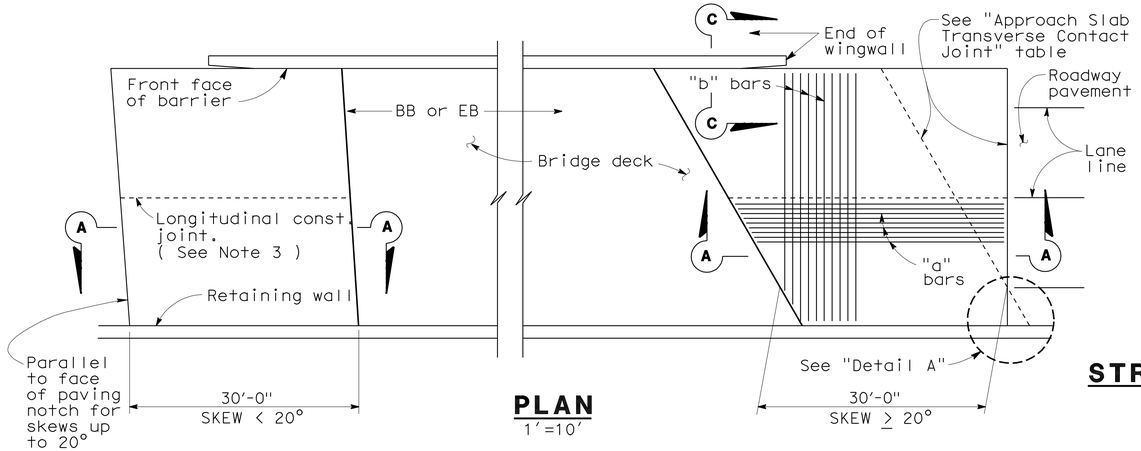

PLAN
1"=10'

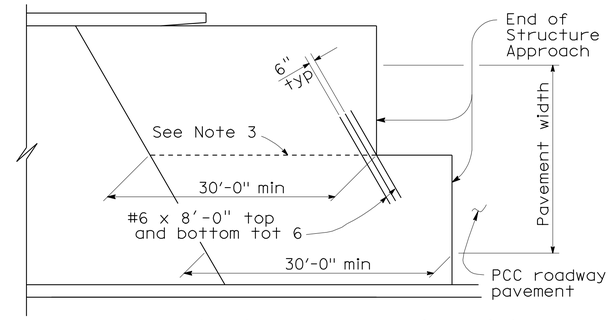

STRUCTURE APPROACH - END STAGGER DETAIL
No Scale

APPROACH SLAB TRANSVERSE CONTACT JOINT		
APPROACH SKEW	WITH AC ROADWAY PAVEMENT	WITH PCC ROADWAY PAVEMENT
< 20°	Parallel to face of paving notch	Parallel to face of paving notch
20°- 45°	Parallel to face of P N use (Detail A)	Stagger lines 24' to 36' apart
> 45°	Parallel to face of P N use (Detail A)	Stagger at each lane line

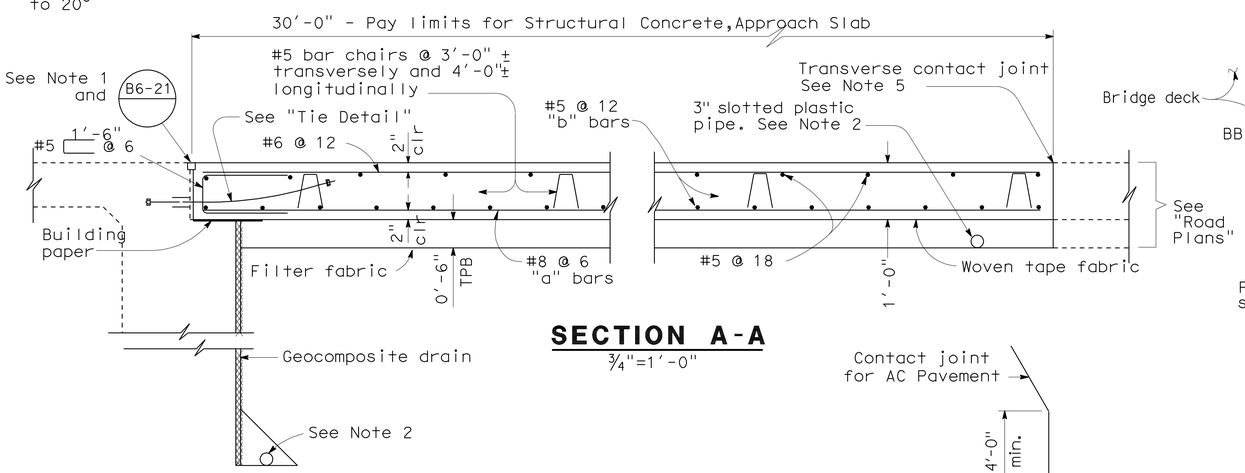

SECTION A-A
¾"=1'-0"

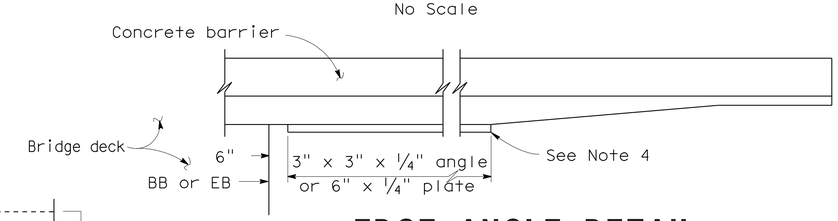

EDGE ANGLE DETAIL
½"=1'-0"

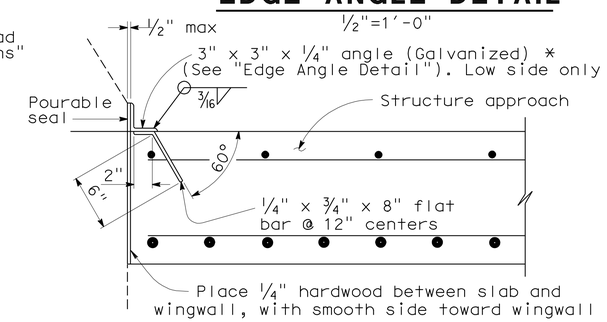

*(TO BE USED WITH TYPE 25 OR TYPE 27 CONCRETE BARRIER)

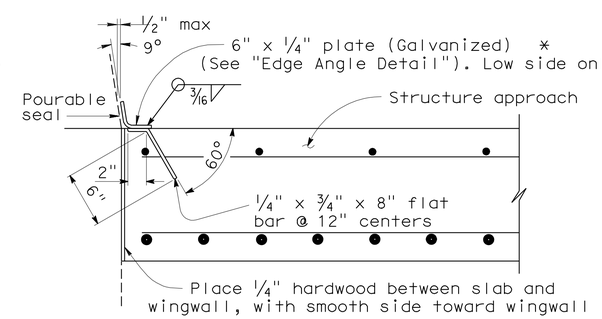

*(TO BE USED WITH TYPE 732 OR TYPE 736 CONCRETE BARRIER)

DETAIL B
1½"=1'-0"

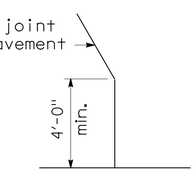

DETAIL A
No Scale

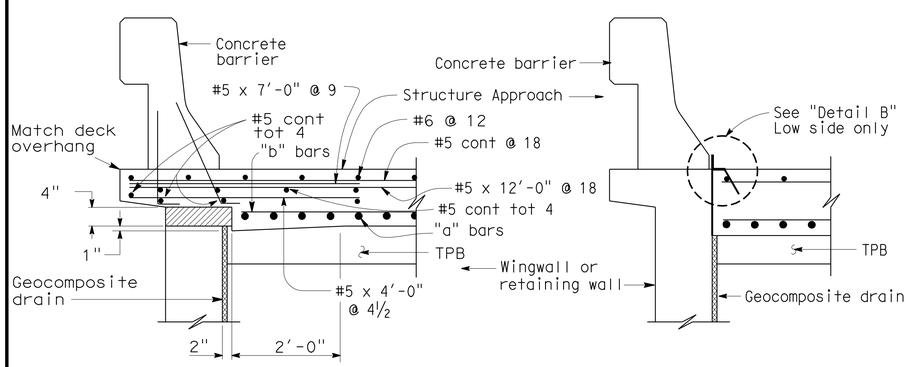

TYPE E-1 TYPE E-2

SECTION C-C
¾"=1'-0"

(Type E-1 to be used,unless otherwise shown on plans)

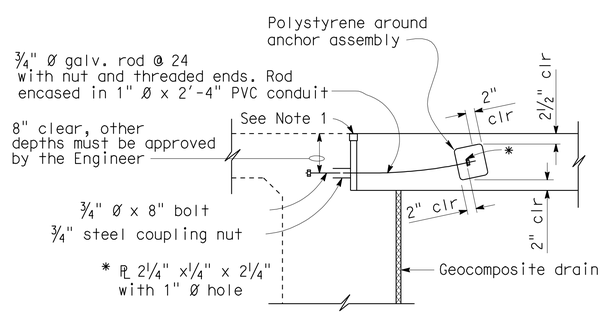

TIE DETAIL
¾"=1'-0"

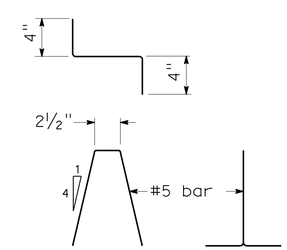

BAR CHAIR DETAIL
1½"=1'-0"

NOTES:

1. For details not noted or shown,see Structure Plans.
2. For drainage details,see "Structure Approach Drainage Details" sheet.
3. Longitudinal construction joints,when permitted by the Engineer,shall be located on lane lines.
4. End angle or plate at beginning of barrier transition, end of wingwall or end of structure approach, as applicable.
5. For transverse contact joint with new PCC paving, refer to Standard Plan P10.
6. At the contractor's option,approach slab transverse reinforcement may be placed parallel to paving notch. Spacing of transverse reinforcement is measured along ℄ roadway.

Polystyrene to be removed.

STANDARD DRAWING

FILE NO. xs3-180e

APPROVED BY M. Ha RESPONSIBLE TECHNICAL SPECIALIST
APPROVAL DATE 8-12-08

RELEASED BY O. Alcantara RESPONSIBLE OFFICE CHIEF
RELEASE DATE 8-12-08

STATE OF CALIFORNIA DEPARTMENT OF TRANSPORTATION

DIVISION OF ENGINEERING SERVICES

BRIDGE NO. 52-0279
POST MILE 43.6

BATES ROAD UNDERCROSSING (WIDEN)
STRUCTURE APPROACH TYPE N(30D)

DS OSD 2147A (ENGLISH STANDARD DRAWING "XS" BORDER REV. 01/11/08)

ORIGINAL SCALE IN INCHES FOR REDUCED PLANS 0 1 2 3

CU 07
EA 260701

DISREGARD PRINTS BEARING EARLIER REVISION DATES

REVISION DATES (PRELIMINARY STAGE ONLY)

SHEET 30 OF 37

USERNAME => s124496 e-52-0279-s-sa02.dgn

DATE PLOTTED => 25-JUN-2011 TIME PLOTTED => 08:59

DIST.	COUNTY	ROUTE	MILE POST TOTAL PROJECT	SHEET NO.	TOTAL SHEETS
07	Ven,SB	101	R39.8/R43.6, 0.0/2.2	691	757

10-18-10

REGISTERED ENGINEER - CIVIL

6-20-11

PLANS APPROVAL DATE

REGISTERED PROFESSIONAL ENGINEER DOUGLAS C. MENZMER No. C63498 Exp. 09-30-12 CIVIL STATE OF CALIFORNIA

The State of California or its officers or agents shall not be responsible for the accuracy or completeness of electronic copies of this plan sheet.

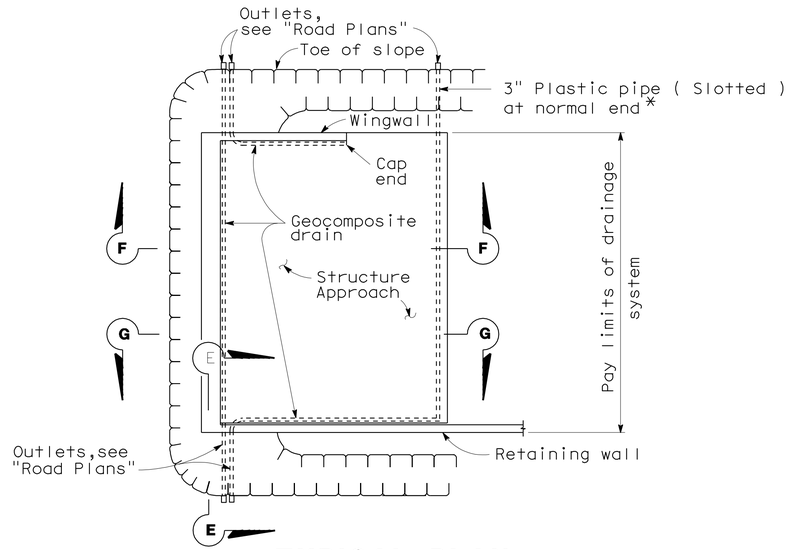

TYPICAL PLAN

1"=10'

*For pipe layout at staggered end,see "Detail B".

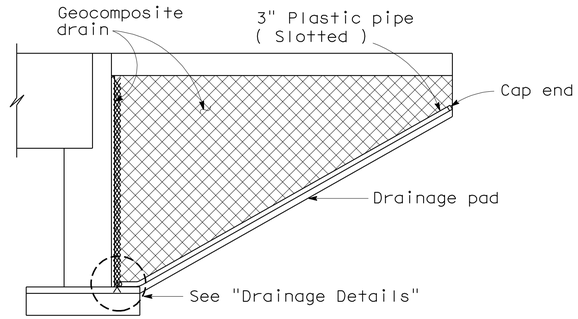

CANTILEVER WINGWALL SECTION F-F

1/4"=1'-0"

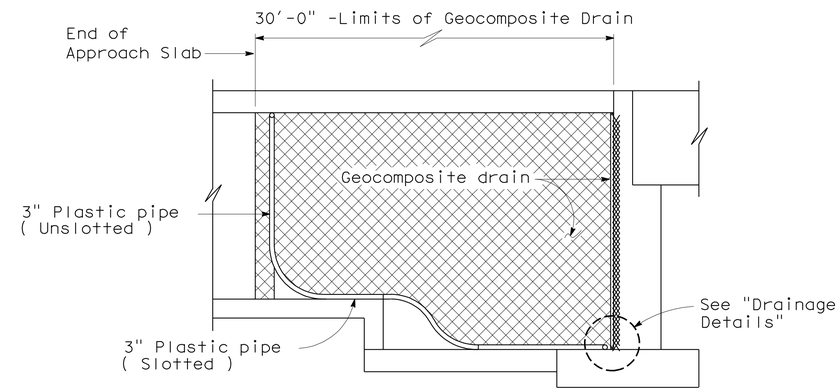

RETAINING WALL WINGWALL SECTION G-G

1/4"=1'-0"

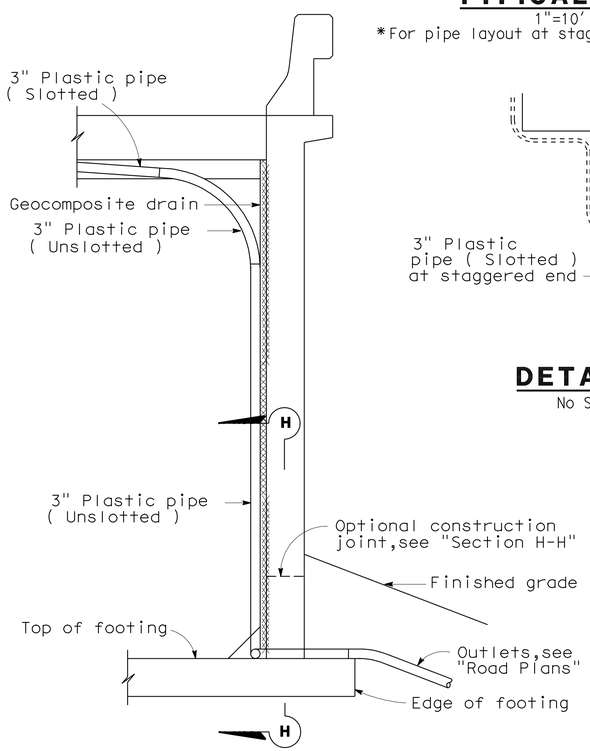

SECTION E-E

1/2"=1'-0"

NOTE: Bends and junctions in 3" plastic pipe are 30" radius min.

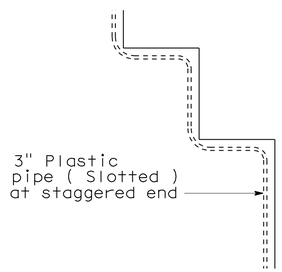

DETAIL B

No Scale

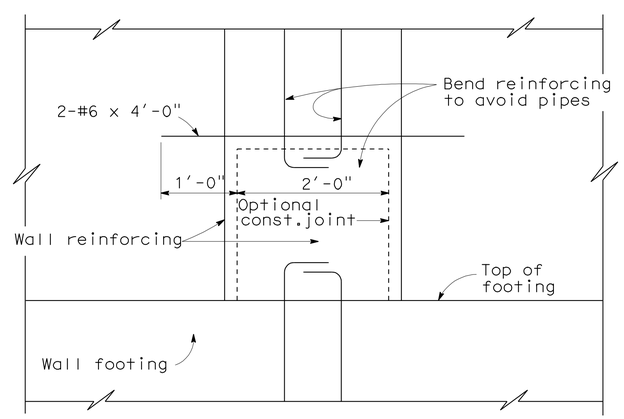

SECTION H-H

1"=1'-0"

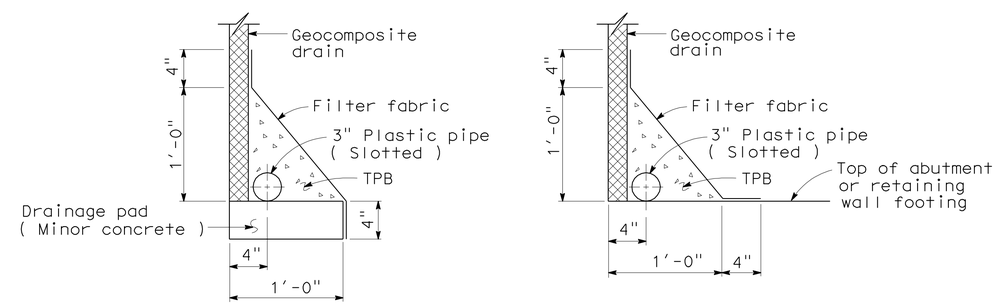

WITHOUT FOOTING

WITH FOOTING

DRAINAGE DETAILS

1 1/2"=1'-0"

STANDARD DRAWING					
RELEASE DATE 4/23/98	DESIGN	BY M.TRAFFALIS	CHECKED E.THORKILDSEN	RELEASED BY	
FILE NO. xs3-110e	DETAILS	BY R.YEE	CHECKED E.THORKILDSEN		
	SUBMITTED	BY M.HA	DRAWING DATE 4/98	OFFICE CHIEF	

STATE OF CALIFORNIA DEPARTMENT OF TRANSPORTATION

DIVISION OF ENGINEERING SERVICES

BRIDGE NO. 52-0279

MILE POST 43.6

BATES ROAD UNDERCROSSING (WIDEN)

STRUCTURE APPROACH DRAINAGE DETAILS

DS OSD 2147A (ENGLISH) (REV. X/XX/XX)

ORIGINAL SCALE IN INCHES FOR REDUCED PLANS 0 1 2 3

CU 07
EA 260701

DISREGARD PRINTS BEARING EARLIER REVISION DATES 6-11-09

REVISION DATES (PRELIMINARY STAGE ONLY)

SHEET 31 OF 37

USERNAME => s124496
e-52-0279-s-sa03.dgn

DATE PLOTTED => 25-JUN-2011 TIME PLOTTED => 08:59

DIST	COUNTY	ROUTE	POST MILES TOTAL PROJECT	SHEET No	TOTAL SHEETS
07	Ven,SB	101	R39.8/R43.6, 0.0/2.2	692	757

REGISTERED CIVIL ENGINEER 10-18-10 DATE

6-20-11
PLANS APPROVAL DATE

REGISTERED PROFESSIONAL ENGINEER DOUGLAS C. MENZMER No. C63498 Exp. 09-30-12 CIVIL STATE OF CALIFORNIA

The State of California or its officers or agents shall not be responsible for the accuracy or completeness of electronic copies of this plan sheet.

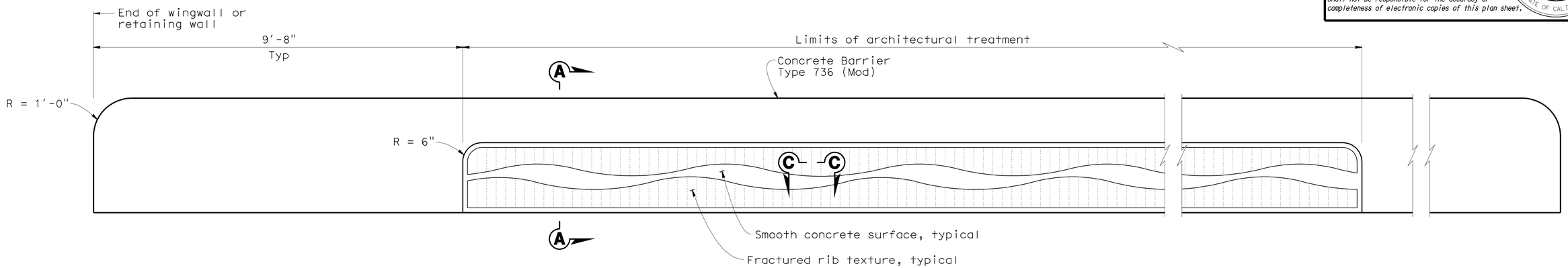

PART TYPICAL ELEVATION

3/4" = 1'-0"

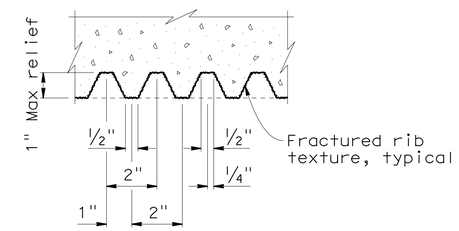

VIEW C-C

No scale

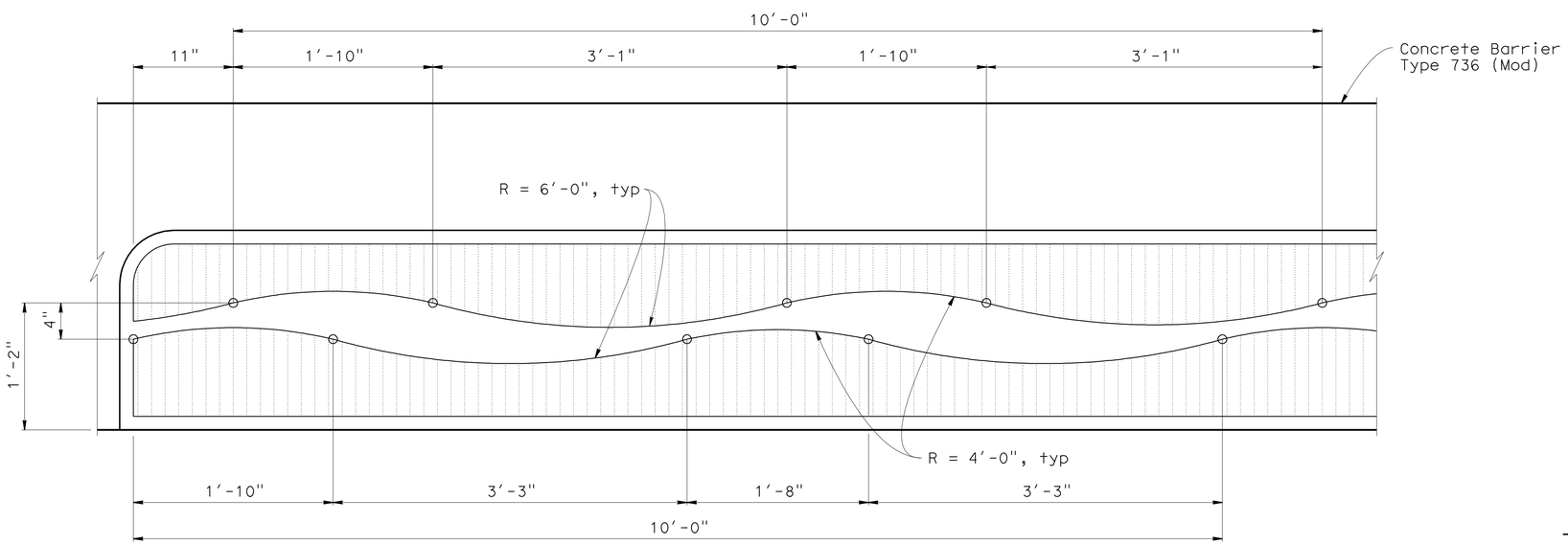

ARCHITECTURAL TREATMENT DETAILS

1 1/2" = 1'-0"

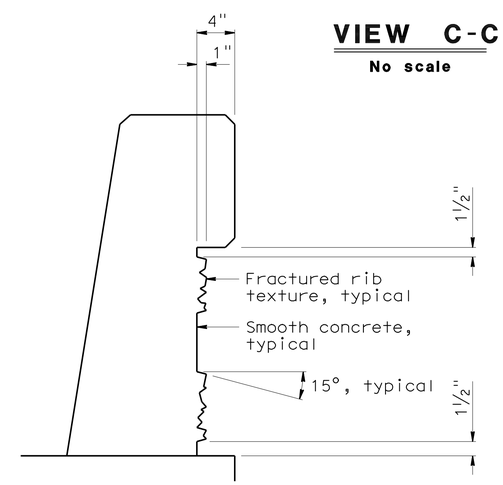

SECTION A-A

1 1/2" = 1'-0"

DESIGN	BY D. Menzmer	CHECKED C. Hensel	
DETAILS	BY kc	CHECKED D. Menzmer	
QUANTITIES	BY C. Hensel	CHECKED D. Menzmer	

STATE OF CALIFORNIA DEPARTMENT OF TRANSPORTATION

DIVISION OF ENGINEERING SERVICES STRUCTURE DESIGN DESIGN BRANCH 12

BRIDGE NO. 52-0279
POST MILE 43.6

BATES ROAD UNDERCROSSING (WIDEN)
ARCHITECTURAL TREATMENT DETAILS

STRUCTURES DESIGN DETAIL SHEET (ENGLISH) (REV. 10/25/05)

ORIGINAL SCALE IN INCHES FOR REDUCED PLANS 0 1 2 3

CU 07
EA 260701

DISREGARD PRINTS BEARING EARLIER REVISION DATES 8-31-09 10-18-10 2-4-11

REVISION DATES

SHEET 32 OF 37

FILE => e-52-0279-y-arch.dgn

USERNAME => s124496 DATE PLOTTED => 25-JUN-2011 TIME PLOTTED => 08:59

DIST	COUNTY	ROUTE	POST MILES TOTAL PROJECT	SHEET No	TOTAL SHEETS
07	Ven,SB	101	R39.8/R43.6, 0.0/2.2	693	757

REGISTERED CIVIL ENGINEER 4-7-10

6-20-11
PLANS APPROVAL DATE

The State of California or its officers or agents shall not be responsible for the accuracy or completeness of electronic copies of this plan sheet.

REGISTERED PROFESSIONAL ENGINEER Harihar Shiwakoti No. C76035 Exp. 6-30-12 CIVIL STATE OF CALIFORNIA

This LOTB sheet was prepared in accordance with the Caltrans Soil & Rock Logging, Classification, & Presentation Manual (June 2007).

BENCH MARK

Datums: NAD ' 83 and NAVD ' 88
Well cap located at 142.72' Lt
Sta 193+30.5 Centerline Rte 101.
N 1962430.256
E 6115849.489
Elev 33.148'

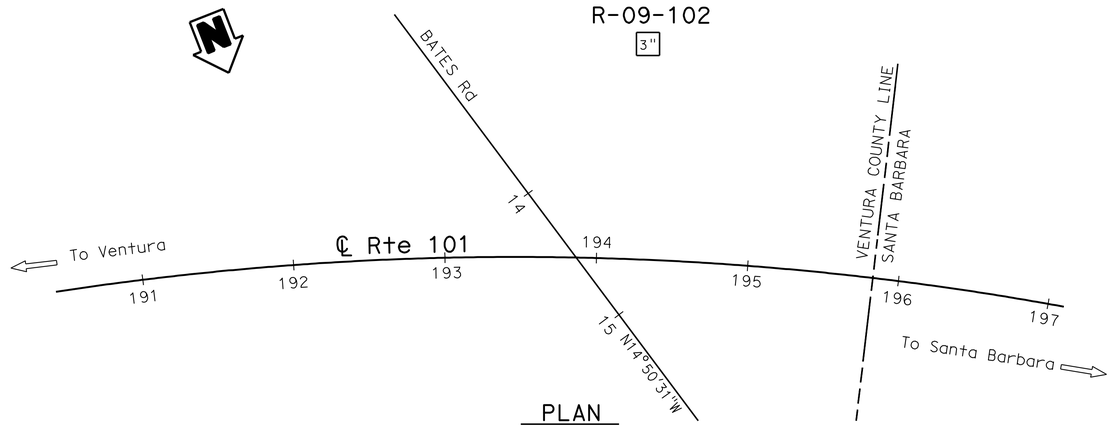

PLAN
1" = 50'

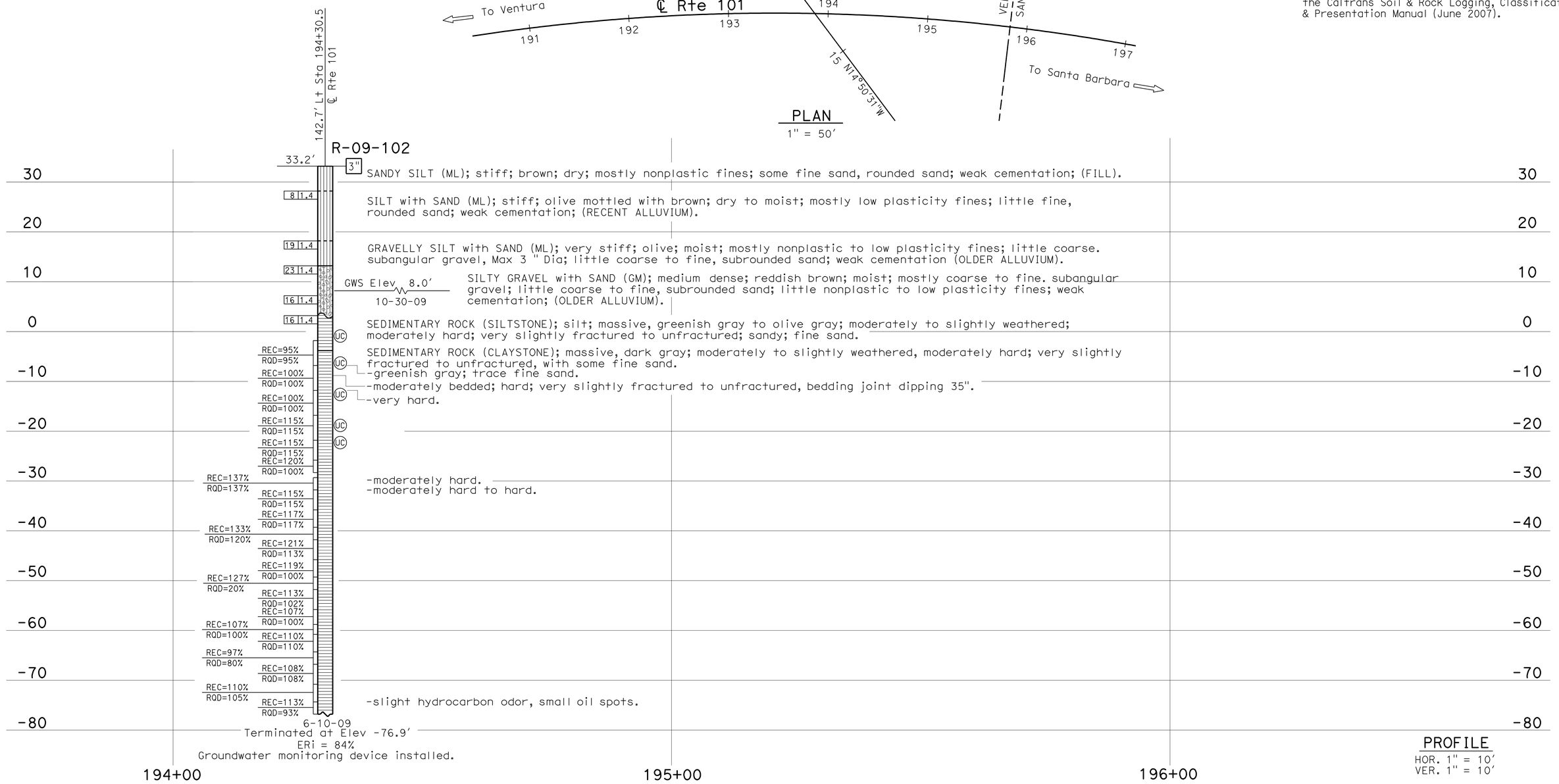

PROFILE
HOR. 1" = 10'
VER. 1" = 10'

ENGINEERING SERVICES	GEOTECHNICAL SERVICES	STATE OF CALIFORNIA DEPARTMENT OF TRANSPORTATION	DIVISION OF ENGINEERING SERVICES STRUCTURE DESIGN DESIGN BRANCH	BRIDGE NO. 52-0279 POST MILES 43.6	BATES ROAD UNDERCROSSING (WIDEN) LOG OF TEST BORINGS 1 OF 5
FUNCTIONAL SUPERVISOR NAME: D. Jang	DRAWN BY: C. Christian, I.G-Remmen 11/09 CHECKED BY: H. Liu	FIELD INVESTIGATION BY: M. Salisbury	CU 07 EA 260701	DISREGARD PRINTS BEARING EARLIER REVISION DATES	REVISION DATES 12-17-09 03-17-10 04-07-10 SHEET 33 OF 37

OGS CIVIL LOG OF TEST BORINGS SHEET

ORIGINAL SCALE IN INCHES FOR REDUCED PLANS 0 1 2 3

FILE => e-52-0279-z-lotb01.dgn

USERNAME => s124496 DATE PLOTTED => 25-JUN-2011 TIME PLOTTED => 08:59

DIST	COUNTY	ROUTE	POST MILES TOTAL PROJECT	SHEET No	TOTAL SHEETS
07	Ven,SB	101	R39.8/R43.6, 0.0/2.2	694	757

REGISTERED CIVIL ENGINEER 4-7-10

6-20-11
PLANS APPROVAL DATE

REGISTERED PROFESSIONAL ENGINEER
Harihar Shiwakoti
No. C76035
Exp. 6-30-12
CIVIL
STATE OF CALIFORNIA

The State of California or its officers or agents shall not be responsible for the accuracy or completeness of electronic copies of this plan sheet.

This LOTB sheet was prepared in accordance with the Caltrans Soil & Rock Logging, Classification, & Presentation Manual (June 2007).

BENCH MARK

Datums: NAD '83 and NAVD '88
Well cap located at 142.72' Lt
Sta 193+30.5 Centerline Rte 101.
N 1962430.256
E 6115849.489
Elev 33.148'

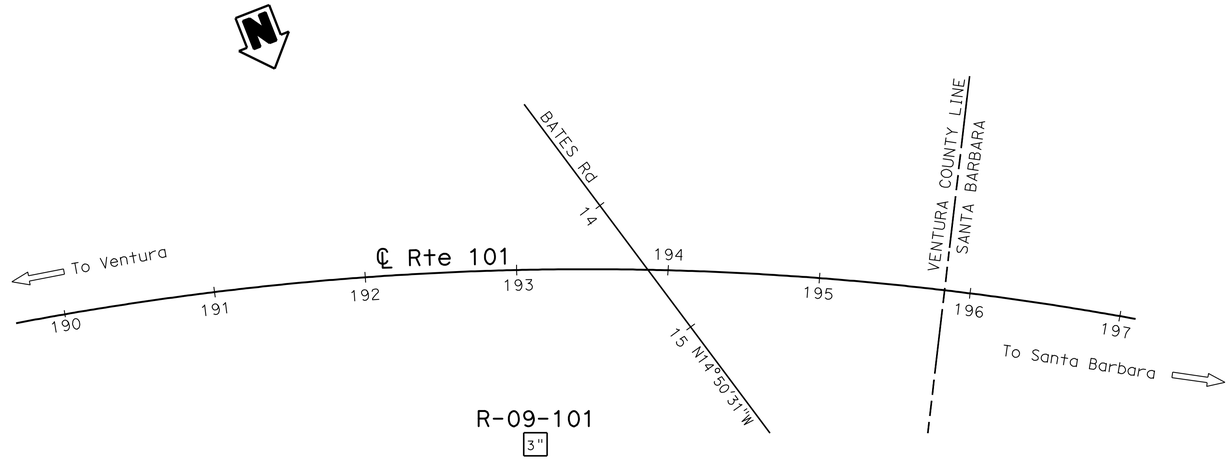

PLAN
1" = 50'

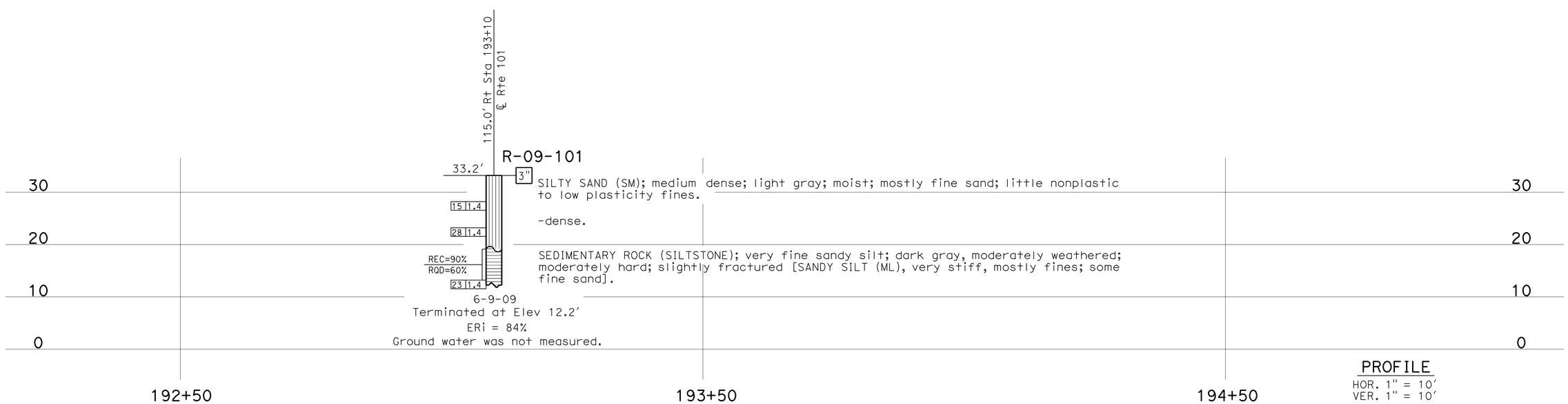

PROFILE
HOR. 1" = 10'
VER. 1" = 10'

ENGINEERING SERVICES	GEOTECHNICAL SERVICES	STATE OF CALIFORNIA DEPARTMENT OF TRANSPORTATION	DIVISION OF ENGINEERING SERVICES STRUCTURE DESIGN DESIGN BRANCH	BRIDGE NO. 52-0279 POST MILES 43.6	BATES ROAD UNDERCROSSING (WIDEN) LOG OF TEST BORINGS 2 OF 5
FUNCTIONAL SUPERVISOR NAME: D. Jang	DRAWN BY: I.G-Remmen 12/09 CHECKED BY: H. Liu	FIELD INVESTIGATION BY: H. Shiwakoti			

OGS CIVIL LOG OF TEST BORINGS SHEET

ORIGINAL SCALE IN INCHES FOR REDUCED PLANS 0 1 2 3

CU 07
EA 260701

DISREGARD PRINTS BEARING EARLIER REVISION DATES

REVISION DATES: 12-21-09 03-18-10 04-07-10

SHEET 34 OF 37

FILE => e-52-0279-z-lotb02.dgn

USERNAME => s124496 DATE PLOTTED => 25-JUN-2011 TIME PLOTTED => 08:59

DIST	COUNTY	ROUTE	POST MILES TOTAL PROJECT	SHEET No	TOTAL SHEETS
07	Ven,SB	101	R39.8/R43.6, 0.0/2.2	695	757

REGISTERED CIVIL ENGINEER 4-7-10

6-20-11
PLANS APPROVAL DATE

REGISTERED PROFESSIONAL ENGINEER Harihar Shiwakoti No. C76035 Exp. 6-30-12 CIVIL STATE OF CALIFORNIA

The State of California or its officers or agents shall not be responsible for the accuracy or completeness of electronic copies of this plan sheet.

REFERENCE: CALTRANS SOIL & ROCK LOGGING, CLASSIFICATION, AND PRESENTATION MANUAL (JUNE 2007)

CEMENTATION

Description	Criteria
Weak	Crumbles or breaks with handling or little finger pressure.
Moderate	Crumbles or breaks with considerable finger pressure.
Strong	Will not crumble or break with finger pressure.

CONSISTENCY OF COHESIVE SOILS

Description	Unconfined Compressive Strength (tsf)	Pocket Penetrometer Measurement (tsf)	Torvane Measurement (tsf)	Field Approximation
Very Soft	< 0.25	< 0.25	< 0.12	Easily penetrated several inches by fist
Soft	0.25 to 0.50	0.25 to 0.50	0.12 to 0.25	Easily penetrated several inches by thumb
Medium Stiff	0.50 to 1.0	0.50 to 1.0	0.25 to 0.50	Penetrated several inches by thumb with moderate effort
Stiff	1 to 2	1 to 2	0.50 to 1.0	Readily indented by thumb but penetrated only with great effort
Very Stiff	2 to 4	2 to 4	1.0 to 2.0	Readily indented by thumbnail
Hard	> 4.0	> 4.0	> 2.0	Indented by thumbnail with difficulty

BOREHOLE IDENTIFICATION

Symbol	Hole Type	Description
Size	A	Auger Boring
Size	R P	Rotary drilled boring Rotary percussion boring (air)
Size	R	Rotary drilled diamond core
Size	HD HA	Hand driven (1-inch soil tube) Hand Auger
●	D	Dynamic Cone Penetration Boring
▲	CPT	Cone Penetration Test (ASTM D 5778-95)
⬚	O	Other

Note: Size in inches.

PLASTICITY OF FINE-GRAINED SOILS

Description	Criteria
Nonplastic	A 1/8-inch thread cannot be rolled at any water content.
Low	The thread can barely be rolled and the lump cannot be formed when drier than the plastic limit.
Medium	The thread is easy to roll and not much time is required to reach the plastic limit. The thread cannot be rerolled after reaching the plastic limit. The lump crumbles when drier than the plastic limit.
High	It takes considerable time rolling and kneading to reach the plastic limit. The thread can be rerolled several times after reaching the plastic limit. The lump can be formed without crumbling when drier than the plastic limit.

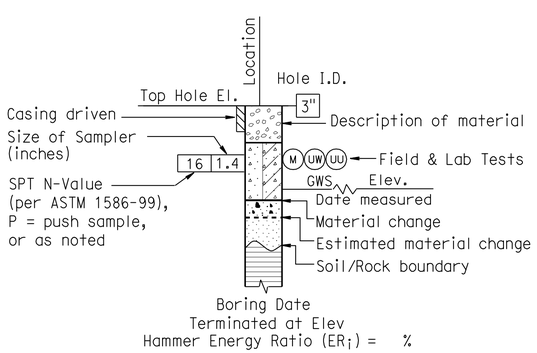

ROTARY BORING

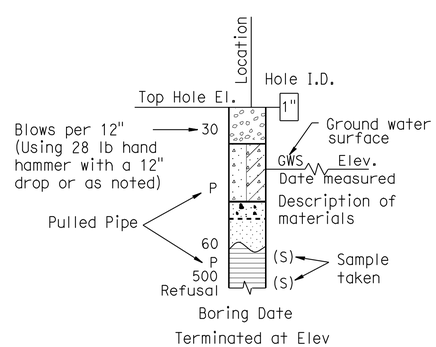

HAND BORING

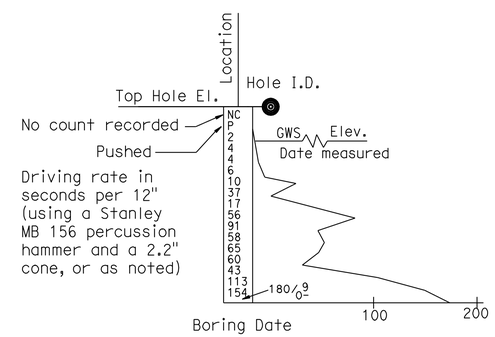

DYNAMIC CONE PENETRATION BORING

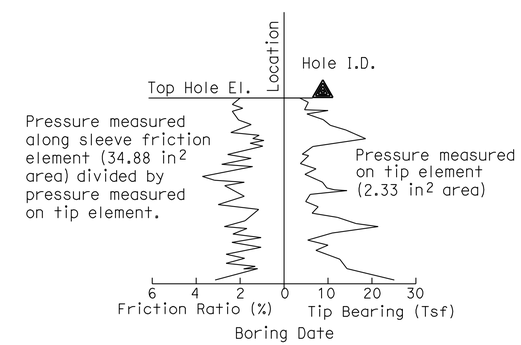

CONE PENETRATION TEST (CPT) SOUNDING

ENGINEERING SERVICES	GEOTECHNICAL SERVICES	STATE OF CALIFORNIA DEPARTMENT OF TRANSPORTATION	DIVISION OF ENGINEERING SERVICES STRUCTURE DESIGN DESIGN BRANCH	BRIDGE NO. 52-0279 POST MILE 43.6	BATES ROAD UNDERCROSSING (WIDEN) LOG OF TEST BORINGS 3 OF 5
	PREPARED BY: I.G-Remmen 12/09				

GS LOTB SOIL LEGEND

ORIGINAL SCALE IN INCHES FOR REDUCED PLANS 0 1 2 3

CU 07
EA 260701

DISREGARD PRINTS BEARING EARLIER REVISION DATES

REVISION DATES

SHEET 35 OF 37

FILE => e-52-0279-z-lotb03.dgn

USERNAME => s124496 DATE PLOTTED => 25-JUN-2011 TIME PLOTTED => 08:59

REFERENCE: CALTRANS SOIL & ROCK LOGGING, CLASSIFICATION, AND PRESENTATION MANUAL (JUNE 2007)

DIST	COUNTY	ROUTE	POST MILES TOTAL PROJECT	SHEET No	TOTAL SHEETS
07	Ven,SB	101	R39.8/R43.6, 0.0/2.2	696	757

REGISTERED CIVIL ENGINEER 4-7-10

6-20-11
PLANS APPROVAL DATE

REGISTERED PROFESSIONAL ENGINEER Harihar Shiwakoti No. C76035 Exp. 6-30-12 CIVIL STATE OF CALIFORNIA

The State of California or its officers or agents shall not be responsible for the accuracy or completeness of electronic copies of this plan sheet.

GROUP SYMBOLS AND NAMES

Graphic/Symbol	Group Names	Graphic/Symbol	Group Names
GW	Well-graded GRAVEL Well-graded GRAVEL with SAND	CL	Lean CLAY Lean CLAY with SAND Lean CLAY with GRAVEL SANDY lean CLAY SANDY lean CLAY with GRAVEL GRAVELLY lean CLAY GRAVELLY lean CLAY with SAND
GP	Poorly graded GRAVEL Poorly graded GRAVEL with SAND		
GW-GM	Well-graded GRAVEL with SILT Well-graded GRAVEL with SILT and SAND	CL-ML	SILTY CLAY SILTY CLAY with SAND SILTY CLAY with GRAVEL SANDY SILTY CLAY SANDY SILTY CLAY with GRAVEL GRAVELLY SILTY CLAY GRAVELLY SILTY CLAY with SAND
GW-GC	Well-graded GRAVEL with CLAY (or SILTY CLAY) Well-graded GRAVEL with CLAY and SAND (or SILTY CLAY and SAND)		
GP-GM	Poorly graded GRAVEL with SILT Poorly graded GRAVEL with SILT and SAND	ML	SILT SILT with SAND SILT with GRAVEL SANDY SILT SANDY SILT with GRAVEL GRAVELLY SILT GRAVELLY SILT with SAND
GP-GC	Poorly graded GRAVEL with CLAY (or SILTY CLAY) Poorly graded GRAVEL with CLAY and SAND (or SILTY CLAY and SAND)		
GM	SILTY GRAVEL SILTY GRAVEL with SAND	OL	ORGANIC lean CLAY ORGANIC lean CLAY with SAND ORGANIC lean CLAY with GRAVEL SANDY ORGANIC lean CLAY SANDY ORGANIC lean CLAY with GRAVEL GRAVELLY ORGANIC lean CLAY GRAVELLY ORGANIC lean CLAY with SAND
GC	CLAYEY GRAVEL CLAYEY GRAVEL with SAND		
GC-GM	SILTY, CLAYEY GRAVEL SILTY, CLAYEY GRAVEL with SAND	OL	ORGANIC SILT ORGANIC SILT with SAND ORGANIC SILT with GRAVEL SANDY ORGANIC SILT SANDY ORGANIC SILT with GRAVEL GRAVELLY ORGANIC SILT GRAVELLY ORGANIC SILT with SAND
SW	Well-graded SAND Well-graded SAND with GRAVEL		
SP	Poorly graded SAND Poorly graded SAND with GRAVEL	CH	Fat CLAY Fat CLAY with SAND Fat CLAY with GRAVEL SANDY fat CLAY SANDY fat CLAY with GRAVEL GRAVELLY fat CLAY GRAVELLY fat CLAY with SAND
SW-SM	Well-graded SAND with SILT Well-graded SAND with SILT and GRAVEL		
SW-SC	Well-graded SAND with CLAY (or SILTY CLAY) Well-graded SAND with CLAY and GRAVEL (or SILTY CLAY and GRAVEL)	MH	Elastic SILT Elastic SILT with SAND Elastic SILT with GRAVEL SANDY elastic SILT SANDY elastic SILT with GRAVEL GRAVELLY elastic SILT GRAVELLY elastic SILT with SAND
SP-SM	Poorly graded SAND with SILT Poorly graded SAND with SILT and GRAVEL		
SP-SC	Poorly graded SAND with CLAY (or SILTY CLAY) Poorly graded SAND with CLAY and GRAVEL (or SILTY CLAY and GRAVEL)	OH	ORGANIC fat CLAY ORGANIC fat CLAY with SAND ORGANIC fat CLAY with GRAVEL SANDY ORGANIC fat CLAY SANDY ORGANIC fat CLAY with GRAVEL GRAVELLY ORGANIC fat CLAY GRAVELLY ORGANIC fat CLAY with SAND
SM	SILTY SAND SILTY SAND with GRAVEL		
SC	CLAYEY SAND CLAYEY SAND with GRAVEL	OH	ORGANIC elastic SILT ORGANIC elastic SILT with SAND ORGANIC elastic SILT with GRAVEL SANDY ORGANIC elastic SILT SANDY ORGANIC elastic SILT with GRAVEL GRAVELLY ORGANIC elastic SILT GRAVELLY ORGANIC elastic SILT with SAND
SC-SM	SILTY, CLAYEY SAND SILTY, CLAYEY SAND with GRAVEL		
PT	PEAT	OL/OH	ORGANIC SOIL ORGANIC SOIL with SAND ORGANIC SOIL with GRAVEL SANDY ORGANIC SOIL SANDY ORGANIC SOIL with GRAVEL GRAVELLY ORGANIC SOIL GRAVELLY ORGANIC SOIL with SAND
	COBBLES COBBLES and BOULDERS BOULDERS		

FIELD AND LABORATORY TESTING

- (C) Consolidation (ASTM D 2435)
- (CL) Collapse Potential (ASTM D 5333)
- (CP) Compaction Curve (CTM 216)
- (CR) Corrosivity Testing (CTM 643, CTM 422, CTM 417)
- (CU) Consolidated Undrained Triaxial (ASTM D 4767)
- (DS) Direct Shear (ASTM D 3080)
- (EI) Expansion Index (ASTM D 4829)
- (M) Moisture Content (ASTM D 2216)
- (OC) Organic Content-% (ASTM D 2974)
- (P) Permeability (CTM 220)
- (PA) Particle Size Analysis (ASTM D 422)
- (PI) Plasticity Index (AASHTO T 90) Liquid Limit (AASHTO T 89)
- (PL) Point Load Index (ASTM D 5731)
- (PM) Pressure Meter
- (PP) Pocket Penetrometer
- (R) R-Value (CTM 301)
- (SE) Sand Equivalent (CTM 217)
- (SG) Specific Gravity (AASHTO T 100)
- (SL) Shrinkage Limit (ASTM D 427)
- (SW) Swell Potential (ASTM D 4546)
- (TV) Pocket Torvane
- (UC) Unconfined Compression-Soil (ASTM D 2166) Unconfined Compression-Rock (ASTM D 2938)
- (UU) Unconsolidated Undrained Triaxial (ASTM D 2850)
- (UW) Unit Weight (ASTM D 4767)
- (VS) Vane Shear (AASHTO T 223)

APPARENT DENSITY OF COHESIONLESS SOILS

Description	SPT N_{60} (Blows / 12 inches)
Very loose	0 - 4
Loose	5 - 10
Medium Dense	11 - 30
Dense	31 - 50
Very Dense	> 50

MOISTURE

Description	Criteria
Dry	Absence of moisture, dusty, dry to the touch
Moist	Damp but no visible water
Wet	Visible free water, usually soil is below water table

PERCENT OR PROPORTION OF SOILS

Description	Criteria
Trace	Particles are present but estimated to be less than 5%
Few	5 to 10%
Little	15 to 25%
Some	30 to 45%
Mostly	50 to 100%

PARTICLE SIZE

Description		Size
Boulder		> 12"
Cobble		3" to 12"
Gravel	Coarse	3/4" to 3"
	Fine	No. 4 to 3/4"
Sand	Coarse	No. 10 to No. 4
	Medium	No. 40 to No. 10
	Fine	No. 200 to No. 40

ENGINEERING SERVICES

GEOTECHNICAL SERVICES
PREPARED BY: I.G-Remmen 12/09

STATE OF CALIFORNIA DEPARTMENT OF TRANSPORTATION

DIVISION OF ENGINEERING SERVICES STRUCTURE DESIGN
DESIGN BRANCH

BRIDGE NO. 52-0279
POST MILE 43.6

BATES ROAD UNDERCROSSING (WIDEN)
LOG OF TEST BORINGS 4 OF 5

GS LOTB SOIL LEGEND

ORIGINAL SCALE IN INCHES FOR REDUCED PLANS 0 1 2 3

CU 07
EA 260701

DISREGARD PRINTS BEARING EARLIER REVISION DATES

REVISION DATES

SHEET 36 OF 37

FILE => e-52-0279-z-lotb04.dgn

USERNAME => s124496 DATE PLOTTED => 25-JUN-2011 TIME PLOTTED => 09:00

DIST	COUNTY	ROUTE	POST MILES TOTAL PROJECT	SHEET No	TOTAL SHEETS
07	Ven,SB	101	R39.8/R43.6, 0.0/2.2	697	757

REGISTERED CIVIL ENGINEER 4-7-10

6-20-11
PLANS APPROVAL DATE

The State of California or its officers or agents shall not be responsible for the accuracy or completeness of electronic copies of this plan sheet.

REGISTERED PROFESSIONAL ENGINEER Harihar Shiwakoti No. C76035 Exp. 6-30-12 CIVIL STATE OF CALIFORNIA

REFERENCE: CALTRANS SOIL & ROCK LOGGING, CLASSIFICATION, AND PRESENTATION MANUAL (JUNE 2007)

PERCENT CORE RECOVERY (REC) & ROCK QUALITY DESIGNATION (RQD)

$$REC = \frac{\sum \text{Length of the recovered core pieces (inches)}}{\text{Total length of core run (inches)}} \times 100\%$$

$$RQD = \frac{\sum \text{Length of intact core pieces} \geq 4''}{\text{Total length of core run (inches)}} \times 100\%$$

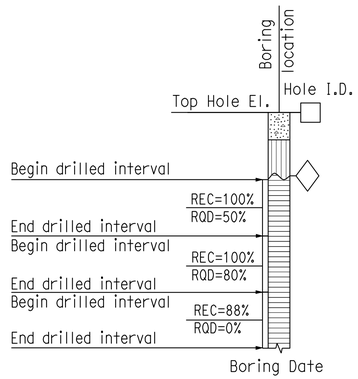

RELATIVE STRENGTH OF INTACT ROCK

Term	Uniaxial Compressive Strength (PSI)
Extremely Strong	> 30,000
Very Strong	14,500 - 30,000
Strong	7,000 - 14,500
Medium Strong	3,500 - 7,000
Weak	700 - 3,500
Very Weak	150 - 700
Extremely Weak	< 150

BEDDING SPACING

Description	Thickness / Spacing
Massive	Greater than 10 ft
Very thickly bedded	3 to 10 ft
Thickly bedded	1 to 3 ft
Moderately bedded	3-5/8" to 1 ft
Thinly bedded	1-1/4" to 3-5/8"
Very thinly bedded	3/8" to 1-1/4"
Laminated	Less than 3/8"

LEGEND OF ROCK MATERIALS

- IGNEOUS ROCK
- SEDIMENTARY ROCK
- METAMORPHIC ROCK

ROCK HARDNESS

Description	Criteria
Extremely Hard	Specimen cannot be scratched with a pocket knife or sharp pick; can only be chipped with repeated heavy hammer blows.
Very Hard	Specimen cannot be scratched with a pocket knife or sharp pick. Breaks with repeated heavy hammer blows.
Hard	Specimen can be scratched with a pocket knife or sharp pick with difficulty (heavy pressure). Heavy hammer blows required to break specimen.
Moderately Hard	Specimen can be scratched with pocket knife or sharp pick with light or moderate pressure. Core breaks with moderate hammer blows.
Moderately Soft	Specimen can be grooved 1/6" deep with a pocket knife or sharp pick with moderate or heavy pressure. Breaks with light hammer blow or heavy manual pressure.
Soft	Specimen can be grooved or gouged easily by a pocket knife or sharp pick with light pressure, can be scratched with fingernail. Breaks with light to moderate manual pressure.
Very Soft	Specimen can be readily indented, grooved or gouged with fingernail, or carved with a pocket knife. Breaks with light manual pressure.

FRACTURE DENSITY

Description	Observed Fracture Density
Unfractured	No fractures.
Very slightly fractured	Lengths greater than 3 feet.
Slightly fractured	Lengths from 1 to 3 feet with few lengths less than 1 foot or greater than 3 feet.
Moderately fractured	Lengths mostly in 4" to 1 foot range with most lengths about 8"
Intensely fractured	Lengths average from 1 to 4" with scattered fragmented intervals with lengths less than 4"
Very intensely fractured	Mostly chips and fragments with a few scattered short core lengths.

Combination descriptors (such as "Very intensely to intensely fractured") are used where equal distribution of both fracture density characteristics is present over a significant interval or exposure, or where characteristics are "in between" the descriptor definitions. Only two adjacent descriptors may be combined.

WEATHERING DESCRIPTORS FOR INTACT ROCK

Description	Diagnostic features					General Characteristics
	Chemical Weathering-Discoloration and/or oxidation		Mechanical Weathering-Grain boundary conditions (disaggregation) primarily for granitics and some coarse-grained sediments	Texture and Solutioning		
	Body of Rock	Fracture Surfaces		Texture	Solutioning	
Fresh	No discoloration, not oxidized.	No discoloration or oxidation.	No separation, intact (tight).	No change.	No solutioning.	Hammer rings when crystalline rocks are struck.
Slightly Weathered	Discoloration or oxidation is limited to surface of, or short distance from, fractures; some feldspar crystals are dull.	Minor to complete discoloration or oxidation of most surfaces.	No visible separation, intact (tight).	Preserved.	Minor leaching of some soluble minerals may be noted.	Hammer rings when crystalline rocks are struck. Body of rock not weakened.
Moderately Weathered	Discoloration or oxidation extends from fractures usually throughout; Fe-Mg minerals are "rusty," feldspar crystals are "cloudy."	All fracture surfaces are discolored or oxidized.	Partial separation of boundaries visible.	Generally preserved.	Soluble minerals may be mostly leached.	Hammer does not ring when rock is struck. Body of rock is slightly weakened.
Intensely Weathered	Discoloration or oxidation throughout; all feldspars and Fe-Mg minerals are altered to clay to some extent; or chemical alteration produces in-situ disaggregation, see grain boundary conditions.	All fracture surfaces are discolored or oxidized, surfaces friable.	Partial separation, rock is friable; in semiarid conditions granitics are disaggregated.	Texture altered by chemical disintegration (hydration, argillation).	Leaching of soluble minerals may be complete.	Dull sound when struck with hammer, usually can be broken with moderate to heavy manual pressure or by light hammer blow without reference to planes of weakness such as incipient or hairline fractures, or veinlets. Rock is significantly weakened.
Decomposed	Discolored or oxidized throughout, but resistant minerals such as quartz may be unaltered; all feldspars and Fe-Mg minerals are completely altered to clay.		Complete separation of grain boundaries (disaggregated).	Resembles a soil, partial or complete remnant rock structure may be preserved; leaching of soluble minerals usually complete.		Can be granulated by hand. Resistant minerals such as quartz may be present as "stringers" or "dikes."

Combination descriptors (such as "slightly weathered to fresh") are permissible where equal distribution of both weathering characteristics is present over significant intervals or where characteristics present are "in between" the diagnostic feature. However, combination descriptors should not be used where significant, identifiable zones can be delineated. Only two adjacent descriptors may be combined. "Very intensely weathered" is the combination descriptor for "intensely weathered to decomposed."

ENGINEERING SERVICES	GEOTECHNICAL SERVICES	STATE OF CALIFORNIA DEPARTMENT OF TRANSPORTATION	DIVISION OF ENGINEERING SERVICES STRUCTURE DESIGN DESIGN BRANCH	BRIDGE NO. 52-0279 POST MILE 43.6	BATES ROAD UNDERCROSSING (WIDEN) LOG OF TEST BORINGS 5 OF 5
	PREPARED BY: I.G-Remmen 12/09		CU 07 EA 260701	DISREGARD PRINTS BEARING EARLIER REVISION DATES →	REVISION DATES — SHEET 37 OF 37

GS LOTB ROCK LEGEND

ORIGINAL SCALE IN INCHES FOR REDUCED PLANS 0 1 2 3

FILE => e-52-0279-z-lotb05.dgn

USERNAME => s124496 DATE PLOTTED => 25-JUN-2011 TIME PLOTTED => 09:00

DIST	COUNTY	ROUTE	POST MILES TOTAL PROJECT	SHEET No	TOTAL SHEETS
07	Ven,SB	101	R39.8/R43.6, 0.0/2.2	698	757

REGISTERED CIVIL ENGINEER 10-18-10 DATE

6-20-11
PLANS APPROVAL DATE

REGISTERED PROFESSIONAL ENGINEER DOUGLAS C. MENZMER No. C63498 Exp. 09-30-12 CIVIL STATE OF CALIFORNIA

The State of California or its officers or agents shall not be responsible for the accuracy or completeness of electronic copies of this plan sheet.

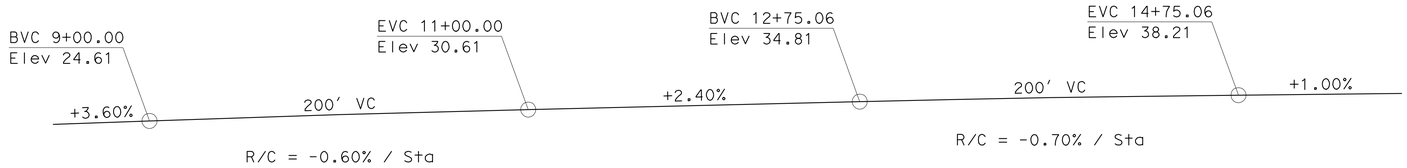

PROFILE GRADE

No scale

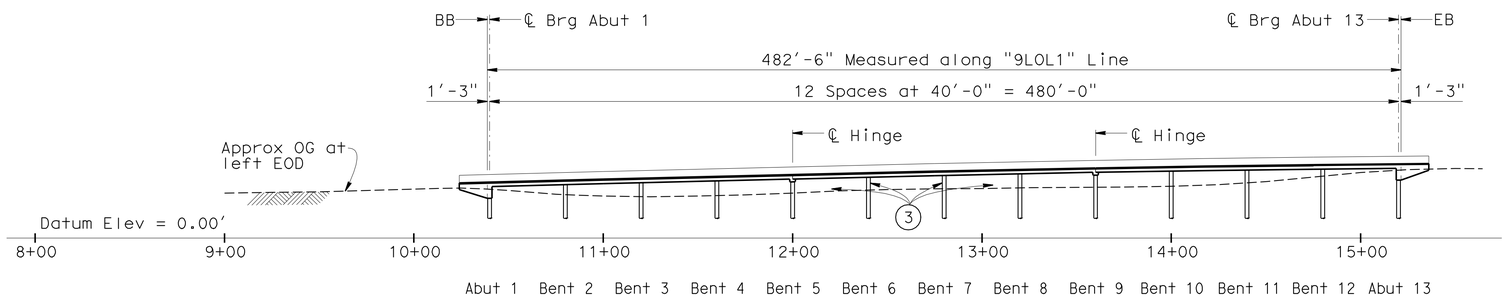

MIRRORED ELEVATION

1" = 40'

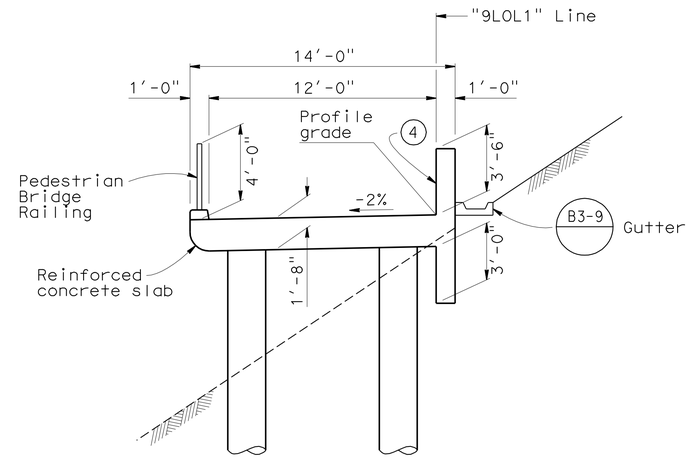

TYPICAL SECTION

1/4" = 1'-0"

"9LOL1" Line
R = 501.20'
Δ = 10°17'19.00"
T = 45.122'
L = 90.001'

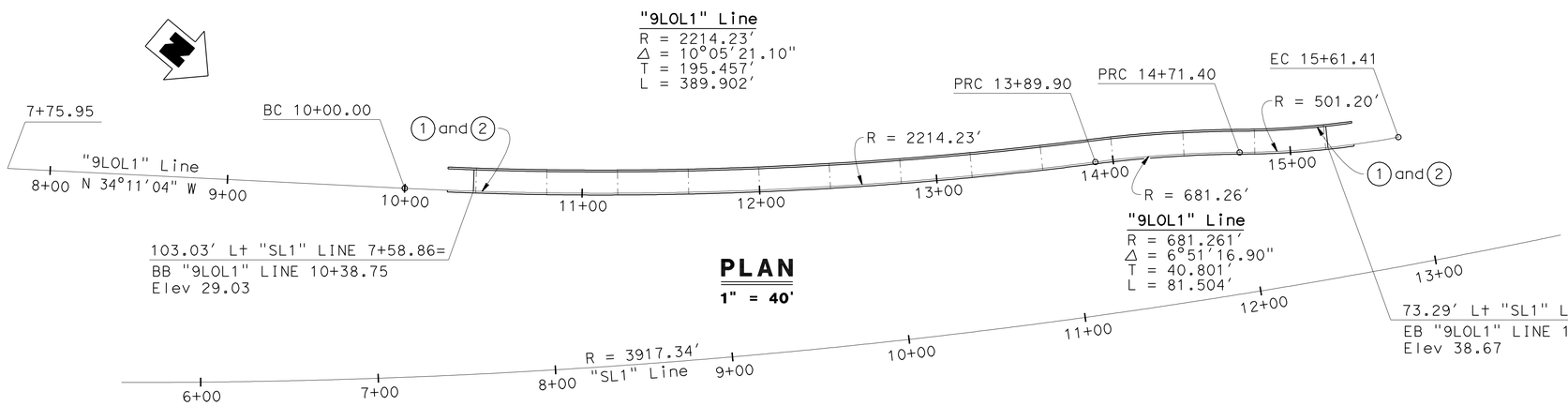

PLAN

1" = 40'

QUANTITIES

STRUCTURE EXCAVATION (BRIDGE)	410	CY
STRUCTURE BACKFILL (BRIDGE)	172	CY
24" CAST-IN-DRILLED-HOLE CONCRETE PILING	818	LF
STRUCTURAL CONCRETE, BRIDGE	580	CY
ARCHITECTURAL TEXTURE (SEASIDE MOTIF)	1,792	SQFT
JOINT SEAL (MR 1")	28	LF
BAR REINFORCING STEEL (BRIDGE)	126,100	LB
BAR REINFORCING STEEL (EPOXY COATED)(BRIDGE)	34,819	LB
PEDESTRIAN BRIDGE RAILING	512	LF

LEGEND

Standard Plan Sheet No.

Detail No.

1. Paint "BIKE LANE RAMP NO. 9"
2. Paint "Br. No. 52-0468"
3. Paint Bent No.
4. Architectural texture (seaside motif)

Note: For "General Notes", "Index To Plans" and "Pile Data Table", see "Index To Plans" sheet.

Matt Holm
DESIGN ENGINEER

	BY	CHECKED			
DESIGN	D. Menzmer	W. Addlespurger	LOAD & RESISTANCE FACTOR DESIGN	LIVE LOADING: 0.09 Ksf Pedestrian Loading and H10 Design Vehicle	
DETAILS	kc	D. Menzmer	LAYOUT	D. Menzmer	P. Mak
QUANTITIES	P. Mak	L. Valla	SPECIFICATIONS	Erwin Rufino	PLANS AND SPECS COMPARED Erwin Rufino

ORIGINAL SCALE IN INCHES FOR REDUCED PLANS 0 1 2 3

STATE OF CALIFORNIA
DEPARTMENT OF TRANSPORTATION

DIVISION OF ENGINEERING SERVICES
STRUCTURE DESIGN
DESIGN BRANCH 12

CU 07
EA 260701

BRIDGE NO. 52-0468
POST MILE 39.9

BIKE LANE RAMP NO. 9
GENERAL PLAN

DISREGARD PRINTS BEARING EARLIER REVISION DATES

REVISION DATES: 7-28-09 12-2-09 3-18-10 5-17-10 6-2-10 8-18-10 11-4-10 1-28-11 2-28-11

SHEET 1 OF 22

STRUCTURES DESIGN GENERAL PLAN SHEET (ENGLISH) (REV.07-24-06)

FILE => f-52-0468-a-gp.dgn

USERNAME => s124496 DATE PLOTTED => 25-JUN-2011 TIME PLOTTED => 09:00

DIST	COUNTY	ROUTE	POST MILES TOTAL PROJECT	SHEET No	TOTAL SHEETS
07	Ven,SB	101	R39.8/R43.6, 0.0/2.2	699	757

REGISTERED CIVIL ENGINEER 10-18-10 DATE

6-20-11
PLANS APPROVAL DATE

REGISTERED PROFESSIONAL ENGINEER DOUGLAS C. MENZMER No. C63498 Exp. 09-30-12 CIVIL STATE OF CALIFORNIA

The State of California or its officers or agents shall not be responsible for the accuracy or completeness of electronic copies of this plan sheet.

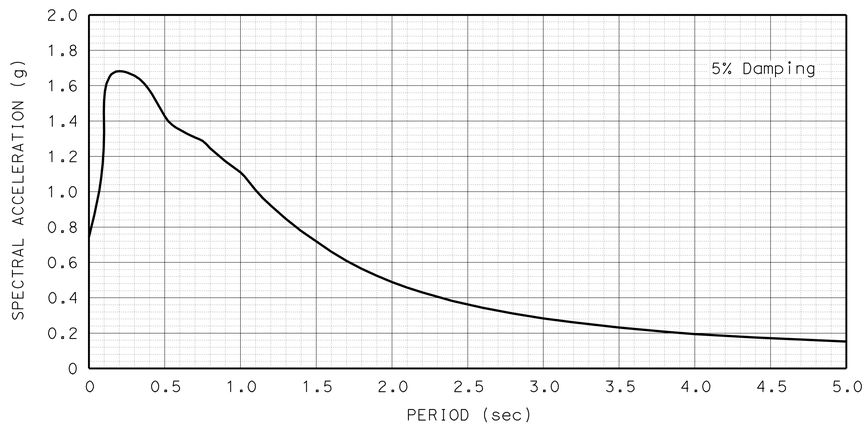

SITE SPECIFIC ACCELERATION RESPONSE SPECTRA CURVE

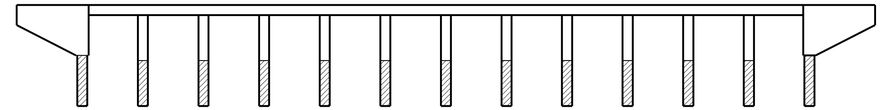

CONCRETE STRENGTH AND TYPE LIMITS

No scale

Structural Concrete, Bridge
(3.6 ksi @ 28 days)

Cast-In-Drilled Hole Concrete Piling
(3.6 ksi @ 28 days)

PILE DATA TABLE

Location	Pile Type	Cut-off Elevation (ft)		Nominal Resistance (kips) Compression	Nominal Resistance (kips) Tension	Design Tip Elevation (ft)	Specified Tip Elevation (ft)
Abutment 1	24" CIDH	L	20.9	140	0	-3	-3
		R	20.9			-3	-3
Bent 2	24" CIDH	L	23.5	350	0	-15	-15
		R	27.5			-11	-11
Bent 3	24" CIDH	L	23.0	310	0	-12	-12
		R	28.4			-7	-7
Bent 4	24" CIDH	L	23.2	330	0	-13	-13
		R	29.4			-7	-7
Bent 5	24" CIDH	L	25.5	260	0	-6	-6
		R	30.3			-1	-1
Bent 6	24" CIDH	L	26.3	350	0	-12	-12
		R	31.3			-7	-7
Bent 7	24" CIDH	L	27.6	310	0	-2	-2
		R	32.3			2	2
Bent 8	24" CIDH	L	27.8	330	0	-4	-4
		R	33.2			1	1
Bent 9	24" CIDH	L	28.3	260	0	0	0
		R	33.9			6	6
Bent 10	24" CIDH	L	29.0	350	0	-4	-4
		R	34.6			2	2
Bent 11	24" CIDH	L	31.0	310	0	1	1
		R	35.2			5	5
Bent 12	24" CIDH	L	34.3	350	0	1	1
		R	35.6			3	3
Abutment 13	24" CIDH	L	30.5	140	0	11	11
		R	30.5			11	11

GENERAL NOTES
LOAD AND RESISTANCE FACTOR DESIGN

DESIGN:
AASHTO LRFD Bridge Design Specifications, 4th edition with Interims through 2007 and the California Amendments December 2008.

SEISMIC DESIGN:
Caltrans Seismic Design Criteria (SDC), Version 1.4 dated June 2006.

DEAD LOAD:
Includes 35 psf for future wearing surface.

LIVE LOADING:
0.09 ksf and H10 Design Vehicle

SEISMIC LOADING:
"Site-Specific Acceleration Response Spectra Curve.

CONCRETE:
f_y = 60 ksi

f'_c = 3.6 ksi

n = 8

STRUCTURAL STEEL:
f_y = 36 ksi minimum unless otherwise noted

STANDARD PLANS DATED MAY 2006

A10A	ACRONYMS AND ABBREVIATIONS (A-L)
A10B	ACRONYMS AND ABBREVIATIONS (M-Z)
A62C	LIMITS OF PAYMENT FOR EXCAVATION AND BACKFILL BRIDGE
B0-1	BRIDGE DETAILS
B0-3	BRIDGE DETAILS
B0-5	BRIDGE DETAILS
B0-13	BRIDGE DETAILS
B3-9	RETAINING WALL DETAILS NO. 2
RSP B6-21	JOINT SEAL (MAXIMUM MOVEMENT RATING = 2")

INDEX TO PLANS

SHEET NO.	TITLE
1.	GENERAL PLAN
2.	INDEX TO PLANS
3.	DECK CONTOURS
4.	FOUNDATION PLAN NO. 1
5.	FOUNDATION PLAN NO. 2
6.	ABUTMENT DETAILS NO. 1
7.	ABUTMENT DETAILS NO. 2
8.	BENT DETAILS
9.	TYPICAL SECTION
10.	SLAB REINFORCEMENT LAYOUT
11.	SLAB REINFORCEMENT DETAILS
12.	SLAB HINGE DETAILS
13.	PEDESTRIAN BRIDGE RAILING DETAILS NO. 1
14.	PEDESTRIAN BRIDGE RAILING DETAILS NO. 2
15.	PEDESTRIAN BRIDGE RAILING DETAILS NO. 3
16.	PEDESTRIAN BRIDGE RAILING DETAILS NO. 4
17.	PEDESTRIAN BRIDGE RAILING DETAILS NO. 5
18.	ARCHITECTURAL TREATMENT DETAILS NO. 1
19.	ARCHITECTURAL TREATMENT DETAILS NO. 2
20.	LOG OF TEST BORINGS 1 OF 3
21.	LOG OF TEST BORINGS 2 OF 3
22.	LOG OF TEST BORINGS 3 OF 3

	BY	CHECKED
DESIGN	P. Mak	W. Addlespurger
DETAILS	kc	P. Mak
QUANTITIES	P. Mak	L. Valla

STATE OF CALIFORNIA
DEPARTMENT OF TRANSPORTATION

DIVISION OF ENGINEERING SERVICES
STRUCTURE DESIGN
DESIGN BRANCH 12

BRIDGE NO. 52-0468
POST MILE 39.9

BIKE LANE RAMP NO. 9
INDEX TO PLANS

STRUCTURES DESIGN DETAIL SHEET (ENGLISH) (REV. 10/25/05)

ORIGINAL SCALE IN INCHES FOR REDUCED PLANS 0 1 2 3

CU 07
EA 260701

DISREGARD PRINTS BEARING EARLIER REVISION DATES

REVISION DATES: 12-17-09, 3-18-10, 5-12-10, 6-2-10, 8-18-10, 10-18-10, 11-4-10, 1-20-11

SHEET 2 OF 22

FILE => f-52-0468-a-itp.dgn

USERNAME => s124496 DATE PLOTTED => 25-JUN-2011 TIME PLOTTED => 09:00

DIST	COUNTY	ROUTE	POST MILES TOTAL PROJECT	SHEET No	TOTAL SHEETS
07	Ven,SB	101	R39.8/R43.6, 0.0/2.2	700	757

REGISTERED CIVIL ENGINEER 10-18-10 DATE

6-20-11
PLANS APPROVAL DATE

REGISTERED PROFESSIONAL ENGINEER
DOUGLAS C. MENZMER
No. C63498
Exp. 09-30-12
CIVIL
STATE OF CALIFORNIA

The State of California or its officers or agents shall not be responsible for the accuracy or completeness of electronic copies of this plan sheet.

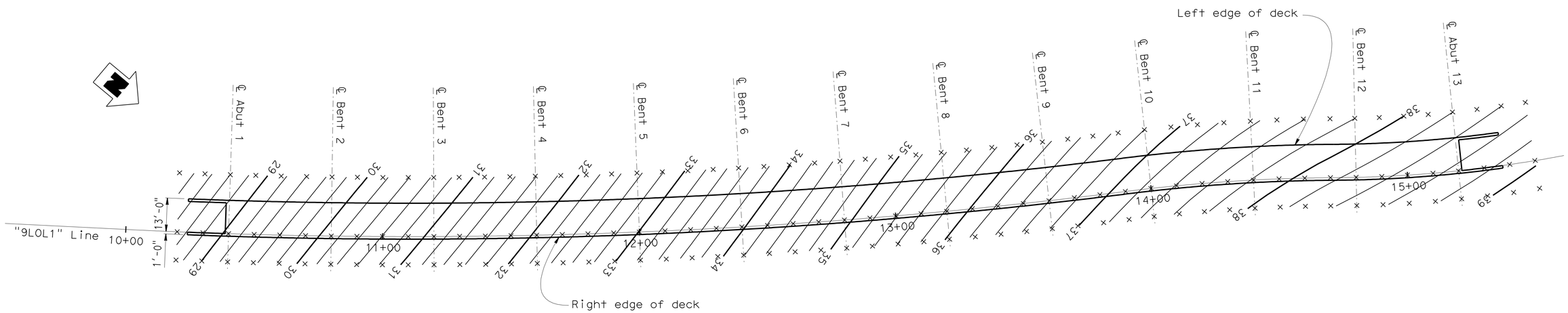

Legend

X - 10′ Intervals along station line.

Contour intervals = 0.20′.

Contours do not include camber.

PLAN

1" = 20'

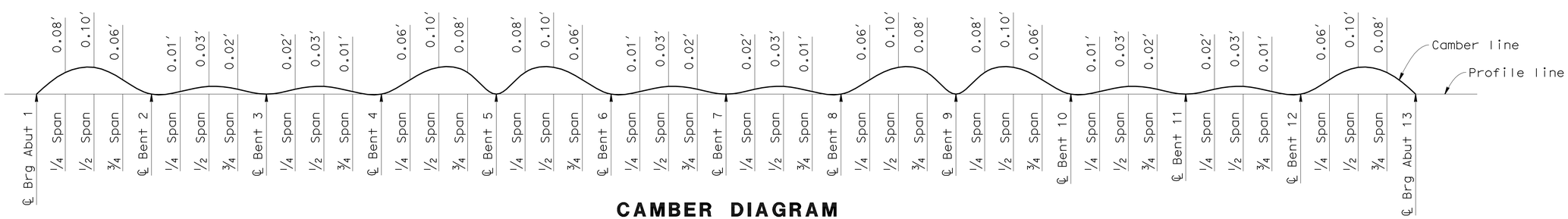

CAMBER DIAGRAM

No scale

Does not include allowance for falsework settlement.

DESIGN	BY P. Mak	CHECKED W. Addlespurger	
DETAILS	BY kc	CHECKED P. Mak	
QUANTITIES	BY P. Mak	CHECKED L. Valla	

STATE OF CALIFORNIA
DEPARTMENT OF TRANSPORTATION

DIVISION OF ENGINEERING SERVICES
STRUCTURE DESIGN
DESIGN BRANCH 12

BRIDGE NO. 52-0468
POST MILE 39.9

BIKE LANE RAMP NO. 9
DECK CONTOURS

STRUCTURES DESIGN DETAIL SHEET (ENGLISH) (REV. 10/25/05)

ORIGINAL SCALE IN INCHES FOR REDUCED PLANS 0 1 2 3

CU 07
EA 260701

DISREGARD PRINTS BEARING EARLIER REVISION DATES

REVISION DATES: 3-4-10 3-18-10 3-18-10 11-4-10

SHEET 3 OF 22

FILE => f-52-0468-b-dc.dgn

USERNAME => s124496 DATE PLOTTED => 25-JUN-2011 TIME PLOTTED => 09:00