Dist	COUNTY	ROUTE	POST MILES TOTAL PROJECT	SHEET No.	TOTAL SHEETS
07	Ven,SB	101	R39.8/R43.6, 0.0/2.2	101	757

REGISTERED CIVIL ENGINEER 01-12-11 DATE

6-20-11
PLANS APPROVAL DATE

REGISTERED PROFESSIONAL ENGINEER O.C. LEE No. C28039 Exp. 03/31/12 CIVIL STATE OF CALIFORNIA

THE STATE OF CALIFORNIA OR ITS OFFICERS OR AGENTS SHALL NOT BE RESPONSIBLE FOR THE ACCURACY OR COMPLETENESS OF SCANNED COPIES OF THIS PLAN SHEET.

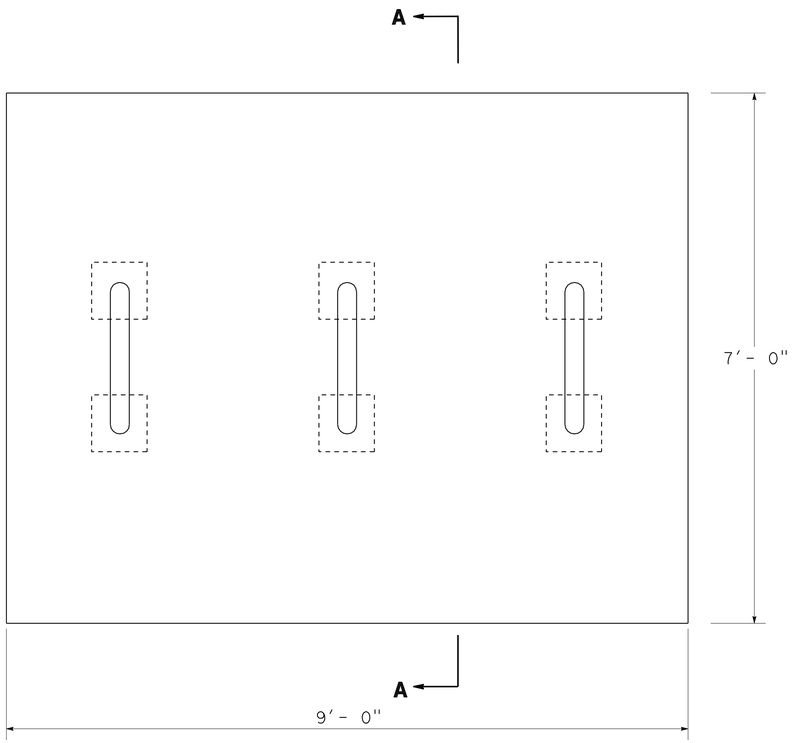

U-STYLE BIKE RACK (TYPE 1) PLAN VIEW

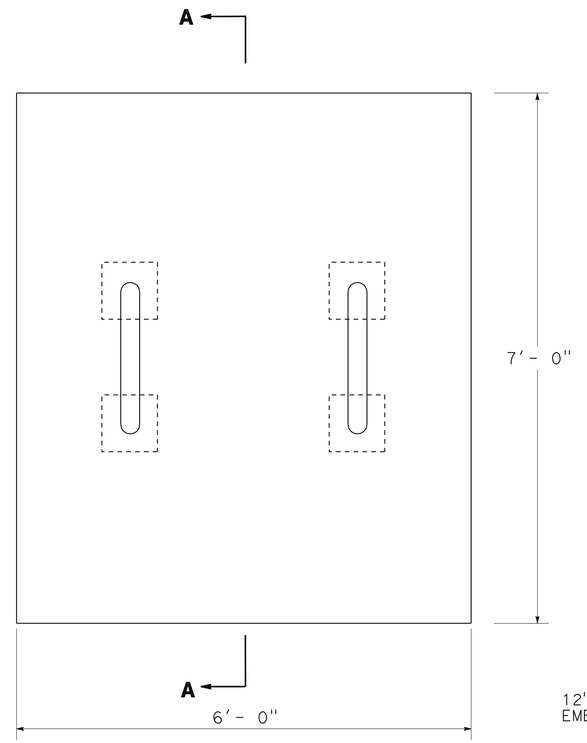

U-STYLE BIKE RACK (TYPE 2) PLAN VIEW

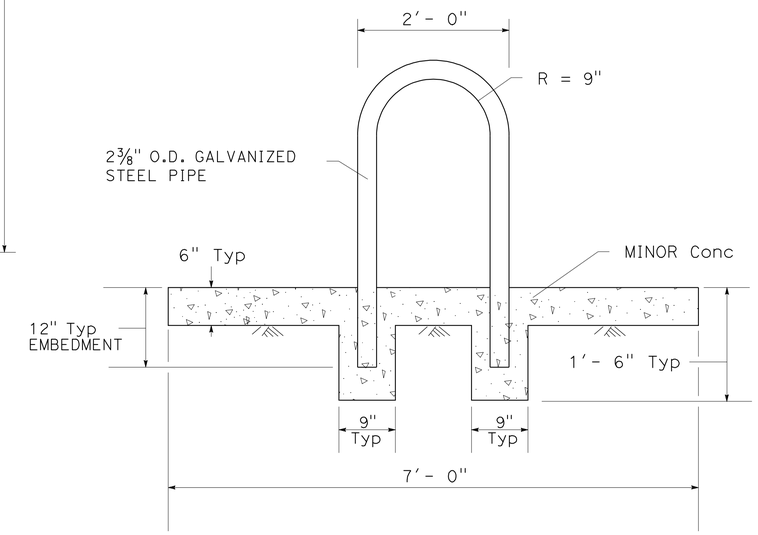

SECTION A-A

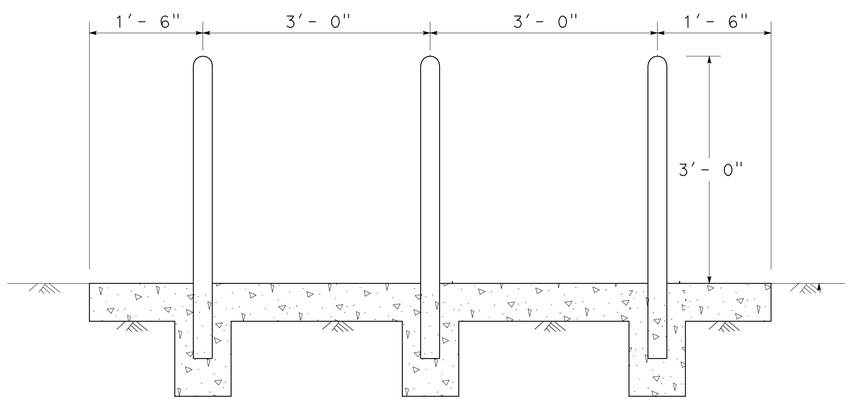

U-STYLE BIKE RACK (TYPE 1) ELEVATION

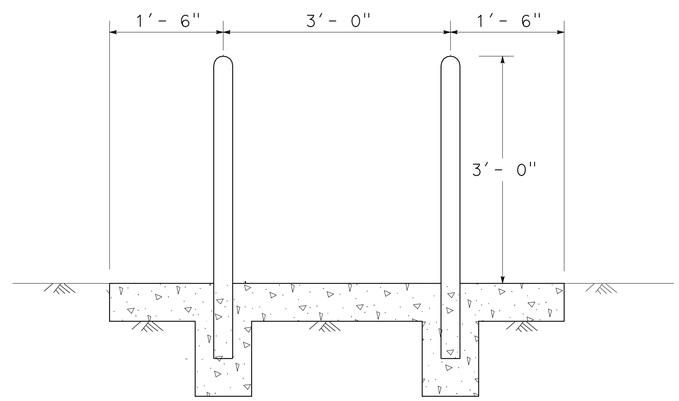

U-STYLE BIKE RACK (TYPE 2) ELEVATION

U-STYLE BIKE RACKS

CONSTRUCTION DETAILS

NO SCALE

C-21

STATE OF CALIFORNIA - DEPARTMENT OF TRANSPORTATION
Caltrans® DESIGN

FUNCTIONAL SUPERVISOR: OC LEE
CALCULATED-DESIGNED BY: BARNABAS F VORREITER
CHECKED BY: OC LEE
REVISED BY
DATE REVISED

LAST REVISION 01-12-11 DATE PLOTTED => 25-JUN-2011 TIME PLOTTED => 08:23

DIST	COUNTY	ROUTE	POST MILES TOTAL PROJECT	SHEET No	TOTAL SHEETS
07	Ven,SB	101	R39.8/R43.6, 0.0/2.2	102	757

REGISTERED CIVIL ENGINEER — DATE 10-18-10

6-20-11
PLANS APPROVAL DATE

REGISTERED PROFESSIONAL ENGINEER — Douglas C. Menzmer — No. C 63498 — Exp. 09/30/2012 — CIVIL — STATE OF CALIFORNIA

The State of California or its officers or agents shall not be responsible for the accuracy or completeness of electronic copies of this plan sheet.

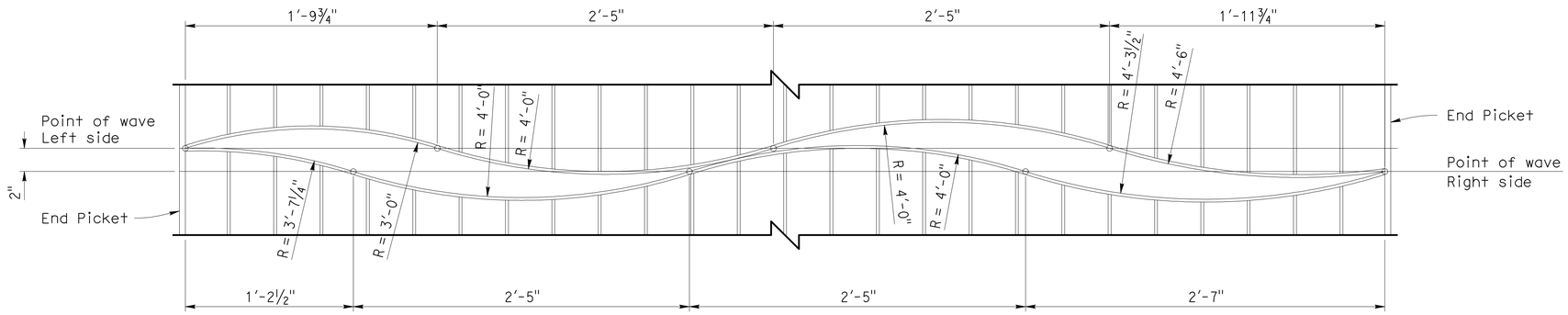

OPEN WAVE LAYOUT
2" = 1'-0"

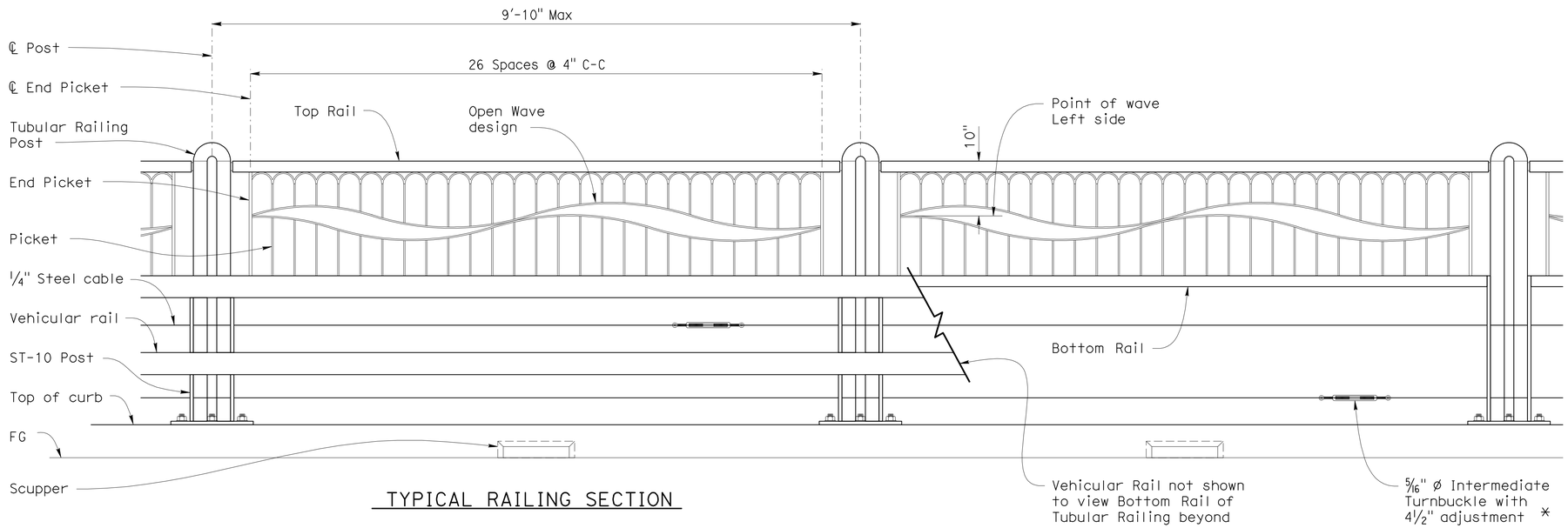

TYPICAL RAILING SECTION

PART ELEVATION
1" = 1'-0"

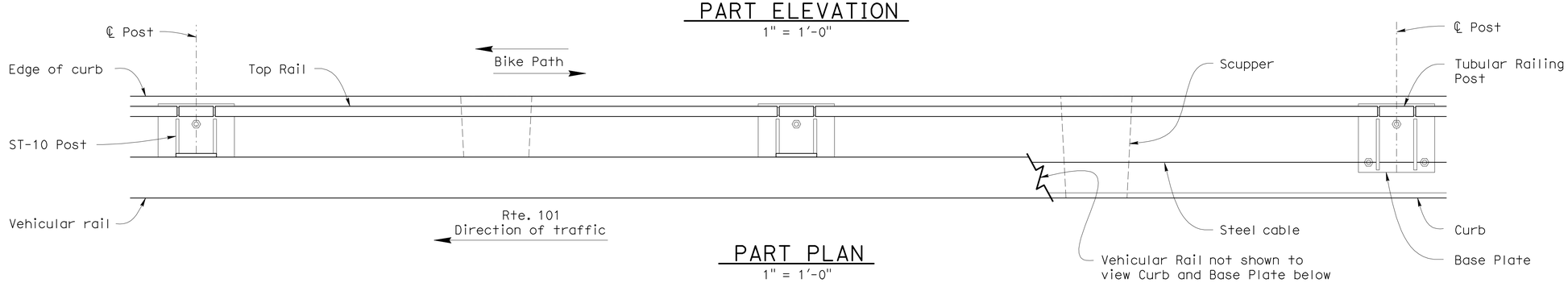

PART PLAN
1" = 1'-0"

* Steel Cable and Turnbuckle Notes:

1. Intermediate Turnbuckles shall be placed in adjacent spans.
2. Maximum distance between turnbuckles shall be 100'
3. Cable shall not be spliced between intermediate turnbuckles and end anchorage.
4. See Standard Plan B11-47 for alternative cable connection and alternative dead end anchorage.
5. Provide thimbles at all cable loops.

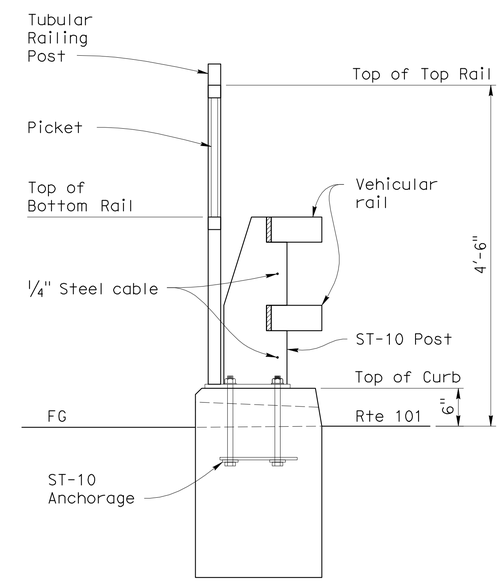

TYPICAL SECTION
1" = 1'-0"

CONSTRUCTION DETAILS
C-22

DESIGN	BY D. Menzmer	CHECKED C. Hensel	
DETAILS	BY T. Mason	CHECKED D. Menzmer	
QUANTITIES	BY	CHECKED	

STATE OF CALIFORNIA
DEPARTMENT OF TRANSPORTATION

DIVISION OF ENGINEERING SERVICES
STRUCTURE DESIGN
DESIGN BRANCH 12

BRIDGE NO.
POST MILE

CA ST-10 RAILING (MOD)
LAYOUT

STRUCTURES DESIGN DETAIL SHEET (ENGLISH) (REV. 10/25/05)

ORIGINAL SCALE IN INCHES FOR REDUCED PLANS 0 1 2 3

CU 07
EA 260701

DISREGARD PRINTS BEARING EARLIER REVISION DATES

REVISION DATES: 8-16-10 8-24-10 11-19-10 01-12-11

SHEET OF

FILE => 726070ga022.dgn

USERNAME => s124496 DATE PLOTTED => 25-JUN-2011 TIME PLOTTED => 08:23

DIST	COUNTY	ROUTE	POST MILES TOTAL PROJECT	SHEET No	TOTAL SHEETS
07	Ven,SB	101	R39.8/R43.6, 0.0/2.2	103	757

REGISTERED CIVIL ENGINEER — DATE 10-18-10

6-20-11
PLANS APPROVAL DATE

The State of California or its officers or agents shall not be responsible for the accuracy or completeness of electronic copies of this plan sheet.

REGISTERED PROFESSIONAL ENGINEER — Douglas C. Menzmer — No. C 63498 — Exp. 09/30/2012 — CIVIL — STATE OF CALIFORNIA

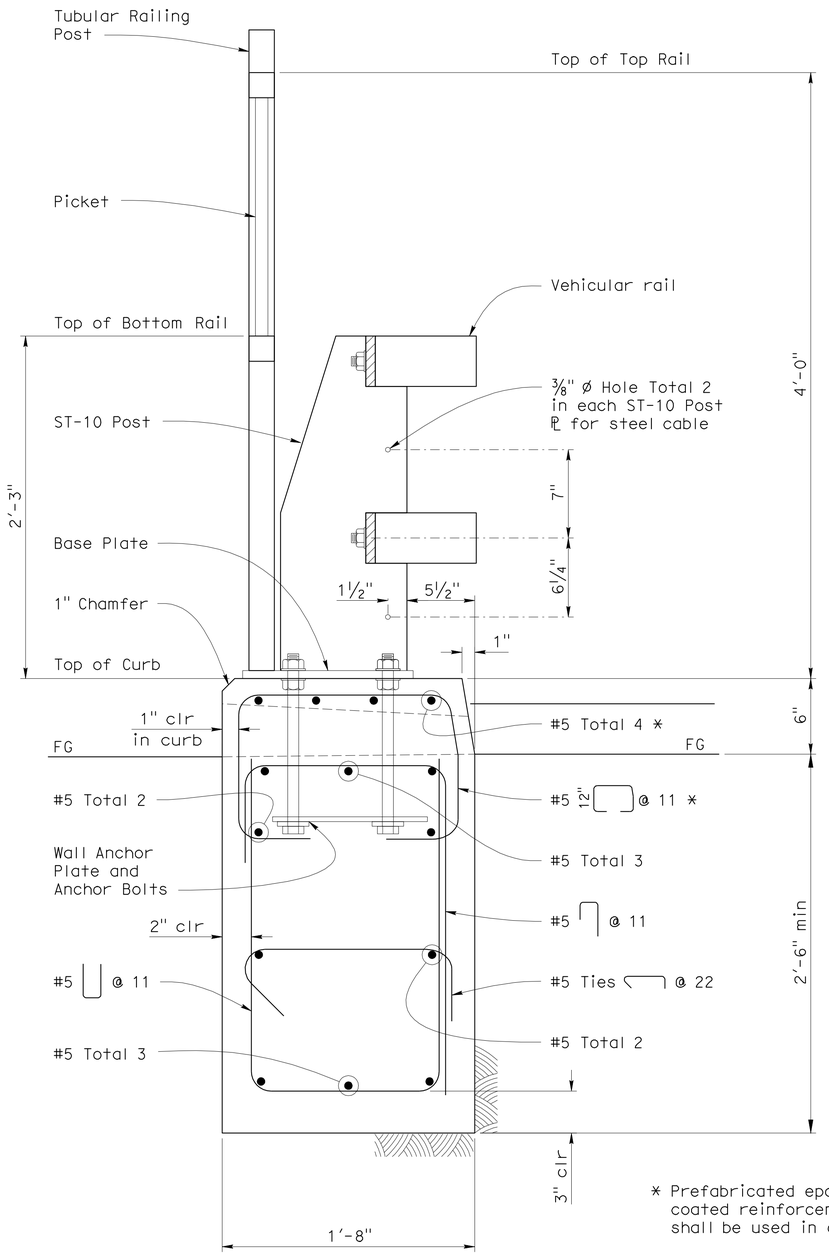

* Prefabricated epoxy coated reinforcement shall be used in curb

For CA ST-10 Railing details not shown see:

B11-68 B11-69 B11-70

TYPICAL SECTION
2" = 1'-0"

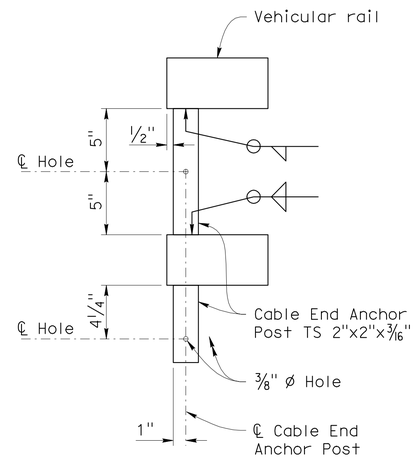

VIEW B-B
2" = 1'-0"

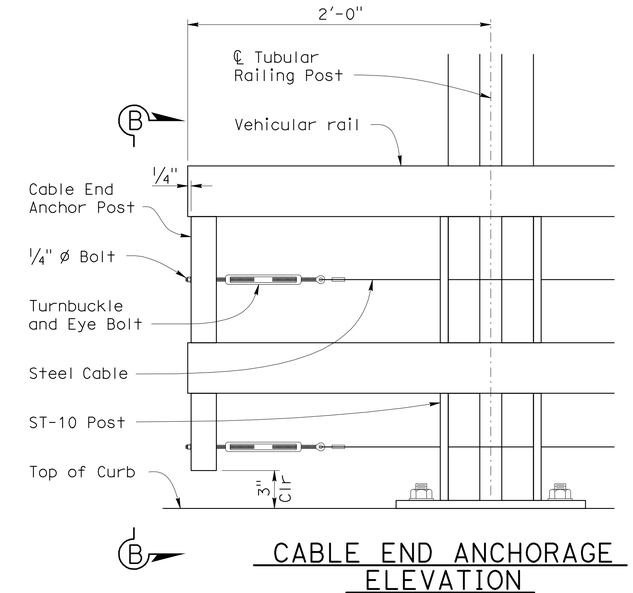

CABLE END ANCHORAGE ELEVATION
2" = 1'-0"

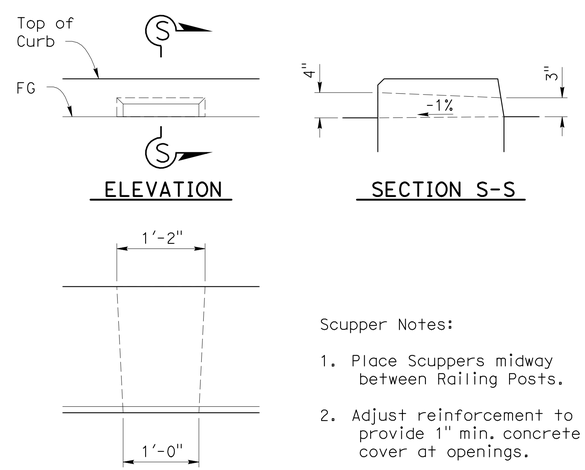

ELEVATION
SECTION S-S
PLAN

Scupper Notes:

1. Place Scuppers midway between Railing Posts.
2. Adjust reinforcement to provide 1" min. concrete cover at openings.

SCUPPER DETAIL
1" = 1'-0"

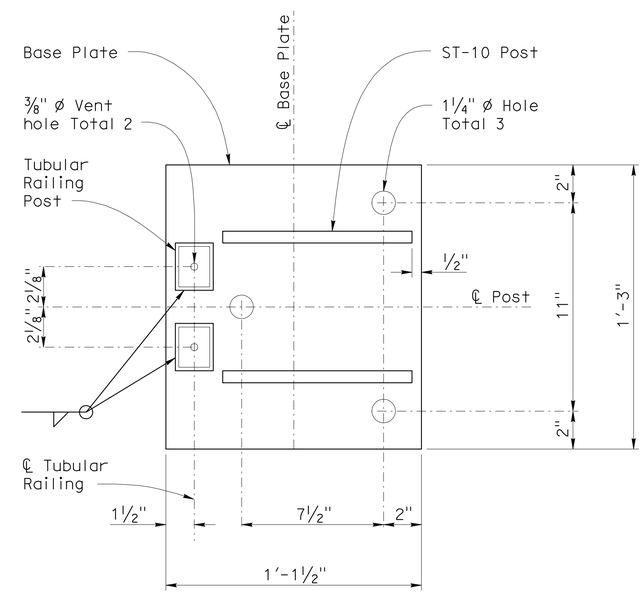

BASE PLATE
3" = 1'-0"

CONSTRUCTION DETAILS
C-23

DESIGN	BY D. Menzmer	CHECKED C. Hensel	
DETAILS	BY T. Mason	CHECKED D. Menzmer	
QUANTITIES	BY	CHECKED	

STATE OF CALIFORNIA
DEPARTMENT OF TRANSPORTATION

DIVISION OF ENGINEERING SERVICES
STRUCTURE DESIGN
DESIGN BRANCH 12

BRIDGE NO.
POST MILE

CA ST-10 RAILING (MOD)
POST DETAILS

STRUCTURES DESIGN DETAIL SHEET (ENGLISH) (REV. 10/25/05)

ORIGINAL SCALE IN INCHES FOR REDUCED PLANS 0 1 2 3

CU 07
EA 260701

DISREGARD PRINTS BEARING EARLIER REVISION DATES

REVISION DATES: 8-16-10 8-24-10 11-10-10 01-12-11

SHEET OF

FILE => 726070ga023.dgn

USERNAME => s124496 DATE PLOTTED => 25-JUN-2011 TIME PLOTTED => 08:23

DIST	COUNTY	ROUTE	POST MILES TOTAL PROJECT	SHEET No	TOTAL SHEETS
07	Ven,SB	101	R39.8/R43.6, 0.0/2.2	104	757

REGISTERED CIVIL ENGINEER — DATE 10-18-10

6-20-11
PLANS APPROVAL DATE

REGISTERED PROFESSIONAL ENGINEER — Douglas C. Menzmer — No. C 63498 — Exp. 09/30/2012 — CIVIL — STATE OF CALIFORNIA

The State of California or its officers or agents shall not be responsible for the accuracy or completeness of electronic copies of this plan sheet.

Typical Tubular Railing Section

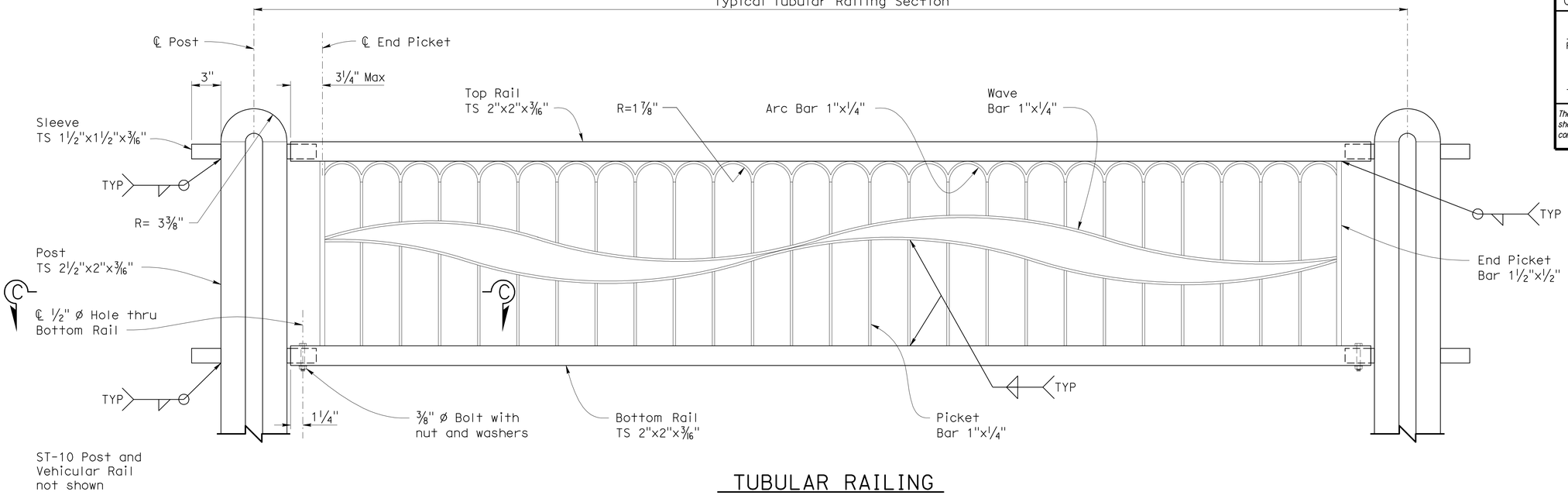

ST-10 Post and Vehicular Rail not shown

TUBULAR RAILING PART ELEVATION

2" = 1'-0"

Notes:

1. Galvanize rail assembaly and all components after fabrication.
2. Posts shall be normal to railing.
3. All bolts shall be A307 with thread locking system.

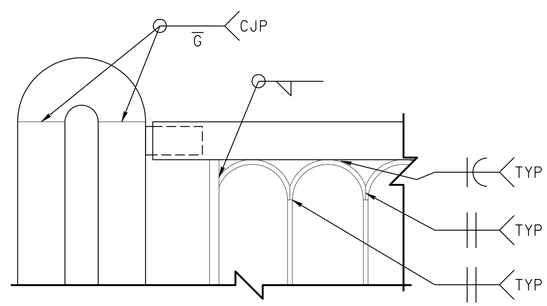

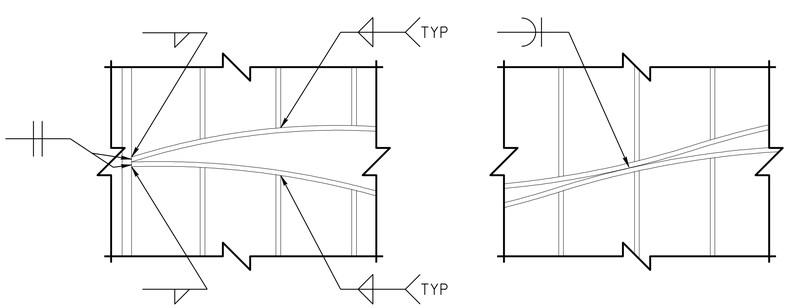

WELD DETAILS

no scale

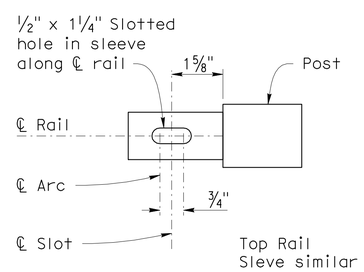

BOTTOM RAIL SLEEVE PLAN VIEW

5" = 1'-0"

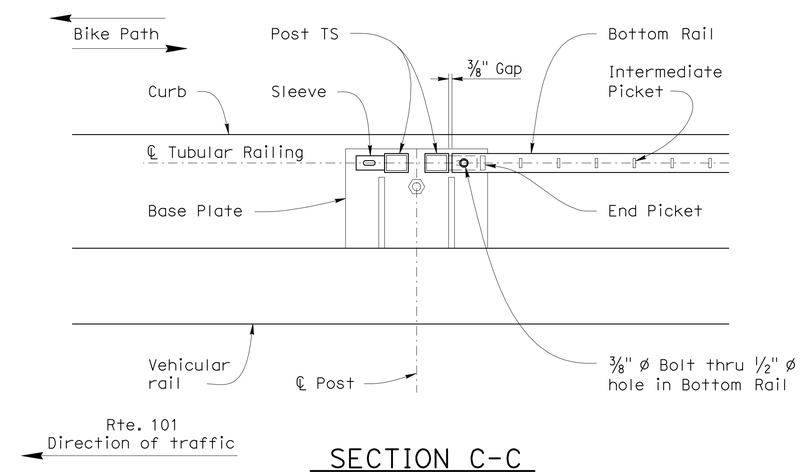

SECTION C-C

1½" = 1'-0"

CONSTRUCTION DETAILS

C-24

DESIGN	BY D. Menzmer	CHECKED C. Hensel	
DETAILS	BY T. Mason	CHECKED D. Menzmer	
QUANTITIES	BY	CHECKED	

STATE OF CALIFORNIA
DEPARTMENT OF TRANSPORTATION

DIVISION OF ENGINEERING SERVICES
STRUCTURE DESIGN
DESIGN BRANCH 12

BRIDGE NO.
POST MILE

CA ST-10 RAILING (MOD)
BICYCLE RAIL DETAILS

STRUCTURES DESIGN DETAIL SHEET (ENGLISH) (REV. 10/25/05)

ORIGINAL SCALE IN INCHES FOR REDUCED PLANS 0 1 2 3

CU 07
EA 260701

DISREGARD PRINTS BEARING EARLIER REVISION DATES

REVISION DATES: 8-16-10 8-24-10 11-10-10 01-12-11

SHEET OF

FILE => 726070ga024.dgn

USERNAME => s124496 DATE PLOTTED => 25-JUN-2011 TIME PLOTTED => 08:23

DIST	COUNTY	ROUTE	POST MILES TOTAL PROJECT	SHEET No	TOTAL SHEETS
07	Ven,SB	101	R39.8/R43.6, 0.0/2.2	105	757

REGISTERED CIVIL ENGINEER — DATE 10-18-10

6-20-11
PLANS APPROVAL DATE

REGISTERED PROFESSIONAL ENGINEER — Douglas C. Menzmer — No. C 63498 — Exp. 09/30/2012 — CIVIL — STATE OF CALIFORNIA

The State of California or its officers or agents shall not be responsible for the accuracy or completeness of electronic copies of this plan sheet.

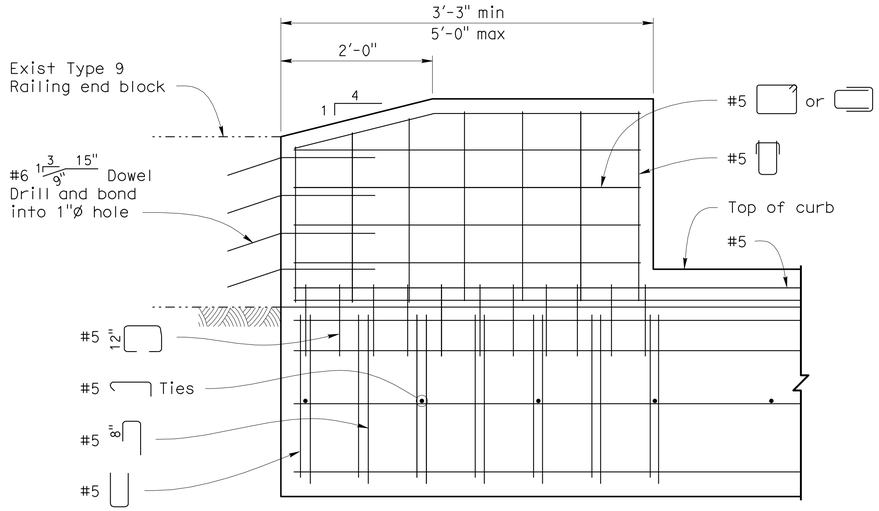

END BLOCK SECTION D-D
1" = 1'-0"

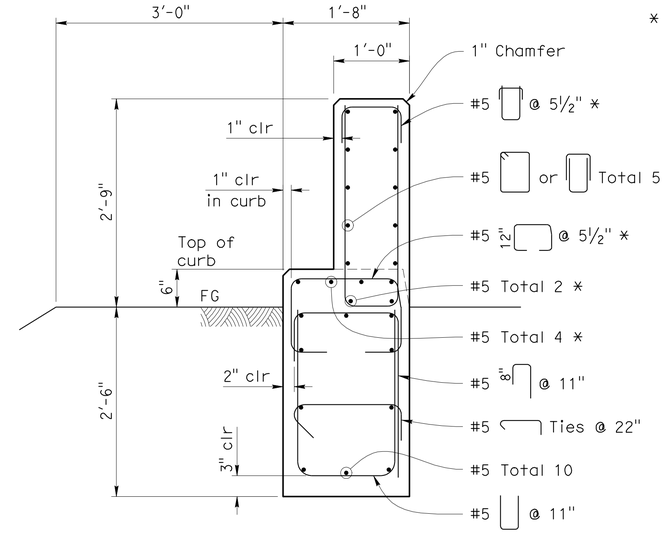

END BLOCK SECTION F-F
1" = 1'-0"

* Prefabricated epoxy coated reinforcement shall be used.

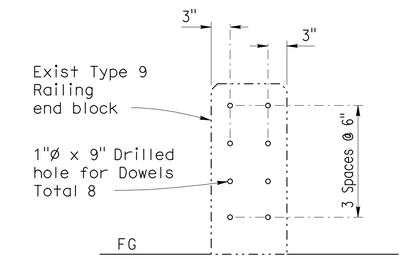

DOWEL LAYOUT
VIEW E-E
1" = 1'-0"

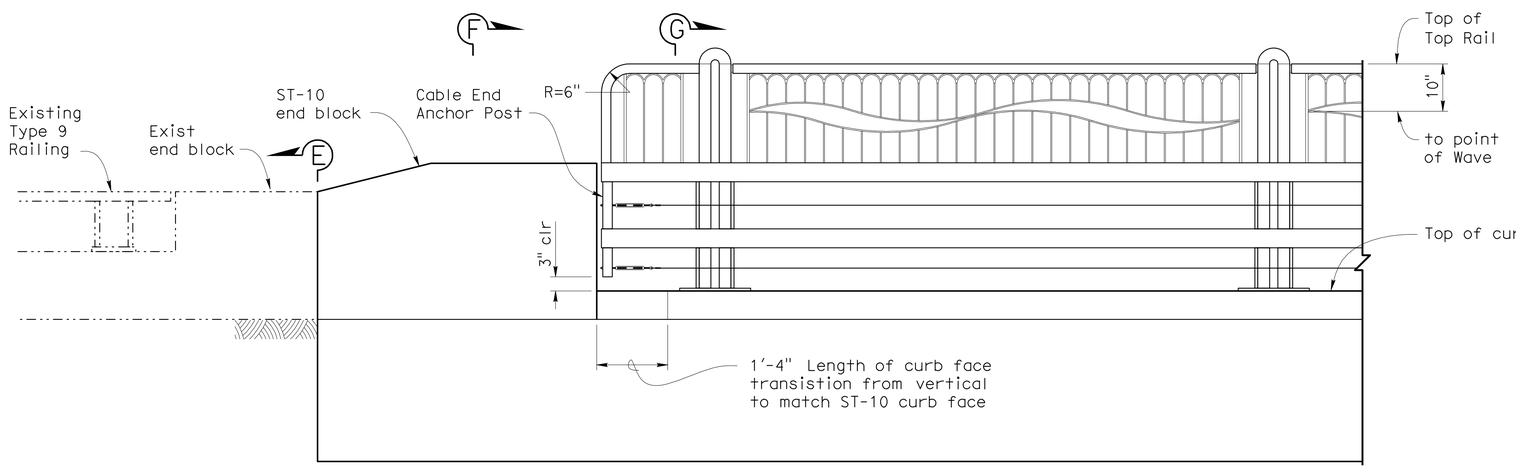

ELEVATION
¾" = 1'-0"

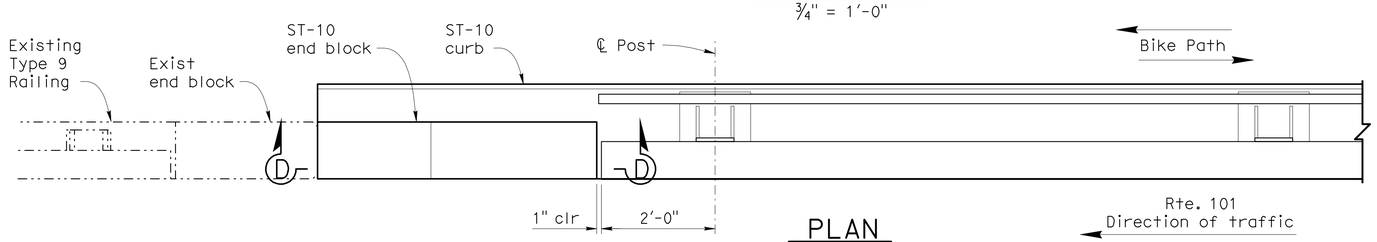

PLAN
¾" = 1'-0"

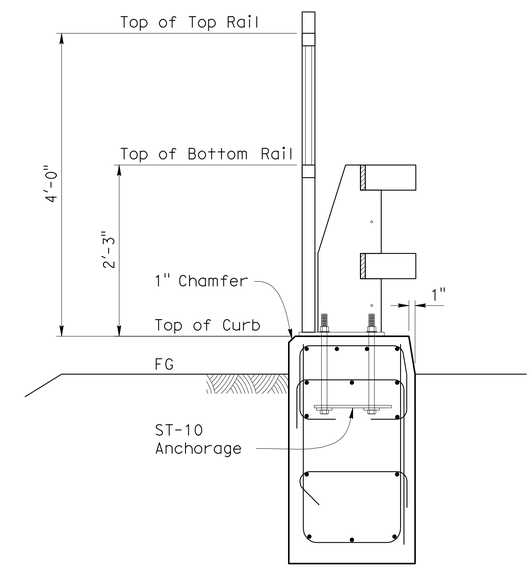

TYPICAL SECTION G-G
1" = 1'-0"

CONSTRUCTION DETAILS
C-25

DESIGN	BY D. Menzmer	CHECKED C. Hensel	
DETAILS	BY T. Mason	CHECKED D. Menzmer	
QUANTITIES	BY	CHECKED	

STATE OF CALIFORNIA
DEPARTMENT OF TRANSPORTATION

DIVISION OF ENGINEERING SERVICES
STRUCTURE DESIGN
DESIGN BRANCH 12

BRIDGE NO.
POST MILE

CA ST-10 RAILING (MOD)
TRANSISTION TO TYPE 9 RAILING

STRUCTURES DESIGN DETAIL SHEET (ENGLISH) (REV. 10/25/05)

ORIGINAL SCALE IN INCHES FOR REDUCED PLANS 0 1 2 3

CU 07
EA 260701

DISREGARD PRINTS BEARING EARLIER REVISION DATES

REVISION DATES: 8-16-10 8-24-10 01-12-11

SHEET OF

FILE => 726070ga025.dgn

USERNAME => s124496 DATE PLOTTED => 25-JUN-2011 TIME PLOTTED => 08:23

DIST	COUNTY	ROUTE	POST MILES TOTAL PROJECT	SHEET No	TOTAL SHEETS
07	Ven,SB	101	R39.8/R43.6, 0.0/2.2	106	757

REGISTERED CIVIL ENGINEER 10-18-10 DATE

6-20-11
PLANS APPROVAL DATE

REGISTERED PROFESSIONAL ENGINEER Douglas C. Menzmer No. C 63498 Exp. 09/30/2012 CIVIL STATE OF CALIFORNIA

The State of California or its officers or agents shall not be responsible for the accuracy or completeness of electronic copies of this plan sheet.

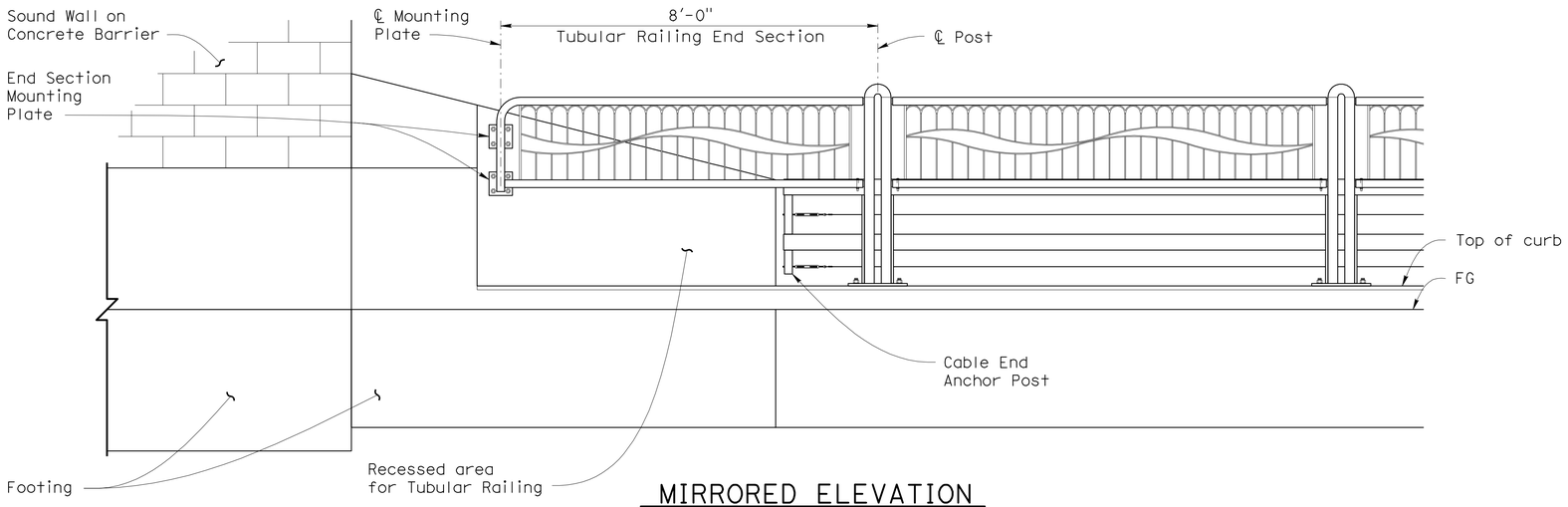

MIRRORED ELEVATION
5/8" = 1'-0"

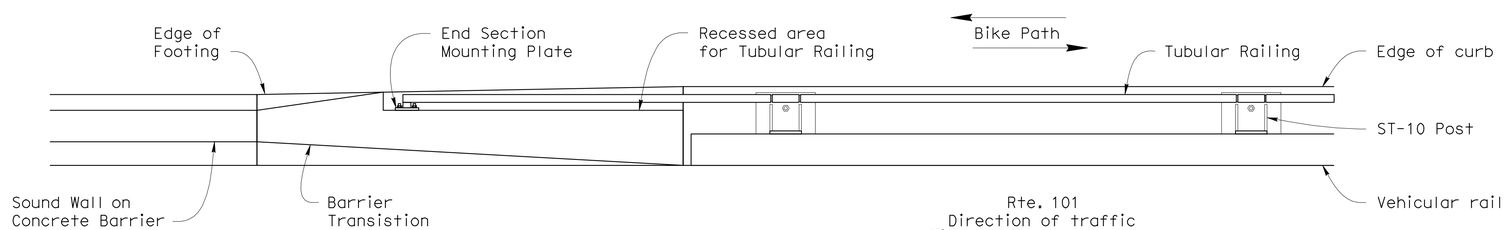

PLAN
5/8" = 1'-0"

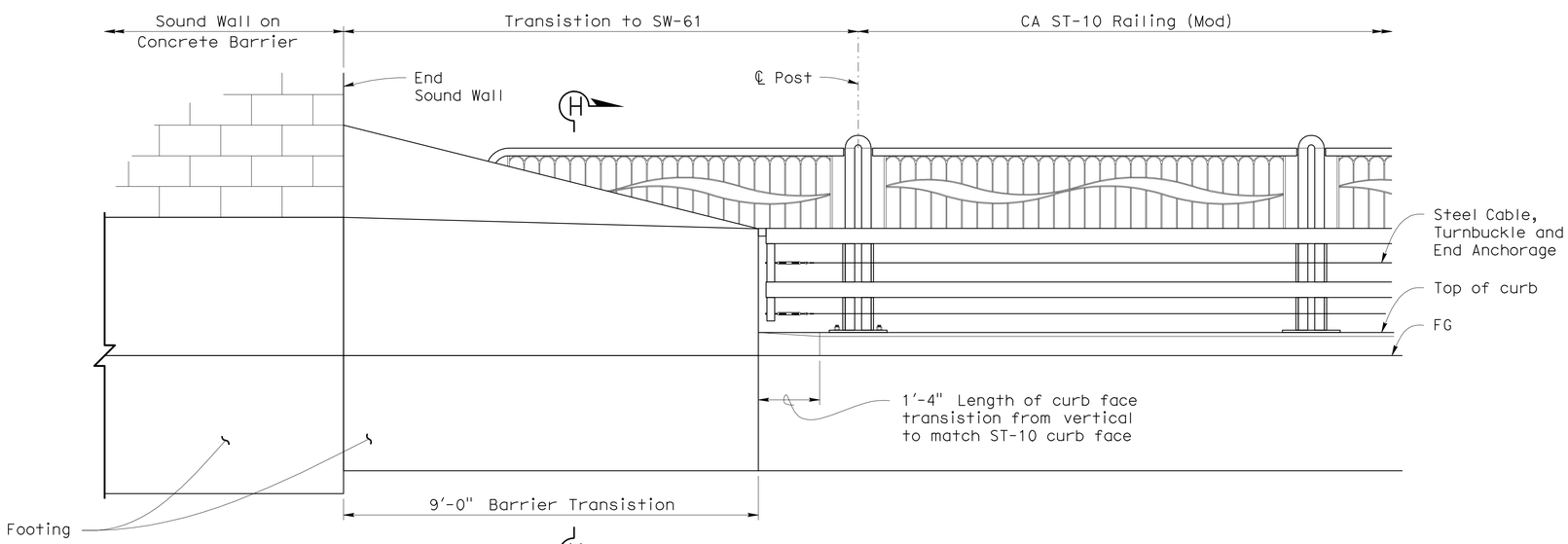

ELEVATION
5/8" = 1'-0"

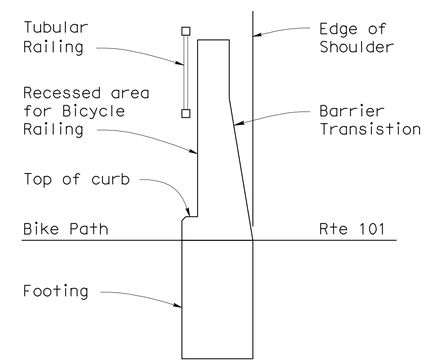

TYPICAL SECTION H-H
5/8" = 1'-0"

CONSTRUCTION DETAILS
C-26

DESIGN	BY D. Menzmer	CHECKED C. Hensel	
DETAILS	BY T. Mason	CHECKED D. Menzmer	
QUANTITIES	BY	CHECKED	

STATE OF CALIFORNIA
DEPARTMENT OF TRANSPORTATION

DIVISION OF ENGINEERING SERVICES
STRUCTURE DESIGN
DESIGN BRANCH 12

BRIDGE NO.
POST MILE

CA ST-10 RAILING (MOD)
TRANSISTION TO SW-61 - LAYOUT

STRUCTURES DESIGN DETAIL SHEET (ENGLISH) (REV. 10/25/05)

ORIGINAL SCALE IN INCHES FOR REDUCED PLANS 0 1 2 3

CU 07
EA 260701

DISREGARD PRINTS BEARING EARLIER REVISION DATES

REVISION DATES: 8-16-10 8-24-10 01-12-11

SHEET OF

FILE => 726070ga026.dgn

USERNAME => s124496 DATE PLOTTED => 25-JUN-2011 TIME PLOTTED => 08:23

DIST	COUNTY	ROUTE	POST MILES TOTAL PROJECT	SHEET No	TOTAL SHEETS
07	Ven,SB	101	R39.8/R43.6, 0.0/2.2	107	757

REGISTERED CIVIL ENGINEER 10-18-10 DATE

6-20-11
PLANS APPROVAL DATE

REGISTERED PROFESSIONAL ENGINEER Douglas C. Menzmer No. C 63498 Exp. 09/30/2012 CIVIL STATE OF CALIFORNIA

The State of California or its officers or agents shall not be responsible for the accuracy or completeness of electronic copies of this plan sheet.

* Prefabricated epoxy coated reinforcement shall be used.

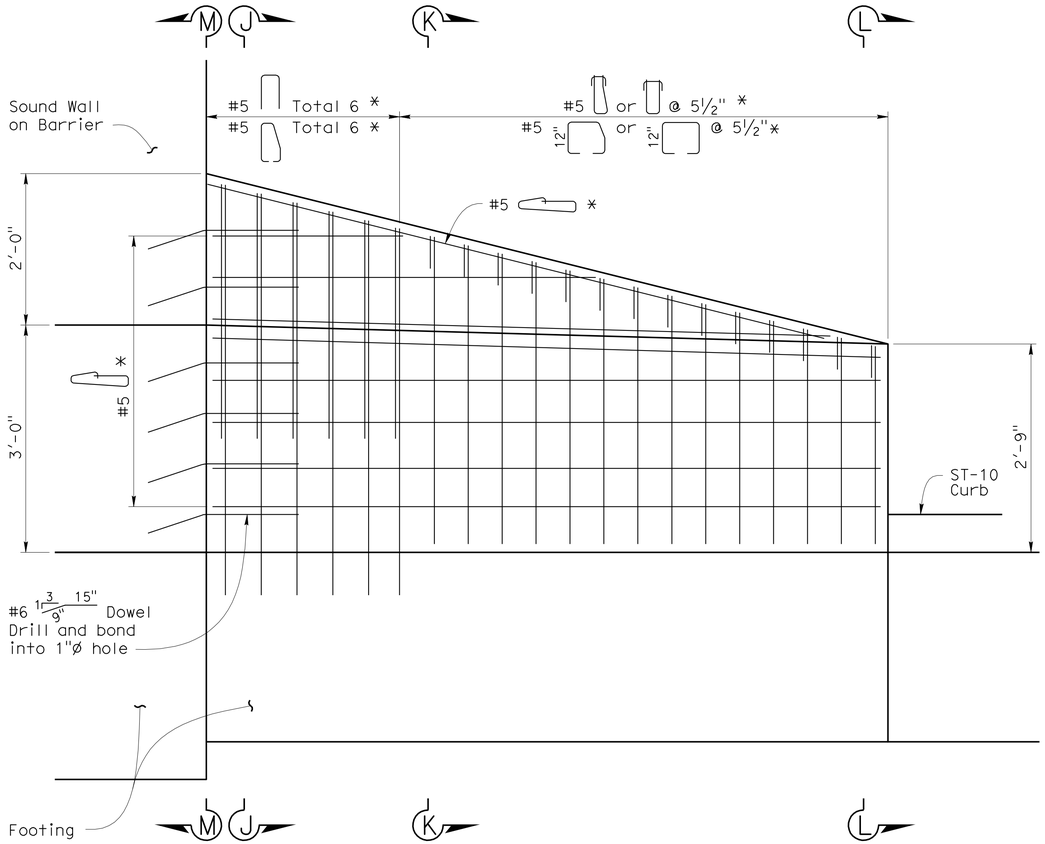

ELEVATION
1" = 1'-0"

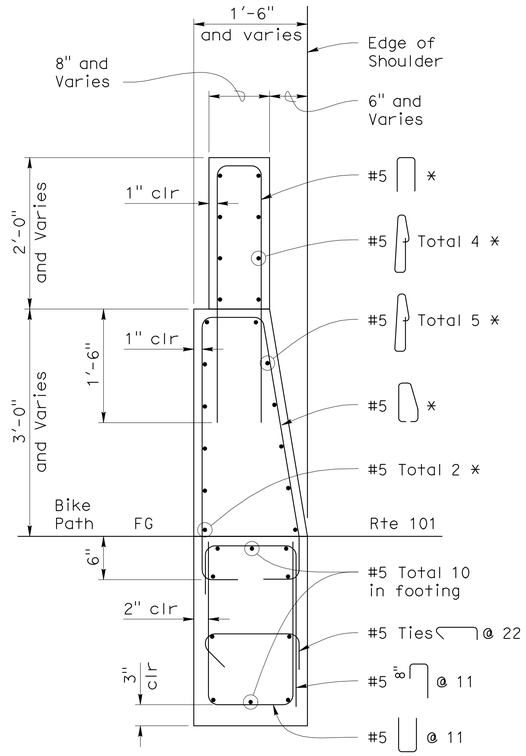

SECTION J-J
1" = 1'-0"

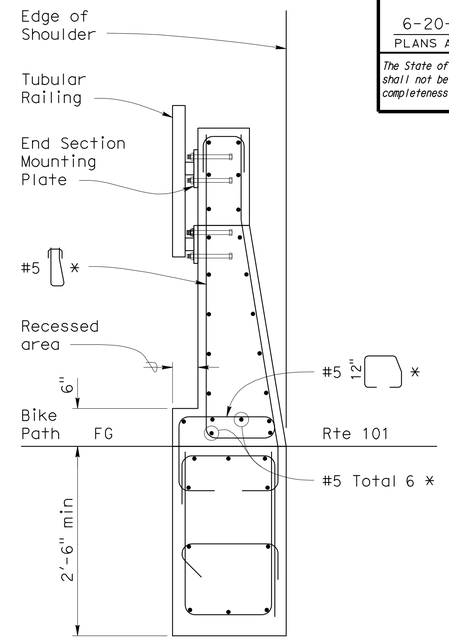

SECTION K-K
1" = 1'-0"

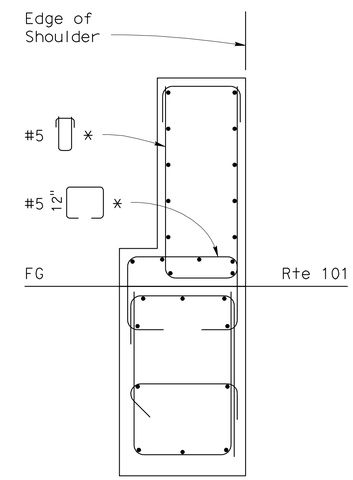

SECTION L-L
1" = 1'-0"

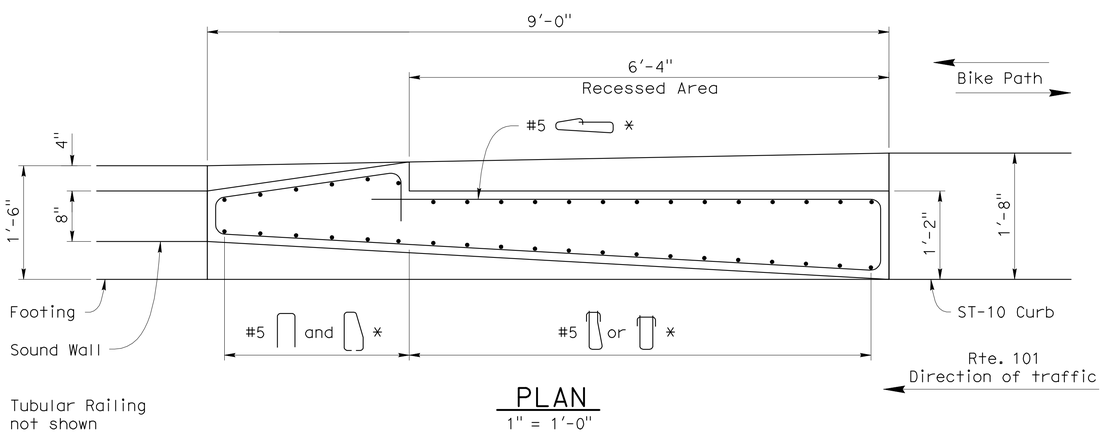

PLAN
1" = 1'-0"

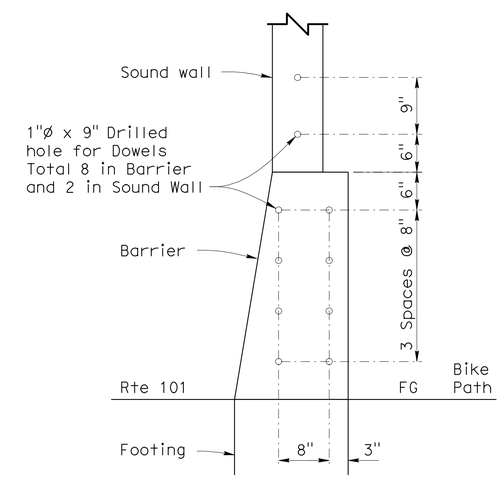

DOWEL LAYOUT VIEW M-M
1" = 1'-0"

CONSTRUCTION DETAILS

C-27

DESIGN	BY D. Menzmer	CHECKED C. Hensel	
DETAILS	BY T. Mason	CHECKED D. Menzmer	
QUANTITIES	BY	CHECKED	

STATE OF CALIFORNIA DEPARTMENT OF TRANSPORTATION

DIVISION OF ENGINEERING SERVICES STRUCTURE DESIGN DESIGN BRANCH 12

BRIDGE NO.

POST MILE

CA ST-10 RAILING (MOD)

TRANSISTION TO SW-61 - DETAILS NO.1

STRUCTURES DESIGN DETAIL SHEET (ENGLISH) (REV. 10/25/05)

ORIGINAL SCALE IN INCHES FOR REDUCED PLANS 0 1 2 3

CU 07
EA 260701

DISREGARD PRINTS BEARING EARLIER REVISION DATES 8-16-10 8-24-10 01-12-11

REVISION DATES

SHEET OF

FILE => 726070ga027.dgn

USERNAME => s124496 DATE PLOTTED => 25-JUN-2011 TIME PLOTTED => 08:24

DIST	COUNTY	ROUTE	POST MILES TOTAL PROJECT	SHEET No	TOTAL SHEETS
07	Ven,SB	101	R39.8/R43.6, 0.0/2.2	108	757

REGISTERED CIVIL ENGINEER 10-18-10 DATE

6-20-11
PLANS APPROVAL DATE

The State of California or its officers or agents shall not be responsible for the accuracy or completeness of electronic copies of this plan sheet.

REGISTERED PROFESSIONAL ENGINEER
Douglas C. Menzmer
No. C 63498
Exp. 09/30/2012
CIVIL
STATE OF CALIFORNIA

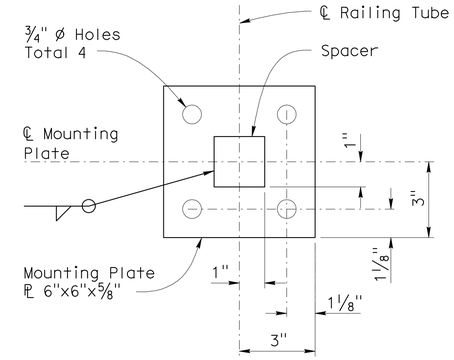

MOUNTING PLATE

4" = 1'-0"

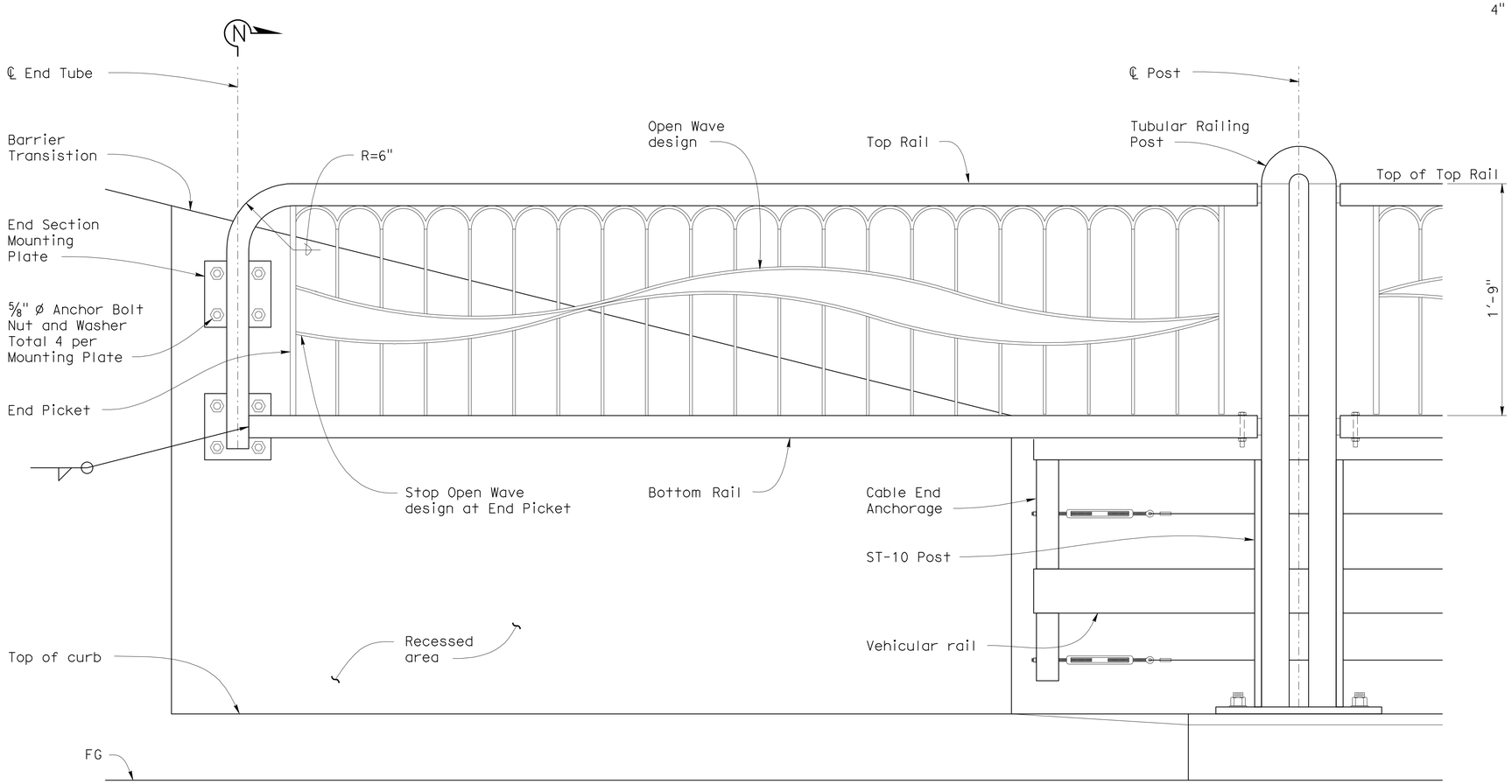

MIRRORED ELEVATION

2" = 1'-0"

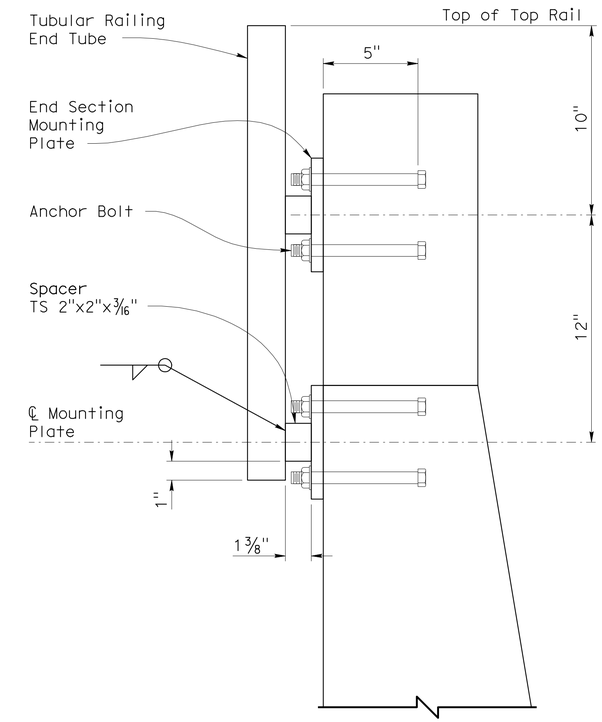

SECTION N-N

3" = 1'-0"

CONSTRUCTION DETAILS

C-28

DESIGN	BY D. Menzmer	CHECKED C. Hensel	
DETAILS	BY T. Mason	CHECKED D. Menzmer	
QUANTITIES	BY	CHECKED	

STATE OF CALIFORNIA
DEPARTMENT OF TRANSPORTATION

DIVISION OF ENGINEERING SERVICES
STRUCTURE DESIGN
DESIGN BRANCH 12

BRIDGE NO.
POST MILE

CA ST-10 RAILING (MOD)
TRANSISTION TO SW-61 - DETAILS NO.2

STRUCTURES DESIGN DETAIL SHEET (ENGLISH) (REV. 10/25/05)

ORIGINAL SCALE IN INCHES FOR REDUCED PLANS 0 1 2 3

CU 07
EA 260701

DISREGARD PRINTS BEARING EARLIER REVISION DATES

REVISION DATES: 8-16-10 8-24-10 01-12-11

SHEET OF

FILE => 726070ga028.dgn

USERNAME => s124496 DATE PLOTTED => 25-JUN-2011 TIME PLOTTED => 08:24

DIST	COUNTY	ROUTE	POST MILES TOTAL PROJECT	SHEET No	TOTAL SHEETS
07	Ven,SB	101	R39.8/R43.6, 0.0/2.2	109	757

REGISTERED CIVIL ENGINEER 10-18-10 DATE

6-20-11
PLANS APPROVAL DATE

REGISTERED PROFESSIONAL ENGINEER Douglas C. Menzmer No. C 63498 Exp. 09/30/2012 CIVIL STATE OF CALIFORNIA

The State of California or its officers or agents shall not be responsible for the accuracy or completeness of electronic copies of this plan sheet.

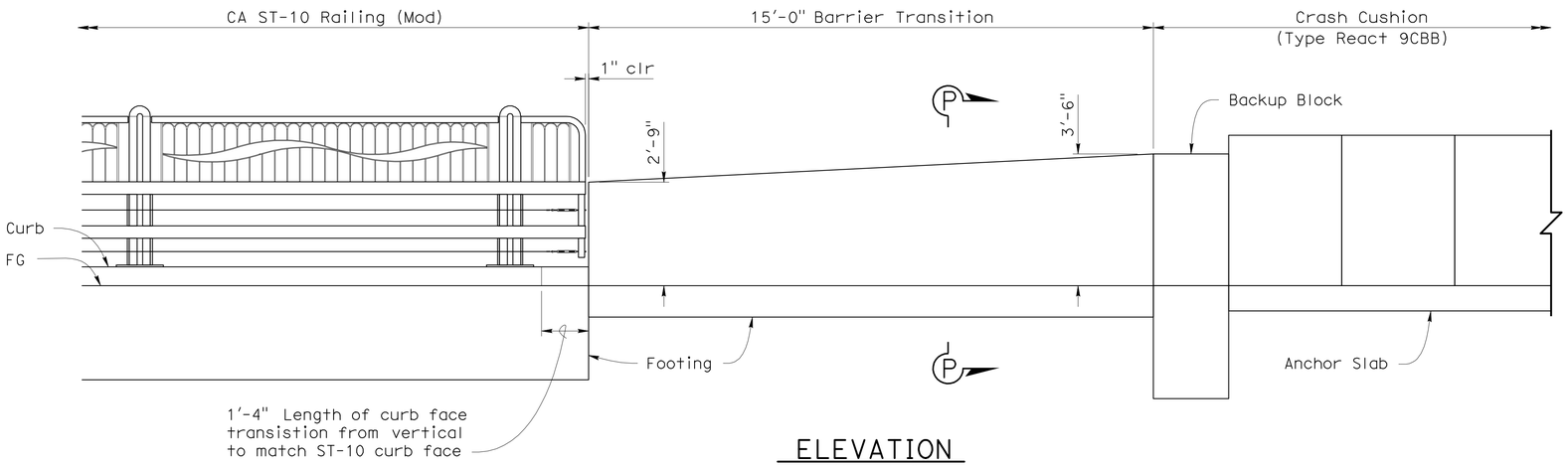

ELEVATION
½" = 1'-0"

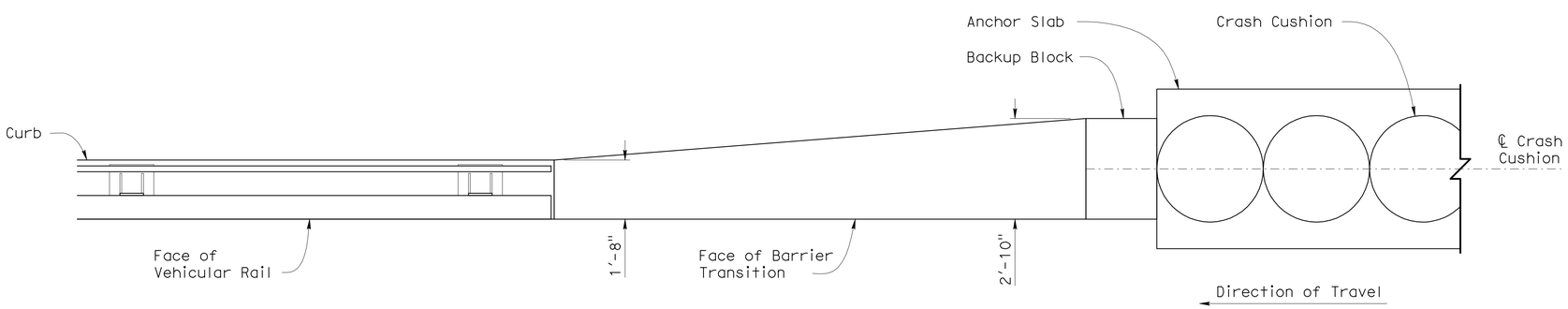

PLAN
½" = 1'-0"

A82C1 A82C2 A82C3

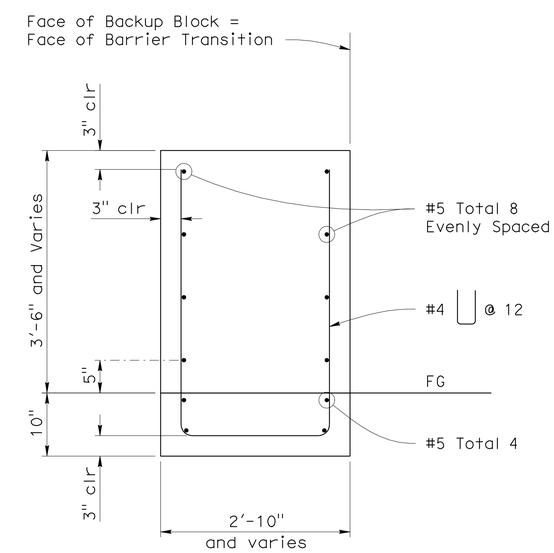

BARRIER TRANSITION
SECTION P-P
1" = 1'-0"

CONSTRUCTION DETAILS

C-29

DESIGN	BY D. Menzmer	CHECKED C. Hensel	
DETAILS	BY T. Mason	CHECKED D. Menzmer	
QUANTITIES	BY	CHECKED	

STATE OF CALIFORNIA
DEPARTMENT OF TRANSPORTATION

DIVISION OF ENGINEERING SERVICES
STRUCTURE DESIGN
DESIGN BRANCH 12

BRIDGE NO.
POST MILE

CA ST-10 RAILING (MOD)
TRANSISTION TO CRASH CUSHION

STRUCTURES DESIGN DETAIL SHEET (ENGLISH) (REV. 10/25/05)

ORIGINAL SCALE IN INCHES FOR REDUCED PLANS 0 1 2 3

CU 07
EA 260701

DISREGARD PRINTS BEARING EARLIER REVISION DATES → 8-16-10 8-24-10 01-12-11

REVISION DATES | SHEET | OF

FILE => 726070ga029.dgn

USERNAME => s124496 DATE PLOTTED => 25-JUN-2011 TIME PLOTTED => 08:24

DIST	COUNTY	ROUTE	POST MILES TOTAL PROJECT	SHEET No	TOTAL SHEETS
07	Ven,SB	101	R39.8/R43.6, 0.0/2.2	110	757

REGISTERED CIVIL ENGINEER 10-18-10 DATE

6-20-11
PLANS APPROVAL DATE

REGISTERED PROFESSIONAL ENGINEER Douglas C. Menzmer No. C 63498 Exp. 09/30/2012 CIVIL STATE OF CALIFORNIA

The State of California or its officers or agents shall not be responsible for the accuracy or completeness of electronic copies of this plan sheet.

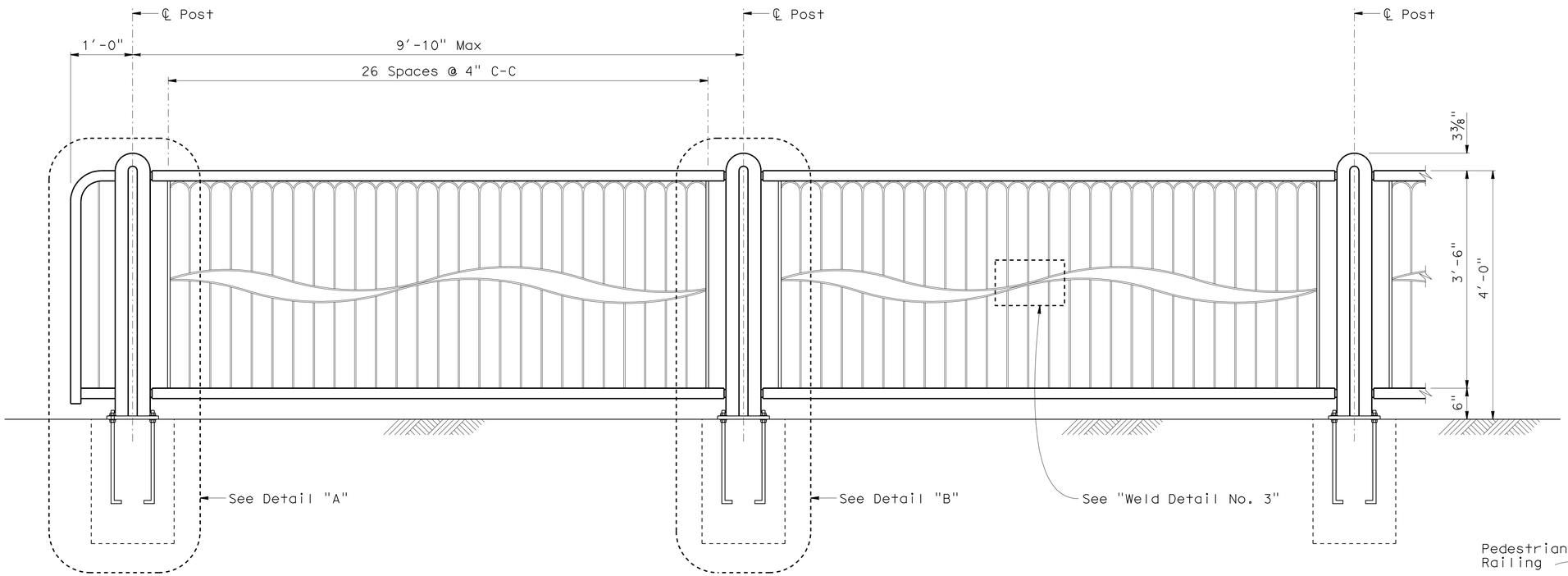

ELEVATION A-A

1" = 1'-0"

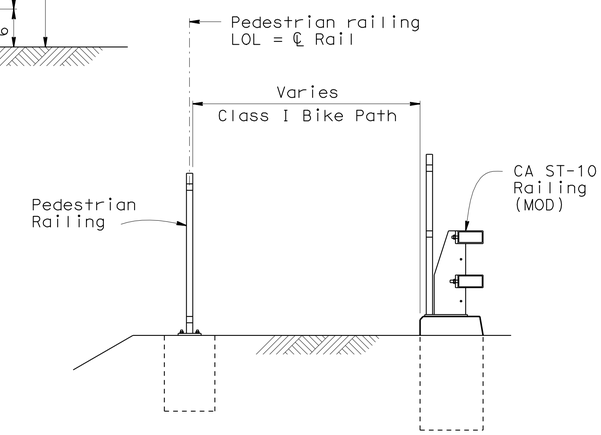

SECTION B-B

1/2" = 1'-0"

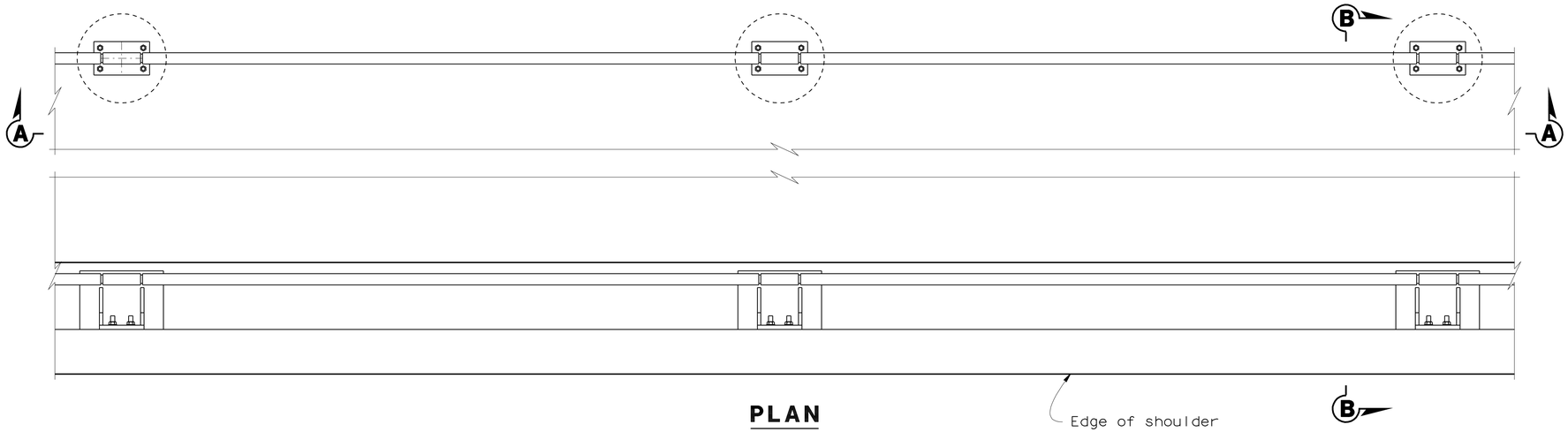

PLAN

1" = 1'-0"

⇦ Direction of vehicular traffic

Notes:

1. Galvanize rail assembly and all components after fabrication.
2. Posts shall be normal to railing.
3. All bolts shall be A307 with thread locking system.
4. See "Road Plans" for layout and limits of pedestrian railing.
5. For "Detail A", "Detail B", and "Weld Detail No. 3" see "Pedestrian Railing Details No. 2" sheet.

CONSTRUCTION DETAILS

C-30

	BY	CHECKED
DESIGN	D. Menzmer	C. Hensel
DETAILS	Kc	D. Menzmer
QUANTITIES	D.M. / P.M.	C. Hensel

STATE OF CALIFORNIA
DEPARTMENT OF TRANSPORTATION

DIVISION OF ENGINEERING SERVICES
STRUCTURE DESIGN
DESIGN BRANCH 12

BRIDGE NO.
POST MILE Varies

PEDESTRIAN RAILING DETAILS NO. 1

STRUCTURES DESIGN DETAIL SHEET (ENGLISH) (REV. 10/25/05)

ORIGINAL SCALE IN INCHES FOR REDUCED PLANS 0 1 2 3

CU 07
EA 260701

DISREGARD PRINTS BEARING EARLIER REVISION DATES

REVISION DATES: 4-15-10, 4-30-10, 10-28-10, 01-12-11

SHEET OF

FILE => 726070ga030.dgn

USERNAME => s6124436 DATE PLOTTED => 25-JUN-2011 TIME PLOTTED => 08:24

DIST	COUNTY	ROUTE	POST MILES TOTAL PROJECT	SHEET No	TOTAL SHEETS
07	Ven,SB	101	R39.8/R43.6, 0.0/2.2	111	757

REGISTERED CIVIL ENGINEER 10-18-10 DATE

6-20-11
PLANS APPROVAL DATE

The State of California or its officers or agents shall not be responsible for the accuracy or completeness of electronic copies of this plan sheet.

REGISTERED PROFESSIONAL ENGINEER Douglas C. Menzmer No. C 63498 Exp. 09/30/2012 CIVIL STATE OF CALIFORNIA

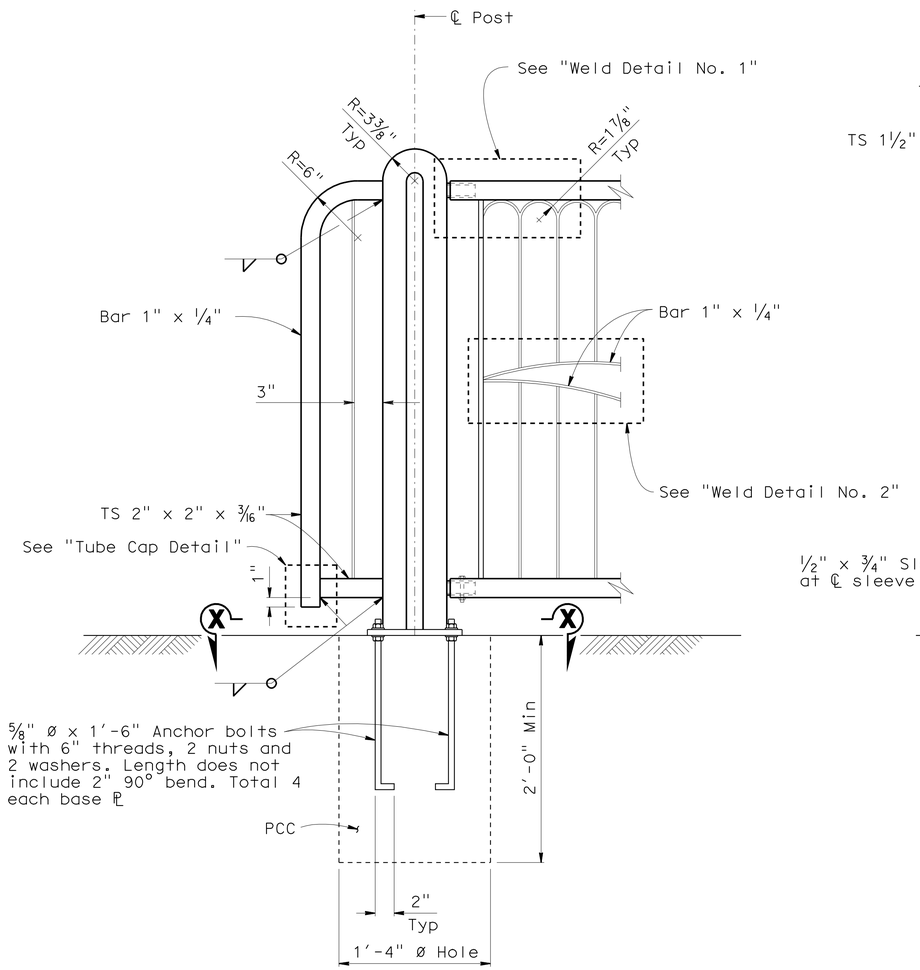

DETAIL A

1 1/2" = 1'-0"

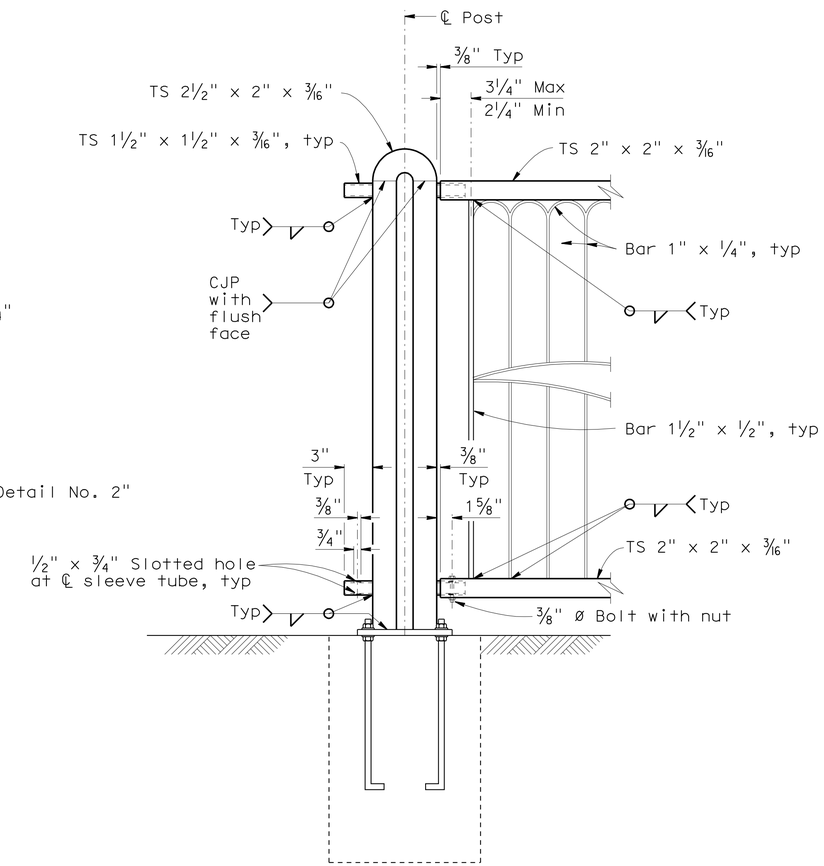

DETAIL B

1 1/2" = 1'-0"

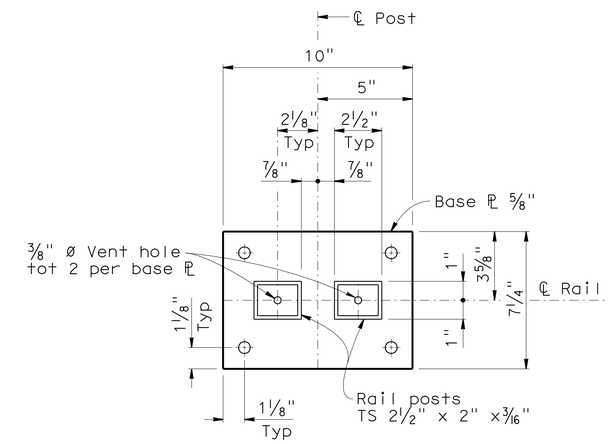

SECTION X-X

3" = 1'-0"

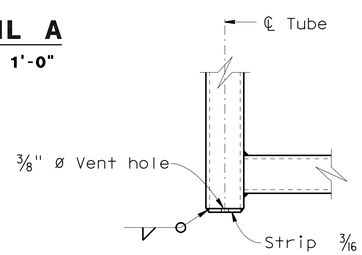

TUBE CAP DETAIL

3" = 1'-0"

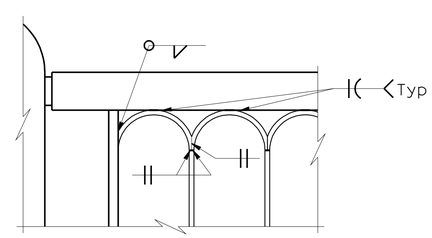

WELD DETAILS NO. 1

3" = 1'-0"

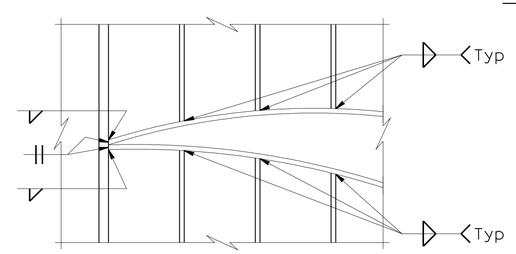

WELD DETAILS NO. 2

3" = 1'-0"

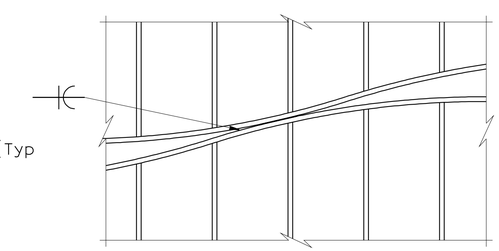

WELD DETAILS NO. 3

3" = 1'-0"

CONSTRUCTION DETAILS

C-31

DESIGN	BY D. Menzmer	CHECKED C. Hensel	
DETAILS	BY kc	CHECKED D. Menzmer	
QUANTITIES	BY D.M. / P.M.	CHECKED C. Hensel	

STATE OF CALIFORNIA DEPARTMENT OF TRANSPORTATION

DIVISION OF ENGINEERING SERVICES STRUCTURE DESIGN DESIGN BRANCH 12

BRIDGE NO.

POST MILE Varies

PEDESTRIAN RAILING DETAILS NO. 2

STRUCTURES DESIGN DETAIL SHEET (ENGLISH) (REV. 10/25/05)

ORIGINAL SCALE IN INCHES FOR REDUCED PLANS 0 1 2 3

CU 07
EA 260701

DISREGARD PRINTS BEARING EARLIER REVISION DATES

REVISION DATES 4-13-10 5-4-10 10-29-10 01-12-11

SHEET OF

FILE => 726070ga031.dgn

USERNAME => s124936 DATE PLOTTED => 25-JUN-2011 TIME PLOTTED => 08:24

DIST	COUNTY	ROUTE	POST MILES TOTAL PROJECT	SHEET No	TOTAL SHEETS
07	Ven,SB	101	R39.8/R43.6, 0.0/2.2	112	757

REGISTERED CIVIL ENGINEER 10-18-10 DATE

6-20-11
PLANS APPROVAL DATE

REGISTERED PROFESSIONAL ENGINEER
Douglas C. Menzmer
No. C 63498
Exp. 09/30/2012
CIVIL
STATE OF CALIFORNIA

The State of California or its officers or agents shall not be responsible for the accuracy or completeness of electronic copies of this plan sheet.

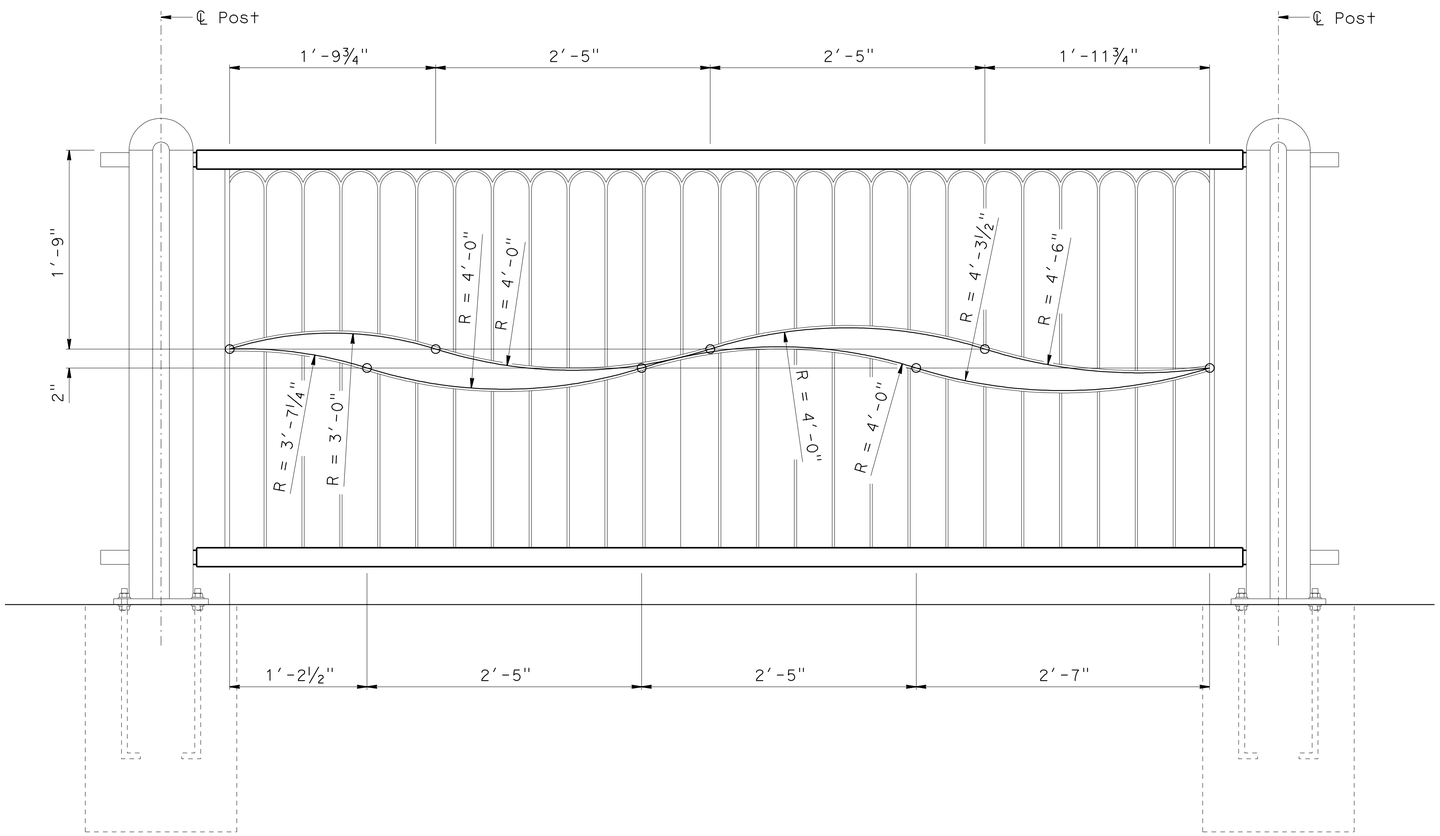

ELEVATION

1 1/2" = 1'-0"

CONSTRUCTION DETAILS

C-32

DESIGN	BY D. Menzmer	CHECKED C. Hensel	
DETAILS	BY kc	CHECKED D. Menzmer	
QUANTITIES	BY D.M. / P.M.	CHECKED C. Hensel	

STATE OF CALIFORNIA
DEPARTMENT OF TRANSPORTATION

DIVISION OF ENGINEERING SERVICES
STRUCTURE DESIGN
DESIGN BRANCH 12

BRIDGE NO.
POST MILE Varies

PEDESTRIAN RAILING
DETAILS NO. 3

STRUCTURES DESIGN DETAIL SHEET (ENGLISH) (REV. 10/25/05)

ORIGINAL SCALE IN INCHES FOR REDUCED PLANS 0 1 2 3

CU 07
EA 260701

DISREGARD PRINTS BEARING EARLIER REVISION DATES

REVISION DATES: 5-5-10 | 10-29-10 | 01-12-11

SHEET OF

FILE => 726070ga032.dgn

USERNAME => s124496 DATE PLOTTED => 25-JUN-2011 TIME PLOTTED => 08:24

DIST	COUNTY	ROUTE	POST MILES TOTAL PROJECT	SHEET No	TOTAL SHEETS
07	Ven,SB	101	R39.8/R43.6, 0.0/2.2	113	757

REGISTERED CIVIL ENGINEER 1-5-11 DATE

6-20-11
PLANS APPROVAL DATE

REGISTERED PROFESSIONAL ENGINEER DOUGLAS C. MENZMER No. C63498 Exp. 09-30-12 CIVIL STATE OF CALIFORNIA

The State of California or its officers or agents shall not be responsible for the accuracy or completeness of electronic copies of this plan sheet.

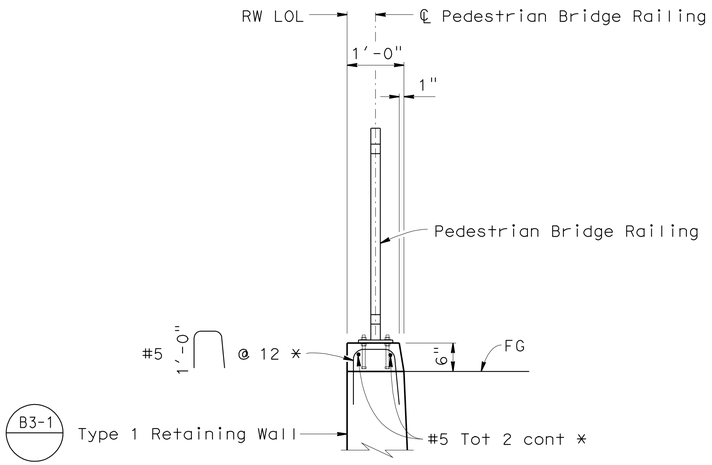

SECTION A-A
PEDESTRIAN BRIDGE RAILING

* Pre-fabricated epoxy coated steel reinforcement

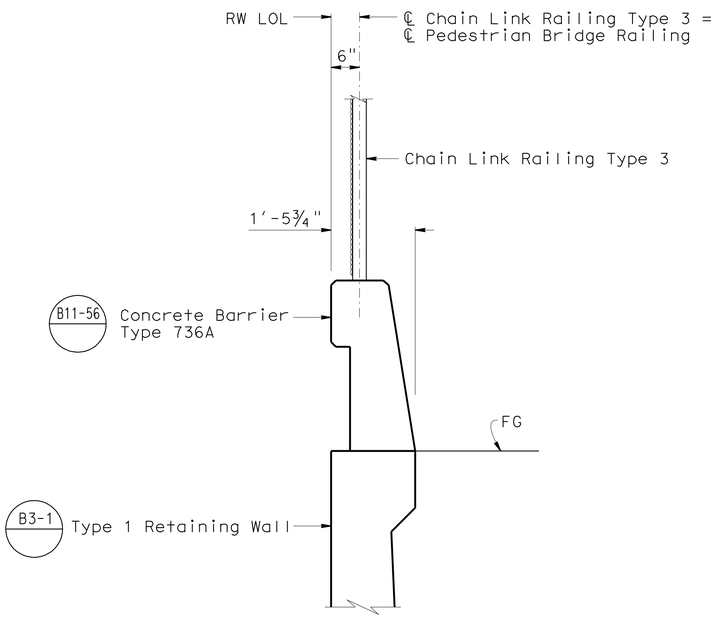

SECTION B-B
CONCRETE BARRIER TYPE 736A

TOP OF WALL DETAILS
3/4" = 1'-0"

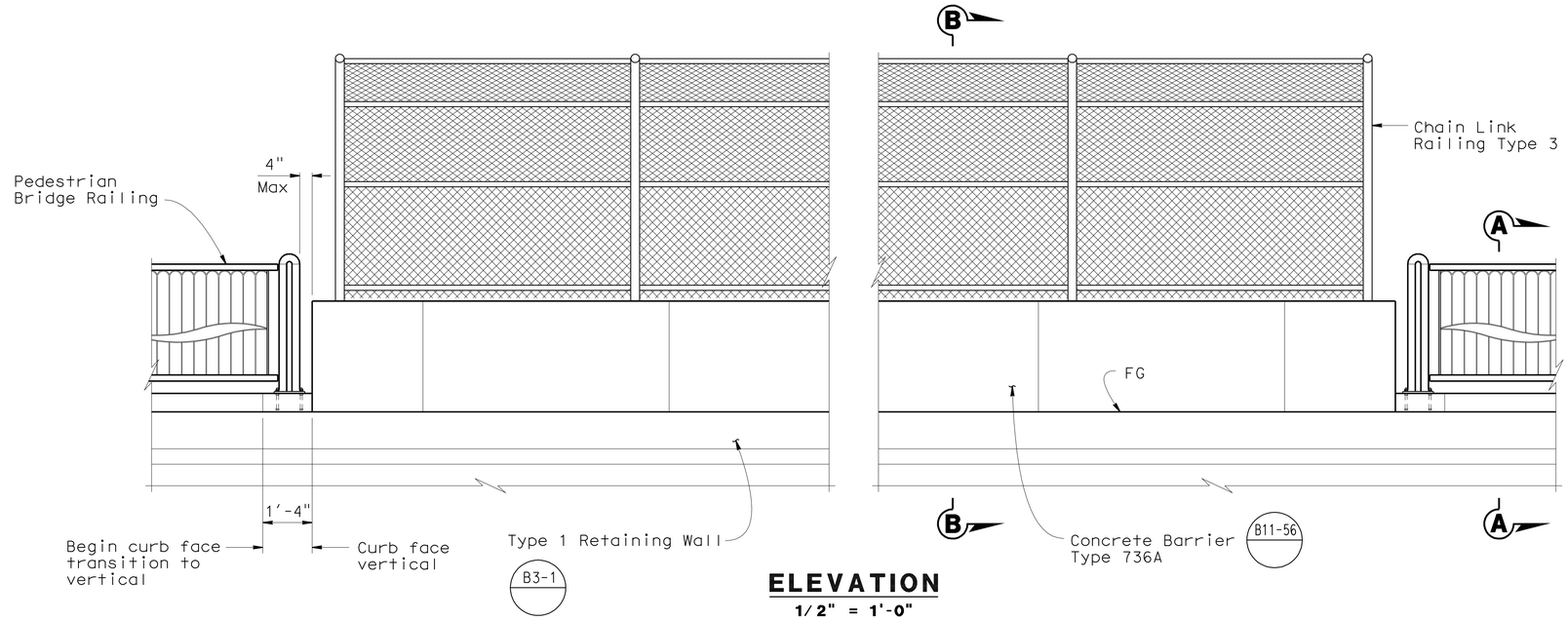

ELEVATION
1/2" = 1'-0"

Note: For Pedestrian Bridge Railing details not shown, see "Bike Lane Ramp No. 9" plan sheets.

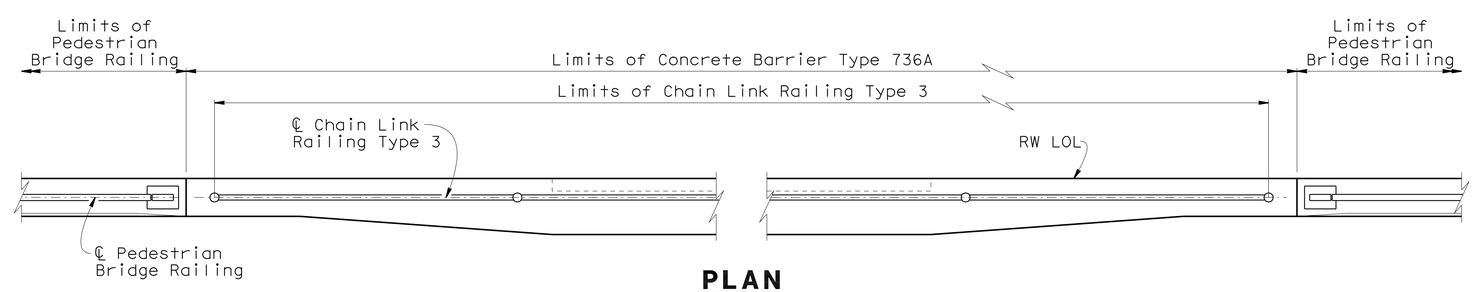

PLAN
1/2" = 1'-0"

CONSTRUCTION DETAILS
C-33

DESIGN	BY D. Menzmer	CHECKED X	
DETAILS	BY kc	CHECKED X	
QUANTITIES	BY X	CHECKED X	

STATE OF CALIFORNIA
DEPARTMENT OF TRANSPORTATION

DIVISION OF ENGINEERING SERVICES
STRUCTURE DESIGN
DESIGN BRANCH 12

BRIDGE NO. X
POST MILE X

RETAINING WALL NO. 53
RAILING DETAILS

STRUCTURES DESIGN DETAIL SHEET (ENGLISH) (REV. 10/25/05)

ORIGINAL SCALE IN INCHES FOR REDUCED PLANS 0 1 2 3

CU 07
EA 260701

DISREGARD PRINTS BEARING EARLIER REVISION DATES 12-27-10

REVISION DATES | SHEET | OF

FILE => 726070ga033.dgn

USERNAME => s124196 DATE PLOTTED => 25-JUN-2011 TIME PLOTTED => 08:24

DIST	COUNTY	ROUTE	POST MILES TOTAL PROJECT	SHEET NO.	TOTAL SHEETS
07	Ven,SB	101	R39.8/R43.6, 0.0/2.2	114	757

REGISTERED ENGINEER - CIVIL 1-5-11

6-20-11
PLANS APPROVAL DATE

REGISTERED PROFESSIONAL ENGINEER DOUGLAS C. MENZMER No. C63498 Exp. 09-30-12 CIVIL STATE OF CALIFORNIA

The State of California or its officers or agents shall not be responsible for the accuracy or completeness of electronic copies of this plan sheet.

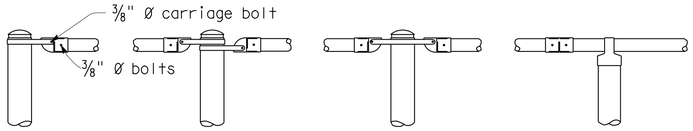

ALTERNATIVE DETAILS

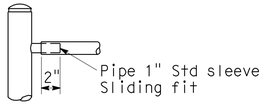

TYPICAL DETAILS

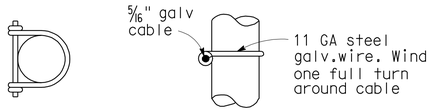

PLAN ELEVATION

DETAIL H

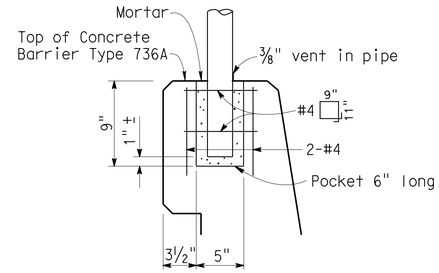

2

POST ANCHORAGE DETAIL

1

NOTES:

1. Railing assembly except chain link fabric to be galvanized after fabrication.
2. Railing shall conform to horizontal and vertical alignment. Posts shall be vertical. Horizontal pipes shall be bent if radius is 150'-0' or less-may be 8'-0" chords if radius is over 150'-0".
3. Peen all 3/8" Ø bolts.
4. When railing is on slope, fabric shall be placed parallel to slope.
5. Alternative details may be submitted by contractor for engineer approval.
6. Additional pipe 1 1/4" std required on radius less tham 150'-0".

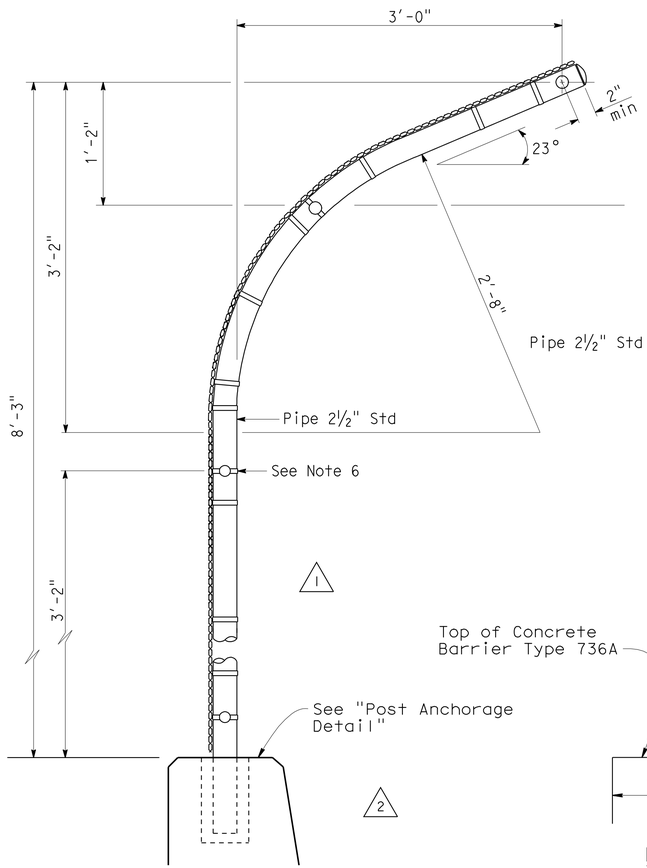

TYPICAL POST DETAIL

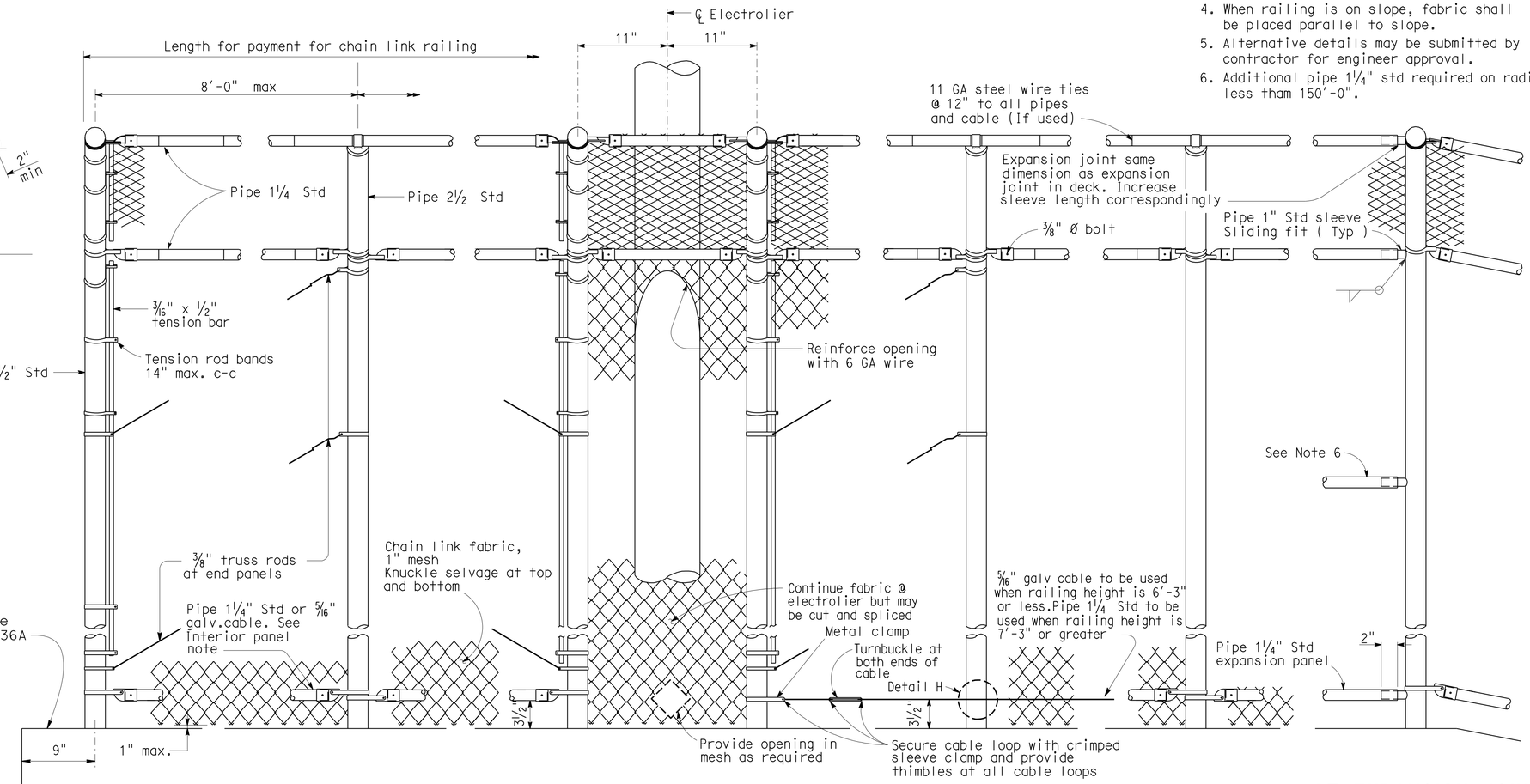

END POST INTERMEDIATE POST AT ELECTROLIER TYPICAL INTERIOR PANEL AT EXPANSION JOINT

ELEVATION 1 2

NO SCALE

CONSTRUCTION DETAILS
C-34

REVISED STANDARD DRAWING

FILE NO. xs16-310e

APPROVED BY T SATTER
RESPONSIBLE TECHNICAL SPECIALIST
APPROVAL DATE 4-15-08

RELEASED BY ROBERTO LACALLE
RESPONSIBLE OFFICE CHIEF
RELEASE DATE 4-15-08

1 Pipe handrailing details removed.
2 Modified post anchorage details.

STATE OF CALIFORNIA
DEPARTMENT OF TRANSPORTATION

DIVISION OF ENGINEERING SERVICES

BRIDGE NO.
POST MILE

RETAINING WALL NO. 53
CHAIN LINK RAILING TYPE 3

DS OSD 2147A (ENGLISH STANDARD DRAWING "XS" BORDER REV. 01/11/08)

ORIGINAL SCALE IN INCHES FOR REDUCED PLANS 0 1 2 3

CU 07
EA 260701

DISREGARD PRINTS BEARING EARLIER REVISION DATES 12-28-10

REVISION DATES (PRELIMINARY STAGE ONLY) SHEET OF

USERNAME => s124496

726070ga034.dgn

DATE PLOTTED => 25-JUN-2011 TIME PLOTTED => 08:24

DIST	COUNTY	ROUTE	POST MILES TOTAL PROJECT	SHEET No	TOTAL SHEETS
07	Ven,SB	101	R39.8/R43.6, 0.0/2.2	115	757

REGISTERED CIVIL ENGINEER — DATE 10-18-10

6-20-11
PLANS APPROVAL DATE

REGISTERED PROFESSIONAL ENGINEER — Douglas C. Menzmer — No. C 63498 — Exp. 09/30/2012 — CIVIL — STATE OF CALIFORNIA

The State of California or its officers or agents shall not be responsible for the accuracy or completeness of electronic copies of this plan sheet.

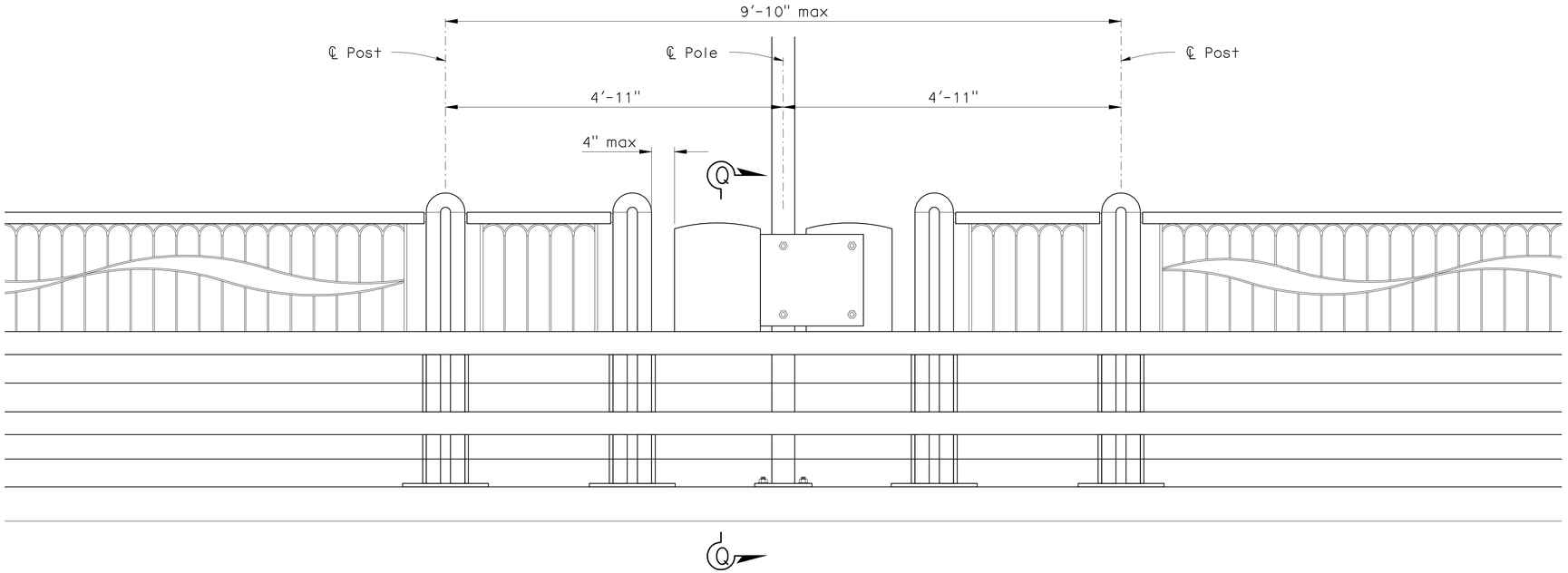

ELEVATION
1" = 1'-0"

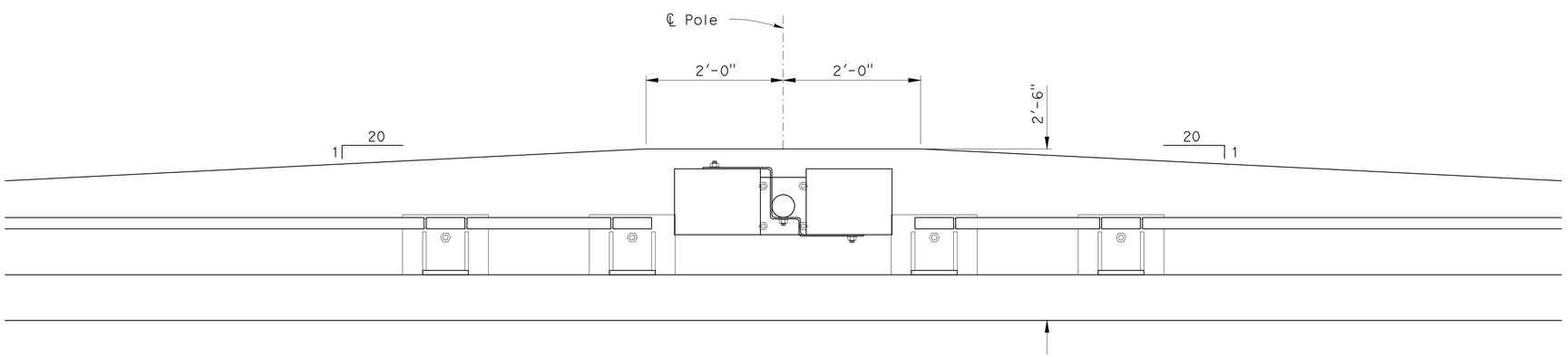

PLAN
1" = 1'-0"

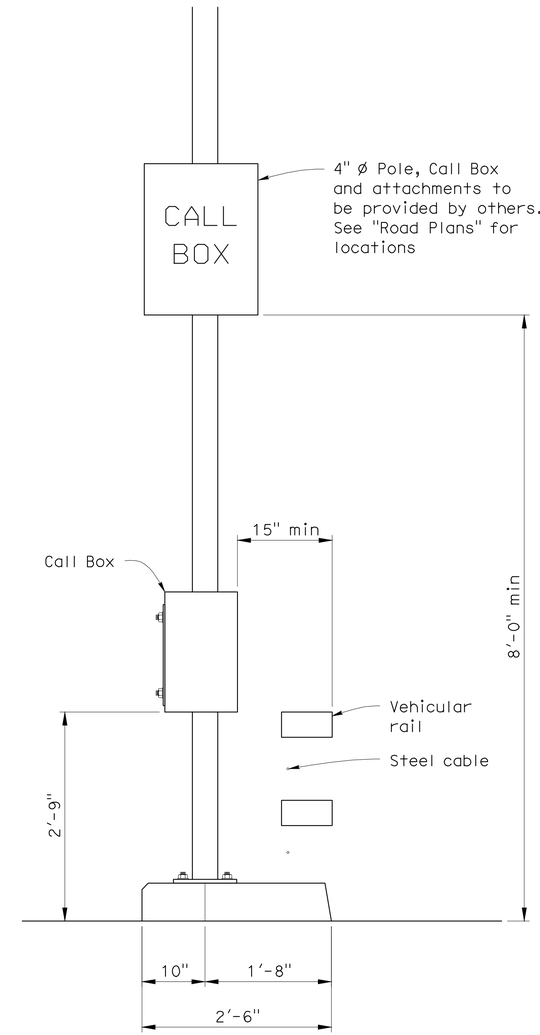

SECTION Q-Q
1" = 1'-0"

CONSTRUCTION DETAILS
C-35

DESIGN	BY D. Menzmer	CHECKED C. Hensel	
DETAILS	BY T. Mason	CHECKED D. Menzmer	
QUANTITIES	BY	CHECKED	

STATE OF CALIFORNIA
DEPARTMENT OF TRANSPORTATION

DIVISION OF ENGINEERING SERVICES
STRUCTURE DESIGN
DESIGN BRANCH 12

BRIDGE NO.
POST MILE

CA ST-10 RAILING (MOD)
CALL BOX DETAILS

STRUCTURES DESIGN DETAIL SHEET (ENGLISH) (REV. 10/25/05)

ORIGINAL SCALE IN INCHES FOR REDUCED PLANS 0 1 2 3

CU 07
EA 260701

DISREGARD PRINTS BEARING EARLIER REVISION DATES

REVISION DATES — SHEET — OF

FILE => 726070ga035.dgn

USERNAME => s124496 DATE PLOTTED => 25-JUN-2011 TIME PLOTTED => 08:25

Dist	COUNTY	ROUTE	POST MILES TOTAL PROJECT	SHEET No.	TOTAL SHEETS
07	Ven,SB	101	R39.8/R43.6, 0.0/2.2	116	757

REGISTERED CIVIL ENGINEER 01-12-11 DATE

6-20-11
PLANS APPROVAL DATE

REGISTERED PROFESSIONAL ENGINEER
O.C. LEE
No. C28039
Exp. 03/31/12
CIVIL
STATE OF CALIFORNIA

THE STATE OF CALIFORNIA OR ITS OFFICERS OR AGENTS SHALL NOT BE RESPONSIBLE FOR THE ACCURACY OR COMPLETENESS OF SCANNED COPIES OF THIS PLAN SHEET.

NOTE:

FOR ACCURATE RIGHT OF WAY DATA, CONTACT
RIGHT OF WAY ENGINEERING AT THE DISTRICT OFFICE.

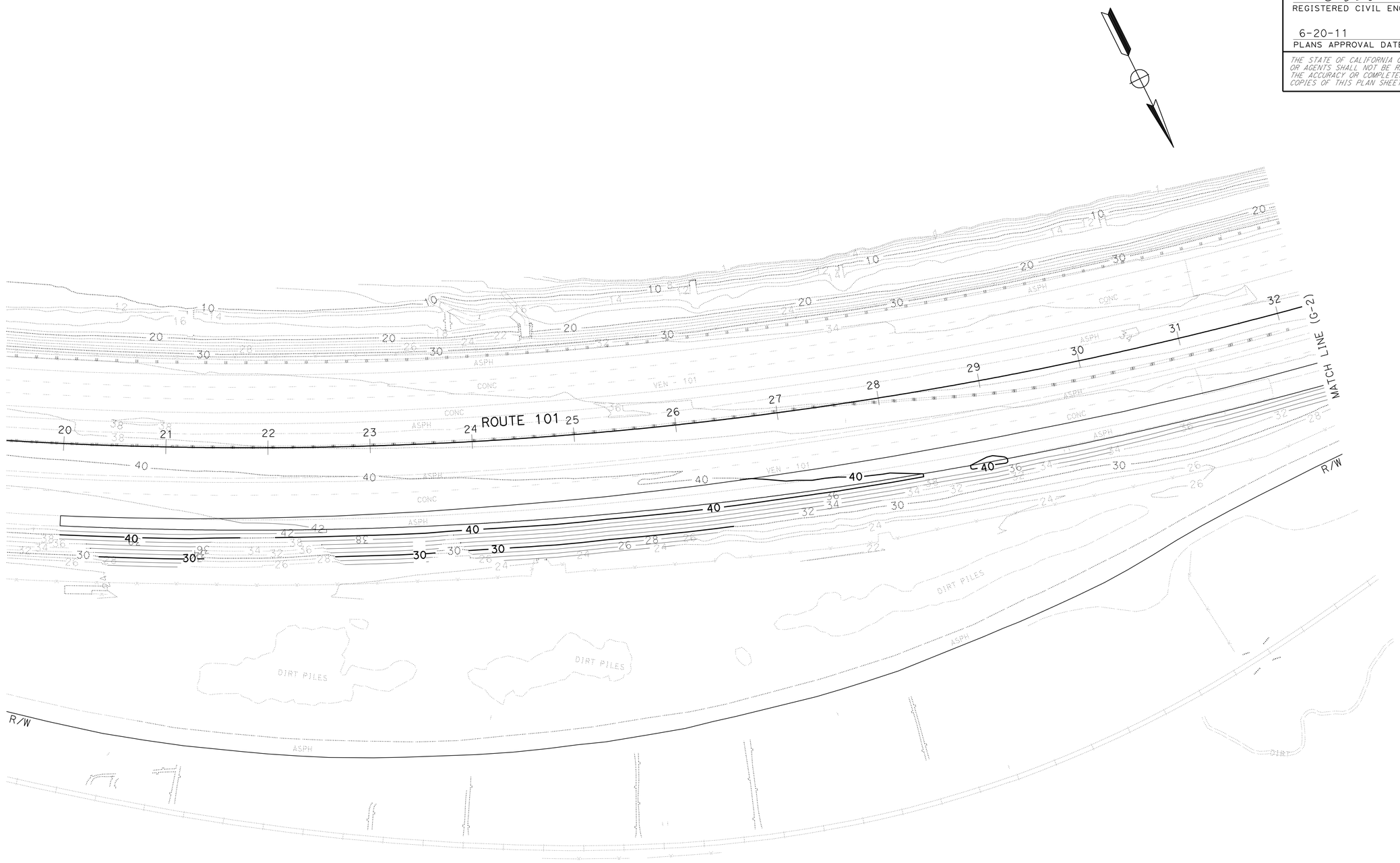

CONTOUR GRADING

SCALE: 1"=50'

THIS PLAN ACCURATE FOR CONTOUR GRADING WORK ONLY

G-1

REVISED BY | DATE REVISED
TRIEU NGUYEN | ANTOINE NADER
CALCULATED-DESIGNED BY | CHECKED BY
FUNCTIONAL SUPERVISOR
OC LEE

STATE OF CALIFORNIA - DEPARTMENT OF TRANSPORTATION
Caltrans
DESIGN

LAST REVISION 01-12-11 | DATE PLOTTED => 25-JUN-2011 | TIME PLOTTED => 08:25

Dist	COUNTY	ROUTE	POST MILES TOTAL PROJECT	SHEET No.	TOTAL SHEETS
07	Ven,SB	101	R39.8/R43.6, 0.0/2.2	117	757

REGISTERED CIVIL ENGINEER 01-12-11 DATE

6-20-11
PLANS APPROVAL DATE

REGISTERED PROFESSIONAL ENGINEER
O.C. LEE
No. C28039
Exp. 03/31/12
CIVIL
STATE OF CALIFORNIA

THE STATE OF CALIFORNIA OR ITS OFFICERS OR AGENTS SHALL NOT BE RESPONSIBLE FOR THE ACCURACY OR COMPLETENESS OF SCANNED COPIES OF THIS PLAN SHEET.

NOTE:

FOR ACCURATE RIGHT OF WAY DATA, CONTACT
RIGHT OF WAY ENGINEERING AT THE DISTRICT OFFICE.

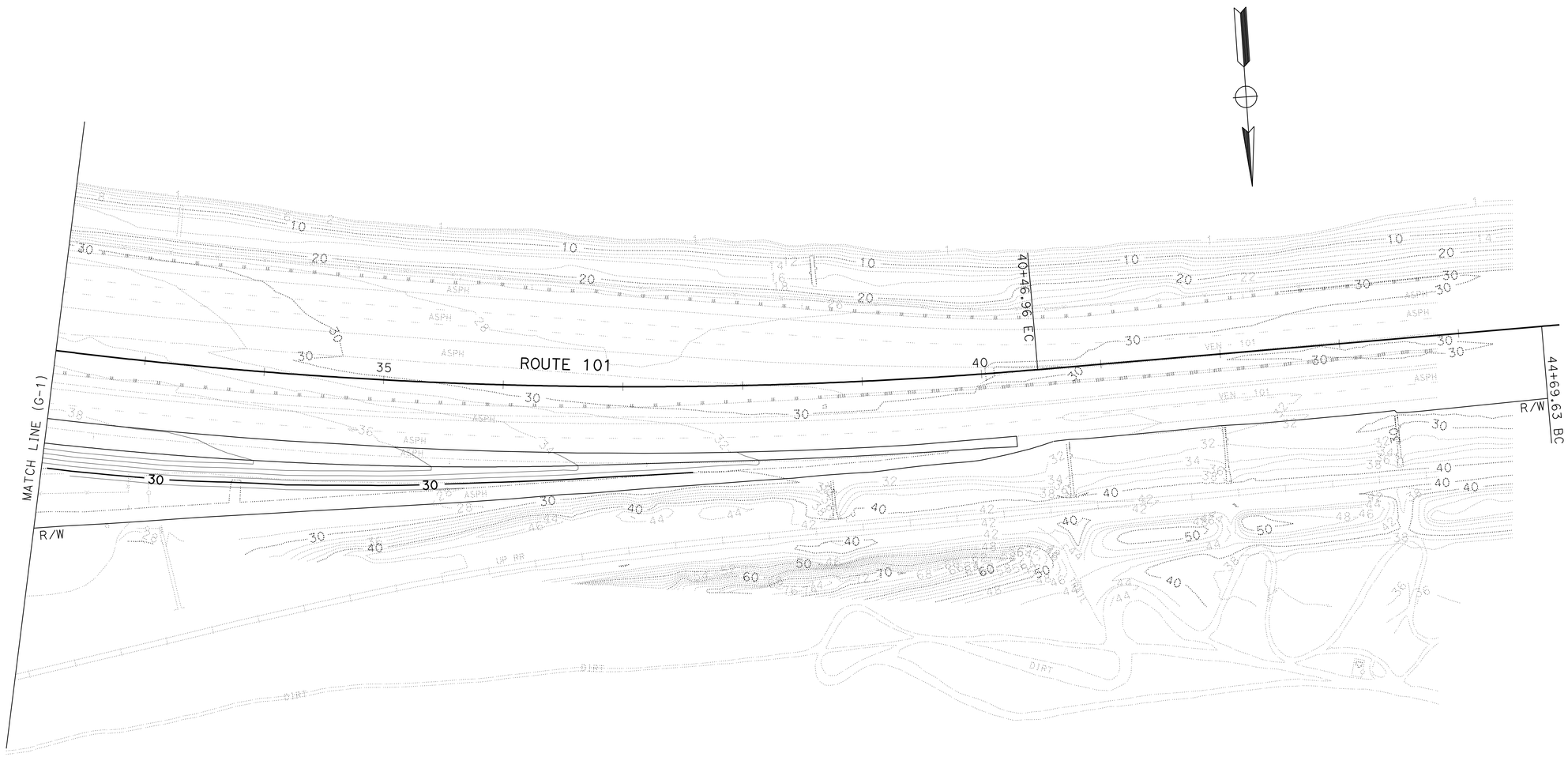

CONTOUR GRADING

SCALE: 1"=50'

THIS PLAN ACCURATE FOR CONTOUR GRADING WORK ONLY

G-2

REVISED BY | DATE REVISED
TRIEU NGUYEN | ANTOINE NADER
CALCULATED-DESIGNED BY | CHECKED BY
FUNCTIONAL SUPERVISOR
OC LEE

STATE OF CALIFORNIA - DEPARTMENT OF TRANSPORTATION
Caltrans
DESIGN

LAST REVISION 01-12-11 | DATE PLOTTED => 25-JUN-2011 TIME PLOTTED => 08:25

Dist	COUNTY	ROUTE	POST MILES TOTAL PROJECT	SHEET No.	TOTAL SHEETS
07	Ven,SB	101	R39.8/R43.6, 0.0/2.2	118	757

REGISTERED CIVIL ENGINEER 01-12-11 DATE

6-20-11
PLANS APPROVAL DATE

REGISTERED PROFESSIONAL ENGINEER
O.C. LEE
No. C28039
Exp. 03/31/12
CIVIL
STATE OF CALIFORNIA

THE STATE OF CALIFORNIA OR ITS OFFICERS OR AGENTS SHALL NOT BE RESPONSIBLE FOR THE ACCURACY OR COMPLETENESS OF SCANNED COPIES OF THIS PLAN SHEET.

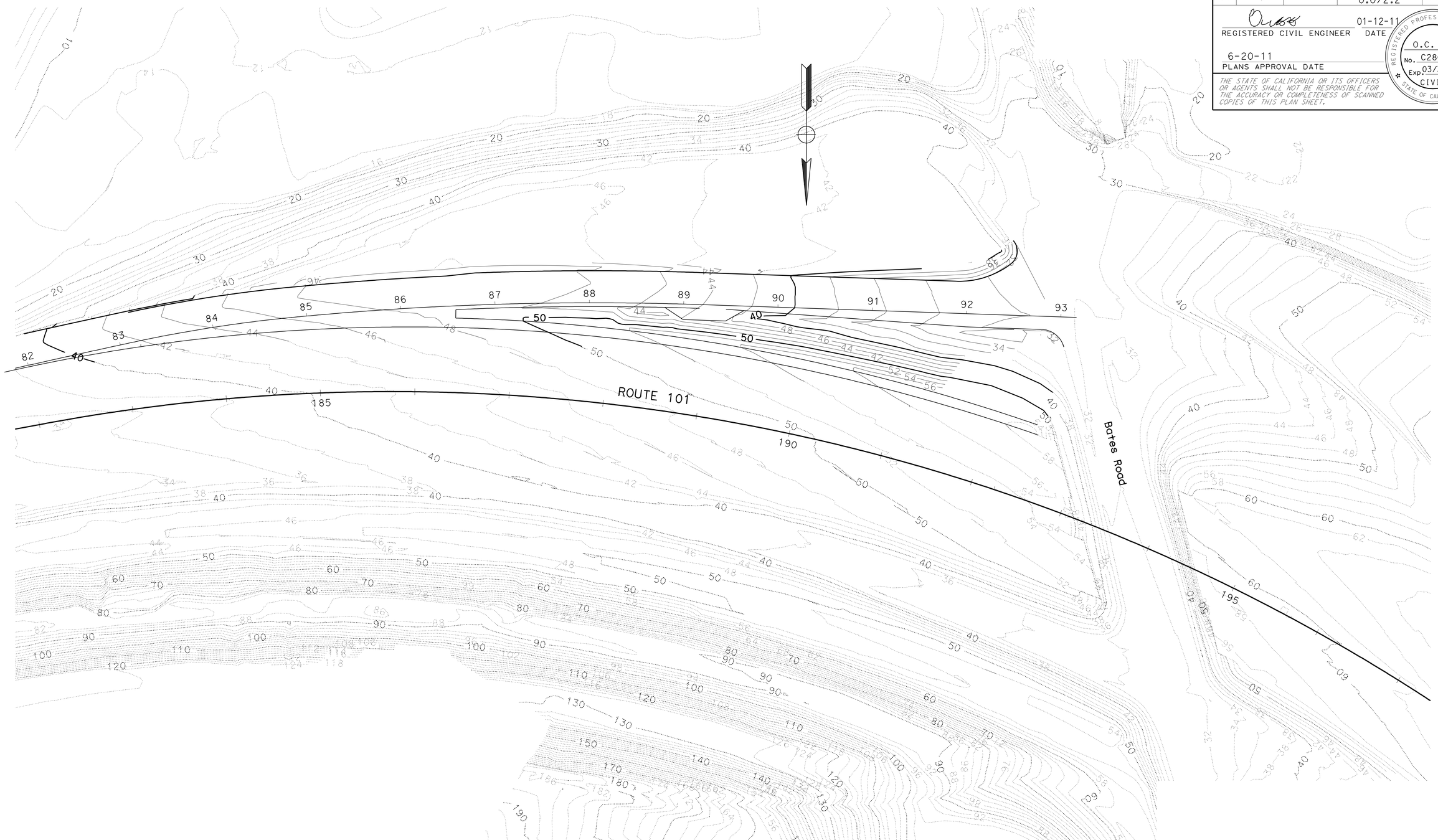

CONTOUR GRADING

SCALE: 1"=50'

THIS PLAN ACCURATE FOR CONTOUR GRADING WORK ONLY

G-3

STATE OF CALIFORNIA - DEPARTMENT OF TRANSPORTATION
Caltrans
DESIGN

FUNCTIONAL SUPERVISOR: OC LEE
CALCULATED-DESIGNED BY: TRIEU NGUYEN
CHECKED BY: ANTOINE NADER
REVISED BY
DATE REVISED

LAST REVISION 01-12-11
DATE PLOTTED => 25-JUN-2011
TIME PLOTTED => 08:25

Dist	COUNTY	ROUTE	POST MILES TOTAL PROJECT	SHEET No.	TOTAL SHEETS
07	Ven,SB	101	R39.8/R43.6, 0.0/2.2	119	757

REGISTERED CIVIL ENGINEER DATE

6-20-11
PLANS APPROVAL DATE

REGISTERED PROFESSIONAL ENGINEER BALDEV K. BHALLA No. 34350 Exp. 9/30/11 CIVIL STATE OF CALIFORNIA

THE STATE OF CALIFORNIA OR ITS OFFICERS OR AGENTS SHALL NOT BE RESPONSIBLE FOR THE ACCURACY OR COMPLETENESS OF SCANNED COPIES OF THIS PLAN SHEET.

NOTE: FOR ACCURATE RIGHT OF WAY DATA,
CONTACT RIGHT OF WAY ENGINEERING AT THE DISTRICT OFFICE.

LEGEND:

(No.) DRAINAGE SYSTEM NUMBER

(xx) DRAINAGE ITEM

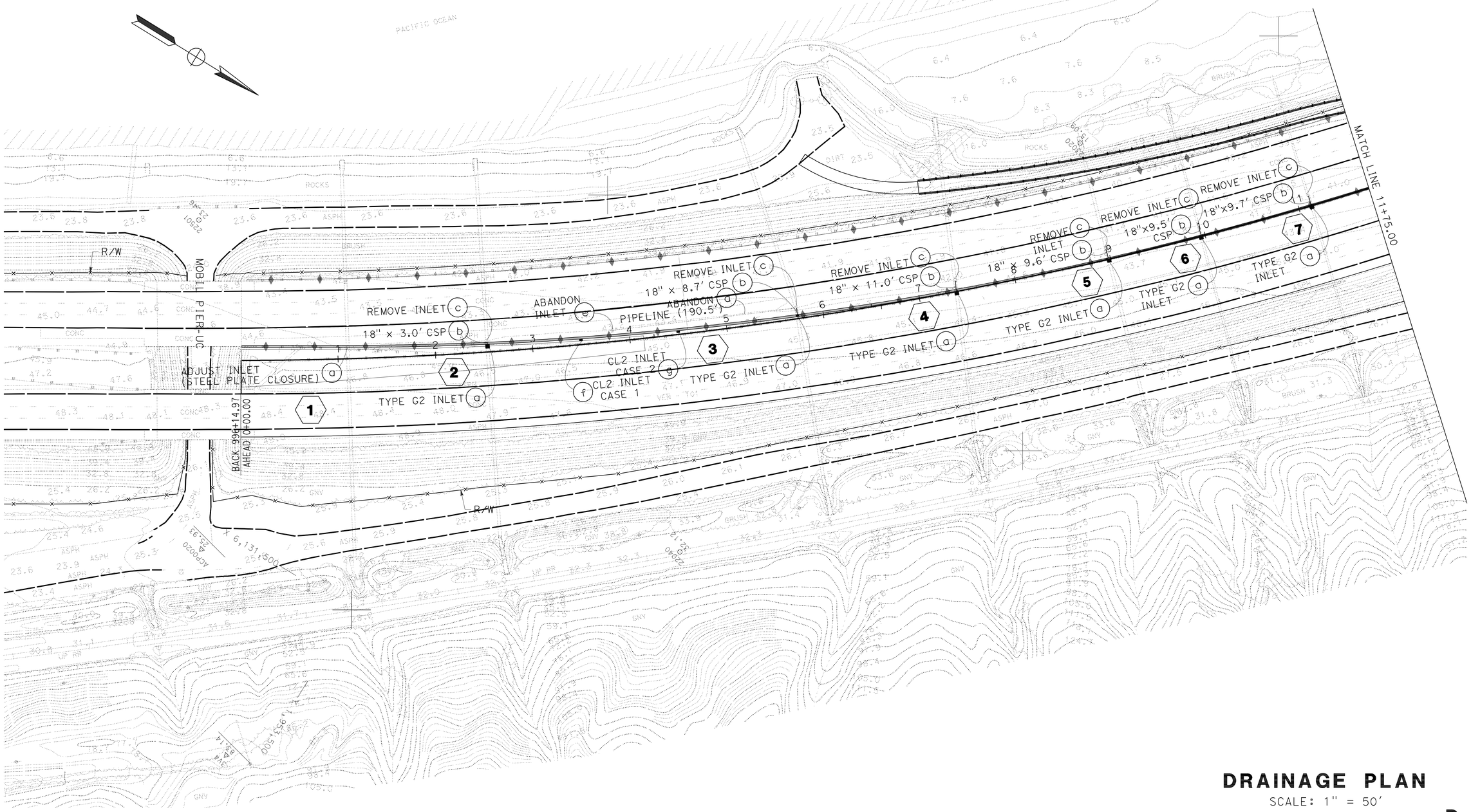

DRAINAGE PLAN

SCALE: 1" = 50'

D-1

THIS PLAN ACCURATE FOR DRAINAGE WORK ONLY.

STATE OF CALIFORNIA - DEPARTMENT OF TRANSPORTATION

Caltrans

HYDRAULICS

FUNCTIONAL SUPERVISOR: DAVE BHALLA

CALCULATED-DESIGNED BY: C.P.NGUYEN

CHECKED BY: D.BHALLA

REVISED BY

DATE REVISED

LAST REVISION 08-31-10

DATE PLOTTED => 28-JUN-2011
TIME PLOTTED => 17:39

NOTE: FOR ACCURATE RIGHT OF WAY DATA,
CONTACT RIGHT OF WAY ENGINEERING AT THE DISTRICT OFFICE.

Dist	COUNTY	ROUTE	POST MILES TOTAL PROJECT	SHEET No.	TOTAL SHEETS
07	Ven,SB	101	R39.8/R43.6, 0.0/2.2	120	757

REGISTERED CIVIL ENGINEER DATE

6-20-11
PLANS APPROVAL DATE

REGISTERED PROFESSIONAL ENGINEER
BALDEV K. BHALLA
No. 34350
Exp. 9/30/11
CIVIL
STATE OF CALIFORNIA

THE STATE OF CALIFORNIA OR ITS OFFICERS OR AGENTS SHALL NOT BE RESPONSIBLE FOR THE ACCURACY OR COMPLETENESS OF SCANNED COPIES OF THIS PLAN SHEET.

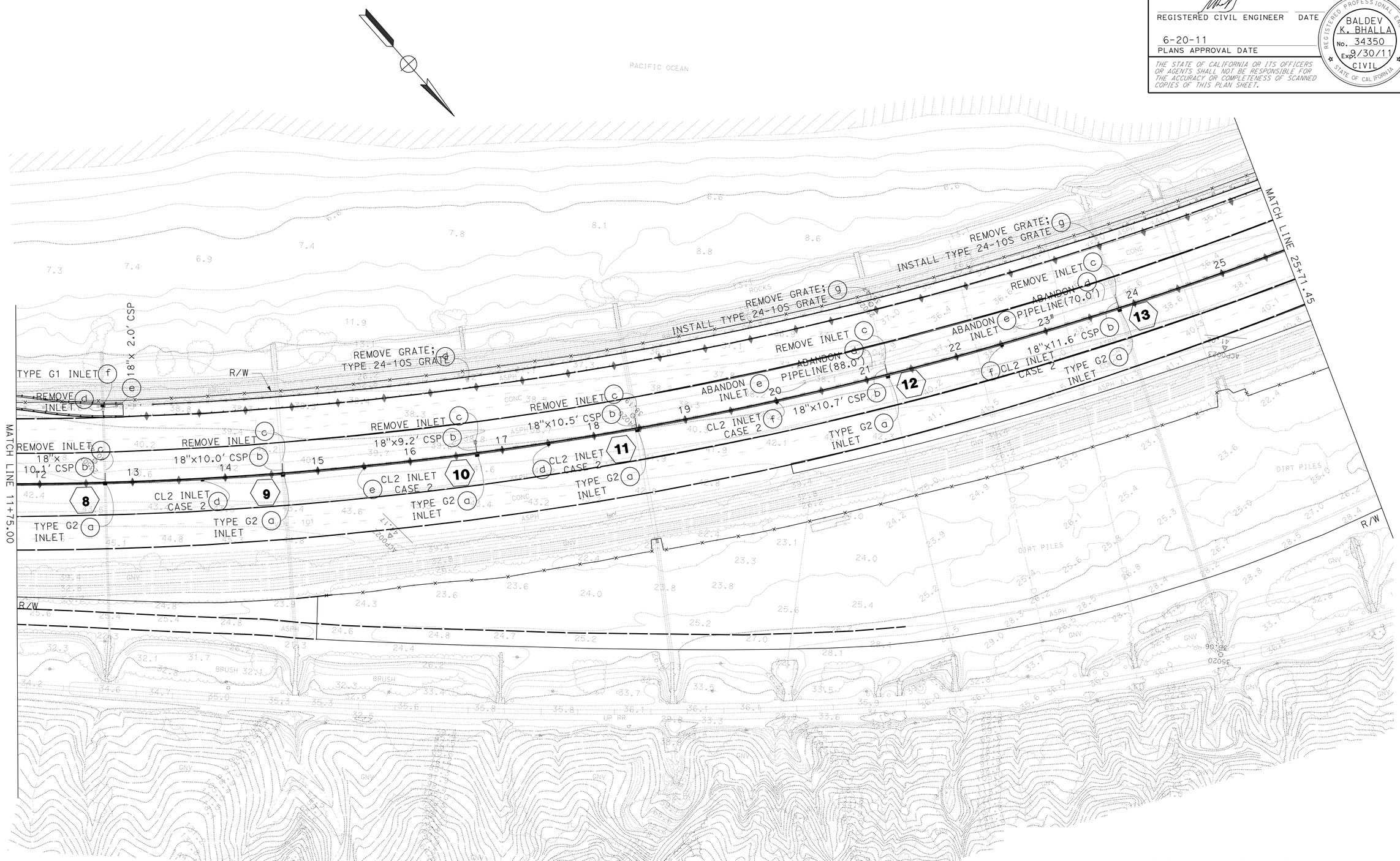

DRAINAGE PLAN

SCALE: 1" = 50'

THIS PLAN ACCURATE FOR DRAINAGE WORK ONLY.

D-2

STATE OF CALIFORNIA - DEPARTMENT OF TRANSPORTATION
Caltrans
HYDRAULICS

FUNCTIONAL SUPERVISOR: DAVE BHALLA
CALCULATED-DESIGNED BY: C.P.NGUYEN
CHECKED BY: D.BHALLA
REVISED BY
DATE REVISED

LAST REVISION 08-31-10
DATE PLOTTED => 28-JUN-2011
TIME PLOTTED => 17:39

Dist	COUNTY	ROUTE	POST MILES TOTAL PROJECT	SHEET No.	TOTAL SHEETS
07	Ven,SB	101	R39.8/R43.6, 0.0/2.2	121	757

REGISTERED CIVIL ENGINEER DATE

6-20-11
PLANS APPROVAL DATE

REGISTERED PROFESSIONAL ENGINEER
BALDEV K. BHALLA
No. 34350
Exp. 9/30/11
CIVIL
STATE OF CALIFORNIA

THE STATE OF CALIFORNIA OR ITS OFFICERS OR AGENTS SHALL NOT BE RESPONSIBLE FOR THE ACCURACY OR COMPLETENESS OF SCANNED COPIES OF THIS PLAN SHEET.

NOTE: FOR ACCURATE RIGHT OF WAY DATA,
CONTACT RIGHT OF WAY ENGINEERING AT THE DISTRICT OFFICE.

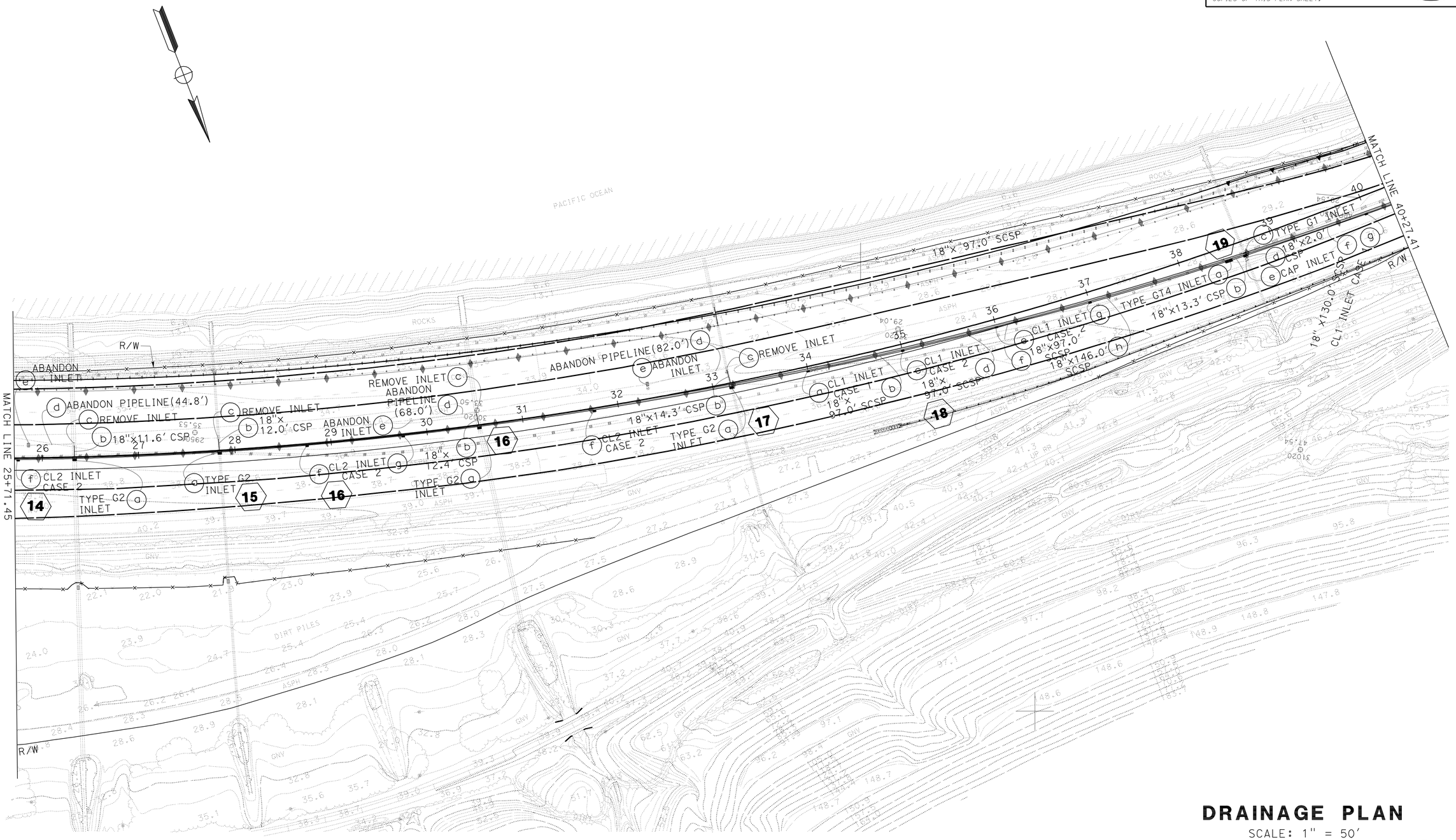

DRAINAGE PLAN

SCALE: 1" = 50'

THIS PLAN ACCURATE FOR DRAINAGE WORK ONLY.

D-3

REVISED BY	DATE REVISED

CALCULATED-DESIGNED BY: C.P.NGUYEN
CHECKED BY: D.BHALLA
FUNCTIONAL SUPERVISOR: DAVE BHALLA

STATE OF CALIFORNIA - DEPARTMENT OF TRANSPORTATION
Caltrans
HYDRAULICS

LAST REVISION 08-31-10
DATE PLOTTED => 01-AUG-2011
TIME PLOTTED => 14:30

Dist	COUNTY	ROUTE	POST MILES TOTAL PROJECT	SHEET No.	TOTAL SHEETS
07	Ven,SB	101	R39.8/R43.6, 0.0/2.2	122	757

REGISTERED CIVIL ENGINEER DATE

6-20-11
PLANS APPROVAL DATE

REGISTERED PROFESSIONAL ENGINEER BALDEV K. BHALLA No. 34350 Exp. 9/30/11 CIVIL STATE OF CALIFORNIA

THE STATE OF CALIFORNIA OR ITS OFFICERS OR AGENTS SHALL NOT BE RESPONSIBLE FOR THE ACCURACY OR COMPLETENESS OF SCANNED COPIES OF THIS PLAN SHEET.

NOTE: FOR ACCURATE RIGHT OF WAY DATA,
CONTACT RIGHT OF WAY ENGINEERING AT THE DISTRICT OFFICE.

BIOFILTRATION SWALE DETAIL

NOT TO SCALE

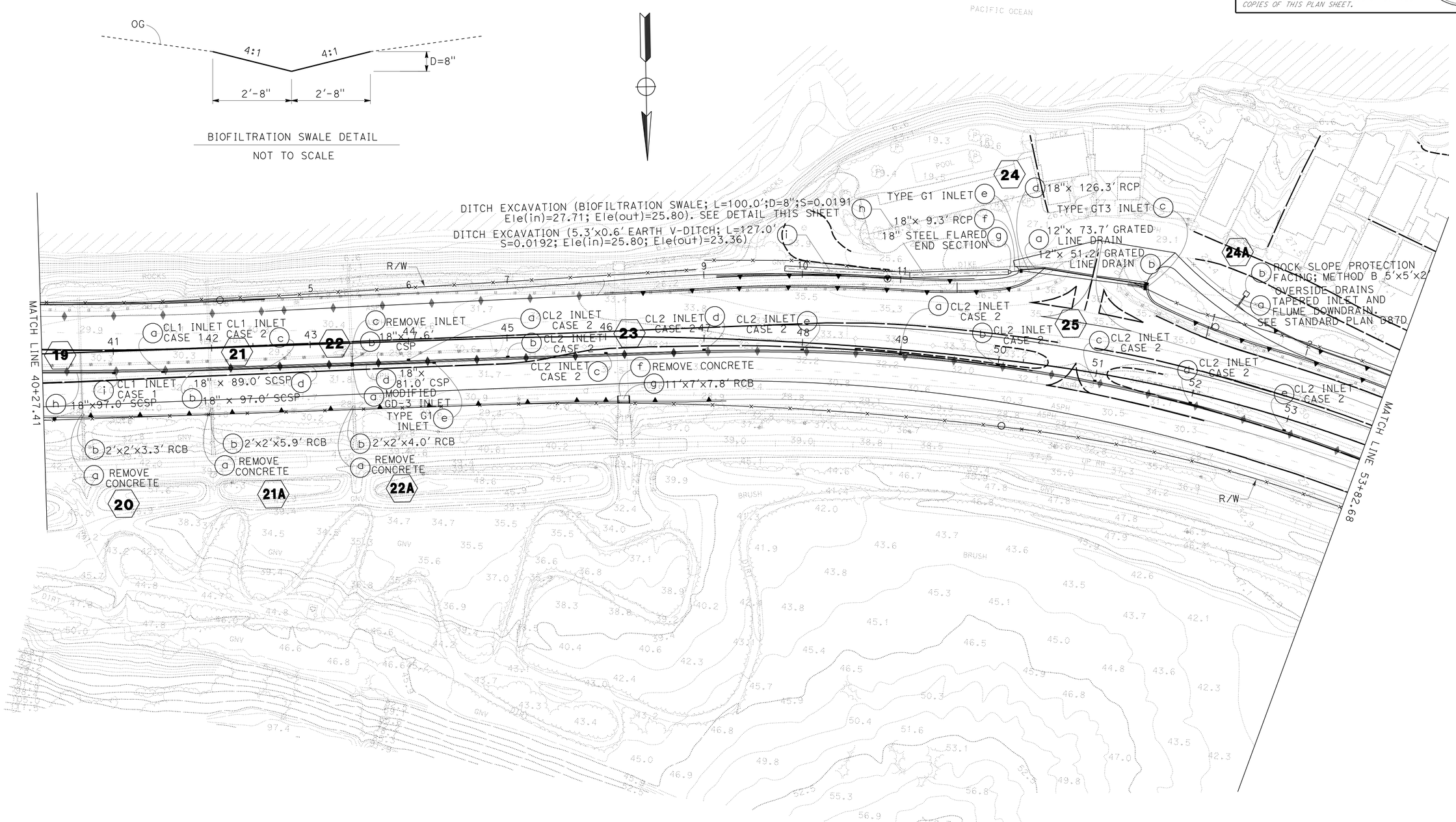

DRAINAGE PLAN

SCALE: 1" = 50'

THIS PLAN ACCURATE FOR DRAINAGE WORK ONLY.

D-4

STATE OF CALIFORNIA - DEPARTMENT OF TRANSPORTATION
Caltrans
HYDRAULICS

FUNCTIONAL SUPERVISOR: DAVE BHALLA
CALCULATED-DESIGNED BY: C.P.NGUYEN
CHECKED BY: D.BHALLA
REVISED BY
DATE REVISED

LAST REVISION 08-31-10
DATE PLOTTED => 25-JUN-2011
TIME PLOTTED => 08:12

Dist	COUNTY	ROUTE	POST MILES TOTAL PROJECT	SHEET No.	TOTAL SHEETS
07	Ven,SB	101	R39.8/R43.6, 0.0/2.2	123	757

REGISTERED CIVIL ENGINEER DATE

6-20-11
PLANS APPROVAL DATE

REGISTERED PROFESSIONAL ENGINEER
BALDEV K. BHALLA
No. 34350
Exp. 9/30/11
CIVIL
STATE OF CALIFORNIA

THE STATE OF CALIFORNIA OR ITS OFFICERS OR AGENTS SHALL NOT BE RESPONSIBLE FOR THE ACCURACY OR COMPLETENESS OF SCANNED COPIES OF THIS PLAN SHEET.

NOTE: FOR ACCURATE RIGHT OF WAY DATA,
CONTACT RIGHT OF WAY ENGINEERING AT THE DISTRICT OFFICE.

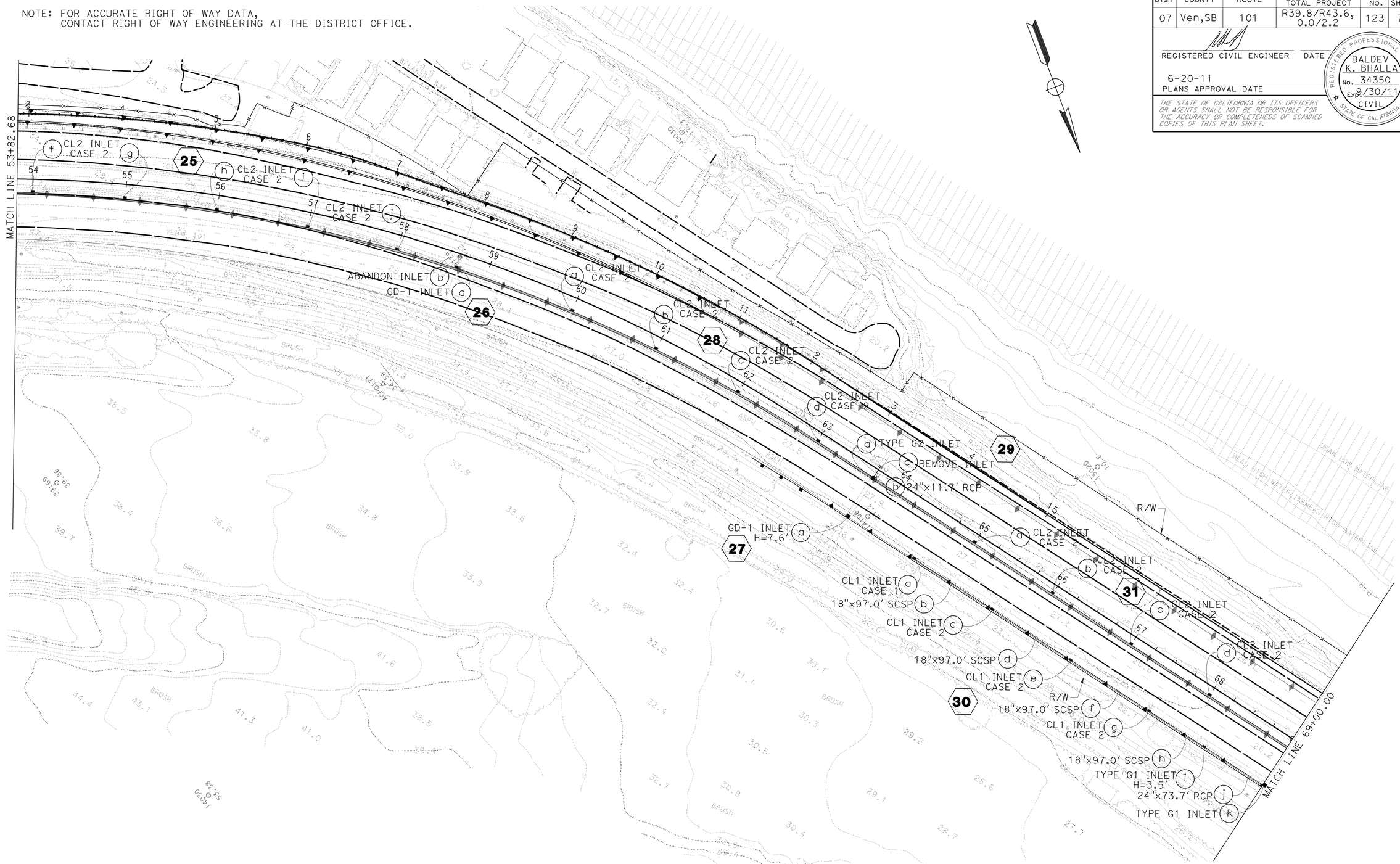

DRAINAGE PLAN

SCALE: 1" = 50'

D-5

THIS PLAN ACCURATE FOR DRAINAGE WORK ONLY.

STATE OF CALIFORNIA - DEPARTMENT OF TRANSPORTATION
Caltrans
HYDRAULICS

FUNCTIONAL SUPERVISOR: DAVE BHALLA
CALCULATED-DESIGNED BY: C.P.NGUYEN
CHECKED BY: D.BHALLA
REVISED BY
DATE REVISED

LAST REVISION 08-31-10
DATE PLOTTED => 25-JUN-2011
TIME PLOTTED => 10:27

Dist	COUNTY	ROUTE	POST MILES TOTAL PROJECT	SHEET No.	TOTAL SHEETS
07	Ven,SB	101	R39.8/R43.6, 0.0/2.2	124	757

REGISTERED CIVIL ENGINEER DATE

6-20-11
PLANS APPROVAL DATE

REGISTERED PROFESSIONAL ENGINEER
BALDEV K. BHALLA
No. 34350
Exp. 9/30/11
CIVIL
STATE OF CALIFORNIA

THE STATE OF CALIFORNIA OR ITS OFFICERS OR AGENTS SHALL NOT BE RESPONSIBLE FOR THE ACCURACY OR COMPLETENESS OF SCANNED COPIES OF THIS PLAN SHEET.

NOTE: FOR ACCURATE RIGHT OF WAY DATA,
CONTACT RIGHT OF WAY ENGINEERING AT THE DISTRICT OFFICE.

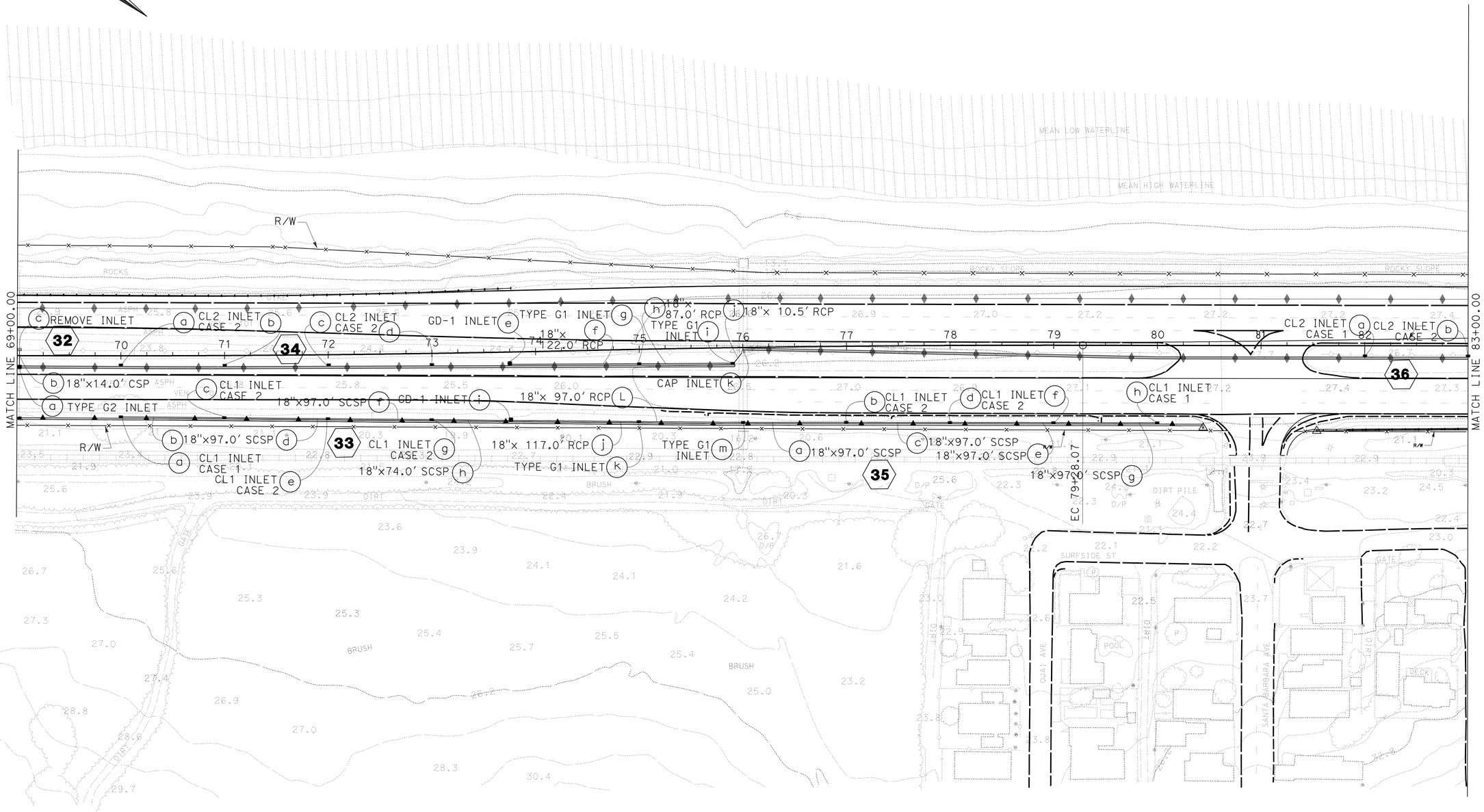

DRAINAGE PLAN

SCALE: 1" = 50'

THIS PLAN ACCURATE FOR DRAINAGE WORK ONLY.

D-6

STATE OF CALIFORNIA - DEPARTMENT OF TRANSPORTATION
Caltrans
HYDRAULICS

FUNCTIONAL SUPERVISOR: DAVE BHALLA
CALCULATED-DESIGNED BY: C.P.NGUYEN
CHECKED BY: D.BHALLA
REVISED BY
DATE REVISED

LAST REVISION 08-31-10
DATE PLOTTED => 25-JUN-2011
TIME PLOTTED => 08:12

NOTE: FOR ACCURATE RIGHT OF WAY DATA,
CONTACT RIGHT OF WAY ENGINEERING AT THE DISTRICT OFFICE.

Dist	COUNTY	ROUTE	POST MILES TOTAL PROJECT	SHEET No.	TOTAL SHEETS
07	Ven,SB	101	R39.8/R43.6, 0.0/2.2	125	757

REGISTERED CIVIL ENGINEER DATE

6-20-11
PLANS APPROVAL DATE

REGISTERED PROFESSIONAL ENGINEER BALDEV K. BHALLA No. 34350 Exp. 9/30/11 CIVIL STATE OF CALIFORNIA

THE STATE OF CALIFORNIA OR ITS OFFICERS OR AGENTS SHALL NOT BE RESPONSIBLE FOR THE ACCURACY OR COMPLETENESS OF SCANNED COPIES OF THIS PLAN SHEET.

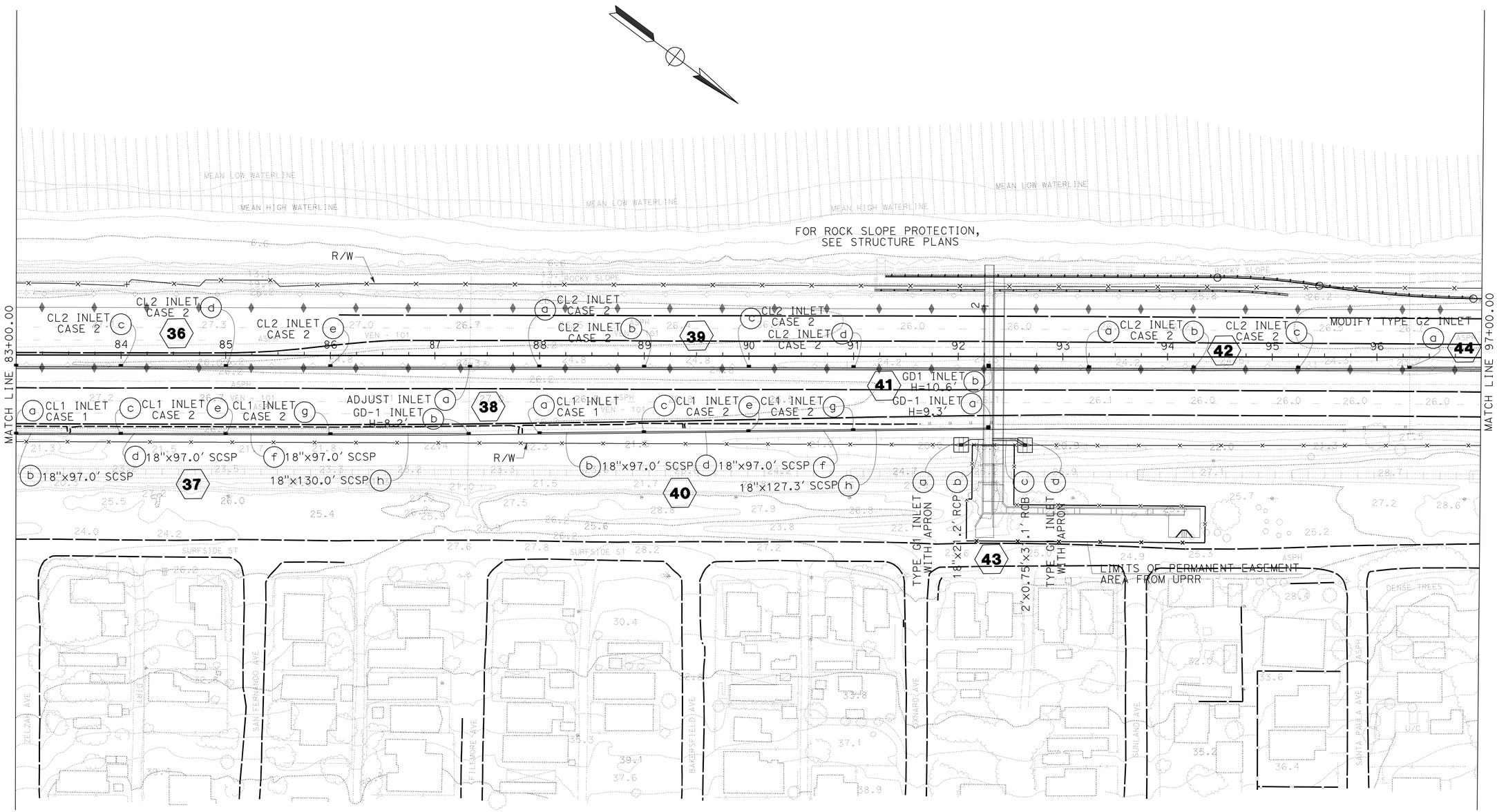

DRAINAGE PLAN

SCALE: 1" = 50'

THIS PLAN ACCURATE FOR DRAINAGE WORK ONLY.

D-7

REVISED BY	DATE REVISED
C.P.NGUYEN	D.BHALLA

CALCULATED-DESIGNED BY / CHECKED BY

FUNCTIONAL SUPERVISOR: DAVE BHALLA

STATE OF CALIFORNIA - DEPARTMENT OF TRANSPORTATION

Caltrans

HYDRAULICS

LAST REVISION 08-31-10 | DATE PLOTTED => 25-JUN-2011 | TIME PLOTTED => 08:13

NOTE: FOR ACCURATE RIGHT OF WAY DATA,
CONTACT RIGHT OF WAY ENGINEERING AT THE DISTRICT OFFICE.

Dist	COUNTY	ROUTE	POST MILES TOTAL PROJECT	SHEET No.	TOTAL SHEETS
07	Ven,SB	101	R39.8/R43.6, 0.0/2.2	126	757

REGISTERED CIVIL ENGINEER DATE

6-20-11
PLANS APPROVAL DATE

REGISTERED PROFESSIONAL ENGINEER
BALDEV K. BHALLA
No. 34350
Exp. 9/30/11
CIVIL
STATE OF CALIFORNIA

THE STATE OF CALIFORNIA OR ITS OFFICERS OR AGENTS SHALL NOT BE RESPONSIBLE FOR THE ACCURACY OR COMPLETENESS OF SCANNED COPIES OF THIS PLAN SHEET.

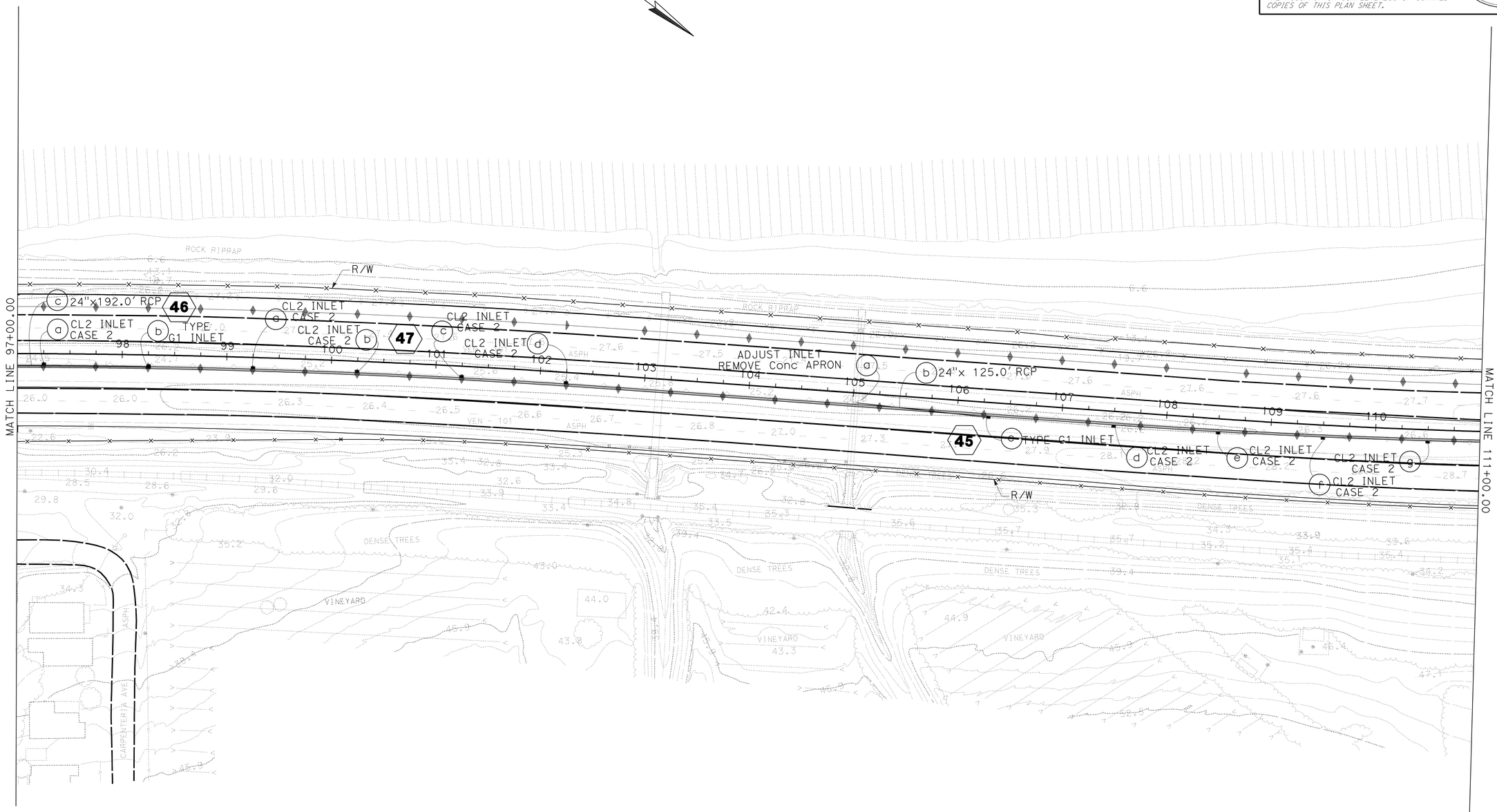

DRAINAGE PLAN

SCALE: 1" = 50'

THIS PLAN ACCURATE FOR DRAINAGE WORK ONLY.

D-8

STATE OF CALIFORNIA - DEPARTMENT OF TRANSPORTATION
Caltrans
HYDRAULICS

FUNCTIONAL SUPERVISOR: DAVE BHALLA
CALCULATED-DESIGNED BY: C.P.NGUYEN
CHECKED BY: D.BHALLA
REVISED BY
DATE REVISED

LAST REVISION 08-31-10
DATE PLOTTED => 25-JUN-2011
TIME PLOTTED => 08:13

Dist	COUNTY	ROUTE	POST MILES TOTAL PROJECT	SHEET No.	TOTAL SHEETS
07	Ven,SB	101	R39.8/R43.6, 0.0/2.2	127	757

REGISTERED CIVIL ENGINEER DATE

6-20-11
PLANS APPROVAL DATE

REGISTERED PROFESSIONAL ENGINEER BALDEV K. BHALLA No. 34350 Exp. 9/30/11 CIVIL STATE OF CALIFORNIA

THE STATE OF CALIFORNIA OR ITS OFFICERS OR AGENTS SHALL NOT BE RESPONSIBLE FOR THE ACCURACY OR COMPLETENESS OF SCANNED COPIES OF THIS PLAN SHEET.

NOTE: FOR ACCURATE RIGHT OF WAY DATA,
CONTACT RIGHT OF WAY ENGINEERING AT THE DISTRICT OFFICE.

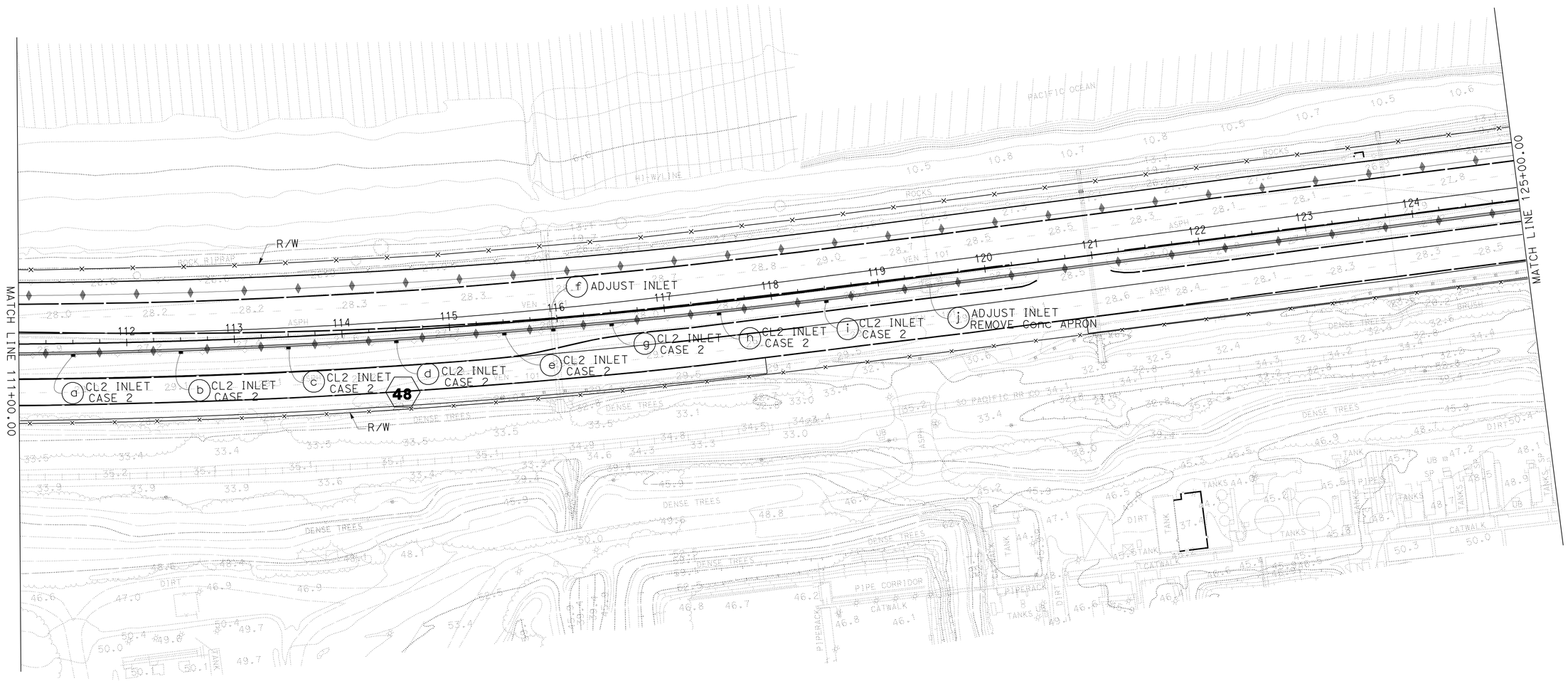

DRAINAGE PLAN

SCALE: 1" = 50'

THIS PLAN ACCURATE FOR DRAINAGE WORK ONLY.

D-9

STATE OF CALIFORNIA - DEPARTMENT OF TRANSPORTATION
Caltrans
HYDRAULICS

FUNCTIONAL SUPERVISOR: DAVE BHALLA
CALCULATED-DESIGNED BY: C.P.NGUYEN
CHECKED BY: D.BHALLA
REVISED BY
DATE REVISED

LAST REVISION 08-31-10
DATE PLOTTED => 25-JUN-2011
TIME PLOTTED => 08:13

Dist	COUNTY	ROUTE	POST MILES TOTAL PROJECT	SHEET No.	TOTAL SHEETS
07	Ven,SB	101	R39.8/R43.6, 0.0/2.2	128	757

REGISTERED CIVIL ENGINEER DATE

6-20-11
PLANS APPROVAL DATE

REGISTERED PROFESSIONAL ENGINEER BALDEV K. BHALLA No. 34350 Exp. 9/30/11 CIVIL STATE OF CALIFORNIA

THE STATE OF CALIFORNIA OR ITS OFFICERS OR AGENTS SHALL NOT BE RESPONSIBLE FOR THE ACCURACY OR COMPLETENESS OF SCANNED COPIES OF THIS PLAN SHEET.

NOTE: FOR ACCURATE RIGHT OF WAY DATA,
CONTACT RIGHT OF WAY ENGINEERING AT THE DISTRICT OFFICE.

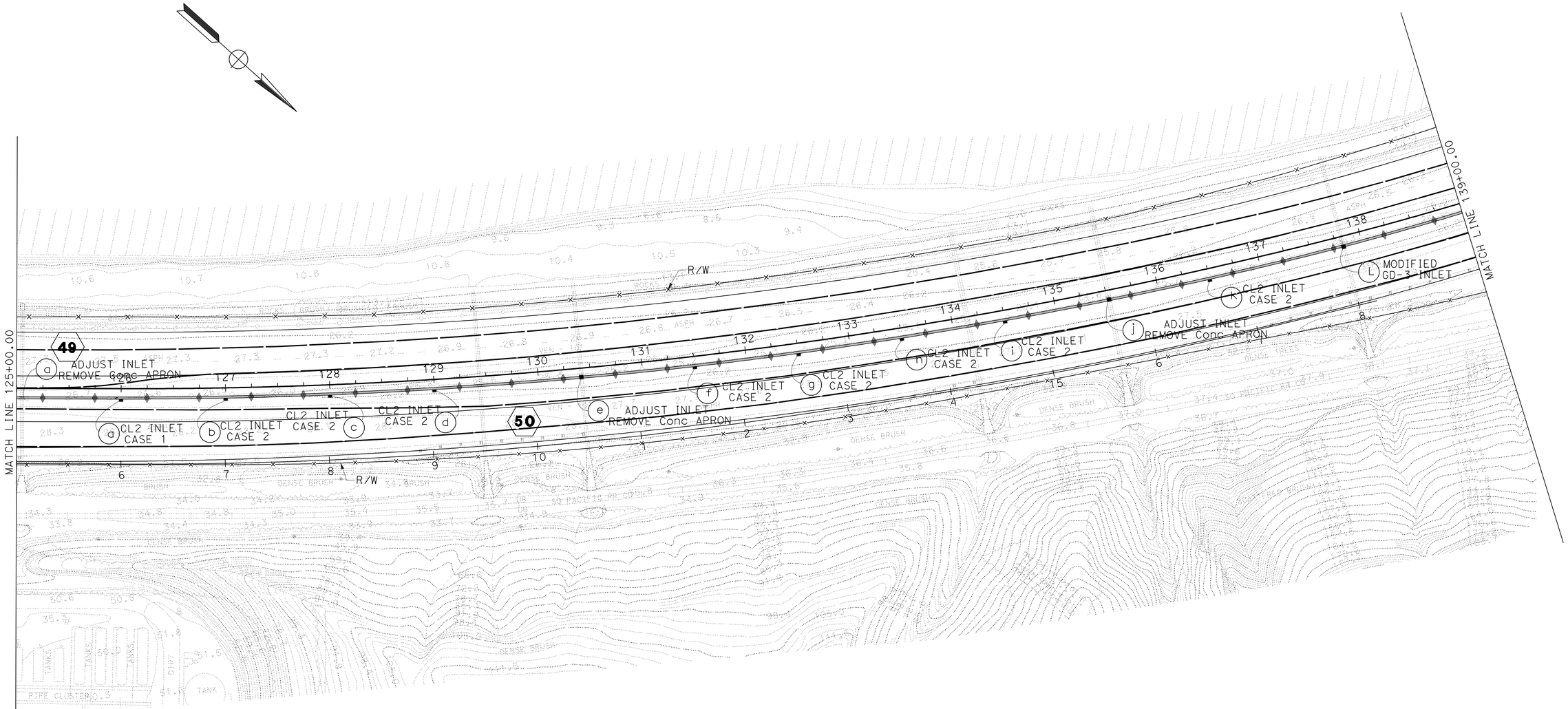

DRAINAGE PLAN

SCALE: 1" = 50'

THIS PLAN ACCURATE FOR DRAINAGE WORK ONLY.

D-10

STATE OF CALIFORNIA - DEPARTMENT OF TRANSPORTATION
Caltrans
HYDRAULICS

FUNCTIONAL SUPERVISOR: DAVE BHALLA
CALCULATED-DESIGNED BY: C.P.NGUYEN
CHECKED BY: D.BHALLA
REVISED BY
DATE REVISED

LAST REVISION 08-31-10
DATE PLOTTED => 25-JUN-2011
TIME PLOTTED => 08:13

Dist	COUNTY	ROUTE	POST MILES TOTAL PROJECT	SHEET No.	TOTAL SHEETS
07	Ven,SB	101	R39.8/R43.6, 0.0/2.2	129	757

REGISTERED CIVIL ENGINEER DATE

6-20-11
PLANS APPROVAL DATE

REGISTERED PROFESSIONAL ENGINEER
SA K. THAI
No. 71390
Exp. 12/31/11
CIVIL
STATE OF CALIFORNIA

THE STATE OF CALIFORNIA OR ITS OFFICERS OR AGENTS SHALL NOT BE RESPONSIBLE FOR THE ACCURACY OR COMPLETENESS OF SCANNED COPIES OF THIS PLAN SHEET.

NOTE: FOR ACCURATE RIGHT OF WAY DATA,
CONTACT RIGHT OF WAY ENGINEERING AT THE DISTRICT OFFICE.

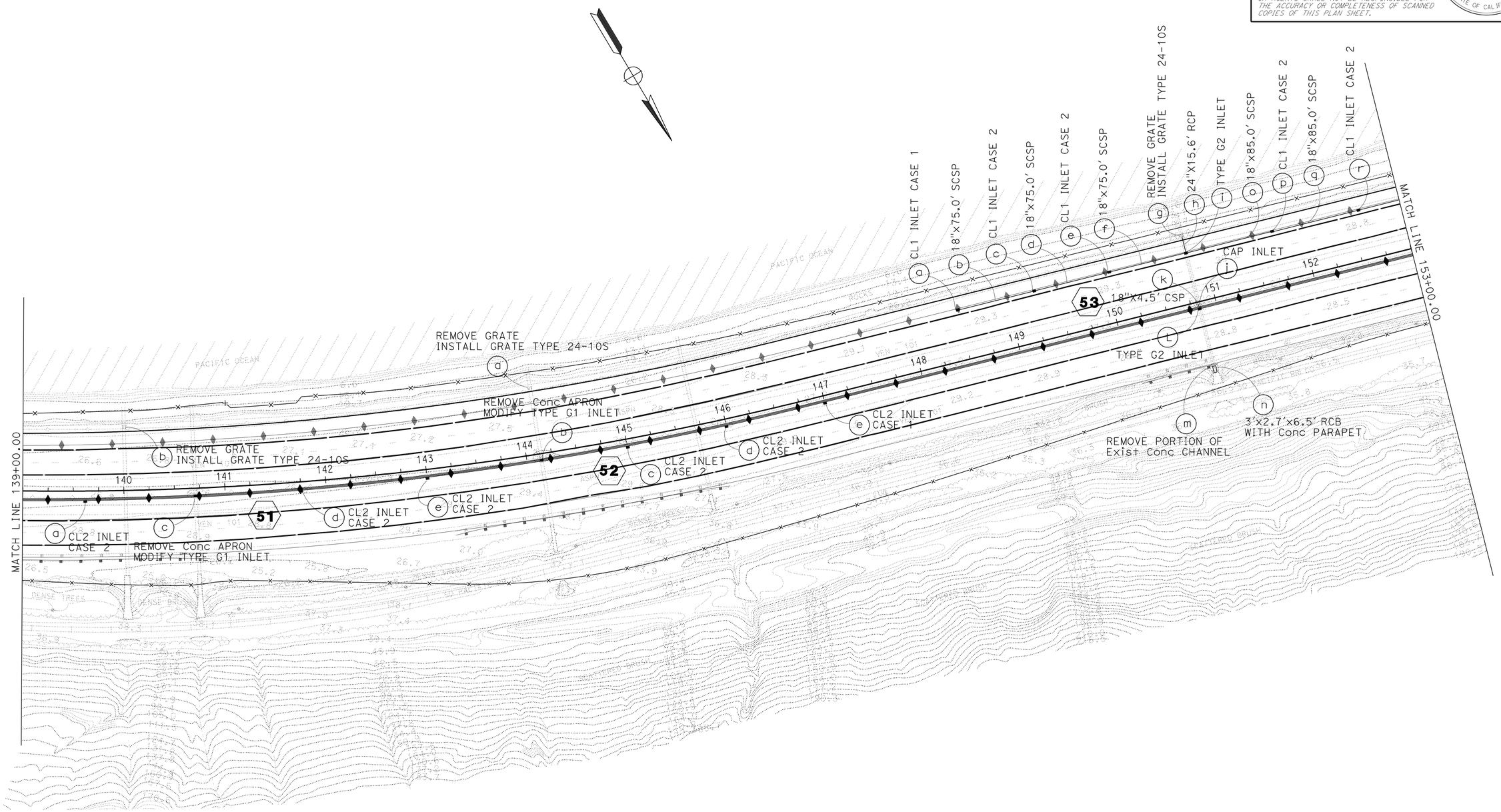

THIS PLAN ACCURATE FOR DRAINAGE WORK ONLY.

DRAINAGE PLAN

SCALE: 1" = 50'

D-11

STATE OF CALIFORNIA - DEPARTMENT OF TRANSPORTATION
Caltrans
HYDRAULICS

FUNCTIONAL SUPERVISOR: DAVE BHALLA

CALCULATED-DESIGNED BY: S. THAI
CHECKED BY: D. BHALLA
REVISED BY
DATE REVISED

LAST REVISION 08-31-10
DATE PLOTTED => 25-JUN-2011
TIME PLOTTED => 08:13

Dist	COUNTY	ROUTE	POST MILES TOTAL PROJECT	SHEET No.	TOTAL SHEETS
07	Ven,SB	101	R39.8/R43.6, 0.0/2.2	130	757

REGISTERED CIVIL ENGINEER DATE

6-20-11
PLANS APPROVAL DATE

REGISTERED PROFESSIONAL ENGINEER SA K. THAI No. 71390 Exp. 12/31/11 CIVIL STATE OF CALIFORNIA

THE STATE OF CALIFORNIA OR ITS OFFICERS OR AGENTS SHALL NOT BE RESPONSIBLE FOR THE ACCURACY OR COMPLETENESS OF SCANNED COPIES OF THIS PLAN SHEET.

NOTE: FOR ACCURATE RIGHT OF WAY DATA,
CONTACT RIGHT OF WAY ENGINEERING AT THE DISTRICT OFFICE.

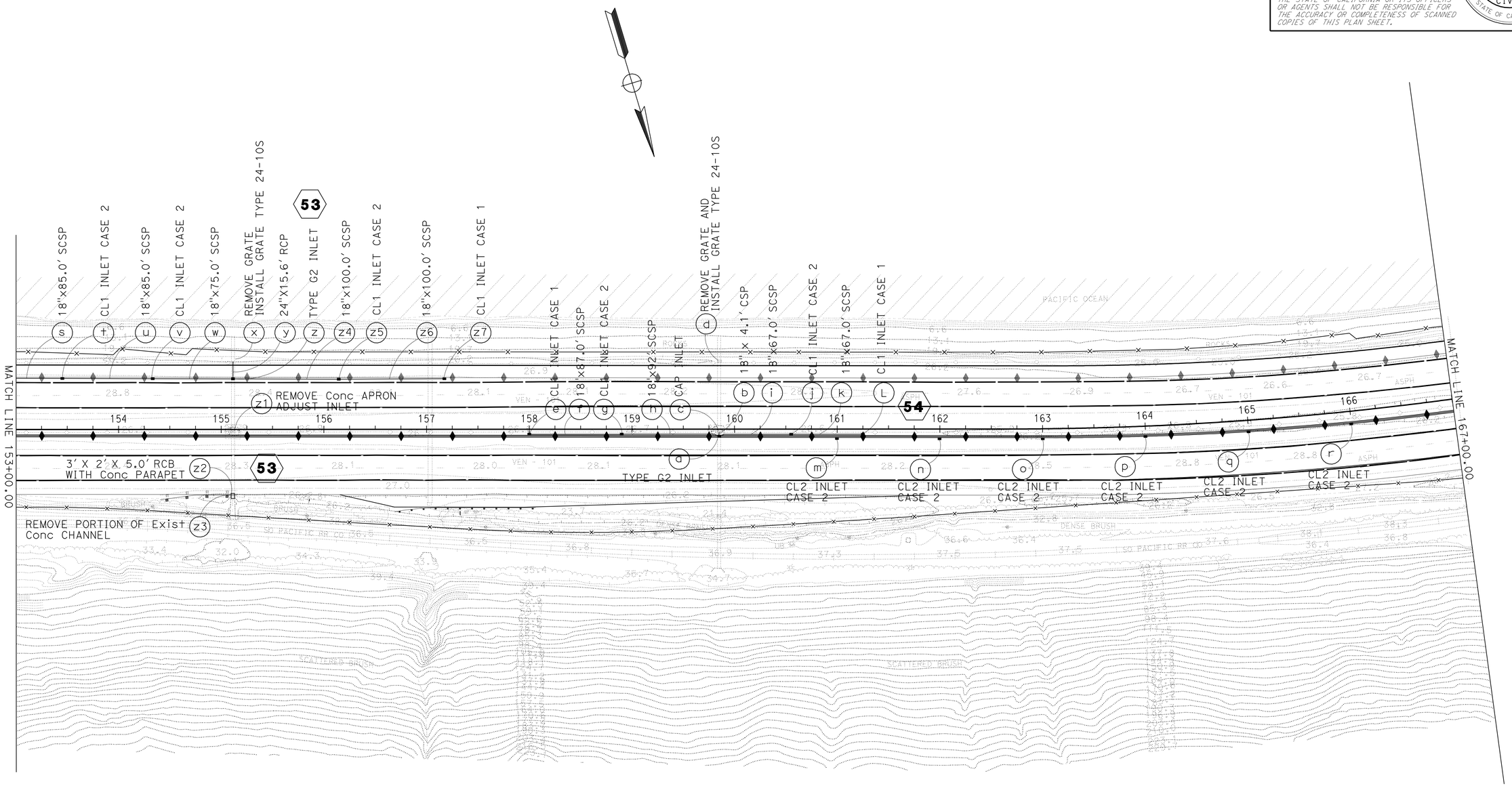

DRAINAGE PLAN

SCALE: 1" = 50'

THIS PLAN ACCURATE FOR DRAINAGE WORK ONLY.

D-12

STATE OF CALIFORNIA - DEPARTMENT OF TRANSPORTATION
Caltrans
HYDRAULICS

FUNCTIONAL SUPERVISOR: DAVE BHALLA
CALCULATED-DESIGNED BY: S. THAI
CHECKED BY: D. BHALLA
REVISED BY
DATE REVISED

LAST REVISION 08-31-10
DATE PLOTTED => 25-JUN-2011
TIME PLOTTED => 08:13

Dist	COUNTY	ROUTE	POST MILES TOTAL PROJECT	SHEET No.	TOTAL SHEETS
07	Ven,SB	101	R39.8/R43.6, 0.0/2.2	131	757

REGISTERED CIVIL ENGINEER DATE

6-20-11
PLANS APPROVAL DATE

REGISTERED PROFESSIONAL ENGINEER SA K. THAI No. 71390 Exp. 12/31/11 CIVIL STATE OF CALIFORNIA

THE STATE OF CALIFORNIA OR ITS OFFICERS OR AGENTS SHALL NOT BE RESPONSIBLE FOR THE ACCURACY OR COMPLETENESS OF SCANNED COPIES OF THIS PLAN SHEET.

NOTE: FOR ACCURATE RIGHT OF WAY DATA,
CONTACT RIGHT OF WAY ENGINEERING AT THE DISTRICT OFFICE.

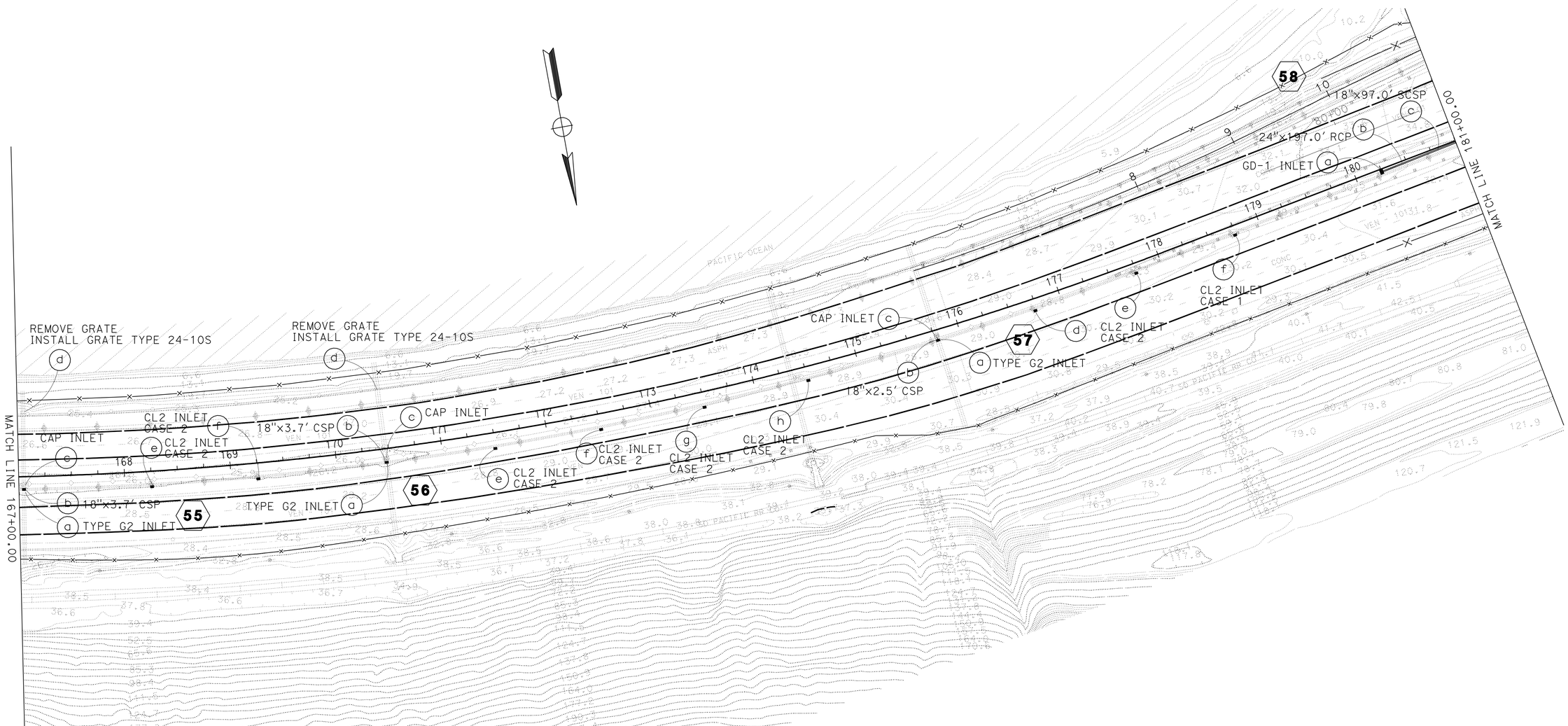

DRAINAGE PLAN

SCALE: 1" = 50'

D-13

THIS PLAN ACCURATE FOR DRAINAGE WORK ONLY.

STATE OF CALIFORNIA - DEPARTMENT OF TRANSPORTATION
Caltrans
HYDRAULICS

FUNCTIONAL SUPERVISOR: DAVE BHALLA
CALCULATED-DESIGNED BY: S. THAI
CHECKED BY: D. BHALLA
REVISED BY
DATE REVISED

LAST REVISION 08-31-10 | DATE PLOTTED => 25-JUN-2011 | TIME PLOTTED => 08:13

NOTE: FOR ACCURATE RIGHT OF WAY DATA,
CONTACT RIGHT OF WAY ENGINEERING AT THE DISTRICT OFFICE.

Dist	COUNTY	ROUTE	POST MILES TOTAL PROJECT	SHEET No.	TOTAL SHEETS
07	Ven,SB	101	R39.8/R43.6, 0.0/2.2	132	757

REGISTERED CIVIL ENGINEER DATE

6-20-11
PLANS APPROVAL DATE

REGISTERED PROFESSIONAL ENGINEER SA K. THAI No. 71390 Exp. 12/31/11 CIVIL STATE OF CALIFORNIA

THE STATE OF CALIFORNIA OR ITS OFFICERS OR AGENTS SHALL NOT BE RESPONSIBLE FOR THE ACCURACY OR COMPLETENESS OF SCANNED COPIES OF THIS PLAN SHEET.

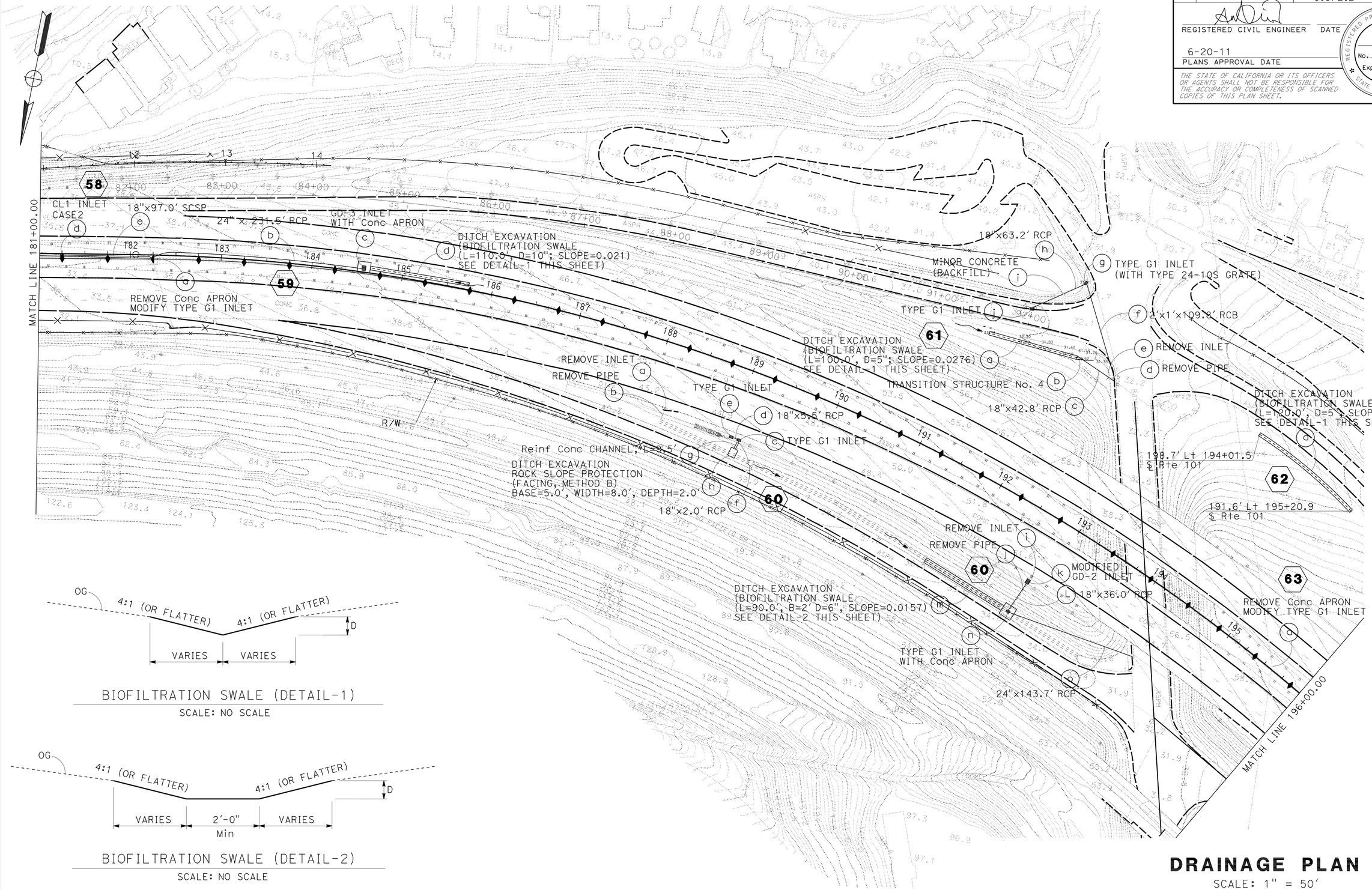

BIOFILTRATION SWALE (DETAIL-1)

SCALE: NO SCALE

BIOFILTRATION SWALE (DETAIL-2)

SCALE: NO SCALE

DRAINAGE PLAN

SCALE: 1" = 50'

THIS PLAN ACCURATE FOR DRAINAGE WORK ONLY.

D-14

STATE OF CALIFORNIA - DEPARTMENT OF TRANSPORTATION
Caltrans
HYDRAULICS

FUNCTIONAL SUPERVISOR: DAVE BHALLA
CALCULATED-DESIGNED BY: S. THAI
CHECKED BY: D. BHALLA
REVISED BY
DATE REVISED

LAST REVISION 08-31-10
DATE PLOTTED => 25-JUN-2011
TIME PLOTTED => 08:13

Dist	COUNTY	ROUTE	POST MILES TOTAL PROJECT	SHEET No.	TOTAL SHEETS
07	Ven,SB	101	R39.8/R43.6, 0.0/2.2	133	757

REGISTERED CIVIL ENGINEER DATE

6-20-11
PLANS APPROVAL DATE

REGISTERED PROFESSIONAL ENGINEER
SA K. THAI
No. 71390
Exp. 12/31/11
CIVIL
STATE OF CALIFORNIA

THE STATE OF CALIFORNIA OR ITS OFFICERS OR AGENTS SHALL NOT BE RESPONSIBLE FOR THE ACCURACY OR COMPLETENESS OF SCANNED COPIES OF THIS PLAN SHEET.

NOTE: FOR ACCURATE RIGHT OF WAY DATA,
CONTACT RIGHT OF WAY ENGINEERING AT THE DISTRICT OFFICE.

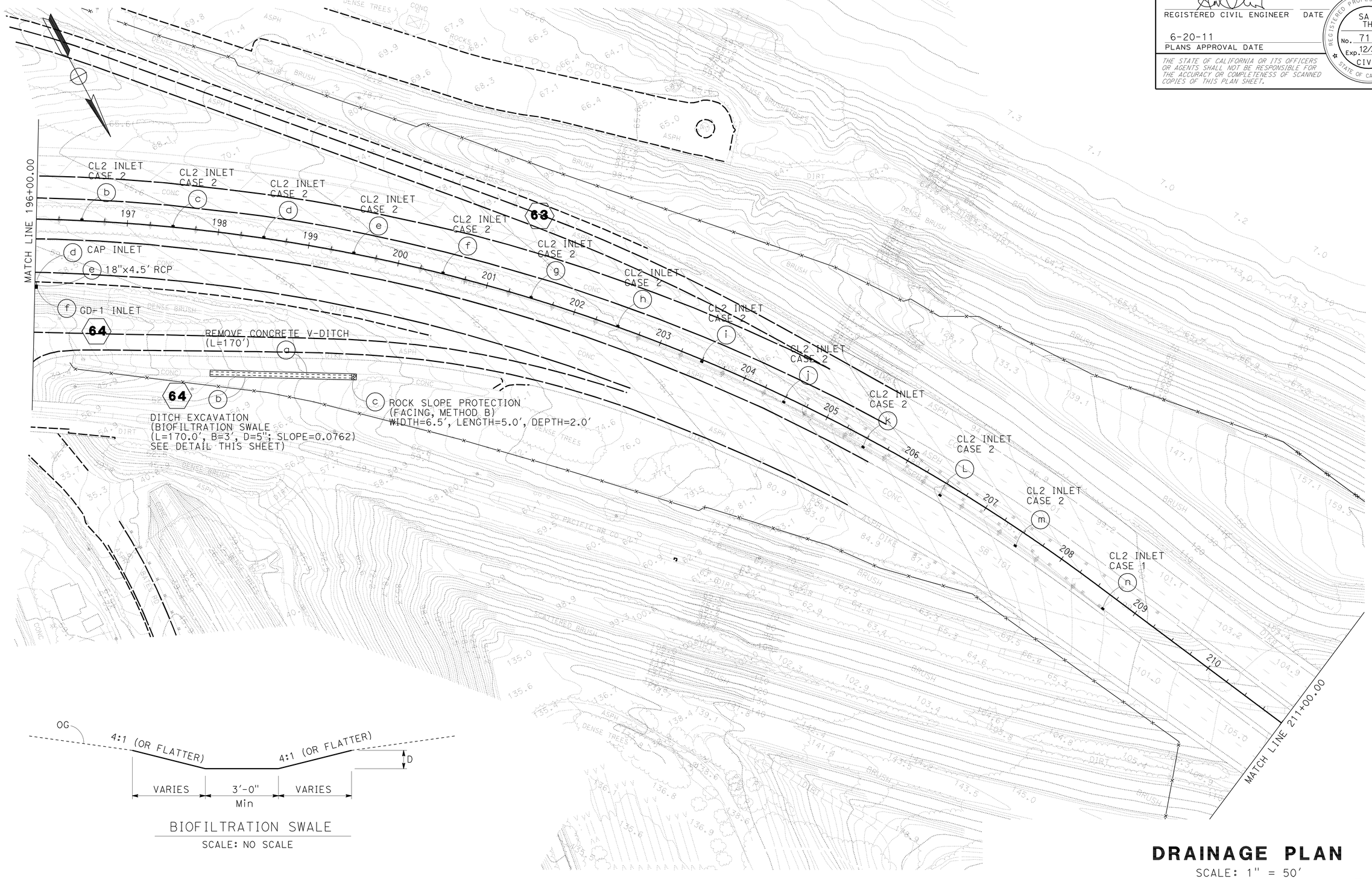

BIOFILTRATION SWALE
SCALE: NO SCALE

DRAINAGE PLAN

SCALE: 1" = 50'

THIS PLAN ACCURATE FOR DRAINAGE WORK ONLY.

D-15

STATE OF CALIFORNIA - DEPARTMENT OF TRANSPORTATION
Caltrans
HYDRAULICS

FUNCTIONAL SUPERVISOR: DAVE BHALLA
CALCULATED-DESIGNED BY: S. THAI
CHECKED BY: D. BHALLA
REVISED BY
DATE REVISED

LAST REVISION 08-31-10
DATE PLOTTED => 25-JUN-2011
TIME PLOTTED => 08:14

NOTE: FOR ACCURATE RIGHT OF WAY DATA,
CONTACT RIGHT OF WAY ENGINEERING AT THE DISTRICT OFFICE.

Dist	COUNTY	ROUTE	POST MILES TOTAL PROJECT	SHEET No.	TOTAL SHEETS
07	Ven,SB	101	R39.8/R43.6, 0.0/2.2	134	757

REGISTERED CIVIL ENGINEER DATE

6-20-11
PLANS APPROVAL DATE

REGISTERED PROFESSIONAL ENGINEER
SA K. THAI
No. 71390
Exp. 12/31/11
CIVIL
STATE OF CALIFORNIA

THE STATE OF CALIFORNIA OR ITS OFFICERS OR AGENTS SHALL NOT BE RESPONSIBLE FOR THE ACCURACY OR COMPLETENESS OF SCANNED COPIES OF THIS PLAN SHEET.

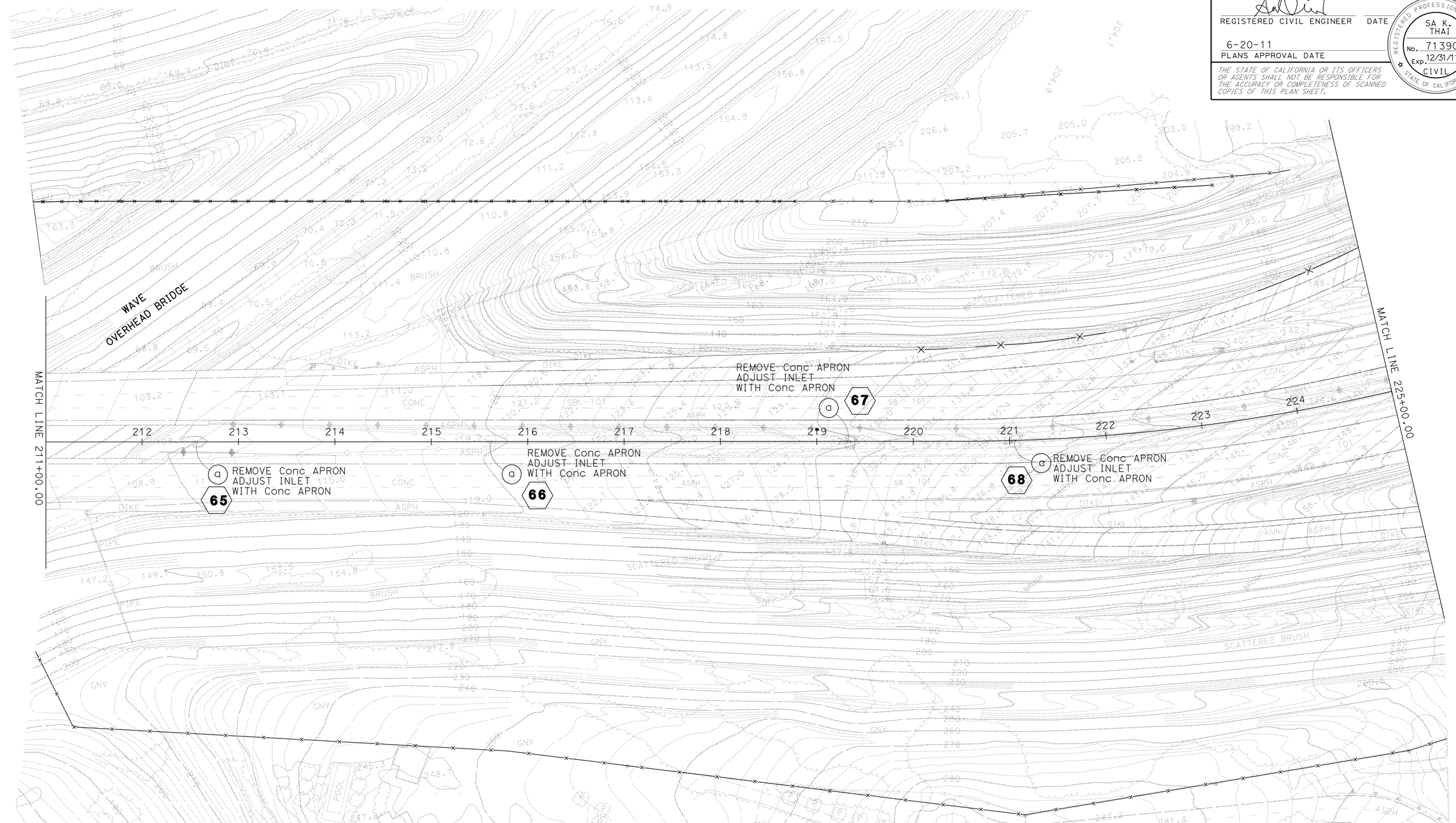

DRAINAGE PLAN

SCALE: 1" = 50'

D-16

THIS PLAN ACCURATE FOR DRAINAGE WORK ONLY.

STATE OF CALIFORNIA - DEPARTMENT OF TRANSPORTATION
Caltrans
HYDRAULICS

FUNCTIONAL SUPERVISOR: DAVE BHALLA

CALCULATED-DESIGNED BY: S. THAI
CHECKED BY: D. BHALLA

REVISED BY
DATE REVISED

LAST REVISION 08-31-10
DATE PLOTTED => 25-JUN-2011
TIME PLOTTED => 08:14

Dist	COUNTY	ROUTE	POST MILES TOTAL PROJECT	SHEET No.	TOTAL SHEETS
07	Ven,SB	101	R39.8/R43.6, 0.0/2.2	135	757

REGISTERED CIVIL ENGINEER DATE

6-20-11
PLANS APPROVAL DATE

REGISTERED PROFESSIONAL ENGINEER
SA K. THAI
No. 71390
Exp. 12/31/11
CIVIL
STATE OF CALIFORNIA

THE STATE OF CALIFORNIA OR ITS OFFICERS OR AGENTS SHALL NOT BE RESPONSIBLE FOR THE ACCURACY OR COMPLETENESS OF SCANNED COPIES OF THIS PLAN SHEET.

NOTE: FOR ACCURATE RIGHT OF WAY DATA,
CONTACT RIGHT OF WAY ENGINEERING AT THE DISTRICT OFFICE.

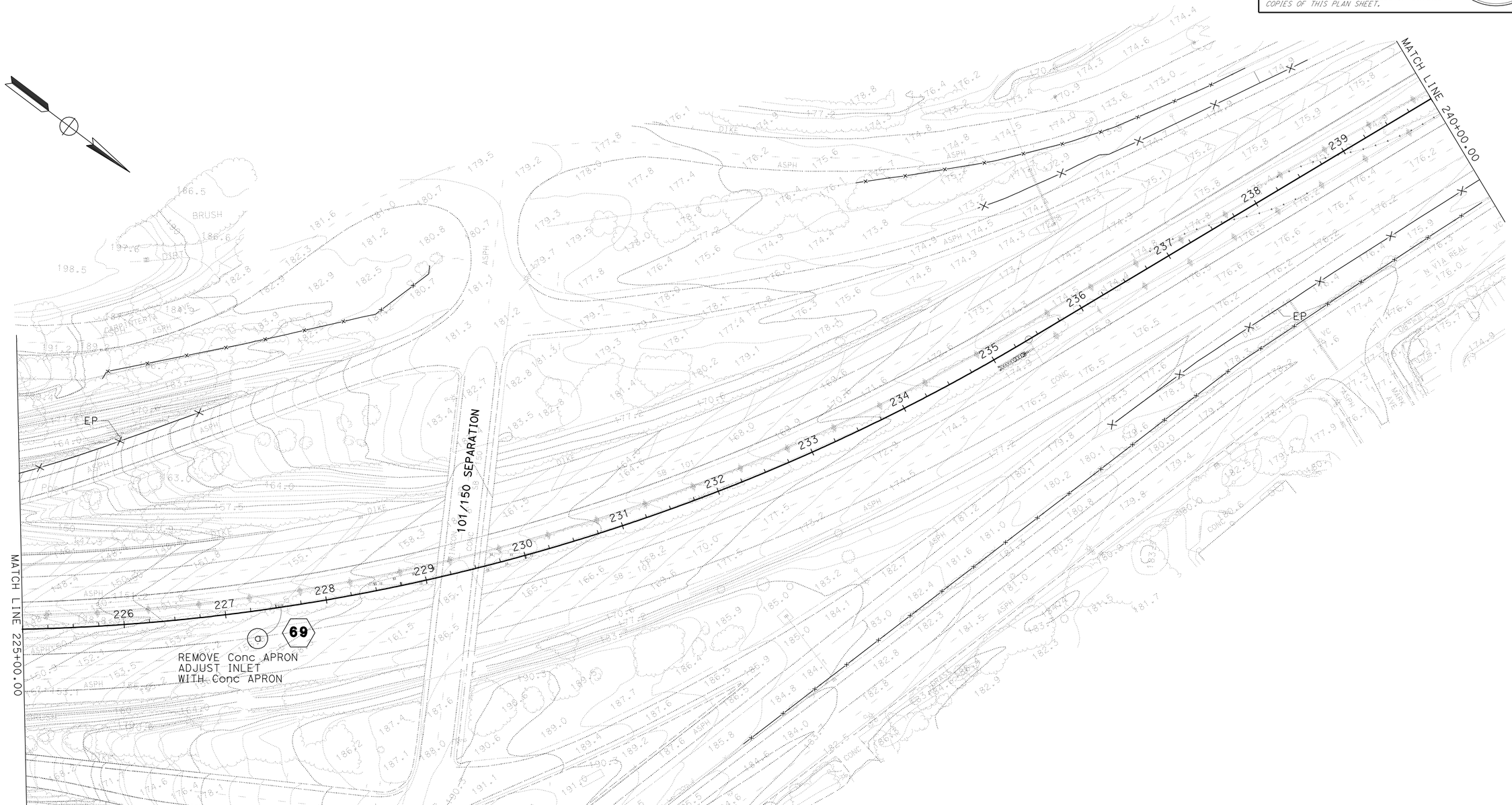

DRAINAGE PLAN

SCALE: 1" = 50'

D-17

THIS PLAN ACCURATE FOR DRAINAGE WORK ONLY.

STATE OF CALIFORNIA - DEPARTMENT OF TRANSPORTATION
Caltrans
HYDRAULICS

FUNCTIONAL SUPERVISOR: DAVE BHALLA
CALCULATED-DESIGNED BY: S. THAI
CHECKED BY: D. BHALLA
REVISED BY
DATE REVISED

LAST REVISION 08-31-10
DATE PLOTTED => 25-JUN-2011
TIME PLOTTED => 08:14

NOTE: FOR ACCURATE RIGHT OF WAY DATA,
CONTACT RIGHT OF WAY ENGINEERING AT THE DISTRICT OFFICE.

Dist	COUNTY	ROUTE	POST MILES TOTAL PROJECT	SHEET No.	TOTAL SHEETS
07	Ven,SB	101	R39.8/R43.6, 0.0/2.2	136	757

REGISTERED CIVIL ENGINEER DATE

6-20-11
PLANS APPROVAL DATE

REGISTERED PROFESSIONAL ENGINEER
SA K. THAI
No. 71390
Exp. 12/31/11
CIVIL
STATE OF CALIFORNIA

THE STATE OF CALIFORNIA OR ITS OFFICERS OR AGENTS SHALL NOT BE RESPONSIBLE FOR THE ACCURACY OR COMPLETENESS OF SCANNED COPIES OF THIS PLAN SHEET.

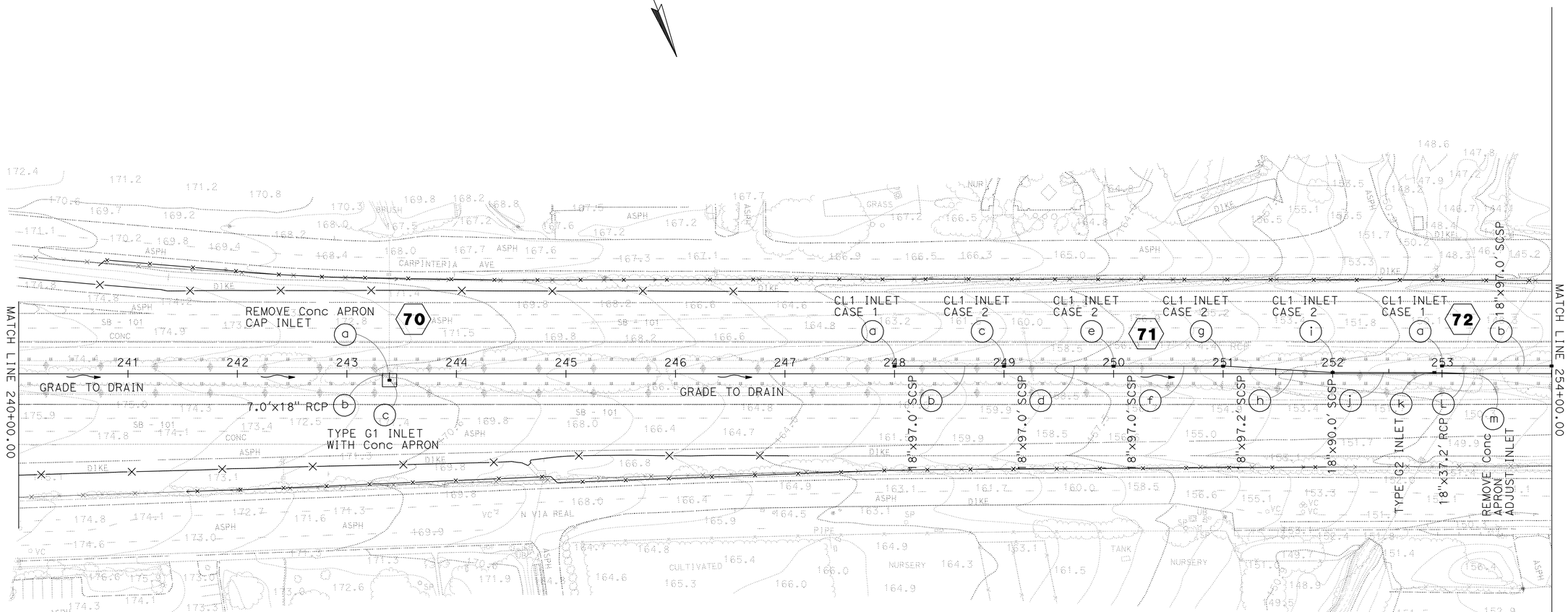

DRAINAGE PLAN

SCALE: 1" = 50'

D-18

THIS PLAN ACCURATE FOR DRAINAGE WORK ONLY.

STATE OF CALIFORNIA - DEPARTMENT OF TRANSPORTATION
Caltrans
HYDRAULICS

FUNCTIONAL SUPERVISOR: DAVE BHALLA
CALCULATED-DESIGNED BY: S. THAI
CHECKED BY: D. BHALLA
REVISED BY
DATE REVISED

LAST REVISION 08-31-10
DATE PLOTTED => 25-JUN-2011
TIME PLOTTED => 08:14

NOTE: FOR ACCURATE RIGHT OF WAY DATA,
CONTACT RIGHT OF WAY ENGINEERING AT THE DISTRICT OFFICE.

Dist	COUNTY	ROUTE	POST MILES TOTAL PROJECT	SHEET No.	TOTAL SHEETS
07	Ven,SB	101	R39.8/R43.6, 0.0/2.2	137	757

REGISTERED CIVIL ENGINEER DATE

6-20-11
PLANS APPROVAL DATE

REGISTERED PROFESSIONAL ENGINEER
SA K. THAI
No. 71390
Exp. 12/31/11
CIVIL
STATE OF CALIFORNIA

THE STATE OF CALIFORNIA OR ITS OFFICERS OR AGENTS SHALL NOT BE RESPONSIBLE FOR THE ACCURACY OR COMPLETENESS OF SCANNED COPIES OF THIS PLAN SHEET.

DRAINAGE PLAN

SCALE: 1" = 50'

D-19

THIS PLAN ACCURATE FOR DRAINAGE WORK ONLY.

STATE OF CALIFORNIA - DEPARTMENT OF TRANSPORTATION
Caltrans
HYDRAULICS

FUNCTIONAL SUPERVISOR: DAVE BHALLA
CALCULATED-DESIGNED BY: S. THAI
CHECKED BY: D. BHALLA
REVISED BY
DATE REVISED

LAST REVISION 08-31-10
DATE PLOTTED => 25-JUN-2011
TIME PLOTTED => 08:14

NOTE: FOR ACCURATE RIGHT OF WAY DATA,
CONTACT RIGHT OF WAY ENGINEERING AT THE DISTRICT OFFICE.

Dist	COUNTY	ROUTE	POST MILES TOTAL PROJECT	SHEET No.	TOTAL SHEETS
07	Ven,SB	101	R39.8/R43.6, 0.0/2.2	138	757

REGISTERED CIVIL ENGINEER DATE

6-20-11
PLANS APPROVAL DATE

REGISTERED PROFESSIONAL ENGINEER
SA K. THAI
No. 71390
Exp. 12/31/11
CIVIL
STATE OF CALIFORNIA

THE STATE OF CALIFORNIA OR ITS OFFICERS OR AGENTS SHALL NOT BE RESPONSIBLE FOR THE ACCURACY OR COMPLETENESS OF SCANNED COPIES OF THIS PLAN SHEET.

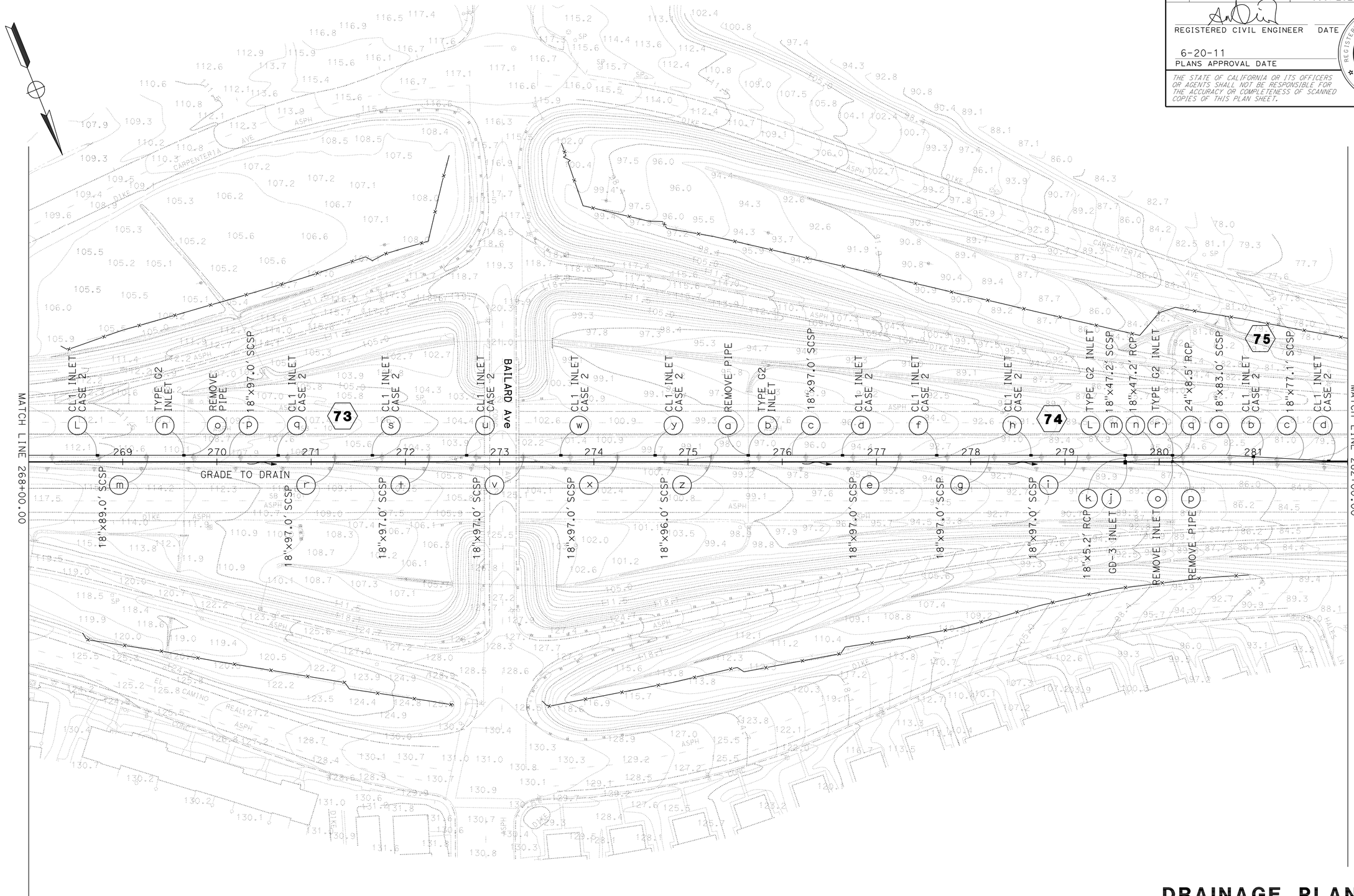

DRAINAGE PLAN

SCALE: 1" = 50'

D-20

THIS PLAN ACCURATE FOR DRAINAGE WORK ONLY.

STATE OF CALIFORNIA - DEPARTMENT OF TRANSPORTATION
Caltrans
HYDRAULICS

FUNCTIONAL SUPERVISOR: DAVE BHALLA
CALCULATED-DESIGNED BY: S. THAI
CHECKED BY: D. BHALLA
REVISED BY
DATE REVISED

LAST REVISION 08-31-10
DATE PLOTTED => 25-JUN-2011
TIME PLOTTED => 08:14

NOTE: FOR ACCURATE RIGHT OF WAY DATA,
CONTACT RIGHT OF WAY ENGINEERING AT THE DISTRICT OFFICE.

Dist	COUNTY	ROUTE	POST MILES TOTAL PROJECT	SHEET No.	TOTAL SHEETS
07	Ven,SB	101	R39.8/R43.6, 0.0/2.2	139	757

REGISTERED CIVIL ENGINEER DATE

6-20-11
PLANS APPROVAL DATE

REGISTERED PROFESSIONAL ENGINEER
SA K. THAI
No. 71390
Exp. 12/31/11
CIVIL
STATE OF CALIFORNIA

THE STATE OF CALIFORNIA OR ITS OFFICERS OR AGENTS SHALL NOT BE RESPONSIBLE FOR THE ACCURACY OR COMPLETENESS OF SCANNED COPIES OF THIS PLAN SHEET.

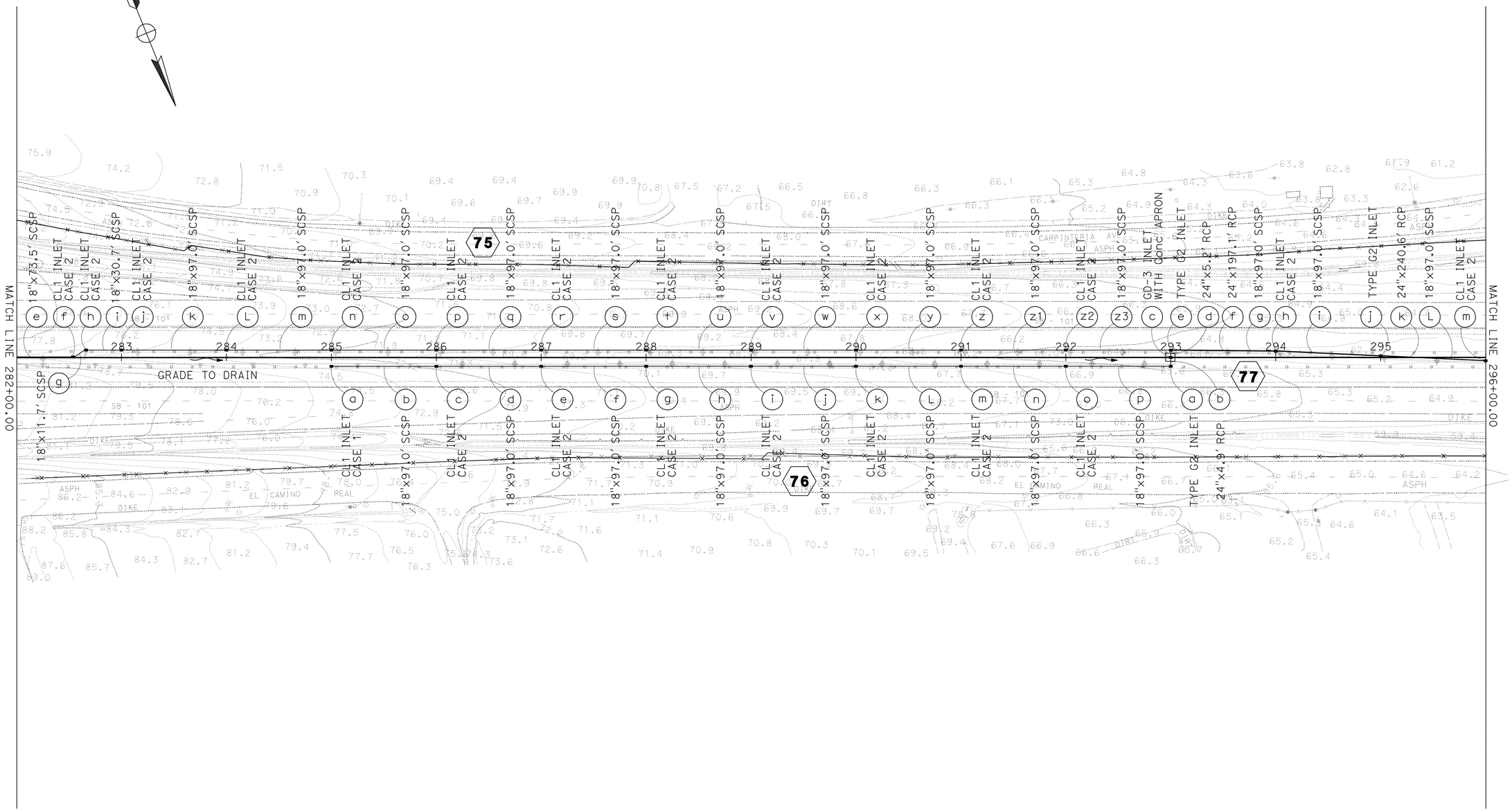

DRAINAGE PLAN

SCALE: 1" = 50'

THIS PLAN ACCURATE FOR DRAINAGE WORK ONLY.

D-21

STATE OF CALIFORNIA - DEPARTMENT OF TRANSPORTATION
Caltrans
HYDRAULICS

FUNCTIONAL SUPERVISOR: DAVE BHALLA
CALCULATED-DESIGNED BY: S. THAI
CHECKED BY: D. BHALLA
REVISED BY
DATE REVISED

LAST REVISION 08-31-10
DATE PLOTTED => 25-JUN-2011
TIME PLOTTED => 08:15

NOTE: FOR ACCURATE RIGHT OF WAY DATA,
CONTACT RIGHT OF WAY ENGINEERING AT THE DISTRICT OFFICE.

Dist	COUNTY	ROUTE	POST MILES TOTAL PROJECT	SHEET No.	TOTAL SHEETS
07	Ven,SB	101	R39.8/R43.6, 0.0/2.2	140	757

REGISTERED CIVIL ENGINEER DATE

6-20-11
PLANS APPROVAL DATE

REGISTERED PROFESSIONAL ENGINEER
SA K. THAI
No. 71390
Exp. 12/31/11
CIVIL
STATE OF CALIFORNIA

THE STATE OF CALIFORNIA OR ITS OFFICERS OR AGENTS SHALL NOT BE RESPONSIBLE FOR THE ACCURACY OR COMPLETENESS OF SCANNED COPIES OF THIS PLAN SHEET.

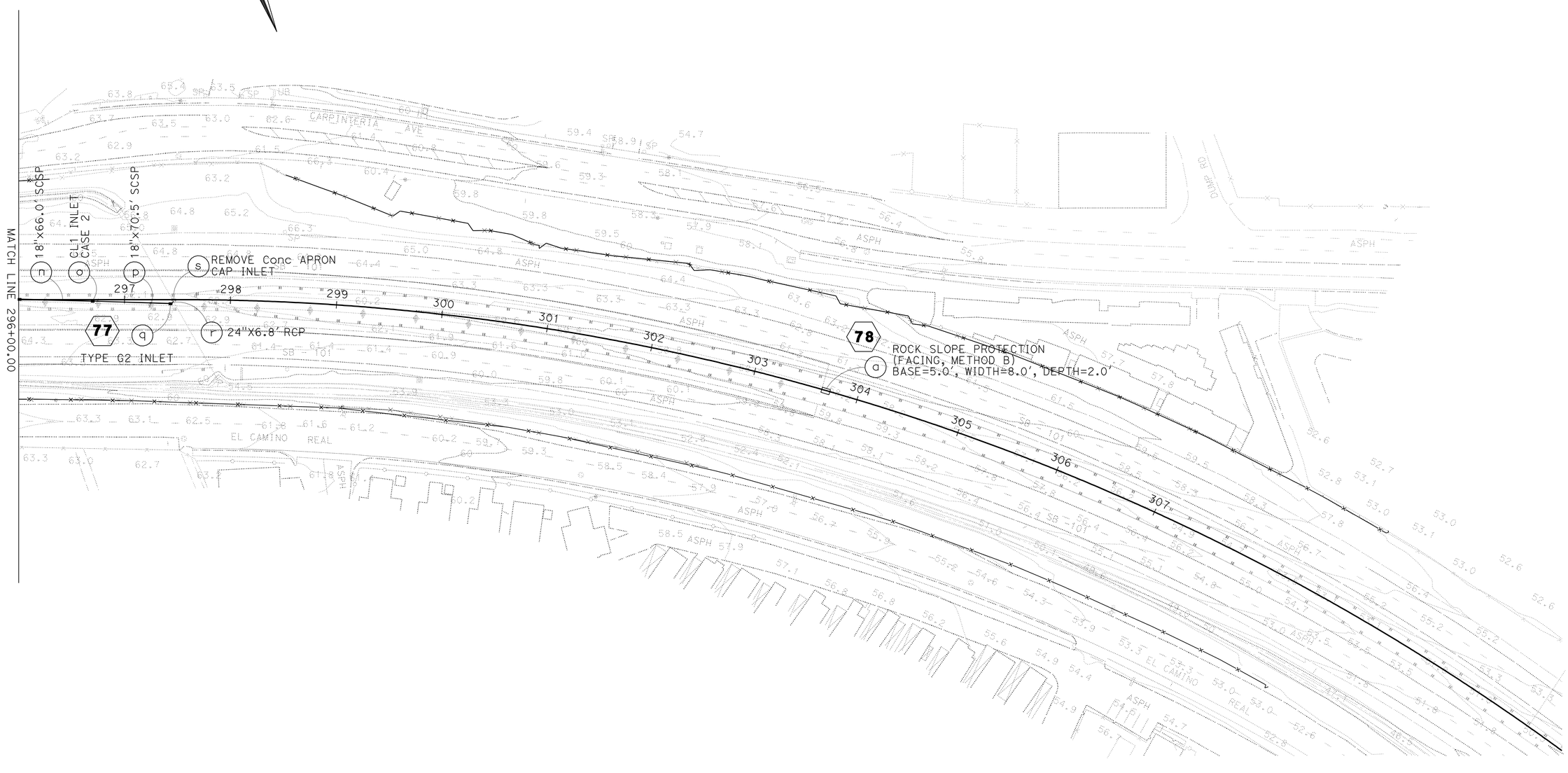

DRAINAGE PLAN

SCALE: 1" = 50'

D-22

THIS PLAN ACCURATE FOR DRAINAGE WORK ONLY.

STATE OF CALIFORNIA - DEPARTMENT OF TRANSPORTATION
Caltrans
HYDRAULICS

FUNCTIONAL SUPERVISOR: DAVE BHALLA

CALCULATED-DESIGNED BY: S. THAI
CHECKED BY: D. BHALLA

REVISED BY
DATE REVISED

LAST REVISION 08-31-10
DATE PLOTTED => 25-JUN-2011
TIME PLOTTED => 08:15

Dist	COUNTY	ROUTE	POST MILES TOTAL PROJECT	SHEET No.	TOTAL SHEETS
07	Ven,SB	101	R39.8/R43.6, 0.0/2.2	141	757

REGISTERED CIVIL ENGINEER DATE

6-20-11
PLANS APPROVAL DATE

REGISTERED PROFESSIONAL ENGINEER
BALDEV K. BHALLA
No. 34350
Exp. 9/30/11
CIVIL
STATE OF CALIFORNIA

THE STATE OF CALIFORNIA OR ITS OFFICERS OR AGENTS SHALL NOT BE RESPONSIBLE FOR THE ACCURACY OR COMPLETENESS OF SCANNED COPIES OF THIS PLAN SHEET.

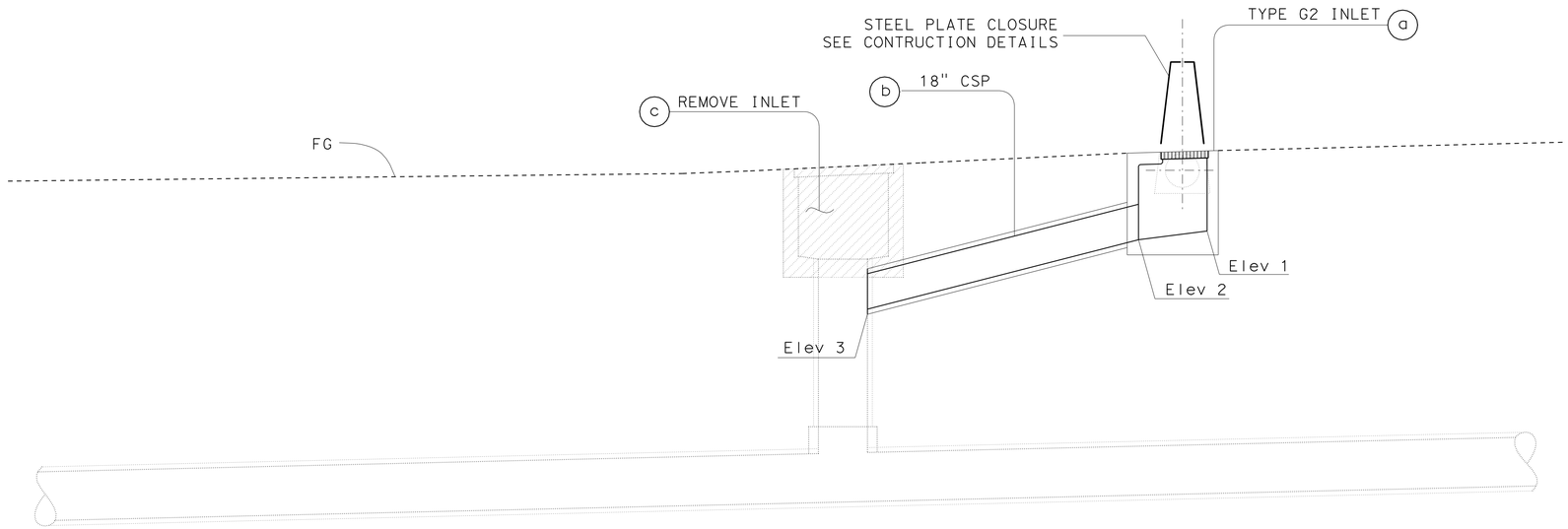

TYPICAL DRAINAGE PROFILE

NO SCALE

DRAINAGE SYSTEM/ UNIT	(a)	(b)	(c)
2	TYPE G2 INLET, H=3.65′; 9.0′ Lt 2+54.00 ℄ Fwy Elev1=41.60; Elev2=41.30	18"x 3.0′ CSP; Elev3=40.85 S=0.1500	11.3′ Lt 2+54.00 ℄ Fwy
* 3	TYPE G2 INLET, H=3.65′; 3.0′ Lt 5+74.00 ℄ Fwy Elev1=40.02; Elev2=39.72	18"x 8.7′ CSP; Elev3=38.72 S=0.1500	11.2′ Lt 5+74.00 ℄ Fwy
4	TYPE G2 INLET, H=3.65′; 1.3′ Lt 7+39.00 ℄ Fwy Elev1=41.35; Elev2=41.05	18"x 11.0′ CSP; Elev3=39.40 S=0.1500	11.6′ Lt 7+39.00 ℄ Fwy
5	TYPE G2 INLET, H=3.65′; 8+98.00 ℄ Fwy Elev1=38.80; Elev2=38.50	18"x 9.6′ CSP; Elev3=37.06 S=0.1500	12.0′ Lt 8+98.00 ℄ Fwy
6	TYPE G2 INLET, H=3.65′; 9+96.00 ℄ Fwy Elev1=38.74; Elev2=38.44	18"x 9.5′ CSP; Elev3=37.02 S=0.1500	11.6′ Lt 9+96.00 ℄ Fwy
7	TYPE G2 INLET, H=3.65′; 11+13.00 ℄ Fwy Elev1=38.15; Elev2=37.85	18"x 9.7′ CSP; Elev3=36.40 S=0.1500	11.7′ Lt 11+13.00 ℄ Fwy
* 8	TYPE G2 INLET, H=3.65′; 12+70.00 ℄ Fwy Elev1=37.55; Elev2=37.25	18"x 10.1′ CSP; Elev3=35.74 S=0.1500	12.5′ Lt 12+70.00 ℄ Fwy
* 9	TYPE G2 INLET, H=3.65′; 14+62.00 ℄ Fwy Elev1=36.80; Elev2=36.50	18"x 10.0′ CSP; Elev3=35.00 S=0.1500	13.2′ Lt 14+62.00 ℄ Fwy
* 10	TYPE G2 INLET, H=3.65′; 16+72.00 ℄ Fwy Elev1=36.45; Elev2=36.15	18"x 9.2′ CSP; Elev3=34.75 S=0.1500	11.7′ Lt 16+72.00 ℄ Fwy
* 11	TYPE G2 INLET, H=3.65′; 18+47.00 ℄ Fwy Elev1=35.75; Elev2=35.45	18"x 10.5′ CSP; Elev3=33.88 S=0.1500	12.0′ Lt 18+47.00 ℄ Fwy
* 12	TYPE G2 INLET, H=3.65′; 21+23.00 ℄ Fwy Elev1=35.21; Elev2=34.91	18"x 10.7′ CSP; Elev3=33.30 S=0.1500	12.5′ Lt 21+23.00 ℄ Fwy
* 13	TYPE G2 INLET, H=3.65′; 23+82.00 ℄ Fwy Elev1=34.20; Elev2=33.90	18"x 11.6′ CSP; Elev3=32.15 S=0.1500	13.3′ Lt 23+82.00 ℄ Fwy
* 14	TYPE G2 INLET, H=3.65′; 26+34.00 ℄ Fwy Elev1=33.30; Elev2=33.00	18"x 11.5′ CSP; Elev3=31.30 S=0.1500	13.5′ Lt 26+64.00 ℄ Fwy
15	TYPE G2 INLET, H=3.65′; 27+84.00 ℄ Fwy Elev1=32.50; Elev2=32.20	18"x 12.0′ CSP; Elev3=30.40 S=0.1500	13.6′ Lt 27+84.00 ℄ Fwy

DRAINAGE SYSTEM/ UNIT	(a)	(b)	(c)
* 16	TYPE G2 INLET, H=3.65′; 30+54.00 ℄ Fwy Elev1=31.73; Elev2=31.43	18"x 12.4′ CSP; Elev3=29.55 S=0.1500	13.8′ Lt 30+54.00 C Fwy
* 17	TYPE G2 INLET, H=3.65′; 2.3′ Rt 33+19.00 ℄ Fwy Elev1=30.70; Elev2=30.40	18"x 14.3′ CSP; Elev3=28.25 S=0.1500	15.6′ Lt 33+19.00 ℄ Fwy
* 22	TYPE G2 INLET, H=5.0′; 23.5′ Rt 43+42.00 ℄ Fwy Elev1=26.45; Elev2=26.15	18"x 7.6′ CSP; Elev3=25.01 S=0.1500	12.0′ Rt 43+42.00 ℄ Fwy
29	TYPE G2 INLET, H=3.5′; 10.65′Rt 63+71.00 ℄ Fwy Elev1=22.27; Elev2=21.97	18"x 11.7′ CSP; Elev3=20.22 S=0.1500	3.7′ Lt 63+71.00 ℄ Fwy
32	TYPE G2 INLET, H=3.5′; 10.9′ Rt 69+02.00 ℄ Fwy Elev1=20.65; Elev2=20.35	18"x 14.0′ CSP; Elev3=18.25 S=0.1500	5.7′ Lt 69+02.00 ℄ Fwy

* SEE D- AND DQ- SHEETS FOR ADDITIONAL DRAINAGE UNIT DETAILS.

THIS PLAN ACCURATE FOR DRAINAGE WORK ONLY.

DRAINAGE PROFILE
DP-1

STATE OF CALIFORNIA - DEPARTMENT OF TRANSPORTATION
Caltrans
HYDRAULICS
FUNCTIONAL SUPERVISOR: DAVE BHALLA
CALCULATED-DESIGNED BY: C.P.NGUYEN
CHECKED BY: D.BHALLA
REVISED BY
DATE REVISED

LAST REVISION 08-31-10
DATE PLOTTED => 25-JUN-2011
TIME PLOTTED => 08:15

Dist	COUNTY	ROUTE	POST MILES TOTAL PROJECT	SHEET No.	TOTAL SHEETS
07	Ven,SB	101	R39.8/R43.6, 0.0/2.2	142	757

REGISTERED CIVIL ENGINEER DATE

6-20-11
PLANS APPROVAL DATE

REGISTERED PROFESSIONAL ENGINEER BALDEV K. BHALLA No. 34350 Exp. 9/30/11 CIVIL STATE OF CALIFORNIA

THE STATE OF CALIFORNIA OR ITS OFFICERS OR AGENTS SHALL NOT BE RESPONSIBLE FOR THE ACCURACY OR COMPLETENESS OF SCANNED COPIES OF THIS PLAN SHEET.

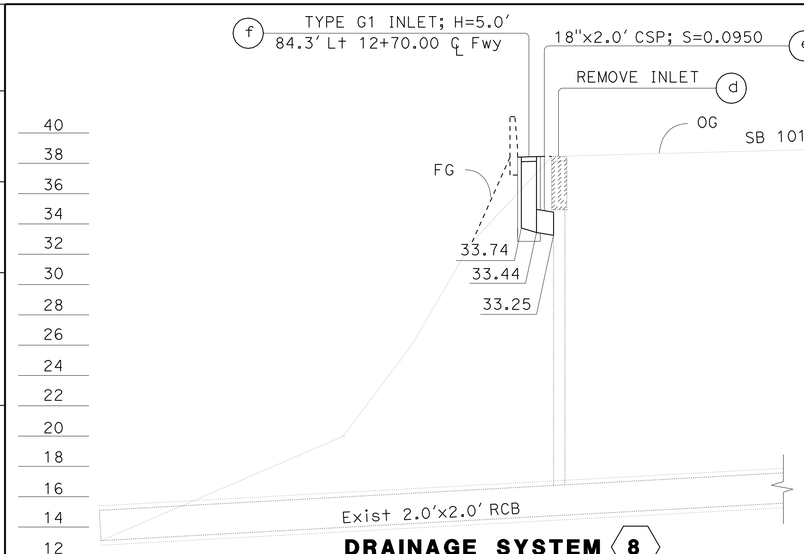

DRAINAGE SYSTEM 8
SCALE: 1":10' Horiz
1":5' Vert

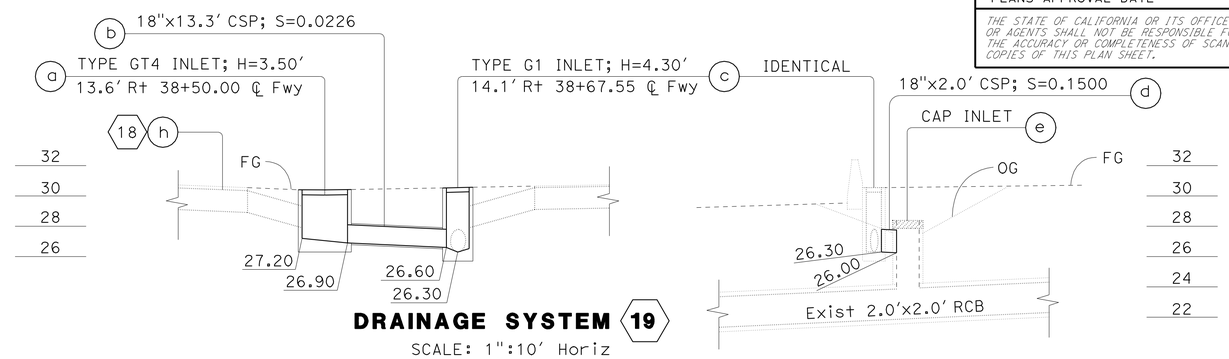

DRAINAGE SYSTEM 19
SCALE: 1":10' Horiz
1":5' Vert

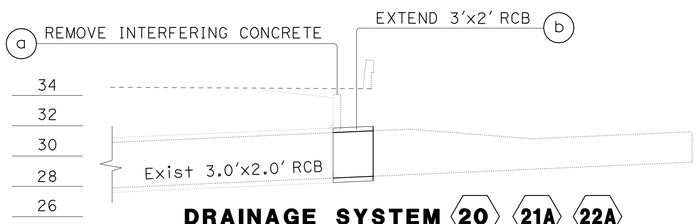

DRAINAGE SYSTEM 20 21A 22A
SCALE: 1":10' Horiz
1":5' Vert

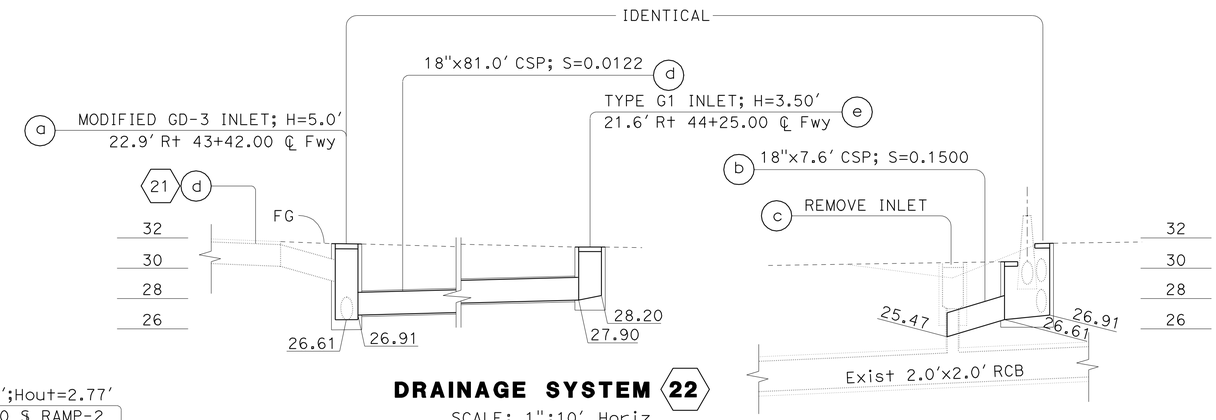

DRAINAGE SYSTEM 22
SCALE: 1":10' Horiz
1":5' Vert

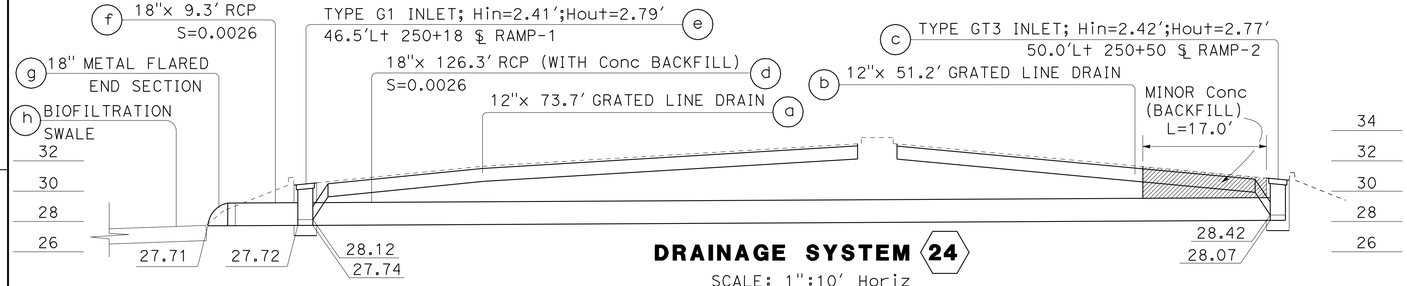

DRAINAGE SYSTEM 24
SCALE: 1":10' Horiz
1":5' Vert

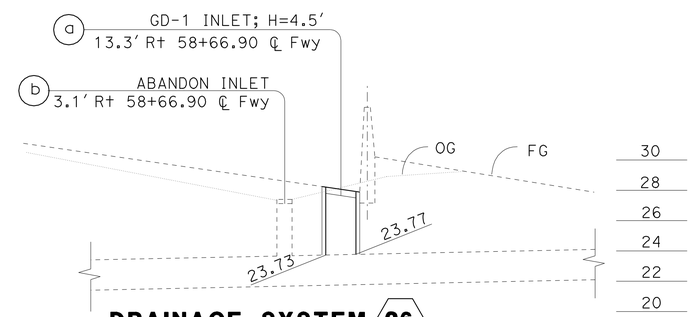

DRAINAGE SYSTEM 26
SCALE: 1":10' Horiz
1":5' Vert

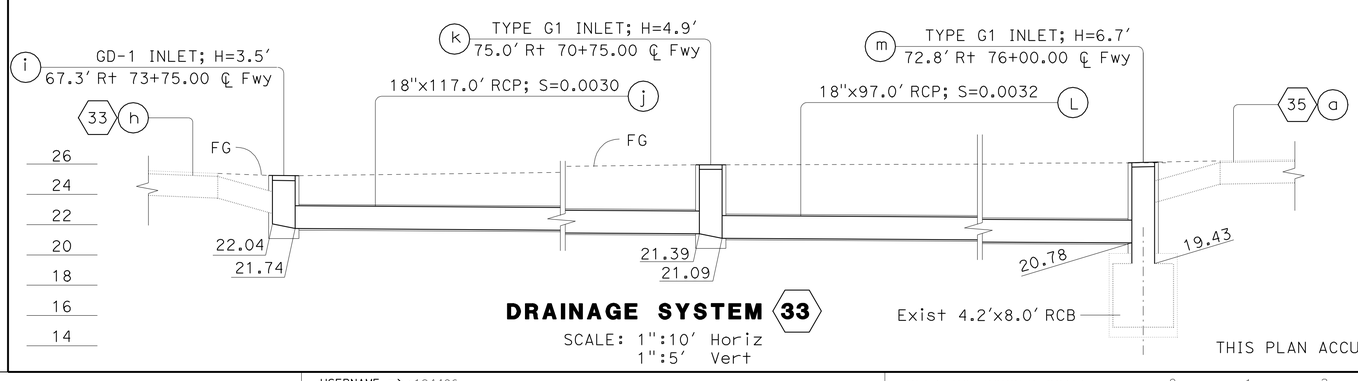

DRAINAGE SYSTEM 33
SCALE: 1":10' Horiz
1":5' Vert

THIS PLAN ACCURATE FOR DRAINAGE WORK ONLY.

DRAINAGE PROFILE
SCALE AS SHOWN
DP-2

STATE OF CALIFORNIA - DEPARTMENT OF TRANSPORTATION
Caltrans
HYDRAULICS

FUNCTIONAL SUPERVISOR: DAVE BHALLA
CALCULATED-DESIGNED BY: C.P.NGUYEN
CHECKED BY: D.BHALLA
REVISED BY
DATE REVISED

LAST REVISION 08-31-10
DATE PLOTTED => 25-JUN-2011
TIME PLOTTED => 08:15

Dist	COUNTY	ROUTE	POST MILES TOTAL PROJECT	SHEET No.	TOTAL SHEETS
07	Ven,SB	101	R39.8/R43.6, 0.0/2.2	143	757

REGISTERED CIVIL ENGINEER DATE

6-20-11
PLANS APPROVAL DATE

REGISTERED PROFESSIONAL ENGINEER BALDEV K. BHALLA No. 34350 Exp. 9/30/11 CIVIL STATE OF CALIFORNIA

THE STATE OF CALIFORNIA OR ITS OFFICERS OR AGENTS SHALL NOT BE RESPONSIBLE FOR THE ACCURACY OR COMPLETENESS OF SCANNED COPIES OF THIS PLAN SHEET.

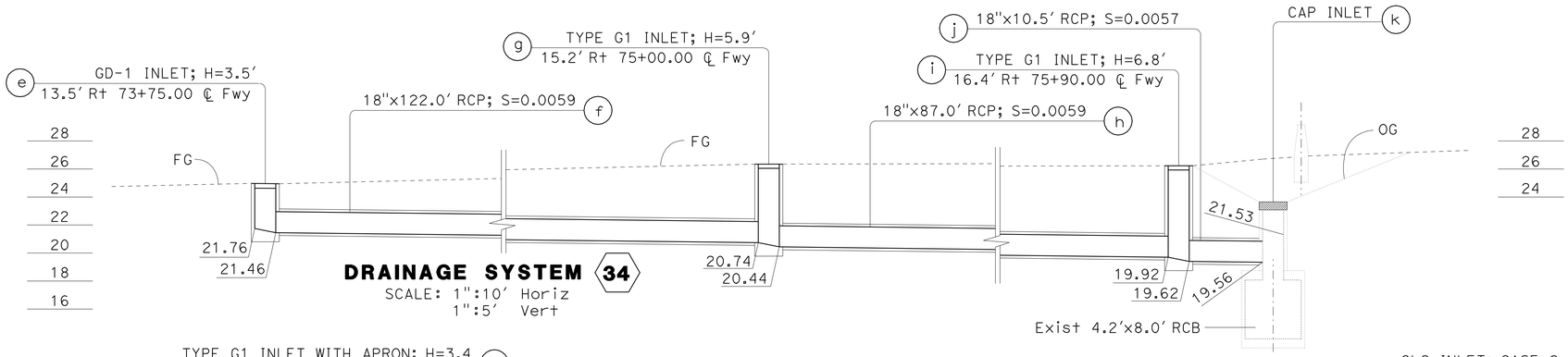

DRAINAGE SYSTEM 34
SCALE: 1":10′ Horiz
1":5′ Vert

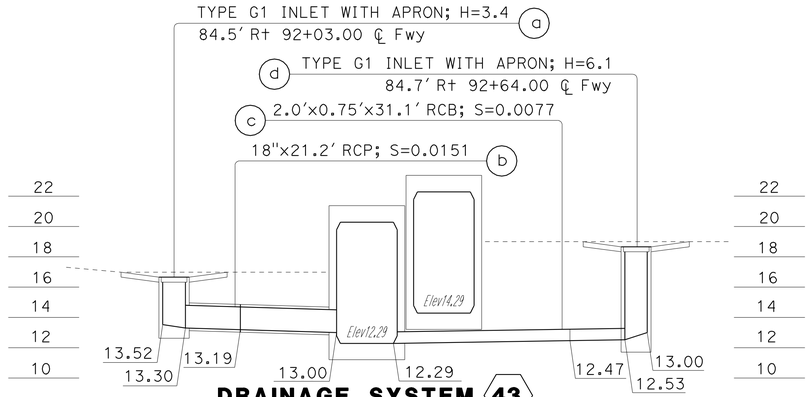

DRAINAGE SYSTEM 43
SCALE: 1":10′ Horiz
1":5′ Vert

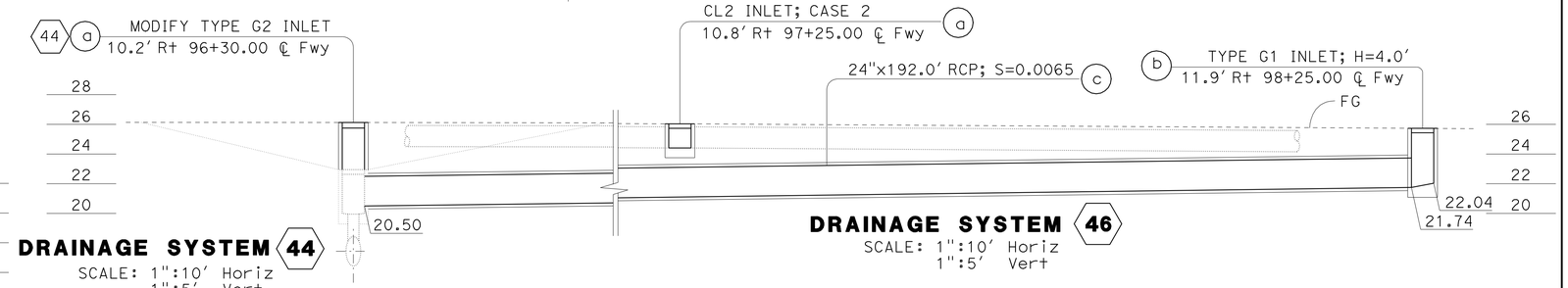

DRAINAGE SYSTEM 44
SCALE: 1":10′ Horiz
1":5′ Vert

DRAINAGE SYSTEM 46
SCALE: 1":10′ Horiz
1":5′ Vert

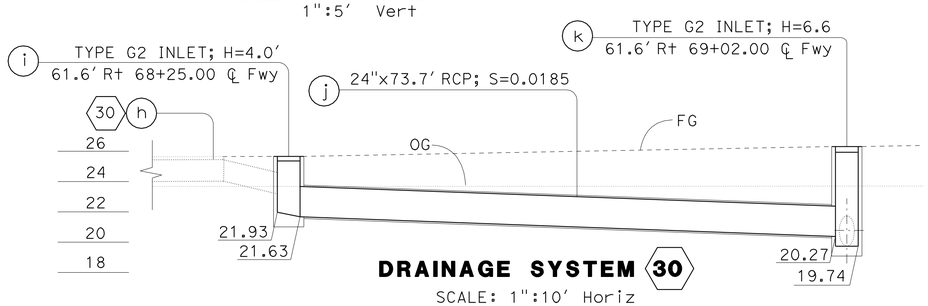

DRAINAGE SYSTEM 30
SCALE: 1":10′ Horiz
1":5′ Vert

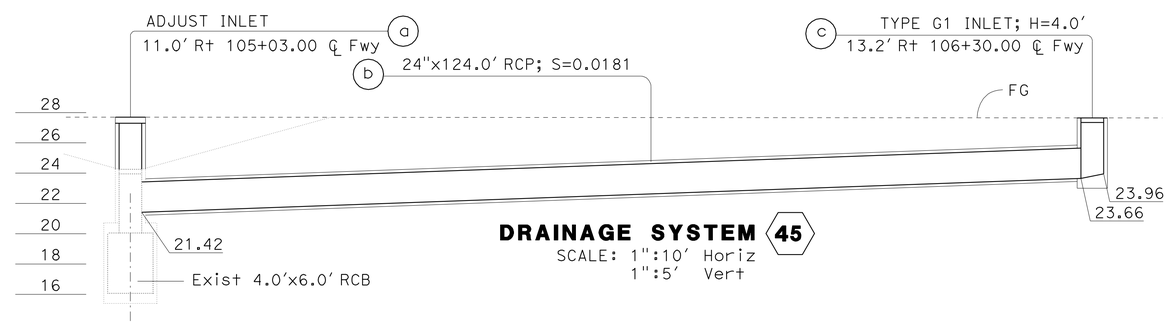

DRAINAGE SYSTEM 45
SCALE: 1":10′ Horiz
1":5′ Vert

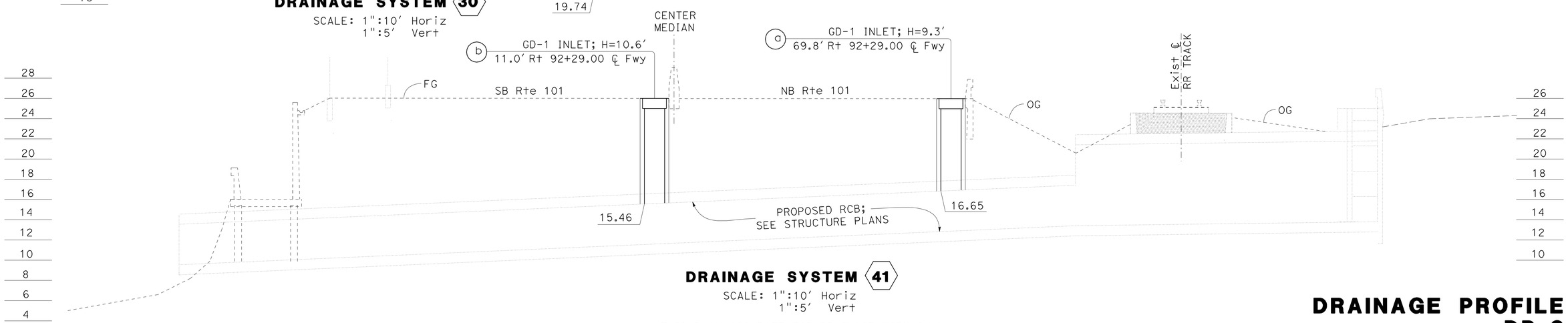

DRAINAGE SYSTEM 41
SCALE: 1":10′ Horiz
1":5′ Vert

THIS PLAN ACCURATE FOR DRAINAGE WORK ONLY.

DRAINAGE PROFILE
SCALE AS SHOWN **DP-3**

STATE OF CALIFORNIA - DEPARTMENT OF TRANSPORTATION
Caltrans
HYDRAULICS

FUNCTIONAL SUPERVISOR: DAVE BHALLA
CALCULATED-DESIGNED BY: C.P.NGUYEN
CHECKED BY: D.BHALLA
REVISED BY / DATE REVISED

LAST REVISION 08-31-10
DATE PLOTTED => 25-JUN-2011
TIME PLOTTED => 08:15

Dist	COUNTY	ROUTE	POST MILES TOTAL PROJECT	SHEET No.	TOTAL SHEETS
07	Ven,SB	101	R39.8/R43.6, 0.0/2.2	144	757

REGISTERED CIVIL ENGINEER DATE

6-20-11
PLANS APPROVAL DATE

REGISTERED PROFESSIONAL ENGINEER SA K. THAI No. 71390 Exp. 12/31/11 CIVIL STATE OF CALIFORNIA

THE STATE OF CALIFORNIA OR ITS OFFICERS OR AGENTS SHALL NOT BE RESPONSIBLE FOR THE ACCURACY OR COMPLETENESS OF SCANNED COPIES OF THIS PLAN SHEET.

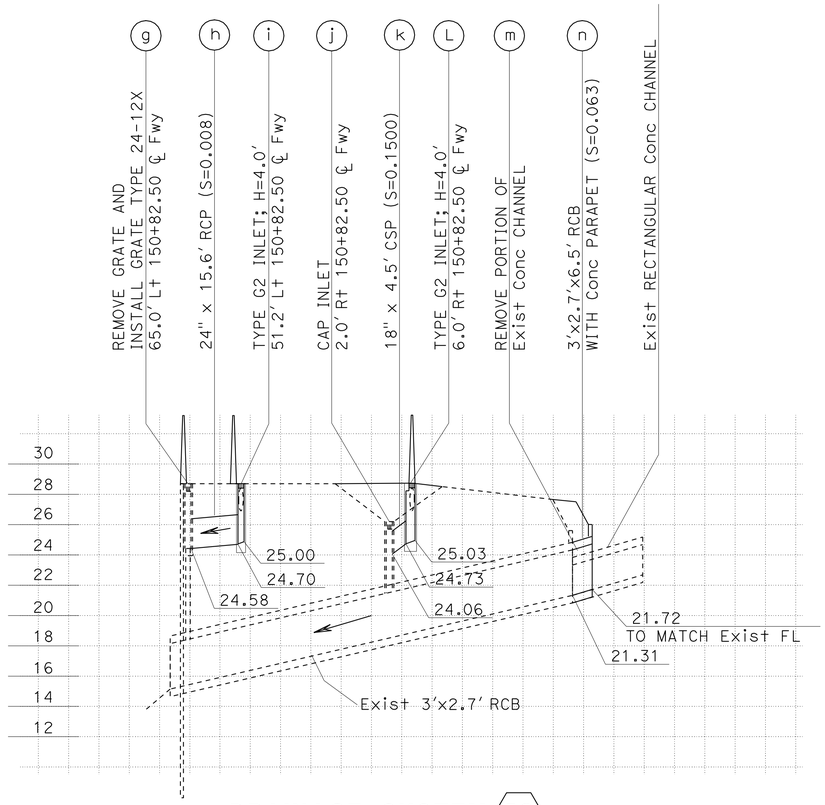

DRAINAGE SYSTEM 53
SCALE: 1":10' Horz
1":5' Vert

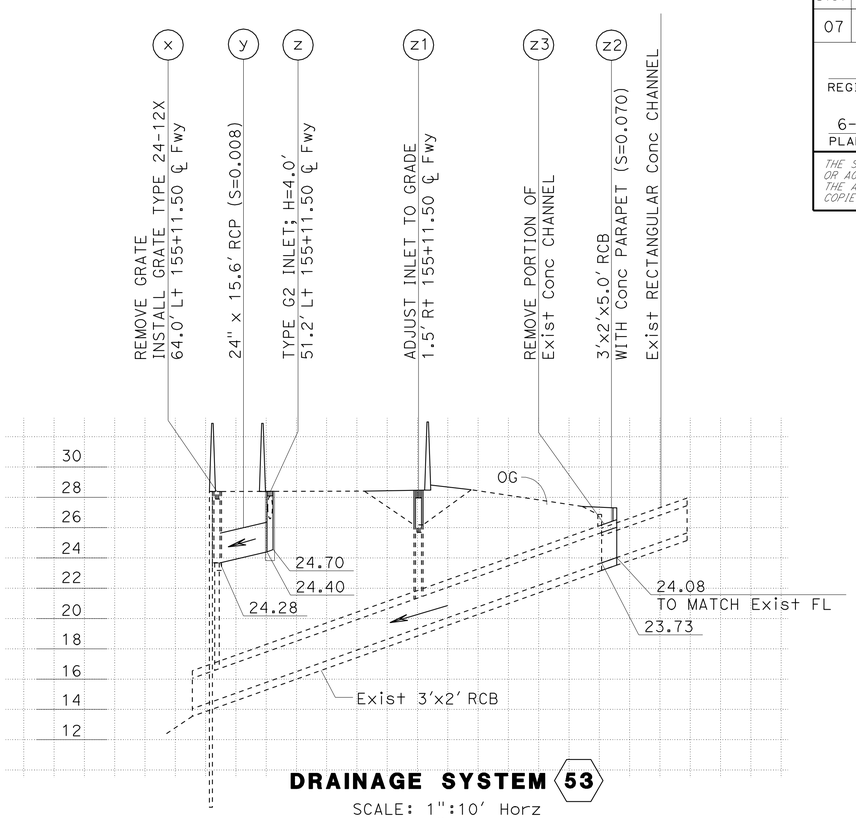

DRAINAGE SYSTEM 53
SCALE: 1":10' Horz
1":5' Vert

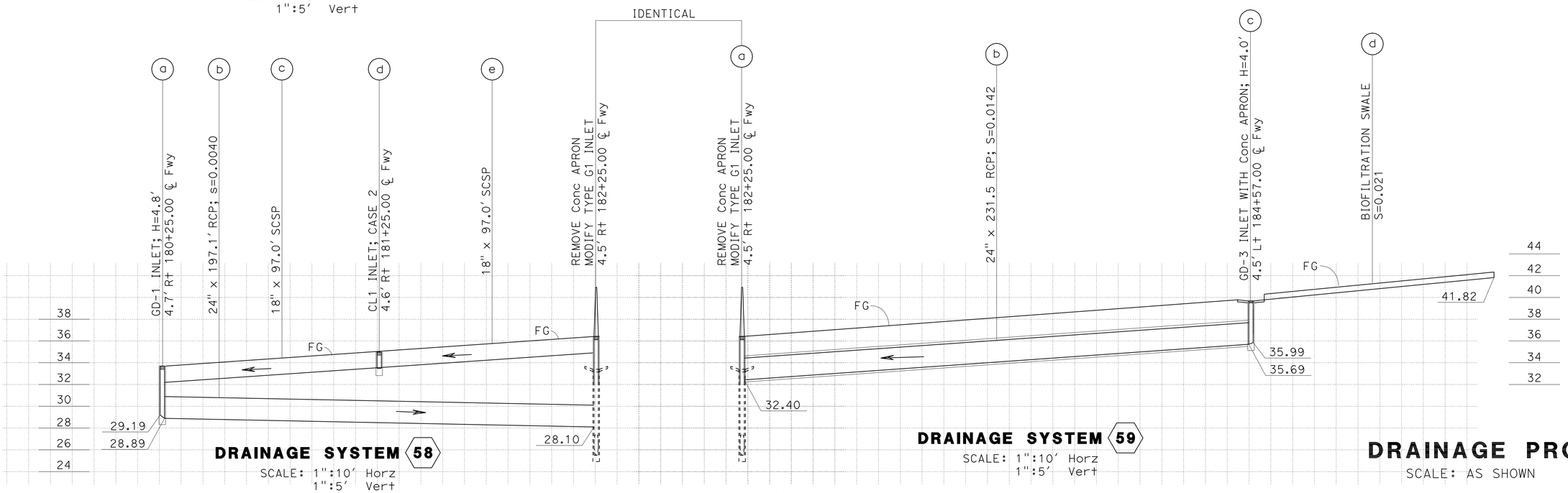

DRAINAGE SYSTEM 58
SCALE: 1":10' Horz
1":5' Vert

DRAINAGE SYSTEM 59
SCALE: 1":10' Horz
1":5' Vert

DRAINAGE PROFILE
SCALE: AS SHOWN

THIS PLAN ACCURATE FOR DRAINAGE WORK ONLY.

DP-4

STATE OF CALIFORNIA - DEPARTMENT OF TRANSPORTATION
Caltrans
HYDRAULICS
FUNCTIONAL SUPERVISOR: DAVE BHALLA
CALCULATED-DESIGNED BY: S. THAI
CHECKED BY: D. BHALLA
REVISED BY
DATE REVISED

LAST REVISION 08-31-10
DATE PLOTTED => 25-JUN-2011
TIME PLOTTED => 08:15

Dist	COUNTY	ROUTE	POST MILES TOTAL PROJECT	SHEET No.	TOTAL SHEETS
07	Ven,SB	101	R39.8/R43.6, 0.0/2.2	145	757

REGISTERED CIVIL ENGINEER DATE

6-20-11
PLANS APPROVAL DATE

REGISTERED PROFESSIONAL ENGINEER
SA K. THAI
No. 71390
Exp. 12/31/11
CIVIL
STATE OF CALIFORNIA

THE STATE OF CALIFORNIA OR ITS OFFICERS OR AGENTS SHALL NOT BE RESPONSIBLE FOR THE ACCURACY OR COMPLETENESS OF SCANNED COPIES OF THIS PLAN SHEET.

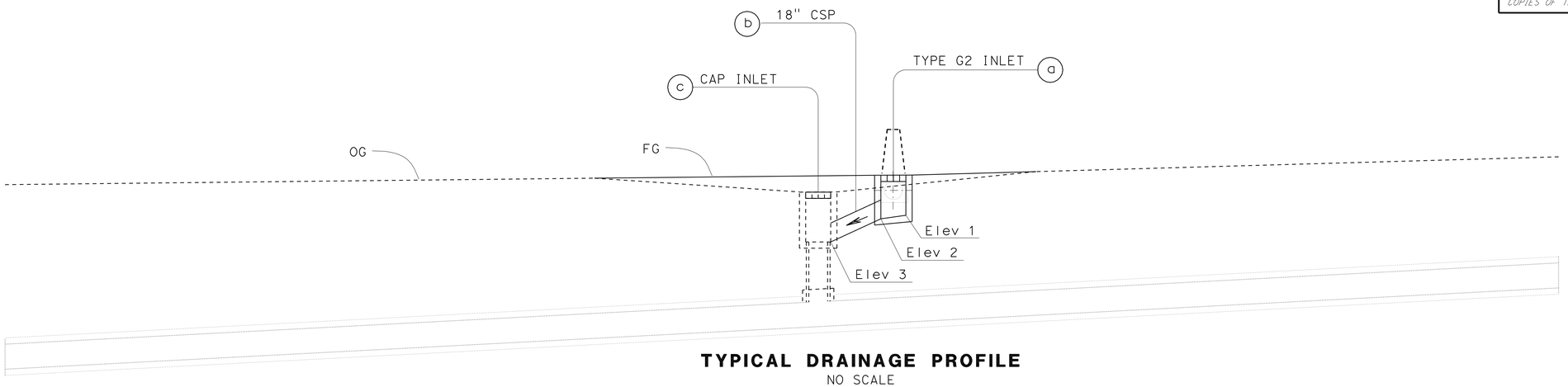

TYPICAL DRAINAGE PROFILE
NO SCALE

DRAINAGE SYSTEM/ UNIT	a	b	c
* 54	TYPE G2 INLET, H=4.5′; 6.9′ R† 159+85.00 ℄ Fwy, Elev1=24.08; Elev2=23.78	18"x 4.1′ CSP; Elev3=23.17 S=0.1500	2.4′ R† 159+85.00 ℄ Fwy
* 55	TYPE G2 INLET, H=3.5′; 12.0′ R† 167+06.00 ℄ Fwy Elev1=23.82; Elev2=23.52	18"x 3.7′ CSP; Elev3=22.97 S=0.1500	8.9′ R† 167+06.00 ℄ Fwy
* 56	TYPE G2 INLET, H=3.5′; 13.0′ R† 170+47.50 ℄ Fwy Elev1=24.72; Elev2=24.42	18"x 3.7′ CSP; Elev3=23.87 S=0.1500	9.6′ R† 170+47.60 ℄ Fwy
* 57	TYPE G2 INLET, H=3.5′; 10.0′R† 175+78.00 ℄ Fwy Elev1=25.43; Elev2=25.13	18"x 2.5′ CSP; Elev3=24.76 S=0.1500	5.5′ R† 175+78.00 ℄ Fwy

* SEE D- AND DQ- SHEETS FOR ADDITIONAL DRAINAGE UNITS DETAILS

THIS PLAN ACCURATE FOR DRAINAGE WORK ONLY.

DRAINAGE PROFILE
SCALE: AS SHOWN
DP- 5

STATE OF CALIFORNIA - DEPARTMENT OF TRANSPORTATION
Caltrans
HYDRAULICS

FUNCTIONAL SUPERVISOR: DAVE BHALLA
CALCULATED-DESIGNED BY: S. THAI
CHECKED BY: D. BHALLA
REVISED BY
DATE REVISED

LAST REVISION 08-31-10
DATE PLOTTED => 25-JUN-2011
TIME PLOTTED => 08:15

Dist	COUNTY	ROUTE	POST MILES TOTAL PROJECT	SHEET No.	TOTAL SHEETS
07	Ven,SB	101	R39.8/R43.6, 0.0/2.2	146	757

REGISTERED CIVIL ENGINEER DATE

6-20-11
PLANS APPROVAL DATE

REGISTERED PROFESSIONAL ENGINEER SA K. THAI No. 71390 Exp. 12/31/11 CIVIL STATE OF CALIFORNIA

THE STATE OF CALIFORNIA OR ITS OFFICERS OR AGENTS SHALL NOT BE RESPONSIBLE FOR THE ACCURACY OR COMPLETENESS OF SCANNED COPIES OF THIS PLAN SHEET.

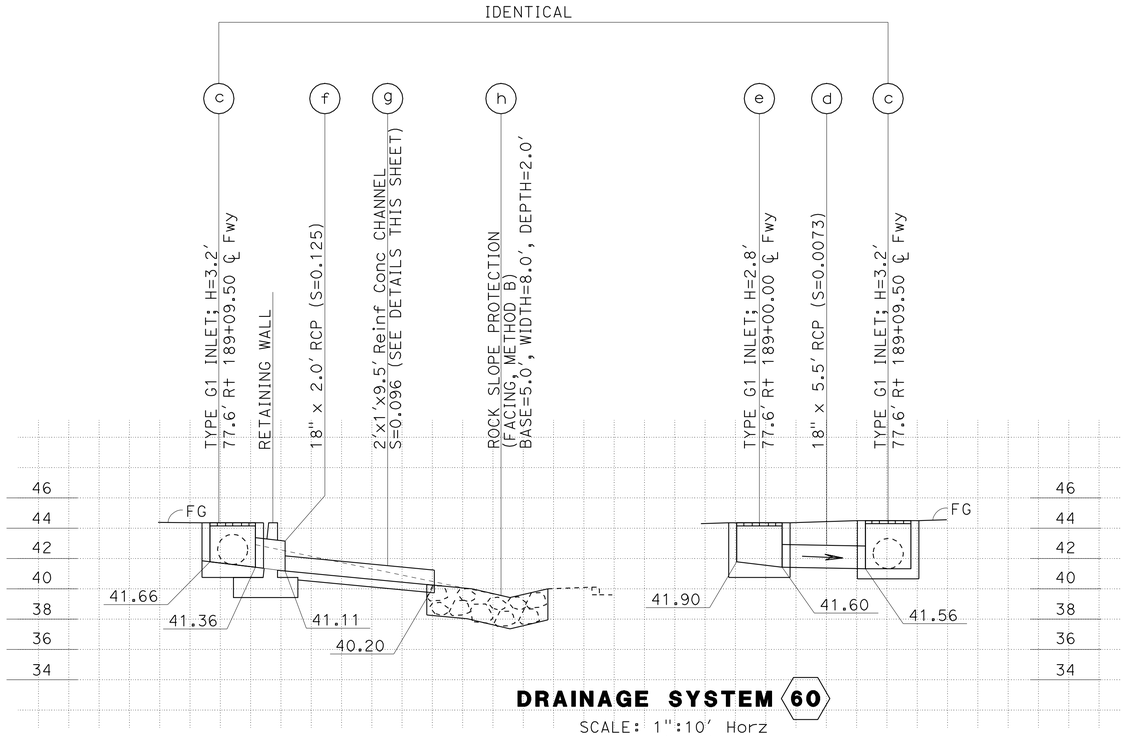

DRAINAGE SYSTEM 60

SCALE: 1":10′ Horz
1":10′ Vert

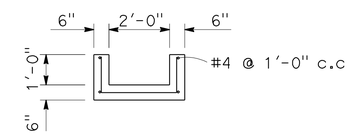

Reinf Conc CHANNEL DETAIL

NO SCALE

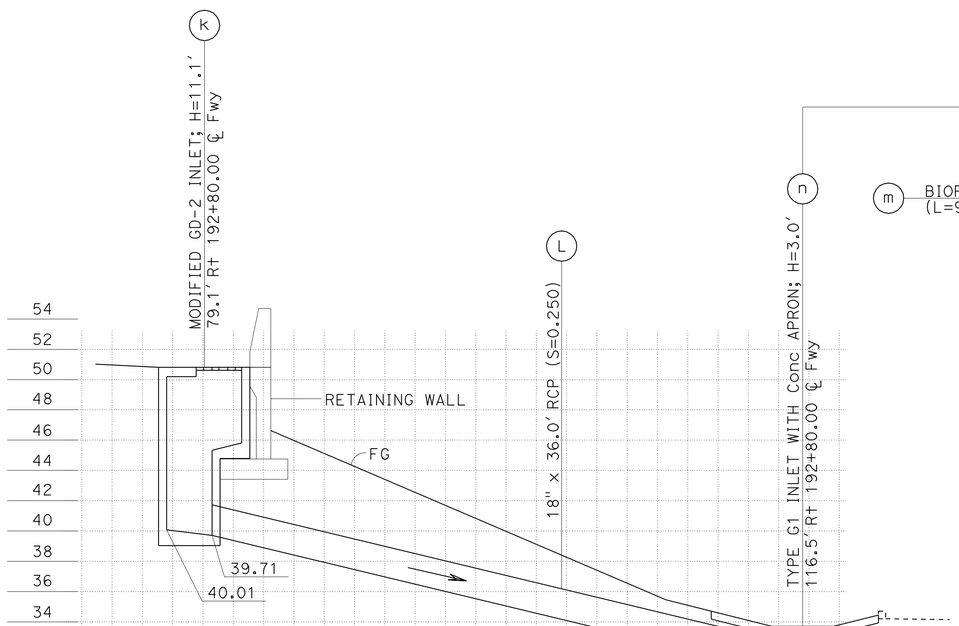

DRAINAGE SYSTEM 60

SCALE: 1":10′ Horz
1":10′ Vert

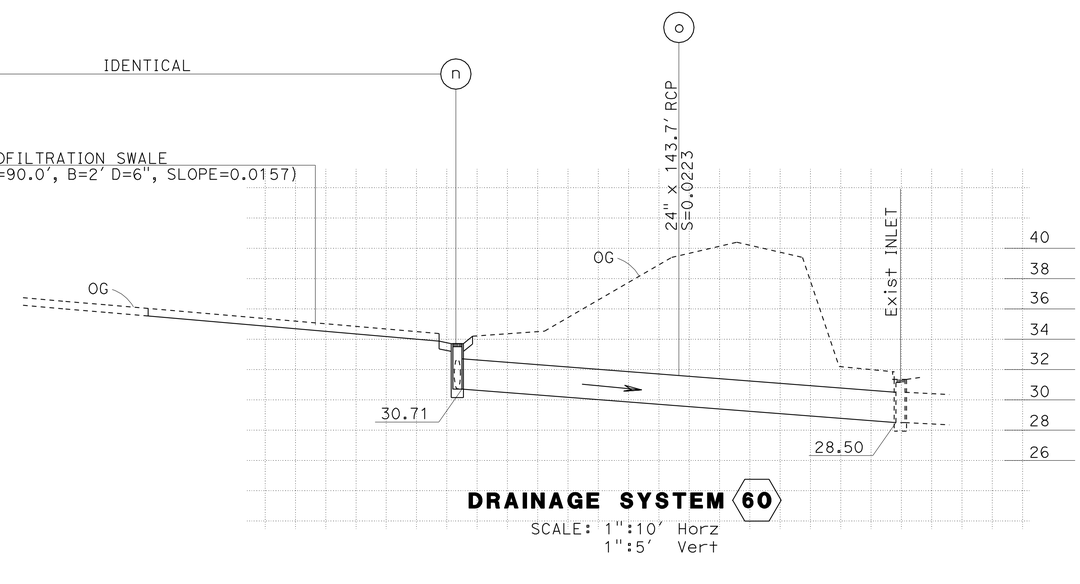

DRAINAGE SYSTEM 60

SCALE: 1":10′ Horz
1":5′ Vert

THIS PLAN ACCURATE FOR DRAINAGE WORK ONLY.

DRAINAGE PROFILE

SCALE: AS SHOWN

DP-6

STATE OF CALIFORNIA - DEPARTMENT OF TRANSPORTATION
Caltrans
HYDRAULICS

FUNCTIONAL SUPERVISOR: DAVE BHALLA
CALCULATED-DESIGNED BY: S. THAI
CHECKED BY: D. BHALLA
REVISED BY
DATE REVISED

LAST REVISION 08-31-10
DATE PLOTTED => 25-JUN-2011
TIME PLOTTED => 08:15

Dist	COUNTY	ROUTE	POST MILES TOTAL PROJECT	SHEET No.	TOTAL SHEETS
07	Ven,SB	101	R39.8/R43.6, 0.0/2.2	147	757

REGISTERED CIVIL ENGINEER DATE

6-20-11
PLANS APPROVAL DATE

REGISTERED PROFESSIONAL ENGINEER SA K. THAI No. 71390 Exp. 12/31/11 CIVIL STATE OF CALIFORNIA

THE STATE OF CALIFORNIA OR ITS OFFICERS OR AGENTS SHALL NOT BE RESPONSIBLE FOR THE ACCURACY OR COMPLETENESS OF SCANNED COPIES OF THIS PLAN SHEET.

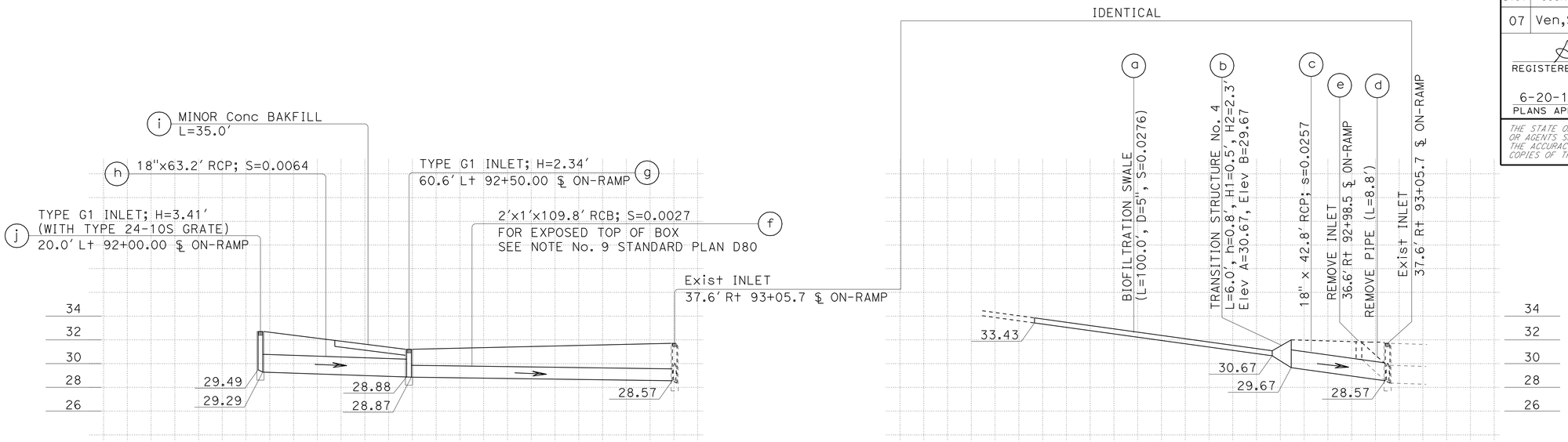

DRAINAGE SYSTEM (61)
SCALE: 1":10' Horz
1":5' Vert

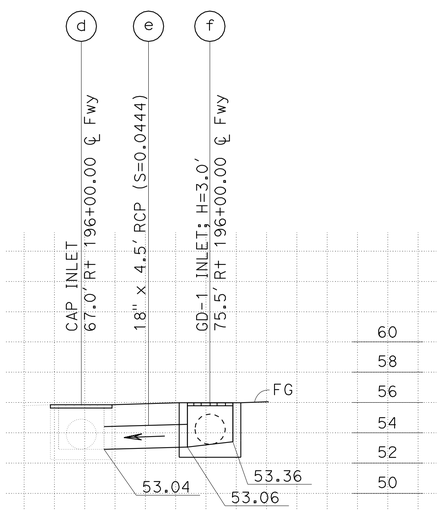

DRAINAGE SYSTEM (64)
SCALE: 1":10' Horz
1":10' Vert

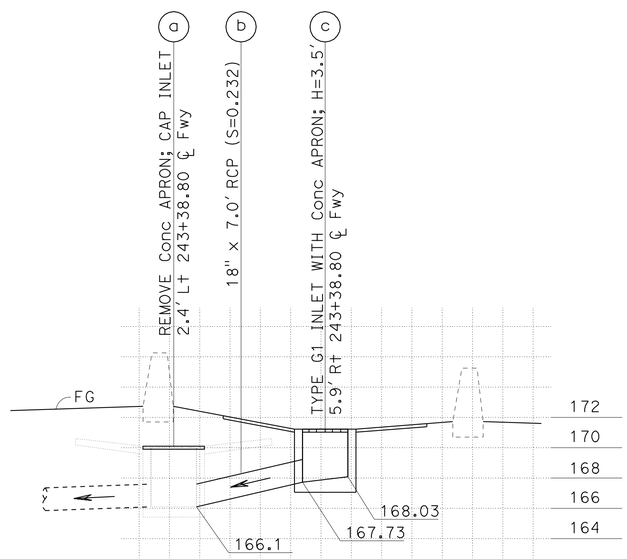

DRAINAGE SYSTEM (70)
SCALE: 1":10' Horz
1":10' Vert

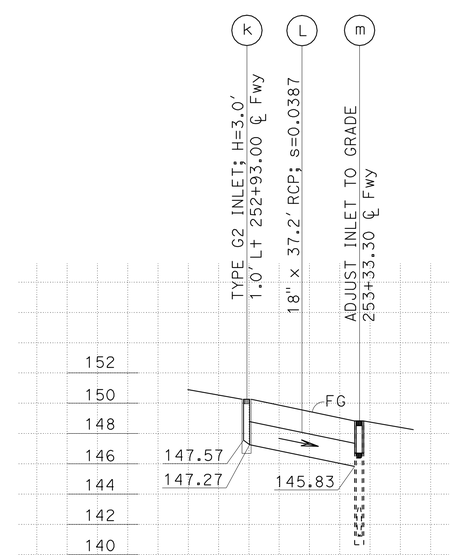

DRAINAGE SYSTEM (71)
SCALE: 1":10' Horz
1":5' Vert

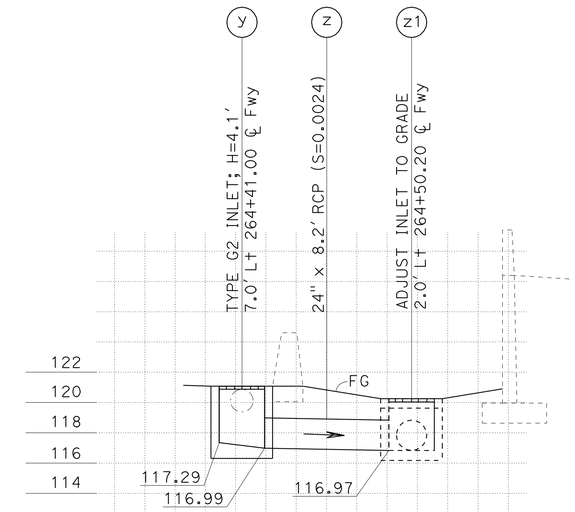

DRAINAGE SYSTEM (72)
SCALE: 1":10' Horz
1":10' Vert

DRAINAGE PROFILE

SCALE: AS SHOWN

DP-7

THIS PLAN ACCURATE FOR DRAINAGE WORK ONLY.

STATE OF CALIFORNIA - DEPARTMENT OF TRANSPORTATION
Caltrans
HYDRAULICS
FUNCTIONAL SUPERVISOR: DAVE BHALLA
CALCULATED-DESIGNED BY: S. THAI
CHECKED BY: D. BHALLA
REVISED BY / DATE REVISED

LAST REVISION 08-31-10 | DATE PLOTTED => 25-JUN-2011 | TIME PLOTTED => 08:15

Dist	COUNTY	ROUTE	POST MILES TOTAL PROJECT	SHEET No.	TOTAL SHEETS
07	Ven,SB	101	R39.8/R43.6, 0.0/2.2	148	757

REGISTERED CIVIL ENGINEER DATE

6-20-11
PLANS APPROVAL DATE

REGISTERED PROFESSIONAL ENGINEER SA K. THAI No. 71390 Exp. 12/31/11 CIVIL STATE OF CALIFORNIA

THE STATE OF CALIFORNIA OR ITS OFFICERS OR AGENTS SHALL NOT BE RESPONSIBLE FOR THE ACCURACY OR COMPLETENESS OF SCANNED COPIES OF THIS PLAN SHEET.

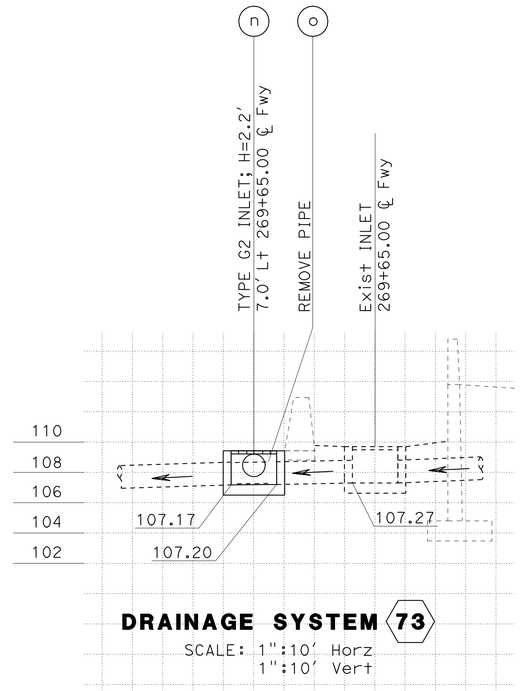

DRAINAGE SYSTEM 73
SCALE: 1":10′ Horz
1":10′ Vert

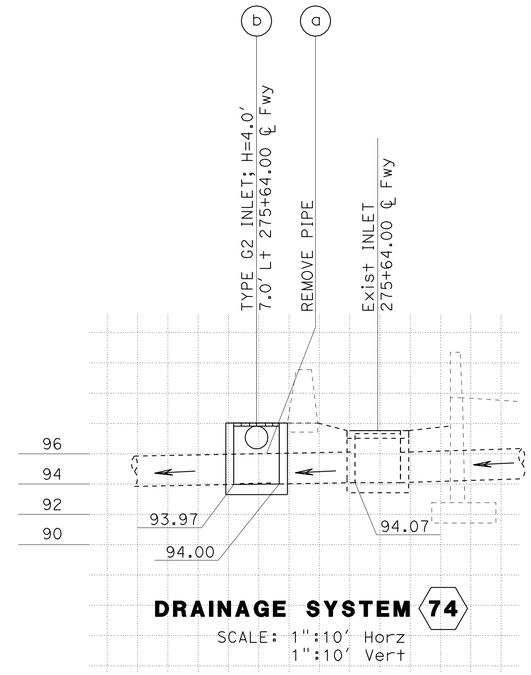

DRAINAGE SYSTEM 74
SCALE: 1":10′ Horz
1":10′ Vert

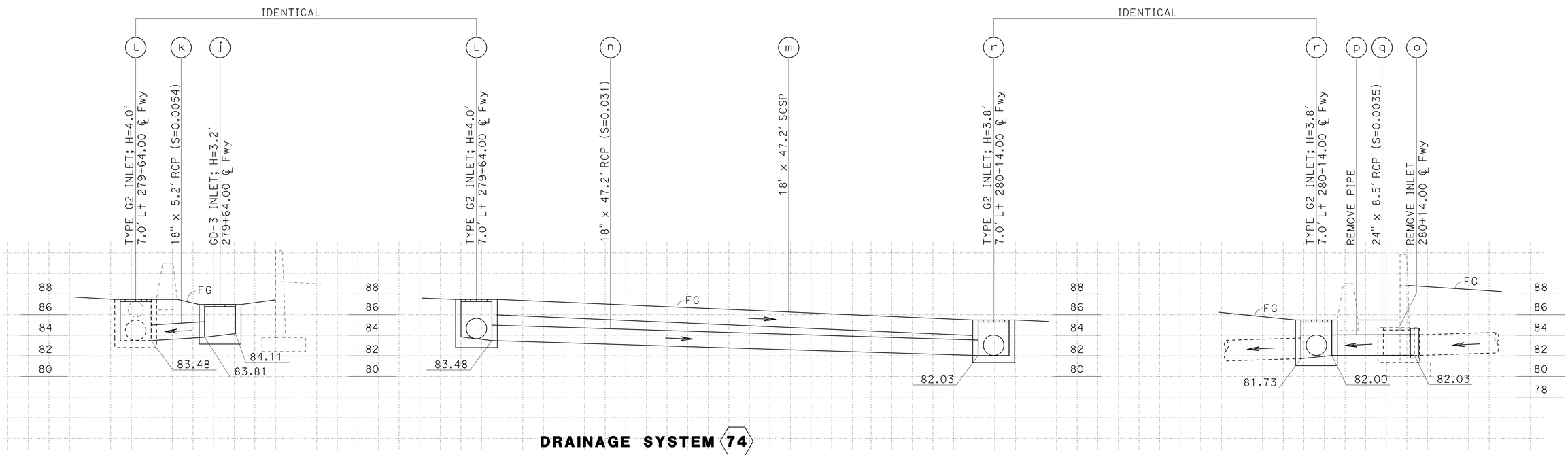

DRAINAGE SYSTEM 74
SCALE: 1":10′ Horz
1":10′ Vert

THIS PLAN ACCURATE FOR DRAINAGE WORK ONLY.

DRAINAGE PROFILE

SCALE: AS SHOWN

DP- 8

REVISED BY	DATE REVISED

CALCULATED-DESIGNED BY: S. THAI
CHECKED BY: D. BHALLA
FUNCTIONAL SUPERVISOR: DAVE BHALLA

STATE OF CALIFORNIA - DEPARTMENT OF TRANSPORTATION
Caltrans
HYDRAULICS

LAST REVISION 08-31-10
DATE PLOTTED => 25-JUN-2011
TIME PLOTTED => 08:16

Dist	COUNTY	ROUTE	POST MILES TOTAL PROJECT	SHEET No.	TOTAL SHEETS
07	Ven,SB	101	R39.8/R43.6, 0.0/2.2	149	757

REGISTERED CIVIL ENGINEER DATE

6-20-11
PLANS APPROVAL DATE

REGISTERED PROFESSIONAL ENGINEER SA K. THAI No. 71390 Exp. 12/31/11 CIVIL STATE OF CALIFORNIA

THE STATE OF CALIFORNIA OR ITS OFFICERS OR AGENTS SHALL NOT BE RESPONSIBLE FOR THE ACCURACY OR COMPLETENESS OF SCANNED COPIES OF THIS PLAN SHEET.

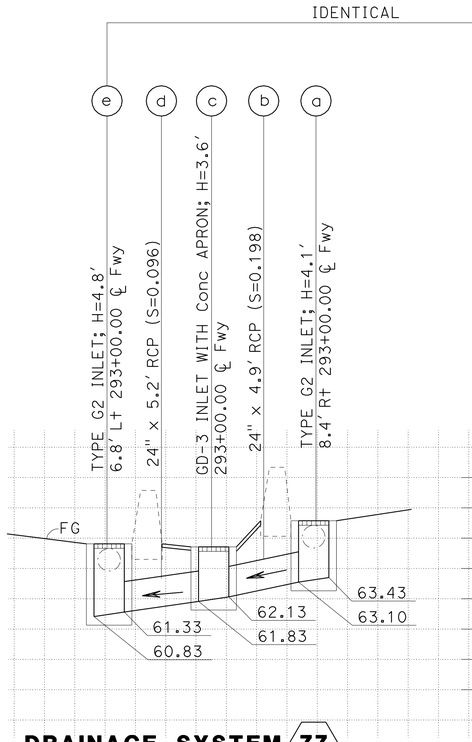

DRAINAGE SYSTEM 77

SCALE: 1":10′ Horz
1":10′ Vert

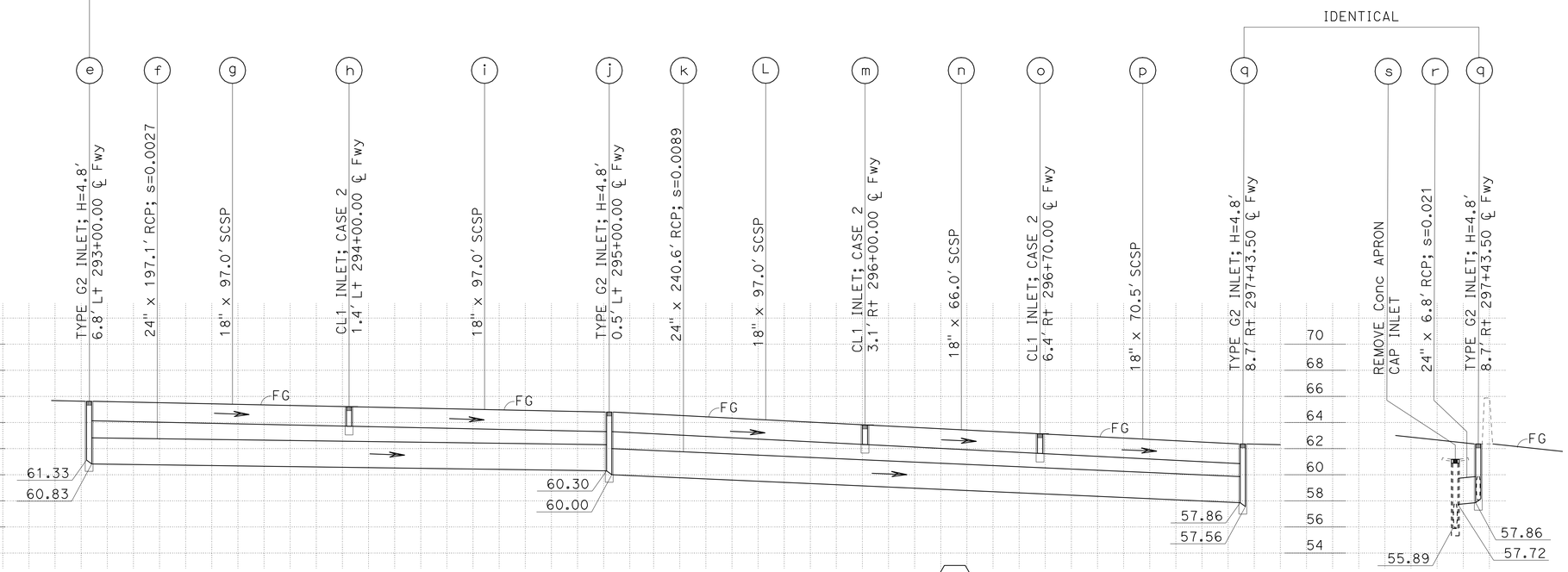

DRAINAGE SYSTEM 77

SCALE: 1":10′ Horz
1":5′ Vert

THIS PLAN ACCURATE FOR DRAINAGE WORK ONLY.

DRAINAGE PROFILE

SCALE: AS SHOWN

DP-9

STATE OF CALIFORNIA - DEPARTMENT OF TRANSPORTATION

Caltrans

HYDRAULICS

FUNCTIONAL SUPERVISOR: DAVE BHALLA

CALCULATED-DESIGNED BY: S. THAI

CHECKED BY: D. BHALLA

REVISED BY

DATE REVISED

LAST REVISION 08-31-10

DATE PLOTTED => 25-JUN-2011
TIME PLOTTED => 08:16

Dist	COUNTY	ROUTE	POST MILES TOTAL PROJECT	SHEET No.	TOTAL SHEETS
07	Ven,SB	101	R39.8/R43.6, 0.0/2.2	150	757

REGISTERED CIVIL ENGINEER DATE

6-20-11
PLANS APPROVAL DATE

REGISTERED PROFESSIONAL ENGINEER BALDEV K. BHALLA No. 34350 Exp. 9/30/11 CIVIL STATE OF CALIFORNIA

THE STATE OF CALIFORNIA OR ITS OFFICERS OR AGENTS SHALL NOT BE RESPONSIBLE FOR THE ACCURACY OR COMPLETENESS OF SCANNED COPIES OF THIS PLAN SHEET.

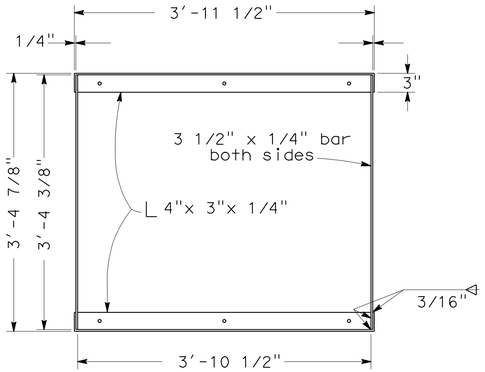

GRATE FRAME DETAIL

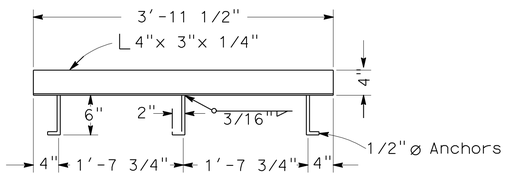

ANCHOR PLACEMENT DETAIL

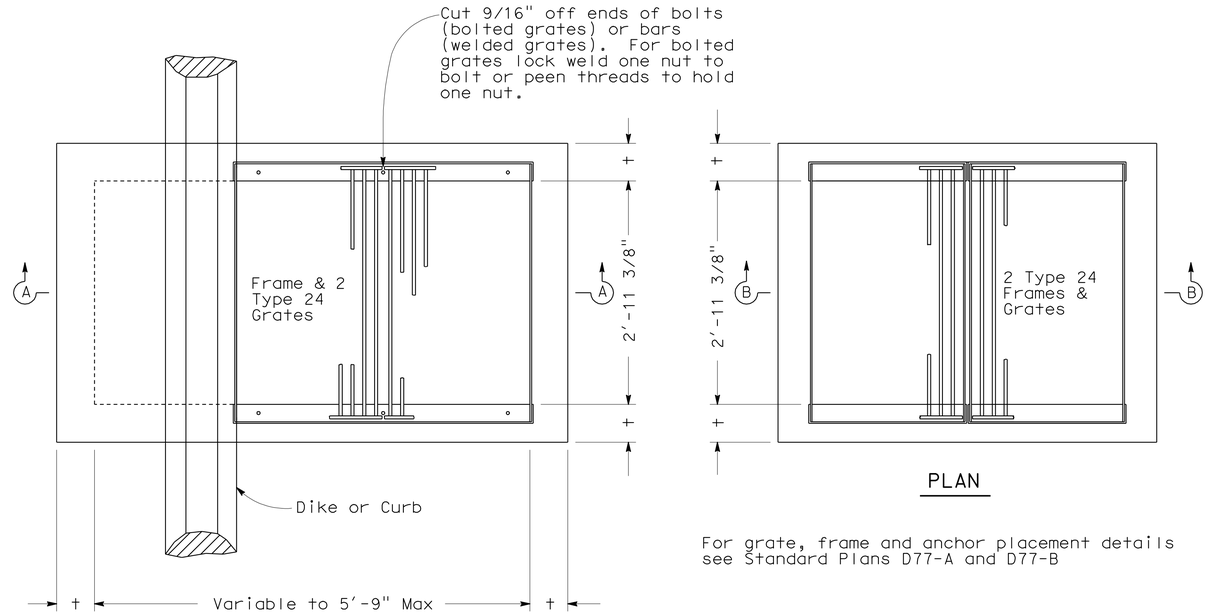

PLAN

PLAN

For grate, frame and anchor placement details see Standard Plans D77-A and D77-B

NOTES

1. 'H' is the difference in elevation between the outlet pipe flow line and the flow line of the grates.
2. Steps - None required when 'H' is 3'-6" or less. Install one step 16"± above floor when 'H' is more than 3'-6" and less than 5'-0". Where 'H' is more than 5'-0" steps shall be evenly spaced @ 12"± intervals from 16"± above floor to within 12"± of the top of the box. Place steps in wall without pipe openings. See Standard Plan D74C for step detail.
3. Pipe(s) can be placed in any wall.
4. Reinforcing steel not required in walls when H=6' or less.
5. Reinforcing steel in walls shall be #4 bars @ 18"± centers placed 1 1/2" clear to inside of box.

MISCELLANEOUS IRON & STEEL

Inlet Type	Grate Type	Weight
GD-1 & GD-2	24 - 12	580
	24 - 10C	379
	24 - 10S	433
	24 - 12X	453
	24 - 13	351
GD-3	24 - 12	652

H	t
8'-0" or less	6"
8'1" to 20'- 0"	8"

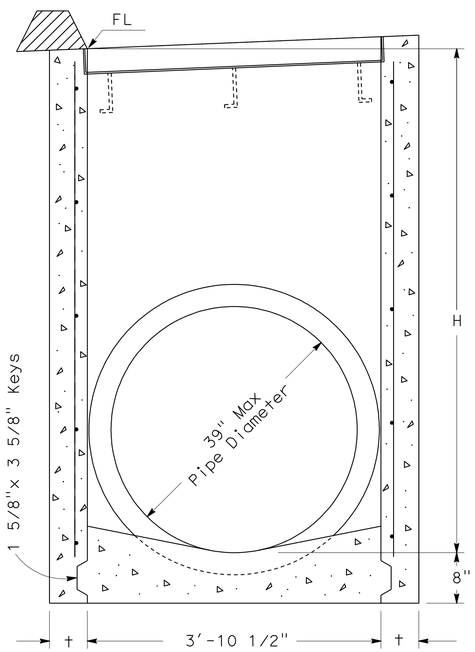

SECTION A-A
(For pipe diameters 39" or less)

GD-1

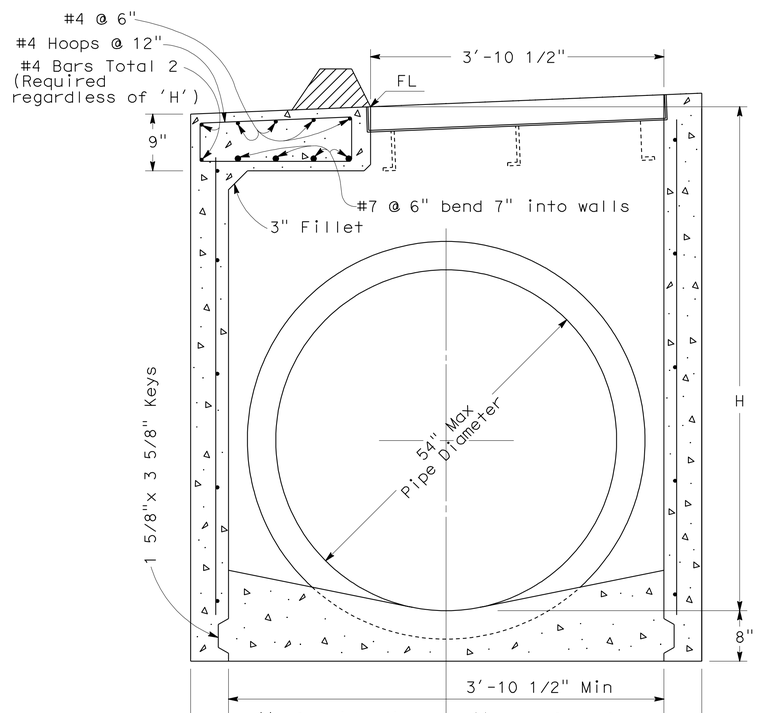

SECTION A-A

GD-2

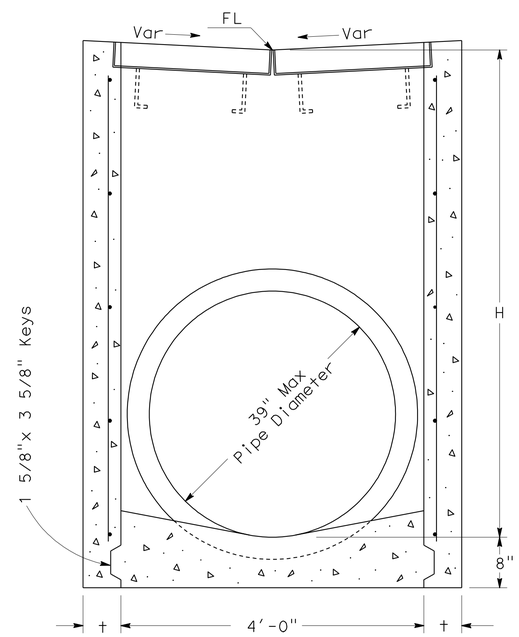

SECTION B-B
(For pipe diameters 39" or less)

GD-3

DRAINAGE INLETS

THIS PLAN ACCURATE FOR DRAINAGE WORK ONLY

DRAINAGE DETAILS
DD-1

STATE OF CALIFORNIA - DEPARTMENT OF TRANSPORTATION
Caltrans
HYDRAULICS
FUNCTIONAL SUPERVISOR: DAVE BHALLA
CALCULATED-DESIGNED BY: D.BHALLA
CHECKED BY
REVISED BY
DATE REVISED

LAST REVISION 08-31-10
DATE PLOTTED => 25-JUN-2011
TIME PLOTTED => 08:16

Dist	COUNTY	ROUTE	POST MILES TOTAL PROJECT	SHEET No.	TOTAL SHEETS
07	Ven,SB	101	R39.8/R43.6, 0.0/2.2	151	757

REGISTERED CIVIL ENGINEER DATE

6-20-11
PLANS APPROVAL DATE

REGISTERED PROFESSIONAL ENGINEER BALDEV K. BHALLA No. 34350 Exp. 9/30/11 CIVIL STATE OF CALIFORNIA

THE STATE OF CALIFORNIA OR ITS OFFICERS OR AGENTS SHALL NOT BE RESPONSIBLE FOR THE ACCURACY OR COMPLETENESS OF SCANNED COPIES OF THIS PLAN SHEET.

INLET TYPE	GRATE TYPE	No. OF GRATES	WEIGHT
OG-1	24-9	1	250

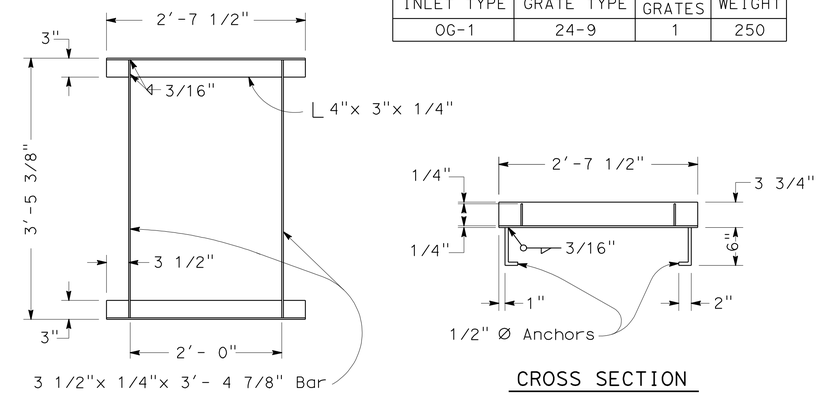

PLAN

CROSS SECTION

FRAME DETAIL

General Notes: See Revised Standard Plan D77A

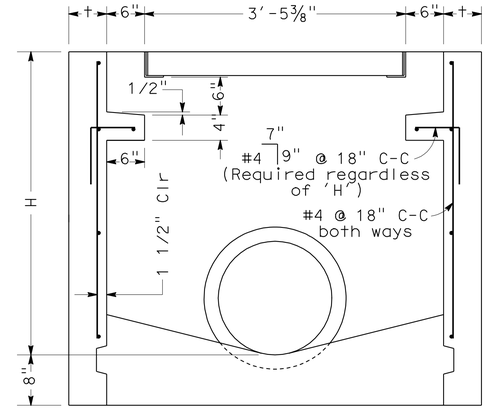

SECTION D-D

General Notes: See Standard Plan D73

TYPE OG-1 INLET

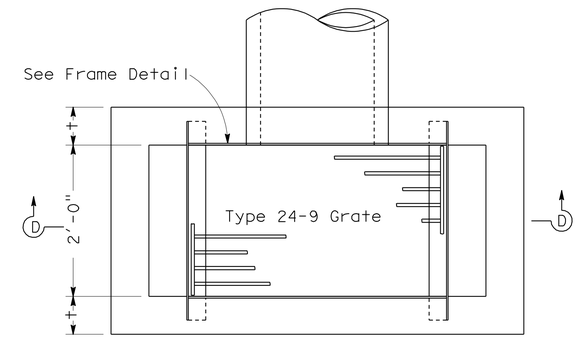

PLAN

H	t
8'-0" or less	6"
8'-1" to 20'-0"	8"

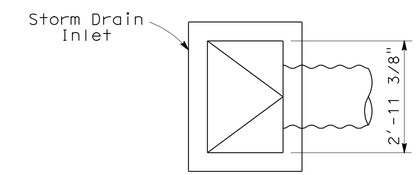

SECTION C-C

No Scale

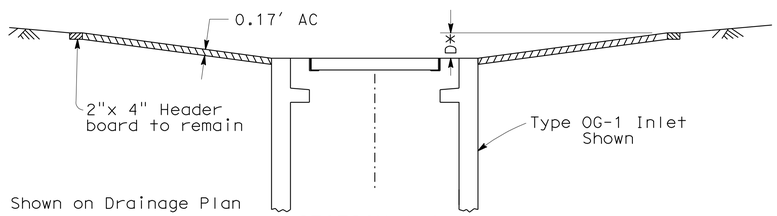

SECTION A-A

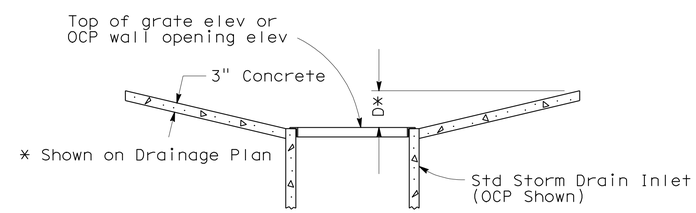

SECTION B-B

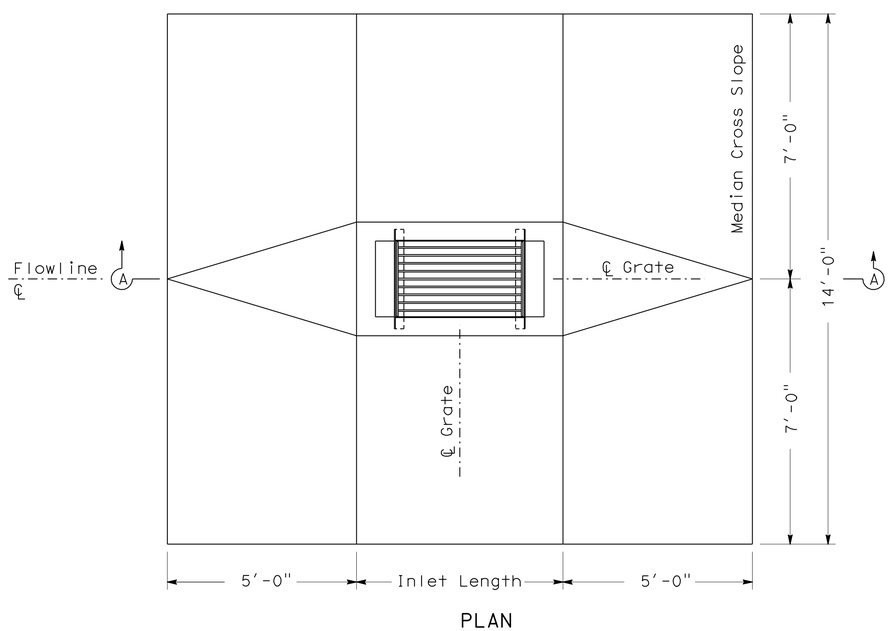

PLAN

MEDIAN INLET APRON DETAIL

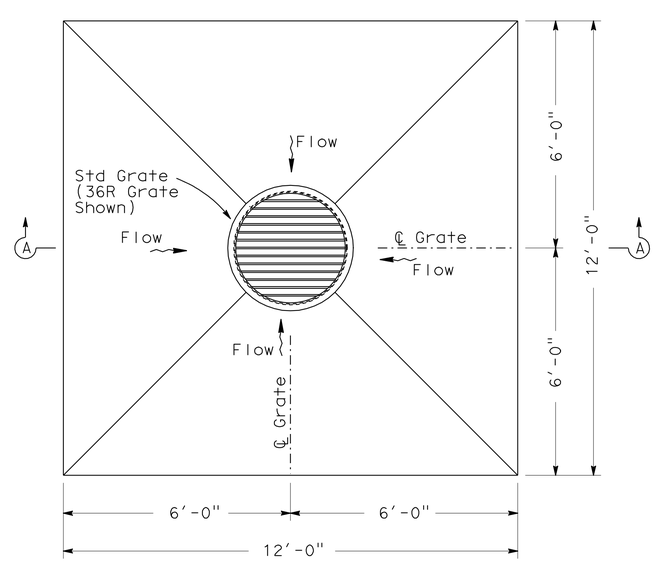

PLAN

DEPRESSED APRON DETAIL

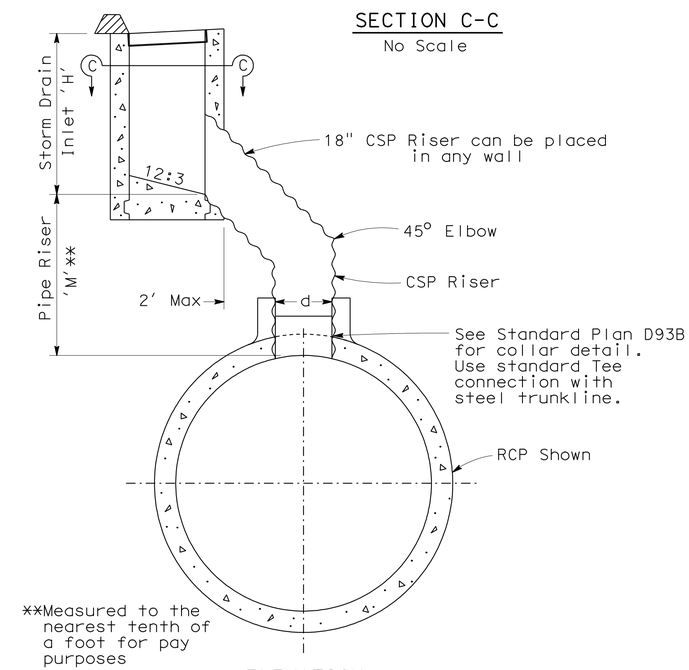

ELEVATION

STORM DRAIN RISER CONNECTION

THIS PLAN ACCURATE FOR DRAINAGE WORK ONLY

DRAINAGE DETAILS

NO SCALE

DD-2

STATE OF CALIFORNIA - DEPARTMENT OF TRANSPORTATION
Caltrans® HYDRAULICS

FUNCTIONAL SUPERVISOR: DAVE BHALLA
CALCULATED-DESIGNED BY: D.BHALLA
CHECKED BY: C.P.NGUYEN
REVISED BY / DATE REVISED

LAST REVISION 08-31-10 | DATE PLOTTED => 25-JUN-2011 | TIME PLOTTED => 08:16

Dist	COUNTY	ROUTE	POST MILES TOTAL PROJECT	SHEET No.	TOTAL SHEETS
07	Ven,SB	101	R39.8/R43.6, 0.0/2.2	152	757

REGISTERED CIVIL ENGINEER DATE

6-20-11
PLANS APPROVAL DATE

REGISTERED PROFESSIONAL ENGINEER BALDEV K. BHALLA No. 34350 Exp. 9/30/11 CIVIL STATE OF CALIFORNIA

THE STATE OF CALIFORNIA OR ITS OFFICERS OR AGENTS SHALL NOT BE RESPONSIBLE FOR THE ACCURACY OR COMPLETENESS OF SCANNED COPIES OF THIS PLAN SHEET.

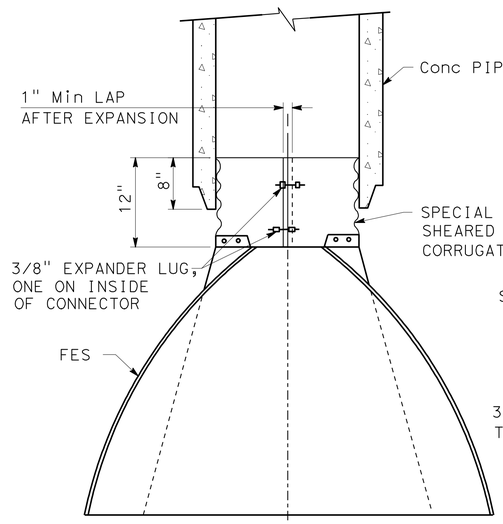

ALTERNATE N. 1o.

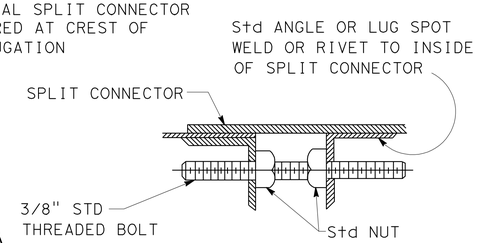

EXPANDER LUG DETAIL

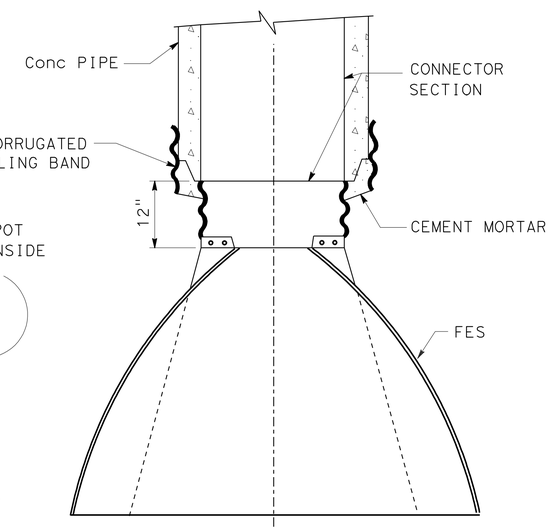

ALTERNATE No. 2

STEEL FES CONNECTION TO CONCRETE PIPE

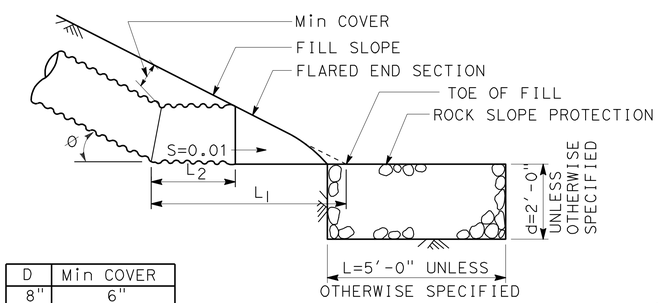

D	Min COVER
8"	6"
12"	6"
18"	12"
24"	12"

PROFILE

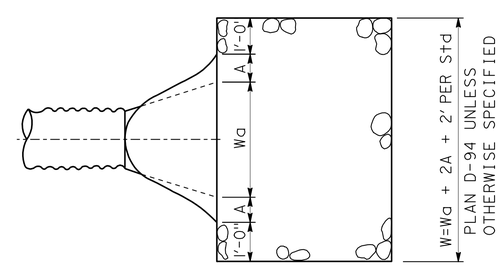

PLAN

ROCK SLOPE PROTECTION DETAIL

PIPE SLOPE S - %	Ø	D=8"	D=12"		D=18"		D=24"	
		L_1	L_1	L_2	L_1	L_2	L_1	L_2
10-15	6°-9°	2'-6"	3'-3"	1'-3"	5'-6"	2'-4"	6'-6"	2'-5"
15-20	9°-11°	2'-7"	3'-3"	1'-3"	5'-6"	2'-5"	6'-7"	2'-5"
20-25	11°-14°	2'-7"	3'-4"	1'-3"	5'-7"	2'-5"	6'-7"	2'-6"
25-30	14°-17°	2'-7"	3'-4"	1'-4"	5'-7"	2'-5"	6'-8"	2'-6"
30-35	17°-19°	2'-7"	3'-4"	1'-4"	5'-7"	2'-6"	6'-9"	2'-7"
35-40	19°-22°	2'-7"	3'-5"	1'-4"	5'-8"	2'-6"	6'-9"	2'-7"
40-45	22°-24°	2'-8"	3'-5"	1'-5"	5'-8"	2'-7"	6'-10"	2'-8"
45-50	24°-26°	2'-8"	3'-5"	1'-5"	5'-8"	2'-7"	6'-10"	2'-8"

OUTLET DETAIL FOR CSP @ TOE OF SLOPE

THIS PLAN ACCURATE FOR DRAINAGE WORK ONLY

DRAINAGE DETAILS
NO SCALE
DD-3

STATE OF CALIFORNIA - DEPARTMENT OF TRANSPORTATION
Caltrans
HYDRAULICS

FUNCTIONAL SUPERVISOR: DAVE BHALLA
CALCULATED-DESIGNED BY: C.P.NGUYEN
CHECKED BY: D.BHALLA
REVISED BY
DATE REVISED

LAST REVISION 08-31-10
DATE PLOTTED => 25-JUN-2011
TIME PLOTTED => 08:16

Dist	COUNTY	ROUTE	POST MILES TOTAL PROJECT	SHEET No.	TOTAL SHEETS
07	Ven,SB	101	R39.8/R43.6, 0.0/2.2	153	757

REGISTERED CIVIL ENGINEER DATE

6-20-11
PLANS APPROVAL DATE

REGISTERED PROFESSIONAL ENGINEER BALDEV K. BHALLA No. 34350 Exp. 9/30/11 CIVIL STATE OF CALIFORNIA

THE STATE OF CALIFORNIA OR ITS OFFICERS OR AGENTS SHALL NOT BE RESPONSIBLE FOR THE ACCURACY OR COMPLETENESS OF SCANNED COPIES OF THIS PLAN SHEET.

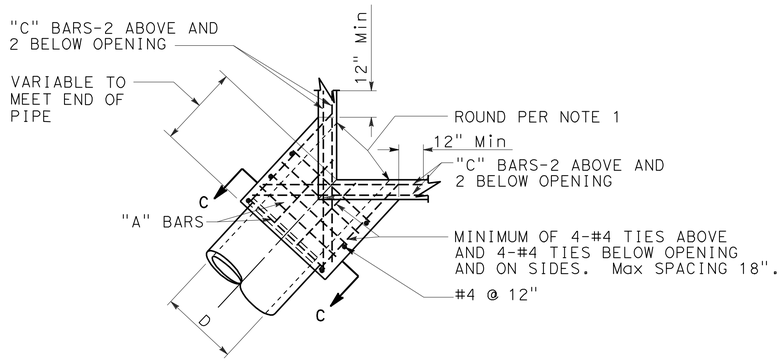

PLAN
CORNER CONNECTION

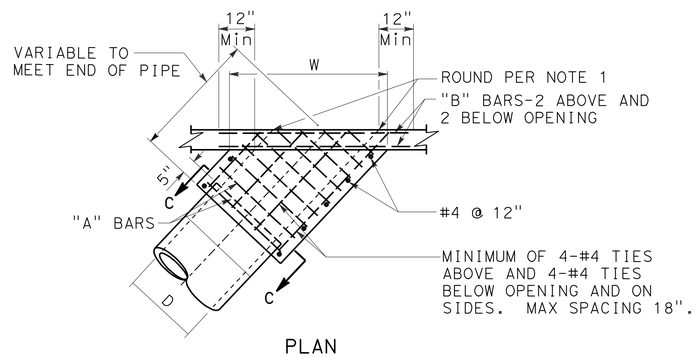

PLAN
SIDE CONNECTION

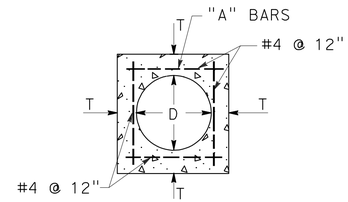

SECTION C-C

D	T	"A"	"B"-"C"
12"	4-½"	#4 @ 6"	#5
15"	4-½"		
18"	5"		
21"	5-½"		
24"	6"		
27"	6-½"		
30"	7"		
33"	7"		
36"	7-½"		
39"	8"		
42"	8"		
45"	8"	#5 @ 6"	#6
48"	8"		
51"	8"		
54"	8"		
57"	10"		
60"	10"		
63"	10"		
66"	11"		
69"	11"		
72"	11"		

NOTES

1. ROUND EDGE OF OUTLET TO 3" RADIUS.
2. REINFORCEMENT SHALL BE 1½" CLEAR FROM THE FACE OF CONCRETE.
3. IN CONNECTING TO AN EXISTING STRUCTURE BREAK OUT PORTIONS OF THE EXISTING STRUCTURE SIX INCHES OUTSIDE ITS INTERSECTION WITH THE NEW CONNECTION. BEND ENDS OF #4 BARS OVER CONNECTION OPENING AS REQUIRED.

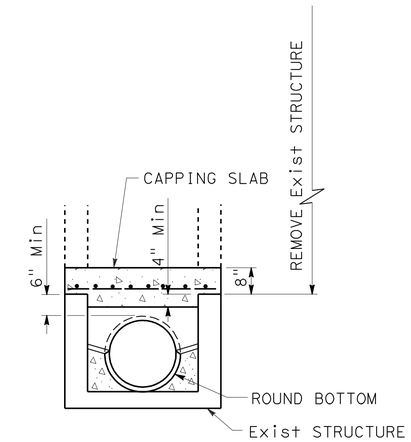

SECTION A-A

MONOLITHIC CONNECTION
FOR PIPES 12" TO 72" INCLUSIVE

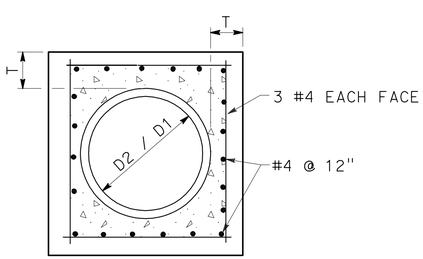

SECTION B-B

D	L	T
12"	1.0'	4"
18"	1.0'	5"
24"	1.0'	6"
36"	1.5'	8"
48"	1.5'	10"
54"	1.5'	10"
60"	1.75'	11"
66"	1.75'	11"
72"	2.0'	12"

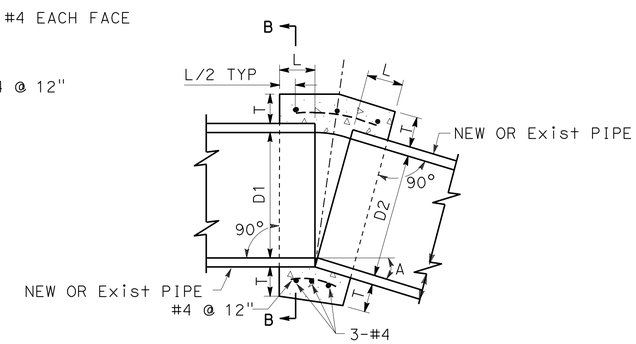

CONCRETE COLLAR

NOTES

1. WHERE PIPES OF DIFFERENT DIAMETERS ARE JOINED WITH A CONCRETE COLLAR, 'L' AND 'T' SHALL BE THOSE OF THE LARGER PIPE. D=D1 OR D2, WHICHEVER IS GREATER.
2. FOR PIPE SIZE NOT LISTED USE NEXT SIZE LARGER.
3. OMIT REINFORCING ON PIPES 24" AND LESS IN DIAMETER AND ON ALL PIPES WHERE ANGLE A IS LESS THAN 10°.
4. JOIN PIPES AT INVERTS.
5. REINFORCEMENT SHALL BE PLACED 1½" CLEAR FROM OUTSIDE DIAMETER OF PIPE.

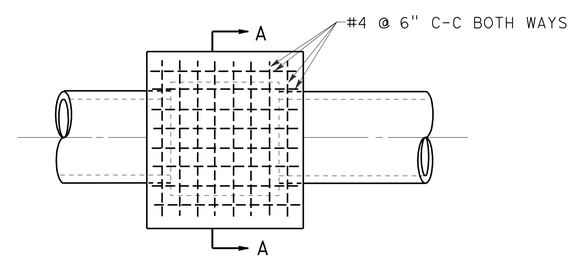

PLAN
CAP INLET DETAIL

THIS PLAN ACCURATE FOR DRAINAGE WORK ONLY

DRAINAGE DETAILS
NO SCALE
DD-4

STATE OF CALIFORNIA - DEPARTMENT OF TRANSPORTATION
Caltrans
HYDRAULICS
FUNCTIONAL SUPERVISOR: DAVE BHALLA
CALCULATED-DESIGNED BY: C.P.NGUYEN
CHECKED BY: D.BHALLA
REVISED BY
DATE REVISED

LAST REVISION 08-31-10
DATE PLOTTED => 25-JUN-2011
TIME PLOTTED => 08:16

Dist	COUNTY	ROUTE	POST MILES TOTAL PROJECT	SHEET No.	TOTAL SHEETS
07	Ven,SB	101	R39.8/R43.6, 0.0/2.2	154	757

REGISTERED CIVIL ENGINEER DATE

6-20-11
PLANS APPROVAL DATE

REGISTERED PROFESSIONAL ENGINEER BALDEV K. BHALLA No. 34350 Exp. 9/30/11 CIVIL STATE OF CALIFORNIA

THE STATE OF CALIFORNIA OR ITS OFFICERS OR AGENTS SHALL NOT BE RESPONSIBLE FOR THE ACCURACY OR COMPLETENESS OF SCANNED COPIES OF THIS PLAN SHEET.

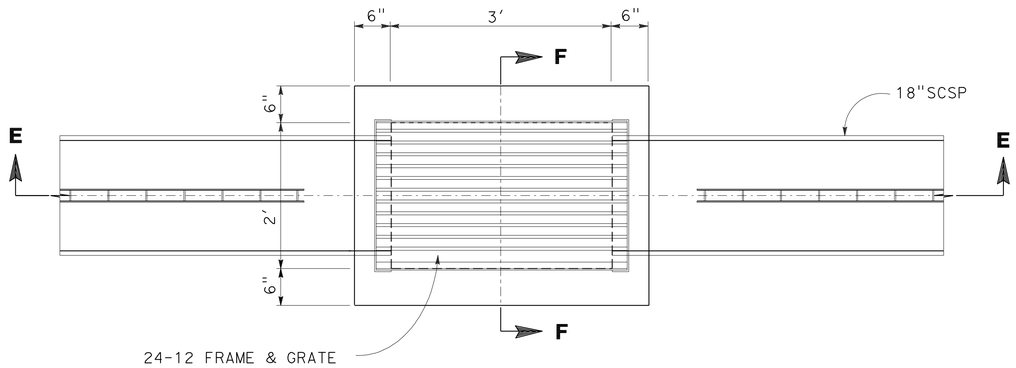

PLAN

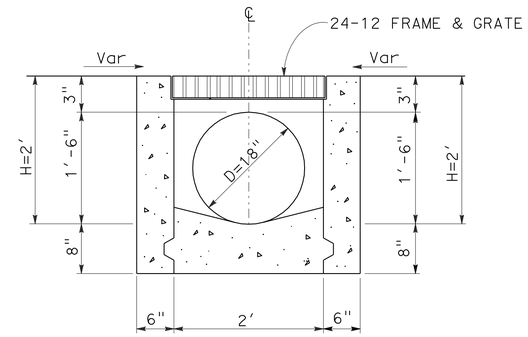

SECTION F-F

NOTES:

1. FOR INFORMATION AND DETAILS NOT SHOWN SEE STD PLANS D73, RSP D77A, D98A AND D98B.
2. LENGTH OF CSP IS INCLUDED IN THE LENGTH OF SCSP INVOLVED SHOWN ON THE SUMMARY OF DRAINAGE QUANTITIES.

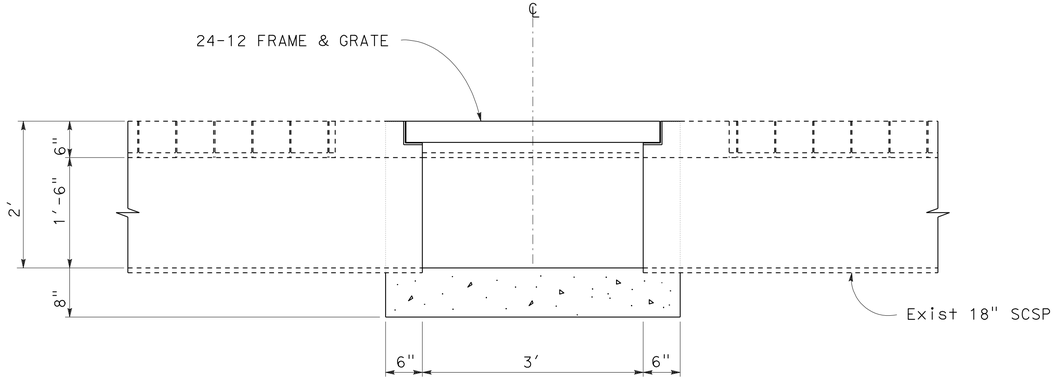

INTERMEDIATE CLEANOUT
CASE 2
SECTION E-E

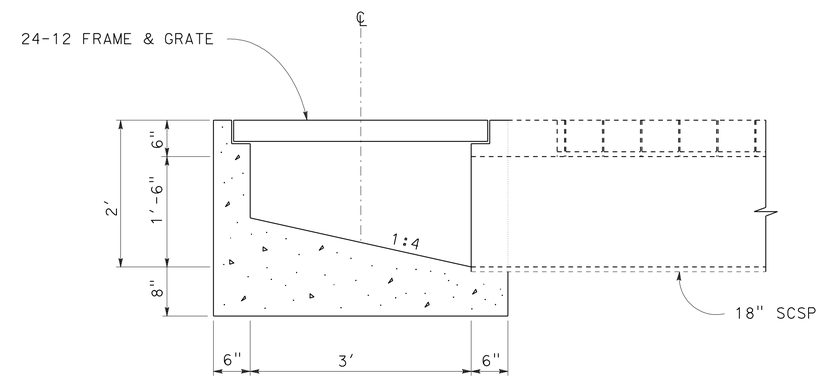

BEGINNING CLEANOUT
CASE 1
SECTION E-E

CL1 INLET

THIS PLAN ACCURATE FOR DRAINAGE WORK ONLY

DRAINAGE DETAILS

NO SCALE **DD-5**

STATE OF CALIFORNIA - DEPARTMENT OF TRANSPORTATION
Caltrans
HYDRAULICS

FUNCTIONAL SUPERVISOR: DAVE BHALLA
CALCULATED-DESIGNED BY: C.P.NGUYEN
CHECKED BY: D.BHALLA
REVISED BY
DATE REVISED

LAST REVISION 08-31-10 | DATE PLOTTED => 25-JUN-2011 | TIME PLOTTED => 08:16

Dist	COUNTY	ROUTE	POST MILES TOTAL PROJECT	SHEET No.	TOTAL SHEETS
07	Ven,SB	101	R39.8/R43.6, 0.0/2.2	155	757

REGISTERED CIVIL ENGINEER DATE

6-20-11
PLANS APPROVAL DATE

REGISTERED PROFESSIONAL ENGINEER BALDEV K. BHALLA No. 34350 Exp. 9/30/11 CIVIL STATE OF CALIFORNIA

THE STATE OF CALIFORNIA OR ITS OFFICERS OR AGENTS SHALL NOT BE RESPONSIBLE FOR THE ACCURACY OR COMPLETENESS OF SCANNED COPIES OF THIS PLAN SHEET.

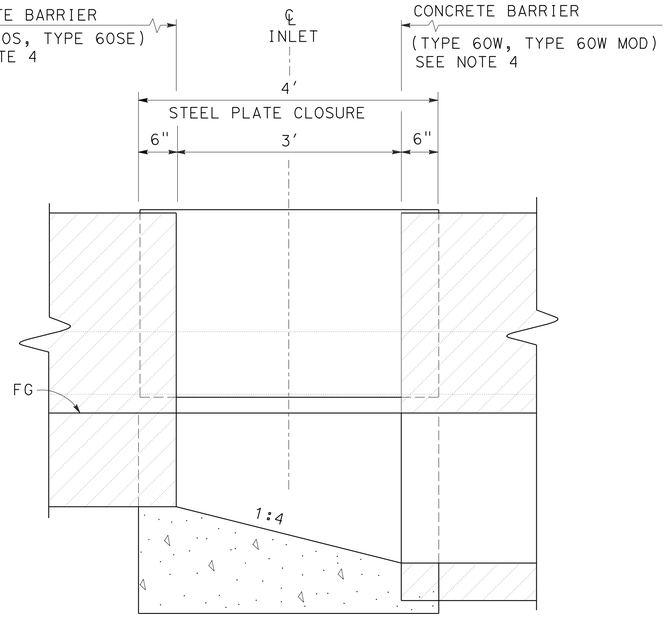

SECTION B-B

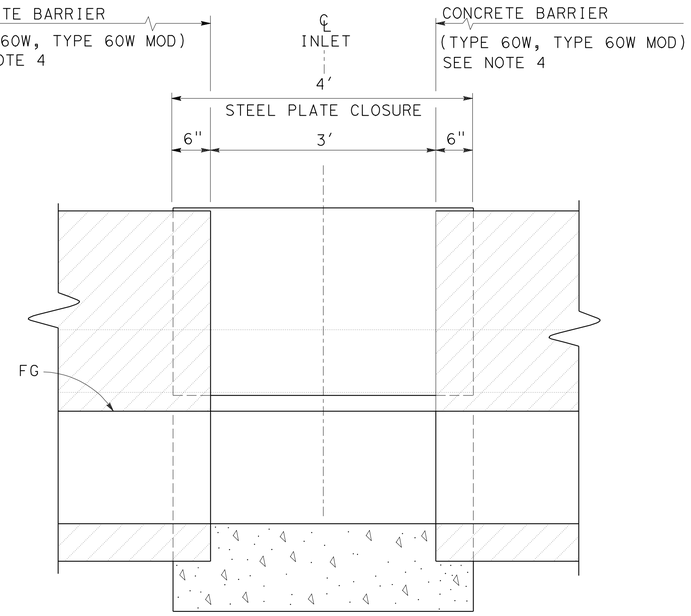

SECTION C-C

NOTES:

1. FOR STEEL PLATE CLOSURE DETAILS. REFER TO CONSTRUCTION DETAILS
2. ELEVATIONS OF PAVEMENT ON OPPOSITE SIDES OF CONCRETE BARRIER MAY VARY.
3. FOR FRAME AND GRATE INSTALLATION, REFER TO TYPE GO INLET ON STANDARD PLAN RSP D74B.
4. FOR CONCRETE BARRIER END ANCHOR DETAIL, REFER TO STANDARD PLAN A76H.
5. FOR DETAILS AND INFORMATION NOT SHOWN REFER TO TYPE G1 INLET ON STANDARD PLAN D73.

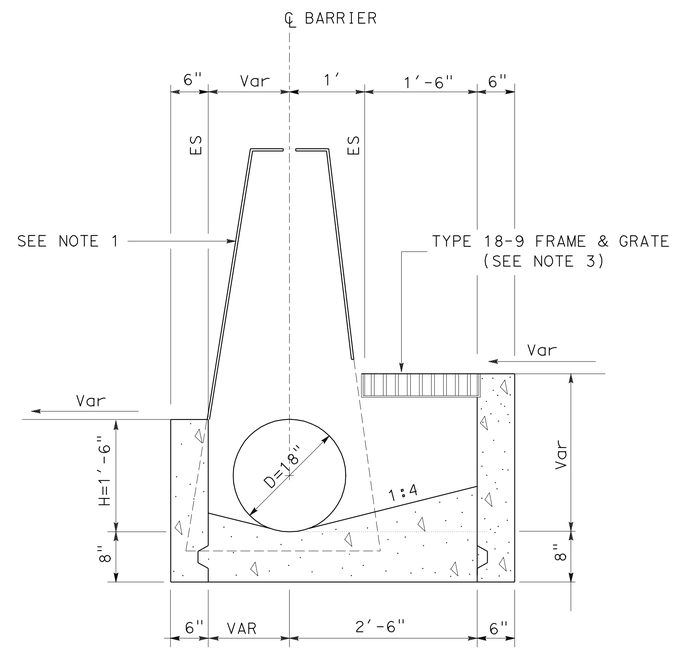

SECTION A-A

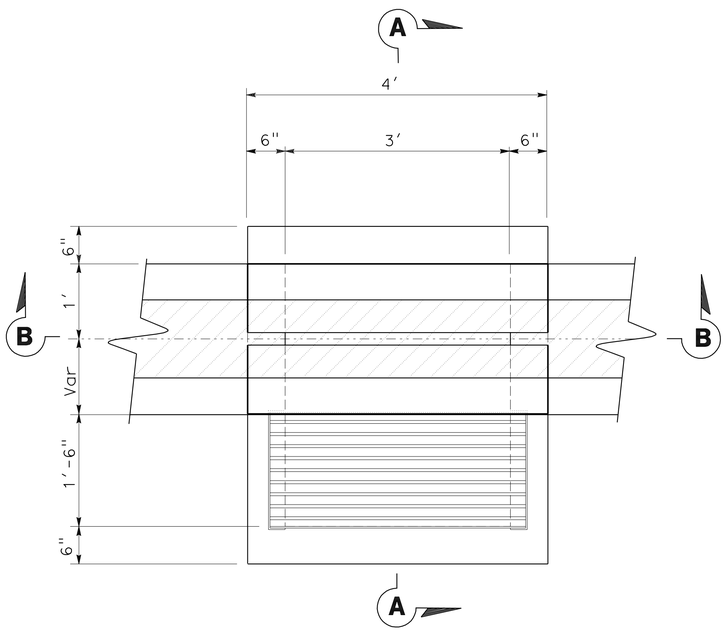

BEGINNING / ENDING CLEANOUT

CASE 1

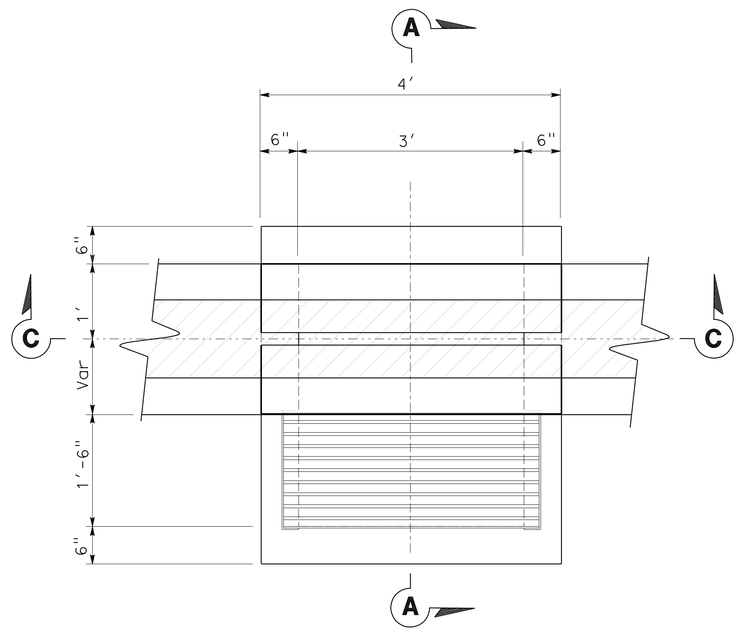

INTERMEDIATE CLEANOUT

CASE 2

PLAN

CL2 INLET

THIS PLAN ACCURATE FOR DRAINAGE WORK ONLY

DRAINAGE DETAILS

NO SCALE **DD-6**

STATE OF CALIFORNIA - DEPARTMENT OF TRANSPORTATION
Caltrans® **HYDRAULICS**

FUNCTIONAL SUPERVISOR: DAVE BHALLA
CALCULATED-DESIGNED BY: C.P.NGUYEN
CHECKED BY: D.BHALLA
REVISED BY
DATE REVISED

LAST REVISION 08-31-10
DATE PLOTTED => 25-JUN-2011
TIME PLOTTED => 08:16

Dist	COUNTY	ROUTE	POST MILES TOTAL PROJECT	SHEET No.	TOTAL SHEETS
07	Ven,SB	101	R39.8/R43.6, 0.0/2.2	156	757

REGISTERED CIVIL ENGINEER DATE

6-20-11
PLANS APPROVAL DATE

REGISTERED PROFESSIONAL ENGINEER
BALDEV K. BHALLA
No. 34350
Exp. 9/30/11
CIVIL
STATE OF CALIFORNIA

THE STATE OF CALIFORNIA OR ITS OFFICERS OR AGENTS SHALL NOT BE RESPONSIBLE FOR THE ACCURACY OR COMPLETENESS OF SCANNED COPIES OF THIS PLAN SHEET.

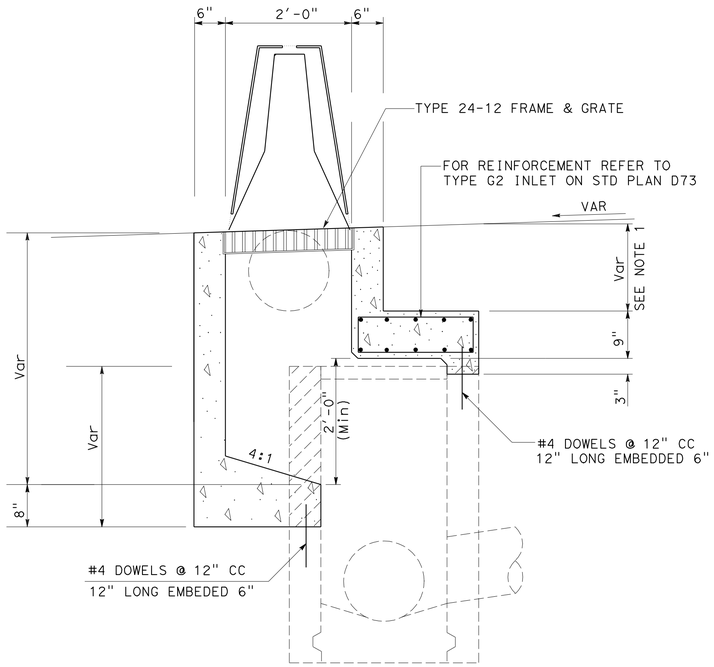

MODIFY TYPE G1 INLET

NOTE: 1. FILL WITH CONCRETE (IF LESS THAN 2'-6") SAME TYPE AS THE ADJOINING PAVEMENT

2. FOR DETAILS AND INFORMATION NOT SHOWN REFER TO TYPE G2 INLET ON STD PLAN D73

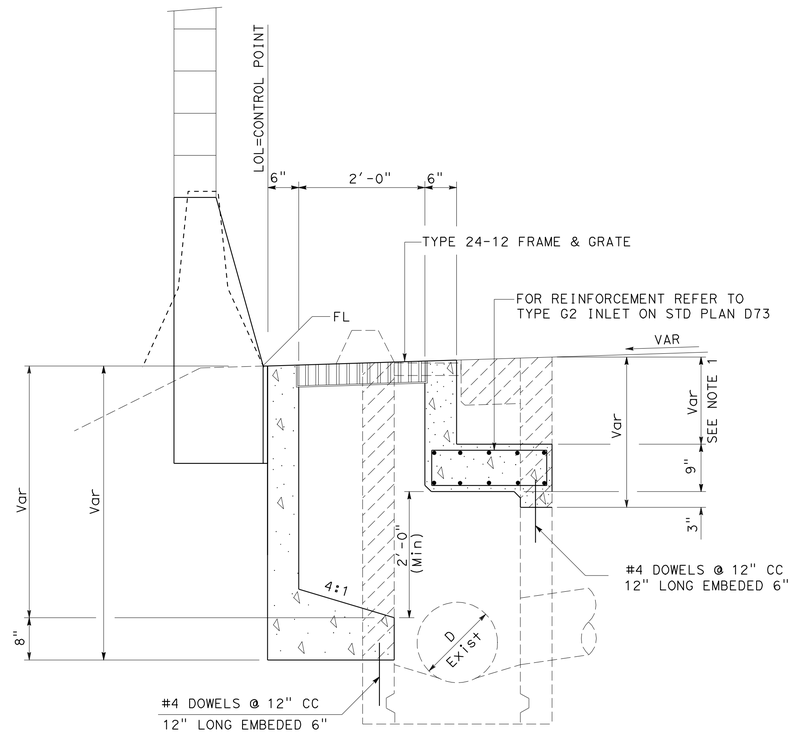

MODIFY TYPE G2 INLET

NOTE: 1. FILL WITH CONCRETE (IF LESS THAN 2'-6") SAME TYPE AS THE ADJOINING PAVEMENT

2. FOR DETAILS AND INFORMATION NOT SHOWN REFER TO TYPE G2 INLET ON Std PLAN D73

DRAINAGE DETAILS

NO SCALE

DD-7

THIS PLAN ACCURATE FOR DRAINAGE WORK ONLY

REVISED BY	DATE REVISED

CALCULATED-DESIGNED BY	CHECKED BY
C.P.NGUYEN	D.BHALLA

FUNCTIONAL SUPERVISOR: DAVE BHALLA

STATE OF CALIFORNIA - DEPARTMENT OF TRANSPORTATION

Caltrans

HYDRAULICS

LAST REVISION 08-31-10 | DATE PLOTTED => 25-JUN-2011 | TIME PLOTTED => 08:16

Dist	COUNTY	ROUTE	POST MILES TOTAL PROJECT	SHEET No.	TOTAL SHEETS
07	Ven,SB	101	R39.8/R43.6, 0.0/2.2	157	757

REGISTERED CIVIL ENGINEER DATE

6-20-11
PLANS APPROVAL DATE

REGISTERED PROFESSIONAL ENGINEER BALDEV K. BHALLA No. 34350 Exp. 9/30/11 CIVIL STATE OF CALIFORNIA

THE STATE OF CALIFORNIA OR ITS OFFICERS OR AGENTS SHALL NOT BE RESPONSIBLE FOR THE ACCURACY OR COMPLETENESS OF SCANNED COPIES OF THIS PLAN SHEET.

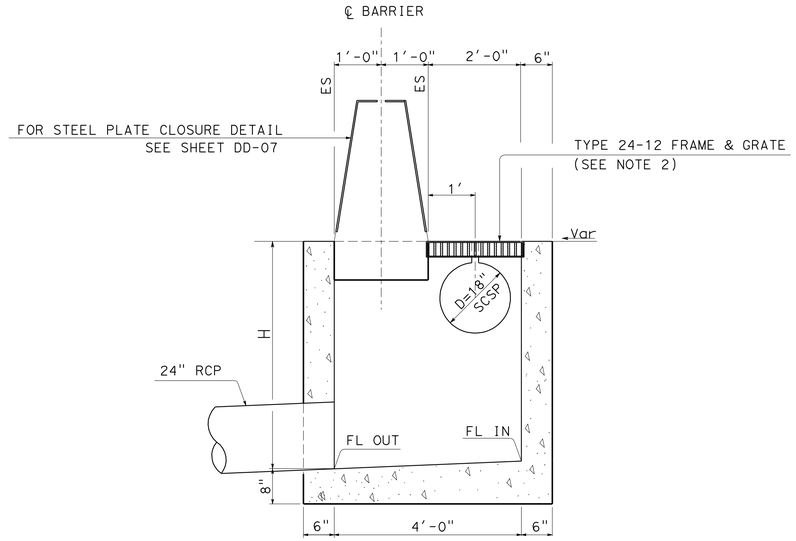

MODIFIED GD-3 INLET

NOTE: 1. FOR DETAILS AND INFORMATION NOT SHOWN REFER TO GD-3 INLET ON SHEET DD-02
2. FOR FRAME AND GRATE INSTALLATION, REFER TO TYPE GO INLET ON REVISED STANDARD PLAN D74B.

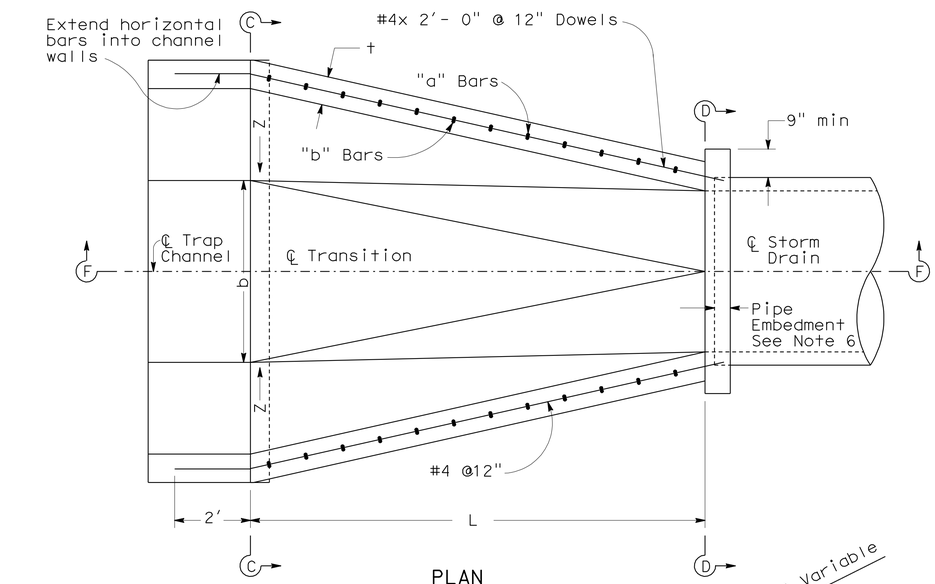

PLAN

TABLE 1

* DESIGN "H"	t	REINFORCEMENT
0' - 4'	6"	#4 @ 12" both ways centered in slab
4' - 6'	6"	"a" bars #5 @ 24" "b" bars #5 @ 24"
6' - 8'	6"	"a" bars #5 @ 12" "b" bars #5 @ 12"
Greater than 8'	10"	"a" bars #6 @ 6" "b" bars #5 @ 12"

* Design "H" varies throughout length of transition. Use larger "H" on short transitions (L=15' or less). For longer transitions, vary reinforcement as indicated above.

NOTES

1. Provide a construction joint between the transition and the storm drain.
2. Extend the longitudinal reinforcing steel of the transition 2' into the trapezoidal channel.
3. In lieu of placing the dowels between the transition and the rectangular storm drain, the longitudinal reinforcing steel of the transition structure may be extended 2' into the storm drain.
4. 'H', 'H2', 'h', 'L', 'b', Elev 'A' and Elev 'B', and 'Z' shall be shown on the plans.
5. This structural detail may be applied to transitions with curved bottoms and curved side walls.
6. Pipe embedment shall be 5" for 96" or less and 8" for over 96".

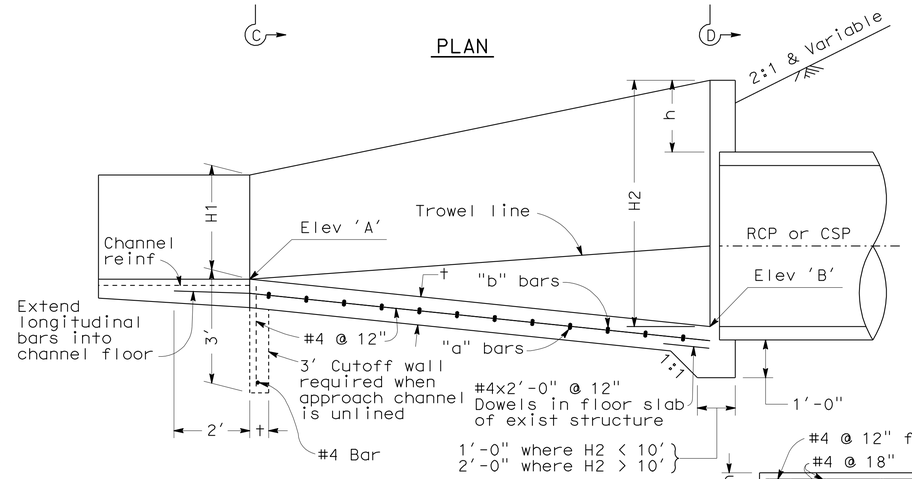

SECTION F-F

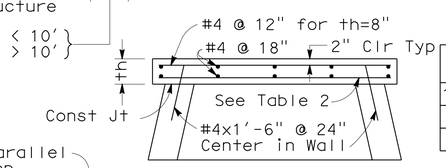

SECTION H-H

TABLE 2

S or D	th	REINFORCEMENT h=6" to 4'	REINFORCEMENT h=5' to 8'
1'-6" to 5'-6"	6"	#4 @ 12"	#4 @ 12"
6' to 10'	6"	#4 @ 8"	#6 @ 9"
12'	8"	#5 @ 9"	#6 @ 6"

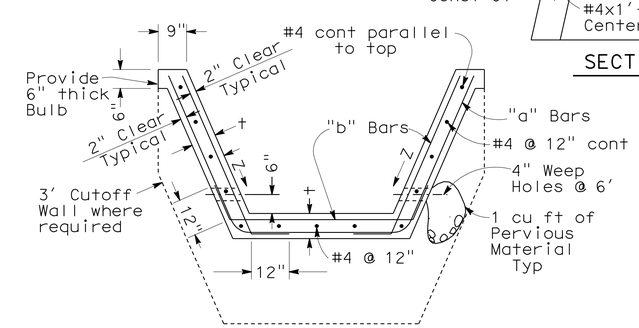

SECTION C-C

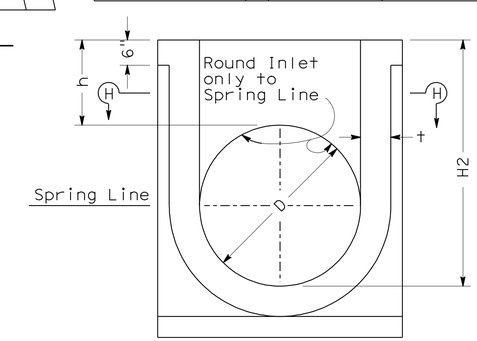

SECTION D-D

TRANSITION STRUCTURE NO 4 (TS NO 4)

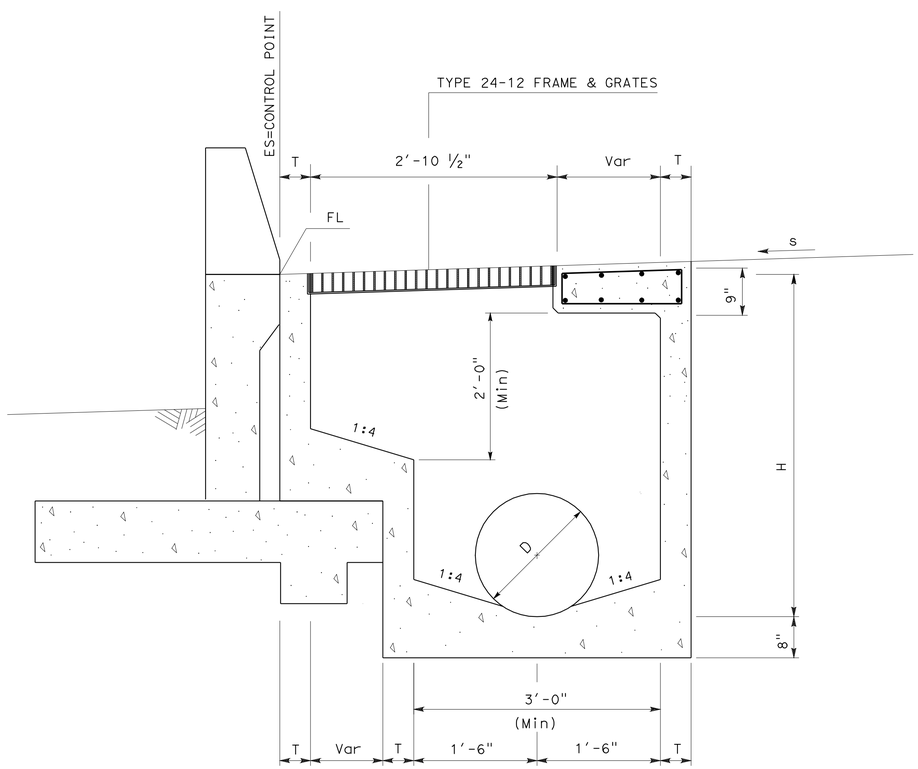

MODIFIED GD-2 INLET

NOTE:
1. FOR DETAILS AND INFORMATION NOT SHOWN, REFER TO GD-2 INLET.

THIS PLAN ACCURATE FOR DRAINAGE WORK ONLY

DRAINAGE DETAILS

NO SCALE

DD-8

STATE OF CALIFORNIA - DEPARTMENT OF TRANSPORTATION
Caltrans® HYDRAULICS
FUNCTIONAL SUPERVISOR: DAVE BHALLA
CALCULATED-DESIGNED BY: C.P.NGUYEN
CHECKED BY: D.BHALLA
REVISED BY / DATE REVISED

LAST REVISION 08-31-10 DATE PLOTTED => 25-JUN-2011 TIME PLOTTED => 08:16

NOTES: PIPE JOINTS ARE STANDARD
OR AS NOTED ON PLANS

(N) NOT A SEPARATE PAY ITEM,
FOR INFORMATION ONLY.

Dist	COUNTY	ROUTE	POST MILES TOTAL PROJECT	SHEET No.	TOTAL SHEETS
07	Ven,SB	101	R39.8/R43.6, 0.0/2.2	158	757

REGISTERED CIVIL ENGINEER DATE

6-20-11
PLANS APPROVAL DATE

REGISTERED PROFESSIONAL ENGINEER
BALDEV K. BHALLA
No. 34350
Exp. 9/30/11
CIVIL
STATE OF CALIFORNIA

THE STATE OF CALIFORNIA OR ITS OFFICERS OR AGENTS SHALL NOT BE RESPONSIBLE FOR THE ACCURACY OR COMPLETENESS OF SCANNED COPIES OF THIS PLAN SHEET.

DRAINAGE SHEET No.	DRAINAGE SYSTEM No. ⬡	DRAINAGE UNIT ○	HEIGHT OF INLET H OR V (FT)	MINOR CONCRETE (MINOR STRUCTURE) (CY)	MISCELLANEOUS IRON AND STEEL (LB)	STRUCTURAL CONCRETE (BOX CULVERT) (CY)	REMOVE CONCRETE (CY)	ABANDON PIPELINE (LF)	SAND BACKFILL (CY)	DITCH EXCAVATION (CY)	REMOVE INLET (EA)	ABANDON INLET (EA)	CAP INLET (EA)	ADJUST INLET (EA)	BAR REINFORCING STEEL (BOX CULVERT) (LB)	18" CORRUGATED STEEL PIPE (0.079" THICK) (LF)	18" SLOTTED CORRUGATED STEEL PIPE (0.079" THICK) (LF)	18" REINFORCED CONCRETE PIPE (LF)	24" REINFORCED CONCRETE PIPE (LF)	(N) STEEL PLATE CLOSURE (EA)	(N) TYPE 18-9 FRAME AND GRATE (EA)	(N) TYPE 24-12 FRAME AND GRATE (EA)	(N) TYPE 24-10S FRAME AND GRATE (EA)	MAXIMUM COVER (FT)	ROCK SLOPE PROTECTION (FACING, METHOD B) (CY)	ROCK SLOPE PROTECTION FABRIC (SQYD)	GRATED LINE DRAIN (LF)	18" STEEL FLARED END SECTION (EA)	MINOR CONCRETE (BACKFILL) (CY)	REMOVE PIPE (LF)	FLUME DOWNDRAIN (LF)	18" TAPERED INLET (EA)	DESCRIPTION	STATION	DRAINAGE SHEET No.	DRAINAGE SYSTEM No. ⬡	DRAINAGE UNIT ○
D-1	1	a												1						1													ADJUST INLET TO GRADE	12.0′ Lt 1+10.00 ℄ Fwy	D-1	1	a
	2	a	3.65	1.48	326															1		1											TYPE G2 INLET	9.0′ Lt 2+54.00 ℄ Fwy		2	a
		b														3.0								5.5									18"x 3.0′ CSP				b
		c					1.29				1																						REMOVE INLET	11.3′ Lt 2+54.00 ℄ Fwy			c
	3	a	3.65	1.48	326															1		1											TYPE G2 INLET	3.0′ Lt 5+74.00 ℄ Fwy		3	a
		b														8.7								5.5									18"x 8.7′ CSP				b
		c					1.29				1																						REMOVE INLET	11.2′ Lt 5+74.00 ℄ Fwy			c
		d						190.5	12.5																								ABANDON PIPELINE	11.2′ Lt 3+82.00 ℄ Fwy TO 11.2′ Lt 5+74.00 ℄ Fwy			d
		e										1																					ABANDON INLET	11.0′ Lt 3+83.00 C Fwy			e
		f		0.89	249															1	1												CL2 INLET; CASE 1	5.8′ Lt 3+50.00 ℄ Fwy			f
		g		0.82	249															1	1												CL2 INLET; CASE 2	4.0′ Lt 4+50.00 ℄ Fwy			g
	4	a	3.65	1.48	326															1		1											TYPE G2 INLET	1.3′ Lt 7+39.00 ℄ Fwy		4	a
		b														11.0								5.5									18"x 11.0′ CSP				b
		c					1.29				1																						REMOVE INLET	11.6′ Lt 7+39.00 ℄ Fwy			c
	5	a	3.65	1.48	326															1		1											TYPE G2 INLET	8+98.00 ℄ Fwy		5	a
		b														9.6								5.5									18"x 9.6′ CSP				b
		c					1.29				1																						REMOVE INLET	12.0′ Lt 8+98.00 ℄ Fwy			c
SHEET TOTAL				7.63	1802		5.16	190.5	12.5		4	1		1		32.3				7	2	4															

DRAINAGE QUANTITIES
DQ-1

STATE OF CALIFORNIA - DEPARTMENT OF TRANSPORTATION
Caltrans HYDRAULICS

FUNCTIONAL SUPERVISOR: DAVE BHALLA
CALCULATED-DESIGNED BY: C.P.NGUYEN
CHECKED BY: D.BHALLA
REVISED BY
DATE REVISED

LAST REVISION DATE PLOTTED => 25-JUN-2011
08-31-10 TIME PLOTTED => 07:58

NOTES: PIPE JOINTS ARE STANDARD
OR AS NOTED ON PLANS

(N) NOT A SEPARATE PAY ITEM,
FOR INFORMATION ONLY.

Dist	COUNTY	ROUTE	POST MILES TOTAL PROJECT	SHEET No.	TOTAL SHEETS
07	Ven,SB	101	R39.8/R43.6, 0.0/2.2	159	757

REGISTERED CIVIL ENGINEER DATE

6-20-11
PLANS APPROVAL DATE

REGISTERED PROFESSIONAL ENGINEER
BALDEV K. BHALLA
No. 34350
Exp. 9/30/11
CIVIL
STATE OF CALIFORNIA

THE STATE OF CALIFORNIA OR ITS OFFICERS OR AGENTS SHALL NOT BE RESPONSIBLE FOR THE ACCURACY OR COMPLETENESS OF SCANNED COPIES OF THIS PLAN SHEET.

DRAINAGE SHEET No.	DRAINAGE SYSTEM No.	DRAINAGE UNIT	HEIGHT OF INLET H OR V (FT)	MINOR CONCRETE (MINOR STRUCTURE) (CY)	MISCELLANEOUS IRON AND STEEL (LB)	STRUCTURAL CONCRETE (BOX CULVERT) (CY)	REMOVE CONCRETE (CY)	ABANDON PIPELINE (LF)	SAND BACKFILL (CY)	DITCH EXCAVATION (CY)	REMOVE INLET (EA)	ABANDON INLET (EA)	CAP INLET (EA)	ADJUST INLET (EA)	BAR REINFORCING STEEL (BOX CULVERT) (LB)	18" CORRUGATED STEEL PIPE (0.079" THICK) (LF)	18" SLOTTED CORRUGATED STEEL PIPE (0.079" THICK) (LF)	18" REINFORCED CONCRETE PIPE (LF)	24" REINFORCED CONCRETE PIPE (LF)	(N) STEEL PLATE CLOSURE (EA)	(N) TYPE 18-9 FRAME AND GRATE (EA)	(N) TYPE 24-12 FRAME AND GRATE (EA)	(N) TYPE 24-10S FRAME AND GRATE (EA)	MAXIMUM COVER (FT)	ROCK SLOPE PROTECTION (FACING, METHOD B) (CY)	ROCK SLOPE PROTECTION FABRIC (SQYD)	GRATED LINE DRAIN (LF)	18" STEEL FLARED END SECTION (EA)	MINOR CONCRETE (BACKFILL) (CY)	REMOVE PIPE (LF)	FLUME DOWNDRAIN (LF)	18" TAPERED INLET (EA)	DESCRIPTION	STATION	DRAINAGE SHEET No.	DRAINAGE SYSTEM No.	DRAINAGE UNIT
D-1	6	a	3.65	1.48	326															1		1											TYPE G2 INLET	9+96.00 ℄ Fwy	D-1	6	a
		b														9.5								5.5									18"x 9.5' CSP				b
		c					1.29				1																						REMOVE INLET	11.6' Lt 9+96.00 ℄ Fwy			c
	7	a	3.65	1.48	326															1		1											TYPE G2 INLET	11+13.00 ℄ Fwy		7	a
		b														9.7								5.5									18"x 9.7' CSP				b
		c					1.29				1																						REMOVE INLET	11.7' Lt 11+13.00 ℄ Fwy			c
D-2	8	a	3.65	1.48	326															1		1											TYPE G2 INLET	12+70.00 ℄ Fwy	D-2	8	a
		b														10.1								5.5									18"x 10.1' CSP				b
		c					1.29				1																						REMOVE INLET	12.5' Lt 12+70.00 ℄ Fwy			c
		d					1.29				1																						REMOVE INLET	79.6' Lt 12+70.00 ℄ Fwy			d
		e														2.0								4.4									18"x 2.0' CSP				e
		f	5.0	1.39	229																		1										TYPE G1 INLET	84.3' Lt 12+70.00 ℄ Fwy			f
	9	a	3.65	1.48	326															1		1											TYPE G2 INLET	14+62.00 ℄ Fwy		9	a
		b														10.0								5.5									18"x 10.0' CSP				b
		c					1.29				1																						REMOVE INLET	13.2' Lt 14+62.00 ℄ Fwy			c
		d		0.82	249															1	1												CL2 INLET; CASE 2	13+75.00 ℄ Fwy			d
SHEET TOTAL				8.13	1782		6.45				5					41.3				5	1	4	1														

DRAINAGE QUANTITIES
DQ-2

C.P.NGUYEN — REVISED BY
D.BHALLA — DATE REVISED
CALCULATED-DESIGNED BY
CHECKED BY
FUNCTIONAL SUPERVISOR
DAVE BHALLA

STATE OF CALIFORNIA - DEPARTMENT OF TRANSPORTATION
Caltrans®
HYDRAULICS

LAST REVISION 08-31-10
DATE PLOTTED => 25-JUN-2011
TIME PLOTTED => 07:58

NOTES: PIPE JOINTS ARE STANDARD
OR AS NOTED ON PLANS

(N) NOT A SEPARATE PAY ITEM,
FOR INFORMATION ONLY.

Dist	COUNTY	ROUTE	POST MILES TOTAL PROJECT	SHEET No.	TOTAL SHEETS
07	Ven,SB	101	R39.8/R43.6, 0.0/2.2	160	757

REGISTERED CIVIL ENGINEER DATE

6-20-11
PLANS APPROVAL DATE

REGISTERED PROFESSIONAL ENGINEER
BALDEV K. BHALLA
No. 34350
Exp. 9/30/11
CIVIL
STATE OF CALIFORNIA

THE STATE OF CALIFORNIA OR ITS OFFICERS OR AGENTS SHALL NOT BE RESPONSIBLE FOR THE ACCURACY OR COMPLETENESS OF SCANNED COPIES OF THIS PLAN SHEET.

DRAINAGE SHEET No.	DRAINAGE SYSTEM No. ⬡	DRAINAGE UNIT ○	HEIGHT OF INLET H OR V FT	MINOR CONCRETE (MINOR STRUCTURE) CY	MISCELLANEOUS IRON AND STEEL LB	STRUCTURAL CONCRETE (BOX CULVERT) CY	REMOVE CONCRETE CY	ABANDON PIPELINE LF	SAND BACKFILL CY	DITCH EXCAVATION CY	REMOVE INLET EA	ABANDON INLET EA	CAP INLET EA	ADJUST INLET EA	BAR REINFORCING STEEL (BOX CULVERT) LB	18" CORRUGATED STEEL PIPE (0.079" THICK) LF	18" SLOTTED CORRUGATED STEEL PIPE (0.079" THICK) LF	18" REINFORCED CONCRETE PIPE LF	24" REINFORCED CONCRETE PIPE LF	(N) STEEL PLATE CLOSURE EA	(N) TYPE 18-9 FRAME AND GRATE EA	(N) TYPE 24-12 FRAME AND GRATE EA	(N) TYPE 24-10S FRAME AND GRATE EA	MAXIMUM COVER FT	ROCK SLOPE PROTECTION (FACING, METHOD B) CY	ROCK SLOPE PROTECTION FABRIC SQYD	GRATED LINE DRAIN LF	18" STEEL FLARED END SECTION EA	MINOR CONCRETE (BACKFILL) CY	REMOVE PIPE LF	FLUME DOWNDRAIN LF	18" TAPERED INLET EA	DESCRIPTION	STATION	DRAINAGE SHEET No.	DRAINAGE SYSTEM No. ⬡	DRAINAGE UNIT ○
D-2	10	a	3.65	1.48	326															1		1											TYPE G2 INLET	16+72.00 ℄ Fwy	D-2	10	a
		b														9.2								5.5									18"x 9.2' CSP				b
		c					1.29				1																						REMOVE INLET	11.7' Lt 16+72.00 ℄ Fwy			c
		d			229																		1										REMOVE GRATE; INSTALL GRATE	81.4' Lt 16+72.00 ℄ Fwy			d
		e		0.82	249															1	1												CL2 INLET; CASE 2	15+50.00 ℄ Fwy			e
	11	a	3.65	1.48	326															1		1											TYPE G2 INLET	18+47.00 ℄ Fwy		11	a
		b														10.5								5.5									18"x 10.5' CSP				b
		c					1.29				1																						REMOVE INLET	12.0' Lt 18+47.00 ℄ Fwy			c
		d		0.82	249															1	1												CL2 INLET; CASE 2	17+50.00 ℄ Fwy			d
	12	a	3.65	1.48	326															1		1											TYPE G2 INLET	21+23.00 ℄ Fwy		12	a
		b														10.7								5.5									18"x 10.7' CSP				b
		c					1.29				1																						REMOVE INLET	12.5' Lt 21+23.00 ℄ Fwy			c
		d						88.0	5.75																								ABANDON PIPELINE	12.5' Lt 20+35.00 ℄ Fwy 12.5' Lt 21+23.00 ℄ Fwy			d
		e										1																					ABANDON INLET	13.0' Lt 20+35.00 ℄ Fwy			e
		f		0.82	249															1	1												CL2 INLET; CASE 2	20+00.00 ℄ Fwy			f
		g			229																		1										REMOVE GRATE; INSTALL GRATE	81.7' Lt 21+23.00 ℄ Fwy			g
SHEET TOTAL				6.90	2183		3.87	88.0	5.75		3	1				30.4				6	3	3	2													

DRAINAGE QUANTITIES
DQ-3

STATE OF CALIFORNIA - DEPARTMENT OF TRANSPORTATION
Caltrans HYDRAULICS

FUNCTIONAL SUPERVISOR: DAVE BHALLA
CALCULATED-DESIGNED BY: C.P.NGUYEN
CHECKED BY: D.BHALLA
REVISED BY
DATE REVISED

LAST REVISION 08-31-10
DATE PLOTTED => 25-JUN-2011
TIME PLOTTED => 07:58

NOTES: PIPE JOINTS ARE STANDARD
OR AS NOTED ON PLANS

(N) NOT A SEPARATE PAY ITEM,
FOR INFORMATION ONLY.

Dist	COUNTY	ROUTE	POST MILES TOTAL PROJECT	SHEET No.	TOTAL SHEETS
07	Ven,SB	101	R39.8/R43.6, 0.0/2.2	161	757

REGISTERED CIVIL ENGINEER DATE

6-20-11
PLANS APPROVAL DATE

REGISTERED PROFESSIONAL ENGINEER BALDEV K. BHALLA No. 34350 Exp. 9/30/11 CIVIL STATE OF CALIFORNIA

THE STATE OF CALIFORNIA OR ITS OFFICERS OR AGENTS SHALL NOT BE RESPONSIBLE FOR THE ACCURACY OR COMPLETENESS OF SCANNED COPIES OF THIS PLAN SHEET.

DRAINAGE SHEET No.	DRAINAGE SYSTEM No.	DRAINAGE UNIT	HEIGHT OF INLET H OR V (FT)	MINOR CONCRETE (MINOR STRUCTURE) (CY)	MISCELLANEOUS IRON AND STEEL (LB)	STRUCTURAL CONCRETE (BOX CULVERT) (CY)	REMOVE CONCRETE (CY)	ABANDON PIPELINE (LF)	SAND BACKFILL (CY)	DITCH EXCAVATION (CY)	REMOVE INLET (EA)	ABANDON INLET (EA)	CAP INLET (EA)	ADJUST INLET (EA)	BAR REINFORCING STEEL (BOX CULVERT) (LB)	18" CORRUGATED STEEL PIPE (0.079" THICK) (LF)	18" SLOTTED CORRUGATED STEEL PIPE (0.079" THICK) (LF)	18" REINFORCED CONCRETE PIPE (LF)	24" REINFORCED CONCRETE PIPE (LF)	(N) STEEL PLATE CLOSURE (EA)	(N) TYPE 18-9 FRAME AND GRATE (EA)	(N) TYPE 24-12 FRAME AND GRATE (EA)	(N) TYPE 24-10S FRAME AND GRATE (EA)	MAXIMUM COVER (FT)	ROCK SLOPE PROTECTION (FACING, METHOD B) (CY)	ROCK SLOPE PROTECTION FABRIC (SQYD)	GRATED LINE DRAIN (LF)	18" STEEL FLARED END SECTION (EA)	MINOR CONCRETE (BACKFILL) (CY)	REMOVE PIPE (LF)	FLUME DOWNDRAIN (LF)	18" TAPERED INLET (EA)	DESCRIPTION	STATION	DRAINAGE SHEET No.	DRAINAGE SYSTEM No.	DRAINAGE UNIT
D-2	13	a	3.65	1.48	326															1		1											TYPE G2 INLET	23+82.00 ℄ Fwy	D-2	13	a
		b														11.6								5.5									18"x 11.6' CSP				b
		c					1.29				1																						REMOVE INLET	13.3' Lt 23+82.00 ℄ Fwy			c
		d						70.0	4.6																								ABANDON PIPELINE				d
		e										1																					ABANDON INLET	12.0' Lt 23+11.00 ℄ Fwy			e
		f		0.82	249															1	1												CL2 INLET; CASE 2	22+50.00 ℄ Fwy			f
		g			229																		1										REMOVE GRATE; INSTALL GRATE	81.7' Lt 23+82.00 ℄ Fwy			g
D-3	14	a	3.65	1.48	326															1		1											TYPE G2 INLET	26+34.00 ℄ Fwy	D-3	14	a
		b														11.5								5.5									18"x 11.5' CSP				b
		c					1.29				1																						REMOVE INLET	13.5' Lt 26+64.00 ℄ Fwy			c
		d						44.8	2.9																								ABANDON PIPELINE				d
		e										1																					ABANDON INLET	12.7' Lt 25+86.00 ℄ Fwy			e
		f		0.82	249															1	1												CL2 INLET; CASE 2	25+75.00 ℄ Fwy			f
	15	a	3.65	1.48	326															1		1											TYPE G2 INLET	27+84.00 ℄ Fwy	D-3	15	a
		b														12.0								5.5									18"x 12.0' CSP				b
		c					1.29				1																						REMOVE INLET	13.6' Lt 27+84.00 ℄ Fwy			c
SHEET TOTAL				6.08	1705		3.87	114.8	7.5		3	2				35.1				5	2	3	1													

DRAINAGE QUANTITIES
DQ-4

STATE OF CALIFORNIA - DEPARTMENT OF TRANSPORTATION
Caltrans HYDRAULICS

FUNCTIONAL SUPERVISOR: DAVE BHALLA
CALCULATED-DESIGNED BY: D.BHALLA
CHECKED BY: C.P.NGUYEN
REVISED BY
DATE REVISED

LAST REVISION 08-31-10
DATE PLOTTED => 25-JUN-2011
TIME PLOTTED => 07:58

NOTES: PIPE JOINTS ARE STANDARD
OR AS NOTED ON PLANS

(N) NOT A SEPARATE PAY ITEM,
FOR INFORMATION ONLY.

Dist	COUNTY	ROUTE	POST MILES TOTAL PROJECT	SHEET No.	TOTAL SHEETS
07	Ven,SB	101	R39.8/R43.6, 0.0/2.2	162	757

REGISTERED CIVIL ENGINEER DATE

6-20-11
PLANS APPROVAL DATE

REGISTERED PROFESSIONAL ENGINEER BALDEV K. BHALLA No. 34350 Exp. 9/30/11 CIVIL STATE OF CALIFORNIA

THE STATE OF CALIFORNIA OR ITS OFFICERS OR AGENTS SHALL NOT BE RESPONSIBLE FOR THE ACCURACY OR COMPLETENESS OF SCANNED COPIES OF THIS PLAN SHEET.

DRAINAGE SHEET No.	DRAINAGE SYSTEM No.	DRAINAGE UNIT	HEIGHT OF INLET H OR V (FT)	MINOR CONCRETE (MINOR STRUCTURE) (CY)	MISCELLANEOUS IRON AND STEEL (LB)	STRUCTURAL CONCRETE (BOX CULVERT) (CY)	REMOVE CONCRETE (CY)	ABANDON PIPELINE (LF)	SAND BACKFILL (CY)	DITCH EXCAVATION (CY)	REMOVE INLET (EA)	ABANDON INLET (EA)	CAP INLET (EA)	ADJUST INLET (EA)	BAR REINFORCING STEEL (BOX CULVERT) (LB)	18" CORRUGATED STEEL PIPE (0.079" THICK) (LF)	18" SLOTTED CORRUGATED STEEL PIPE (0.079" THICK) (LF)	18" REINFORCED CONCRETE PIPE (LF)	24" REINFORCED CONCRETE PIPE (LF)	(N) STEEL PLATE CLOSURE (EA)	(N) TYPE 18-9 FRAME AND GRATE (EA)	(N) TYPE 24-12 FRAME AND GRATE (EA)	(N) TYPE 24-10S FRAME AND GRATE (EA)	MAXIMUM COVER (FT)	ROCK SLOPE PROTECTION (FACING, METHOD B) (CY)	ROCK SLOPE PROTECTION FABRIC (SQYD)	GRATED LINE DRAIN (LF)	18" STEEL FLARED END SECTION (EA)	MINOR CONCRETE (BACKFILL) (CY)	REMOVE PIPE (LF)	FLUME DOWNDRAIN (LF)	18" TAPERED INLET (EA)	DESCRIPTION	STATION	DRAINAGE SHEET No.	DRAINAGE SYSTEM No.	DRAINAGE UNIT
D-3	16	a	3.65	1.48	326															1		1											TYPE G2 INLET	30+54.00 ℄ Fwy	D-3	16	a
		b														12.4								5.5									18"x 12.4' CSP				b
		c					1.29				1																						REMOVE INLET	13.8' L+ 30+54.00 ℄ Fwy			c
		d						68.0	4.4																								ABANDON PIPELINE	13.8' L+ 29+86.00 ℄ Fwy 13.8' L+ 30+54.00 ℄ Fwy			d
		e										1																					ABANDON INLET	13.7' L+ 29+86.00 ℄ Fwy			e
		f		0.82	249															1	1												CL2 INLET; CASE 2	28+75.00 ℄ Fwy			f
		g		0.82	249															1	1												CL2 INLET; CASE 2	29+75.00 ℄ Fwy			g
	17	a	3.65	1.48	326															1		1											TYPE G2 INLET	2.3' R+ 33+19.00 ℄ Fwy		17	a
		b														14.3								5.5									18"x 14.3' CSP				b
		c					1.29				1																						REMOVE INLET	15.6' L+ 33+19.00 ℄ Fwy			c
		d						82.0	5.4																								ABANDON PIPELINE	15.6' L+ 32+36.00 ℄ Fwy 15.6' L+ 33+19.00 ℄ Fwy			d
		e										1																					ABANDON INLET	15.0' L+ 32+35.00 ℄ Fwy			e
		f		0.82	249															1	1												CL2 INLET; CASE 2	31+75.00 ℄ Fwy			f
	18	a		0.55	326																	1											CL1 INLET; CASE 1	34+00.00 ℄ Fwy		18	a
		b															97.0																18" SCSP				b
		c		0.51	326																	1											CL1 INLET; CASE 2	35+00.00 ℄ Fwy			c
		d															97.0																18" SCSP				d
		e		0.51	326																	1											CL1 INLET; CASE 2	36+00.00 ℄ Fwy			e
		f															97.0																18" SCSP				f
		g		0.51	326																	1											CL1 INLET; CASE 2	37+00.00 ℄ Fwy			g
		h															146.0																18" SCSP				h
SHEET TOTAL				7.50	2703		2.58	150.0	9.8		2	2				26.7	437.0			5	3	6															

DRAINAGE QUANTITIES
DQ-5

C.P.NGUYEN — REVISED BY
D.BHALLA — DATE REVISED
CALCULATED-DESIGNED BY
CHECKED BY
FUNCTIONAL SUPERVISOR
DAVE BHALLA

STATE OF CALIFORNIA - DEPARTMENT OF TRANSPORTATION
Caltrans®
HYDRAULICS

LAST REVISION 08-31-10
DATE PLOTTED => 25-JUN-2011
TIME PLOTTED => 07:58

NOTES: PIPE JOINTS ARE STANDARD
OR AS NOTED ON PLANS

(N) NOT A SEPARATE PAY ITEM,
FOR INFORMATION ONLY.

Dist	COUNTY	ROUTE	POST MILES TOTAL PROJECT	SHEET No.	TOTAL SHEETS
07	Ven,SB	101	R39.8/R43.6, 0.0/2.2	163	757

REGISTERED CIVIL ENGINEER DATE

6-20-11
PLANS APPROVAL DATE

REGISTERED PROFESSIONAL ENGINEER BALDEV K. BHALLA No. 34350 Exp. 9/30/11 CIVIL STATE OF CALIFORNIA

THE STATE OF CALIFORNIA OR ITS OFFICERS OR AGENTS SHALL NOT BE RESPONSIBLE FOR THE ACCURACY OR COMPLETENESS OF SCANNED COPIES OF THIS PLAN SHEET.

DRAINAGE SHEET No.	DRAINAGE SYSTEM No.	DRAINAGE UNIT	HEIGHT OF INLET H OR V (FT)	MINOR CONCRETE (MINOR STRUCTURE) (CY)	MISCELLANEOUS IRON AND STEEL (LB)	STRUCTURAL CONCRETE (BOX CULVERT) (CY)	REMOVE CONCRETE (CY)	ABANDON PIPELINE (LF)	SAND BACKFILL (CY)	DITCH EXCAVATION (CY)	REMOVE INLET (EA)	ABANDON INLET (EA)	CAP INLET (EA)	ADJUST INLET (EA)	BAR REINFORCING STEEL (BOX CULVERT) (LB)	18" CORRUGATED STEEL PIPE (0.079" THICK) (LF)	18" SLOTTED CORRUGATED STEEL PIPE (0.079" THICK) (LF)	18" REINFORCED CONCRETE PIPE (LF)	24" REINFORCED CONCRETE PIPE (LF)	(N) STEEL PLATE CLOSURE (EA)	(N) TYPE 18-9 FRAME AND GRATE (EA)	(N) TYPE 24-12 FRAME AND GRATE (EA)	(N) TYPE 24-10S FRAME AND GRATE (EA)	MAXIMUM COVER (FT)	ROCK SLOPE PROTECTION (FACING, METHOD B) (CY)	ROCK SLOPE PROTECTION FABRIC (SQYD)	GRATED LINE DRAIN (LF)	18" STEEL FLARED END SECTION (EA)	MINOR CONCRETE (BACKFILL) (CY)	REMOVE PIPE (LF)	FLUME DOWNDRAIN (LF)	18" TAPERED INLET (EA)	DESCRIPTION	STATION	DRAINAGE SHEET No.	DRAINAGE SYSTEM No.	DRAINAGE UNIT
D-3	19	a	3.5	2.37	652																	2											TYPE GT4 INLET	13.6′ R+ 38+50.00 ℄ Fwy	D-3	19	a
		b														13.3								4.3									18" CSP				b
		c	4.3	1.24	326																	1											TYPE G1 INLET	14.1′ R+ 38+67.55 ℄ Fwy			c
		d														2.0								4.3									18" CSP				d
		e											1																				CAP INLET	19.5′ R+ 38+67.55 ℄ Fwy			e
		f															130.0																18" SCSP				f
		g		0.55	326																	1											CL1 INLET; CASE 1	40+00.00 ℄ Fwy			g
D-4		h															97.0																18" SCSP		D-4		h
		i		0.55	326																	1											CL1 INLET; CASE 1	20.2′ R+ 41+00.00 ℄ Fwy			i
D-4	20	a					0.3																										REMOVE CONCRETE (PARAPET)	62.6′ R+ 40+66.72 ℄ Fwy	D-4	20	a
		b				1.03									165									3.2									2′x2′RCB (L=3.3′)				b
D-4	21	a		0.53	326																	1											CL1 INLET; CASE 1	21.8′ R+ 41+50.00 ℄ Fwy	D-4	21	a
		b															97.0																18" SCSP				b
		c		0.51	326																	1											CL1 INLET; CASE 2	22.0′ R+ 42+50.00 ℄ Fwy			c
		d															89.0																18" SCSP				d
	21A	a					0.3																										REMOVE CONCRETE (PARAPET)	61.9′ R+ 41+97.50 ℄ Fwy		21A	a
		b				1.62									283.2									3.2									2′x2′RCB (L=5.9′)				b
SHEET TOTAL				5.75	2282	2.65	0.6						1		448.2	15.3	413.0					7														

DRAINAGE QUANTITIES
DQ-6

STATE OF CALIFORNIA - DEPARTMENT OF TRANSPORTATION
Caltrans HYDRAULICS

FUNCTIONAL SUPERVISOR: DAVE BHALLA
CALCULATED-DESIGNED BY: D.BHALLA
CHECKED BY: C.P.NGUYEN
REVISED BY
DATE REVISED

LAST REVISION 08-31-10
DATE PLOTTED => 25-JUN-2011
TIME PLOTTED => 07:58

NOTES: PIPE JOINTS ARE STANDARD
OR AS NOTED ON PLANS

(N) NOT A SEPARATE PAY ITEM,
FOR INFORMATION ONLY.

Dist	COUNTY	ROUTE	POST MILES TOTAL PROJECT	SHEET No.	TOTAL SHEETS
07	Ven,SB	101	R39.8/R43.6, 0.0/2.2	164	757

REGISTERED CIVIL ENGINEER DATE

6-20-11
PLANS APPROVAL DATE

REGISTERED PROFESSIONAL ENGINEER BALDEV K. BHALLA No. 34350 Exp. 9/30/11 CIVIL STATE OF CALIFORNIA

THE STATE OF CALIFORNIA OR ITS OFFICERS OR AGENTS SHALL NOT BE RESPONSIBLE FOR THE ACCURACY OR COMPLETENESS OF SCANNED COPIES OF THIS PLAN SHEET.

DRAINAGE SHEET No.	DRAINAGE SYSTEM No. ⬡	DRAINAGE UNIT ○	HEIGHT OF INLET H OR V (FT)	MINOR CONCRETE (MINOR STRUCTURE) (CY)	MISCELLANEOUS IRON AND STEEL (LB)	STRUCTURAL CONCRETE (BOX CULVERT) (CY)	REMOVE CONCRETE (CY)	ABANDON PIPELINE (LF)	SAND BACKFILL (CY)	DITCH EXCAVATION (CY)	REMOVE INLET (EA)	ABANDON INLET (EA)	CAP INLET (EA)	ADJUST INLET (EA)	BAR REINFORCING STEEL (BOX CULVERT) (LB)	18" CORRUGATED STEEL PIPE (0.079" THICK) (LF)	18" SLOTTED CORRUGATED STEEL PIPE (0.079" THICK) (LF)	18" REINFORCED CONCRETE PIPE (LF)	24" REINFORCED CONCRETE PIPE (LF)	(N) STEEL PLATE CLOSURE (EA)	(N) TYPE 18-9 FRAME AND GRATE (EA)	(N) TYPE 24-12 FRAME AND GRATE (EA)	(N) TYPE 24-10S FRAME AND GRATE (EA)	MAXIMUM COVER (FT)	ROCK SLOPE PROTECTION (FACING, METHOD B) (CY)	ROCK SLOPE PROTECTION FABRIC (SQYD)	GRATED LINE DRAIN (LF)	18" STEEL FLARED END SECTION (EA)	MINOR CONCRETE (BACKFILL) (CY)	REMOVE PIPE (LF)	FLUME DOWNDRAIN (LF)	18" TAPERED INLET (EA)	DESCRIPTION	STATION	DRAINAGE SHEET No.	DRAINAGE SYSTEM No. ⬡	DRAINAGE UNIT ○
D-4	22	a	5.0	1.96	498																2												MODIFIED GD-3 INLET	22.9' Rt 43+42.00 ℄ Fwy	D-4	22	a
		b														7.6								6.5									18" CSP				b
		c					1.29				1																						REMOVE INLET	12.0' Rt 43+42.00 ℄ Fwy			c
		d														81.0								5.0									18" CSP				d
		e	3.5	1.06	326																	1											TYPE G1 INLET	21.6' Rt 44+25.00 ℄ Fwy			e
	22A	a					0.3																										REMOVE CONCRETE (PARAPET)	64.0' Rt 43+42.00 ℄ Fwy		22A	a
		b				1.10									192.0									3.2									2'x2'x4.0' RCB				b
	23	a		0.82	249															1	1												CL2 INLET; CASE 2	44+00.00 ℄ Fwy		23	a
		b		0.82	249															1	1												CL2 INLET; CASE 2	45+00.00 ℄ Fwy			b
		c		0.82	249															1	1												CL2 INLET; CASE 2	46+00.00 ℄ Fwy			c
		d		0.82	249															1	1												CL2 INLET; CASE 2	47+00.00 C Fwy			d
		e		0.89	249															1	1												CL2 INLET; CASE 1	48+00.00 ℄ Fwy			e
		f					1.22																										REMOVE INTERFERENCE CONCRETE				f
		g				8.5									2753									4.0									11'x7'RCB (L=7.8')	67.0' Rt 46+17.00 ℄ Fwy			g
D-4	24	a																									73.7						12" GRATED LINE DRAIN	RAMP-1	D-4	24	a
		b																									51.2						12" GRATED LINE DRAIN	RAMP-2			b
		c	2.77	1.65	652																	2											TYPE GT3 INLET	50.0 Lt 250+50 ℄ RAMP-2			c
SHEET TOTAL				8.84	2721	9.6	2.8				1				2945	88.6				5	7	3					124.9									

DRAINAGE QUANTITIES
DQ-7

STATE OF CALIFORNIA - DEPARTMENT OF TRANSPORTATION
Caltrans® HYDRAULICS

FUNCTIONAL SUPERVISOR: DAVE BHALLA
CALCULATED-DESIGNED BY: D.BHALLA
CHECKED BY: C.P.NGUYEN
REVISED BY
DATE REVISED

LAST REVISION 08-31-10
DATE PLOTTED => 25-JUN-2011
TIME PLOTTED => 07:58

NOTES: PIPE JOINTS ARE STANDARD
OR AS NOTED ON PLANS

(N) NOT A SEPARATE PAY ITEM,
FOR INFORMATION ONLY.

Dist	COUNTY	ROUTE	POST MILES TOTAL PROJECT	SHEET No.	TOTAL SHEETS
07	Ven,SB	101	R39.8/R43.6, 0.0/2.2	165	757

REGISTERED CIVIL ENGINEER DATE

6-20-11
PLANS APPROVAL DATE

REGISTERED PROFESSIONAL ENGINEER BALDEV K. BHALLA No. 34350 Exp. 9/30/11 CIVIL STATE OF CALIFORNIA

THE STATE OF CALIFORNIA OR ITS OFFICERS OR AGENTS SHALL NOT BE RESPONSIBLE FOR THE ACCURACY OR COMPLETENESS OF SCANNED COPIES OF THIS PLAN SHEET.

DRAINAGE SHEET No.	DRAINAGE SYSTEM No. ⬡	DRAINAGE UNIT ○	HEIGHT OF INLET H OR V (FT)	MINOR CONCRETE (MINOR STRUCTURE) (CY)	MISCELLANEOUS IRON AND STEEL (LB)	STRUCTURAL CONCRETE (BOX CULVERT) (CY)	REMOVE CONCRETE (CY)	ABANDON PIPELINE (LF)	SAND BACKFILL (CY)	DITCH EXCAVATION (CY)	REMOVE INLET (EA)	ABANDON INLET (EA)	CAP INLET (EA)	ADJUST INLET (EA)	BAR REINFORCING STEEL (BOX CULVERT) (LB)	18" CORRUGATED STEEL PIPE (0.079" THICK) (LF)	18" SLOTTED CORRUGATED STEEL PIPE (0.079" THICK) (LF)	18" REINFORCED CONCRETE PIPE (LF)	24" REINFORCED CONCRETE PIPE (LF)	(N) STEEL PLATE CLOSURE (EA)	(N) TYPE 18-9 FRAME AND GRATE (EA)	(N) TYPE 24-12 FRAME AND GRATE (EA)	(N) TYPE 24-10S FRAME AND GRATE (EA)	MAXIMUM COVER (FT)	ROCK SLOPE PROTECTION (FACING, METHOD B) (CY)	ROCK SLOPE PROTECTION FABRIC (SQYD)	GRATED LINE DRAIN (LF)	18" STEEL FLARED END SECTION (EA)	MINOR CONCRETE (BACKFILL) (CY)	REMOVE PIPE (LF)	FLUME DOWNDRAIN (LF)	18" TAPERED INLET (EA)	DESCRIPTION	STATION	DRAINAGE SHEET No.	DRAINAGE SYSTEM No. ⬡	DRAINAGE UNIT ○
D-4	24	d																126.3						3.8					5.7				18" RCP (WITH CONCRETE BACKFILL)		D-4	24	d
		e	2.79	0.95	326																	1											TYPE G1 INLET	46.5' Lt 250+18 ℄ RAMP-1			e
		f																9.3						2.8									18" RCP				f
		g																										1					18" STEEL FLARED END SECTION	90.0' Lt 50+00.00 ℄ Fwy			g
		h								6.6																						BIOFILTRATION SWALE (L=100.0')	74.1' Lt 47+78.18 ℄ Fwy 76.3' Lt 49+02.54 ℄ Fwy			h
		i								8.4																						EARTH V-DITCH (L=100.0')	76.3' Lt 49+02.54 ℄ Fwy 89.5' Lt 49+99.54 ℄ Fwy			i
D-4	24A	a																													10.0	1	OVERSIDE DRAIN & TAPERED INLET	96.0' Lt 52+22.37 ℄ Fwy	D-4	24A	a
		b																							1.9	9.0							ROCK SLOPE PROTECTION; FACING - METHOD B	110.6' Lt 52+27.53 ℄ Fwy			b
D-4	25	a		0.55	249															1	1												CL2 INLET; CASE 1	5.4' Rt 49+00.00 ℄ Fwy	D-4	25	a
		b		0.51	249															1	1												CL2 INLET; CASE 2	6.0' Rt 50+00.00 ℄ Fwy			b
		c		0.51	249															1	1												CL2 INLET; CASE 2	8.6' Rt 51+00.00 ℄ Fwy			c
		d		0.51	249															1	1												CL2 INLET; CASE 2	10.9' Rt 52+00.00 ℄ Fwy			d
		e		0.51	249															1	1												CL2 INLET; CASE 2	12.9' Rt 53+00.00 ℄ Fwy			e
D-5		f		0.51	249															1	1												CL2 INLET; CASE 2	14.5' Rt 54+00.00 ℄ Fwy	D-5		f
		g		0.51	249															1	1												CL2 INLET; CASE 2	15.6' Rt 55+00.00 ℄ Fwy			g
		h		0.51	249															1	1												CL2 INLET; CASE 2	16.3' Rt 56+00.00 ℄ Fwy			h
		i		0.51	249															1	1												CL2 INLET; CASE 2	16.6' Rt 57+00.00 ℄ Fwy			i
		j		0.51	249															1	1												CL2 INLET; CASE 2	16.3' Rt 58+00.00 ℄ Fwy			j
SHEET TOTAL				6.09	2816					15.0								135.6		10	10	1			1.9	9.0		1	5.7		10.0	1					

DRAINAGE QUANTITIES
DQ-8

STATE OF CALIFORNIA - DEPARTMENT OF TRANSPORTATION
Caltrans® HYDRAULICS

FUNCTIONAL SUPERVISOR: DAVE BHALLA
CALCULATED-DESIGNED BY: C.P.NGUYEN
CHECKED BY: D.BHALLA
REVISED BY
DATE REVISED

LAST REVISION 08-31-10
DATE PLOTTED => 25-JUN-2011
TIME PLOTTED => 07:58

NOTES: PIPE JOINTS ARE STANDARD
OR AS NOTED ON PLANS

(N) NOT A SEPARATE PAY ITEM,
FOR INFORMATION ONLY.

Dist	COUNTY	ROUTE	POST MILES TOTAL PROJECT	SHEET No.	TOTAL SHEETS
07	Ven,SB	101	R39.8/R43.6, 0.0/2.2	166	757

REGISTERED CIVIL ENGINEER DATE

6-20-11
PLANS APPROVAL DATE

REGISTERED PROFESSIONAL ENGINEER BALDEV K. BHALLA No. 34350 Exp. 9/30/11 CIVIL STATE OF CALIFORNIA

THE STATE OF CALIFORNIA OR ITS OFFICERS OR AGENTS SHALL NOT BE RESPONSIBLE FOR THE ACCURACY OR COMPLETENESS OF SCANNED COPIES OF THIS PLAN SHEET.

DRAINAGE SHEET No.	DRAINAGE SYSTEM No. ⬡	DRAINAGE UNIT ○	HEIGHT OF INLET H OR V FT	MINOR CONCRETE (MINOR STRUCTURE) CY	MISCELLANEOUS IRON AND STEEL LB	STRUCTURAL CONCRETE (BOX CULVERT) CY	REMOVE CONCRETE CY	ABANDON PIPELINE LF	SAND BACKFILL CY	DITCH EXCAVATION CY	REMOVE INLET EA	ABANDON INLET EA	CAP INLET EA	ADJUST INLET EA	BAR REINFORCING STEEL (BOX CULVERT) LB	18" CORRUGATED STEEL PIPE (0.079" THICK) LF	18" SLOTTED CORRUGATED STEEL PIPE (0.079" THICK) LF	18" REINFORCED CONCRETE PIPE LF	24" REINFORCED CONCRETE PIPE LF	(N) STEEL PLATE CLOSURE EA	(N) TYPE 18-9 FRAME AND GRATE EA	(N) TYPE 24-12 FRAME AND GRATE EA	(N) TYPE 24-10S FRAME AND GRATE EA	MAXIMUM COVER FT	ROCK SLOPE PROTECTION (FACING, METHOD B) CY	ROCK SLOPE PROTECTION FABRIC SQYD	GRATED LINE DRAIN LF	18" STEEL FLARED END SECTION EA	MINOR CONCRETE (BACKFILL) CY	REMOVE PIPE LF	FLUME DOWNDRAIN LF	18" TAPERED INLET EA	DESCRIPTION	STATION	DRAINAGE SHEET No.	DRAINAGE SYSTEM No. ⬡	DRAINAGE UNIT ○
D-5	26	a	4.5	1.79	579																	2											GD-1 INLET	16.0′ R+ 58+66.90 ℄ Fwy	D-5	26	a
		b										1																					ABANDON INLET	3.1′ R+ 58+66.90 ℄ Fwy			b
D-5	27	a	7.6	2.68	579																	2											GD-1 INLET	61.3′ R+ 63+71.00 ℄ Fwy	D-5	27	a
D-5	28	a		0.51	249															1	1												CL2 INLET; CASE 2	14.7′ R+ 60+00.00 ℄ Fwy	D-5	28	a
		b		0.51	249															1	1												CL2 INLET; CASE 2	13.3′ R+ 61+00.00 ℄ Fwy			b
		c		0.51	249															1	1												CL2 INLET; CASE 2	11.7′ R+ 62+00.00 ℄ Fwy			c
		d		0.51	249															1	1												CL2 INLET; CASE 2	10.1′ R+ 63+00.00 ℄ Fwy			d
D-5	29	a	3.5	1.44	326																	1											TYPE G2 INLET	10.65′ R+ 63+71.00 ℄ Fwy	D-5	29	a
		b													11.7									3.5									18" CSP				b
		c				1.29				1																							REMOVE INLET	3.7′ L+ 63+71.00 ℄ Fwy			c
D-5	30	a		0.55	326																	1											CL1 INLET; CASE 1	61.4′ R+ 64+55.00 ℄ Fwy	D-5	30	a
		b														97.0																	18" SCSP				b
		c		0.51	326																	1											CL1 INLET; CASE 2	61.4′ R+ 65+55.00 ℄ Fwy			c
		d														97.0																	18" SCSP				d
SHEET TOTAL				9.01	3132		1.29				1	1			11.7	194.0				4	4	7															

DRAINAGE QUANTITIES

DQ-9

STATE OF CALIFORNIA - DEPARTMENT OF TRANSPORTATION
Caltrans HYDRAULICS

FUNCTIONAL SUPERVISOR: DAVE BHALLA

CALCULATED-DESIGNED BY: D.BHALLA
CHECKED BY: C.P.NGUYEN

REVISED BY
DATE REVISED

LAST REVISION 08-31-10
DATE PLOTTED => 25-JUN-2011
TIME PLOTTED => 07:58

NOTES: PIPE JOINTS ARE STANDARD
OR AS NOTED ON PLANS

(N) NOT A SEPARATE PAY ITEM,
FOR INFORMATION ONLY.

Dist	COUNTY	ROUTE	POST MILES TOTAL PROJECT	SHEET No.	TOTAL SHEETS
07	Ven,SB	101	R39.8/R43.6, 0.0/2.2	167	757

REGISTERED CIVIL ENGINEER DATE

6-20-11
PLANS APPROVAL DATE

REGISTERED PROFESSIONAL ENGINEER
BALDEV K. BHALLA
No. 34350
Exp. 9/30/11
CIVIL
STATE OF CALIFORNIA

THE STATE OF CALIFORNIA OR ITS OFFICERS OR AGENTS SHALL NOT BE RESPONSIBLE FOR THE ACCURACY OR COMPLETENESS OF SCANNED COPIES OF THIS PLAN SHEET.

DRAINAGE SHEET No.	DRAINAGE SYSTEM No.	DRAINAGE UNIT	HEIGHT OF INLET H OR V (FT)	MINOR CONCRETE (MINOR STRUCTURE) (CY)	MISCELLANEOUS IRON AND STEEL (LB)	STRUCTURAL CONCRETE (BOX CULVERT) (CY)	REMOVE CONCRETE (CY)	ABANDON PIPELINE (LF)	SAND BACKFILL (CY)	DITCH EXCAVATION (CY)	REMOVE INLET (EA)	ABANDON INLET (EA)	CAP INLET (EA)	ADJUST INLET (EA)	BAR REINFORCING STEEL (BOX CULVERT) (LB)	18" CORRUGATED STEEL PIPE (0.079" THICK) (LF)	18" SLOTTED CORRUGATED STEEL PIPE (0.079" THICK) (LF)	18" REINFORCED CONCRETE PIPE (LF)	24" REINFORCED CONCRETE PIPE (LF)	(N) STEEL PLATE CLOSURE (EA)	(N) TYPE 18-9 FRAME AND GRATE (EA)	(N) TYPE 24-12 FRAME AND GRATE (EA)	(N) TYPE 24-10S FRAME AND GRATE (EA)	MAXIMUM COVER (FT)	ROCK SLOPE PROTECTION (FACING, METHOD B) (CY)	ROCK SLOPE PROTECTION FABRIC (SQYD)	GRATED LINE DRAIN (LF)	18" STEEL FLARED END SECTION (EA)	MINOR CONCRETE (BACKFILL) (CY)	REMOVE PIPE (LF)	FLUME DOWNDRAIN (LF)	18" TAPERED INLET (EA)	DESCRIPTION	STATION	DRAINAGE SHEET No.	DRAINAGE SYSTEM No.	DRAINAGE UNIT
D-5	30	e		0.51	326																	1											CL1 INLET; CASE 2	61.4' Rt 66+55.00 ℄ Fwy	D-5	30	e
		f															97.0																18" SCSP				f
		g		0.51	326																	1											CL1 INLET; CASE 2	61.4' Rt 67+55.00 ℄ Fwy			g
		h															67.0																18" SCSP				h
		i	4.0	1.57	326																	1											TYPE G2 INLET	61.6' Rt 68+25.00 ℄ Fwy			i
		j																	73.7					6.1									24" RCP				j
		k	6.6	2.23	326																	1											TYPE G2 INLET	61.6' Rt 69+02.00 ℄ Fwy			k
D-5	31	a		0.55	249															1	1												CL2 INLET; CASE 1	9.9' Rt 65+00.00 ℄ Fwy	D-5	31	a
		b		0.51	249															1	1												CL2 INLET; CASE 2	9.9' Rt 66+00.00 ℄ Fwy			b
		c		0.51	249															1	1												CL2 INLET; CASE 2	9.9' Rt 67+00.00 ℄ Fwy			c
		d		0.51	249															1	1												CL2 INLET; CASE 2	9.9' Rt 68+00.00 ℄ Fwy			d
D-6	32	a	3.5	1.44	326																	1											TYPE G2 INLET	10.9' Rt 69+02.00 ℄ Fwy	D-6	32	a
		b														14.0								3.5									18" CSP				b
		c					1.29				1																						REMOVE INLET	5.7' Lt 69+02.00 ℄ Fwy			c
D-6	33	a		0.55	326																	1											CL1 INLET; CASE 1	25.8' Rt 70+00.00 ℄ Fwy	D-6	33	a
		b															97.0																18" SCSP				b
		c		0.51	326																	1											CL1 INLET; CASE 2	25.4' Rt 71+00.00 ℄ Fwy			c
		d															97.0																18" SCSP				d
SHEET TOTAL				9.40	3278		1.29				1					14.0	358.0		73.7	4	4	7															

DRAINAGE QUANTITIES
DQ-10

STATE OF CALIFORNIA - DEPARTMENT OF TRANSPORTATION
Caltrans® HYDRAULICS

FUNCTIONAL SUPERVISOR: DAVE BHALLA
CALCULATED-DESIGNED BY: C.P.NGUYEN
CHECKED BY: D.BHALLA
REVISED BY
DATE REVISED

LAST REVISION 08-31-10
DATE PLOTTED => 25-JUN-2011
TIME PLOTTED => 07:58

NOTES: PIPE JOINTS ARE STANDARD
OR AS NOTED ON PLANS

(N) NOT A SEPARATE PAY ITEM,
FOR INFORMATION ONLY.

Dist	COUNTY	ROUTE	POST MILES TOTAL PROJECT	SHEET No.	TOTAL SHEETS
07	Ven,SB	101	R39.8/R43.6, 0.0/2.2	168	757

REGISTERED CIVIL ENGINEER DATE

6-20-11
PLANS APPROVAL DATE

REGISTERED PROFESSIONAL ENGINEER BALDEV K. BHALLA No. 34350 Exp. 9/30/11 CIVIL STATE OF CALIFORNIA

THE STATE OF CALIFORNIA OR ITS OFFICERS OR AGENTS SHALL NOT BE RESPONSIBLE FOR THE ACCURACY OR COMPLETENESS OF SCANNED COPIES OF THIS PLAN SHEET.

DRAINAGE SHEET No.	DRAINAGE SYSTEM No.	DRAINAGE UNIT	HEIGHT OF INLET H OR V (FT)	MINOR CONCRETE (MINOR STRUCTURE) (CY)	MISCELLANEOUS IRON AND STEEL (LB)	STRUCTURAL CONCRETE (BOX CULVERT) (CY)	REMOVE CONCRETE (CY)	ABANDON PIPELINE (LF)	SAND BACKFILL (CY)	DITCH EXCAVATION (CY)	REMOVE INLET (EA)	ABANDON INLET (EA)	CAP INLET (EA)	ADJUST INLET (EA)	BAR REINFORCING STEEL (BOX CULVERT) (LB)	18" CORRUGATED STEEL PIPE (0.079" THICK) (LF)	18" SLOTTED CORRUGATED STEEL PIPE (0.079" THICK) (LF)	18" REINFORCED CONCRETE PIPE (LF)	24" REINFORCED CONCRETE PIPE (LF)	(N) STEEL PLATE CLOSURE (EA)	(N) TYPE 18-9 FRAME AND GRATE (EA)	(N) TYPE 24-12 FRAME AND GRATE (EA)	(N) TYPE 24-10S FRAME AND GRATE (EA)	MAXIMUM COVER (FT)	ROCK SLOPE PROTECTION (FACING, METHOD B) (CY)	ROCK SLOPE PROTECTION FABRIC (SQYD)	GRATED LINE DRAIN (LF)	18" STEEL FLARED END SECTION (EA)	MINOR CONCRETE (BACKFILL) (CY)	REMOVE PIPE (LF)	FLUME DOWNDRAIN (LF)	18" TAPERED INLET (EA)	DESCRIPTION	STATION	DRAINAGE SHEET No.	DRAINAGE SYSTEM No.	DRAINAGE UNIT
D-6	33	e		0.51	326																	1											CL1 INLET; CASE 2	25.1' R+ 72+00.00 ℄ Fwy	D-6	33	e
		f															97.0																18" SCSP				f
		g		0.51	326																	1											CL1 INLET; CASE 2	24.9' R+ 73+00.00 ℄ Fwy			g
		h															74.0																18" SCSP				h
		i	3.5	1.50	579																	2											GD-1 INLET	67.3' R+ 73+75.00 ℄ Fwy			i
		j																117.0						4.9									18" RCP				j
		k	4.9	1.37	326																	1											TYPE G1 INLET	75.0' R+ 70+75.00 ℄ Fwy			k
		L																97.0						6.7									18" RCP				L
		m	6.7	1.76	326																	1											TYPE G1 INLET	72.8' R+ 76+00.00 ℄ Fwy			m
D-6	34	a		0.51	249															1	1												CL2 INLET; CASE 2	70+00.00 ℄ Fwy	D-6	34	a
		b		0.51	249															1	1												CL2 INLET; CASE 2	71+00.00 ℄ Fwy			b
		c		0.51	249															1	1												CL2 INLET; CASE 2	72+00.00 ℄ Fwy			c
		d		0.51	249															1	1												CL2 INLET; CASE 2	73+00.00 ℄ Fwy			d
		e	3.5	1.50	579																	2											GD-1 INLET	13.5' R+ 73+75.00 ℄ Fwy			e
		f																122.0						5.9									18" RCP				f
		g	5.9	1.59	326																	1											TYPE G1 INLET	15.2' R+ 75+00.00 ℄ Fwy			g
		h																87.0						6.8									18" RCP				h
		i	6.8	1.79	326																	1											TYPE G1 INLET	16.4' R+ 75+90.00 ℄ Fwy			i
		j																10.5						6.8									18" RCP				j
		k											1																				CAP INLET	4.2' R+ 76+00.00 ℄ Fwy			k
SHEET TOTAL				12.57	4110								1				171.0	433.5		4	4	10															

DRAINAGE QUANTITIES
DQ-11

C.P.NGUYEN — REVISED BY
D.BHALLA — DATE REVISED
CALCULATED-DESIGNED BY
CHECKED BY
FUNCTIONAL SUPERVISOR
DAVE BHALLA

STATE OF CALIFORNIA - DEPARTMENT OF TRANSPORTATION
Caltrans®
HYDRAULICS

LAST REVISION DATE PLOTTED => 25-JUN-2011
08-31-10 TIME PLOTTED => 07:58

NOTES: PIPE JOINTS ARE STANDARD
OR AS NOTED ON PLANS

(N) NOT A SEPARATE PAY ITEM,
FOR INFORMATION ONLY.

Dist	COUNTY	ROUTE	POST MILES TOTAL PROJECT	SHEET No.	TOTAL SHEETS
07	Ven,SB	101	R39.8/R43.6, 0.0/2.2	169	757

REGISTERED CIVIL ENGINEER DATE

6-20-11
PLANS APPROVAL DATE

REGISTERED PROFESSIONAL ENGINEER BALDEV K. BHALLA No. 34350 Exp. 9/30/11 CIVIL STATE OF CALIFORNIA

THE STATE OF CALIFORNIA OR ITS OFFICERS OR AGENTS SHALL NOT BE RESPONSIBLE FOR THE ACCURACY OR COMPLETENESS OF SCANNED COPIES OF THIS PLAN SHEET.

DRAINAGE SHEET No.	DRAINAGE SYSTEM No.	DRAINAGE UNIT	HEIGHT OF INLET H OR V (FT)	MINOR CONCRETE (MINOR STRUCTURE) (CY)	MISCELLANEOUS IRON AND STEEL (LB)	STRUCTURAL CONCRETE (BOX CULVERT) (CY)	REMOVE CONCRETE (CY)	ABANDON PIPELINE (LF)	SAND BACKFILL (CY)	DITCH EXCAVATION (CY)	REMOVE INLET (EA)	ABANDON INLET (EA)	CAP INLET (EA)	ADJUST INLET (EA)	BAR REINFORCING STEEL (BOX CULVERT) (LB)	18" CORRUGATED STEEL PIPE (0.079" THICK) (LF)	18" SLOTTED CORRUGATED STEEL PIPE (0.079" THICK) (LF)	18" REINFORCED CONCRETE PIPE (LF)	24" REINFORCED CONCRETE PIPE (LF)	(N) STEEL PLATE CLOSURE (EA)	(N) TYPE 18-9 FRAME AND GRATE (EA)	(N) TYPE 24-12 FRAME AND GRATE (EA)	(N) TYPE 24-10S FRAME AND GRATE (EA)	MAXIMUM COVER (FT)	ROCK SLOPE PROTECTION (FACING, METHOD B) (CY)	ROCK SLOPE PROTECTION FABRIC (SQYD)	GRATED LINE DRAIN (LF)	18" STEEL FLARED END SECTION (EA)	MINOR CONCRETE (BACKFILL) (CY)	REMOVE PIPE (LF)	FLUME DOWNDRAIN (LF)	18" TAPERED INLET (EA)	DESCRIPTION	STATION	DRAINAGE SHEET No.	DRAINAGE SYSTEM No.	DRAINAGE UNIT
D-6	35	a															97.0																	18" SCSP		D-6	35	a
		b		0.5I	326																	I												CL1 INLET; CASE 2	26.1′ R+ 77+00.00 ℄ Fwy			b
		c															97.0																	18" SCSP				c
		d		0.5I	326																	I												CL1 INLET; CASE 2	26.1′ R+ 78+00.00 ℄ Fwy			d
		e															97.0																	18" SCSP				e
		f		0.5I	326																	I												CL1 INLET; CASE 2	26.3′ R+ 79+00.00 ℄ Fwy			f
		g															97.0																	18" SCSP				g
		h		0.55	326																	I												CL1 INLET; CASE 1	26.1′ R+ 80+00.00 ℄ Fwy			h
D-6	36	a		0.55	249															I	I													CL2 INLET; CASE 1	10.9′ R+ 82+00.00 ℄ Fwy	D-6	36	a
		b		0.5I	249															I	I													CL2 INLET; CASE 2	11.0′ R+ 83+00.00 ℄ Fwy			b
D-7		c		0.5I	249															I	I													CL2 INLET; CASE 2	10.7′ R+ 84+00.00 ℄ Fwy	D-7		c
		d		0.5I	249															I	I													CL2 INLET; CASE 2	10.9′ R+ 85+00.00 ℄ Fwy			d
		e		0.5I	249															I	I													CL2 INLET; CASE 2	10.9′ R+ 86+00.00 ℄ Fwy			e
D-7	37	a		0.55	326																	I												CL1 INLET; CASE 1	3+00.00 ℄ SW No. 90	D-7	37	a
		b															97.0																	18" SCSP				b
		c		0.5I	326																	I												CL1 INLET; CASE 2	4+00.00 ℄ RW No. 90			c
		d															97.0																	18" SCSP				d
		e		0.5I	326																	I												CL1 INLET; CASE 2	5+00.00 ℄ SW No. 90			e
SHEET TOTAL				6.24	3527												582.0			5	5	7															

DRAINAGE QUANTITIES
DQ-12

STATE OF CALIFORNIA - DEPARTMENT OF TRANSPORTATION
Caltrans® HYDRAULICS

FUNCTIONAL SUPERVISOR: DAVE BHALLA
CALCULATED-DESIGNED BY: D.BHALLA
CHECKED BY: C.P.NGUYEN
REVISED BY
DATE REVISED

LAST REVISION 08-31-10
DATE PLOTTED => 25-JUN-2011
TIME PLOTTED => 07:58

NOTES: PIPE JOINTS ARE STANDARD
OR AS NOTED ON PLANS

(N) NOT A SEPARATE PAY ITEM,
FOR INFORMATION ONLY.

Dist	COUNTY	ROUTE	POST MILES TOTAL PROJECT	SHEET No.	TOTAL SHEETS
07	Ven,SB	101	R39.8/R43.6, 0.0/2.2	170	757

REGISTERED CIVIL ENGINEER DATE

6-20-11
PLANS APPROVAL DATE

REGISTERED PROFESSIONAL ENGINEER
BALDEV K. BHALLA
No. 34350
Exp. 9/30/11
CIVIL
STATE OF CALIFORNIA

THE STATE OF CALIFORNIA OR ITS OFFICERS OR AGENTS SHALL NOT BE RESPONSIBLE FOR THE ACCURACY OR COMPLETENESS OF SCANNED COPIES OF THIS PLAN SHEET.

DRAINAGE SHEET No.	DRAINAGE SYSTEM No.	DRAINAGE UNIT	HEIGHT OF INLET H OR V (FT)	MINOR CONCRETE (MINOR STRUCTURE) (CY)	MISCELLANEOUS IRON AND STEEL (LB)	STRUCTURAL CONCRETE (BOX CULVERT) (CY)	REMOVE CONCRETE (CY)	ABANDON PIPELINE (LF)	SAND BACKFILL (CY)	DITCH EXCAVATION (CY)	REMOVE INLET (EA)	ABANDON INLET (EA)	CAP INLET (EA)	ADJUST INLET (EA)	BAR REINFORCING STEEL (BOX CULVERT) (LB)	18" CORRUGATED STEEL PIPE (0.079" THICK) (LF)	18" SLOTTED CORRUGATED STEEL PIPE (0.079" THICK) (LF)	18" REINFORCED CONCRETE PIPE (LF)	24" REINFORCED CONCRETE PIPE (LF)	(N) STEEL PLATE CLOSURE (EA)	(N) TYPE 18-9 FRAME AND GRATE (EA)	(N) TYPE 24-12 FRAME AND GRATE (EA)	(N) TYPE 24-10S FRAME AND GRATE (EA)	MAXIMUM COVER (FT)	ROCK SLOPE PROTECTION (FACING, METHOD B) (CY)	ROCK SLOPE PROTECTION FABRIC (SQYD)	GRATED LINE DRAIN (LF)	18" STEEL FLARED END SECTION (EA)	MINOR CONCRETE (BACKFILL) (CY)	REMOVE PIPE (LF)	FLUME DOWNDRAIN (LF)	18" TAPERED INLET (EA)	DESCRIPTION	STATION	DRAINAGE SHEET No.	DRAINAGE SYSTEM No.	DRAINAGE UNIT
D-7	37	f															97.0																	18" SCSP		D-7	37	f
		g		0.55	326																	1												CL1 INLET; CASE 2	78.9′ R+ 86+00.00 ℄ Fwy			g
		h															130.0																	18" SCSP				h
D-7	38	a												1																				ADJUST INLET TO GRADE	11.1′ R+ 87+33.50 ℄ Fwy	D-7	38	a
		b	8.2	3.87	579																	1												GD-1 INLET	75.6′ R+ 87+32.00 ℄ Fwy			b
D-7	39	a		0.51	249															1	1													CL2 INLET; CASE 2	10.9′ R+ 88+00.00 ℄ Fwy	D-7	39	a
		b		0.51	249															1	1													CL2 INLET; CASE 2	10.9′ R+ 89+00.00 ℄ Fwy			b
		c		0.51	249															1	1													CL2 INLET; CASE 2	10.9′ R+ 90+00.00 ℄ Fwy			c
		d		0.51	249															1	1													CL2 INLET; CASE 2	10.9′ R+ 91+00.00 ℄ Fwy			d
D-7	40	a		0.55	326																	1												CL1 INLET; CASE 1	80.5′ R+ 88+00.00 ℄ Fwy	D-7	40	a
		b															97.0																	18" SCSP				b
		c		0.51	326																	1												CL1 INLET; CASE 2	78.0′ R+ 89+00.00 ℄ Fwy			c
		d															97.0																	18" SCSP				d
		e		0.51	326																	1												CL1 INLET; CASE 2	74.9′ R+ 90+00.00 ℄ Fwy			e
		f															97.0																	18" SCSP				f
		g		0.51	326																	1												CL1 INLET; CASE 2	72.4′ R+ 91+00.00 ℄ Fwy			g
		h															127.3																	18" SCSP				h
SHEET TOTAL				8.54	3205									1			645.3			4	4	6															

DRAINAGE QUANTITIES
DQ-13

STATE OF CALIFORNIA - DEPARTMENT OF TRANSPORTATION
Caltrans®
HYDRAULICS

FUNCTIONAL SUPERVISOR: DAVE BHALLA
CALCULATED-DESIGNED BY: D.BHALLA
CHECKED BY: C.P.NGUYEN
REVISED BY
DATE REVISED

LAST REVISION 08-31-10
DATE PLOTTED => 25-JUN-2011
TIME PLOTTED => 07:59

NOTES: PIPE JOINTS ARE STANDARD
OR AS NOTED ON PLANS

(N) NOT A SEPARATE PAY ITEM,
FOR INFORMATION ONLY.

Dist	COUNTY	ROUTE	POST MILES TOTAL PROJECT	SHEET No.	TOTAL SHEETS
07	Ven,SB	101	R39.8/R43.6, 0.0/2.2	171	757

REGISTERED CIVIL ENGINEER DATE

6-20-11
PLANS APPROVAL DATE

REGISTERED PROFESSIONAL ENGINEER
BALDEV K. BHALLA
No. 34350
Exp. 9/30/11
CIVIL
STATE OF CALIFORNIA

THE STATE OF CALIFORNIA OR ITS OFFICERS OR AGENTS SHALL NOT BE RESPONSIBLE FOR THE ACCURACY OR COMPLETENESS OF SCANNED COPIES OF THIS PLAN SHEET.

DRAINAGE SHEET No.	DRAINAGE SYSTEM No.	DRAINAGE UNIT	HEIGHT OF INLET H OR V (FT)	MINOR CONCRETE (MINOR STRUCTURE) (CY)	MISCELLANEOUS IRON AND STEEL (LB)	STRUCTURAL CONCRETE (BOX CULVERT) (CY)	REMOVE CONCRETE (CY)	ABANDON PIPELINE (LF)	SAND BACKFILL (CY)	DITCH EXCAVATION (CY)	REMOVE INLET (EA)	ABANDON INLET (EA)	CAP INLET (EA)	ADJUST INLET (EA)	BAR REINFORCING STEEL (BOX CULVERT) (LB)	18" CORRUGATED STEEL PIPE (0.079" THICK) (LF)	18" SLOTTED CORRUGATED STEEL PIPE (0.079" THICK) (LF)	18" REINFORCED CONCRETE PIPE (LF)	24" REINFORCED CONCRETE PIPE (LF)	(N) STEEL PLATE CLOSURE (EA)	(N) TYPE 18-9 FRAME AND GRATE (EA)	(N) TYPE 24-12 FRAME AND GRATE (EA)	(N) TYPE 24-10S FRAME AND GRATE (EA)	MAXIMUM COVER (FT)	ROCK SLOPE PROTECTION (FACING, METHOD B) (CY)	ROCK SLOPE PROTECTION FABRIC (SQYD)	GRATED LINE DRAIN (LF)	18" STEEL FLARED END SECTION (EA)	MINOR CONCRETE (BACKFILL) (CY)	REMOVE PIPE (LF)	FLUME DOWNDRAIN (LF)	18" TAPERED INLET (EA)	DESCRIPTION	STATION	DRAINAGE SHEET No.	DRAINAGE SYSTEM No.	DRAINAGE UNIT
D-7	41	a	9.3	4.20	579																	2											GD-1 INLET	69.8′ Rt 92+29.00 ℄ Fwy	D-7	41	a
		b	10.6	4.83	579																	2											GD-1 INLET	11.0′ Rt 92+29.00 ℄ Fwy			b
D-7	42	a		0.51	249															1	1												CL2 INLET; CASE 2	10.9′ Rt 93+25.00 ℄ Fwy	D-7	42	a
		b		0.51	249															1	1												CL2 INLET; CASE 2	10.9′ Rt 94+25.00 ℄ Fwy			b
		c		0.51	249															1	1												CL2 INLET; CASE 2	10.9′ Rt 95+25.00 ℄ Fwy			c
D-7	43	a	3.4	2.80	326																	1											TYPE G1 INLET WITH CONCRETE APRON	84.5′ Rt 92+03.00 ℄ Fwy	D-7	43	a
		b																21.2						3.4									REINFORCED CONRETE PIPE				b
		c				4.26									746																		2.0′W x 0.75′H x31.1′L REINFORCED CONCRETE BOX				c
		d	6.1	3.68	326																	1											TYPE G1 INLET WITH CONCRETE APRON	84.7′ Rt 92+64.00 ℄ Fwy			d
D-7	44	a		0.98	326		0.3																										MODIFY TYPE G2 INLET	10.2′ Rt 96+30.00 ℄ Fwy	D-7	44	a
SHEET TOTAL				18.02	2883	4.26	0.3								746			21.2		3	3	6															

DRAINAGE QUANTITIES
DQ-14

STATE OF CALIFORNIA - DEPARTMENT OF TRANSPORTATION
Caltrans®
HYDRAULICS

FUNCTIONAL SUPERVISOR: DAVE BHALLA
CALCULATED-DESIGNED BY: D.BHALLA
CHECKED BY: C.P.NGUYEN
REVISED BY
DATE REVISED

LAST REVISION 08-31-10
DATE PLOTTED => 25-JUN-2011
TIME PLOTTED => 07:59

NOTES: PIPE JOINTS ARE STANDARD
OR AS NOTED ON PLANS

(N) NOT A SEPARATE PAY ITEM,
FOR INFORMATION ONLY.

Dist	COUNTY	ROUTE	POST MILES TOTAL PROJECT	SHEET No.	TOTAL SHEETS
07	Ven,SB	101	R39.8/R43.6, 0.0/2.2	172	757

REGISTERED CIVIL ENGINEER DATE

6-20-11
PLANS APPROVAL DATE

REGISTERED PROFESSIONAL ENGINEER
BALDEV K. BHALLA
No. 34350
Exp. 9/30/11
CIVIL
STATE OF CALIFORNIA

THE STATE OF CALIFORNIA OR ITS OFFICERS OR AGENTS SHALL NOT BE RESPONSIBLE FOR THE ACCURACY OR COMPLETENESS OF SCANNED COPIES OF THIS PLAN SHEET.

DRAINAGE SHEET No.	DRAINAGE SYSTEM No. ⬡	DRAINAGE UNIT ○	HEIGHT OF INLET H OR V (FT)	MINOR CONCRETE (MINOR STRUCTURE) (CY)	MISCELLANEOUS IRON AND STEEL (LB)	STRUCTURAL CONCRETE (BOX CULVERT) (CY)	REMOVE CONCRETE (CY)	ABANDON PIPELINE (LF)	SAND BACKFILL (CY)	DITCH EXCAVATION (CY)	REMOVE INLET (EA)	ABANDON INLET (EA)	CAP INLET (EA)	ADJUST INLET (EA)	BAR REINFORCING STEEL (BOX CULVERT) (LB)	18" CORRUGATED STEEL PIPE (0.079" THICK) (LF)	18" SLOTTED CORRUGATED STEEL PIPE (0.079" THICK) (LF)	18" REINFORCED CONCRETE PIPE (LF)	24" REINFORCED CONCRETE PIPE (LF)	(N) STEEL PLATE CLOSURE (EA)	(N) TYPE 18-9 FRAME AND GRATE (EA)	(N) TYPE 24-12 FRAME AND GRATE (EA)	(N) TYPE 24-10S FRAME AND GRATE (EA)	MAXIMUM COVER (FT)	ROCK SLOPE PROTECTION (FACING, METHOD B) (CY)	ROCK SLOPE PROTECTION FABRIC (SQYD)	GRATED LINE DRAIN (LF)	18" STEEL FLARED END SECTION (EA)	MINOR CONCRETE (BACKFILL) (CY)	REMOVE PIPE (LF)	FLUME DOWNDRAIN (LF)	18" TAPERED INLET (EA)	DESCRIPTION	STATION	DRAINAGE SHEET No.	DRAINAGE SYSTEM No. ⬡	DRAINAGE UNIT ○
D-8	45	a					1.4							1																			ADJUST INLET TO GRADE, REMOVE Conc APRON	11.0′ R† 105+03.00 ℄ Fwy	D-8	45	a
		b																	124.0					6.1									24" RCP				b
		c	4.0	1.17	326																	1											TYPE G1 INLET	13.2′ R† 106+30.00 ℄ Fwy			c
		d		0.51	249															1	1												CL2 INLET; CASE 2	13.0′ R† 107+50.00 ℄ Fwy			d
		e		0.51	249															1	1												CL2 INLET; CASE 2	12.3′ R† 108+50.00 ℄ Fwy			e
		f		0.51	249															1	1												CL2 INLET; CASE 2	11.3′ R† 109+50.00 ℄ Fwy			f
		g		0.51	249															1	1												CL2 INLET; CASE 2	10.4′ R† 110+50.00 ℄ Fwy			g
D-8	46	a		0.51	249															1	1												CL2 INLET; CASE 2	10.8′ R† 97+25.00 ℄ Fwy	D-8	46	a
		b	4.0	1.17	326																	1											TYPE G1 INLET	11.9′ R† 98+25.00 ℄ Fwy			b
		c																	192.0					4.0									24" RCP	10.2′ R† 96+30.00 ℄ Fwy 11.9′ R† 98+25.00 ℄ Fwy			c
D-8	47	a		0.51	249															1	1												CL2 INLET; CASE 2	10.9′ R† 99+25.00 ℄ Fwy	D-8	47	a
		b		0.51	249															1	1												CL2 INLET; CASE 2	10.9′ R† 100+25.00 ℄ Fwy			b
		c		0.51	249															1	1												CL2 INLET; CASE 2	10.9′ R† 101+25.00 ℄ Fwy			c
		d		0.51	249															1	1												CL2 INLET; CASE 2	10.9′ R† 102+25.00 ℄ Fwy			d
D-9	48	a		0.51	249															1	1												CL2 INLET; CASE 2	10.0′ R† 111+50.00 ℄ Fwy	D-9	48	a
		b		0.51	249															1	1												CL2 INLET; CASE 2	9.4′ R† 112+50.00 ℄ Fwy			b
		c		0.51	249															1	1												CL2 INLET; CASE 2	9.0′ R† 113+50.00 ℄ Fwy			c
		d		0.51	249															1	1												CL2 INLET; CASE 2	8.7′ R† 114+50.00 ℄ Fwy			d
SHEET TOTAL				8.97	3889		1.4							1					316.0	13	13	2															

DRAINAGE QUANTITIES
DQ-15

STATE OF CALIFORNIA - DEPARTMENT OF TRANSPORTATION
Caltrans® HYDRAULICS

FUNCTIONAL SUPERVISOR: DAVE BHALLA
CALCULATED-DESIGNED BY: C.P.NGUYEN
CHECKED BY: D.BHALLA
REVISED BY
DATE REVISED

LAST REVISION 08-31-10
DATE PLOTTED => 25-JUN-2011
TIME PLOTTED => 07:59

NOTES: PIPE JOINTS ARE STANDARD
OR AS NOTED ON PLANS

(N) NOT A SEPARATE PAY ITEM,
FOR INFORMATION ONLY.

Dist	COUNTY	ROUTE	POST MILES TOTAL PROJECT	SHEET No.	TOTAL SHEETS
07	Ven,SB	101	R39.8/R43.6, 0.0/2.2	173	757

REGISTERED CIVIL ENGINEER DATE

6-20-11
PLANS APPROVAL DATE

REGISTERED PROFESSIONAL ENGINEER BALDEV K. BHALLA No. 34350 Exp. 9/30/11 CIVIL STATE OF CALIFORNIA

THE STATE OF CALIFORNIA OR ITS OFFICERS OR AGENTS SHALL NOT BE RESPONSIBLE FOR THE ACCURACY OR COMPLETENESS OF SCANNED COPIES OF THIS PLAN SHEET.

DRAINAGE SHEET No.	DRAINAGE SYSTEM No. ⬡	DRAINAGE UNIT ○	HEIGHT OF INLET H OR V FT	MINOR CONCRETE (MINOR STRUCTURE) CY	MISCELLANEOUS IRON AND STEEL LB	STRUCTURAL CONCRETE (BOX CULVERT) CY	REMOVE CONCRETE CY	ABANDON PIPELINE LF	SAND BACKFILL CY	DITCH EXCAVATION CY	REMOVE INLET EA	ABANDON INLET EA	CAP INLET EA	ADJUST INLET EA	BAR REINFORCING STEEL (BOX CULVERT) LB	18" CORRUGATED STEEL PIPE (0.079" THICK) LF	18" SLOTTED CORRUGATED STEEL PIPE (0.079" THICK) LF	18" REINFORCED CONCRETE PIPE LF	24" REINFORCED CONCRETE PIPE LF	(N) STEEL PLATE CLOSURE EA	(N) TYPE 18-9 FRAME AND GRATE EA	(N) TYPE 24-12 FRAME AND GRATE EA	(N) TYPE 24-10S FRAME AND GRATE EA	MAXIMUM COVER FT	ROCK SLOPE PROTECTION (FACING, METHOD B) CY	ROCK SLOPE PROTECTION FABRIC SQYD	GRATED LINE DRAIN LF	18" STEEL FLARED END SECTION EA	MINOR CONCRETE (BACKFILL) CY	REMOVE PIPE LF	FLUME DOWNDRAIN LF	18" TAPERED INLET EA	DESCRIPTION	STATION	DRAINAGE SHEET No.	DRAINAGE SYSTEM No. ⬡	DRAINAGE UNIT ○
D-9	48	e		0.51	249														1	1													CL2 INLET; CASE 2	9.1′ R+ 115+50.00 ℄ Fwy	D-9	48	e
		f												1																			ADJUST INLET TO GRADE	9.0′ R+ 115+96.00 ℄ Fwy			f
		g		0.51	249														1	1													CL2 INLET; CASE 2	9.0′ R+ 116+50.00 ℄ Fwy			g
		h		0.51	249														1	1													CL2 INLET; CASE 2	9.4′ R+ 117+50.00 ℄ Fwy			h
		i		0.51	249														1	1													CL2 INLET; CASE 2	9.9′ R+ 118+50.00 ℄ Fwy			i
		j					1.29							1																			ADJUST INLET TO GRADE, REMOVE Conc APRON	8.9′ R+ 119+47.50 ℄ Fwy			j
D-10	49	a					1.29							1																			ADJUST INLET TO GRADE, REMOVE Conc APRON	9.0′ R+ 125+05.00 ℄ Fwy	D-10	49	a
D-10	50	a		0.55	249														1	1													CL2 INLET; CASE 1	10.4′ R+ 126+00.00 ℄ Fwy	D-10	50	a
		b		0.51	249														1	1													CL2 INLET; CASE 2	10.0′ R+ 127+00.00 ℄ Fwy			b
		c		0.51	249														1	1													CL2 INLET; CASE 2	10.2′ R+ 128+00.00 ℄ Fwy			c
		d		0.51	249														1	1													CL2 INLET; CASE 2	10.0′ R+ 129+00.00 ℄ Fwy			d
		e					1.29							1																			ADJUST INLET TO GRADE, REMOVE Conc APRON	8.50′ R+ 130+41.50 ℄ Fwy			e
		f		0.51	249														1	1													CL2 INLET; CASE 2	10.0′ R+ 131+50.00 ℄ Fwy			f
		g		0.51	249														1	1													CL2 INLET; CASE 2	10.0′ R+ 132+50.00 ℄ Fwy			g
		h		0.51	249														1	1													CL2 INLET; CASE 2	9.80′ R+ 133+50.00 ℄ Fwy			h
		i		0.51	249														1	1													CL2 INLET; CASE 2	10.0′ R+ 134+50.00 ℄ Fwy			i
		j					1.29							1																			ADJUST INLET TO GRADE, REMOVE Conc APRON	9.20′ R+ 135+52.00 ℄ Fwy			j
		k		0.51	249														1	1													CL2 INLET; CASE 2	10.2′ R+ 136+50.00 ℄ Fwy			k
		L	6.50	2.40	651																2												MODIFIED GD-3 INLET	9.80′ R+ 137+82.00 ℄ Fwy			L
SHEET TOTAL				9.07	3888		5.16							5						13	13	2															

DRAINAGE QUANTITIES
DQ-16

STATE OF CALIFORNIA - DEPARTMENT OF TRANSPORTATION
Caltrans® HYDRAULICS

FUNCTIONAL SUPERVISOR: DAVE BHALLA
CALCULATED-DESIGNED BY: D.BHALLA
CHECKED BY
REVISED BY
DATE REVISED

C.P.NGUYEN

LAST REVISION 08-31-10
DATE PLOTTED => 25-JUN-2011
TIME PLOTTED => 07:59

NOTES: PIPE JOINTS ARE STANDARD
OR AS NOTED ON PLANS

(N) NOT A SEPARATE PAY ITEM,
FOR INFORMATION ONLY.

Dist	COUNTY	ROUTE	POST MILES TOTAL PROJECT	SHEET No.	TOTAL SHEETS
07	Ven,SB	101	R39.8/R43.6, 0.0/2.2	174	757

REGISTERED CIVIL ENGINEER DATE

6-20-11
PLANS APPROVAL DATE

REGISTERED PROFESSIONAL ENGINEER SA K. THAI No. 71390 Exp. 12/31/11 CIVIL STATE OF CALIFORNIA

THE STATE OF CALIFORNIA OR ITS OFFICERS OR AGENTS SHALL NOT BE RESPONSIBLE FOR THE ACCURACY OR COMPLETENESS OF SCANNED COPIES OF THIS PLAN SHEET.

DRAINAGE SHEET No.	DRAINAGE SYSTEM No.	DRAINAGE UNIT	HEIGHT OF INLET H OR V (FT)	MINOR CONCRETE (MINOR STRUCTURE) (CY)	MISCELLANEOUS IRON AND STEEL (LB)	STRUCTURAL CONCRETE (BOX CULVERT) (CY)	REMOVE CONCRETE (CY)	ABANDON PIPELINE (LF)	SAND BACKFILL (CY)	DITCH EXCAVATION (CY)	REMOVE INLET (EA)	ABANDON INLET (EA)	CAP INLET (EA)	ADJUST INLET (EA)	BAR REINFORCING STEEL (BOX CULVERT) (LB)	18" CORRUGATED STEEL PIPE (0.079" THICK) (LF)	18" SLOTTED CORRUGATED STEEL PIPE (0.079" THICK) (LF)	18" REINFORCED CONCRETE PIPE (LF)	24" REINFORCED CONCRETE PIPE (LF)	(N) STEEL PLATE CLOSURE (EA)	(N) TYPE 18-9 FRAME AND GRATE (EA)	(N) TYPE 24-12 FRAME AND GRATE (EA)	(N) TYPE 24-10S FRAME AND GRATE (EA)	MAXIMUM COVER (FT)	ROCK SLOPE PROTECTION (FACING, METHOD B) (CY)	ROCK SLOPE PROTECTION FABRIC (SQYD)	GRATED LINE DRAIN (LF)	18" STEEL FLARED END SECTION (EA)	MINOR CONCRETE (BACKFILL) (CY)	REMOVE PIPE (LF)	FLUME DOWNDRAIN (LF)	18" TAPERED INLET (EA)	DESCRIPTION	STATION	DRAINAGE SHEET No.	DRAINAGE SYSTEM No.	DRAINAGE UNIT
D-11	51	a		0.82	249															1	1													CL2 INLET; CASE 2	10.5' Rt 139+70.00 ℄ Fwy	D-11	51	a
		b			229																		1											REMOVE GRATE INSTALL GRATE TYPE 24-10S	63.0' Lt 140+00.00 ℄ Fwy			b
		c		1.13	326		1.7																											REMOVE Conc APRON MODIFY TYPE GI INLET	7.8' Rt 140+71.00 ℄ Fwy			c
		d		0.82	249															1	1													CL2 INLET; CASE 2	9.2' Rt 141+75.00 ℄ Fwy			d
		e		0.82	249															1	1													CL2 INLET; CASE 2	7.8' Rt 143+00.00 ℄ Fwy			e
D-11	52	a			229																		1											REMOVE GRATE INSTALL GRATE TYPE 24-10S	63.3' Lt 144+14.50 ℄ Fwy	D-11	52	a
		b		0.98	326		1.7																											REMOVE Conc APRON MODIFY TYPE GI INLET	6.3' Rt 144+14.50 ℄ Fwy			b
		c		0.82	249															1	1													CL2 INLET; CASE 2	8.3' Rt 145+00.00 ℄ Fwy			c
		d		0.82	249															1	1													CL2 INLET; CASE 2	8.3' Rt 146+00.00 ℄ Fwy			d
		e		0.89	249															1	1													CL2 INLET; CASE 1	8.3' Rt 147+00.00 ℄ Fwy			e
D-11	53	a		0.55	326																	1												CL1 INLET; CASE 1	51.3' Lt 148+50.00 ℄ Fwy	D-11	53	a
		b															75.0																	18" SCSP				b
		c		0.51	326																	1												CL1 INLET; CASE 2	51.3' Lt 149+28.00 ℄ Fwy			c
		d															75.0																	18" SCSP				d
		e		0.51	326																	1												CL1 INLET; CASE 2	51.3' Lt 150+04.00 ℄ Fwy			e
		f															75.0																	18" SCSP				f
		g			229																		1											REMOVE GRATE INSTALL GRATE TYPE 24-10S	65.0' Lt 150+82.50 ℄ Fwy			g
		h																	15.6					4									24" RCP				h
		i	4.0	1.57	326																	1												TYPE G2 INLET	51.2' Lt 150+82.50 ℄ Fwy			i
SHEET TOTAL				10.24	4137		3.4										225.0		15.6	6	6	4	3														

DRAINAGE QUANTITIES
DQ-17

STATE OF CALIFORNIA - DEPARTMENT OF TRANSPORTATION
Caltrans® HYDRAULICS

FUNCTIONAL SUPERVISOR: DAVE BHALLA

CALCULATED-DESIGNED BY: S. THAI
CHECKED BY: D. BHALLA

REVISED BY
DATE REVISED

LAST REVISION 08-31-10
DATE PLOTTED => 25-JUN-2011
TIME PLOTTED => 07:59

NOTES: PIPE JOINTS ARE STANDARD
OR AS NOTED ON PLANS

(N) NOT A SEPARATE PAY ITEM,
FOR INFORMATION ONLY.

Dist	COUNTY	ROUTE	POST MILES TOTAL PROJECT	SHEET No.	TOTAL SHEETS
07	Ven,SB	101	R39.8/R43.6, 0.0/2.2	175	757

REGISTERED CIVIL ENGINEER DATE

6-20-11
PLANS APPROVAL DATE

REGISTERED PROFESSIONAL ENGINEER SA K. THAI No. 71390 Exp. 12/31/11 CIVIL STATE OF CALIFORNIA

THE STATE OF CALIFORNIA OR ITS OFFICERS OR AGENTS SHALL NOT BE RESPONSIBLE FOR THE ACCURACY OR COMPLETENESS OF SCANNED COPIES OF THIS PLAN SHEET.

DRAINAGE SHEET No.	DRAINAGE SYSTEM No. ⬡	DRAINAGE UNIT ○	HEIGHT OF INLET H OR V (FT)	MINOR CONCRETE (MINOR STRUCTURE) (CY)	MISCELLANEOUS IRON AND STEEL (LB)	STRUCTURAL CONCRETE (BOX CULVERT) (CY)	REMOVE CONCRETE (CY)	ABANDON PIPELINE (LF)	SAND BACKFILL (CY)	DITCH EXCAVATION (CY)	REMOVE INLET (EA)	ABANDON INLET (EA)	CAP INLET (EA)	ADJUST INLET (EA)	BAR REINFORCING STEEL (BOX CULVERT) (LB)	18" CORRUGATED STEEL PIPE (0.079" THICK) (LF)	18" SLOTTED CORRUGATED STEEL PIPE (0.079" THICK) (LF)	18" REINFORCED CONCRETE PIPE (LF)	24" REINFORCED CONCRETE PIPE (LF)	(N) STEEL PLATE CLOSURE (EA)	(N) TYPE 18-9 FRAME AND GRATE (EA)	(N) TYPE 24-12 FRAME AND GRATE (EA)	(N) TYPE 24-10S FRAME AND GRATE (EA)	MAXIMUM COVER (FT)	ROCK SLOPE PROTECTION (FACING, METHOD B) (CY)	ROCK SLOPE PROTECTION FABRIC (SQYD)	GRATED LINE DRAIN (LF)	18" STEEL FLARED END SECTION (EA)	MINOR CONCRETE (BACKFILL) (CY)	REMOVE PIPE (LF)	FLUME DOWNDRAIN (LF)	18" TAPERED INLET (EA)	DESCRIPTION	STATION	DRAINAGE SHEET No.	DRAINAGE SYSTEM No. ⬡	DRAINAGE UNIT ○
D-11	53	j											1																				CAP INLET	2.0 Rt 150+82.50 ℄ Fwy	D-11	53	j
		k														4.5							4									18" CSP				k
		L	4.0	1.57	326																	1										TYPE G2 INLET	6.0' Rt 150+82.50 ℄ Fwy			L
		m					1.0																									REMOVE PORTION OF Exist Conc CHANNEL				m
		n				2.02									325																	RCB WITH Conc PARAPET (L=6.5')	54.5' Rt 150+82.50 ℄ Fwy			n
		o															85.0															18" SCSP				o
		p		0.55	326																	1										CLI INLET; CASE 2	51.3' Lt 151+70.80 ℄ Fwy			p
		q															85.0															18" SCSP				q
		r		0.51	326																	1										CLI INLET; CASE 2	51.3' Lt 152+58.80 ℄ Fwy			r
D-12		s															85.0															18" SCSP		D-12		s
		t		0.51	326																	1										CLI INLET; CASE 2	51.3' Lt 153+45.30 ℄ Fwy			t
		u															85.0															18" SCSP				u
		v		0.51	326																	1										CLI INLET; CASE 2	51.3' Lt 154+31.80 ℄ Fwy			v
		w															75.0															18" SCSP				w
		x			229																		1									REMOVE GRATE INSTALL GRATE TYPE 24-12X	64.0' Lt 155+11.50 ℄ Fwy			x
		y																	15.6					4								24" RCP				y
		z	4.0	1.57	326																	1										TYPE G2 INLET	51.2' Lt 155+11.50 ℄ Fwy			z
		z1					1.4							1																		REMOVE Conc APRON ADJUST INLET TO GRADE	155+11.00 ℄ Fwy			z1
		z2				1.56									250																	RCB WITH Conc PARAPET (L=5.0")				z2
		z3					0.8																									REMOVE PORTION OF Exist Conc CHANNEL				z3
		z4															100.0															18" SCSP				z4
SHEET TOTAL				5.22	2185	3.58	3.2						1	1	575	4.5	515.0		15.6			6	1													

DRAINAGE QUANTITIES
DQ-18

STATE OF CALIFORNIA - DEPARTMENT OF TRANSPORTATION
Caltrans® HYDRAULICS

FUNCTIONAL SUPERVISOR: DAVE BHALLA
CALCULATED-DESIGNED BY: S. THAI
CHECKED BY: D. BHALLA
REVISED BY
DATE REVISED

LAST REVISION 08-31-10
DATE PLOTTED => 25-JUN-2011
TIME PLOTTED => 07:59

NOTES: PIPE JOINTS ARE STANDARD
OR AS NOTED ON PLANS

(N) NOT A SEPARATE PAY ITEM,
FOR INFORMATION ONLY.

Dist	COUNTY	ROUTE	POST MILES TOTAL PROJECT	SHEET No.	TOTAL SHEETS
07	Ven,SB	101	R39.8/R43.6, 0.0/2.2	176	757

REGISTERED CIVIL ENGINEER DATE

6-20-11
PLANS APPROVAL DATE

REGISTERED PROFESSIONAL ENGINEER SA K. THAI No. 71390 Exp. 12/31/11 CIVIL STATE OF CALIFORNIA

THE STATE OF CALIFORNIA OR ITS OFFICERS OR AGENTS SHALL NOT BE RESPONSIBLE FOR THE ACCURACY OR COMPLETENESS OF SCANNED COPIES OF THIS PLAN SHEET.

DRAINAGE SHEET No.	DRAINAGE SYSTEM No.	DRAINAGE UNIT	HEIGHT OF INLET H OR V FT	MINOR CONCRETE (MINOR STRUCTURE) CY	MISCELLANEOUS IRON AND STEEL LB	STRUCTURAL CONCRETE (BOX CULVERT) CY	REMOVE CONCRETE CY	ABANDON PIPELINE LF	SAND BACKFILL CY	DITCH EXCAVATION CY	REMOVE INLET EA	ABANDON INLET EA	CAP INLET EA	ADJUST INLET EA	BAR REINFORCING STEEL (BOX CULVERT) LB	18" CORRUGATED STEEL PIPE (0.079" THICK) LF	18" SLOTTED CORRUGATED STEEL PIPE (0.079" THICK) LF	18" REINFORCED CONCRETE PIPE LF	24" REINFORCED CONCRETE PIPE LF	(N) STEEL PLATE CLOSURE EA	(N) TYPE 18-9 FRAME AND GRATE EA	(N) TYPE 24-12 FRAME AND GRATE EA	(N) TYPE 24-10S FRAME AND GRATE EA	MAXIMUM COVER FT	ROCK SLOPE PROTECTION (FACING, METHOD B) CY	ROCK SLOPE PROTECTION FABRIC SQYD	GRATED LINE DRAIN LF	18" STEEL FLARED END SECTION EA	MINOR CONCRETE (BACKFILL) CY	REMOVE PIPE LF	FLUME DOWNDRAIN LF	18" TAPERED INLET EA	DESCRIPTION	STATION	DRAINAGE SHEET No.	DRAINAGE SYSTEM No.	DRAINAGE UNIT
D-11	53	z5		0.51	326																	1											CLI INLET; CASE 2	51.3' L+ 156+14.50 ℄ Fwy	D-11	53	z5
		z6															100.0																18" SCSP				z6
		z7		0.55	326																	1											CLI INLET; CASE 1	51.3' L+ 157+17.40 ℄ Fwy			z7
D-12	54	a	4.45	1.69	326																	1											TYPE G2 INLET	6.9' R+ 159+85.00 ℄ Fwy	D-12	54	a
		b														4.1																	18" CSP				b
		c											1																				CAP INLET	2.4' R+ 159+85.00 ℄ Fwy			c
		d			229																		1										REMOVE GRATE INSTALL GRATE TYPE 24-12X	66.0' L+ 159+85.00 ℄ Fwy			d
		e		0.55	326																	1										CLI INLET; CASE 1	158+00.00 ℄ Fwy			e
		f															87.0																18" SCSP				f
		g		0.51	326																	1											CLI INLET; CASE 2	158+90.00 ℄ Fwy			g
		h															92.0																18" SCSP				h
		i															67.0																18" SCSP				i
		j		0.51	326																	1											CLI INLET; CASE 2	160+55.00 ℄ Fwy			j
		k															67.0																18" SCSP				k
		L		0.55	326																	1											CLI INLET; CASE 1	161+25.00 ℄ Fwy			L
		m		0.82	249															1	1												CL2 INLET; CASE 2	6.8' R+ 161+00.00 ℄ Fwy			m
		n		0.82	249															1	1												CL2 INLET; CASE 2	7.8' R+ 162+00.00 ℄ Fwy			n
		o		0.82	249															1	1												CL2 INLET; CASE 2	8.8' R+ 163+00.00 ℄ Fwy			o
		p		0.82	249															1	1												CL2 INLET; CASE 2	10.2' R+ 164+00.00 ℄ Fwy			p
		q		0.82	249															1	1												CL2 INLET; CASE 2	11.3' R+ 165+00.00 ℄ Fwy			q
		r		0.82	249															1	1												CL2 INLET; CASE 2	12.2' R+ 166+00.00 ℄ Fwy			r
SHEET TOTAL				9.79	4005								1			4.1	413.0			6	6	7	1														

DRAINAGE QUANTITIES
DQ-19

STATE OF CALIFORNIA - DEPARTMENT OF TRANSPORTATION
Caltrans® HYDRAULICS

FUNCTIONAL SUPERVISOR: DAVE BHALLA

CALCULATED-DESIGNED BY: S. THAI
CHECKED BY: D. BHALLA

REVISED BY
DATE REVISED

LAST REVISION 08-31-10
DATE PLOTTED => 28-JUN-2011
TIME PLOTTED => 17:39

NOTES: PIPE JOINTS ARE STANDARD
OR AS NOTED ON PLANS

(N) NOT A SEPARATE PAY ITEM,
FOR INFORMATION ONLY.

Dist	COUNTY	ROUTE	POST MILES TOTAL PROJECT	SHEET No.	TOTAL SHEETS
07	Ven,SB	101	R39.8/R43.6, 0.0/2.2	177	757

REGISTERED CIVIL ENGINEER DATE

6-20-11
PLANS APPROVAL DATE

REGISTERED PROFESSIONAL ENGINEER
SA K. THAI
No. 71390
Exp. 12/31/11
CIVIL
STATE OF CALIFORNIA

THE STATE OF CALIFORNIA OR ITS OFFICERS OR AGENTS SHALL NOT BE RESPONSIBLE FOR THE ACCURACY OR COMPLETENESS OF SCANNED COPIES OF THIS PLAN SHEET.

DRAINAGE SHEET No.	DRAINAGE SYSTEM No.	DRAINAGE UNIT	HEIGHT OF INLET H OR V (FT)	MINOR CONCRETE (MINOR STRUCTURE) (CY)	MISCELLANEOUS IRON AND STEEL (LB)	STRUCTURAL CONCRETE (BOX CULVERT) (CY)	REMOVE CONCRETE (CY)	ABANDON PIPELINE (LF)	SAND BACKFILL (CY)	DITCH EXCAVATION (CY)	REMOVE INLET (EA)	ABANDON INLET (EA)	CAP INLET (EA)	ADJUST INLET (EA)	BAR REINFORCING STEEL (BOX CULVERT) (LB)	18" CORRUGATED STEEL PIPE (0.079" THICK) (LF)	18" SLOTTED CORRUGATED STEEL PIPE (0.079" THICK) (LF)	18" REINFORCED CONCRETE PIPE (LF)	24" REINFORCED CONCRETE PIPE (LF)	(N) STEEL PLATE CLOSURE (EA)	(N) TYPE 18-9 FRAME AND GRATE (EA)	(N) TYPE 24-12 FRAME AND GRATE (EA)	(N) TYPE 24-10S FRAME AND GRATE (EA)	MAXIMUM COVER (FT)	ROCK SLOPE PROTECTION (FACING, METHOD B) (CY)	ROCK SLOPE PROTECTION FABRIC (SQYD)	GRATED LINE DRAIN (LF)	18" STEEL FLARED END SECTION (EA)	MINOR CONCRETE (BACKFILL) (CY)	REMOVE PIPE (LF)	FLUME DOWNDRAIN (LF)	18" TAPERED INLET (EA)	DESCRIPTION	STATION	DRAINAGE SHEET No.	DRAINAGE SYSTEM No.	DRAINAGE UNIT
D-13	55	a	3.5	1.44	326																	1											TYPE G2 INLET	12.0' Rt 167+05.00 ℄ Fwy	D-13	55	a
		b														3.7								4									18" CSP				b
		c											1																				CAP INLET	8.9' Rt 167+06.00 ℄ Fwy			c
		d			229																		1										REMOVE GRATE INSTALL GRATE TYPE 24-12X	60.0' Lt 167+05.00 ℄ Fwy			d
		e		0.82	249															1	1											CL2 INLET; CASE 2	13.7' Rt 168+25.00 ℄ Fwy			e
		f		0.82	249															1	1											CL2 INLET; CASE 2	13.7' Rt 169+25.00 ℄ Fwy			f
D-13	56	a	3.5	1.44	326																	1											TYPE G2 INLET	13.0' Rt 170+47.50 ℄ Fwy	D-13	56	a
		b														3.7								4									18" CSP				b
		c											1																				CAP INLET	9.6' Rt 170+47.60 ℄ Fwy			c
		d			229																		1										REMOVE GRATE INSTALL GRATE TYPE 24-10S	60.0' Lt 170+47.00 ℄ Fwy			d
		e		0.82	249															1	1											CL2 INLET; CASE 2	13.7' Rt 171+50.00 ℄ Fwy			e
		f		0.82	249															1	1											CL2 INLET; CASE 2	13.7' Rt 172+50.00 ℄ Fwy			f
		g		0.82	249															1	1											CL2 INLET; CASE 2	13.7' Rt 173+50.00 ℄ Fwy			g
		h		0.82	249															1	1											CL2 INLET; CASE 2	13.7' Rt 174+50.00 ℄ Fwy			h
D-13	57	a	3.5	1.44	326																	1											TYPE G2 INLET	10.0' Rt 175+78.00 ℄ Fwy	D-13	57	a
		b														2.5								4									18" CSP				b
		c											1																				CAP INLET	5.5' Rt 175+78.00 ℄ Fwy			c
		d		0.82	249															1	1											CL2 INLET; CASE 2	13.7' Rt 176+75.00 ℄ Fwy			d
		e		0.82	249															1	1											CL2 INLET; CASE 2	13.7' Rt 177+75.00 ℄ Fwy			e
		f		0.89	249															1	1											CL2 INLET; CASE 1	13.7' Rt 178+75.00 ℄ Fwy			f
SHEET TOTAL				11.77	3677								3			9.9				9	9	3	2														

DRAINAGE QUANTITIES
DQ-20

STATE OF CALIFORNIA - DEPARTMENT OF TRANSPORTATION
Caltrans® HYDRAULICS

FUNCTIONAL SUPERVISOR: DAVE BHALLA

CALCULATED-DESIGNED BY: S. THAI
CHECKED BY: D. BHALLA

REVISED BY
DATE REVISED

LAST REVISION 08-31-10
DATE PLOTTED => 25-JUN-2011
TIME PLOTTED => 07:59

NOTES: PIPE JOINTS ARE STANDARD
OR AS NOTED ON PLANS

(N) NOT A SEPARATE PAY ITEM,
FOR INFORMATION ONLY.

Dist	COUNTY	ROUTE	POST MILES TOTAL PROJECT	SHEET No.	TOTAL SHEETS
07	Ven,SB	101	R39.8/R43.6, 0.0/2.2	178	757

REGISTERED CIVIL ENGINEER DATE

6-20-11
PLANS APPROVAL DATE

REGISTERED PROFESSIONAL ENGINEER SA K. THAI No. 71390 Exp. 12/31/11 CIVIL STATE OF CALIFORNIA

THE STATE OF CALIFORNIA OR ITS OFFICERS OR AGENTS SHALL NOT BE RESPONSIBLE FOR THE ACCURACY OR COMPLETENESS OF SCANNED COPIES OF THIS PLAN SHEET.

DRAINAGE SHEET No.	DRAINAGE SYSTEM No.	DRAINAGE UNIT	HEIGHT OF INLET H OR V (FT)	MINOR CONCRETE (MINOR STRUCTURE) (CY)	MISCELLANEOUS IRON AND STEEL (LB)	STRUCTURAL CONCRETE (BOX CULVERT) (CY)	REMOVE CONCRETE (CY)	ABANDON PIPELINE (LF)	SAND BACKFILL (CY)	DITCH EXCAVATION (CY)	REMOVE INLET (EA)	ABANDON INLET (EA)	CAP INLET (EA)	ADJUST INLET (EA)	BAR REINFORCING STEEL (BOX CULVERT) (LB)	18" CORRUGATED STEEL PIPE (0.079" THICK) (LF)	18" SLOTTED CORRUGATED STEEL PIPE (0.079" THICK) (LF)	18" REINFORCED CONCRETE PIPE (LF)	24" REINFORCED CONCRETE PIPE (LF)	(N) STEEL PLATE CLOSURE (EA)	(N) TYPE 18-9 FRAME AND GRATE (EA)	(N) TYPE 24-12 FRAME AND GRATE (EA)	(N) TYPE 24-10S FRAME AND GRATE (EA)	MAXIMUM COVER (FT)	ROCK SLOPE PROTECTION (FACING, METHOD B) (CY)	ROCK SLOPE PROTECTION FABRIC (SQYD)	GRATED LINE DRAIN (LF)	18" STEEL FLARED END SECTION (EA)	MINOR CONCRETE (BACKFILL) (CY)	REMOVE PIPE (LF)	FLUME DOWNDRAIN (LF)	18" TAPERED INLET (EA)	DESCRIPTION	STATION	DRAINAGE SHEET No.	DRAINAGE SYSTEM No.	DRAINAGE UNIT
D-13	58	a	4.8	1.87	634																	2											GD-1 INLET	4.7' Rt 180+25.00 ℄ Fwy	D-13	58	a
		b																	197.1					9									24" RCP	4.7' Rt 180+25.00 ℄ Fwy - 4.5' Rt 182+25.00 ℄ Fwy			b
		c															97.0																18" SCSP				c
D-14		d		0.51	326																	1											CLI INLET; CASE 2	4.6' Rt 181+25.00 ℄ Fwy	D-14		d
		e															97.0																18" SCSP				e
D-14	59	a		0.82	326		1.7													1													REMOVE Conc APRON MODIFY TYPE G1 INLET	4.5' Rt 182+25.00 ℄ Fwy	D-14	59	a
		b																	231.5					4									24" RCP				b
		c	4.0	3.09	634																	2											GD-3 INLET WITH Conc APRON	4.5' Lt 184+57.00 ℄ Fwy			c
		d								367																							BIOFILTRATION SWALE (L=110')				d
D-14	60	a									1																						REMOVE INLET		D-14	60	a
		b																													15.0		REMOVE PIPE				b
		c	3.2	0.99	326																	1											TYPE G1 INLET	77.6' Rt 189+09.00 ℄ Fwy			c
		d																5.5						4									18" RCP				d
		e	2.8	0.95	326																	1											TYPE G1 INLET	77.6' Rt 189+00.00 ℄ Fwy			e
		f																2.0						4									18" RCP				f
		g		0.89																													Reinf Conc CHANNEL (L=9.5)	88.7' Rt 189+09.00 C Fwy - 98.2' Rt 189+09.00 C Fwy			g
		h																							3.0	8.7							ROCK SLOPE PROTECTION				h
		i									1																						REMOVE INLET				i
		j																													41.5		REMOVE PIPE				j
		k	11.1	4.73	634																	2											MODIFIED GD-2 INLET	79.1' Rt 192+80.00 ℄ Fwy			k
		L																36.0						12									18" RCP				L
SHEET TOTAL				13.85	3206		1.7			367	2						194.0	43.5	428.6	1		9			3.0	8.7				56.5							

DRAINAGE QUANTITIES
DQ-21

STATE OF CALIFORNIA - DEPARTMENT OF TRANSPORTATION
Caltrans® HYDRAULICS

FUNCTIONAL SUPERVISOR: DAVE BHALLA

CALCULATED-DESIGNED BY: S. THAI
CHECKED BY: D. BHALLA

REVISED BY
DATE REVISED

LAST REVISION DATE PLOTTED => 25-JUN-2011
TIME PLOTTED => 07:59
08-31-10

NOTES: PIPE JOINTS ARE STANDARD
OR AS NOTED ON PLANS

(N) NOT A SEPARATE PAY ITEM,
FOR INFORMATION ONLY.

Dist	COUNTY	ROUTE	POST MILES TOTAL PROJECT	SHEET No.	TOTAL SHEETS
07	Ven,SB	101	R39.8/R43.6, 0.0/2.2	179	757

REGISTERED CIVIL ENGINEER DATE

6-20-11
PLANS APPROVAL DATE

REGISTERED PROFESSIONAL ENGINEER SA K. THAI No. 71390 Exp. 12/31/11 CIVIL STATE OF CALIFORNIA

THE STATE OF CALIFORNIA OR ITS OFFICERS OR AGENTS SHALL NOT BE RESPONSIBLE FOR THE ACCURACY OR COMPLETENESS OF SCANNED COPIES OF THIS PLAN SHEET.

DRAINAGE SHEET No.	DRAINAGE SYSTEM No.	DRAINAGE UNIT	HEIGHT OF INLET H OR V (FT)	MINOR CONCRETE (MINOR STRUCTURE) (CY)	MISCELLANEOUS IRON AND STEEL (LB)	STRUCTURAL CONCRETE (BOX CULVERT) (CY)	REMOVE CONCRETE (CY)	ABANDON PIPELINE (LF)	SAND BACKFILL (CY)	DITCH EXCAVATION (CY)	REMOVE INLET (EA)	ABANDON INLET (EA)	CAP INLET (EA)	ADJUST INLET (EA)	BAR REINFORCING STEEL (BOX CULVERT) (LB)	18" CORRUGATED STEEL PIPE (0.079" THICK) (LF)	18" SLOTTED CORRUGATED STEEL PIPE (0.079" THICK) (LF)	18" REINFORCED CONCRETE PIPE (LF)	24" REINFORCED CONCRETE PIPE (LF)	(N) STEEL PLATE CLOSURE (EA)	(N) TYPE 18-9 FRAME AND GRATE (EA)	(N) TYPE 24-12 FRAME AND GRATE (EA)	(N) TYPE 24-10S FRAME AND GRATE (EA)	MAXIMUM COVER (FT)	ROCK SLOPE PROTECTION (FACING, METHOD B) (CY)	ROCK SLOPE PROTECTION FABRIC (SQYD)	GRATED LINE DRAIN (LF)	18" STEEL FLARED END SECTION (EA)	MINOR CONCRETE (BACKFILL) (CY)	REMOVE PIPE (LF)	FLUME DOWNDRAIN (LF)	18" TAPERED INLET (EA)	DESCRIPTION	STATION	DRAINAGE SHEET No.	DRAINAGE SYSTEM No.	DRAINAGE UNIT
D-14	60	m								300																							BIOFILTRATION SWALE (L=90')		D-14	60	m
		n	3.0	2.37	326																	1											TYPE GINLET WITH Conc APRON	116.5' Rt 192+80.00 ℄ Fwy			n
		o																	143.7					4									24" RCP	116.5' Rt 192+80.00 ℄ Fwy - 81.7' Rt 194+27.30 ℄ Fwy			o
D-14	61	a								200																							BIOFILTRATION SWALE (L=100')		D-14	61	a
		b		2.85																													TRANSITION STRUCTURE No. 4				b
		c																42.8						3									18" RCP				c
		d																												8.8			REMOVE PIPE				d
		e									1																						REMOVE INLET	36.6' Rt 92+98.5 ℄ ON-RAMP			e
		f				30.11									5270.4																		REINFORCED Conc BOX				f
		g	2.34	0.95	229																		1										TYPE GINLET WITH TYPE 24-10S GRATE	60.6' Lt 92+50.00 ℄ ON RAMP			g
		h																63.2						1									18" RCP				h
		i																											7.2				MINOR CONCRETE BACKFILL				i
		j	3.41	1.04	326																	1											TYPE GINLET	20.0' Lt 92+00.00 ℄ ON RAMP			j
D-14	62	a								240																							BIOFILTRATION SWALE (L=120')		D-14	62	a
D-14	63	a		1.09	326		1.7																										REMOVE Conc APRON MODIFY TYPE GINLET		D-14	63	a
D-15		b		0.82	249															1	1												CL2 INLET; CASE 2	196+50.00 ℄ Fwy	D-15		b
		c		0.82	249															1	1												CL2 INLET; CASE 2	197+50.00 ℄ Fwy			c
		d		0.82	249															1	1												CL2 INLET; CASE 2	198+50.00 ℄ Fwy			d
		e		0.82	249															1	1												CL2 INLET; CASE 2	199+50.00 ℄ Fwy			e
		f		0.82	249															1	1												CL2 INLET; CASE 2	200+50.00 ℄ Fwy			f
SHEET TOTAL				12.40	2452	30.11	1.7			740	1				5270.4			106.0	143.7	5	5	2	1						7.2	8.8							

DRAINAGE QUANTITIES
DQ-22

STATE OF CALIFORNIA - DEPARTMENT OF TRANSPORTATION
Caltrans® HYDRAULICS

FUNCTIONAL SUPERVISOR: DAVE BHALLA
CALCULATED-DESIGNED BY: S. THAI
CHECKED BY: D. BHALLA
REVISED BY
DATE REVISED

LAST REVISION 08-31-10
DATE PLOTTED => 25-JUN-2011
TIME PLOTTED => 07:59

NOTES: PIPE JOINTS ARE STANDARD
OR AS NOTED ON PLANS

(N) NOT A SEPARATE PAY ITEM,
FOR INFORMATION ONLY.

Dist	COUNTY	ROUTE	POST MILES TOTAL PROJECT	SHEET No.	TOTAL SHEETS
07	Ven,SB	101	R39.8/R43.6, 0.0/2.2	180	757

REGISTERED CIVIL ENGINEER DATE

6-20-11
PLANS APPROVAL DATE

REGISTERED PROFESSIONAL ENGINEER SA K. THAI No. 71390 Exp. 12/31/11 CIVIL STATE OF CALIFORNIA

THE STATE OF CALIFORNIA OR ITS OFFICERS OR AGENTS SHALL NOT BE RESPONSIBLE FOR THE ACCURACY OR COMPLETENESS OF SCANNED COPIES OF THIS PLAN SHEET.

DRAINAGE SHEET No.	DRAINAGE SYSTEM No. ⬡	DRAINAGE UNIT ○	HEIGHT OF INLET H OR V (FT)	MINOR CONCRETE (MINOR STRUCTURE) (CY)	MISCELLANEOUS IRON AND STEEL (LB)	STRUCTURAL CONCRETE (BOX CULVERT) (CY)	REMOVE CONCRETE (CY)	ABANDON PIPELINE (LF)	SAND BACKFILL (CY)	DITCH EXCAVATION (CY)	REMOVE INLET (EA)	ABANDON INLET (EA)	CAP INLET (EA)	ADJUST INLET (EA)	BAR REINFORCING STEEL (BOX CULVERT) (LB)	18" CORRUGATED STEEL PIPE (0.079" THICK) (LF)	18" SLOTTED CORRUGATED STEEL PIPE (0.079" THICK) (LF)	18" REINFORCED CONCRETE PIPE (LF)	24" REINFORCED CONCRETE PIPE (LF)	(N) STEEL PLATE CLOSURE (EA)	(N) TYPE 18-9 FRAME AND GRATE (EA)	(N) TYPE 24-12 FRAME AND GRATE (EA)	(N) TYPE 24-10S FRAME AND GRATE (EA)	MAXIMUM COVER (FT)	ROCK SLOPE PROTECTION (FACING, METHOD B) (CY)	ROCK SLOPE PROTECTION FABRIC (SQYD)	GRATED LINE DRAIN (LF)	18" STEEL FLARED END SECTION (EA)	MINOR CONCRETE (BACKFILL) (CY)	REMOVE PIPE (LF)	FLUME DOWNDRAIN (LF)	18" TAPERED INLET (EA)	DESCRIPTION	STATION	DRAINAGE SHEET No.	DRAINAGE SYSTEM No. ⬡	DRAINAGE UNIT ○
D-15		g		0.82	249															1	1												CL2 INLET; CASE 2	201+50.00 ℄ Fwy	D-15	63	g
		h		0.82	249															1	1												CL2 INLET; CASE 2	202+50.00 ℄ Fwy			h
		i		0.82	249															1	1												CL2 INLET; CASE 2	2.1Rt 203+50.00 ℄ Fwy			i
		j		0.82	249															1	1												CL2 INLET; CASE 2	6.0 Rt 204+50.00 ℄ Fwy			j
		k		0.82	249															1	1												CL2 INLET; CASE 2	10.7 Rt 205+50.00 ℄ Fwy			k
		L		0.82	249															1	1												CL2 INLET; CASE 2	14.8 Rt 206+50.00 ℄ Fwy			L
		m		0.82	249															1	1												CL2 INLET; CASE 2	17.1Rt 207+50.00 ℄ Fwy			m
		n		0.89	249															1	1												CL2 INLET; CASE 1	17.6 Rt 208+68.70 ℄ Fwy			n
D-15	64	a					11.1																										REMOVE Conc V-DITCH (L=170')		D-15	64	a
		b								467																							BIOFILTRATION SWALE (L=170')				b
		c																							3.0	8.7							ROCK SLOPE PROTECTION	131.5 Rt 199+79.30 ℄ Fwy			c
		d											1																				CAP INLET	67.0 Rt 196+00.00 ℄ Fwy			d
		e																4.5						3									18" RCP				e
		f	3.0	1.35	653																	2											GD-1 INLET	75.5 Rt 196+00.00 ℄ Fwy			f
D-16	65	a		1.42			1.4							1																			REMOVE Conc APRON ADJUST INLET TO GRADE WITH Conc APRON	212+55.00 ℄ Fwy	D-16	65	a
D-16	66	a		1.42			1.4							1																			REMOVE Conc APRON ADJUST INLET TO GRADE WITH Conc APRON	215+55.00 ℄ Fwy	D-16	66	a
D-16	67	a		1.42			1.4							1																			REMOVE Conc APRON ADJUST INLET TO GRADE WITH Conc APRON	219+41.00 ℄ Fwy	D-16	67	a
SHEET TOTAL				12.24	2645		15.3			467			1	3				4.5		8	8	2			3.0	8.7											

DRAINAGE QUANTITIES
DQ-23

STATE OF CALIFORNIA - DEPARTMENT OF TRANSPORTATION
Caltrans HYDRAULICS

FUNCTIONAL SUPERVISOR: DAVE BHALLA

CALCULATED-DESIGNED BY: S. THAI
CHECKED BY: D. BHALLA

REVISED BY
DATE REVISED

LAST REVISION 08-31-10
DATE PLOTTED => 28-JUN-2011
TIME PLOTTED => 17:40

NOTES: PIPE JOINTS ARE STANDARD
OR AS NOTED ON PLANS

(N) NOT A SEPARATE PAY ITEM,
FOR INFORMATION ONLY.

Dist	COUNTY	ROUTE	POST MILES TOTAL PROJECT	SHEET No.	TOTAL SHEETS
07	Ven,SB	101	R39.8/R43.6, 0.0/2.2	181	757

REGISTERED CIVIL ENGINEER DATE

6-20-11
PLANS APPROVAL DATE

REGISTERED PROFESSIONAL ENGINEER SA K. THAI No. 71390 Exp. 12/31/11 CIVIL STATE OF CALIFORNIA

THE STATE OF CALIFORNIA OR ITS OFFICERS OR AGENTS SHALL NOT BE RESPONSIBLE FOR THE ACCURACY OR COMPLETENESS OF SCANNED COPIES OF THIS PLAN SHEET.

DRAINAGE SHEET No.	DRAINAGE SYSTEM No.	DRAINAGE UNIT	HEIGHT OF INLET H OR V (FT)	MINOR CONCRETE (MINOR STRUCTURE) (CY)	MISCELLANEOUS IRON AND STEEL (LB)	STRUCTURAL CONCRETE (BOX CULVERT) (CY)	REMOVE CONCRETE (CY)	ABANDON PIPELINE (LF)	SAND BACKFILL (CY)	DITCH EXCAVATION (CY)	REMOVE INLET (EA)	ABANDON INLET (EA)	CAP INLET (EA)	ADJUST INLET (EA)	BAR REINFORCING STEEL (BOX CULVERT) (LB)	18" CORRUGATED STEEL PIPE (0.079" THICK) (LF)	18" SLOTTED CORRUGATED STEEL PIPE (0.079 THICK) (LF)	18" REINFORCED CONCRETE PIPE (LF)	24" REINFORCED CONCRETE PIPE (LF)	(N) STEEL PLATE CLOSURE (EA)	(N) TYPE 18-9 FRAME AND GRATE (EA)	(N) TYPE 24-12 FRAME AND GRATE (EA)	(N) TYPE 24-10S FRAME AND GRATE (EA)	MAXIMUM COVER (FT)	ROCK SLOPE PROTECTION (FACING, METHOD B) (CY)	ROCK SLOPE PROTECTION FABRIC (SQYD)	GRATED LINE DRAIN (LF)	18" STEEL FLARED END SECTION (EA)	MINOR CONCRETE (BACKFILL) (CY)	REMOVE PIPE (LF)	FLUME DOWNDRAIN (LF)	18" TAPERED INLET (EA)	DESCRIPTION	STATION	DRAINAGE SHEET No.	DRAINAGE SYSTEM No.	DRAINAGE UNIT
D-16	68	a		1.42			1.4							1																			REMOVE Conc APRON ADJUST INLET TO GRADE WITH Conc APRON	221+05.00 ℄ Fwy	D-16	68	a
D-17	69	a		1.42			1.4							1																			REMOVE Conc APRON ADJUST INLET TO GRADE WITH Conc APRON	227+28.00 ℄ Fwy	D-17	69	a
D-18	70	a					1.4						1																				REMOVE Conc APRON CAP INLET	2.4' Lt 243+38.8 ℄ Fwy	D-18	70	a
		b																7.0															18" RCP				b
		c	3.5	2.46	326																	1											TYPE G1INLET WITH Conc APRON	5.9' Rt 243+38.8 ℄ Fwy			c
D-18	71	a		0.55	326																	1											CLI INLET; CASE 1	7.0' Lt 248+00.00 ℄ Fwy	D-18	71	a
		b															97.0																18" SCSP				b
		c		0.51	326																	1											CLI INLET; CASE 2	7.0' Lt 249+00.00 ℄ Fwy			c
		d															97.0																18" SCSP				d
		e		0.51	326																	1											CLI INLET; CASE 2	7.0' Lt 250+00.00 ℄ Fwy			e
		f															97.0																18" SCSP				f
		g		0.51	326																	1											CLI INLET; CASE 2	7.0' Lt 251+00.00 ℄ Fwy			g
		h															97.0																18" SCSP				h
		i		0.51	326																	1											CLI INLET; CASE 2	1.3' Lt 252+00.00 CL Fwy			i
		j															90.0																18" SCSP				j
		k	3.0	1.31	326																	1											TYPE G2 INLET	1.0' Lt 252+93.00 ℄ Fwy			k
		L																37.2						4									18" RCP				L
		m					1.4							1																			REMOVE Conc APRON ADJUST INLET TO GRADE	253+33.30 ℄ Fwy			m
SHEET TOTAL				9.20	2282		5.6						1	3			478.0	44.2				7															

DRAINAGE QUANTITIES
DQ-24

STATE OF CALIFORNIA - DEPARTMENT OF TRANSPORTATION
Caltrans® HYDRAULICS

FUNCTIONAL SUPERVISOR: DAVE BHALLA
CALCULATED-DESIGNED BY: S. THAI
CHECKED BY: D. BHALLA
REVISED BY
DATE REVISED

LAST REVISION 08-31-10
DATE PLOTTED => 25-JUN-2011
TIME PLOTTED => 07:59

NOTES: PIPE JOINTS ARE STANDARD
OR AS NOTED ON PLANS

(N) NOT A SEPARATE PAY ITEM,
FOR INFORMATION ONLY.

Dist	COUNTY	ROUTE	POST MILES TOTAL PROJECT	SHEET No.	TOTAL SHEETS
07	Ven,SB	101	R39.8/R43.6, 0.0/2.2	182	757

REGISTERED CIVIL ENGINEER DATE

6-20-11
PLANS APPROVAL DATE

REGISTERED PROFESSIONAL ENGINEER SA K. THAI No. 71390 Exp. 12/31/11 CIVIL STATE OF CALIFORNIA

THE STATE OF CALIFORNIA OR ITS OFFICERS OR AGENTS SHALL NOT BE RESPONSIBLE FOR THE ACCURACY OR COMPLETENESS OF SCANNED COPIES OF THIS PLAN SHEET.

DRAINAGE SHEET No.	DRAINAGE SYSTEM No.	DRAINAGE UNIT	HEIGHT OF INLET H OR V (FT)	MINOR CONCRETE (MINOR STRUCTURE) (CY)	MISCELLANEOUS IRON AND STEEL (LB)	STRUCTURAL CONCRETE (BOX CULVERT) (CY)	REMOVE CONCRETE (CY)	ABANDON PIPELINE (LF)	SAND BACKFILL (CY)	DITCH EXCAVATION (CY)	REMOVE INLET (EA)	ABANDON INLET (EA)	CAP INLET (EA)	ADJUST INLET (EA)	BAR REINFORCING STEEL (BOX CULVERT) (LB)	18" CORRUGATED STEEL PIPE (0.079" THICK) (LF)	18" SLOTTED CORRUGATED STEEL PIPE (0.079 THICK) (LF)	18" REINFORCED CONCRETE PIPE (LF)	24" REINFORCED CONCRETE PIPE (LF)	(N) STEEL PLATE CLOSURE (EA)	(N) TYPE 18-9 FRAME AND GRATE (EA)	(N) TYPE 24-12 FRAME AND GRATE (EA)	(N) TYPE 24-10S FRAME AND GRATE (EA)	MAXIMUM COVER (FT)	ROCK SLOPE PROTECTION (FACING, METHOD B) (CY)	ROCK SLOPE PROTECTION FABRIC (SQYD)	GRATED LINE DRAIN (LF)	18" STEEL FLARED END SECTION (EA)	MINOR CONCRETE (BACKFILL) (CY)	REMOVE PIPE (LF)	FLUME DOWNDRAIN (LF)	18" TAPERED INLET (EA)	DESCRIPTION	STATION	DRAINAGE SHEET No.	DRAINAGE SYSTEM No.	DRAINAGE UNIT
D-18	72	a		0.55	326																	1											CLI INLET; CASE 1	7.0' Lt 253+00.00 ℄ Fwy	D-18	72	a
		b															97.0																18" SCSP				b
D-19		c		0.51	326																	1											CLI INLET; CASE 2	7.0' Lt 254+00.00 ℄ Fwy	D-19		c
		d															97.0																18" SCSP				d
		e		0.51	326																	1											CLI INLET; CASE 2	7.0' Lt 255+00.00 ℄ Fwy			e
		f															97.0																18" SCSP				f
		g		0.51	326																	1											CLI INLET; CASE 2	7.0' Lt 256+00.00 ℄ Fwy			g
		h															97.0																18" SCSP				h
		i		0.51	326																	1											CLI INLET; CASE 2	7.0' Lt 257+00.00 ℄ Fwy			i
		j															97.0																18" SCSP				j
		k		0.51	326																	1											CLI INLET; CASE 2	7.0' Lt 258+00.00 ℄ Fwy			k
		L															97.0																18" SCSP				L
		m		0.51	326																	1											CLI INLET; CASE 2	7.0' Lt 259+00.00 ℄ Fwy			m
		n															97.0																18" SCSP				n
		o		0.51	326																	1											CLI INLET; CASE 2	7.0' Lt 260+00.00 ℄ Fwy			o
		p															97.0																18" SCSP				p
		q		0.51	326																	1											CLI INLET; CASE 2	7.0' Lt 261+00.00 ℄ Fwy			q
		r															97.0																18" SCSP				r
		s		0.51	326																	1											CLI INLET; CASE 2	7.0' Lt 262+00.00 ℄ Fwy			s
		t															97.0																18" SCSP				t
		u		0.51	326																	1											CLI INLET; CASE 2	7.0' Lt 263+00.00 ℄ Fwy			u
SHEET TOTAL				5.65	3586												970.0					11															

DRAINAGE QUANTITIES
DQ-25

STATE OF CALIFORNIA - DEPARTMENT OF TRANSPORTATION
Caltrans® HYDRAULICS

FUNCTIONAL SUPERVISOR: DAVE BHALLA

CALCULATED-DESIGNED BY: S. THAI
CHECKED BY: D. BHALLA

REVISED BY
DATE REVISED

LAST REVISION 08-31-10
DATE PLOTTED => 25-JUN-2011
TIME PLOTTED => 10:24

NOTES: PIPE JOINTS ARE STANDARD
OR AS NOTED ON PLANS

(N) NOT A SEPARATE PAY ITEM,
FOR INFORMATION ONLY.

Dist	COUNTY	ROUTE	POST MILES TOTAL PROJECT	SHEET No.	TOTAL SHEETS
07	Ven,SB	101	R39.8/R43.6, 0.0/2.2	183	757

REGISTERED CIVIL ENGINEER DATE

6-20-11
PLANS APPROVAL DATE

REGISTERED PROFESSIONAL ENGINEER
SA K. THAI
No. 71390
Exp. 12/31/11
CIVIL
STATE OF CALIFORNIA

THE STATE OF CALIFORNIA OR ITS OFFICERS OR AGENTS SHALL NOT BE RESPONSIBLE FOR THE ACCURACY OR COMPLETENESS OF SCANNED COPIES OF THIS PLAN SHEET.

DRAINAGE SHEET No.	DRAINAGE SYSTEM No.	DRAINAGE UNIT	HEIGHT OF INLET H OR V (FT)	MINOR CONCRETE (MINOR STRUCTURE) (CY)	MISCELLANEOUS IRON AND STEEL (LB)	STRUCTURAL CONCRETE (BOX CULVERT) (CY)	REMOVE CONCRETE (CY)	ABANDON PIPELINE (LF)	SAND BACKFILL (CY)	DITCH EXCAVATION (CY)	REMOVE INLET (EA)	ABANDON INLET (EA)	CAP INLET (EA)	ADJUST INLET (EA)	BAR REINFORCING STEEL (BOX CULVERT) (LB)	18" CORRUGATED STEEL PIPE (0.079" THICK) (LF)	18" SLOTTED CORRUGATED STEEL PIPE (0.079 THICK) (LF)	18" REINFORCED CONCRETE PIPE (LF)	24" REINFORCED CONCRETE PIPE (LF)	(N) STEEL PLATE CLOSURE (EA)	(N) TYPE 18-9 FRAME AND GRATE (EA)	(N) TYPE 24-12 FRAME AND GRATE (EA)	(N) TYPE 24-10S FRAME AND GRATE (EA)	MAXIMUM COVER (FT)	ROCK SLOPE PROTECTION (FACING, METHOD B) (CY)	ROCK SLOPE PROTECTION FABRIC (SQYD)	GRATED LINE DRAIN (LF)	18" STEEL FLARED END SECTION (EA)	MINOR CONCRETE (BACKFILL) (CY)	REMOVE PIPE (LF)	FLUME DOWNDRAIN (LF)	18" TAPERED INLET (EA)	DESCRIPTION	STATION	DRAINAGE SHEET No.	DRAINAGE SYSTEM No.	DRAINAGE UNIT
D-19	72	v															97.0																	18" SCSP		D-19	72	v
		w		0.51	326																	1												CLI INLET; CASE 2	7.0' Lt 263+75.00 ℄ Fwy			w
		x															63.0																	18" SCSP				x
		y	4.1	1.59	326																	1												TYPE G2 INLET	7.0' Lt 264+41.00 ℄ Fwy			y
		z																	8.2					5									24" RCP				z
		z1					1.4							1																				REMOVE Conc APRON ADJUST INLET TO GRADE	2.0' Lt 264+50.20 ℄ Fwy			z1
D-19	73	a															88.5																	18" SCSP		D-19	73	a
		b		0.51	326																	1												CLI INLET; CASE 2	7.0' Lt 265+32.50 ℄ Fwy			b
		c															79.1																	18" SCSP				c
		d		0.51	326																	1												CLI INLET; CASE 2	5.3' Lt 266+14.50 ℄ Fwy			d
		e															79.1																	18" SCSP				e
		f		0.51	326																	1												CLI INLET; CASE 2	1.0' Lt 266+96.50 ℄ Fwy			f
		g															69.3																	18" SCSP				g
		h		0.51	326																	1												CLI INLET; CASE 2	1.0' Lt 267+68.70 ℄ Fwy			h
		i															11.7																	18" SCSP				i
		j		0.51	326																	1												CLI INLET; CASE 2	7.0' Lt 267+81.35 ℄ Fwy			j
		k															88.9																	18" SCSP				k
D-20		L		0.51	326																	1												CLI INLET; CASE 2	7.0' Lt 268+73.20 ℄ Fwy	D-20		L
		m															89.0																	18" SCSP				m
		n	2.2	1.31	326																	1												TYPE G2 INLET	7.0' Lt 269+65.00 ℄ Fwy			n
SHEET TOTAL				6.47	2934		1.4							1			665.6		8.2			9															

DRAINAGE QUANTITIES
DQ-26

STATE OF CALIFORNIA - DEPARTMENT OF TRANSPORTATION
Caltrans® HYDRAULICS

FUNCTIONAL SUPERVISOR: DAVE BHALLA
CALCULATED-DESIGNED BY: S. THAI
CHECKED BY: D. BHALLA
REVISED BY
DATE REVISED

LAST REVISION DATE PLOTTED => 25-JUN-2011
08-31-10 TIME PLOTTED => 08:00

NOTES: PIPE JOINTS ARE STANDARD
OR AS NOTED ON PLANS

(N) NOT A SEPARATE PAY ITEM,
FOR INFORMATION ONLY.

Dist	COUNTY	ROUTE	POST MILES TOTAL PROJECT	SHEET No.	TOTAL SHEETS
07	Ven,SB	101	R39.8/R43.6, 0.0/2.2	184	757

REGISTERED CIVIL ENGINEER DATE

6-20-11
PLANS APPROVAL DATE

REGISTERED PROFESSIONAL ENGINEER SA K. THAI No. 71390 Exp. 12/31/11 CIVIL STATE OF CALIFORNIA

THE STATE OF CALIFORNIA OR ITS OFFICERS OR AGENTS SHALL NOT BE RESPONSIBLE FOR THE ACCURACY OR COMPLETENESS OF SCANNED COPIES OF THIS PLAN SHEET.

DRAINAGE SHEET No.	DRAINAGE SYSTEM No.	DRAINAGE UNIT	HEIGHT OF INLET H OR V (FT)	MINOR CONCRETE (MINOR STRUCTURE) (CY)	MISCELLANEOUS IRON AND STEEL (LB)	STRUCTURAL CONCRETE (BOX CULVERT) (CY)	REMOVE CONCRETE (CY)	ABANDON PIPELINE (LF)	SAND BACKFILL (CY)	DITCH EXCAVATION (CY)	REMOVE INLET (EA)	ABANDON INLET (EA)	CAP INLET (EA)	ADJUST INLET (EA)	BAR REINFORCING STEEL (BOX CULVERT) (LB)	18" CORRUGATED STEEL PIPE (0.079" THICK) (LF)	18" SLOTTED CORRUGATED STEEL PIPE (0.079 THICK) (LF)	18" REINFORCED CONCRETE PIPE (LF)	24" REINFORCED CONCRETE PIPE (LF)	(N) STEEL PLATE CLOSURE (EA)	(N) TYPE 18-9 FRAME AND GRATE (EA)	(N) TYPE 24-12 FRAME AND GRATE (EA)	(N) TYPE 24-10S FRAME AND GRATE (EA)	MAXIMUM COVER (FT)	ROCK SLOPE PROTECTION (FACING, METHOD B) (CY)	ROCK SLOPE PROTECTION FABRIC (SQYD)	GRATED LINE DRAIN (LF)	18" STEEL FLARED END SECTION (EA)	MINOR CONCRETE (BACKFILL) (CY)	REMOVE PIPE (LF)	FLUME DOWNDRAIN (LF)	18" TAPERED INLET (EA)	DESCRIPTION	STATION	DRAINAGE SHEET No.	DRAINAGE SYSTEM No.	DRAINAGE UNIT
D-20	73	o																												3.0			REMOVE PIPE		D-20	73	o
		p															97.0																18" SCSP				p
		q		0.51	326																	1											CLI INLET; CASE 2	7.0' Lt 270+65.00 ℄ Fwy			q
		r															97.0																18" SCSP				r
		s		0.51	326																	1											CLI INLET; CASE 2	7.0' Lt 271+65.00 ℄ Fwy			s
		t															97.0																18" SCSP				t
		u		0.51	326																	1											CLI INLET; CASE 2	7.0' Lt 272+65.00 ℄ Fwy			u
		v															97.0																18" SCSP				v
		w		0.51	326																	1											CLI INLET; CASE 2	7.0' Lt 273+65.00 ℄ Fwy			w
		x															97.0																18" SCSP				x
		y		0.51	326																	1											CLI INLET; CASE 2	7.0' Lt 274+65.00 ℄ Fwy			y
		z															96.0																18" SCSP				z
D-20	74	a																												3.0			REMOVE PIPE		D-20	74	a
		b	4.0	1.57	326																	1											TYPE G2 INLET	7.0' Lt 275+64.00 ℄ Fwy			b
		c															97.0																18" SCSP				c
		d		0.51	326																	1											CLI INLET; CASE 2	7.0' Lt 276+64.00 ℄ Fwy			d
		e															97.0																18" SCSP				e
		f		0.51	326																	1											CLI INLET; CASE 2	7.0' Lt 277+64.00 ℄ Fwy			f
		g															97.0																18" SCSP				g
SHEET TOTAL				5.14	2608												872.0					8								6.0							

DRAINAGE QUANTITIES
DQ-27

STATE OF CALIFORNIA - DEPARTMENT OF TRANSPORTATION
Caltrans HYDRAULICS

FUNCTIONAL SUPERVISOR: DAVE BHALLA
CALCULATED-DESIGNED BY: S. THAI
CHECKED BY: D. BHALLA
REVISED BY
DATE REVISED

LAST REVISION 08-31-10
DATE PLOTTED => 25-JUN-2011
TIME PLOTTED => 08:00

NOTES: PIPE JOINTS ARE STANDARD
OR AS NOTED ON PLANS

(N) NOT A SEPARATE PAY ITEM,
FOR INFORMATION ONLY.

Dist	COUNTY	ROUTE	POST MILES TOTAL PROJECT	SHEET No.	TOTAL SHEETS
07	Ven,SB	101	R39.8/R43.6, 0.0/2.2	185	757

REGISTERED CIVIL ENGINEER DATE

6-20-11
PLANS APPROVAL DATE

REGISTERED PROFESSIONAL ENGINEER SA K. THAI No. 71390 Exp. 12/31/11 CIVIL STATE OF CALIFORNIA

THE STATE OF CALIFORNIA OR ITS OFFICERS OR AGENTS SHALL NOT BE RESPONSIBLE FOR THE ACCURACY OR COMPLETENESS OF SCANNED COPIES OF THIS PLAN SHEET.

DRAINAGE SHEET No.	DRAINAGE SYSTEM No.	DRAINAGE UNIT	HEIGHT OF INLET H OR V (FT)	MINOR CONCRETE (MINOR STRUCTURE) (CY)	MISCELLANEOUS IRON AND STEEL (LB)	STRUCTURAL CONCRETE (BOX CULVERT) (CY)	REMOVE CONCRETE (CY)	ABANDON PIPELINE (LF)	SAND BACKFILL (CY)	DITCH EXCAVATION (CY)	REMOVE INLET (EA)	ABANDON INLET (EA)	CAP INLET (EA)	ADJUST INLET (EA)	BAR REINFORCING STEEL (BOX CULVERT) (LB)	18" CORRUGATED STEEL PIPE (0.079" THICK) (LF)	18" SLOTTED CORRUGATED STEEL PIPE (0.079 THICK) (LF)	18" REINFORCED CONCRETE PIPE (LF)	24" REINFORCED CONCRETE PIPE (LF)	(N) STEEL PLATE CLOSURE (EA)	(N) TYPE 18-9 FRAME AND GRATE (EA)	(N) TYPE 24-12 FRAME AND GRATE (EA)	(N) TYPE 24-10S FRAME AND GRATE (EA)	MAXIMUM COVER (FT)	ROCK SLOPE PROTECTION (FACING, METHOD B) (CY)	ROCK SLOPE PROTECTION FABRIC (SQYD)	GRATED LINE DRAIN (LF)	18" STEEL FLARED END SECTION (EA)	MINOR CONCRETE (BACKFILL) (CY)	REMOVE PIPE (LF)	FLUME DOWNDRAIN (LF)	18" TAPERED INLET (EA)	DESCRIPTION	STATION	DRAINAGE SHEET No.	DRAINAGE SYSTEM No.	DRAINAGE UNIT
D-20	74	h		0.51	326																	1											CLI INLET; CASE 2	7.0' Lt 278+64.00 ℄ Fwy	D-20	74	h
		i															97.0																18" SCSP				i
		j	3.2	1.43	634																	2											GD-3 INLET	279+64.00 ℄ Fwy			j
		k																5.2						4									18" RCP				k
		L	4.0	1.57	326																	1											TYPE G2 INLET	7.0' Lt 279+64.00 ℄ Fwy			L
		m															47.2																18" SCSP				m
		n																47.2						4									18" RCP				n
		o									1																						REMOVE INLET	280+14.00 ℄ Fwy			o
		p																												10.7			REMOVE PIPE				p
		q																	8.5					4									24" RCP				q
		r	3.8	1.51	326																	1											TYPE G2 INLET	7.0' Lt 280+14.00 ℄ Fwy			r
D-20	75	a															83.0																18" SCSP		D-20	75	a
		b		0.51	326																	1											CLI INLET; CASE 2	5.4' Lt 281+00.00 ℄ Fwy			b
		c															77.1																18" SCSP				c
		d		0.51	326																	1											CLI INLET; CASE 2	1.0' Lt 281+80.00 ℄ Fwy			d
D-21		e															73.5																18" SCSP		D-21		e
		f		0.51	326																	1											CLI INLET; CASE 2	0.5' Lt 282+53.50 ℄ Fwy			f
		g															11.7																18" SCSP				g
		h		0.51	326																	1											CLI INLET; CASE 2	7.0' Lt 282+66.50 ℄ Fwy			h
		i															30.7																18" SCSP				i
SHEET TOTAL				7.06	2916						1						420.2	52.4	8.5			9								10.7							

DRAINAGE QUANTITIES
DQ-28

STATE OF CALIFORNIA - DEPARTMENT OF TRANSPORTATION
Caltrans® HYDRAULICS

FUNCTIONAL SUPERVISOR: DAVE BHALLA
CALCULATED-DESIGNED BY: S. THAI
CHECKED BY: D. BHALLA
REVISED BY
DATE REVISED

LAST REVISION DATE PLOTTED => 25-JUN-2011
TIME PLOTTED => 08:00
08-31-10

NOTES: PIPE JOINTS ARE STANDARD
OR AS NOTED ON PLANS

(N) NOT A SEPARATE PAY ITEM,
FOR INFORMATION ONLY.

Dist	COUNTY	ROUTE	POST MILES TOTAL PROJECT	SHEET No.	TOTAL SHEETS
07	Ven,SB	101	R39.8/R43.6, 0.0/2.2	186	757

REGISTERED CIVIL ENGINEER DATE

6-20-11
PLANS APPROVAL DATE

REGISTERED PROFESSIONAL ENGINEER SA K. THAI No. 71390 Exp. 12/31/11 CIVIL STATE OF CALIFORNIA

THE STATE OF CALIFORNIA OR ITS OFFICERS OR AGENTS SHALL NOT BE RESPONSIBLE FOR THE ACCURACY OR COMPLETENESS OF SCANNED COPIES OF THIS PLAN SHEET.

DRAINAGE SHEET No.	DRAINAGE SYSTEM No.	DRAINAGE UNIT	HEIGHT OF INLET H OR V (FT)	MINOR CONCRETE (MINOR STRUCTURE) (CY)	MISCELLANEOUS IRON AND STEEL (LB)	STRUCTURAL CONCRETE (BOX CULVERT) (CY)	REMOVE CONCRETE (CY)	ABANDON PIPELINE (LF)	SAND BACKFILL (CY)	DITCH EXCAVATION (CY)	REMOVE INLET (EA)	ABANDON INLET (EA)	CAP INLET (EA)	ADJUST INLET (EA)	BAR REINFORCING STEEL (BOX CULVERT) (LB)	18" CORRUGATED STEEL PIPE (0.079" THICK) (LF)	18" SLOTTED CORRUGATED STEEL PIPE (0.079 THICK) (LF)	18" REINFORCED CONCRETE PIPE (LF)	24" REINFORCED CONCRETE PIPE (LF)	(N) STEEL PLATE CLOSURE (EA)	(N) TYPE 18-9 FRAME AND GRATE (EA)	(N) TYPE 24-12 FRAME AND GRATE (EA)	(N) TYPE 24-10S FRAME AND GRATE (EA)	MAXIMUM COVER (FT)	ROCK SLOPE PROTECTION (FACING, METHOD B) (CY)	ROCK SLOPE PROTECTION FABRIC (SQYD)	GRATED LINE DRAIN (LF)	18" STEEL FLARED END SECTION (EA)	MINOR CONCRETE (BACKFILL) (CY)	REMOVE PIPE (LF)	FLUME DOWNDRAIN (LF)	18" TAPERED INLET (EA)	DESCRIPTION	STATION	DRAINAGE SHEET No.	DRAINAGE SYSTEM No.	DRAINAGE UNIT
D-21	75	j		0.51	326																	1											CLI INLET; CASE 2	7.0' Lt 283+00.00 ℄ Fwy	D-21	75	j
		k															97.0																18" SCSP				k
		l		0.51	326																	1											CLI INLET; CASE 2	7.0' Lt 284+00.00 ℄ Fwy			l
		m															97.0																18" SCSP				m
		n		0.51	326																	1											CLI INLET; CASE 2	7.0' Lt 285+00.00 ℄ Fwy			n
		o															97.0																18" SCSP				o
		p		0.51	326																	1											CLI INLET; CASE 2	7.0' Lt 286+00.00 ℄ Fwy			p
		q															97.0																18" SCSP				q
		r		0.51	326																	1											CLI INLET; CASE 2	7.0' Lt 287+00.00 ℄ Fwy			r
		s															97.0																18" SCSP				s
		t		0.51	326																	1											CLI INLET; CASE 2	7.0' Lt 288+00.00 ℄ Fwy			t
		u															97.0																18" SCSP				u
		v		0.51	326																	1											CLI INLET; CASE 2	7.0' Lt 289+00.00 ℄ Fwy			v
		w															97.0																18" SCSP				w
		x		0.51	326																	1											CLI INLET; CASE 2	7.0' Lt 290+00.00 ℄ Fwy			x
		y															97.0																18" SCSP				y
		z		0.51	326																	1											CLI INLET; CASE 2	7.0' Lt 291+00.00 ℄ Fwy			z
		z1															97.0																18" SCSP				z1
		z2		0.51	326																	1											CLI INLET; CASE 2	7.0' Lt 292+00.00 ℄ Fwy			z2
		z3															97.0																18" SCSP				z3
SHEET TOTAL				5.10	3260												970.0					10															

DRAINAGE QUANTITIES
DQ-29

STATE OF CALIFORNIA - DEPARTMENT OF TRANSPORTATION
Caltrans® HYDRAULICS

FUNCTIONAL SUPERVISOR: DAVE BHALLA

CALCULATED-DESIGNED BY: S. THAI
CHECKED BY: D. BHALLA

REVISED BY
DATE REVISED

LAST REVISION 08-31-10
DATE PLOTTED => 25-JUN-2011
TIME PLOTTED => 08:00

NOTES: PIPE JOINTS ARE STANDARD
OR AS NOTED ON PLANS

(N) NOT A SEPARATE PAY ITEM,
FOR INFORMATION ONLY.

Dist	COUNTY	ROUTE	POST MILES TOTAL PROJECT	SHEET No.	TOTAL SHEETS
07	Ven,SB	101	R39.8/R43.6, 0.0/2.2	187	757

REGISTERED CIVIL ENGINEER DATE

6-20-11
PLANS APPROVAL DATE

REGISTERED PROFESSIONAL ENGINEER SA K. THAI No. 71390 Exp. 12/31/11 CIVIL STATE OF CALIFORNIA

THE STATE OF CALIFORNIA OR ITS OFFICERS OR AGENTS SHALL NOT BE RESPONSIBLE FOR THE ACCURACY OR COMPLETENESS OF SCANNED COPIES OF THIS PLAN SHEET.

DRAINAGE SHEET No.	DRAINAGE SYSTEM No.	DRAINAGE UNIT	HEIGHT OF INLET H OR V (FT)	MINOR CONCRETE (MINOR STRUCTURE) (CY)	MISCELLANEOUS IRON AND STEEL (LB)	STRUCTURAL CONCRETE (BOX CULVERT) (CY)	REMOVE CONCRETE (CY)	ABANDON PIPELINE (LF)	SAND BACKFILL (CY)	DITCH EXCAVATION (CY)	REMOVE INLET (EA)	ABANDON INLET (EA)	CAP INLET (EA)	ADJUST INLET (EA)	BAR REINFORCING STEEL (BOX CULVERT) (LB)	18" CORRUGATED STEEL PIPE (0.079" THICK) (LF)	18" SLOTTED CORRUGATED STEEL PIPE (0.079 THICK) (LF)	18" REINFORCED CONCRETE PIPE (LF)	24" REINFORCED CONCRETE PIPE (LF)	(N) STEEL PLATE CLOSURE (EA)	(N) TYPE 18-9 FRAME AND GRATE (EA)	(N) TYPE 24-12 FRAME AND GRATE (EA)	(N) TYPE 24-10S FRAME AND GRATE (EA)	MAXIMUM COVER (FT)	ROCK SLOPE PROTECTION (FACING, METHOD B) (CY)	ROCK SLOPE PROTECTION FABRIC (SQYD)	GRATED LINE DRAIN (LF)	18" STEEL FLARED END SECTION (EA)	MINOR CONCRETE (BACKFILL) (CY)	REMOVE PIPE (LF)	FLUME DOWNDRAIN (LF)	18" TAPERED INLET (EA)	DESCRIPTION	STATION	DRAINAGE SHEET No.	DRAINAGE SYSTEM No.	DRAINAGE UNIT
D-21	76	a		0.55	326																	1											CLI INLET; CASE 1	8.4' Rt 285+00.00 ℄ Fwy	D-21	76	a
		b															97.0																18" SCSP				b
		c		0.51	326																	1											CLI INLET; CASE 2	8.4' Rt 286+00.00 ℄ Fwy			c
		d															97.0																18" SCSP				d
		e		0.51	326																	1											CLI INLET; CASE 2	8.4' Rt 287+00.00 ℄ Fwy			e
		f															97.0																18" SCSP				f
		g		0.51	326																	1											CLI INLET; CASE 2	8.4' Rt 288+00.00 ℄ Fwy			g
		h															97.0																18" SCSP				h
		i		0.51	326																	1											CLI INLET; CASE 2	8.4' Rt 289+00.00 ℄ Fwy			i
		j															97.0																18" SCSP				j
		k		0.51	326																	1											CLI INLET; CASE 2	8.4' Rt 290+00.00 ℄ Fwy			k
		L															97.0																18" SCSP				L
		m		0.51	326																	1											CLI INLET; CASE 2	8.4' Rt 291+00.00 ℄ Fwy			m
		n															97.0																18" SCSP				n
		o		0.51	326																	1											CLI INLET; CASE 2	8.4' Rt 292+00.00 ℄ Fwy			o
		p															97.0																18" SCSP				p
D-21	77	a	4.1	1.59	326																	1											TYPE G2 INLET	8.4' Rt 293+00.00 ℄ Fwy	D-21	77	a
		b																	4.9					4									24" RCP				b
		c	3.6	2.95	634																	2											GD-3 INLET WITH Conc APRON	293+00.00 ℄ Fwy			c
		d																	5.2					4									24" RCP				d
SHEET TOTAL				8.66	3568												776.0		10.1			11															

DRAINAGE QUANTITIES
DQ-30

STATE OF CALIFORNIA - DEPARTMENT OF TRANSPORTATION
Caltrans® HYDRAULICS

FUNCTIONAL SUPERVISOR: DAVE BHALLA
CALCULATED-DESIGNED BY: S. THAI
CHECKED BY: D. BHALLA
REVISED BY
DATE REVISED

LAST REVISION 08-31-10
DATE PLOTTED => 25-JUN-2011
TIME PLOTTED => 08:00

NOTES: PIPE JOINTS ARE STANDARD
OR AS NOTED ON PLANS

(N) NOT A SEPARATE PAY ITEM,
FOR INFORMATION ONLY.

Dist	COUNTY	ROUTE	POST MILES TOTAL PROJECT	SHEET No.	TOTAL SHEETS
07	Ven,SB	101	R39.8/R43.6, 0.0/2.2	188	757

REGISTERED CIVIL ENGINEER DATE

6-20-11
PLANS APPROVAL DATE

REGISTERED PROFESSIONAL ENGINEER SA K. THAI No. 71390 Exp. 12/31/11 CIVIL STATE OF CALIFORNIA

THE STATE OF CALIFORNIA OR ITS OFFICERS OR AGENTS SHALL NOT BE RESPONSIBLE FOR THE ACCURACY OR COMPLETENESS OF SCANNED COPIES OF THIS PLAN SHEET.

DRAINAGE SHEET No.	DRAINAGE SYSTEM No. (⬡)	DRAINAGE UNIT (○)	HEIGHT OF INLET H OR V (FT)	MINOR CONCRETE (MINOR STRUCTURE) (CY)	MISCELLANEOUS IRON AND STEEL (LB)	STRUCTURAL CONCRETE (BOX CULVERT) (CY)	REMOVE CONCRETE (CY)	ABANDON PIPELINE (LF)	SAND BACKFILL (CY)	DITCH EXCAVATION (CY)	REMOVE INLET (EA)	ABANDON INLET (EA)	CAP INLET (EA)	ADJUST INLET (EA)	BAR REINFORCING STEEL (BOX CULVERT) (LB)	18" CORRUGATED STEEL PIPE (0.079" THICK) (LF)	18" SLOTTED CORRUGATED STEEL PIPE (0.079 THICK) (LF)	18" REINFORCED CONCRETE PIPE (LF)	24" REINFORCED CONCRETE PIPE (LF)	(N) STEEL PLATE CLOSURE (EA)	(N) TYPE 18-9 FRAME AND GRATE (EA)	(N) TYPE 24-12 FRAME AND GRATE (EA)	(N) TYPE 24-10S FRAME AND GRATE (EA)	MAXIMUM COVER (FT)	ROCK SLOPE PROTECTION (FACING, METHOD B) (CY)	ROCK SLOPE PROTECTION FABRIC (SQYD)	GRATED LINE DRAIN (LF)	18" STEEL FLARED END SECTION (EA)	MINOR CONCRETE (BACKFILL) (CY)	REMOVE PIPE (LF)	FLUME DOWNDRAIN (LF)	18" TAPERED INLET (EA)	DESCRIPTION	STATION	DRAINAGE SHEET No.	DRAINAGE SYSTEM No. (⬡)	DRAINAGE UNIT (○)
D-21	77	e	4.8	1.77	326																	1											TYPE G2 INLET	6.8' Lt 293+00.00 ℄ Fwy	D-21	77	e
		f																	197.1					5									24" RCP	6.8' Lt 293+00.00 ℄ Fwy - 0.5' Lt 295+00.00 ℄ Fwy			f
		g															97.0																18" SCSP				g
		h		0.51	326																	1											CLI INLET; CASE 2	1.4' Lt 294+00.00 ℄ Fwy			h
		i															97.0																18" SCSP				i
		j	4.8	1.77	326																	1											TYPE G2 INLET	0.5' Lt 295+00.00 ℄ Fwy			j
		k																	240.6					5									24" RCP	0.5' Lt 295+00.00 ℄ Fwy - 8.7' Rt 297+43.50 ℄ Fwy			k
		L															97.0																18" SCSP				L
		m		0.51	326																	1											CLI INLET; CASE 2	3.1' Lt 296+00.00 ℄ Fwy			m
D-22		n															66.0																18" SCSP		D-22		n
		o		0.51	326																	1											CLI INLET; CASE 2	6.4' Lt 296+70.00 ℄ Fwy			o
		p															70.5																18" SCSP				p
		q	4.8	1.77	326																	1											TYPE G2 INLET	8.7' Lt 297+43.50 ℄ Fwy			q
		r																	6.8					5									24" RCP	8.7' Lt 297+43.50 ℄ Fwy - 297+46.70 ℄ Fwy			r
		s					1.4						1																				REMOVE Conc APRON CAP INLET	297+46.70 ℄ Fwy			s
D-22		a																							3.0	8.7							ROCK SLOPE PROTECTION		D-22		a
SHEET TOTAL				6.84	1956		1.4						1				427.5		444.5			6			3.0	8.7											

DRAINAGE QUANTITIES
DQ-31

STATE OF CALIFORNIA - DEPARTMENT OF TRANSPORTATION
Caltrans® HYDRAULICS

FUNCTIONAL SUPERVISOR: DAVE BHALLA
CALCULATED-DESIGNED BY: S. THAI
CHECKED BY: D. BHALLA
REVISED BY
DATE REVISED

LAST REVISION 08-31-10
DATE PLOTTED => 25-JUN-2011
TIME PLOTTED => 08:00

(N) NOT A SEPARATE PAY ITEM, FOR INFORMATION ONLY.

DRAINAGE QUANTITIES SUMMARY

Dist	COUNTY	ROUTE	POST MILES TOTAL PROJECT	SHEET No.	TOTAL SHEETS
07	Ven,SB	101	R39.8/R43.6, 0.0/2.2	189	757

REGISTERED CIVIL ENGINEER DATE

6-20-11
PLANS APPROVAL DATE

REGISTERED PROFESSIONAL ENGINEER SA K. THAI No. 71390 Exp. 12/31/11 CIVIL STATE OF CALIFORNIA

THE STATE OF CALIFORNIA OR ITS OFFICERS OR AGENTS SHALL NOT BE RESPONSIBLE FOR THE ACCURACY OR COMPLETENESS OF SCANNED COPIES OF THIS PLAN SHEET.

SHEET No.	HEIGHT OF INLET H OR V	MINOR CONCRETE (MINOR STRUCTURE)	MISCELLANEOUS IRON AND STEEL	STRUCTURAL CONCRETE (BOX CULVERT)	REMOVE CONCRETE	ABANDON PIPELINE	SAND BACKFILL	DITCH EXCAVATION	REMOVE INLET	ABANDON INLET	CAP INLET	ADJUST INLET	BAR REINFORCING STEEL (BOX CULVERT)	18" CORRUGATED STEEL PIPE (0.079" THICK)	18" SLOTTED CORRUGATED STEEL PIPE (0.079 THICK)	18" REINFORCED CONCRETE PIPE	24" REINFORCED CONCRETE PIPE	(N) STEEL PLATE CLOSURE	(N) TYPE 18-9 FRAME AND GRATE	(N) TYPE 24-12 FRAME AND GRATE	(N) TYPE 24-10S FRAME AND GRATE	MAXIMUM COVER	ROCK SLOPE PROTECTION (FACING, METHOD B)	ROCK SLOPE PROTECTION FABRIC	GRATED LINE DRAIN	18" STEEL FLARED END SECTION	MINOR CONCRETE (BACKFILL)	REMOVE PIPE	FLUME DOWNDRAIN	18" TAPERED INLET	DESCRIPTION
	FT	CY	LB	CY	CY	LF	CY	CY	EA	EA	EA	EA	LB	LF	LF	LF	LF	EA	EA	EA	EA	FT	CY	SQYD	LF	EA	CY	LF	LF	EA	
DQ-1		7.63	1802		5.16	190.5	12.5		4	1		1		32.3				7	2	4											
DQ-2		8.13	1782		6.45				5					41.3				5	1	4	1										
DQ-3		6.90	2183		3.87	88.0	5.75		3	1				30.4				6	3	3	2										
DQ-4		6.08	1705		3.87	114.8	7.5		3	2				35.1				5	2	3	1										
DQ-5		7.50	2703		2.58	150.0	9.8		2	2				26.7	437.0			5	3	6											
DQ-6		5.75	2282	2.65	0.6						1		448.2	15.3	413.0					7											
DQ-7		8.89	2721	9.6	2.8				1				2945	88.6				5	7	3					124.9						
DQ-8		6.09	2816					15.0								135.6		10	10	1			1.9	9.0		1	5.7		10.0	1	
DQ-9		9.01	3132		1.29				1	1				11.7	194.0			4	4	7											
DQ-10		9.40	3278		1.29				1					14.0	358.0		73.7	4	4	7											
DQ-11		12.57	4110								1				171.0	433.5		4	4	10											
DQ-12		6.24	3527												582.0			5	5	7											
DQ-13		8.54	3205									1			645.3			4	4	6											
DQ-14		18.02	2883	4.26	0.30								746			21.2		3	3	6											
DQ-15		8.97	3889		1.40							1					316.0	13	13	2											
DQ-16		9.07	3888		5.16							5						13	13	2											
DQ-17		10.24	4137		3.4										225.0		15.6	6	6	4	3										
DQ-18		5.22	2185	3.58	3.2						1	1	575	4.5	515.0		15.6			6	1										
DQ-19		9.79	4005								1			4.1	413.0			6	6	7	1										
DQ-20		11.77	3677								3			9.9				9	9	3	2										
DQ-21		13.85	3206		1.7			367	2						194.0	43.5	428.6	1		9			3.0	8.7				56.5			
DQ-22		12.40	2452	30.11	1.7			740	1				5270.4			106.0	143.7	5	5	2	1						7.2	8.8			
DQ-23		12.24	2645		15.3			467			1	3				4.5		8	8	2			3.0	8.7							
DQ-24		9.20	2282		5.6						1	3			478.0	44.2				7											
DQ-25		5.65	3586												970.0					11											
DQ-26		6.47	2934		1.4							1			665.6		8.2			9											
DQ-27		5.14	2608												872.0					8								6.0			
DQ-28		7.06	2916						1						420.2	52.4	8.5			9								10.7			
DQ-29		5.10	3260												970.0					10											
DQ-30		8.66	3568												776.0		10.1			11											
DQ-31		6.84	1956		1.4						1				427.5		444.5			6			3.0	8.7							
TOTAL		268.37	91323	50.2	68.5	543.3	35.6	1589	24	7	10	16	9984.6	313.9	9726.6	840.9	1464.5	128	112	182	12		10.9	35.1	124.9	1	12.9	82.0	10.0	1	

DRAINAGE QUANTITIES

DQ-32

STATE OF CALIFORNIA - DEPARTMENT OF TRANSPORTATION
Caltrans
HYDRAULICS

FUNCTIONAL SUPERVISOR: DAVE BHALLA
CALCULATED-DESIGNED BY: S. THAI
CHECKED BY: D. BHALLA
REVISED BY
DATE REVISED

LAST REVISION 08-31-10
DATE PLOTTED => 25-JUN-2011
TIME PLOTTED => 08:00

Dist	COUNTY	ROUTE	POST MILES TOTAL PROJECT	SHEET No.	TOTAL SHEETS
07	Ven,SB	101	R39.8/R43.6, 0.0/2.2	190	757

REGISTERED CIVIL ENGINEER 8-16-10 DATE

6-20-11
PLANS APPROVAL DATE

REGISTERED PROFESSIONAL ENGINEER HAYKAZ AGHAJANIAN No. C53866 Exp. 12-31-11 CIVIL STATE OF CALIFORNIA

THE STATE OF CALIFORNIA OR ITS OFFICERS OR AGENTS SHALL NOT BE RESPONSIBLE FOR THE ACCURACY OR COMPLETENESS OF SCANNED COPIES OF THIS PLAN SHEET.

NOTES:

1. LOCATIONS OF UTILITY FACILITIES SHOWN ON THESE PLANS ARE APPROXIMATE AND SHALL BE VERIFIED BY THE CONTRACTOR PRIOR TO CONSTRUCTION.
2. UTILITY OWNER FOR THIS PROJECT:
   GAS- SOUTHERN CALIFORNIA GAS (SCG)
   OIL - CHEVRON, RICON ISLAND LIMITED PARTNERSHIP.
   PACIFIC OPERATORS OFF-SHORE

   POWER - SOUTHERN CALIFORNIA EDISON (SCE)
   PACIFIC OPERATION OFF-SHORE
   TELEPHONE - AMERICAN TELEPHONE TELEGRAPH (AT&T CALIFORNIA)
   AMERICAN TELEPHONE TELEGRAPH (AT&T LONG DISTANCE)
   SPRINT, VERIZON (MCI), LEVEL 3, QWEST.
   SEWER - VENTURA REGIONAL SANITATION DISTRICT (VRSD)
   CARPINTERIA SANITATION DISTRICT (CSD)
   WATER - CASITAS MUNICIPAL WATER DISTRICT (CMWD)
   CARPINTERIA VALLEY WATER DISTRICT (CVWD)

3 FOR ACCURATE RIGHT OF WAY DATA, CONTACT RIGHT OF WAY ENGINEERING AT THE DISTRICT OFFICE.

4. LOCATION OF UTILITY SUBSTRUCTURE FACILITIES SHOWN ON THESE PLANS WERE OBTAINED FROM OWER'S RECORDS AND/OR STATE SURVEYS.

ABBREVIATIONS:

SCE=SOUTHERN CALIFORNIA EDISON
SCG=SOUTHERN CALIFORNIA GAS
AT&T= AMERICAN TELEPHONE TELEGRAPH
MCD= MULTIPLE CONCRETE DUCT
Fo= Fiber Optic
FM=FORCE MAIN
DIG= Digital
OH=OVERHEAD
UG=UNDERGROUND

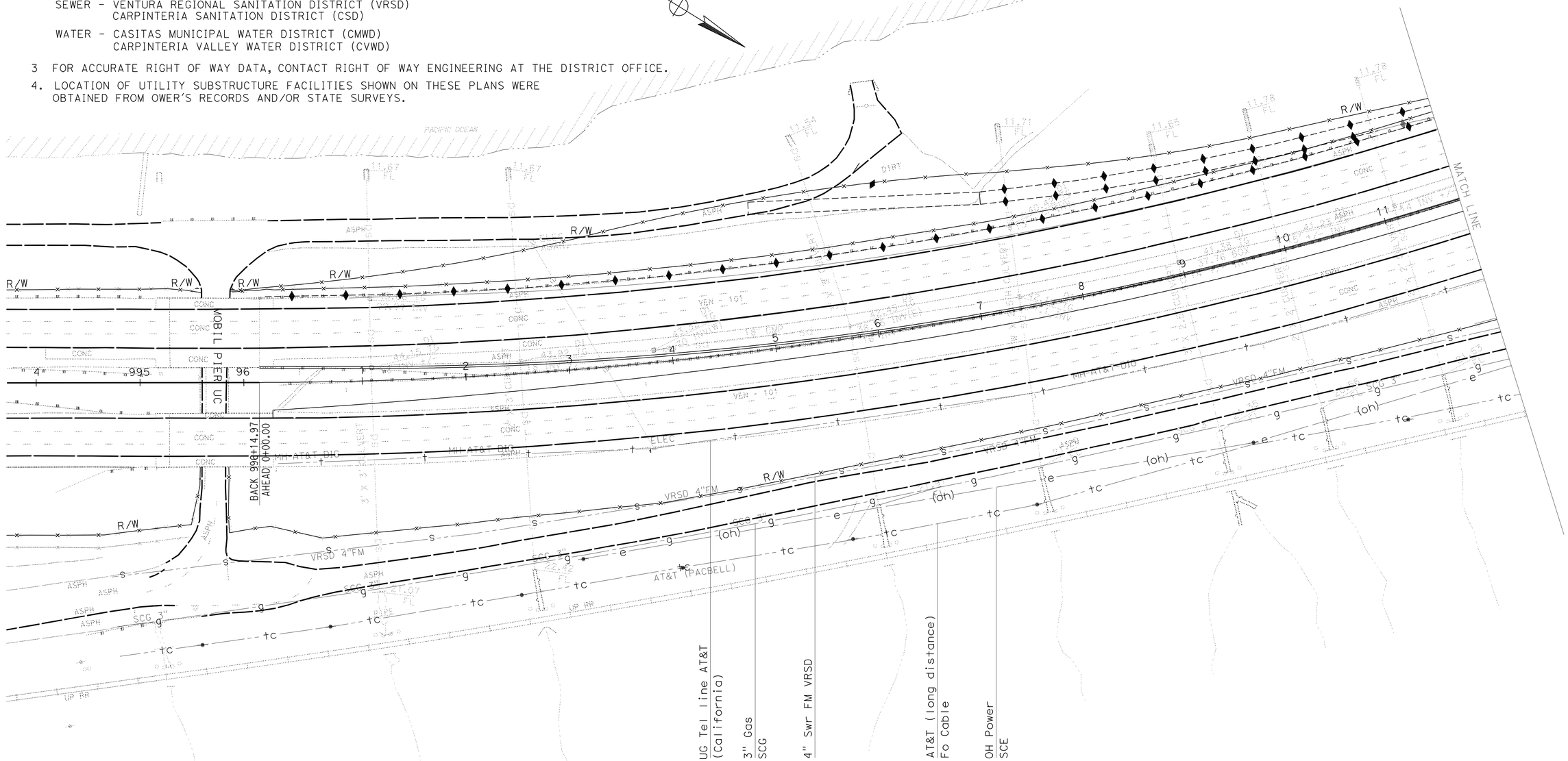

UTILITY PLAN

SCALE: 1" = 50'

U-1

THIS PLAN ACCURATE FOR UTILITY INFORMATION ONLY.

STATE OF CALIFORNIA - DEPARTMENT OF TRANSPORTATION
Caltrans UTILITIES ENGINEERING
FUNCTIONAL SUPERVISOR: HAYKAZ AGHAJANIAN
CUONG PHAM
CALCULATED-DESIGNED BY: HAYKAZ AGHAJANIAN
CHECKED BY
REVISED BY
DATE REVISED

LAST REVISION 12-08-10 | DATE PLOTTED => 01-AUG-2011 | TIME PLOTTED => 14:30

Dist	COUNTY	ROUTE	POST MILES TOTAL PROJECT	SHEET No.	TOTAL SHEETS
07	Ven,SB	101	R39.8/R43.6, 0.0/2.2	191	757

REGISTERED CIVIL ENGINEER 8-16-10 DATE

6-20-11
PLANS APPROVAL DATE

REGISTERED PROFESSIONAL ENGINEER HAYKAZ AGHAJANIAN No. C53866 Exp. 12-31-11 CIVIL STATE OF CALIFORNIA

THE STATE OF CALIFORNIA OR ITS OFFICERS OR AGENTS SHALL NOT BE RESPONSIBLE FOR THE ACCURACY OR COMPLETENESS OF SCANNED COPIES OF THIS PLAN SHEET.

NOTE:

1. FOR ACCURATE RIGHT OF WAY DATA, CONTACT RIGHT OF WAY ENGINEERING AT THE DISTRICT OFFICE.

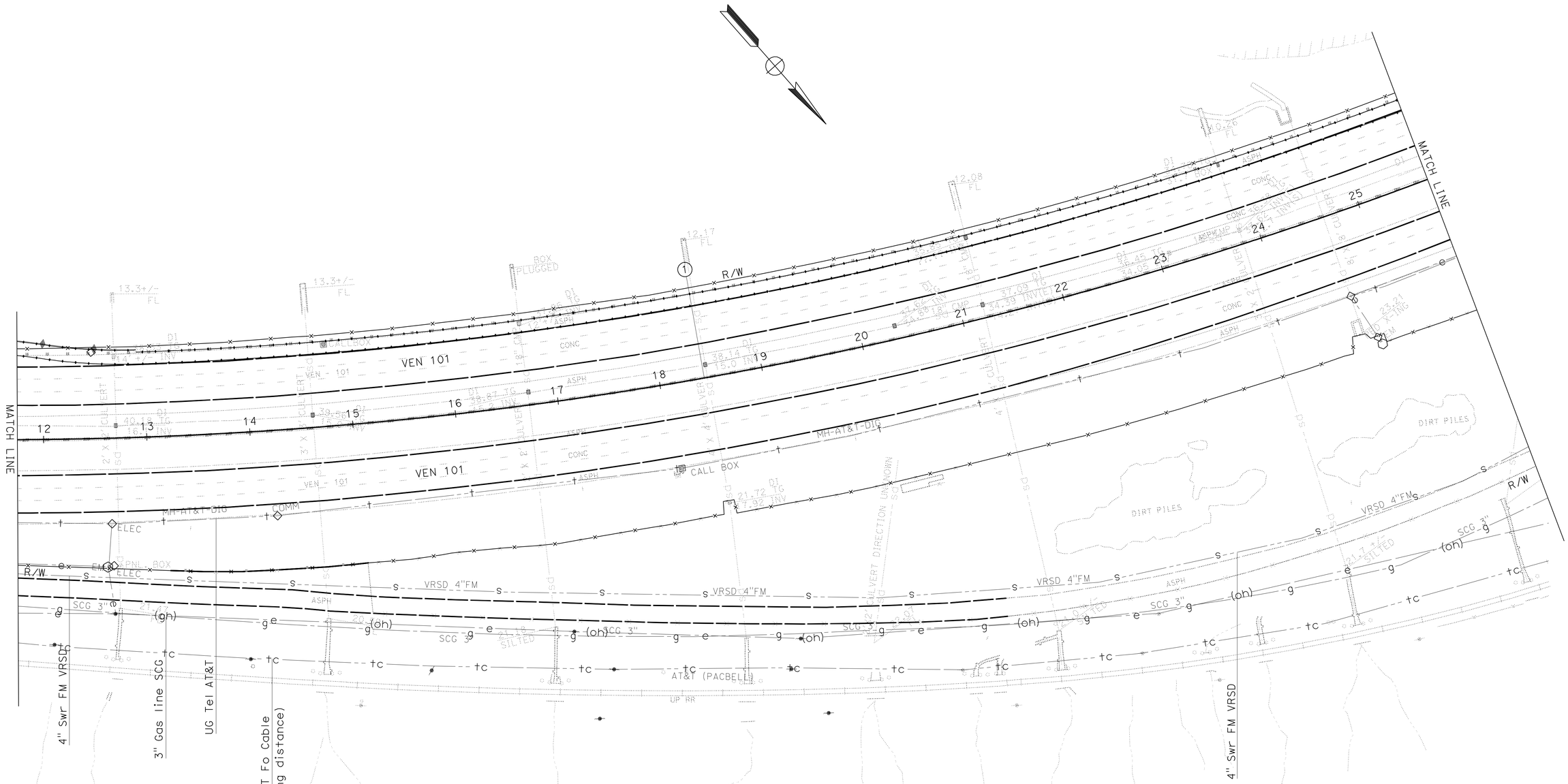

UTILITY PLAN

SCALE: 1" = 50'

U-2

THIS PLAN ACCURATE FOR UTILITY INFORMATION ONLY.

STATE OF CALIFORNIA - DEPARTMENT OF TRANSPORTATION
Caltrans UTILITIES ENGINEERING

FUNCTIONAL SUPERVISOR: HAYKAZ AGHAJANIAN

CALCULATED-DESIGNED BY: CUONG PHAM
CHECKED BY: HAYKAZ AGHAJANIAN

REVISED BY
DATE REVISED

LAST REVISION 12-08-10
DATE PLOTTED => 01-AUG-2011
TIME PLOTTED => 14:30

Dist	COUNTY	ROUTE	POST MILES TOTAL PROJECT	SHEET No.	TOTAL SHEETS
07	Ven,SB	101	R39.8/R43.6, 0.0/2.2	192	757

REGISTERED CIVIL ENGINEER 8-16-10 DATE

6-20-11
PLANS APPROVAL DATE

REGISTERED PROFESSIONAL ENGINEER HAYKAZ AGHAJANIAN No. C53866 Exp. 12-31-11 CIVIL STATE OF CALIFORNIA

THE STATE OF CALIFORNIA OR ITS OFFICERS OR AGENTS SHALL NOT BE RESPONSIBLE FOR THE ACCURACY OR COMPLETENESS OF SCANNED COPIES OF THIS PLAN SHEET.

NOTE:

1. FOR ACCURATE RIGHT OF WAY DATA, CONTACT RIGHT OF WAY ENGINEERING AT THE DISTRICT OFFICE.

POTHOLING INFORMATION TABLE

X	UTILITY COMPANY	NORTHING	EASTING	GROUND ELEVATION	DEPTH
1	12" Sewer Encasement VRSD	1954999.57	6228604.08	30.15	7.80
2	12" Sewer Encasement VRSD	1955165.34	6128620.30	28.05	1.00
3	12" Sewer Encasement VRSD	1955050.31	6128249.42	27.22	4.00

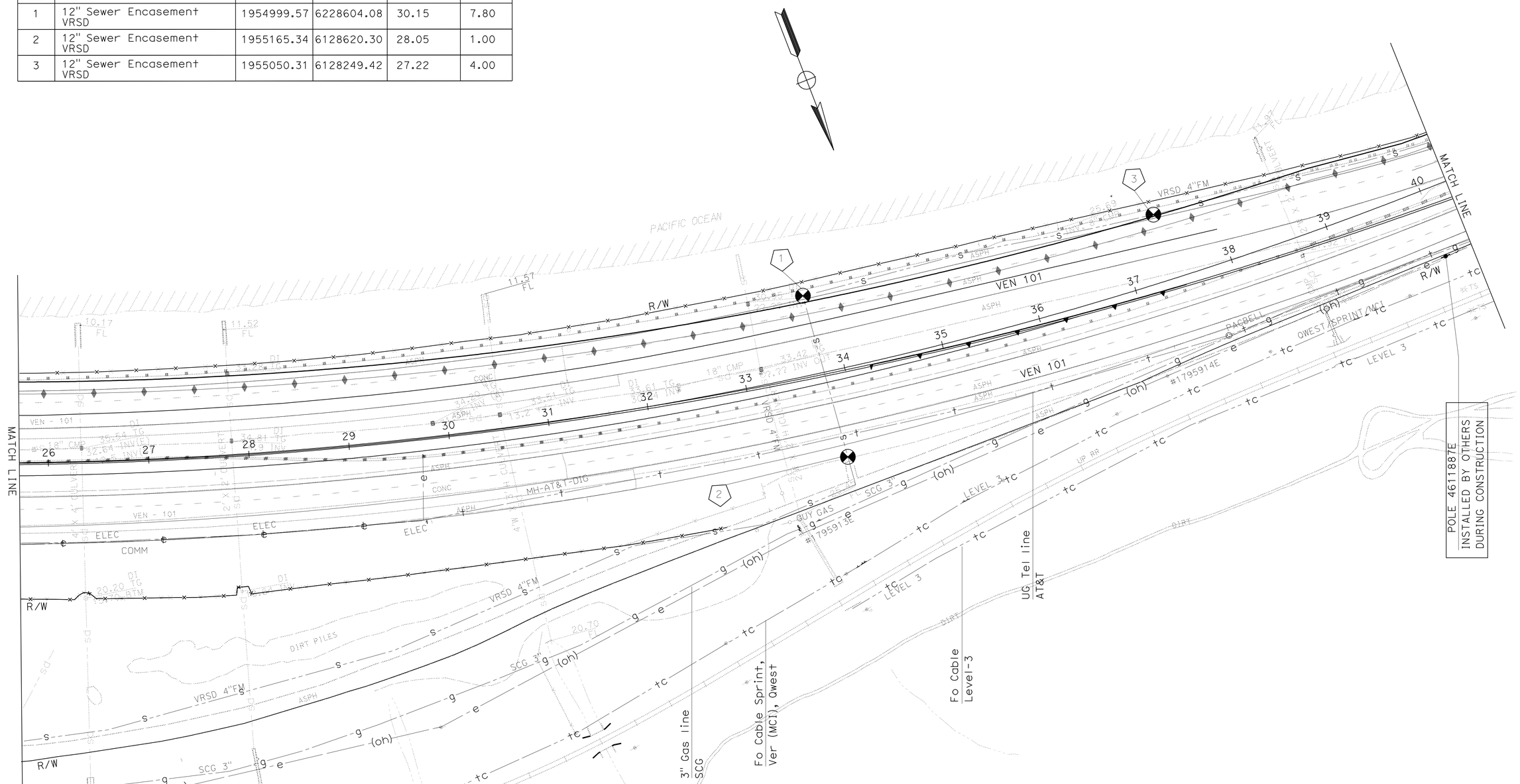

THIS PLAN ACCURATE FOR UTILITY INFORMATION ONLY.

UTILITY PLAN
SCALE: 1" = 50'

U-3

STATE OF CALIFORNIA - DEPARTMENT OF TRANSPORTATION
Caltrans UTILITIES ENGINEERING

FUNCTIONAL SUPERVISOR: HAYKAZ AGHAJANIAN
CALCULATED-DESIGNED BY: CUONG PHAM
CHECKED BY: HAYKAZ AGHAJANIAN
REVISED BY
DATE REVISED

LAST REVISION 12-14-10
DATE PLOTTED => 01-AUG-2011
TIME PLOTTED => 14:31

Dist	COUNTY	ROUTE	POST MILES TOTAL PROJECT	SHEET No.	TOTAL SHEETS
07	Ven,SB	101	R39.8/R43.6, 0.0/2.2	193	757

REGISTERED CIVIL ENGINEER 8-16-10 DATE

6-20-11
PLANS APPROVAL DATE

REGISTERED PROFESSIONAL ENGINEER HAYKAZ AGHAJANIAN No. C53866 Exp. 12-31-11 CIVIL STATE OF CALIFORNIA

THE STATE OF CALIFORNIA OR ITS OFFICERS OR AGENTS SHALL NOT BE RESPONSIBLE FOR THE ACCURACY OR COMPLETENESS OF SCANNED COPIES OF THIS PLAN SHEET.

NOTE:

1. FOR ACCURATE RIGHT OF WAY DATA, CONTACT RIGHT OF WAY ENGINEERING AT THE DISTRICT OFFICE.
2. (*) This utility facility will be relocated by others prior to construction. See U-25 for AT&T relocation plan.

POTHOLING INFORMATION TABLE

X	UTILITY COMPANY	NORTHING	EASTING	GROUND ELEVATION	DEPTH
1	4" Sewer line VRSD	1955049.36	6127173.30	24.38	3.50
2	4" Sewer line VRSD	1955050.31	6128249.42	29.34	4.00

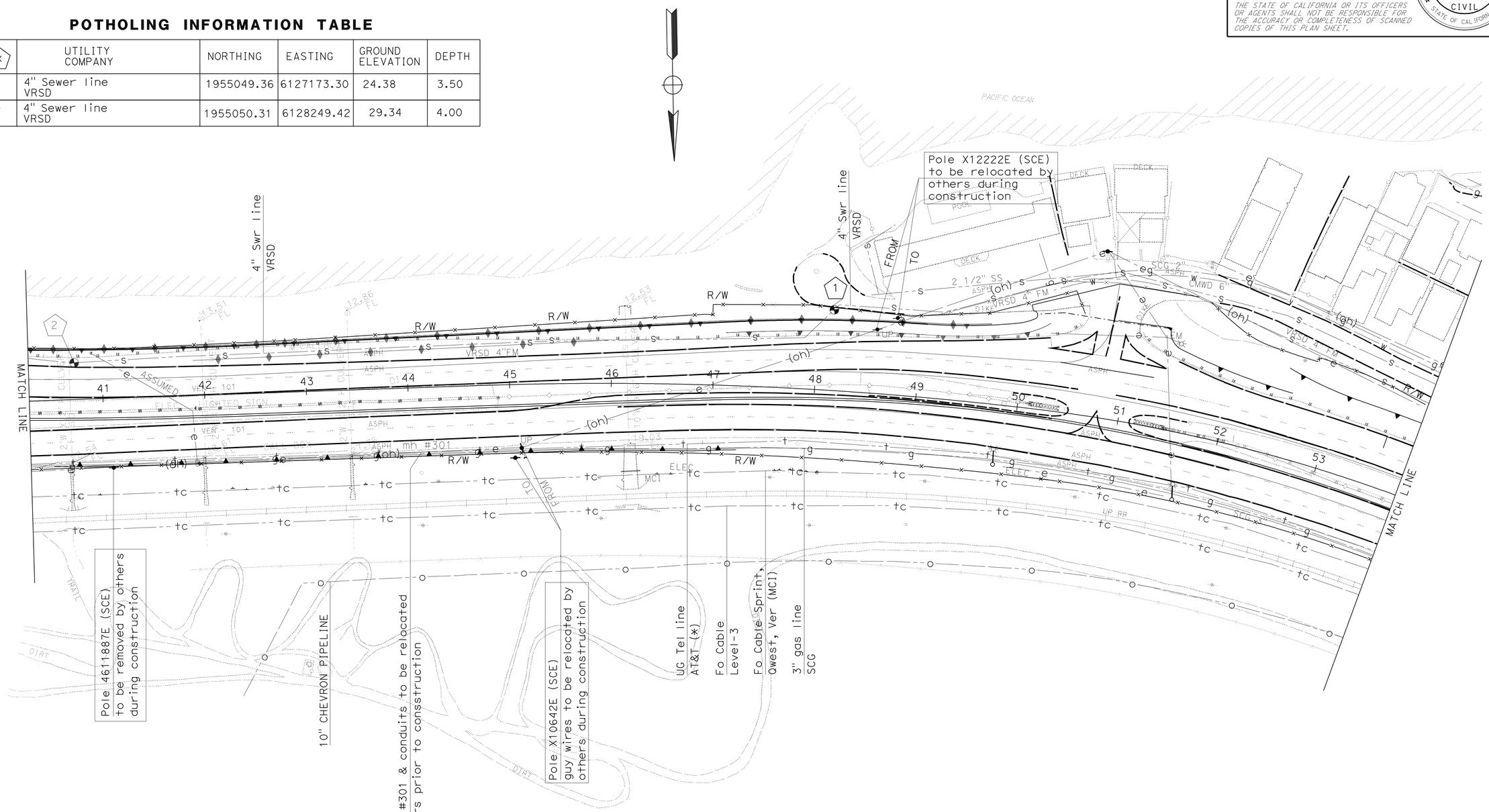

UTILITY PLAN

SCALE: 1" = 50'

U-4

THIS PLAN ACCURATE FOR UTILITY WORK ONLY.

STATE OF CALIFORNIA - DEPARTMENT OF TRANSPORTATION
Caltrans UTILITIES ENGINEERING

FUNCTIONAL SUPERVISOR: HAYKAZ AGHAJANIAN
CALCULATED-DESIGNED BY: CUONG PHAM
CHECKED BY: HAYKAZ AGHAJANIAN
REVISED BY
DATE REVISED

LAST REVISION 12-14-10
DATE PLOTTED => 01-AUG-2011
TIME PLOTTED => 14:31

Dist	COUNTY	ROUTE	POST MILES TOTAL PROJECT	SHEET No.	TOTAL SHEETS
07	Ven,SB	101	R39.8/R43.6, 0.0/2.2	194	757

REGISTERED CIVIL ENGINEER 8-16-10 DATE

6-20-11
PLANS APPROVAL DATE

REGISTERED PROFESSIONAL ENGINEER HAYKAZ AGHAJANIAN No. C53866 Exp. 12-31-11 CIVIL STATE OF CALIFORNIA

THE STATE OF CALIFORNIA OR ITS OFFICERS OR AGENTS SHALL NOT BE RESPONSIBLE FOR THE ACCURACY OR COMPLETENESS OF SCANNED COPIES OF THIS PLAN SHEET.

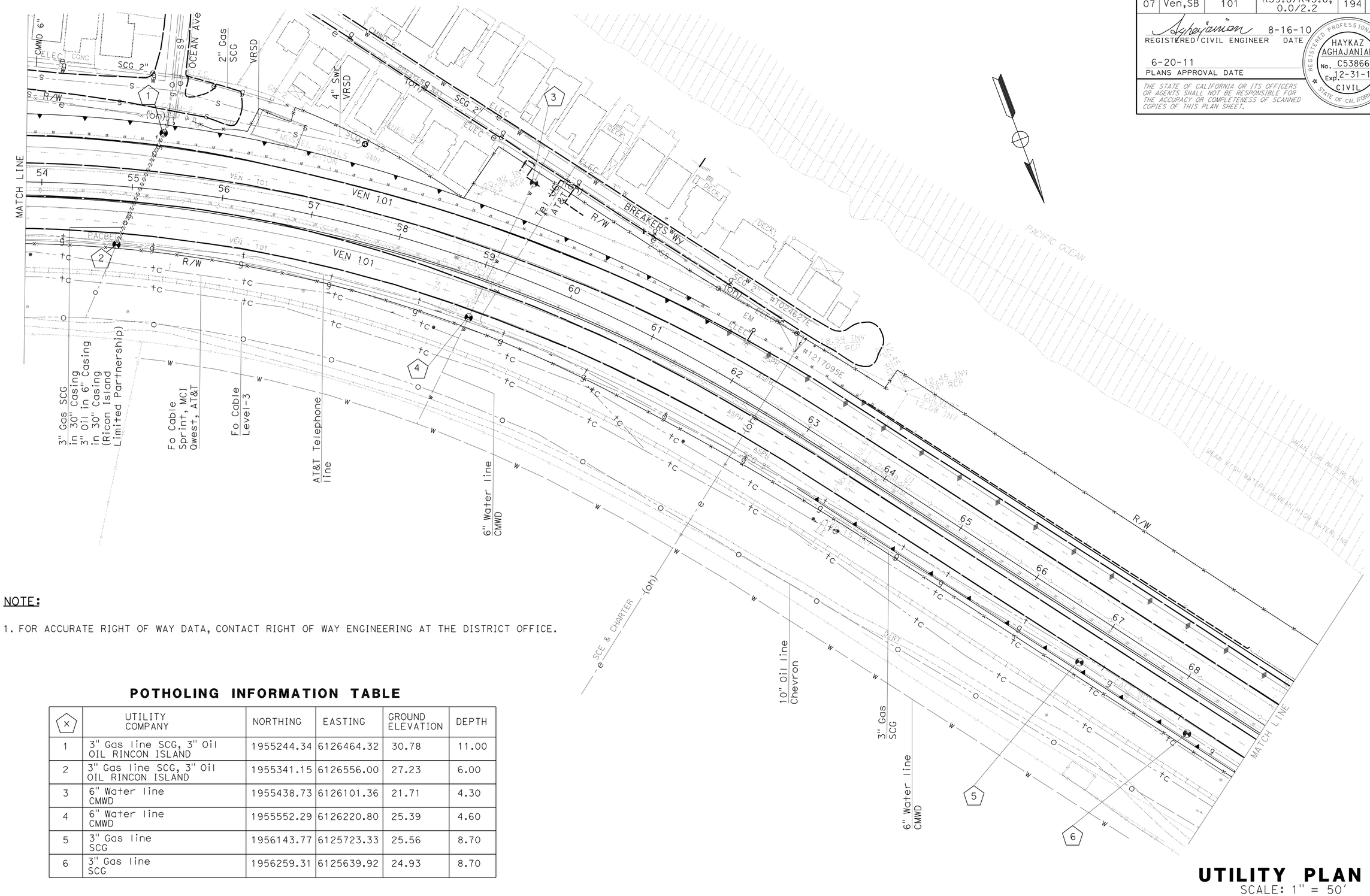

NOTE:

1. FOR ACCURATE RIGHT OF WAY DATA, CONTACT RIGHT OF WAY ENGINEERING AT THE DISTRICT OFFICE.

POTHOLING INFORMATION TABLE

⬠	UTILITY COMPANY	NORTHING	EASTING	GROUND ELEVATION	DEPTH
1	3" Gas line SCG, 3" Oil OIL RINCON ISLAND	1955244.34	6126464.32	30.78	11.00
2	3" Gas line SCG, 3" Oil OIL RINCON ISLAND	1955341.15	6126556.00	27.23	6.00
3	6" Water line CMWD	1955438.73	6126101.36	21.71	4.30
4	6" Water line CMWD	1955552.29	6126220.80	25.39	4.60
5	3" Gas line SCG	1956143.77	6125723.33	25.56	8.70
6	3" Gas line SCG	1956259.31	6125639.92	24.93	8.70

UTILITY PLAN
SCALE: 1" = 50'

THIS PLAN ACCURATE FOR UTILITY INFORMATION ONLY.

U-5

STATE OF CALIFORNIA - DEPARTMENT OF TRANSPORTATION
Caltrans UTILITIES ENGINEERING

FUNCTIONAL SUPERVISOR: HAYKAZ AGHAJANIAN
CALCULATED-DESIGNED BY: CUONG PHAM
CHECKED BY: HAYKAZ AGHAJANIAN
REVISED BY
DATE REVISED

LAST REVISION 12-08-10
DATE PLOTTED => 01-AUG-2011
TIME PLOTTED => 14:31

Dist	COUNTY	ROUTE	POST MILES TOTAL PROJECT	SHEET No.	TOTAL SHEETS
07	Ven,SB	101	R39.8/R43.6, 0.0/2.2	195	757

REGISTERED CIVIL ENGINEER 8-16-10 DATE

6-20-11
PLANS APPROVAL DATE

REGISTERED PROFESSIONAL ENGINEER HAYKAZ AGHAJANIAN No. C53866 Exp. 12-31-11 CIVIL STATE OF CALIFORNIA

THE STATE OF CALIFORNIA OR ITS OFFICERS OR AGENTS SHALL NOT BE RESPONSIBLE FOR THE ACCURACY OR COMPLETENESS OF SCANNED COPIES OF THIS PLAN SHEET.

NOTE:

1. FOR ACCURATE RIGHT OF WAY DATA, CONTACT RIGHT OF WAY ENGINEERING AT THE DISTRICT OFFICE.

POTHOLING INFORMATION TABLE

⊗	UTILITY COMPANY	NORTHING	EASTING	GROUND ELEVATION	DEPTH
1	3" Gas line SCG	1956348.80	6125573.86	24.70	8.25
2	3" Gas line SCG	1956442.33	6125573.76	24.85	8.55

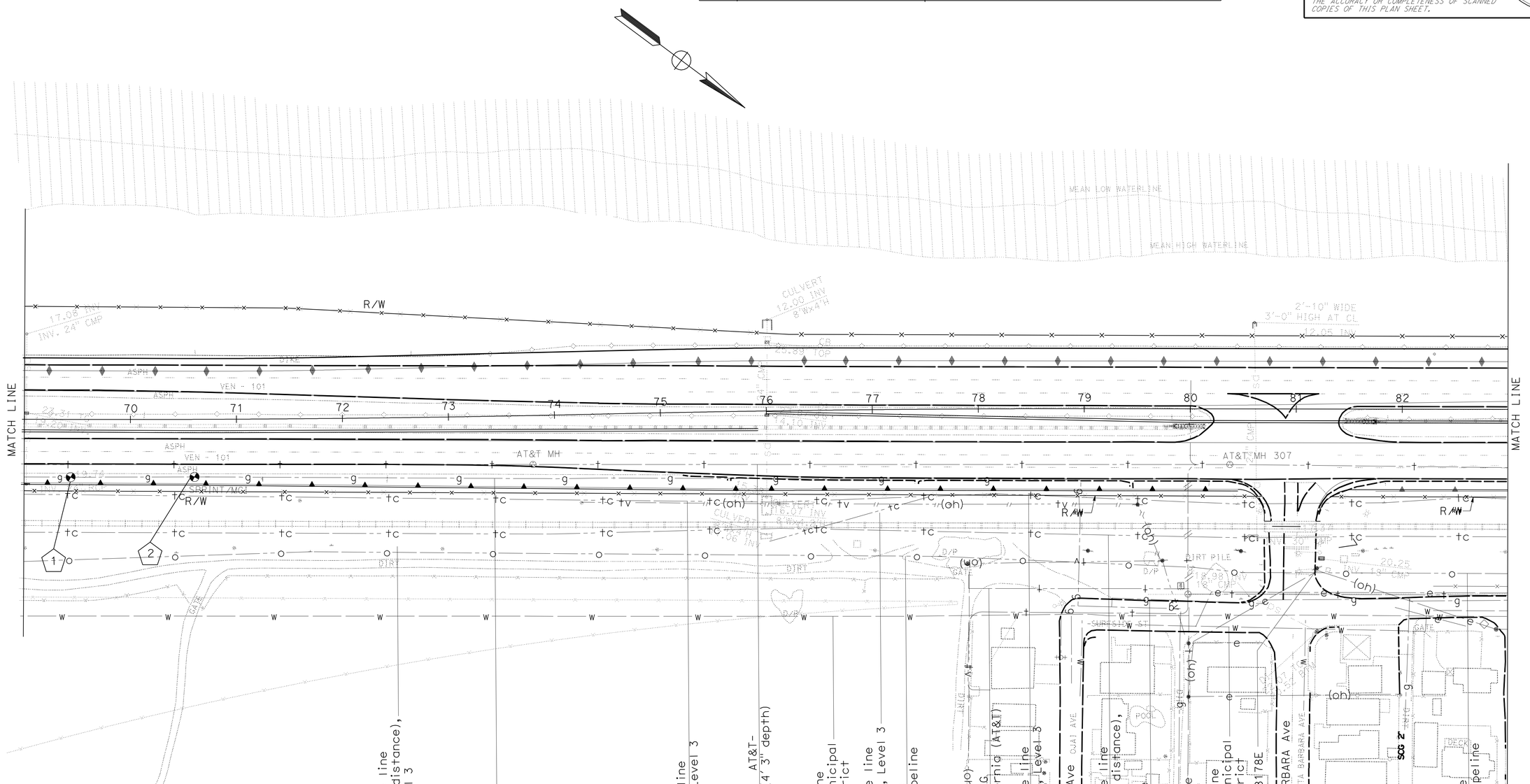

UTILITY PLAN

SCALE: 1" = 50'

THIS PLAN ACCURATE FOR UTILITY INFORMATION ONLY.

U-6

STATE OF CALIFORNIA - DEPARTMENT OF TRANSPORTATION
Caltrans UTILITIES ENGINEERING

FUNCTIONAL SUPERVISOR: HAYKAZ AGHAJANIAN

CALCULATED-DESIGNED BY: CUONG PHAM
CHECKED BY: HAYKAZ AGHAJANIAN

REVISED BY
DATE REVISED

LAST REVISION 12-08-10
DATE PLOTTED => 25-JUN-2011
TIME PLOTTED => 07:52

Dist	COUNTY	ROUTE	POST MILES TOTAL PROJECT	SHEET No.	TOTAL SHEETS
07	Ven,SB	101	R39.8/R43.6, 0.0/2.2	196	757

REGISTERED CIVIL ENGINEER 8-16-10 DATE

6-20-11
PLANS APPROVAL DATE

REGISTERED PROFESSIONAL ENGINEER HAYKAZ AGHAJANIAN No. C53866 Exp. 12-31-11 CIVIL STATE OF CALIFORNIA

THE STATE OF CALIFORNIA OR ITS OFFICERS OR AGENTS SHALL NOT BE RESPONSIBLE FOR THE ACCURACY OR COMPLETENESS OF SCANNED COPIES OF THIS PLAN SHEET.

POTHOLING INFORMATION TABLE

(X)	UTILITY COMPANY	NORTHING	EASTING	GROUND ELEVATION	DEPTH
1	10" Oil Chevron Pipeline	1958161.03	6124337.36	24.74	4.50
2	10" Oil Chevron Pipeline	1958283.87	6124245.89	24.39	5.65
3	4 DU underground AT&T (California)	1958190.12	6124341.70	23.96	1.00
4	4 DU underground AT&T (California)	1958333.28	6124235.35	24.55	0.5
5	2" Gas line SCG	1958197.00	6124338.09	23.64	2.75
6	2" Gas line SCG	1958291.36	6124268.80	24.22	3.20
7	Level 3 Communication	1958177.68	6124231.31	20.52	14.25
8	Level 3 Communication	1958240.38	6124189.70	20.52	4.40

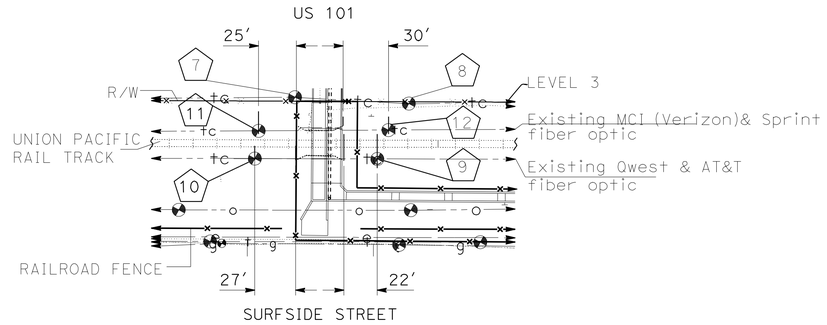

(X)	UTILITY COMPANY	NORTHING	EASTING	DISTANT FROM ℄ RAIL TRACK	DEPTH
9	Qwest & AT&T fiber optic	1958245.62	6124231.47	12' 5"	4'
10	Qwest & AT&T fiber optic	1958171.73	6124263.49	9' 5"	4'
11	MCI (VERIZON)& SPRINT FO	1958180.67	6124279.66	8' 6"	4'
12	MCI (VERIZON)& SPRINT FO	1958240.08	6124211.80	8' 5"	4'

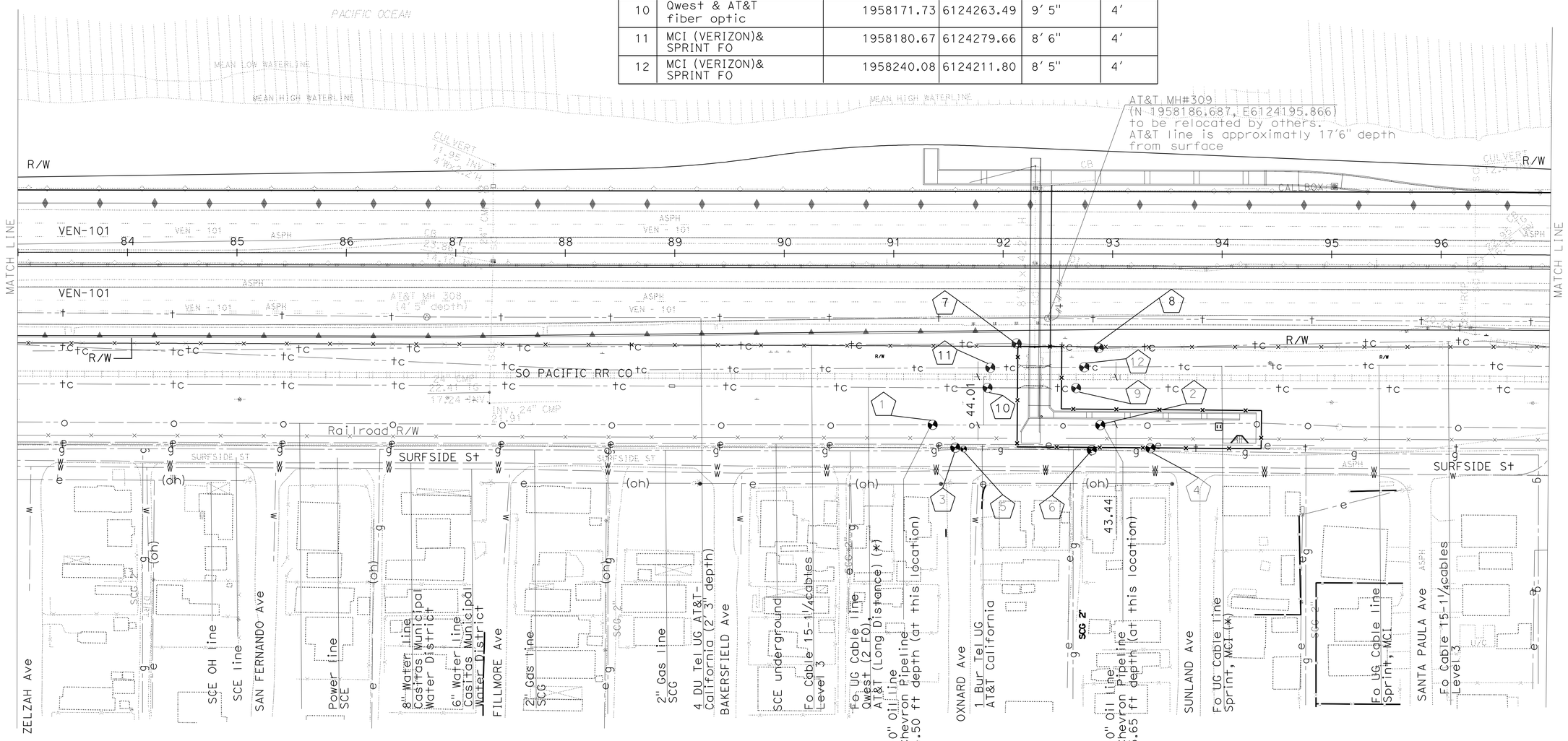

NOTE:

1. FOR ACCURATE RIGHT OF WAY DATA, CONTACT RIGHT OF WAY ENGINEERING AT THE DISTRICT OFFICE.
2. (*) This utility facilities will be relocated by others during construction.
   See U-23, U-24 for AT&T relocation plans.

THIS PLAN ACCURATE FOR UTILITY INFORMATION ONLY.

UTILITY PLAN

SCALE: 1" = 50'

U-7

REVISED BY	DATE REVISED
CUONG PHAM	HAYKAZ AGHAJANIAN
CALCULATED-DESIGNED BY	CHECKED BY
FUNCTIONAL SUPERVISOR	HAYKAZ AGHAJANIAN

STATE OF CALIFORNIA - DEPARTMENT OF TRANSPORTATION
Caltrans UTILITIES ENGINEERING

LAST REVISION 12-08-10 | DATE PLOTTED => 01-AUG-2011 | TIME PLOTTED => 14:31

Dist	COUNTY	ROUTE	POST MILES TOTAL PROJECT	SHEET No.	TOTAL SHEETS
07	Ven,SB	101	R39.8/R43.6, 0.0/2.2	197	757

REGISTERED CIVIL ENGINEER 8-16-10 DATE

6-20-11
PLANS APPROVAL DATE

REGISTERED PROFESSIONAL ENGINEER HAYKAZ AGHAJANIAN No. C53866 Exp. 12-31-11 CIVIL STATE OF CALIFORNIA

THE STATE OF CALIFORNIA OR ITS OFFICERS OR AGENTS SHALL NOT BE RESPONSIBLE FOR THE ACCURACY OR COMPLETENESS OF SCANNED COPIES OF THIS PLAN SHEET.

NOTE:

1. FOR ACCURATE RIGHT OF WAY DATA, CONTACT RIGHT OF WAY ENGINEERING AT THE DISTRICT OFFICE.

LOCATION OF EXISTING TELEPHONE MANHOLE

⊙	UTILITY COMPANY	STATION	OFFSET DISTANCE	NORTHING	EASTING	TOP OF MH LID ELEV	TOP OF PAVEMENT ELEV
1	MH-310 AT&T	97+12.69	61.05	1958566.305	6123916.480	25.41	25.52
2	MH-311 AT&T	103+54.22	69.34	1959099.210	6123567.261	25.51	25.86
3	MH-312 AT&T	109+92.02	70.52	1959639.225	6123224.528	28.17	28.64

POTHOLING INFORMATION TABLE

⬠	UTILITY COMPANY	NORTHING	EASTING	GROUND ELEVATION	DEPTH
1	4-DUCT-AT&T	1959562.97	6123273.62	28.51	8.60

⬠	UTILITY COMPANY	STATION	OFFSET DISTANCE FROM EP	DEPTH
2	4-DUCT-AT&T	103+24.73	4.50	13.58
3	4-DUCT-AT&T	104+92.69	5.33	13.50
4	4-DUCT-AT&T	105+08.69	4.75	13.00

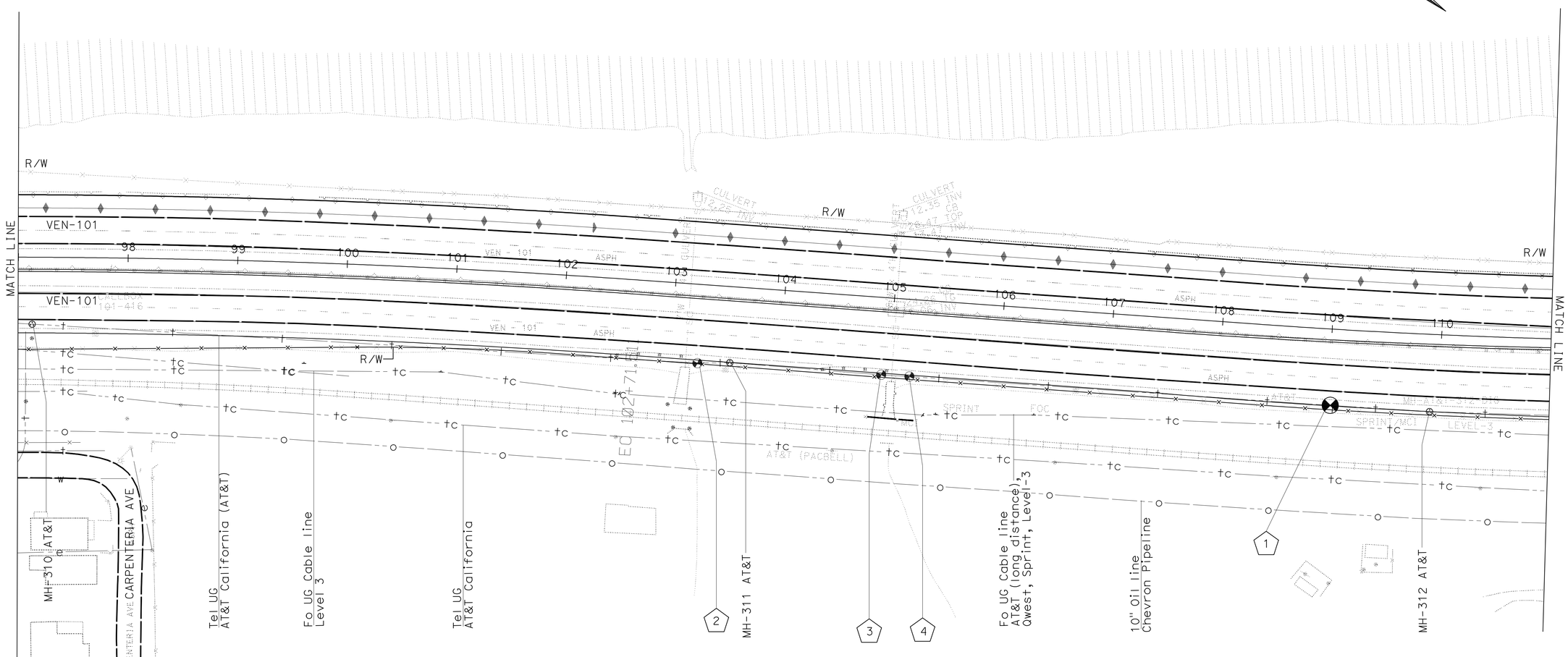

UTILITY PLAN

SCALE: 1" = 50'

U-8

THIS PLAN ACCURATE FOR UTILITY INFORMATION ONLY.

STATE OF CALIFORNIA - DEPARTMENT OF TRANSPORTATION
Caltrans UTILITIES ENGINEERING

FUNCTIONAL SUPERVISOR: HAYKAZ AGHAJANIAN

CALCULATED-DESIGNED BY: HAYKAZ AGHAJANIAN
CHECKED BY: CUONG PHAM

REVISED BY
DATE REVISED

LAST REVISION 12-14-10 | DATE PLOTTED => 01-AUG-2011 | TIME PLOTTED => 14:31

Dist	COUNTY	ROUTE	POST MILES TOTAL PROJECT	SHEET No.	TOTAL SHEETS
07	Ven,SB	101	R39.8/R43.6, 0.0/2.2	198	757

REGISTERED CIVIL ENGINEER 8-16-10 DATE

6-20-11
PLANS APPROVAL DATE

REGISTERED PROFESSIONAL ENGINEER HAYKAZ AGHAJANIAN No. C53866 Exp. 12-31-11 CIVIL STATE OF CALIFORNIA

THE STATE OF CALIFORNIA OR ITS OFFICERS OR AGENTS SHALL NOT BE RESPONSIBLE FOR THE ACCURACY OR COMPLETENESS OF SCANNED COPIES OF THIS PLAN SHEET.

NOTE:

1. FOR ACCURATE RIGHT OF WAY DATA, CONTACT RIGHT OF WAY ENGINEERING AT THE DISTRICT OFFICE.

LOCATION OF EXISTING TELEPHONE MANHOLE

⊙	UTILITY COMPANY	STATION	OFFSET DISTANCE	NORTHING	EASTING	TOP OF MH LID ELEV.	TOP OF PAVEMENT ELEV.
2	MH-313 AT&T	115+79.60	69.45	1960115.922	6122870.076	28.60	29.44
3	MH-313½AT&T	120+70.93	70.10	1960489.007	6122545.833	27.30	29.25

POTHOLING INFORMATION TABLE

⬠	UTILITY COMPANY	NORTHING	EASTING	GROUND ELEVATION	DEPTH
1	4 DU underground AT&T (California)	1960627.55	6122423.40	27.13	10.90
2	4 DU underground AT&T (California)	1960664.07	6122390.56	27.16	9.45
3	54" Metal Encasement PACIFIC OPERATORS OFFSHORE	1959928.45	6123016.40	29.11	10.80

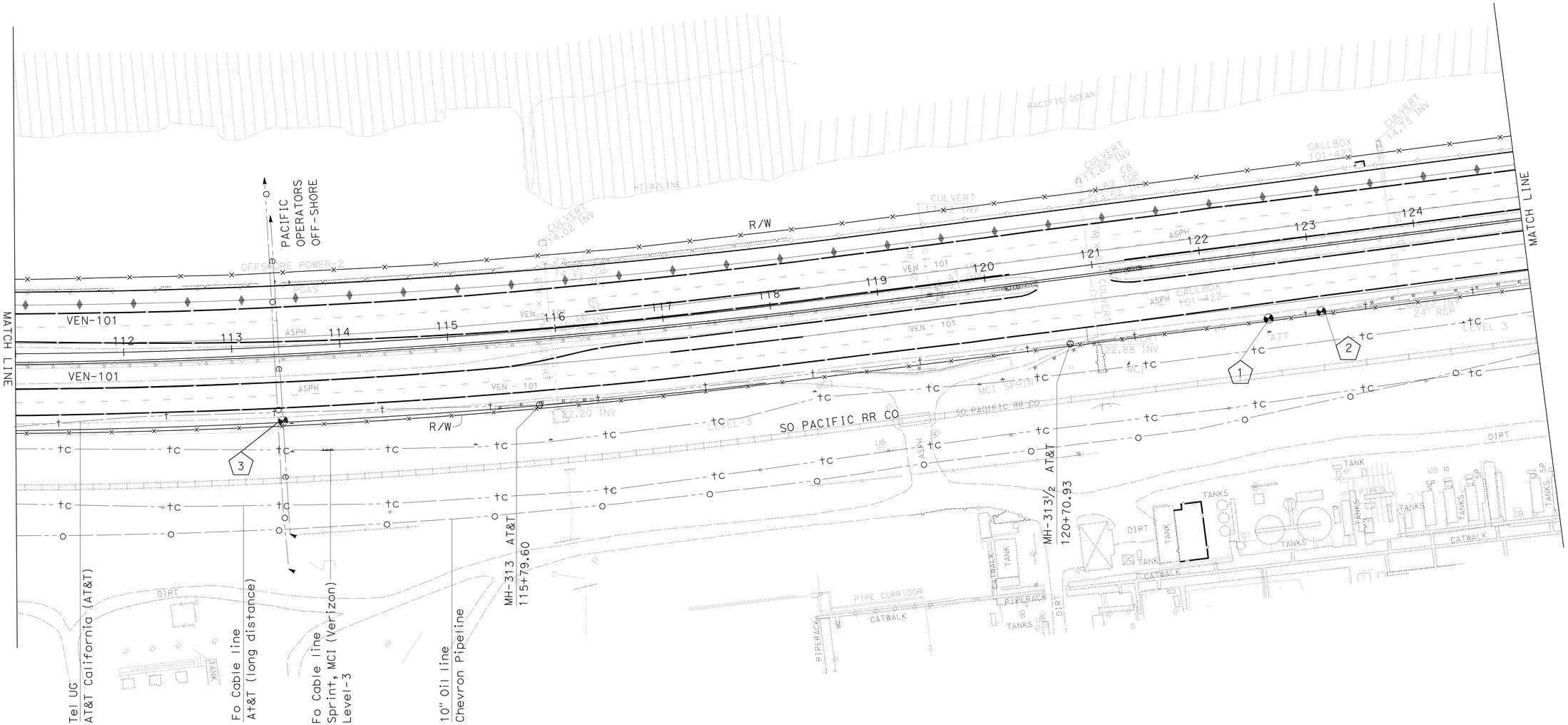

THIS PLAN ACCURATE FOR UTILITY INFORMATION ONLY.

UTILITY PLAN

SCALE: 1" = 50'

U-9

STATE OF CALIFORNIA - DEPARTMENT OF TRANSPORTATION
Caltrans UTILITIES ENGINEERING

FUNCTIONAL SUPERVISOR: HAYKAZ AGHAJANIAN
CUONG PHAM
CALCULATED-DESIGNED BY: HAYKAZ AGHAJANIAN
CHECKED BY
REVISED BY
DATE REVISED

LAST REVISION 12-14-10 | DATE PLOTTED => 25-JUN-2011 | TIME PLOTTED => 07:52

Dist	COUNTY	ROUTE	POST MILES TOTAL PROJECT	SHEET No.	TOTAL SHEETS
07	Ven,SB	101	R39.8/R43.6, 0.0/2.2	199	757

REGISTERED CIVIL ENGINEER 8-16-10 DATE

6-20-11
PLANS APPROVAL DATE

REGISTERED PROFESSIONAL ENGINEER HAYKAZ AGHAJANIAN No. C53866 Exp. 12-31-11 CIVIL STATE OF CALIFORNIA

THE STATE OF CALIFORNIA OR ITS OFFICERS OR AGENTS SHALL NOT BE RESPONSIBLE FOR THE ACCURACY OR COMPLETENESS OF SCANNED COPIES OF THIS PLAN SHEET.

NOTE:

1. FOR ACCURATE RIGHT OF WAY DATA, CONTACT RIGHT OF WAY ENGINEERING AT THE DISTRICT OFFICE.

THIS PLAN ACCURATE FOR UTILITY INFORMATION ONLY.

UTILITY PLAN

SCALE: 1" = 50'

U-10

STATE OF CALIFORNIA - DEPARTMENT OF TRANSPORTATION
Caltrans UTILITIES ENGINEERING

FUNCTIONAL SUPERVISOR: HAYKAZ AGHAJANIAN

CALCULATED-DESIGNED BY: CUONG PHAM
CHECKED BY: HAYKAZ AGHAJANIAN

REVISED BY
DATE REVISED

LAST REVISION 12-14-10
DATE PLOTTED => 25-JUN-2011
TIME PLOTTED => 07:52

Dist	COUNTY	ROUTE	POST MILES TOTAL PROJECT	SHEET No.	TOTAL SHEETS
07	Ven,SB	101	R39.8/R43.6, 0.0/2.2	200	757

REGISTERED CIVIL ENGINEER 8-16-10 DATE

6-20-11
PLANS APPROVAL DATE

REGISTERED PROFESSIONAL ENGINEER HAYKAZ AGHAJANIAN No. C53866 Exp. 12-31-11 CIVIL STATE OF CALIFORNIA

THE STATE OF CALIFORNIA OR ITS OFFICERS OR AGENTS SHALL NOT BE RESPONSIBLE FOR THE ACCURACY OR COMPLETENESS OF SCANNED COPIES OF THIS PLAN SHEET.

NOTE:

1. FOR ACCURATE RIGHT OF WAY DATA, CONTACT RIGHT OF WAY ENGINEERING AT THE DISTRICT OFFICE.

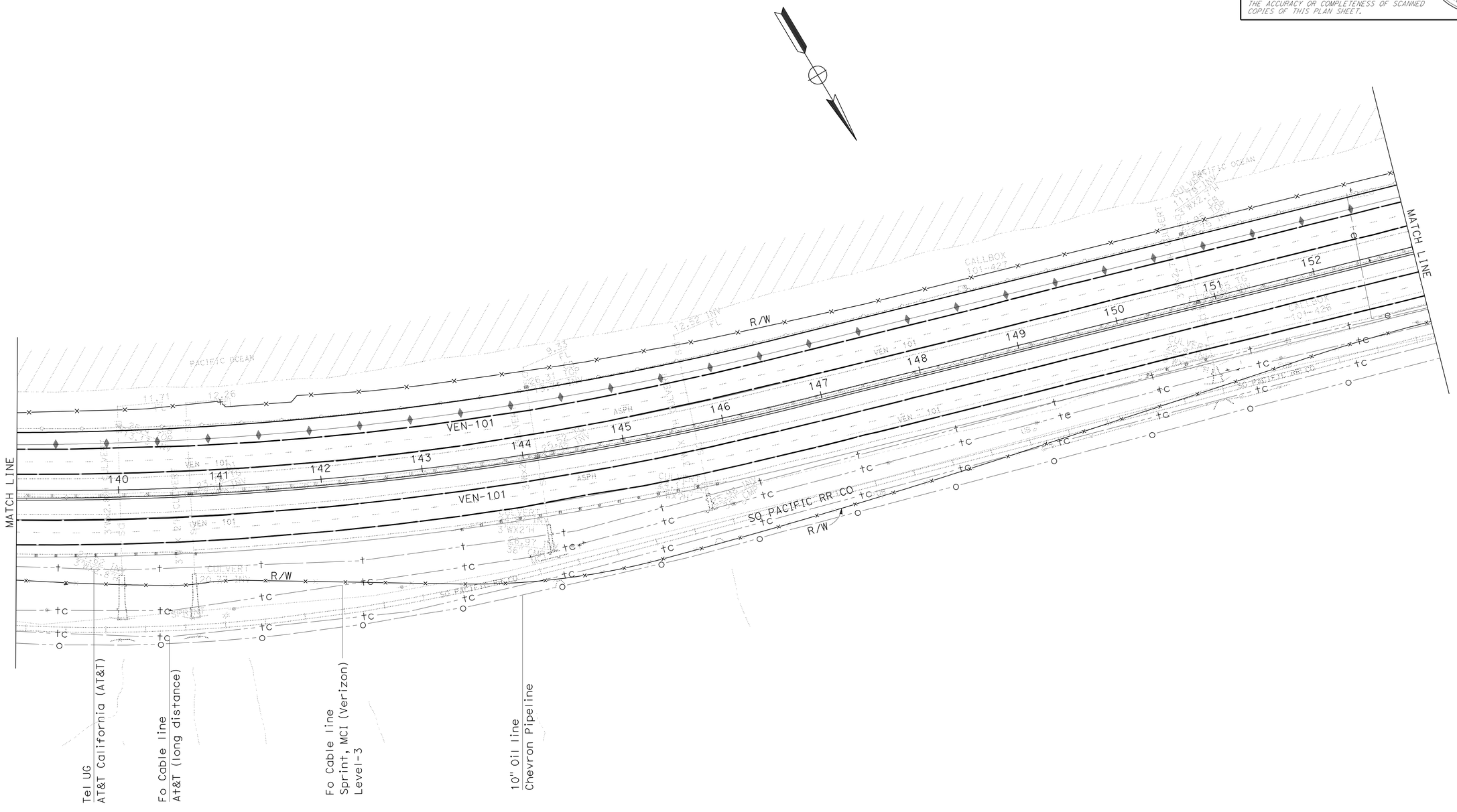

UTILITY PLAN

SCALE: 1" = 50'

U-11

THIS PLAN ACCURATE FOR UTILITY INFORMATION ONLY.

STATE OF CALIFORNIA - DEPARTMENT OF TRANSPORTATION
Caltrans UTILITIES ENGINEERING

FUNCTIONAL SUPERVISOR: HAYKAZ AGHAJANIAN
CALCULATED-DESIGNED BY: CUONG PHAM
CHECKED BY: HAYKAZ AGHAJANIAN
REVISED BY
DATE REVISED

LAST REVISION 12-14-10
DATE PLOTTED => 25-JUN-2011
TIME PLOTTED => 07:52