Dist	COUNTY	ROUTE	POST MILES TOTAL PROJECT	SHEET No.	TOTAL SHEETS
07	Ven,SB	101	R39.8/R43.6, 0.0/2.2	1	757

STATE OF CALIFORNIA
DEPARTMENT OF TRANSPORTATION

PROJECT PLANS FOR CONSTRUCTION ON
STATE HIGHWAY
IN VENTURA AND SANTA BARBARA COUNTIES
FROM MOBILE PIER UNDERCROSSING
TO 0.4 MILE SOUTH OF CASITAS PASS ROAD

TO BE SUPPLEMENTED BY STANDARD PLANS DATED MAY 2006

INDEX OF PLANS

SHEET No.	DESCRIPTION
1	TITLE AND LOCATION MAP
2-15	TYPICAL CROSS SECTIONS
16-37	LAYOUTS
38-80	PROFILES AND SUPERELEVATION DIAGRAM
81-115	CONSTRUCTION DETAILS
116-118	CONTOUR GRADING
119-189	DRAINAGE PLANS, PROFILES, DETAILS AND QUANTITIES
190-214	UTILITY PLANS
215	CONSTRUCTION AREA SIGNS
216-303	STAGE CONSTRUCTION PLANS AND QUANTITIES
304-310	TRAFFIC HANDLING PLANS
311-335	PAVEMENT DELINEATION AND SIGN PLANS
336-338	PAVEMENT DELINEATION DETAILS AND QUANTITIES
339-366	SIGN DETAILS AND QUANTITIES
367-375	SUMMARY OF QUANTITIES
376-413	RETAINING WALL PLANS
414	PLANT LIST PLANS
415-428	PLANTING PLANS
429-438	IRRIGATION PLANS
439-440	LANDSCAPE DETAILS
441-482	ELECTRICAL PLANS
483-568	REVISED AND NEW STANDARD PLANS

STRUCTURE PLANS

569	PEDESTRIAN RAMP, PEDESTRIAN UC AND DRAINAGE CULVERT PROJECT PLAN
570-598	PEDESTRIAN UNDERCROSSING Br No. 52-0467
599-648	PEDESTRIAN RAMP Br No. 52-0469
649-660	DRAINAGE CULVERT Br No. 52-0466
661-697	BATES ROAD UNDERCROSSING (WIDEN) Br No. 52-0279
698-719	BIKE LANE RAMP No.9 Br No. 52-0468
720-726	RETAINING WALL AND SOUND WALL No. 57 Br No. 52-E0015
727-729	SOUND WALL No. 61 Br No. 52-WALL61
730-732	SOUND WALL No. 63 Br No. 52-WALL63
733-739	RETAINING WALL AND SOUND WALL No. 147 Br No. 52-E0014
740-757	RETAINING WALL AND SOUND WALL No. 181 Br No. 52-E0016

THE STANDARD PLANS LIST APPLICABLE TO THIS CONTRACT IS INCLUDED IN THE NOTICE TO BIDDERS AND SPECIAL PROVISIONS BOOK.

LOCATION MAP

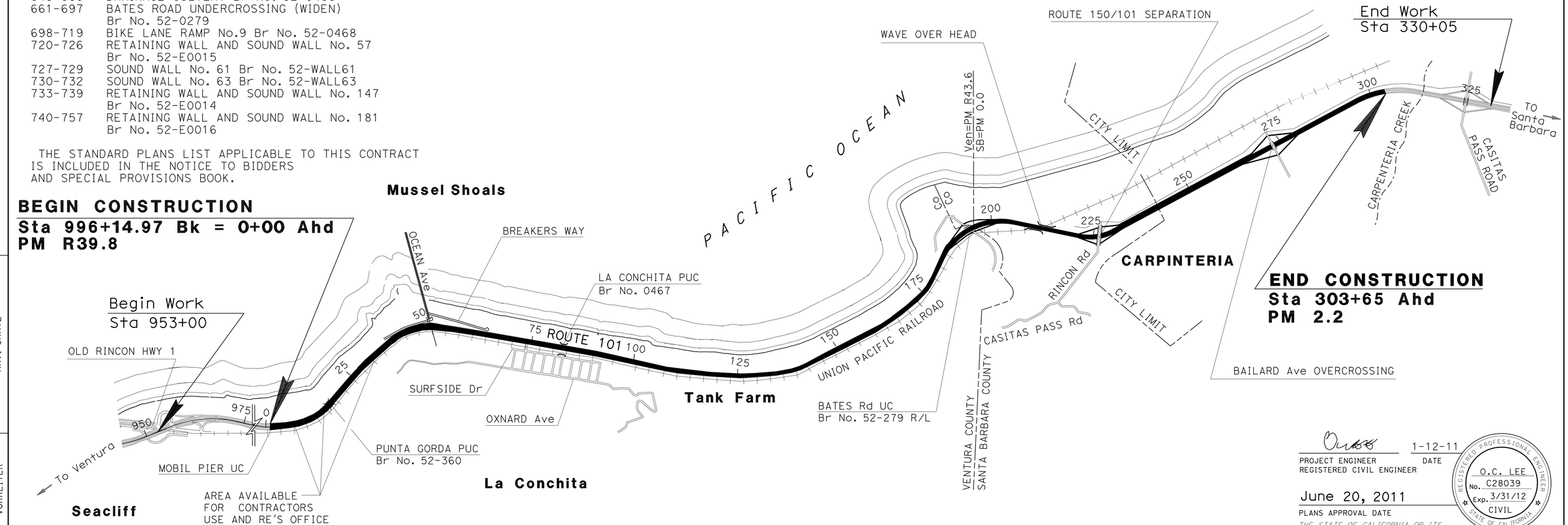

THE CONTRACTOR SHALL POSSESS THE CLASS (OR CLASSES) OF OF LICENSE AS SPECIFIED IN THE "NOTICE TO BIDDERS."

NO SCALE

PROJECT ENGINEER
REGISTERED CIVIL ENGINEER

1-12-11
DATE

REGISTERED PROFESSIONAL ENGINEER
O.C. LEE
No. C28039
Exp. 3/31/12
CIVIL
STATE OF CALIFORNIA

June 20, 2011
PLANS APPROVAL DATE

THE STATE OF CALIFORNIA OR ITS OFFICERS OR AGENTS SHALL NOT BE RESPONSIBLE FOR THE ACCURACY OR COMPLETENESS OF SCANNED COPIES OF THIS PLAN SHEET.

CONTRACT No.	07-260704
PROJECT ID	0700000490

PROJECT MANAGER: RAVI GHATE
DESIGN ENGINEER: BARNABAS F VORREITER

LAST REVISION 01-24-11
DATE PLOTTED => 25-JUN-2011
TIME PLOTTED => 08:42

Dist	COUNTY	ROUTE	POST MILES TOTAL PROJECT	SHEET No.	TOTAL SHEETS
07	Ven,SB	101	R39.8/R43.6, 0.0/2.2	2	757

REGISTERED CIVIL ENGINEER 02-07-11 DATE

6-20-11
PLANS APPROVAL DATE

REGISTERED PROFESSIONAL ENGINEER O.C. LEE No. C28039 Exp 03/31/12 CIVIL STATE OF CALIFORNIA

THE STATE OF CALIFORNIA OR ITS OFFICERS OR AGENTS SHALL NOT BE RESPONSIBLE FOR THE ACCURACY OR COMPLETENESS OF SCANNED COPIES OF THIS PLAN SHEET.

NOTES:

1. DIMENSIONS OF THE PAVEMENT STRUCTURES (STRUCTURAL SECTIONS) ARE SUBJECT TO TOLERANCES SPECIFIED IN THE STANDARD SPECIFICATIONS.
2. SUPERELEVATION AS SHOWN OR AS DIRECTED BY THE ENGINEER.
3. CONCRETE BARRIERS SHALL BE OF FEDERAL STANDARD COLOR # 33446 (SANDSTONE).
4. STATION AND ALIGNMENT FOR "SL1" LINE AND ROUTE 101 ℄ ARE IDENTICAL.

ABBRIVATIONS:

1. MVPO = MAITENANCE VEHICLE PULL OUT

DESIGN DESIGNATION (ROUTE 101)

2000 ADT= 66,000 D= 50%
2020 ADT= 89,500 T= 7%
V= 55 MPH

Exist STRUCTURAL SECTIONS

1E: 0.75' PCC; 0.45' CEMENT TREATED BASE; 0.50' CLASS B AGGREGATE BASE
2E: 0.33' ASPHALT CONCRETE (TYPE B); 0.67' CEMENT TREATED BASE
3E: 0.75' CLASS B PCC; 0.33' MIXED CEMENT TREATED BASE; 0.17' CLASS 2 AGGREGATE BASE; 1.83' CLASS 4 AGGREGATE SUBBASE
4E: 0.67' PCC; 0.50' CEMENT TREATED BASE; 0.67' CLASS B AGGREGATE BASE
5E: 0.50' ASPHALT CONCRETE (TYPE B); 1.00' AGGREGATE BASE CLASS B
6E: 0.20' ASPHALT CONCRETE (TYPE B); 0.50' AGGREGATE BASE CLASS B

Exist STRUCTURAL SECTIONS

7E: 0.50' ASPHALT CONCRETE (TYPE B); 0.50' AGGREGATE BASE CLASS B
8E: 0.30' ASPHALT CONCRETE (TYPE B); 0.60' CLASS 2 AGGREGATE BASE; 0.80' CLASS 4 AGGREGATE BASE
9E: 0.21' PLANT MIXED SURFACING; 1.00' IMPORTED SUBBASE MATERIAL
10E: 0.21' PLANT MIXED SURFACING; 0.50' IMPORTED SUBBASE MATERIAL
11E: 0.50' ASPHALT CONCRETE (TYPE B); 0.75' CLASS 2 AGGREGATE BASE; 1.83' CLASS 4 AGGREGATE SUBBASE
12E: 0.38' ASPHALT CONCRETE (TYPE B); 0.88' CLASS 2 AGGREGATE BASE; 1.83' CLASS 4 AGGREGATE SUBBASE
13E: 0.38' PLANT-MIXED SURFACING "CLASS D" SEAL; 0.42' CEMENT TREATED BASE; 0.50' IMPORTED SUBBASE MATERIAL; 0.67' PERVIOUS SUBBASE MATERIAL

STRUCTURAL SECTIONS

1: 0.95' JOINTED PLAIN CONCRETE PAVEMENT (JPCP); 0.50' LEAN CONCRETE BASE (LCB); 0.70' CLASS 3 AGGREGATE BASE (AB)
2: 0.40' HOT MIX ASPHALT (TYPE B); 0.40' LEAN CONCRETE BASE (LCB); 0.65' CLASS 3 AGGREGATE BASE (AB)
3: 0.50' HOT MIX ASPHALT (TYPE B); 0.50' LEAN CONCRETE BASE (LCB); 0.90' CLASS 3 AGGREGATE BASE (AB)
4: 0.95' CONCRETE PAVEMENT(RSC); 0.50' LEAN CONCRETE BASE RAPID SETTING (LCBRS); 0.70' CLASS 3 AGGREGATE BASE (AB)
5: 0.30' COLD PLANE AC Pvmt; 0.30' HOT MIX ASPHALT (TYPE B)
6: 1.80' CLASS D AGGREGATE BASE (AB CL-D)

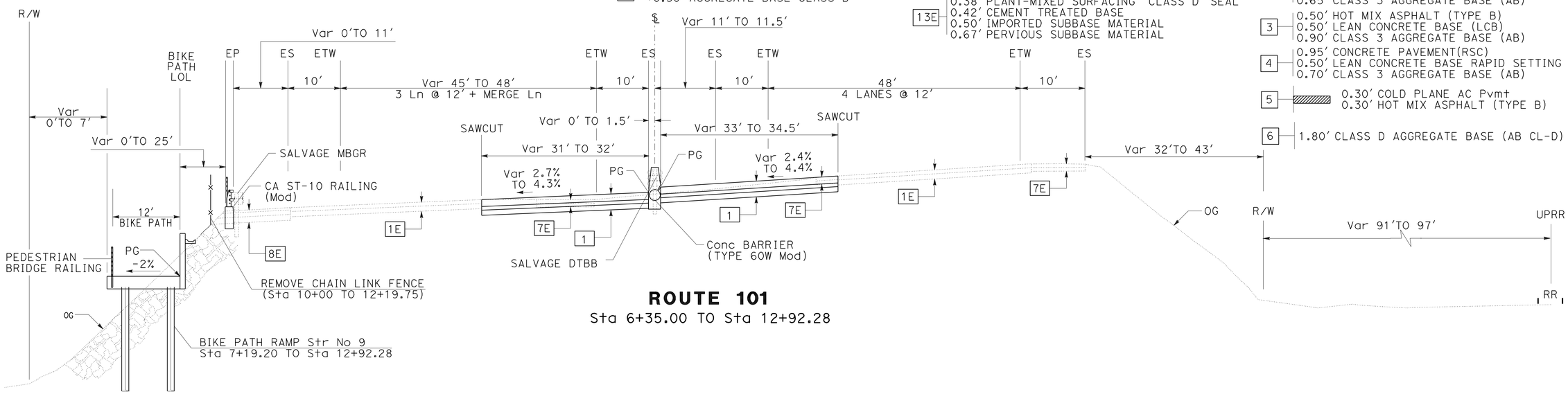

ROUTE 101
Sta 6+35.00 TO Sta 12+92.28

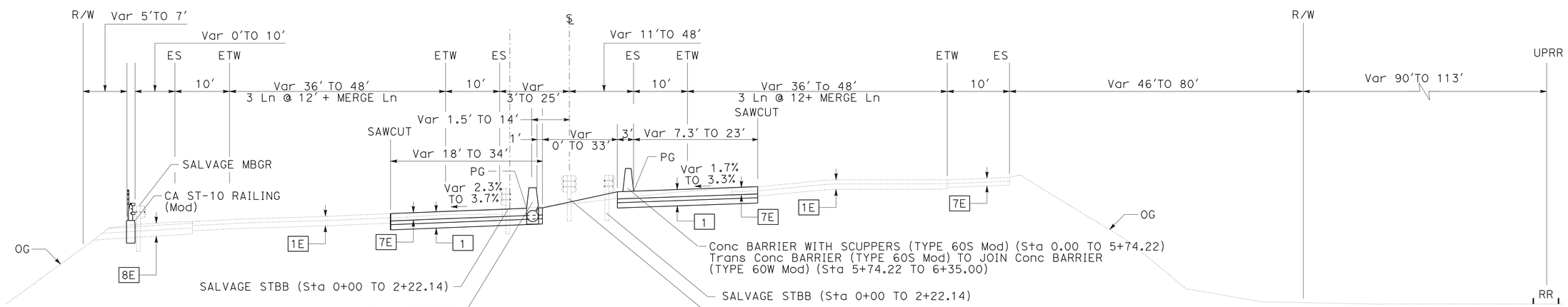

ROUTE 101
Sta 0+00.00 TO Sta 6+35.00

TYPICAL CROSS SECTIONS

NO SCALE

X-1

STATE OF CALIFORNIA - DEPARTMENT OF TRANSPORTATION
Caltrans
DESIGN
FUNCTIONAL SUPERVISOR: OC LEE
CALCULATED-DESIGNED BY: OC LEE
CHECKED BY
REVISED BY: BARNABAS F. VORREITER
DATE REVISED

LAST REVISION 02-07-11
DATE PLOTTED => 28-JUN-2011
TIME PLOTTED => 17:34

Dist	COUNTY	ROUTE	POST MILES TOTAL PROJECT	SHEET No.	TOTAL SHEETS
07	Ven,SB	101	R39.8/R43.6, 0.0/2.2	3	757

REGISTERED CIVIL ENGINEER 01-12-11 DATE

6-20-11
PLANS APPROVAL DATE

REGISTERED PROFESSIONAL ENGINEER O.C. LEE No. C28039 Exp 03/31/12 CIVIL STATE OF CALIFORNIA

THE STATE OF CALIFORNIA OR ITS OFFICERS OR AGENTS SHALL NOT BE RESPONSIBLE FOR THE ACCURACY OR COMPLETENESS OF SCANNED COPIES OF THIS PLAN SHEET.

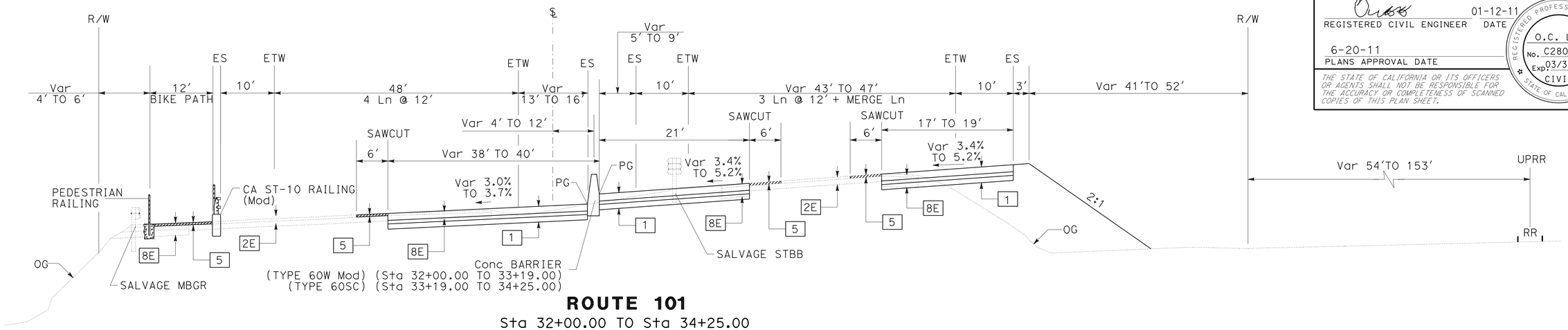

ROUTE 101
Sta 32+00.00 TO Sta 34+25.00

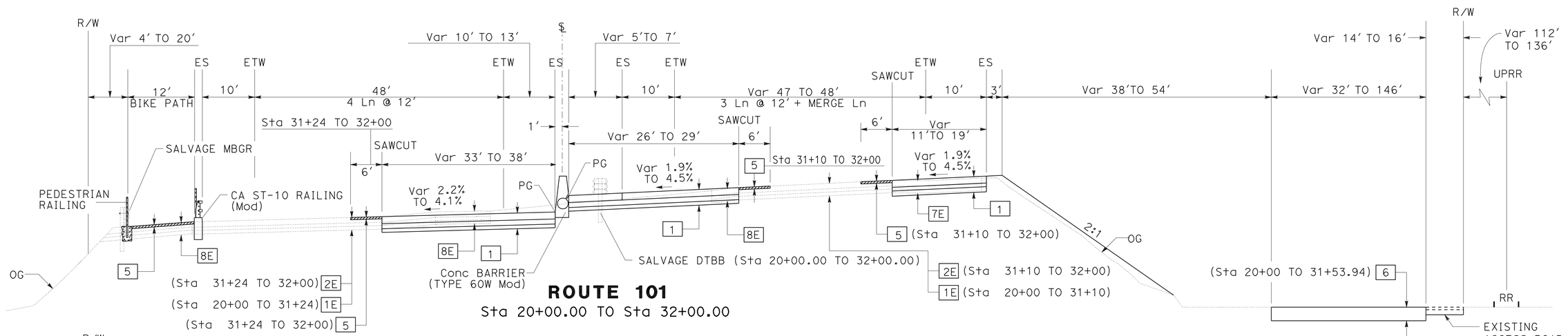

ROUTE 101
Sta 20+00.00 TO Sta 32+00.00

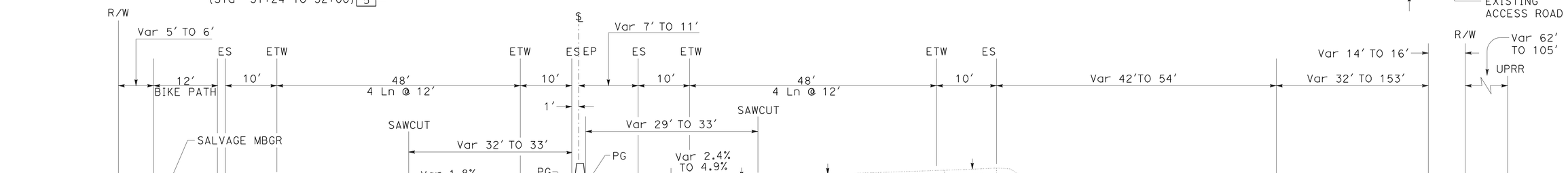

ROUTE 101
Sta 12+92.28 TO Sta 20+00.00

TYPICAL CROSS SECTIONS
NO SCALE

X-2

STATE OF CALIFORNIA - DEPARTMENT OF TRANSPORTATION
Caltrans
DESIGN

FUNCTIONAL SUPERVISOR: OC LEE
CALCULATED-DESIGNED BY: BARNABAS F. VORREITER
CHECKED BY: OC LEE
REVISED BY
DATE REVISED

LAST REVISION 01-12-11
DATE PLOTTED => 01-AUG-2011
TIME PLOTTED => 14:29

Dist	COUNTY	ROUTE	POST MILES TOTAL PROJECT	SHEET No.	TOTAL SHEETS
07	Ven,SB	101	R39.8/R43.6, 0.0/2.2	4	757

REGISTERED CIVIL ENGINEER 02-10-11 DATE

6-20-11
PLANS APPROVAL DATE

REGISTERED PROFESSIONAL ENGINEER O.C. LEE No. C28039 Exp 03/31/12 CIVIL STATE OF CALIFORNIA

THE STATE OF CALIFORNIA OR ITS OFFICERS OR AGENTS SHALL NOT BE RESPONSIBLE FOR THE ACCURACY OR COMPLETENESS OF SCANNED COPIES OF THIS PLAN SHEET.

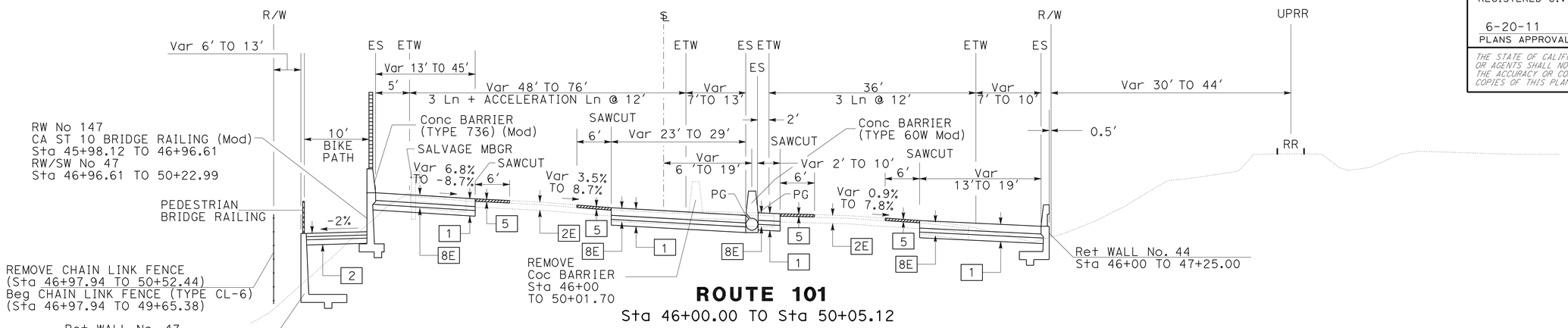

ROUTE 101
Sta 46+00.00 TO Sta 50+05.12

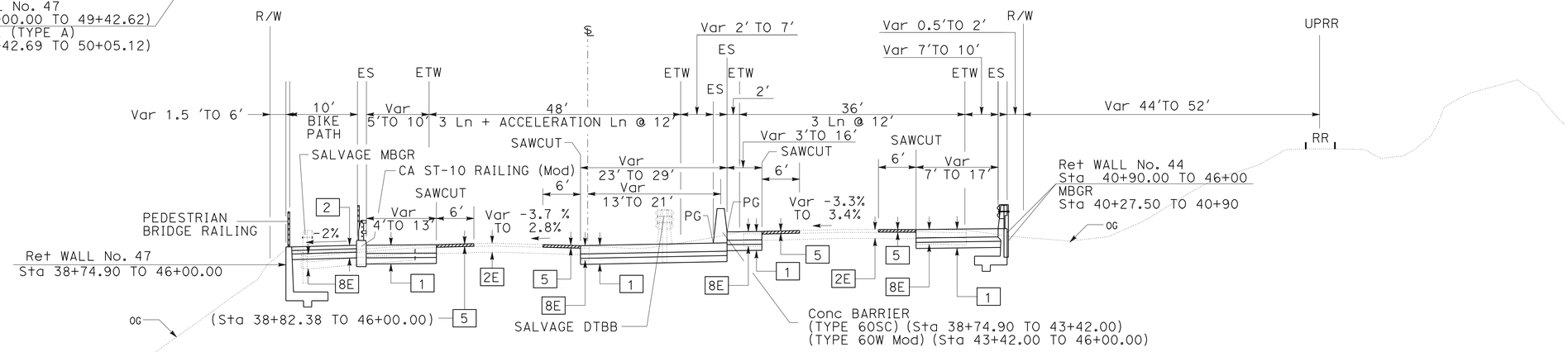

ROUTE 101
Sta 38+74.90 TO Sta 46+00.00

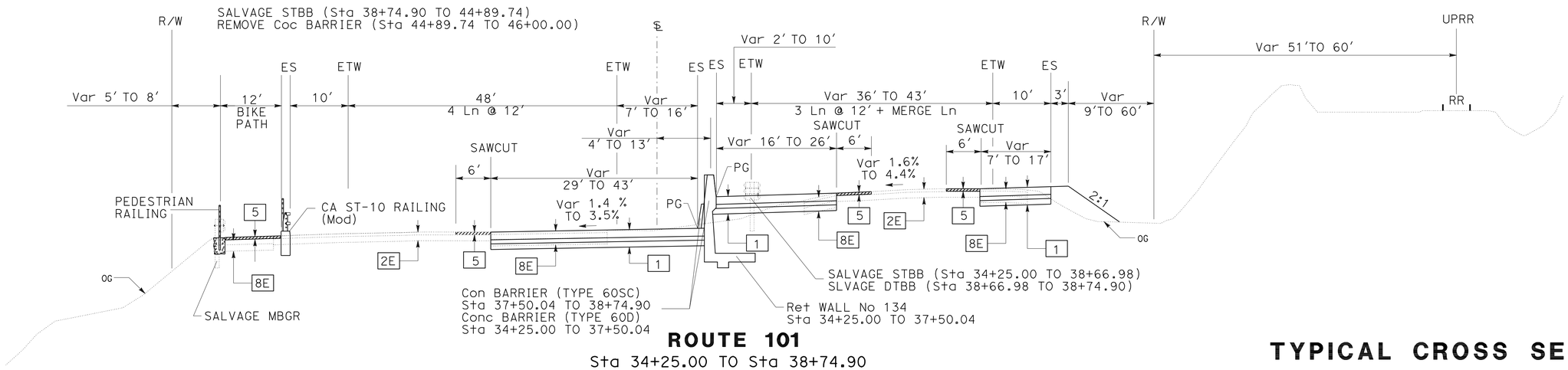

ROUTE 101
Sta 34+25.00 TO Sta 38+74.90

TYPICAL CROSS SECTIONS

NO SCALE

X-3

STATE OF CALIFORNIA - DEPARTMENT OF TRANSPORTATION
Caltrans®
DESIGN

FUNCTIONAL SUPERVISOR: OC LEE
CALCULATED-DESIGNED BY: BARNABAS F. VORREITER
CHECKED BY: OC LEE
REVISED BY
DATE REVISED

LAST REVISION 02-10-11
DATE PLOTTED => 01-AUG-2011
TIME PLOTTED => 14:29

Dist	COUNTY	ROUTE	POST MILES TOTAL PROJECT	SHEET No.	TOTAL SHEETS
07	Ven,SB	101	R39.8/R43.6, 0.0/2.2	5	757

REGISTERED CIVIL ENGINEER 01-12-11 DATE

6-20-11
PLANS APPROVAL DATE

REGISTERED PROFESSIONAL ENGINEER O.C. LEE No. C28039 Exp 03/31/12 CIVIL STATE OF CALIFORNIA

THE STATE OF CALIFORNIA OR ITS OFFICERS OR AGENTS SHALL NOT BE RESPONSIBLE FOR THE ACCURACY OR COMPLETENESS OF SCANNED COPIES OF THIS PLAN SHEET.

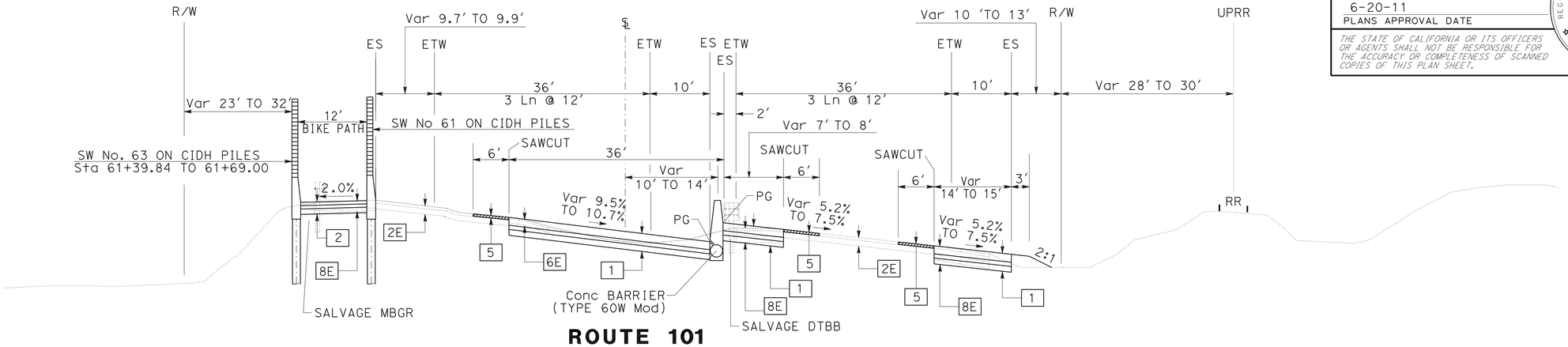

ROUTE 101
Sta 60+55.25 TO Sta 61+69.00

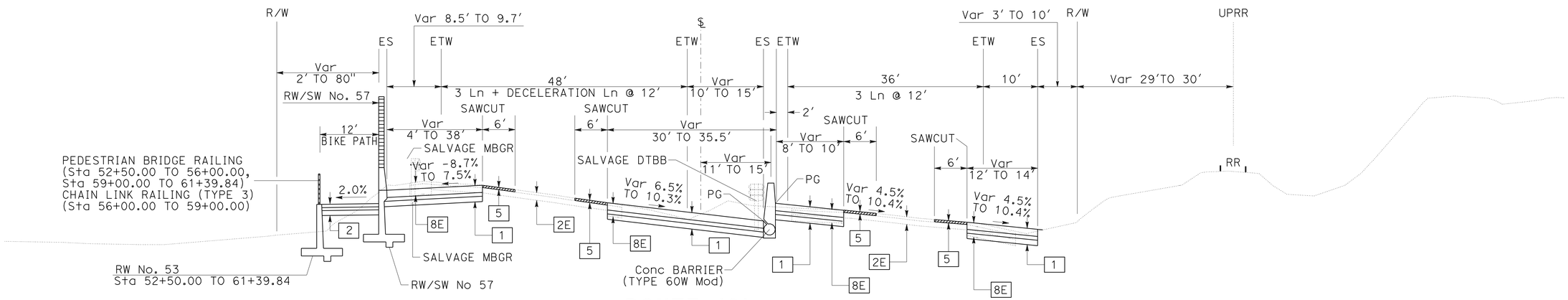

ROUTE 101
Sta 51+34.63 TO Sta 60+55.25

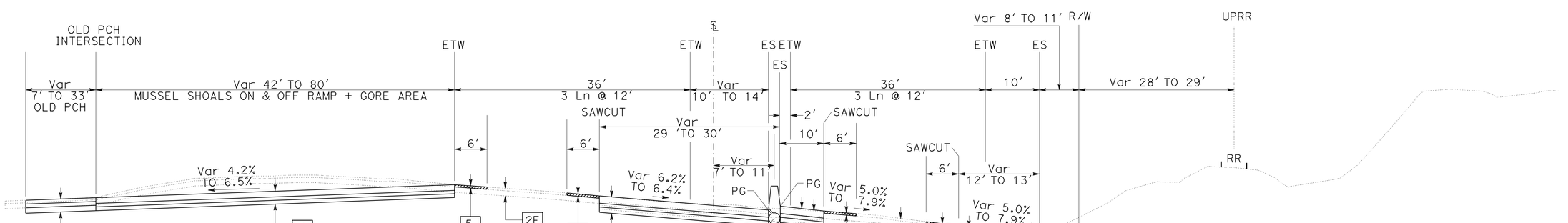

ROUTE 101
Sta 50+05.12 TO Sta 51+34.63

TYPICAL CROSS SECTIONS

NO SCALE

X-4

STATE OF CALIFORNIA - DEPARTMENT OF TRANSPORTATION
Caltrans
DESIGN

FUNCTIONAL SUPERVISOR: OC LEE
CALCULATED-DESIGNED BY: BARNABAS F. VORREITER
CHECKED BY: OC LEE
REVISED BY
DATE REVISED

LAST REVISION 01-12-11
DATE PLOTTED => 25-JUN-2011
TIME PLOTTED => 08:43

Dist	COUNTY	ROUTE	POST MILES TOTAL PROJECT	SHEET No.	TOTAL SHEETS
07	Ven,SB	101	R39.8/R43.6, 0.0/2.2	6	757

REGISTERED CIVIL ENGINEER 01-12-11 DATE

6-20-11
PLANS APPROVAL DATE

REGISTERED PROFESSIONAL ENGINEER O.C. LEE No. C28039 Exp 03/31/12 CIVIL STATE OF CALIFORNIA

THE STATE OF CALIFORNIA OR ITS OFFICERS OR AGENTS SHALL NOT BE RESPONSIBLE FOR THE ACCURACY OR COMPLETENESS OF SCANNED COPIES OF THIS PLAN SHEET.

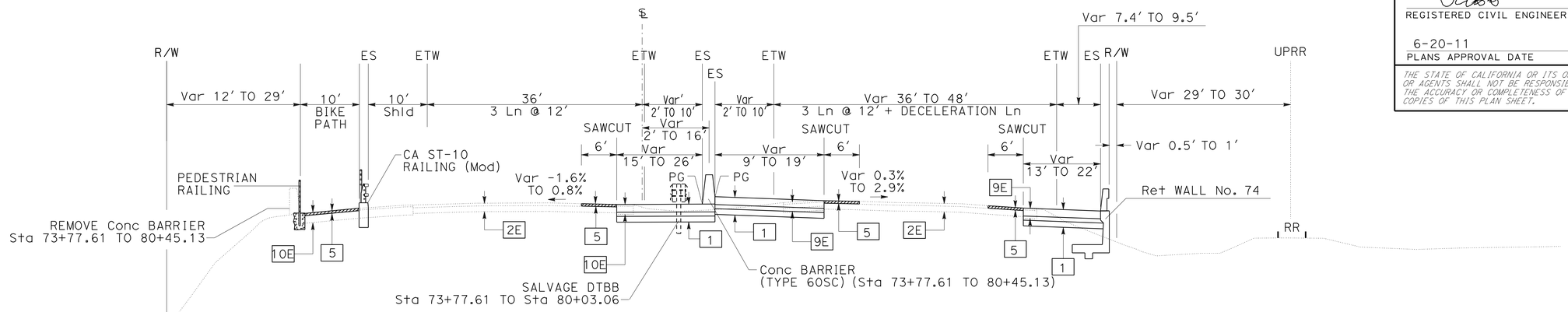

ROUTE 101

Sta 73+77.61 TO Sta 80+45.13

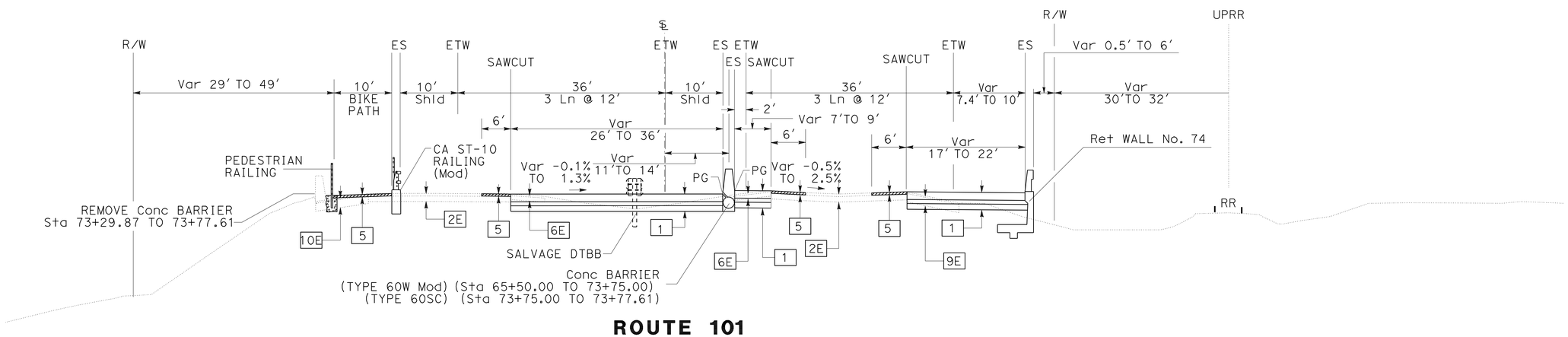

ROUTE 101

Sta 65+50.00 TO Sta 73+77.61

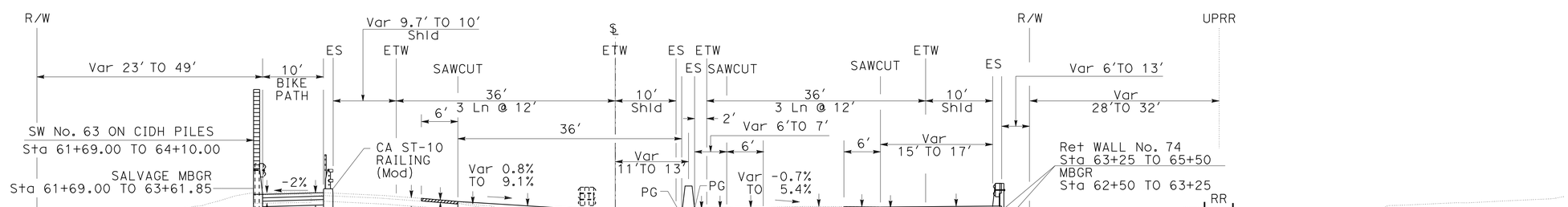

ROUTE 101

Sta 61+69.00 TO Sta 65+50.00

TYPICAL CROSS SECTIONS

NO SCALE

X-5

STATE OF CALIFORNIA - DEPARTMENT OF TRANSPORTATION
Caltrans
DESIGN

FUNCTIONAL SUPERVISOR: OC LEE
CALCULATED-DESIGNED BY: BARNABAS F. VORREITER
CHECKED BY: OC LEE
REVISED BY
DATE REVISED

LAST REVISION 01-12-11
DATE PLOTTED => 25-JUN-2011
TIME PLOTTED => 08:43

Dist	COUNTY	ROUTE	POST MILES TOTAL PROJECT	SHEET No.	TOTAL SHEETS
07	Ven,SB	101	R39.8/R43.6, 0.0/2.2	7	757

REGISTERED CIVIL ENGINEER 02-07-11 DATE

6-20-11
PLANS APPROVAL DATE

REGISTERED PROFESSIONAL ENGINEER O.C. LEE No. C28039 Exp 03/31/12 CIVIL STATE OF CALIFORNIA

THE STATE OF CALIFORNIA OR ITS OFFICERS OR AGENTS SHALL NOT BE RESPONSIBLE FOR THE ACCURACY OR COMPLETENESS OF SCANNED COPIES OF THIS PLAN SHEET.

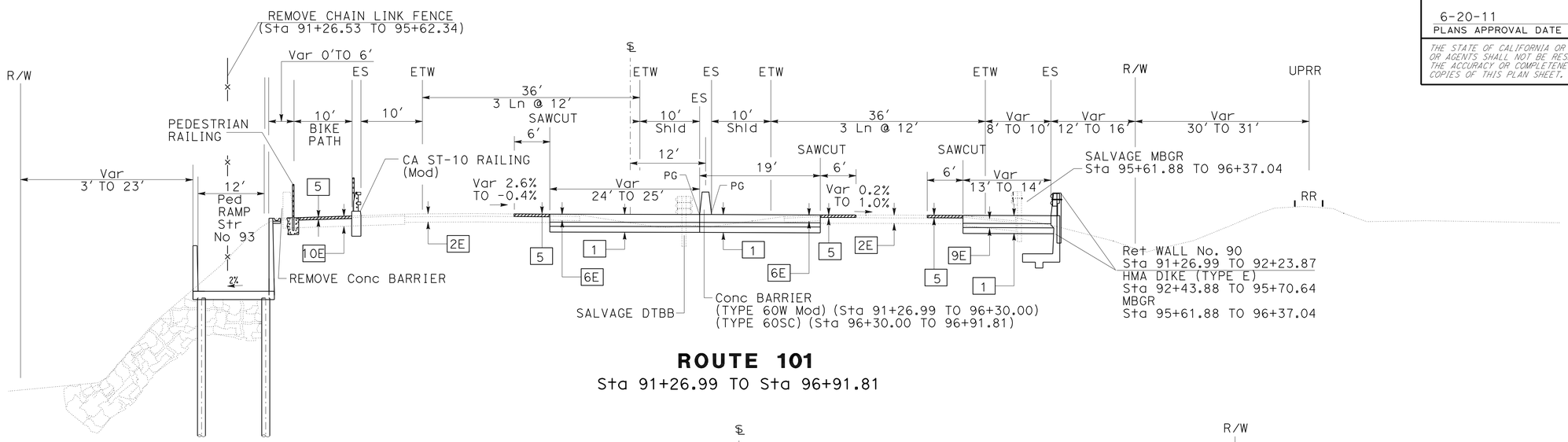

ROUTE 101

Sta 91+26.99 TO Sta 96+91.81

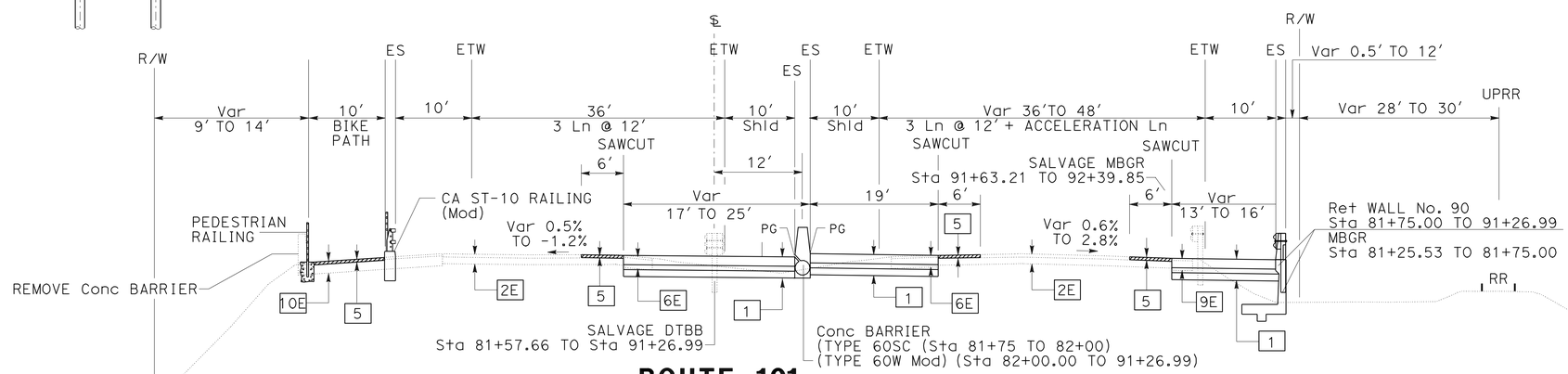

ROUTE 101

Sta 81+75.00 TO Sta 91+26.99

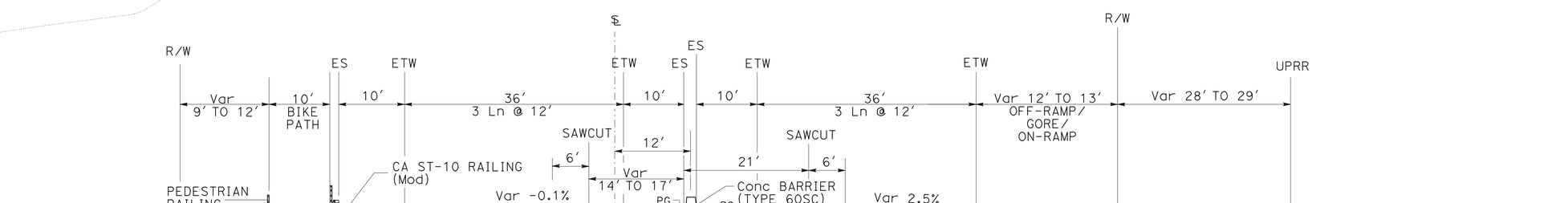

ROUTE 101

Sta 80+45.13 TO Sta 81+75.00

TYPICAL CROSS SECTIONS

NO SCALE

X-6

STATE OF CALIFORNIA - DEPARTMENT OF TRANSPORTATION
Caltrans® **DESIGN**

FUNCTIONAL SUPERVISOR: OC LEE
CALCULATED-DESIGNED BY: BARNABAS F. VORREITER
CHECKED BY: OC LEE
REVISED BY
DATE REVISED

LAST REVISION 02-07-11
DATE PLOTTED => 01-AUG-2011
TIME PLOTTED => 14:29

Dist	COUNTY	ROUTE	POST MILES TOTAL PROJECT	SHEET No.	TOTAL SHEETS
07	Ven,SB	101	R39.8/R43.6, 0.0/2.2	8	757

REGISTERED CIVIL ENGINEER 02-07-11 DATE

6-20-11
PLANS APPROVAL DATE

REGISTERED PROFESSIONAL ENGINEER O.C. LEE No. C28039 Exp 03/31/12 CIVIL STATE OF CALIFORNIA

THE STATE OF CALIFORNIA OR ITS OFFICERS OR AGENTS SHALL NOT BE RESPONSIBLE FOR THE ACCURACY OR COMPLETENESS OF SCANNED COPIES OF THIS PLAN SHEET.

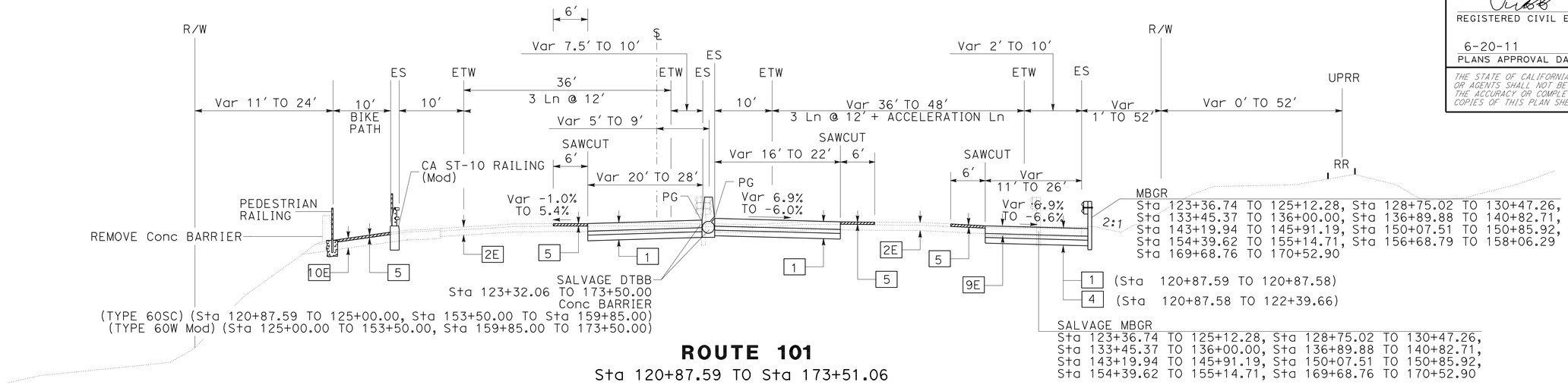

ROUTE 101

Sta 120+87.59 TO Sta 173+51.06

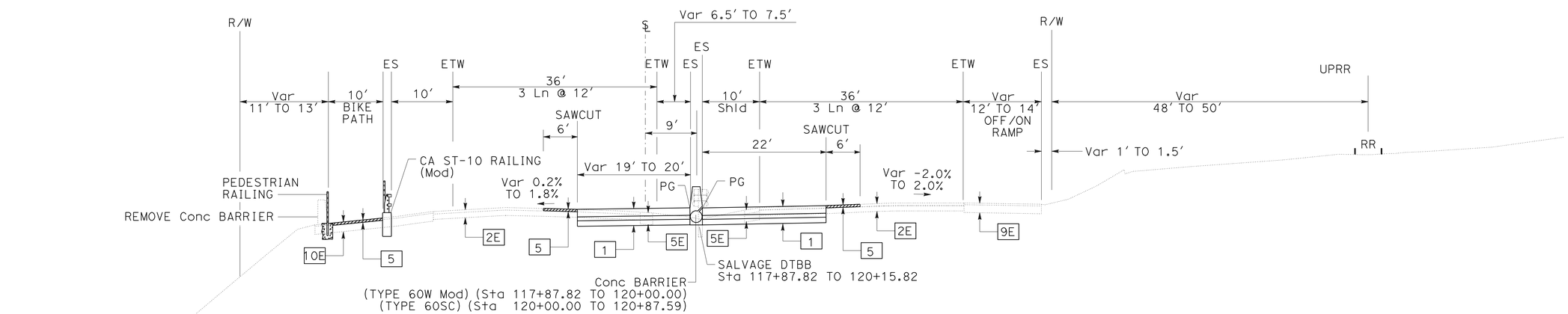

ROUTE 101

Sta 117+87.82 TO Sta 120+87.59

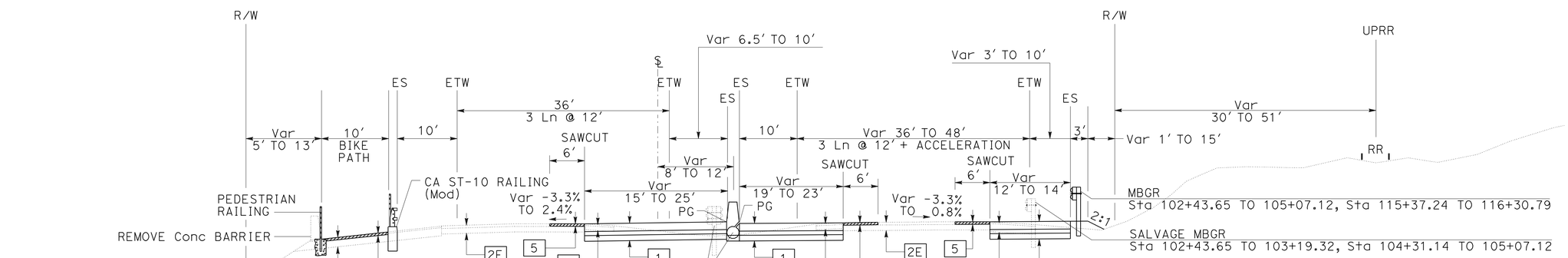

ROUTE 101

Sta 96+91.81 TO Sta 117+87.82

TYPICAL CROSS SECTIONS

NO SCALE

X-7

STATE OF CALIFORNIA - DEPARTMENT OF TRANSPORTATION
Caltrans®
DESIGN

FUNCTIONAL SUPERVISOR: OC LEE
CALCULATED-DESIGNED BY: BARNABAS F. VORREITER
CHECKED BY: OC LEE
REVISED BY
DATE REVISED

LAST REVISION 02-07-11
DATE PLOTTED => 25-JUN-2011
TIME PLOTTED => 08:43

Dist	COUNTY	ROUTE	POST MILES TOTAL PROJECT	SHEET No.	TOTAL SHEETS
07	Ven,SB	101	R39.8/R43.6, 0.0/2.2	9	757

REGISTERED CIVIL ENGINEER — DATE 01-12-11

6-20-11
PLANS APPROVAL DATE

REGISTERED PROFESSIONAL ENGINEER — O.C. LEE — No. C28039 — Exp. 03/31/12 — CIVIL — STATE OF CALIFORNIA

THE STATE OF CALIFORNIA OR ITS OFFICERS OR AGENTS SHALL NOT BE RESPONSIBLE FOR THE ACCURACY OR COMPLETENESS OF SCANNED COPIES OF THIS PLAN SHEET.

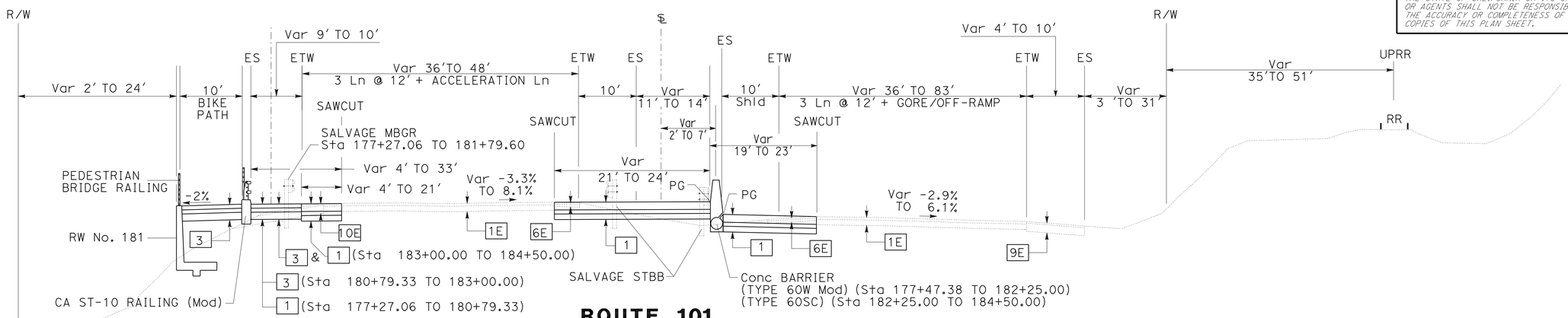

ROUTE 101

Sta 177+27.06 TO Sta 184+45.01

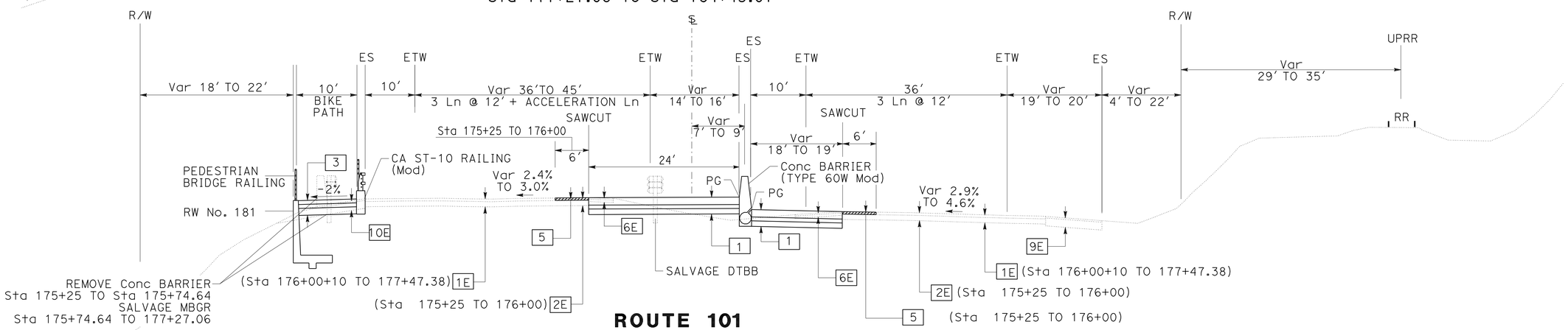

ROUTE 101

Sta 175+25.00 TO Sta 177+27.06

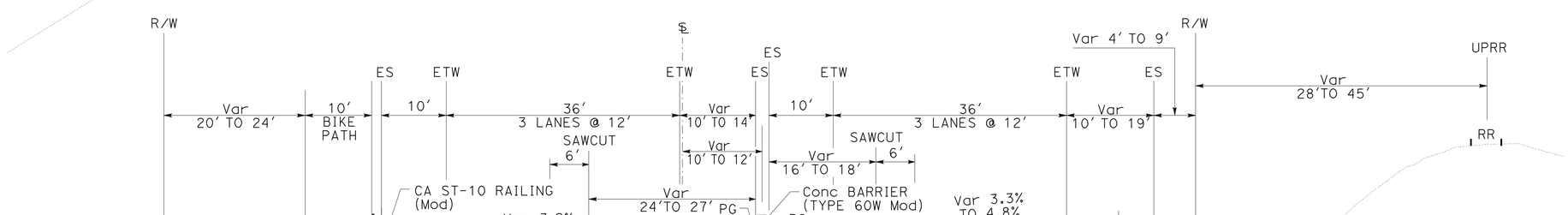

ROUTE 101

Sta 173+51.06 TO Sta 175+25.00

TYPICAL CROSS SECTIONS

NO SCALE

X-8

STATE OF CALIFORNIA - DEPARTMENT OF TRANSPORTATION — Caltrans — DESIGN

FUNCTIONAL SUPERVISOR: OC LEE
CALCULATED-DESIGNED BY: BARNABAS F. VORREITER
CHECKED BY: OC LEE
REVISED BY
DATE REVISED

LAST REVISION 01-12-11 — DATE PLOTTED => 25-JUN-2011 — TIME PLOTTED => 08:43

Dist	COUNTY	ROUTE	POST MILES TOTAL PROJECT	SHEET No.	TOTAL SHEETS
07	Ven,SB	101	R39.8/R43.6, 0.0/2.2	10	757

REGISTERED CIVIL ENGINEER 02-07-11 DATE

6-20-11
PLANS APPROVAL DATE

REGISTERED PROFESSIONAL ENGINEER O.C. LEE No. C28039 Exp 03/31/12 CIVIL STATE OF CALIFORNIA

THE STATE OF CALIFORNIA OR ITS OFFICERS OR AGENTS SHALL NOT BE RESPONSIBLE FOR THE ACCURACY OR COMPLETENESS OF SCANNED COPIES OF THIS PLAN SHEET.

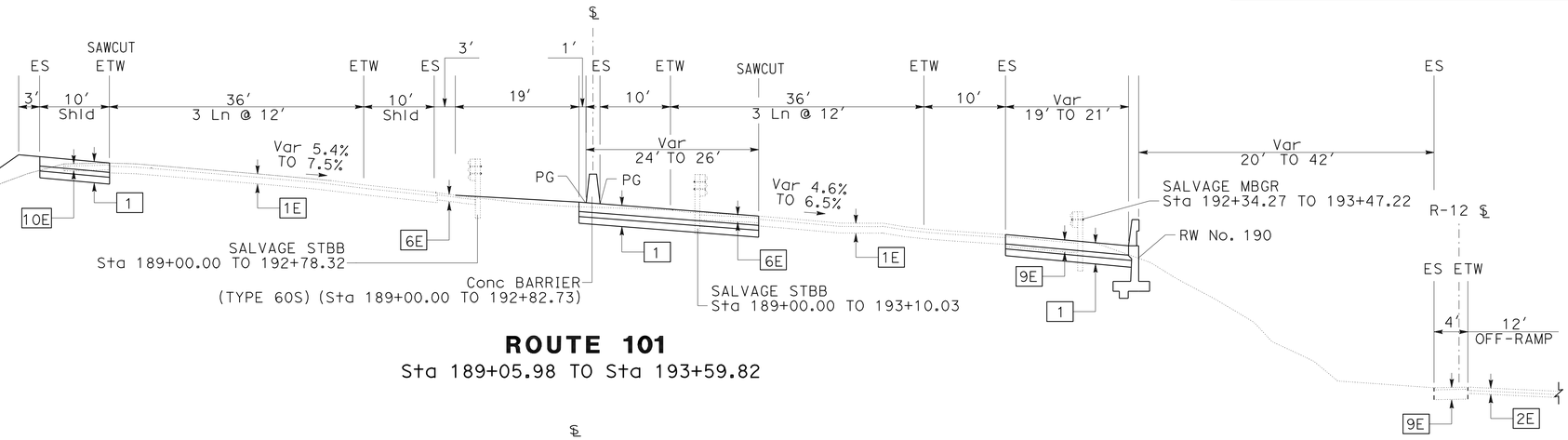

ROUTE 101
Sta 189+05.98 TO Sta 193+59.82

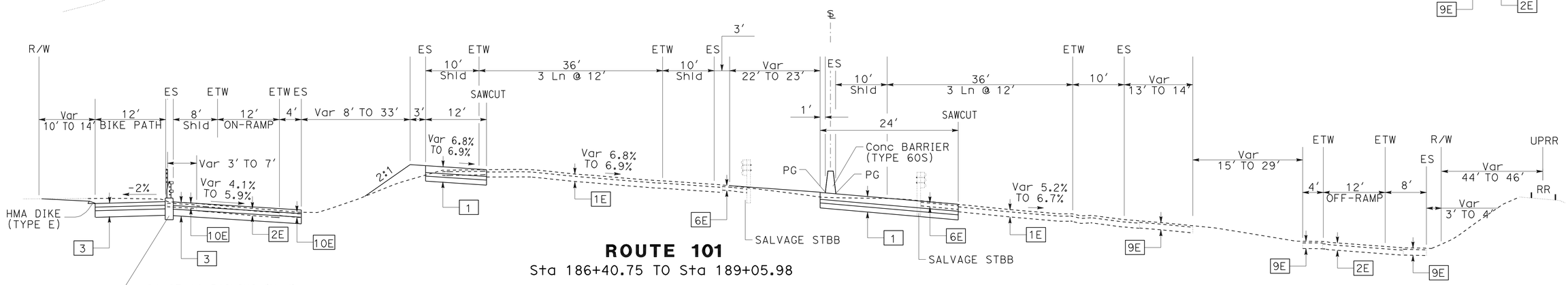

ROUTE 101
Sta 186+40.75 TO Sta 189+05.98

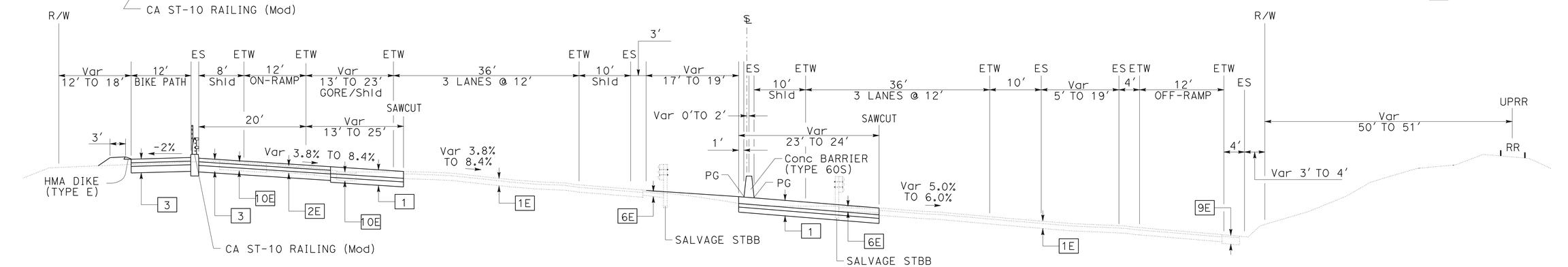

ROUTE 101
Sta 184+45.01 TO Sta 186+40.75

TYPICAL CROSS SECTIONS

NO SCALE

X-9

STATE OF CALIFORNIA - DEPARTMENT OF TRANSPORTATION
Caltrans
DESIGN

FUNCTIONAL SUPERVISOR: OC LEE
CALCULATED-DESIGNED BY: BARNABAS F. VORREITER
CHECKED BY: OC LEE
REVISED BY
DATE REVISED

LAST REVISION 02-07-11
DATE PLOTTED => 25-JUN-2011
TIME PLOTTED => 08:44

Dist	COUNTY	ROUTE	POST MILES TOTAL PROJECT	SHEET No.	TOTAL SHEETS
07	Ven,SB	101	R39.8/R43.6, 0.0/2.2	11	757

REGISTERED CIVIL ENGINEER 01-12-11 DATE

6-20-11
PLANS APPROVAL DATE

REGISTERED PROFESSIONAL ENGINEER O.C. LEE No. C28039 Exp 03/31/12 CIVIL STATE OF CALIFORNIA

THE STATE OF CALIFORNIA OR ITS OFFICERS OR AGENTS SHALL NOT BE RESPONSIBLE FOR THE ACCURACY OR COMPLETENESS OF SCANNED COPIES OF THIS PLAN SHEET.

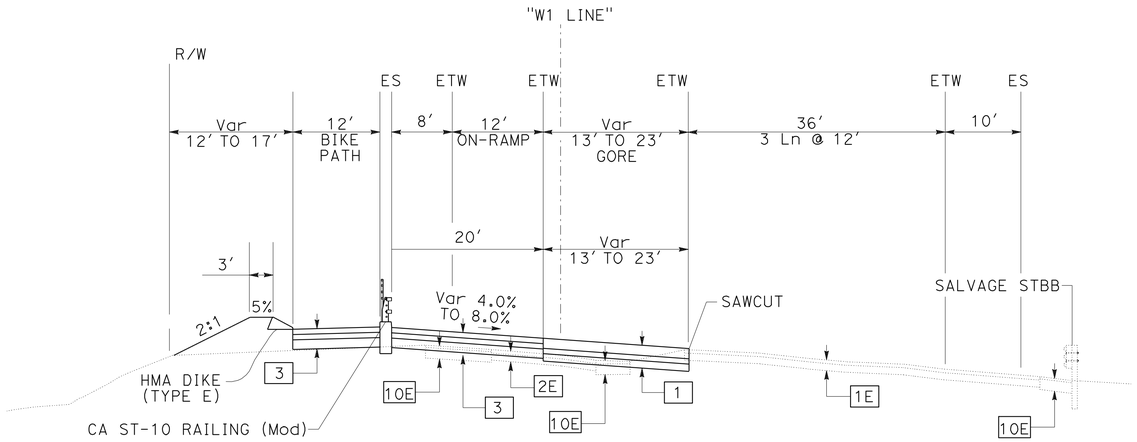

BATES ROAD ON RAMP
Sta 84+56.00 TO Sta 86+58.18

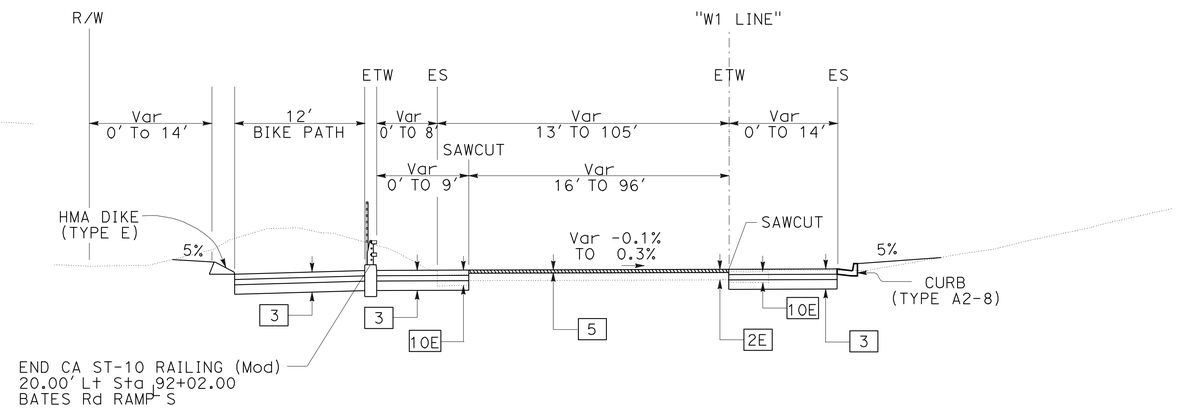

BATES ROAD ON RAMP
Sta 92+02.00 TO Sta 93+09.31

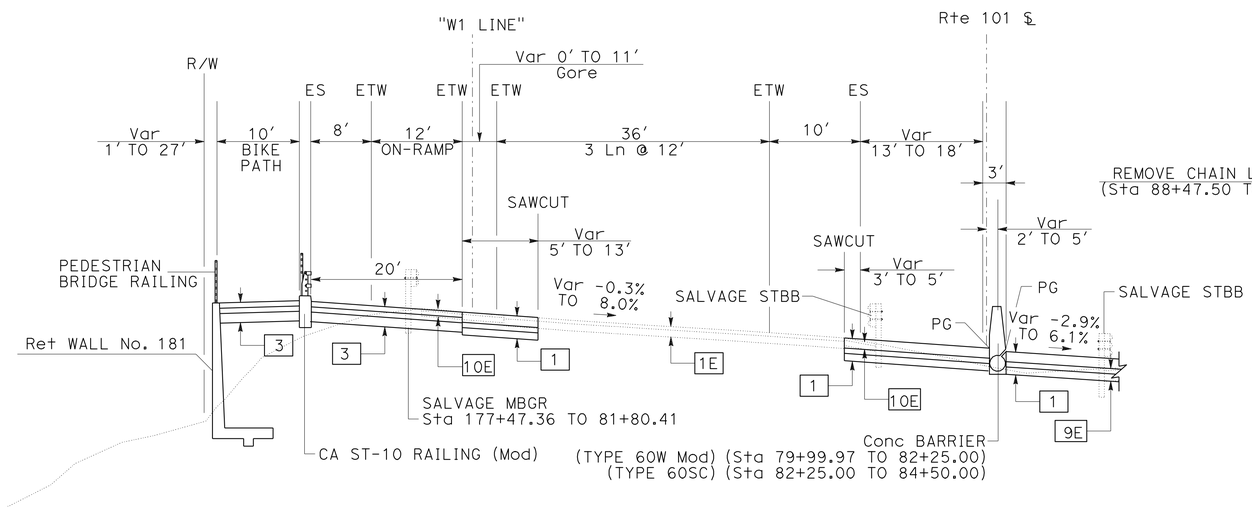

BATES ROAD ON RAMP
Sta 79+99.97 TO Sta 84+56.00

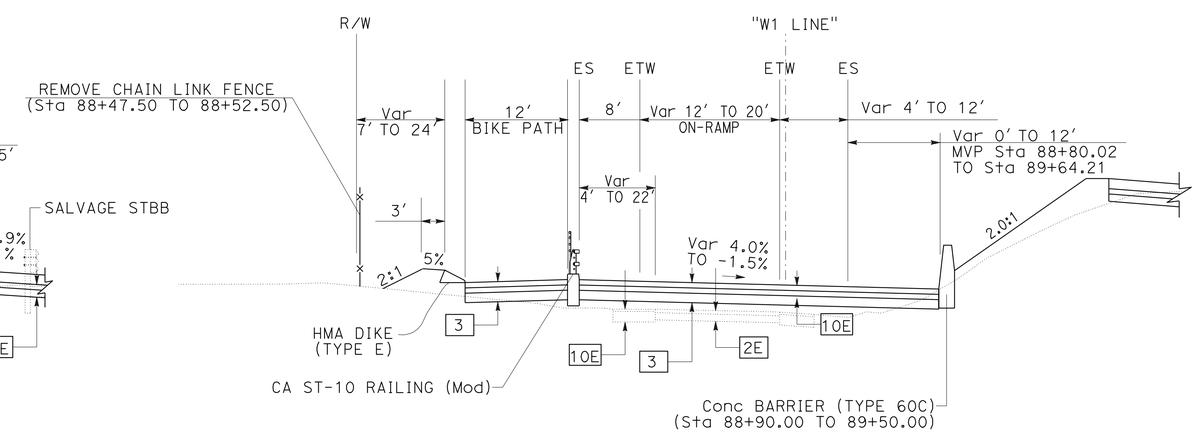

BATES ROAD ON RAMP
Sta 86+58.18 TO Sta 92+02.00

SB 101 ON-RAMP FROM BATES

TYPICAL CROSS SECTIONS

NO SCALE

X-10

STATE OF CALIFORNIA - DEPARTMENT OF TRANSPORTATION
Caltrans
DESIGN

FUNCTIONAL SUPERVISOR: OC LEE
CALCULATED-DESIGNED BY: BARNABAS F. VORREITER
CHECKED BY: OC LEE
REVISED BY
DATE REVISED

LAST REVISION 01-12-11
DATE PLOTTED => 25-JUN-2011
TIME PLOTTED => 08:44

Dist	COUNTY	ROUTE	POST MILES TOTAL PROJECT	SHEET No.	TOTAL SHEETS
07	Ven,SB	101	R39.8/R43.6, 0.0/2.2	12	757

REGISTERED CIVIL ENGINEER 01-12-11 DATE

6-20-11
PLANS APPROVAL DATE

REGISTERED PROFESSIONAL ENGINEER O.C. LEE No. C28039 Exp. 03/31/12 CIVIL STATE OF CALIFORNIA

THE STATE OF CALIFORNIA OR ITS OFFICERS OR AGENTS SHALL NOT BE RESPONSIBLE FOR THE ACCURACY OR COMPLETENESS OF SCANNED COPIES OF THIS PLAN SHEET.

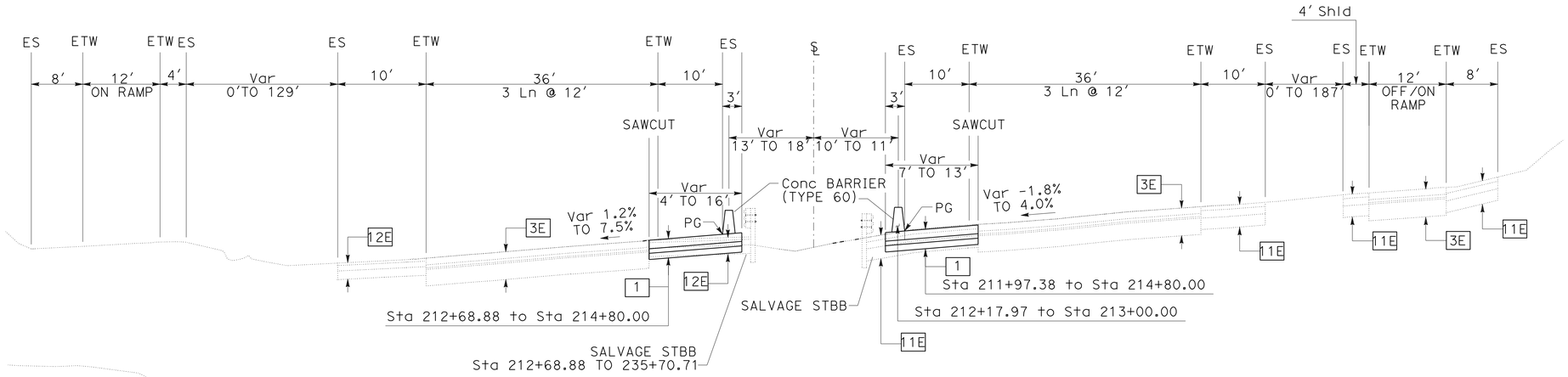

ROUTE 101

Sta 211+97.38 TO Sta 235+70.71

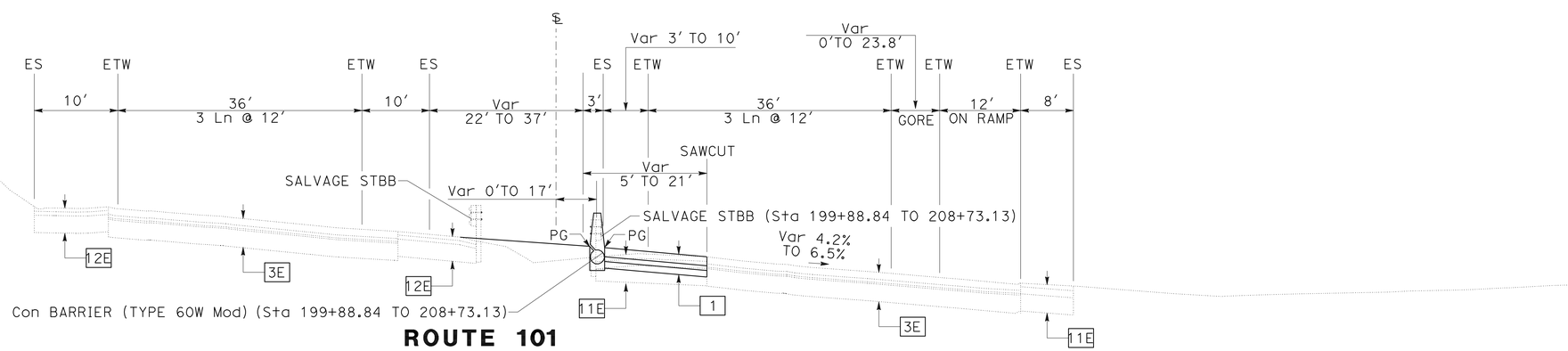

ROUTE 101

Sta 199+88.84 TO Sta 209+37.35

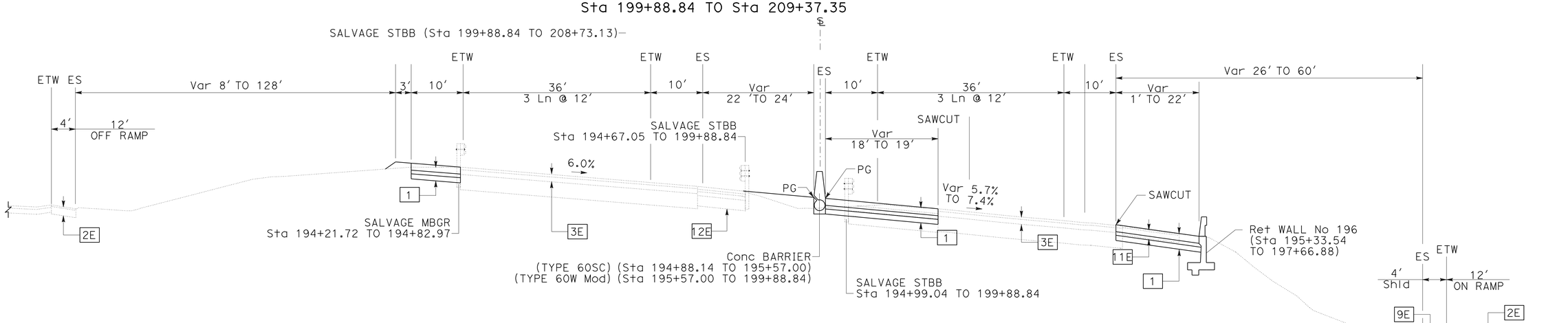

ROUTE 101

Sta 194+21.72 TO Sta 199+88.84

TYPICAL CROSS SECTIONS

NO SCALE

X-11

STATE OF CALIFORNIA - DEPARTMENT OF TRANSPORTATION
Caltrans®
DESIGN

FUNCTIONAL SUPERVISOR: OC LEE
CALCULATED-DESIGNED BY: BARNABAS F. VORREITER
CHECKED BY: OC LEE
REVISED BY
DATE REVISED

LAST REVISION 01-12-11
DATE PLOTTED => 25-JUN-2011
TIME PLOTTED => 08:44

Dist	COUNTY	ROUTE	POST MILES TOTAL PROJECT	SHEET No.	TOTAL SHEETS
07	Ven,SB	101	R39.8/R43.6, 0.0/2.2	13	757

REGISTERED CIVIL ENGINEER — DATE 01-12-11

PLANS APPROVAL DATE 6-20-11

REGISTERED PROFESSIONAL ENGINEER O.C. LEE No. C28039 Exp. 03/31/12 CIVIL STATE OF CALIFORNIA

THE STATE OF CALIFORNIA OR ITS OFFICERS OR AGENTS SHALL NOT BE RESPONSIBLE FOR THE ACCURACY OR COMPLETENESS OF SCANNED COPIES OF THIS PLAN SHEET.

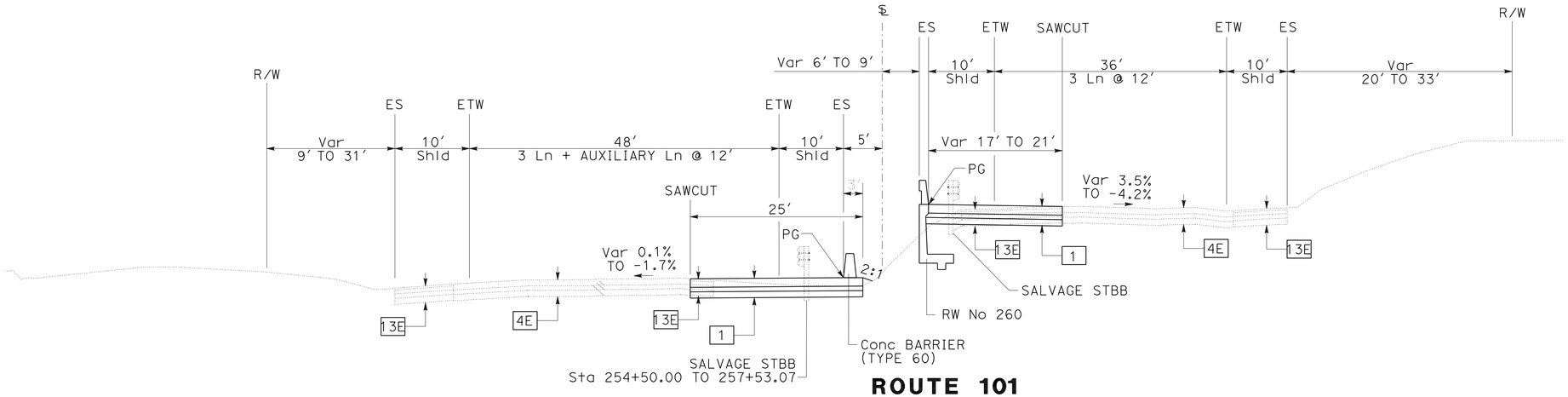

ROUTE 101

Sta 254+50.00 TO Sta 265+09.82

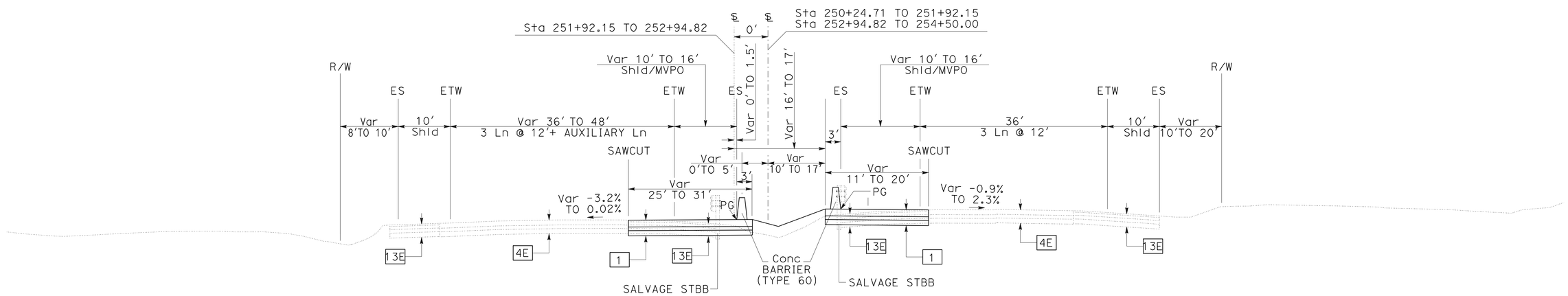

ROUTE 101

Sta 250+24.71 TO Sta 254+50.00

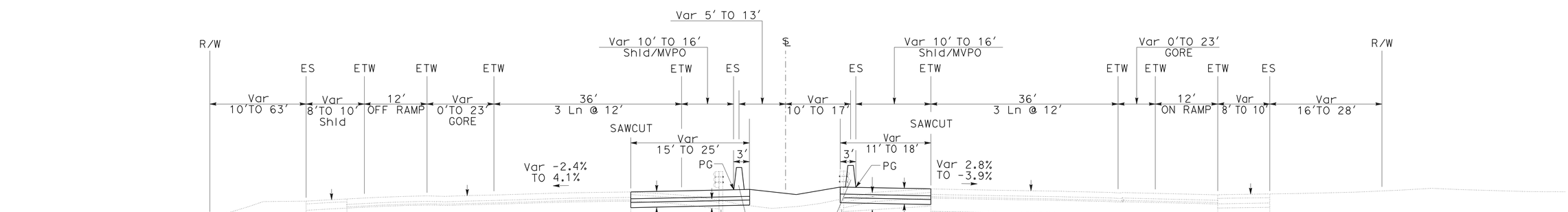

ROUTE 101

Sta 235+70.71 TO Sta 250+24.71

TYPICAL CROSS SECTIONS

NO SCALE

X-12

STATE OF CALIFORNIA - DEPARTMENT OF TRANSPORTATION

Caltrans® **DESIGN**

FUNCTIONAL SUPERVISOR: OC LEE

CALCULATED-DESIGNED BY: BARNABAS F. VORREITER — OC LEE

CHECKED BY

REVISED BY

DATE REVISED

LAST REVISION 01-12-11 | DATE PLOTTED => 25-JUN-2011 | TIME PLOTTED => 08:44

Dist	COUNTY	ROUTE	POST MILES TOTAL PROJECT	SHEET No.	TOTAL SHEETS
07	Ven,SB	101	R39.8/R43.6, 0.0/2.2	14	757

REGISTERED CIVIL ENGINEER 01-12-11 DATE

6-20-11
PLANS APPROVAL DATE

REGISTERED PROFESSIONAL ENGINEER O.C. LEE No. C28039 Exp. 03/31/12 CIVIL STATE OF CALIFORNIA

THE STATE OF CALIFORNIA OR ITS OFFICERS OR AGENTS SHALL NOT BE RESPONSIBLE FOR THE ACCURACY OR COMPLETENESS OF SCANNED COPIES OF THIS PLAN SHEET.

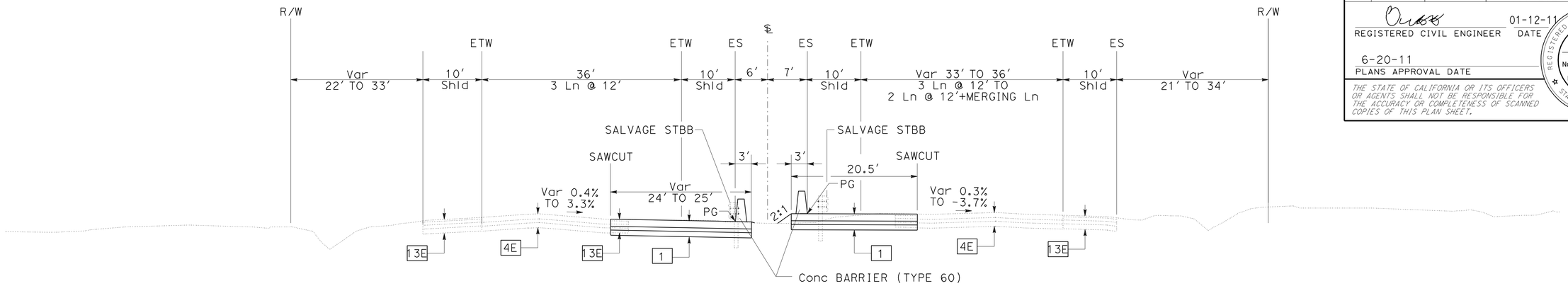

ROUTE 101
Sta 286+00.00 TO Sta 293+03.93

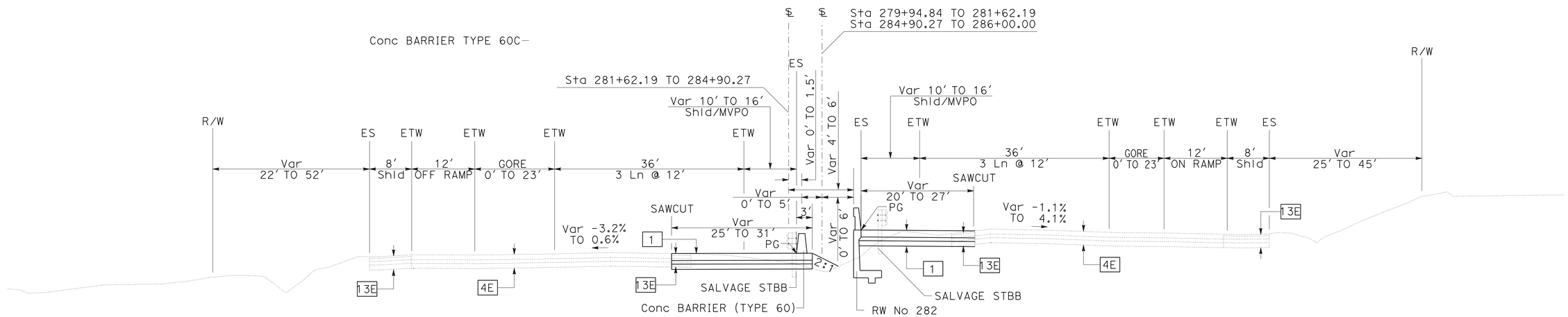

ROUTE 101
Sta 279+94.84 TO Sta 286+00.00

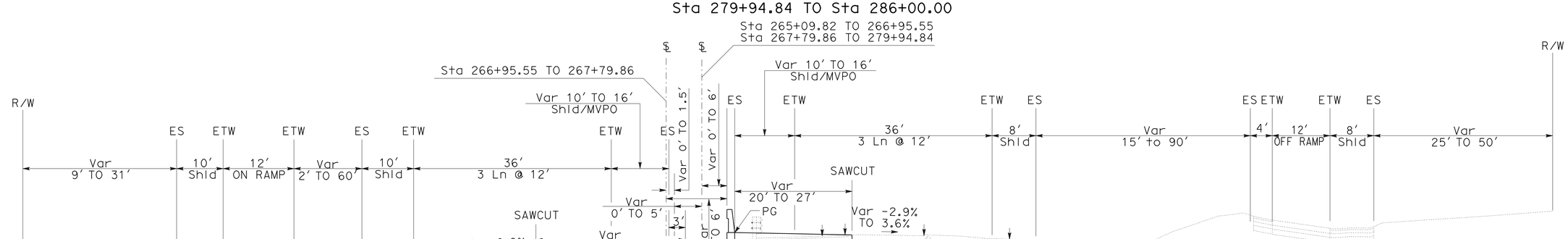

ROUTE 101
Sta 265+09.82 TO Sta 279+94.84

TYPICAL CROSS SECTIONS

NO SCALE

X-13

STATE OF CALIFORNIA - DEPARTMENT OF TRANSPORTATION
Caltrans®
DESIGN

FUNCTIONAL SUPERVISOR: OC LEE
CALCULATED-DESIGNED BY: BARNABAS F. VORREITER
CHECKED BY: OC LEE
REVISED BY
DATE REVISED

LAST REVISION DATE PLOTTED => 25-JUN-2011
01-12-11 TIME PLOTTED => 08:44

Dist	COUNTY	ROUTE	POST MILES TOTAL PROJECT	SHEET No.	TOTAL SHEETS
07	Ven,SB	101	R39.8/R43.6, 0.0/2.2	15	757

REGISTERED CIVIL ENGINEER 01-12-11 DATE

6-20-11
PLANS APPROVAL DATE

REGISTERED PROFESSIONAL ENGINEER O.C. LEE No. C28039 Exp. 03/31/12 CIVIL STATE OF CALIFORNIA

THE STATE OF CALIFORNIA OR ITS OFFICERS OR AGENTS SHALL NOT BE RESPONSIBLE FOR THE ACCURACY OR COMPLETENESS OF SCANNED COPIES OF THIS PLAN SHEET.

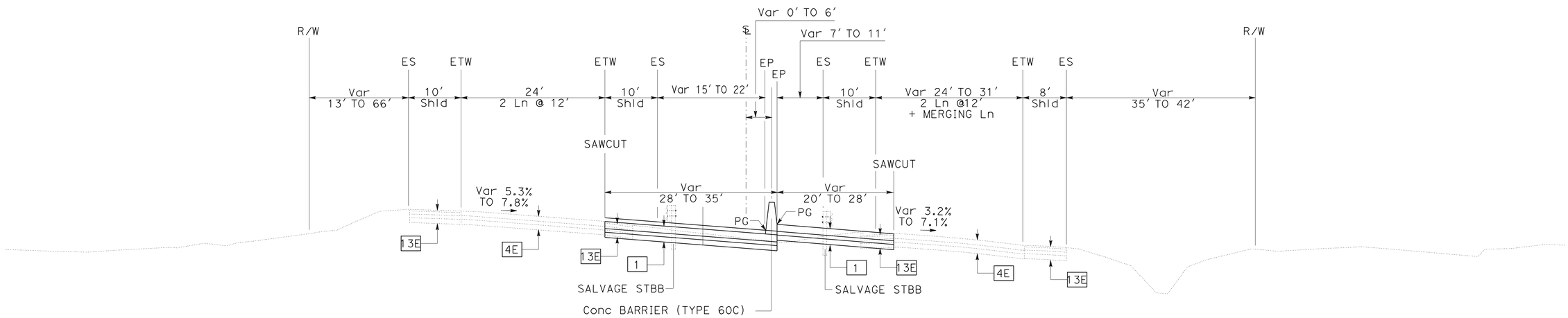

ROUTE 101
Sta 295+46.54 TO Sta 303+64.63

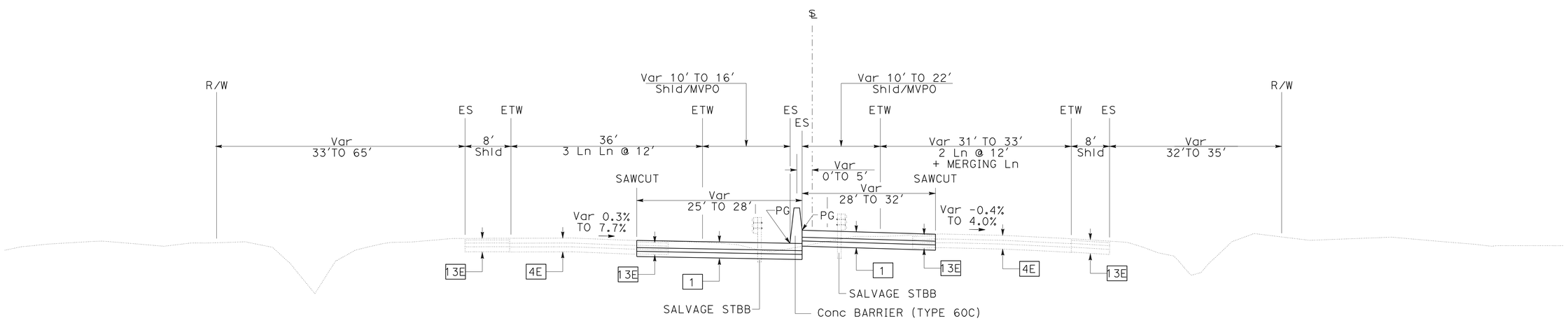

ROUTE 101
Sta 293+03.93 TO Sta 295+46.54

TYPICAL CROSS SECTIONS

NO SCALE

X-14

STATE OF CALIFORNIA - DEPARTMENT OF TRANSPORTATION
Caltrans
DESIGN

FUNCTIONAL SUPERVISOR: OC LEE
CALCULATED-DESIGNED BY: BARNABAS F. VORREITER
CHECKED BY: OC LEE
REVISED BY
DATE REVISED

LAST REVISION 01-12-11 | DATE PLOTTED => 25-JUN-2011 | TIME PLOTTED => 08:44

Dist	COUNTY	ROUTE	POST MILES TOTAL PROJECT	SHEET No.	TOTAL SHEETS
07	Ven,SB	101	R39.8/R43.6, 0.0/2.2	16	757

REGISTERED CIVIL ENGINEER 02-08-11 DATE

6-20-11
PLANS APPROVAL DATE

REGISTERED PROFESSIONAL ENGINEER O.C. LEE No. C28039 Exp. 03/31/12 CIVIL STATE OF CALIFORNIA

THE STATE OF CALIFORNIA OR ITS OFFICERS OR AGENTS SHALL NOT BE RESPONSIBLE FOR THE ACCURACY OR COMPLETENESS OF SCANNED COPIES OF THIS PLAN SHEET.

NOTE:

FOR ACCURATE RIGHT OF WAY DATA, CONTACT RIGHT OF WAY ENGINEERING AT THE DISTRICT OFFICE.

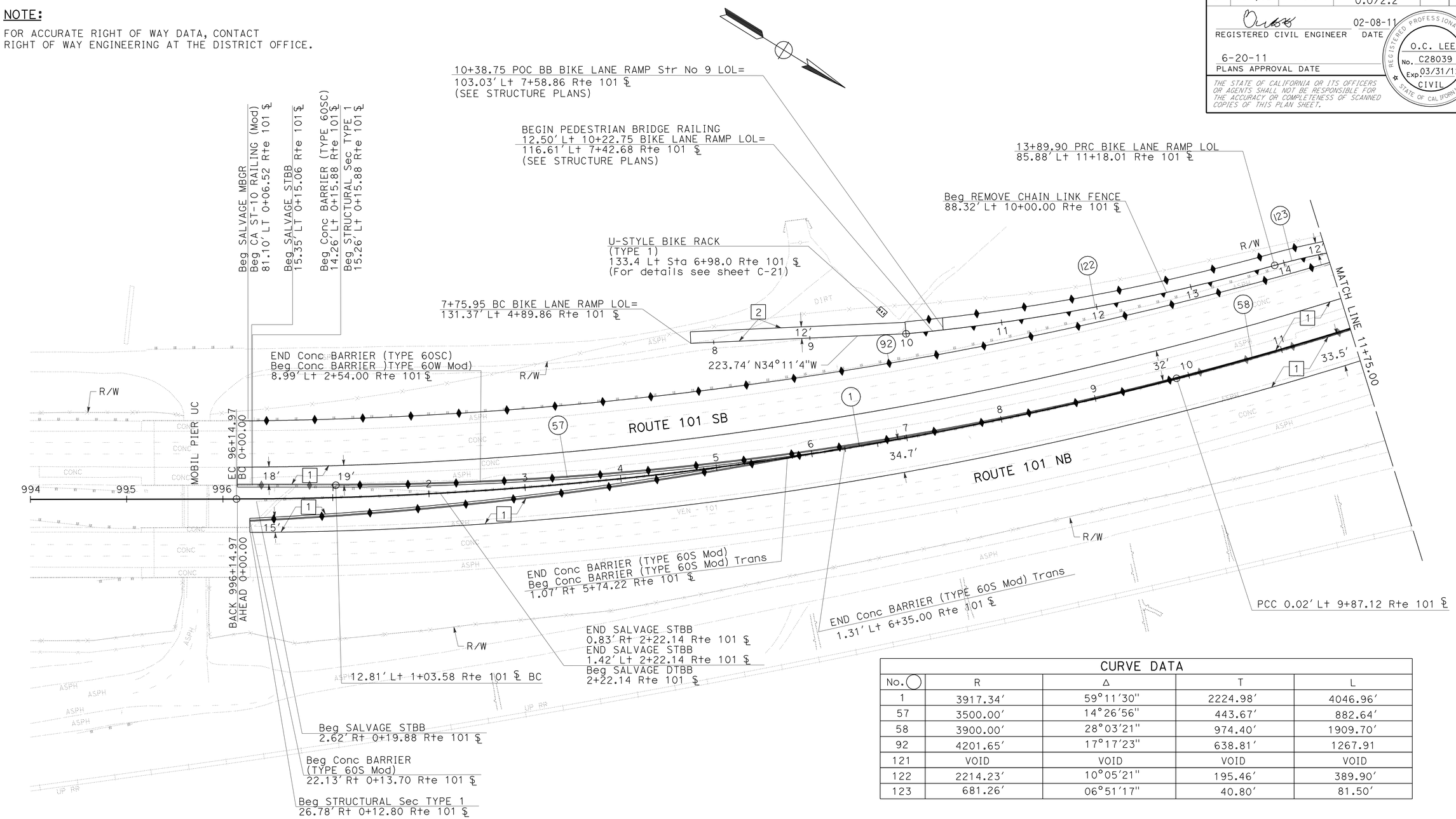

CURVE DATA				
No. ◯	R	Δ	T	L
1	3917.34'	59°11'30"	2224.98'	4046.96'
57	3500.00'	14°26'56"	443.67'	882.64'
58	3900.00'	28°03'21"	974.40'	1909.70'
92	4201.65'	17°17'23"	638.81'	1267.91
121	VOID	VOID	VOID	VOID
122	2214.23'	10°05'21"	195.46'	389.90'
123	681.26'	06°51'17"	40.80'	81.50'

LAYOUT

SCALE: 1" = 50'

L-1

STATE OF CALIFORNIA - DEPARTMENT OF TRANSPORTATION
Caltrans
DESIGN

FUNCTIONAL SUPERVISOR: OC LEE
CALCULATED-DESIGNED BY: BARNABAS F. VORREITER
CHECKED BY: OC LEE
REVISED BY
DATE REVISED

LAST REVISION 02-08-11
DATE PLOTTED => 28-JUN-2011
TIME PLOTTED => 17:35

Dist	COUNTY	ROUTE	POST MILES TOTAL PROJECT	SHEET No.	TOTAL SHEETS
07	Ven,SB	101	R39.8/R43.6, 0.0/2.2	17	757

REGISTERED CIVIL ENGINEER 02-08-11 DATE

6-20-11
PLANS APPROVAL DATE

REGISTERED PROFESSIONAL ENGINEER O.C. LEE No. C28039 Exp. 03/31/12 CIVIL STATE OF CALIFORNIA

THE STATE OF CALIFORNIA OR ITS OFFICERS OR AGENTS SHALL NOT BE RESPONSIBLE FOR THE ACCURACY OR COMPLETENESS OF SCANNED COPIES OF THIS PLAN SHEET.

NOTE:

FOR ACCURATE RIGHT OF WAY DATA, CONTACT RIGHT OF WAY ENGINEERING AT THE DISTRICT OFFICE.

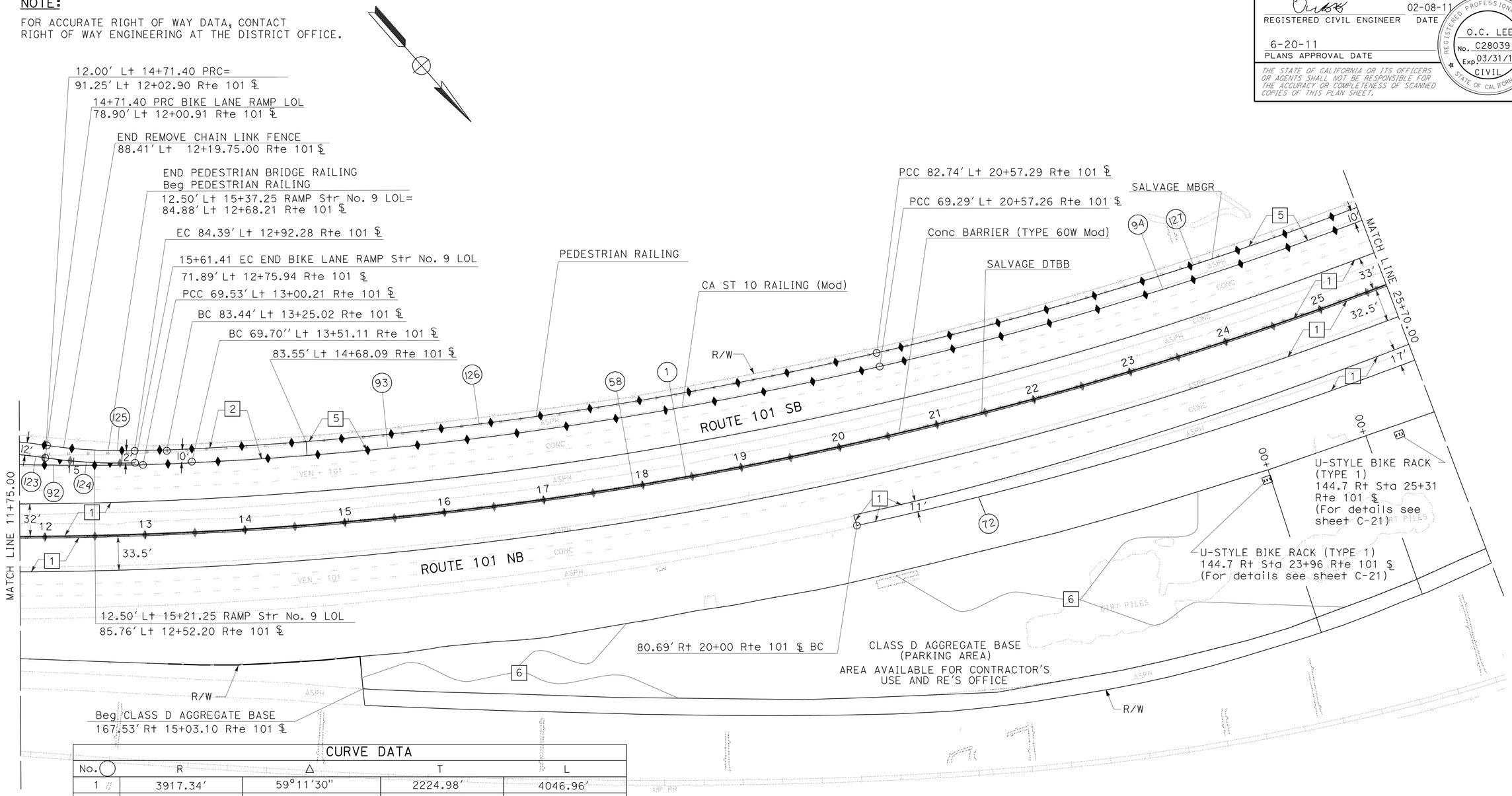

CURVE DATA

No.	R	Δ	T	L
1	3917.34′	59°11′30"	2224.98′	4046.96′
58	3900.00′	28°03′21"	974.40′	1909.70′
72	3980.17′	14°00′10"	488.80′	972.74′
92	4201.65′	17°17′23"	638.81′	1267.91′
93	3830.20′	11°07′27"	373.00	743.65′
94	3738.94	13°01′26"	426.79′	849.91′
123	681.26′	06°51′17"	40.80′	81.50′
124	501.20′	10°17′19"	45.12′	90.00′
125	488.70′	10°17′20"	44.00′	87.76′
126	3816.26′	10°45′38"	359.42′	716.72′
127	3725.00′	13°01′25"	425.19′	846.72′

LAYOUT

SCALE: 1" = 50′

L-2

STATE OF CALIFORNIA - DEPARTMENT OF TRANSPORTATION
Caltrans®
DESIGN

FUNCTIONAL SUPERVISOR: OC LEE
CALCULATED-DESIGNED BY: BARNABAS F. VORREITER
CHECKED BY: OC LEE
REVISED BY
DATE REVISED

LAST REVISION 02-08-11
DATE PLOTTED => 28-JUN-2011
TIME PLOTTED => 17:35

Dist	COUNTY	ROUTE	POST MILES TOTAL PROJECT	SHEET No.	TOTAL SHEETS
07	Ven,SB	101	R39.8/R43.6, 0.0/2.2	18	757

REGISTERED CIVIL ENGINEER 02-14-11 DATE

6-20-11
PLANS APPROVAL DATE

REGISTERED PROFESSIONAL ENGINEER O.C. LEE No. C28039 Exp. 03/31/12 CIVIL STATE OF CALIFORNIA

THE STATE OF CALIFORNIA OR ITS OFFICERS OR AGENTS SHALL NOT BE RESPONSIBLE FOR THE ACCURACY OR COMPLETENESS OF SCANNED COPIES OF THIS PLAN SHEET.

NOTE:

FOR ACCURATE RIGHT OF WAY DATA, CONTACT
RIGHT OF WAY ENGINEERING AT THE DISTRICT OFFICE.

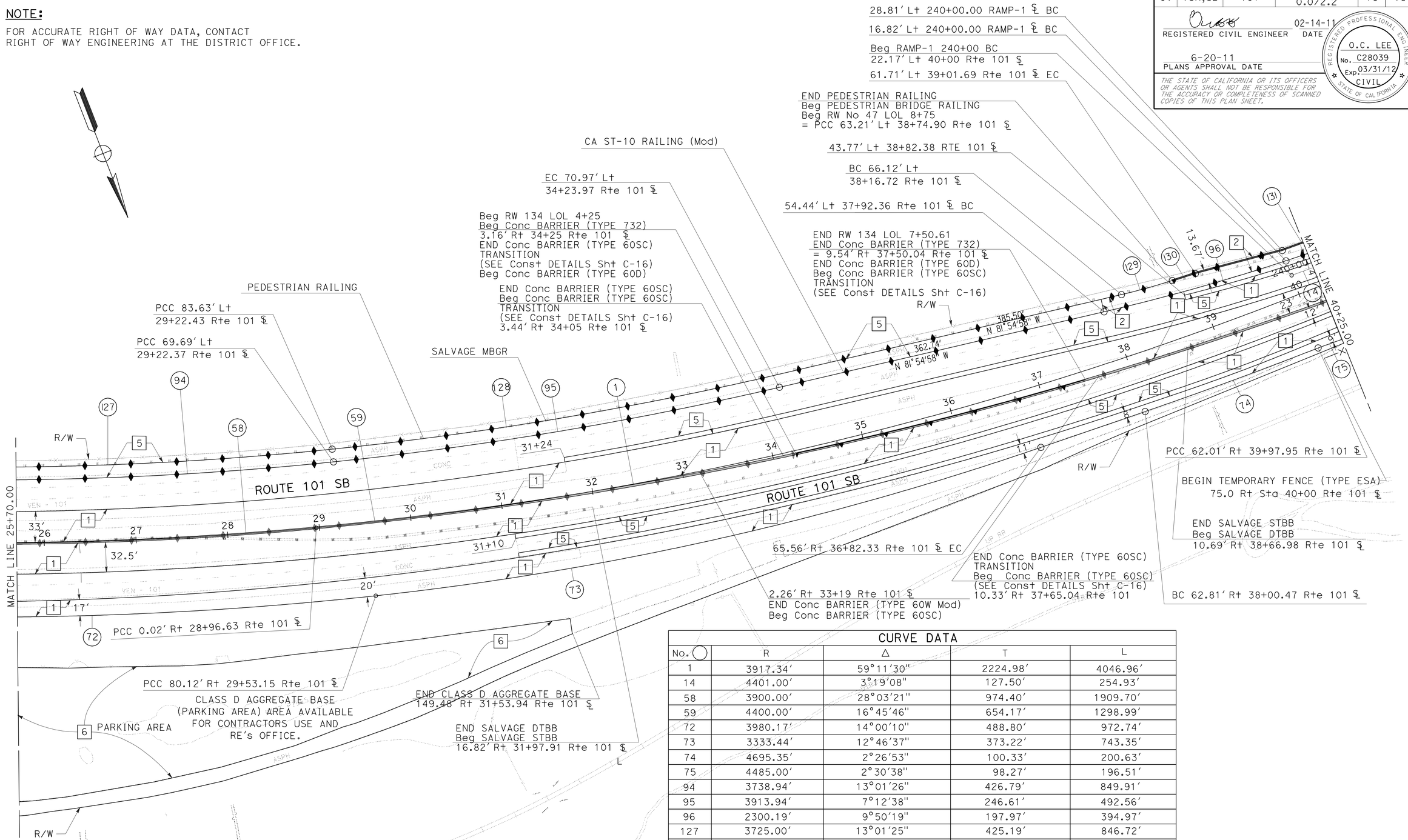

CURVE DATA				
No. ◯	R	Δ	T	L
1	3917.34'	59°11'30"	2224.98'	4046.96'
14	4401.00'	3°19'08"	127.50'	254.93'
58	3900.00'	28°03'21"	974.40'	1909.70'
59	4400.00'	16°45'46"	654.17'	1298.99'
72	3980.17'	14°00'10"	488.80'	972.74'
73	3333.44'	12°46'37"	373.22'	743.35'
74	4695.35'	2°26'53"	100.33'	200.63'
75	4485.00'	2°30'38"	98.27'	196.51'
94	3738.94'	13°01'26"	426.79'	849.91'
95	3913.94'	7°12'38"	246.61'	492.56'
96	2300.19'	9°50'19"	197.97'	394.97'
127	3725.00'	13°01'25"	425.19'	846.72'
128	3900.00'	7°12'38"	245.73'	490.81'
129	675.00'	4°52'24"	28.72'	57.41'
130	4364.26'	0°20'45"	13.17'	26.34'
131	4371.26'	3°20'14"	127.34'	254.60'

LAYOUT

SCALE: 1" = 50'

L-3

STATE OF CALIFORNIA - DEPARTMENT OF TRANSPORTATION
Caltrans® **DESIGN**

FUNCTIONAL SUPERVISOR: OC LEE
CALCULATED-DESIGNED BY: BARNABAS F. VORREITER
CHECKED BY: OC LEE
REVISED BY / DATE REVISED

LAST REVISION 02-14-11
DATE PLOTTED => 01-AUG-2011
TIME PLOTTED => 14:29

Dist	COUNTY	ROUTE	POST MILES TOTAL PROJECT	SHEET No.	TOTAL SHEETS
07	Ven,SB	101	R39.8/R43.6, 0.0/2.2	19	757

REGISTERED CIVIL ENGINEER 02-14-11 DATE

6-20-11
PLANS APPROVAL DATE

REGISTERED PROFESSIONAL ENGINEER O.C. LEE No. C28039 Exp. 03/31/12 CIVIL STATE OF CALIFORNIA

THE STATE OF CALIFORNIA OR ITS OFFICERS OR AGENTS SHALL NOT BE RESPONSIBLE FOR THE ACCURACY OR COMPLETENESS OF SCANNED COPIES OF THIS PLAN SHEET.

NOTE:

FOR ACCURATE RIGHT OF WAY DATA, CONTACT RIGHT OF WAY ENGINEERING AT THE DISTRICT OFFICE.

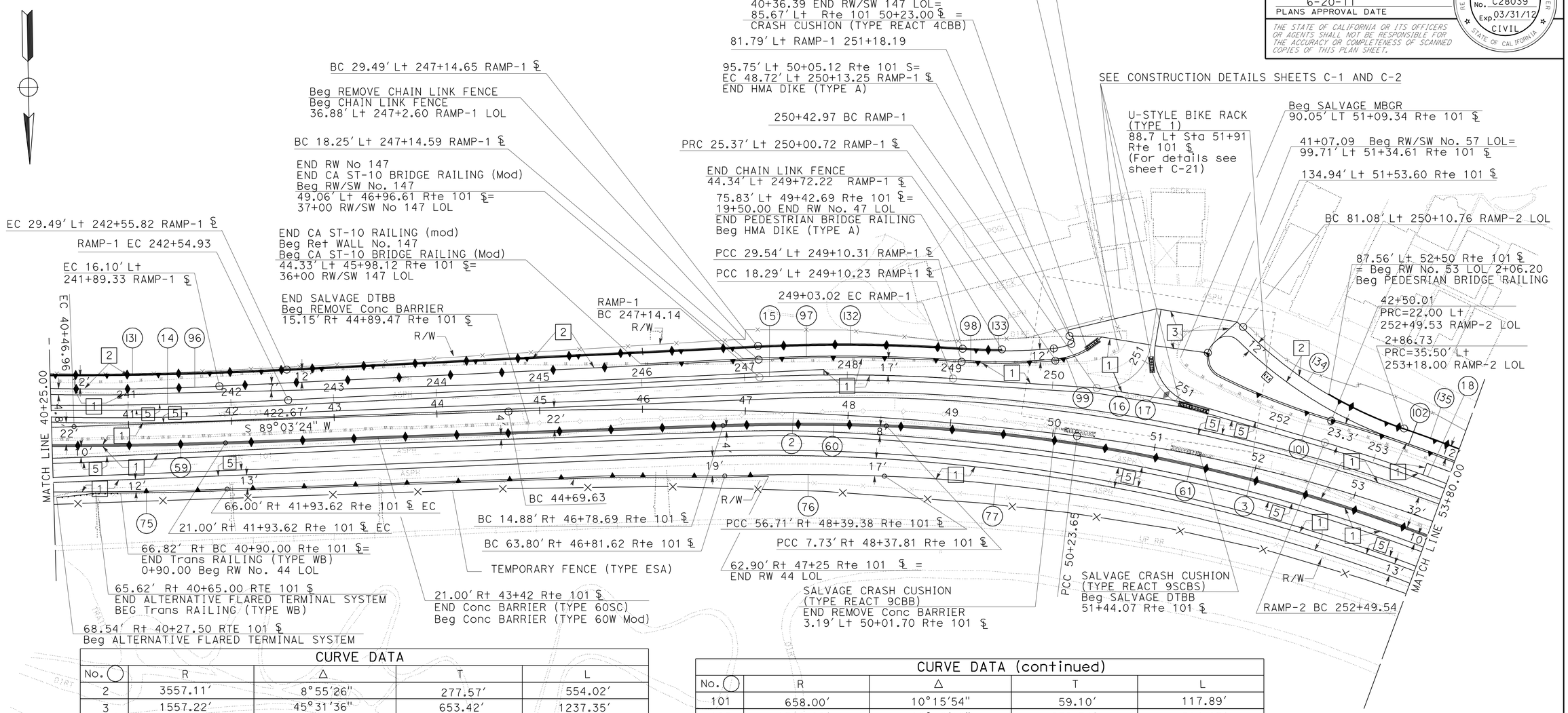

CURVE DATA

No.	R	Δ	T	L
2	3557.11'	8°55'26"	277.57'	554.02'
3	1557.22'	45°31'36"	653.42'	1237.35'
14	4401.00'	3°19'08"	127.50'	254.93'
15	1646.00'	6°34'29"	94.54'	188.88'
16	50.00'	84°33'01"	45.46'	73.78'
17	50.00'	82°54'05"	44.16'	72.35'
18	1488.00'	13°29'42"	176.05'	350.47'
59	4400.00'	16°45'46"	654.17'	1298.99'
60	2200.00'	4°08'09"	79.43'	158.80'
61	1650.00'	50°18'53"	774.93'	1448.96'
75	4485.00'	1°19'25"	51.82'	103.63'
76	2151.00'	4°08'09"	77.67'	155.26'
77	1601.00'	50°18'53"	751.92'	1405.93'
96	2300.19'	9°50'19"	197.97'	394.97'
97	1664.50'	6°48'23"	98.98'	197.73'
98	553.50'	9°24'31"	45.55'	90.89'
99	73.50'	32°44'03"	21.59'	41.99'

CURVE DATA (continued)

No.	R	Δ	T	L
101	658.00'	10°15'54"	59.10'	117.89'
102	1510.00'	19°30'19"	259.54'	514.05'
131	4371.26'	3°20'14"	127.34'	254.60'
132	1675.74'	6°48'23"	99.65'	199.07'
133	542.26'	6°41'28"	31.70'	63.33'
134	402.91'	26°36'34"	95.28'	187.12'
135	1523.87'	16°54'51"	226.58'	449.86'

LAYOUT

SCALE: 1" = 50'

L-4

STATE OF CALIFORNIA - DEPARTMENT OF TRANSPORTATION
Caltrans
DESIGN

FUNCTIONAL SUPERVISOR: OC LEE
CALCULATED-DESIGNED BY: BARNABAS F. VORREITER
CHECKED BY: OC LEE
REVISED BY
DATE REVISED

LAST REVISION 02-14-11
DATE PLOTTED => 25-JUN-2011
TIME PLOTTED => 08:44

Dist	COUNTY	ROUTE	POST MILES TOTAL PROJECT	SHEET No.	TOTAL SHEETS
07	Ven,SB	101	R39.8/R43.6, 0.0/2.2	20	757

REGISTERED CIVIL ENGINEER 02-14-11 DATE

6-20-11
PLANS APPROVAL DATE

REGISTERED PROFESSIONAL ENGINEER O.C. LEE No. C28039 Exp. 03/31/12 CIVIL STATE OF CALIFORNIA

THE STATE OF CALIFORNIA OR ITS OFFICERS OR AGENTS SHALL NOT BE RESPONSIBLE FOR THE ACCURACY OR COMPLETENESS OF SCANNED COPIES OF THIS PLAN SHEET.

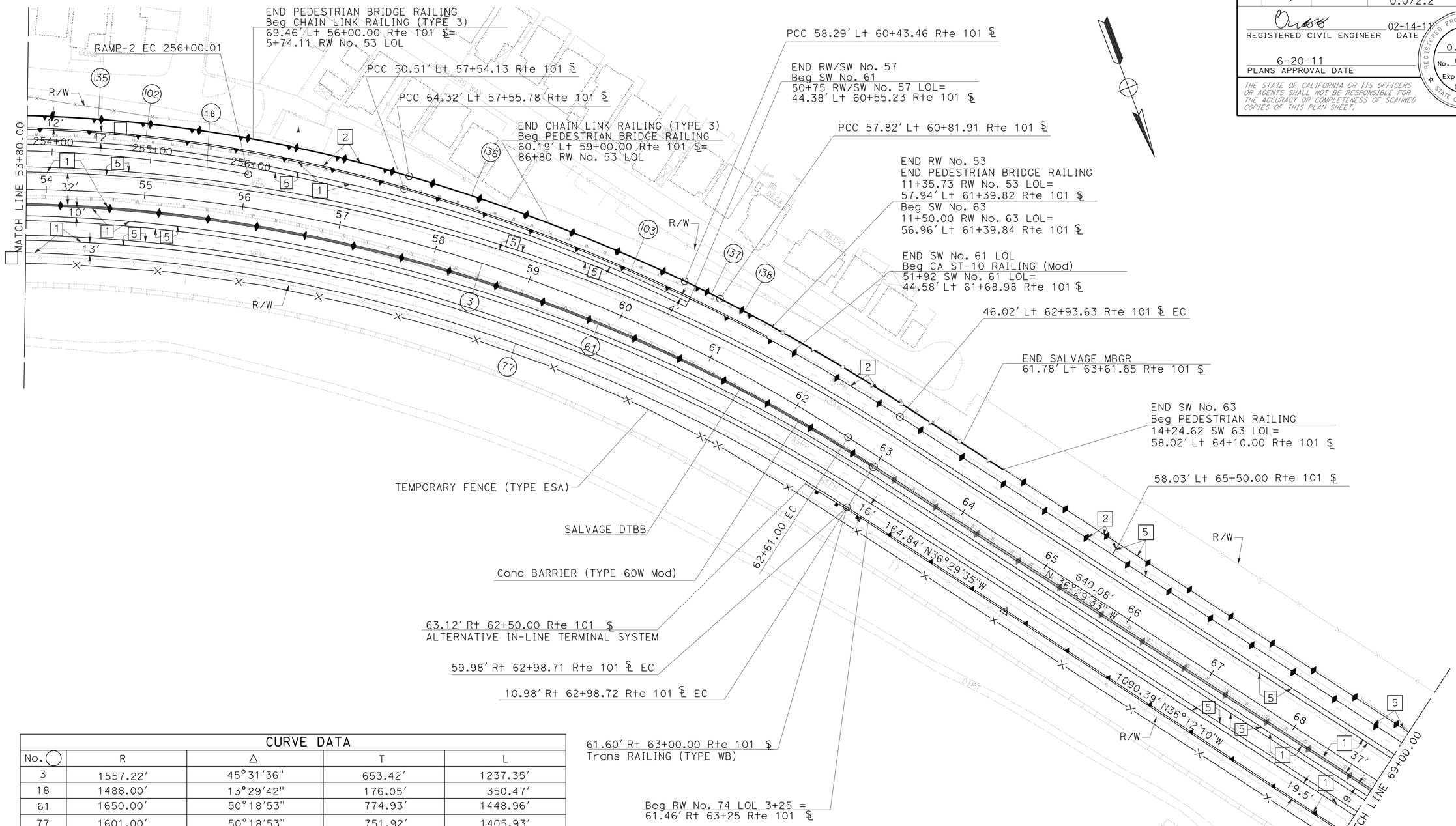

CURVE DATA				
No. ◯	R	Δ	T	L
3	1557.22'	45°31'36"	653.42'	1237.35'
18	1488.00'	13°29'42"	176.05'	350.47'
61	1650.00'	50°18'53"	774.93'	1448.96'
77	1601.00'	50°18'53"	751.92'	1405.93'
102	1510.00'	19°30'19"	259.54'	514.05'
103	1910.00'	16°38'02"	279.22'	554.51'
135	1523.87'	16°54'51"	226.58'	449.86'
136	1927.31'	8°53'14"	149.77'	298.84'
137	1066.23'	2°08'35"	19.94'	39.88'
138	3266.60'	1°03'13"	30.04'	60.07'

NOTE:

FOR ACCURATE RIGHT OF WAY DATA, CONTACT RIGHT OF WAY ENGINEERING AT THE DISTRICT OFFICE.

LAYOUT

SCALE: 1" = 50'

L-5

STATE OF CALIFORNIA - DEPARTMENT OF TRANSPORTATION
Caltrans
DESIGN

FUNCTIONAL SUPERVISOR: OC LEE
CALCULATED-DESIGNED BY: BARNABAS F. VORREITTER
CHECKED BY: OC LEE
REVISED BY
DATE REVISED

LAST REVISION 02-14-11
DATE PLOTTED => 01-AUG-2011
TIME PLOTTED => 14:29

Dist	COUNTY	ROUTE	POST MILES TOTAL PROJECT	SHEET No.	TOTAL SHEETS
07	Ven,SB	101	R39.8/R43.6, 0.0/2.2	21	757

REGISTERED CIVIL ENGINEER 02-14-11 DATE

6-20-11
PLANS APPROVAL DATE

REGISTERED PROFESSIONAL ENGINEER O.C. LEE No. C28039 Exp. 03/31/12 CIVIL STATE OF CALIFORNIA

THE STATE OF CALIFORNIA OR ITS OFFICERS OR AGENTS SHALL NOT BE RESPONSIBLE FOR THE ACCURACY OR COMPLETENESS OF SCANNED COPIES OF THIS PLAN SHEET.

NOTE:

FOR ACCURATE RIGHT OF WAY DATA, CONTACT RIGHT OF WAY ENGINEERING AT THE DISTRICT OFFICE.

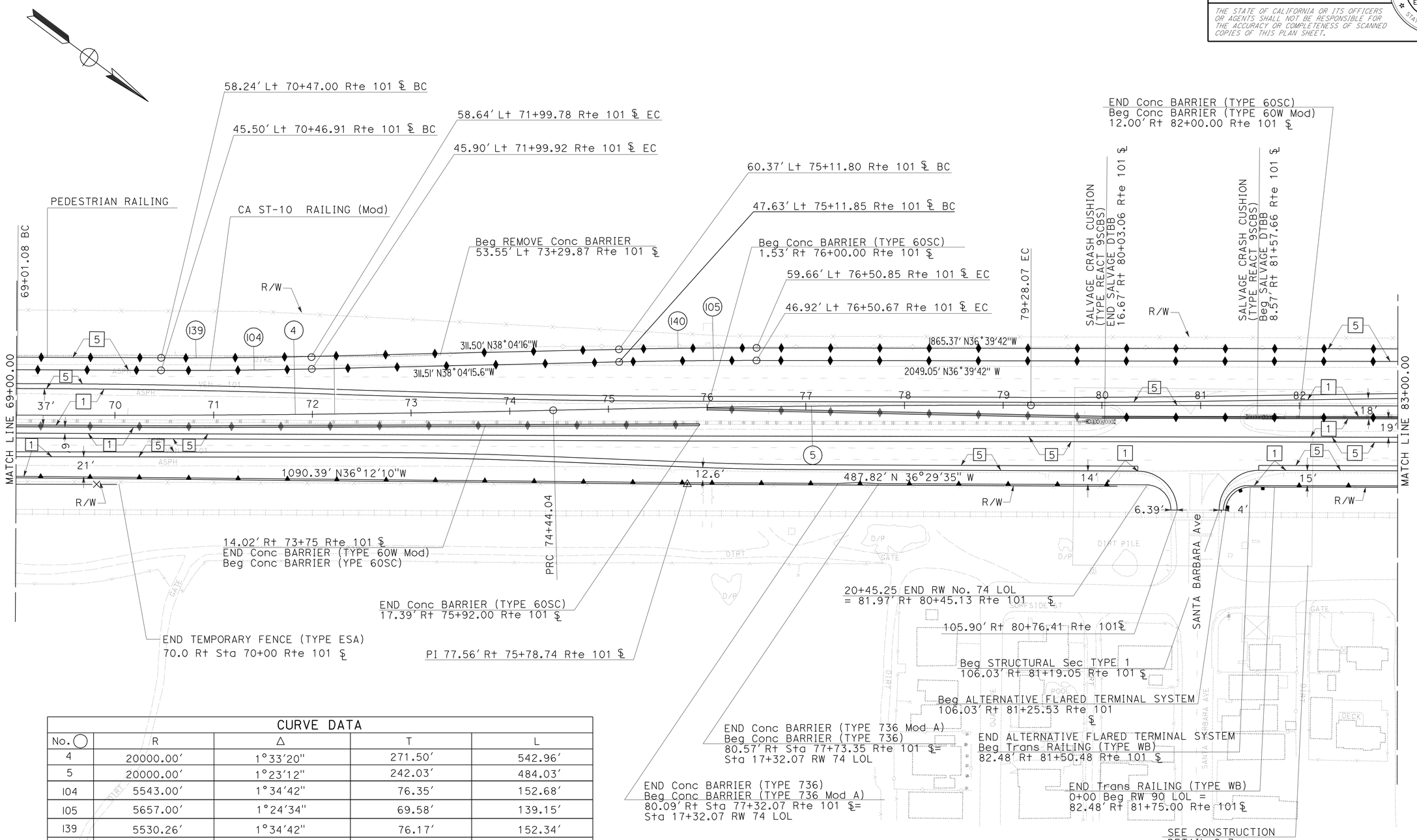

CURVE DATA				
No. ◯	R	Δ	T	L
4	20000.00'	1°33'20"	271.50'	542.96'
5	20000.00'	1°23'12"	242.03'	484.03'
104	5543.00'	1°34'42"	76.35'	152.68'
105	5657.00'	1°24'34"	69.58'	139.15'
139	5530.26'	1°34'42"	76.17'	152.34'
140	5669.74'	1°24'34"	69.74'	139.47'

LAYOUT

SCALE: 1" = 50'

L-6

STATE OF CALIFORNIA - DEPARTMENT OF TRANSPORTATION
Caltrans DESIGN

FUNCTIONAL SUPERVISOR: OC LEE
CALCULATED-DESIGNED BY: BARNABAS F. VORREITER
CHECKED BY: OC LEE
REVISED BY
DATE REVISED

LAST REVISION 02-14-11
DATE PLOTTED => 25-JUN-2011
TIME PLOTTED => 08:45

Dist	COUNTY	ROUTE	POST MILES TOTAL PROJECT	SHEET No.	TOTAL SHEETS
07	Ven,SB	101	R39.8/R43.6, 0.0/2.2	22	757

REGISTERED CIVIL ENGINEER 02-14-11 DATE

6-20-11
PLANS APPROVAL DATE

REGISTERED PROFESSIONAL ENGINEER O.C. LEE No. C28039 Exp. 03/31/12 CIVIL STATE OF CALIFORNIA

THE STATE OF CALIFORNIA OR ITS OFFICERS OR AGENTS SHALL NOT BE RESPONSIBLE FOR THE ACCURACY OR COMPLETENESS OF SCANNED COPIES OF THIS PLAN SHEET.

NOTE:

FOR ACCURATE RIGHT OF WAY DATA, CONTACT RIGHT OF WAY ENGINEERING AT THE DISTRICT OFFICE.

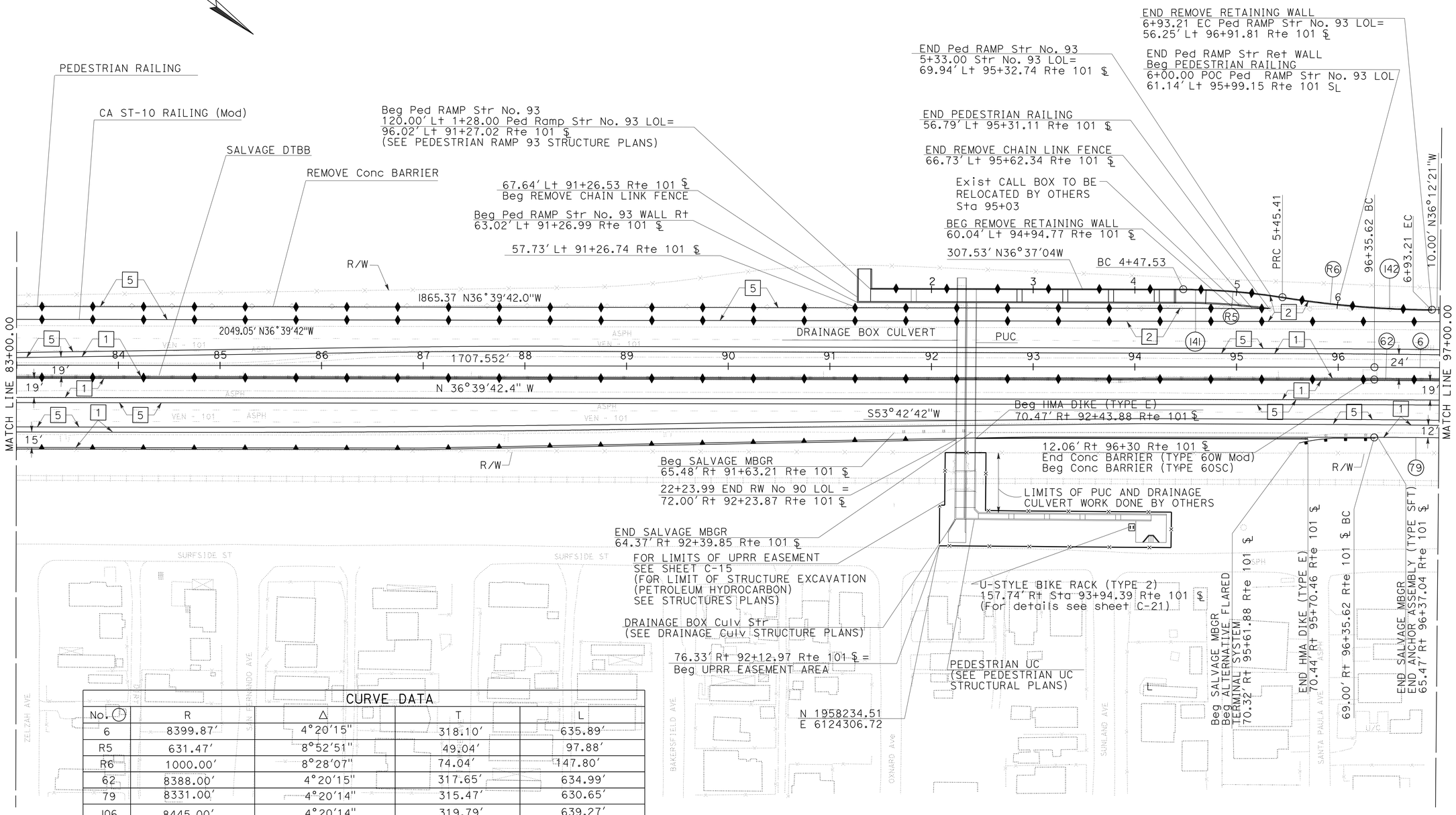

CURVE DATA

No.	R	Δ	T	L
6	8399.87'	4°20'15"	318.10'	635.89'
R5	631.47'	8°52'51"	49.04'	97.88'
R6	1000.00'	8°28'07"	74.04'	147.80'
62	8388.00'	4°20'15"	317.65'	634.99'
79	8331.00'	4°20'14"	315.47'	630.65'
106	8445.00'	4°20'14"	319.79'	639.27'
141	632.11'	8°52'50"	49.09'	97.99'
142	999.26'	8°28'07"	73.98'	147.70'

LAYOUT

SCALE: 1" = 50'

L-7

STATE OF CALIFORNIA - DEPARTMENT OF TRANSPORTATION
DESIGN
Caltrans

FUNCTIONAL SUPERVISOR: OC LEE
CALCULATED-DESIGNED BY: BARNABAS F. VORREITER
CHECKED BY: OC LEE
REVISED BY
DATE REVISED

LAST REVISION 02-14-11
DATE PLOTTED => 02-AUG-2011
TIME PLOTTED => 09:40

Dist	COUNTY	ROUTE	POST MILES TOTAL PROJECT	SHEET No.	TOTAL SHEETS
07	Ven,SB	101	R39.8/R43.6, 0.0/2.2	23	757

REGISTERED CIVIL ENGINEER 02-10-11 DATE

6-20-11
PLANS APPROVAL DATE

REGISTERED PROFESSIONAL ENGINEER O.C. LEE No. C28039 Exp. 03/31/12 CIVIL STATE OF CALIFORNIA

THE STATE OF CALIFORNIA OR ITS OFFICERS OR AGENTS SHALL NOT BE RESPONSIBLE FOR THE ACCURACY OR COMPLETENESS OF SCANNED COPIES OF THIS PLAN SHEET.

NOTE:

FOR ACCURATE RIGHT OF WAY DATA, CONTACT RIGHT OF WAY ENGINEERING AT THE DISTRICT OFFICE.

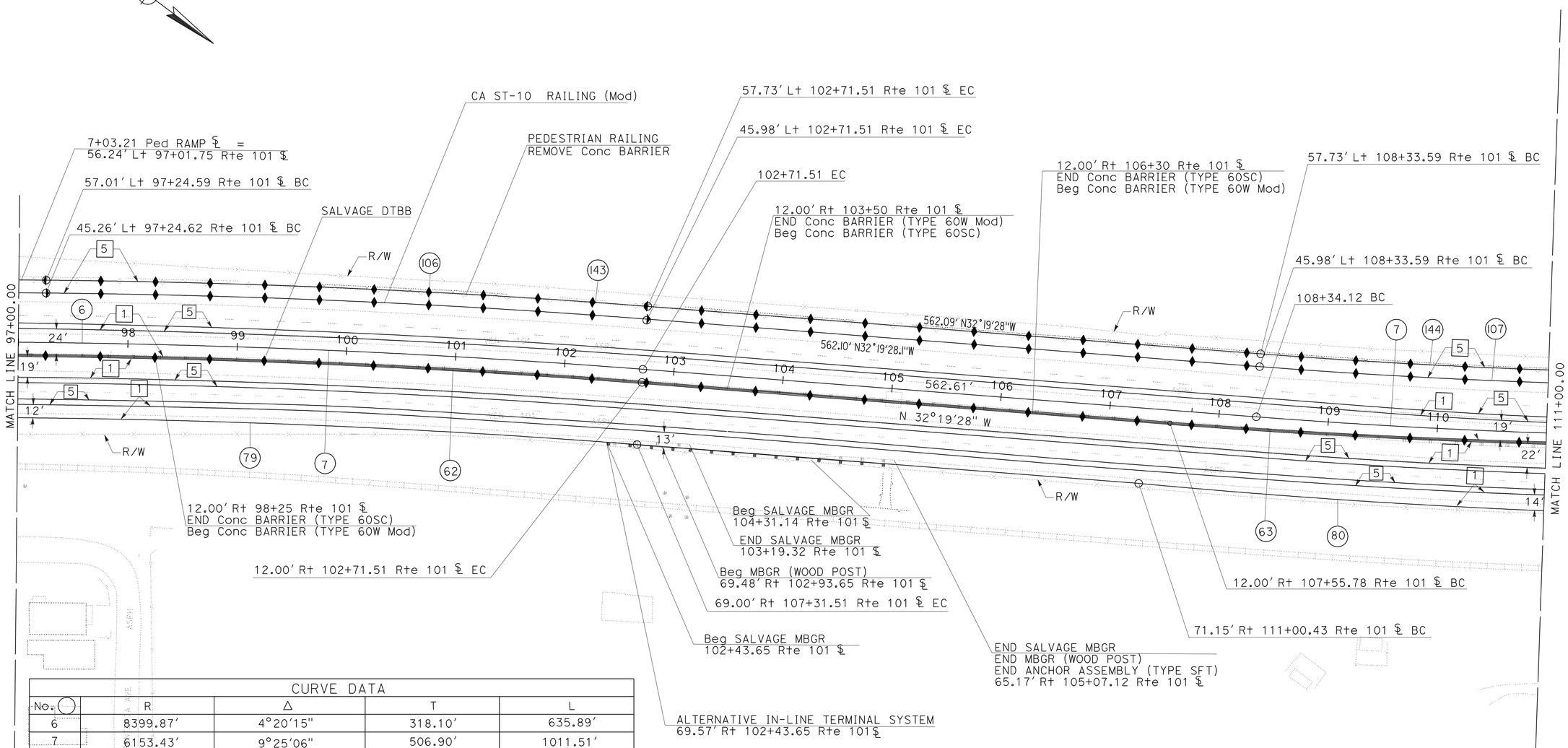

CURVE DATA

No.	R	Δ	T	L
6	8399.87'	4°20'15"	318.10'	635.89'
7	6153.43'	9°25'06"	506.90'	1011.51'
62	8388.00'	4°20'15"	317.65'	634.99'
63	6900.00'	9°25'45"	569.04'	1135.52'
79	8331.00'	4°20'14"	315.47'	630.65'
80	7154.52'	2°58'44"	186.03'	371.97'
106	8117.25'	3°52'52"	275.04'	549.86'
107	6161.75'	9°24'46'	507.28'	1012.28'
143	8129.00'	3°52'52"	275.43'	550.66'
144	6150.00'	9°24'46"	506.31'	1010.35'

LAYOUT

SCALE: 1" = 50'

L-8

STATE OF CALIFORNIA - DEPARTMENT OF TRANSPORTATION
Caltrans
DESIGN

FUNCTIONAL SUPERVISOR: OC LEE
CALCULATED-DESIGNED BY: BARNABAS F. VORREITER
CHECKED BY: OC LEE
REVISED BY
DATE REVISED

LAST REVISION 02-10-11
DATE PLOTTED => 25-JUN-2011
TIME PLOTTED => 08:45

Dist	COUNTY	ROUTE	POST MILES TOTAL PROJECT	SHEET No.	TOTAL SHEETS
07	Ven,SB	101	R39.8/R43.6, 0.0/2.2	24	757

REGISTERED CIVIL ENGINEER 02-14-11 DATE

6-20-11
PLANS APPROVAL DATE

REGISTERED PROFESSIONAL ENGINEER O.C. LEE No. C28039 Exp. 03/31/12 CIVIL STATE OF CALIFORNIA

THE STATE OF CALIFORNIA OR ITS OFFICERS OR AGENTS SHALL NOT BE RESPONSIBLE FOR THE ACCURACY OR COMPLETENESS OF SCANNED COPIES OF THIS PLAN SHEET.

NOTE:

FOR ACCURATE RIGHT OF WAY DATA, CONTACT RIGHT OF WAY ENGINEERING AT THE DISTRICT OFFICE.

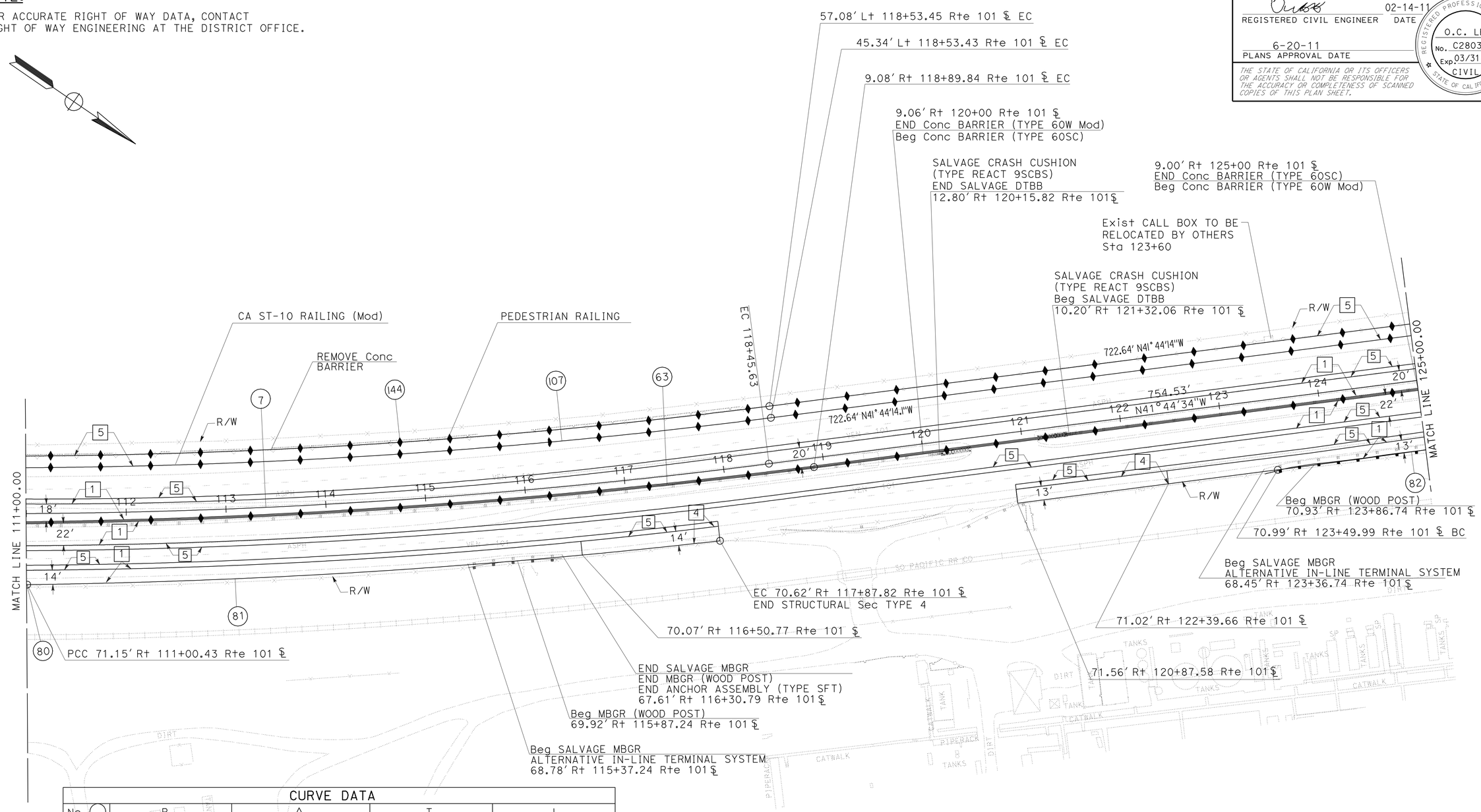

CURVE DATA

No.	R	Δ	T	L
7	6153.43'	9°25'06"	506.90'	1011.51'
63	6900.00'	9°25'45"	569.04'	1135.52'
80	7154.52'	2°58'44"	186.03'	371.97'
81	6962.00'	5°43'16"	347.88'	695.17'
82	10818.39'	2°20'03"	220.40'	440.73'
107	6161.75'	9°24'46"	507.28'	1012.28'
144	6150.00'	9°24'46"	506.31'	1010.35'

LAYOUT

SCALE: 1" = 50'

L-9

STATE OF CALIFORNIA - DEPARTMENT OF TRANSPORTATION

Caltrans® DESIGN

FUNCTIONAL SUPERVISOR: OC LEE

CALCULATED-DESIGNED BY: BARNABAS F. VORREITER

CHECKED BY: OC LEE

REVISED BY | DATE REVISED

LAST REVISION 02-14-11 | DATE PLOTTED => 25-JUN-2011 | TIME PLOTTED => 08:45

Dist	COUNTY	ROUTE	POST MILES TOTAL PROJECT	SHEET No.	TOTAL SHEETS
07	Ven,SB	101	R39.8/R43.6, 0.0/2.2	25	757

REGISTERED CIVIL ENGINEER 02-10-11 DATE

6-20-11
PLANS APPROVAL DATE

REGISTERED PROFESSIONAL ENGINEER O.C. LEE No. C28039 Exp. 03/31/12 CIVIL STATE OF CALIFORNIA

THE STATE OF CALIFORNIA OR ITS OFFICERS OR AGENTS SHALL NOT BE RESPONSIBLE FOR THE ACCURACY OR COMPLETENESS OF SCANNED COPIES OF THIS PLAN SHEET.

NOTE:

FOR ACCURATE RIGHT OF WAY DATA, CONTACT
RIGHT OF WAY ENGINEERING AT THE DISTRICT OFFICE.

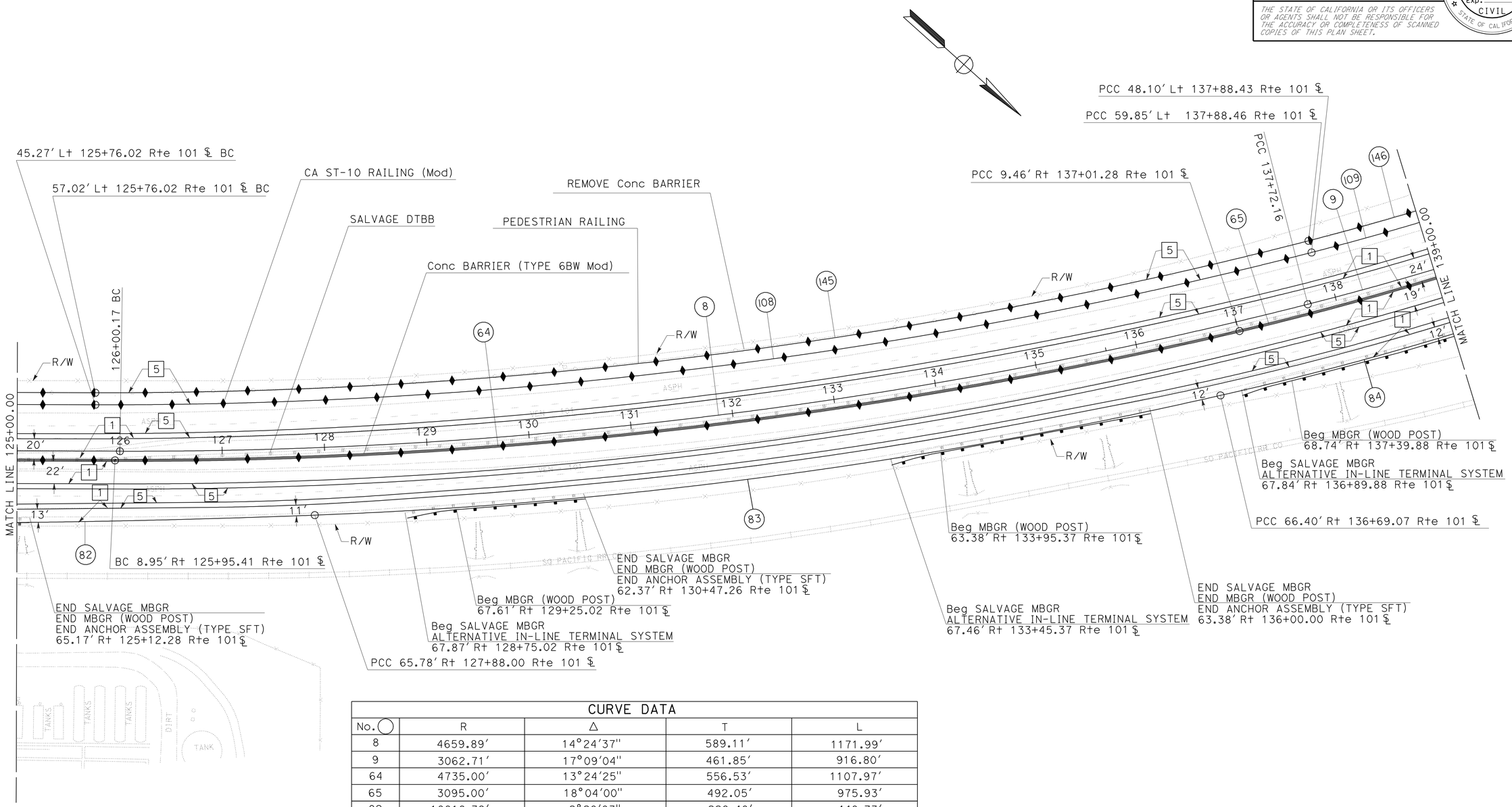

CURVE DATA				
No. ◯	R	Δ	T	L
8	4659.89′	14°24′37"	589.11′	1171.99′
9	3062.71′	17°09′04"	461.85′	916.80′
64	4735.00′	13°24′25"	556.53′	1107.97′
65	3095.00′	18°04′00"	492.05′	975.93′
82	10818.39′	2°20′03"	220.40′	440.73′
83	4792.00′	10°41′01"	448.06′	893.53′
84	3152.00′	18°39′43"	517.91′	1026.64′
108	4711.75′	14°35′44"	603.41′	1200.28′
109	2851.75′	17°24′54"	436.76′	866.79′
145	4700.00′	14°35′44"	601.90′	1197.29′
146	2840.00′	17°24′58"	434.99′	863.26′

LAYOUT

SCALE: 1" = 50′

L-10

STATE OF CALIFORNIA - DEPARTMENT OF TRANSPORTATION
Caltrans DESIGN

FUNCTIONAL SUPERVISOR: OC LEE
CALCULATED-DESIGNED BY: BARNABAS F. VORREITER
CHECKED BY: OC LEE
REVISED BY
DATE REVISED

LAST REVISION 02-10-11
DATE PLOTTED => 25-JUN-2011
TIME PLOTTED => 08:45

Dist	COUNTY	ROUTE	POST MILES TOTAL PROJECT	SHEET No.	TOTAL SHEETS
07	Ven,SB	101	R39.8/R43.6, 0.0/2.2	26	757

REGISTERED CIVIL ENGINEER 02-10-11 DATE

6-20-11
PLANS APPROVAL DATE

REGISTERED PROFESSIONAL ENGINEER O.C. LEE No. C28039 Exp. 03/31/12 CIVIL STATE OF CALIFORNIA

THE STATE OF CALIFORNIA OR ITS OFFICERS OR AGENTS SHALL NOT BE RESPONSIBLE FOR THE ACCURACY OR COMPLETENESS OF SCANNED COPIES OF THIS PLAN SHEET.

NOTE:

FOR ACCURATE RIGHT OF WAY DATA, CONTACT RIGHT OF WAY ENGINEERING AT THE DISTRICT OFFICE.

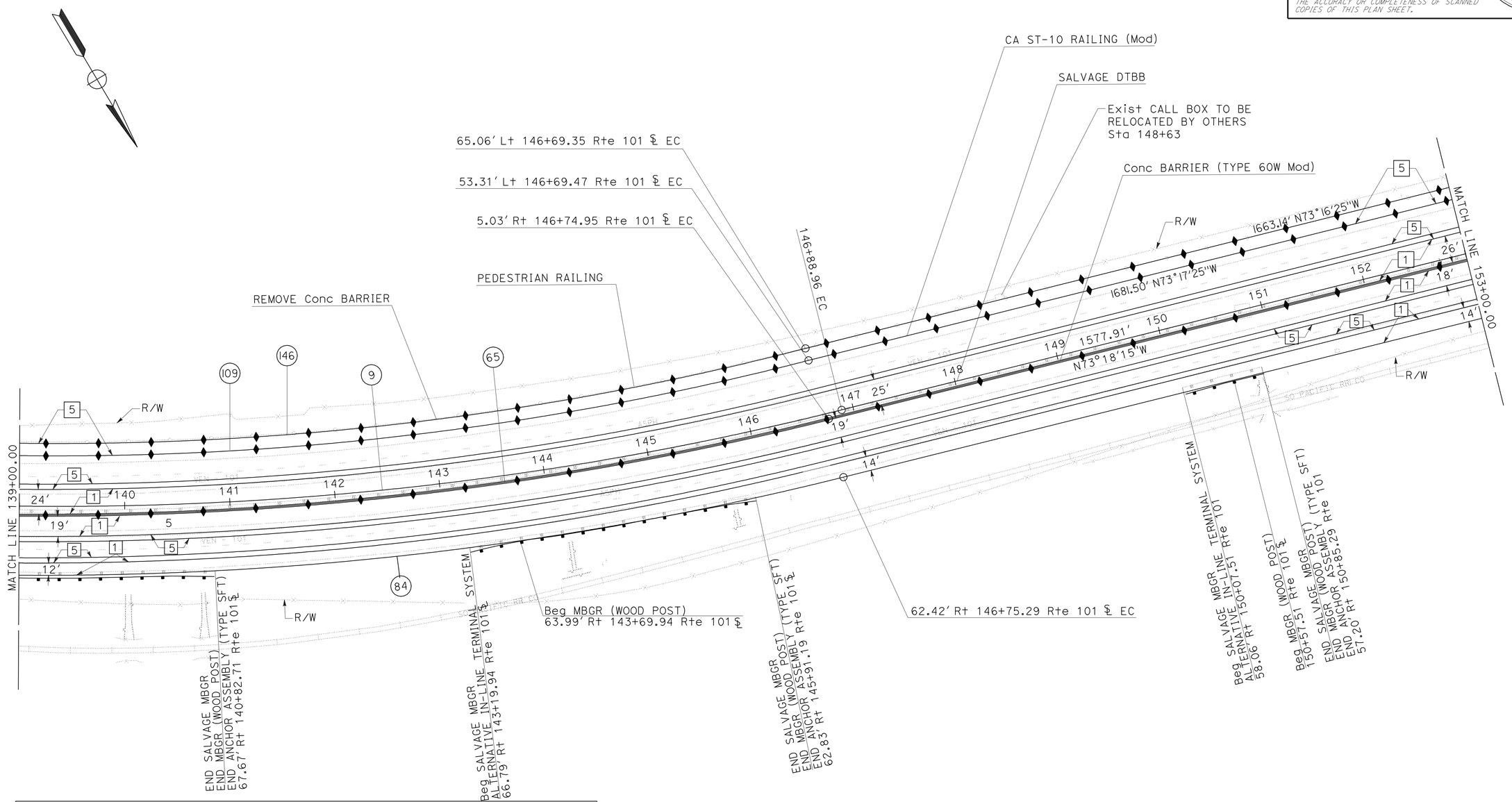

CURVE DATA

No.	R	Δ	T	L
9	3062.71'	17°09'04"	461.85'	916.80'
65	3095.00'	18°04'00"	492.05'	975.93'
84	3152.00'	18°39'43"	517.91'	1026.64'
109	2851.75'	17°24'54"	436.76'	866.79'
146	2840.00'	17°24'58"	434.99'	863.26'

LAYOUT

SCALE: 1" = 50'

L-11

STATE OF CALIFORNIA - DEPARTMENT OF TRANSPORTATION
Caltrans DESIGN

FUNCTIONAL SUPERVISOR: OC LEE
CALCULATED-DESIGNED BY: BARNABAS F. VORREITER
CHECKED BY: OC LEE
REVISED BY
DATE REVISED

LAST REVISION 02-10-11 DATE PLOTTED => 25-JUN-2011 TIME PLOTTED => 08:45

Dist	COUNTY	ROUTE	POST MILES TOTAL PROJECT	SHEET No.	TOTAL SHEETS
07	Ven,SB	101	R39.8/R43.6, 0.0/2.2	27	757

REGISTERED CIVIL ENGINEER 02-10-11 DATE

6-20-11
PLANS APPROVAL DATE

REGISTERED PROFESSIONAL ENGINEER O.C. LEE No. C28039 Exp. 03/31/12 CIVIL STATE OF CALIFORNIA

THE STATE OF CALIFORNIA OR ITS OFFICERS OR AGENTS SHALL NOT BE RESPONSIBLE FOR THE ACCURACY OR COMPLETENESS OF SCANNED COPIES OF THIS PLAN SHEET.

NOTE:

FOR ACCURATE RIGHT OF WAY DATA, CONTACT
RIGHT OF WAY ENGINEERING AT THE DISTRICT OFFICE.

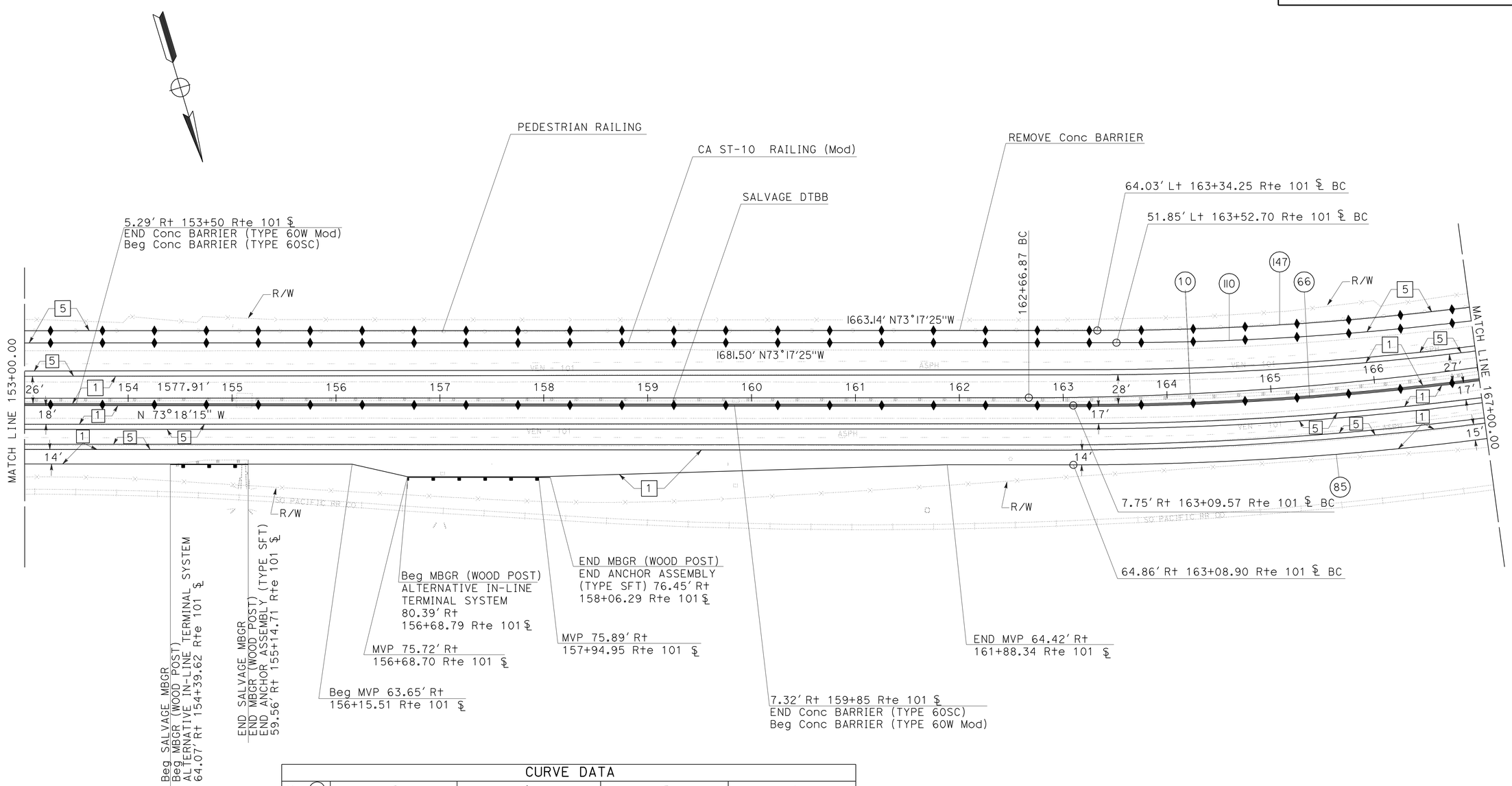

CURVE DATA

No. ◯	R	Δ	T	L
10	3239.54′	27°13′30″	784.48′	1539.32′
66	3051.00′	27°37′28″	750.09′	1471.01′
85	3108.00′	19°37′15″	537.42′	1064.32′
110	2800.00′	14°56′03″	366.99′	729.83′
147	2900.00′	14°50′05′	377.54′	750.85′

LAYOUT

SCALE: 1" = 50′

L-12

STATE OF CALIFORNIA - DEPARTMENT OF TRANSPORTATION
Caltrans DESIGN

FUNCTIONAL SUPERVISOR: OC LEE
CALCULATED-DESIGNED BY: BARNABAS F. VORREITER
CHECKED BY: OC LEE
REVISED BY
DATE REVISED

LAST REVISION 02-10-11
DATE PLOTTED => 25-JUN-2011
TIME PLOTTED => 08:45

Dist	COUNTY	ROUTE	POST MILES TOTAL PROJECT	SHEET No.	TOTAL SHEETS
07	Ven,SB	101	R39.8/R43.6, 0.0/2.2	28	757

REGISTERED CIVIL ENGINEER 02-10-11 DATE

6-20-11
PLANS APPROVAL DATE

REGISTERED PROFESSIONAL ENGINEER O.C. LEE No. C28039 Exp. 03/31/12 CIVIL STATE OF CALIFORNIA

THE STATE OF CALIFORNIA OR ITS OFFICERS OR AGENTS SHALL NOT BE RESPONSIBLE FOR THE ACCURACY OR COMPLETENESS OF SCANNED COPIES OF THIS PLAN SHEET.

NOTE:

FOR ACCURATE RIGHT OF WAY DATA, CONTACT RIGHT OF WAY ENGINEERING AT THE DISTRICT OFFICE.

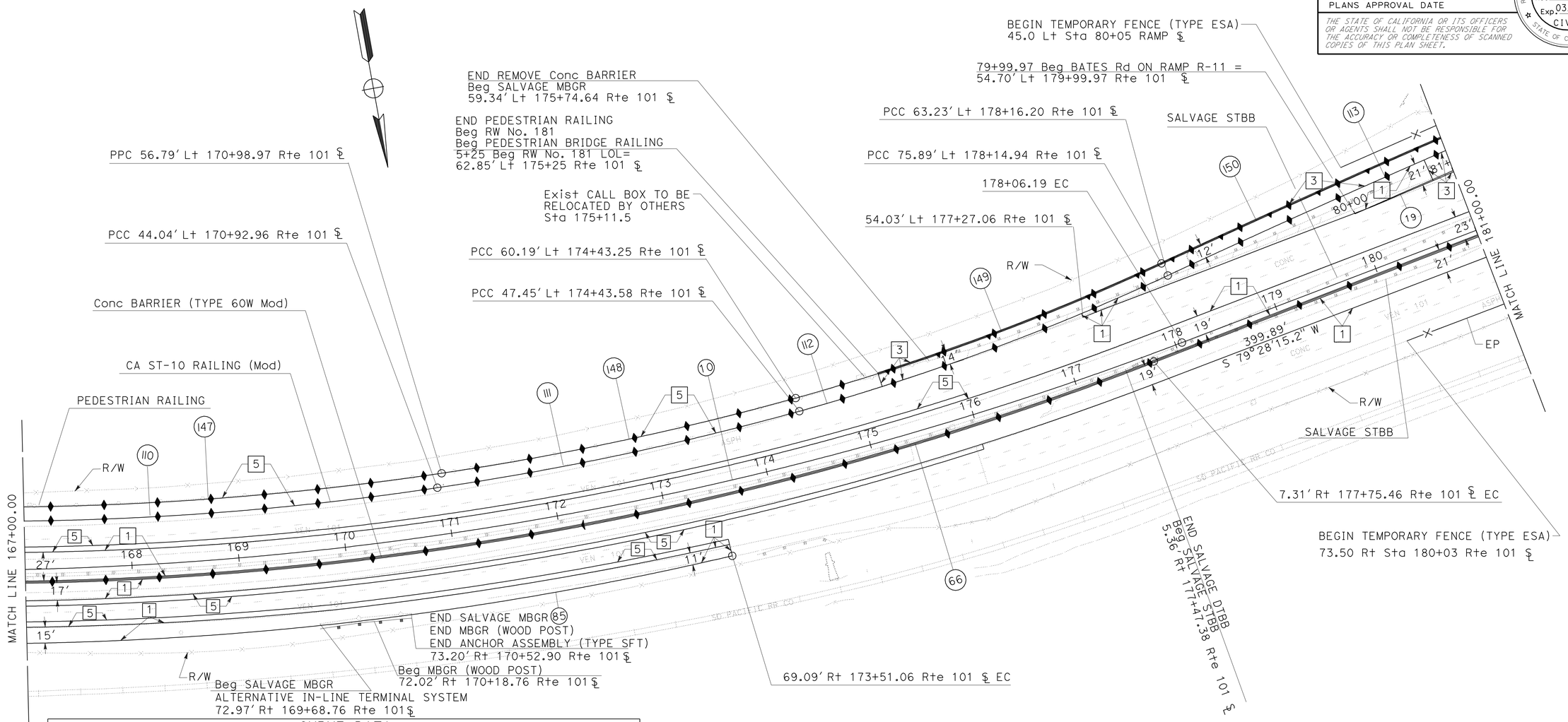

CURVE DATA

No.	R	Δ	T	L
10	3239.54'	27°13'30"	784.48'	1539.32'
19	11800.00'	1°31'52"	157.67'	315.32'
66	3051.00'	27°37'28"	750.09'	1471.01'
85	3108.00'	19°37'15"	537.42'	1064.32'
110	2800.00'	14°56'03"	366.99'	729.83'
111	2753.93'	7°11'36"	173.10'	345.75'
112	2237.87'	9°23'49"	183.93'	367.03'
113	11820.03'	2°25'06"	249.45'	499.88'
147	2900.00'	14°50'05"	377.54'	750.85'
148	2741.26'	7°04'03"	169.29'	338.14'
149	2225.13'	9°23'05"	182.64'	364.46'
150	11832.74'	2°25'16"	250.04'	500.00'

LAYOUT

SCALE: 1" = 50'

L-13

STATE OF CALIFORNIA - DEPARTMENT OF TRANSPORTATION
Caltrans
DESIGN

FUNCTIONAL SUPERVISOR: OC LEE
CALCULATED-DESIGNED BY: BARNABAS F. VORREITER
CHECKED BY: OC LEE
REVISED BY
DATE REVISED

LAST REVISION 02-10-11
DATE PLOTTED => 28-JUN-2011
TIME PLOTTED => 17:35

Dist	COUNTY	ROUTE	POST MILES TOTAL PROJECT	SHEET No.	TOTAL SHEETS
07	Ven,SB	101	R39.8/R43.6, 0.0/2.2	29	757

REGISTERED CIVIL ENGINEER 02-09-11 DATE

6-20-11
PLANS APPROVAL DATE

REGISTERED PROFESSIONAL ENGINEER O.C. LEE No. C28039 Exp. 03/31/12 CIVIL STATE OF CALIFORNIA

THE STATE OF CALIFORNIA OR ITS OFFICERS OR AGENTS SHALL NOT BE RESPONSIBLE FOR THE ACCURACY OR COMPLETENESS OF SCANNED COPIES OF THIS PLAN SHEET.

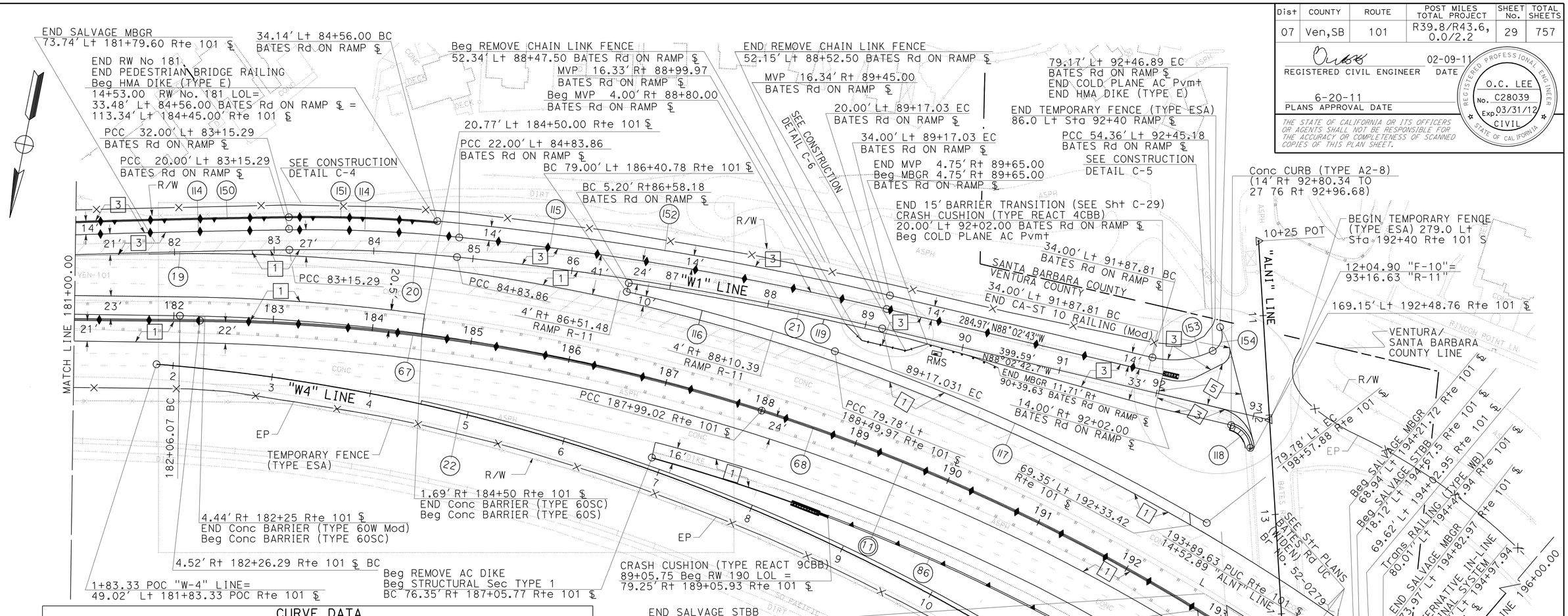

CURVE DATA

No.	R	Δ	T	L
11	2012.19′	75°13′45"	1550.41′	2642.00′
19	11800.00′	1°31′52"	157.67′	315.32′
20	1470.00′	6°34′14"	84.38′	168.57′
21	3300.00	7°31′15"	216.90′	433.17′
22	1960.00′	28°11′58"	492.31′	964.66′
67	1906.00′	17°12′16"	288.33′	572.32′
68	2012.19′	30°08′15"	541.75′	1058.41′
86	1985.00′	18°45′59"	328.02′	650.16′
87	1933.01′	4°05′16"	68.98′	137.91′
88	1985.00′	14°39′11"	255.22′	507.65′
113	11820.03′	2°25′06"	249.45′	498.88′
114	1490.08′	6°34′15"	85.54′	170.88′
115	3320.09′	7°31′14"	218.20′	435.78′
116	1956.00′	6°22′12"	108.84′	217.46′
117	2091.97′	28°41′58"	535.17′	1047.87′
118	25.00′	73°03′57"	18.52′	31.88′
119	3296.00′	4°29′29"	129.26′	258.38′
150	11832.74′	2°25′19"	250.04′	500.00′
151	1502.74′	5°41′04"	74.61′	149.09′
152	3333.34′	7°55′20"	230.81′	460.89′
153	91.00′	39°05′02"	32.30′	62.08′
154	17.00′	93°59′19"	18.23′	27.89′

NOTE:

FOR ACCURATE RIGHT OF WAY DATA, CONTACT
RIGHT OF WAY ENGINEERING AT THE DISTRICT OFFICE.

LAYOUT

SCALE: 1" = 50′

L-14

STATE OF CALIFORNIA - DEPARTMENT OF TRANSPORTATION
Caltrans DESIGN

FUNCTIONAL SUPERVISOR: OC LEE
CALCULATED-DESIGNED BY: OC LEE
CHECKED BY
REVISED BY
DATE REVISED

LAST REVISION 02-09-11
DATE PLOTTED => 01-AUG-2011
TIME PLOTTED => 14:30

Dist	COUNTY	ROUTE	POST MILES TOTAL PROJECT	SHEET No.	TOTAL SHEETS
07	Ven,SB	101	R39.8/R43.6, 0.0/2.2	30	757

REGISTERED CIVIL ENGINEER 01-12-11 DATE

6-20-11
PLANS APPROVAL DATE

REGISTERED PROFESSIONAL ENGINEER O.C. LEE No. C28039 Exp. 03/31/12 CIVIL STATE OF CALIFORNIA

THE STATE OF CALIFORNIA OR ITS OFFICERS OR AGENTS SHALL NOT BE RESPONSIBLE FOR THE ACCURACY OR COMPLETENESS OF SCANNED COPIES OF THIS PLAN SHEET.

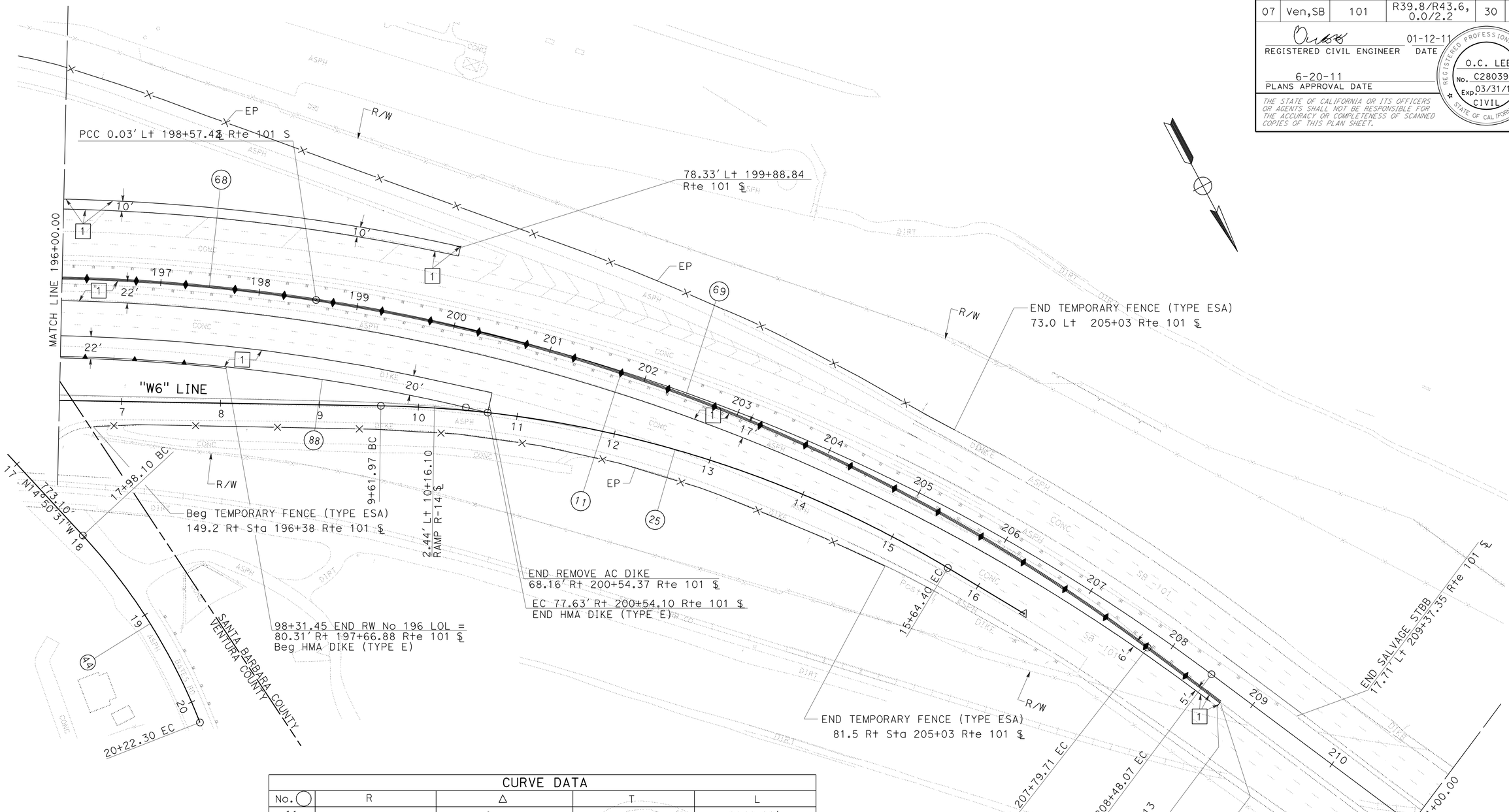

CURVE DATA				
No. ◯	R	Δ	T	L
11	2012.19'	75°13'45"	1550.41'	2642.00'
25	1150.00'	30°00'52"	308.30'	602.43'
44	600.00'	21°24'36"	113.43'	224.20'
68	2012.19'	30°08'15"	541.75'	1058.41'
69	1868.68'	28°12'35"	469.55'	920.05'
88	1985.00'	14°39'11"	255.22'	507.65'

NOTE:

FOR ACCURATE RIGHT OF WAY DATA, CONTACT
RIGHT OF WAY ENGINEERING AT THE DISTRICT OFFICE.

LAYOUT

SCALE: 1" = 50'

L-15

REVISED BY | DATE REVISED
BARNABAS F. VORREITER | OC LEE
CALCULATED-DESIGNED BY | CHECKED BY
FUNCTIONAL SUPERVISOR | OC LEE

STATE OF CALIFORNIA - DEPARTMENT OF TRANSPORTATION
Caltrans
DESIGN

LAST REVISION 01-12-11 | DATE PLOTTED => 25-JUN-2011 | TIME PLOTTED => 08:46

Dist	COUNTY	ROUTE	POST MILES TOTAL PROJECT	SHEET No.	TOTAL SHEETS
07	Ven,SB	101	R39.8/R43.6, 0.0/2.2	31	757

REGISTERED CIVIL ENGINEER 01-12-11 DATE

6-20-11
PLANS APPROVAL DATE

REGISTERED PROFESSIONAL ENGINEER O.C. LEE No. C28039 Exp. 03/31/12 CIVIL STATE OF CALIFORNIA

THE STATE OF CALIFORNIA OR ITS OFFICERS OR AGENTS SHALL NOT BE RESPONSIBLE FOR THE ACCURACY OR COMPLETENESS OF SCANNED COPIES OF THIS PLAN SHEET.

NOTE:

FOR ACCURATE RIGHT OF WAY DATA, CONTACT RIGHT OF WAY ENGINEERING AT THE DISTRICT OFFICE.

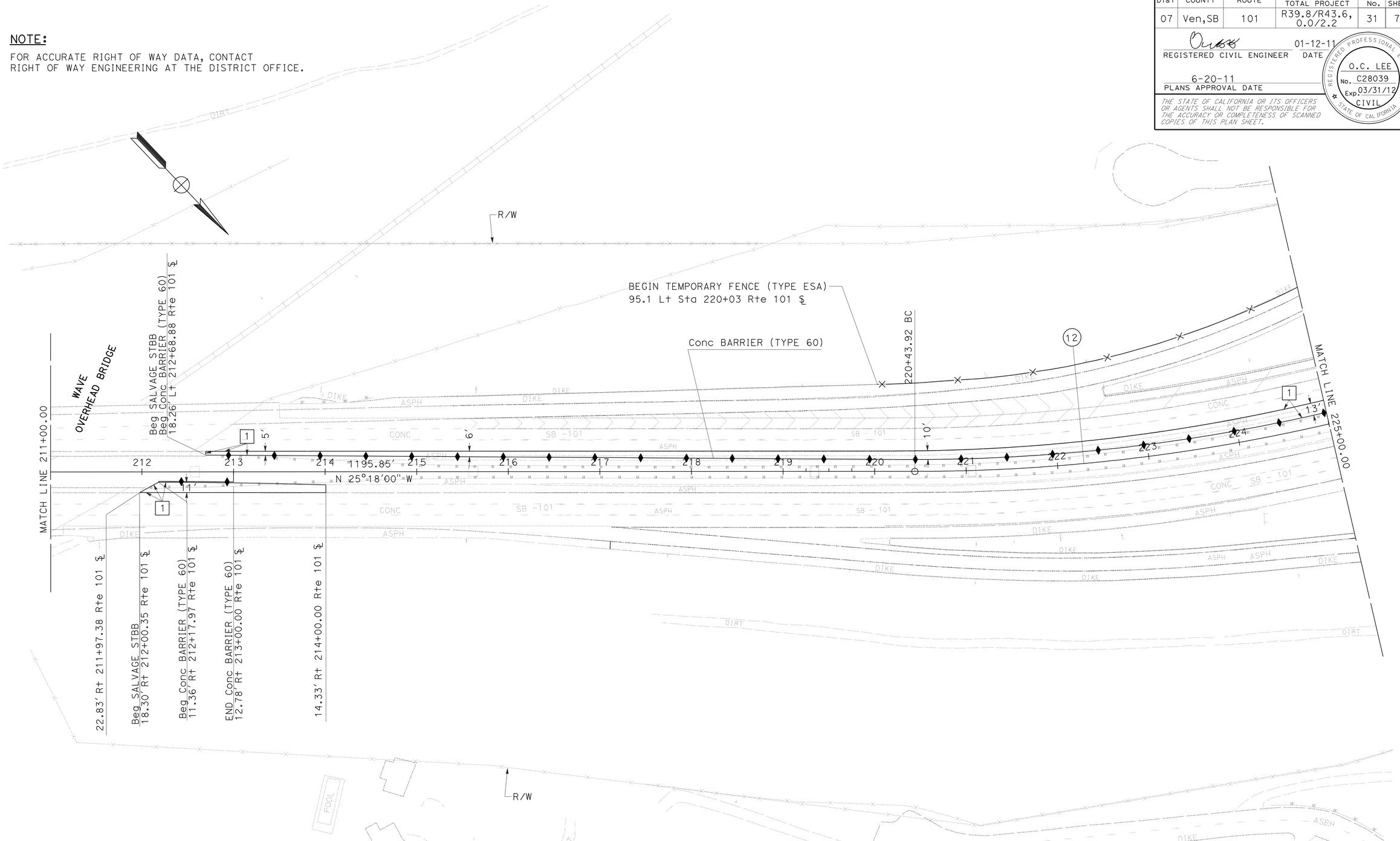

CURVE DATA				
No. ◯	R	Δ	T	L
12	2006.07'	42°43'18"	784.59'	1495.79'

LAYOUT

SCALE: 1" = 50'

L-16

STATE OF CALIFORNIA - DEPARTMENT OF TRANSPORTATION
Caltrans
DESIGN

FUNCTIONAL SUPERVISOR: OC LEE
CALCULATED-DESIGNED BY: BARNABAS F. VORREITER
CHECKED BY: OC LEE
REVISED BY
DATE REVISED

LAST REVISION 01-12-11
DATE PLOTTED => 25-JUN-2011
TIME PLOTTED => 08:46

Dist	COUNTY	ROUTE	POST MILES TOTAL PROJECT	SHEET No.	TOTAL SHEETS
07	Ven,SB	101	R39.8/R43.6, 0.0/2.2	32	757

REGISTERED CIVIL ENGINEER 01-12-11 DATE

6-20-11
PLANS APPROVAL DATE

REGISTERED PROFESSIONAL ENGINEER O.C. LEE No. C28039 Exp. 03/31/12 CIVIL STATE OF CALIFORNIA

THE STATE OF CALIFORNIA OR ITS OFFICERS OR AGENTS SHALL NOT BE RESPONSIBLE FOR THE ACCURACY OR COMPLETENESS OF SCANNED COPIES OF THIS PLAN SHEET.

NOTE:

FOR ACCURATE RIGHT OF WAY DATA, CONTACT RIGHT OF WAY ENGINEERING AT THE DISTRICT OFFICE.

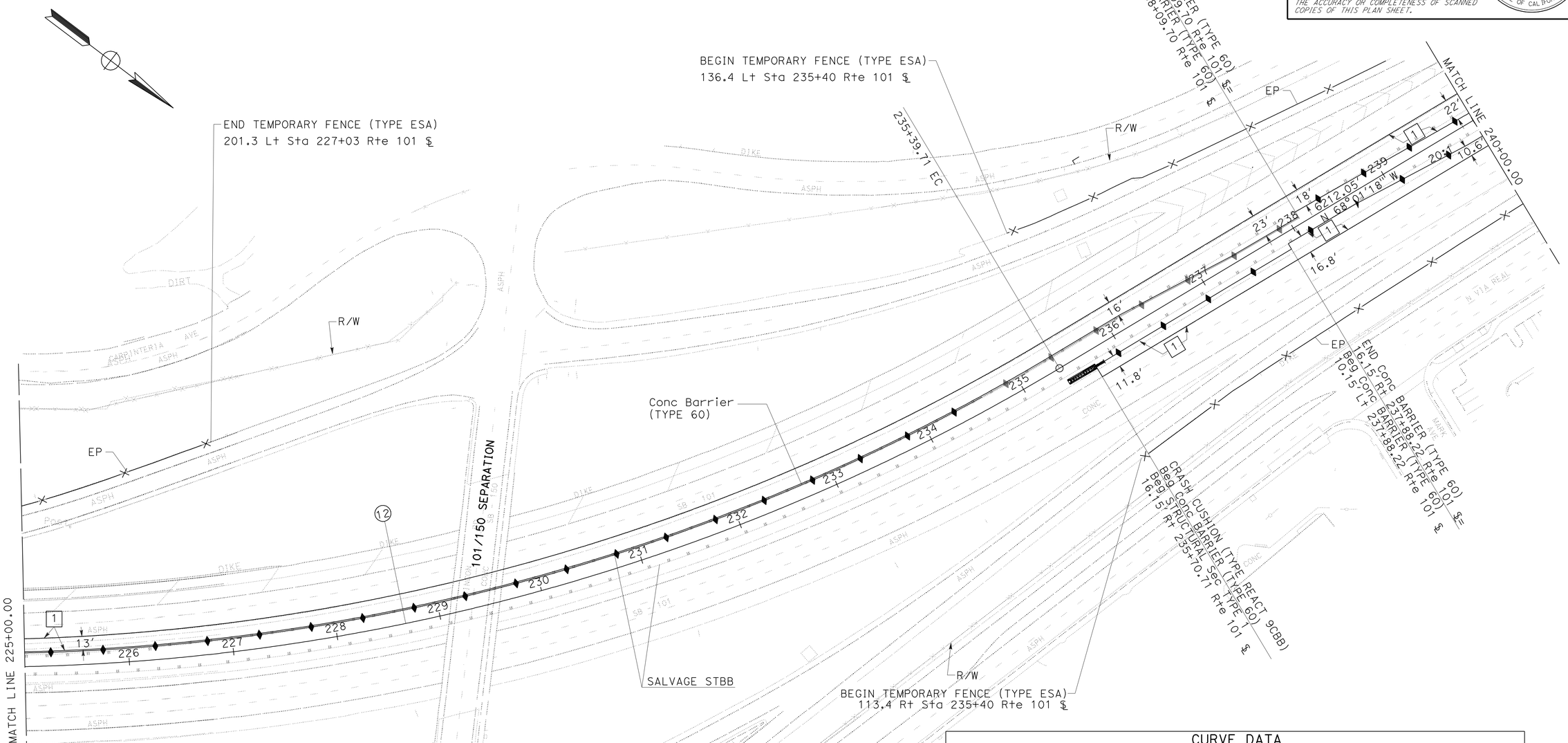

CURVE DATA				
No. ◯	R	Δ	T	L
12	2006.07′	42°43′18″	784.59′	1495.79′

LAYOUT

SCALE: 1" = 50′

L-17

STATE OF CALIFORNIA - DEPARTMENT OF TRANSPORTATION

Caltrans®

DESIGN

FUNCTIONAL SUPERVISOR: OC LEE

CALCULATED-DESIGNED BY: BARNABAS F. VORREITER

CHECKED BY: OC LEE

REVISED BY

DATE REVISED

LAST REVISION 01-12-11

DATE PLOTTED => 25-JUN-2011

TIME PLOTTED => 08:46

Dist	COUNTY	ROUTE	POST MILES TOTAL PROJECT	SHEET No.	TOTAL SHEETS
07	Ven,SB	101	R39.8/R43.6, 0.0/2.2	33	757

REGISTERED CIVIL ENGINEER 01-12-11 DATE

6-20-11
PLANS APPROVAL DATE

REGISTERED PROFESSIONAL ENGINEER O.C. LEE No. C28039 Exp. 03/31/12 CIVIL STATE OF CALIFORNIA

THE STATE OF CALIFORNIA OR ITS OFFICERS OR AGENTS SHALL NOT BE RESPONSIBLE FOR THE ACCURACY OR COMPLETENESS OF SCANNED COPIES OF THIS PLAN SHEET.

NOTE:

FOR ACCURATE RIGHT OF WAY DATA, CONTACT RIGHT OF WAY ENGINEERING AT THE DISTRICT OFFICE.

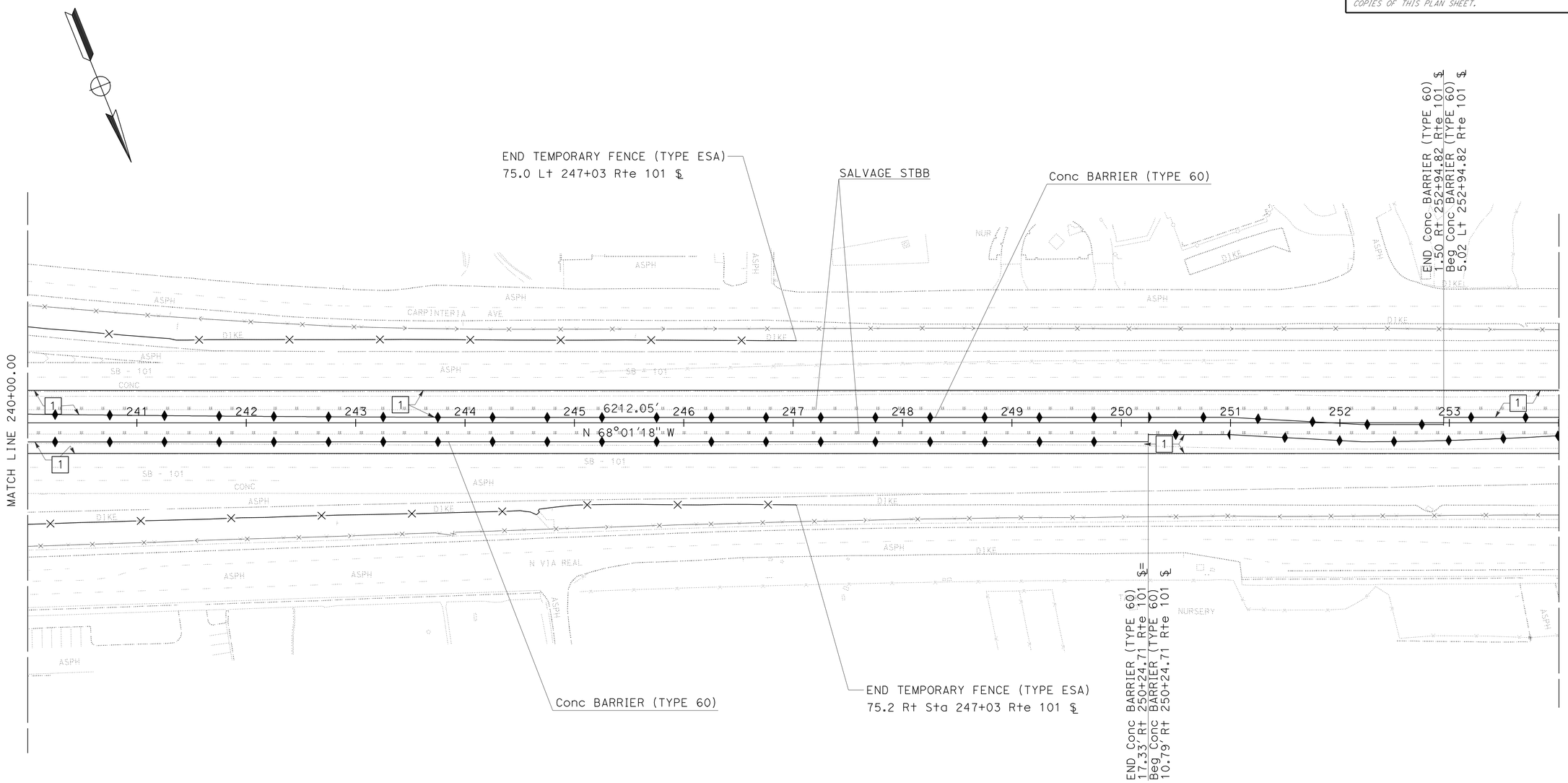

LAYOUT

SCALE: 1" = 50'

L-18

STATE OF CALIFORNIA - DEPARTMENT OF TRANSPORTATION
Caltrans
DESIGN

FUNCTIONAL SUPERVISOR: OC LEE
CALCULATED-DESIGNED BY: BARNABAS F. VORREITER
CHECKED BY: OC LEE
REVISED BY
DATE REVISED

LAST REVISION 01-12-11
DATE PLOTTED => 25-JUN-2011
TIME PLOTTED => 08:46

Dist	COUNTY	ROUTE	POST MILES TOTAL PROJECT	SHEET No.	TOTAL SHEETS
07	Ven,SB	101	R39.8/R43.6, 0.0/2.2	34	757

REGISTERED CIVIL ENGINEER 01-12-11 DATE

6-20-11
PLANS APPROVAL DATE

REGISTERED PROFESSIONAL ENGINEER O.C. LEE No. C28039 Exp. 03/31/12 CIVIL STATE OF CALIFORNIA

THE STATE OF CALIFORNIA OR ITS OFFICERS OR AGENTS SHALL NOT BE RESPONSIBLE FOR THE ACCURACY OR COMPLETENESS OF SCANNED COPIES OF THIS PLAN SHEET.

NOTE:

FOR ACCURATE RIGHT OF WAY DATA, CONTACT RIGHT OF WAY ENGINEERING AT THE DISTRICT OFFICE.

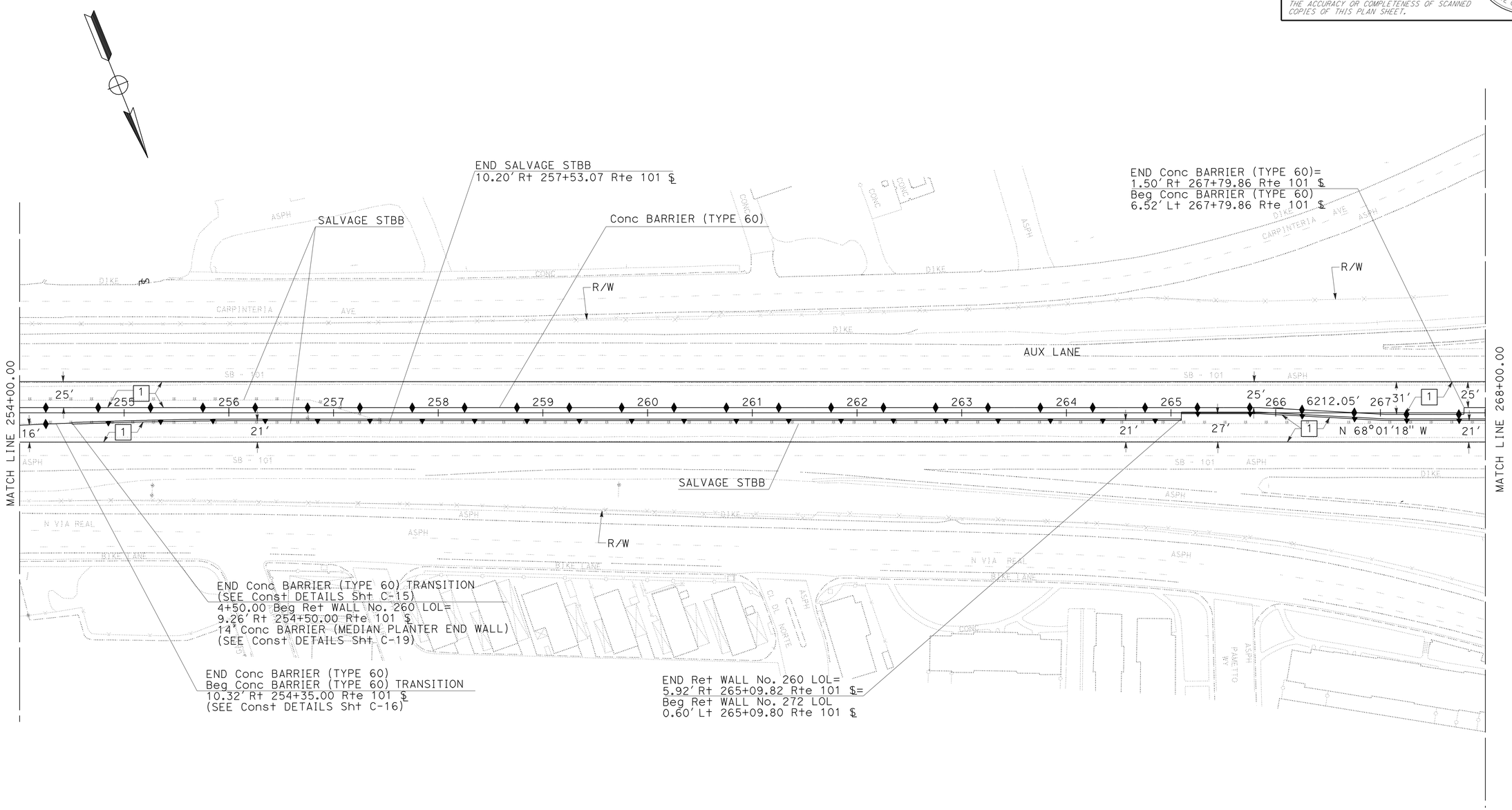

LAYOUT

SCALE: 1" = 50'

L-19

STATE OF CALIFORNIA - DEPARTMENT OF TRANSPORTATION

Caltrans® **DESIGN**

FUNCTIONAL SUPERVISOR: OC LEE

CALCULATED-DESIGNED BY: BARNABAS F. VORREITER

CHECKED BY: OC LEE

REVISED BY

DATE REVISED

LAST REVISION 01-12-11

DATE PLOTTED => 25-JUN-2011
TIME PLOTTED => 08:46

Dist	COUNTY	ROUTE	POST MILES TOTAL PROJECT	SHEET No.	TOTAL SHEETS
07	Ven,SB	101	R39.8/R43.6, 0.0/2.2	35	757

REGISTERED CIVIL ENGINEER 01-12-11 DATE

6-20-11
PLANS APPROVAL DATE

REGISTERED PROFESSIONAL ENGINEER O.C. LEE No. C28039 Exp. 03/31/12 CIVIL STATE OF CALIFORNIA

THE STATE OF CALIFORNIA OR ITS OFFICERS OR AGENTS SHALL NOT BE RESPONSIBLE FOR THE ACCURACY OR COMPLETENESS OF SCANNED COPIES OF THIS PLAN SHEET.

NOTE:

FOR ACCURATE RIGHT OF WAY DATA, CONTACT RIGHT OF WAY ENGINEERING AT THE DISTRICT OFFICE.

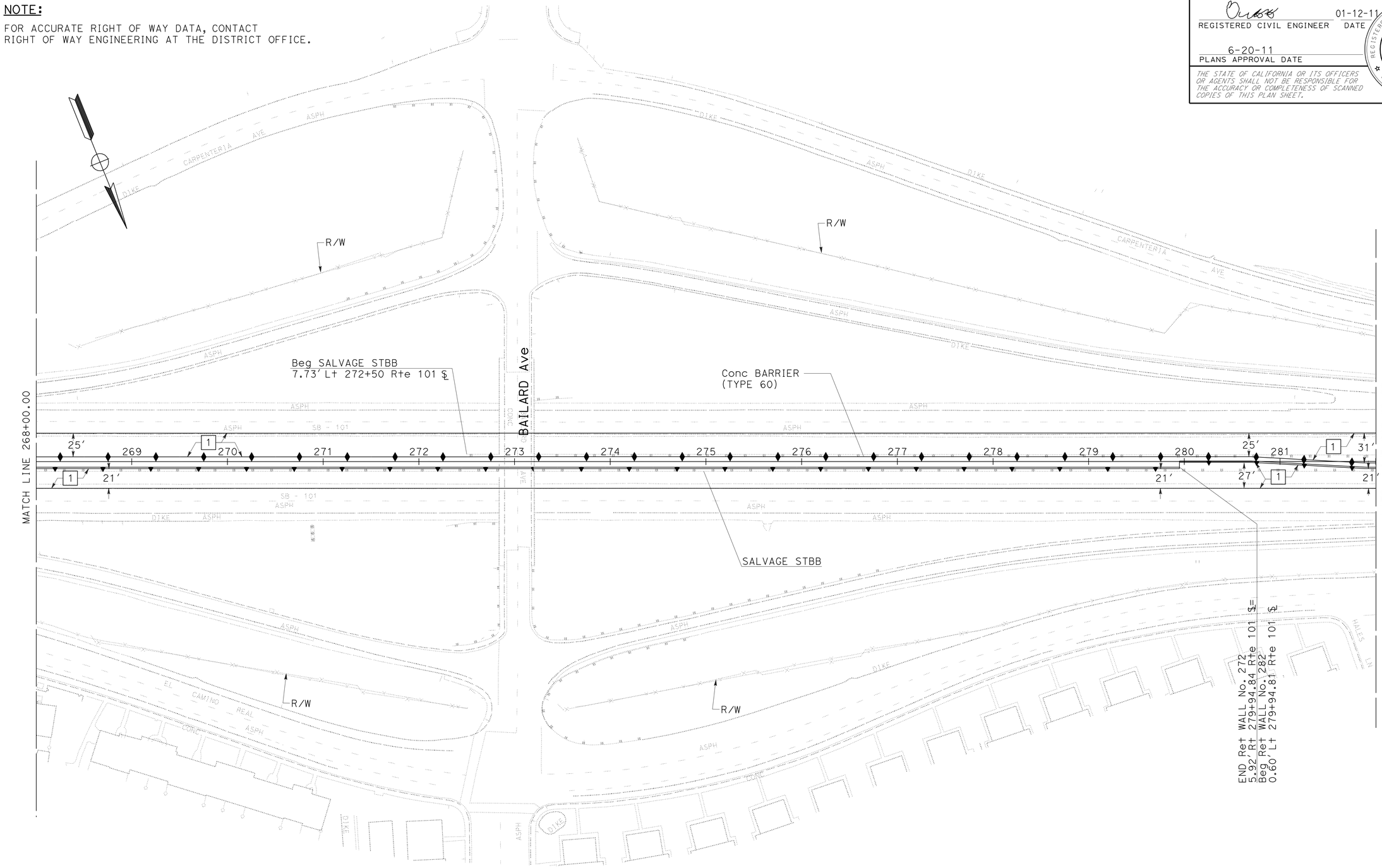

LAYOUT

SCALE: 1" = 50'

L-20

STATE OF CALIFORNIA - DEPARTMENT OF TRANSPORTATION

Caltrans® **DESIGN**

FUNCTIONAL SUPERVISOR: OC LEE

CALCULATED-DESIGNED BY: BARNABAS F. VORREITER

CHECKED BY: OC LEE

REVISED BY

DATE REVISED

LAST REVISION 01-12-11

DATE PLOTTED => 25-JUN-2011
TIME PLOTTED => 08:46

Dist	COUNTY	ROUTE	POST MILES TOTAL PROJECT	SHEET No.	TOTAL SHEETS
07	Ven,SB	101	R39.8/R43.6, 0.0/2.2	36	757

REGISTERED CIVIL ENGINEER 12-07-10 DATE

6-20-11
PLANS APPROVAL DATE

REGISTERED PROFESSIONAL ENGINEER O.C. LEE No. C28039 Exp. 03/31/12 CIVIL STATE OF CALIFORNIA

THE STATE OF CALIFORNIA OR ITS OFFICERS OR AGENTS SHALL NOT BE RESPONSIBLE FOR THE ACCURACY OR COMPLETENESS OF SCANNED COPIES OF THIS PLAN SHEET.

NOTE:

FOR ACCURATE RIGHT OF WAY DATA, CONTACT
RIGHT OF WAY ENGINEERING AT THE DISTRICT OFFICE.

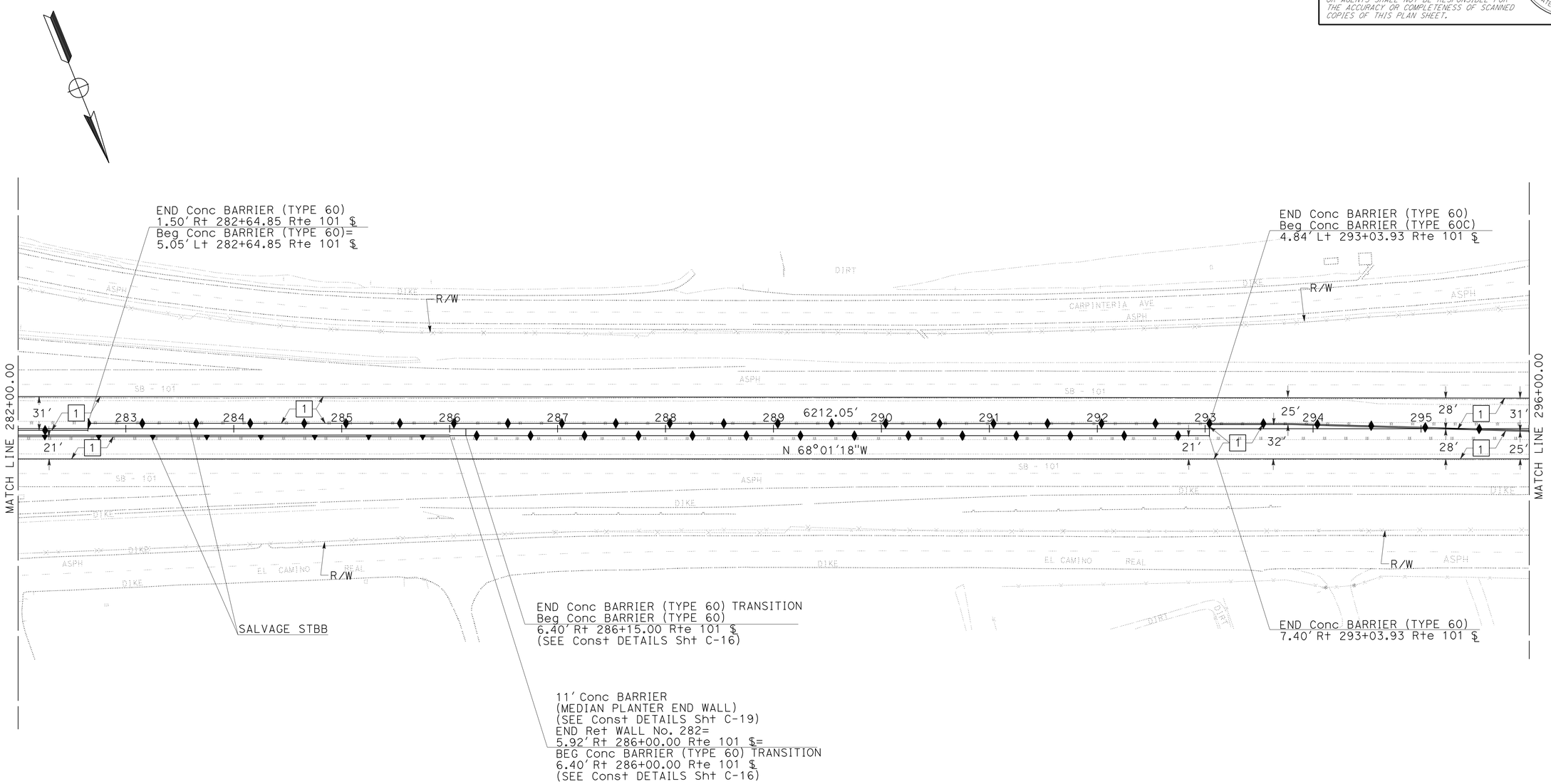

LAYOUT

SCALE: 1" = 50'

L-21

STATE OF CALIFORNIA - DEPARTMENT OF TRANSPORTATION
Caltrans
DESIGN

FUNCTIONAL SUPERVISOR: OC LEE
CALCULATED-DESIGNED BY: BARNABAS F. VORREITER
CHECKED BY: OC LEE
REVISED BY
DATE REVISED

LAST REVISION 12-07-10
DATE PLOTTED => 25-JUN-2011
TIME PLOTTED => 08:46

Dist	COUNTY	ROUTE	POST MILES TOTAL PROJECT	SHEET No.	TOTAL SHEETS
07	Ven,SB	101	R39.8/R43.6, 0.0/2.2	37	757

REGISTERED CIVIL ENGINEER 01-12-11 DATE

6-20-11
PLANS APPROVAL DATE

REGISTERED PROFESSIONAL ENGINEER O.C. LEE No. C28039 Exp. 03/31/12 CIVIL STATE OF CALIFORNIA

THE STATE OF CALIFORNIA OR ITS OFFICERS OR AGENTS SHALL NOT BE RESPONSIBLE FOR THE ACCURACY OR COMPLETENESS OF SCANNED COPIES OF THIS PLAN SHEET.

NOTE:

FOR ACCURATE RIGHT OF WAY DATA, CONTACT
RIGHT OF WAY ENGINEERING AT THE DISTRICT OFFICE.

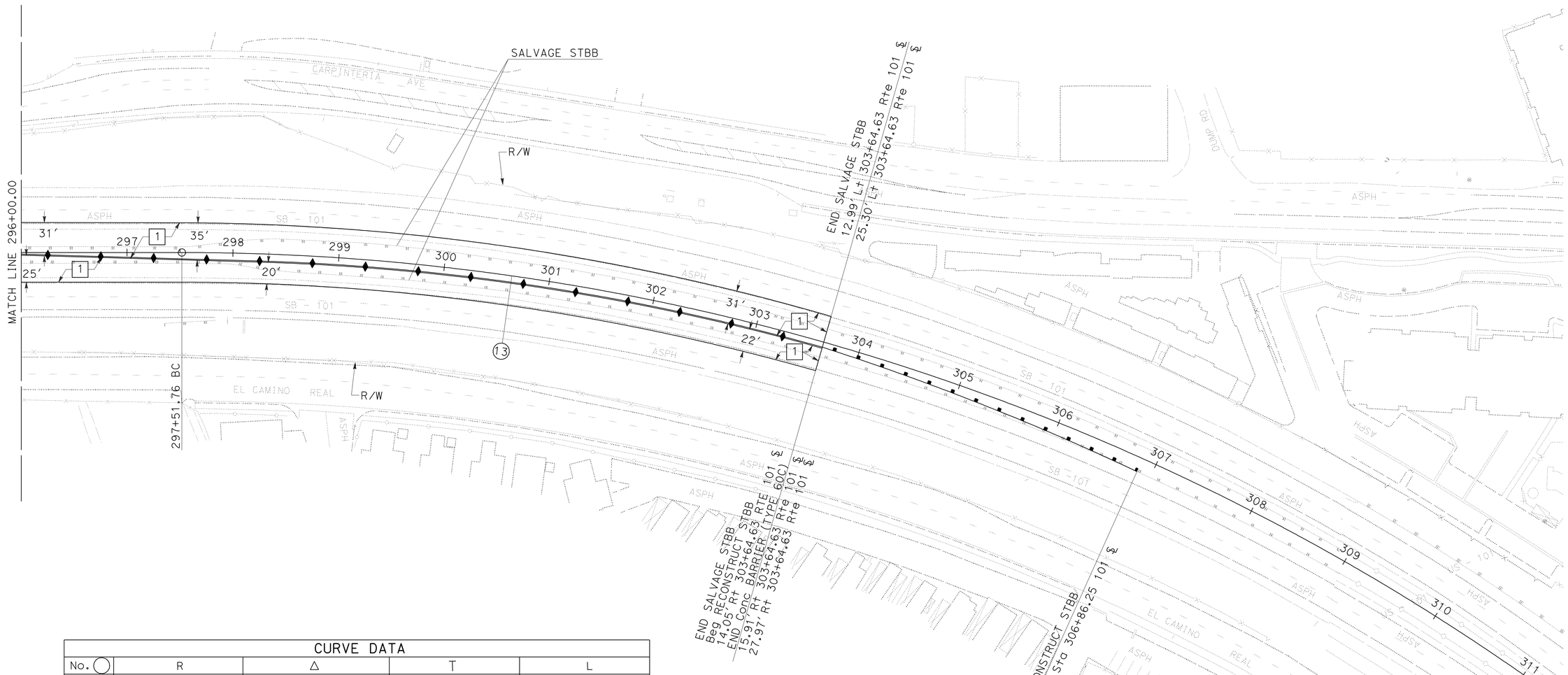

CURVE DATA				
No. ◯	R	Δ	T	L
13	2210.63′	39°23′57″	791.50′	1520.13′

LAYOUT

SCALE: 1" = 50′

L-22

STATE OF CALIFORNIA - DEPARTMENT OF TRANSPORTATION
Caltrans®
DESIGN

FUNCTIONAL SUPERVISOR: OC LEE
CALCULATED-DESIGNED BY: BARNABAS F. VORREITER
CHECKED BY: OC LEE
REVISED BY
DATE REVISED

LAST REVISION 01-12-11
DATE PLOTTED => 25-JUN-2011
TIME PLOTTED => 08:46

Dist	COUNTY	ROUTE	POST MILES TOTAL PROJECT	SHEET No.	TOTAL SHEETS
07	Ven,SB	101	R39.8/R43.6, 0.0/2.2	38	757

REGISTERED CIVIL ENGINEER 01-12-11 DATE

6-20-11
PLANS APPROVAL DATE

REGISTERED PROFESSIONAL ENGINEER O.C. LEE No. C28039 Exp. 03/31/12 CIVIL STATE OF CALIFORNIA

THE STATE OF CALIFORNIA OR ITS OFFICERS OR AGENTS SHALL NOT BE RESPONSIBLE FOR THE ACCURACY OR COMPLETENESS OF SCANNED COPIES OF THIS PLAN SHEET.

REVISED BY TRIEU NGUYEN
DATE REVISED ANTOINE NADER
CALCULATED-DESIGNED BY
CHECKED BY
FUNCTIONAL SUPERVISOR OC LEE

STATE OF CALIFORNIA - DEPARTMENT OF TRANSPORTATION
Caltrans® DESIGN

NB OUTSIDE SAWCUT

70.79' Rt +00
Elev (42.65)
70.71' Rt +25
Elev (42.59)
70.48' Rt +50
Elev (42.52)
70.29' Rt +75
Elev (42.48)
70.07' Rt +00
Elev (42.48)
69.95' Rt +25
Elev (42.40)
69.47' Rt +50
Elev (42.02)
69.07' Rt +75
Elev (41.84)
68.66' Rt +00
Elev (41.81)
68.26' Rt +25
Elev (41.74)
67.89' Rt +50
Elev (41.59)
67.47' Rt +75
Elev (41.47)
66.95' Rt +00
Elev (41.41)
66.49' Rt +25
Elev (41.39)
66.12' Rt +50
Elev (41.34)
65.47' Rt +75
Elev (40.96)
64.95' Rt +00
Elev (40.85)
64.54' Rt +25
Elev (40.78)
64.16' Rt +50
Elev (40.78)
63.89' Rt +75
Elev (40.78)
63.48' Rt +00
Elev (40.57)
63.21' Rt +25
Elev (40.33)
62.65' Rt +50
Elev (40.32)
62.24' Rt +75
Elev (40.32)
61.82' Rt +00
Elev (40.30)
61.45' Rt +25
Elev (40.25)
60.97' Rt +50
Elev (40.11)
60.52' Rt +75
Elev (39.95)
60.06' Rt +00
Elev (39.76)
59.73' Rt +25
Elev (39.63)
59.26' Rt +50
Elev (39.56)
58.88' Rt +75
Elev (39.48)
58.64' Rt +00
Elev (39.46)
58.25' Rt +25
Elev (39.35)
57.97' Rt +50

MATCH LINE

NB OUTSIDE ES

80.70' Rt +00
Elev 42.93
80.69' Rt +25
Elev 42.87
80.69' Rt +50
Elev 42.85
80.69' Rt +75
Elev 42.89
80.69' Rt +00
Elev 42.93
80.68' Rt +25
Elev 42.84
80.68' Rt +50
Elev 42.41
80.67' Rt +75
Elev 42.23
80.66' Rt +00
Elev 42.23
80.66' Rt +25
Elev 42.18
80.65' Rt +50
Elev 42.02
80.64' Rt +75
Elev 41.94
80.63' Rt +00
Elev 41.94
80.62' Rt +25
Elev 41.97
80.61' Rt +50
Elev 41.93
80.60' Rt +75
Elev 41.43
80.58' Rt +00
Elev 41.33
80.57' Rt +25
Elev 41.31
80.56' Rt +50
Elev 41.37
80.54' Rt +75
Elev 41.43
80.53' Rt +00
Elev 41.22
80.51' Rt +25
Elev 40.91
80.49' Rt +50
Elev 40.93
80.48' Rt +75
Elev 40.96
80.46' Rt +00
Elev 40.95
80.44' Rt +25
Elev 40.90
80.42' Rt +50
Elev 40.72
80.40' Rt +75
Elev 40.54
80.38' Rt +00
Elev 40.42
80.36' Rt +25
Elev 40.37
80.33' Rt +50
Elev 40.38
80.31' Rt +75
Elev 40.24
80.29' Rt +00
Elev 40.20
80.26' Rt +25
Elev 40.04
80.24' Rt +50

PROFILE

SCALE: Horiz 1" = 100'
Vert 1" = 20'

P-1

STATION		20+00	21+00	22+00	23+00	24+00	25+00	26+00	27+00	28+00	TOTAL
CY	Exc	1004.99									
	Emb	467.90									

LAST REVISION 01-12-11
DATE PLOTTED => 25-JUN-2011
TIME PLOTTED => 08:30

Dist	COUNTY	ROUTE	POST MILES TOTAL PROJECT	SHEET No.	TOTAL SHEETS
07	Ven,SB	101	R39.8/R43.6, 0.0/2.2	39	757

REGISTERED CIVIL ENGINEER 01-12-11 DATE

6-20-11
PLANS APPROVAL DATE

REGISTERED PROFESSIONAL ENGINEER O.C. LEE No. C28039 Exp. 03/31/12 CIVIL STATE OF CALIFORNIA

THE STATE OF CALIFORNIA OR ITS OFFICERS OR AGENTS SHALL NOT BE RESPONSIBLE FOR THE ACCURACY OR COMPLETENESS OF SCANNED COPIES OF THIS PLAN SHEET.

REVISED BY TRIEU NGUYEN
DATE REVISED ANTOINE NADER
CALCULATED-DESIGNED BY
CHECKED BY
FUNCTIONAL SUPERVISOR OC LEE

STATE OF CALIFORNIA - DEPARTMENT OF TRANSPORTATION
Caltrans® **DESIGN**

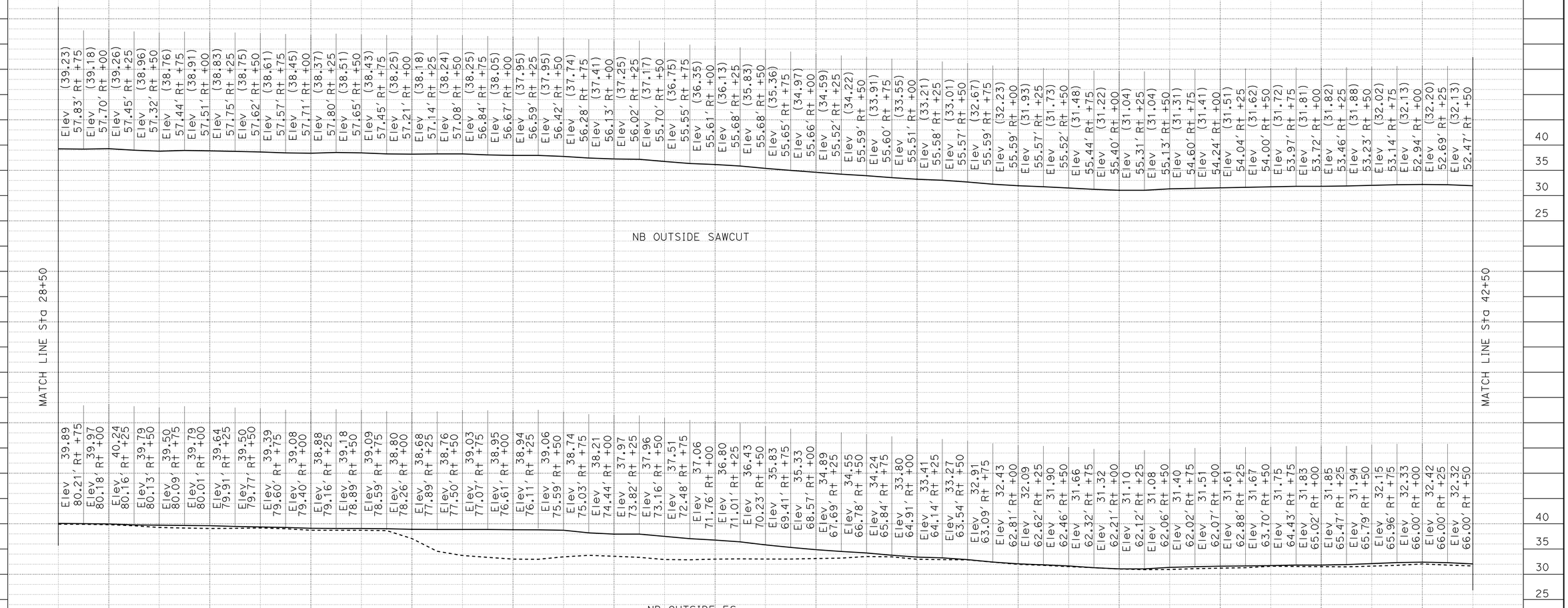

PROFILE

SCALE: Horiz 1" = 100'
Vert 1" = 20'

P-2

STATION		29+00	30+00	31+00	32+00	33+00	34+00	35+00	36+00	37+00	38+00	39+00	40+00	41+00	42+00	TOTAL
CY	Exc								1338.09							
	Emb								1546.58							

LAST REVISION 01-12-11
DATE PLOTTED => 25-JUN-2011
TIME PLOTTED => 08:30

Dist	COUNTY	ROUTE	POST MILES TOTAL PROJECT	SHEET No.	TOTAL SHEETS
07	Ven,SB	101	R39.8/R43.6, 0.0/2.2	40	757

REGISTERED CIVIL ENGINEER 01-12-11 DATE

6-20-11
PLANS APPROVAL DATE

REGISTERED PROFESSIONAL ENGINEER O.C. LEE No. C28039 Exp. 03/31/12 CIVIL STATE OF CALIFORNIA

THE STATE OF CALIFORNIA OR ITS OFFICERS OR AGENTS SHALL NOT BE RESPONSIBLE FOR THE ACCURACY OR COMPLETENESS OF SCANNED COPIES OF THIS PLAN SHEET.

REVISED BY | DATE REVISED

TRIEU NGUYEN | ANTOINE NADER

CALCULATED-DESIGNED BY | CHECKED BY

FUNCTIONAL SUPERVISOR: OC LEE

STATE OF CALIFORNIA - DEPARTMENT OF TRANSPORTATION

Caltrans DESIGN

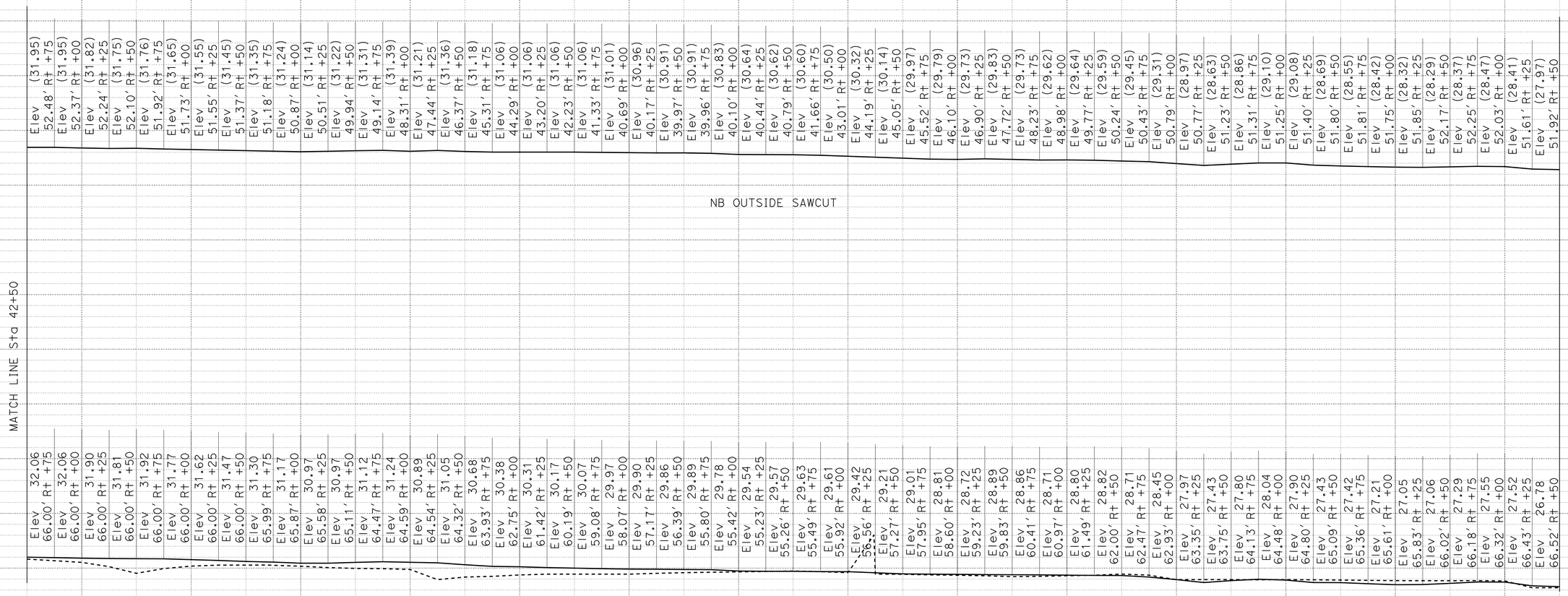

PROFILE

SCALE: Horiz 1" = 100'
Vert 1" = 20'

P-3

STATION		43+00	44+00	45+00	46+00	47+00	48+00	49+00	50+00	51+00	52+00	53+00	54+00	55+00	56+00	TOTAL
CY	Exc	1372.02														
	Emb	124.84														

LAST REVISION 01-12-11 | DATE PLOTTED => 25-JUN-2011 | TIME PLOTTED => 08:30

Dist	COUNTY	ROUTE	POST MILES TOTAL PROJECT	SHEET No.	TOTAL SHEETS
07	Ven,SB	101	R39.8/R43.6, 0.0/2.2	41	757

REGISTERED CIVIL ENGINEER 01-12-11 DATE

6-20-11
PLANS APPROVAL DATE

REGISTERED PROFESSIONAL ENGINEER O.C. LEE No. C28039 Exp. 03/31/12 CIVIL STATE OF CALIFORNIA

THE STATE OF CALIFORNIA OR ITS OFFICERS OR AGENTS SHALL NOT BE RESPONSIBLE FOR THE ACCURACY OR COMPLETENESS OF SCANNED COPIES OF THIS PLAN SHEET.

REVISED BY | DATE REVISED

TRIEU NGUYEN | ANTOINE NADER

CALCULATED-DESIGNED BY | CHECKED BY

FUNCTIONAL SUPERVISOR: OC LEE

STATE OF CALIFORNIA - DEPARTMENT OF TRANSPORTATION

Caltrans® **DESIGN**

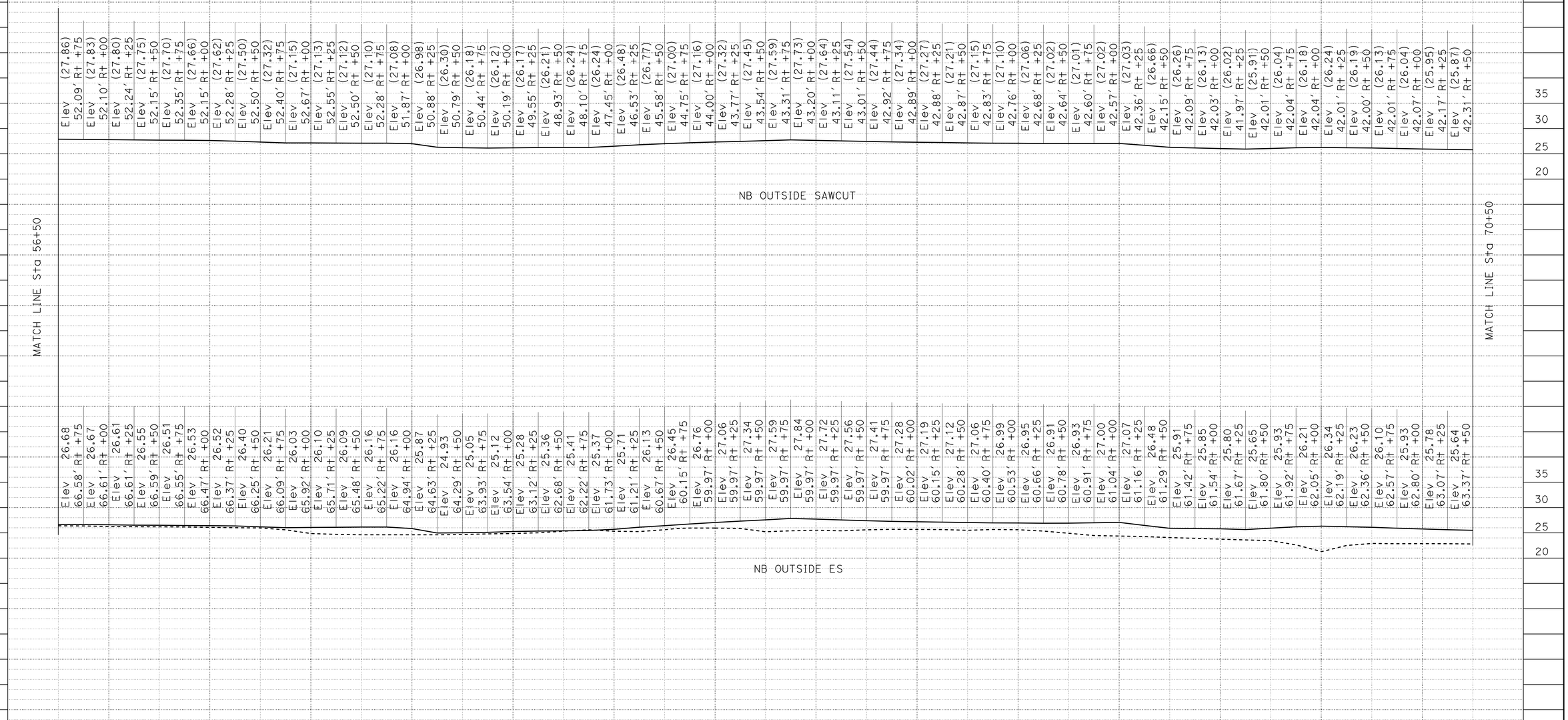

PROFILE

SCALE: Horiz 1" = 100'
Vert 1" = 20'

P-4

STATION	57+00	58+00	59+00	60+00	61+00	62+00	63+00	64+00	65+00	66+00	67+00	68+00	69+00	70+00	TOTAL
CY Exc	1331.54														
CY Emb	128.74														

LAST REVISION 01-12-11 | DATE PLOTTED => 25-JUN-2011 | TIME PLOTTED => 08:30

Dist	COUNTY	ROUTE	POST MILES TOTAL PROJECT	SHEET No.	TOTAL SHEETS
07	Ven,SB	101	R39.8/R43.6, 0.0/2.2	42	757

REGISTERED CIVIL ENGINEER 01-12-11 DATE

6-20-11
PLANS APPROVAL DATE

REGISTERED PROFESSIONAL ENGINEER O.C. LEE No. C28039 Exp. 03/31/12 CIVIL STATE OF CALIFORNIA

THE STATE OF CALIFORNIA OR ITS OFFICERS OR AGENTS SHALL NOT BE RESPONSIBLE FOR THE ACCURACY OR COMPLETENESS OF SCANNED COPIES OF THIS PLAN SHEET.

REVISED BY | DATE REVISED

TRIEU NGUYEN | ANTOINE NADER

CALCULATED-DESIGNED BY | CHECKED BY

FUNCTIONAL SUPERVISOR: OC LEE

STATE OF CALIFORNIA - DEPARTMENT OF TRANSPORTATION

Caltrans® **DESIGN**

35 30 25 20

MATCH LINE Sta 70+50

Elev (25.79) 42.45' Rt +75
Elev (25.73) 42.61' Rt +00
Elev (25.68) 42.77' Rt +25
Elev (25.65) 42.95' Rt +50
Elev (25.62) 43.17' Rt +75
Elev (25.59) 43.44' Rt +00
Elev (25.54) 43.74' Rt +25
Elev (25.48) 44.10' Rt +50
Elev (25.43) 44.59' Rt +75
Elev (25.43) 45.11' Rt +00
Elev (25.43) 45.78' Rt +25
Elev (25.44) 46.59' Rt +50
Elev (25.46) 47.92' Rt +75
Elev (25.54) 49.36' Rt +00
Elev (25.62) 51.02' Rt +25
Elev (25.79) 52.71' Rt +50
Elev (25.92) 54.37' Rt +75
Elev (25.98) 55.87' Rt +00
Elev (26.06) 57.33' Rt +25
Elev (26.13) 58.74' Rt +50
Elev (26.18) 60.11' Rt +75
Elev (26.24) 61.32' Rt +00
Elev (26.26) 62.46' Rt +25
Elev (26.28) 63.29' Rt +50
Elev (26.33) 63.92' Rt +75
Elev (26.34) 64.32' Rt +00
Elev (26.32) 64.66' Rt +25
Elev (26.32) 64.95' Rt +50
Elev (26.32) 65.20' Rt +75
Elev (26.33) 65.40' Rt +00
Elev (26.37) 65.59' Rt +25
Elev (26.42) 65.79' Rt +50
Elev (26.47) 65.95' Rt +75
Elev (26.47) 66.05' Rt +00
Elev (26.42) 66.13' Rt +25
Elev (26.37) 66.13' Rt +50
Elev (26.33) 66.00' Rt +75
Elev (26.32) 65.99' Rt +00
Elev (26.34) 66.23' Rt +25
Elev (26.40) 65.60' Rt +75
Elev (26.69) 65.65' Rt +00
Elev (26.72) 65.68' Rt +25
Elev (26.69) 65.71' Rt +50
Elev (26.66) 65.73' Rt +75
Elev (26.66) 65.74' Rt +00
Elev (26.69) 65.75' Rt +25
Elev (26.72) 65.81' Rt +50
Elev (26.72) 65.87' Rt +75
Elev (26.72) 65.93' Rt +00
Elev (26.72) 65.97' Rt +25
Elev (26.73) 66.00' Rt +50

NB OUTSIDE SAWCUT

MATCH LINE Sta 84+50

Elev 25.49 63.70' Rt +75
Elev 25.41 64.06' Rt +00
Elev 25.33 64.45' Rt +25
Elev 25.28 64.87' Rt +50
Elev 25.22 65.33' Rt +75
Elev 25.16 65.81' Rt +00
Elev 25.04 66.33' Rt +25
Elev 24.93 66.88' Rt +50
Elev 24.85 67.46' Rt +75
Elev 24.87 68.07' Rt +00
Elev 24.88 68.71' Rt +25
Elev 24.92 69.39' Rt +50
Elev 25.00 70.10' Rt +75
Elev 25.21 70.83' Rt +00
Elev 25.32 71.60' Rt +25
Elev 25.44 72.40' Rt +50
Elev 25.56 73.18' Rt +75
Elev 25.75 73.93' Rt +00
Elev 25.92 74.64' Rt +25
Elev 25.97 75.33' Rt +50
Elev 26.00 75.98' Rt +75
Elev 26.04 76.50' Rt +00
Elev 26.06 76.97' Rt +25
Elev 26.08 77.40' Rt +50
Elev 26.12 77.81' Rt +75
Elev 26.07 78.18' Rt +00
Elev 25.98 78.52' Rt +25
Elev 25.95 78.83' Rt +50
Elev 25.94 79.11' Rt +75
Elev 25.94 79.36' Rt +00
Elev 26.00 79.58' Rt +25
Elev 26.06 79.76' Rt +50
Elev 26.17 79.92' Rt +75
Elev 26.22 80.04' Rt +00
Elev 26.19 80.14' Rt +25
Elev 26.10 80.21' Rt +50
Elev 26.03 80.28' Rt +75
Elev 26.01 80.36' Rt +00
Elev 25.98 80.43' Rt +25
Elev 26.05 81.00' Rt +75
Elev 26.28 81.00' Rt +00
Elev 26.37 81.00' Rt +25
Elev 26.34 81.00' Rt +50
Elev 26.32 81.00' Rt +75
Elev 26.32 81.00' Rt +00
Elev 26.36 81.00' Rt +25
Elev 26.41 81.00' Rt +50
Elev 26.44 81.00' Rt +75
Elev 26.49 81.00' Rt +00
Elev 26.53 81.00' Rt +25
Elev 26.56 81.00' Rt +50

NB OUTSIDE ES

PROFILE

SCALE: Horiz 1" = 100'
Vert 1" = 20'

P-5

STATION		71+00	72+00	73+00	74+00	75+00	76+00	77+00	78+00	79+00	80+00	81+00	82+00	83+00	84+00	TOTAL
CY	Exc	665.13														
	Emb	0														

LAST REVISION 01-12-11 | DATE PLOTTED => 25-JUN-2011 | TIME PLOTTED => 08:30

Dist	COUNTY	ROUTE	POST MILES TOTAL PROJECT	SHEET No.	TOTAL SHEETS
07	Ven,SB	101	R39.8/R43.6, 0.0/2.2	43	757

REGISTERED CIVIL ENGINEER 01-12-11 DATE

6-20-11
PLANS APPROVAL DATE

REGISTERED PROFESSIONAL ENGINEER O.C. LEE No. C28039 Exp. 03/31/12 CIVIL STATE OF CALIFORNIA

THE STATE OF CALIFORNIA OR ITS OFFICERS OR AGENTS SHALL NOT BE RESPONSIBLE FOR THE ACCURACY OR COMPLETENESS OF SCANNED COPIES OF THIS PLAN SHEET.

MATCH LINE Sta 84+50

NB OUTSIDE SAWCUT

Elev (26.72) 65.97' Rt +75
Elev (26.69) 65.93' Rt +00
Elev (26.65) 65.96' Rt +25
Elev (26.63) 66.02' Rt +50
Elev (26.63) 66.08' Rt +75
Elev (26.63) 66.14' Rt +00
Elev (26.62) 66.09' Rt +25
Elev (26.60) 65.98' Rt +50
Elev (26.58) 65.86' Rt +75
Elev (26.55) 65.68' Rt +00
Elev (26.52) 65.39' Rt +25
Elev (26.48) 65.09' Rt +50
Elev (26.43) 64.72' Rt +75
Elev (26.29) 64.34' Rt +00
Elev (26.23) 63.96' Rt +25
Elev (26.20) 63.59' Rt +50
Elev (26.17) 63.19' Rt +75
Elev (26.14) 62.75' Rt +00
Elev (26.12) 62.31' Rt +25
Elev (26.10) 61.77' Rt +50
Elev (26.10) 61.23' Rt +75
Elev (26.10) 60.69' Rt +00
Elev (26.10) 60.17' Rt +25
Elev (26.06) 59.64' Rt +50
Elev (26.03) 59.08' Rt +75
Elev (26.03) 58.53' Rt +00
Elev (26.03) 57.99' Rt +25
Elev (26.03) 57.61' Rt +50
Elev (26.06) 57.22' Rt +75
Elev (26.08) 56.83' Rt +00
Elev (26.10) 56.49' Rt +25
Elev (26.11) 56.21' Rt +50
Elev (26.10) 55.92' Rt +75
Elev (26.09) 55.63' Rt +00
Elev (26.08) 55.59' Rt +25
Elev (26.07) 55.66' Rt +50
Elev (26.05) 55.72' Rt +75
Elev (26.03) 55.79' Rt +00
Elev (26.01) 55.88' Rt +25
Elev (25.99) 55.98' Rt +50
Elev (25.97) 56.08' Rt +75
Elev (25.95) 56.13' Rt +00
Elev (25.94) 56.17' Rt +25
Elev (25.94) 56.20' Rt +50
Elev (25.94) 56.24' Rt +75
Elev (25.94) 56.36' Rt +00
Elev (25.89) 56.49' Rt +25
Elev (25.84) 56.61' Rt +50
Elev (25.78) 56.73' Rt +75
Elev (25.79) 56.86' Rt +00
Elev (25.85) 56.91' Rt +25
Elev (25.92) 56.89' Rt +50
Elev (25.99) 56.87' Rt +75
Elev (26.01) 56.81' Rt +00
Elev (26.01) 56.68' Rt +25
Elev (26.01) 56.47' Rt +50

MATCH LINE Sta 98+50

NB OUTSIDE ES

Elev 26.57 81.00' Rt +75
Elev 26.54 81.00' Rt +00
Elev 26.52 81.00' Rt +25
Elev 26.52 81.00' Rt +50
Elev 26.53 81.00' Rt +75
Elev 26.51 81.00' Rt +00
Elev 26.50 81.00' Rt +25
Elev 26.47 81.00' Rt +50
Elev 26.43 81.00' Rt +75
Elev 26.39 81.00' Rt +00
Elev 26.34 80.50' Rt +25
Elev 26.28 80.00' Rt +50
Elev 26.21 79.50' Rt +75
Elev 25.99 79.00' Rt +00
Elev 25.91 78.50' Rt +25
Elev 25.88 78.00' Rt +50
Elev 25.85 77.50' Rt +75
Elev 25.82 77.00' Rt +00
Elev 25.79 76.50' Rt +25
Elev 25.74 76.00' Rt +50
Elev 25.73 75.50' Rt +75
Elev 25.72 75.00' Rt +00
Elev 25.73 74.50' Rt +25
Elev 25.70 74.00' Rt +50
Elev 25.68 73.50' Rt +75
Elev 25.74 73.00' Rt +00
Elev 25.83 72.50' Rt +25
Elev 25.91 72.00' Rt +50
Elev 25.97 71.50' Rt +75
Elev 26.02 71.00' Rt +00
Elev 26.07 70.50' Rt +25
Elev 26.09 70.00' Rt +50
Elev 26.07 69.50' Rt +75
Elev 26.06 69.00' Rt +00
Elev 26.04 69.00' Rt +25
Elev 26.02 69.00' Rt +50
Elev 25.99 69.00' Rt +75
Elev 25.98 69.00' Rt +00
Elev 25.97 69.00' Rt +25
Elev 25.95 69.00' Rt +50
Elev 25.92 69.00' Rt +75
Elev 25.90 69.00' Rt +00
Elev 25.90 69.00' Rt +25
Elev 25.90 69.00' Rt +50
Elev 25.90 69.00' Rt +75
Elev 25.90 69.00' Rt +00
Elev 25.83 69.00' Rt +25
Elev 25.74 69.00' Rt +50
Elev 25.67 69.00' Rt +75
Elev 25.78 69.00' Rt +00
Elev 25.88 69.00' Rt +25
Elev 25.98 69.00' Rt +50
Elev 25.98 69.00' Rt +75
Elev 25.98 69.00' Rt +00
Elev 25.95 69.00' Rt +25
Elev 25.91 69.00' Rt +50

STATION	85+00	86+00	87+00	88+00	89+00	90+00	91+00	92+00	93+00	94+00	95+00	96+00	97+00	98+00	TOTAL
CY Exc	566.73														
CY Emb	382.73														

PROFILE

SCALE: Horiz 1" = 100'
Vert 1" = 20'

P-6

STATE OF CALIFORNIA - DEPARTMENT OF TRANSPORTATION
Caltrans® **DESIGN**

FUNCTIONAL SUPERVISOR: OC LEE
CALCULATED-DESIGNED BY: TRIEU NGUYEN
CHECKED BY: ANTOINE NADER
REVISED BY
DATE REVISED

LAST REVISION 01-12-11
DATE PLOTTED => 25-JUN-2011
TIME PLOTTED => 08:31

Dist	COUNTY	ROUTE	POST MILES TOTAL PROJECT	SHEET No.	TOTAL SHEETS
07	Ven,SB	101	R39.8/R43.6, 0.0/2.2	44	757

REGISTERED CIVIL ENGINEER 01-12-11 DATE

6-20-11
PLANS APPROVAL DATE

REGISTERED PROFESSIONAL ENGINEER O.C. LEE No. C28039 Exp. 03/31/12 CIVIL STATE OF CALIFORNIA

THE STATE OF CALIFORNIA OR ITS OFFICERS OR AGENTS SHALL NOT BE RESPONSIBLE FOR THE ACCURACY OR COMPLETENESS OF SCANNED COPIES OF THIS PLAN SHEET.

REVISED BY
DATE REVISED

TRIEU NGUYEN
ANTOINE NADER
CALCULATED-DESIGNED BY
CHECKED BY
FUNCTIONAL SUPERVISOR
OC LEE

STATE OF CALIFORNIA - DEPARTMENT OF TRANSPORTATION
Caltrans®
DESIGN

MATCH LINE Sta 98+50

Elev (26.01) 56.31' Rt +75
Elev (26.03) 56.24' Rt +00
Elev (26.07) 56.10' Rt +25
Elev (26.11) 55.89' Rt +50
Elev (26.15) 55.98' Rt +75
Elev (26.18) 56.16' Rt +00
Elev (26.21) 56.26' Rt +25
Elev (26.24) 56.30' Rt +50
Elev (26.27) 56.34' Rt +75
Elev (26.31) 56.51' Rt +00
Elev (26.36) 56.62' Rt +25
Elev (26.41) 56.65' Rt +50
Elev (26.47) 56.60' Rt +75
Elev (26.52) 56.57' Rt +00
Elev (26.55) 56.48' Rt +25
Elev (26.59) 56.31' Rt +50
Elev (26.62) 56.10' Rt +75
Elev (26.65) 56.03' Rt +00
Elev (26.71) 55.96' Rt +25
Elev (26.77) 55.90' Rt +50
Elev (26.83) 55.83' Rt +75
Elev (26.89) 55.89' Rt +00
Elev (26.95) 55.99' Rt +25
Elev (27.00) 56.08' Rt +50
Elev (27.06) 56.18' Rt +75
Elev (27.12) 56.27' Rt +00
Elev (27.17) 56.40' Rt +25
Elev (27.24) 56.54' Rt +50
Elev (27.31) 56.68' Rt +75
Elev (27.38) 56.82' Rt +00
Elev (27.45) 56.89' Rt +25
Elev (27.57) 56.92' Rt +50
Elev (27.70) 56.96' Rt +75
Elev (27.84) 57.00' Rt +00
Elev (27.97) 57.04' Rt +25
Elev (28.10) 56.97' Rt +50
Elev (28.20) 56.83' Rt +75
Elev (28.26) 56.69' Rt +00
Elev (28.33) 56.55' Rt +25
Elev (28.40) 56.43' Rt +50
Elev (28.47) 56.39' Rt +75
Elev (28.61) 56.45' Rt +00
Elev (28.75) 56.50' Rt +25
Elev (28.86) 56.44' Rt +50
Elev (28.92) 56.48' Rt +75
Elev (28.98) 56.63' Rt +00
Elev (29.04) 56.87' Rt +25
Elev (29.10) 56.86' Rt +50
Elev (29.18) 56.82' Rt +75
Elev (29.27) 56.88' Rt +00
Elev (29.36) 57.04' Rt +25
Elev (29.45) 56.82' Rt +50
Elev (29.46) 56.66' Rt +75
Elev (29.47) 56.60' Rt +00
Elev (29.48) 56.64' Rt +25
Elev (29.48) 56.50' Rt +50

NB OUTSIDE SAWCUT

MATCH LINE Sta 112+50

Elev 25.85 69.00' Rt +75
Elev 25.86 69.00' Rt +00
Elev 25.89 69.00' Rt +25
Elev 25.93 69.00' Rt +50
Elev 25.96 69.00' Rt +75
Elev 25.99 69.00' Rt +00
Elev 26.02 69.00' Rt +25
Elev 26.05 69.00' Rt +50
Elev 26.07 69.00' Rt +75
Elev 26.10 69.00' Rt +00
Elev 26.18 69.00' Rt +25
Elev 26.26 69.00' Rt +50
Elev 26.33 69.00' Rt +75
Elev 26.40 69.00' Rt +00
Elev 26.44 69.00' Rt +25
Elev 26.46 69.00' Rt +50
Elev 26.48 69.00' Rt +75
Elev 26.50 69.00' Rt +00
Elev 26.56 69.00' Rt +25
Elev 26.62 69.00' Rt +50
Elev 26.69 69.00' Rt +75
Elev 26.75 69.00' Rt +00
Elev 26.81 69.00' Rt +25
Elev 26.87 69.00' Rt +50
Elev 26.94 69.00' Rt +75
Elev 27.01 69.00' Rt +00
Elev 27.08 69.00' Rt +25
Elev 27.17 69.00' Rt +50
Elev 27.24 69.00' Rt +75
Elev 27.32 69.00' Rt +00
Elev 27.40 69.00' Rt +25
Elev 27.55 69.00' Rt +50
Elev 27.73 69.00' Rt +75
Elev 27.90 69.00' Rt +00
Elev 28.08 69.00' Rt +25
Elev 28.25 69.28' Rt +50
Elev 28.38 69.57' Rt +75
Elev 28.48 69.78' Rt +00
Elev 28.57 69.90' Rt +25
Elev 28.66 69.95' Rt +50
Elev 28.77 70.01' Rt +75
Elev 28.91 70.08' Rt +00
Elev 29.04 70.17' Rt +25
Elev 29.19 70.27' Rt +50
Elev 29.27 70.38' Rt +75
Elev 29.35 70.50' Rt +00
Elev 29.41 70.64' Rt +25
Elev 29.48 70.80' Rt +50
Elev 29.59 70.96' Rt +75
Elev 29.71 71.14' Rt +00
Elev 29.80 70.98' Rt +25
Elev 29.88 70.83' Rt +50
Elev 29.87 70.69' Rt +75
Elev 29.85 70.56' Rt +00
Elev 29.83 70.44' Rt +25
Elev 29.81 70.33' Rt +50

NB OUTSIDE ES

PROFILE

SCALE: Horiz 1" = 100'
Vert 1" = 20'

P-7

STATION	99+00	100+00	101+00	102+00	103+00	104+00	105+00	106+00	107+00	108+00	109+00	110+00	111+00	112+00	TOTAL
CY Exc	1235.97														
CY Emb	280.52														

LAST REVISION 01-12-11
DATE PLOTTED => 25-JUN-2011
TIME PLOTTED => 08:31

Dist	COUNTY	ROUTE	POST MILES TOTAL PROJECT	SHEET No.	TOTAL SHEETS
07	Ven,SB	101	R39.8/R43.6, 0.0/2.2	45	757

REGISTERED CIVIL ENGINEER 01-12-11 DATE

6-20-11
PLANS APPROVAL DATE

REGISTERED PROFESSIONAL ENGINEER O.C. LEE No. C28039 Exp. 03/31/12 CIVIL STATE OF CALIFORNIA

THE STATE OF CALIFORNIA OR ITS OFFICERS OR AGENTS SHALL NOT BE RESPONSIBLE FOR THE ACCURACY OR COMPLETENESS OF SCANNED COPIES OF THIS PLAN SHEET.

REVISED BY
DATE REVISED
TRIEU NGUYEN
ANTOINE NADER
CALCULATED-DESIGNED BY
CHECKED BY
FUNCTIONAL SUPERVISOR
OC LEE

STATE OF CALIFORNIA - DEPARTMENT OF TRANSPORTATION
Caltrans
DESIGN

35 30 25 20

Elev (29.48) 56.45' Rt +75
Elev (29.48) 56.50' Rt +00
Elev (29.48) 56.65' Rt +25
Elev (29.48) 56.62' Rt +50
Elev (29.53) 56.51' Rt +75
Elev (29.59) 56.50' Rt +00
Elev (29.66) 56.56' Rt +25
Elev (29.73) 56.43' Rt +50
Elev (29.82) 56.40' Rt +75
Elev (29.90) 56.48' Rt +00
Elev (29.98) 56.32' Rt +25
Elev (29.97) 56.19' Rt +50
Elev (29.93) 56.16' Rt +75
Elev (29.90) 56.23' Rt +00
Elev (29.86) 56.33' Rt +25
Elev (29.84) 56.18' Rt +50
Elev (29.84) 56.13' Rt +75
Elev (29.84) 56.18' Rt +00
Elev (29.84) 56.34' Rt +25
Elev (29.84) 56.09' Rt +50
Elev (29.82) 55.93' Rt +75
Elev (29.81)

NB OUTSIDE SAWCUT

56.80' Rt +00
Elev (28.46) 56.76' Rt +25
Elev (28.44) 56.70' Rt +50
Elev (28.27) 56.59' Rt +75
Elev (28.15) 56.46' Rt +00
Elev (28.02) 56.27' Rt +25
Elev (27.94) 56.10' Rt +50
Elev (27.95) 56.00' Rt +75
Elev (28.03) 55.78' Rt +00
Elev (28.06) 55.68' Rt +25
Elev (28.10) 55.72' Rt +50
Elev (28.16) 55.80' Rt +75
Elev (28.24) 55.73' Rt +00
Elev (28.28) 55.71' Rt +25
Elev (28.35) 55.72' Rt +50
Elev (28.41) 55.72' Rt +75
Elev (28.46) 55.78' Rt +00
Elev (28.55) 55.83' Rt +25
Elev (28.64) 55.71' Rt +50
Elev (28.63) 55.60' Rt +75
Elev (28.61) 55.48' Rt +00
Elev (28.60) 55.43' Rt +25
Elev (28.59) 55.43' Rt +50

MATCH LINE Sta 112+50

Elev 29.81 70.23' Rt +75
Elev 29.81 70.14' Rt +00
Elev 29.80 70.07' Rt +25
Elev 29.79 70.00' Rt +50
Elev 29.86 69.95' Rt +75
Elev 29.97 69.90' Rt +00
Elev 30.06 69.87' Rt +25
Elev 30.14 69.85' Rt +50
Elev 30.25 69.84' Rt +75
Elev 30.33 69.84' Rt +00
Elev 30.41 69.85' Rt +25
Elev 30.37 69.87' Rt +50
Elev 30.29 69.90' Rt +75
Elev 30.19 69.94' Rt +00
Elev 30.06 70.00' Rt +25
Elev 30.00 70.06' Rt +50
Elev 30.00 70.14' Rt +75
Elev 29.99 70.22' Rt +00
Elev 29.94 70.32' Rt +25
Elev 29.97 70.43' Rt +50
Elev 30.00 70.55' Rt +75
Elev 30.03

NB OUTSIDE ES

71.04' Rt +00
Elev 28.07 71.04' Rt +25
Elev 28.09 71.03' Rt +50
Elev 27.82 71.03' Rt +75
Elev 27.66 71.03' Rt +00
Elev 27.52 71.02' Rt +25
Elev 27.50 71.02' Rt +50
Elev 27.51 71.01' Rt +75
Elev 27.69 71.01' Rt +00
Elev 27.68 71.00' Rt +25
Elev 27.70 71.00' Rt +50
Elev 27.84 70.96' Rt +75
Elev 28.00 70.87' Rt +00
Elev 27.98 70.72' Rt +25
Elev 28.08 70.52' Rt +50
Elev 28.23 70.25' Rt +75
Elev 28.33 69.93' Rt +00
Elev 28.60 69.55' Rt +25
Elev 28.85 69.11' Rt +50
Elev 28.88 68.62' Rt +75
Elev 28.91 68.06' Rt +00
Elev 28.92 67.51' Rt +25
Elev 28.92 67.03' Rt +50

MATCH LINE Sta 126+50

PROFILE

SCALE: Horiz 1" = 100'
Vert 1" = 20'

P-8

STATION	113+00	114+00	115+00	116+00	117+00	118+00	119+00	120+00	121+00	122+00	123+00	124+00	125+00	126+00	TOTAL
CY Exc	1020.27														
CY Emb	301.20														

LAST REVISION 01-12-11
DATE PLOTTED => 25-JUN-2011
TIME PLOTTED => 08:31

Dist	COUNTY	ROUTE	POST MILES TOTAL PROJECT	SHEET No.	TOTAL SHEETS
07	Ven,SB	101	R39.8/R43.6, 0.0/2.2	46	757

REGISTERED CIVIL ENGINEER 01-12-11 DATE

6-20-11
PLANS APPROVAL DATE

REGISTERED PROFESSIONAL ENGINEER O.C. LEE No. C28039 Exp. 03/31/12 CIVIL STATE OF CALIFORNIA

THE STATE OF CALIFORNIA OR ITS OFFICERS OR AGENTS SHALL NOT BE RESPONSIBLE FOR THE ACCURACY OR COMPLETENESS OF SCANNED COPIES OF THIS PLAN SHEET.

REVISED BY | DATE REVISED

TRIEU NGUYEN | ANTOINE NADER

CALCULATED-DESIGNED BY | CHECKED BY

FUNCTIONAL SUPERVISOR: OC LEE

STATE OF CALIFORNIA - DEPARTMENT OF TRANSPORTATION

Caltrans® **DESIGN**

35 30 25 20

MATCH LINE Sta 126+50

Elev 55.45' Rt +75 (28.57)
Elev 55.62' Rt +00 (28.54)
Elev 55.46' Rt +25 (28.51)
Elev 55.26' Rt +50 (28.48)
Elev 55.20' Rt +75 (28.45)
Elev 54.90' Rt +00 (28.41)
Elev 54.57' Rt +25 (28.40)
Elev 54.38' Rt +50 (28.40)
Elev 54.04' Rt +75 (28.40)
Elev 53.75' Rt +00 (28.40)
Elev 53.59' Rt +25 (28.40)
Elev 53.35' Rt +50 (28.40)
Elev 53.10' Rt +75 (28.38)
Elev 52.99' Rt +00 (28.32)
Elev 53.02' Rt +25 (28.26)
Elev 53.18' Rt +50 (28.19)
Elev 53.27' Rt +75 (27.88)
Elev 53.50' Rt +00 (27.85)
Elev 53.60' Rt +25 (27.82)
Elev 53.50' Rt +50 (27.78)
Elev 53.53' Rt +75 (27.73)
Elev 53.70' Rt +00 (27.68)
Elev 53.75' Rt +25 (27.63)
Elev 53.53' Rt +50 (27.61)
Elev 53.44' Rt +75 (27.64)
Elev 53.49' Rt +00 (27.67)
Elev 53.38' Rt +25 (27.70)
Elev 53.18' Rt +50 (27.71)
Elev 53.11' Rt +75 (27.70)
Elev 53.18' Rt +00 (27.70)
Elev 53.14' Rt +25 (27.70)
Elev 53.21' Rt +50 (27.71)
Elev 53.41' Rt +75 (27.72)
Elev 53.46' Rt +00 (27.73)
Elev 53.53' Rt +25 (27.65)
Elev 53.56' Rt +50 (27.53)
Elev 53.64' Rt +75 (27.50)
Elev 53.51' Rt +00 (27.51)
Elev 53.27' Rt +25 (27.63)
Elev 53.57' Rt +50 (27.82)
Elev 53.51' Rt +75 (28.29)
Elev 53.47' Rt +00 (28.44)
Elev 53.53' Rt +25 (28.50)
Elev 53.47' Rt +50 (28.56)
Elev 53.41' Rt +75 (28.59)
Elev 53.53' Rt +00 (28.65)
Elev 53.85' Rt +25 (28.72)
Elev 53.77' Rt +50 (28.78)
Elev 53.74' Rt +75 (28.86)
Elev 53.66' Rt +00 (28.94)
Elev 53.57' Rt +25 (29.02)
Elev 53.54' Rt +50 (29.10)
Elev 53.38' Rt +75 (29.18)
Elev 53.41' Rt +00 (29.25)
Elev 53.23' Rt +25 (29.32)
Elev 53.20' Rt +50 (29.33)

NB OUTSIDE SAWCUT

MATCH LINE Sta 140+50

Elev 66.63' Rt +75 28.90
Elev 66.31' Rt +00 28.88
Elev 66.06' Rt +25 28.85
Elev 65.89' Rt +50 28.80
Elev 65.80' Rt +75 28.73
Elev 65.77' Rt +00 28.65
Elev 65.76' Rt +25 28.65
Elev 65.75' Rt +50 28.66
Elev 65.74' Rt +75 28.66
Elev 65.73' Rt +00 28.68
Elev 65.72' Rt +25 28.69
Elev 65.72' Rt +50 28.73
Elev 65.72' Rt +75 28.78
Elev 65.71' Rt +00 28.73
Elev 65.72' Rt +25 28.66
Elev 65.72' Rt +50 28.52
Elev 65.72' Rt +75 27.88
Elev 65.73' Rt +00 27.82
Elev 65.74' Rt +25 27.76
Elev 65.75' Rt +50 27.69
Elev 65.76' Rt +75 27.59
Elev 65.78' Rt +00 27.51
Elev 65.79' Rt +25 27.44
Elev 65.81' Rt +50 27.43
Elev 65.83' Rt +75 27.55
Elev 65.85' Rt +00 27.68
Elev 65.88' Rt +25 27.82
Elev 65.90' Rt +50 27.95
Elev 65.93' Rt +75 28.06
Elev 65.96' Rt +00 28.16
Elev 65.99' Rt +25 28.21
Elev 66.03' Rt +50 28.21
Elev 66.06' Rt +75 28.22
Elev 66.10' Rt +00 28.21
Elev 66.14' Rt +25 28.02
Elev 66.18' Rt +50 27.76
Elev 66.22' Rt +75 27.69
Elev 66.27' Rt +00 27.71
Elev 66.31' Rt +25 27.87
Elev 66.36' Rt +50 28.19
Elev 66.43' Rt +75 29.08
Elev 66.52' Rt +00 29.29
Elev 66.55' Rt +25 29.32
Elev 66.50' Rt +50 29.34
Elev 66.39' Rt +75 29.30
Elev 66.25' Rt +00 29.34
Elev 66.11' Rt +25 29.37
Elev 65.98' Rt +50 29.35
Elev 65.84' Rt +75 29.38
Elev 65.71' Rt +00 29.43
Elev 65.58' Rt +25 29.49
Elev 65.45' Rt +50 29.56
Elev 65.32' Rt +75 29.62
Elev 65.20' Rt +00 29.71
Elev 65.07' Rt +25 29.80
Elev 64.95' Rt +50 29.78

NB OUTSIDE ES

PROFILE

SCALE: Horiz 1" = 100'
Vert 1" = 20'

P-9

STATION		127+00	128+00	129+00	130+00	131+00	132+00	133+00	134+00	135+00	136+00	137+00	138+00	139+00	140+00	TOTAL
CY	Exc	1098.19														
	Emb	347.70														

LAST REVISION 01-12-11
DATE PLOTTED => 25-JUN-2011
TIME PLOTTED => 08:31

Dist	COUNTY	ROUTE	POST MILES TOTAL PROJECT	SHEET No.	TOTAL SHEETS
07	Ven,SB	101	R39.8/R43.6, 0.0/2.2	47	757

REGISTERED CIVIL ENGINEER 01-12-11 DATE

6-20-11
PLANS APPROVAL DATE

REGISTERED PROFESSIONAL ENGINEER O.C. LEE No. C28039 Exp. 03/31/12 CIVIL STATE OF CALIFORNIA

THE STATE OF CALIFORNIA OR ITS OFFICERS OR AGENTS SHALL NOT BE RESPONSIBLE FOR THE ACCURACY OR COMPLETENESS OF SCANNED COPIES OF THIS PLAN SHEET.

REVISED BY
DATE REVISED

TRIEU NGUYEN
ANTOINE NADER

CALCULATED-DESIGNED BY
CHECKED BY

FUNCTIONAL SUPERVISOR
OC LEE

STATE OF CALIFORNIA - DEPARTMENT OF TRANSPORTATION
Caltrans®
DESIGN

35 30 25 20

MATCH LINE Sta 140+50

Elev (29.32) 52.96' Rt +75
Elev (29.33) 52.82' Rt +00
Elev (29.35) 52.63' Rt +25
Elev (29.36) 52.19' Rt +50
Elev (29.35) 51.96' Rt +75
Elev (29.33) 51.94' Rt +00
Elev (29.32) 51.75' Rt +25
Elev (29.33) 51.49' Rt +50
Elev (29.35) 51.35' Rt +75
Elev (29.38) 51.05' Rt +00
Elev (29.40) 50.95' Rt +25
Elev (29.43) 50.71' Rt +50
Elev (29.44) 50.58' Rt +75
Elev (29.44) 50.18' Rt +00
Elev (29.46) 49.34' Rt +25
Elev (29.49) 48.71' Rt +50
Elev (29.52) 48.88' Rt +75
Elev (29.66) 49.45' Rt +00
Elev (29.84) 49.64' Rt +25
Elev (29.99) 49.51' Rt +50
Elev (30.11) 49.33' Rt +75
Elev (30.10) 49.08' Rt +00
Elev (29.96) 48.87' Rt +25
Elev (29.73) 48.75' Rt +50
Elev (29.60) 48.91' Rt +75
Elev (29.64) 49.07' Rt +00
Elev (29.74) 48.85' Rt +25
Elev (29.62) 49.19' Rt +50
Elev (29.10) 49.21' Rt +75
Elev (29.02) 49.09' Rt +00
Elev (28.81) 49.15' Rt +25
Elev (28.81) 49.06' Rt +50
Elev (28.77) 48.98' Rt +75
Elev (28.69) 48.92' Rt +00
Elev (28.57) 48.80' Rt +25
Elev (28.47) 48.60' Rt +50
Elev (28.39) 48.68' Rt +75
Elev (28.35) 48.68' Rt +00
Elev (28.34) 48.45' Rt +25
Elev (28.40) 48.46' Rt +50
Elev (28.41) 48.58' Rt +75
Elev (28.41) 48.78' Rt +00
Elev (28.41) 49.04' Rt +25
Elev (28.41) 49.12' Rt +50
Elev (28.24) 49.19' Rt +75
Elev (28.12) 49.31' Rt +00
Elev (28.20) 49.39' Rt +25
Elev (28.20) 49.59' Rt +50
Elev (27.95) 49.73' Rt +75
Elev (27.83) 49.65' Rt +00
Elev (27.68) 49.66' Rt +25
Elev (27.77) 49.62' Rt +50
Elev (27.70) 49.53' Rt +75
Elev (27.70) 49.54' Rt +00
Elev (27.71) 49.54' Rt +25
Elev (27.62) 49.48' Rt +50

NB OUTSIDE SAWCUT

MATCH LINE Sta 154+50

Elev 29.71 64.83' Rt +75
Elev 29.71 64.71' Rt +00
Elev 29.71 64.59' Rt +25
Elev 29.70 64.47' Rt +50
Elev 29.64 64.36' Rt +75
Elev 29.58 64.25' Rt +00
Elev 29.51 64.13' Rt +25
Elev 29.48 64.02' Rt +50
Elev 29.47 63.92' Rt +75
Elev 29.45 63.81' Rt +00
Elev 29.45 63.71' Rt +25
Elev 29.44 63.60' Rt +50
Elev 29.40 63.50' Rt +75
Elev 29.42 63.40' Rt +00
Elev 29.46 63.30' Rt +25
Elev 29.50 63.21' Rt +50
Elev 29.53 63.11' Rt +75
Elev 29.79 63.02' Rt +00
Elev 30.09 62.93' Rt +25
Elev 30.32 62.84' Rt +50
Elev 30.47 62.75' Rt +75
Elev 30.36 62.67' Rt +00
Elev 29.97 62.58' Rt +25
Elev 29.43 62.50' Rt +50
Elev 29.30 62.42' Rt +75
Elev 29.55 62.42' Rt +00
Elev 29.83 62.45' Rt +25
Elev 29.64 62.49' Rt +50
Elev 28.60 62.52' Rt +75
Elev 28.51 62.55' Rt +00
Elev 28.19 62.59' Rt +25
Elev 28.18 62.62' Rt +50
Elev 28.27 62.66' Rt +75
Elev 28.33 62.69' Rt +00
Elev 28.19 62.72' Rt +25
Elev 27.99 62.76' Rt +50
Elev 27.68 62.79' Rt +75
Elev 27.55 62.82' Rt +00
Elev 27.65 62.86' Rt +25
Elev 27.79 62.89' Rt +50
Elev 27.84 62.92' Rt +75
Elev 27.86 62.96' Rt +00
Elev 27.86 62.99' Rt +25
Elev 27.96 63.02' Rt +50
Elev 27.70 63.06' Rt +75
Elev 27.46 63.09' Rt +00
Elev 27.63 63.13' Rt +25
Elev 27.48 63.16' Rt +50
Elev 27.07 63.19' Rt +75
Elev 26.99 63.23' Rt +00
Elev 26.79 63.26' Rt +25
Elev 27.01 63.29' Rt +50
Elev 26.79 63.33' Rt +75
Elev 26.70 63.36' Rt +00
Elev 26.92 63.39' Rt +25
Elev 26.81 63.43' Rt +50

NB OUTSIDE ES

PROFILE

SCALE: Horiz 1" = 100'
Vert 1" = 20'

P-10

STATION	141+00	142+00	143+00	144+00	145+00	146+00	147+00	148+00	149+00	150+00	151+00	152+00	153+00	154+00	TOTAL
CY Exc	1369.93														
CY Emb	255.63														

LAST REVISION 01-12-11
DATE PLOTTED => 25-JUN-2011
TIME PLOTTED => 08:31

Dist	COUNTY	ROUTE	POST MILES TOTAL PROJECT	SHEET No.	TOTAL SHEETS
07	Ven,SB	101	R39.8/R43.6, 0.0/2.2	48	757

REGISTERED CIVIL ENGINEER 01-12-11 DATE

6-20-11
PLANS APPROVAL DATE

REGISTERED PROFESSIONAL ENGINEER O.C. LEE No. C28039 Exp. 03/31/12 CIVIL STATE OF CALIFORNIA

THE STATE OF CALIFORNIA OR ITS OFFICERS OR AGENTS SHALL NOT BE RESPONSIBLE FOR THE ACCURACY OR COMPLETENESS OF SCANNED COPIES OF THIS PLAN SHEET.

REVISED BY
DATE REVISED
TRIEU NGUYEN
ANTOINE NADER
CALCULATED-DESIGNED BY
CHECKED BY
FUNCTIONAL SUPERVISOR
OC LEE

STATE OF CALIFORNIA - DEPARTMENT OF TRANSPORTATION
Caltrans
DESIGN

35 30 25 20

Elev 49.47 Rt +75
Elev 49.47 Rt +00
Elev 49.38 Rt +25
Elev 49.42 Rt +50
Elev 49.59 Rt +75
Elev 49.68 Rt +00
Elev 49.53 Rt +25
Elev 49.21 Rt +50
Elev 49.39 Rt +75
Elev 49.57 Rt +00
Elev 49.33 Rt +25
Elev 49.27 Rt +50
Elev 49.55 Rt +75
Elev 49.83 Rt +00
Elev 49.85 Rt +25
Elev 49.86 Rt +50
Elev 49.88 Rt +75
Elev 49.90 Rt +00
Elev 49.91 Rt +25
Elev 49.93 Rt +50
Elev 49.94 Rt +75
Elev 49.90 Rt +00
Elev 49.87 Rt +25
Elev 49.83 Rt +50
Elev 49.79 Rt +75
Elev 49.76 Rt +00
Elev 49.72 Rt +25
Elev 49.69 Rt +50
Elev 49.65 Rt +75
Elev 49.62 Rt +00
Elev 49.58 Rt +25
Elev 49.55 Rt +50
Elev 49.54 Rt +75
Elev 49.69 Rt +00
Elev 50.19 Rt +25
Elev 50.88 Rt +50
Elev 51.72 Rt +75
Elev 52.02 Rt +00
Elev 52.51 Rt +25
Elev 52.78 Rt +50
Elev 53.17 Rt +75
Elev 53.46 Rt +00
Elev 53.80 Rt +25
Elev 53.97 Rt +50
Elev 54.13 Rt +75
Elev 54.33 Rt +00
Elev 54.51 Rt +25
Elev 54.71 Rt +50
Elev 54.77 Rt +75
Elev 54.72 Rt +00
Elev 54.70 Rt +25
Elev 54.87 Rt +50
Elev 55.13 Rt +75
Elev 55.40 Rt +00

MATCH LINE Sta 154+50

NB OUTSIDE SAWCUT

MATCH LINE Sta 168+00

Elev 63.46 Rt +75
Elev 63.50 Rt +00
Elev 63.53 Rt +25
Elev 63.56 Rt +50
Elev 63.60 Rt +75
Elev 63.63 Rt +00
Elev 63.66 Rt +25
Elev 63.70 Rt +50
Elev 63.73 Rt +75
Elev 63.76 Rt +00
Elev 63.80 Rt +25
Elev 63.83 Rt +50
Elev 63.86 Rt +75
Elev 63.90 Rt +00
Elev 63.93 Rt +25
Elev 63.97 Rt +50
Elev 64.00 Rt +75
Elev 64.03 Rt +00
Elev 64.07 Rt +25
Elev 64.10 Rt +50
Elev 64.13 Rt +75
Elev 64.17 Rt +00
Elev 64.20 Rt +25
Elev 64.23 Rt +50
Elev 64.27 Rt +75
Elev 64.30 Rt +00
Elev 64.34 Rt +25
Elev 64.37 Rt +50
Elev 64.40 Rt +75
Elev 64.44 Rt +00
Elev 64.47 Rt +25
Elev 64.50 Rt +75
Elev 64.55 Rt +75
Elev 64.74 Rt +00
Elev 65.09 Rt +25
Elev 65.45 Rt +50
Elev 65.78 Rt +75
Elev 66.11 Rt +00
Elev 66.42 Rt +25
Elev 66.72 Rt +50
Elev 67.01 Rt +75
Elev 67.29 Rt +00
Elev 67.55 Rt +25
Elev 67.80 Rt +50
Elev 68.04 Rt +75
Elev 68.27 Rt +00
Elev 68.48 Rt +25
Elev 68.68 Rt +50
Elev 68.87 Rt +75
Elev 69.04 Rt +00
Elev 69.20 Rt +25
Elev 69.35 Rt +50
Elev 69.49 Rt +75
Elev 69.61 Rt +00

NB OUTSIDE ES

PROFILE

SCALE: Horiz 1" = 100'
Vert 1" = 20'

P-11

STATION	155+00	156+00	157+00	158+00	159+00	160+00	161+00	162+00	163+00	164+00	165+00	166+00	167+00	168+00	TOTAL
CY Exc	1249.18														
CY Emb	914.84														

LAST REVISION 01-12-11
DATE PLOTTED => 25-JUN-2011
TIME PLOTTED => 08:31

Dist	COUNTY	ROUTE	POST MILES TOTAL PROJECT	SHEET No.	TOTAL SHEETS
07	Ven,SB	101	R39.8/R43.6, 0.0/2.2	49	757

REGISTERED CIVIL ENGINEER 01-12-11 DATE

6-20-11
PLANS APPROVAL DATE

REGISTERED PROFESSIONAL ENGINEER O.C. LEE No. C28039 Exp. 03/31/12 CIVIL STATE OF CALIFORNIA

THE STATE OF CALIFORNIA OR ITS OFFICERS OR AGENTS SHALL NOT BE RESPONSIBLE FOR THE ACCURACY OR COMPLETENESS OF SCANNED COPIES OF THIS PLAN SHEET.

REVISED BY: TRIEU NGUYEN
DATE REVISED:
CALCULATED-DESIGNED BY: ANTOINE NADER
CHECKED BY:
FUNCTIONAL SUPERVISOR: OC LEE

STATE OF CALIFORNIA - DEPARTMENT OF TRANSPORTATION
Caltrans® DESIGN

35 30 25

Elev 29.08 55.83' Rt +25
Elev 29.09 56.25' Rt +50
Elev 29.03 56.73' Rt +75
Elev 29.10 57.09' Rt +00
Elev 29.03 57.40' Rt +25
Elev 29.24 57.46' Rt +50
Elev 29.25 57.32' Rt +75
Elev 29.38 57.08' Rt +00
Elev 29.29 56.93' Rt +25
Elev 29.29 56.90' Rt +50
Elev 29.43 56.81' Rt +75
Elev 29.42 56.93' Rt +00
Elev 29.40 57.10' Rt +25
Elev 29.39 57.11' Rt +50
Elev 29.48 57.34' Rt +75
Elev 29.68 57.51' Rt +00
Elev 29.80 57.80' Rt +25
Elev 29.86 58.19' Rt +50
Elev 29.92 58.60' Rt +75
Elev 29.97 59.21' Rt +00
Elev 30.02 59.91' Rt +25
Elev 30.11 60.64' Rt +50
Elev 30.25

NB OUTSIDE SAWCUT

MATCH LINE Sta 168+00

MATCH LINE Sta 181+50

Elev 29.34 69.72' Rt +25
Elev 29.32 69.82' Rt +50
Elev 29.21 69.91' Rt +75
Elev 29.29 69.98' Rt +00
Elev 29.01 70.04' Rt +25
Elev 29.47 70.09' Rt +50
Elev 29.42 70.12' Rt +75
Elev 29.61 70.14' Rt +00
Elev 29.49 70.15' Rt +25
Elev 29.59 70.15' Rt +50
Elev 29.93 70.13' Rt +75
Elev 29.87 70.10' Rt +00
Elev 29.90 70.06' Rt +25
Elev 29.79 70.00' Rt +50
Elev 29.89 69.93' Rt +75
Elev 30.18 69.85' Rt +00
Elev 30.32 69.76' Rt +25
Elev 30.35 69.65' Rt +50
Elev 30.36 69.53' Rt +75
Elev 30.38 69.40' Rt +00
Elev 30.38 69.26' Rt +25
Elev 30.44 69.10' Rt +50
Elev 30.58

NB OUTSIDE ES

PROFILE

SCALE: Horiz 1" = 100'
Vert 1" = 20'

P-12

STATION	168+00	169+00	170+00	171+00	172+00	173+00	174+00	175+00	176+00	177+00	178+00	179+00	180+00	181+00	TOTAL
CY Exc	466.41														
CY Emb	111.88														

LAST REVISION 01-12-11
DATE PLOTTED => 25-JUN-2011
TIME PLOTTED => 08:31

Dist	COUNTY	ROUTE	POST MILES TOTAL PROJECT	SHEET No.	TOTAL SHEETS
07	Ven,SB	101	R39.8/R43.6, 0.0/2.2	50	757

REGISTERED CIVIL ENGINEER 01-12-11 DATE

6-20-11
PLANS APPROVAL DATE

REGISTERED PROFESSIONAL ENGINEER O.C. LEE No. C28039 Exp. 03/31/12 CIVIL STATE OF CALIFORNIA

THE STATE OF CALIFORNIA OR ITS OFFICERS OR AGENTS SHALL NOT BE RESPONSIBLE FOR THE ACCURACY OR COMPLETENESS OF SCANNED COPIES OF THIS PLAN SHEET.

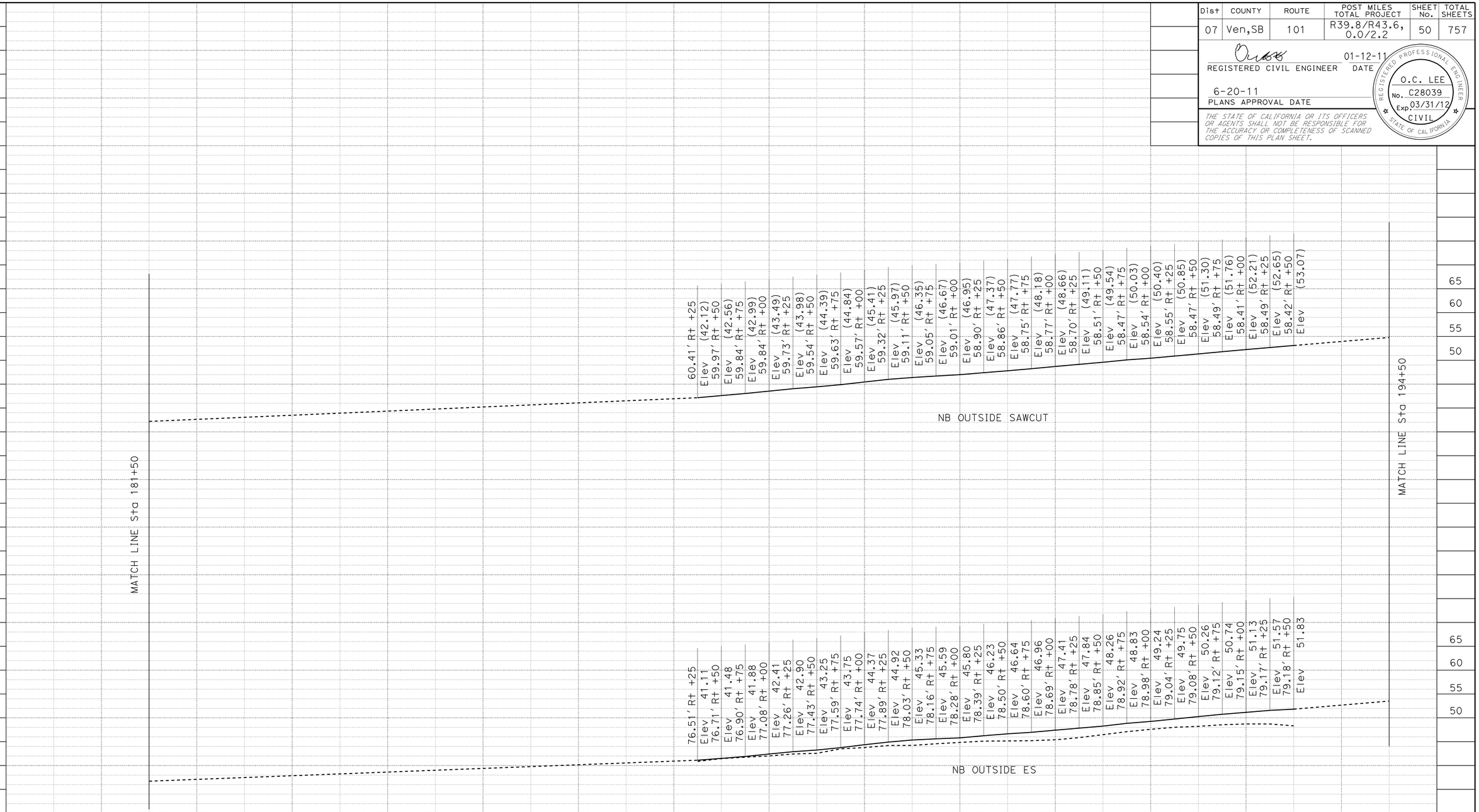

PROFILE

SCALE: Horiz 1" = 100'
Vert 1" = 20'

P-13

STATION	181+00	182+00	183+00	184+00	185+00	186+00	187+00	188+00	189+00	190+00	191+00	192+00	193+00	194+00	TOTAL
CY Exc								992.06							
CY Emb								39.77							

STATE OF CALIFORNIA - DEPARTMENT OF TRANSPORTATION
Caltrans® DESIGN

FUNCTIONAL SUPERVISOR: OC LEE
CALCULATED-DESIGNED BY: TRIEU NGUYEN
CHECKED BY: ANTOINE NADER
REVISED BY
DATE REVISED

LAST REVISION 01-12-11
DATE PLOTTED => 25-JUN-2011
TIME PLOTTED => 08:31

Dist	COUNTY	ROUTE	POST MILES TOTAL PROJECT	SHEET No.	TOTAL SHEETS
07	Ven,SB	101	R39.8/R43.6, 0.0/2.2	51	757

REGISTERED CIVIL ENGINEER 01-12-11 DATE

6-20-11
PLANS APPROVAL DATE

REGISTERED PROFESSIONAL ENGINEER O.C. LEE No. C28039 Exp. 03/31/12 CIVIL STATE OF CALIFORNIA

THE STATE OF CALIFORNIA OR ITS OFFICERS OR AGENTS SHALL NOT BE RESPONSIBLE FOR THE ACCURACY OR COMPLETENESS OF SCANNED COPIES OF THIS PLAN SHEET.

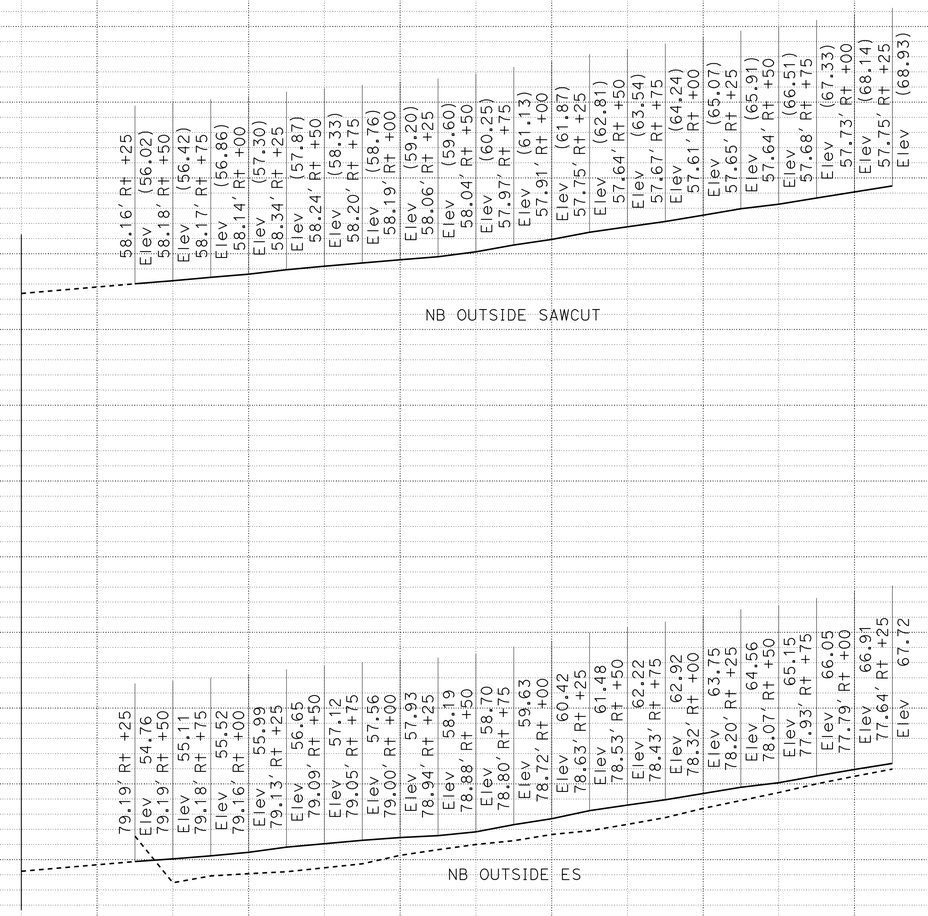

PROFILE

SCALE: Horiz 1" = 100'
Vert 1" = 20'

P-14

STATION		195+00	196+00	197+00	198+00	199+00	200+00	TOTAL
CY	Exc	606.33						
	Emb	271.09						

STATE OF CALIFORNIA - DEPARTMENT OF TRANSPORTATION
Caltrans® DESIGN

FUNCTIONAL SUPERVISOR: OC LEE
CALCULATED-DESIGNED BY: TRIEU NGUYEN
CHECKED BY: ANTOINE NADER
REVISED BY
DATE REVISED

LAST REVISION 01-12-11
DATE PLOTTED => 25-JUN-2011
TIME PLOTTED => 08:31

Dist	COUNTY	ROUTE	POST MILES TOTAL PROJECT	SHEET No.	TOTAL SHEETS
07	Ven,SB	101	R39.8/R43.6, 0.0/2.2	52	757

REGISTERED CIVIL ENGINEER 01-12-11 DATE

6-20-11
PLANS APPROVAL DATE

REGISTERED PROFESSIONAL ENGINEER
O.C. LEE
No. C28039
Exp. 03/31/12
CIVIL
STATE OF CALIFORNIA

THE STATE OF CALIFORNIA OR ITS OFFICERS OR AGENTS SHALL NOT BE RESPONSIBLE FOR THE ACCURACY OR COMPLETENESS OF SCANNED COPIES OF THIS PLAN SHEET.

REVISED BY
DATE REVISED

TRIEU NGUYEN
ANTOINE NADER

CALCULATED-DESIGNED BY
CHECKED BY

FUNCTIONAL SUPERVISOR
OC LEE

STATE OF CALIFORNIA - DEPARTMENT OF TRANSPORTATION
Caltrans
DESIGN

40
35
30
25

39.61' Lt +75
Elev (29.05)
37.43' Lt +00
Elev (29.14)
35.23' Lt +25
Elev (29.24)
33.52' Lt +50
Elev (29.43)
31.73' Lt +75
Elev (29..63)
30.78' Lt +00
Elev (29..64)
29.89' Lt +25
Elev (29..64)
29.20' Lt +50
Elev (29..65)
28.87' Lt +75
Elev (29..65)
28.54' Lt +00
Elev (29.65)
28.23' Lt +25
Elev (29.73)
27.99' Lt +50

SB OUTSIDE SAWCUT

MATCH LINE Sta 42+50

45.58' Lt +00
Elev 28.57
43.81' Lt +25
Elev 28.83
42.15' Lt +50
Elev 29.00
40.60' Lt +75
Elev 29.04
39.16' Lt +00
Elev 29.11
37.82' Lt +25
Elev 29.18
36.59' Lt +50
Elev 29.38
35.56' Lt +75
Elev 29.58
34.81' Lt +00
Elev 29.60
34.33' Lt +25
Elev 29.59
34.11' Lt +50
Elev 29.58
34.17' Lt +75
Elev 29.58
34.48' Lt +00
Elev 29.57
34.84' Lt +25
Elev 29.65
35.19' Lt +50
Elev 29.90

SB OUTSIDE ES

PROFILE

SCALE: Horiz 1" = 100'
Vert 1" = 20'

P-15

STATION		39+00	40+00	41+00	42+00	TOTAL
CY	Exc		203.64			
	Emb		0			

LAST REVISION 01-12-11
DATE PLOTTED => 25-JUN-2011
TIME PLOTTED => 08:31

Dist	COUNTY	ROUTE	POST MILES TOTAL PROJECT	SHEET No.	TOTAL SHEETS
07	Ven,SB	101	R39.8/R43.6, 0.0/2.2	53	757

REGISTERED CIVIL ENGINEER 01-12-11 DATE

6-20-11
PLANS APPROVAL DATE

REGISTERED PROFESSIONAL ENGINEER O.C. LEE No. C28039 Exp. 03/31/12 CIVIL STATE OF CALIFORNIA

THE STATE OF CALIFORNIA OR ITS OFFICERS OR AGENTS SHALL NOT BE RESPONSIBLE FOR THE ACCURACY OR COMPLETENESS OF SCANNED COPIES OF THIS PLAN SHEET.

REVISED BY | DATE REVISED

TRIEU NGUYEN | ANTOINE NADER

CALCULATED-DESIGNED BY | CHECKED BY

FUNCTIONAL SUPERVISOR: OC LEE

STATE OF CALIFORNIA - DEPARTMENT OF TRANSPORTATION

Caltrans DESIGN

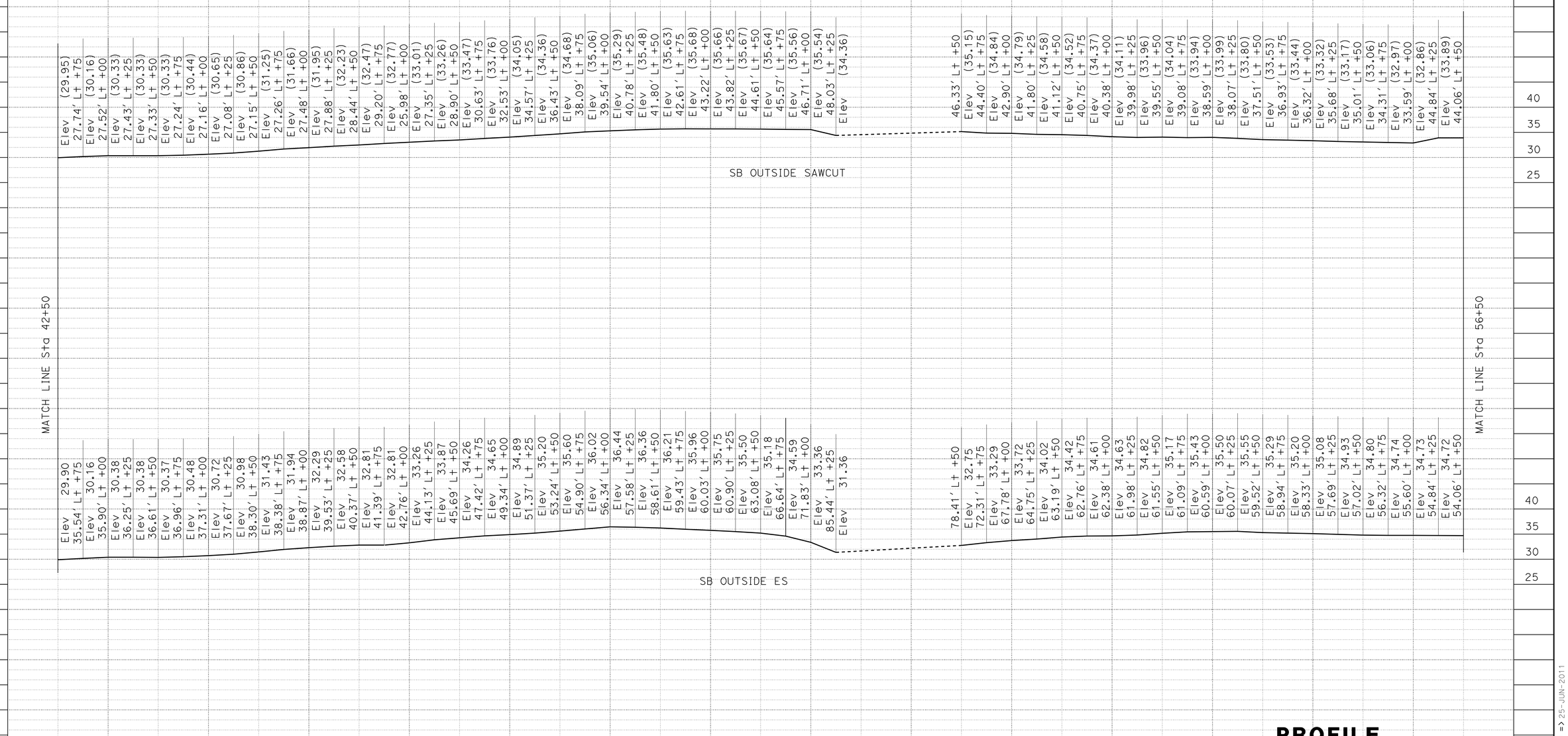

PROFILE

SCALE: Horiz 1" = 100'
Vert 1" = 20'

P-16

STATION		43+00	44+00	45+00	46+00	47+00	48+00	49+00	50+00	51+00	52+00	53+00	54+00	55+00	56+00	TOTAL
CY	Exc	2237.81														
	Emb	21.38														

LAST REVISION 01-12-11 | DATE PLOTTED => 25-JUN-2011 | TIME PLOTTED => 08:31

Dist	COUNTY	ROUTE	POST MILES TOTAL PROJECT	SHEET No.	TOTAL SHEETS
07	Ven,SB	101	R39.8/R43.6, 0.0/2.2	54	757

REGISTERED CIVIL ENGINEER 01-12-11 DATE

6-20-11
PLANS APPROVAL DATE

REGISTERED PROFESSIONAL ENGINEER O.C. LEE No. C28039 Exp. 03/31/12 CIVIL STATE OF CALIFORNIA

THE STATE OF CALIFORNIA OR ITS OFFICERS OR AGENTS SHALL NOT BE RESPONSIBLE FOR THE ACCURACY OR COMPLETENESS OF SCANNED COPIES OF THIS PLAN SHEET.

REVISED BY | DATE REVISED

TRIEU NGUYEN | ANTOINE NADER

CALCULATED-DESIGNED BY | CHECKED BY

FUNCTIONAL SUPERVISOR: OC LEE

STATE OF CALIFORNIA - DEPARTMENT OF TRANSPORTATION

Caltrans® DESIGN

35 30 25 20

Elev (33.89) 43.25' Lt +75
Elev (33.86) 42.41' Lt +00
Elev (33.79) 41.55' Lt +25
Elev (33.66) 40.66' Lt +50
Elev (33.50) 39.77' Lt +75
Elev (33.17) 38.95' Lt +00
Elev (32.86) 38.20' Lt +25
Elev (32.67) 37.51' Lt +50
Elev (32.51) 36.89' Lt +75
Elev (32.38) 36.34' Lt +00
Elev (32.22) 35.85' Lt +25
Elev (32.15) 35.43' Lt +50
Elev (32.04) 35.07' Lt +75
Elev (31.66) 34.78' Lt +00
Elev (31.41) 34.56' Lt +25
Elev (31.11) 34.40' Lt +50
Elev (30.97) 34.32' Lt +75
Elev (30.88) 34.29' Lt +00
Elev (30.77) 34.34' Lt +25
Elev (30.82) 34.45' Lt +50
Elev (30.76) 34.63' Lt +75
Elev (30.62) 34.87' Lt +00
Elev (30.36) 35.18' Lt +25
Elev (30.25)

SB OUTSIDE SAWCUT

MATCH LINE Sta 56+50

Elev 34.69 53.25' Lt +75
Elev 34.65 52.42' Lt +00
Elev 34.58 51.55' Lt +25
Elev 34.46 50.66' Lt +50
Elev 34.30 49.78' Lt +75
Elev 33.98 48.96' Lt +00
Elev 33.69 48.20' Lt +25
Elev 33.46 47.52' Lt +50
Elev 33.30 46.89' Lt +75
Elev 33.17 46.34' Lt +00
Elev 33.04 45.85' Lt +25
Elev 32.95 45.43' Lt +50
Elev 32.84 45.07' Lt +75
Elev 32.53 44.78' Lt +00
Elev 32.21 44.56' Lt +25
Elev 31.93 44.41' Lt +50
Elev 31.78 44.32' Lt +75
Elev 31.68 44.29' Lt +00
Elev 31.59 44.34' Lt +25
Elev 31.61 44.45' Lt +50
Elev 31.55 44.63' Lt +75
Elev 31.34 44.87' Lt +00
Elev 31.04 45.18' Lt +25
Elev 30.89

SB OUTSIDE ES

35 30 25 20

PROFILE

SCALE: Horiz 1" = 100'
Vert 1" = 20'

P-17

STATION		57+00	58+00	59+00	60+00	61+00	62+00	63+00	64+00	65+00	66+00	67+00	68+00	69+00	70+00	TOTAL
CY	Exc	736.59														
	Emb	.43														

LAST REVISION 01-12-11 | DATE PLOTTED => 25-JUN-2011 | TIME PLOTTED => 08:32

Dist	COUNTY	ROUTE	POST MILES TOTAL PROJECT	SHEET No.	TOTAL SHEETS
07	Ven,SB	101	R39.8/R43.6, 0.0/2.2	55	757

REGISTERED CIVIL ENGINEER 01-12-11 DATE

6-20-11
PLANS APPROVAL DATE

REGISTERED PROFESSIONAL ENGINEER O.C. LEE No. C28039 Exp. 03/31/12 CIVIL STATE OF CALIFORNIA

THE STATE OF CALIFORNIA OR ITS OFFICERS OR AGENTS SHALL NOT BE RESPONSIBLE FOR THE ACCURACY OR COMPLETENESS OF SCANNED COPIES OF THIS PLAN SHEET.

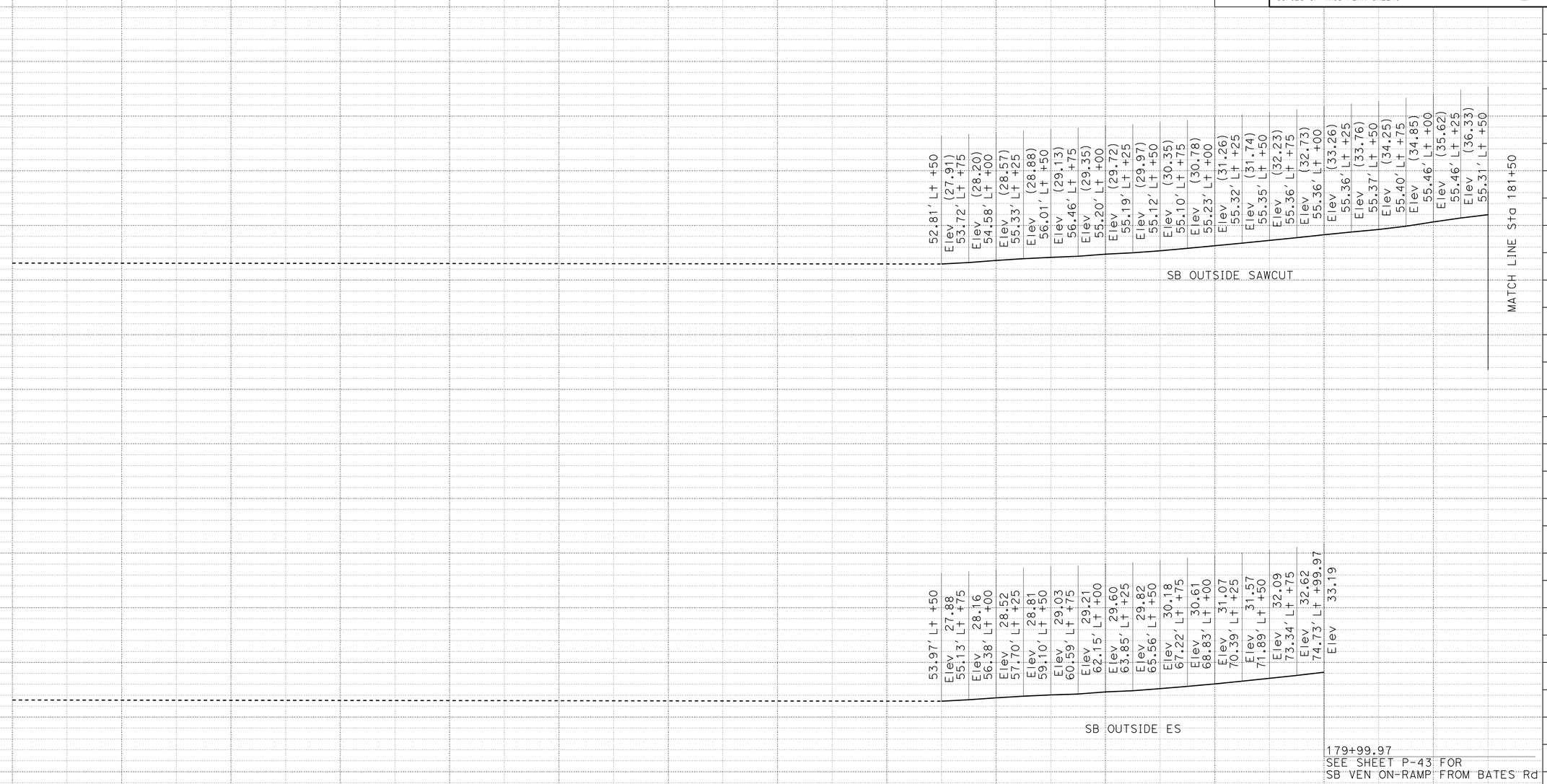

PROFILE

SCALE: Horiz 1" = 100'
Vert 1" = 20'

P-18

STATION	168+00	169+00	170+00	171+00	172+00	173+00	174+00	175+00	176+00	177+00	178+00	179+00	180+00	181+00	TOTAL
CY Exc										427.46					
CY Emb										128.50					

STATE OF CALIFORNIA - DEPARTMENT OF TRANSPORTATION
Caltrans® DESIGN

FUNCTIONAL SUPERVISOR: OC LEE
CALCULATED-DESIGNED BY: TRIEU NGUYEN
CHECKED BY: ANTOINE NADER
REVISED BY
DATE REVISED

LAST REVISION 01-12-11
DATE PLOTTED => 25-JUN-2011
TIME PLOTTED => 08:32

Dist	COUNTY	ROUTE	POST MILES TOTAL PROJECT	SHEET No.	TOTAL SHEETS
07	Ven,SB	101	R39.8/R43.6, 0.0/2.2	56	757

REGISTERED CIVIL ENGINEER 01-12-11 DATE

6-20-11
PLANS APPROVAL DATE

REGISTERED PROFESSIONAL ENGINEER O.C. LEE No. C28039 Exp. 03/31/12 CIVIL STATE OF CALIFORNIA

THE STATE OF CALIFORNIA OR ITS OFFICERS OR AGENTS SHALL NOT BE RESPONSIBLE FOR THE ACCURACY OR COMPLETENESS OF SCANNED COPIES OF THIS PLAN SHEET.

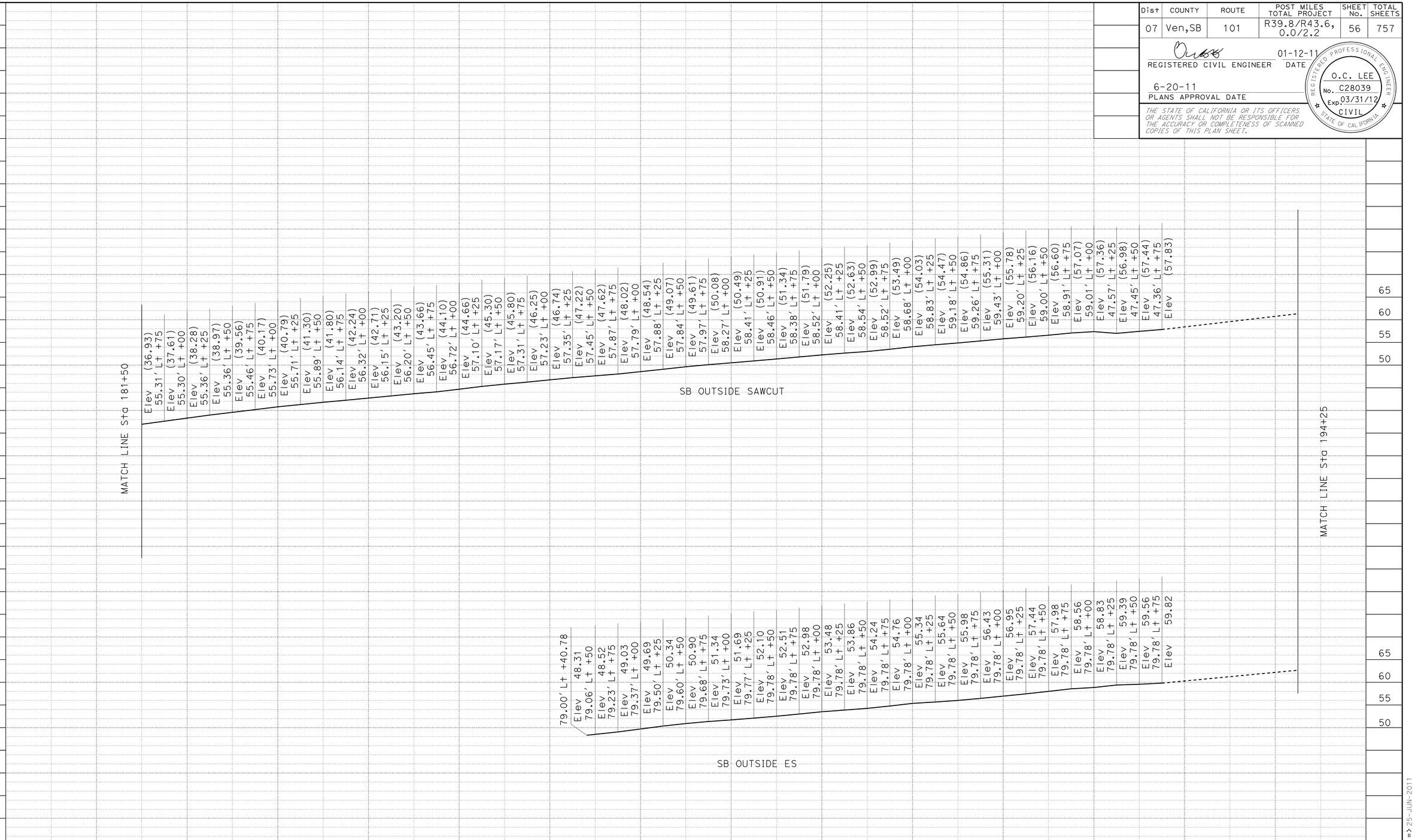

PROFILE

SCALE: Horiz 1"=50'
Vert 1"=10'

P-19

STATION		182+00	183+00	184+00	185+00	186+00	187+00	188+00	189+00	190+00	191+00	192+00	193+00	194+00	TOTAL
CY	Exc	1887.91													
	Emb	2979.15													

STATE OF CALIFORNIA - DEPARTMENT OF TRANSPORTATION
Caltrans
DESIGN

FUNCTIONAL SUPERVISOR: OC LEE
CALCULATED-DESIGNED BY: TRIEU NGUYEN
CHECKED BY: ANTOINE NADER
REVISED BY
DATE REVISED

LAST REVISION 01-12-11
DATE PLOTTED => 25-JUN-2011
TIME PLOTTED => 08:32

Dist	COUNTY	ROUTE	POST MILES TOTAL PROJECT	SHEET No.	TOTAL SHEETS
07	Ven,SB	101	R39.8/R43.6, 0.0/2.2	57	757

REGISTERED CIVIL ENGINEER 01-12-11 DATE

6-20-11
PLANS APPROVAL DATE

REGISTERED PROFESSIONAL ENGINEER O.C. LEE No. C28039 Exp. 03/31/12 CIVIL STATE OF CALIFORNIA

THE STATE OF CALIFORNIA OR ITS OFFICERS OR AGENTS SHALL NOT BE RESPONSIBLE FOR THE ACCURACY OR COMPLETENESS OF SCANNED COPIES OF THIS PLAN SHEET.

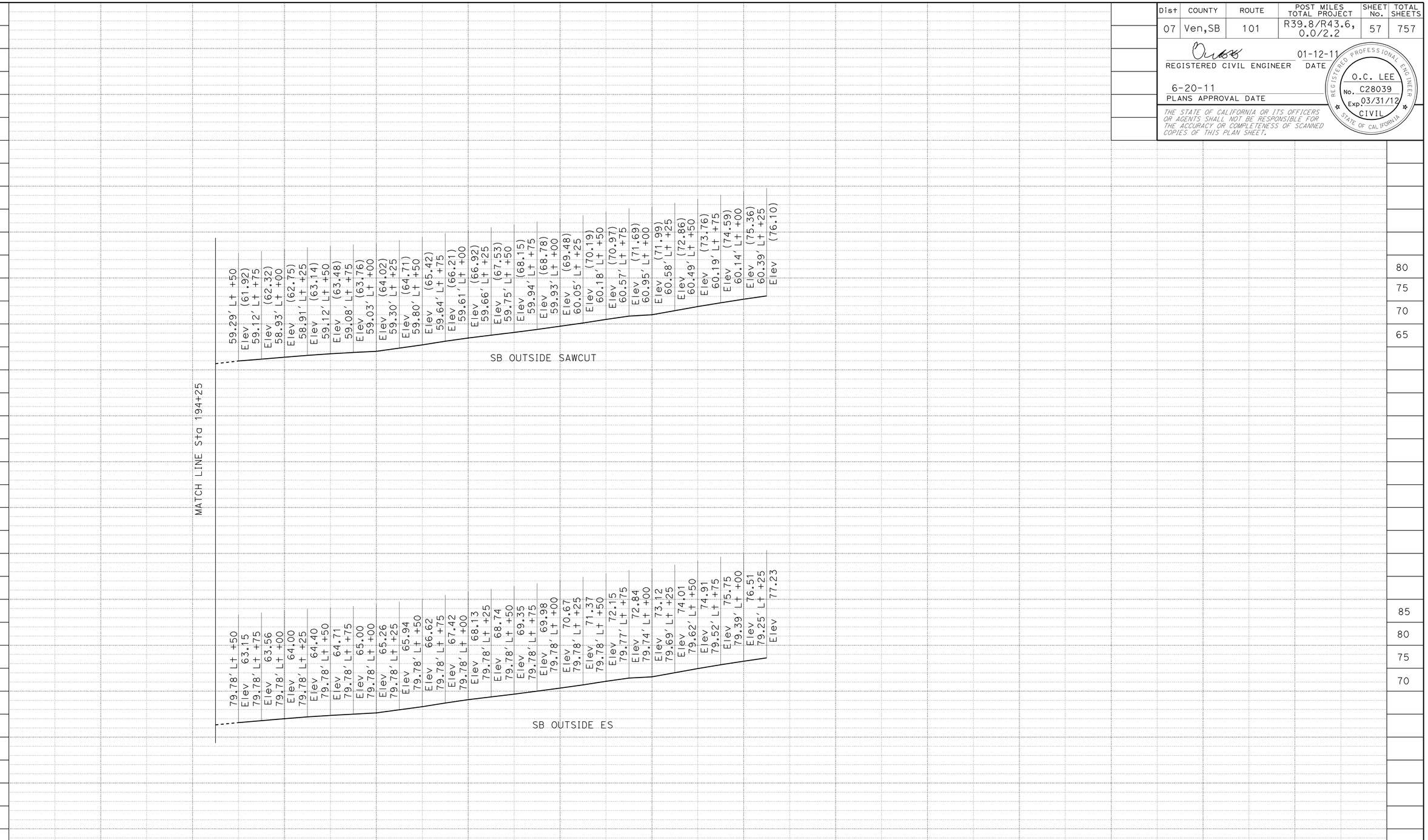

PROFILE

SCALE: Horiz 1" = 100'
Vert 1" = 20'

P-20

STATION		195+00	196+00	197+00	198+00	199+00	200+00	TOTAL
CY	Exc	784.55						
	Emb	112.40						

STATE OF CALIFORNIA - DEPARTMENT OF TRANSPORTATION
Caltrans® DESIGN

FUNCTIONAL SUPERVISOR: OC LEE
CALCULATED-DESIGNED BY: TRIEU NGUYEN
CHECKED BY: ANTOINE NADER
REVISED BY
DATE REVISED

LAST REVISION 01-12-11
DATE PLOTTED => 25-JUN-2011
TIME PLOTTED => 08:32

Dist	COUNTY	ROUTE	POST MILES TOTAL PROJECT	SHEET No.	TOTAL SHEETS
07	Ven,SB	101	R39.8/R43.6, 0.0/2.2	58	757

REGISTERED CIVIL ENGINEER 01-12-11 DATE

6-20-11
PLANS APPROVAL DATE

REGISTERED PROFESSIONAL ENGINEER O.C. LEE No. C28039 Exp. 03/31/12 CIVIL STATE OF CALIFORNIA

THE STATE OF CALIFORNIA OR ITS OFFICERS OR AGENTS SHALL NOT BE RESPONSIBLE FOR THE ACCURACY OR COMPLETENESS OF SCANNED COPIES OF THIS PLAN SHEET.

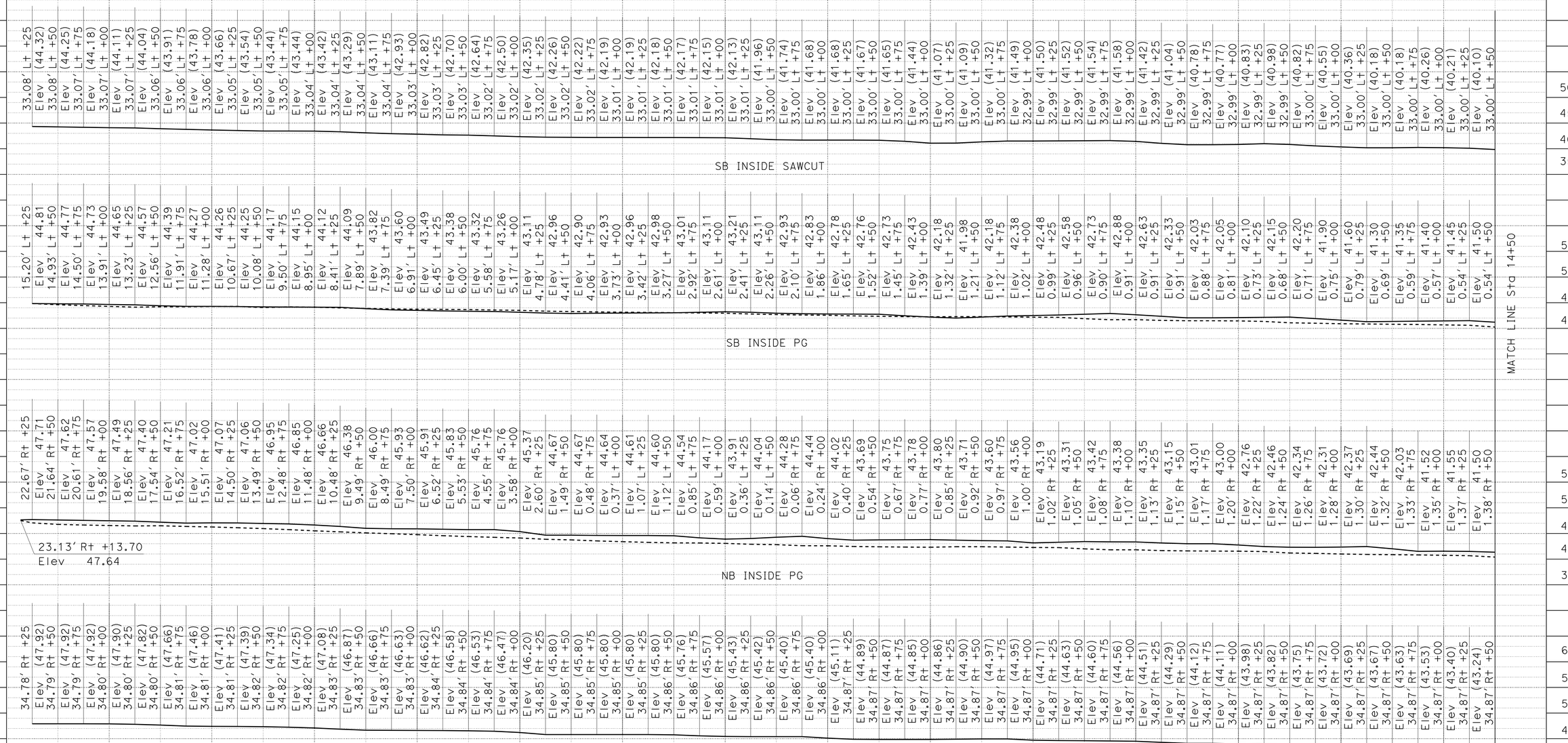

PROFILE

SCALE: Horiz 1" = 100'
Vert 1" = 20'

P-21

STATION	1+00	2+00	3+00	4+00	5+00	6+00	7+00	8+00	9+00	10+00	11+00	12+00	13+00	14+00	TOTAL
CY Exc							5270.70								
CY Emb							475.27								

STATE OF CALIFORNIA - DEPARTMENT OF TRANSPORTATION
Caltrans® DESIGN
FUNCTIONAL SUPERVISOR: OC LEE
CALCULATED-DESIGNED BY: TRIEU NGUYEN
CHECKED BY: ANTOINE NADER
REVISED BY
DATE REVISED

LAST REVISION 01-12-11
DATE PLOTTED => 28-JUN-2011
TIME PLOTTED => 17:36

Dist	COUNTY	ROUTE	POST MILES TOTAL PROJECT	SHEET No.	TOTAL SHEETS
07	Ven,SB	101	R39.8/R43.6, 0.0/2.2	59	757

REGISTERED CIVIL ENGINEER 01-12-11 DATE

6-20-11
PLANS APPROVAL DATE

REGISTERED PROFESSIONAL ENGINEER O.C. LEE No. C28039 Exp. 03/31/12 CIVIL STATE OF CALIFORNIA

THE STATE OF CALIFORNIA OR ITS OFFICERS OR AGENTS SHALL NOT BE RESPONSIBLE FOR THE ACCURACY OR COMPLETENESS OF SCANNED COPIES OF THIS PLAN SHEET.

REVISED BY | DATE REVISED

TRIEU NGUYEN | ANTOINE NADER

CALCULATED-DESIGNED BY | CHECKED BY

FUNCTIONAL SUPERVISOR: OC LEE

STATE OF CALIFORNIA - DEPARTMENT OF TRANSPORTATION

Caltrans® **DESIGN**

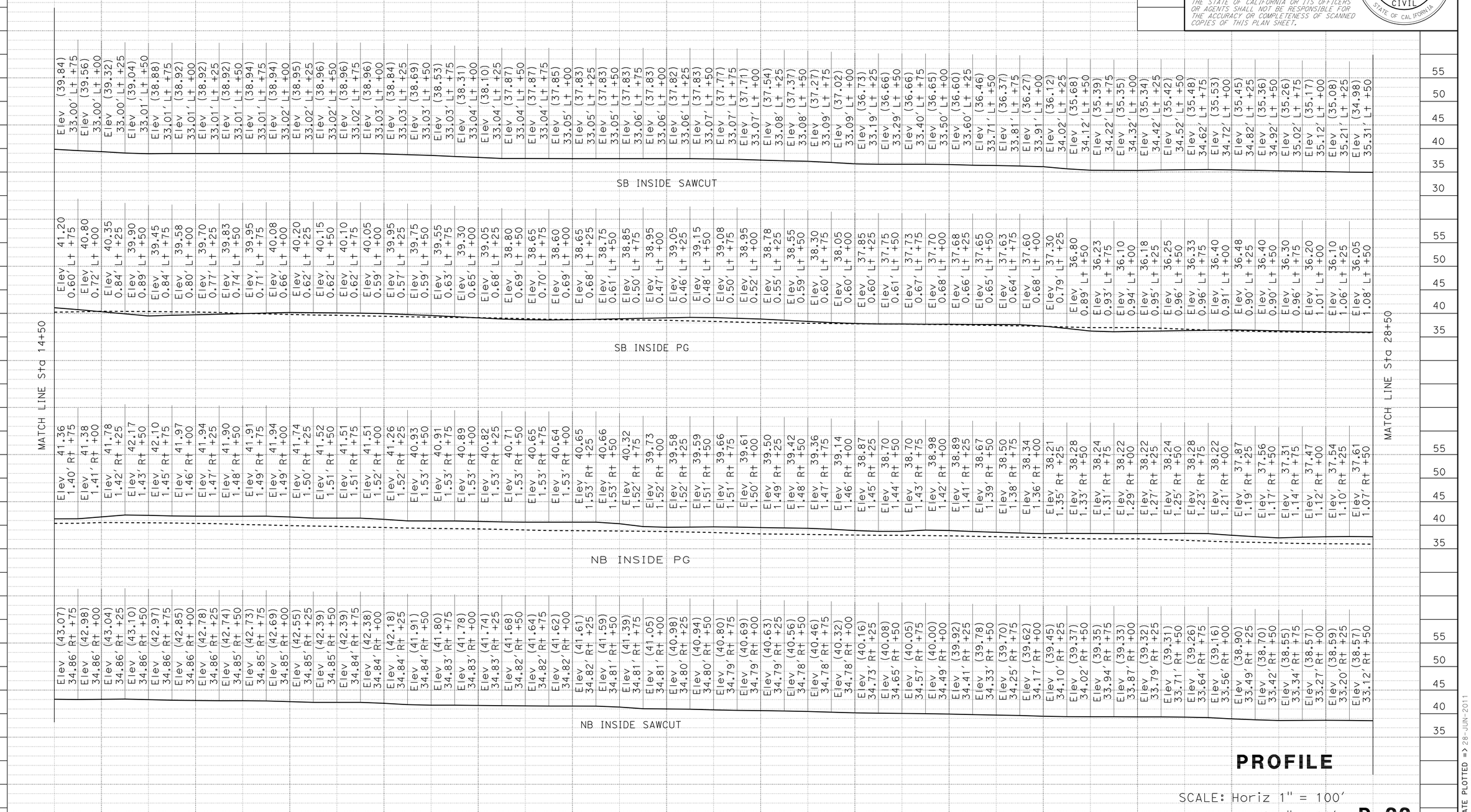

PROFILE

SCALE: Horiz 1" = 100'
Vert 1" = 20'

P-22

LAST REVISION 01-12-11 | DATE PLOTTED => 28-JUN-2011 | TIME PLOTTED => 17:36

Dist	COUNTY	ROUTE	POST MILES TOTAL PROJECT	SHEET No.	TOTAL SHEETS
07	Ven,SB	101	R39.8/R43.6, 0.0/2.2	60	757

REGISTERED CIVIL ENGINEER 01-12-11 DATE

6-20-11
PLANS APPROVAL DATE

REGISTERED PROFESSIONAL ENGINEER O.C. LEE No. C28039 Exp. 03/31/12 CIVIL STATE OF CALIFORNIA

THE STATE OF CALIFORNIA OR ITS OFFICERS OR AGENTS SHALL NOT BE RESPONSIBLE FOR THE ACCURACY OR COMPLETENESS OF SCANNED COPIES OF THIS PLAN SHEET.

REVISED BY | DATE REVISED

TRIEU NGUYEN | ANTOINE NADER

CALCULATED-DESIGNED BY | CHECKED BY

FUNCTIONAL SUPERVISOR: OC LEE

STATE OF CALIFORNIA - DEPARTMENT OF TRANSPORTATION

Caltrans®

DESIGN

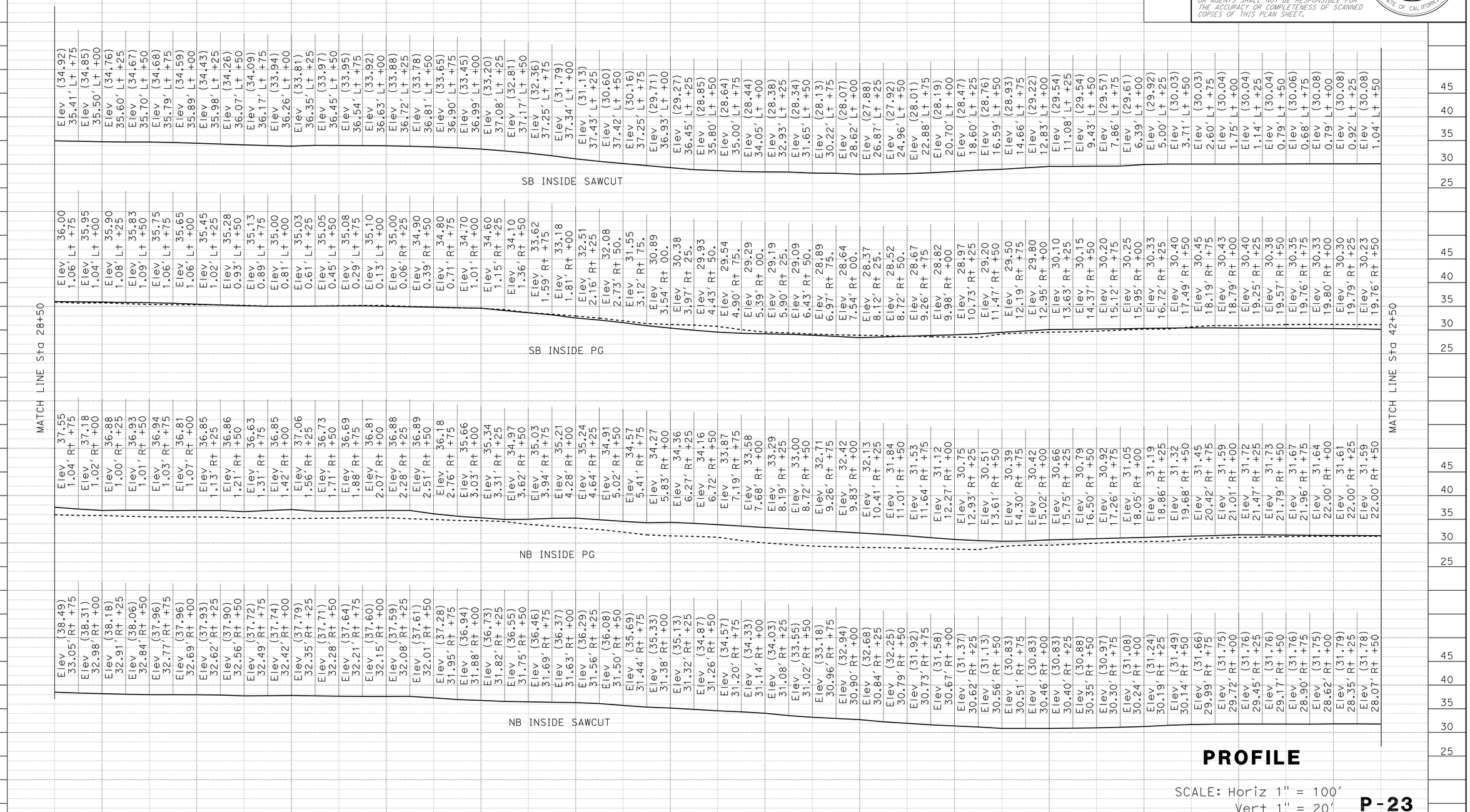

PROFILE

SCALE: Horiz 1" = 100'
Vert 1" = 20'

P-23

LAST REVISION 01-12-11
DATE PLOTTED => 28-JUN-2011
TIME PLOTTED => 17:36

Dist	COUNTY	ROUTE	POST MILES TOTAL PROJECT	SHEET No.	TOTAL SHEETS
07	Ven,SB	101	R39.8/R43.6, 0.0/2.2	61	757

REGISTERED CIVIL ENGINEER 01-12-11 DATE

6-20-11
PLANS APPROVAL DATE

REGISTERED PROFESSIONAL ENGINEER O.C. LEE No. C28039 Exp. 03/31/12 CIVIL STATE OF CALIFORNIA

THE STATE OF CALIFORNIA OR ITS OFFICERS OR AGENTS SHALL NOT BE RESPONSIBLE FOR THE ACCURACY OR COMPLETENESS OF SCANNED COPIES OF THIS PLAN SHEET.

MATCH LINE Sta 42+50

SB INSIDE SAWCUT

Elev (30.10) 1.17' Lt +75
Elev (30.12) 1.30' Lt +00
Elev (30.17) 1.42' Lt +25
Elev (30.21) 1.55' Lt +50
Elev (30.27) 1.68' Lt +75
Elev (30.35) 1.80' Lt +00
Elev (30.45) 1.93' Lt +25
Elev (30.55) 2.06' Lt +50
Elev (30.79) 2.19' Lt +75
Elev (31.00) 2.44' Lt +00
Elev (31.19) 2.87' Lt +25
Elev (31.47) 3.48' Lt +50
Elev (31.81) 4.26' Lt +75
Elev (32.15) 5.21' Lt +00
Elev (32.40) 6.35' Lt +25
Elev (32.50) 7.66' Lt +50
Elev (32.50) 9.15' Lt +75
Elev (32.73) 10.81' Lt +00
Elev (33.01) 12.65' Lt +25
Elev (33.30) 14.55' Lt +50
Elev (33.44) 16.25' Lt +75
Elev (33.45) 17.74' Lt +00
Elev (33.67) 19.03' Lt +25
Elev (33.88) 20.11' Lt +50
Elev (33.67) 20.99' Lt +75
Elev (33.89) 21.67' Lt +00
Elev (33.95) 22.14' Lt +25
Elev (34.00) 22.40' Lt +50
Elev (34.07) 22.47' Lt +75
Elev (33.74) 22.32' Lt +00
Elev (33.83) 21.98' Lt +25
Elev (33.79) 21.54' Lt +50
Elev (33.84) 21.13' Lt +75
Elev (33.76) 20.74' Lt +00
Elev (33.72) 20.37' Lt +25
Elev (33.36) 20.02' Lt +50
Elev (33.04) 19.69' Lt +75
Elev (32.84) 19.38' Lt +00
Elev (32.79) 19.09' Lt +25
Elev (32.38) 18.82' Lt +50
Elev (32.24) 18.58' Lt +75
Elev (32.14) 18.35' Lt +00
Elev (32.15) 18.14' Lt +25
Elev (32.19) 17.96' Lt +50
Elev (32.17) 17.79' Lt +75
Elev (31.98) 17.65' Lt +00
Elev (31.93) 17.52' Lt +25
Elev (31.77) 17.42' Lt +50
Elev (31.70) 17.34' Lt +75
Elev (31.69) 17.28' Lt +00
Elev (31.74) 17.24' Lt +25
Elev (31.54) 17.22' Lt +50
Elev (31.41) 17.22' Lt +75
Elev (31.23) 17.24' Lt +00
Elev (31.09) 17.28' Lt +25
Elev (31.08) 17.35' Lt +50

SB INSIDE PG

Elev 30.15 19.75' Rt +75
Elev 30.08 19.75' Rt +00
Elev 30.00 19.76' Rt +25
Elev 30.08 19.81' Rt +50
Elev 30.15 19.82' Rt +75
Elev 30.23 19.82' Rt +00
Elev 30.30 19.82' Rt +25
Elev 30.38 19.83' Rt +50
Elev 30.45 19.85' Rt +75
Elev 30.53 19.72' Rt +00
Elev 30.60 19.43' Rt +25
Elev 30.85 19.02' Rt +50
Elev 31.10 18.44' Rt +75
Elev 31.35 17.62' Rt +00
Elev 31.55 16.59' Rt +25
Elev 31.65 15.37' Rt +50
Elev 31.70 14.03' Rt +75
Elev 31.75 12.63' Rt +00
Elev 31.90 11.30' Rt +25
Elev 32.05 10.03' Rt +50
Elev 32.00 8.86' Rt +75
Elev 31.90 7.88' Rt +00
Elev 31.85 7.02' Rt +25
Elev 31.80 6.16' Rt +50
Elev 31.75 5.63' Rt +75
Elev 31.78 5.25' Rt +00
Elev 31.80 5.07' Rt +25
Elev 31.83 5.14' Rt +50
Elev 31.85 5.33' Rt +75
Elev 31.88 5.80' Rt +00
Elev 31.90 6.41' Rt +25
Elev 31.95 7.16' Rt +50
Elev 32.00 7.84' Rt +75
Elev 31.95 8.47' Rt +00
Elev 31.90 9.03' Rt +25
Elev 31.50 9.59' Rt +50
Elev 31.10 10.12' Rt +75
Elev 30.70 10.70' Rt +00
Elev 30.35 11.18' Rt +25
Elev 30.08 11.69' Rt +50
Elev 29.88 12.09' Rt +75
Elev 29.75 12.54' Rt +00
Elev 29.70 12.98' Rt +25
Elev 29.65 13.41' Rt +50
Elev 29.60 13.73' Rt +75
Elev 29.55 14.02' Rt +00
Elev 29.40 14.35' Rt +25
Elev 29.24 14.70' Rt +50
Elev 29.08 14.96' Rt +75
Elev 29.00 15.23' Rt +00
Elev 28.93 15.42' Rt +25
Elev 28.75 15.60' Rt +50
Elev 28.48 15.74' Rt +75
Elev 28.20 15.85' Rt +00
Elev 27.95 15.95' Rt +25
Elev 27.85 16.04' Rt +50

NB INSIDE PG

Elev 22.00' 31.56 Rt +75
Elev 22.00' 31.53 Rt +00
Elev 22.00' 31.52 Rt +25
Elev 22.00' 31.50 Rt +50
Elev 22.00' 31.40 Rt +75
Elev 22.00' 31.39 Rt +00
Elev 22.00' 31.38 Rt +25
Elev 22.00' 31.37 Rt +50
Elev 22.00' 31.45 Rt +75
Elev 21.87' 31.45 Rt +00
Elev 21.10' 31.48 Rt +25
Elev 20.45' 31.68 Rt +50
Elev 19.62' 31.72 Rt +75
Elev 18.62' 31.75 Rt +00
Elev 17.45' 31.79 Rt +25
Elev 16.10' 31.90 Rt +50
Elev 14.67' 32.00 Rt +75
Elev 13.35' 32.10 Rt +00
Elev 12.14' 32.20 Rt +25
Elev 11.04' 32.35 Rt +50
Elev 10.04' 32.53 Rt +75
Elev 9.15' 32.59 Rt +00
Elev 8.38' 32.64 Rt +25
Elev 7.79' 32.71 Rt +50
Elev 7.41' 32.82 Rt +75
Elev 7.24' 32.92 Rt +00
Elev 7.26' 33.02 Rt +25
Elev 7.49' 32.93 Rt +50
Elev 7.91' 32.83 Rt +75
Elev 8.54' 32.73 Rt +00
Elev 9.25' 32.64 Rt +25
Elev 9.93' 32.54 Rt +50
Elev 10.58' 32.48 Rt +75
Elev 11.21' 32.35 Rt +00
Elev 11.82' 32.33 Rt +25
Elev 12.40' 32.22 Rt +50
Elev 12.95' 32.07 Rt +75
Elev 13.48' 32.03 Rt +00
Elev 13.99' 31.88 Rt +25
Elev 14.47' 31.78 Rt +50
Elev 14.92' 31.68 Rt +75
Elev 15.35' 31.77 Rt +00
Elev 15.75' 31.82 Rt +25
Elev 16.12' 31.92 Rt +50
Elev 16.47' 32.02 Rt +75
Elev 16.79' 32.11 Rt +00
Elev 17.09' 32.19 Rt +25
Elev 17.36' 31.89 Rt +50
Elev 17.60' 31.49 Rt +75
Elev 17.82' 31.48 Rt +00
Elev 18.01' 31.47 Rt +25
Elev 18.18' 31.30 Rt +50
Elev 18.32' 31.03 Rt +75
Elev 18.43' 30.74 Rt +00
Elev 18.52' 30.63 Rt +25
Elev 18.57' 30.59 Rt +50

MATCH LINE Sta 56+50

NB INSIDE SAWCUT

Elev (31.76) 27.79' Rt +75
Elev (31.73) 27.52' Rt +00
Elev (31.66) 27.24' Rt +25
Elev (31.64) 26.97' Rt +50
Elev (31.46) 26.69' Rt +75
Elev (31.45) 26.42' Rt +00
Elev (31.43) 26.14' Rt +25
Elev (31.41) 25.87' Rt +50
Elev (31.43) 25.59' Rt +75
Elev (31.38) 25.19' Rt +00
Elev (31.43) 24.62' Rt +25
Elev (31.65) 23.87' Rt +50
Elev (31.64) 22.95' Rt +75
Elev (31.64) 21.89' Rt +00
Elev (31.73) 20.92' Rt +25
Elev (31.84) 20.04' Rt +50
Elev (31.93) 19.26' Rt +75
Elev (32.02) 18.59' Rt +00
Elev (32.11) 18.01' Rt +25
Elev (32.30) 17.54' Rt +50
Elev (32.42) 17.16' Rt +75
Elev (32.42) 16.89' Rt +00
Elev (32.41) 16.71' Rt +25
Elev (32.37) 16.64' Rt +50
Elev (32.36) 16.66' Rt +75
Elev (32.36) 16.79' Rt +00
Elev (32.33) 17.01' Rt +25
Elev (32.29) 17.34' Rt +50
Elev (32.18) 17.77' Rt +75
Elev (32.03) 18.29' Rt +00
Elev (32.04) 18.92' Rt +25
Elev (32.06) 19.57' Rt +50
Elev (31.97) 20.28' Rt +75
Elev (31.78) 20.97' Rt +00
Elev (31.78) 21.63' Rt +25
Elev (31.73) 22.25' Rt +50
Elev (31.57) 22.85' Rt +75
Elev (31.53) 23.41' Rt +00
Elev (31.43) 23.95' Rt +25
Elev (31.27) 24.45' Rt +50
Elev (31.06) 24.93' Rt +75
Elev (31.15) 25.37' Rt +00
Elev (31.06) 25.79' Rt +25
Elev (31.01) 26.17' Rt +50
Elev (30.98) 26.53' Rt +75
Elev (31.14) 26.85' Rt +00
Elev (31.27) 27.14' Rt +25
Elev (30.95) 27.40' Rt +50
Elev (30.63) 27.63' Rt +75
Elev (30.58) 27.83' Rt +00
Elev (30.53) 27.99' Rt +25
Elev (30.40) 28.13' Rt +50
Elev (30.23) 28.23' Rt +75
Elev (30.05) 28.31' Rt +00
Elev (29.88) 28.35' Rt +25
Elev (29.84) 28.36' Rt +50

PROFILE

SCALE: Horiz 1" = 100'
Vert 1" = 20'

P-24

STATION		43+00	44+00	45+00	46+00	47+00	48+00	49+00	50+00	51+00	52+00	53+00	54+00	55+00	56+00	TOTAL
CY	Exc	4527.22														
	Emb	0														

STATE OF CALIFORNIA - DEPARTMENT OF TRANSPORTATION
Caltrans® DESIGN

FUNCTIONAL SUPERVISOR: OC LEE
CALCULATED-DESIGNED BY: TRIEU NGUYEN
CHECKED BY: ANTOINE NADER
REVISED BY
DATE REVISED

LAST REVISION 01-12-11
DATE PLOTTED => 28-JUN-2011
TIME PLOTTED => 17:36

Dist	COUNTY	ROUTE	POST MILES TOTAL PROJECT	SHEET No.	TOTAL SHEETS
07	Ven,SB	101	R39.8/R43.6, 0.0/2.2	62	757

REGISTERED CIVIL ENGINEER 01-12-11 DATE

6-20-11
PLANS APPROVAL DATE

REGISTERED PROFESSIONAL ENGINEER O.C. LEE No. C28039 Exp. 03/31/12 CIVIL STATE OF CALIFORNIA

THE STATE OF CALIFORNIA OR ITS OFFICERS OR AGENTS SHALL NOT BE RESPONSIBLE FOR THE ACCURACY OR COMPLETENESS OF SCANNED COPIES OF THIS PLAN SHEET.

REVISED BY | DATE REVISED

TRIEU NGUYEN | ANTOINE NADER

CALCULATED-DESIGNED BY | CHECKED BY

FUNCTIONAL SUPERVISOR: OC LEE

STATE OF CALIFORNIA - DEPARTMENT OF TRANSPORTATION

Caltrans® **DESIGN**

MATCH LINE Sta 56+50

SB INSIDE SAWCUT

Elev (31.11) 17.43' Lt +75
Elev (31.09) 17.54' Lt +00
Elev (31.14) 17.67' Lt +25
Elev (31.13) 17.82' Lt +50
Elev (31.12) 17.99' Lt +75
Elev (31.08) 18.17' Lt +00
Elev (30.94) 18.38' Lt +25
Elev (30.67) 18.62' Lt +50
Elev (30.68) 18.87' Lt +75
Elev (30.66) 19.14' Lt +00
Elev (30.64) 19.43' Lt +25
Elev (30.59) 19.74' Lt +50
Elev (30.58) 20.08' Lt +75
Elev (30.53) 20.43' Lt +00
Elev (30.50) 20.81' Lt +25
Elev (30.17) 21.20' Lt +50
Elev (29.79) 21.62' Lt +75
Elev (29.52) 22.05' Lt +00
Elev (29.43) 22.50' Lt +25
Elev (29.34) 22.97' Lt +50
Elev (29.26) 23.46' Lt +75
Elev (29.17) 23.98' Lt +00
Elev (29.05) 24.51' Lt +25
Elev (29.03) 25.06' Lt +50
Elev (28.98) 25.56' Lt +75
Elev (28.84) 25.73' Lt +00
Elev (28.63) 25.78' Lt +25
Elev (28.40) 25.83' Lt +50
Elev (28.38) 25.88' Lt +75
Elev (28.36) 25.93' Lt +00
Elev (28.35) 25.98' Lt +25
Elev (28.25) 26.03' Lt +50
Elev (28.06) 26.08' Lt +75
Elev (27.88) 26.13' Lt +00
Elev (27.74) 26.18' Lt +25
Elev (27.62) 26.23' Lt +50
Elev (27.50) 26.28' Lt +75
Elev (27.29) 26.33' Lt +00
Elev (27.10) 26.38' Lt +25
Elev (26.91) 26.43' Lt +50
Elev (26.61) 26.48' Lt +75
Elev (26.34) 26.53' Lt +00
Elev (26.20) 26.58' Lt +25
Elev (26.15) 26.63' Lt +50
Elev (26.09) 26.67' Lt +75
Elev (26.03) 26.72' Lt +00
Elev (26.00) 26.77' Lt +25
Elev (25.96) 26.82' Lt +50
Elev (25.91) 26.87' Lt +75
Elev (25.86) 26.92' Lt +00
Elev (25.82) 26.94' Lt +25
Elev (25.79) 26.87' Lt +50
Elev (25.77) 26.70' Lt +75
Elev (25.76) 26.44' Lt +00
Elev (25.74) 26.09' Lt +25
Elev (25.73) 25.65' Lt +50

SB INSIDE PG

Elev 27.78 16.09' Rt +75
Elev 27.70 16.13' Rt +00
Elev 27.68 16.14' Rt +25
Elev 27.65 16.15' Rt +50
Elev 27.63 16.12' Rt +75
Elev 27.60 16.04' Rt +00
Elev 27.58 15.87' Rt +25
Elev 27.55 15.84' Rt +50
Elev 27.53 15.73' Rt +75
Elev 27.51 15.57' Rt +00
Elev 27.49 15.35' Rt +25
Elev 27.47 15.15' Rt +50
Elev 27.45 14.90' Rt +75
Elev 27.43 14.56' Rt +00
Elev 27.41 14.17' Rt +25
Elev 26.87 13.80' Rt +50
Elev 26.33 13.45' Rt +75
Elev 25.78 13.11' Rt +00
Elev 25.82 12.73' Rt +25
Elev 25.86 12.32' Rt +50
Elev 25.90 11.86' Rt +75
Elev 25.94 11.34' Rt +00
Elev 25.95 10.85' Rt +25
Elev 25.96 10.32' Rt +50
Elev 25.96 9.80' Rt +75
Elev 25.97 9.65' Rt +00
Elev 25.98 9.66' Rt +25
Elev 25.99 9.77' Rt +50
Elev 26.29 9.85' Rt +75
Elev 26.56 9.89' Rt +00
Elev 26.79 9.88' Rt +25
Elev 26.96 9.89' Rt +50
Elev 27.09 9.92' Rt +75
Elev 27.16 9.95' Rt +00
Elev 27.24 9.96' Rt +25
Elev 27.31 9.95' Rt +50
Elev 27.11 9.90' Rt +75
Elev 26.91 9.86' Rt +00
Elev 26.71 9.86' Rt +25
Elev 26.51 9.83' Rt +50
Elev 26.31 9.82' Rt +75
Elev 26.21 9.84' Rt +00
Elev 26.11 9.82' Rt +25
Elev 26.01 9.82' Rt +50
Elev 25.91 9.84' Rt +75
Elev 25.89 9.88' Rt +00
Elev 25.86 9.88' Rt +25
Elev 25.84 9.90' Rt +50
Elev 25.81 9.91' Rt +75
Elev 25.80 9.91' Rt +00
Elev 25.79 9.92' Rt +25
Elev 25.78 9.96' Rt +50
Elev 25.77 10.04' Rt +75
Elev 25.77 10.15' Rt +00
Elev 25.76 10.29' Rt +25
Elev 25.76 10.43' Rt +50

MATCH LINE Sta 70+50

NB INSIDE PG

Elev 30.56 18.61' Rt +75
Elev 30.52 18.61' Rt +00
Elev 30.48 18.59' Rt +25
Elev 30.44 18.54' Rt +50
Elev 30.40 18.47' Rt +75
Elev 30.36 18.37' Rt +00
Elev 30.22 18.24' Rt +25
Elev 30.15 18.09' Rt +50
Elev 30.07 17.91' Rt +75
Elev 29.96 17.71' Rt +00
Elev 29.86 17.47' Rt +25
Elev 29.85 17.21' Rt +50
Elev 29.68 16.93' Rt +75
Elev 29.58 16.62' Rt +00
Elev 29.76 16.28' Rt +25
Elev 29.54 15.92' Rt +50
Elev 29.05 15.53' Rt +75
Elev 28.71 15.11' Rt +00
Elev 28.51 14.67' Rt +25
Elev 28.42 14.20' Rt +50
Elev 28.34 13.71' Rt +75
Elev 28.30 13.19' Rt +00
Elev 28.27 12.65' Rt +25
Elev 28.24 12.40' Rt +50
Elev 28.20 12.14' Rt +75
Elev 28.01 11.97' Rt +00
Elev 27.83 11.97' Rt +25
Elev 27.69 11.97' Rt +50
Elev 27.60 11.97' Rt +75
Elev 27.51 11.97' Rt +00
Elev 27.51 11.97' Rt +25
Elev 27.48 11.97' Rt +50
Elev 27.46 11.97' Rt +75
Elev 27.45 11.97' Rt +00
Elev 27.40 11.97' Rt +25
Elev 27.37 11.97' Rt +50
Elev 27.32 11.97' Rt +75
Elev 27.28 11.97' Rt +00
Elev 27.24 11.97' Rt +25
Elev 27.21 11.97' Rt +50
Elev 27.16 11.97' Rt +75
Elev 27.06 11.97' Rt +00
Elev 26.96 11.97' Rt +25
Elev 26.96 11.97' Rt +50
Elev 26.81 11.97' Rt +75
Elev 26.59 11.97' Rt +00
Elev 26.35 11.97' Rt +25
Elev 26.29 11.97' Rt +50
Elev 26.21 11.97' Rt +75
Elev 26.20 11.97' Rt +00
Elev 26.19 11.99' Rt +25
Elev 26.18 12.03' Rt +50
Elev 26.17 12.11' Rt +75
Elev 26.16 12.22' Rt +00
Elev 26.15 12.36' Rt +25
Elev 26.15 12.50' Rt +50

NB INSIDE SAWCUT

Elev (29.77) 28.34' Rt +75
Elev (29.74) 28.29' Rt +00
Elev (29.75) 28.21' Rt +25
Elev (29.75) 28.10' Rt +50
Elev (29.68) 27.96' Rt +75
Elev (29.60) 27.78' Rt +00
Elev (29.49) 27.57' Rt +25
Elev (29.42) 27.34' Rt +50
Elev (29.33) 27.07' Rt +75
Elev (29.21) 26.77' Rt +00
Elev (29.15) 26.44' Rt +25
Elev (29.15) 26.08' Rt +50
Elev (29.02) 25.69' Rt +75
Elev (28.95) 25.27' Rt +00
Elev (29.25) 24.82' Rt +25
Elev (28.91) 24.34' Rt +50
Elev (28.41) 23.82' Rt +75
Elev (28.09) 23.28' Rt +00
Elev (27.96) 22.71' Rt +25
Elev (27.90) 22.10' Rt +50
Elev (27.85) 21.47' Rt +75
Elev (27.90) 20.81' Rt +00
Elev (27.91) 20.11' Rt +25
Elev (27.92) 19.39' Rt +50
Elev (27.95) 18.70' Rt +75
Elev (27.84) 18.34' Rt +00
Elev (27.73) 18.30' Rt +25
Elev (27.64) 18.30' Rt +50
Elev (27.60) 18.30' Rt +75
Elev (27.55) 18.30' Rt +00
Elev (27.53) 18.30' Rt +25
Elev (27.51) 18.30' Rt +50
Elev (27.49) 18.30' Rt +75
Elev (27.42) 18.30' Rt +00
Elev (27.37) 18.30' Rt +25
Elev (27.33) 18.30' Rt +50
Elev (27.28) 18.30' Rt +75
Elev (27.24) 18.30' Rt +00
Elev (27.20) 18.30' Rt +25
Elev (27.17) 18.30' Rt +50
Elev (27.13) 18.30' Rt +75
Elev (27.05) 18.30' Rt +00
Elev (26.97) 18.30' Rt +25
Elev (26.89) 18.30' Rt +50
Elev (26.69) 18.30' Rt +75
Elev (26.49) 18.30' Rt +00
Elev (26.28) 18.30' Rt +25
Elev (26.21) 18.30' Rt +50
Elev (26.17) 18.30' Rt +75
Elev (26.14) 18.30' Rt +00
Elev (26.12) 18.31' Rt +25
Elev (26.14) 18.36' Rt +50
Elev (26.16) 18.44' Rt +75
Elev (26.16) 18.54' Rt +00
Elev (26.15) 18.68' Rt +25
Elev (26.13) 18.85' Rt +50

STATION	57+00	58+00	59+00	60+00	61+00	62+00	63+00	64+00	65+00	66+00	67+00	68+00	69+00	70+00	TOTAL
CY Exc	4005.87														
CY Emb	0														

PROFILE

SCALE: Horiz 1" = 100'
Vert 1" = 20'

P-25

LAST REVISION 01-12-11

DATE PLOTTED => 28-JUN-2011
TIME PLOTTED => 17:36

Dist	COUNTY	ROUTE	POST MILES TOTAL PROJECT	SHEET No.	TOTAL SHEETS
07	Ven,SB	101	R39.8/R43.6, 0.0/2.2	63	757

REGISTERED CIVIL ENGINEER 01-12-11 DATE

6-20-11
PLANS APPROVAL DATE

REGISTERED PROFESSIONAL ENGINEER O.C. LEE No. C28039 Exp. 03/31/12 CIVIL STATE OF CALIFORNIA

THE STATE OF CALIFORNIA OR ITS OFFICERS OR AGENTS SHALL NOT BE RESPONSIBLE FOR THE ACCURACY OR COMPLETENESS OF SCANNED COPIES OF THIS PLAN SHEET.

REVISED BY | DATE REVISED

TRIEU NGUYEN | ANTOINE NADER

CALCULATED-DESIGNED BY | CHECKED BY

FUNCTIONAL SUPERVISOR: OC LEE

STATE OF CALIFORNIA - DEPARTMENT OF TRANSPORTATION

Caltrans® **DESIGN**

MATCH LINE Sta 70+50

SB INSIDE SAWCUT

Elev (25.73) 25.11' Lt +75
Elev (25.73) 24.47' Lt +00
Elev (25.73) 23.75' Lt +25
Elev (25.73) 22.92' Lt +50
Elev (25.74) 22.01' Lt +75
Elev (25.75) 21.00' Lt +00
Elev (25.63) 19.90' Lt +25
Elev (25.49) 18.77' Lt +50
Elev (25.48) 17.68' Lt +75
Elev (25.49) 16.61' Lt +00
Elev (25.47) 15.54' Lt +25
Elev (25.36) 14.44' Lt +50
Elev (25.26) 13.36' Lt +75
Elev (25.24) 12.31' Lt +00
Elev (25.22) 11.29' Lt +25
Elev (25.25) 10.30' Lt +50
Elev (25.43) 9.39' Lt +75
Elev (25.91) 8.57' Lt +00
Elev (26.26) 7.84' Lt +25
Elev (26.31) 7.21' Lt +50
Elev (26.36) 6.68' Lt +75
Elev (26.43) 6.20' Lt +00
Elev (26.55) 5.76' Lt +25
Elev (26.66) 5.35' Lt +50
Elev (26.67) 4.97' Lt +75
Elev (26.67) 4.62' Lt +00
Elev (26.70) 4.31' Lt +25
Elev (26.76) 4.02' Lt +50
Elev (26.83) 3.77' Lt +75
Elev (26.85) 3.55' Lt +00
Elev (26.88) 3.36' Lt +25
Elev (26.91) 3.20' Lt +50
Elev (26.98) 3.07' Lt +75
Elev (27.05) 2.97' Lt +00
Elev (27.11) 2.91' Lt +25
Elev (27.14) 2.92' Lt +50
Elev (27.17) 2.99' Lt +75
Elev (27.19) 3.13' Lt +00
Elev (27.19) 3.33' Lt +25
Elev (27.30) 3.59' Lt +50
Elev (27.34) 3.91' Lt +75
Elev (27.42) 4.29' Lt +00
Elev (27.68) 4.68' Lt +25
Elev (27.64) 5.08' Lt +50
Elev (27.61) 5.47' Lt +75
Elev (27.57) 5.86' Lt +00
Elev (27.52) 6.25' Lt +25
Elev (27.50) 6.64' Lt +50
Elev (27.50) 7.03' Lt +75
Elev (27.46) 7.42' Lt +00
Elev (27.37) 7.81' Lt +25
Elev (27.27) 8.21' Lt +50
Elev (27.27) 8.60' Lt +75
Elev (27.29) 8.99' Lt +00
Elev (27.25) 9.38' Lt +25
Elev (27.18) 9.77' Lt +50

SB INSIDE PG

Elev 25.75 10.44' Rt +75
Elev 25.75 10.48' Rt +00
Elev 25.74 10.54' Rt +25
Elev 25.74 10.63' Rt +50
Elev 25.73 10.76' Rt +75
Elev 25.73 10.87' Rt +00
Elev 25.58 11.02' Rt +25
Elev 25.43 11.24' Rt +50
Elev 25.28 11.51' Rt +75
Elev 25.20 11.79' Rt +00
Elev 25.13 12.08' Rt +25
Elev 25.05 12.41' Rt +50
Elev 24.98 12.79' Rt +75
Elev 24.90 13.19' Rt +00
Elev 24.83 13.60' Rt +25
Elev 25.10 14.09' Rt +50
Elev 25.38 14.68' Rt +75
Elev 25.92 15.18' Rt +00
Elev 26.30 15.56' Rt +25
Elev 26.33 15.89' Rt +50
Elev 26.35 16.20' Rt +75
Elev 26.43 0.45' Rt +00
Elev 26.50 1.34' Rt +25
Elev 26.58 2.18' Rt +50
Elev 26.68 2.95' Rt +75
Elev 26.70 3.70' Rt +00
Elev 26.73 4.45' Rt +25
Elev 26.78 5.18' Rt +50
Elev 26.85 5.88' Rt +75
Elev 26.90 6.55' Rt +00
Elev 26.93 7.19' Rt +25
Elev 26.95 7.82' Rt +50
Elev 27.00 8.44' Rt +75
Elev 27.08 9.01' Rt +00
Elev 27.15 9.51' Rt +25
Elev 27.20 10.00' Rt +50
Elev 27.25 10.49' Rt +75
Elev 27.28 10.95' Rt +00
Elev 27.30 10.95' Rt +25
Elev 27.31 10.96' Rt +50
Elev 27.33 10.94' Rt +75
Elev 27.40 11.00' Rt +00
Elev 27.70 11.00' Rt +25
Elev 27.78 10.97' Rt +50
Elev 27.80 10.93' Rt +75
Elev 27.70 10.94' Rt +00
Elev 27.60 10.93' Rt +25
Elev 27.50 10.94' Rt +50
Elev 27.43 10.94' Rt +75
Elev 27.35 10.92' Rt +00
Elev 27.28 10.89' Rt +25
Elev 27.20 10.91' Rt +50
Elev 27.13 10.94' Rt +75
Elev 27.05 10.94' Rt +00
Elev 27.08 10.93' Rt +25
Elev 27.10 10.94' Rt +50

MATCH LINE Sta 84+50

NB INSIDE PG

Elev 26.14 12.50' Rt +75
Elev 26.13 12.54' Rt +00
Elev 26.12 12.60' Rt +25
Elev 26.11 12.70' Rt +50
Elev 26.10 12.83' Rt +75
Elev 26.09 12.99' Rt +00
Elev 26.09 13.18' Rt +25
Elev 26.08 13.40' Rt +50
Elev 26.07 13.65' Rt +75
Elev 26.06 13.94' Rt +00
Elev 26.05 14.25' Rt +25
Elev 26.04 14.60' Rt +50
Elev 26.03 14.98' Rt +75
Elev 26.03 15.39' Rt +00
Elev 26.10 15.83' Rt +25
Elev 26.25 16.30' Rt +50
Elev 26.43 16.75' Rt +75
Elev 26.48 17.19' Rt +00
Elev 26.51 17.57' Rt +25
Elev 26.54 17.94' Rt +50
Elev 26.62 18.27' Rt +75
Elev 26.76 2.53' Rt +00
Elev 26.90 3.41' Rt +25
Elev 27.05 4.26' Rt +50
Elev 27.19 5.08' Rt +75
Elev 27.34 5.87' Rt +00
Elev 27.54 6.62' Rt +25
Elev 27.62 7.35' Rt +50
Elev 27.77 8.04' Rt +75
Elev 27.91 8.70' Rt +00
Elev 27.79 9.33' Rt +25
Elev 27.67 9.93' Rt +50
Elev 27.56 10.50' Rt +75
Elev 27.44 11.04' Rt +00
Elev 27.32 11.54' Rt +25
Elev 27.39 12.03' Rt +50
Elev 27.46 12.51' Rt +75
Elev 27.53 13.00' Rt +00
Elev 27.60 13.00' Rt +25
Elev 27.67 13.00' Rt +50
Elev 27.74 13.00' Rt +75
Elev 27.81 13.00' Rt +00
Elev 27.88 13.00' Rt +25
Elev 27.95 13.00' Rt +50
Elev 28.02 13.00' Rt +75
Elev 28.10 13.00' Rt +00
Elev 28.02 13.00' Rt +25
Elev 27.95 13.00' Rt +50
Elev 27.87 13.00' Rt +75
Elev 27.80 13.00' Rt +00
Elev 27.73 13.00' Rt +25
Elev 27.65 13.00' Rt +50
Elev 27.58 13.00' Rt +75
Elev 27.50 13.00' Rt +00
Elev 27.43 13.00' Rt +25
Elev 27.36 13.00' Rt +50

NB INSIDE SAWCUT

Elev (26.111) 19.06' Rt +75
Elev (26.08) 19.29' Rt +00
Elev (26.06) 19.55' Rt +25
Elev (26.04) 19.85' Rt +50
Elev (26.04) 20.18' Rt +75
Elev (26.05) 20.54' Rt +00
Elev (26.05) 20.93' Rt +25
Elev (26.03) 21.35' Rt +50
Elev (26.01) 21.80' Rt +75
Elev (25.98) 22.28' Rt +00
Elev (25.97) 22.80' Rt +25
Elev (25.96) 23.34' Rt +50
Elev (25.94) 23.92' Rt +75
Elev (25.89) 24.53' Rt +00
Elev (25.97) 25.17' Rt +25
Elev (26.22) 25.84' Rt +50
Elev (26.40) 26.49' Rt +75
Elev (26.31) 27.12' Rt +00
Elev (26.28) 27.71' Rt +25
Elev (26.40) 28.27' Rt +50
Elev (26.52) 28.79' Rt +75
Elev (26.63) 29.21' Rt +00
Elev (26.68) 29.61' Rt +25
Elev (26.74) 29.97' Rt +50
Elev (26.82) 30.30' Rt +75
Elev (26.99) 30.60' Rt +00
Elev (27.17) 30.87' Rt +25
Elev (27.22) 31.11' Rt +50
Elev (27.25) 31.31' Rt +75
Elev (27.27) 31.49' Rt +00
Elev (27.28) 31.63' Rt +25
Elev (27.28) 31.75' Rt +50
Elev (27.22) 31.83' Rt +75
Elev (27.08) 31.88' Rt +00
Elev (26.98) 31.90' Rt +25
Elev (27.02) 31.90' Rt +50
Elev (27.06) 31.90' Rt +75
Elev (27.06) 31.90' Rt +00
Elev (27.18) 31.90' Rt +25
Elev (27.25) 31.90' Rt +50
Elev (27.20) 31.90' Rt +75
Elev (27.34) 31.90' Rt +00
Elev (27.25) 31.90' Rt +25
Elev (27.29) 31.90' Rt +50
Elev (27.41) 31.90' Rt +75
Elev (27.59) 31.90' Rt +00
Elev (27.50) 31.90' Rt +25
Elev (27.48) 31.90' Rt +50
Elev (27.43) 31.90' Rt +75
Elev (27.41) 31.90' Rt +00
Elev (27.41) 31.90' Rt +25
Elev (27.40) 31.90' Rt +50
Elev (27.34) 31.90' Rt +75
Elev (27.22) 31.90' Rt +00
Elev (27.16) 31.90' Rt +25
Elev (27.12) 31.90' Rt +50

PROFILE

SCALE: Horiz 1" = 100'
Vert 1" = 20'

P-26

STATION	71+00	72+00	73+00	74+00	75+00	76+00	77+00	78+00	79+00	80+00	81+00	82+00	83+00	84+00	TOTAL
CY Exc	3331.52														
CY Emb	0														

LAST REVISION 01-12-11 | DATE PLOTTED => 28-JUN-2011 | TIME PLOTTED => 17:36

Dist	COUNTY	ROUTE	POST MILES TOTAL PROJECT	SHEET No.	TOTAL SHEETS
07	Ven,SB	101	R39.8/R43.6, 0.0/2.2	64	757

REGISTERED CIVIL ENGINEER 01-12-11 DATE

6-20-11
PLANS APPROVAL DATE

REGISTERED PROFESSIONAL ENGINEER O.C. LEE No. C28039 Exp. 03/31/12 CIVIL STATE OF CALIFORNIA

THE STATE OF CALIFORNIA OR ITS OFFICERS OR AGENTS SHALL NOT BE RESPONSIBLE FOR THE ACCURACY OR COMPLETENESS OF SCANNED COPIES OF THIS PLAN SHEET.

REVISED BY | DATE REVISED

TRIEU NGUYEN | ANTOINE NADER

CALCULATED-DESIGNED BY | CHECKED BY

FUNCTIONAL SUPERVISOR: OC LEE

STATE OF CALIFORNIA - DEPARTMENT OF TRANSPORTATION

Caltrans® **DESIGN**

MATCH LINE Sta 84+50

STA	SB INSIDE SAWCUT	SB INSIDE PG	NB INSIDE PG	NB INSIDE SAWCUT
84+50			27.28 13.00' Rt +75	27.07 31.90' Rt +75
84+75	27.18 10.16' Lt +75	27.13 10.96' Rt +75	27.21 13.00' Rt +00	27.01 31.90' Rt +00
85+00	27.18 10.55' Lt +00	27.15 10.98' Rt +00	27.14 13.00' Rt +25	26.95 31.90' Rt +25
85+25	27.19 10.94' Lt +25	27.18 11.00' Rt +25	27.06 13.00' Rt +50	26.89 31.90' Rt +50
85+50	27.25 11.34' Lt +50	27.20 11.00' Rt +50	26.99 13.00' Rt +75	26.86 31.90' Rt +75
85+75	27.32 11.73' Lt +75	27.33 11.00' Rt +75	27.01 13.00' Rt +00	26.88 31.90' Rt +00
86+00	27.29 12.12' Lt +00	27.35 11.00' Rt +00	27.03 13.00' Rt +25	26.91 31.90' Rt +25
86+25	27.24 12.51' Lt +25	27.28 11.00' Rt +25	27.04 13.00' Rt +50	26.92 31.90' Rt +50
86+50	27.18 12.90' Lt +50	27.20 10.95' Rt +50	27.06 13.00' Rt +75	26.91 31.90' Rt +75
86+75	26.91 13.29' Lt +75	26.90 10.92' Rt +75	27.08 13.00' Rt +00	26.91 31.90' Rt +00
87+00	26.80 13.64' Lt +00	26.70 10.90' Rt +00	27.10 13.00' Rt +25	26.91 31.90' Rt +25
87+25	26.71 13.92' Lt +25	26.55 10.88' Rt +25	27.12 13.00' Rt +50	26.92 31.90' Rt +50
87+50	26.64 14.14' Lt +50	26.45 10.87' Rt +50	27.14 13.00' Rt +75	26.93 31.90' Rt +75
87+75	26.59 14.30' Lt +75	26.43 10.86' Rt +75	27.16 13.00' Rt +00	26.94 31.90' Rt +00
88+00	26.57 14.40' Lt +00	26.40 10.86' Rt +00	27.18 13.00' Rt +25	26.93 31.90' Rt +25
88+25	26.54 14.43' Lt +25	26.38 10.85' Rt +25	27.20 13.00' Rt +50	26.90 31.90' Rt +50
88+50	26.51 14.41' Lt +50	26.35 10.85' Rt +50	27.22 13.00' Rt +75	26.88 31.90' Rt +75
88+75	26.49 14.37' Lt +75	26.33 10.85' Rt +75	27.23 13.00' Rt +00	26.86 31.90' Rt +00
89+00	26.47 14.33' Lt +00	26.30 10.85' Rt +00	27.25 13.00' Rt +25	26.85 31.90' Rt +25
89+25	26.46 14.29' Lt +25	26.28 10.85' Rt +25	27.27 13.00' Rt +50	26.86 31.90' Rt +50
89+50	26.44 14.25' Lt +50	26.25 10.83' Rt +50	27.29 13.00' Rt +75	26.88 31.90' Rt +75
89+75	26.38 14.21' Lt +75	26.23 10.81' Rt +75	27.31 13.00' Rt +00	26.89 31.90' Rt +00
90+00	26.31 14.17' Lt +00	26.20 10.81' Rt +00	27.33 13.00' Rt +25	26.84 31.90' Rt +25
90+25	26.25 14.14' Lt +25	26.15 10.81' Rt +25	27.24 13.00' Rt +50	26.76 31.90' Rt +50
90+50	26.23 14.10' Lt +50	26.13 10.83' Rt +50	27.15 13.00' Rt +75	26.69 31.90' Rt +75
90+75	26.21 14.06' Lt +75	26.10 10.86' Rt +75	26.97 13.00' Rt +00	26.57 31.90' Rt +00
91+00	26.20 14.02' Lt +00	26.08 10.91' Rt +00	26.68 13.00' Rt +25	26.39 31.90' Rt +25
91+25	26.16 13.98' Lt +25	26.05 10.94' Rt +25	26.43 13.00' Rt +50	26.24 31.90' Rt +50
91+50	26.11 13.94' Lt +50	26.00 10.93' Rt +50	26.38 13.00' Rt +75	26.21 31.90' Rt +75
91+75	26.06 13.90' Lt +75	25.95 10.93' Rt +75	26.35 13.00' Rt +00	26.18 31.90' Rt +00
92+00	26.00 13.86' Lt +00	25.93 10.93' Rt +00	26.34 13.00' Rt +25	26.16 31.90' Rt +25
92+25	25.98 13.82' Lt +25	25.90 10.94' Rt +25	26.32 13.00' Rt +50	26.15 31.90' Rt +50
92+50	26.00 13.78' Lt +50	25.95 10.97' Rt +50	26.30 13.00' Rt +75	26.16 31.90' Rt +75
92+75	26.02 13.74' Lt +75	26.00 10.98' Rt +75	26.28 13.00' Rt +00	26.16 31.90' Rt +00
93+00	26.04 13.71' Lt +00	26.01 10.98' Rt +00	26.26 13.00' Rt +25	26.16 31.90' Rt +25
93+25	26.06 13.67' Lt +25	26.03 10.99' Rt +25	26.25 13.00' Rt +50	26.15 31.90' Rt +50
93+50	26.08 13.63' Lt +50	26.05 10.99' Rt +50	26.24 13.00' Rt +75	26.14 31.90' Rt +75
93+75	26.10 13.59' Lt +75	26.07 11.00' Rt +75	26.17 13.00' Rt +00	26.10 31.90' Rt +00
94+00	26.11 13.55' Lt +00	26.10 11.00' Rt +00	26.16 13.00' Rt +25	26.06 31.90' Rt +25
94+25	26.13 13.51' Lt +25	26.11 11.00' Rt +25	26.15 13.00' Rt +50	26.05 31.90' Rt +50
94+50	26.13 13.47' Lt +50	26.10 11.00' Rt +50	26.13 13.00' Rt +75	26.04 31.90' Rt +75
94+75	26.13 13.43' Lt +75	26.08 10.99' Rt +75	26.14 13.00' Rt +00	26.04 31.90' Rt +00
95+00	26.16 13.39' Lt +00	26.05 10.99' Rt +00	26.13 13.00' Rt +25	26.04 31.90' Rt +25
95+25	26.21 13.35' Lt +25	26.03 11.00' Rt +25	26.12 13.00' Rt +50	26.04 31.90' Rt +50
95+50	26.25 13.31' Lt +50	26.00 11.00' Rt +50	26.11 13.00' Rt +75	26.03 31.90' Rt +75
95+75	26.31 13.28' Lt +75	26.03 11.00' Rt +75	26.10 13.00' Rt +00	26.03 31.90' Rt +00
96+00	26.36 13.22' Lt +00	26.00 11.00' Rt +00	26.09 13.00' Rt +25	26.03 31.90' Rt +25
96+25	26.40 13.12' Lt +25	25.98 11.00' Rt +25	26.08 13.00' Rt +50	26.03 31.90' Rt +50
96+50	26.45 12.96' Lt +50	25.95 10.99' Rt +50	26.07 12.99' Rt +75	26.02 31.90' Rt +75
96+75	26.49 12.80' Lt +75	25.93 10.98' Rt +75	26.06 12.99' Rt +00	26.02 31.90' Rt +00
97+00	26.51 12.66' Lt +00	25.90 10.97' Rt +00	26.05 12.98' Rt +25	26.02 31.90' Rt +25
97+25	26.54 12.53' Lt +25	25.88 10.98' Rt +25	26.04 12.98' Rt +50	26.02 31.90' Rt +50
97+50	26.56 12.41' Lt +50	25.85 10.98' Rt +50	26.03 12.98' Rt +75	26.01 31.90' Rt +75
97+75	26.56 12.30' Lt +75	25.82 10.95' Rt +75	26.10 12.97' Rt +00	26.08 31.90' Rt +00
98+00	26.54 12.21' Lt +00	25.80 10.91' Rt +00	26.17 12.97' Rt +25	26.15 31.90' Rt +25
98+25	26.53 12.12' Lt +25	25.77 10.87' Rt +25	26.25 12.97' Rt +50	26.22 31.90' Rt +50
98+50	26.50 12.05' Lt +50	25.75 10.85' Rt +50		

MATCH LINE Sta 98+50

STATION	85+00	86+00	87+00	88+00	89+00	90+00	91+00	92+00	93+00	94+00	95+00	96+00	97+00	98+00	TOTAL
CY Exc	3155.33														
CY Emb	0														

PROFILE

SCALE: Horiz 1" = 100'
Vert 1" = 20'

P-27

LAST REVISION 01-12-11 | DATE PLOTTED => 28-JUN-2011 | TIME PLOTTED => 17:37

Dist	COUNTY	ROUTE	POST MILES TOTAL PROJECT	SHEET No.	TOTAL SHEETS
07	Ven,SB	101	R39.8/R43.6, 0.0/2.2	65	757

REGISTERED CIVIL ENGINEER 01-12-11 DATE

6-20-11
PLANS APPROVAL DATE

REGISTERED PROFESSIONAL ENGINEER O.C. LEE No. C28039 Exp. 03/31/12 CIVIL STATE OF CALIFORNIA

THE STATE OF CALIFORNIA OR ITS OFFICERS OR AGENTS SHALL NOT BE RESPONSIBLE FOR THE ACCURACY OR COMPLETENESS OF SCANNED COPIES OF THIS PLAN SHEET.

REVISED BY: TRIEU NGUYEN — DATE REVISED:
CALCULATED-DESIGNED BY: TRIEU NGUYEN — CHECKED BY:
FUNCTIONAL SUPERVISOR: OC LEE

STATE OF CALIFORNIA - DEPARTMENT OF TRANSPORTATION
Caltrans® **DESIGN**

MATCH LINE Sta 98+50

Elev (26.57) 11.99' Lt +75
Elev (26.65) 11.94' Lt +00
Elev (26.72) 11.90' Lt +25
Elev (26.78) 11.88' Lt +50
Elev (26.84) 11.87' Lt +75
Elev (26.92) 11.87' Lt +00
Elev (27.00) 11.88' Lt +25
Elev (27.08) 11.90' Lt +50
Elev (27.14) 11.94' Lt +75
Elev (27.19) 11.98' Lt +00
Elev (27.24) 12.04' Lt +25
Elev (27.28) 12.11' Lt +50
Elev (27.32) 12.19' Lt +75
Elev (27.36) 12.29' Lt +00
Elev (27.40) 12.39' Lt +25
Elev (27.44) 12.51' Lt +50
Elev (27.47) 12.64' Lt +75
Elev (27.47) 12.73' Lt +00
Elev (27.46) 12.76' Lt +25
Elev (27.46) 12.75' Lt +50
Elev (27.45) 12.74' Lt +75
Elev (27.45) 12.73' Lt +00
Elev (27.45) 12.72' Lt +25
Elev (27.46) 12.71' Lt +50
Elev (27.46) 12.70' Lt +75
Elev (27.46) 12.69' Lt +00
Elev (27.48) 12.68' Lt +25
Elev (27.51) 12.67' Lt +50
Elev (27.54) 12.66' Lt +75
Elev (27.57) 12.65' Lt +00
Elev (27.59) 12.64' Lt +25
Elev (27.59) 12.63' Lt +50
Elev (27.58) 12.62' Lt +75
Elev (27.57) 12.61' Lt +00
Elev (27.57) 12.60' Lt +25
Elev (27.56) 12.59' Lt +50
Elev (27.54) 12.57' Lt +75
Elev (27.52) 12.56' Lt +00
Elev (27.50) 12.55' Lt +25
Elev (27.48) 12.52' Lt +50
Elev (27.46) 12.40' Lt +75
Elev (27.57) 12.17' Lt +00
Elev (27.70) 11.84' Lt +25
Elev (27.80) 11.45' Lt +50
Elev (27.79) 11.09' Lt +75
Elev (27.77) 10.74' Lt +00
Elev (27.76) 10.42' Lt +25
Elev (27.76) 10.13' Lt +50
Elev (27.78) 9.85' Lt +75
Elev (27.86) 9.60' Lt +00
Elev (27.94) 9.37' Lt +25
Elev (27.98) 9.17' Lt +50
Elev (28.02) 8.99' Lt +75
Elev (28.10) 8.83' Lt +00
Elev (28.19) 8.69' Lt +25
Elev (28.26) 8.58' Lt +50

SB INSIDE SAWCUT

Elev 25.82 10.85' Rt +75
Elev 25.90 10.85' Rt +00
Elev 25.98 10.86' Rt +25
Elev 26.05 10.86' Rt +50
Elev 26.13 10.87' Rt +75
Elev 26.20 10.88' Rt +00
Elev 26.30 10.89' Rt +25
Elev 26.40 10.90' Rt +50
Elev 26.50 10.91' Rt +75
Elev 26.60 10.93' Rt +00
Elev 26.70 10.95' Rt +25
Elev 26.80 10.97' Rt +50
Elev 26.90 10.98' Rt +75
Elev 27.00 10.99' Rt +00
Elev 27.10 10.99' Rt +25
Elev 27.20 11.00' Rt +50
Elev 27.25 11.00' Rt +75
Elev 27.30 11.00' Rt +00
Elev 27.32 11.00' Rt +25
Elev 27.35 11.00' Rt +50
Elev 27.40 11.00' Rt +75
Elev 27.48 11.00' Rt +00
Elev 27.55 11.00' Rt +25
Elev 27.60 11.00' Rt +50
Elev 27.63 11.00' Rt +75
Elev 27.65 11.00' Rt +00
Elev 27.68 11.00' Rt +25
Elev 27.73 11.00' Rt +50
Elev 27.77 11.00' Rt +75
Elev 27.82 11.00' Rt +00
Elev 27.88 11.00' Rt +25
Elev 27.93 11.00' Rt +50
Elev 27.88 11.00' Rt +75
Elev 27.82 11.00' Rt +00
Elev 27.80 11.00' Rt +25
Elev 27.77 11.00' Rt +50
Elev 27.75 10.97' Rt +75
Elev 27.73 10.86' Rt +00
Elev 27.70 10.65' Rt +25
Elev 27.68 10.38' Rt +50
Elev 27.65 10.10' Rt +75
Elev 27.75 9.84' Rt +00
Elev 27.90 9.59' Rt +25
Elev 28.05 9.35' Rt +50
Elev 28.13 9.12' Rt +75
Elev 28.15 8.91' Rt +00
Elev 28.18 8.70' Rt +25
Elev 28.20 8.50' Rt +50
Elev 28.23 8.32' Rt +75
Elev 28.25 8.14' Rt +00
Elev 28.27 7.98' Rt +25
Elev 28.30 7.83' Rt +50
Elev 28.32 7.69' Rt +75
Elev 28.35 7.56' Rt +00
Elev 28.38 7.44' Rt +25
Elev 28.40 7.33' Rt +50

SB INSIDE PG

Elev 26.35 12.97' Rt +75
Elev 26.40 12.97' Rt +00
Elev 26.45 12.96' Rt +25
Elev 26.48 12.96' Rt +50
Elev 26.52 12.96' Rt +75
Elev 26.56 12.96' Rt +00
Elev 26.60 12.97' Rt +25
Elev 26.67 12.97' Rt +50
Elev 26.75 12.97' Rt +75
Elev 26.78 12.97' Rt +00
Elev 26.79 12.97' Rt +25
Elev 26.80 12.98' Rt +50
Elev 26.84 12.98' Rt +75
Elev 26.88 12.99' Rt +00
Elev 26.92 12.99' Rt +25
Elev 26.97 13.00' Rt +50
Elev 27.01 13.00' Rt +75
Elev 27.05 13.00' Rt +00
Elev 27.09 13.00' Rt +25
Elev 27.13 13.00' Rt +50
Elev 27.17 13.00' Rt +75
Elev 27.22 13.00' Rt +00
Elev 27.26 13.00' Rt +25
Elev 27.30 13.00' Rt +50
Elev 27.34 13.00' Rt +75
Elev 27.38 13.00' Rt +00
Elev 27.42 13.00' Rt +25
Elev 27.46 13.00' Rt +50
Elev 27.51 13.00' Rt +75
Elev 27.55 13.00' Rt +00
Elev 27.59 13.00' Rt +25
Elev 27.63 13.00' Rt +50
Elev 27.64 13.00' Rt +75
Elev 27.66 13.00' Rt +00
Elev 27.67 13.00' Rt +25
Elev 27.68 13.00' Rt +50
Elev 27.69 12.97' Rt +75
Elev 27.70 12.86' Rt +00
Elev 27.71 12.65' Rt +25
Elev 27.72 12.38' Rt +50
Elev 27.73 12.10' Rt +75
Elev 27.85 11.84' Rt +00
Elev 27.90 11.59' Rt +25
Elev 27.95 11.35' Rt +50
Elev 28.00 11.12' Rt +75
Elev 28.01 10.91' Rt +00
Elev 28.03 10.70' Rt +25
Elev 28.06 10.50' Rt +50
Elev 28.08 10.32' Rt +75
Elev 28.09 10.14' Rt +00
Elev 28.15 9.98' Rt +25
Elev 28.20 9.83' Rt +50
Elev 28.22 9.69' Rt +75
Elev 28.24 9.56' Rt +00
Elev 28.26 9.44' Rt +25
Elev 28.28 9.33' Rt +50

NB INSIDE PG

Elev (26.32) 31.90' Rt +75
Elev (26.36) 31.90' Rt +00
Elev (26.41) 31.90' Rt +25
Elev (26.45) 31.90' Rt +50
Elev (26.49) 31.90' Rt +75
Elev (26.53) 31.90' Rt +00
Elev (26.57) 31.90' Rt +25
Elev (26.62) 31.90' Rt +50
Elev (26.67) 31.90' Rt +75
Elev (26.71) 31.90' Rt +00
Elev (26.71) 31.90' Rt +25
Elev (26.73) 31.90' Rt +50
Elev (26.74) 31.90' Rt +75
Elev (26.75) 31.90' Rt +00
Elev (26.78) 31.90' Rt +25
Elev (26.84) 31.90' Rt +50
Elev (26.89) 31.90' Rt +75
Elev (26.94) 31.90' Rt +00
Elev (27.00) 31.90' Rt +25
Elev (27.05) 31.90' Rt +50
Elev (27.10) 31.90' Rt +75
Elev (27.15) 31.90' Rt +00
Elev (27.20) 31.90' Rt +25
Elev (27.26) 31.90' Rt +50
Elev (27.28) 31.90' Rt +75
Elev (27.31) 31.90' Rt +00
Elev (27.35) 31.90' Rt +25
Elev (27.39) 31.90' Rt +50
Elev (27.45) 31.90' Rt +75
Elev (27.51) 31.90' Rt +00
Elev (27.57) 31.90' Rt +25
Elev (27.62) 31.90' Rt +50
Elev (27.66) 31.90' Rt +75
Elev (27.71) 31.90' Rt +00
Elev (27.75) 31.90' Rt +25
Elev (27.80) 31.90' Rt +50
Elev (27.82) 31.90' Rt +75
Elev (27.84) 31.90' Rt +00
Elev (27.87) 31.90' Rt +25
Elev (27.90) 31.91' Rt +50
Elev (27.93) 31.94' Rt +75
Elev (28.06) 31.97' Rt +00
Elev (28.21) 31.99' Rt +25
Elev (28.26) 32.01' Rt +50
Elev (28.29) 32.04' Rt +75
Elev (28.32) 32.06' Rt +00
Elev (28.38) 32.07' Rt +25
Elev (28.43) 32.09' Rt +50
Elev (28.46) 32.11' Rt +75
Elev (28.51) 32.12' Rt +00
Elev (28.60) 32.14' Rt +25
Elev (28.68) 32.15' Rt +50
Elev (28.75) 32.16' Rt +75
Elev (28.81) 32.17' Rt +00
Elev (28.86) 32.17' Rt +25
Elev (28.90) 32.18' Rt +50

NB INSIDE SAWCUT

MATCH LINE Sta 112+50

PROFILE

SCALE: Horiz 1" = 100'
Vert 1" = 20'

P-28

STATION	99+00	100+00	101+00	102+00	103+00	104+00	105+00	106+00	107+00	108+00	109+00	110+00	111+00	112+00	TOTAL
CY Exc	3049.80														
CY Emb	0														

LAST REVISION 01-12-11
DATE PLOTTED => 28-JUN-2011
TIME PLOTTED => 17:37

Dist	COUNTY	ROUTE	POST MILES TOTAL PROJECT	SHEET No.	TOTAL SHEETS
07	Ven,SB	101	R39.8/R43.6, 0.0/2.2	66	757

REGISTERED CIVIL ENGINEER 01-12-11 DATE

6-20-11
PLANS APPROVAL DATE

REGISTERED PROFESSIONAL ENGINEER O.C. LEE No. C28039 Exp. 03/31/12 CIVIL STATE OF CALIFORNIA

THE STATE OF CALIFORNIA OR ITS OFFICERS OR AGENTS SHALL NOT BE RESPONSIBLE FOR THE ACCURACY OR COMPLETENESS OF SCANNED COPIES OF THIS PLAN SHEET.

REVISED BY | DATE REVISED

TRIEU NGUYEN | ANTOINE NADER

CALCULATED-DESIGNED BY | CHECKED BY

FUNCTIONAL SUPERVISOR: OC LEE

STATE OF CALIFORNIA - DEPARTMENT OF TRANSPORTATION

Caltrans® **DESIGN**

MATCH LINE Sta 112+50

Elev (28.33) 8.49' Lt +75
Elev (28.34) 8.43' Lt +00
Elev (28.35) 8.39' Lt +25
Elev (28.36) 8.37' Lt +50
Elev (28.37) 8.37' Lt +75
Elev (28.39) 8.40' Lt +00
Elev (28.40) 8.45' Lt +25
Elev (28.41) 8.53' Lt +50
Elev (28.42) 8.62' Lt +75
Elev (28.43) 8.74' Lt +00
Elev (28.44) 8.89' Lt +25
Elev (28.45) 9.05' Lt +50
Elev (28.46) 9.24' Lt +75
Elev (28.47) 9.46' Lt +00
Elev (28.49) 9.69' Lt +25
Elev (28.61) 9.95' Lt +50
Elev (28.63) 10.24' Lt +75
Elev (28.67) 10.54' Lt +00
Elev (28.71) 10.87' Lt +25
Elev (28.75) 11.23' Lt +50
Elev (28.76) 11.56' Lt +75
Elev (28.78) 11.80' Lt +00
Elev (28.79) 11.93' Lt +25
Elev (28.81) 11.97' Lt +50
Elev (28.98) 11.97' Lt +75
Elev (28.91) 11.97' Lt +00
Elev (28.80) 11.97' Lt +25
Elev (28.76) 11.97' Lt +50
Elev (28.71) 11.97' Lt +75
Elev (28.66) 11.97' Lt +00
Elev (28.62) 11.97' Lt +25
Elev (28.61) 11.97' Lt +50
Elev (28.66) 11.96' Lt +75
Elev (28.71) 11.96' Lt +00
Elev (28.60) 11.96' Lt +25
Elev (28.49) 11.96' Lt +50
Elev (28.43) 11.96' Lt +75
Elev (28.39) 11.96' Lt +00
Elev (28.39) 11.96' Lt +25
Elev (28.32) 11.96' Lt +50
Elev (28.21) 11.96' Lt +75
Elev (28.13) 11.96' Lt +00
Elev (28.07) 11.96' Lt +25
Elev (28.10) 11.96' Lt +50
Elev (28.12) 11.96' Lt +75
Elev (28.12) 11.96' Lt +00
Elev (28.00) 11.96' Lt +25
Elev (27.79) 11.96' Lt +50
Elev (27.62) 11.96' Lt +75
Elev (27.49) 11.96' Lt +00
Elev (27.44) 11.96' Lt +25
Elev (27.42) 11.96' Lt +50
Elev (27.41) 12.01' Lt +75
Elev (27.37) 12.18' Lt +00
Elev (27.37) 12.41' Lt +25
Elev (27.40) 12.63' Lt +50

SB INSIDE SAWCUT

Elev (28.43) 7.23' Rt +75
Elev (28.45) 7.14' Rt +00
Elev (28.48) 7.07' Rt +25
Elev (28.50) 7.00' Rt +50
Elev (28.52) 6.95' Rt +75
Elev (28.55) 6.90' Rt +00
Elev (28.57) 6.87' Rt +25
Elev (28.60) 6.85' Rt +50
Elev (28.63) 6.84' Rt +75
Elev (28.65) 6.84' Rt +00
Elev (28.68) 6.85' Rt +25
Elev (28.70) 6.85' Rt +50
Elev (28.73) 6.85' Rt +75
Elev (28.75) 6.85' Rt +00
Elev (28.77) 6.93' Rt +25
Elev (28.80) 6.99' Rt +50
Elev (28.82) 7.07' Rt +75
Elev (28.85) 7.14' Rt +00
Elev (28.88) 7.26' Rt +25
Elev (28.90) 7.39' Rt +50
Elev (28.93) 7.53' Rt +75
Elev (28.95) 7.68' Rt +00
Elev (28.98) 7.82' Rt +25
Elev (29.00) 7.97' Rt +50
Elev (29.02) 8.05' Rt +75
Elev (29.05) 8.05' Rt +00
Elev (29.07) 8.08' Rt +25
Elev (29.05) 8.06' Rt +50
Elev (29.02) 8.07' Rt +75
Elev (29.00) 8.06' Rt +00
Elev (28.98) 8.05' Rt +25
Elev (28.95) 8.03' Rt +50
Elev (28.93) 8.02' Rt +75
Elev (28.90) 8.00' Rt +00
Elev (28.85) 7.97' Rt +25
Elev (28.80) 8.02' Rt +50
Elev (28.75) 8.02' Rt +75
Elev (28.70) 8.03' Rt +00
Elev (28.65) 8.02' Rt +25
Elev (28.60) 8.01' Rt +50
Elev (28.55) 7.99' Rt +75
Elev (28.48) 7.95' Rt +00
Elev (28.40) 7.95' Rt +25
Elev (28.38) 7.95' Rt +50
Elev (28.37) 7.99' Rt +75
Elev (28.35) 7.97' Rt +00
Elev (28.32) 7.89' Rt +25
Elev (28.15) 7.83' Rt +50
Elev (27.98) 7.80' Rt +75
Elev (27.82) 7.81' Rt +00
Elev (27.70) 7.87' Rt +25
Elev (27.68) 7.94' Rt +50
Elev (27.65) 7.94' Rt +75
Elev (27.63) 7.95' Rt +00
Elev (27.60) 7.92' Rt +25
Elev (27.57) 7.89' Rt +50

SB INSIDE PG

MATCH LINE Sta 126+50

Elev (28.30) 9.23' Rt +75
Elev (28.32) 9.14' Rt +00
Elev (28.34) 9.07' Rt +25
Elev (28.36) 9.00' Rt +50
Elev (28.38) 8.95' Rt +75
Elev (28.41) 8.90' Rt +00
Elev (28.44) 8.87' Rt +25
Elev (28.48) 8.85' Rt +50
Elev (28.51) 8.84' Rt +75
Elev (28.63) 8.84' Rt +00
Elev (28.71) 8.85' Rt +25
Elev (28.84) 8.87' Rt +50
Elev (28.93) 8.90' Rt +75
Elev (29.10) 8.94' Rt +00
Elev (29.28) 9.00' Rt +25
Elev (29.33) 9.06' Rt +50
Elev (29.38) 9.14' Rt +75
Elev (29.43) 9.23' Rt +00
Elev (29.48) 9.32' Rt +25
Elev (29.42) 9.43' Rt +50
Elev (29.37) 9.55' Rt +75
Elev (29.31) 9.68' Rt +00
Elev (29.20) 9.82' Rt +25
Elev (29.05) 9.97' Rt +50
Elev (29.04) 10.07' Rt +75
Elev (29.03) 10.08' Rt +00
Elev (29.02) 10.08' Rt +25
Elev (28.98) 10.07' Rt +50
Elev (28.93) 10.07' Rt +75
Elev (28.87) 10.06' Rt +00
Elev (28.82) 10.06' Rt +25
Elev (28.92) 10.05' Rt +50
Elev (29.07) 10.05' Rt +75
Elev (29.35) 10.04' Rt +00
Elev (29.33) 10.04' Rt +25
Elev (29.28) 10.03' Rt +50
Elev (29.04) 10.03' Rt +75
Elev (28.90) 10.03' Rt +00
Elev (28.85) 10.02' Rt +25
Elev (28.81) 10.02' Rt +50
Elev (28.73) 10.01' Rt +75
Elev (28.66) 10.01' Rt +00
Elev (28.65) 10.00' Rt +25
Elev (28.64) 10.00' Rt +50
Elev (28.63) 9.99' Rt +75
Elev (28.62) 9.99' Rt +00
Elev (28.61) 9.98' Rt +25
Elev (28.60) 9.98' Rt +50
Elev (28.58) 9.97' Rt +75
Elev (28.57) 9.97' Rt +00
Elev (28.52) 9.96' Rt +25
Elev (28.21) 9.96' Rt +50
Elev (27.80) 9.96' Rt +75
Elev (27.72) 9.95' Rt +00
Elev (27.68) 9.92' Rt +25
Elev (27.61) 9.89' Rt +50

NB INSIDE PG

Elev (28.92) 32.18' Rt +75
Elev (28.92) 32.19' Rt +00
Elev (28.91) 32.19' Rt +25
Elev (28.92) 32.19' Rt +50
Elev (28.92) 32.19' Rt +75
Elev (28.91) 32.18' Rt +00
Elev (28.95) 32.18' Rt +25
Elev (28.99) 32.17' Rt +50
Elev (29.02) 32.17' Rt +75
Elev (29.12) 32.16' Rt +00
Elev (29.20) 32.15' Rt +25
Elev (29.26) 32.14' Rt +50
Elev (29.30) 32.12' Rt +75
Elev (29.39) 32.11' Rt +00
Elev (29.53) 32.10' Rt +25
Elev (29.54) 32.08' Rt +50
Elev (29.55) 32.06' Rt +75
Elev (29.56) 32.04' Rt +00
Elev (29.65) 32.02' Rt +25
Elev (29.61) 32.00' Rt +50
Elev (29.53) 31.97' Rt +75
Elev (29.45) 31.95' Rt +00
Elev (29.36) 31.92' Rt +25
Elev (29.27) 31.90' Rt +50
Elev (29.45) 31.90' Rt +75
Elev (29.46) 31.90' Rt +00
Elev (29.37) 31.90' Rt +25
Elev (29.23) 31.90' Rt +50
Elev (29.09) 31.90' Rt +75
Elev (28.98) 31.90' Rt +00
Elev (28.87) 31.90' Rt +25
Elev (28.87) 31.90' Rt +50
Elev (28.89) 31.90' Rt +75
Elev (28.92) 31.90' Rt +00
Elev (28.91) 31.90' Rt +25
Elev (28.83) 31.90' Rt +50
Elev (28.53) 31.90' Rt +75
Elev (28.40) 31.90' Rt +00
Elev (28.32) 31.90' Rt +25
Elev (28.27) 31.90' Rt +50
Elev (28.23) 31.90' Rt +75
Elev (28.22) 31.90' Rt +00
Elev (28.28) 31.90' Rt +25
Elev (28.35) 31.90' Rt +50
Elev (28.38) 31.90' Rt +75
Elev (28.40) 31.90' Rt +00
Elev (28.40) 31.90' Rt +25
Elev (28.50) 31.90' Rt +50
Elev (28.56) 31.90' Rt +75
Elev (28.55) 31.90' Rt +00
Elev (28.52) 31.90' Rt +25
Elev (28.31) 31.90' Rt +50
Elev (28.07) 31.90' Rt +75
Elev (28.02) 31.90' Rt +00
Elev (27.99) 31.90' Rt +25
Elev (27.95) 31.89' Rt +50

NB INSIDE SAWCUT

PROFILE

SCALE: Horiz 1" = 100'
Vert 1" = 20'

P-29

STATION	113+00	114+00	115+00	116+00	117+00	118+00	119+00	120+00	121+00	122+00	123+00	124+00	125+00	126+00	TOTAL
CY Exc	3898.41														
CY Emb	0														

LAST REVISION 01-12-11 | DATE PLOTTED => 28-JUN-2011 | TIME PLOTTED => 17:37

Dist	COUNTY	ROUTE	POST MILES TOTAL PROJECT	SHEET No.	TOTAL SHEETS
07	Ven,SB	101	R39.8/R43.6, 0.0/2.2	67	757

REGISTERED CIVIL ENGINEER 01-12-11 DATE

6-20-11
PLANS APPROVAL DATE

REGISTERED PROFESSIONAL ENGINEER O.C. LEE No. C28039 Exp. 03/31/12 CIVIL STATE OF CALIFORNIA

THE STATE OF CALIFORNIA OR ITS OFFICERS OR AGENTS SHALL NOT BE RESPONSIBLE FOR THE ACCURACY OR COMPLETENESS OF SCANNED COPIES OF THIS PLAN SHEET.

REVISED BY | DATE REVISED

TRIEU NGUYEN | ANTOINE NADER

CALCULATED-DESIGNED BY | CHECKED BY

FUNCTIONAL SUPERVISOR: OC LEE

STATE OF CALIFORNIA - DEPARTMENT OF TRANSPORTATION

Caltrans® **DESIGN**

MATCH LINE Sta 126+50

STA	SB INSIDE SAWCUT	SB INSIDE PG	NB INSIDE PG	NB INSIDE SAWCUT
12.85' Lt +75	27.44	27.55	27.93	27.93
13.06' Lt +00	27.40	27.50	27.94	27.94
13.26' Lt +25	27.34	27.39	27.93	27.93
13.45' Lt +50	27.33	27.37	27.92	27.92
13.64' Lt +75	27.27	27.35	27.92	27.92
13.82' Lt +00	27.23	27.33	27.91	27.91
14.00' Lt +25	27.16	27.31	27.89	27.89
14.16' Lt +50	27.12	27.29	27.87	27.87
14.32' Lt +75	27.07	27.26	27.84	27.84
14.48' Lt +00	27.02	27.24	27.83	27.83
14.63' Lt +25	26.96	27.22	27.81	27.81
14.76' Lt +50	26.91	27.20	27.76	27.76
14.90' Lt +75	26.85	27.18	27.72	27.72
15.02' Lt +00	26.79	27.16	27.67	27.67
15.14' Lt +25	26.75	27.14	27.61	27.61
15.25' Lt +50	26.79	27.12	27.59	27.59
15.36' Lt +75	26.82	27.10	27.58	27.58
15.46' Lt +00	26.85	27.08	27.57	27.57
15.55' Lt +25	26.82	27.07	27.56	27.56
15.63' Lt +50	26.75	27.06	27.54	27.54
15.71' Lt +75	26.69	27.05	27.50	27.50
15.78' Lt +00	26.63	26.99	27.48	27.48
15.84' Lt +25	26.56	26.92	27.42	27.42
15.90' Lt +50	26.50	26.85	27.35	27.35
15.95' Lt +75	26.44	26.79	27.28	27.28
16.09' Lt +00	26.38	26.71	27.21	27.21
16.02' Lt +25	26.32	26.59	27.16	27.16
16.07' Lt +50	26.30	26.53	27.02	27.02
16.09' Lt +75	26.29	26.46	26.98	26.98
16.09' Lt +00	26.28	26.40	26.96	26.96
16.09' Lt +25	26.27	26.34	26.94	26.94
16.09' Lt +50	26.27	26.27	26.97	26.97
16.07' Lt +75	26.27	26.21	26.90	26.90
16.09' Lt +00	26.26	26.24	26.98	26.98
16.05' Lt +25	26.26	26.27	27.02	27.02
16.03' Lt +50	26.25	26.30	27.05	27.05
15.99' Lt +75	26.22	26.33	27.05	27.05
15.95' Lt +00	26.12	26.36	27.02	27.02
15.84' Lt +25	26.24	26.39	26.97	26.97
15.78' Lt +50	26.34	26.42	26.90	26.90
15.71' Lt +75	26.43	26.45	26.93	26.93
15.64' Lt +25	26.49	26.48	27.04	27.04
15.55' Lt +50	26.60	26.58	27.16	27.16
15.47' Lt +75	26.62	26.65	27.28	27.28
15.56' Lt +00	26.65	26.73	27.39	27.39
15.65' Lt +25	26.75	26.81	27.49	27.49
15.75' Lt +50	26.84	26.89	27.58	27.58
15.84' Lt +75	26.92	26.96	27.67	27.67
15.95' Lt +00	27.01	27.03	27.72	27.72
16.05' Lt +25	27.10	27.07	27.71	27.71
16.16' Lt +50	27.19	27.11	27.66	27.66
16.27' Lt +75	27.27	27.15	27.60	27.60
16.38' Lt +00	27.35	27.22	27.62	27.62
16.50' Lt +25	27.41	27.29	27.67	27.67
16.62' Lt +50	27.44	27.32	27.72	27.72
		27.55	27.79	27.79
		27.23	27.84	27.84
		27.13	27.76	27.76
		27.07	27.68	27.68
		26.99	27.61	27.61
		26.88	27.57	27.57
		26.80	27.48	27.48
		26.73	27.42	27.42
		26.68	27.35	27.35
		26.63	27.28	27.28
		26.60	27.21	27.21
		26.57	27.16	27.16
		26.55	27.10	27.10
		26.55	27.08	27.08
		26.52	27.07	27.07
		26.50	27.06	27.06
		26.48	27.05	27.05
		26.45	27.04	27.04
		26.50	27.03	27.03
		26.55	27.02	27.02
		26.60	27.01	27.01
		26.65	27.00	27.00
		26.70	26.99	26.99
		26.75	26.98	26.98
		26.80	26.97	26.97
		26.85	26.96	26.96
		26.90	26.95	26.95
		27.00	26.94	26.94
		27.10	26.93	26.93
		27.20	26.92	26.92
		27.30	26.91	26.91
		27.40	26.90	26.90
		27.45	26.89	26.89
		27.52	26.88	26.88
		27.60	26.87	26.87
		27.68	26.86	26.86
		27.75	26.85	26.85
		27.82	26.84	26.84
		27.90	26.83	26.83
		27.98	26.82	26.82
		28.05	26.81	26.81
		28.13	26.80	26.80
		28.20	26.79	26.79

MATCH LINE Sta 140+50

PROFILE

SCALE: Horiz 1" = 100'
Vert 1" = 20'

P-30

STATION	127+00	128+00	129+00	130+00	131+00	132+00	133+00	134+00	135+00	136+00	137+00	138+00	139+00	140+00	TOTAL
CY Exc	3353.23														
CY Emb	0														

LAST REVISION 01-12-11 | DATE PLOTTED => 28-JUN-2011 | TIME PLOTTED => 17:37

Dist	COUNTY	ROUTE	POST MILES TOTAL PROJECT	SHEET No.	TOTAL SHEETS
07	Ven,SB	101	R39.8/R43.6, 0.0/2.2	68	757

REGISTERED CIVIL ENGINEER 01-12-11 DATE

6-20-11
PLANS APPROVAL DATE

REGISTERED PROFESSIONAL ENGINEER O.C. LEE No. C28039 Exp. 03/31/12 CIVIL STATE OF CALIFORNIA

THE STATE OF CALIFORNIA OR ITS OFFICERS OR AGENTS SHALL NOT BE RESPONSIBLE FOR THE ACCURACY OR COMPLETENESS OF SCANNED COPIES OF THIS PLAN SHEET.

REVISED BY | DATE REVISED

TRIEU NGUYEN | ANTOINE NADER

CALCULATED-DESIGNED BY | CHECKED BY

FUNCTIONAL SUPERVISOR: OC LEE

STATE OF CALIFORNIA - DEPARTMENT OF TRANSPORTATION

Caltrans® **DESIGN**

MATCH LINE Sta 140+50

SB INSIDE SAWCUT

Elev (27.37) 16.75' Lt +75
Elev (27.32) 16.87' Lt +00
Elev (27.28) 17.00' Lt +25
Elev (27.24) 17.14' Lt +50
Elev (27.32) 17.27' Lt +75
Elev (27.42) 17.41' Lt +00
Elev (27.52) 17.55' Lt +25
Elev (27.61) 17.70' Lt +50
Elev (27.60) 17.85' Lt +75
Elev (27.58) 18.00' Lt +00
Elev (27.58) 18.15' Lt +25
Elev (27.57) 18.31' Lt +50
Elev (27.60) 18.47' Lt +75
Elev (27.68) 18.64' Lt +00
Elev (27.76) 18.80' Lt +25
Elev (27.84) 18.97' Lt +50
Elev (27.98) 19.14' Lt +75
Elev (28.18) 19.32' Lt +00
Elev (28.30) 19.50' Lt +25
Elev (28.35) 19.68' Lt +50
Elev (28.40) 19.86' Lt +75
Elev (28.46) 20.05' Lt +00
Elev (28.40) 20.24' Lt +25
Elev (28.23) 20.43' Lt +50
Elev (28.08) 20.62' Lt +75
Elev (28.32) 20.67' Lt +00
Elev (28.48) 20.69' Lt +25
Elev (28.60) 20.71' Lt +50
Elev (28.61) 20.73' Lt +75
Elev (28.66) 20.75' Lt +00
Elev (28.66) 20.77' Lt +25
Elev (28.80) 20.80' Lt +50
Elev (28.91) 20.82' Lt +75
Elev (28.99) 20.84' Lt +00
Elev (29.04) 20.86' Lt +25
Elev (28.82) 20.88' Lt +50
Elev (28.92) 20.90' Lt +75
Elev (28.82) 20.92' Lt +00
Elev (28.76) 20.94' Lt +25
Elev (28.73) 20.96' Lt +50
Elev (28.73) 20.98' Lt +75
Elev (28.73) 21.00' Lt +00
Elev (28.64) 21.02' Lt +25
Elev (28.76) 21.05' Lt +50
Elev (28.67) 21.07' Lt +75
Elev (28.62) 21.09' Lt +00
Elev (28.63) 21.11' Lt +25
Elev (28.65) 21.13' Lt +50
Elev (28.73) 21.15' Lt +75
Elev (28.73) 21.17' Lt +00
Elev (28.55) 21.19' Lt +25
Elev (28.41) 21.21' Lt +50
Elev (28.43) 21.23' Lt +75
Elev (28.44) 21.25' Lt +00
Elev (28.51) 21.28' Lt +25
Elev (28.49) 21.30' Lt +50

SB INSIDE PG

Elev 28.15 6.74' Rt +75
Elev 28.10 6.62' Rt +00
Elev 28.05 6.50' Rt +25
Elev 28.00 6.38' Rt +50
Elev 27.95 6.27' Rt +75
Elev 28.02 6.15' Rt +00
Elev 28.10 6.04' Rt +25
Elev 28.18 5.93' Rt +50
Elev 28.20 5.82' Rt +75
Elev 28.23 5.67' Rt +00
Elev 28.25 5.54' Rt +25
Elev 28.27 5.43' Rt +50
Elev 28.30 5.33' Rt +75
Elev 28.32 5.24' Rt +00
Elev 28.35 5.13' Rt +25
Elev 28.45 5.03' Rt +50
Elev 28.60 4.98' Rt +75
Elev 28.75 4.91' Rt +00
Elev 28.90 4.82' Rt +25
Elev 29.05 4.73' Rt +50
Elev 29.20 4.64' Rt +75
Elev 29.10 4.53' Rt +00
Elev 29.00 4.34' Rt +25
Elev 28.60 4.10' Rt +50
Elev 28.05 4.17' Rt +75
Elev 28.40 4.16' Rt +00
Elev 28.60 4.18' Rt +25
Elev 28.70 4.16' Rt +50
Elev 28.68 4.18' Rt +75
Elev 28.67 4.26' Rt +00
Elev 28.69 4.37' Rt +25
Elev 28.83 4.41' Rt +50
Elev 28.93 4.49' Rt +75
Elev 29.05 4.53' Rt +00
Elev 29.10 4.52' Rt +25
Elev 29.02 4.61' Rt +50
Elev 28.93 4.58' Rt +75
Elev 28.84 4.61' Rt +00
Elev 28.79 4.63' Rt +25
Elev 28.75 4.71' Rt +50
Elev 28.77 4.74' Rt +75
Elev 28.80 4.71' Rt +00
Elev 28.67 4.77' Rt +25
Elev 28.78 4.77' Rt +50
Elev 28.69 4.80' Rt +75
Elev 28.65 4.88' Rt +00
Elev 28.66 4.93' Rt +25
Elev 28.70 4.94' Rt +50
Elev 28.77 4.95' Rt +75
Elev 28.85 4.93' Rt +00
Elev 28.58 4.95' Rt +25
Elev 28.42 5.00' Rt +50
Elev 28.45 5.09' Rt +75
Elev 28.47 5.16' Rt +00
Elev 28.55 5.18' Rt +25
Elev 28.57 5.24' Rt +50

MATCH LINE Sta 154+50

NB INSIDE PG

Elev 27.11 8.74' Rt +75
Elev 27.22 8.62' Rt +00
Elev 27.34 8.50' Rt +25
Elev 27.46 8.38' Rt +50
Elev 27.57 8.27' Rt +75
Elev 27.69 8.15' Rt +00
Elev 27.80 8.04' Rt +25
Elev 27.92 7.93' Rt +50
Elev 28.04 7.82' Rt +75
Elev 28.15 7.71' Rt +00
Elev 28.27 7.61' Rt +25
Elev 28.39 7.50' Rt +50
Elev 28.50 7.40' Rt +75
Elev 28.62 7.30' Rt +00
Elev 28.73 7.20' Rt +25
Elev 28.82 7.10' Rt +50
Elev 28.90 7.01' Rt +75
Elev 28.98 6.91' Rt +00
Elev 29.06 6.82' Rt +25
Elev 29.14 6.73' Rt +50
Elev 29.20 6.64' Rt +75
Elev 29.24 6.55' Rt +00
Elev 29.32 6.47' Rt +25
Elev 29.42 6.38' Rt +50
Elev 29.55 6.30' Rt +75
Elev 29.60 6.30' Rt +00
Elev 29.67 6.34' Rt +25
Elev 29.95 6.37' Rt +50
Elev 30.15 6.40' Rt +75
Elev 30.03 6.44' Rt +00
Elev 29.63 6.47' Rt +25
Elev 29.36 6.51' Rt +50
Elev 29.35 6.54' Rt +75
Elev 29.33 6.57' Rt +00
Elev 29.32 6.61' Rt +25
Elev 29.31 6.64' Rt +50
Elev 29.30 6.67' Rt +75
Elev 29.29 6.71' Rt +00
Elev 29.27 6.74' Rt +25
Elev 29.26 6.77' Rt +50
Elev 29.23 6.81' Rt +75
Elev 29.21 6.84' Rt +00
Elev 29.27 6.87' Rt +25
Elev 29.33 6.91' Rt +50
Elev 29.40 6.94' Rt +75
Elev 29.46 6.98' Rt +00
Elev 29.48 7.01' Rt +25
Elev 29.50 7.04' Rt +50
Elev 29.64 7.08' Rt +75
Elev 29.70 7.11' Rt +00
Elev 29.62 7.14' Rt +25
Elev 29.54 7.18' Rt +50
Elev 29.46 7.21' Rt +75
Elev 29.38 7.24' Rt +00
Elev 29.29 7.28' Rt +25
Elev 29.21 7.31' Rt +50

NB INSIDE SAWCUT

Elev (28.10) 27.87' Rt +75
Elev (28.12) 27.74' Rt +00
Elev (28.13) 27.62' Rt +25
Elev (28.24) 27.49' Rt +50
Elev (28.35) 27.37' Rt +75
Elev (28.44) 27.24' Rt +00
Elev (28.51) 27.12' Rt +25
Elev (28.59) 27.00' Rt +50
Elev (28.68) 26.88' Rt +75
Elev (28.75) 26.76' Rt +00
Elev (28.84) 26.64' Rt +25
Elev (28.90) 26.52' Rt +50
Elev (28.96) 26.40' Rt +75
Elev (29.01) 26.28' Rt +00
Elev (29.05) 26.17' Rt +25
Elev (29.16) 26.05' Rt +50
Elev (29.25) 25.94' Rt +75
Elev (29.33) 25.82' Rt +00
Elev (29.39) 25.71' Rt +25
Elev (29.43) 25.59' Rt +50
Elev (29.46) 25.48' Rt +75
Elev (29.48) 25.37' Rt +00
Elev (29.47) 25.26' Rt +25
Elev (29.45) 25.15' Rt +50
Elev (29.71) 25.04' Rt +75
Elev (29.53) 25.01' Rt +00
Elev (29.70) 25.01' Rt +25
Elev (29.77) 25.01' Rt +50
Elev (29.70) 25.01' Rt +75
Elev (29.59) 25.01' Rt +00
Elev (29.28) 25.01' Rt +25
Elev (29.13) 25.01' Rt +50
Elev (29.20) 25.01' Rt +75
Elev (29.08) 25.01' Rt +00
Elev (29.06) 25.01' Rt +25
Elev (29.03) 25.01' Rt +50
Elev (28.91) 25.01' Rt +75
Elev (28.93) 25.01' Rt +00
Elev (28.89) 25.01' Rt +25
Elev (29.02) 25.01' Rt +50
Elev (28.92) 25.01' Rt +75
Elev (28.86) 25.01' Rt +00
Elev (28.94) 25.01' Rt +25
Elev (28.92) 25.01' Rt +50
Elev (28.90) 25.01' Rt +75
Elev (28.88) 25.01' Rt +00
Elev (28.81) 25.01' Rt +25
Elev (28.81) 25.01' Rt +50
Elev (28.87) 25.01' Rt +75
Elev (28.92) 25.01' Rt +00
Elev (28.81) 25.01' Rt +25
Elev (28.72) 25.01' Rt +50
Elev (28.68) 25.01' Rt +75
Elev (28.57) 25.01' Rt +00
Elev (28.55) 25.01' Rt +25
Elev (28.58) 25.01' Rt +50

STATION	141+00	142+00	143+00	144+00	145+00	146+00	147+00	148+00	149+00	150+00	151+00	152+00	153+00	154+00	TOTAL
CY Exc	2760.10														
CY Emb	0														

PROFILE

SCALE: Horiz 1" = 100'
Vert 1" = 20'

P-31

LAST REVISION 01-12-11 | DATE PLOTTED => 28-JUN-2011 | TIME PLOTTED => 17:37

Dist	COUNTY	ROUTE	POST MILES TOTAL PROJECT	SHEET No.	TOTAL SHEETS
07	Ven,SB	101	R39.8/R43.6, 0.0/2.2	69	757

REGISTERED CIVIL ENGINEER 01-12-11 DATE

6-20-11
PLANS APPROVAL DATE

REGISTERED PROFESSIONAL ENGINEER O.C. LEE No. C28039 Exp. 03/31/12 CIVIL STATE OF CALIFORNIA

THE STATE OF CALIFORNIA OR ITS OFFICERS OR AGENTS SHALL NOT BE RESPONSIBLE FOR THE ACCURACY OR COMPLETENESS OF SCANNED COPIES OF THIS PLAN SHEET.

REVISED BY | DATE REVISED

TRIEU NGUYEN | ANTONE NADER

CALCULATED-DESIGNED BY | CHECKED BY

FUNCTIONAL SUPERVISOR: OC LEE

STATE OF CALIFORNIA - DEPARTMENT OF TRANSPORTATION

Caltrans® **DESIGN**

MATCH LINE Sta 154+50

MATCH LINE Sta 168+00

SB INSIDE SAWCUT

Elev (28.47) 21.32' Lt +75
Elev (28.48) 21.34' Lt +00
Elev (28.46) 21.36' Lt +25
Elev (28.43) 21.38' Lt +50
Elev (28.39) 21.40' Lt +75
Elev (28.33) 21.42' Lt +00
Elev (28.30) 21.44' Lt +25
Elev (28.29) 21.46' Lt +50
Elev (28.34) 21.48' Lt +75
Elev (28.38) 21.50' Lt +00
Elev (28.35) 21.53' Lt +25
Elev (28.33) 21.55' Lt +50
Elev (28.34) 21.57' Lt +75
Elev (28.27) 21.59' Lt +00
Elev (28.17) 21.61' Lt +25
Elev (28.01) 21.63' Lt +50
Elev (27.86) 21.65' Lt +75
Elev (27.85) 21.67' Lt +00
Elev (27.83) 21.69' Lt +25
Elev (27.82) 21.71' Lt +50
Elev (27.80) 21.73' Lt +75
Elev (27.78) 21.76' Lt +00
Elev (27.76) 21.78' Lt +25
Elev (27.74) 21.80' Lt +50
Elev (27.73) 21.82' Lt +75
Elev (27.72) 21.84' Lt +00
Elev (27.71) 21.86' Lt +25
Elev (27.71) 21.88' Lt +50
Elev (27.70) 21.90' Lt +75
Elev (27.70) 21.92' Lt +00
Elev (27.69) 21.94' Lt +25
Elev (27.69) 21.96' Lt +50
Elev (27.68) 21.97' Lt +75
Elev (27.68) 21.84' Lt +00
Elev (27.67) 21.51' Lt +25
Elev (27.64) 21.04' Lt +50
Elev (27.56) 20.59' Lt +75
Elev (27.48) 20.14' Lt +00
Elev (27.43) 19.72' Lt +25
Elev (27.32) 19.30' Lt +50
Elev (27.23) 18.90' Lt +75
Elev (27.11) 18.51' Lt +00
Elev (26.99) 18.14' Lt +25
Elev (26.85) 17.78' Lt +50
Elev (26.71) 17.44' Lt +75
Elev (26.65) 17.11' Lt +00
Elev (26.69) 16.79' Lt +25
Elev (26.77) 16.49' Lt +50
Elev (26.74) 16.20' Lt +75
Elev (26.75) 15.93' Lt +00
Elev (27.03) 15.67' Lt +25
Elev (27.15) 15.43' Lt +50
Elev (26.98) 15.20' Lt +75
Elev (26.85) 14.98' Lt +00

SB INSIDE PG

Elev 28.60 5.25' Rt +75
Elev 28.63 5.27' Rt +00
Elev 28.52 5.30' Rt +25
Elev 28.47 5.37' Rt +50
Elev 28.42 5.47' Rt +75
Elev 28.40 5.49' Rt +00
Elev 28.48 5.52' Rt +25
Elev 28.55 5.57' Rt +50
Elev 28.63 5.61' Rt +75
Elev 28.70 5.63' Rt +00
Elev 28.65 5.65' Rt +25
Elev 28.60 5.63' Rt +50
Elev 28.50 5.75' Rt +75
Elev 28.40 5.78' Rt +00
Elev 28.25 5.79' Rt +25
Elev 28.00 5.75' Rt +50
Elev 27.80 5.77' Rt +75
Elev 27.70 5.79' Rt +00
Elev 27.65 5.82' Rt +25
Elev 27.63 5.87' Rt +50
Elev 27.60 5.91' Rt +75
Elev 27.57 5.95' Rt +00
Elev 27.60 5.99' Rt +25
Elev 27.63 6.03' Rt +50
Elev 27.65 6.07' Rt +75
Elev 27.68 6.12' Rt +00
Elev 27.70 6.16' Rt +25
Elev 27.73 6.21' Rt +50
Elev 27.82 6.26' Rt +75
Elev 27.93 6.31' Rt +00
Elev 28.02 6.35' Rt +25
Elev 28.13 6.39' Rt +50
Elev 28.23 6.43' Rt +75
Elev 28.43 6.62' Rt +00
Elev 28.52 6.97' Rt +25
Elev 28.63 7.32' Rt +50
Elev 28.55 7.66' Rt +75
Elev 28.48 7.98' Rt +00
Elev 28.40 8.30' Rt +25
Elev 28.27 8.60' Rt +50
Elev 28.10 8.88' Rt +75
Elev 27.88 9.16' Rt +00
Elev 27.63 9.40' Rt +25
Elev 27.38 9.59' Rt +50
Elev 27.13 9.86' Rt +75
Elev 26.88 10.10' Rt +00
Elev 26.95 10.31' Rt +25
Elev 27.02 10.54' Rt +50
Elev 27.10 10.73' Rt +75
Elev 27.18 10.90' Rt +00
Elev 27.68 11.06' Rt +25
Elev 27.98 11.21' Rt +50
Elev 27.60 11.29' Rt +75
Elev 27.30 11.37' Rt +00

NB INSIDE PG

Elev 29.13 7.35' Rt +75
Elev 29.10 7.38' Rt +00
Elev 29.07 7.41' Rt +25
Elev 29.04 7.45' Rt +50
Elev 29.01 7.48' Rt +75
Elev 28.85 7.51' Rt +00
Elev 28.84 7.55' Rt +25
Elev 28.83 7.58' Rt +50
Elev 28.82 7.61' Rt +75
Elev 28.81 7.65' Rt +00
Elev 28.80 7.68' Rt +25
Elev 28.78 7.71' Rt +50
Elev 28.76 7.75' Rt +75
Elev 28.69 7.78' Rt +00
Elev 28.40 7.82' Rt +25
Elev 28.39 7.85' Rt +50
Elev 28.38 7.88' Rt +75
Elev 28.37 7.92' Rt +00
Elev 28.35 7.95' Rt +25
Elev 28.32 7.98' Rt +50
Elev 28.29 8.02' Rt +75
Elev 28.26 8.05' Rt +00
Elev 28.23 8.08' Rt +25
Elev 28.20 8.12' Rt +50
Elev 28.15 8.15' Rt +75
Elev 28.11 8.19' Rt +00
Elev 28.09 8.22' Rt +25
Elev 28.08 8.25' Rt +50
Elev 28.03 8.29' Rt +75
Elev 27.98 8.32' Rt +00
Elev 27.93 8.35' Rt +25
Elev 27.90 8.39' Rt +50
Elev 27.88 8.43' Rt +75
Elev 27.84 8.62' Rt +00
Elev 27.77 8.97' Rt +25
Elev 27.70 9.32' Rt +50
Elev 27.65 9.66' Rt +75
Elev 27.60 9.98' Rt +00
Elev 27.56 10.30' Rt +25
Elev 27.51 10.60' Rt +50
Elev 27.46 10.88' Rt +75
Elev 27.41 11.16' Rt +00
Elev 27.37 11.42' Rt +25
Elev 27.32 11.67' Rt +50
Elev 27.27 11.91' Rt +75
Elev 27.22 12.13' Rt +00
Elev 27.18 12.34' Rt +25
Elev 27.13 12.54' Rt +50
Elev 27.08 12.73' Rt +75
Elev 27.03 12.90' Rt +00
Elev 26.99 13.06' Rt +25
Elev 27.06 13.21' Rt +50
Elev 27.13 13.35' Rt +75
Elev 27.27 13.47' Rt +00

NB INSIDE SAWCUT

Elev (28.46) 25.01' Rt +75
Elev (28.55) 25.01' Rt +00
Elev (28.60) 25.01' Rt +25
Elev (28.59) 25.01' Rt +50
Elev (28.38) 25.01' Rt +75
Elev (28.23) 25.01' Rt +00
Elev (28.22) 25.01' Rt +25
Elev (28.22) 25.01' Rt +50
Elev (28.20) 25.01' Rt +75
Elev (28.32) 25.01' Rt +00
Elev (28.33) 25.01' Rt +25
Elev (28.27) 25.01' Rt +50
Elev (28.35) 25.01' Rt +75
Elev (28.03) 25.01' Rt +00
Elev (27.95) 25.01' Rt +25
Elev (28.05) 25.01' Rt +50
Elev (28.15) 25.01' Rt +75
Elev (28.24) 25.01' Rt +00
Elev (28.32) 25.01' Rt +25
Elev (28.29) 25.01' Rt +50
Elev (28.26) 25.01' Rt +75
Elev (28.23) 25.01' Rt +00
Elev (28.21) 25.01' Rt +25
Elev (28.18) 25.01' Rt +50
Elev (28.15) 25.01' Rt +75
Elev (28.13) 25.01' Rt +00
Elev (28.11) 25.01' Rt +25
Elev (28.10) 25.01' Rt +50
Elev (28.10) 25.01' Rt +75
Elev (28.11) 25.01' Rt +00
Elev (28.11) 25.01' Rt +25
Elev (28.13) 25.01' Rt +50
Elev (28.15) 25.02' Rt +75
Elev (28.16) 25.18' Rt +00
Elev (28.15) 25.50' Rt +25
Elev (28.15) 25.83' Rt +50
Elev (28.13) 26.15' Rt +75
Elev (28.12) 26.45' Rt +00
Elev (28.14) 26.75' Rt +25
Elev (28.14) 27.04' Rt +50
Elev (28.15) 27.32' Rt +75
Elev (28.15) 27.58' Rt +00
Elev (28.17) 27.84' Rt +25
Elev (28.19) 28.08' Rt +50
Elev (28.13) 28.32' Rt +75
Elev (27.99) 28.54' Rt +00
Elev (27.94) 28.75' Rt +25
Elev (28.10) 28.96' Rt +50
Elev (28.04) 29.15' Rt +75
Elev (27.97) 29.33' Rt +00
Elev (27.92) 29.50' Rt +25
Elev (27.98) 29.66' Rt +50
Elev (28.06) 29.81' Rt +75
Elev (28.14) 29.95' Rt +00

PROFILE

SCALE: Horiz 1" = 100'
Vert 1" = 20'

P-32

STATION	155+00	156+00	157+00	158+00	159+00	160+00	161+00	162+00	163+00	164+00	165+00	166+00	167+00	168+00	TOTAL
CY Exc	3072.13														
CY Emb	0														

LAST REVISION 01-12-11 | DATE PLOTTED => 28-JUN-2011 | TIME PLOTTED => 17:37

Dist	COUNTY	ROUTE	POST MILES TOTAL PROJECT	SHEET No.	TOTAL SHEETS
07	Ven,SB	101	R39.8/R43.6, 0.0/2.2	71	757

REGISTERED CIVIL ENGINEER 01-12-11 DATE

6-20-11
PLANS APPROVAL DATE

REGISTERED PROFESSIONAL ENGINEER O.C. LEE No. C28039 Exp. 03/31/12 CIVIL STATE OF CALIFORNIA

THE STATE OF CALIFORNIA OR ITS OFFICERS OR AGENTS SHALL NOT BE RESPONSIBLE FOR THE ACCURACY OR COMPLETENESS OF SCANNED COPIES OF THIS PLAN SHEET.

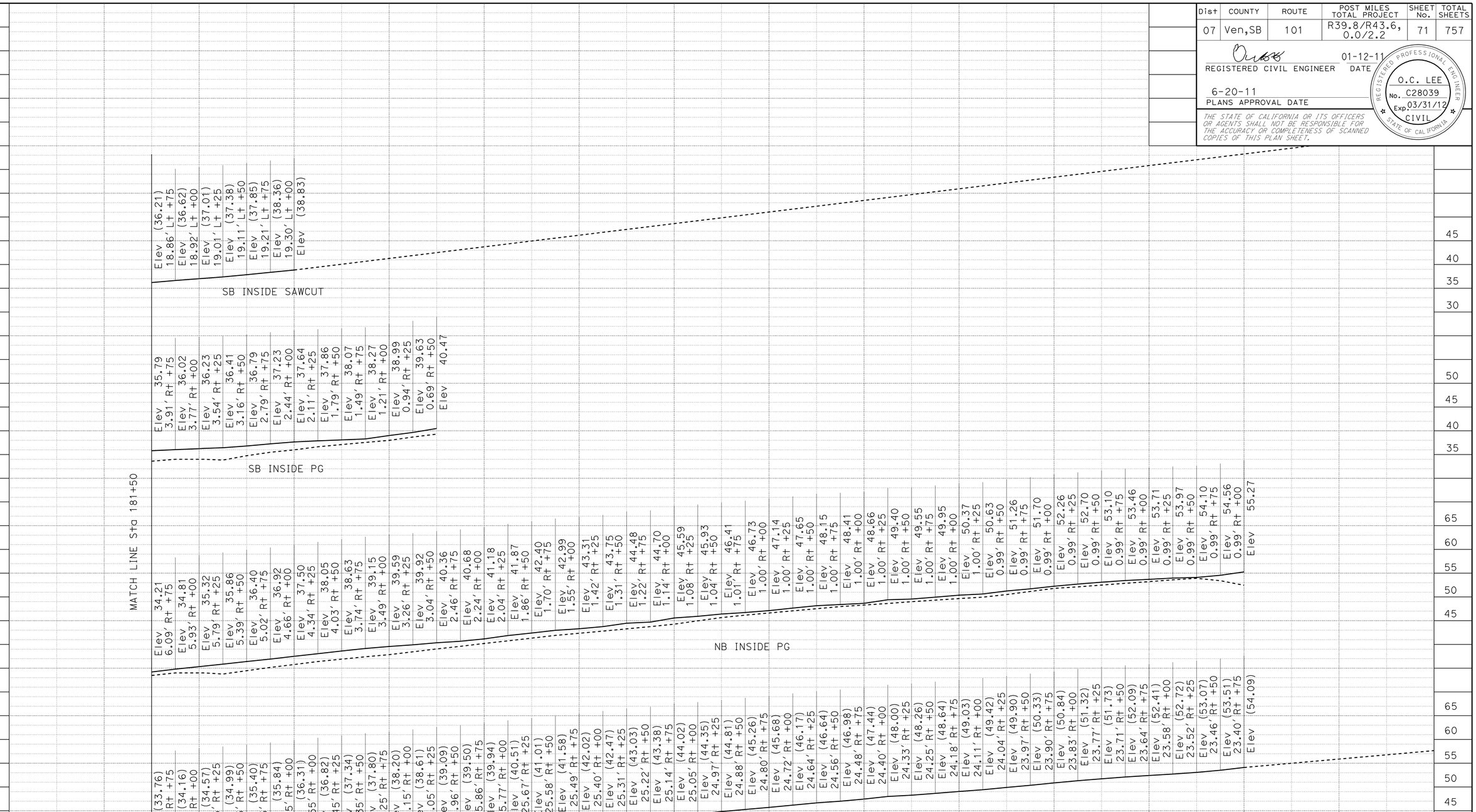

PROFILE

SCALE: Horiz 1" = 100'
Vert 1" = 20'

P-34

STATE OF CALIFORNIA - DEPARTMENT OF TRANSPORTATION
Caltrans® **DESIGN**

FUNCTIONAL SUPERVISOR: OC LEE
CALCULATED-DESIGNED BY: ANTOINE NADER
CHECKED BY:
REVISED BY: TRIEU NGUYEN
DATE REVISED:

LAST REVISION 01-12-11
DATE PLOTTED => 25-JUN-2011
TIME PLOTTED => 08:33

Dist	COUNTY	ROUTE	POST MILES TOTAL PROJECT	SHEET No.	TOTAL SHEETS
07	Ven,SB	101	R39.8/R43.6, 0.0/2.2	71	757

REGISTERED CIVIL ENGINEER 01-12-11 DATE

6-20-11
PLANS APPROVAL DATE

REGISTERED PROFESSIONAL ENGINEER O.C. LEE No. C28039 Exp. 03/31/12 CIVIL STATE OF CALIFORNIA

THE STATE OF CALIFORNIA OR ITS OFFICERS OR AGENTS SHALL NOT BE RESPONSIBLE FOR THE ACCURACY OR COMPLETENESS OF SCANNED COPIES OF THIS PLAN SHEET.

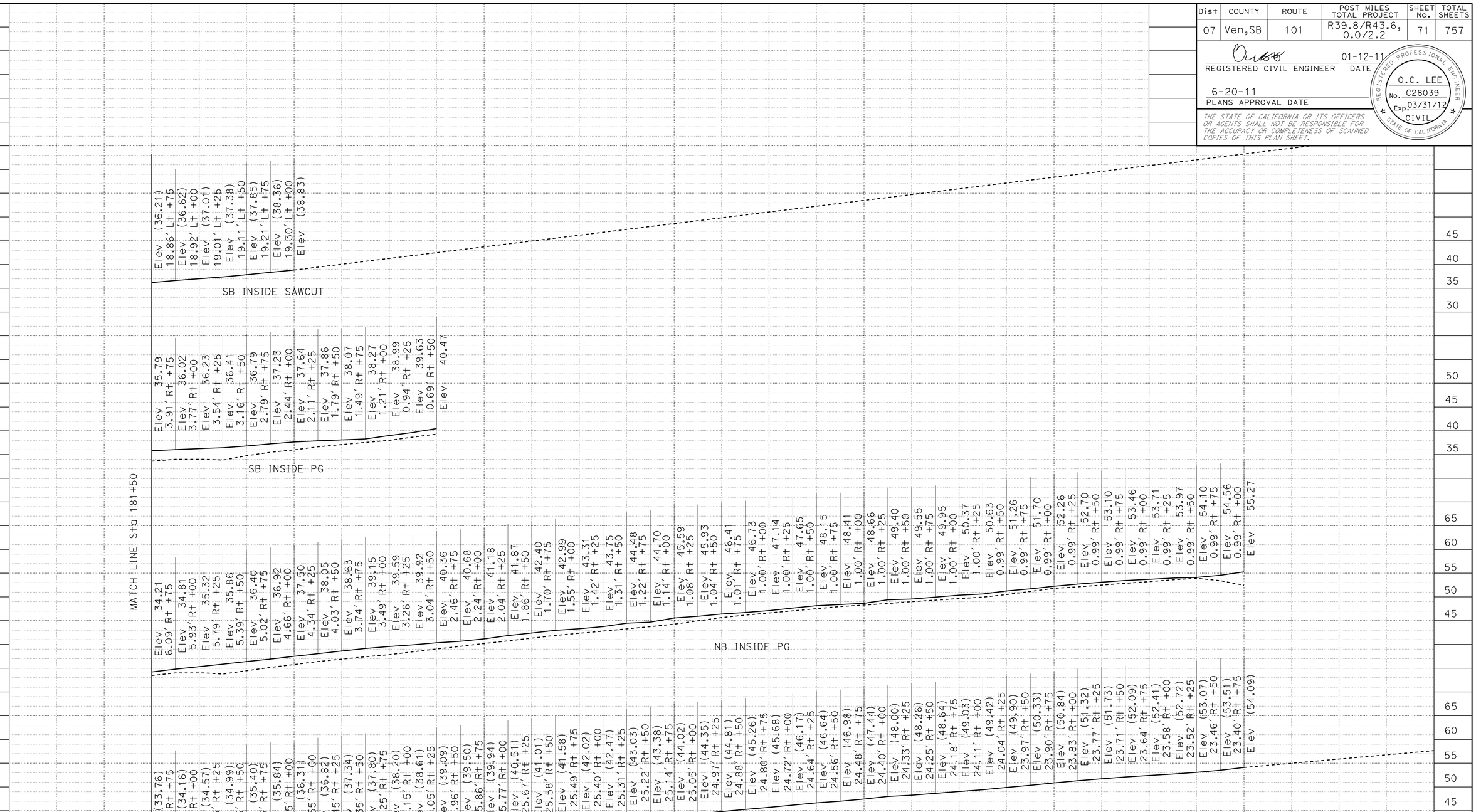

PROFILE

SCALE: Horiz 1" = 100'
Vert 1" = 20'

P-34

STATE OF CALIFORNIA - DEPARTMENT OF TRANSPORTATION
Caltrans® **DESIGN**

FUNCTIONAL SUPERVISOR: OC LEE
CALCULATED-DESIGNED BY: ANTOINE NADER
CHECKED BY:
REVISED BY: TRIEU NGUYEN
DATE REVISED:

LAST REVISION 01-12-11
DATE PLOTTED => 25-JUN-2011
TIME PLOTTED => 08:33

Dist	COUNTY	ROUTE	POST MILES TOTAL PROJECT	SHEET No.	TOTAL SHEETS
07	Ven,SB	101	R39.8/R43.6, 0.0/2.2	72	757

REGISTERED CIVIL ENGINEER 01-12-11 DATE

6-20-11
PLANS APPROVAL DATE

REGISTERED PROFESSIONAL ENGINEER O.C. LEE No. C28039 Exp. 03/31/12 CIVIL STATE OF CALIFORNIA

THE STATE OF CALIFORNIA OR ITS OFFICERS OR AGENTS SHALL NOT BE RESPONSIBLE FOR THE ACCURACY OR COMPLETENESS OF SCANNED COPIES OF THIS PLAN SHEET.

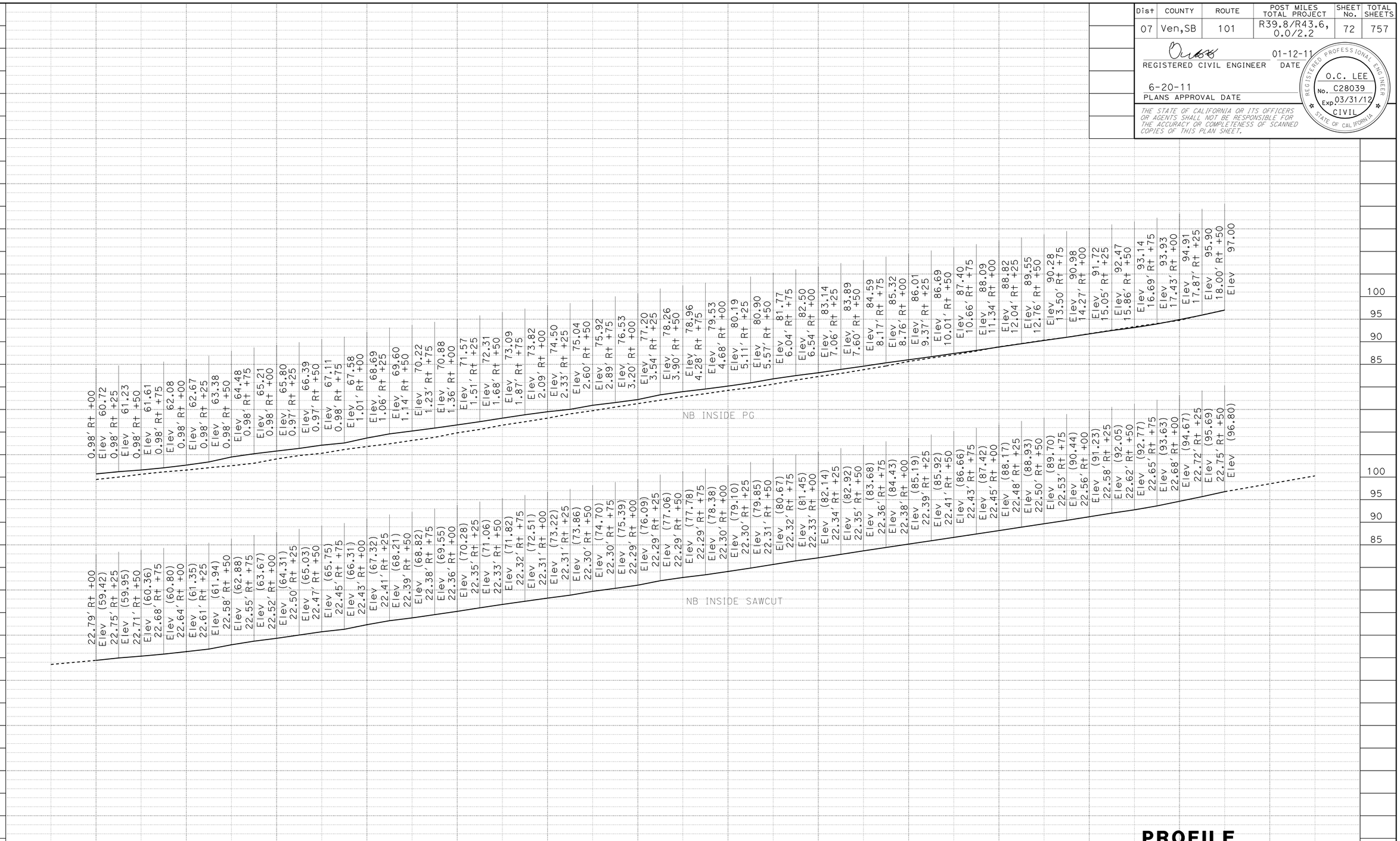

PROFILE

SCALE: Horiz 1" = 100'
Vert 1" = 20'

P-35

STATION	196+00	197+00	198+00	199+00	200+00	201+00	202+00	203+00	204+00	205+00	206+00	207+00	208+00	209+00	TOTAL
CY Exc	1439.52														
CY Emb	206.93														

STATE OF CALIFORNIA - DEPARTMENT OF TRANSPORTATION
Caltrans DESIGN

FUNCTIONAL SUPERVISOR: OC LEE
CALCULATED-DESIGNED BY: TRIEU NGUYEN
CHECKED BY: ANTOINE NADER
REVISED BY
DATE REVISED

LAST REVISION 01-12-11
DATE PLOTTED => 25-JUN-2011
TIME PLOTTED => 08:33

Dist	COUNTY	ROUTE	POST MILES TOTAL PROJECT	SHEET No.	TOTAL SHEETS
07	Ven,SB	101	R39.8/R43.6, 0.0/2.2	73	757

REGISTERED CIVIL ENGINEER 01-12-11 DATE

6-20-11
PLANS APPROVAL DATE

REGISTERED PROFESSIONAL ENGINEER O.C. LEE No. C28039 Exp. 03/31/12 CIVIL STATE OF CALIFORNIA

THE STATE OF CALIFORNIA OR ITS OFFICERS OR AGENTS SHALL NOT BE RESPONSIBLE FOR THE ACCURACY OR COMPLETENESS OF SCANNED COPIES OF THIS PLAN SHEET.

PROFILE

SCALE: Horiz 1" = 100'
Vert 1" = 20'

P-36

STATE OF CALIFORNIA - DEPARTMENT OF TRANSPORTATION
Caltrans® DESIGN

FUNCTIONAL SUPERVISOR: OC LEE
CALCULATED-DESIGNED BY: TRIEU NGUYEN
CHECKED BY: ANTOINE NADER
REVISED BY
DATE REVISED

LAST REVISION 01-12-11
DATE PLOTTED => 25-JUN-2011
TIME PLOTTED => 08:34

Dist	COUNTY	ROUTE	POST MILES TOTAL PROJECT	SHEET No.	TOTAL SHEETS
07	Ven,SB	101	R39.8/R43.6, 0.0/2.2	74	757

REGISTERED CIVIL ENGINEER 01-12-11 DATE

6-20-11
PLANS APPROVAL DATE

REGISTERED PROFESSIONAL ENGINEER O.C. LEE No. C28039 Exp. 03/31/12 CIVIL STATE OF CALIFORNIA

THE STATE OF CALIFORNIA OR ITS OFFICERS OR AGENTS SHALL NOT BE RESPONSIBLE FOR THE ACCURACY OR COMPLETENESS OF SCANNED COPIES OF THIS PLAN SHEET.

PROFILE

SCALE: Horiz 1" = 100'
Vert 1" = 20'

P-37

STATION	224+00	225+00	226+00	227+00	228+00	229+00	230+00	231+00	232+00	233+00	234+00	235+00	236+00	237+00	TOTAL
CY Exc	1532.45														
CY Emb	419.14														

STATE OF CALIFORNIA - DEPARTMENT OF TRANSPORTATION
Caltrans DESIGN

FUNCTIONAL SUPERVISOR: OC LEE
CALCULATED-DESIGNED BY: TRIEU NGUYEN
CHECKED BY: ANTOINE NADER
REVISED BY
DATE REVISED

LAST REVISION 01-12-11
DATE PLOTTED => 25-JUN-2011
TIME PLOTTED => 08:34

Dist	COUNTY	ROUTE	POST MILES TOTAL PROJECT	SHEET No.	TOTAL SHEETS
07	Ven,SB	101	R39.8/R43.6, 0.0/2.2	75	757

REGISTERED CIVIL ENGINEER 01-12-11 DATE

6-20-11
PLANS APPROVAL DATE

REGISTERED PROFESSIONAL ENGINEER O.C. LEE No. C28039 Exp. 03/31/12 CIVIL STATE OF CALIFORNIA

THE STATE OF CALIFORNIA OR ITS OFFICERS OR AGENTS SHALL NOT BE RESPONSIBLE FOR THE ACCURACY OR COMPLETENESS OF SCANNED COPIES OF THIS PLAN SHEET.

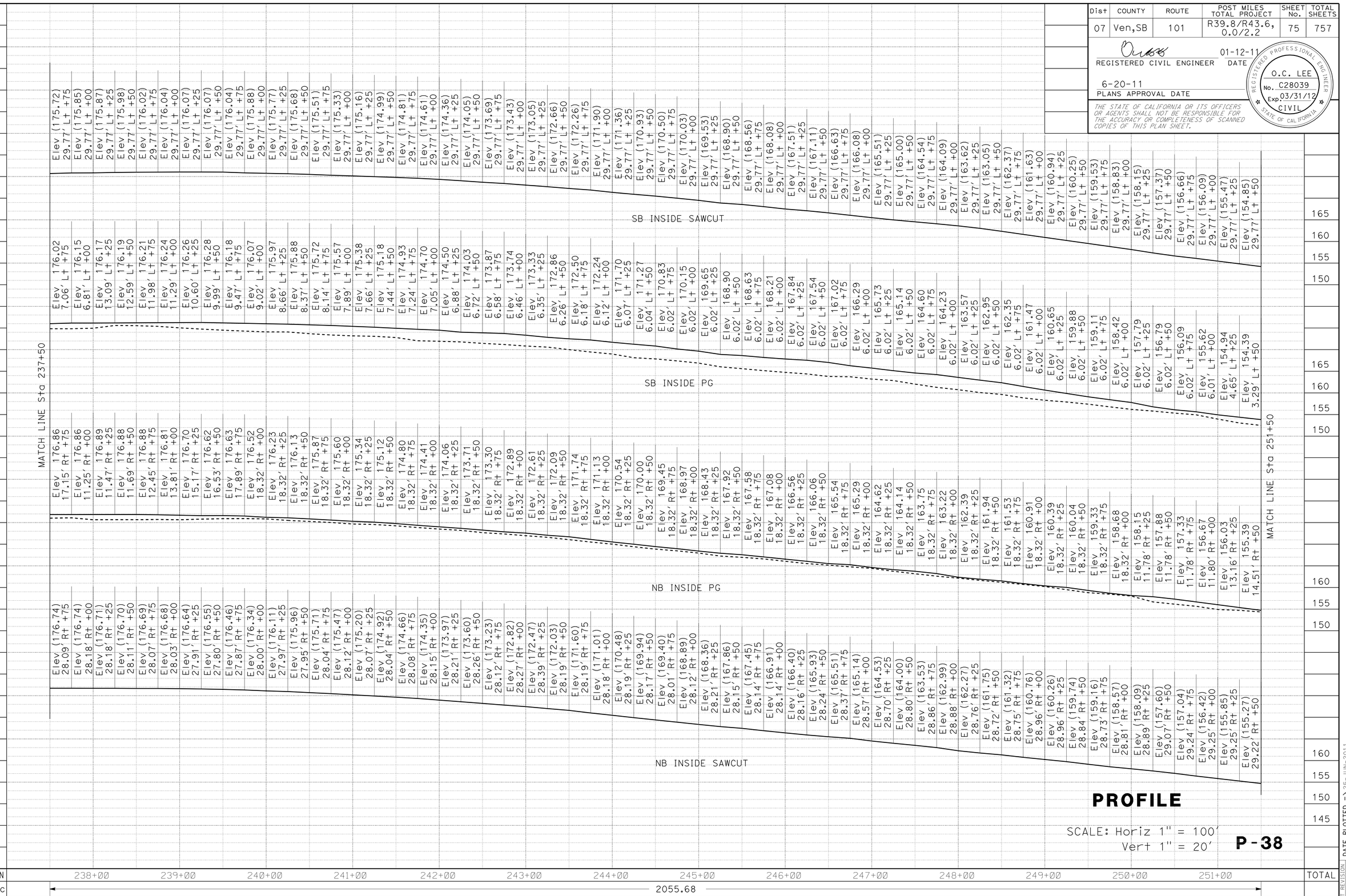

PROFILE

SCALE: Horiz 1" = 100'
Vert 1" = 20'

P-38

STATE OF CALIFORNIA - DEPARTMENT OF TRANSPORTATION
Caltrans® **DESIGN**

FUNCTIONAL SUPERVISOR: OC LEE
CALCULATED-DESIGNED BY: ANTOINE NADER
CHECKED BY: TRIEU NGUYEN
REVISED BY
DATE REVISED

LAST REVISION DATE PLOTTED => 25-JUN-2011
01-12-11 TIME PLOTTED => 08:34

Dist	COUNTY	ROUTE	POST MILES TOTAL PROJECT	SHEET No.	TOTAL SHEETS
07	Ven,SB	101	R39.8/R43.6, 0.0/2.2	76	757

REGISTERED CIVIL ENGINEER 01-12-11 DATE

6-20-11
PLANS APPROVAL DATE

REGISTERED PROFESSIONAL ENGINEER O.C. LEE No. C28039 Exp. 03/31/12 CIVIL STATE OF CALIFORNIA

THE STATE OF CALIFORNIA OR ITS OFFICERS OR AGENTS SHALL NOT BE RESPONSIBLE FOR THE ACCURACY OR COMPLETENESS OF SCANNED COPIES OF THIS PLAN SHEET.

CY Exc 2461.82
CY Emb 206.51

PROFILE

SCALE: Horiz 1" = 100'
Vert 1" = 20'

P-39

STATE OF CALIFORNIA - DEPARTMENT OF TRANSPORTATION
Caltrans®
DESIGN

FUNCTIONAL SUPERVISOR: OC LEE
CALCULATED-DESIGNED BY: TRIEU NGUYEN
CHECKED BY: ANTOINE NADER
REVISED BY
DATE REVISED

LAST REVISION 01-12-11
DATE PLOTTED => 25-JUN-2011
TIME PLOTTED => 08:34

Dist	COUNTY	ROUTE	POST MILES TOTAL PROJECT	SHEET No.	TOTAL SHEETS
07	Ven,SB	101	R39.8/R43.6, 0.0/2.2	77	757

REGISTERED CIVIL ENGINEER 01-12-11 DATE

6-20-11
PLANS APPROVAL DATE

REGISTERED PROFESSIONAL ENGINEER O.C. LEE No. C28039 Exp. 03/31/12 CIVIL STATE OF CALIFORNIA

THE STATE OF CALIFORNIA OR ITS OFFICERS OR AGENTS SHALL NOT BE RESPONSIBLE FOR THE ACCURACY OR COMPLETENESS OF SCANNED COPIES OF THIS PLAN SHEET.

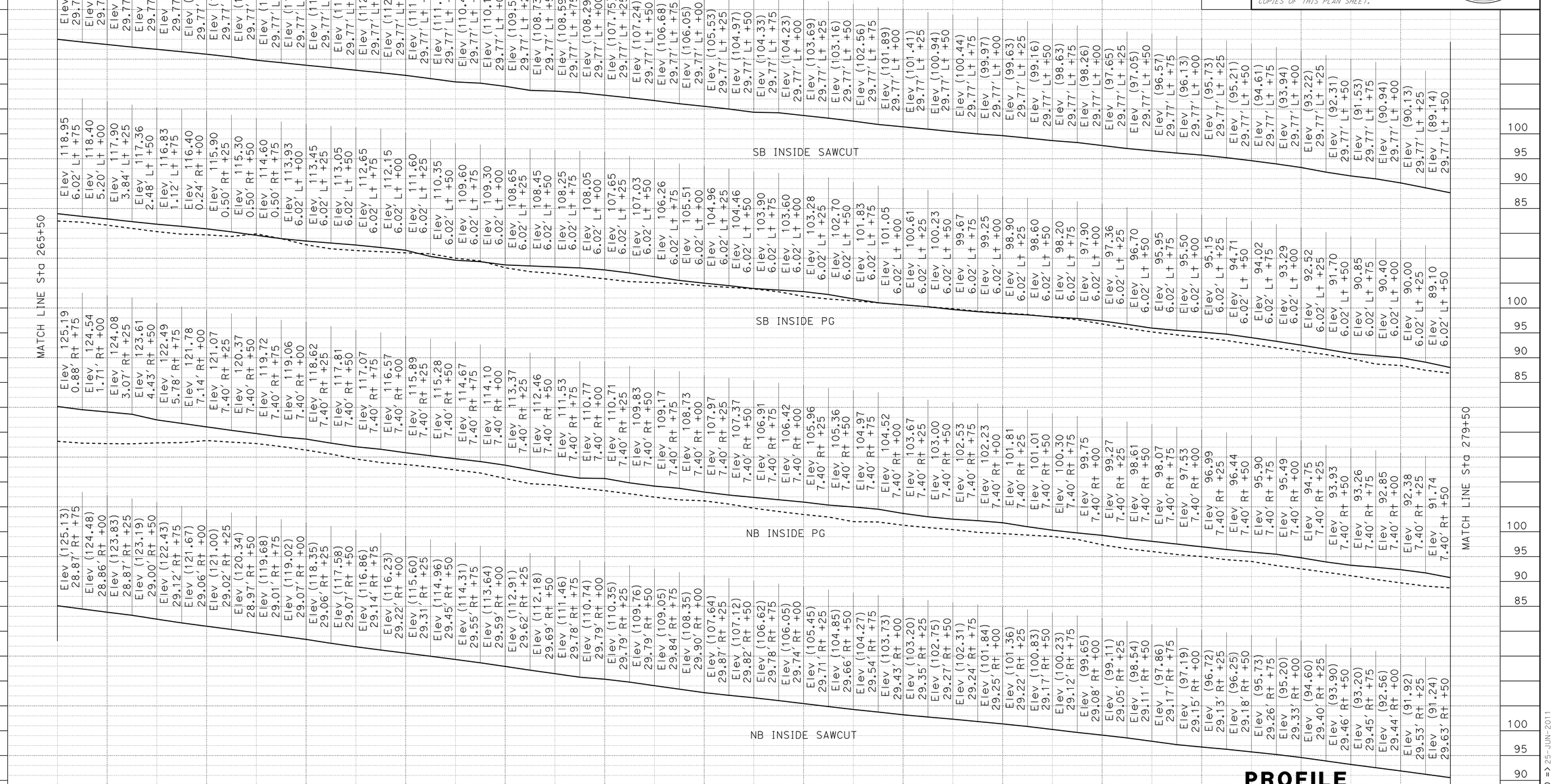

PROFILE

SCALE: Horiz 1" = 100'
Vert 1" = 20'

P-40

TRIEU NGUYEN
ANTOINE NADER
OC LEE

REVISED BY
DATE REVISED
CALCULATED-DESIGNED BY
CHECKED BY
FUNCTIONAL SUPERVISOR

STATE OF CALIFORNIA - DEPARTMENT OF TRANSPORTATION
Caltrans
DESIGN

LAST REVISION 01-12-11
DATE PLOTTED => 25-JUN-2011
TIME PLOTTED => 08:34

Dist	COUNTY	ROUTE	POST MILES TOTAL PROJECT	SHEET No.	TOTAL SHEETS
07	Ven,SB	101	R39.8/R43.6, 0.0/2.2	78	757

REGISTERED CIVIL ENGINEER 01-12-11 DATE

6-20-11
PLANS APPROVAL DATE

REGISTERED PROFESSIONAL ENGINEER O.C. LEE No. C28039 Exp. 03/31/12 CIVIL STATE OF CALIFORNIA

THE STATE OF CALIFORNIA OR ITS OFFICERS OR AGENTS SHALL NOT BE RESPONSIBLE FOR THE ACCURACY OR COMPLETENESS OF SCANNED COPIES OF THIS PLAN SHEET.

PROFILE

SCALE: Horiz 1" = 100'
Vert 1" = 20'

P-41

STATION	280+00	281+00	282+00	283+00	284+00	285+00	286+00	287+00	288+00	289+00	290+00	291+00	292+00	293+00	TOTAL
CY Exc	1850.04														
CY Emb	271.60														

STATE OF CALIFORNIA - DEPARTMENT OF TRANSPORTATION
Caltrans® DESIGN

FUNCTIONAL SUPERVISOR: OC LEE
CALCULATED-DESIGNED BY: TRIEU NGUYEN
CHECKED BY: ANTOINE NADER
REVISED BY
DATE REVISED

LAST REVISION 01-12-11 | DATE PLOTTED => 25-JUN-2011 | TIME PLOTTED => 08:34

Dist	COUNTY	ROUTE	POST MILES TOTAL PROJECT	SHEET No.	TOTAL SHEETS
07	Ven,SB	101	R39.8/R43.6, 0.0/2.2	79	757

REGISTERED CIVIL ENGINEER 01-12-11 DATE

6-20-11
PLANS APPROVAL DATE

REGISTERED PROFESSIONAL ENGINEER O.C. LEE No. C28039 Exp. 03/31/12 CIVIL STATE OF CALIFORNIA

THE STATE OF CALIFORNIA OR ITS OFFICERS OR AGENTS SHALL NOT BE RESPONSIBLE FOR THE ACCURACY OR COMPLETENESS OF SCANNED COPIES OF THIS PLAN SHEET.

REVISED BY | DATE REVISED

TRIEU NGUYEN | ANTOINE NADER

CALCULATED-DESIGNED BY | CHECKED BY

FUNCTIONAL SUPERVISOR: OC LEE

STATE OF CALIFORNIA - DEPARTMENT OF TRANSPORTATION

Caltrans® **DESIGN**

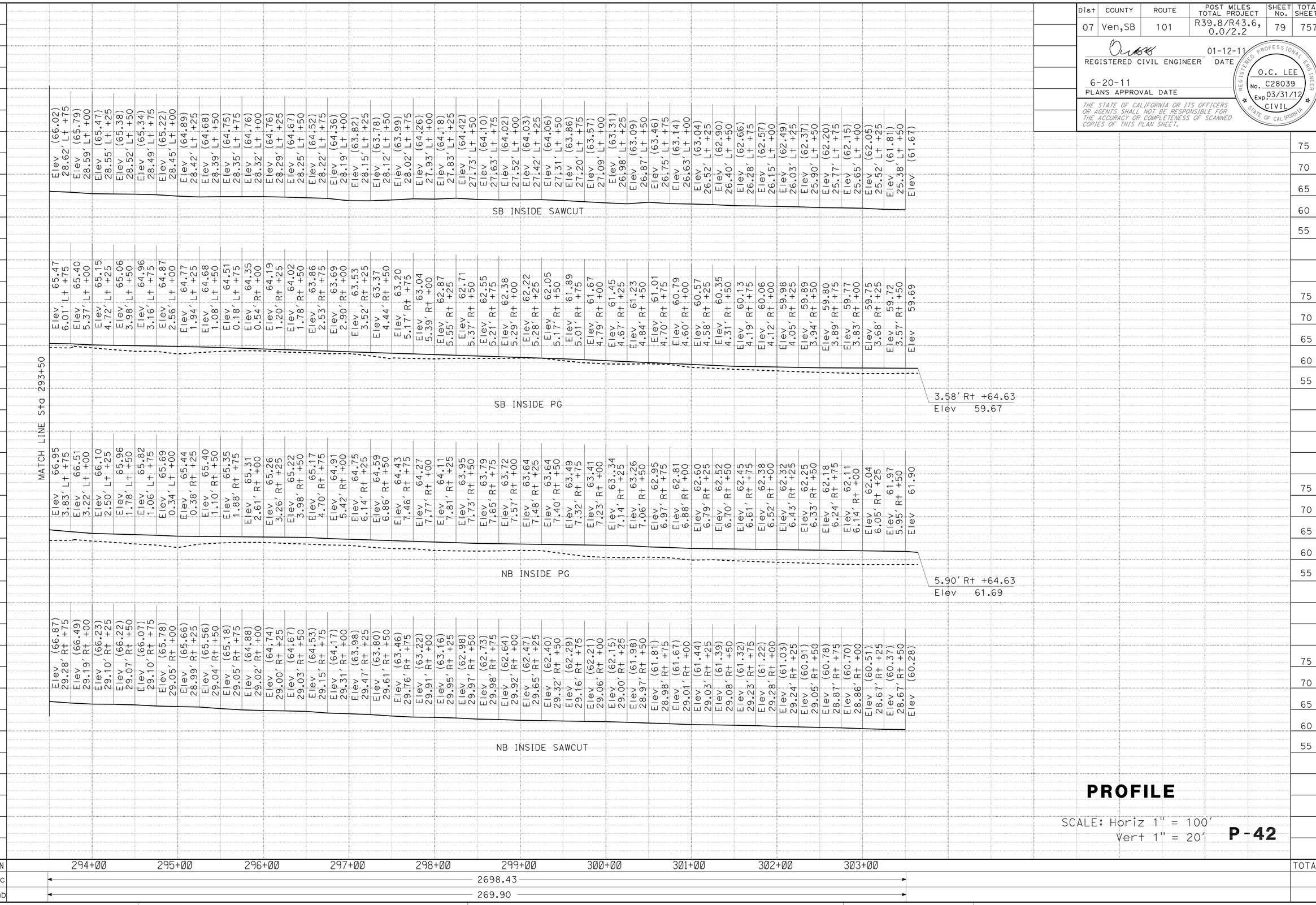

PROFILE

SCALE: Horiz 1" = 100'
Vert 1" = 20'

P-42

LAST REVISION 01-12-11
DATE PLOTTED => 25-JUN-2011
TIME PLOTTED => 08:34

Dist	COUNTY	ROUTE	POST MILES TOTAL PROJECT	SHEET No.	TOTAL SHEETS
07	Ven,SB	101	R39.8/R43.6, 0.0/2.2	80	757

REGISTERED CIVIL ENGINEER 01-12-11 DATE

6-20-11
PLANS APPROVAL DATE

REGISTERED PROFESSIONAL ENGINEER O.C. LEE No. C28039 Exp. 03/31/12 CIVIL STATE OF CALIFORNIA

THE STATE OF CALIFORNIA OR ITS OFFICERS OR AGENTS SHALL NOT BE RESPONSIBLE FOR THE ACCURACY OR COMPLETENESS OF SCANNED COPIES OF THIS PLAN SHEET.

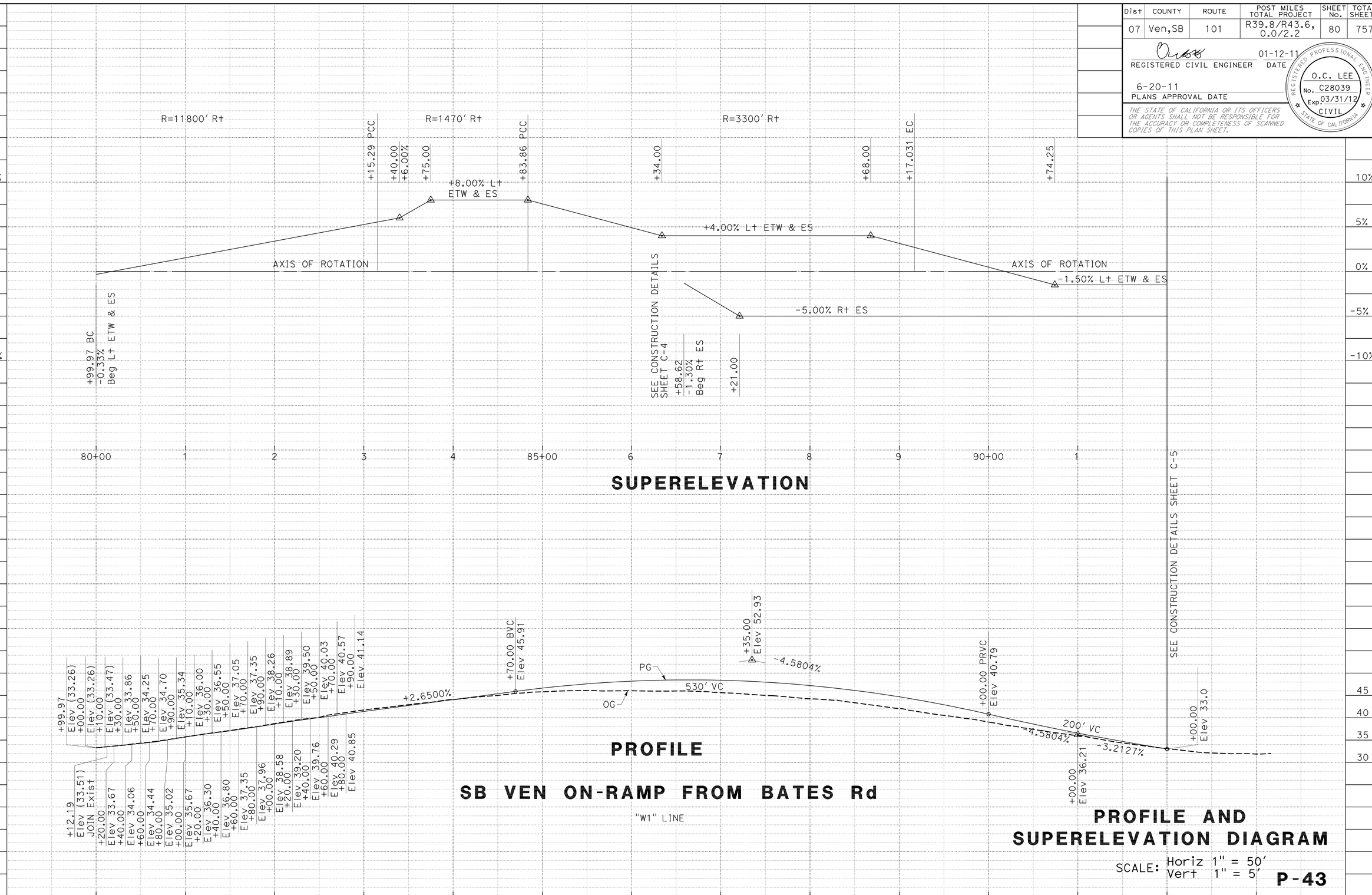

STATE OF CALIFORNIA - DEPARTMENT OF TRANSPORTATION
Caltrans
DESIGN

FUNCTIONAL SUPERVISOR: OC Lee
CALCULATED-DESIGNED BY: HAN L NG
CHECKED BY: ANTOINE NADER
REVISED BY
DATE REVISED

LAST REVISION 01-12-11
DATE PLOTTED => 25-JUN-2011
TIME PLOTTED => 08:34

Dist	COUNTY	ROUTE	POST MILES TOTAL PROJECT	SHEET No.	TOTAL SHEETS
07	Ven,SB	101	R39.8/R43.6, 0.0/2.2	81	757

REGISTERED CIVIL ENGINEER 02-08-11 DATE

6-20-11
PLANS APPROVAL DATE

REGISTERED PROFESSIONAL ENGINEER O.C. LEE No. C28039 Exp. 03/31/12 CIVIL STATE OF CALIFORNIA

THE STATE OF CALIFORNIA OR ITS OFFICERS OR AGENTS SHALL NOT BE RESPONSIBLE FOR THE ACCURACY OR COMPLETENESS OF SCANNED COPIES OF THIS PLAN SHEET.

NOTE:

FOR ACCURATE RIGHT OF WAY DATA, CONTACT RIGHT OF WAY ENGINEERING AT THE DISTRICT OFFICE.

LEGEND:

OBLITERATE Exist HMA SURFACE

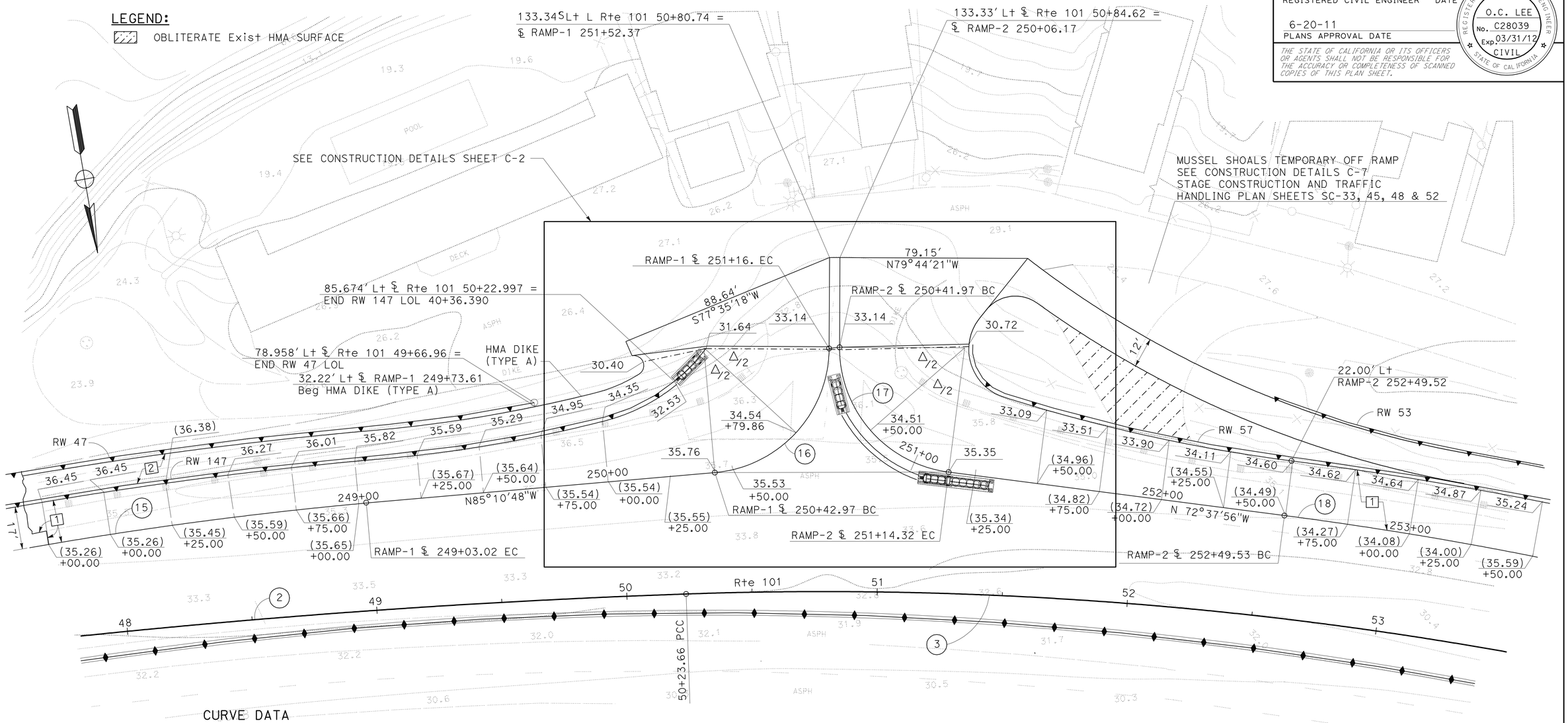

CURVE DATA

No.	R	Δ	T	L
2	3557.11'	8°55'26"	277.57'	554.02'
3	1557.22'	45°31'36"	653.42'	1237.35'
15	1646.00'	6°34'29"	94.54'	188.88'
16	50.00'	84°33'01"	45.46'	73.78'
17	50.00'	82°54'05"	44.16'	72.35'
18	1488.00'	13°29'42"	176.05'	350.47'

CONSTRUCTION DETAILS

SCALE: 1" = 20'

INTERSECTION DETAILS
MUSSEL SHOALS

C-1

STATE OF CALIFORNIA - DEPARTMENT OF TRANSPORTATION
Caltrans DESIGN

MARIO FADUL — CALCULATED-DESIGNED BY
RICKY LEE — CHECKED BY
OC LEE — FUNCTIONAL SUPERVISOR
REVISED BY — DATE REVISED

LAST REVISION 02-08-11
DATE PLOTTED => 25-JUN-2011
TIME PLOTTED => 08:21

Dist	COUNTY	ROUTE	POST MILES TOTAL PROJECT	SHEET No.	TOTAL SHEETS
07	Ven,SB	101	R39.8/R43.6, 0.0/2.2	82	757

REGISTERED CIVIL ENGINEER 02-08-11 DATE

6-20-11
PLANS APPROVAL DATE

REGISTERED PROFESSIONAL ENGINEER O.C. LEE No. C28039 Exp. 03/31/12 CIVIL STATE OF CALIFORNIA

THE STATE OF CALIFORNIA OR ITS OFFICERS OR AGENTS SHALL NOT BE RESPONSIBLE FOR THE ACCURACY OR COMPLETENESS OF SCANNED COPIES OF THIS PLAN SHEET.

CURVE DATA

No.	R	Δ	T	L
2	3557.11′	8°55′26"	277.57′	554.02′
3	1557.22′	45°31′36"	653.42′	1237.35′
16	50.00′	84°33′01"	45.46′	73.78′
17	50.00′	82°54′06"	44.16′	72.35′
98	555.00′	9°23′11"	45.56′	90.92′
99	75.00′	25°51′51"	17.22′	33.86′
100	20.00′	78°21′07"	16.30′	27.35′
131	543.00′	9°22′53′	44.55′	88.91′
175	55.00′	18°20′23′	8.88′	17.61′
176	4.00′	158°28′11′	21.04′	11.06′
177	20.00′	32°48′19"	5.89′	11.45′
178	15.00′	86°58′53"	14.23′	22.77′

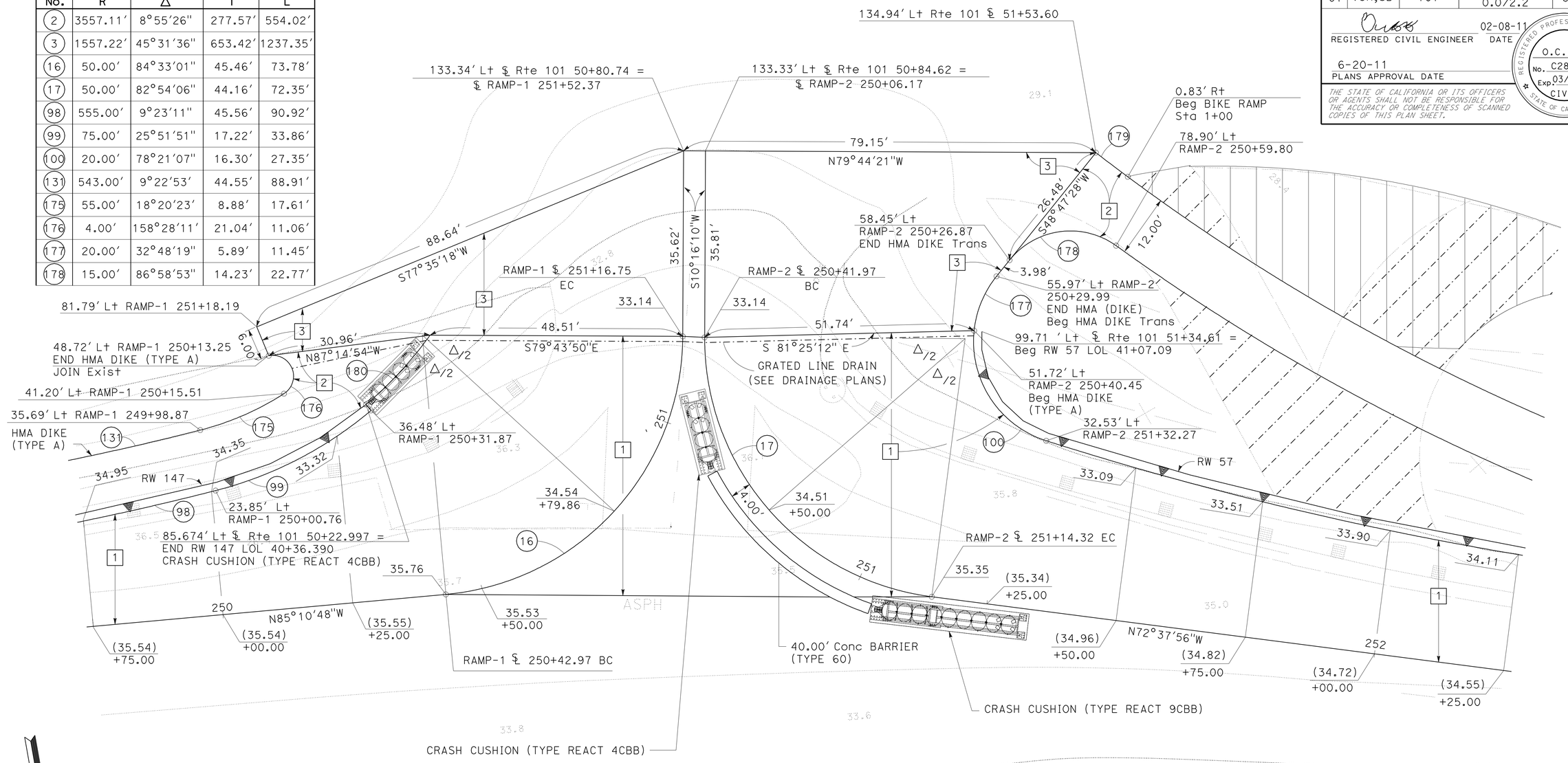

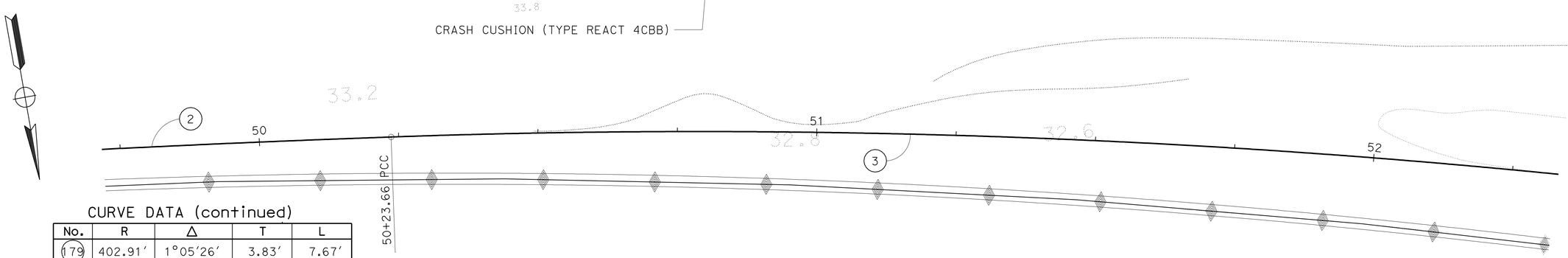

CURVE DATA (continued)

No.	R	Δ	T	L
179	402.91′	1°05′26′	3.83′	7.67′
180	73.50′	14°09′59"	9.13′	18.17′

NOTE:

FOR ACCURATE RIGHT OF WAY DATA, CONTACT RIGHT OF WAY ENGINEERING AT THE DISTRICT OFFICE.

INTERSECTION DETAILS
MUSSEL SHOALS

CONSTRUCTION DETAILS

SCALE: 1" = 10′

C-2

STATE OF CALIFORNIA - DEPARTMENT OF TRANSPORTATION

Caltrans

DESIGN

FUNCTIONAL SUPERVISOR: OC LEE

CALCULATED-DESIGNED BY: MARIO FADUL

CHECKED BY: RICKY LEE

REVISED BY

DATE REVISED

LAST REVISION 02-08-11

DATE PLOTTED => 25-JUN-2011

TIME PLOTTED => 08:29

Dist	COUNTY	ROUTE	POST MILES TOTAL PROJECT	SHEET No.	TOTAL SHEETS
07	Ven,SB	101	R39.8/R43.6, 0.0/2.2	83	757

REGISTERED CIVIL ENGINEER 02-15-11 DATE

6-20-11
PLANS APPROVAL DATE

REGISTERED PROFESSIONAL ENGINEER O.C. LEE No. C28039 Exp. 03/31/12 CIVIL STATE OF CALIFORNIA

THE STATE OF CALIFORNIA OR ITS OFFICERS OR AGENTS SHALL NOT BE RESPONSIBLE FOR THE ACCURACY OR COMPLETENESS OF SCANNED COPIES OF THIS PLAN SHEET.

NOTE:

FOR ACCURATE RIGHT OF WAY DATA, CONTACT RIGHT OF WAY ENGINEERING AT THE DISTRICT OFFICE.

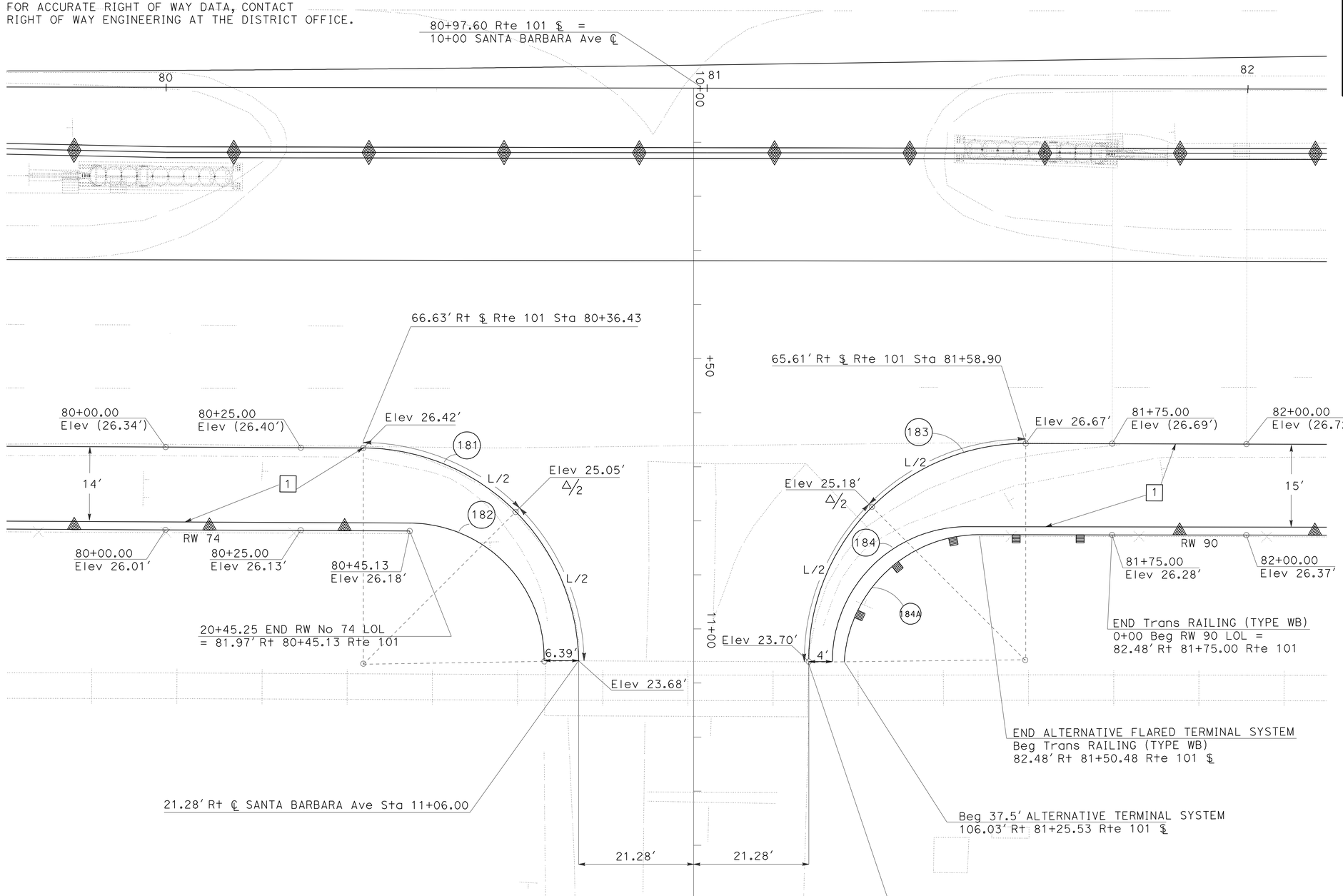

CURVE DATA

No.	R	Δ	T	L
181	40.00′	88°49′18"	39.19′	62.01′
182	25.00′	0°06′19"	24.95′	39.22′
183	40.00′	90°25′39"	40.30′	63.13′
184	25.00′	0°08′37"	24.94′	39.21′
184A	25.00′	86°40′15"	23.59′	37.82′

SANTA BARBARA Ave AT LA CONCHITA

CONSTRUCTION DETAIL

SCALE: 1" = 10′

C-3

STATE OF CALIFORNIA - DEPARTMENT OF TRANSPORTATION
Caltrans® DESIGN

FUNCTIONAL SUPERVISOR: OC LEE
CALCULATED-DESIGNED BY: MYLY NGUYEN
CHECKED BY: RICKY LEE
REVISED BY
DATE REVISED

LAST REVISION 02-15-11
DATE PLOTTED => 29-JUN-2011
TIME PLOTTED => 09:38

Dist	COUNTY	ROUTE	POST MILES TOTAL PROJECT	SHEET No.	TOTAL SHEETS
07	Ven,SB	101	R39.8/R43.6, 0.0/2.2	84	757

REGISTERED CIVIL ENGINEER 01-12-11 DATE

6-20-11
PLANS APPROVAL DATE

REGISTERED PROFESSIONAL ENGINEER O.C. LEE No. C28039 Exp. 03/31/12 CIVIL STATE OF CALIFORNIA

THE STATE OF CALIFORNIA OR ITS OFFICERS OR AGENTS SHALL NOT BE RESPONSIBLE FOR THE ACCURACY OR COMPLETENESS OF SCANNED COPIES OF THIS PLAN SHEET.

NOTE:

FOR ACCURATE RIGHT OF WAY DATA, CONTACT RIGHT OF WAY ENGINEERING AT THE DISTRICT OFFICE.

CURVE DATA

No.	R	Δ	T	L
11	2012.19′	75°13′45"	1550.41′	2642.00′
19	11800.00′	1°31′52"	157.67′	315.32′
20	1470.00′	6°34′14"	84.38′	168.57′
21	3300.00′	7°31′15"	216.90′	433.17′
22	1960.00′	28°11′58	492.31′	964.66′

CONSTRUCTION DETAILS

SCALE: 1" = 20′

C-4

STATE OF CALIFORNIA - DEPARTMENT OF TRANSPORTATION
Caltrans® **DESIGN**

FUNCTIONAL SUPERVISOR: OC LEE
CALCULATED-DESIGNED BY: HAN L NG
CHECKED BY: RICKY LEE
REVISED BY / DATE REVISED

LAST REVISION 01-12-11
DATE PLOTTED => 29-JUN-2011
TIME PLOTTED => 09:39

Dist	COUNTY	ROUTE	POST MILES TOTAL PROJECT	SHEET No.	TOTAL SHEETS
07	Ven,SB	101	R39.8/R43.6, 0.0/2.2	85	757

REGISTERED CIVIL ENGINEER 02-08-11 DATE

6-20-11
PLANS APPROVAL DATE

REGISTERED PROFESSIONAL ENGINEER O.C. LEE No. C28039 Exp. 03/31/12 CIVIL STATE OF CALIFORNIA

THE STATE OF CALIFORNIA OR ITS OFFICERS OR AGENTS SHALL NOT BE RESPONSIBLE FOR THE ACCURACY OR COMPLETENESS OF SCANNED COPIES OF THIS PLAN SHEET.

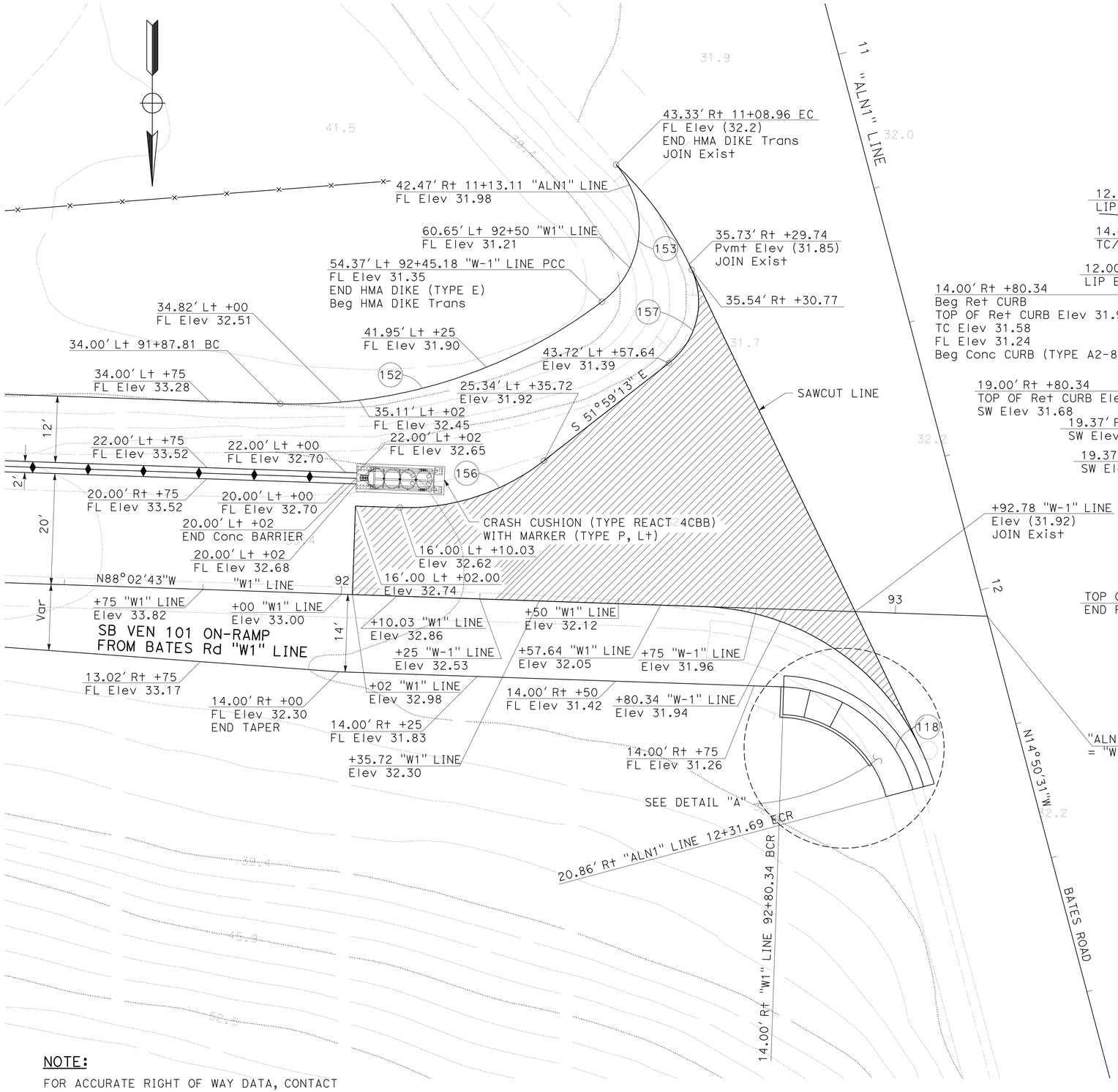

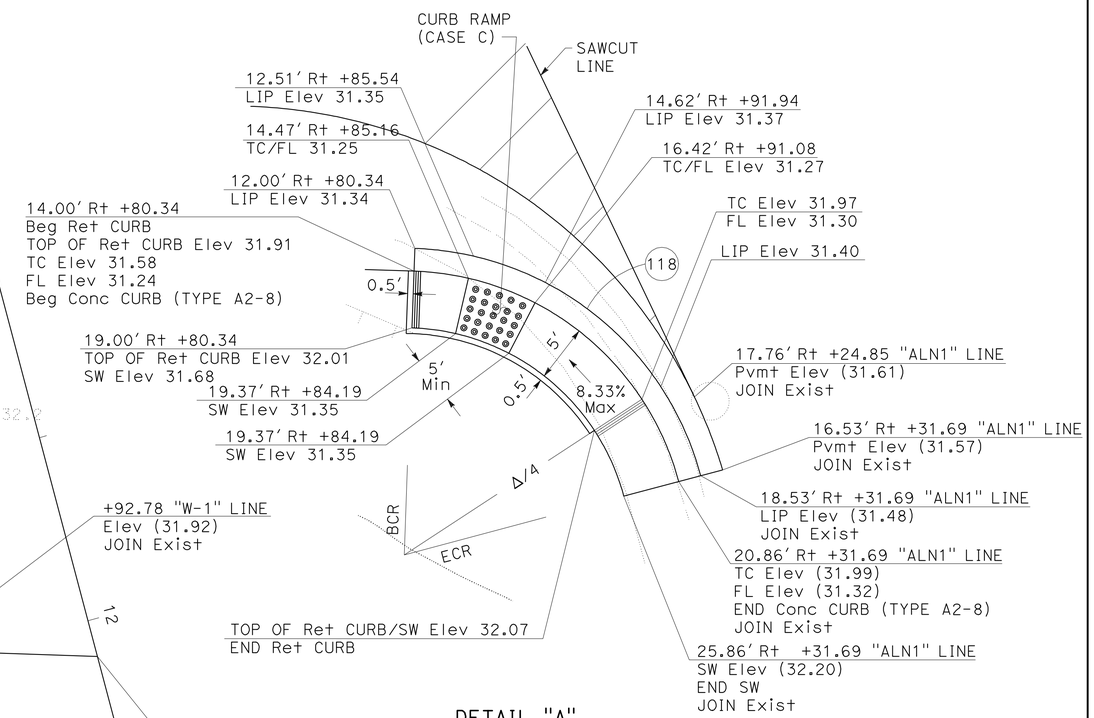

DETAIL "A"

NO SCALE

CURVE DATA

No.	R	Δ	T	L
118	25.00'	73°03'57"	18.52'	31.88'
152	91.00'	39°05'02"	32.30'	62.08'
153	17.00'	93°59'19"	18.23'	27.89'
156	40.00'	39°58'05"	14.55'	27.90'
157	14.00'	76°31'31"	11.04'	18.70'

LEGEND:

COLD PLANE AC Pvmt (0.30')

NOTE:

FOR ACCURATE RIGHT OF WAY DATA, CONTACT RIGHT OF WAY ENGINEERING AT THE DISTRICT OFFICE.

CONSTRUCTION DETAILS

SCALE: 1" = 10'

C-5

STATE OF CALIFORNIA - DEPARTMENT OF TRANSPORTATION
DESIGN
FUNCTIONAL SUPERVISOR: OC LEE
CALCULATED-DESIGNED BY: HAN L NG
CHECKED BY: RICKY LEE
REVISED BY
DATE REVISED

LAST REVISION 02-08-11
DATE PLOTTED => 01-AUG-2011
TIME PLOTTED => 14:30

Dist	COUNTY	ROUTE	POST MILES TOTAL PROJECT	SHEET No.	TOTAL SHEETS
07	Ven,SB	101	R39.8/R43.6, 0.0/2.2	86	757

REGISTERED CIVIL ENGINEER 02-08-11 DATE

6-20-11
PLANS APPROVAL DATE

REGISTERED PROFESSIONAL ENGINEER O.C. LEE No. C28039 Exp. 03/31/12 CIVIL STATE OF CALIFORNIA

THE STATE OF CALIFORNIA OR ITS OFFICERS OR AGENTS SHALL NOT BE RESPONSIBLE FOR THE ACCURACY OR COMPLETENESS OF SCANNED COPIES OF THIS PLAN SHEET.

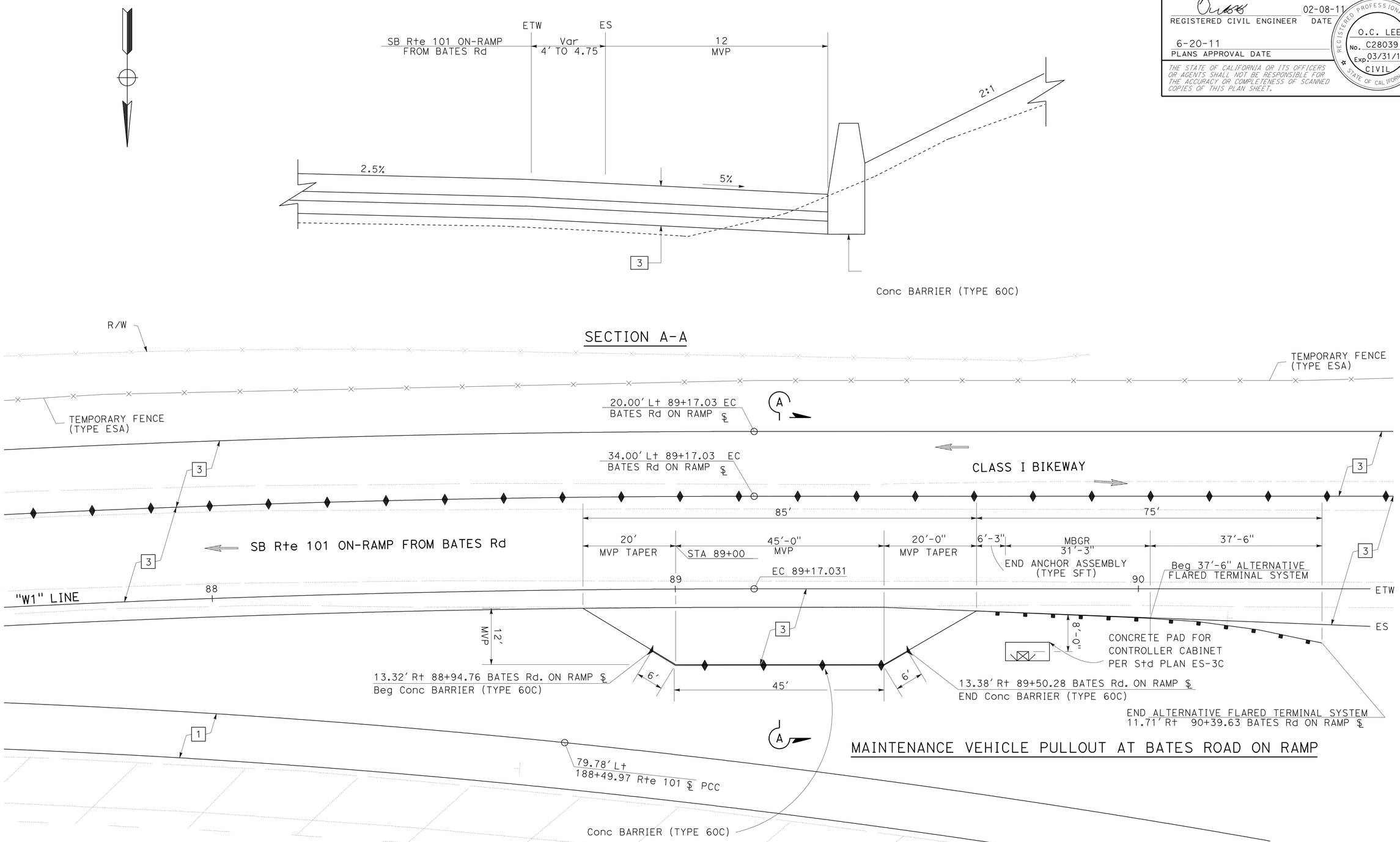

NOTE:

FOR ACCURATE RIGHT OF WAY DATA, CONTACT RIGHT OF WAY ENGINEERING AT THE DISTRICT OFFICE.

CONSTRUCTION DETAILS

SCALE: 1" = 10'

C-6

STATE OF CALIFORNIA - DEPARTMENT OF TRANSPORTATION
Caltrans
DESIGN

FUNCTIONAL SUPERVISOR: OC LEE
CALCULATED-DESIGNED BY: BARNABAS F VORREITER
CHECKED BY: OC LEE
REVISED BY
DATE REVISED

LAST REVISION 02-08-11
DATE PLOTTED => 25-JUN-2011
TIME PLOTTED => 08:22

Dist	COUNTY	ROUTE	POST MILES TOTAL PROJECT	SHEET No.	TOTAL SHEETS
07	Ven,SB	101	R39.8/R43.6, 0.0/2.2	87	757

REGISTERED CIVIL ENGINEER 02-08-11 DATE

6-20-11
PLANS APPROVAL DATE

REGISTERED PROFESSIONAL ENGINEER O.C. LEE No. C28039 Exp. 03/31/12 CIVIL STATE OF CALIFORNIA

THE STATE OF CALIFORNIA OR ITS OFFICERS OR AGENTS SHALL NOT BE RESPONSIBLE FOR THE ACCURACY OR COMPLETENESS OF SCANNED COPIES OF THIS PLAN SHEET.

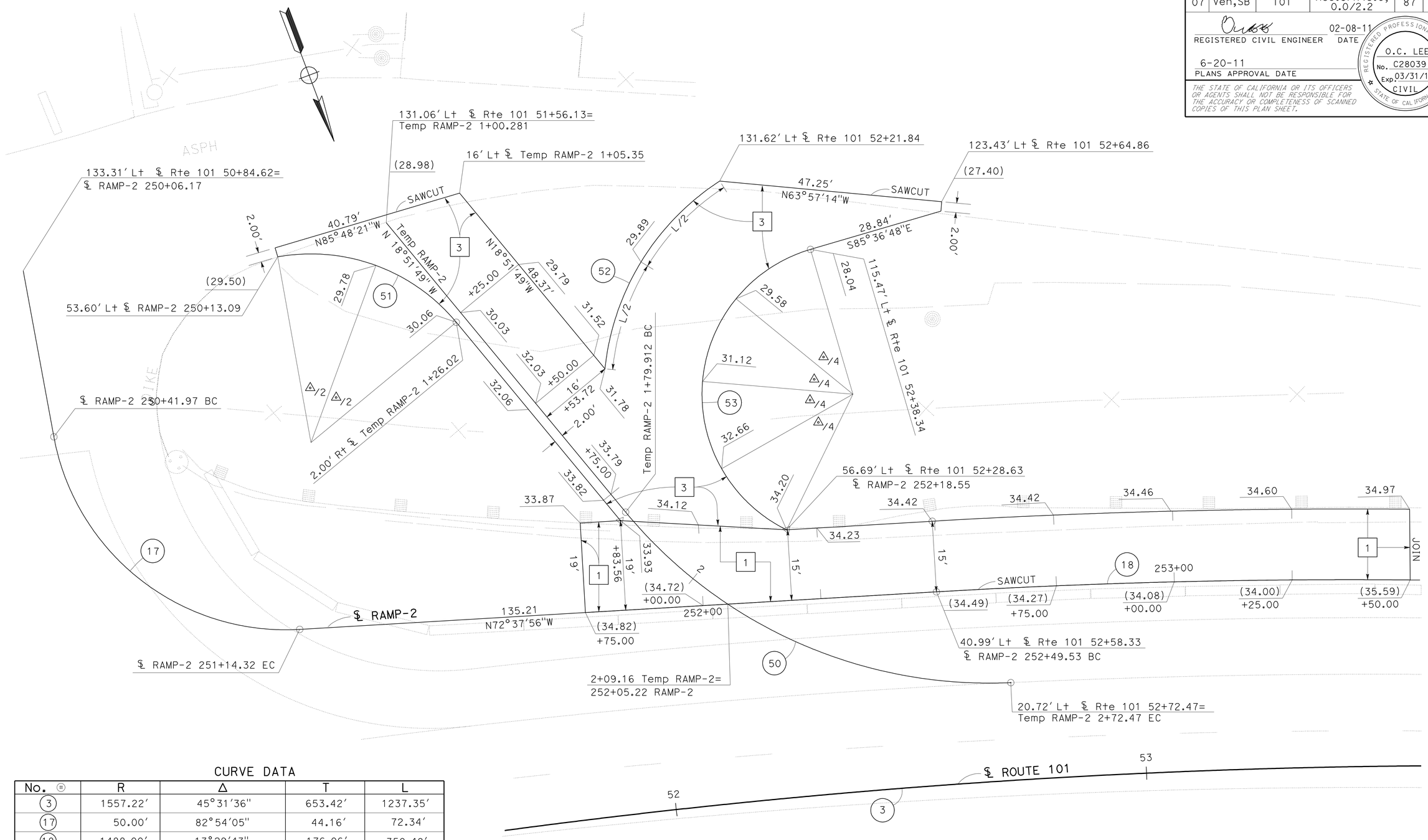

CURVE DATA

No.	R	Δ	T	L
3	1557.22'	45°31'36"	653.42'	1237.35'
17	50.00'	82°54'05"	44.16'	72.34'
18	1488.00'	13°29'43"	176.06'	350.48'
50	100.00'	53°01'58"	49.89'	92.56'
51	40.00'	60°30'44"	23.33'	42.25
52	54.00'	51°10'10"	25.86'	48.23
53	32.00'	137°35'16"	82.48'	76.84'

MUSSEL SHOALS TEMPORARY OFF RAMP

CONSTRUCTION DETAILS

SCALE: 1" = 10'

C-7

STATE OF CALIFORNIA - DEPARTMENT OF TRANSPORTATION

Caltrans

FUNCTIONAL SUPERVISOR: OC LEE

CALCULATED-DESIGNED BY: MARIO FADUL

CHECKED BY: RICKY LEE

REVISED BY

DATE REVISED

LAST REVISION 02-08-11

DATE PLOTTED => 25-JUN-2011
TIME PLOTTED => 08:22

Dist	COUNTY	ROUTE	POST MILES TOTAL PROJECT	SHEET No.	TOTAL SHEETS
07	Ven,SB	101	R39.8/R43.6, 0.0/2.2	88	757

REGISTERED CIVIL ENGINEER 02-08-11 DATE

6-20-11
PLANS APPROVAL DATE

REGISTERED PROFESSIONAL ENGINEER O.C. LEE No. C28039 Exp. 03/31/12 CIVIL STATE OF CALIFORNIA

THE STATE OF CALIFORNIA OR ITS OFFICERS OR AGENTS SHALL NOT BE RESPONSIBLE FOR THE ACCURACY OR COMPLETENESS OF SCANNED COPIES OF THIS PLAN SHEET.

LEGEND:

- ROADWAY OR STRUCTURE EXCAVATION (TYPE Y-1)
- ROADWAY OR STRUCTURE EXCAVATION (TYPE Y-2)
- FILL AREA FOR ROADWAY AND/OR STRUCTURE EXCAVATION (TYPE Y-1) REUSE (AERIALLY DEPOSITED LEAD) COVERED WITH 1' NON-HAZARDOUS SOIL
- FILL AREA FOR ROADWAY (TYPE Y-2) REUSE (AERIALLY DEPOSITED LEAD)

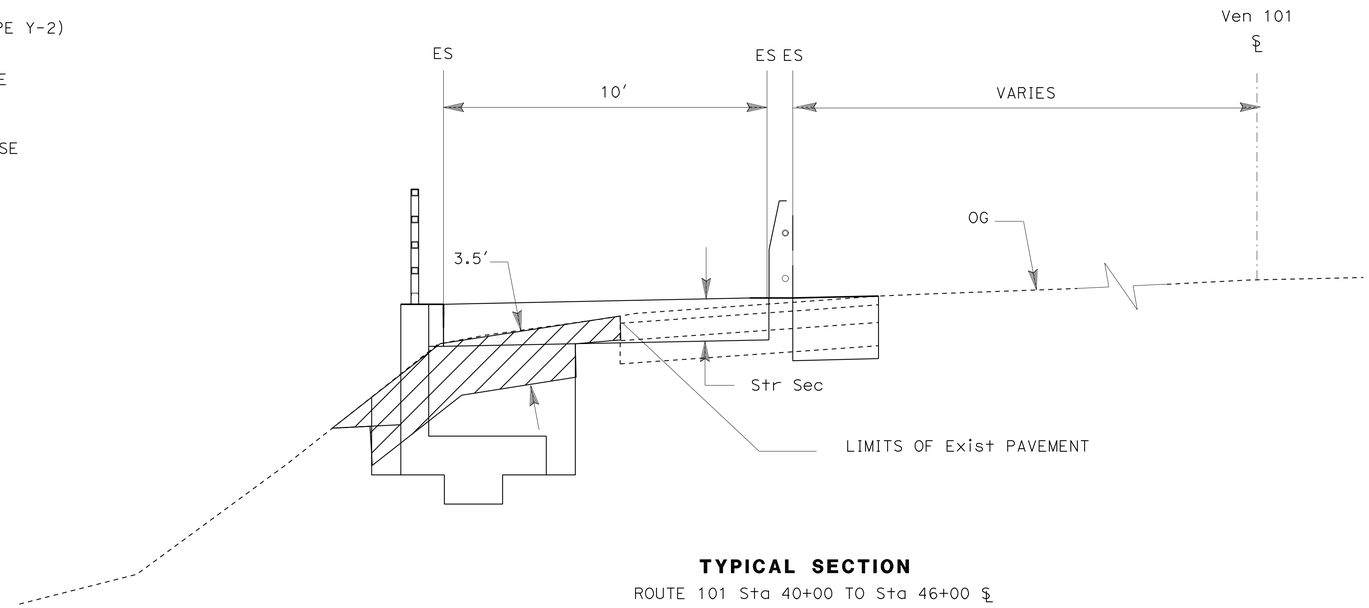

TYPICAL SECTION

ROUTE 101 Sta 40+00 TO Sta 46+00 ℄

NO SCALE

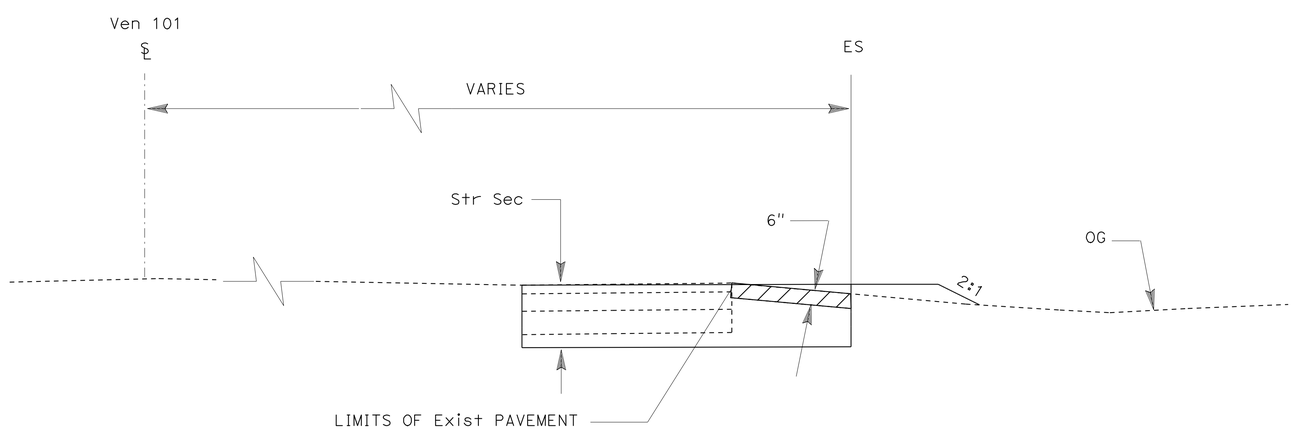

TYPICAL SECTION

ROUTE 101 Sta 37+00 TO Sta 40+50 ℄

NO SCALE

NOTE:

FOR ACCURATE RIGHT OF WAY AND DATA, CONTACT RIGHT OF WAY ENGINEERING AT THE DISTRICT OFFICE.

CONSTRUCTION DETAILS (AERIALLY DEPOSITED LEAD)

NO SCALE

C-8

STATE OF CALIFORNIA - DEPARTMENT OF TRANSPORTATION

Caltrans DESIGN

FUNCTIONAL SUPERVISOR: OC LEE

CALCULATED-DESIGNED BY: MYLY NGUYEN

CHECKED BY: RICKY LEE

REVISED BY / DATE REVISED

LAST REVISION 02-08-11

DATE PLOTTED => 28-JUN-2011
TIME PLOTTED => 17:38

Dist	COUNTY	ROUTE	POST MILES TOTAL PROJECT	SHEET No.	TOTAL SHEETS
07	Ven,SB	101	R39.8/R43.6, 0.0/2.2	89	757

REGISTERED CIVIL ENGINEER 02-08-11 DATE

6-20-11
PLANS APPROVAL DATE

REGISTERED PROFESSIONAL ENGINEER O.C. LEE No. C28039 Exp. 03/31/12 CIVIL STATE OF CALIFORNIA

THE STATE OF CALIFORNIA OR ITS OFFICERS OR AGENTS SHALL NOT BE RESPONSIBLE FOR THE ACCURACY OR COMPLETENESS OF SCANNED COPIES OF THIS PLAN SHEET.

LEGEND:

- ROADWAY OR STRUCTURE EXCAVATION (TYPE Y-1)
- ROADWAY OR STRUCTURE EXCAVATION (TYPE Y-2)
- FILL AREA FOR ROADWAY AND/OR STRUCTURE EXCAVATION (TYPE Y-1) REUSE (AERIALLY DEPOSITED LEAD) COVERED WITH 1' NON-HAZARDOUS SOIL
- FILL AREA FOR ROADWAY (TYPE Y-2) REUSE (AERIALLY DEPOSITED LEAD)

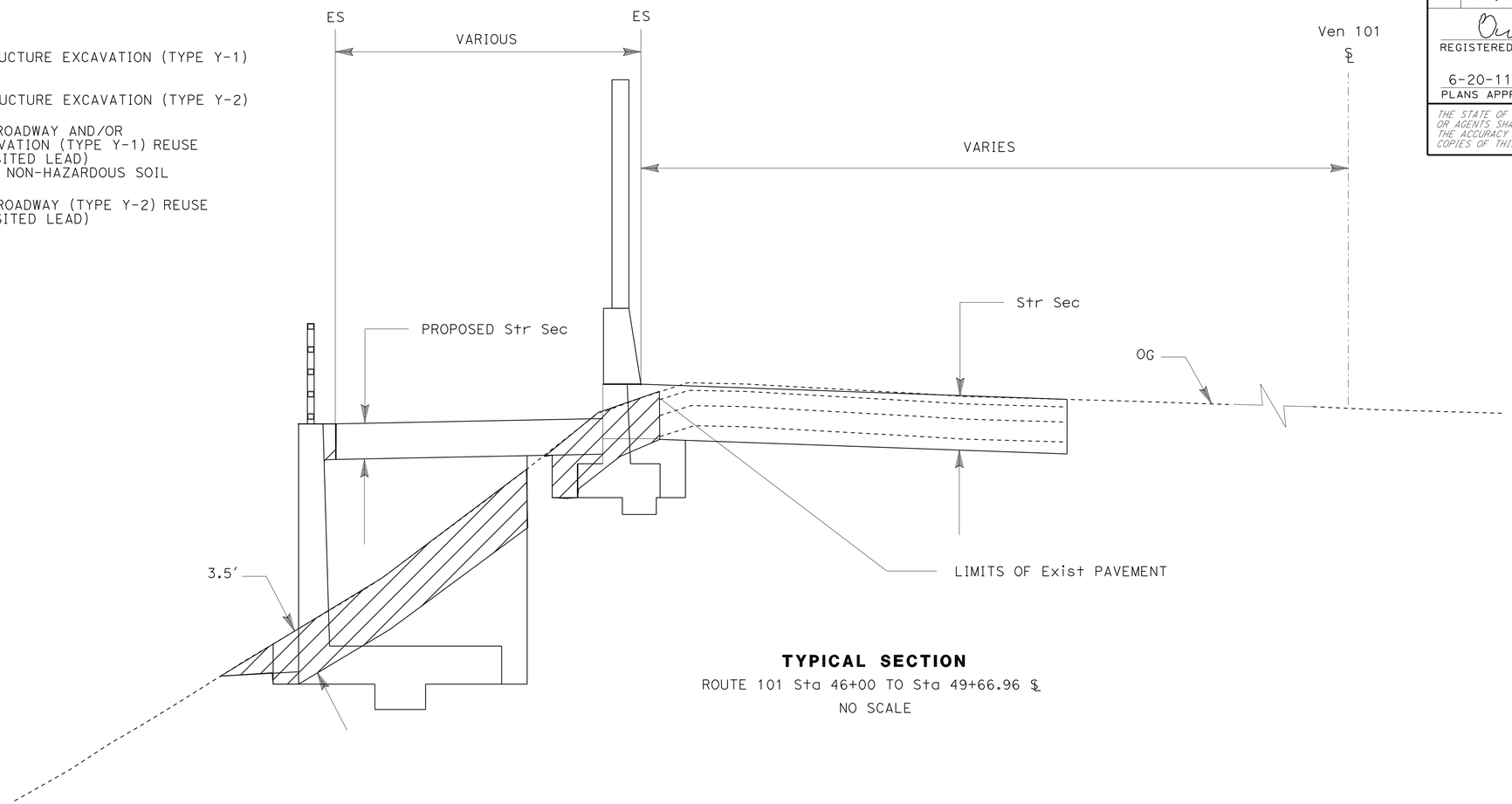

TYPICAL SECTION
ROUTE 101 Sta 46+00 TO Sta 49+66.96 ℄
NO SCALE

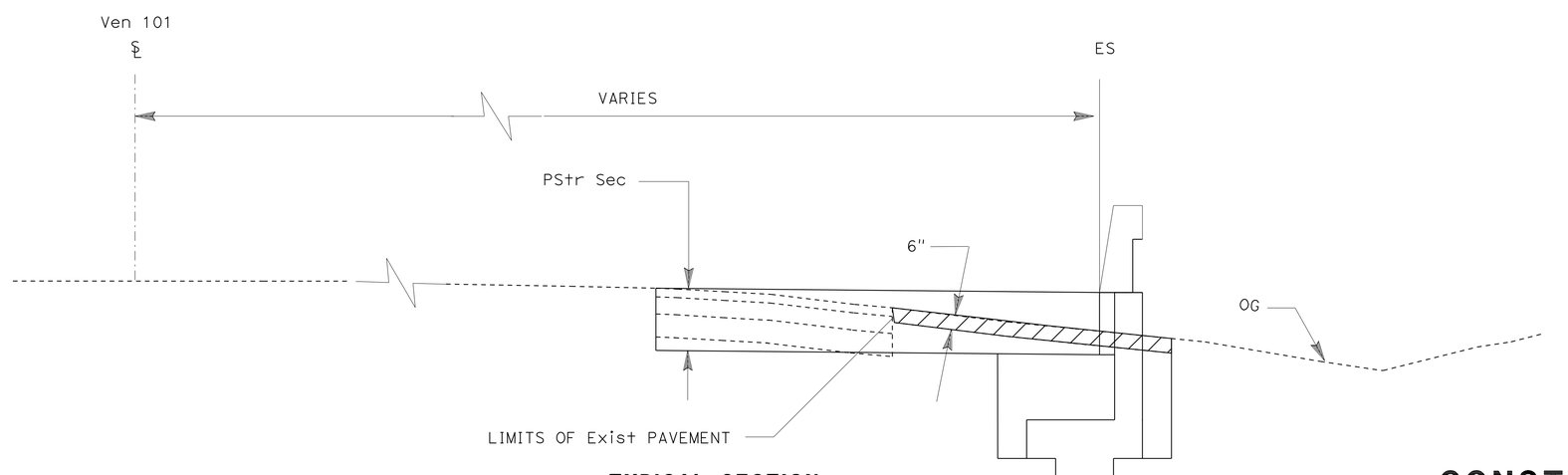

TYPICAL SECTION
ROUTE 101 Sta 40+50 TO Sta 47+25 ℄
ROUTE 101 Sta 63+35 TO Sta 80+45 ℄
ROUTE 101 Sta 81+75 TO Sta 92+00 ℄
NO SCALE

NOTE:

FOR ACCURATE RIGHT OF WAY DATA, CONTACT RIGHT OF WAY ENGINEERING AT THE DISTRICT OFFICE.

CONSTRUCTION DETAILS (AERIALLY DEPOSITED LEAD)

NO SCALE

C-9

REVISED BY | DATE REVISED
MYLY NGUYEN | RICKY LEE
CALCULATED-DESIGNED BY | CHECKED BY
FUNCTIONAL SUPERVISOR: OC LEE
STATE OF CALIFORNIA - DEPARTMENT OF TRANSPORTATION
Caltrans DESIGN

LAST REVISION 02-08-11 | DATE PLOTTED => 28-JUN-2011 | TIME PLOTTED => 17:38

Dist	COUNTY	ROUTE	POST MILES TOTAL PROJECT	SHEET No.	TOTAL SHEETS
07	Ven,SB	101	R39.8/R43.6, 0.0/2.2	90	757

REGISTERED CIVIL ENGINEER 02-08-11 DATE

6-20-11
PLANS APPROVAL DATE

REGISTERED PROFESSIONAL ENGINEER O.C. LEE No. C28039 Exp. 03/31/12 CIVIL STATE OF CALIFORNIA

THE STATE OF CALIFORNIA OR ITS OFFICERS OR AGENTS SHALL NOT BE RESPONSIBLE FOR THE ACCURACY OR COMPLETENESS OF SCANNED COPIES OF THIS PLAN SHEET.

LEGEND:

- ROADWAY OR STRUCTURE EXCAVATION (TYPE Y-1)
- ROADWAY OR STRUCTURE EXCAVATION (TYPE Y-2)
- FILL AREA FOR ROADWAY AND/OR STRUCTURE EXCAVATION (TYPE Y-1) REUSE (AERIALLY DEPOSITED LEAD) COVERED WITH 1' NON-HAZARDOUS SOIL
- FILL AREA FOR ROADWAY (TYPE Y-2) REUSE (AERIALLY DEPOSITED LEAD)

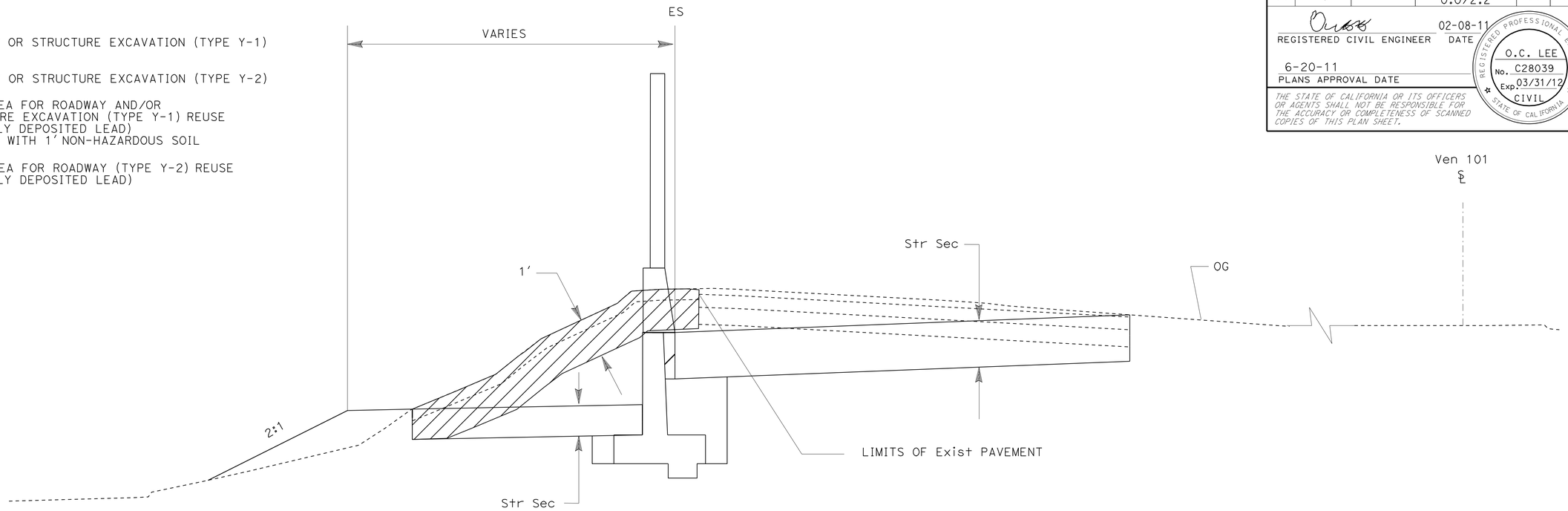

TYPICAL SECTION
ROUTE 101 Sta 49+66.96 TO Sta 50+00 ℄
NO SCALE

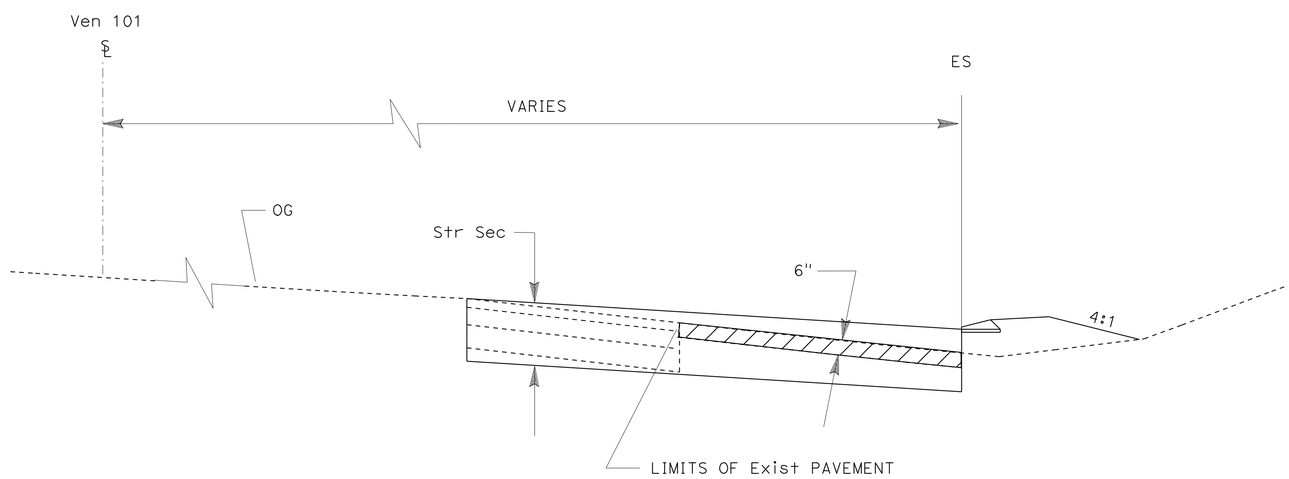

TYPICAL SECTION
ROUTE 101 Sta 47+25 TO Sta 52+50 ℄
ROUTE 101 Sta 56+00 TO Sta 63+25 ℄
NO SCALE

NOTE:

FOR ACCURATE RIGHT OF WAY DATA, CONTACT RIGHT OF WAY ENGINEERING AT THE DISTRICT OFFICE.

CONSTRUCTION DETAILS (AERIALLY DEPOSITED LEAD)

NO SCALE

C-10

STATE OF CALIFORNIA - DEPARTMENT OF TRANSPORTATION
Caltrans® DESIGN

FUNCTIONAL SUPERVISOR: OC LEE
CALCULATED-DESIGNED BY: MYLY NGUYEN
CHECKED BY: RICKY LEE
REVISED BY / DATE REVISED

LAST REVISION 02-08-11 | DATE PLOTTED => 28-JUN-2011 | TIME PLOTTED => 17:38

Dist	COUNTY	ROUTE	POST MILES TOTAL PROJECT	SHEET No.	TOTAL SHEETS
07	Ven,SB	101	R39.8/R43.6, 0.0/2.2	91	757

REGISTERED CIVIL ENGINEER 02-09-11 DATE

6-20-11
PLANS APPROVAL DATE

REGISTERED PROFESSIONAL ENGINEER O.C. LEE No. C28039 Exp. 03/31/12 CIVIL STATE OF CALIFORNIA

THE STATE OF CALIFORNIA OR ITS OFFICERS OR AGENTS SHALL NOT BE RESPONSIBLE FOR THE ACCURACY OR COMPLETENESS OF SCANNED COPIES OF THIS PLAN SHEET.

LEGEND:

- ROADWAY OR STRUCTURE EXCAVATION (TYPE Y-1)
- ROADWAY OR STRUCTURE EXCAVATION (TYPE Y-2)
- FILL AREA FOR ROADWAY AND/OR STRUCTURE EXCAVATION (TYPE Y-1) REUSE (AERIALLY DEPOSITED LEAD) COVERED WITH 1' NON-HAZARDOUS SOIL
- FILL AREA FOR ROADWAY (TYPE Y-2) REUSE (AERIALLY DEPOSITED LEAD)

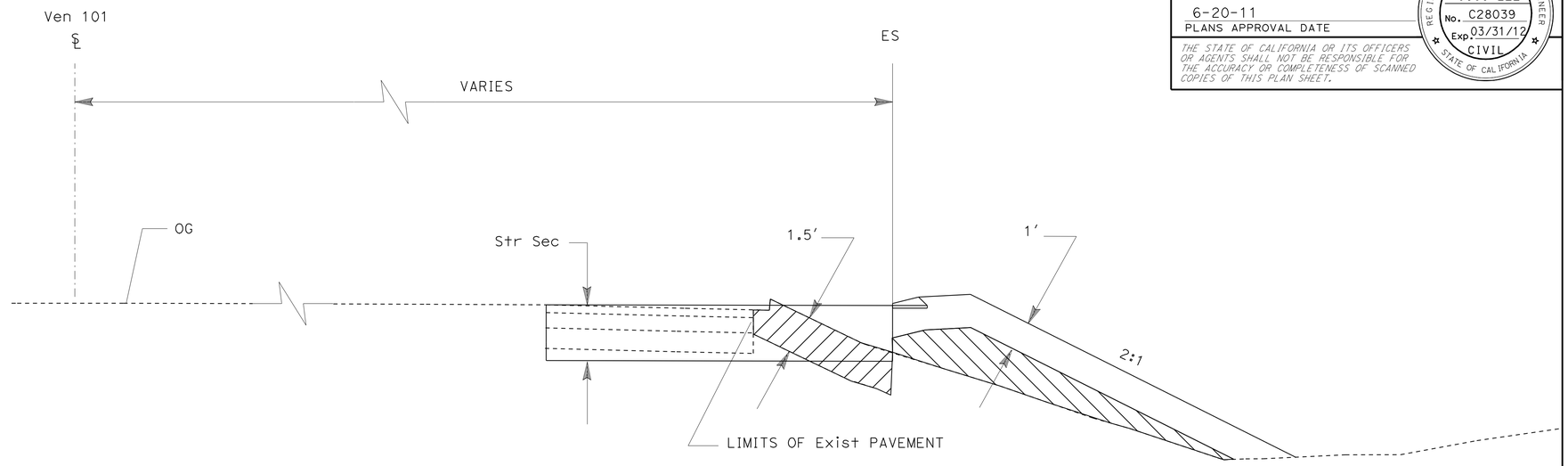

TYPICAL SECTION
ROUTE 101 Sta 92+00 TO Sta 117+87.82 ℄
ROUTE 101 Sta 120+87.58 TO Sta 137+00 ℄
NO SCALE

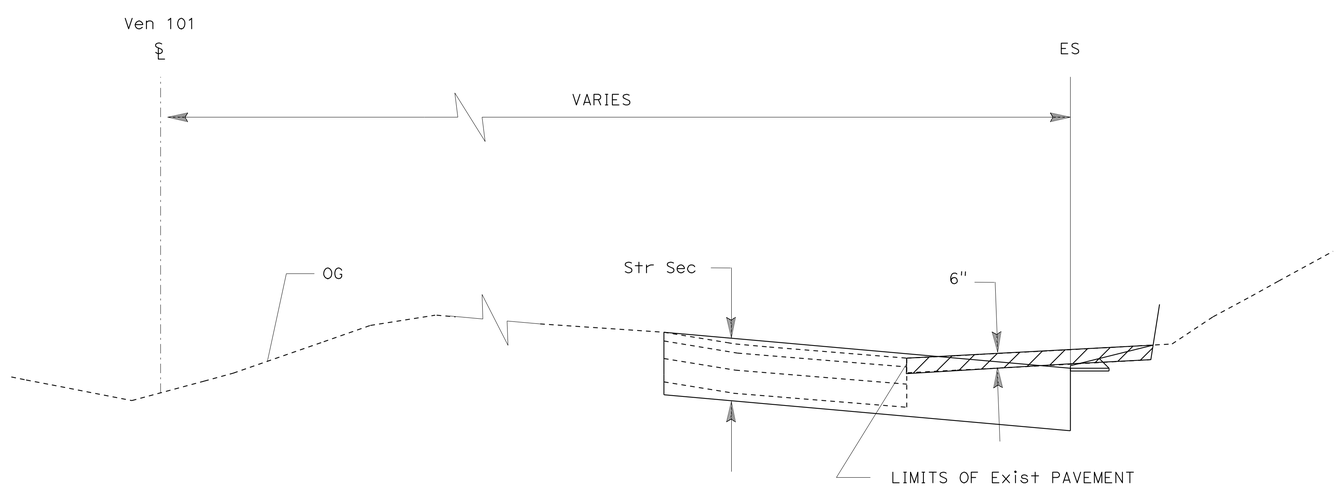

TYPICAL SECTION
ROUTE 101 Sta 52+50 TO Sta 56+00 ℄
NO SCALE

NOTE:
FOR ACCURATE RIGHT OF WAY DATA, CONTACT RIGHT OF WAY ENGINEERING AT THE DISTRICT OFFICE.

CONSTRUCTION DETAILS (AERIALLY DEPOSITED LEAD)
NO SCALE

C-11

REVISED BY | DATE REVISED
MYLY NGUYEN | RICKY LEE
CALCULATED-DESIGNED BY | CHECKED BY
FUNCTIONAL SUPERVISOR: OC LEE
STATE OF CALIFORNIA - DEPARTMENT OF TRANSPORTATION
Caltrans DESIGN

LAST REVISION 02-09-11 | DATE PLOTTED => 28-JUN-2011 TIME PLOTTED => 17:38

Dist	COUNTY	ROUTE	POST MILES TOTAL PROJECT	SHEET No.	TOTAL SHEETS
07	Ven,SB	101	R39.8/R43.6, 0.0/2.2	92	757

REGISTERED CIVIL ENGINEER 02-09-11 DATE

6-20-11
PLANS APPROVAL DATE

REGISTERED PROFESSIONAL ENGINEER O.C. LEE No. C28039 Exp. 03/31/12 CIVIL STATE OF CALIFORNIA

THE STATE OF CALIFORNIA OR ITS OFFICERS OR AGENTS SHALL NOT BE RESPONSIBLE FOR THE ACCURACY OR COMPLETENESS OF SCANNED COPIES OF THIS PLAN SHEET.

LEGEND:

- ROADWAY OR STRUCTURE EXCAVATION (TYPE Y-1)
- ROADWAY OR STRUCTURE EXCAVATION (TYPE Y-2)
- FILL AREA FOR ROADWAY AND/OR STRUCTURE EXCAVATION (TYPE Y-1) REUSE (AERIALLY DEPOSITED LEAD) COVERED WITH 1' NON-HAZARDOUS SOIL
- FILL AREA FOR ROADWAY (TYPE Y-2) REUSE (AERIALLY DEPOSITED LEAD)

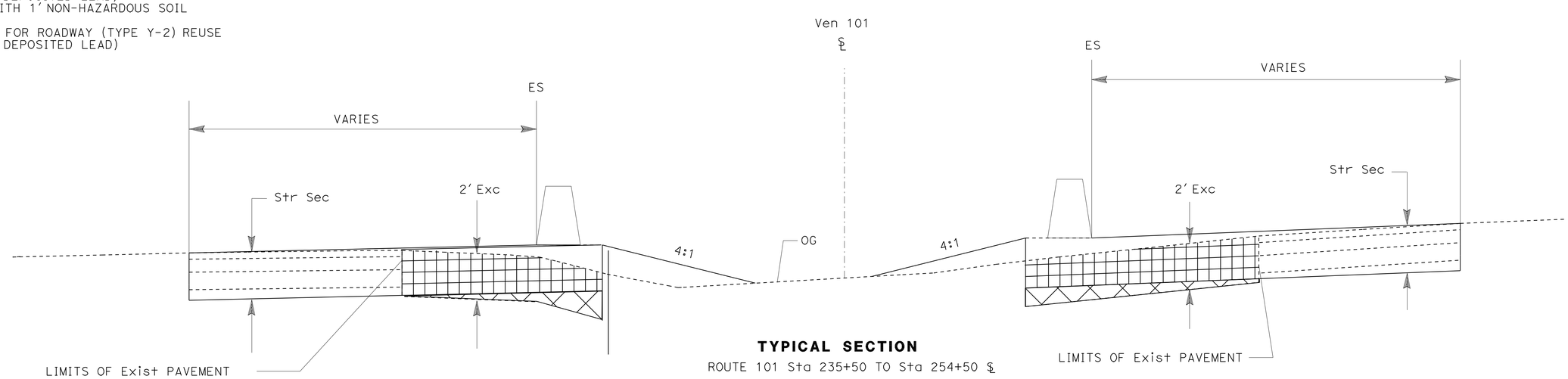

TYPICAL SECTION
ROUTE 101 Sta 235+50 TO Sta 254+50 ℄
NO SCALE

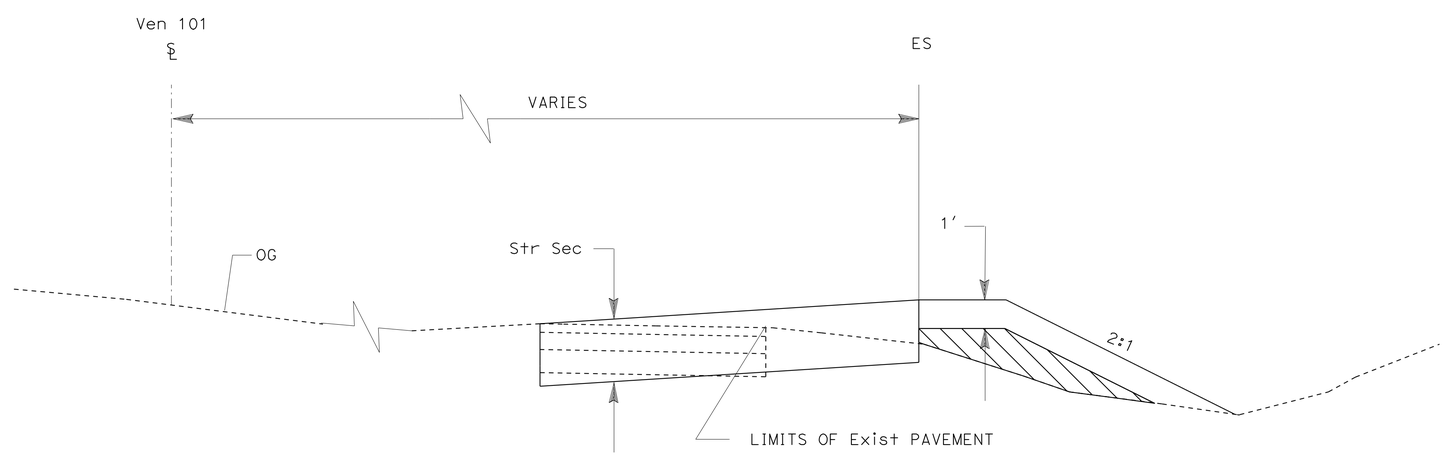

TYPICAL SECTION
ROUTE 101 Sta 137+00 TO Sta 152+25 ℄
ROUTE 101 Sta 153+00 TO Sta 173+51.06 ℄
NO SCALE

NOTE:

FOR ACCURATE RIGHT OF WAY DATA, CONTACT RIGHT OF WAY ENGINEERING AT THE DISTRICT OFFICE.

CONSTRUCTION DETAILS (AERIALLY DEPOSITED LEAD)

NO SCALE

C-12

REVISED BY | DATE REVISED
MYLY NGUYEN | RICKY LEE
CALCULATED-DESIGNED BY | CHECKED BY
FUNCTIONAL SUPERVISOR: OC LEE
STATE OF CALIFORNIA - DEPARTMENT OF TRANSPORTATION
Caltrans DESIGN

LAST REVISION 02-09-11 | DATE PLOTTED => 28-JUN-2011 TIME PLOTTED => 17:38

Dist	COUNTY	ROUTE	POST MILES TOTAL PROJECT	SHEET No.	TOTAL SHEETS
07	Ven,SB	101	R39.8/R43.6, 0.0/2.2	93	757

REGISTERED CIVIL ENGINEER 02-09-11 DATE

6-20-11
PLANS APPROVAL DATE

REGISTERED PROFESSIONAL ENGINEER O.C. LEE No. C28039 Exp. 03/31/12 CIVIL STATE OF CALIFORNIA

THE STATE OF CALIFORNIA OR ITS OFFICERS OR AGENTS SHALL NOT BE RESPONSIBLE FOR THE ACCURACY OR COMPLETENESS OF SCANNED COPIES OF THIS PLAN SHEET.

LEGEND:

- ROADWAY OR STRUCTURE EXCAVATION (TYPE Y-1)
- ROADWAY OR STRUCTURE EXCAVATION (TYPE Y-2)
- FILL AREA FOR ROADWAY AND/OR STRUCTURE EXCAVATION (TYPE Y-1) REUSE (AERIALLY DEPOSITED LEAD) COVERED WITH 1' NON-HAZARDOUS SOIL
- FILL AREA FOR ROADWAY (TYPE Y-2) REUSE (AERIALLY DEPOSITED LEAD)

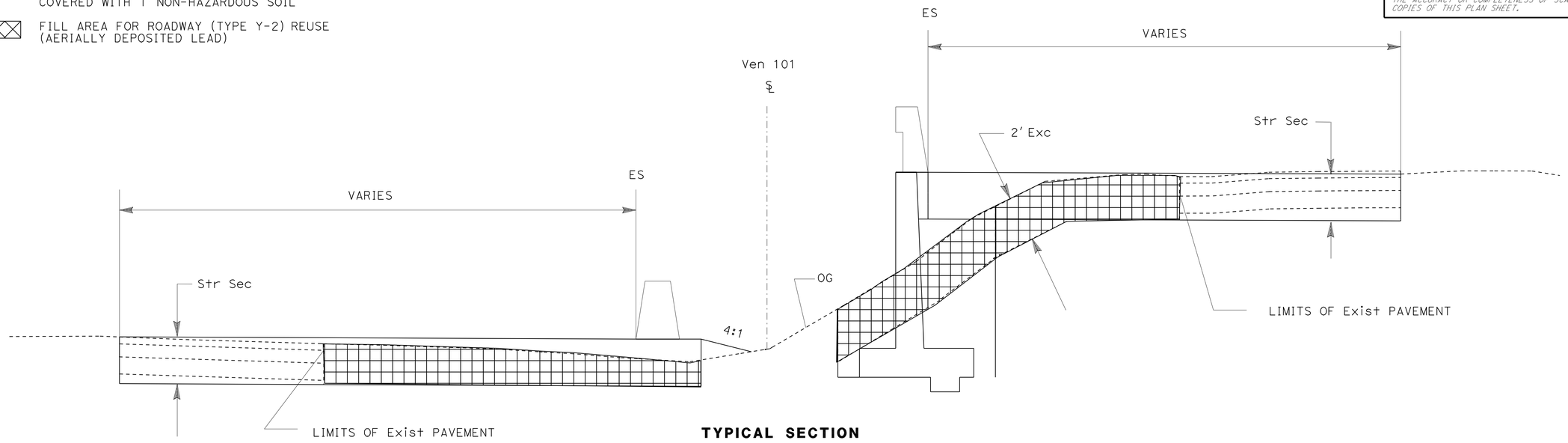

TYPICAL SECTION
ROUTE 101 Sta 262+00 TO Sta 286+00 ℄
NO SCALE

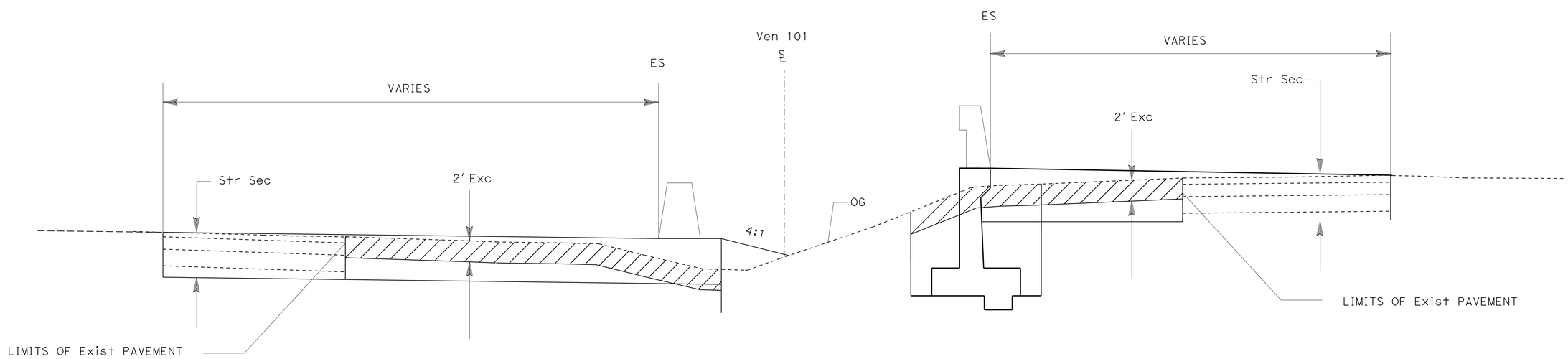

TYPICAL SECTION
ROUTE 101 Sta 254+50 TO Sta 262+00 ℄
NO SCALE

NOTE:
FOR ACCURATE RIGHT OF WAY DATA, CONTACT RIGHT OF WAY ENGINEERING AT THE DISTRICT OFFICE.

CONSTRUCTION DETAILS (AERIALLY DEPOSITED LEAD)

NO SCALE

C-13

REVISED BY | DATE REVISED
MYLY NGUYEN | RICKY LEE
CALCULATED-DESIGNED BY | CHECKED BY
FUNCTIONAL SUPERVISOR
OC LEE

STATE OF CALIFORNIA - DEPARTMENT OF TRANSPORTATION
Caltrans
DESIGN

LAST REVISION 02-09-11 | DATE PLOTTED => 28-JUN-2011 TIME PLOTTED => 17:38

Dist	COUNTY	ROUTE	POST MILES TOTAL PROJECT	SHEET No.	TOTAL SHEETS
07	Ven,SB	101	R39.8/R43.6, 0.0/2.2	94	757

REGISTERED CIVIL ENGINEER 02-09-11 DATE

6-20-11
PLANS APPROVAL DATE

REGISTERED PROFESSIONAL ENGINEER O.C. LEE No. C28039 Exp. 03/31/12 CIVIL STATE OF CALIFORNIA

THE STATE OF CALIFORNIA OR ITS OFFICERS OR AGENTS SHALL NOT BE RESPONSIBLE FOR THE ACCURACY OR COMPLETENESS OF SCANNED COPIES OF THIS PLAN SHEET.

LEGEND:

- ROADWAY OR STRUCTURE EXCAVATION (TYPE Y-1)
- ROADWAY OR STRUCTURE EXCAVATION (TYPE Y-2)
- FILL AREA FOR ROADWAY AND/OR STRUCTURE EXCAVATION (TYPE Y-1) REUSE (AERIALLY DEPOSITED LEAD) COVERED WITH 1' NON-HAZARDOUS SOIL
- FILL AREA FOR ROADWAY (TYPE Y-2) REUSE (AERIALLY DEPOSITED LEAD)

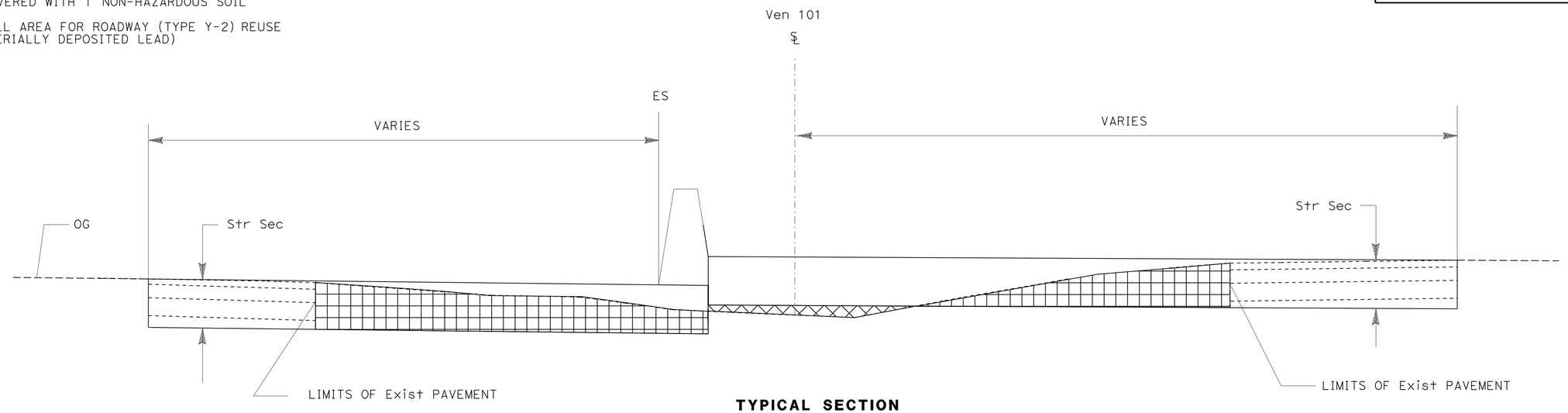

TYPICAL SECTION
ROUTE 101 Sta 293+00 TO Sta 295+00 ℄
NO SCALE

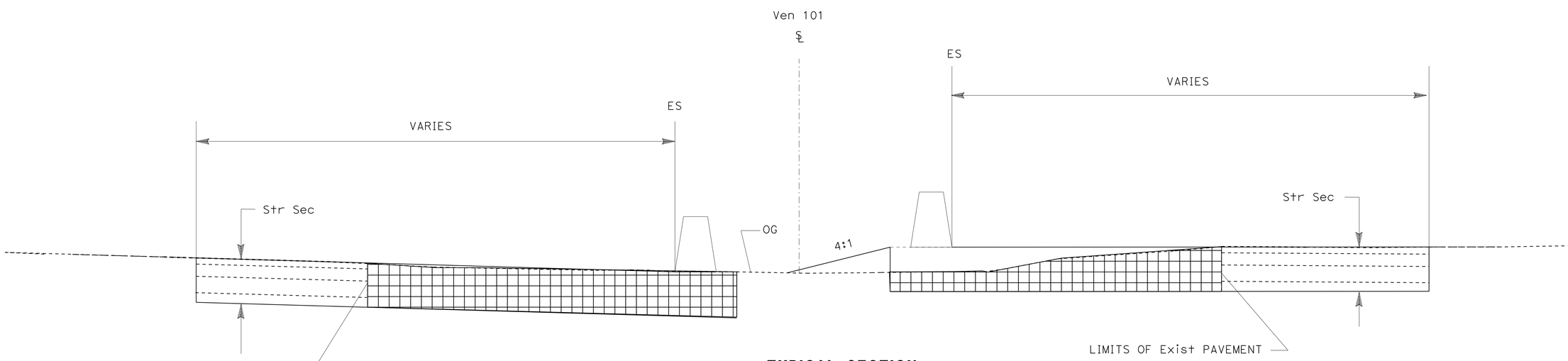

TYPICAL SECTION
ROUTE 101 Sta 286+00 TO Sta 293+00 ℄
NO SCALE

NOTE:
FOR ACCURATE RIGHT OF WAY DATA, CONTACT RIGHT OF WAY ENGINEERING AT THE DISTRICT OFFICE.

CONSTRUCTION DETAILS (AERIALLY DEPOSITED LEAD)

NO SCALE

C-14

REVISED BY | DATE REVISED
MYLY NGUYEN | RICKY LEE
CALCULATED-DESIGNED BY | CHECKED BY
FUNCTIONAL SUPERVISOR: OC LEE
STATE OF CALIFORNIA - DEPARTMENT OF TRANSPORTATION
Caltrans DESIGN

LAST REVISION 02-09-11 | DATE PLOTTED => 28-JUN-2011 | TIME PLOTTED => 17:38

Dist	COUNTY	ROUTE	POST MILES TOTAL PROJECT	SHEET No.	TOTAL SHEETS
07	Ven,SB	101	R39.8/R43.6, 0.0/2.2	95	757

REGISTERED CIVIL ENGINEER 05-24-11 DATE

6-20-11
PLANS APPROVAL DATE

REGISTERED PROFESSIONAL ENGINEER O.C. LEE No. C28039 Exp. 03/31/12 CIVIL STATE OF CALIFORNIA

THE STATE OF CALIFORNIA OR ITS OFFICERS OR AGENTS SHALL NOT BE RESPONSIBLE FOR THE ACCURACY OR COMPLETENESS OF SCANNED COPIES OF THIS PLAN SHEET.

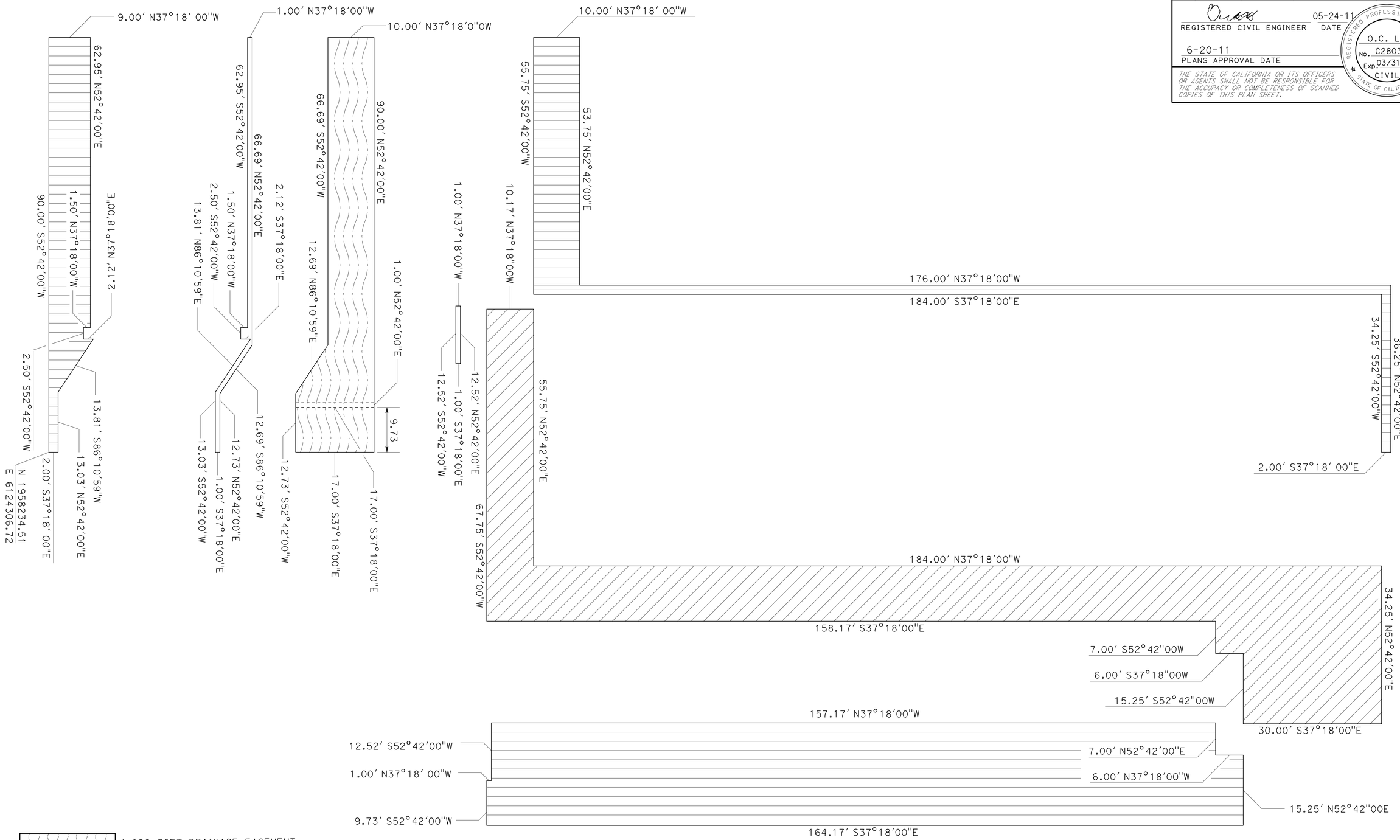

1,026 SQFT DRAINAGE EASEMENT
3,606 SQFT Ped ACCESS AND PERTINENT Str EASEMENT
125 SQFT UTILITY EASEMENT
5,255 SQFT Temp CONSTRUCTION EASEMENT

CONSTRUCTION DETAILS (LIMITS OF UPPR EASEMENT)

SCALE 1"=10

C-15

STATE OF CALIFORNIA - DEPARTMENT OF TRANSPORTATION
Caltrans
DESIGN

FUNCTIONAL SUPERVISOR: OC LEE
CALCULATED-DESIGNED BY: BARNABAS F. VORREITER
CHECKED BY: OC LEE
REVISED BY
DATE REVISED

LAST REVISION 05-24-11
DATE PLOTTED => 01-AUG-2011
TIME PLOTTED => 14:30

Dist	COUNTY	ROUTE	POST MILES TOTAL PROJECT	SHEET No.	TOTAL SHEETS
07	Ven,SB	101	R39.8/R43.6, 0.0/2.2	96	757

REGISTERED CIVIL ENGINEER 02-09-11 DATE

6-20-11
PLANS APPROVAL DATE

REGISTERED PROFESSIONAL ENGINEER O.C. LEE No. C28039 Exp. 03/31/12 CIVIL STATE OF CALIFORNIA

THE STATE OF CALIFORNIA OR ITS OFFICERS OR AGENTS SHALL NOT BE RESPONSIBLE FOR THE ACCURACY OR COMPLETENESS OF SCANNED COPIES OF THIS PLAN SHEET.

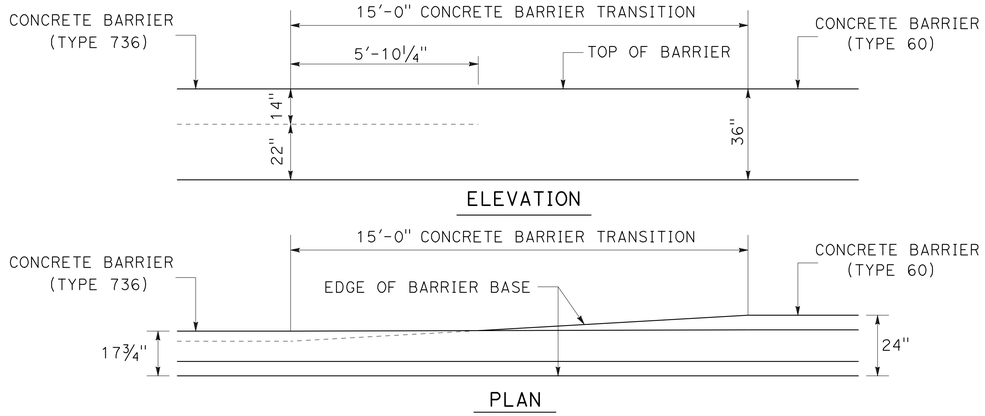

TRANSITION CONCRETE BARRIER (TYPE 736) TO CONCRETE BARRIER (TYPE 60)

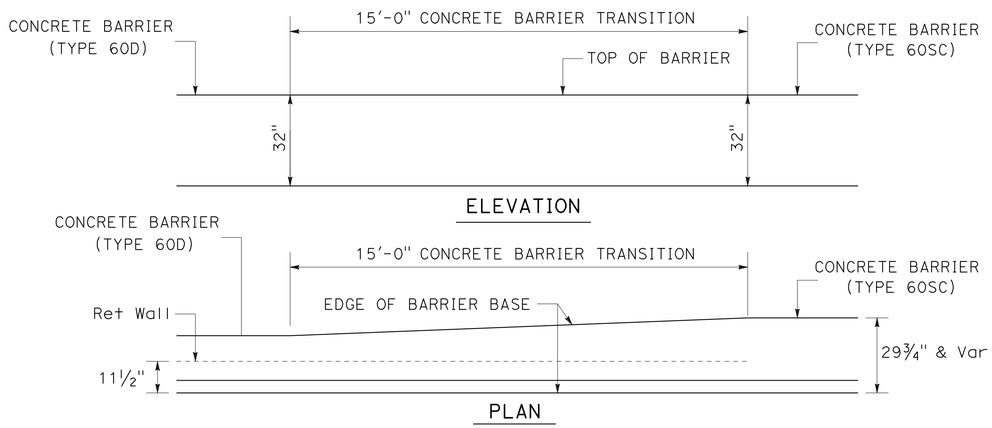

TRANSITION CONCRETE BARRIER (TYPE 60D) TO CONCRETE BARRIER (TYPE 60SC)

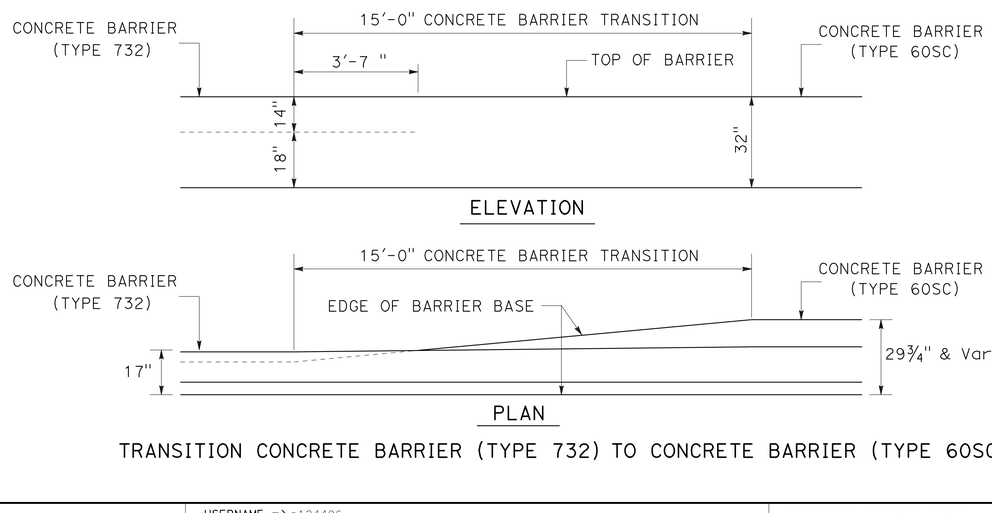

TRANSITION CONCRETE BARRIER (TYPE 732) TO CONCRETE BARRIER (TYPE 60SC)

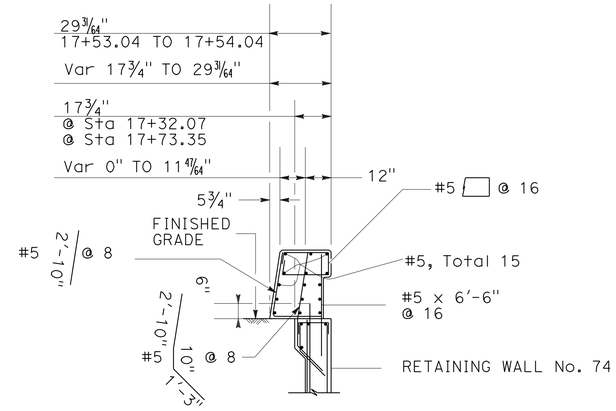

SECTION D-D

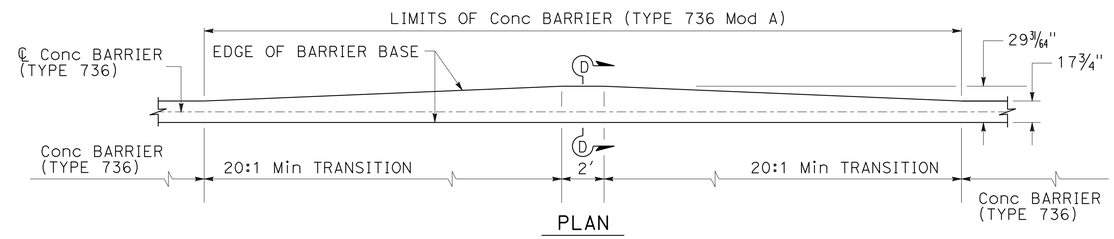

TRANSITION CONCRETE BARRIER (TYPE 736) TO CONCRETE BARRIER (TYPE 736 Mod A)
STAION 17+32.07 TO STATION 17+73.35 RW 74 LOL

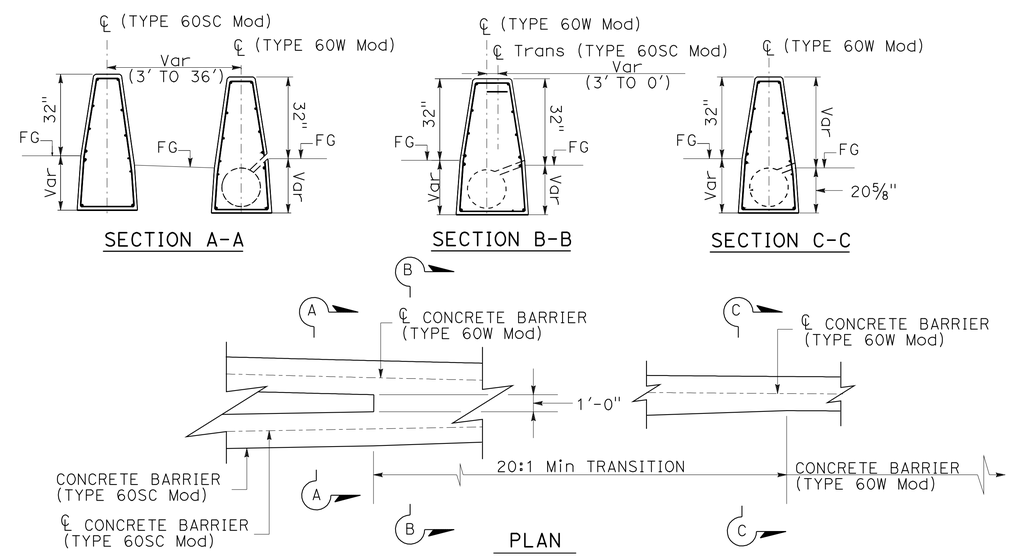

TRANSITION CONCRETE BARRIER (TYPE 60S Mod) TO JOIN CONCRETE BARRIER (TYPE 60W Mod)

CONSTRUCTION DETAILS

NO SCALE

C-16

STATE OF CALIFORNIA - DEPARTMENT OF TRANSPORTATION
Caltrans DESIGN
FUNCTIONAL SUPERVISOR: OC LEE
CALCULATED-DESIGNED BY: K. KAYODA
CHECKED BY: BARNABAS F. VORREITER
REVISED BY / DATE REVISED

LAST REVISION 02-09-11 | DATE PLOTTED => 25-JUN-2011 | TIME PLOTTED => 08:22

Dist	COUNTY	ROUTE	POST MILES TOTAL PROJECT	SHEET No.	TOTAL SHEETS
07	Ven SB	101	R39.8/R43.6, 0.0/2.2	97	757

REGISTERED CIVIL ENGINEER 01-12-11 DATE

6-20-11
PLANS APPROVAL DATE

REGISTERED PROFESSIONAL ENGINEER O.C. LEE No. C28039 Exp. 03/31/12 CIVIL STATE OF CALIFORNIA

THE STATE OF CALIFORNIA OR ITS OFFICERS OR AGENTS SHALL NOT BE RESPONSIBLE FOR THE ACCURACY OR COMPLETENESS OF SCANNED COPIES OF THIS PLAN SHEET.

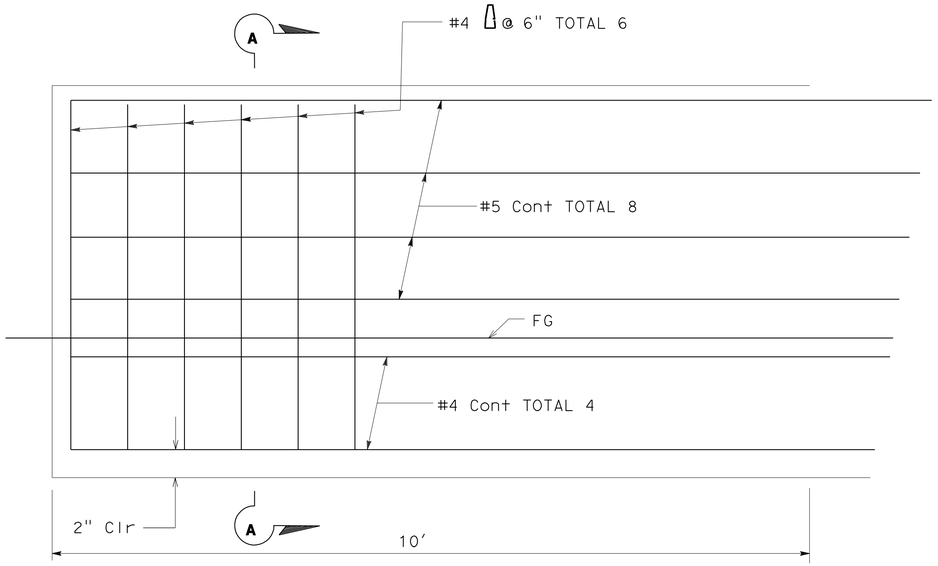

ELEVATION

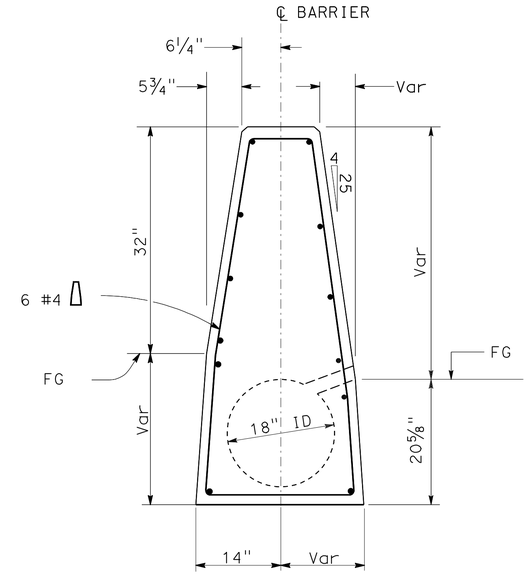

SECTION A-A

NOTES:

1. END ANCHOR REQUIRED AT BARRIER ENDS AND AT INTERRUPTIONS IN BARRIER.
2. FOR BARRIER DETAILS AND INFORMATION NOT SHOWN, SEE STD PLAN A76A.
3. SINGLE SLOTTED (RIGHT) TYPICAL SECTION SHOWN.
4. FOR OTHER TYPES OF END ANCHOR DETAILS, SEE STANDARD PLAN A76B.

END ANCHOR FOR CONCRETE BARRIER (TYPE 60W)

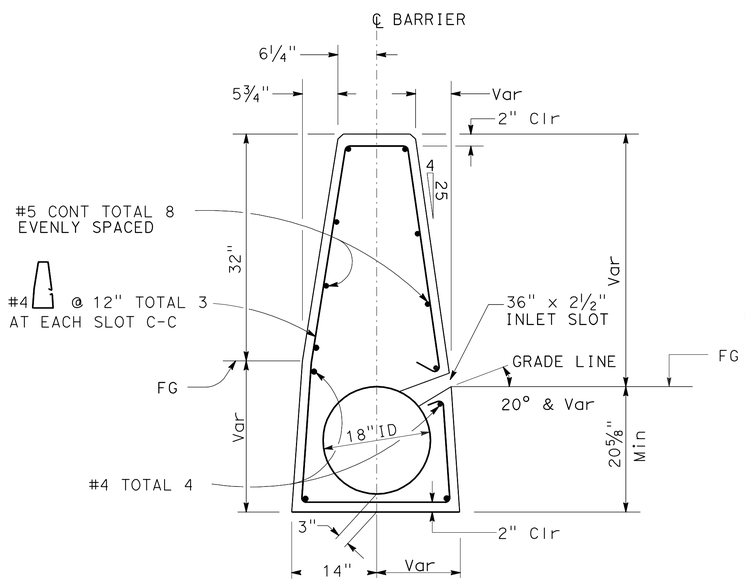

TYPICAL SECTION

CONCRETE BARRIER (TYPE 60W Mod)

SINGLE SLOTTED SECTION CAST IN PLACE

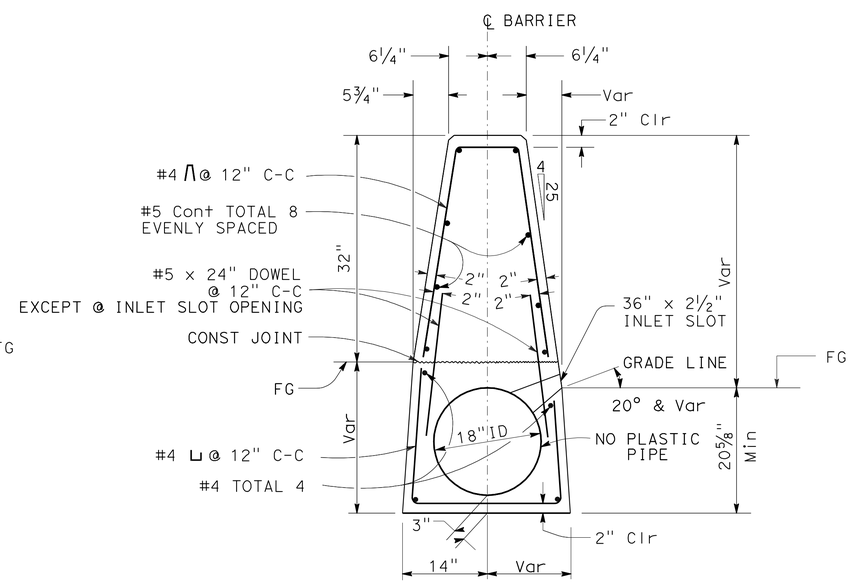

TYPICAL SECTION

CONCRETE BARRIER (TYPE 60W Mod)

SINGLE SLOTTED SECTION CAST IN PLACE

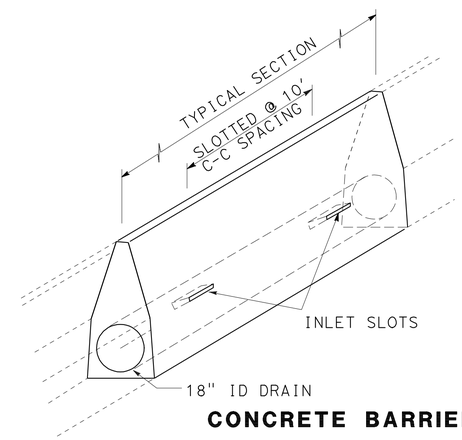

CONCRETE BARRIER

(TYPICAL TO ALL TYPES OF 60W)

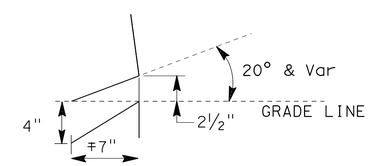

SCUPPER DETAIL

CONSTRUCTION DETAILS

NO SCALE

C-17

STATE OF CALIFORNIA - DEPARTMENT OF TRANSPORTATION
Caltrans
DESIGN

FUNCTIONAL SUPERVISOR: OC LEE
CALCULATED-DESIGNED BY: BARNABAS F VORREITER
CHECKED BY: OC LEE
REVISED BY
DATE REVISED

LAST REVISION 01-12-11
DATE PLOTTED => 25-JUN-2011
TIME PLOTTED => 08:23

Dist	COUNTY	ROUTE	POST MILES TOTAL PROJECT	SHEET No.	TOTAL SHEETS
07	Ven,SB	101	R39.8/R43.6, 0.0/2.2	98	757

REGISTERED CIVIL ENGINEER 01-12-11 DATE

6-20-11
PLANS APPROVAL DATE

REGISTERED PROFESSIONAL ENGINEER O.C. LEE No. C28039 Exp. 03/31/12 CIVIL STATE OF CALIFORNIA

THE STATE OF CALIFORNIA OR ITS OFFICERS OR AGENTS SHALL NOT BE RESPONSIBLE FOR THE ACCURACY OR COMPLETENESS OF SCANNED COPIES OF THIS PLAN SHEET.

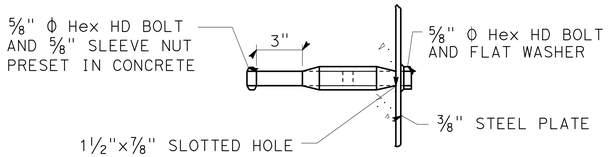

DETAIL "F"

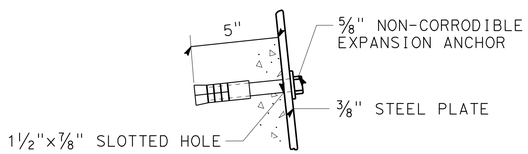

ALTERNATE DETAIL "F"

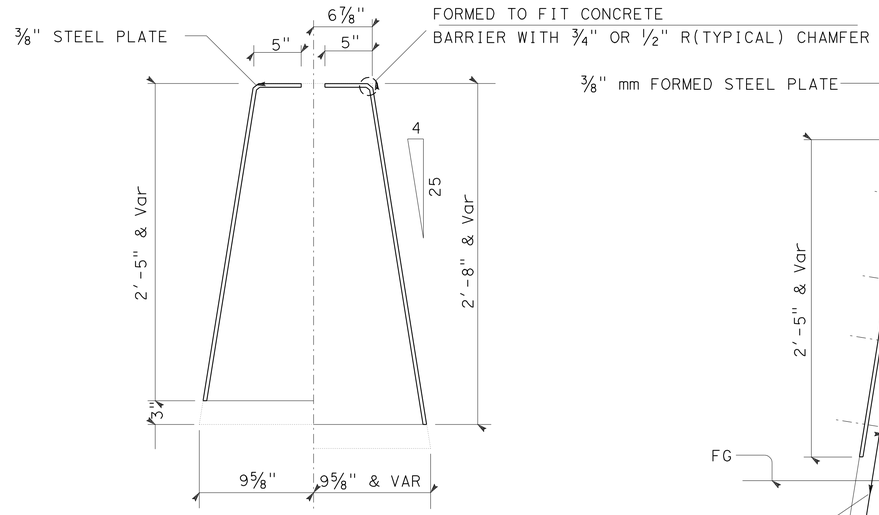

DETAIL "G"

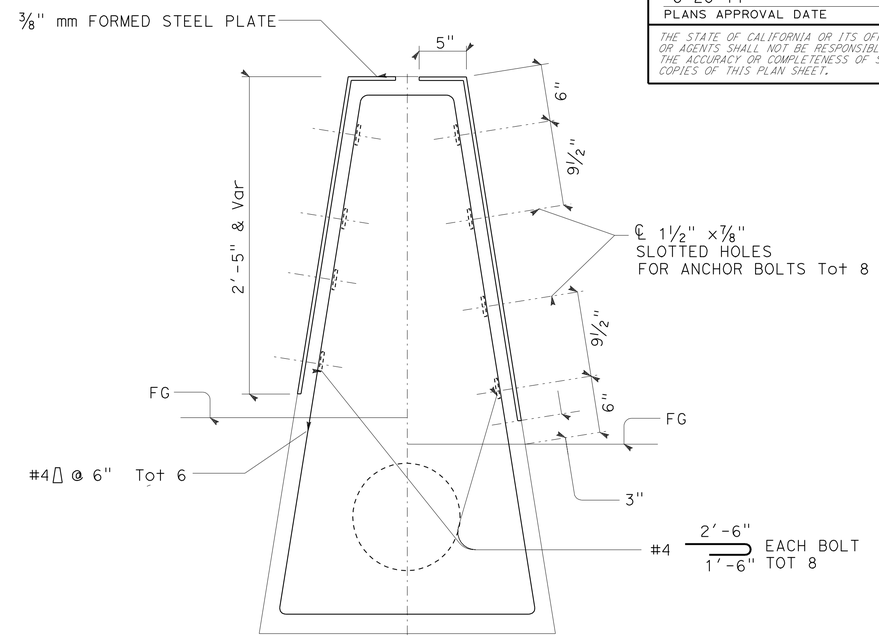

SECTION M-M

STEEL PLATE CLOSURE ANCHOR BOLT DETAILS

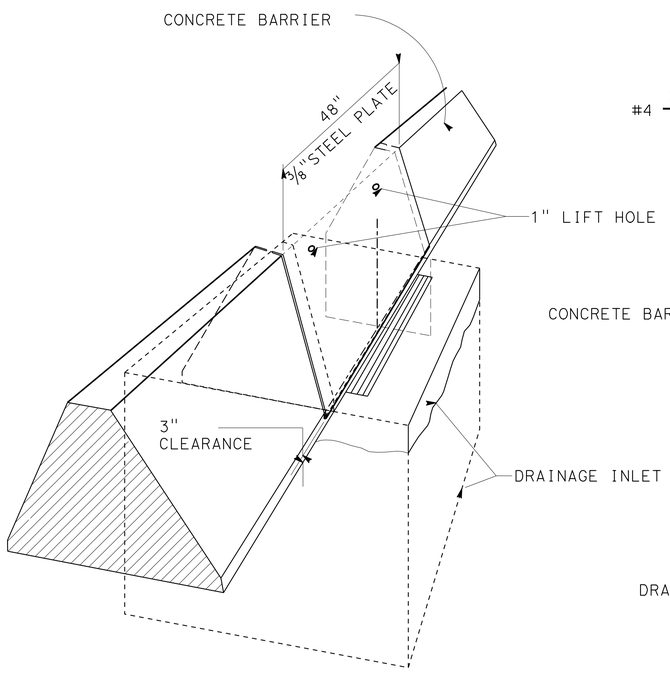

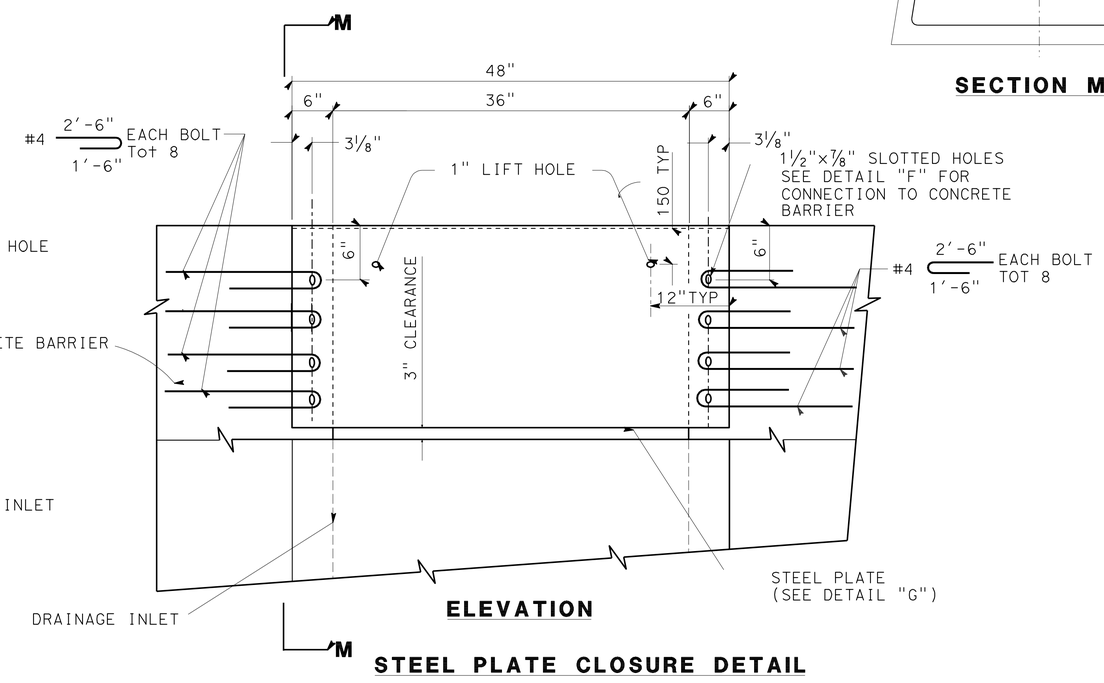

ELEVATION

STEEL PLATE CLOSURE DETAIL

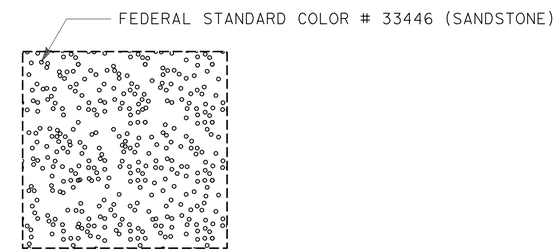

DETAILS OF CONCRETE BARRIER (TYPE 60 Mod, 60C, 60SC, 60W Mod) OVER INLET

CONSTRUCTION DETAILS

NO SCALE

C-18

STATE OF CALIFORNIA - DEPARTMENT OF TRANSPORTATION
Caltrans DESIGN

FUNCTIONAL SUPERVISOR: OC LEE
CALCULATED-DESIGNED BY: BARNABAS F. VORREITER
CHECKED BY: OC LEE
REVISED BY
DATE REVISED

LAST REVISION 01-12-11
DATE PLOTTED => 25-JUN-2011
TIME PLOTTED => 08:23

Dist	COUNTY	ROUTE	POST MILES TOTAL PROJECT	SHEET No.	TOTAL SHEETS
07	Ven,SB	101	R39.8/R43.6, 0.0/2.2	99	757

REGISTERED CIVIL ENGINEER 02-09-11 DATE

6-20-11
PLANS APPROVAL DATE

REGISTERED PROFESSIONAL ENGINEER O.C. LEE No. C28039 Exp. 03/31/12 CIVIL STATE OF CALIFORNIA

THE STATE OF CALIFORNIA OR ITS OFFICERS OR AGENTS SHALL NOT BE RESPONSIBLE FOR THE ACCURACY OR COMPLETENESS OF SCANNED COPIES OF THIS PLAN SHEET.

NOTE:

1. REINFORCEMENT NOT SHOWN ON PLAN FOR CLARITY. FOR DETAILS SEE STD PLANS A76B.

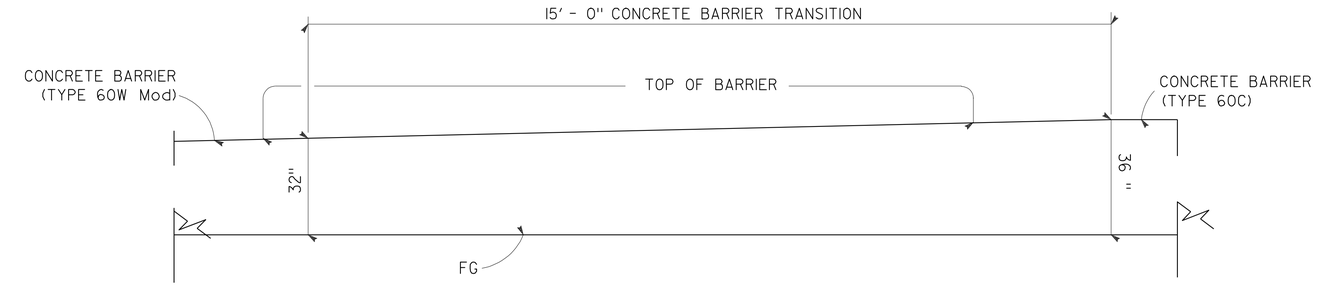

ELEVATION

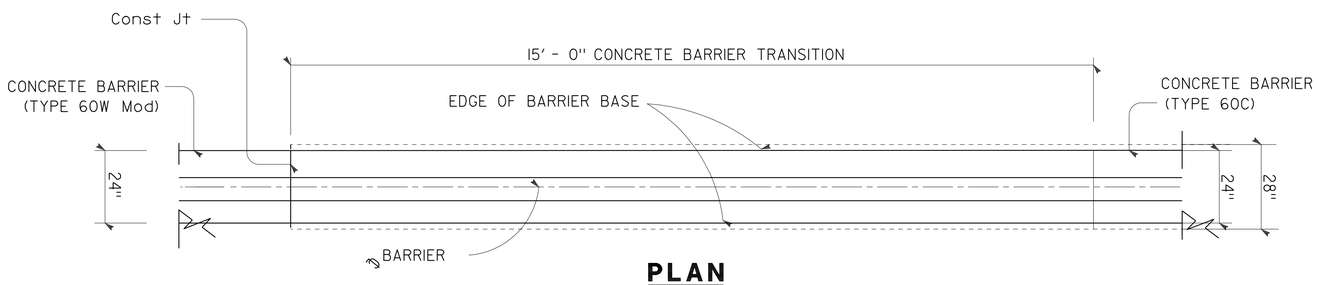

PLAN

TRANSITION CONCRETE BARRIER (TYPE 60W Mod) TO CONCRETE BARRIER (TYPE 60C)

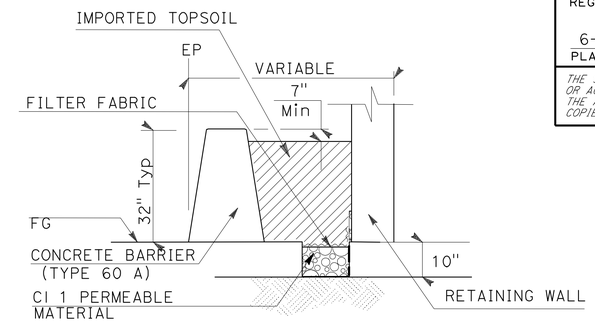

MEDIAN PLANTER DETAIL
AT Sta 254+50 AND Sta 286+00
NO SCALE

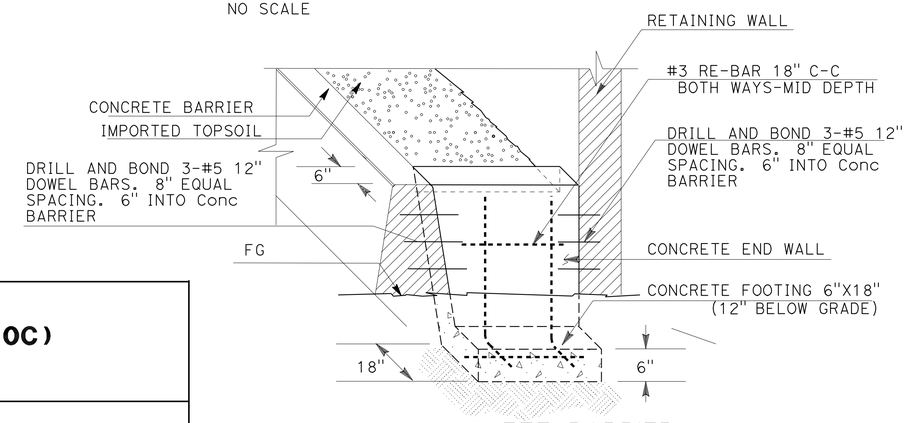

CONCRETE BARRIER
(MEDIAN PLANTER END WALL)
BETWEEN BARRIER AND RETAINING WALL
NO SCALE

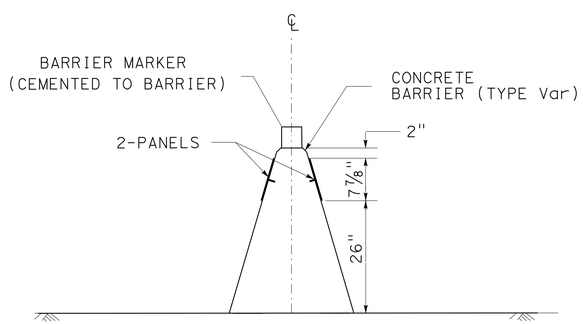

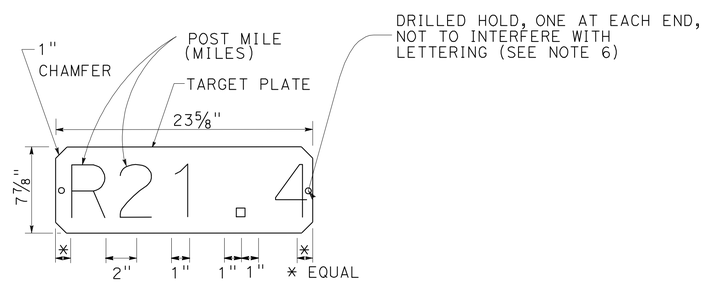

TYPICAL MEDIAN MILEAGE PANEL
WHITE BACKGROUND WITH BLACK LETTERS

(*) BARRIER MARKERS SHALL BE DELINEATED WHEN THE CLEARANCE BETWEEN THE BARRIER AND THE EDGE OF TRAVELED WAY IS LESS THAN 8'. MARKERS SHALL BE PLACED ON TOP OF THE BARRIER AT 19'-8¼" OC.

MEDIAN MILEAGE PANEL AND INSTALLATION DETAILS

NOTES:

1. INSTALL HORIZONTAL MEDIAN MILEAGE PANEL ON BOTH SIDES OF BARRIER AT 1,056 FEET 3 INCHES INTERVALS AS DETERMINED BY THE ENGINEER.
2. LETTERS AND NUMERALS SHALL BE 6" SERIES D DIE CUT NON-REFLECTIVE PRESSURE SENSITIVE BLACK VINYL FROM AN APPROVED MANUFACTURER.
3. NUTS, BOLTS, WASHERS, ETC. ON PANEL FACE SHALL BE NEATLY PAINTED IN APPROPRIATE COLOR.
4. 2" EXPANSION ANCHORAGE DEVICES, ONE AT EACH END, HOLE DEPTH AND DIAMETER TO BE DETERMINED BY MANUFACTURER'S SPECIFICATIONS.
5. TARGET PLATES LEGEND SHALL BE IN POST MILE AS DIRECTED BY THE ENGINEER.

CONSTRUCTION DETAILS
NO SCALE

C-19

STATE OF CALIFORNIA - DEPARTMENT OF TRANSPORTATION
Caltrans® DESIGN
FUNCTIONAL SUPERVISOR: OC LEE
CALCULATED-DESIGNED BY: BARNABAS F VORREITER
CHECKED BY: OC LEE
REVISED BY / DATE REVISED

LAST REVISION 02-09-11 DATE PLOTTED => 25-JUN-2011 TIME PLOTTED => 08:23

Dist	COUNTY	ROUTE	POST MILES TOTAL PROJECT	SHEET No.	TOTAL SHEETS
07	Ven,SB	101	R39.8/R43.6, 0.0/2.2	100	757

REGISTERED CIVIL ENGINEER 02-09-11 DATE

6-20-11
PLANS APPROVAL DATE

REGISTERED PROFESSIONAL ENGINEER O.C. LEE No. C28039 Exp. 03/31/12 CIVIL STATE OF CALIFORNIA

THE STATE OF CALIFORNIA OR ITS OFFICERS OR AGENTS SHALL NOT BE RESPONSIBLE FOR THE ACCURACY OR COMPLETENESS OF SCANNED COPIES OF THIS PLAN SHEET.

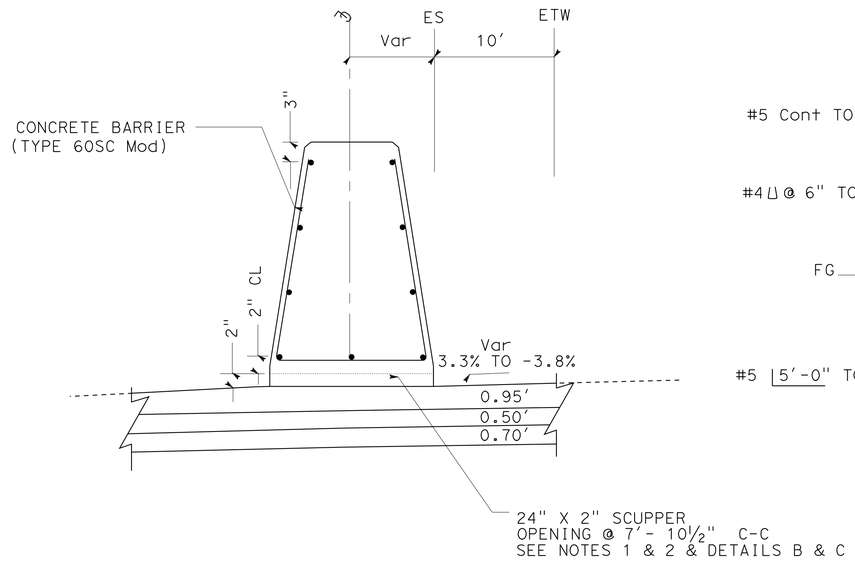

DETAIL A

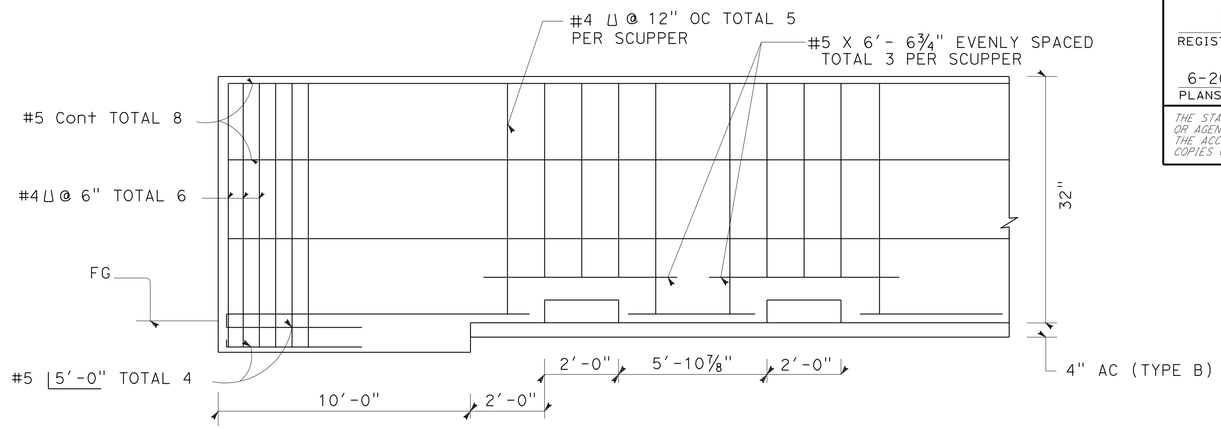

DETAIL C

END ANCHORAGE AND SCUPPERS

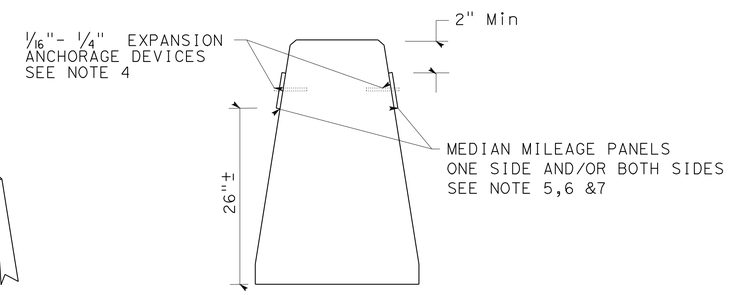

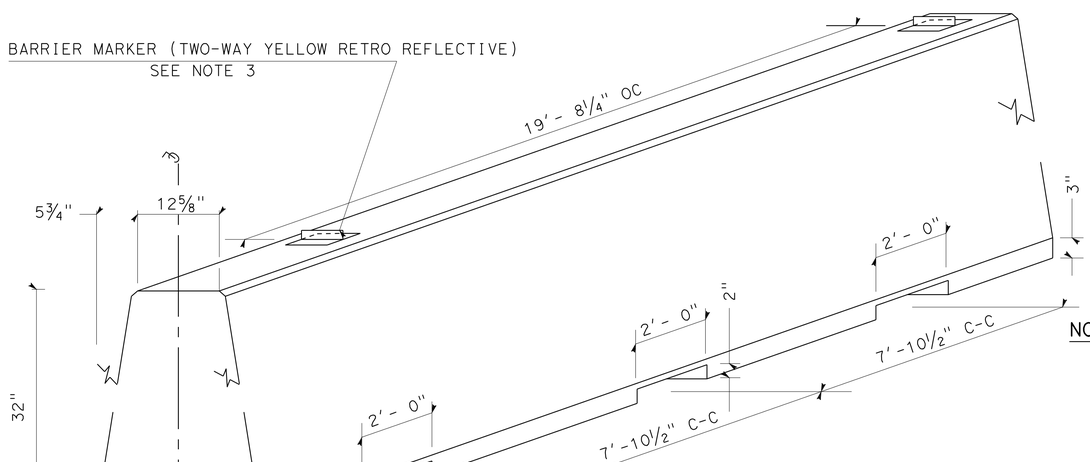

DETAIL B

CONCRETE BARRIER (TYPE 60S Mod)
WITH SCUPPERS

NOTES :

1. RAISE REINFORCEMENT TO CLEAR SCUPPER OPENING.
2. FOR DETAILS NOT SHOWN SEE STANDARD PLANS CONCRETE BARRIER TYPE 60, 60C & 60D, 60S 60SC, 732 AND TYPE 736
3. BARRIER MARKER SHALL BE CEMENTED MIDDLE OF BARRIER. @ 19'-8¼" OC AS SHOWN ON DETAIL B.
4. ANCHOR DEVICES PLACED ON EACH END OF MILEAGE PANEL. DIAMETER TO BE DETERMINED BY MANUFACTURERS SPECIFICATIONS.
5. INSTALL MEDIAN MILEAGE PANELS HORIZONTAL FACING EP ON BOTH SIDES OF BARRIER AT 1056'- 0" (0.2 MILE) INTERVALS AS LOCATED BY THE ENGINEER.
6. LETTERS AND NUMERALS SHALL BE 6" SERIES D DIE CUT NON-REFLECTIVE PRESSURE SENSITIVE BLACK VINYL FROM AN APPROVED MANUFACTURER.
7. NUTS, BOLTS, WASHERS, ETC. ON PANEL FACE SHALL BE NEATLY PAINTED IN APPROPRIATE COLOR.

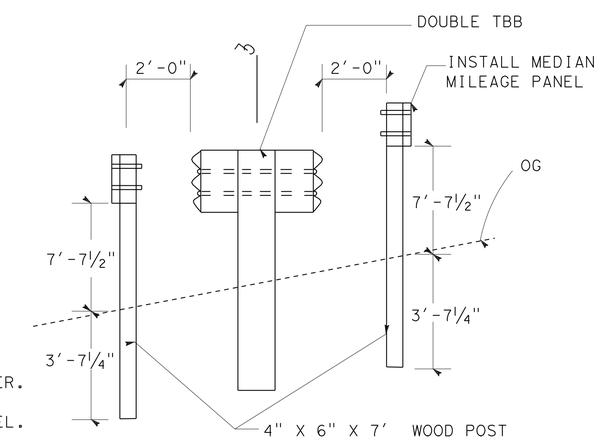

MEDIAN MILEAGE PANEL AND INSTALLATION DETAILS

CONSTRUCTION DETAILS

NO SCALE

C-20

STATE OF CALIFORNIA - DEPARTMENT OF TRANSPORTATION
Caltrans® DESIGN
FUNCTIONAL SUPERVISOR: OC LEE
CALCULATED-DESIGNED BY: BARNABAS F VORREITER
CHECKED BY: OC LEE
REVISED BY
DATE REVISED

LAST REVISION 02-09-11 DATE PLOTTED => 25-JUN-2011 TIME PLOTTED => 08:23