TO ACCOMPANY PLANS DATED 6-24-13

Dist	COUNTY	ROUTE	POST MILES TOTAL PROJECT	SHEET No.	TOTAL SHEETS
07	LA	5	0.0/7.6	601	985

REGISTERED CIVIL ENGINEER

April 19, 2013
PLANS APPROVAL DATE

REGISTERED PROFESSIONAL ENGINEER Gurinderpal Bhullar No. C48815 Exp. 9-30-14 CIVIL STATE OF CALIFORNIA

THE STATE OF CALIFORNIA OR ITS OFFICERS OR AGENTS SHALL NOT BE RESPONSIBLE FOR THE ACCURACY OR COMPLETENESS OF SCANNED COPIES OF THIS PLAN SHEET.

NOTES: See Revised Standard Plan RSP T9 for tables.

Use cone spacing X for taper segment, Y for tangent segment or Z for conflict situations, as approriate, per Table 1, unless X, Y, or Z cone spacing is shown on this sheet.

Unless otherwise specified in the special provisions, all temporary warning signs shall have black legend on fluorescent orange background.

California codes are designated by (CA). Otherwise, Federal (MUTCD) codes are shown.

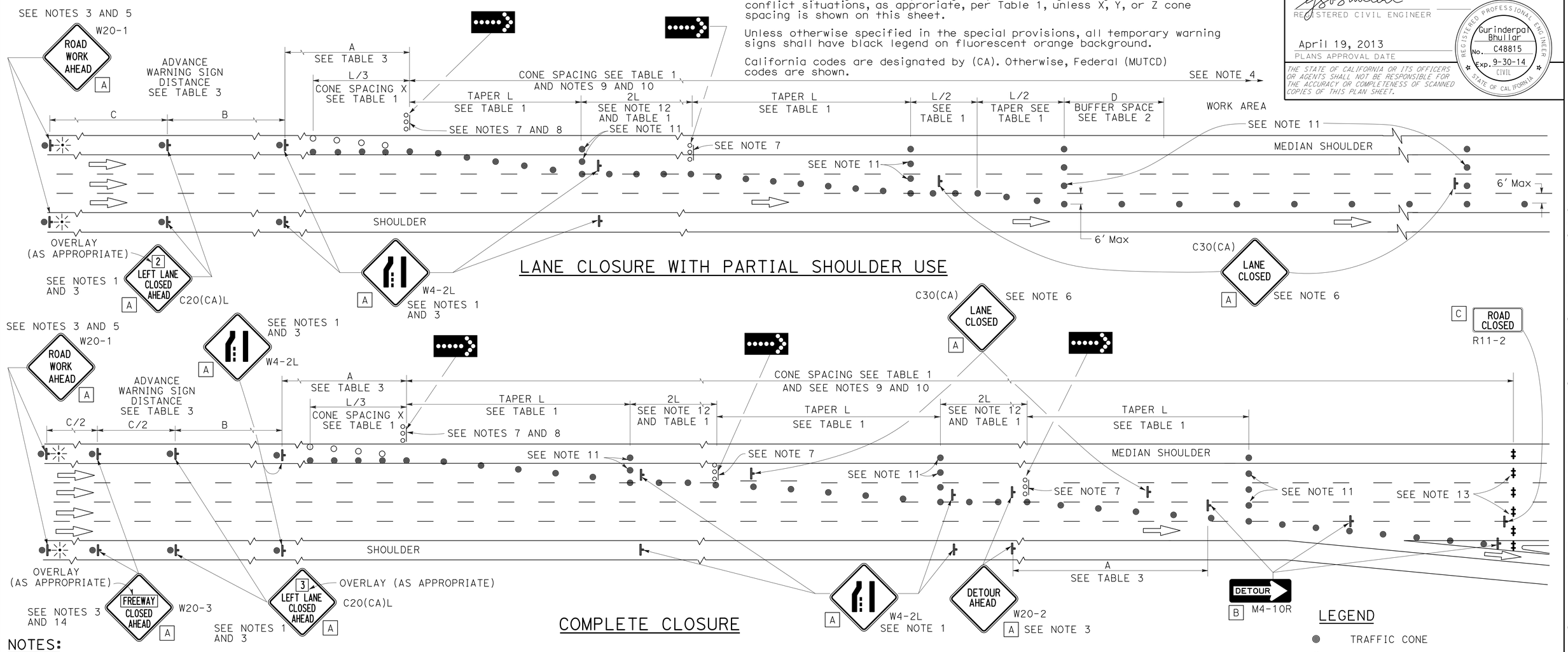

LANE CLOSURE WITH PARTIAL SHOULDER USE

COMPLETE CLOSURE

NOTES:

1. Lane closures on the right side using partial median shoulder as a traffic lane shall conform to the details as shown except that C20(CA)R and W4-2R signs shall be used.
2. At least one person shall be assigned to provide full time maintenance of traffic control devices for lane closures.
3. Each advance warning sign on each side of the roadway shall be equipped with at least two flags for daytime closure. Each flag shall be at least 16" X 16" in size and shall be orange or fluorescent red-orange in color. Flashing beacons shall be placed at the locations indicated for lane closure during hours of darkness.
4. A G20-2 "END ROAD WORK" sign, with minimum size of 48" x 24" as appropriate, shall be placed at the end of the lane closure unless the end of work area is obvious or ends within a larger project's limits.
5. If the W20-1 sign would follow within 2000' of a stationary W20-1 or G20-1 "ROAD WORK NEXT ___ MILES", use a C20(CA) sign for the first advance warning sign.
6. Place a C30(CA) sign every 2000' throughout length of lane closure.
7. One flashing arrow sign for each lane closed. The flashing arrow signs shall be Type I.
8. A minimum 1500' of sight distance shall be provided where possible for vehicles approaching the first flashing arrow sign. Lane closures shall not begin at the top of crest vertical curve or on a horizontal curve.
9. All cones used for lane closures during the hours of darkness shall be fitted with retroreflective bands (or sleeves) as specified in the specifications.
10. Portable delineators, placed at one-half the spacing indicated for traffic cones, may be used instead of cones for daytime closures only.
11. Unless otherwise specified in the special provisions, a minimum of 3 cones shall be placed transversely across each closed lane and shoulder at each location where a taper across a traffic lane ends and every 2000' as shown on the "Lane Closure With Partial Shoulder Use" detail. Two Type II barricades may be used instead of the 3 cones. The transverse alignment of the cones or barricades on the closed shoulder may be shifted from the transverse alignment to provide access to the work.
12. Unless otherwise specified in the special provisions, the 2L tangent shown along lane lines shall be used between the L tapers required for each closed traffic lane.
13. A minimum of Two Type II or III barricades shall be placed across each closed lane and shoulder at the location shown and every 2000' within the complete closure area. Within the complete closure area, the transverse alignment of the barricades on the closed shoulder may be shifted from the transverse alignment to provide access to the work.
14. When specified in the special provisions, a W20-2 "DETOUR AHEAD" sign is to be used in place of the W20-3 "FREEWAY CLOSED AHEAD" sign.

SIGN PANEL SIZE (Min)

A	48" x 48"
B	48" x 18"
C	48" x 30"

LEGEND

- TRAFFIC CONE
- TRAFFIC CONE (OPTIONAL TAPER)
- TEMPORARY TRAFFIC CONTROL SIGN
- FLASHING ARROW SIGN (FAS)
- FAS SUPPORT OR TRAILER
- PORTABLE FLASHING BEACON

STATE OF CALIFORNIA
DEPARTMENT OF TRANSPORTATION

TRAFFIC CONTROL SYSTEM FOR LANE CLOSURES ON FREEWAYS AND EXPRESSWAYS

NO SCALE

RSP T10A DATED APRIL 19, 2013 SUPERSEDES STANDARD PLAN T10A DATED MAY 20, 2011 - PAGE 238 OF THE STANDARD PLANS BOOK DATED 2010.

REVISED STANDARD PLAN RSP T10A

2010 REVISED STANDARD PLAN RSP T10A

12-18-12

Dist	COUNTY	ROUTE	POST MILES TOTAL PROJECT	SHEET No.	TOTAL SHEETS
07	LA	5	0.0/7.6	602	985

REGISTERED CIVIL ENGINEER

April 19, 2013
PLANS APPROVAL DATE

REGISTERED PROFESSIONAL ENGINEER Gurinderpal Bhullar No. C48815 Exp. 9-30-14 CIVIL STATE OF CALIFORNIA

THE STATE OF CALIFORNIA OR ITS OFFICERS OR AGENTS SHALL NOT BE RESPONSIBLE FOR THE ACCURACY OR COMPLETENESS OF SCANNED COPIES OF THIS PLAN SHEET.

TO ACCOMPANY PLANS DATED 6-24-13

TYPICAL RAMP CLOSURES

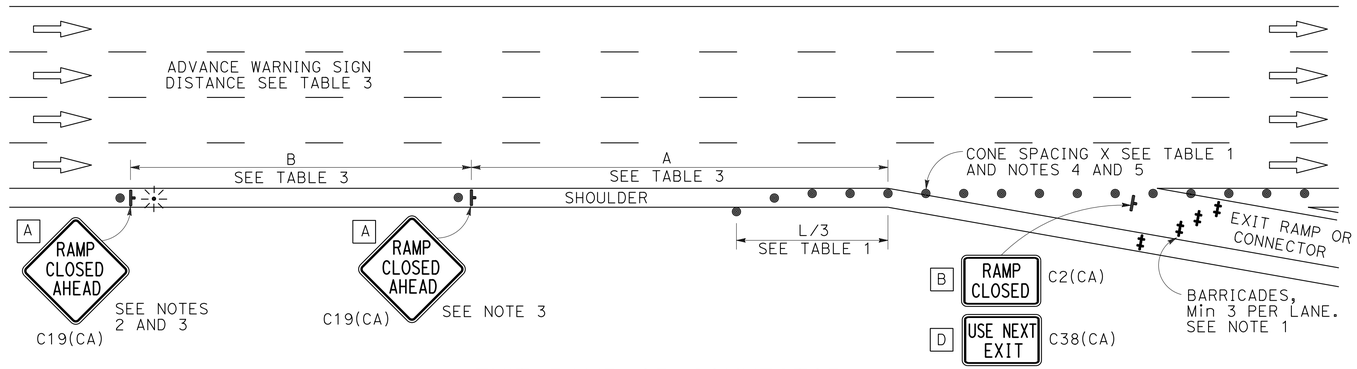

EXIT RAMP OR CONNECTOR

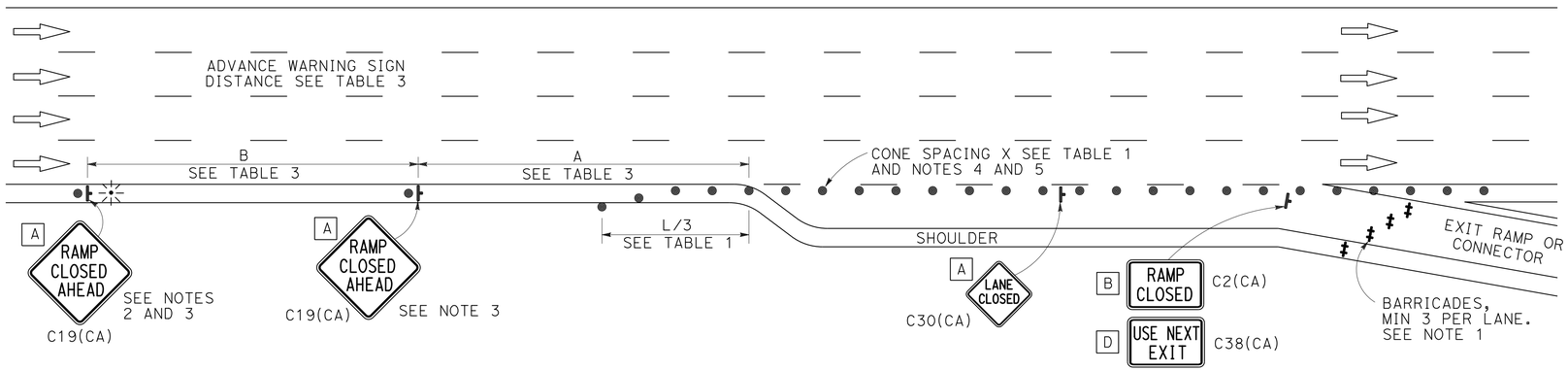

EXIT RAMP OR CONNECTOR WITH ADDITIONAL LANE

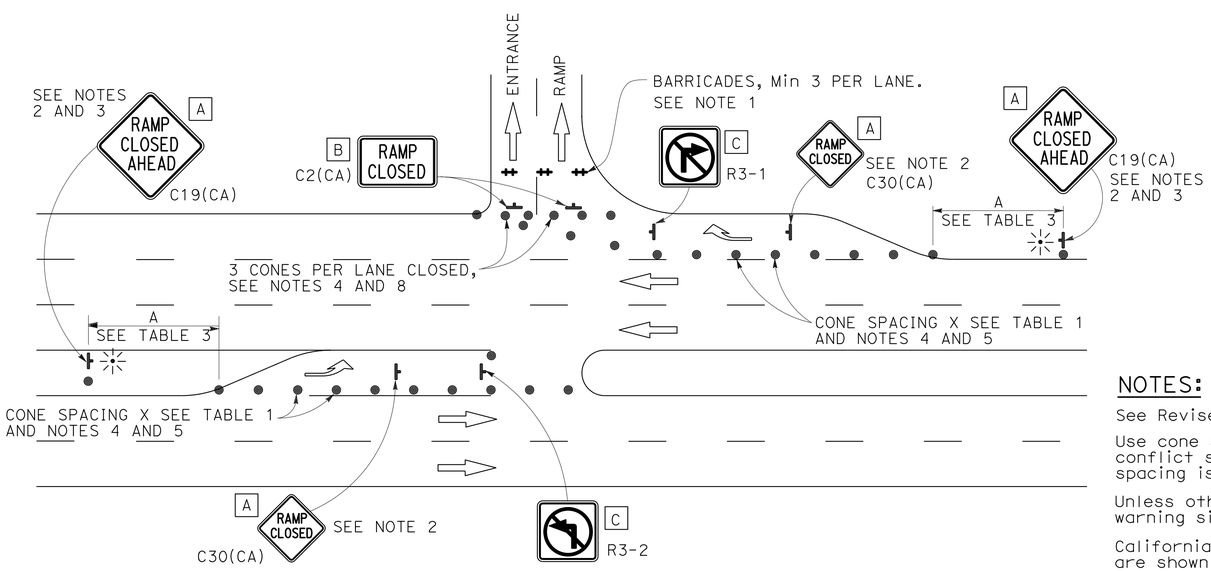

ENTRANCE RAMP WITH TURNING POCKETS

SIGN PANEL SIZE (Min)

- A 48" x 48"
- B 48" x 30"
- C 36" x 36"
- D 48" x 36"

LEGEND

- TRAFFIC CONE
- TEMPORARY TRAFFIC CONTROL SIGN
- BARRICADES
- PORTABLE FLASHING BEACON

NOTES:

1. Barricades shall be Type I, II, or III for closures lasting one week or less and Type III for closures lasting longer than one week.
2. In addition to placing the C19(CA) "RAMP CLOSED AHEAD" and C30(CA) "RAMP CLOSED" signs, black on orange overlay plates with the word "CLOSED" may be mounted, as directed by the Engineer, on all guide signs that refer to the closed ramp. The letter size on the overlay shall be the same as the guide sign.
3. Each advance C19(CA) "RAMP CLOSED AHEAD" sign shall be equipped with at least two flags for daytime closure. Each flag shall be at least 16" x 16" in size and shall be orange or fluorescent red-orange in color. A flashing beacon shall be placed on top of the first C19(CA) sign during hours of darkness.
4. All cones used for ramp closures during the hours of darkness shall be fitted with retroreflective bands (or sleeves) as specified in the specifications.
5. Portable delineators, placed at one-half the spacing indicated for traffic cones, may be used instead of cones for daytime ramp closures only.
6. At least one person shall be assigned to provide full time maintenance of traffic control devices, unless otherwise directed by the Engineer.
7. The existing "EXIT" signs shall be covered during ramp closures.
8. A minimum of 3 cones shall be placed transversely across each closed lane and shoulder.

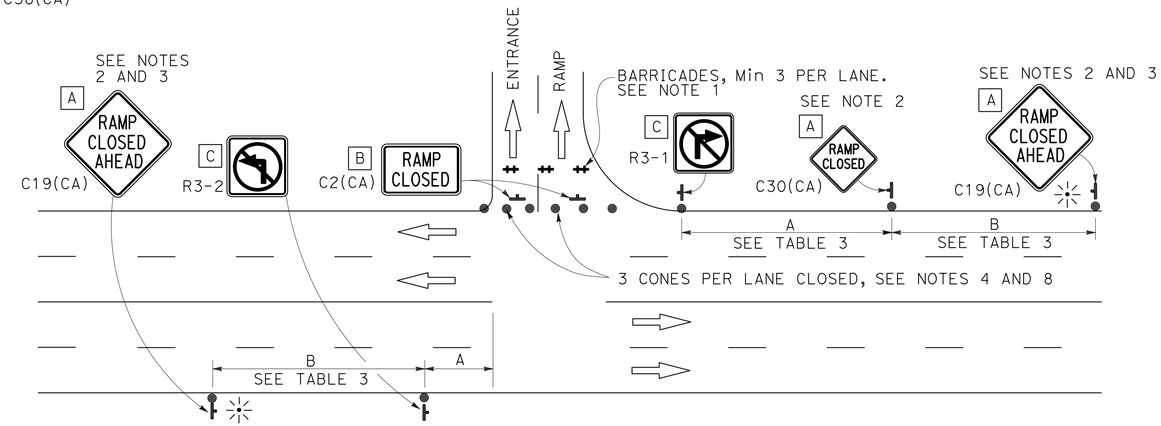

ENTRANCE RAMP WITHOUT TURNING POCKETS

NOTES:

See Revised Standard Plan RSP T9 for tables.

Use cone spacing X for taper segment, Y for tangent segment or Z for conflict situations, as approriate, per Table 1, unless X, Y, or Z cone spacing is shown on this sheet.

Unless otherwise specified in the special provisions, all temporary warning signs shall have black legend on fluorescent orange background.

California codes are designated by (CA). Otherwise, Federal (MUTCD) codes are shown.

STATE OF CALIFORNIA
DEPARTMENT OF TRANSPORTATION

TRAFFIC CONTROL SYSTEM FOR RAMP CLOSURE

NO SCALE

RSP T14 DATED APRIL 19, 2013 SUPERSEDES STANDARD PLAN T14 DATED MAY 20, 2011 - PAGE 242 OF THE STANDARD PLANS BOOK DATED 2010.

REVISED STANDARD PLAN RSP T14

2010 REVISED STANDARD PLAN RSP T14

12-18-12

Dist	COUNTY	ROUTE	POST MILES TOTAL PROJECT	SHEET No.	TOTAL SHEETS
07	LA	5	0.0/7.6	603	985

REGISTERED CIVIL ENGINEER

April 19, 2013
PLANS APPROVAL DATE

REGISTERED PROFESSIONAL ENGINEER Gurinderpal Bhullar No. C48815 Exp. 9-30-14 CIVIL STATE OF CALIFORNIA

THE STATE OF CALIFORNIA OR ITS OFFICERS OR AGENTS SHALL NOT BE RESPONSIBLE FOR THE ACCURACY OR COMPLETENESS OF SCANNED COPIES OF THIS PLAN SHEET.

TO ACCOMPANY PLANS DATED 6-24-13

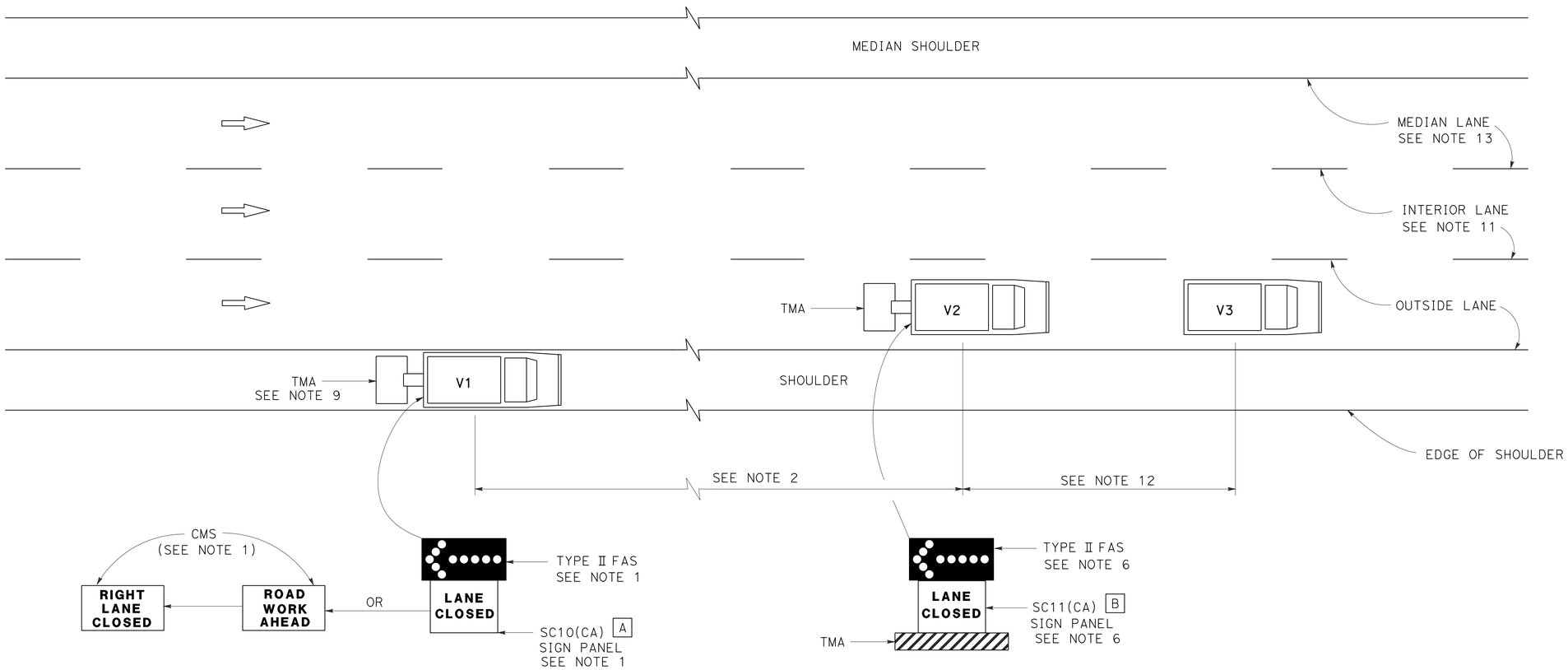

MOVING LANE CLOSURE ON MEDIAN LANE OR OUTSIDE LANE OF MULTILANE HIGHWAYS

SIGN PANEL SIZE (Min)

A 66" x 36"

B 54" x 42"

LEGEND

V1	SIGN VEHICLE
V2	SHADOW VEHICLE
V3	WORK/APPLICATION VEHICLE
	FLASHING ARROW SIGN (FAS)
CMS	CHANGEABLE MESSAGE SIGN
TMA	TRUCK-MOUNTED ATTENUATOR

NOTES:

1. Either a changeable message sign or a SC10(CA) sign panel and a Type II flashing arrow sign shall be mounted on the rear of sign vehicle V1. The changeable message sign shall be sequenced to show the "ROAD WORK AHEAD" message first, followed by the "RIGHT LANE CLOSED" message. For median lane closure, the flashing arrow symbol shall be reversed with the arrowhead on the right and the changeable message sign shall show "LEFT LANE CLOSED".
2. If traffic queues develop, sign vehicle V1 should be positioned upstream from the end of queue. Sign vehicle V1 shall be positioned where highly visible when shoulders are not available.
3. A minimum sight distance of 1500′ should be provided in advance of sign vehicle V1.
4. Sign vehicle V1 should remain at the beginning of horizontal or vertical curves until the other vehicles (V2 and V3) are far enough beyond the curve to resume the minimum sight distance of 1500′.
5. Vehicle-mounted sign panels shall have Type III or above retroreflective sheeting, black on white, or black on fluorescent orange, with 6" minimum series D letters per Caltrans sign specifications.
6. Shadow vehicle V2 shall be equipped with a truck-mounted attenuator. The sign panel shown and a Type II flashing arrow sign shall be mounted on the rear of shadow vehicle V2. For median lane closure the flashing arrow sign symbol shall be displayed with the arrowhead on the right.
7. All vehicles used for lane closures shall be equipped with two-way radios, and the vehicle operators shall maintain communication during the work or application operation.
8. All vehicles shall be equipped with flashing or rotating amber lights.
9. If sign vehicle V1 encroaches into the traffic lane due to insufficient shoulder width, sign vehicle V1 shall be equipped with a truck-mounted attenuator. Sign vehicle V1 shall stay as close to the edge of shoulder as practicable.
10. Where workers would be on foot in the work area, a stationary type lane closure (Revised Standard Plan T10, T11, etc., as applicable) shall be used instead of this plan.
11. For moving lane closure on interior lane of multilane highways, use Revised Standard Plan T16.
12. The spacing between work vehicle(s) and the shadow vehicles, and between each shadow vehicle should be minimized to deter road users from driving in between.
13. When the work/application vehicle V3 occupies the median lane, sign vehicle V1 should drive in the median shoulder and indicate left lane closed ahead.

STATE OF CALIFORNIA
DEPARTMENT OF TRANSPORTATION

TRAFFIC CONTROL SYSTEM FOR MOVING LANE CLOSURE ON MULTILANE HIGHWAYS

NO SCALE

RSP T15 DATED APRIL 19, 2013 SUPERSEDES STANDARD PLAN T15
DATED MAY 20, 2011 - PAGE 243 OF THE STANDARD PLANS BOOK DATED 2010.

REVISED STANDARD PLAN RSP T15

2010 REVISED STANDARD PLAN RSP T15

12-18-12

Dist	COUNTY	ROUTE	POST MILES TOTAL PROJECT	SHEET No.	TOTAL SHEETS
07	LA	5	0.0/7.6	604	985

REGISTERED CIVIL ENGINEER

April 19, 2013
PLANS APPROVAL DATE

REGISTERED PROFESSIONAL ENGINEER
Gurinderpal Bhullar
No. C48815
Exp. 9-30-14
CIVIL
STATE OF CALIFORNIA

THE STATE OF CALIFORNIA OR ITS OFFICERS OR AGENTS SHALL NOT BE RESPONSIBLE FOR THE ACCURACY OR COMPLETENESS OF SCANNED COPIES OF THIS PLAN SHEET.

TO ACCOMPANY PLANS DATED 6-24-13

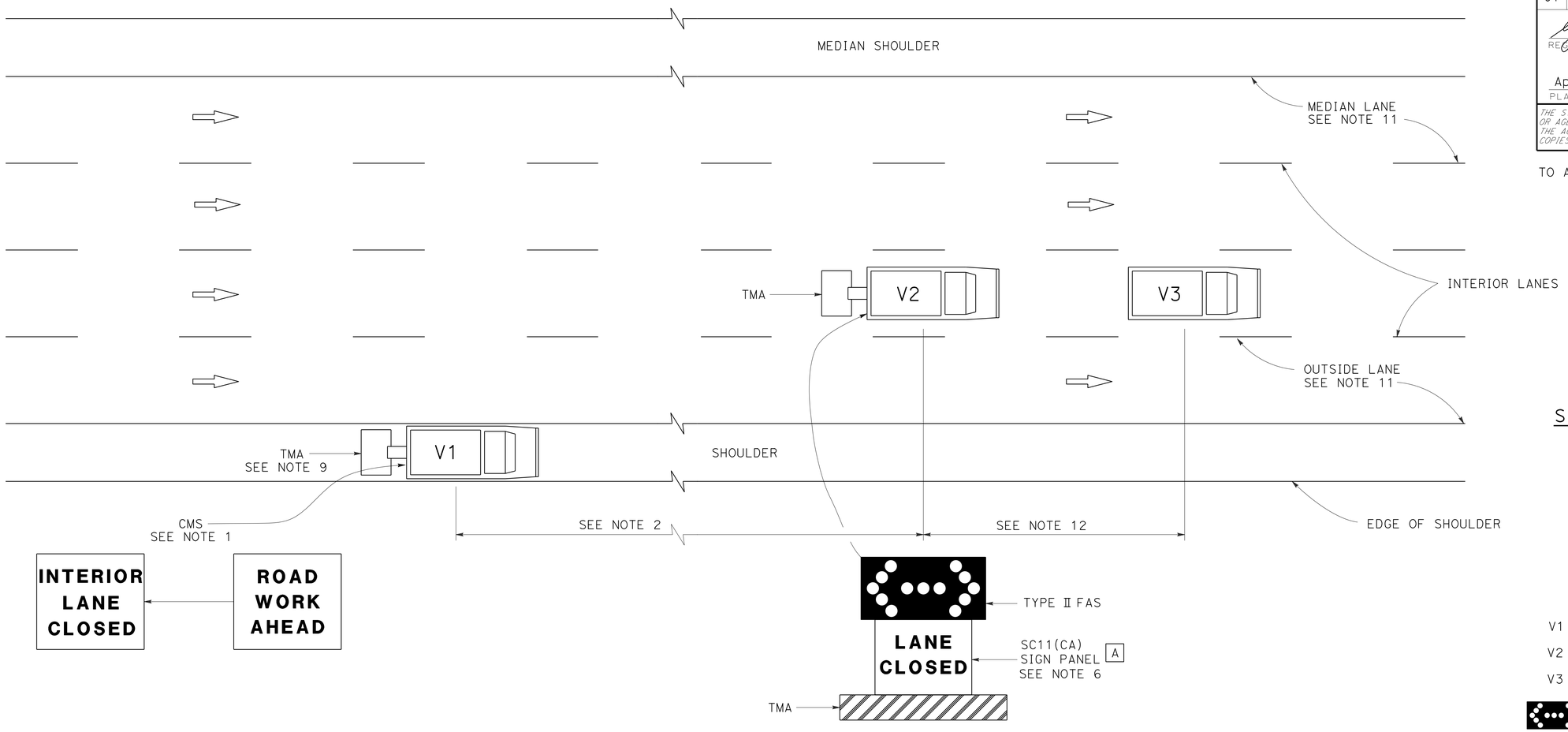

INTERIOR LANE CLOSED

ROAD WORK AHEAD

MOVING LANE CLOSURE ON INTERIOR LANE OF MULTILANE HIGHWAYS

SIGN PANEL SIZE (Min)

A 54" x 42"

LEGEND

V1	SIGN VEHICLE
V2	SHADOW VEHICLE
V3	WORK/APPLICATION VEHICLE
	FLASHING ARROW SIGN (FAS) IN FLASHING DOUBLE ARROW MODE
CMS	CHANGEABLE MESSAGE SIGN
TMA	TRUCK-MOUNTED ATTENUATOR

NOTES:

1. A changeable message sign shall be mounted on the rear of sign vehicle V1. The changeable message sign shall be sequenced to show the "ROAD WORK AHEAD" message first, followed by the "INTERIOR LANE CLOSED" message. The message "CENTER LANE CLOSED" may be used in place of the "INTERIOR LANE CLOSED" message.
2. If traffic queues develop, sign vehicle V1 should be positioned upstream from the end of queue. Sign vehicle V1 shall be positioned where highly visible when shoulders are not available.
3. A minimum sight distance of 1500′ should be provided in advance of sign vehicle V1.
4. Sign vehicle V1 should remain at the beginning of horizontal or vertical curves until the other vehicles (V2 and V3) are far enough beyond the curve to resume the minimum sight distance of 1500′.
5. Vehicle-mounted sign panels shall have Type III or above retroreflective sheeting, black on white, or black on fluorescent orange, with 6" minimum series D letters per Caltrans sign specifications.
6. Shadow vehicle V2 shall be equipped with a truck-mounted attenuator. The sign panel shown and a Type II flashing arrow sign shall be mounted on the rear of shadow vehicle V2.
7. All vehicles used for lane closures shall be equipped with two-way radios, and the vehicle operators shall maintain communication during the work or application operation.
8. All vehicles shall be equipped with flashing or rotating amber lights.
9. If sign vehicle V1 encroaches into the traffic lane due to insufficient shoulder width, sign vehicle V1 shall be equipped with a truck-mounted attenuator. Sign vehicle V1 shall stay as close to the edge of shoulder as practicable.
10. Where workers would be on foot in the work area, a stationary type lane closure (Revised Standard Plan T10, T11 etc., as applicable) shall be used instead of this plan.
11. For moving lane closure on median lane or outside lane of multilane highways, use Revised Standard Plan T15.
12. The spacing between work vehicle(s) and the shadow vehicles, and between each shadow vehicle should be minimized to deter road users from driving in between.

STATE OF CALIFORNIA
DEPARTMENT OF TRANSPORTATION

TRAFFIC CONTROL SYSTEM FOR MOVING LANE CLOSURE ON MULTILANE HIGHWAYS

NO SCALE

RSP T16 DATED APRIL 19, 2013 SUPERSEDES STANDARD PLAN T16
DATED MAY 20, 2011 - PAGE 244 OF THE STANDARD PLANS BOOK DATED 2010.

REVISED STANDARD PLAN RSP T16

2010 REVISED STANDARD PLAN RSP T16

12-18-12

Dist	COUNTY	ROUTE	POST MILES TOTAL PROJECT	SHEET No.	TOTAL SHEETS
07	LA	5	0.0/7.6	605	985

REGISTERED CIVIL ENGINEER

April 20, 2012
PLANS APPROVAL DATE

REGISTERED PROFESSIONAL ENGINEER Gary Wang No. C58298 Exp. 6-30-12 CIVIL STATE OF CALIFORNIA

THE STATE OF CALIFORNIA OR ITS OFFICERS OR AGENTS SHALL NOT BE RESPONSIBLE FOR THE ACCURACY OR COMPLETENESS OF SCANNED COPIES OF THIS PLAN SHEET.

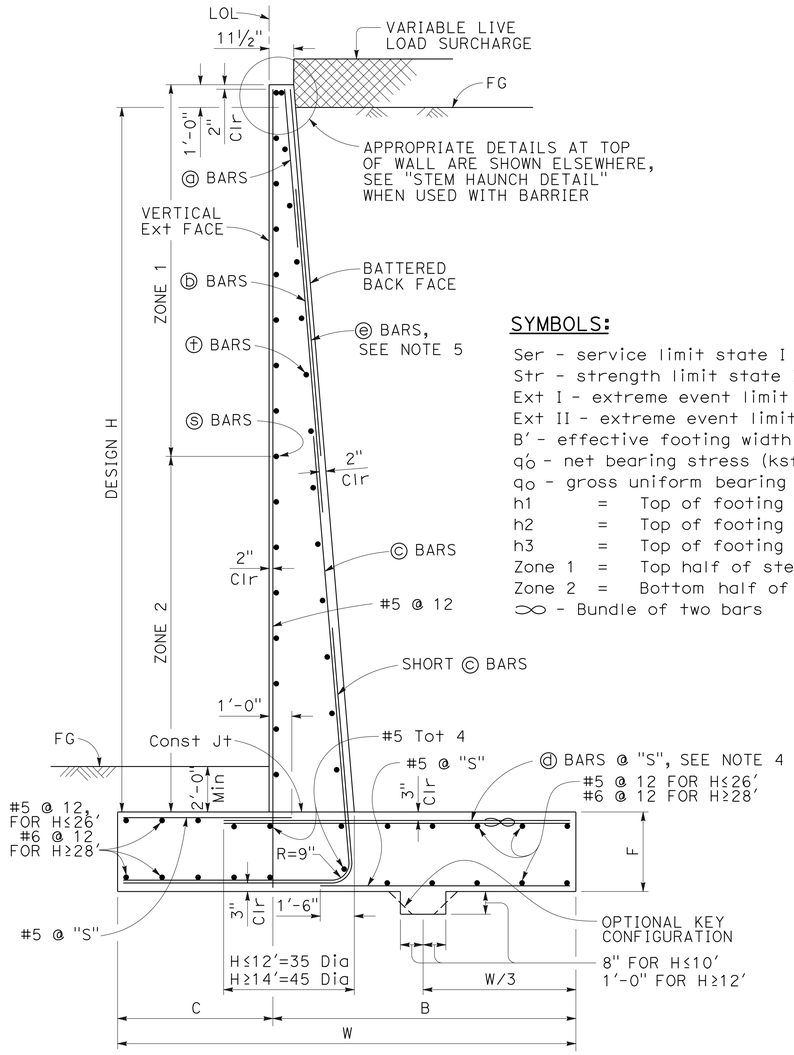

TYPICAL SECTION

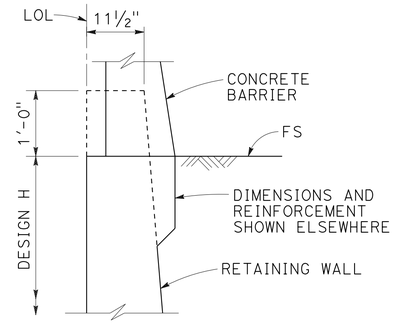

STEM HAUNCH DETAIL

SYMBOLS:

Ser - service limit state I
Str - strength limit state I
Ext I - extreme event limit state I
Ext II - extreme event limit state II
B' - effective footing width (ft)
q_o' - net bearing stress (ksf), OG assumed to be FG at toe
q_o - gross uniform bearing stress (ksf)
h1 = Top of footing to top of short ⓒ bar
h2 = Top of footing to top of ⓒ bar
h3 = Top of footing to top of ⓑ bar
Zone 1 = Top half of stem height
Zone 2 = Bottom half of stem height
∞ - Bundle of two bars

DESIGN CONDITIONS:

Design H may be exceeded by 6" before going to the next size. Special footing design is required where foundation material is incapable of supporting bearing stress listed in the table.

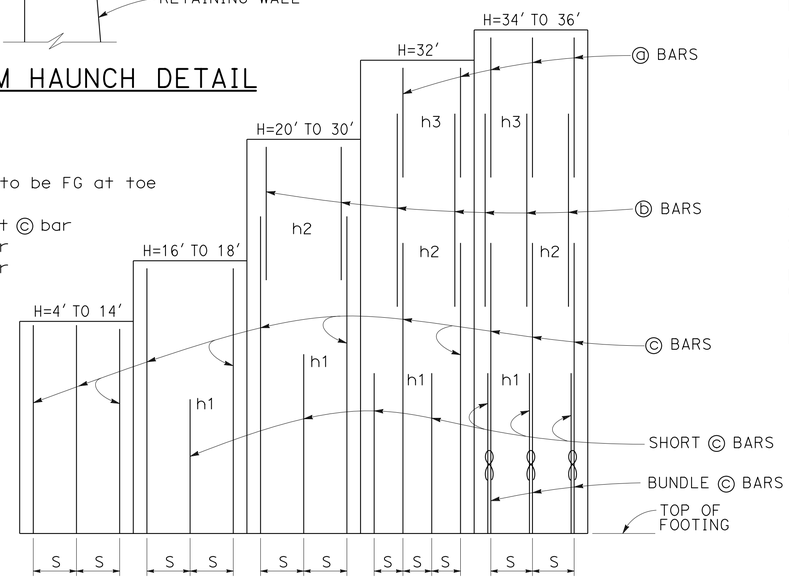

ELEVATION

DESIGN NOTES:

TO ACCOMPANY PLANS DATED 6-24-13

DESIGN: AASHTO LRFD Bridge Design Specifications, 4th Edition with California Amendments

LS: Varied surcharge on level ground surface

DC: Stem Architectural Treatment of thickness up to 6" of concrete (75 psf) considered

CT: 54 kip transverse force applied at He = 32", distributed over 10 feet at the top of wall and 1 : 1 distribution down and outward. Distribution below footing taken no less than 40'.

SEISMIC: $k_h = 0.2$, $k_v = 0.0$

SOIL: $\phi = 34°$, $\gamma = 120$ pcf

REINFORCED CONCRETE: f'c = 3,600 psi
fy = 60,000 psi

LOAD COMBINATIONS AND LIMIT STATES:

Service I	Q = 1.00DC+1.00EV+1.00EH+1.00LS
Strength I	Q = αDC+βEV+ηEH+1.75LS
Extreme I	Q = 1.00DC+1.00EV+1.00EH+1.00EQD+1.00EQE
Extreme II	Q = 1.00DC+1.00EV+1.00EH+1.00CT

Where:

Q:	Force Effects
α:	1.25 or 0.90, Whichever Controls Design
β:	1.35 or 1.00, Whichever Controls Design
η:	1.50 or 0.90, Whichever Controls Design
DC:	Dead Load of Structure Components
EH:	Horizontal Earth Fill Pressure
EV:	Vertical Earth Pressure from Earth Fill Weight
LS:	Live Load Surcharge
EQE:	Seismic Earth Pressure
EQD:	Soil and Structural and Nonstructural Components Inertia
CT:	Vehicular Collision Force

TABLE OF REINFORCING STEEL, DIMENSIONS AND DATA

DESIGN H	4'	6'	8'	10'	12'	14'	16'	18'	20'	22'	24'	26'	28'	30'	32'	34'	36'
W	6'-10"	7'-0"	7'-3"	7'-7"	8'-4"	9'-7"	10'-9"	12'-0"	13'-3"	14'-6"	15'-9"	17'-1"	18'-5"	19'-10"	21'-2"	22'-7"	24'-0"
C	2'-2"	2'-3"	2'-3"	2'-4"	2'-6"	3'-0"	3'-6"	4'-0"	4'-6"	5'-0"	5'-5"	6'-0"	6'-6"	7'-2"	7'-8"	8'-2"	9'-0"
B	4'-8"	4'-9"	5'-0"	5'-3"	5'-10"	6'-7"	7'-3"	8'-0"	8'-9"	9'-6"	10'-4"	11'-1"	11'-11"	12'-8"	13'-6"	14'-5"	15'-0"
F	1'-4"	1'-4"	1'-4"	1'-4"	1'-6"	1'-8"	1'-8"	1'-9"	1'-9"	1'-11"	2'-2"	2'-5"	2'-10"	3'-3"	3'-6"	4'-0"	4'-3"
BATTER	½: 12	½: 12	½: 12	½: 12	½: 12	½: 12	½: 12	½: 12	½: 12	½: 12	⅝: 12	⅝: 12	¾: 12	⅞: 12	1 : 12	1 : 12	1 : 12
SPACING "S"	9"	9"	9"	9"	9"	7"	6"	5"	6"	6"	6"	6"	6"	6"	6"	10"	8"
ⓐ BARS	-	-	-	-	-	-	-	-	-	-	-	-	-	-	#7	#7	#6
ⓑ BARS	-	-	-	-	-	-	-	-	#7	#7	#7	#7	#7	#7	#9	#9	#8
ⓒ BARS	#6	#6	#6	#6	#6	#6	#7	#7	#8	#9	#9	#10	#10	#10	#11	#11	#11
ⓓ BARS	#5	#5	#6	#6	#6	#6	#9	#8	#8	#9	#9	#10	#10	#10	#11	#11	#11
h1	-	-	-	-	-	-	5'-9"	5'-10"	8'-0"	9'-0"	10'-1"	11'-0"	12'-1"	13'-0"	13'-0"	12'-7"	11'-6"
h2	-	-	-	-	-	-	-	-	10'-5"	13'-0"	14'-7"	17'-6"	19'-0"	20'-5"	19'-0"	18'-0"	20'-2"
h3	-	-	-	-	-	-	-	-	-	-	-	-	-	-	21'-2"	21'-10"	24'-0"
ZONE 1 ⓢ BARS	#5 @ 18	#5 @ 18	#5 @ 18	#5 @ 18	#5 @ 18	#5 @ 18	#5 @ 18	#5 @ 18	#5 @ 18	#5 @ 18	#5 @ 12	#5 @ 12	#5 @ 12	#5 @ 12	#5 @ 12	#5 @ 12	#5 @ 12
ZONE 2 ⓢ BARS	#5 @ 18	#5 @ 18	#5 @ 18	#5 @ 18	#5 @ 18	#5 @ 18	#5 @ 12	#5 @ 12	#5 @ 12	#5 @ 12	#5 @ 12	#5 @ 12	#6 @ 12	#6 @ 12	#6 @ 12	#7 @ 12	#7 @ 12
ZONE 1 ⓣ BARS	#4 @ 18	#4 @ 18	#4 @ 18	#4 @ 18	#4 @ 18	#4 @ 18	#4 @ 18	#4 @ 18	#4 @ 18	#4 @ 18	#4 @ 12	#4 @ 12	#4 @ 18	#4 @ 12	#4 @ 12	#4 @ 12	#4 @ 12
ZONE 2 ⓣ BARS	#4 @ 18	#4 @ 18	#4 @ 18	#4 @ 18	#4 @ 18	#4 @ 18	#4 @ 18	#4 @ 18	#4 @ 18	#4 @ 18	#4 @ 12	#4 @ 12	#4 @ 12	#4 @ 12	#5 @ 12	#5 @ 12	#5 @ 12
Ser: B', q_o'	6.8, 0.7	6.5, 1.0	6.2, 1.3	6.0, 1.6	6.3, 2.0	7.5, 2.1	8.6, 2.2	9.8, 2.3	11.0, 2.4	12.1, 2.5	13.2, 2.8	14.4, 2.9	15.5, 3.1	16.8, 3.3	18.0, 3.5	19.2, 3.7	20.6, 3.7
Str: B', q_o	6.6, 1.6	5.0, 1.8	3.6, 2.3	3.0, 3.3	3.2, 4.0	4.3, 3.8	5.3, 3.7	6.4, 3.7	7.4, 3.8	8.2, 4.1	9.0, 4.4	9.9, 4.6	10.7, 4.9	11.7, 5.2	12.6, 5.4	13.6, 5.8	14.6, 5.9
Ext I: B', q_o	5.2, 1.1	4.7, 1.5	3.9, 2.2	3.1, 3.4	2.8, 4.8	3.2, 5.3	3.6, 5.7	4.1, 6.1	4.6, 6.4	5.0, 6.9	5.3, 7.6	5.8, 8.1	6.1, 8.9	6.7, 9.4	7.1, 10.0	7.5, 10.7	8.2, 10.9
Ext II: B', q_o	2.6, 2.2	2.7, 2.6	2.8, 3.1	2.9, 3.6	3.7, 3.6	5.2, 3.3	6.7, 3.1	8.3, 3.0	9.8, 3.0	11.2, 3.1	12.5, 3.2	13.9, 3.4	15.2, 3.6	16.7, 3.8	18.0, 4.0	19.3, 4.2	20.8, 4.3

NOTES:

1. For details not shown and drainage notes see RSP B3-5
2. For wall stem joint details see B0-3 3-3 and B0-3 3-4
3. At ⓒ bars:
   H ≤ 6', no splices are allowed within 1'-8" above the top of footing.
   H > 6', no splices are allowed within H/4 above the top of footing.
4. Bundle ⓓ bars for H = 34' & 36'.
5. Provide #6 @ 10" x 15'-0" ⓔ bars over a distance of 8'-0" measured from all expansion joints, begin wall and end wall locations. For H ≤ 14', hook ⓔ bar into footing and reduce bar length as needed to maintain Min Clr cover.

STATE OF CALIFORNIA
DEPARTMENT OF TRANSPORTATION

RETAINING WALL TYPE 1 (CASE 1)

NO SCALE

RSP B3-1A DATED APRIL 20, 2012 SUPPLEMENTS THE STANDARD PLANS BOOK DATED 2010.

REVISED STANDARD PLAN RSP B3-1A

2010 REVISED STANDARD PLAN RSP B3-1A

2-22-12

Dist	COUNTY	ROUTE	POST MILES TOTAL PROJECT	SHEET No.	TOTAL SHEETS
07	LA	5	0.0/7.6	606	985

REGISTERED CIVIL ENGINEER

April 20, 2012
PLANS APPROVAL DATE

REGISTERED PROFESSIONAL ENGINEER Gary Wang No. C58298 Exp. 6-30-12 CIVIL STATE OF CALIFORNIA

THE STATE OF CALIFORNIA OR ITS OFFICERS OR AGENTS SHALL NOT BE RESPONSIBLE FOR THE ACCURACY OR COMPLETENESS OF SCANNED COPIES OF THIS PLAN SHEET.

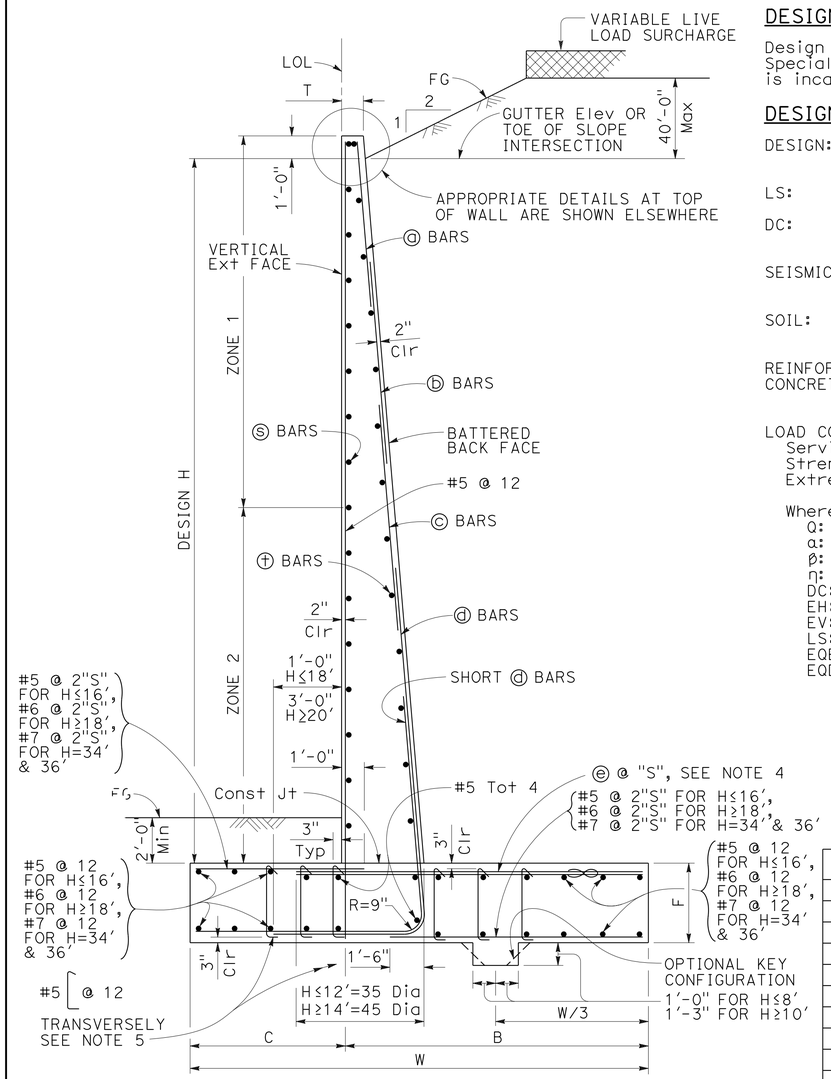

TYPICAL SECTION

DESIGN CONDITIONS:

Design H may be exceeded by 6" before going to the next size. Special footing design is required where foundation material is incapable of supporting bearing stress listed in the table.

DESIGN NOTES:

DESIGN: AASHTO LRFD Bridge Design Specifications, 4th Edition with California Amendments

LS: Varied surcharge on level ground surface

DC: Stem Architectural Treatment of thickness up to 6" of concrete (75 psf) considered

SEISMIC: $k_h = 0.2$
$k_v = 0.0$

SOIL: $\phi = 34°$
$\gamma = 120$ pcf

REINFORCED CONCRETE: $f'c = 3{,}600$ psi
$fy = 60{,}000$ psi

LOAD COMBINATIONS AND LIMIT STATES:

Service I	Q = 1.00DC+1.00EV+1.00EH+1.00LS
Strength I	Q = αDC+βEV+ηEH+1.75LS
Extreme I	Q = 1.00DC+1.00EV+1.00EH+1.00EQD+1.00EQE

Where:

Q:	Force Effects
α:	1.25 or 0.90, Whichever Controls Design
β:	1.35 or 1.00, Whichever Controls Design
η:	1.50 or 0.90, Whichever Controls Design
DC:	Dead Load of Structure Components
EH:	Horizontal Earth Fill Pressure
EV:	Vertical Earth Pressure from Earth Fill Weight
LS:	Live Load Surcharge
EQE:	Seismic Earth Pressure
EQD:	Soil and Structural and Nonstructural Components Inertia

SYMBOLS:

TO ACCOMPANY PLANS DATED 6-24-13

Ser - service limit state I
Str - strength limit state I
Ext - extreme event limit state I
B′ - effective footing width (ft)
q'_o - net bearing stress (ksf), OG assumed to be FG at toe
q_o - gross uniform bearing stress (ksf)
h1 = Top of footing to top of short ⓓ bar
h2 = Top of footing to top of ⓓ bar
h3 = Top of footing to top of ⓒ bar
h4 = Top of footing to top of ⓑ bar
Zone 1 = Top half of stem height
Zone 2 = Bottom half of stem height
∞ - Bundle of two bars

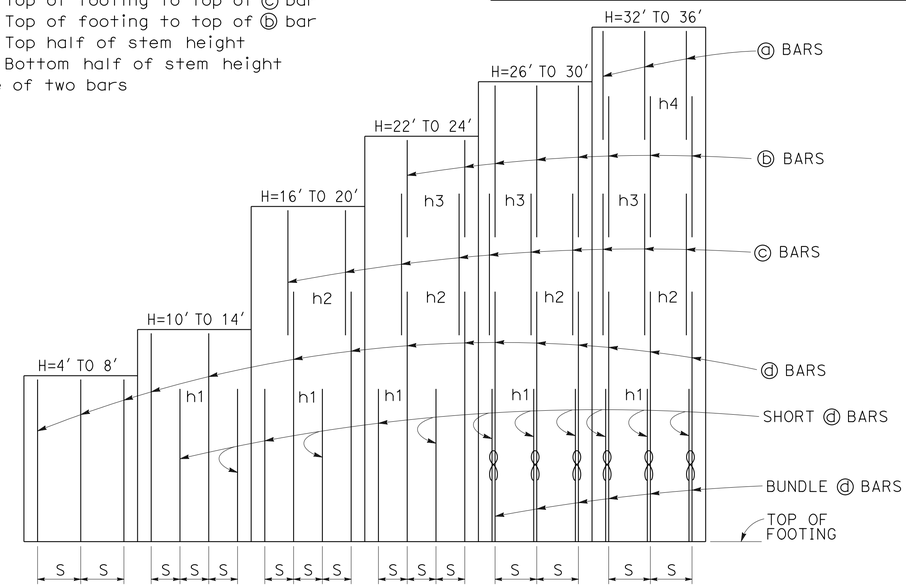

ELEVATION

TABLE OF REINFORCING STEEL, DIMENSIONS AND DATA

DESIGN H	4′	6′	8′	10′	12′	14′	16′	18′	20′	22′	24′	26′	28′	30′	32′	34′	36′
W	6′-0"	7′-6"	9′-6"	11′-0"	12′-6"	15′-6"	17′-3"	19′-6"	21′-9"	23′-6"	26′-0"	28′-1"	30′-3"	31′-6"	33′-0"	34′-8"	35′-11"
C	2′-0"	2′-6"	3′-3"	3′-6"	4′-3"	5′-0"	5′-3"	5′-9"	6′-9"	7′-3"	8′-3"	8′-9"	9′-0"	9′-6"	10′-0"	10′-10"	11′-3"
B	4′-0"	5′-0"	6′-3"	7′-6"	8′-3"	10′-6"	12′-0"	13′-9"	15′-0"	16′-3"	17′-9"	19′-4"	21′-3"	22′-0"	23′-0"	23′-10"	24′-8"
F	1′-6"	1′-6"	2′-0"	2′-3"	2′-6"	2′-8"	2′-10"	3′-0"	3′-4"	3′-6"	3′-6"	3′-7"	3′-7"	3′-9"	3′-9"	4′-0"	4′-4"
T	11½"	11½"	11½"	11½"	11½"	11½"	11½"	11½"	11½"	11½"	11½"	11½"	1′-2"	1′-5"	1′-10"	2′-3"	2′-9"
BATTER	½: 12	½: 12	½: 12	½: 12	½: 12	⅝: 12	⅝: 12	¾: 12	⅞: 12	1 : 12	1⅛: 12	1⅛: 12	1⅛: 12	1⅛: 12	1⅛: 12	1⅛: 12	1⅛: 12
SPACING "S"	16"	12"	10"	7"	7"	7"	7"	7"	7"	6"	6"	10"	8"	7"	7"	7"	7"
ⓐ BARS	-	-	-	-	-	-	-	-	-	-	-	-	-	-	#5	#5	#5
ⓑ BARS	-	-	-	-	-	-	-	-	-	#5	#5	#5	#5	#5	#7	#7	#7
ⓒ BARS	-	-	-	-	-	-	#6	#6	#6	#7	#8	#8	#8	#8	#9	#9	#9
ⓓ BARS	#5	#5	#6	#6	#7	#8	#9	#10	#10	#10	#11	#11	#11	#11	#11	#11	#11
ⓔ BARS	#5	#5	#6	#6	#7	#8	#9	#10	#10	#10	#11	#11	#11	#11	#11	#11	#11
h1	-	-	-	5′-3"	6′-4"	7′-6"	8′-9"	9′-9"	11′-0"	11′-3"	11′-6"	10′-3"	11′-9"	12′-3"	12′-6"	13′-3"	13′-8"
h2	-	-	-	-	-	-	12′-8"	15′-6"	17′-0"	16′-6"	17′-3"	18′-0"	17′-6"	17′-4"	14′-10"	15′-9"	16′-4"
h3	-	-	-	-	-	-	-	-	-	18′-9"	21′-3"	21′-3"	22′-4"	22′-8"	18′-0"	18′-6"	19′-6"
h4	-	-	-	-	-	-	-	-	-	-	-	-	-	-	26′-3"	27′-4"	28′-6"
No. of Toe Stirrups	0	0	0	0	0	0	0	0	0	0	0	5	5	6	7	8	9
No. of Heel Stirrups	0	0	0	0	0	0	0	0	4	6	7	8	10	10	11	11	11
ZONE 1 ⓢ BARS	#5 @ 18	#5 @ 18	#5 @ 18	#5 @ 18	#5 @ 18	#5 @ 18	#5 @ 18	#5 @ 18	#5 @ 12	#5 @ 12	#5 @ 12	#5 @ 12	#5 @ 12	#6 @ 12	#6 @ 12	#6 @ 10	#6 @ 10
ZONE 2 ⓢ BARS	#5 @ 18	#5 @ 18	#5 @ 18	#5 @ 18	#5 @ 18	#5 @ 12	#5 @ 12	#5 @ 12	#5 @ 12	#6 @ 12	#6 @ 12	#7 @ 12	#7 @ 12	#7 @ 12	#7 @ 12	#7 @ 10	#7 @ 10
ZONE 1 ⓣ BARS	#4 @ 18	#4 @ 18	#4 @ 18	#4 @ 18	#4 @ 18	#4 @ 18	#4 @ 18	#4 @ 18	#4 @ 18	#4 @ 18	#4 @ 18	#4 @ 12	#4 @ 12	#4 @ 12	#5 @ 12	#5 @ 12	#5 @ 12
ZONE 2 ⓣ BARS	#4 @ 18	#4 @ 18	#4 @ 18	#4 @ 18	#4 @ 18	#4 @ 12	#4 @ 12	#4 @ 12	#4 @ 12	#4 @ 12	#4 @ 12	#5 @ 12	#5 @ 12	#5 @ 12	#6 @ 12	#6 @ 12	#6 @ 12
Ser: B′, q'_o	4.0, 0.9	5.5, 1.0	9.3, 1.0	10.9, 1.3	12.3, 1.5	14.8, 1.9	16.6, 2.1	18.7, 2.4	20.6, 2.7	22.3, 3.0	24.2, 3.3	26.1, 3.5	28.2, 3.9	29.6, 4.0	31.1, 4.2	32.7, 4.4	34.1, 4.6
Str: B′, q_o	2.2, 2.2	3.5, 2.2	5.1, 2.3	6.3, 2.6	7.6, 2.7	12.9, 3.1	14.3, 3.6	16.5, 3.9	19.4, 4.5	20.7, 4.8	22.5, 5.2	24.3, 5.6	26.2, 6.0	27.5, 6.3	28.8, 6.6	30.3, 6.9	31.8, 7.2
Ext: B′, q_o	2.3, 3.4	2.7, 4.4	3.6, 5.0	3.8, 6.5	4.5, 7.0	7.0, 6.1	7.6, 6.9	9.3, 7.0	11.0, 7.1	11.8, 7.6	14.1, 7.4	15.6, 7.7	17.1, 8.0	17.2, 8.7	18.1, 9.0	19.0, 9.4	19.4, 10.0

NOTES:

1. For details not shown and drainage notes see RSP B3-5
2. For wall stem joint details see B0-3 3-3 and B0-3 3-4
3. At ⓓ and short ⓓ bars:
   H ≤ 6′, no splices are allowed within 1′-8" above the top of footing.
   H > 6′, no splices are allowed within H/4 above the top of footing.
4. Bundle ⓔ bars for H ≥ 26′.
5. Hook stirrups around & space with alternating transverse reinforcement at 2 x "S".

RSP B3-1B DATED APRIL 20, 2012 SUPPLEMENTS THE STANDARD PLANS BOOK DATED 2010.

STATE OF CALIFORNIA
DEPARTMENT OF TRANSPORTATION

RETAINING WALL TYPE 1 (CASE 2)

NO SCALE

REVISED STANDARD PLAN RSP B3-1B

2010 REVISED STANDARD PLAN RSP B3-1B

3-30-12

Dist	COUNTY	ROUTE	POST MILES TOTAL PROJECT	SHEET No.	TOTAL SHEETS
07	LA	5	0.0/7.6	607	985

TO ACCOMPANY PLANS DATED 6-24-13

REGISTERED CIVIL ENGINEER

April 20, 2012
PLANS APPROVAL DATE

REGISTERED PROFESSIONAL ENGINEER Gary Wang No. C58298 Exp. 6-30-12 CIVIL STATE OF CALIFORNIA

THE STATE OF CALIFORNIA OR ITS OFFICERS OR AGENTS SHALL NOT BE RESPONSIBLE FOR THE ACCURACY OR COMPLETENESS OF SCANNED COPIES OF THIS PLAN SHEET.

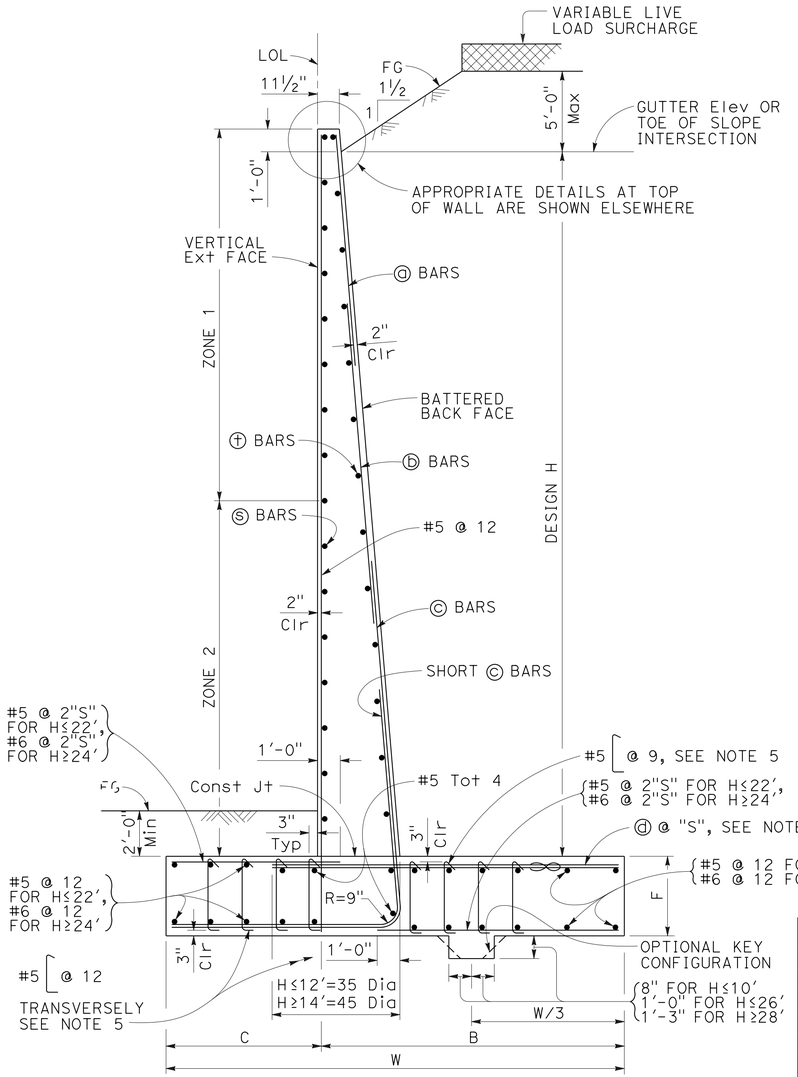

TYPICAL SECTION

DESIGN CONDITIONS:

Design H may be exceeded by 6" before going to the next size. Special footing design is required where foundation material is incapable of supporting bearing stress listed in the table.

DESIGN NOTES:

DESIGN: AASHTO LRFD Bridge Design Specifications, 4th Edition with California Amendments

LS: Varied surcharge on level ground surface

DC: Stem Architectural Treatment of thickness up to 6" of concrete (75 psf) considered

SEISMIC: $k_h = 0.2$
$k_v = 0.0$

SOIL: $\phi = 34°$
$\gamma = 120$ pcf

REINFORCED CONCRETE: $f'c = 3{,}600$ psi
$fy = 60{,}000$ psi

LOAD COMBINATIONS AND LIMIT STATES:

Service I $Q = 1.00DC+1.00EV+1.00EH+1.00LS$
Strength I $Q = \alpha DC+\beta EV+\eta EH+1.75LS$
Extreme I $Q = 1.00DC+1.00EV+1.00EH+1.00EQD+1.00EQE$

Where:

Q: Force Effects
α: 1.25 or 0.90, Whichever Controls Design
β: 1.35 or 1.00, Whichever Controls Design
η: 1.50 or 0.90, Whichever Controls Design
DC: Dead Load of Structure Components
EH: Horizontal Earth Fill Pressure
EV: Vertical Earth Pressure from Earth Fill Weight
LS: Live Load Surcharge
EQE: Seismic Earth Pressure
EQD: Soil and Structural and Nonstructural Components Inertia

SYMBOLS:

Ser - service limit state I
Str - strength limit state I
Ext - extreme event limit state I
B' - effective footing width (ft)
q_o' - net bearing stress (ksf), OG assumed to be FG at toe
q_o - gross uniform bearing stress (ksf)
h1 = Top of footing to top of short ⓒ bar
h2 = Top of footing to top of ⓒ bar
h3 = Top of footing to top of ⓑ bar
Zone 1 = Top half of stem height
Zone 2 = Bottom half of stem height
∞ - Bundle of two bars

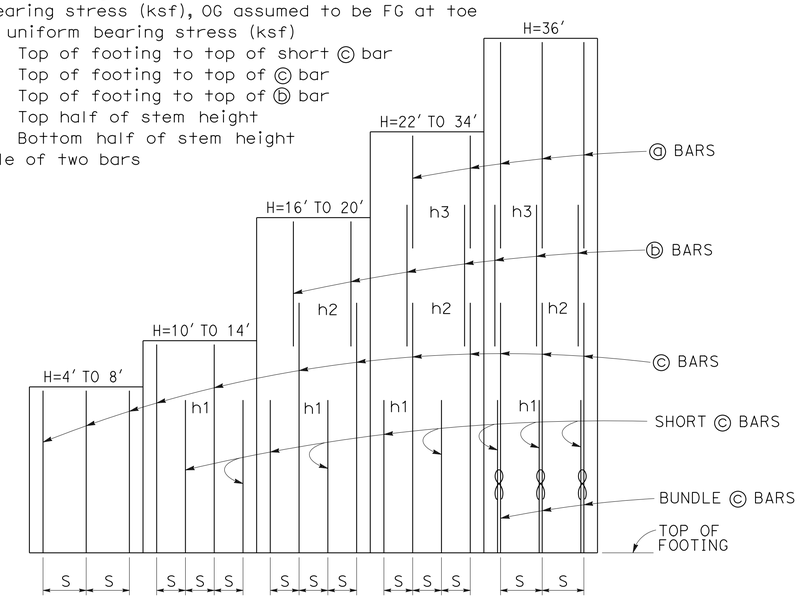

ELEVATION

NOTES:

1. For details not shown and drainage notes see RSP B3-5
2. For wall stem joint details see B0-3/3-3 and B0-3/3-4
3. At ⓒ bars:
   H ≤ 6', no splices are allowed within 1'-8" above the top of footing.
   H > 6', no splices are allowed within H/4 above the top of footing.
4. Bundle ⓓ bars for H = 36'.
5. Hook stirrups around & space with alternating transverse reinforcement at 2 x "S".

TABLE OF REINFORCING STEEL, DIMENSIONS AND DATA

DESIGN H	4'	6'	8'	10'	12'	14'	16'	18'	20'	22'	24'	26'	28'	30'	32'	34'	36'
W	6'-5"	7'-3"	8'-3"	9'-3"	10'-8"	12'-6"	13'-9"	15'-1"	16'-6"	17'-10"	19'-3"	20'-4"	21'-5"	22'-8"	23'-11"	25'-1"	26'-4"
C	2'-2"	2'-6"	3'-0"	3'-6"	3'-8"	3'-11"	4'-0"	4'-7"	5'-3"	6'-0"	7'-0"	7'-9"	8'-3"	8'-8"	9'-0"	9'-6"	9'-10"
B	4'-3"	4'-9"	5'-3"	5'-9"	7'-0"	8'-7"	9'-9"	10'-6"	11'-3"	11'-10"	12'-3"	12'-7"	13'-2"	14'-0"	14'-11"	15'-7"	16'-6"
F	1'-4"	1'-4"	1'-4"	1'-6"	1'-6"	1'-6"	1'-8"	2'-0"	2'-4"	2'-9"	3'-2"	3'-0"	3'-0"	3'-0"	3'-3"	3'-3"	3'-3"
BATTER	½: 12	½: 12	½: 12	½: 12	½: 12	½: 12	½: 12	½: 12	½: 12	½: 12	⅝: 12	¾: 12	1 : 12	1 : 12	1⅛: 12	1⅛: 12	1⅛: 12
SPACING "S"	16"	16"	16"	8"	8"	7"	7"	7"	6"	6"	7"	7"	7"	6"	6"	6"	8"
ⓐ BARS	-	-	-	-	-	-	-	-	-	#5	#5	#5	#5	#5	#5	#6	#6
ⓑ BARS	-	-	-	-	-	-	#5	#5	#5	#7	#7	#7	#8	#8	#8	#9	#9
ⓒ BARS	#5	#5	#6	#5	#6	#6	#7	#8	#8	#9	#10	#10	#10	#10	#10	#11	#11
ⓓ BARS	#5	#5	#6	#5	#6	#8	#9	#9	#9	#10	#11	#9	#9	#9	#10	#10	#9
h1	-	-	-	4'-2"	4'-7"	6'-2"	7'-3"	8'-6"	8'-8"	9'-8"	11'-0"	12'-2"	14'-0"	13'-0"	15'-10"	14'-6"	12'-0"
h2	-	-	-	-	-	-	10'-6"	12'-9"	14'-2"	13'-8"	17'-0"	18'-6"	17'-10"	18'-9"	20'-3"	21'-0"	17'-0"
h3	-	-	-	-	-	-	-	-	-	15'-6"	17'-9"	19'-6"	21'-8"	23'-0"	24'-8"	25'-6"	24'-8"
No. of Toe Stirrups	0	0	0	0	0	0	0	0	0	0	0	6	6	7	7	7	8
No. of Heel Stirrups	0	0	0	0	0	0	0	0	0	0	0	6	6	6	6	6	6
ZONE 1 ⓢ BARS	#5 @ 18	#5 @ 18	#5 @ 18	#5 @ 18	#5 @ 18	#5 @ 18	#5 @ 18	#5 @ 18	#5 @ 18	#5 @ 18	#5 @ 18	#5 @ 12	#5 @ 12	#5 @ 12	#5 @ 12	#5 @ 12	#5 @ 12
ZONE 2 ⓢ BARS	#5 @ 18	#5 @ 18	#5 @ 18	#5 @ 18	#5 @ 18	#5 @ 18	#5 @ 12	#5 @ 12	#5 @ 12	#5 @ 12	#5 @ 12	#6 @ 12	#6 @ 12	#6 @ 12	#7 @ 12	#7 @ 12	#7 @ 12
ZONE 1 ⓣ BARS	#4 @ 18	#4 @ 18	#4 @ 18	#4 @ 18	#4 @ 18	#4 @ 18	#4 @ 18	#4 @ 18	#4 @ 18	#4 @ 18	#4 @ 18	#4 @ 18	#4 @ 12	#4 @ 12	#4 @ 12	#4 @ 12	#4 @ 12
ZONE 2 ⓣ BARS	#4 @ 18	#4 @ 18	#4 @ 18	#4 @ 18	#4 @ 18	#4 @ 18	#4 @ 18	#4 @ 18	#4 @ 18	#4 @ 18	#4 @ 12	#4 @ 12	#5 @ 12	#5 @ 12	#5 @ 12	#5 @ 12	#5 @ 12
Ser: B', q_o'	4.3, 0.8	4.9, 1.1	5.6, 1.3	7.1, 1.5	8.0, 1.8	9.3, 2.1	10.6, 2.3	11.9, 2.5	13.3, 2.6	14.6, 2.8	15.9, 2.9	17.0, 3.0	18.0, 3.1	19.3, 3.3	20.4, 3.5	21.5, 3.7	22.7, 3.9
Str: B', q_o	2.4, 2.2	2.4, 2.7	2.7, 3.2	3.0, 3.7	4.3, 3.8	5.9, 3.8	7.0, 4.1	7.9, 4.3	9.0, 4.5	9.9, 4.7	10.8, 4.9	11.6, 5.0	12.3, 5.2	13.3, 5.4	14.2, 5.7	15.0, 5.9	16.0, 6.1
Ext: B', q_o	4.1, 1.5	3.9, 2.1	3.8, 2.8	3.5, 3.9	3.6, 4.9	4.2, 5.5	4.6, 6.3	5.0, 7.0	5.6, 7.4	6.0, 8.0	6.5, 8.4	6.9, 8.6	7.2, 9.2	7.7, 9.6	8.1, 10.4	8.4, 10.9	8.9, 11.3

STATE OF CALIFORNIA
DEPARTMENT OF TRANSPORTATION

RETAINING WALL TYPE 1 (CASE 3)

NO SCALE

RSP B3-1C DATED APRIL 20, 2012 SUPPLEMENTS THE STANDARD PLANS BOOK DATED 2010.

REVISED STANDARD PLAN RSP B3-1C

2010 REVISED STANDARD PLAN RSP B3-1C

3-30-12

Dist	COUNTY	ROUTE	POST MILES TOTAL PROJECT	SHEET No.	TOTAL SHEETS
07	LA	5	0.0/7.6	608	985

REGISTERED CIVIL ENGINEER

April 20, 2012
PLANS APPROVAL DATE

REGISTERED PROFESSIONAL ENGINEER Gary Wang No. C58298 Exp. 6-30-12 CIVIL STATE OF CALIFORNIA

THE STATE OF CALIFORNIA OR ITS OFFICERS OR AGENTS SHALL NOT BE RESPONSIBLE FOR THE ACCURACY OR COMPLETENESS OF SCANNED COPIES OF THIS PLAN SHEET.

TO ACCOMPANY PLANS DATED 6-24-13

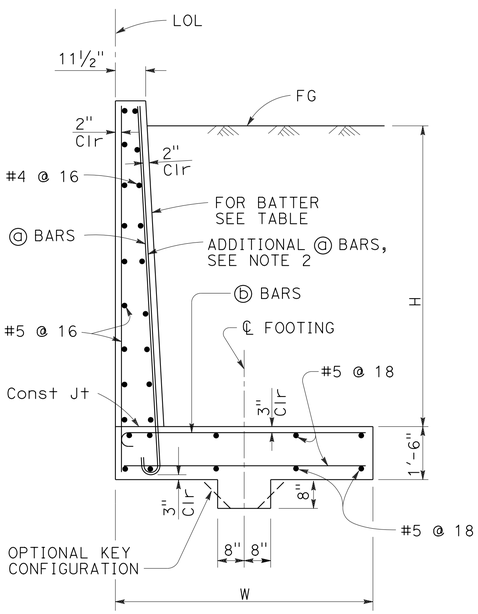

SPREAD FOOTING SECTION

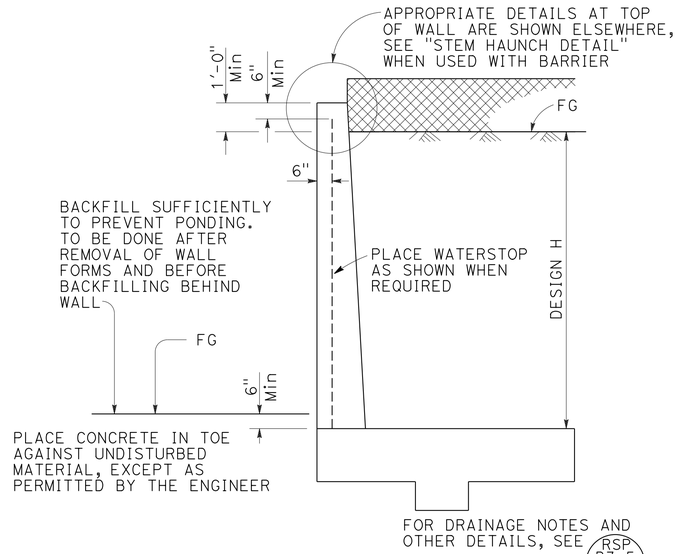

DESIGN SECTION

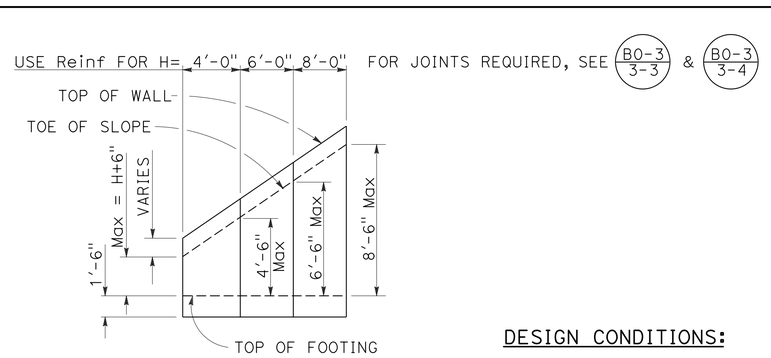

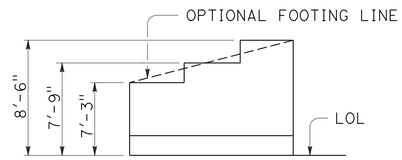

TYPICAL LAYOUT EXAMPLE

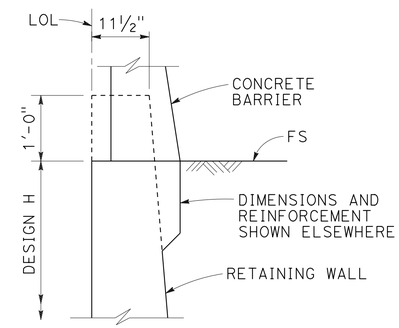

STEM HAUNCH DETAIL

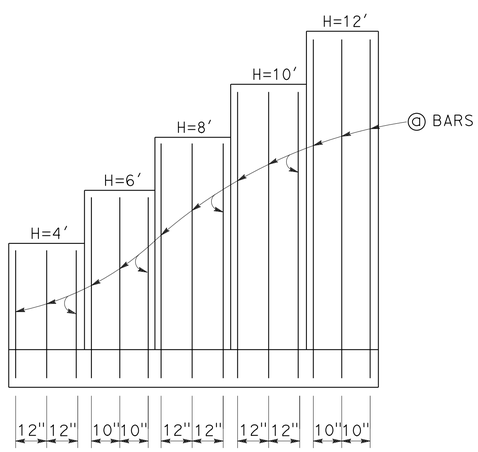

ELEVATION

SYMBOLS:

Ser - service limit state I
Str - strength limit state I
Ext I - extreme event limit state I
Ext II - extreme event limit state II
B' - effective footing width (ft)
q_o' - net bearing stress (ksf), OG assumed to be FG at toe
q_o - gross uniform bearing stress (ksf)

TABLE OF REINFORCING STEEL, DIMENSIONS AND DATA

DESIGN H	4'	6'	8'	10'	12'
W	7'-3"	7'-9"	8'-6"	9'-6"	10'-6"
BATTER	NONE	NONE	100 : 2	100 : 3	100 : 4
ⓐ BARS	#7 @ 12	#7 @ 10	#7 @ 12	#7 @ 12	#7 @ 10
ⓑ BARS	#7 @ 12	#7 @ 10	#8 @ 12	#9 @ 12	#10 @ 10
Ser: B', q_o'	6.2, 1.4	6.1, 1.8	6.4, 2.1	7.0, 2.5	7.7, 2.8
Str: B', q_o	6.2, 2.4	6.1, 2.9	5.3, 3.0	6.0, 3.5	6.6, 4.0
Ext I: B', q_o	4.4, 1.5	4.1, 2.2	4.0, 3.1	4.1, 3.9	4.2, 4.8
Ext II: B', q_o	2.5, 2.7	3.1, 3.0	3.8, 3.2	4.9, 3.3	5.8, 3.5

DESIGN CONDITIONS:

Design H may be exceeded by 6" before going to the next size. Special footing design is required where foundation material is incapable of supporting bearing stress listed in the table.

DESIGN NOTES:

DESIGN: AASHTO LRFD Bridge Design Specifications, 4th Edition with California Amendments

LS: Varied surcharge on level ground surface

DC: Stem Architectural Treatment of thickness up to 6" of concrete (75 psf) considered

CT: 54 kip transverse force applied at He = 32", distributed over 10 feet at the top of wall and 1 : 1 distribution down and outward. Distribution below footing taken no less than 40'.

SEISMIC: $k_h = 0.2$
$k_v = 0.0$

SOIL: $\phi = 34°$
$\gamma = 120$ pcf

REINFORCED CONCRETE: f'c = 3,600 psi
fy = 60,000 psi

LOAD COMBINATIONS AND LIMIT STATES:

Service I	Q = 1.00DC+1.00EV+1.00EH+1.00LS
Strength I	Q = αDC+βEV+ηEH+1.75LS
Extreme I	Q = 1.00DC+1.00EV+1.00EH+1.00EQD+1.00EQE
Extreme II	Q = 1.00DC+1.00EV+1.00EH+1.00CT

Where:

Q:	Force Effects
α:	1.25 or 0.90, Whichever Controls Design
β:	1.35 or 1.00, Whichever Controls Design
η:	1.50 or 0.90, Whichever Controls Design
DC:	Dead Load of Structure Components
EH:	Horizontal Earth Fill Pressure
EV:	Vertical Earth Pressure from Earth Fill Weight
LS:	Live Load Surcharge
EQE:	Seismic Earth Pressure
EQD:	Soil and Structural and Nonstructural Components Inertia
CT:	Vehicular Collision Force

NOTES:

1. At ⓐ bars:
   H ≤ 6', no splices are allowed within 1'-8" above the top of footing.
   H > 6', no splices are allowed within H/4 above the top of footing.

2. Provide #6 @ 8" ⓐ bars in addition to tabulated ⓐ bars over a distance of 8'-0" measured from all expansion joints, begin wall and end wall locations.

STATE OF CALIFORNIA
DEPARTMENT OF TRANSPORTATION

RETAINING WALL TYPE 5 (CASE 1)

NO SCALE

RSP B3-4A DATED APRIL 20, 2012 SUPPLEMENTS THE STANDARD PLANS BOOK DATED 2010.

REVISED STANDARD PLAN RSP B3-4A

2010 REVISED STANDARD PLAN RSP B3-4A

3-1-12

Dist	COUNTY	ROUTE	POST MILES TOTAL PROJECT	SHEET No.	TOTAL SHEETS
07	LA	5	0.0/7.6	609	985

REGISTERED CIVIL ENGINEER

April 20, 2012
PLANS APPROVAL DATE

REGISTERED PROFESSIONAL ENGINEER Gary Wang No. C58298 Exp. 6-30-12 CIVIL STATE OF CALIFORNIA

THE STATE OF CALIFORNIA OR ITS OFFICERS OR AGENTS SHALL NOT BE RESPONSIBLE FOR THE ACCURACY OR COMPLETENESS OF SCANNED COPIES OF THIS PLAN SHEET.

TO ACCOMPANY PLANS DATED 6-24-13

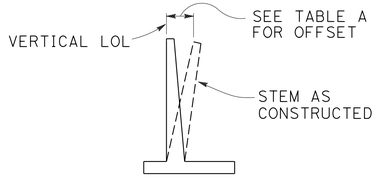

APPROXIMATE WALL OFFSET VALUES

Values for offseting forms to be determined by the Engineer.

TABLE A

H	OFFSET
4'-12'	H/200
14'-16'	H/160
18'-20'	H/140
22'-24'	H/130
26'-36'	2½"

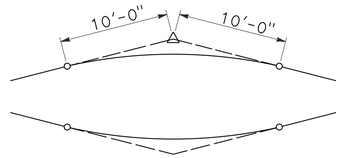

20'-0" VC AT TOP OF WALL SLOPE CHANGE

Where shown on the plans

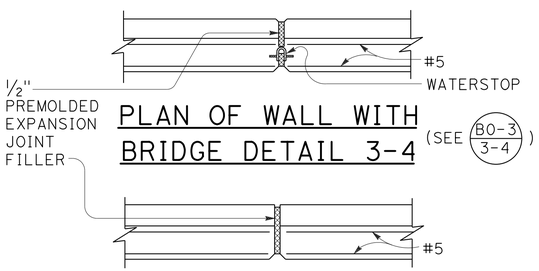

PLAN OF WALL WITH BRIDGE DETAIL 3-4

(SEE B0-3 / 3-4)

PLAN OF WALL WITH EXPANSION JOINT ONLY

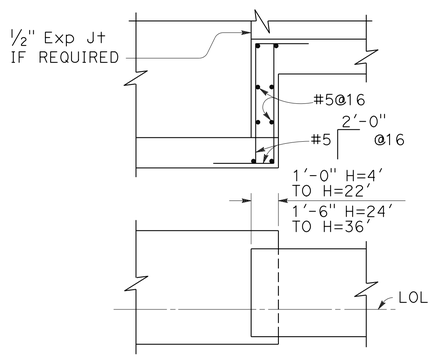

FOOTING STEP

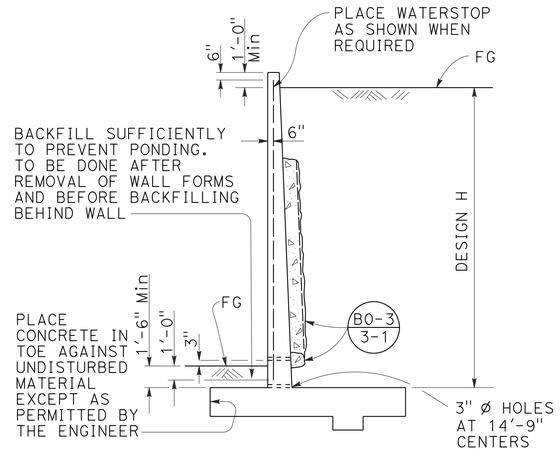

DESIGN AND DRAINAGE

DESIGN CONDITIONS:

Design "H" may be exceeded by 6" before going to the next size. Special footing design is required where foundation material is incapable of supporting bearing stress listed in table

Return wall not required unless shown elsewhere

DESIGN NOTES:

DESIGN: AASHTO LRFD Bridge Design Specifications, 4th edition with California Amendments

LIVE LOAD: Surcharge on level ground surface

SOIL: ϕ = 34°
γ = 120 pcf

REINFORCED CONCRETE: fy = 60,000 psi
fc' = 3,600 psi

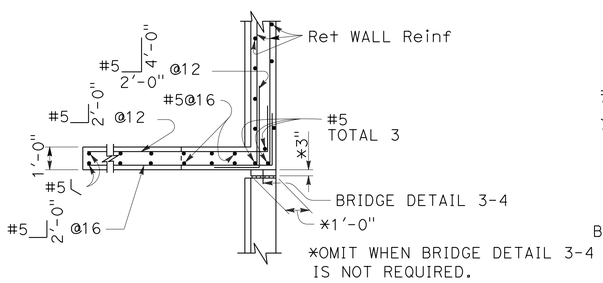

PLAN
(For return wall Type "A")

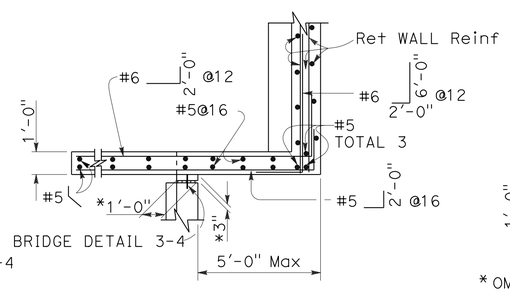

PLAN
(For return wall Type "B")

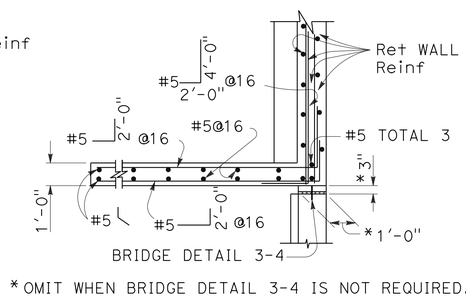

*OMIT WHEN BRIDGE DETAIL 3-4 IS NOT REQUIRED.

PLAN
(For return wall Type "C")

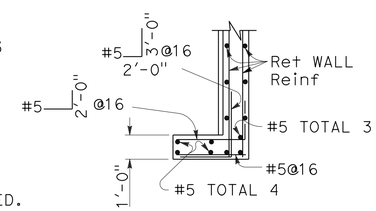

PLAN
(For return wall Type "D")

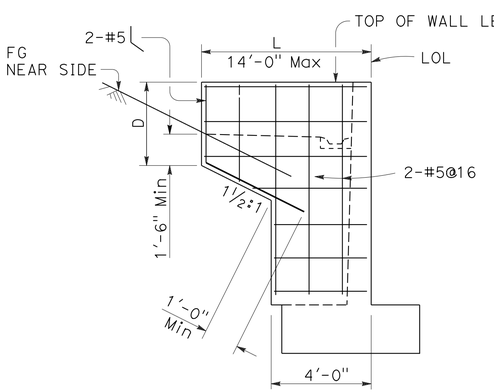

ELEVATION
RETURN WALL TYPE "A"
Use where H=8' or less

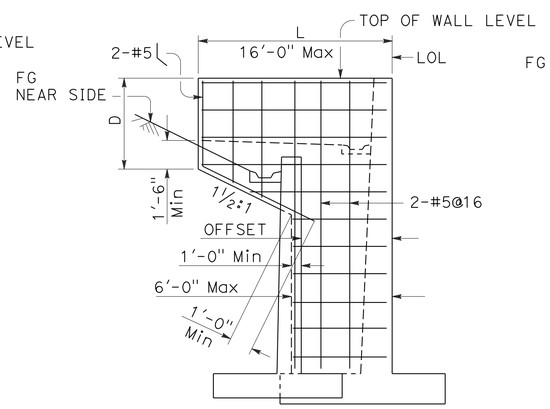

ELEVATION
RETURN WALL TYPE "B"
Use where H=10' or more on offset walls

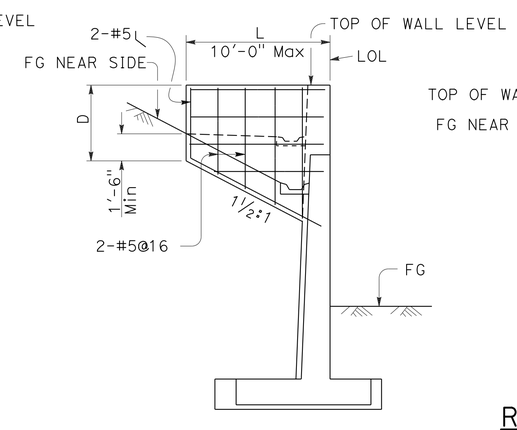

ELEVATION
RETURN WALL TYPE "C"
Use where H=10' or more on straight walls

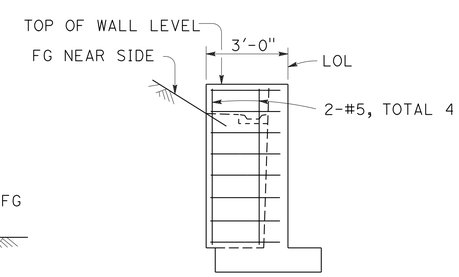

ELEVATION
RETURN WALL TYPE "D"
Use where H=6' or less

STATE OF CALIFORNIA
DEPARTMENT OF TRANSPORTATION

RETAINING WALL DETAILS No. 1

NO SCALE

RSP B3-5 DATED APRIL 20, 2012 SUPERSEDES STANDARD PLAN B3-5
DATED MAY 20, 2011 - PAGE 277 OF THE STANDARD PLANS BOOK DATED 2010.

REVISED STANDARD PLAN RSP B3-5

2010 REVISED STANDARD PLAN RSP B3-5

2-22-12

Dist	COUNTY	ROUTE	POST MILES TOTAL PROJECT	SHEET No.	TOTAL SHEETS
07	LA	5	0.0/7.6	610	985

REGISTERED CIVIL ENGINEER

October 21, 2011
PLANS APPROVAL DATE

REGISTERED PROFESSIONAL ENGINEER
Tillat Satter
No. C42892
Exp. 3-31-12
CIVIL
STATE OF CALIFORNIA

THE STATE OF CALIFORNIA OR ITS OFFICERS OR AGENTS SHALL NOT BE RESPONSIBLE FOR THE ACCURACY OR COMPLETENESS OF SCANNED COPIES OF THIS PLAN SHEET.

TO ACCOMPANY PLANS DATED 6-24-13

2010 REVISED STANDARD PLAN RSP B11-47

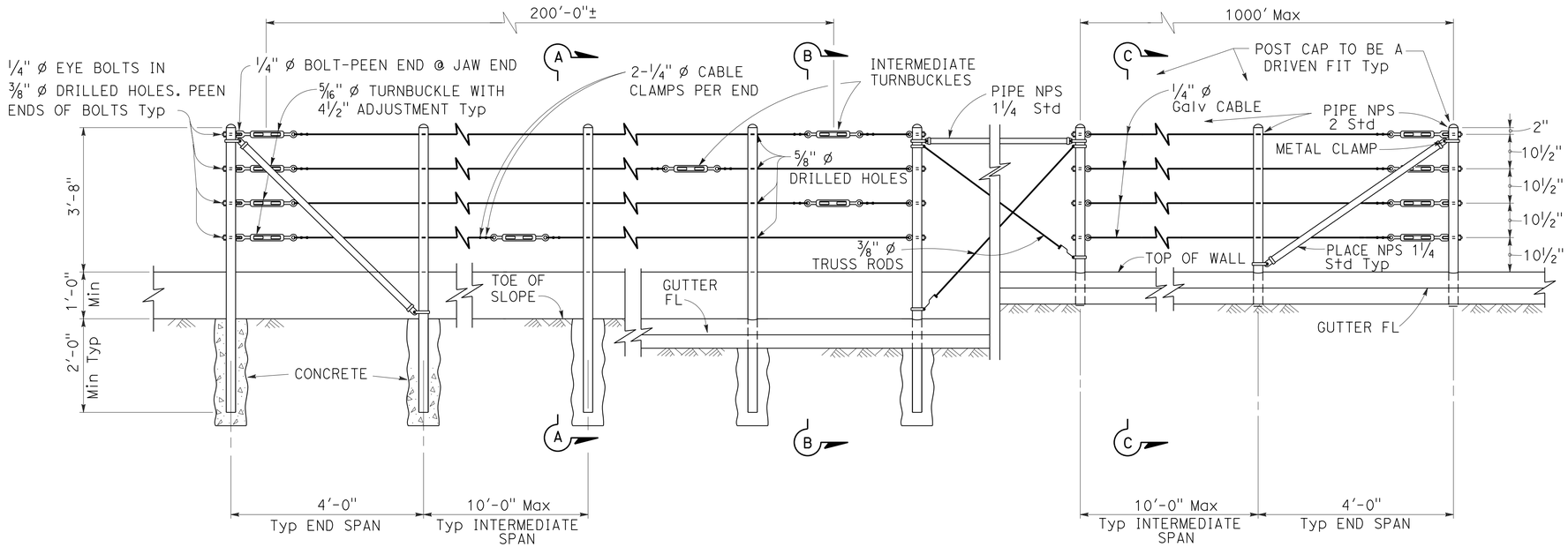

EXISTING WALL (WITHOUT GUTTER)
Existing

RETAINING WALL (WITH GUTTER)
Existing

RETAINING WALL (WITH GUTTER)
New construction

ELEVATION

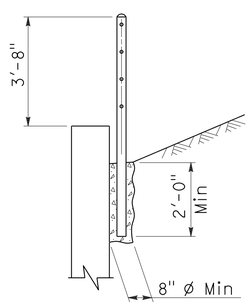

SECTION A-A
Existing

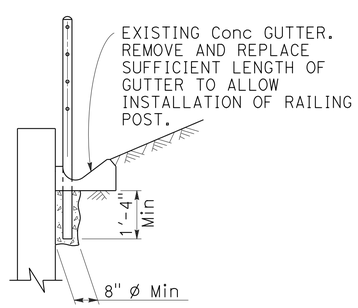

SECTION B-B
Existing

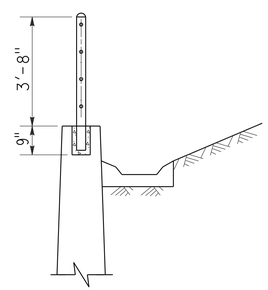

SECTION C-C
New construction

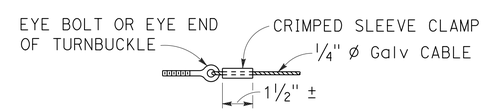

ALTERNATIVE CABLE CONNECTION

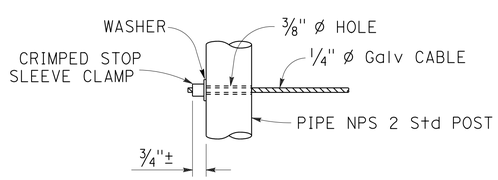

ALTERNATIVE DEAD END ANCHORAGE

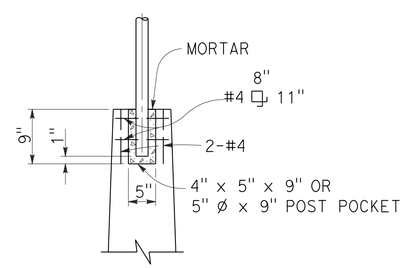

POST POCKET

NOTES:

1. Maximum distance between turnbuckles shall be 200'-0"±.
2. Intermediate turnbuckles to be placed in adjacent spans.
3. Cable shall not be spliced between intermediate turnbuckles and end posts.
4. Posts to be vertical.
5. Alignment of holes in posts may vary to conform to slope of top of retaining wall.
6. The Contractor shall verify all dependent dimensions in the field before ordering or fabricating any material.
7. Line posts shall be braced horizontally and trussed diagonally in both directions at intervals not to exceed 1000'.
8. Post pockets to be centered in top of wall.
9. Typical end spans, braced in both directions, shall be constructed at changes in line where the angle of deflection is 15° or more.
10. Provide thimbles at all cable loops.

STATE OF CALIFORNIA
DEPARTMENT OF TRANSPORTATION

CABLE RAILING

NO SCALE

RSP B11-47 DATED OCTOBER 21, 2011 SUPERSEDES STANDARD PLAN B11-47 DATED MAY 20, 2011 - PAGE 293 OF THE STANDARD PLANS BOOK DATED 2010.

REVISED STANDARD PLAN RSP B11-47

Dist	COUNTY	ROUTE	POST MILES TOTAL PROJECT	SHEET No.	TOTAL SHEETS
07	LA	5	0.0/7.6	611	985

REGISTERED CIVIL ENGINEER

October 19, 2012
PLANS APPROVAL DATE

REGISTERED PROFESSIONAL ENGINEER — Tillat Satter — No. C42892 — Exp. 3-31-14 — CIVIL — STATE OF CALIFORNIA

THE STATE OF CALIFORNIA OR ITS OFFICERS OR AGENTS SHALL NOT BE RESPONSIBLE FOR THE ACCURACY OR COMPLETENESS OF SCANNED COPIES OF THIS PLAN SHEET.

TO ACCOMPANY PLANS DATED 6-24-13

2010 REVISED STANDARD PLAN RSP B15-6

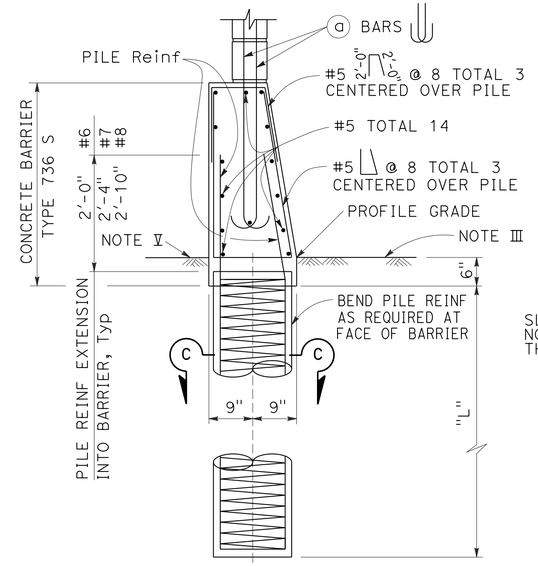

CASE 1

For details not shown, See Case 2.
Level ground ±10% on both sides of barrier.

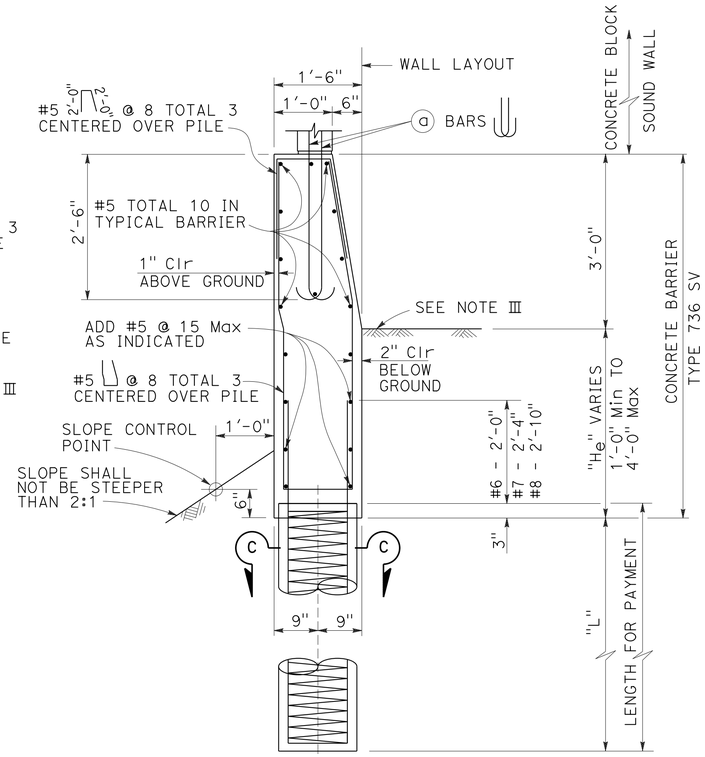

CASE 2

For details not shown, See Case 1.
Level ground ±10% at the traffic side of barrier and sloping ground on the opposite side.

BARRIER SECTIONS

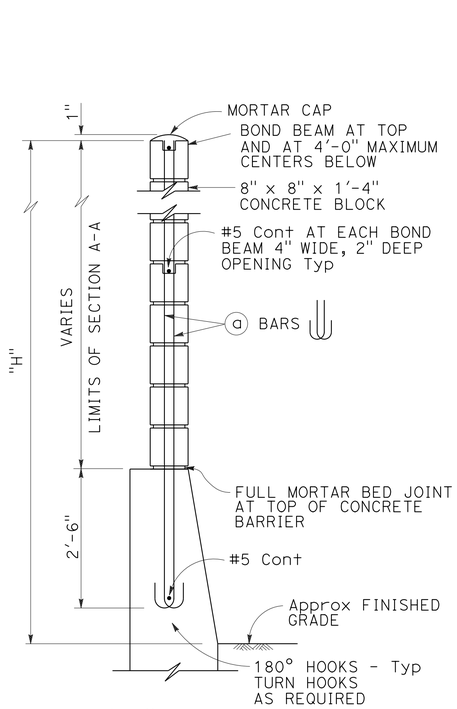

H=6'-4" THRU H=10'-4"

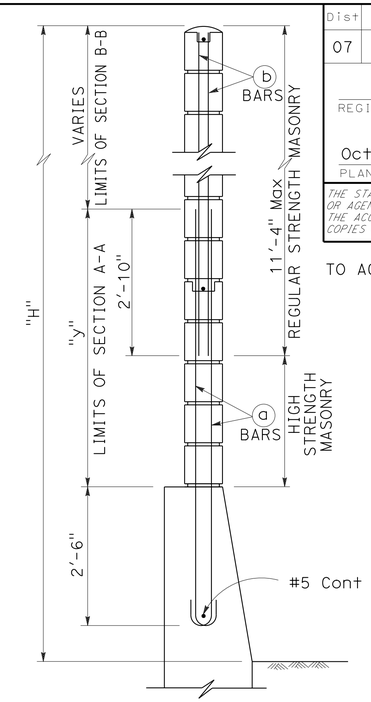

H=12'-4" THRU H=16'-4"

For details not shown, see H=6'-4" thru H=10'-4".

TYPICAL SECTIONS

See Standard Plan B15-8 for pile details.

SOUND WALL REINFORCEMENT TABLE

MAXIMUM H	(a) BARS @ 1'-4" Max	(b) BARS @ 1'-4" Max	"y"	f'm (psi)	COMPRESSIVE STRENGTH OF CMU (psi)	H
6'-4"	#4	---	---	1500	1900	6'-4"
8'-4"	#4	---	---	1500	1900	8'-4"
10'-4"	#4	---	---	1500	1900	10'-4"
12'-4"	#5	#4	5'-0"	1500	1900	12'-4"
14'-4"	#6	#4	7'-0"	1500	1900	14'-4"
16'-4"	#6	#4	9'-0"	2500	3750	16'-4"

NOTES I THROUGH VI:

I. Details shown are primarily to conform design of sound walls to Type 736S and Type 736 SV Concrete Barriers. For sound wall details conforming with barriers see Standard Plans B15-7 and B15-8.

II. For details and sections not shown, see Standard Plans B15-7 and B15-8.

III. Slope ground at traffic side of barrier to drain. Maximum slope ±10%. See Std Plan B11-56, Note 3.

IV. Pile spacing may be varied, but shall not exceed the tabular values. See Standard Plan B15-8.

V. For Case 1 - ground line to be at the same elevation on both sides of the barrier. Barrier shall not be used to retain earth.

VI. See Standard Plan B15-9 for other details.

NOTES A THROUGH F:

A. For type of block, type of block bond, and joint finish, see other sheets.

B. When blocks are laid in stacked bond, ladder type, galvanized joint reinforcement shall be provided. A minimum of 2-9 gauge wires continuous at 4'-0" maximum to be used. Locate reinforcement in joints that are at the approximate midpoint between bond beams.

C. Horizontal joints shall be tooled concave or may be weathered. Vertical joints shall be tooled concave or may be raked.

D. For intermediate wall heights (H), or barrier depths (H_e), that are between the values given, use the tabular information for the next higher (H) or (H_e).

E. Concrete to be used for the barrier shall contain not less than 590 pounds of cementitious material per cubic yard.

F. Masonry strengths are listed in the "SOUND WALL REINFORCEMENT TABLE".

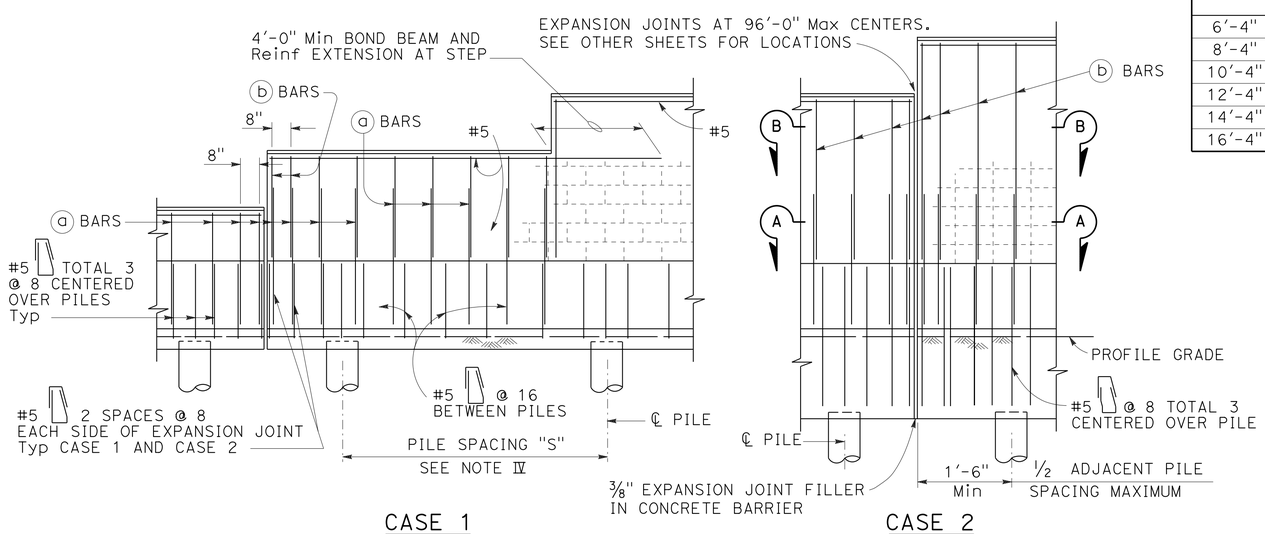

CASE 1

For details not shown, See Case 2.

CASE 2

For details not shown, See Case 1.

PARTIAL ELEVATIONS

STATE OF CALIFORNIA
DEPARTMENT OF TRANSPORTATION

SOUND WALL MASONRY BLOCK ON TYPE 736S/SV BARRIER DETAILS (1)

NO SCALE

RSP B15-6 DATED OCTOBER 19, 2012 SUPERSEDES STANDARD PLAN B15-6 DATED MAY 20, 2011 - PAGE 320 OF THE STANDARD PLANS BOOK DATED 2010.

REVISED STANDARD PLAN RSP B15-6

7-19-12

DIST	COUNTY	ROUTE	POST MILES TOTAL PROJECT	SHEET NO.	TOTAL SHEETS
07	LA	5	0.0/7.6	612	985

REGISTERED ELECTRICAL ENGINEER

January 20, 2012
PLANS APPROVAL DATE

REGISTERED PROFESSIONAL ENGINEER
Jeffery G. McRae
No. E14512
Exp. 6-30-12
ELECTRICAL
STATE OF CALIFORNIA

THE STATE OF CALIFORNIA OR ITS OFFICERS OR AGENTS SHALL NOT BE RESPONSIBLE FOR THE ACCURACY OR COMPLETENESS OF SCANNED COPIES OF THIS PLAN SHEET.

TO ACCOMPANY PLANS DATED 6-24-13

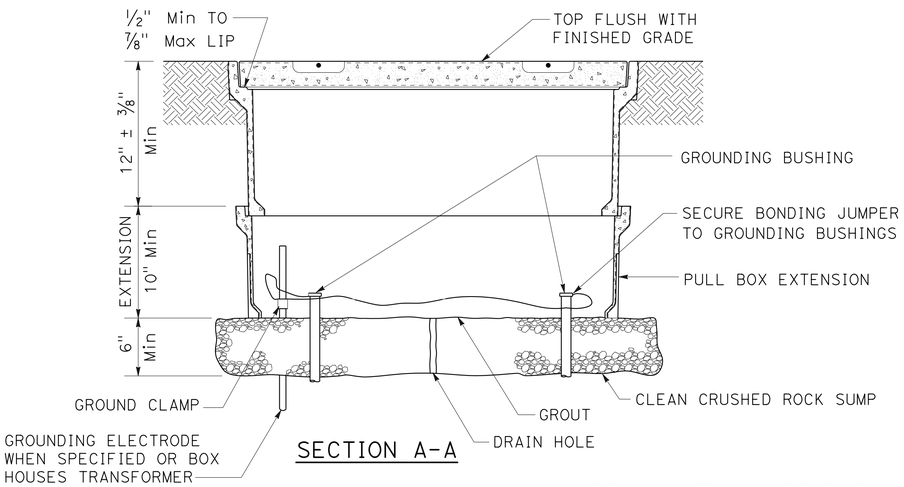

SECTION A-A

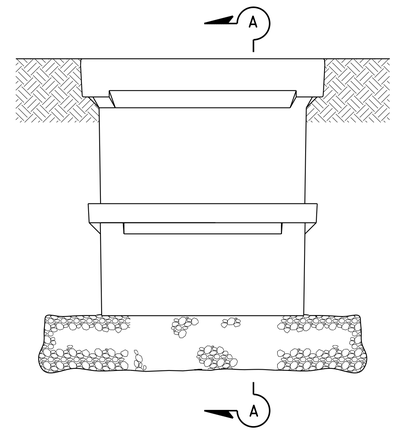

SIDE VIEW

INSTALLATION DETAILS

DETAIL A

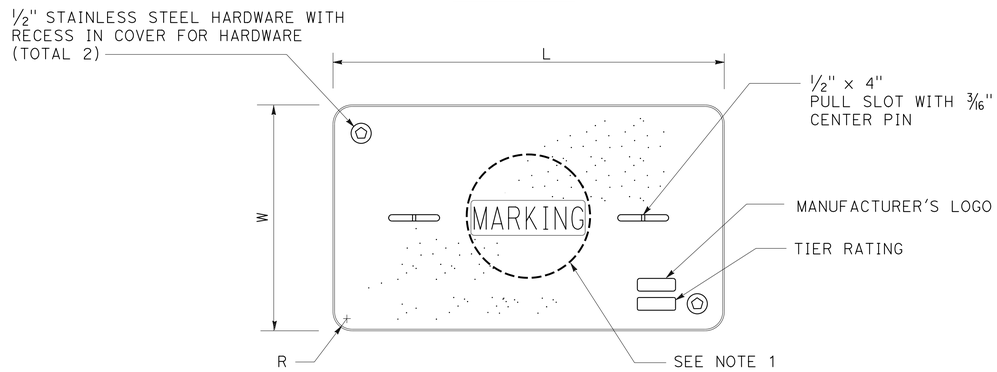

COVER TOP VIEW

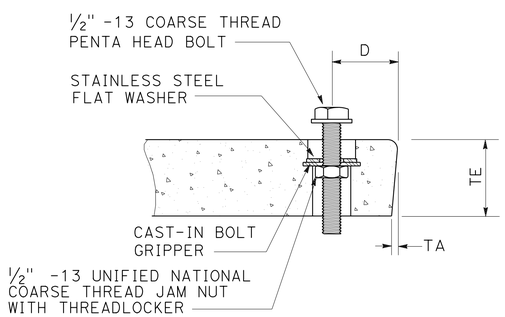

TYPICAL COVER CAPTIVE BOLT

OR SIMILAR

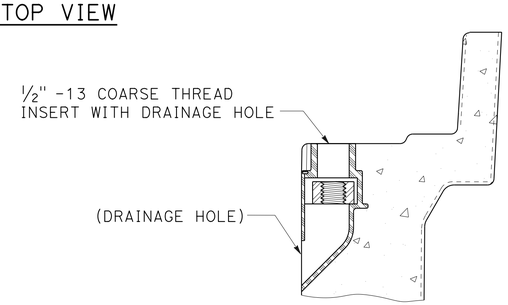

TYPICAL THREADED INSERT

OR SIMILAR

DIMENSION TABLE										
PULL BOX	PULL BOX			COVER						
	MINIMUM DEPTH BOX	MINIMUM DEPTH EXTENSION	MAXIMUM WEIGHT	L	W	R	TE	TA	D	MAXIMUM WEIGHT
No. 3 1/2	12"	N/A	40 lb	1' - 3 3/8"	10 1/8"	1 3/8"	2"	1/8"	1 3/4"	30 lb
No. 5	12"	10"	55 lb	1' - 11 1/4"	1' - 1 3/4"	1 3/8"	2"	1/8"	1 3/4"	60 lb
No. 6	12"	10"	70 lb	2' - 6 1/2"	1' - 5 1/2"	1 3/8"	2"	1/8"	2"	85 lb

NOTES ON PULL BOXES:

1. Pull box covers must be marked as follows: "SERVICE" Service circuits between service point and service disconnect; "SPRINKLER-CONTROL" sprinkler control circuits, 50 V or less; "CALTRANS" on all pull boxes, except pull boxes marked "SPRINKLER-CONTROL"; and "TELEPHONE" Telephone service;

   A) No. 3 1/2 pull box.
      1) "SIGNAL" - Traffic signal circuits with or without street or sign lighting circuits.
      2) "ST LIGHTING" - Street or sign lighting circuits where voltage is under 600 V.

   B) No. 5, 6, 9 or 9A pull box.
      1) "TRAFFIC SIGNAL" - Traffic signal circuits with or without street or sign lighting circuits.
      2) "STREET LIGHTING" - Street or sign lighting circuits where voltage is under 600 V.
      3) "STREET LIGHTING-HIGH VOLTAGE" - Street or sign lighting circuits where voltage is above 600 V.
      4) "IRRIGATION" - Circuits to irrigation controller 120 V or more.
      5) "RAMP METER" - Ramp meter circuits.
      6) "COUNT STATION" - Count or speed monitor circuits.
      7) "COMMUNICATIONS" - Communication circuits.
      8) "TOS COMMUNICATIONS" - TOS communication line.
      9) "TOS POWER" - TOS power.
      10) "TDC POWER" - Telephone demarcation cabinet power.
      11) "CCTV" - Closed circuit television circuits.
      12) "TMS" - Traffic monitoring station circuits.
      13) "CMS" - Changeable message sign circuits.
      14) "HAR" - Highway advisory radio circuits.

2. The nominal dimensions of the opening in which the cover sets must be the same as the cover dimensions (L and W) plus 1/8" or greater.

3. Covers and boxes must be interchangeable with California Standard. When interchanged with a standard, the top surfaces must be flush within 1/8". Top outside radius of covers and pull boxes must have a 1/8" radius.

4. Pull box extension may be another pull box as long as the bottom edge of the pull box can fit into the cover opening.

STATE OF CALIFORNIA
DEPARTMENT OF TRANSPORTATION

ELECTRICAL SYSTEMS (PULL BOX)

NO SCALE

RSP ES-8A DATED JANUARY 20, 2012 SUPPLEMENTS THE STANDARD PLANS BOOK DATED 2010.

REVISED STANDARD PLAN RSP ES-8A

2010 REVISED STANDARD PLAN RSP ES-8A

01-09-12

DIST	COUNTY	ROUTE	POST MILES TOTAL PROJECT	SHEET NO.	TOTAL SHEETS
07	LA	5	0.0/7.6	613	985

REGISTERED ELECTRICAL ENGINEER

January 20, 2012
PLANS APPROVAL DATE

REGISTERED PROFESSIONAL ENGINEER
Jeffery G. McRae
No. E14512
Exp. 6-30-12
ELECTRICAL
STATE OF CALIFORNIA

THE STATE OF CALIFORNIA OR ITS OFFICERS OR AGENTS SHALL NOT BE RESPONSIBLE FOR THE ACCURACY OR COMPLETENESS OF SCANNED COPIES OF THIS PLAN SHEET.

TO ACCOMPANY PLANS DATED 6-24-13

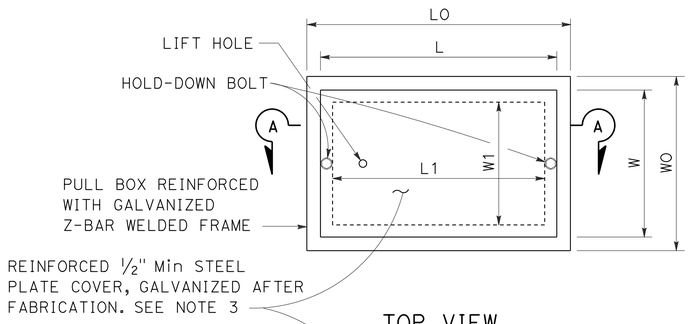

TOP VIEW

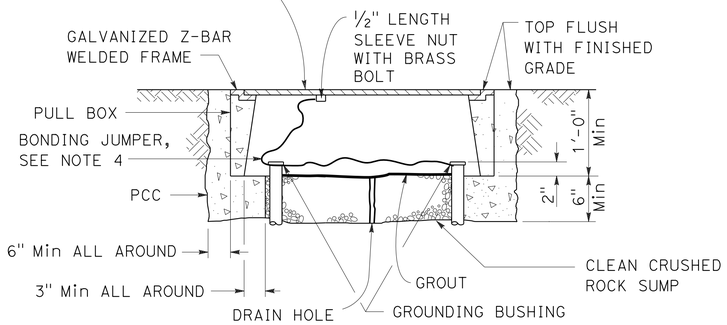

SECTION A-A

No. 3½(T), No. 5(T) AND No. 6(T) TRAFFIC PULL BOX

NOTES ON PULL BOXES:

1. Traffic pull box shall be provided with steel cover and special concrete footing. Steel cover shall have embossed non-skid pattern.
2. Steel reinforcing shall be as regularly used in the standard products of the respective manufacturer.
3. Pull box covers must be marked as follows: "SERVICE" Service circuits between service point and service disconnect; "SPRINKLER-CONTROL" Sprinkler control circuits, 50 V or less; "CALTRANS" On all pull boxes, except pull boxes marked "SPRINKLER-CONTROL"; and "TELEPHONE" Telephone service.
   A) No. 3½(T) pull box.
      1) "SIGNAL" - Traffic signal circuits with or without street or sign lighting circuits.
      2) "ST LIGHTING" - Street or sign lighting circuits where voltage is under 600 V.
   B) No. 5(T) or 6(T) pull box.
      1) "TRAFFIC SIGNAL" - Traffic signal circuits with or without street or sign lighting circuits.
      2) "STREET LIGHTING" - Street or sign lighting circuits where voltage is under 600 V.
      3) "STREET LIGHTING-HIGH VOLTAGE" - Street or sign lighting circuits where voltage is above 600 V.
      4) "IRRIGATION" - Circuits to irrigation controller 120 V or more.
      5) "RAMP METER" - Ramp meter circuits.
      6) "COUNT STATION" - Count or speed monitor circuits.
      7) "COMMUNICATION" - Communication circuits.
      8) "TOS COMMUNICATIONS" - TOS communications line.
      9) "TOS POWER" - TOS power.
      10) "TDC POWER" - Telephone demarcation cabinet power.
      11) "CCTV" - Closed circuit television circuits.
      12) "TMS" - Traffic monitoring station circuits.
      13) "CMS" - Changeable message sign circuits.
      14) "HAR" - Highway advisory radio circuits.
4. Bonding jumper for metal covers shall be 3' long, minimum.
5. The nominal dimensions of the opening in which the cover sets must be the same as the cover dimensions except the length and width dimensions shall be ⅛" greater.
6. Covers and boxes must be interchangeable with California standard male and female gages. When interchanged with a standard male or female gage, the top surfaces must be flush within ⅛".

DIMENSION TABLE

PULL BOX	BOX						COVER				
	MINIMUM * THICKNESS	MINIMUM DEPTH BOX AND EXTENSION	WO	LO	L1	W1	L **	W **	R	EDGE THICKNESS	EDGE TAPER
No. 3½(T)	1½"	1'-0"	1'-5"± 1"	1'-8⅞"±	1'-2½"±	10⅝"± 1"	1'-8"±	1'-1¾"±	0"	½"	NONE
No. 5(T)	1¾"	1'-0"	1'-11½"± 1"	2'-5½"±	1'-7"±	1'-1"± 1"	2'-3"±	1'-4"±	0"	½"	NONE
No. 6(T)	2"	1'-0"	2'-6"± 1"	2'-11½"±	1'-11½"±	1'-5"± 1"	2'-9"±	1'-8"±	0"	½"	NONE

* EXCLUDING CONDUIT WEB ** TOP DIMENSION

STATE OF CALIFORNIA
DEPARTMENT OF TRANSPORTATION

ELECTRICAL SYSTEMS (TRAFFIC RATED PULL BOX)

NO SCALE

RSP ES-8B DATED JANUARY 20, 2012 SUPPLEMENTS THE STANDARD PLANS BOOK DATED 2010.

REVISED STANDARD PLAN RSP ES-8B

2010 REVISED STANDARD PLAN RSP ES-8B

Dist	COUNTY	ROUTE	POST MILES TOTAL PROJECT	SHEET No.	TOTAL SHEETS
07	LA	5	0.0/7.6	614	985

REGISTERED ELECTRICAL ENGINEER

July 20, 2012
PLANS APPROVAL DATE

REGISTERED PROFESSIONAL ENGINEER
Jeffery G. McRae
No. E14512
Exp. 6-30-14
ELECTRICAL
STATE OF CALIFORNIA

THE STATE OF CALIFORNIA OR ITS OFFICERS OR AGENTS SHALL NOT BE RESPONSIBLE FOR THE ACCURACY OR COMPLETENESS OF SCANNED COPIES OF THIS PLAN SHEET.

TO ACCOMPANY PLANS DATED 6-24-13

ISOFOOTCANDLE CURVE - MINIMUM

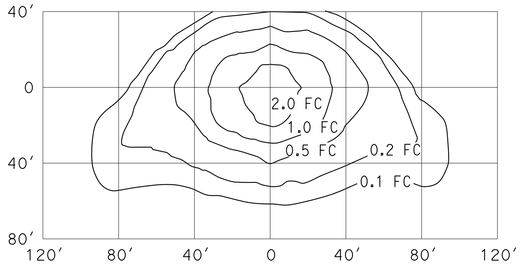

TYPE III MEDIUM CUTOFF

Cutoff Luminaire
34′ Mounting Height
Lamp operated at 22,000 lm
200-W high pressure sodium lamp
ANSI Designation S66

ISOFOOTCANDLE CURVE - MINIMUM

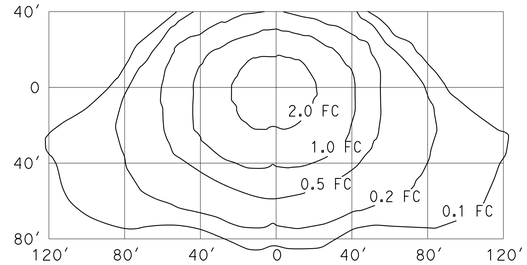

TYPE III MEDIUM CUTOFF

Cutoff Luminaire
40′ Mounting Height
Lamp operated at 37,000 lm
310-W high pressure sodium lamp
ANSI Designation S67

ISOFOOTCANDLE CURVE - MINIMUM

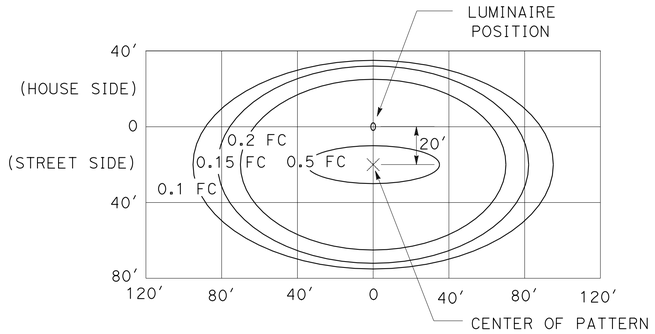

LED LUMINAIRE ROADWAY 1

200-W HPS Equivalent at 34′ Mounting Height

ISOFOOTCANDLE CURVE - MINIMUM

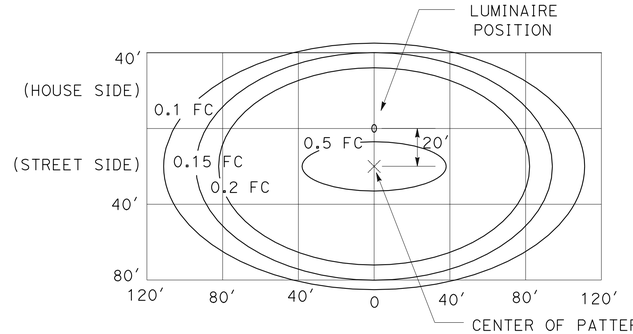

LED LUMINAIRE ROADWAY 2

310-W HPS Equivalent at 40′ Mounting Height

ISOFOOTCANDLE CURVE - MINIMUM

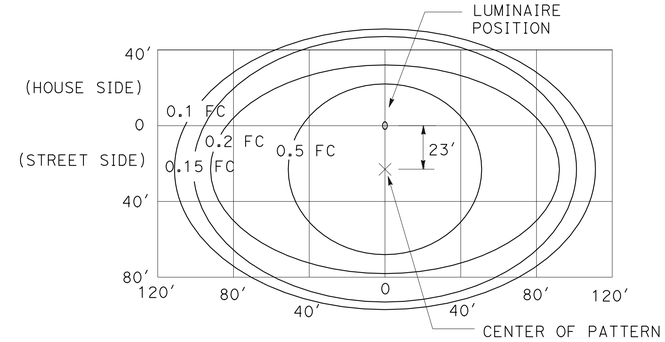

LED LUMINAIRE ROADWAY 4

400-W HPS Equivalent at 40′ Mounting Height

ISOFOOTCANDLE CURVE - MINIMUM

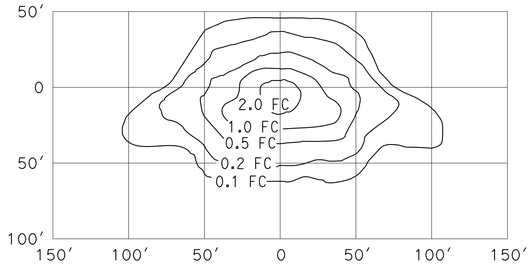

TYPE III MEDIUM CUTOFF

Cutoff Luminaire
30′ Mounting Height
Lamp operated at 16,000 lm
150-W high pressure sodium lamp
ANSI Designation S55

ISOFOOTCANDLE CURVE - MINIMUM

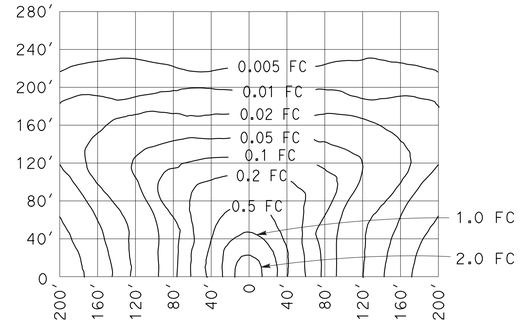

LOW PRESSURE SODIUM LUMINAIRE

40′ Mounting Height
Lamp operated at 33,000 lm
180-W low pressure sodium lamp

STATE OF CALIFORNIA
DEPARTMENT OF TRANSPORTATION

ELECTRICAL SYSTEMS (ISOFOOTCANDLE DIAGRAMS)

NO SCALE

RSP ES-10A DATED JULY 20, 2012 SUPPLEMENTS THE STANDARD PLANS BOOK DATED 2010.

REVISED STANDARD PLAN RSP ES-10A

2010 REVISED STANDARD PLAN RSP ES-10A

Dist	COUNTY	ROUTE	POST MILES TOTAL PROJECT	SHEET No.	TOTAL SHEETS
07	LA	5	0.0/7.6	615	985

REGISTERED ELECTRICAL ENGINEER

July 20, 2012
PLANS APPROVAL DATE

REGISTERED PROFESSIONAL ENGINEER
Jeffery G. McRae
No. E14512
Exp. 6-30-14
ELECTRICAL
STATE OF CALIFORNIA

THE STATE OF CALIFORNIA OR ITS OFFICERS OR AGENTS SHALL NOT BE RESPONSIBLE FOR THE ACCURACY OR COMPLETENESS OF SCANNED COPIES OF THIS PLAN SHEET.

TO ACCOMPANY PLANS DATED 6-24-13

ISOFOOTCANDLE CURVE - MINIMUM

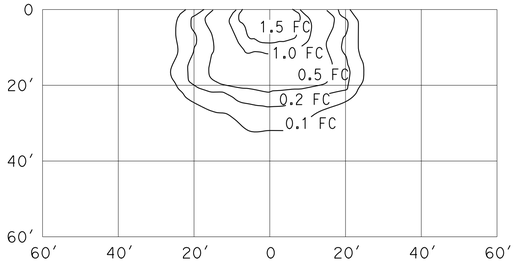

WALL LUMINAIRE
15′ Mounting Height
Lamp operated at 5,800 lm
70-W high pressure sodium lamp
ANSI Designation S62

ISOFOOTCANDLE CURVE - MINIMUM

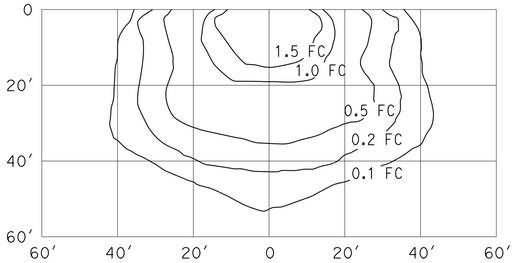

WALL LUMINAIRE
15′ Mounting Height
Lamp operated at 9,500 lm
100-W high pressure sodium lamp
ANSI Designation S54

ISOFOOTCANDLE CURVE - MINIMUM

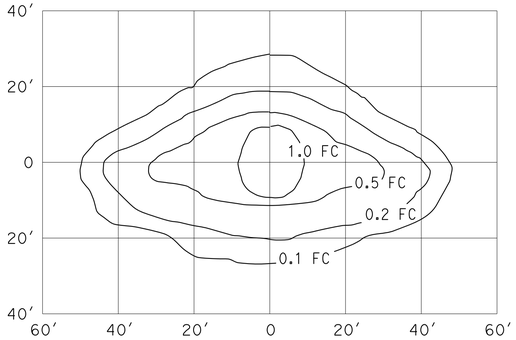

PENDANT SOFFIT LUMINAIRE
TYPE III SHORT
17′ Mounting Height
Lamp operated at 5,800 lm
70-W high pressure sodium lamp
ANSI Designation S62

ISOFOOTCANDLE CURVE - MINIMUM

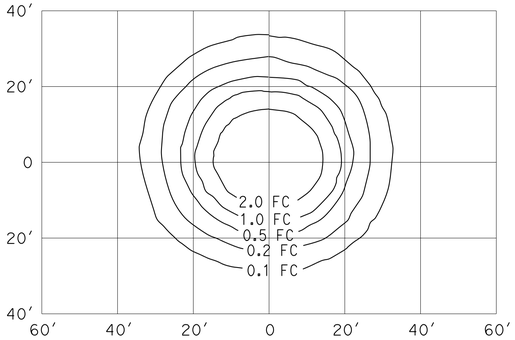

PENDANT SOFFIT LUMINAIRE
17′ Mounting Height
Lamp operated at 5,800 lm
70-W high pressure sodium lamp
ANSI Designation S62

ISOFOOTCANDLE CURVE - MINIMUM

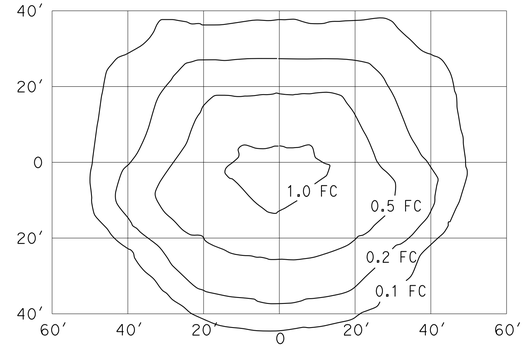

FLUSH SOFFIT LUMINAIRE
17′ Mounting Height
Lamp operated at 5,800 lm
70-W high pressure sodium lamp
ANSI Designation S62

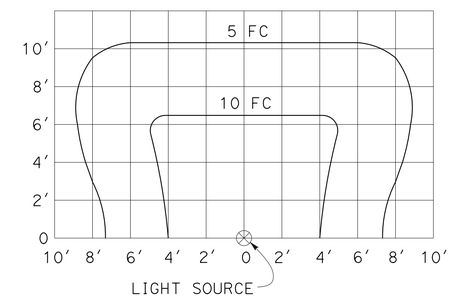

SIGN LIGHTING FIXTURE
ISOFOOTCANDLE DIAGRAM

NOTES:

1. Curves represent the minimum footcandle (FC) of initial illumination on a 10′-0" x 20′-0" panel.
2. The FC shown are with the fixture attached to the light fixture mounting channel which places the center of the source 4′-8" in front of panel and 1′-0" below the bottom edge.
3. Applicable lamp: 85-W fluorescent phosphor coated induction lamp.

STATE OF CALIFORNIA
DEPARTMENT OF TRANSPORTATION

ELECTRICAL SYSTEMS (ISOFOOTCANDLE DIAGRAMS)

NO SCALE

RSP ES-10B DATED JULY 20, 2012 SUPPLEMENTS THE STANDARD PLANS BOOK DATED 2010.

REVISED STANDARD PLAN RSP ES-10B

2010 REVISED STANDARD PLAN RSP ES-10B

DIST	COUNTY	ROUTE	POST MILES TOTAL PROJECT	SHEET No.	TOTAL SHEETS
07	LA	5	0.0/7.6	616	985

P. Vijitakula 12-28-12
REGISTERED CIVIL ENGINEER DATE

6-24-13
PLANS APPROVAL DATE

REGISTERED PROFESSIONAL ENGINEER P. VIJITAKULA No. C 54701 Exp. 12-31-13 CIVIL STATE OF CALIFORNIA

The State of California or its officers or agents shall not be responsible for the accuracy or completeness of electronic copies of this plan sheet.

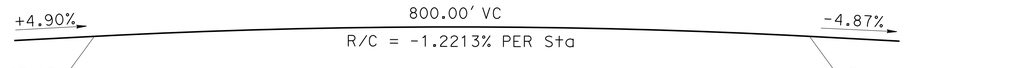

PROFILE GRADE

NO SCALE

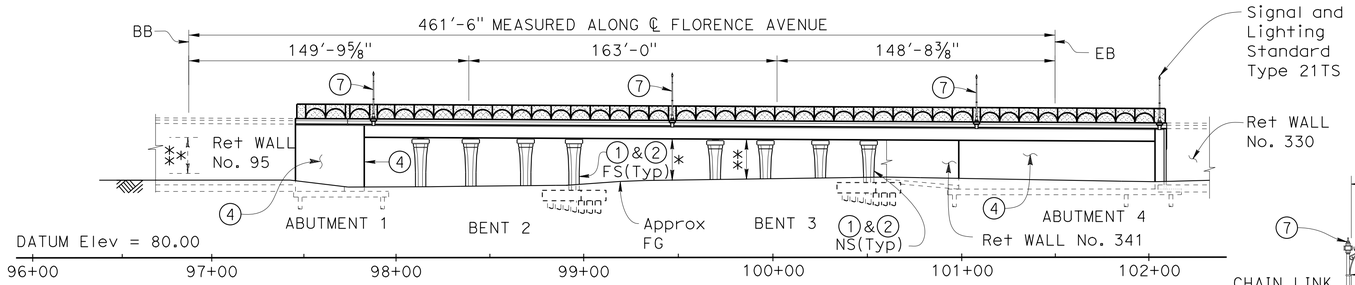

ELEVATION

1" = 40'

LEGEND:

- * 17'-8" SB MINIMUM VERTICAL CLEARANCE
- ** 17'-8⅝" NB MINIMUM VERTICAL CLEARANCE
- *** 19'-0" SB ON-RAMP MINIMUM VERTICAL CLEARANCE
- Indicates point of minimum vertical clearance
- Indicates existing structure

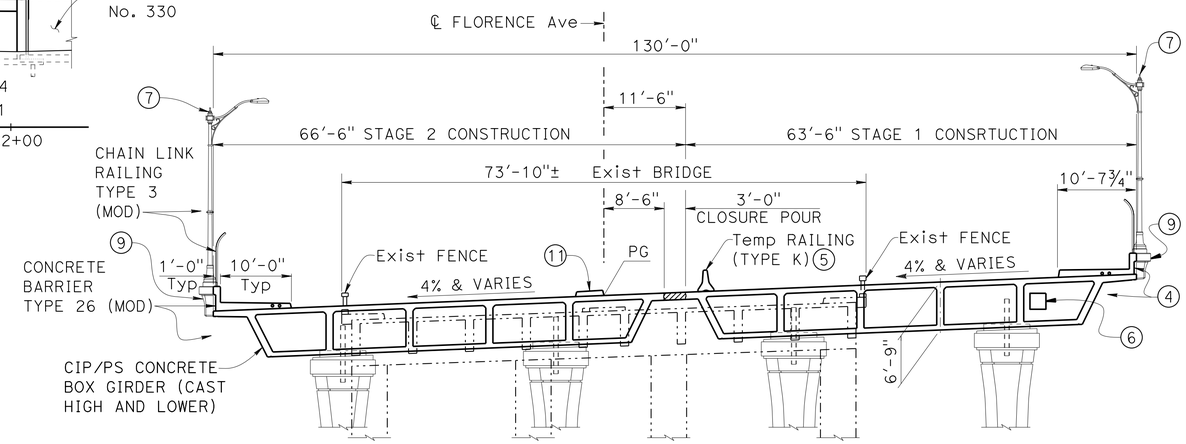

TYPICAL SECTION

3/32" = 1'

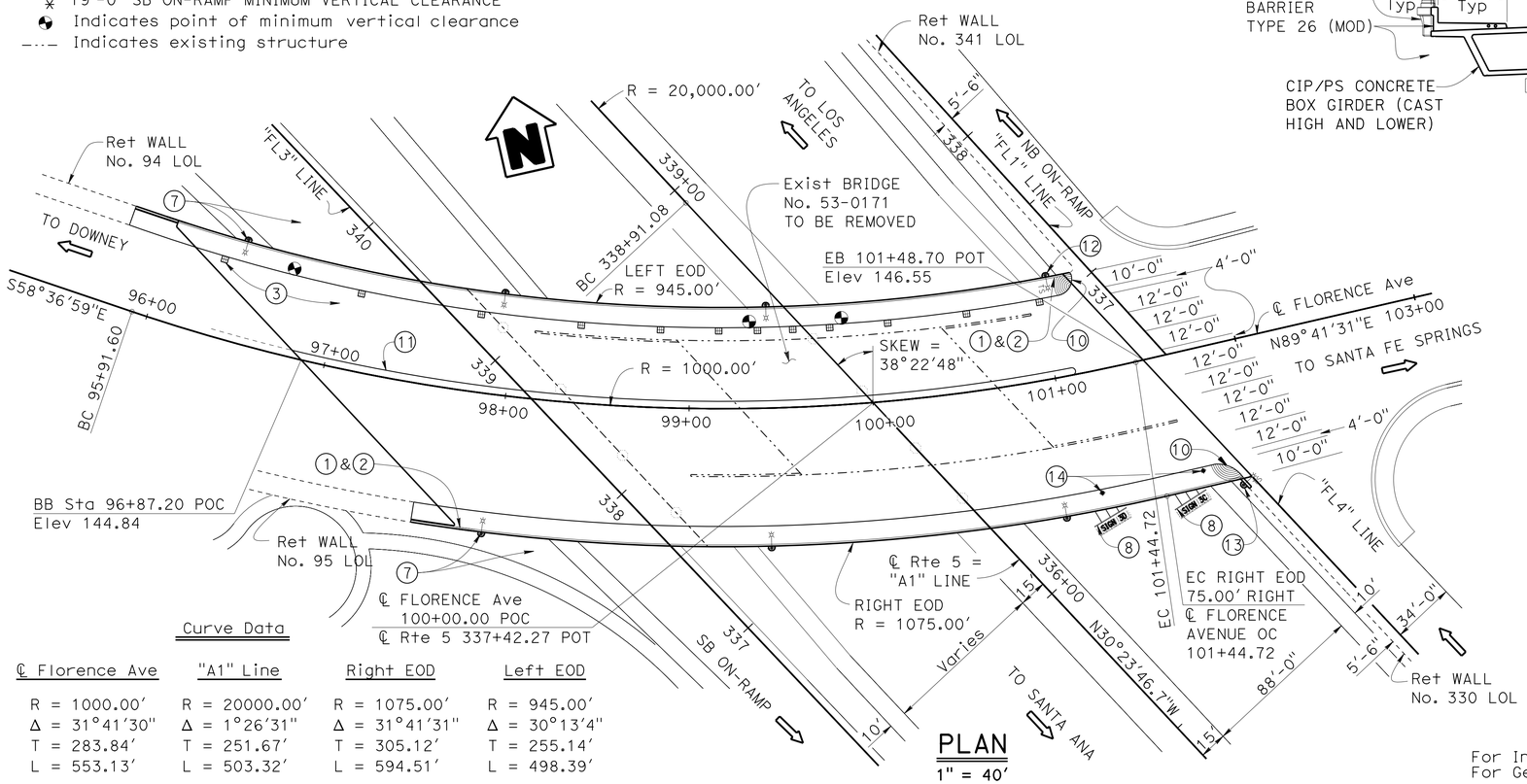

PLAN

1" = 40'

Curve Data

℄ Florence Ave	"A1" Line	Right EOD	Left EOD
R = 1000.00'	R = 20000.00'	R = 1075.00'	R = 945.00'
Δ = 31°41'30"	Δ = 1°26'31"	Δ = 31°41'31"	Δ = 30°13'4"
T = 283.84'	T = 251.67'	T = 305.12'	T = 255.14'
L = 553.13'	L = 503.32'	L = 594.51'	L = 498.39'

Notes:

1. Paint "Bridge No. 53-3065
2. Paint "Florence Avenue OC"
3. Deck Drain Type D-1 Total 12, see "Deck Details" sheet
4. Architectural Treatment
5. Temporary Railing Type K (Bolted to concrete deck), See "Bridge Details" sheet and "Road Plans"
6. Future Utility Opening See, "Typical Section Stage 1" sheet for location)
7. Decorative City Lighting Standard (Total 6), see "Road Plans"
8. Sign and Overhead Structure, see "Road Plans"
9. Luminaire Pedestal total 6, see "Luminaire Pedestal Details No. 1" and "Luminaire Pedestal Details No. 2" sheets
10. Curb Ramp, see "Road Plans"
11. Median, see "Deck Details" sheet
12. Pedestal for Signal and Lighting Standard Type 26A-4-100 (total 1), see "Signal And Lighting Pedestal Details No. 3" and "Signal And Lighting Pedestal Details No. 4" sheets
13. Pedestal for Signal and Lighting Standard Type 21TS (total 1), see "Signal And Lighting Pedestal Details No. 1" and "Signal And Lighting Pedestal Details No. 2" sheets
14. Electrical Systems (Signal and Lighting Standard, Type 1 and Equipment Numbering) (total 2), see Standard Plan ES-7B and "Road Plans"

For Index to Plans, Standard Plan List, see "Index To Plans" sheet.
For General Notes, Quantities and Pile Data Table, see "General Notes" sheet.

Jeff Sims
DESIGN ENGINEER

	BY	CHECKED
DESIGN	P. Vijitakula	Vadim Shostak
DETAILS	Bob Huddleston/C. Figuerres	Vadim Shostak
QUANTITIES	Art Herrera	Mike Bergman

LOAD & RESISTANCE FACTOR DESIGN — LIVE LOADING: HL93 W/"LOW-BOY" AND PERMIT DESIGN VEHICLE

	BY	CHECKED
LAYOUT	P. Vijitakula	Vadim Shostak
SPECIFICATIONS	Xiahong Li	PLANS AND SPECS COMPARED Xiahong Li

ORIGINAL SCALE IN INCHES FOR REDUCED PLANS 0 1 2 3

STATE OF CALIFORNIA
DEPARTMENT OF TRANSPORTATION

DIVISION OF ENGINEERING SERVICES
STRUCTURE DESIGN
DESIGN BRANCH 1

BRIDGE NO. 53-3065
POST MILE 6.38

FLORENCE AVENUE OC (REPLACE)
GENERAL PLAN

UNIT: 3576
PROJECT NUMBER & PHASE: 07000018351
CONTRACT NO.: 07-215954

DISREGARD PRINTS BEARING EARLIER REVISION DATES

REVISION DATES			SHEET	OF
03-01-11		09-28-12 03/29/13	1	56

USERNAME => s124096 DATE PLOTTED => 26-JUN-2013 TIME PLOTTED => 15:42

STRUCTURES DESIGN GENERAL PLAN SHEET (ENGLISH) (REV.09-01-10)

FILE => 53-3065-a-01-gp.dgn

DIST	COUNTY	ROUTE	POST MILES TOTAL PROJECT	SHEET No.	TOTAL SHEETS
07	LA	5	0.0/7.6	617	985

P. Vijitakula
REGISTERED CIVIL ENGINEER 12-28-12 DATE

6-24-13
PLANS APPROVAL DATE

REGISTERED PROFESSIONAL ENGINEER P. VIJITAKULA No. C 54701 Exp. 12-31-13 CIVIL STATE OF CALIFORNIA

The State of California or its officers or agents shall not be responsible for the accuracy or completeness of electronic copies of this plan sheet.

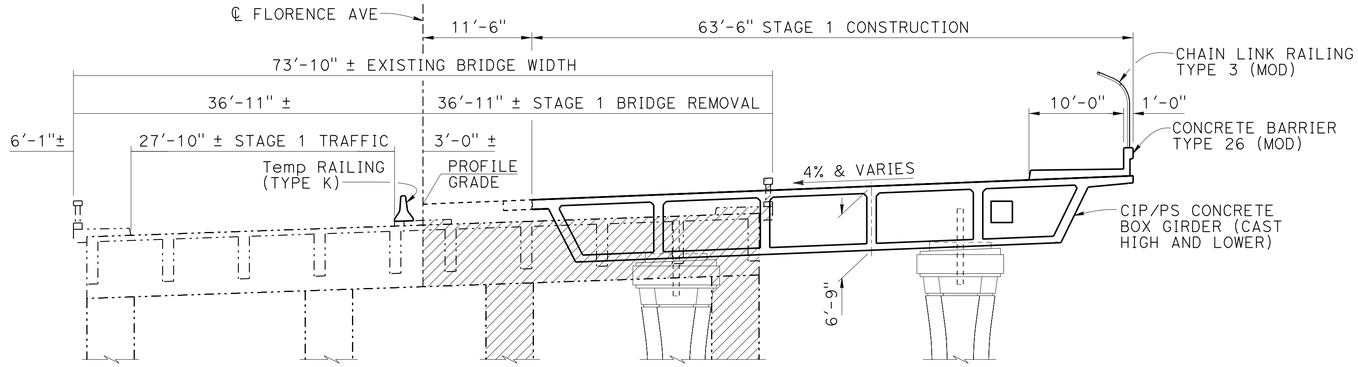

STAGE 1 CONSTRUCTION

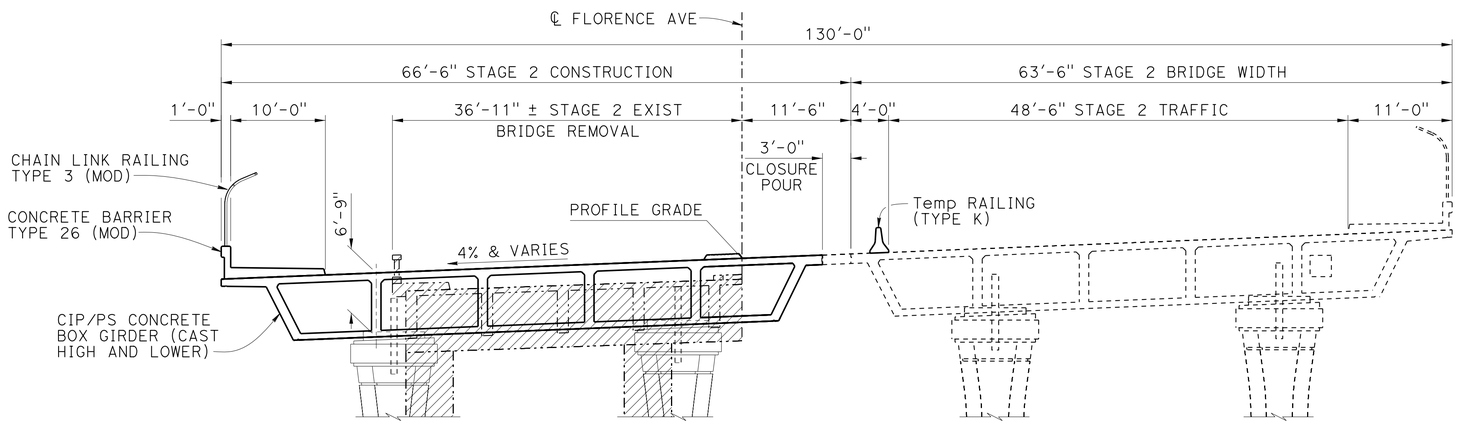

STAGE 2 CONSTRUCTION

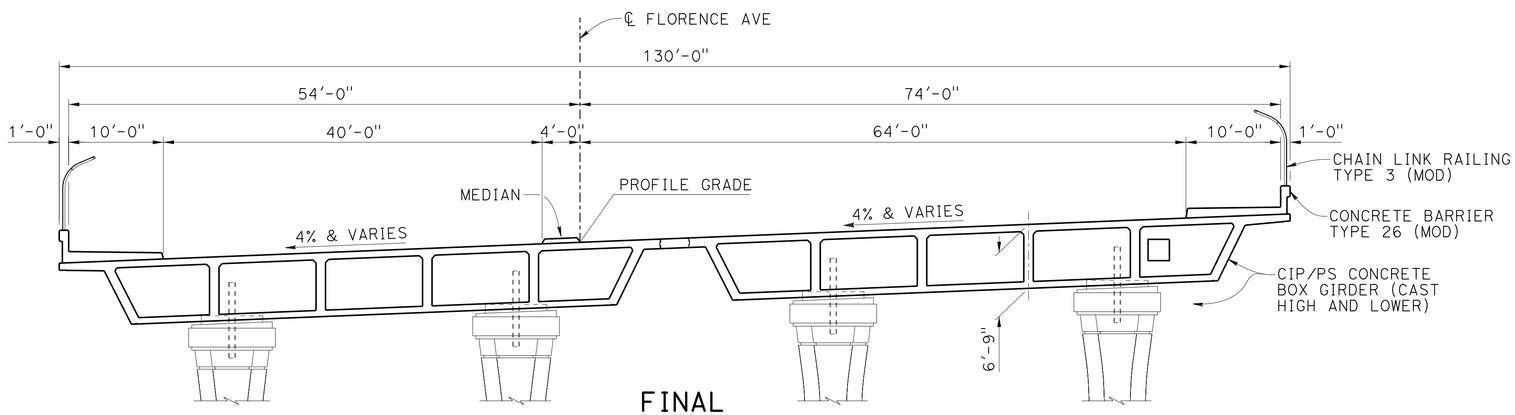

FINAL

TYPICAL SECTION

1/8" = 1'-0"

LEGEND:

- - - - - INDICATES EXISTING STRUCTURE

BRIDGE REMOVAL

Notes:

- Existing structure at bent cap overhang portion may require a shoring system after stage 1 bridge removal as determined by the Engineer.
- Stage traffic and construction shown shall apply to bridge work only. For additional details, see "ROAD PLANS".

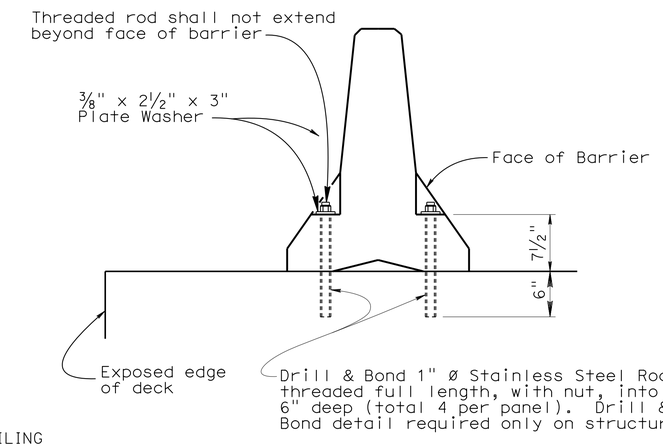

Note:

- For more details, see "Standard Plan T3A" and "Road Plans"

STAGE 2 TRAFFIC

TYPE K RAILING ATTACHMENT DETAILS

NO SCALE

	BY	CHECKED
DESIGN	P. Vijitakula	Vadim Shostak
DETAILS	Bob Huddleston/C. Figuerres	Vadim Shostak
QUANTITIES	Art Herrera	Mike Bergman

STATE OF CALIFORNIA
DEPARTMENT OF TRANSPORTATION

DIVISION OF ENGINEERING SERVICES
STRUCTURE DESIGN
DESIGN BRANCH 1

BRIDGE NO. 53-3065
POST MILE 6.38

FLORENCE AVENUE OC (REPLACE)
BRIDGE DETAILS

STRUCTURES DESIGN DETAIL SHEET (ENGLISH) (REV. 09-01-10)

ORIGINAL SCALE IN INCHES FOR REDUCED PLANS 0 1 2 3

UNIT: 3576
PROJECT NUMBER & PHASE: 07000018351
CONTRACT NO.: 07-215954

DISREGARD PRINTS BEARING EARLIER REVISION DATES

REVISION DATES 07-02-11 09-24-12 03/29/13

SHEET 2 OF 56

FILE => 53-3065-a-02-bridgedet.dgn

USERNAME => s124496 DATE PLOTTED => 26-JUN-2013 TIME PLOTTED => 15:42

DIST	COUNTY	ROUTE	POST MILES TOTAL PROJECT	SHEET No.	TOTAL SHEETS
07	LA	5	0.0/7.6	618	985

P. Vijitakula
REGISTERED CIVIL ENGINEER 12-28-12 DATE

6-24-13
PLANS APPROVAL DATE

REGISTERED PROFESSIONAL ENGINEER
P. VIJITAKULA
No. C 54701
Exp. 12-31-13
CIVIL
STATE OF CALIFORNIA

The State of California or its officers or agents shall not be responsible for the accuracy or completeness of electronic copies of this plan sheet.

INDEX TO PLANS

1. GENERAL PLAN
2. BRIDGE DETAILS
3. INDEX TO PLANS
4. GENERAL NOTES
5. DECK CONTOURS
6. FOUNDATION PLAN NO. 1
7. FOUNDATION PLAN NO. 2
8. ABUTMENT 1 STAGE 1 LAYOUT
9. ABUTMENT 1 STAGE 2 LAYOUT
10. ABUTMENT 4 STAGE 1 LAYOUT
11. ABUTMENT 4 STAGE 2 LAYOUT
12. ABUTMENT 1 DETAILS
13. ABUTMENT 4 DETAILS
14. ABUTMENT DETAILS NO. 1
15. ABUTMENT DETAILS NO. 2
16. ABUTMENT DETAILS NO. 3
17. BENT DETAILS STAGE 1
18. BENT DETAILS STAGE 2
19 BENT DETAILS NO. 1
20. BENT DETAILS NO. 2
21. BENT DETAILS NO. 3
22. BENT DETAILS NO. 4
23. TYPICAL SECTION STAGE 1
24. TYPICAL SECTION STAGE 2
25. GIRDER LAYOUT STAGE 1
26 GIRDER LAYOUT STAGE 2
27. GIRDER REINFORCEMENT NO. 1
28. GIRDER REINFORCEMENT NO. 2
29. GIRDER REINFORCEMENT NO. 3
30. GIRDER REINFORCEMENT NO. 4
31. GIRDER REINFORCEMENT NO. 5
32. DECK DETAILS
33. LUMINAIRE PEDESTAL DETAILS NO. 1
34. LUMINAIRE PEDESTAL DETAILS NO. 2
35. SIGNAL AND LIGHTING PEDESTAL DETAILS NO. 1
36. SIGNAL AND LIGHTING PEDESTAL DETAILS NO. 2
37. SIGNAL AND LIGHTING PEDESTAL DETAILS NO. 3
38. SIGNAL AND LIGHTING PEDESTAL DETAILS NO. 4
39. CHAIN LINK RAILING TYPE 3 (MODIFIED) DETAILS
40. CONSTRUCTION SEQUENCE STAGE 1
41. CONSTRUCTION SEQUENCE STAGE 2
42. CONSTRUCTION SEQUENCE NOTES
43. ABUTMENT 1 ARCHITECTURAL ELEVATION
44. ABUTMENT 4 ARCHITECTURAL ELEVATION
45. ARCHITECTURAL MOTIF DETAILS AT ABUTMENT 1
46. ARCHITECTURAL MOTIF DETAILS AT ABUTMENT 4
47. ABUTMENT 1 RETURN WALL ELEVATIONS
48. ABUTMENT 4 RETURN WALL ELEVATIONS
49. SECTIONS AT ABUTMENTS & RETAINING WALLS
50. BARRIER MOTIF DETAILS
51. LOG OF TEST BORINGS 1 OF 6
52. LOG OF TEST BORINGS 2 OF 6
53. LOG OF TEST BORINGS 3 OF 6
54. LOG OF TEST BORINGS 4 OF 6
55. LOG OF TEST BORINGS 5 OF 6
56. LOG OF TEST BORINGS 6 OF 6

STANDARD PLANS DATED 2010

A10A	ABBREVIATIONS (SHEET 1 OF 2)
A10B	ABBREVIATIONS (SHEET 2 OF 2)
A10C	LINES SYMBOLS (SHEET 1 OF 3)
A10D	LINES SYMBOLS (SHEET 2 OF 3)
A10E	LINES SYMBOLS (SHEET 3 OF 3)
A10F	LEGEND - SOIL (SHEET 1 OF 2)
A10G	LEGEND - SOIL (SHEET 2 OF 2)
A10H	LEGEND - ROCK
A62B	LIMITS OF PAYMENT FOR EXCAVATION AND BACKFILL BRIDGE SURCHARGE AND WALL
A62C	LIMITS OF PAYMENT FOR EXCAVATION AND BACKFILL BRIDGE
A87A	CURBS AND DRIVEWAYS
B0-1	BRIDGE DETAILS
B0-3	BRIDGE DETAILS
B0-5	BRIDGE DETAILS
B0-13	BRIDGE DETAILS
RSP B3-5	RETAINING WALL DETAILS NO. 1
B6-21	JOINT SEALS (MAXIMUM MOVEMENT RATING = 2")
B7-1	BOX GIRDER DETAILS
B7-5	DECK DRAINS
B7-6	DECK DRAINS - TYPES D-1 AND D-2
B7-10	UTILITY OPENING - BOX GIRDER
B7-8	DECK DRAINAGE DETAILS
B7-11	UTILITY DETAILS
B8-5	CAST-IN-PLACE PRESTRESSED GIRDER DETAILS
B11-54	CONCRETE BARRIER TYPE 26
B11-56	CONCRETE BARRIER TYPE 736
ES-7A	ELECTRICAL SYSTEMS (SIGNAL AND LIGHTING STANDARD, TYPE TS, AND PEDESTRIAN PUSH BUTTON POST)
ES-7B	ELECTRICAL SYSTEMS (SIGNAL AND LIGHTING STANDARD, TYPE 1, AND EQUIPMENT NUMBERING)
ES-7E	ELECTRICAL SYSTEMS (SIGNAL AND LIGHTING STANDARD, CASE 3 SIGNAL MAST ARM LOADING, WIND VELOSITY=100MPH AND SIGNAL MAST ARM LENGTHS 15' TO 45')
T3A	TEMPORARY RAILING (TYPE K)

STANDARD PLAN SHEET NO.

DETAIL NO.

PRESTRESSING NOTES

270 KSI Low Relaxation Strand:

P_{jack} = 16320 kips

Anchor Set = 3/8 in

Friction curvature coefficient, μ = 0.150 (1/rad)

Friction wobble coefficient, K = 0.0002 (1/ft)

Assumed long term losses = 20 (ksi)

Total Number of Girders = 6

The final force ratio (larger divided by smaller) between any two girders shall not exceed exceed the ratio of 10 to 9

Concrete: f'_c = 4500 psi @ 28 days

f'_{ci} = 3500 psi @ time of stressing

Contractor shall submit elongation calculations based on initial stress at

⊠ = 0.880 times jacking stress.

Stressing shall be performed from both ends.

NOTE: Prestressing Notes shown are for each stage construction.

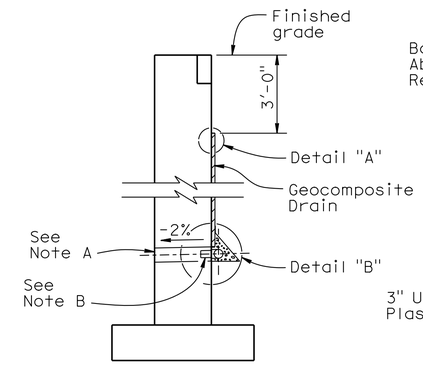

WALL SECTION

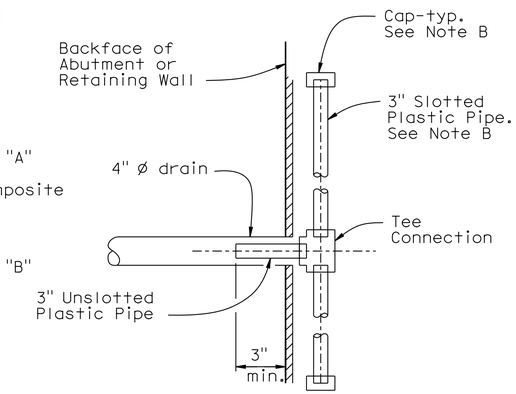

SECTION A-A

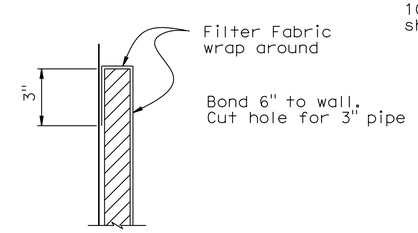

DETAIL "A"

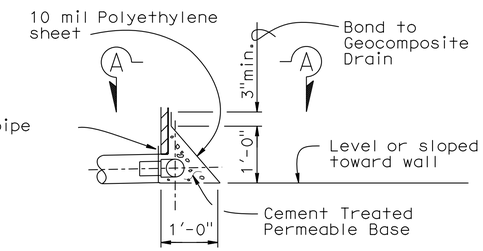

DETAIL "B"

WEEP HOLE AND GEOCOMPOSITE DRAIN

ALTERNATIVE TO BRIDGE DETAIL B0-3 / 3-1

Notes:

A. 4" ø drains at intermediate sag points and at 25' max center to center.
For walls adjacent to sidewalks or curbs, provide 4" cast iron or asbestos cement pipe under the sidewalk to discharge through curb face.
Exposed wall drains shall be located 3"± above finished grade.

B. Geocomposite drain, cement treated permeable base, and 3"ø slotted plastic pipe continuous behind retaining wall or abutment. Cap ends of pipe. Provide "Tee" connection at each 4" ø drain.

C. Connect the low end of plastic pipe to the main outlet pipe as apprlicable.

	BY	CHECKED
DESIGN	P. Vijitakula	Vadim Shostak
DETAILS	G. M. Souza / Jin Zhou	Vadim Shostak
QUANTITIES	Art Herrera	Mike Bergman

STATE OF CALIFORNIA
DEPARTMENT OF TRANSPORTATION

DIVISION OF ENGINEERING SERVICES
STRUCTURE DESIGN
DESIGN BRANCH 1

BRIDGE NO. 53-3065
POST MILE 6.38

FLORENCE AVENUE OC (REPLACE)
INDEX TO PLANS

STRUCTURES DESIGN DETAIL SHEET (ENGLISH) (REV. 09-01-10)

ORIGINAL SCALE IN INCHES FOR REDUCED PLANS 0 1 2 3

UNIT: 3576
PROJECT NUMBER & PHASE: 07000018351
CONTRACT NO.: 07-215954

DISREGARD PRINTS BEARING EARLIER REVISION DATES

REVISION DATES 11-03-11 04/02/13 10-15-12

SHEET 3 OF 56

FILE => 53-3065-a-03-itp.dgn

USERNAME => s128843 DATE PLOTTED => 05-SEP-2013 TIME PLOTTED => 15:01

DIST	COUNTY	ROUTE	POST MILES TOTAL PROJECT	SHEET No.	TOTAL SHEETS
07	LA	5	0.0/7.6	619	985

P. Vijitakula 12-28-12
REGISTERED CIVIL ENGINEER DATE

6-24-13
PLANS APPROVAL DATE

REGISTERED PROFESSIONAL ENGINEER P. VIJITAKULA No. C 54701 Exp. 12-31-13 CIVIL STATE OF CALIFORNIA

The State of California or its officers or agents shall not be responsible for the accuracy or completeness of electronic copies of this plan sheet.

GENERAL NOTES
LOAD AND RESISTANCE FACTOR DESIGN

DESIGN: AASHTO LRFD Bridge Design Specifications, 4th edition and the California Amendments, preface date December 2008

SEISMIC DESIGN: Caltrans Seismic Design Criteria (SDC), Version 1.6, dated November 2010

DEAD LOAD: Includes 35 psf for future wearing surface.

LIVE LOADING: HL93 and permit design load.

SEISMIC LOADING: Site specific Acceleration Response Spectra (ARS) Curve

Soil Profile: Type D, V_{S30} = 1092.5 ft/sec (333 m/sec)
Moment Magnitude: M_{Max} = 7.3
Peak Ground Acceleration (PGA) = 0.7g

CONCRETE: f_y = 60 ksi
f_c = 3.6 ksi
n = 8
See prestressing notes.

STRUCTURAL STEEL: f_y = ASTM A709 Grade 50

Structural Concrete, Bridge (3600 psi @ 28 days)
Structural Concrete, Bridge (4500 psi at 28 days)
Structural Concrete, Bridge Footing (3600 psi @ 28 days)

CONCRETE STRENGTH AND TYPE LIMITS
No Scale

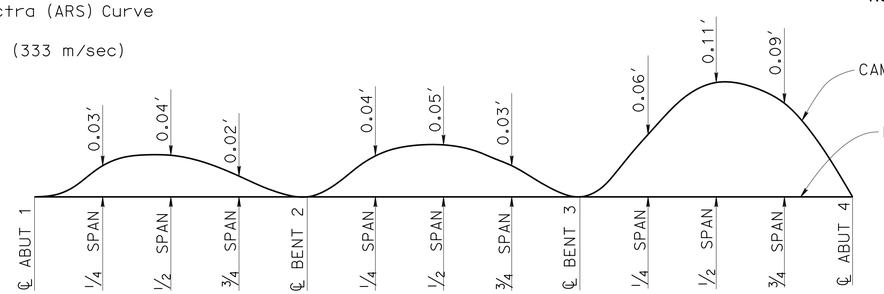

NOTE: Does not include allowance for falsework settlement

CAMBER DIAGRAM - STAGE 1
No Scale

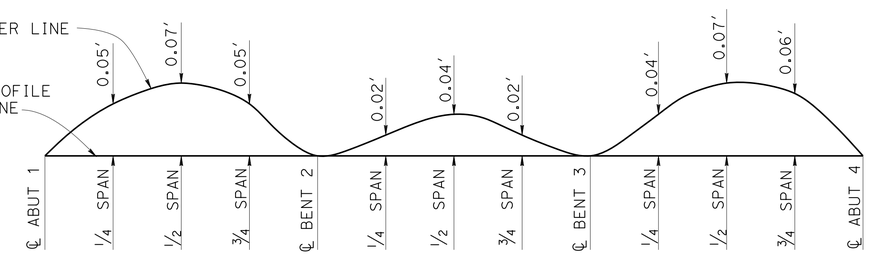

NOTE: Does not include allowance for falsework settlement

CAMBER DIAGRAM - STAGE 2
No Scale

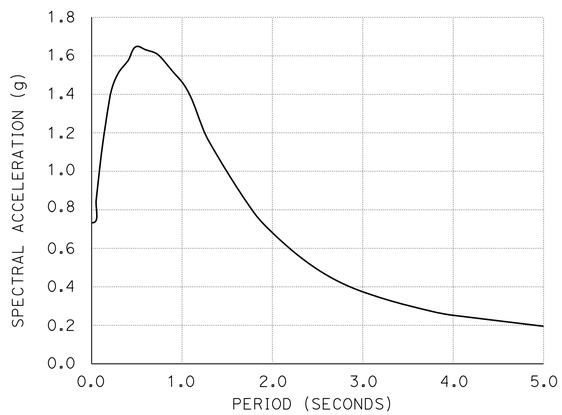

SITE SPECIFIC ARS CURVE
NO SCALE

QUANTITIES

BRIDGE REMOVAL, LOCATION A	LUMP	SUM
STRUCTURE EXCAVATION (BRIDGE)	7,790	CY
STRUCTURE EXCAVATION (TYPE Y-2) (AERIALLY DEPOSITED LEAD)	565	CY
STRUCTURE BACKFILL (BRIDGE)	4,030	CY
PERVIOUS BACKFILL MATERIAL	395	CY
JACKING SUPERSTRUCTURE	LUMP	SUM
FURNISH STEEL PILING (HP 14 X 89)	12,100	LF
DRIVE STEEL PILE (HP 14 X 89)	310	EA
36" CAST-IN-DRILLED-HOLE CONCRETE PILING	8,970	LF
PRESTRESSING CAST-IN-PLACE CONCRETE	LUMP	SUM
STRUCTURAL CONCRETE, BRIDGE FOOTING	1,675	CY
STRUCTURAL CONCRETE, BRIDGE	7,410	CY
ARCHITECTURAL TREATMENT (SPLIT SLATE)	1,320	SQFT
ARCHITECTURAL TREATMENT (SUNRAY-SPLIT SLATE)	6,590	SQFT
JOINT SEAL (MR 2")	383	LF
BAR REINFORCING STEEL (BRIDGE)	2,973,600	LB
STRUCTURAL STEEL (BRIDGE)	5,410	LB
WELDED STEEL PIPE CASING (BRIDGE)	53	LF
MINOR CONCRETE (MEDIAN CURB)	30	CY
MISCELLANEOUS METAL (BRIDGE)	2,115	LB
BRIDGE DECK DRAINAGE SYSTEM	1,740	LB
CHAIN LINK RAILING (TYPE 3 MODIFIED)	975	LF
CONCRETE BARRIER (TYPE 26 MODIFIED)	975	LF
CONCRETE BARRIER (TYPE 60D MODIFIED)	390	LF
CONCRETE BARRIER (TYPE 736 MODIFIED)	12	LF

FALSEWORK RELEASE

Alternative 1:

Falsework shall be released as soon as permitted by the specifications.
Closure pour shall not be placed sooner than 60 days after the falsework had been released.

Alternative 2:

Falsework shall not be released less than 28 days after the last concrete has been placed.
Closure pour shall not be placed sooner than 14 days after the falsework has been released.

When Falsework Release Alternative 2 is used, camber values are 0.75 times those shown.

PILE DATA TABLE

LOCATION	PILE TYPE	CUT-OFF ELEVATION (ft)	NOMINAL RESISTANCE(Kips)		DESIGN TIP ELEVATION (ft)	SPECIFIED TIP ELEVATION (ft)	NOMINAL DRIVING RESISTANCE (Kips)
			COMPRESSION	TENSION			
ABUT 1	HP 14X89	111.92	400	N/A	(a) 74, (c) 84, (d) 81	74.0	400
BENT 2	36" CIDH	109.25	760	0	(a) 35, (b) N/A, (c) 77, (d) 70	35.0	N/A
BENT 3	36" CIDH	114.25	760	0	(a) 39, (b) N/A, (c) 68, (d) 74	39.0	N/A
ABUT 4	HP 14X89	113.42	400	N/A	(a) 76, (c) 86, (d) 81	76.0	400

NOTES: 1. Design tip elevations for abutments are controlled by: (a) Compression, (c) Settlement, and (d) Lateral load.
2. Design tip elevation for bents are controlled by: (a) Compression, (b) Tension, (c) Settlement, and (d) Lateral load.

	BY	CHECKED
DESIGN	P. Vijitakula	Vadim Shostak
DETAILS	Jin Zhou	Vadim Shostak
QUANTITIES	Art Herrera	Mike Bergman

STATE OF CALIFORNIA
DEPARTMENT OF TRANSPORTATION

DIVISION OF ENGINEERING SERVICES
STRUCTURE DESIGN
DESIGN BRANCH 1

BRIDGE NO. 53-3065
POST MILE 6.38

FLORENCE AVENUE OC (REPLACE)
GENERAL NOTES

STRUCTURES DESIGN DETAIL SHEET (ENGLISH) (REV. 09-01-10)

ORIGINAL SCALE IN INCHES FOR REDUCED PLANS 0 1 2 3

UNIT: 3576
PROJECT NUMBER & PHASE: 07000018351
CONTRACT NO.: 07-215954

DISREGARD PRINTS BEARING EARLIER REVISION DATES

REVISION DATES 11-02-11 03/29/13 12/24/12

SHEET 4 OF 56

FILE => 53-3065-a-04-generalnotes.dgn

USERNAME => s128843 DATE PLOTTED => 05-SEP-2013 TIME PLOTTED => 15:01

DIST	COUNTY	ROUTE	POST MILES TOTAL PROJECT	SHEET No.	TOTAL SHEETS
07	LA	5	0.0/7.6	620	985

P. Vijitakula 12-28-12
REGISTERED CIVIL ENGINEER DATE

6-24-13
PLANS APPROVAL DATE

REGISTERED PROFESSIONAL ENGINEER
P. VIJITAKULA
No. C 54701
Exp. 12-31-13
CIVIL
STATE OF CALIFORNIA

The State of California or its officers or agents shall not be responsible for the accuracy or completeness of electronic copies of this plan sheet.

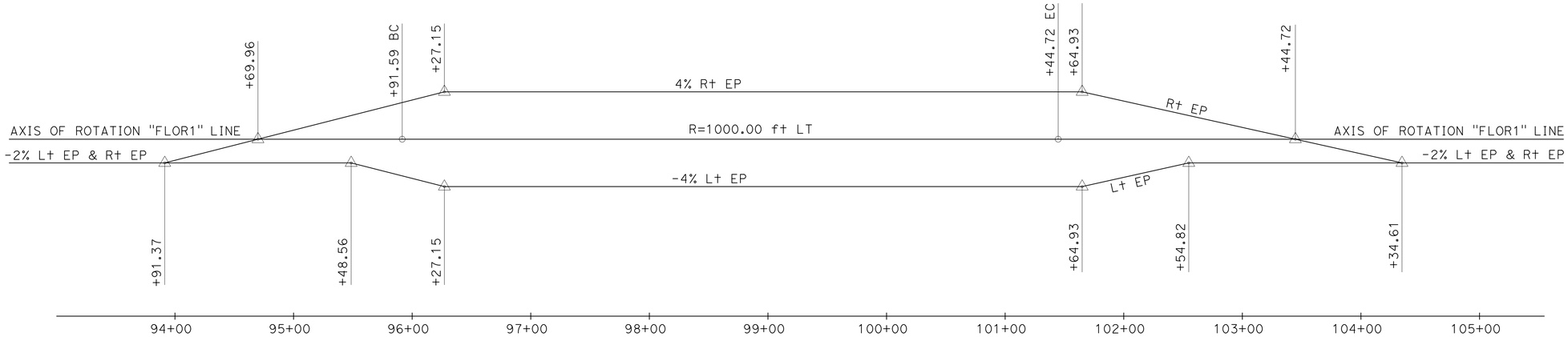

SUPERELEVATION DIAGRAM

NO SCALE

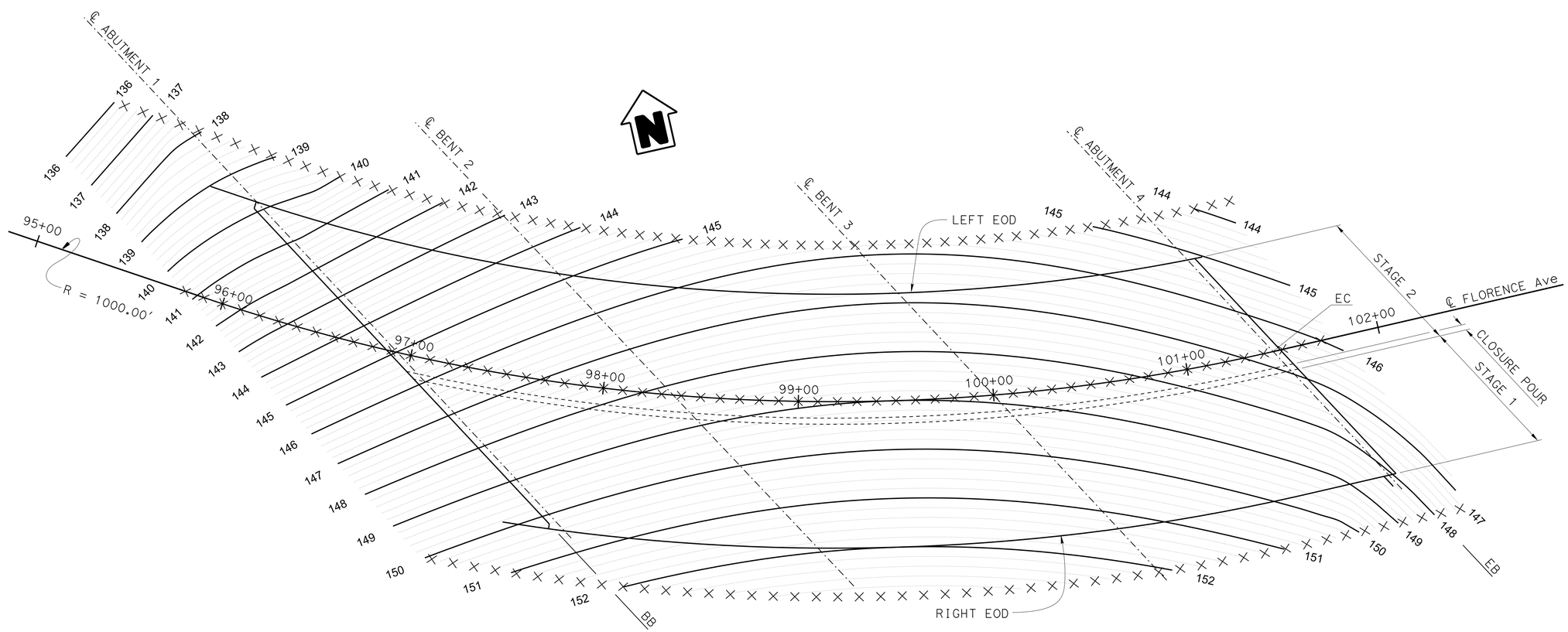

DECK CONTOURS

1" = 30'

Notes: Contours do not include camber
0.20' contour interval
X - 10' intervals

DESIGN	BY P. Vijitakula	CHECKED Vadim Shostak	
DETAILS	BY G. M. Souza	CHECKED Vadim Shostak	
QUANTITIES	BY Art Herrera	CHECKED Mike Bergman	

STATE OF CALIFORNIA
DEPARTMENT OF TRANSPORTATION

DIVISION OF ENGINEERING SERVICES
STRUCTURE DESIGN
DESIGN BRANCH 1

BRIDGE NO. 53-3065
POST MILE 6.38

FLORENCE AVENUE OC (REPLACE)
DECK CONTOURS

STRUCTURES DESIGN DETAIL SHEET (ENGLISH) (REV. 09-01-10)

ORIGINAL SCALE IN INCHES FOR REDUCED PLANS 0 1 2 3

UNIT: 3576
PROJECT NUMBER & PHASE: 07000018351 CONTRACT NO.: 07-215954

DISREGARD PRINTS BEARING EARLIER REVISION DATES → 07-31-12 03/29/13

SHEET 5 OF 56

FILE => 53-3065-a-05-deck-contours.dgn

USERNAME => s133318 DATE PLOTTED => 14-AUG-2013 TIME PLOTTED => 10:49

DIST	COUNTY	ROUTE	POST MILES TOTAL PROJECT	SHEET No.	TOTAL SHEETS
07	LA	5	0.0/7.6	621	985

P. Vijitakula 12-28-12
REGISTERED CIVIL ENGINEER DATE

6-24-13
PLANS APPROVAL DATE

REGISTERED PROFESSIONAL ENGINEER P. VIJITAKULA No. C 54701 Exp. 12-31-13 CIVIL STATE OF CALIFORNIA

The State of California or its officers or agents shall not be responsible for the accuracy or completeness of electronic copies of this plan sheet.

① Sta 98+14.13 "FLOR1" =
Sta 338+71.20 "FL3" POT

CURVE DATA				
No.	R	Δ	T	L
Ⓔ	950.82′	00°01′28"	0.20′	0.41′
Ⓕ	1000.00′	31°41′30"	283.84′	553.12′
Ⓖ	1111.10′	10°38′38"	103.50′	206.41′
Ⓗ	1075.50′	00°06′04"	0.95′	1.90′

NOTES:

1. Underground utilities as shown are approximate, see "Utility Plans" for more information.
2. Centerlines of Abutments 1 & 4, Bents 2 & 3 are parallel.
3. Approximate limits of Aerially Deposited Lead (Type Y-2) are shown. For details not shown, see "ABUTMENT DETAILS NO. 2" sheet and "ROAD PLANS"
4. All piles not shown

Legend:

- Indicates 36" Ø CIDH concrete piles
- Indicates HP 14 x 89 vertical piles
- Indicates HP 14 x 89 batter 1:3 piles
- 000.00 - Indicates bottom of footing elevation

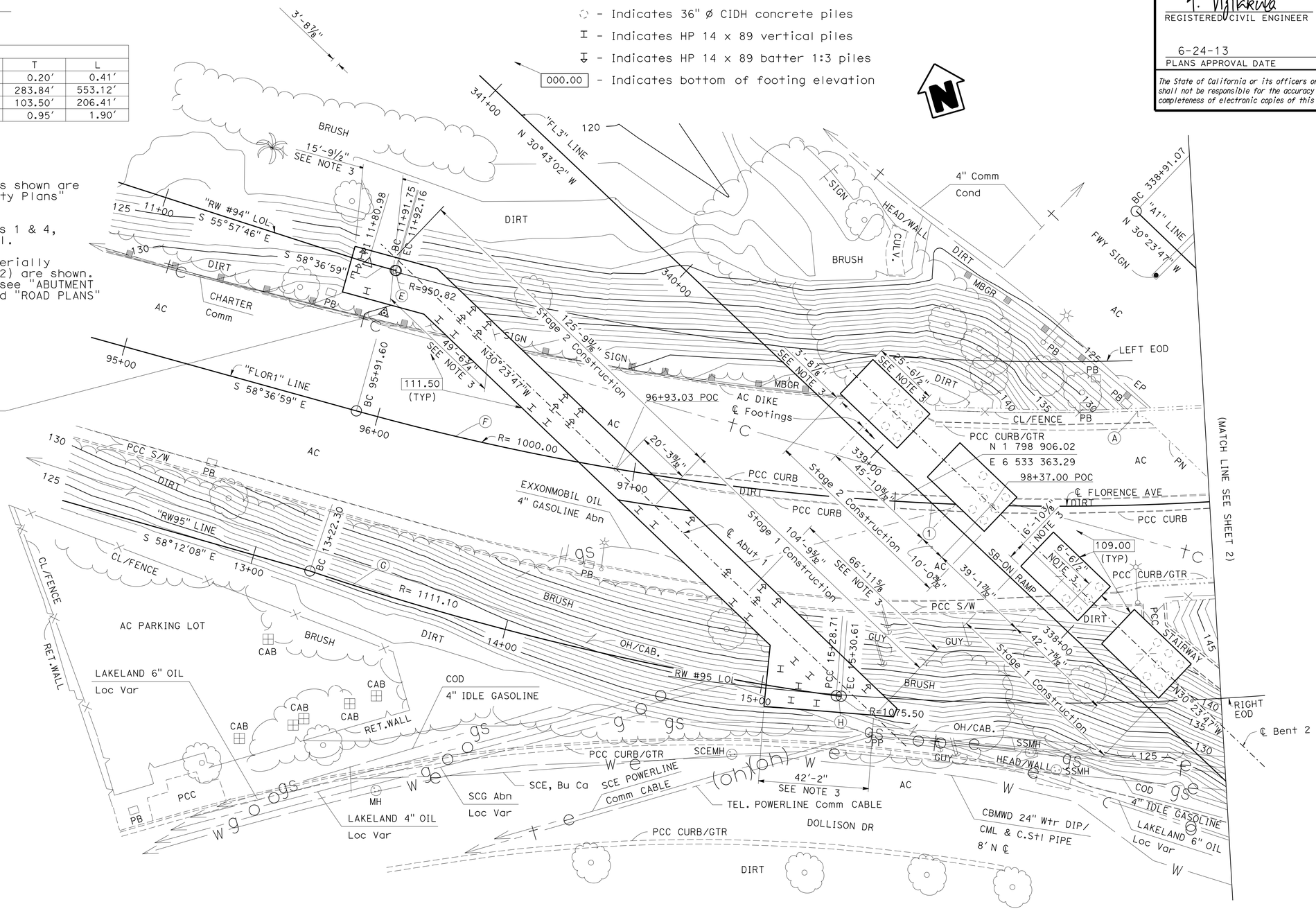

SURVEY CONTROL

SUHV-950

FND: 1X2/Tag Same as 937
226.75 Ft Lt ℄ Route 5
Sta 340+69.41
N 1 799 028.28
E 6 533 195.83
Elev= 135.37

PRELIMINARY INVESTIGATION SECTION					
SCALE 1"=20′	VERT.DATUM NAVD88	PHOTOGRAMMETRY AS OF: X			
	HORZ.DATUM NAD83 (1986)	SURVEYED	BY T.PHUNG 06/2011	CHECKED	BY C.STEWART 06/2011
ALIGNMENT TIES Dist. Traverse Sheet		DRAFTED	BY V.PHAM 07/2011	CHECKED	BY S.ALIVIO 07/2011

DESIGN	BY P. Vijitakula	CHECKED Vadim Shostak
DETAILS	BY G. M. Souza	CHECKED Vadim Shostak
QUANTITIES	BY Art Herrera	CHECKED Mike Bergman

STATE OF CALIFORNIA
DEPARTMENT OF TRANSPORTATION

DIVISION OF ENGINEERING SERVICES
STRUCTURE DESIGN
DESIGN BRANCH 1

BRIDGE NO. 53-3065
POST MILE 6.38

FLORENCE AVENUE OC (REPLACE)
FOUNDATION PLAN NO. 1

STRUCTURES FOUNDATION PLAN SHEET (ENGLISH) (REV. 09-01-10)

ORIGINAL SCALE IN INCHES FOR REDUCED PLANS 0 1 2 3

UNIT: 3576
PROJECT NUMBER & PHASE: 07000018351
CONTRACT NO.: 07-215954

DISREGARD PRINTS BEARING EARLIER REVISION DATES

REVISION DATES			SHEET	OF
07/15/11	11/29/12	03/29/13	6	56

FILE => 53-3065-e-06-fp01.dgn

USERNAME => s124436 DATE PLOTTED => 26-JUN-2013 TIME PLOTTED => 15:42

DIST	COUNTY	ROUTE	POST MILES TOTAL PROJECT	SHEET No.	TOTAL SHEETS
07	LA	5	0.0/7.6	622	985

P. Vijitakula 12-28-12
REGISTERED CIVIL ENGINEER DATE

6-24-13
PLANS APPROVAL DATE

REGISTERED PROFESSIONAL ENGINEER
P. VIJITAKULA
No. C 54701
Exp. 12-31-13
CIVIL
STATE OF CALIFORNIA

The State of California or its officers or agents shall not be responsible for the accuracy or completeness of electronic copies of this plan sheet.

② Sta 100+00.01 "FLOR1" =
Sta 337+42.26 "A1" POT

③ Sta 101+48.72 "FLOR1" POT =
Sta 336+60.39 "FL4" POT

④ Sta 101+61.56 "FLOR1" POT =
Sta 336+39.69 "FL1" POT

BRIDGE LOCATION (Exist Br.No 53-0171)

Ⓐ 54.64 Ft Lt "A1" Line, ℄ Route 5, Sta 338+38.05, Elev= 146.15±
Ⓑ 56.16 Ft Rt "A1" Line, ℄ Route 5, Sta 337+44.49, Elev= 145.02±
Ⓒ 55.58 Ft Lt "A1" Line, ℄ Route 5, Sta 337+42.15, Elev= 149.24±
Ⓓ 55.32 Ft Rt "A1" Line, ℄ Route 5, Sta 336+58.69, Elev= 146.56±

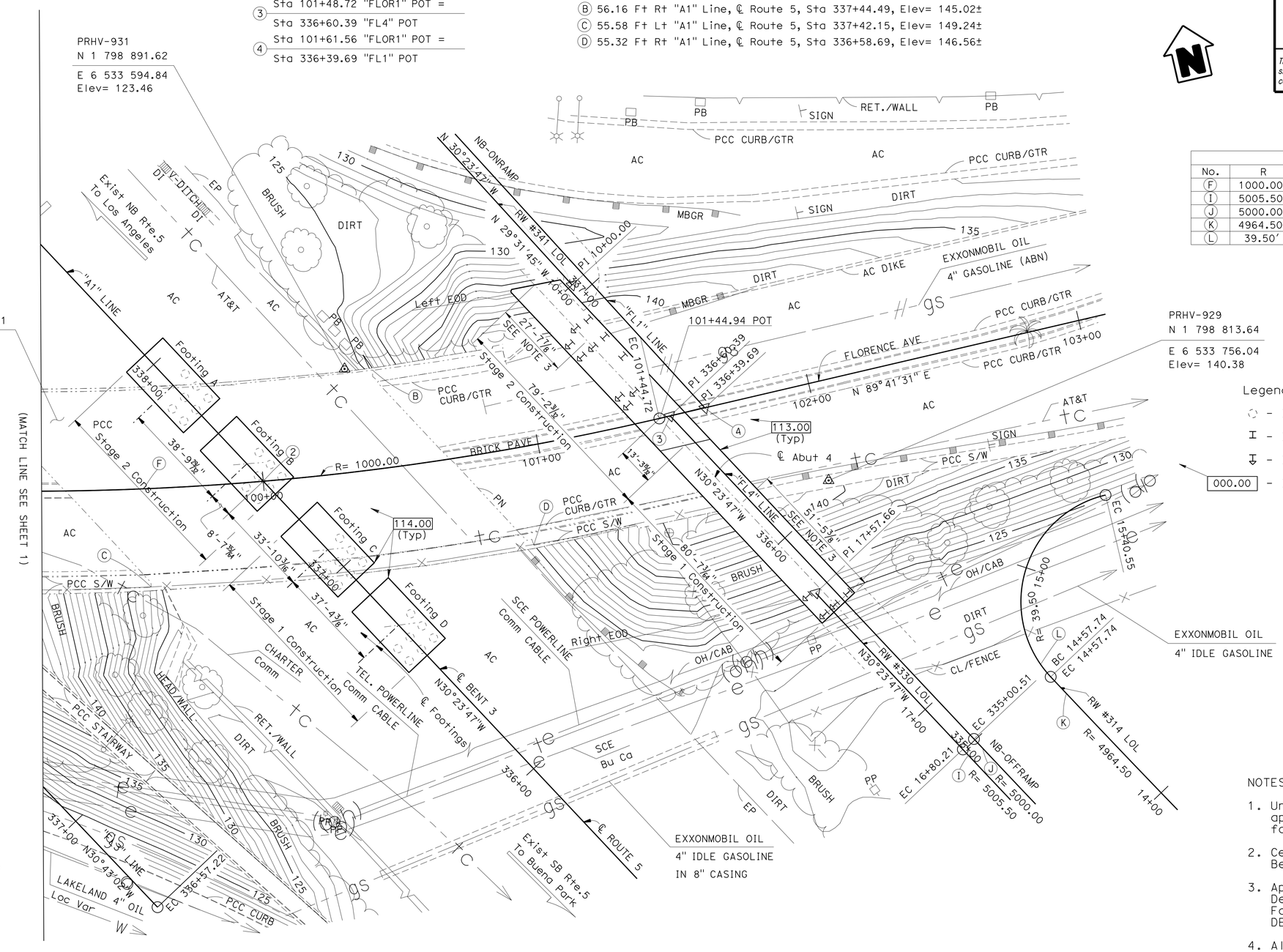

CURVE DATA				
No.	R	Δ	T	L
Ⓕ	1000.00′	31°41′30"	283.84′	553.12′
Ⓘ	5005.50′	02°40′42"	117.01′	233.99′
Ⓙ	5000.00′	02°40′42"	116.89′	233.73′
Ⓚ	4964.50′	02°38′52"	114.74′	229.43′
Ⓛ	39.50′	120°07′07"	68.58′	82.81′

Legend:

- ◌ - Indicates 36" Ø CIDH concrete piles
- I - Indicates HP 14 x 89 vertical piles
- ↧ - Indicates HP 14 x 89 batter 1:3 piles
- [000.00] - Indicates bottom of footing elevation

SURVEY CONTROL

PRHV-931

FND: PK NB Shldr.
49.07 Ft Rt ℄ Route 5
Sta 337+51.66
N 1 798 891.62
E 6 533 594.84
Elev= 123.46

PRHV-929

FND: SCRX Sly SW Florence
148.66 Ft Rt ℄ Route 5
Sta 336+02.83
N 1 798 813.64
E 6 533 756.04
Elev= 140.38

NOTES:

1. Underground utilities as shown are approximate, see "Utility Plans" for more information.
2. Centerlines of Abutments 1 & 4, Bents 2 & 3 are parallel.
3. Approximate limits of Aerially Deposited Lead (Type Y-2) are shown. For details not shown, see "ABUTMENT DETAILS NO. 2" sheet and "ROAD PLANS"
4. All piles not shown

PRELIMINARY INVESTIGATION SECTION

SCALE	VERT.DATUM NAVD88	PHOTOGRAMMETRY AS OF: X			
1"=20'	HORZ.DATUM NAD83 (1986)	SURVEYED	BY T.PHUNG 06/2011	CHECKED	BY C.STEWART 06/2011
ALIGNMENT TIES Dist. Traverse Sheet		DRAFTED	BY V.PHAM 07/2011	CHECKED	BY S.ALIVIO 07/2011

	BY	CHECKED
DESIGN	P. Vijitakula	Vadim Shostak
DETAILS	G. M. Souza	Vadim Shostak
QUANTITIES	Art Herrera	Mike Bergman

STATE OF CALIFORNIA
DEPARTMENT OF TRANSPORTATION

DIVISION OF ENGINEERING SERVICES
STRUCTURE DESIGN
DESIGN BRANCH 1

BRIDGE NO. 53-3065
POST MILE 6.38

FLORENCE AVENUE OC (REPLACE)
FOUNDATION PLAN NO. 2

STRUCTURES FOUNDATION PLAN SHEET (ENGLISH) (REV. 09-01-10)

ORIGINAL SCALE IN INCHES FOR REDUCED PLANS 0 1 2 3

UNIT: 3576
PROJECT NUMBER & PHASE: 07000018351 CONTRACT NO.: 07-215954

DISREGARD PRINTS BEARING EARLIER REVISION DATES → 7/15/11 11/22/12 03/29/13

SHEET 7 OF 56

FILE => 53-3065-e-07-fp02.dgn

USERNAME => s124496 DATE PLOTTED => 26-JUN-2013 TIME PLOTTED => 15:42

DIST	COUNTY	ROUTE	POST MILES TOTAL PROJECT	SHEET No.	TOTAL SHEETS
07	LA	5	0.0/7.6	623	985

P. Vijitakula 12-28-12
REGISTERED CIVIL ENGINEER DATE

6-24-13
PLANS APPROVAL DATE

REGISTERED PROFESSIONAL ENGINEER P. VIJITAKULA No. C 54701 Exp. 12-31-13 CIVIL STATE OF CALIFORNIA

The State of California or its officers or agents shall not be responsible for the accuracy or completeness of electronic copies of this plan sheet.

Notes:

1. Place reinforcement normal to ℄ abutment
2. Place reinforcement at each end of abutment and at each stage of construction
3. For stage 1 construction use total of 244 (122 - 2 bar bundles)
   For stage 2 construction use total of 294 (147 - 2 bar bundles)
   For Abutment 4 Stage 1 construction use a total of 154 (77-2 bar bundles)
   For Abutment 4 Stage 2 construction use a total of 164 (82-2 bar bundles)
4. Extend stage 1 abutment and footing reinforcement 2'-0" into Stage 2 construction for mechanical splicing at every other 2 bars (splices shall be staggered). Contractor may submit optional steel couplers for approval by the Engineer.
5. For details and locations of Jacking Recesses and 10" ø Formed Hole, see "Construction Sequence No. 1" sheet
6. Reinforcement shall be made continuous by weld or mechanical splice at jacking recess.

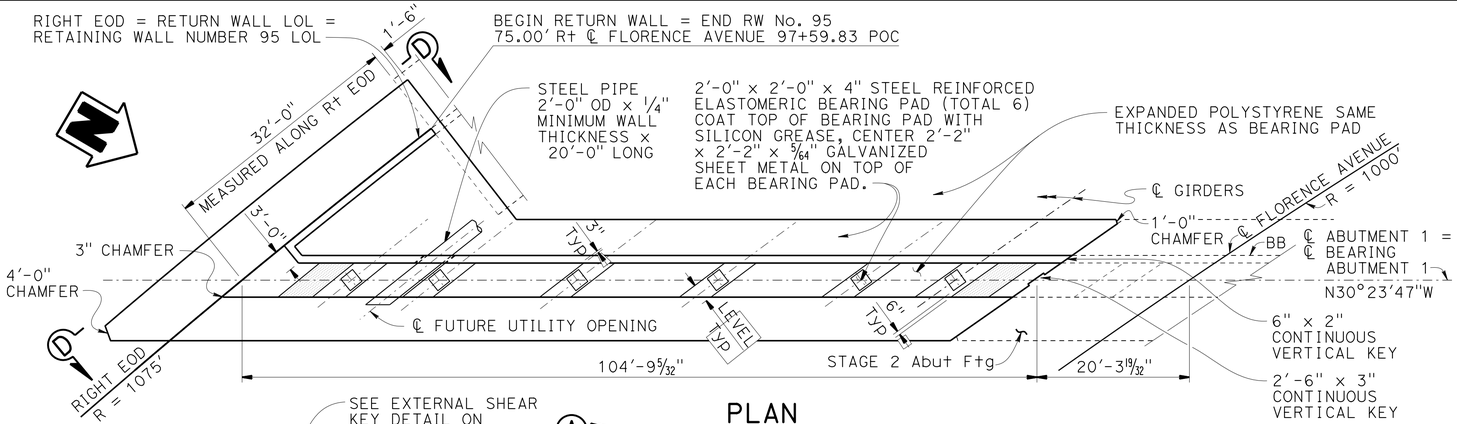

PLAN
1" = 10'

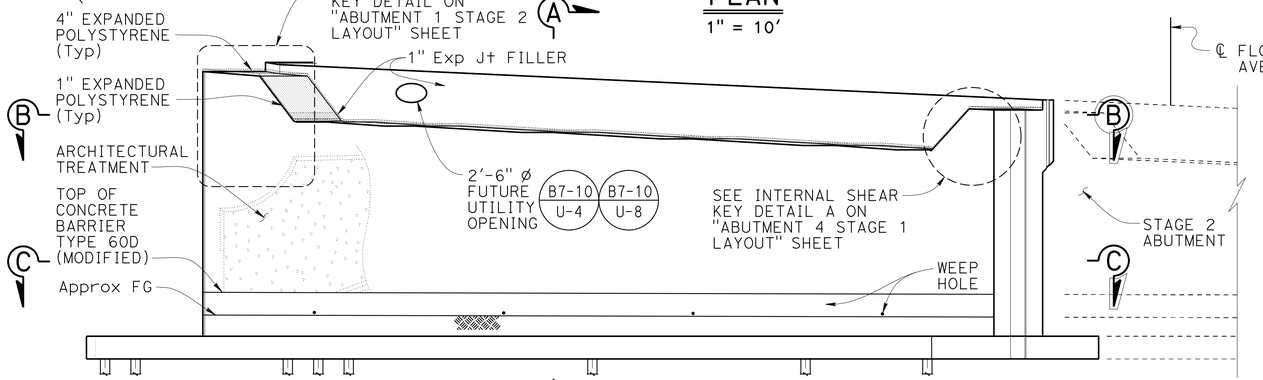

ELEVATION
1" = 10'

Notes:

- For sections B-B and C-C, see "Abutment 1 Details" sheet
- For View D-D, see "Abutment Details No. 2" Sheet
- All piles not shown
- Concrete Barriers not shown
- Jacking recesses and 10" ø formed hole locations not shown
- For Concrete Barrier Type 60D (Mod), details see "Abutment 4 Stage 2 Layout" sheet

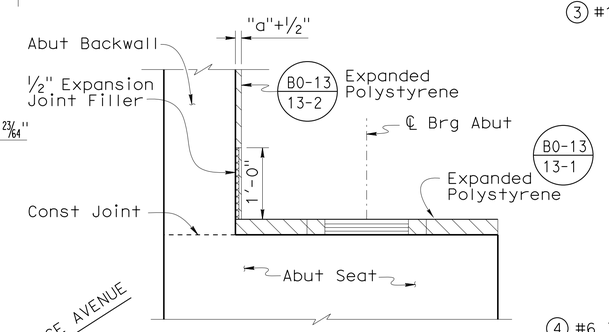

BACKWALL BASE DETAIL
No Scale

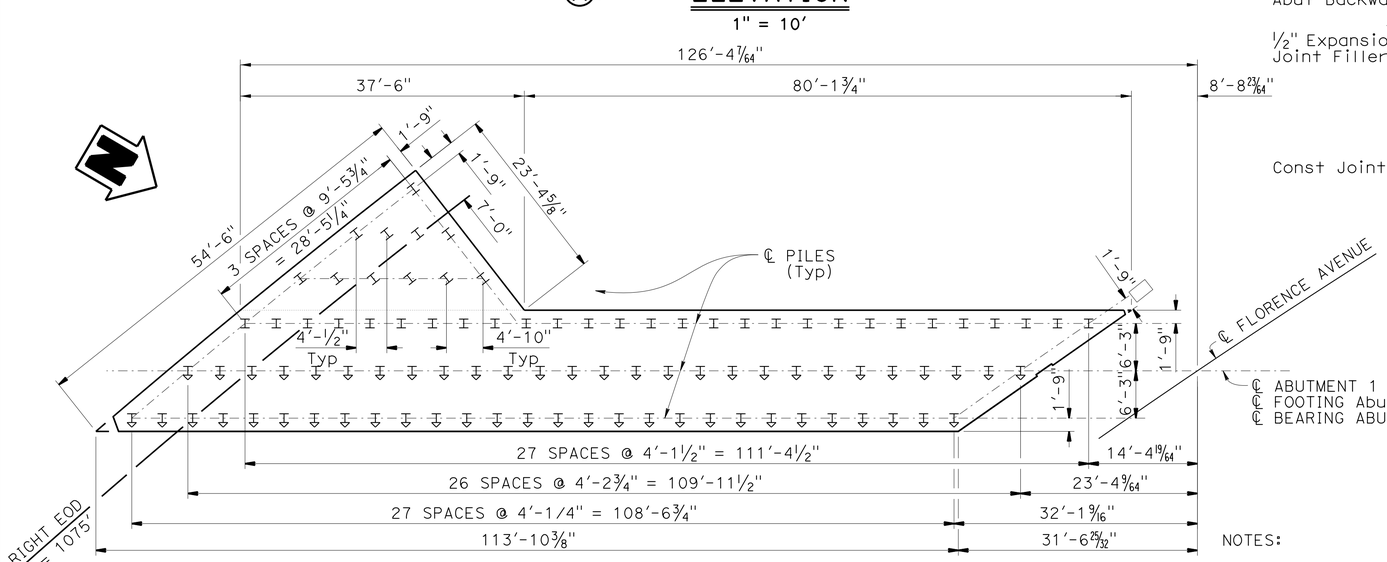

FOOTING PLAN
1" = 10'

NOTES:

I INDICATES VERTICAL PILES

↧ INDICATES BATTERED PILES

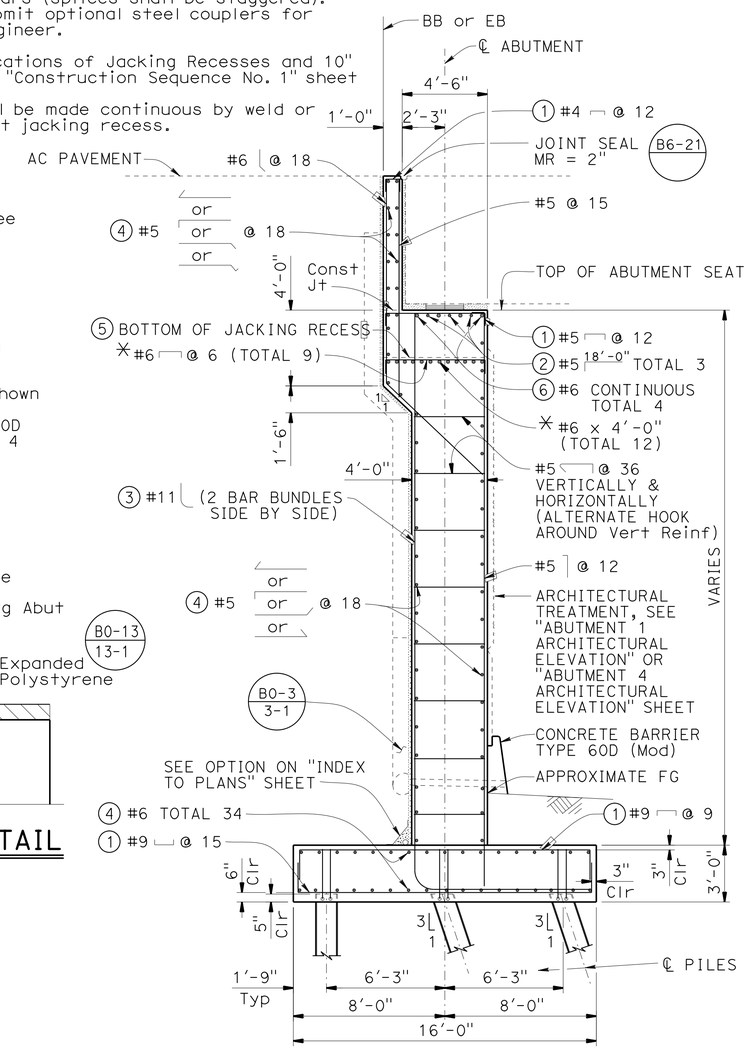

NOTE: * SPACE REINFORCEMENT CENTERED AT ℄ JACKING RECESS

SECTION A-A
1/4" = 1'-0"

DESIGN	BY P. Vijitakula	CHECKED Vadim Shostak	
DETAILS	BY G. M. Souza	CHECKED Vadim Shostak	
QUANTITIES	BY Art Herrera	CHECKED Mike Bergman	

STATE OF CALIFORNIA DEPARTMENT OF TRANSPORTATION

DIVISION OF ENGINEERING SERVICES STRUCTURE DESIGN DESIGN BRANCH 1

BRIDGE NO. 53-3065
POST MILE 6.38

FLORENCE AVENUE OC (REPLACE)
ABUTMENT 1 STAGE 1 LAYOUT

STRUCTURES DESIGN DETAIL SHEET (ENGLISH) (REV. 09-01-10)

ORIGINAL SCALE IN INCHES FOR REDUCED PLANS 0 1 2 3

UNIT: 3576
PROJECT NUMBER & PHASE: 07000018351
CONTRACT NO.: 07-215954

DISREGARD PRINTS BEARING EARLIER REVISION DATES

REVISION DATES 11-02-11 05/24/13 05/30/13

SHEET 8 OF 56

FILE => 53-3065-f-08-abut01-stg01-lyt.dgn

USERNAME => s128843 DATE PLOTTED => 05-SEP-2013 TIME PLOTTED => 15:01

DIST	COUNTY	ROUTE	POST MILES TOTAL PROJECT	SHEET No.	TOTAL SHEETS
07	LA	5	0.0/7.6	624	985

P. Vijitakula
REGISTERED CIVIL ENGINEER 12-28-12 DATE

6-24-13
PLANS APPROVAL DATE

REGISTERED PROFESSIONAL ENGINEER P. VIJITAKULA No. C 54701 Exp. 12-31-13 CIVIL STATE OF CALIFORNIA

The State of California or its officers or agents shall not be responsible for the accuracy or completeness of electronic copies of this plan sheet.

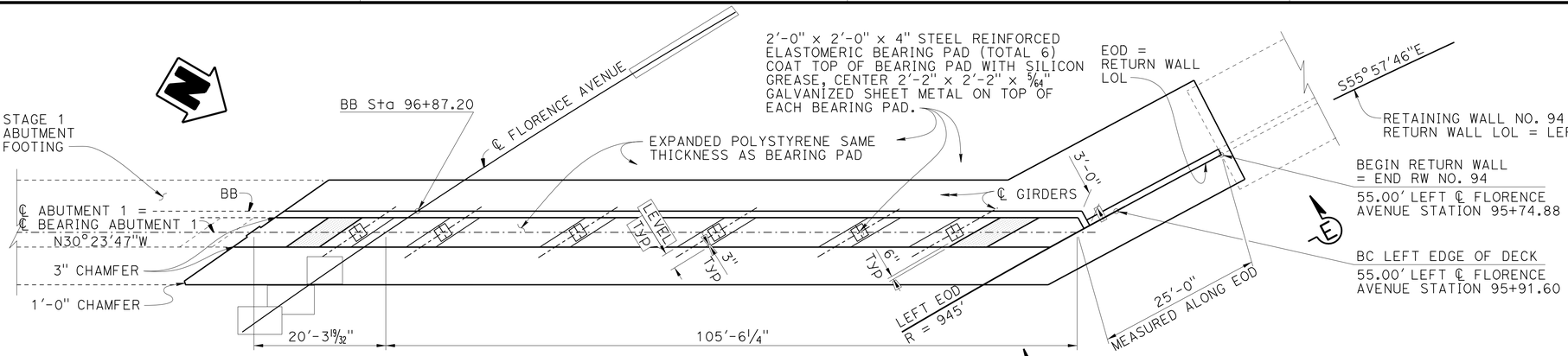

PLAN
1" = 10'

NOTES:

- FOR SECTIONS B-B AND C-C, SEE "ABUTMENT 1 DETAILS" SHEET
- FOR SECTION A-A SEE "ABUTMENT 1 STAGE 1 LAYOUT" SHEET
- FOR VIEW E-E SEE "ABUTMENT DETAILS NO. 2" SHEET
- FOR LOCATIONS AND DETAILS OF JACKING RECESS AND 10" ø FORMED HOLE, SEE "CONSTRUCTION SEQUENCE STAGE 2" SHEET.

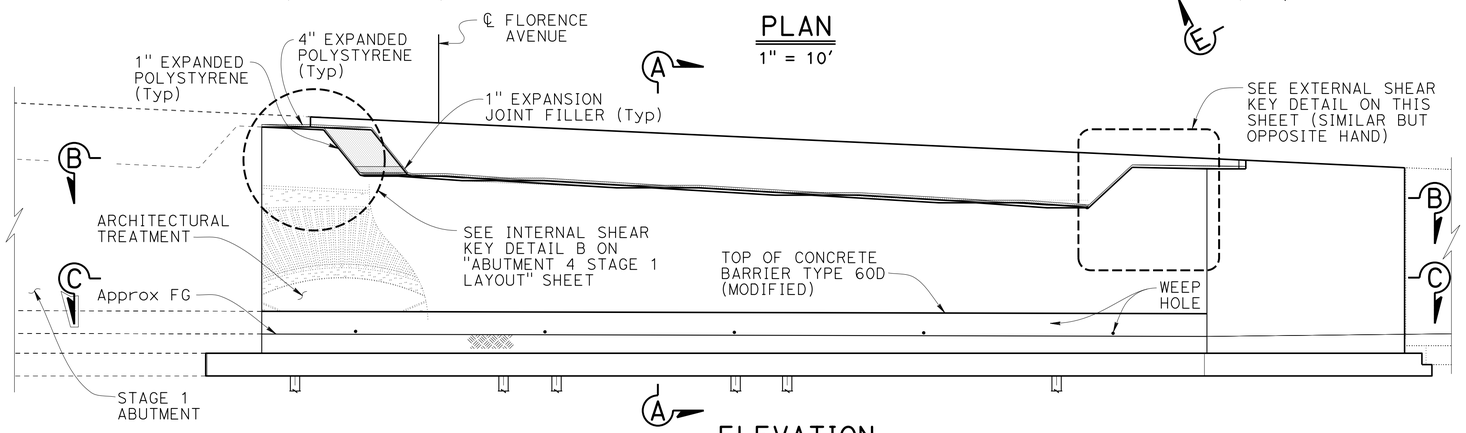

ELEVATION
1" = 10'

NOTES:

- ALL PILES NOT SHOWN
- CONCRETE BARRIERS NOT SHOWN
- JACKING RECESS AND 10" ø FORMED HOLE LOCATIONS NOT SHOWN

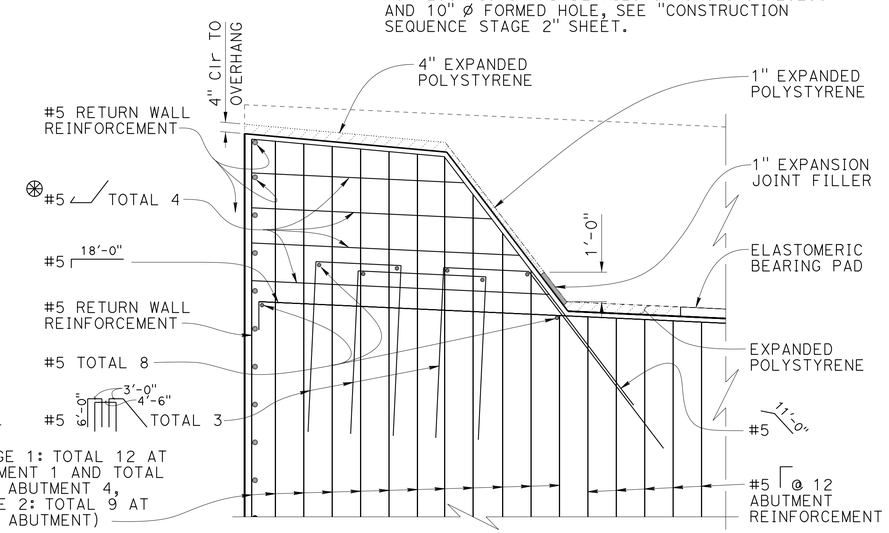

EXTERNAL SHEAR KEY DETAIL
3/8" = 1'-0"

NOTES:

⊛ EXTEND ONE LEG OF REINFORCEMENT INTO ABUTMENT BACKWALL

⊠ EXTEND 2'-4" INTO FOOTING

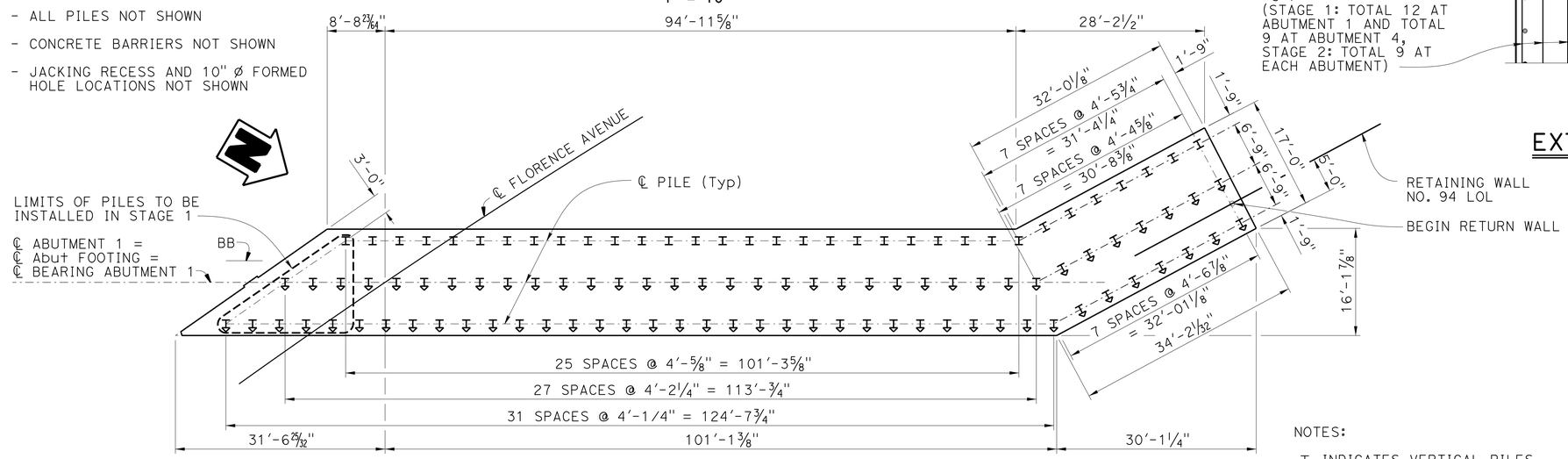

FOOTING PLAN
1" = 10'

NOTES:

I INDICATES VERTICAL PILES

I INDICATES BATTERED PILES

DESIGN	BY P. Vijitakula	CHECKED Vadim Shostak	
DETAILS	BY G. M. Souza	CHECKED Vadim Shostak	
QUANTITIES	BY Art Herrera	CHECKED Mike Bergman	

STATE OF CALIFORNIA DEPARTMENT OF TRANSPORTATION

DIVISION OF ENGINEERING SERVICES STRUCTURE DESIGN DESIGN BRANCH 1

BRIDGE NO. 53-3065
POST MILE 6.38

FLORENCE AVENUE OC (REPLACE)
ABUTMENT 1 STAGE 2 LAYOUT

STRUCTURES DESIGN DETAIL SHEET (ENGLISH) (REV. 09-01-10)

ORIGINAL SCALE IN INCHES FOR REDUCED PLANS 0 1 2 3

UNIT: 3576
PROJECT NUMBER & PHASE: 07000018351 CONTRACT NO.: 07-215954

DISREGARD PRINTS BEARING EARLIER REVISION DATES

REVISION DATES 12-13-11 03/29/13 05/30/13

SHEET 9 OF 56

FILE => 53-3065-f-09-abut01-stg02-lyt.dgn

USERNAME => s128843 DATE PLOTTED => 05-SEP-2013 TIME PLOTTED => 15:01

DIST	COUNTY	ROUTE	POST MILES TOTAL PROJECT	SHEET No.	TOTAL SHEETS
07	LA	5	0.0/7.6	625	985

P. Vijitakula
REGISTERED CIVIL ENGINEER 12-28-12 DATE

6-24-13
PLANS APPROVAL DATE

REGISTERED PROFESSIONAL ENGINEER P. VIJITAKULA No. C 54701 Exp. 12-31-13 CIVIL STATE OF CALIFORNIA

The State of California or its officers or agents shall not be responsible for the accuracy or completeness of electronic copies of this plan sheet.

NOTES:

- FOR SECTIONS B-B AND C-C, SEE "ABUTMENT 4 DETAILS" SHEET
- FOR SECTION A-A, SEE "ABUTMENT 1 STAGE 1 LAYOUT" SHEET
- FOR VIEW G-G, SEE "ABUTMENT 4 STAGE 2 LAYOUT" SHEET
- FOR LOCATIONS AND DETAILS OF JACKING RECESS AND 10" Ø FORMED HOLE, SEE "CONSTRUCTION SEQUENCE STAGE 1" SHEET

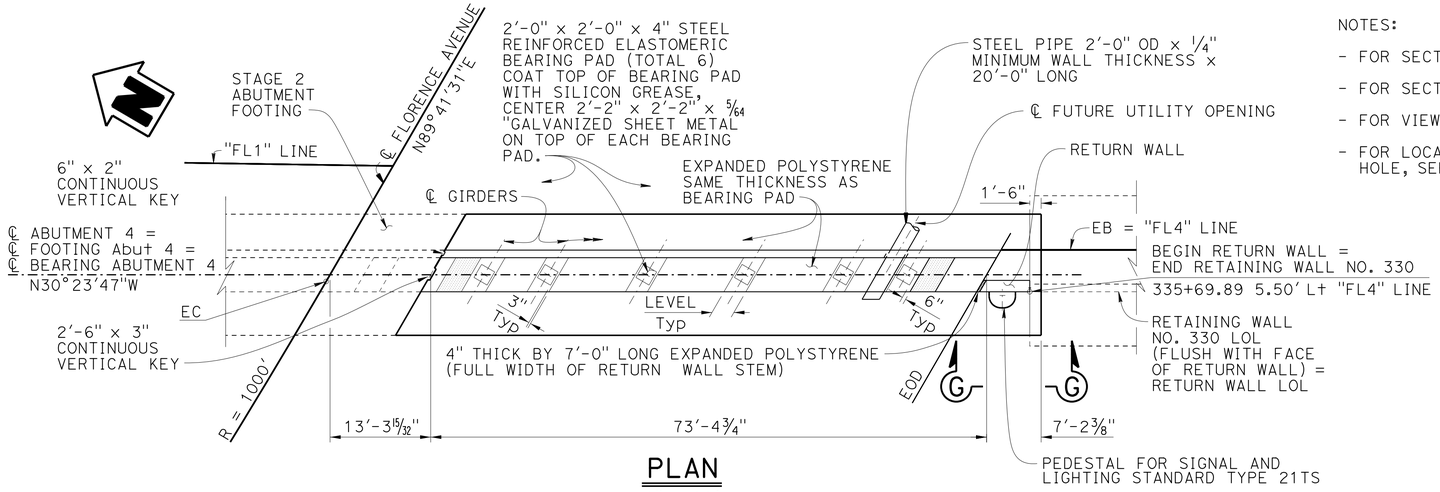

PLAN

1" = 10'

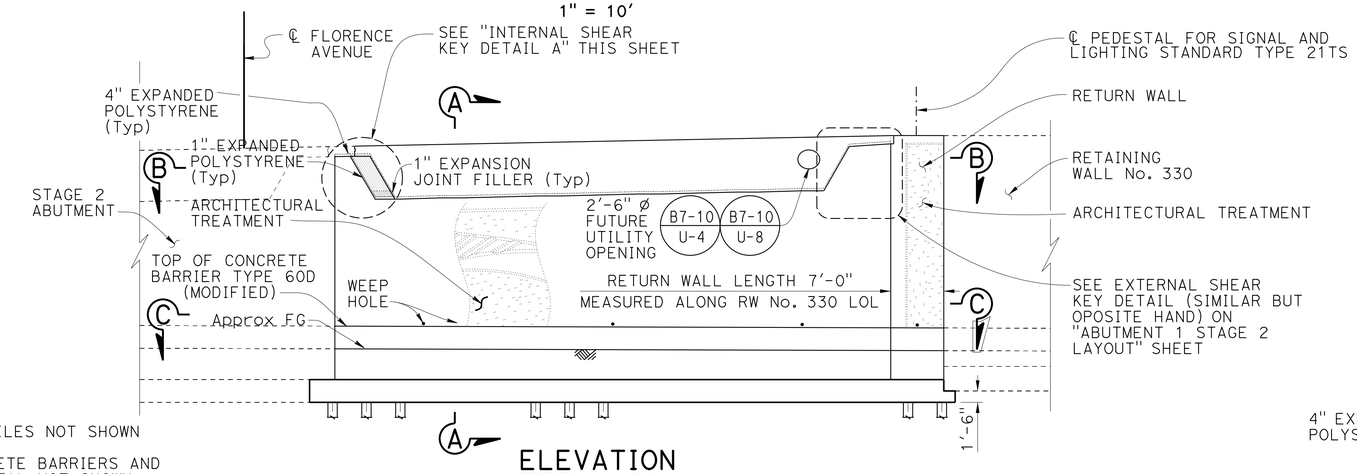

NOTES:

- ALL PILES NOT SHOWN
- CONCRETE BARRIERS AND PEDESTAL NOT SHOWN
- JACKING RECESS AND 10" Ø FORMED HOLE LOCATIONS NOT SHOWN

ELEVATION

1" = 10'

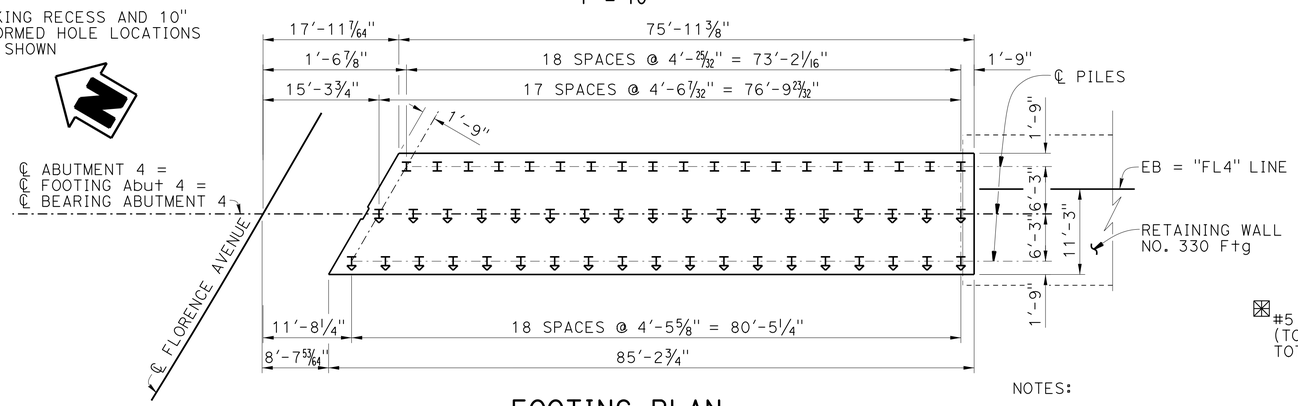

FOOTING PLAN

1" = 10'

NOTES:

I INDICATES VERTICAL PILES

I INDICATES BATTERED PILES

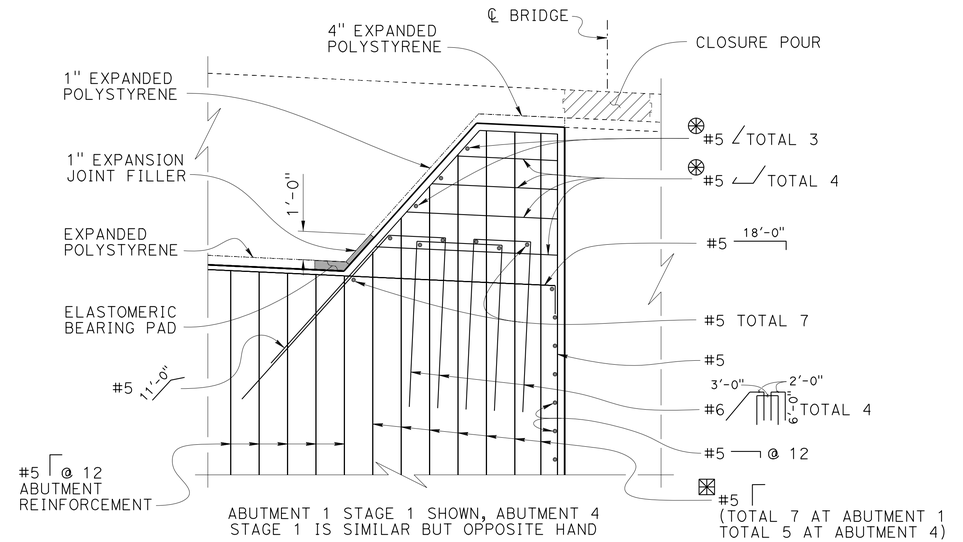

ABUTMENT 1 STAGE 1 SHOWN, ABUTMENT 4 STAGE 1 IS SIMILAR BUT OPPOSITE HAND

INTERNAL SHEAR KEY DETAIL A

3/8" = 1'-0"

NOTES:

EXTEND ONE LEG OF Reinf INTO ABUTMENT BACKWALL

EXTEND 2'-4" INTO FOOTING

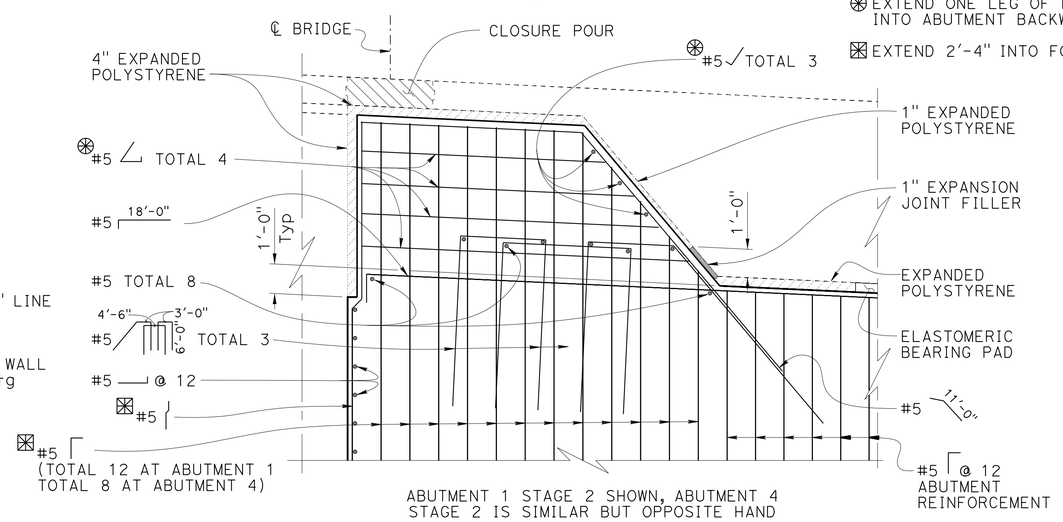

ABUTMENT 1 STAGE 2 SHOWN, ABUTMENT 4 STAGE 2 IS SIMILAR BUT OPPOSITE HAND

INTERNAL SHEAR KEY DETAIL B

3/8" = 1'-0"

DESIGN	BY P. Vijitakula	CHECKED Vadim Shostak	
DETAILS	BY G. M. Souza	CHECKED Vadim Shostak	
QUANTITIES	BY Art Herrera	CHECKED Mike Bergman	

STATE OF CALIFORNIA DEPARTMENT OF TRANSPORTATION

DIVISION OF ENGINEERING SERVICES STRUCTURE DESIGN DESIGN BRANCH 1

BRIDGE NO. 53-3065
POST MILE 6.38

FLORENCE AVENUE OC (REPLACE)

ABUTMENT 4 STAGE 1 LAYOUT

STRUCTURES DESIGN DETAIL SHEET (ENGLISH) (REV. 09-01-10)

ORIGINAL SCALE IN INCHES FOR REDUCED PLANS 0 1 2 3

UNIT: 3576
PROJECT NUMBER & PHASE: 07000018351 CONTRACT NO.: 07-215954

DISREGARD PRINTS BEARING EARLIER REVISION DATES

REVISION DATES 11-04-11 05/02/13 05/30/13

SHEET 10 OF 56

FILE => 53-3065-f-10-abut04-stg01-lyt.dgn

USERNAME => s128843 DATE PLOTTED => 05-SEP-2013 TIME PLOTTED => 15:01

DIST	COUNTY	ROUTE	POST MILES TOTAL PROJECT	SHEET No.	TOTAL SHEETS
07	LA	5	0.0/7.6	626	985

P. Vijitakula
REGISTERED CIVIL ENGINEER 12-28-12 DATE

6-24-13
PLANS APPROVAL DATE

REGISTERED PROFESSIONAL ENGINEER P. VIJITAKULA No. C 54701 Exp. 12-31-13 CIVIL STATE OF CALIFORNIA

The State of California or its officers or agents shall not be responsible for the accuracy or completeness of electronic copies of this plan sheet.

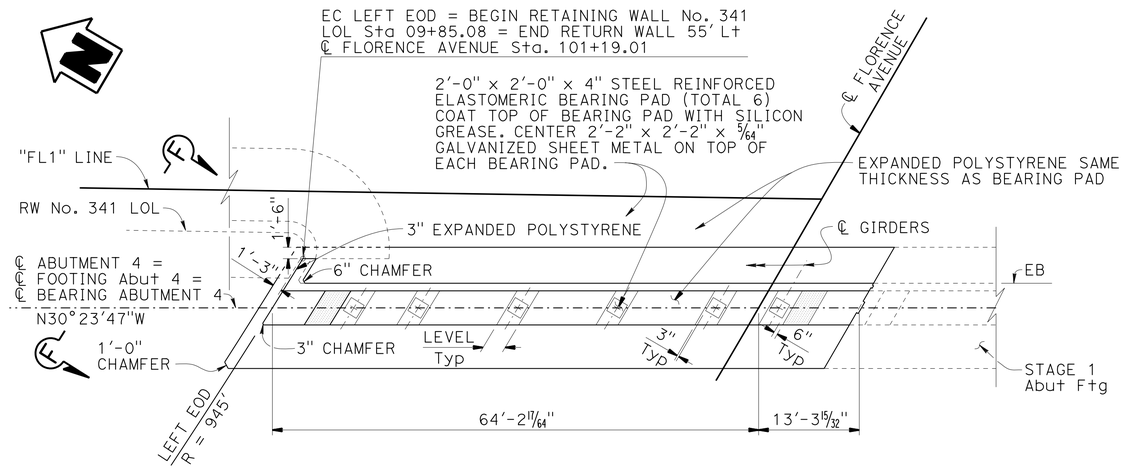

PLAN
1" = 10'

NOTES:

- FOR SECTIONS B-B AND C-C, SEE "ABUTMENT 4 DETAILS" SHEET
- FOR SECTION A-A, SEE "ABUTMENT 1 STAGE 1 LAYOUT" SHEET
- FOR SECTIONS G-G AND J-J, SEE ABUTMENT DETAILS NO. 2" SHEET
- FOR DETAILS AND LOCATIONS OF JACKING RECESSES AND 10" ø FORMED HOLE, SEE "CONSTRUCTION SEQUENCE NO. 2" SHEET
- ⚠ FOR DETAILS, SEE TABLE 1 ON "ABUTMENT DETAILS NO. 3" SHEET. EXTEND VERTICAL REINFORCING STEEL INTO ABUTMENT FOOTING. FOR VIEW G-G, AT PORTION UNDERNEATH 4" EXPANDED POLYSTYRENE EXTEND BOTH FACES OF HORIZONTAL REINFORCING STEEL 2'-0" INTO ABUTMENT STEM. FOR VIEW F-F, EXTEND BOTH FACES OF HORIZONTAL REINFORCING STEEL 2'-0" INTO ABUTMENT STEM.

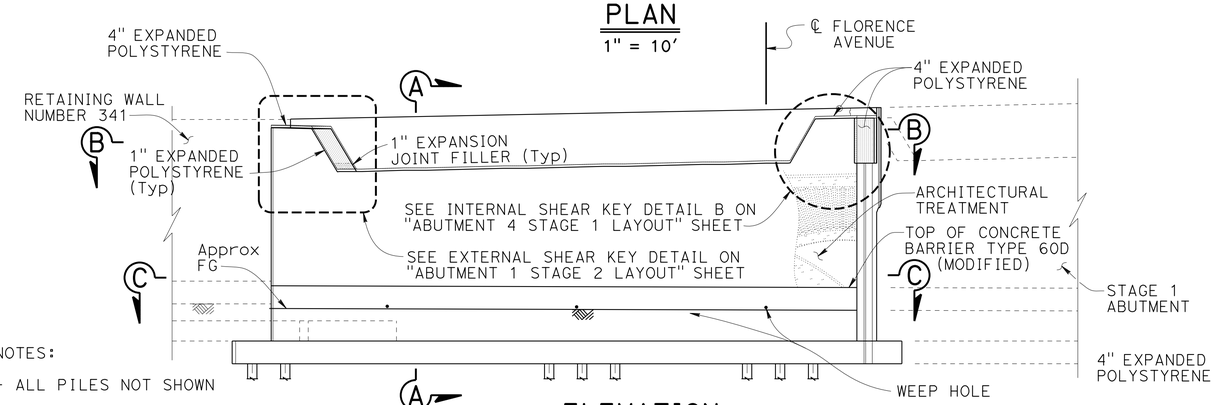

ELEVATION
1" = 10'

NOTES:

- ALL PILES NOT SHOWN
- CONCRETE BARRIERS NOT SHOWN
- JACKING RECESSES AND 10" ø FORMED HOLE LOCATIONS NOT SHOWN

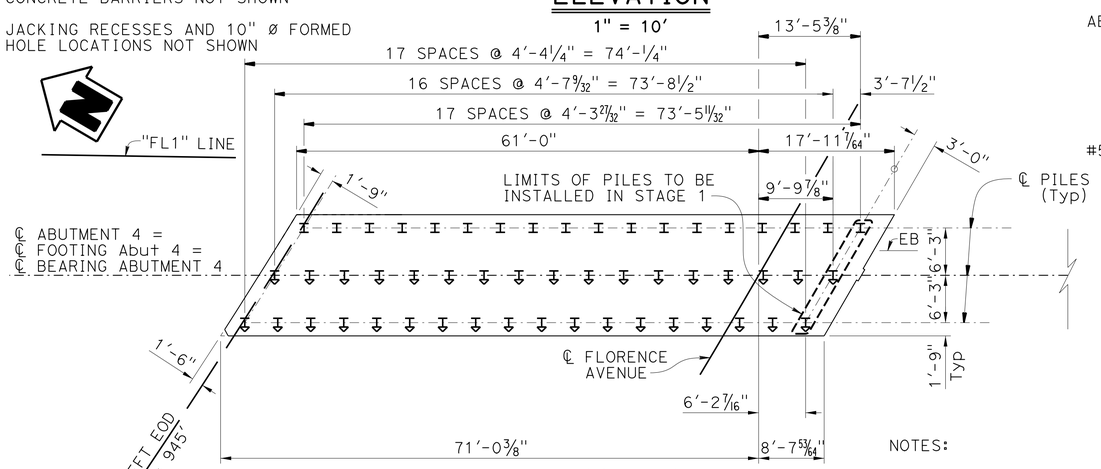

FOOTING PLAN
1" = 10'

NOTES:

I INDICATES VERTICAL PILES

I INDICATES BATTERED PILES

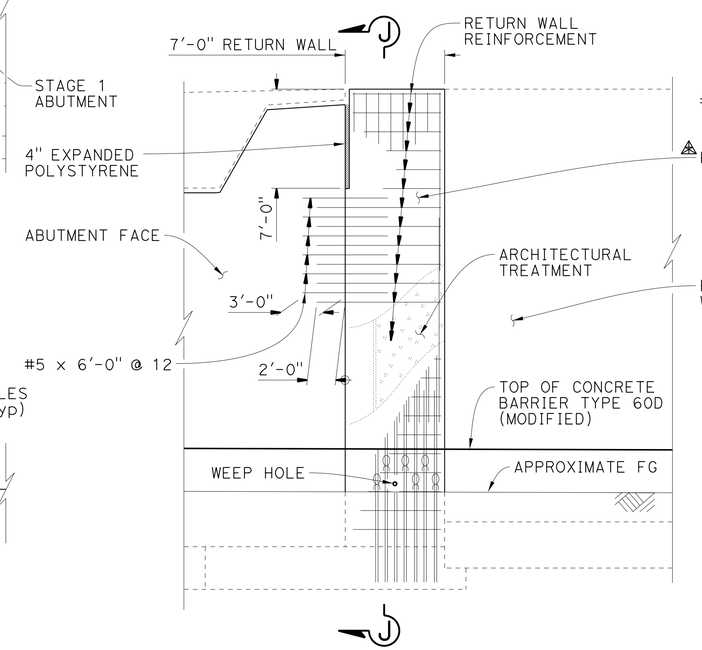

PILES, PEDESTAL AND CONCRETE BARRIER NOT SHOWN

VIEW G-G
3/16" = 1'-0"

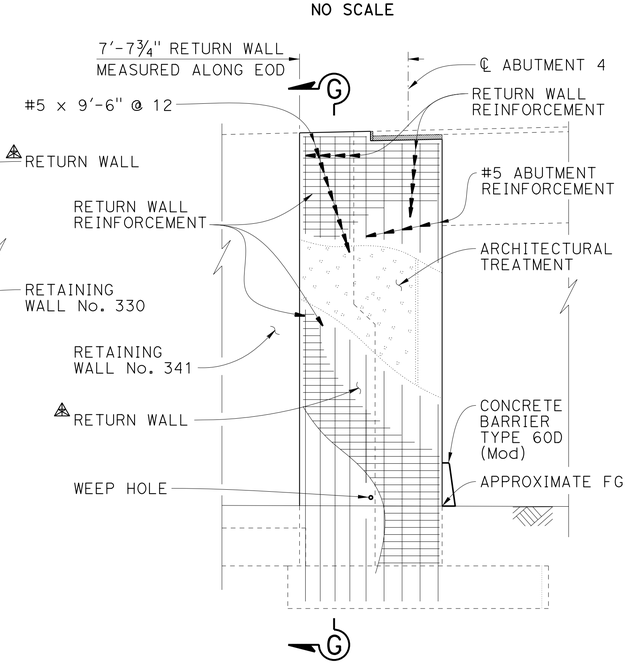

PILES AND CONCRETE BARRIER NOT SHOWN

VIEW F-F
3/16" = 1'-0"

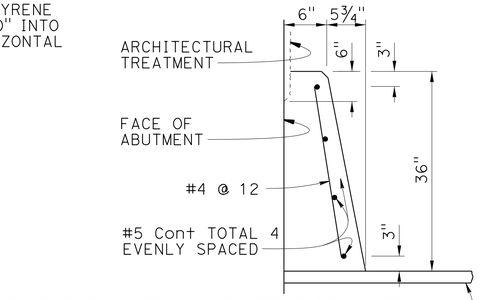

FOR DETAILS NOT SHOWN, SEE A76A

CONCRETE BARRIER TYPE 60D (MODIFIED)
NO SCALE

	BY	CHECKED
DESIGN	P. Vijitakula	Vadim Shostak
DETAILS	G. M. Souza	Vadim Shostak
QUANTITIES	Art Herrera	Mike Bergman

STATE OF CALIFORNIA
DEPARTMENT OF TRANSPORTATION

DIVISION OF ENGINEERING SERVICES
STRUCTURE DESIGN
DESIGN BRANCH 1

BRIDGE NO. 53-3065
POST MILE 6.38

FLORENCE AVENUE OC (REPLACE)
ABUTMENT 4 STAGE 2 LAYOUT

STRUCTURES DESIGN DETAIL SHEET (ENGLISH) (REV. 09-01-10)

ORIGINAL SCALE IN INCHES FOR REDUCED PLANS 0 1 2 3

UNIT: 3576
PROJECT NUMBER & PHASE: 07000018351
CONTRACT NO.: 07-215954

DISREGARD PRINTS BEARING EARLIER REVISION DATES → 12-18-11 05/30/13 04/02/13

SHEET 11 OF 56

FILE => 53-3065-f-11-abut04-stg02-lyt.dgn

USERNAME => s128843 DATE PLOTTED => 05-SEP-2013 TIME PLOTTED => 15:01

DIST	COUNTY	ROUTE	POST MILES TOTAL PROJECT	SHEET No.	TOTAL SHEETS
07	LA	5	0.0/7.6	627	985

P. Vijitakula 12-28-12
REGISTERED CIVIL ENGINEER DATE

6-24-13
PLANS APPROVAL DATE

REGISTERED PROFESSIONAL ENGINEER P. VIJITAKULA No. C 54701 Exp. 12-31-13 CIVIL STATE OF CALIFORNIA

The State of California or its officers or agents shall not be responsible for the accuracy or completeness of electronic copies of this plan sheet.

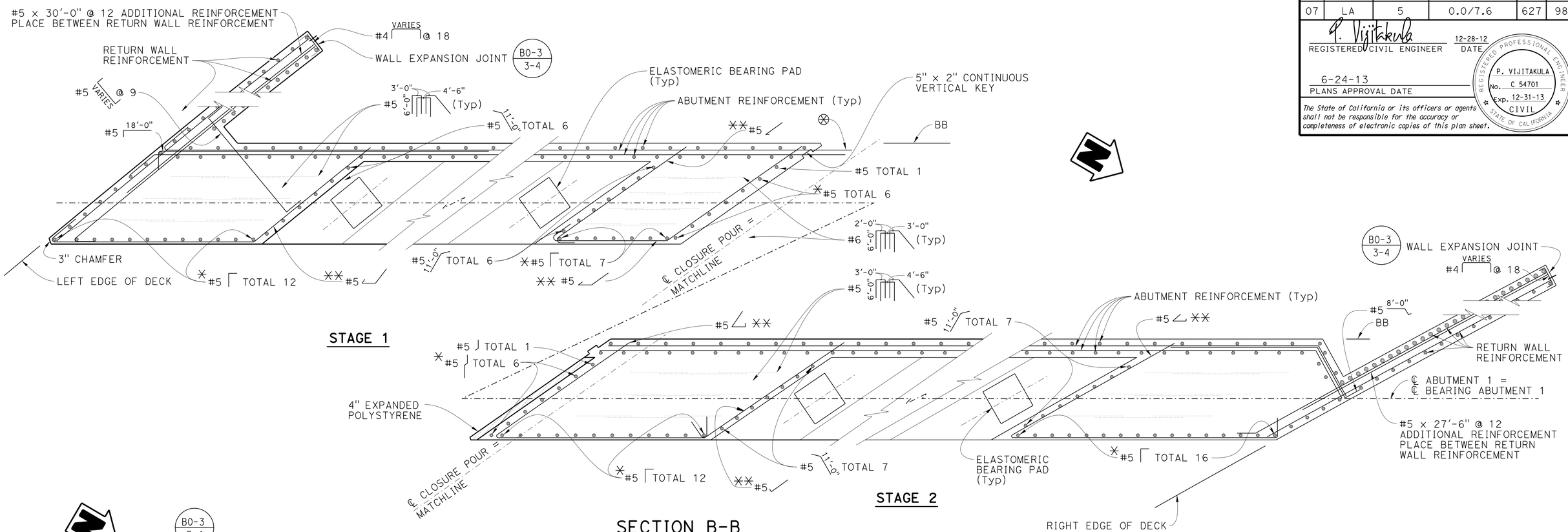

SECTION B-B

3/8" = 1'-0"

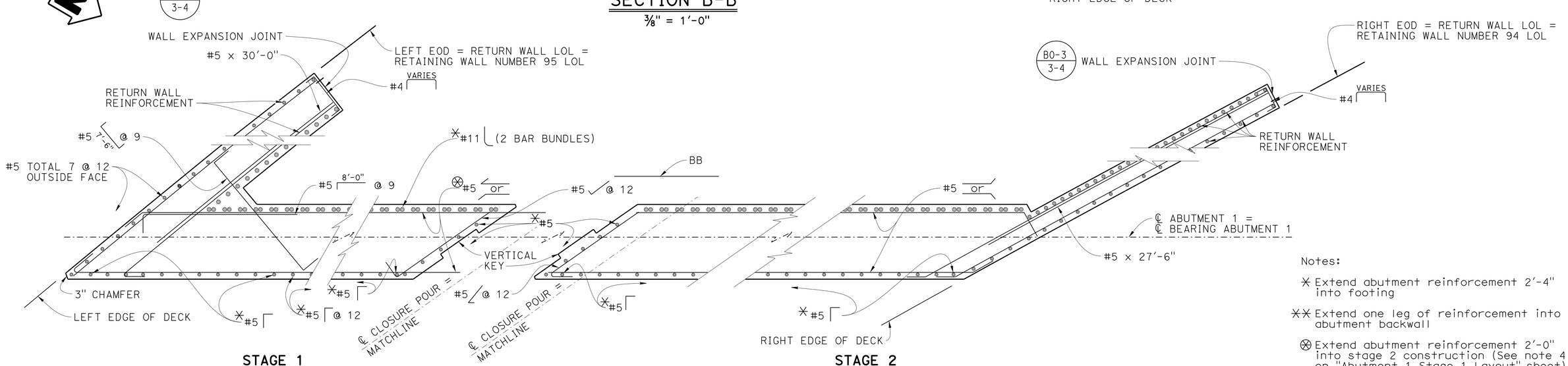

SECTION C-C

3/8" = 1'-0"

Notes:

✳ Extend abutment reinforcement 2'-4" into footing

✳✳ Extend one leg of reinforcement into abutment backwall

⊗ Extend abutment reinforcement 2'-0" into stage 2 construction (See note 4 on "Abutment 1 Stage 1 Layout" sheet)

	BY	CHECKED
DESIGN	P. Vijitakula	Vadim Shostak
DETAILS	G. M. Souza	Vadim Shostak
QUANTITIES	Art Herrera	Mike Bergman

STATE OF CALIFORNIA DEPARTMENT OF TRANSPORTATION

DIVISION OF ENGINEERING SERVICES STRUCTURE DESIGN DESIGN BRANCH 1

BRIDGE NO. 53-3065
POST MILE 6.38

FLORENCE AVENUE OC (REPLACE)
ABUTMENT 1 DETAILS

STRUCTURES DESIGN DETAIL SHEET (ENGLISH) (REV. 09-01-10)

ORIGINAL SCALE IN INCHES FOR REDUCED PLANS 0 1 2 3

UNIT: 3576
PROJECT NUMBER & PHASE: 07000018351
CONTRACT NO.: 07-215954

DISREGARD PRINTS BEARING EARLIER REVISION DATES

REVISION DATES 07-31-12 04/03/13 08-32-12

SHEET 12 OF 56

FILE => 53-3065-f-12-abut01-dtl.dgn

USERNAME => s124436 DATE PLOTTED => 26-JUN-2013 TIME PLOTTED => 15:42

DIST	COUNTY	ROUTE	POST MILES TOTAL PROJECT	SHEET No.	TOTAL SHEETS
07	LA	5	0.0/7.6	628	985

P. Vijitakula 12-28-12
REGISTERED CIVIL ENGINEER DATE

6-24-13
PLANS APPROVAL DATE

REGISTERED PROFESSIONAL ENGINEER P. VIJITAKULA No. C 54701 Exp. 12-31-13 CIVIL STATE OF CALIFORNIA

The State of California or its officers or agents shall not be responsible for the accuracy or completeness of electronic copies of this plan sheet.

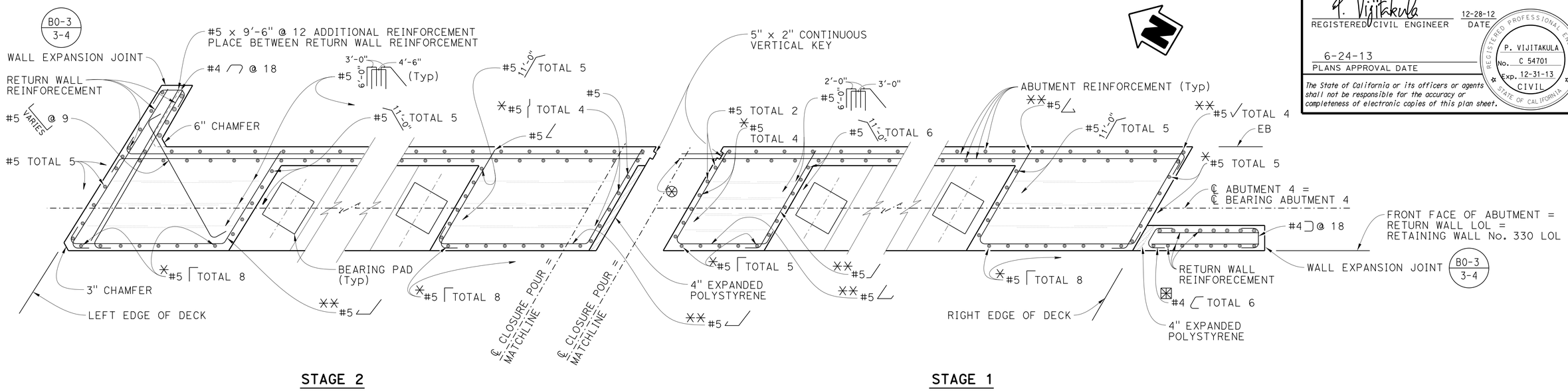

SECTION B-B

3/8" = 1'-0"

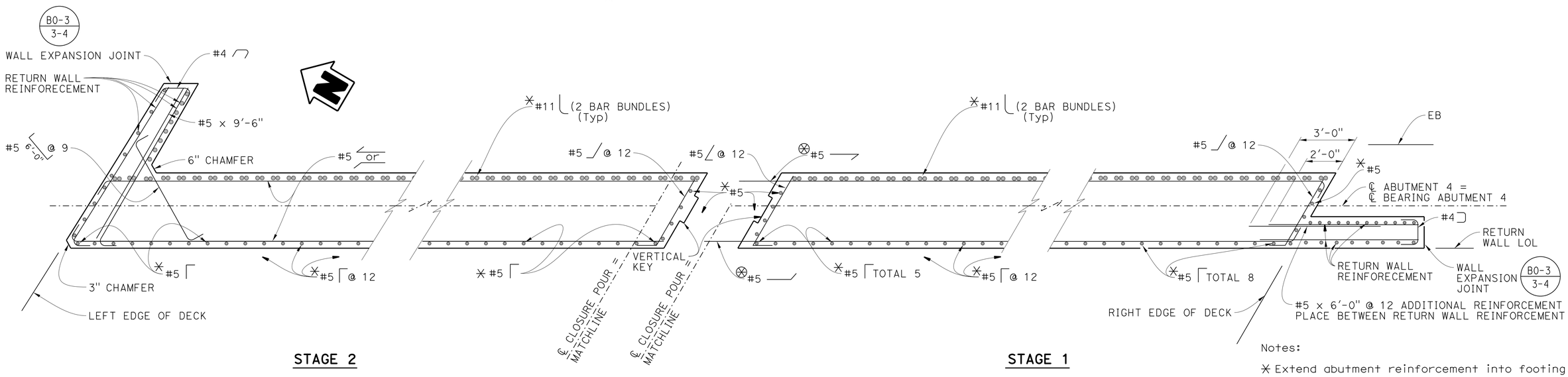

SECTION C-C

3/8" = 1'-0"

Notes:

✳ Extend abutment reinforcement into footing

✳✳ Extend one leg of reinforcement into abutment backwall

⊗ Extend abutment reinforcement 2'-0" into stage 2 construction (See note 4 on "Abutment 1 Stage 1 Layout" sheet)

⊠ Place in limit of 4" Expanded Polystyrene

	BY	CHECKED
DESIGN	P. Vijitakula	Vadim Shostak
DETAILS	G. M. Souza	Vadim Shostak
QUANTITIES	Art Herrera	Mike Bergman

STATE OF CALIFORNIA
DEPARTMENT OF TRANSPORTATION

DIVISION OF ENGINEERING SERVICES
STRUCTURE DESIGN
DESIGN BRANCH 1

BRIDGE NO. 53-3065
POST MILE 6.38

FLORENCE AVENUE OC (REPLACE)
ABUTMENT 4 DETAILS

STRUCTURES DESIGN DETAIL SHEET (ENGLISH) (REV. 09-01-10)

ORIGINAL SCALE IN INCHES FOR REDUCED PLANS 0 1 2 3

UNIT: 3576
PROJECT NUMBER & PHASE: 07000018351
CONTRACT NO.: 07-215954

DISREGARD PRINTS BEARING EARLIER REVISION DATES
REVISION DATES 01-30-12 08-22-12 04/02/13

SHEET 13 OF 56

FILE => 53-3065-f-13-abut04-dtl.dgn

USERNAME => s124496 DATE PLOTTED => 26-JUN-2013 TIME PLOTTED => 15:43

DIST	COUNTY	ROUTE	POST MILES TOTAL PROJECT	SHEET No.	TOTAL SHEETS
07	LA	5	0.0/7.6	629	985

P. Vijitakula 12-28-12
REGISTERED CIVIL ENGINEER DATE

6-24-13
PLANS APPROVAL DATE

REGISTERED PROFESSIONAL ENGINEER P. VIJITAKULA No. C 54701 Exp. 12-31-13 CIVIL STATE OF CALIFORNIA

The State of California or its officers or agents shall not be responsible for the accuracy or completeness of electronic copies of this plan sheet.

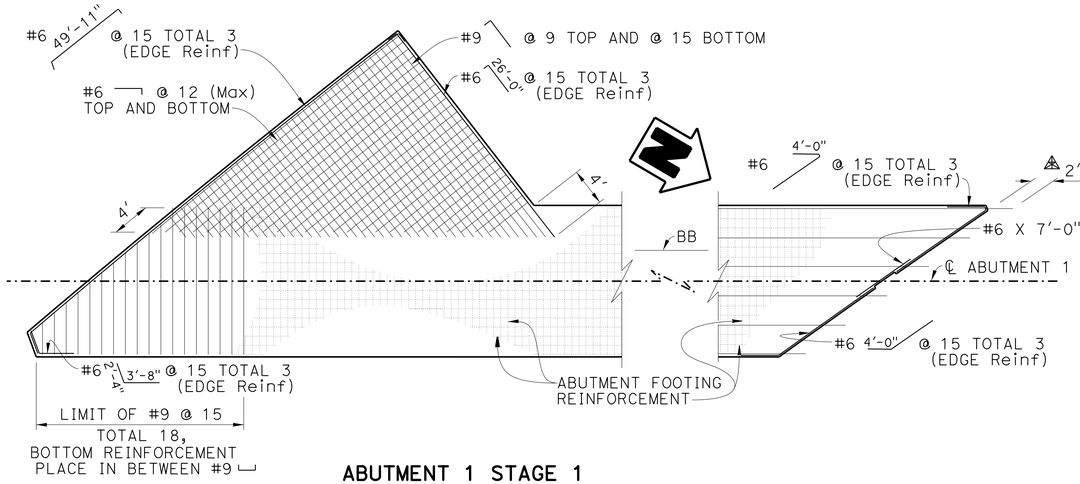

ABUTMENT 1 STAGE 1

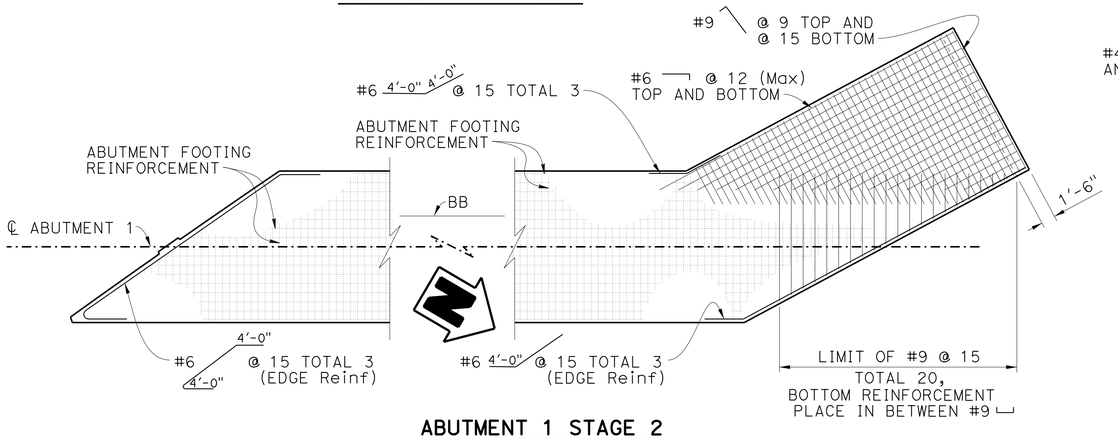

ABUTMENT 1 STAGE 2

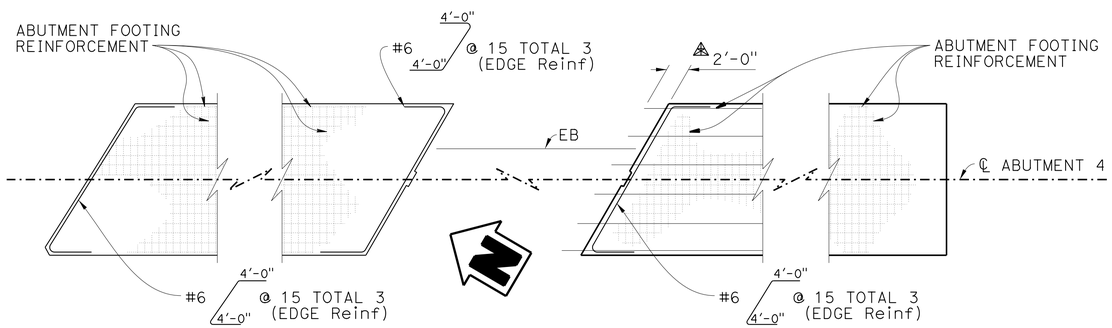

ABUTMENT 4 STAGE 2

ABUTMENT 4 STAGE 1

PART FOOTING AT CORNER PLAN

1/8" = 1'-0"

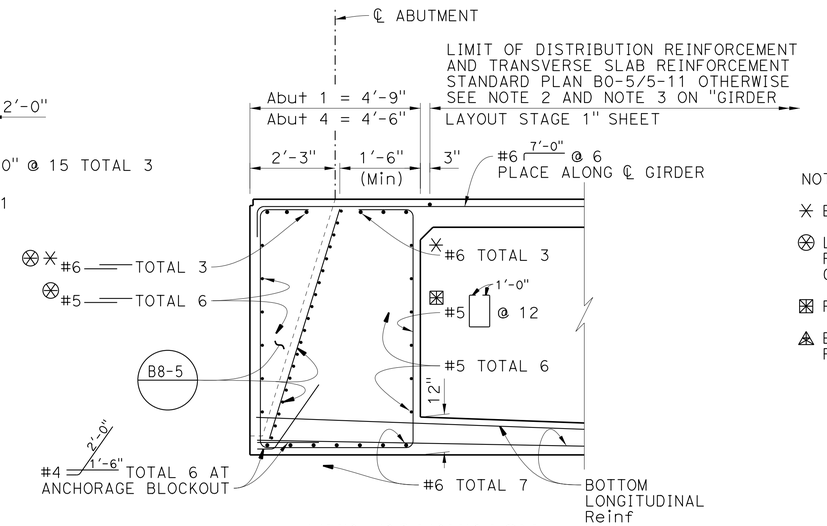

END DIAPHRAGM SECTION X-X

1/2" = 1'-0"

NOTE: For SECTION X-X location, see "GIRDER LAYOUT STAGE 1 AND GIRDER LAYOUT STAGE 2" sheets

NOTES:

- ✳ EXTEND 3'-0" INTO CLOSURE POUR
- ⊗ LAP AT INTERIOR GIRDER BLOCKOUTS, REINFORCEMENT MAY BE BENT TO CLEAR PRESTRESSING EQUIPMENT
- ⊠ PLACE NORMAL TO ℄ ABUTMENT
- ⚠ EXTEND EVERY OTHER 2 HORIZONTAL REINFORCMENT (BOTH FACES)

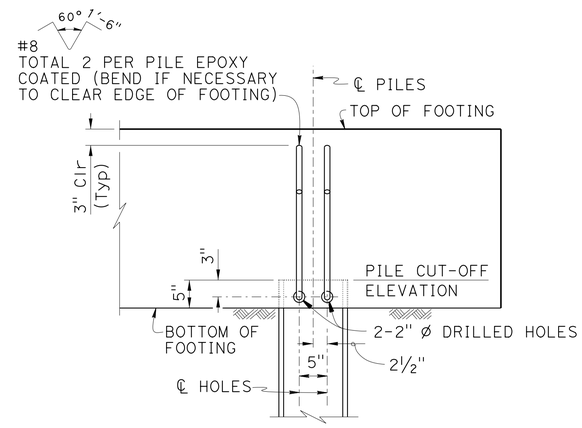

STEEL PILE ANCHOR DETAILS

NO SCALE

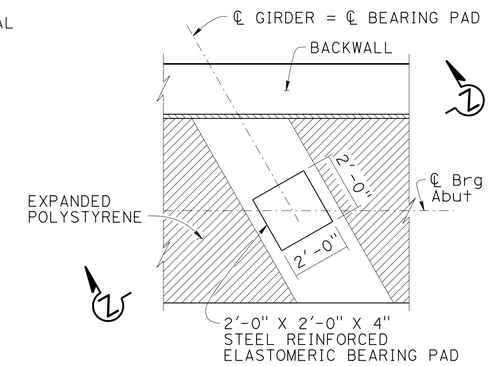

PLAN

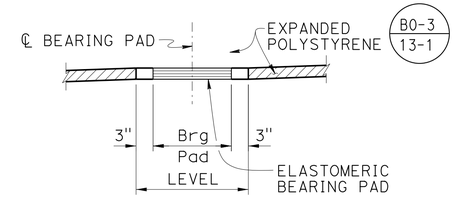

SECTION Z-Z

BEARING PAD DETAILS

NO SCALE

DESIGN	BY P. Vijitakula	CHECKED Vadim Shostak	
DETAILS	BY G. M. Souza	CHECKED Vadim Shostak	
QUANTITIES	BY Art Herrera	CHECKED Mike Bergman	

STATE OF CALIFORNIA DEPARTMENT OF TRANSPORTATION

DIVISION OF ENGINEERING SERVICES STRUCTURE DESIGN DESIGN BRANCH 1

BRIDGE NO. 53-3065
POST MILE 6.38

FLORENCE AVENUE OC (REPLACE)
ABUTMENT DETAILS NO. 1

STRUCTURES DESIGN DETAIL SHEET (ENGLISH) (REV. 09-01-10)

ORIGINAL SCALE IN INCHES FOR REDUCED PLANS 0 1 2 3

UNIT: 3576
PROJECT NUMBER & PHASE: 07000018351
CONTRACT NO.: 07-215954

DISREGARD PRINTS BEARING EARLIER REVISION DATES

REVISION DATES 11-04-11 04/02/13 09-24-12

SHEET 14 OF 56

FILE => 53-3065-f-14-abut-dt01.dgn

USERNAME => s124936 DATE PLOTTED => 26-JUN-2013 TIME PLOTTED => 15:43

DIST	COUNTY	ROUTE	POST MILES TOTAL PROJECT	SHEET No.	TOTAL SHEETS
07	LA	5	0.0/7.6	630	985

P. Vijitakula 12-28-12
REGISTERED CIVIL ENGINEER DATE

6-24-13
PLANS APPROVAL DATE

REGISTERED PROFESSIONAL ENGINEER P. VIJITAKULA No. C 54701 Exp. 12-31-13 CIVIL STATE OF CALIFORNIA

The State of California or its officers or agents shall not be responsible for the accuracy or completeness of electronic copies of this plan sheet.

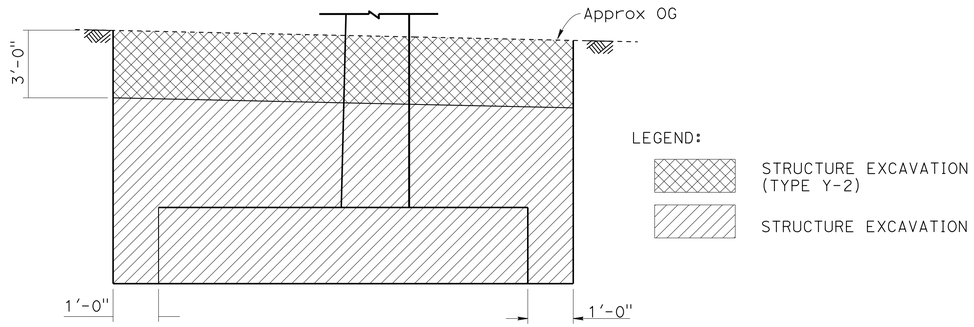

NOTE:

Approximate limits of Aerially Deposited Lead (Type Y-2) are typical for both abutments and bent 2. For details not shown, see "ROAD PLANS" and Std Plan A62B

LIMITS OF PAYMENT FOR STRUCTURE EXCAVATION (TYPE Y-2) (AERIALLY DEPOSITED LEAD)

NO SCALE

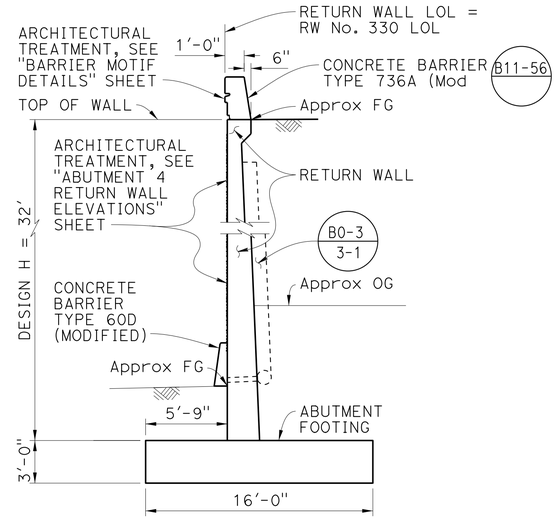

SECTION J-J

3/16" = 1'-0"

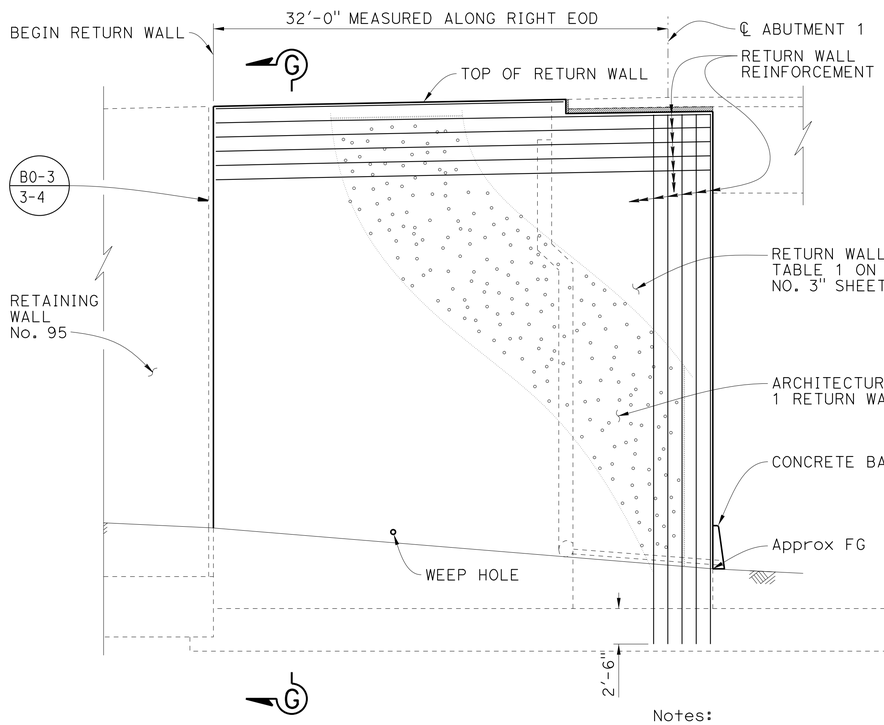

VIEW D-D

3/16" = 1'-0"

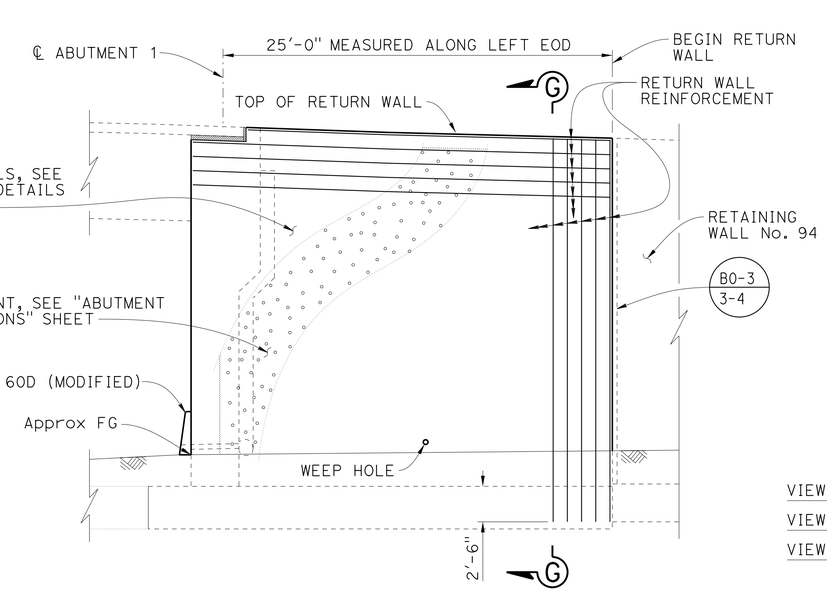

VIEW E-E

3/16" = 1'-0"

Notes:

- Extend vertical reinforcing steel into footing and extend both faces of horizontal reinforcing steels into abutment stem.
- Piles and concrete barrier not shown

✳ VIEW F-F REQUIRES CURB RAMP

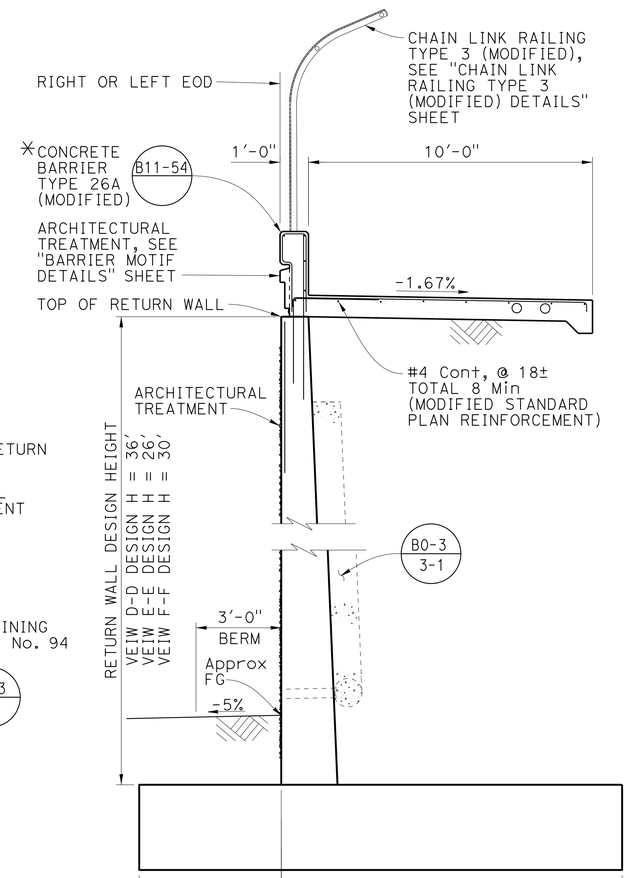

VIEW D-D	7'-0"	VARIES
VIEW E-E	5'-0"	12'-0"
VIEW F-F	1'-6"	VARIES

NOTE:

FOR DETAILS NOT SHOWN, SEE TABLE 1 ON "ABUTMENT DETAILS NO. 3" SHEET

SECTION G-G

3/8" = 1'-0"

	BY	CHECKED
DESIGN	P. Vijitakula	Vadim Shostak
DETAILS	G. M. Souza	Vadim Shostak
QUANTITIES	Art Herrera	Mike Bergman

STATE OF CALIFORNIA
DEPARTMENT OF TRANSPORTATION

DIVISION OF ENGINEERING SERVICES
STRUCTURE DESIGN
DESIGN BRANCH 1

BRIDGE NO. 53-3065
POST MILE 6.38

FLORENCE AVENUE OC (REPLACE)

ABUTMENT DETAILS NO. 2

STRUCTURES DESIGN DETAIL SHEET (ENGLISH) (REV. 09-01-10)

ORIGINAL SCALE IN INCHES FOR REDUCED PLANS 0 1 2 3

UNIT: 3576
PROJECT NUMBER & PHASE: 07000018351
CONTRACT NO.: 07-215954

DISREGARD PRINTS BEARING EARLIER REVISION DATES

REVISION DATES 01-22-12 11-27-12 09-30-12

SHEET 15 OF 56

FILE => 53-3065-f-15-abut-dt02.dgn

USERNAME => s124496 DATE PLOTTED => 26-JUN-2013 TIME PLOTTED => 15:43

DIST	COUNTY	ROUTE	POST MILES TOTAL PROJECT	SHEET No.	TOTAL SHEETS
07	LA	5	0.0/7.6	631	985

P. Vijitakula
REGISTERED CIVIL ENGINEER 12-28-12 DATE

6-24-13
PLANS APPROVAL DATE

REGISTERED PROFESSIONAL ENGINEER P. VIJITAKULA No. C 54701 Exp. 12-31-13 CIVIL STATE OF CALIFORNIA

The State of California or its officers or agents shall not be responsible for the accuracy or completeness of electronic copies of this plan sheet.

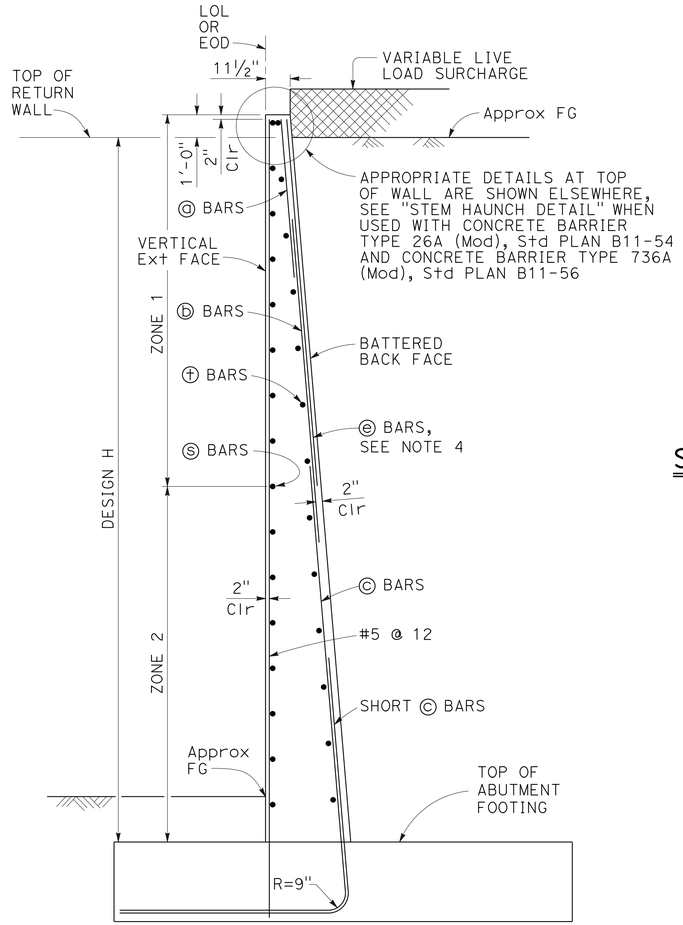

TYPICAL SECTION (RETURN WALL)

NO SCALE

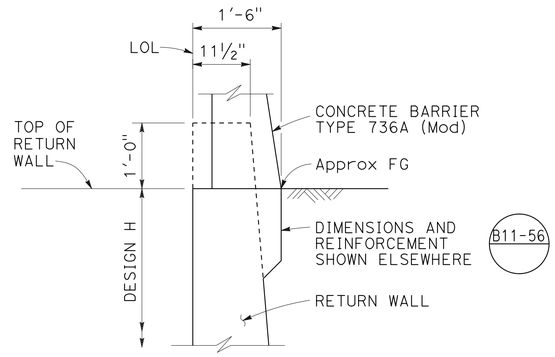

STEM HAUNCH DETAIL (FOR VIEW G-G)

NO SCALE

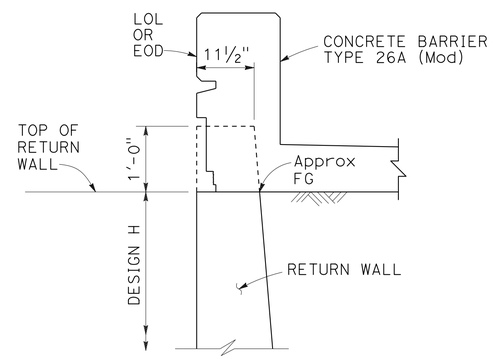

STEM HAUNCH DETAIL (FOR VIEW D-D & E-E)

NO SCALE

SYMBOLS:

h1 = Top of footing to top of short ⓒ bar
h2 = Top of footing to top of ⓒ bar
h3 = Top of footing to top of ⓑ bar
Zone 1 = Top half of stem height
Zone 2 = Bottom half of stem height
∞ - Bundle of two bars

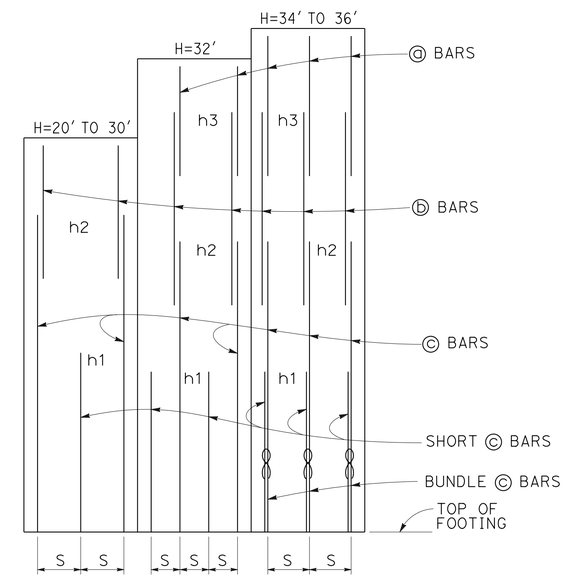

ELEVATION

NO SCALE

NOTES:

1. For details not shown and drainage notes see B3-5
2. For wall stem joint details see B0-3/3-3 and B0-3/3-4
3. At ⓒ bars:
   H ≤ 6', no splices are allowed within 1'-8" above the top of footing.
   H > 6', no splices are allowed within H/4 above the top of footing.
4. Provide #6 @ 10" x 15'-0" ⓔ bars over a distance of 8'-0" measured from all expansion joints, begin wall and end wall locations. For H ≤ 14', hook ⓔ bar into footing and reduce bar length as needed to maintain Min Clr cover.
5. For footing dimensions and pile details, see "Abutment 1 Stage 1 Layout", "Abutment 1 Stage 2 Layout", "Abutment 4 Stage 1 Layout", "Abutment 4 Stage 2 Layout", "Abutment Details No. 1" and "Abutment Details No. 2" sheets.

TABLE 1: REINFORCING STEEL, DIMENSIONS AND DATA

DESIGN H	22'	24'	26'	28'	30'	32'	34'	36'
BATTER	½: 12	⅝: 12	⅝: 12	¾: 12	⅞: 12	1 : 12	1 : 12	1 : 12
SPACING "S"	6"	6"	6"	6"	6"	6"	10"	8"
ⓐ BARS	-	-	-	-	-	#7	#7	#6
ⓑ BARS	#7	#7	#7	#7	#7	#9	#9	#8
ⓒ BARS	#9	#9	#10	#10	#10	#11	#11	#11
h1	9'-0"	10'-1"	11'-0"	12'-1"	13'-0"	13'-0"	12'-7"	11'-6"
h2	13'-0"	14'-7"	17'-6"	19'-0"	20'-5"	19'-0"	18'-0"	20'-2"
h3	-	-	-	-	-	21'-2"	21'-10"	24'-0"
ZONE 1 ⓢ BARS	#5 @ 18	#5 @ 12	#5 @ 12	#5 @ 12	#5 @ 12	#5 @ 12	#5 @ 12	#5 @ 12
ZONE 2 ⓢ BARS	#5 @ 12	#5 @ 12	#5 @ 12	#6 @ 12	#6 @ 12	#6 @ 12	#7 @ 12	#7 @ 12
ZONE 1 ⓣ BARS	#4 @ 18	#4 @ 12	#4 @ 12	#4 @ 18	#4 @ 12	#4 @ 12	#4 @ 12	#4 @ 12
ZONE 2 ⓣ BARS	#4 @ 18	#4 @ 12	#4 @ 12	#4 @ 12	#4 @ 12	#5 @ 12	#5 @ 12	#5 @ 12

	BY	CHECKED
DESIGN	P. Vijitakula	Vadim Shostak
DETAILS	G. M. Souza	Vadim Shostak
QUANTITIES	Art Herrera	Mike Bergman

STATE OF CALIFORNIA
DEPARTMENT OF TRANSPORTATION

DIVISION OF ENGINEERING SERVICES
STRUCTURE DESIGN
DESIGN BRANCH 1

BRIDGE NO. 53-3065
POST MILE 6.38

FLORENCE AVENUE OC (REPLACE)
ABUTMENT DETAILS NO. 3

STRUCTURES DESIGN DETAIL SHEET (ENGLISH) (REV. 09-01-10)

ORIGINAL SCALE IN INCHES FOR REDUCED PLANS 0 1 2 3

UNIT: 3576
PROJECT NUMBER & PHASE: 07000018351
CONTRACT NO.: 07-215954

DISREGARD PRINTS BEARING EARLIER REVISION DATES

REVISION DATES 04-16-12 08-22-12 04/02/13

SHEET 16 OF 56

FILE => 53-3065-f-16-abut-dt03.dgn

USERNAME => s124496 DATE PLOTTED => 26-JUN-2013 TIME PLOTTED => 15:43

DIST	COUNTY	ROUTE	POST MILES TOTAL PROJECT	SHEET No.	TOTAL SHEETS
07	LA	5	0.0/7.6	632	985

P. Vijitakula
REGISTERED CIVIL ENGINEER 12-28-12 DATE

6-24-13
PLANS APPROVAL DATE

REGISTERED PROFESSIONAL ENGINEER P. VIJITAKULA No. C 54701 Exp. 12-31-13 CIVIL STATE OF CALIFORNIA

The State of California or its officers or agents shall not be responsible for the accuracy or completeness of electronic copies of this plan sheet.

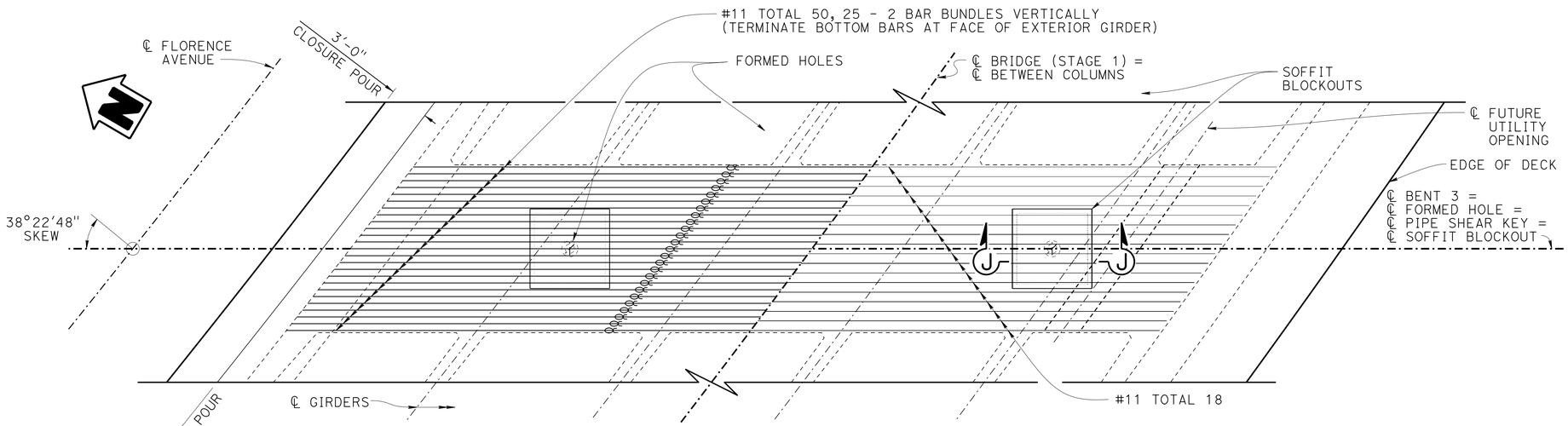

TOP REINFORCEMENT

BOTTOM REINFORCEMENT

PLAN (AT BENT 3)

1" = 5'

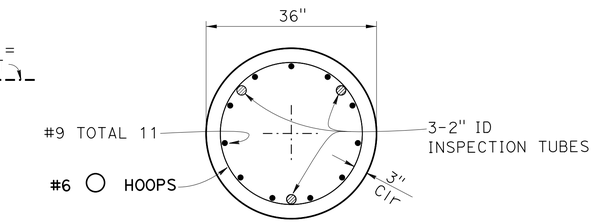

SECTION K-K

¾"=1'-0"

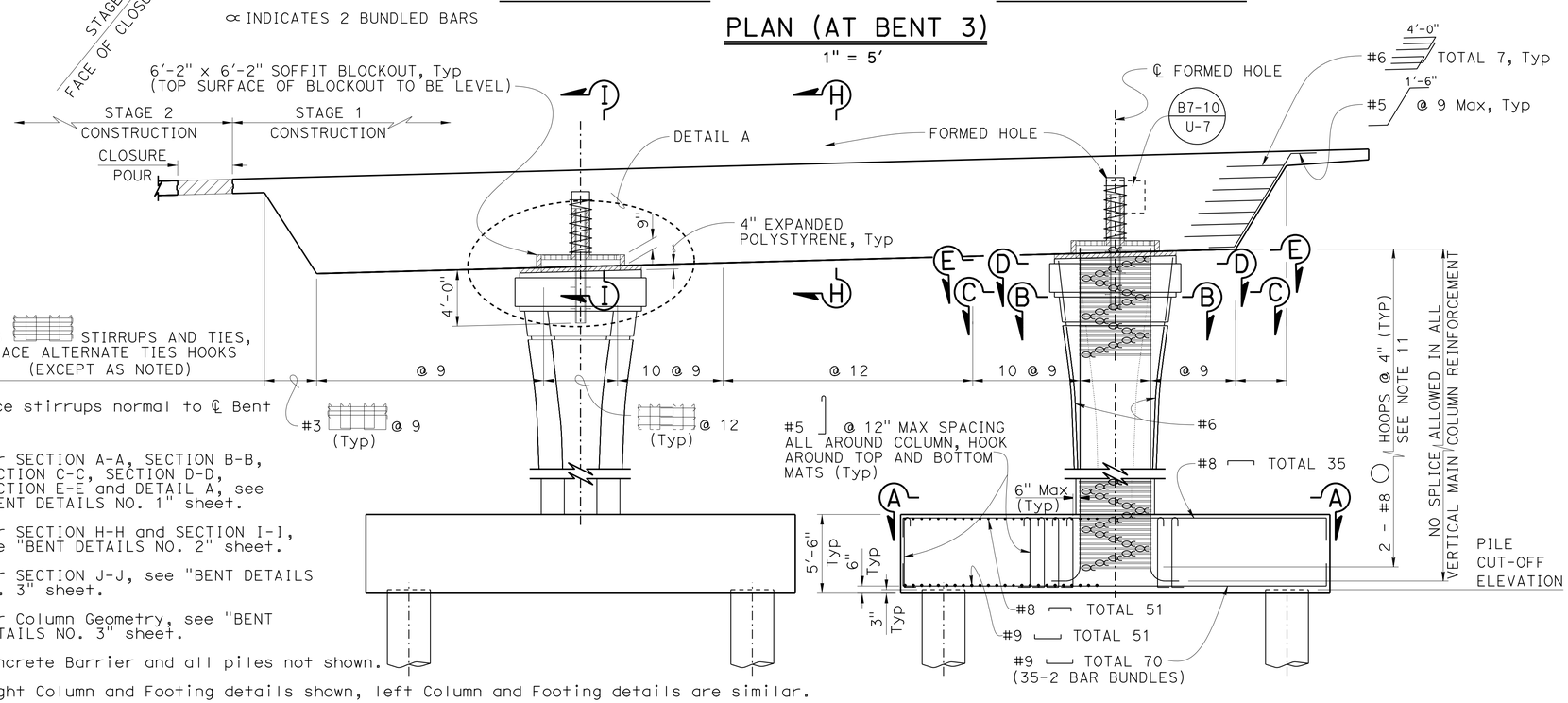

✳ Place stirrups normal to ℄ Bent

NOTES:

1. For SECTION A-A, SECTION B-B, SECTION C-C, SECTION D-D, SECTION E-E and DETAIL A, see "BENT DETAILS NO. 1" sheet.
2. For SECTION H-H and SECTION I-I, see "BENT DETAILS NO. 2" sheet.
3. For SECTION J-J, see "BENT DETAILS NO. 3" sheet.
4. For Column Geometry, see "BENT DETAILS NO. 3" sheet.
5. Concrete Barrier and all piles not shown.
6. Right Column and Footing details shown, left Column and Footing details are similar.
7. Bent 2 and Bent 3 dimensions and details are similar.
8. For Pile Cut-off Elevations and Specified Tip Elevations, see "GENERAL NOTES" sheet.
9. Bent 2 Stage 1 and Stage 2 dimensions and details are similar.
10. For Bent Footing Plan View, see "BENT DETAILS NO. 4" sheet.
11. 2 - #8 bundled bars.

ELEVATION

1" = 5'

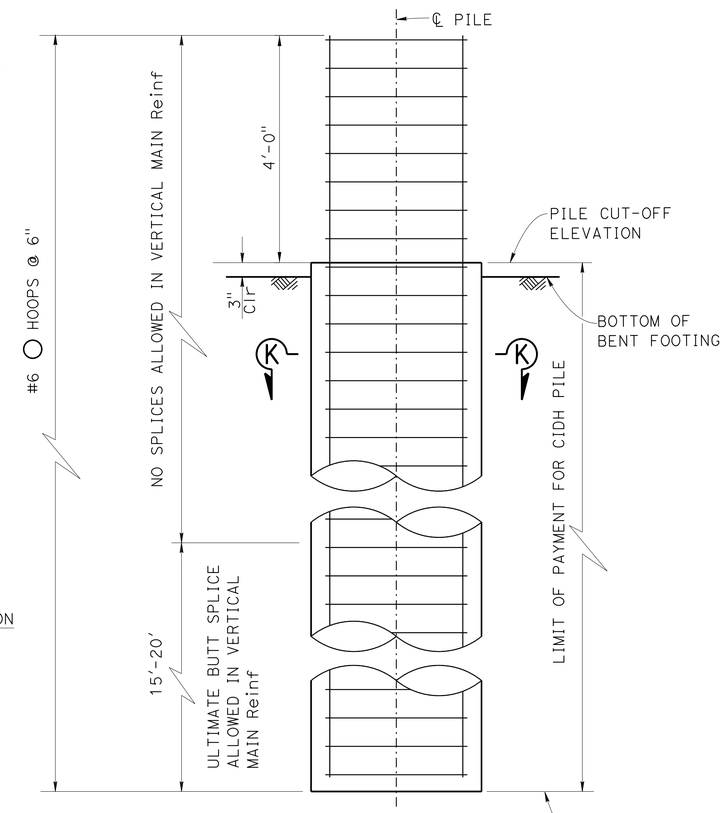

NOTE: #6 and #8 ○ hoops made continuous with ultimate butt splice, place staggered splices.

36" CIDH CONCRETE PILE

ELEVATION

¾"=1'-0"

DESIGN	BY P. Vijitakula	CHECKED Vadim Shostak	
DETAILS	BY G. M. Souza	CHECKED Vadim Shostak	
QUANTITIES	BY Art Herrera	CHECKED Mike Bergman	

STATE OF CALIFORNIA DEPARTMENT OF TRANSPORTATION

DIVISION OF ENGINEERING SERVICES STRUCTURE DESIGN DESIGN BRANCH 1

BRIDGE NO. 53-3065
POST MILE 6.38

FLORENCE AVENUE OC (REPLACE)

BENT DETAILS STAGE 1

STRUCTURES DESIGN DETAIL SHEET (ENGLISH) (REV. 09-01-10)

ORIGINAL SCALE IN INCHES FOR REDUCED PLANS 0 1 2 3

UNIT: 3576
PROJECT NUMBER & PHASE: 07000018351 CONTRACT NO.: 07-215954

DISREGARD PRINTS BEARING EARLIER REVISION DATES

REVISION DATES 11-14-11 05/30/13 04/02/13

SHEET 17 OF 56

FILE => 53-3065-j-17-bent-dt-stg-01.dgn

USERNAME => s124496 DATE PLOTTED => 26-JUN-2013 TIME PLOTTED => 15:43

DIST	COUNTY	ROUTE	POST MILES TOTAL PROJECT	SHEET No.	TOTAL SHEETS
07	LA	5	0.0/7.6	633	985

P. Vijitakula
REGISTERED CIVIL ENGINEER 12-28-12 DATE

6-24-13
PLANS APPROVAL DATE

REGISTERED PROFESSIONAL ENGINEER P. VIJITAKULA No. C 54701 Exp. 12-31-13 CIVIL STATE OF CALIFORNIA

The State of California or its officers or agents shall not be responsible for the accuracy or completeness of electronic copies of this plan sheet.

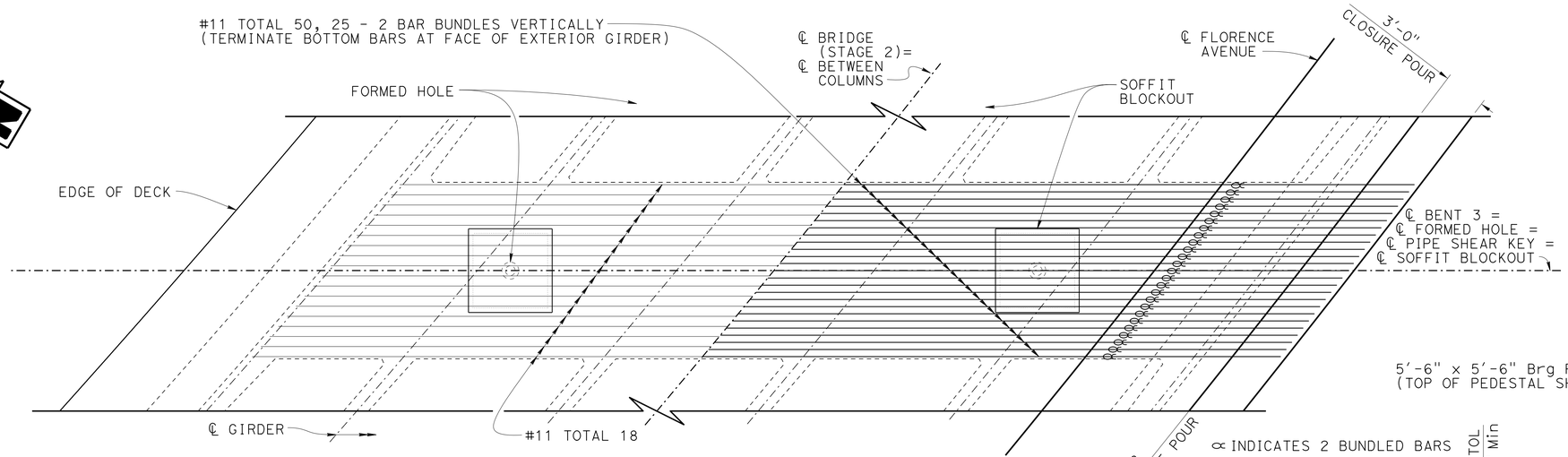

BOTTOM REINFORCEMENT **TOP REINFORCEMENT**

PLAN (AT BENT 3)

1" = 5'

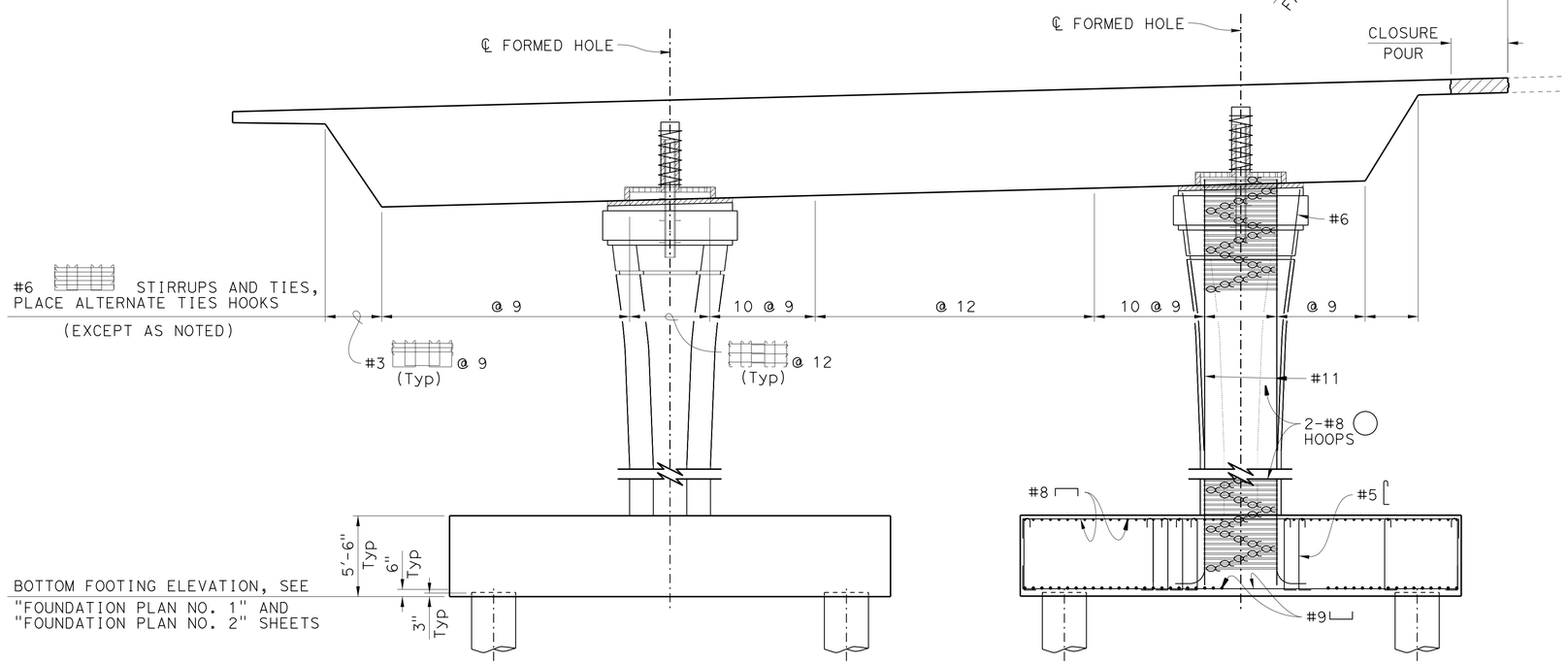

ELEVATION

1" = 5'

Notes:

- For Sections A-A, B-B, C-C, D-D and E-E see "Bent Details No. 1" sheet.
- For dimensions and details not shown, see "Bent Details Stage 1" sheet.

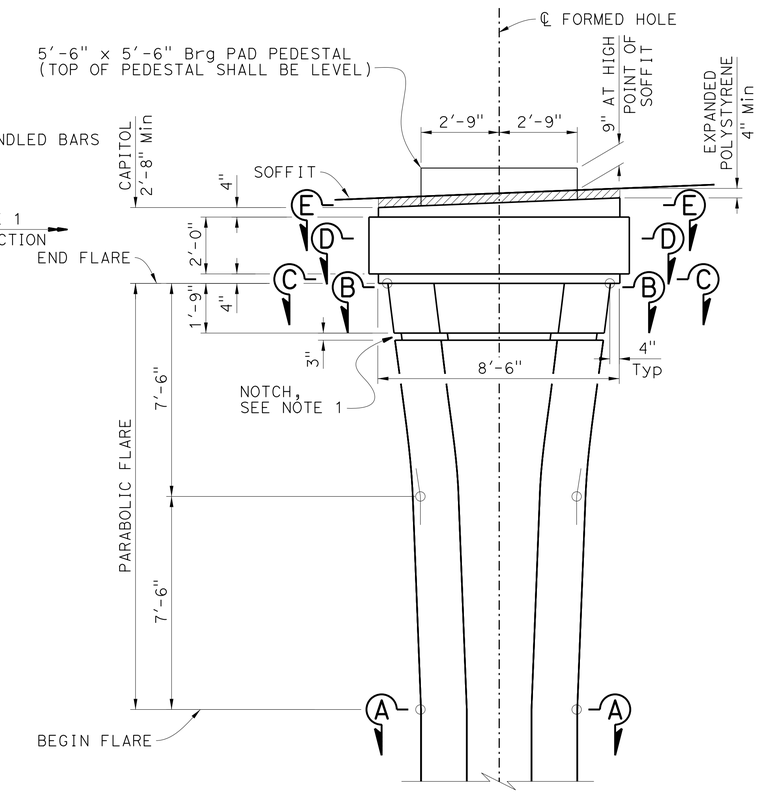

COLUMN GEOMETRY

3/8" = 1'-0"

NOTES:

1. 3" High x 3" deep notch around at column perimeter
2. Column geometry and reinforcement shall be symmetrical about ℄ Formed Hole and ℄ Bent
3. Pipe Shear Key not shown

	BY	CHECKED
DESIGN	P. Vijitakula	Vadim Shostak
DETAILS	G. M. Souza / Jin Zhou	Vadim Shostak
QUANTITIES	Art Herrera	Mike Bergman

STATE OF CALIFORNIA DEPARTMENT OF TRANSPORTATION

DIVISION OF ENGINEERING SERVICES STRUCTURE DESIGN DESIGN BRANCH 1

BRIDGE NO. 53-3065
POST MILE 6.38

FLORENCE AVENUE OC (REPLACE)
BENT DETAILS STAGE 2

STRUCTURES DESIGN DETAIL SHEET (ENGLISH) (REV. 09-01-10)

ORIGINAL SCALE IN INCHES FOR REDUCED PLANS 0 1 2 3

UNIT: 3576
PROJECT NUMBER & PHASE: 07000018351 CONTRACT NO.: 07-215954

DISREGARD PRINTS BEARING EARLIER REVISION DATES

REVISION DATES 01-13-12 05/30/13 10-18-13

SHEET 18 OF 56

FILE => 53-3065-j-18-bent-dt-stg-02.dgn

USERNAME => s124496 DATE PLOTTED => 26-JUN-2013 TIME PLOTTED => 15:43

DIST	COUNTY	ROUTE	POST MILES TOTAL PROJECT	SHEET No.	TOTAL SHEETS
07	LA	5	0.0/7.6	634	985

P. Vijitakula
REGISTERED CIVIL ENGINEER 12-28-12 DATE

6-24-13
PLANS APPROVAL DATE

REGISTERED PROFESSIONAL ENGINEER P. VIJITAKULA No. C 54701 Exp. 12-31-13 CIVIL STATE OF CALIFORNIA

The State of California or its officers or agents shall not be responsible for the accuracy or completeness of electronic copies of this plan sheet.

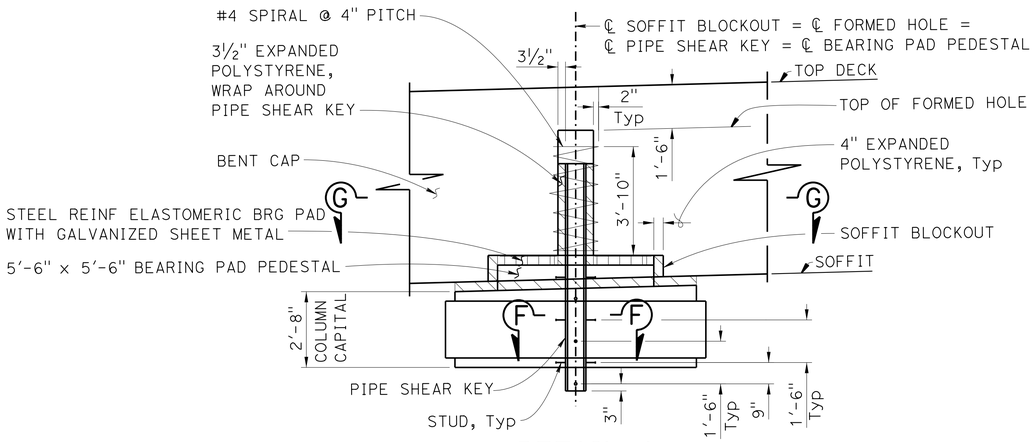

DETAIL A
⅜" = 1'-0"

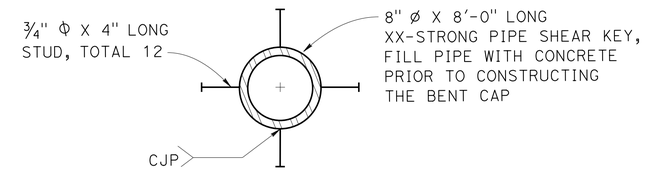

SECTION F-F
1½" = 1'-0"

NOTES:

1. For SECTIONS A-A, B-B, C-C, D-D, E-E and DETAIL A locations, see "BENT DETAILS STAGE 1" and "BENT DETAILS STAGE 2" sheets.
2. For SECTION L-L, see "BENT DETAILS NO. 3" sheet.
3. Column dimensions shall be symmetrical about ℄ Formed Hole and ℄ Bent

* At Notches, where 2" clearance is compromised, remove a 6" length of reinforcement

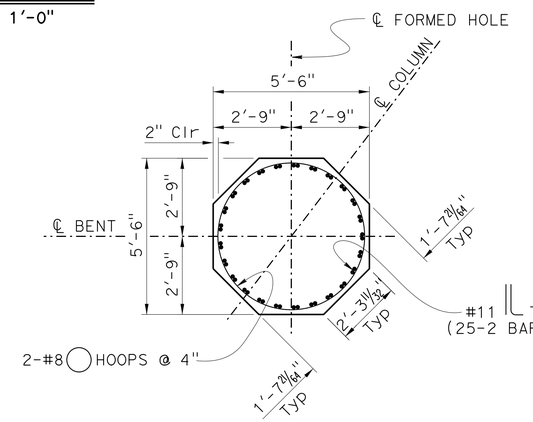

(OCTAGON)
SECTION A-A
⅜" = 1'-0"

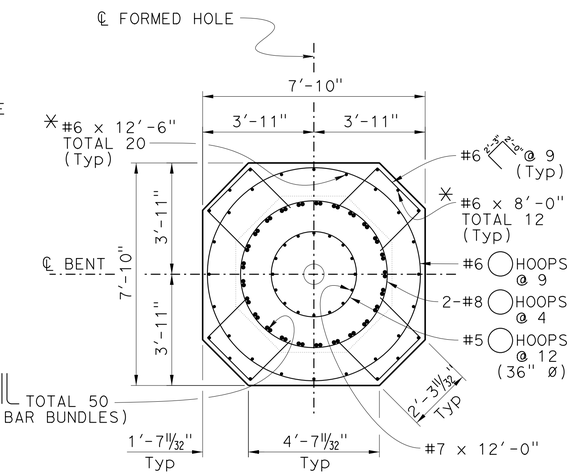

(COLUMN END FLARE)
SECTION B-B
⅜" = 1'-0"

PLACE 24"X64"X0.079" GALVANIZED SHEET METAL (TOTAL 2) OVER 21"X30"X4" STEEL REINFORCED ELASTOMERIC BRG PAD (TOTAL 4) AND ADJUST TO HAVE 2" OVERLAP ALONG EDGE OF BEARING PADS, COAT TOP OF PADS WITH SILICONE GREASE.

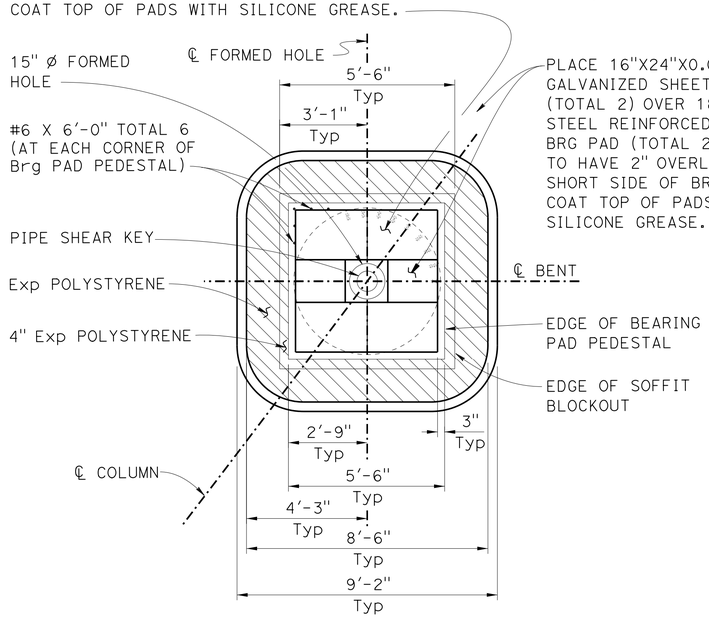

(PLAN @ BEARING PAD)
SECTION G-G
⅜" = 1'-0"

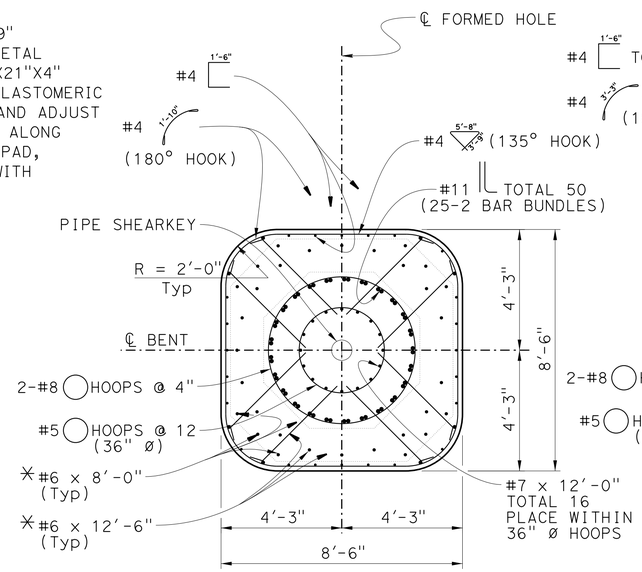

SECTION C-C
⅜" = 1'-0"

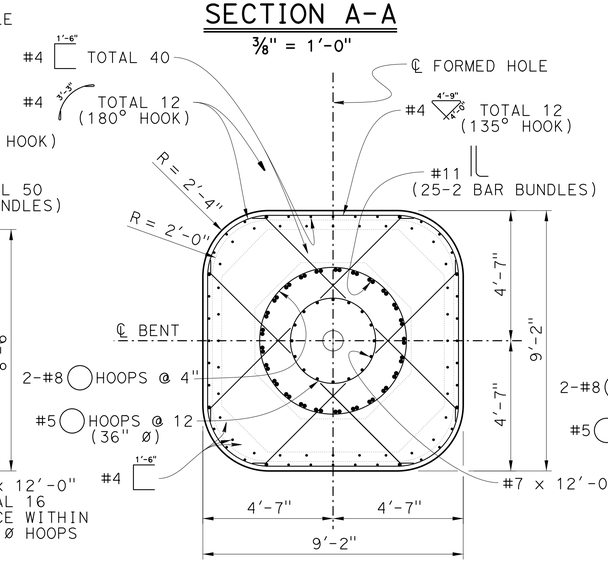

SECTION D-D
⅜" = 1'-0"

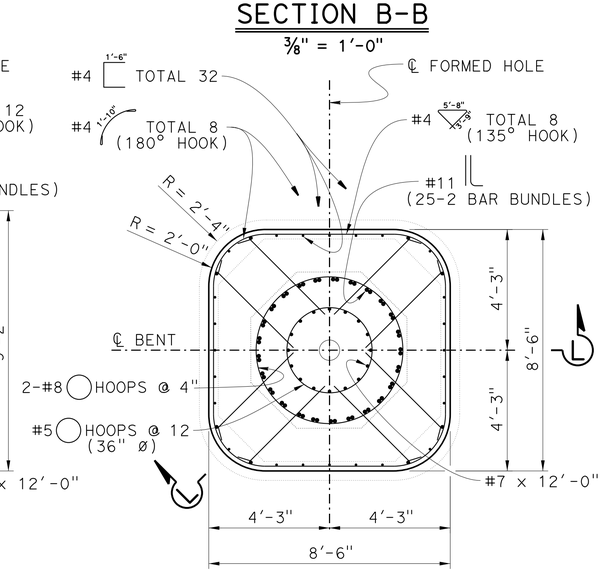

SECTION E-E
⅜" = 1'-0"

DESIGN	BY P. Vijitakula	CHECKED Vadim Shostak	
DETAILS	BY Jin Zhou	CHECKED Vadim Shostak	
QUANTITIES	BY Art Herrera	CHECKED Mike Bergman	

STATE OF CALIFORNIA
DEPARTMENT OF TRANSPORTATION

DIVISION OF ENGINEERING SERVICES
STRUCTURE DESIGN
DESIGN BRANCH 1

BRIDGE NO. 53-3065
POST MILE 6.38

FLORENCE AVENUE OC (REPLACE)
BENT DETAILS NO. 1

STRUCTURES DESIGN DETAIL SHEET (ENGLISH) (REV. 09-01-10)

ORIGINAL SCALE IN INCHES FOR REDUCED PLANS 0 1 2 3

UNIT: 3576
PROJECT NUMBER & PHASE: 07000018351
CONTRACT NO.: 07-215954

DISREGARD PRINTS BEARING EARLIER REVISION DATES

REVISION DATES 12-30-11 04/02/13 03-21-13

SHEET 19 OF 56

FILE => 53-3065-j-19-bent-d+01.dgn

USERNAME => s124496 DATE PLOTTED => 26-JUN-2013 TIME PLOTTED => 15:43

DIST	COUNTY	ROUTE	POST MILES TOTAL PROJECT	SHEET No.	TOTAL SHEETS
07	LA	5	0.0/7.6	635	985

P. Vijitakula 12-28-12
REGISTERED CIVIL ENGINEER DATE

6-24-13
PLANS APPROVAL DATE

REGISTERED PROFESSIONAL ENGINEER
P. VIJITAKULA
No. C 54701
Exp. 12-31-13
CIVIL
STATE OF CALIFORNIA

The State of California or its officers or agents shall not be responsible for the accuracy or completeness of electronic copies of this plan sheet.

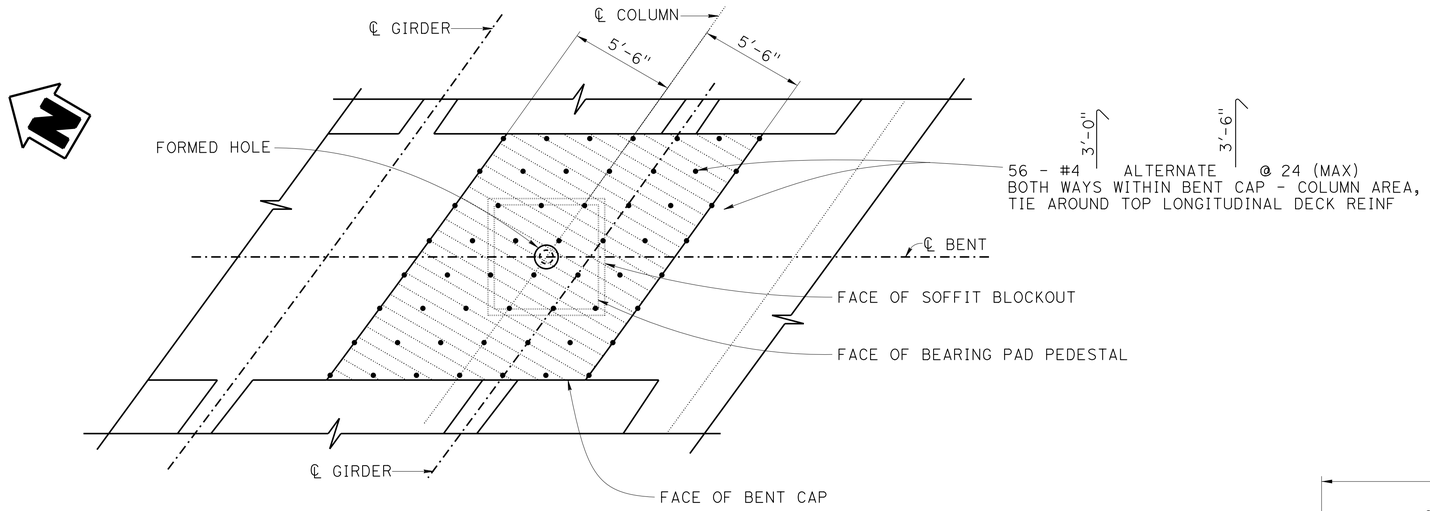

PART BENT CAP PLAN

1/4" =1'-0"

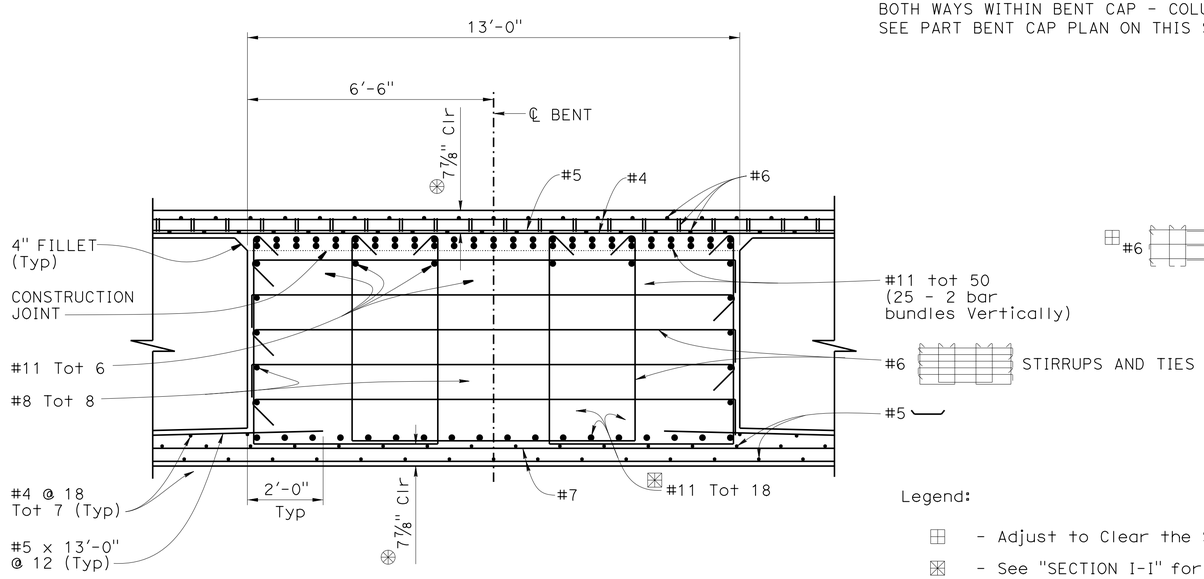

SECTION H-H

1/2" =1'-0"

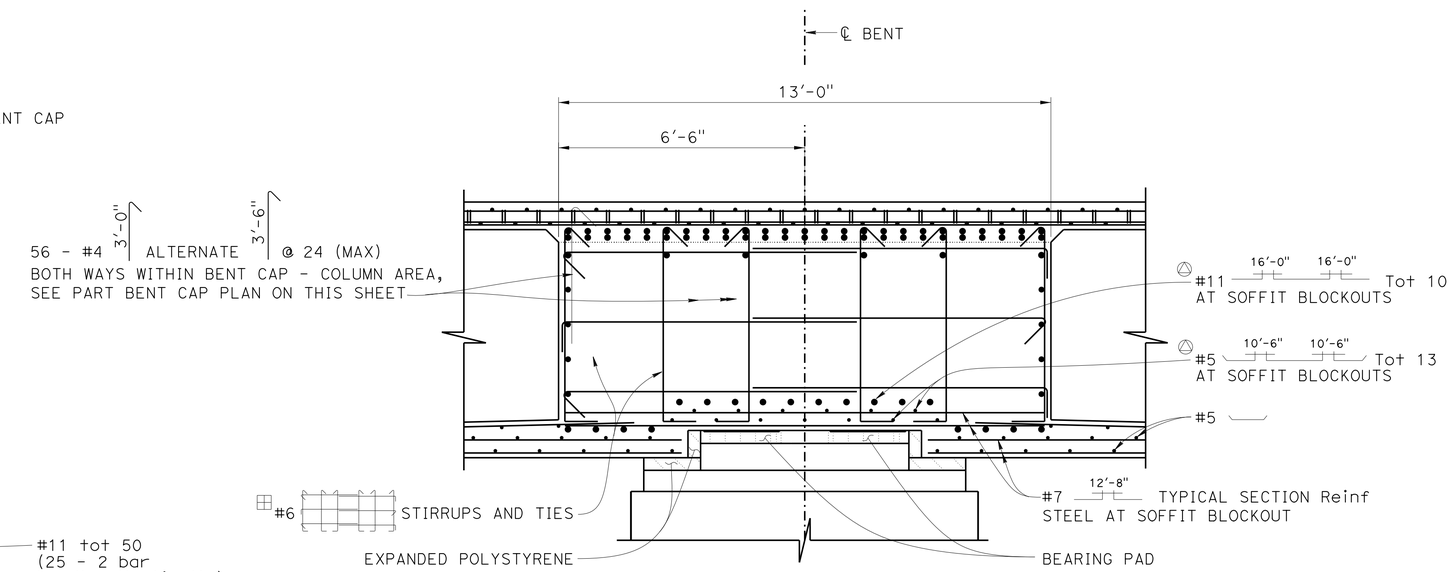

SECTION I-I

1/2" =1'-0"

NOTES:

- For details not shown, see "SECTION H-H".
- Column reinforcement not shown for clarity.

Legend:

- ⊞ - Adjust to Clear the Soffit Blockouts
- ⊠ - See "SECTION I-I" for bar details at Soffit Blockout
- ⊛ - Clearance to Main Cap Reinf
- ⊕ - Place Stirrups Normal to ℄ Bent
- △ - Place lower reinforcing steel 2" clear from face of Soffit Blockouts
- ▨ - Indicates Limit of Bent Cap - Column Area

	BY	CHECKED
DESIGN	P. Vijitakula	Vadim Shostak
DETAILS	Jin Zhou	Vadim Shostak
QUANTITIES	Art Herrera	Mike Bergman

STATE OF CALIFORNIA
DEPARTMENT OF TRANSPORTATION

DIVISION OF ENGINEERING SERVICES
STRUCTURE DESIGN
DESIGN BRANCH 1

BRIDGE NO. 53-3065
POST MILE 6.38

FLORENCE AVENUE OC (REPLACE)
BENT DETAILS NO. 2

STRUCTURES DESIGN DETAIL SHEET (ENGLISH) (REV. 09-01-10)

ORIGINAL SCALE IN INCHES FOR REDUCED PLANS 0 1 2 3

UNIT: 3576
PROJECT NUMBER & PHASE: 07000018351
CONTRACT NO.: 07-215954

DISREGARD PRINTS BEARING EARLIER REVISION DATES

REVISION DATES: 11-14-11 04/02/13 08-08-12

SHEET 20 OF 56

FILE => 53-3065-j-20-bent-dt02.dgn

USERNAME => s124496 DATE PLOTTED => 26-JUN-2013 TIME PLOTTED => 15:43

DIST	COUNTY	ROUTE	POST MILES TOTAL PROJECT	SHEET No.	TOTAL SHEETS
07	LA	5	0.0/7.6	636	985

P. Vijitakula 12-28-12
REGISTERED CIVIL ENGINEER DATE

6-24-13
PLANS APPROVAL DATE

REGISTERED PROFESSIONAL ENGINEER
P. VIJITAKULA
No. C 54701
Exp. 12-31-13
CIVIL
STATE OF CALIFORNIA

The State of California or its officers or agents shall not be responsible for the accuracy or completeness of electronic copies of this plan sheet.

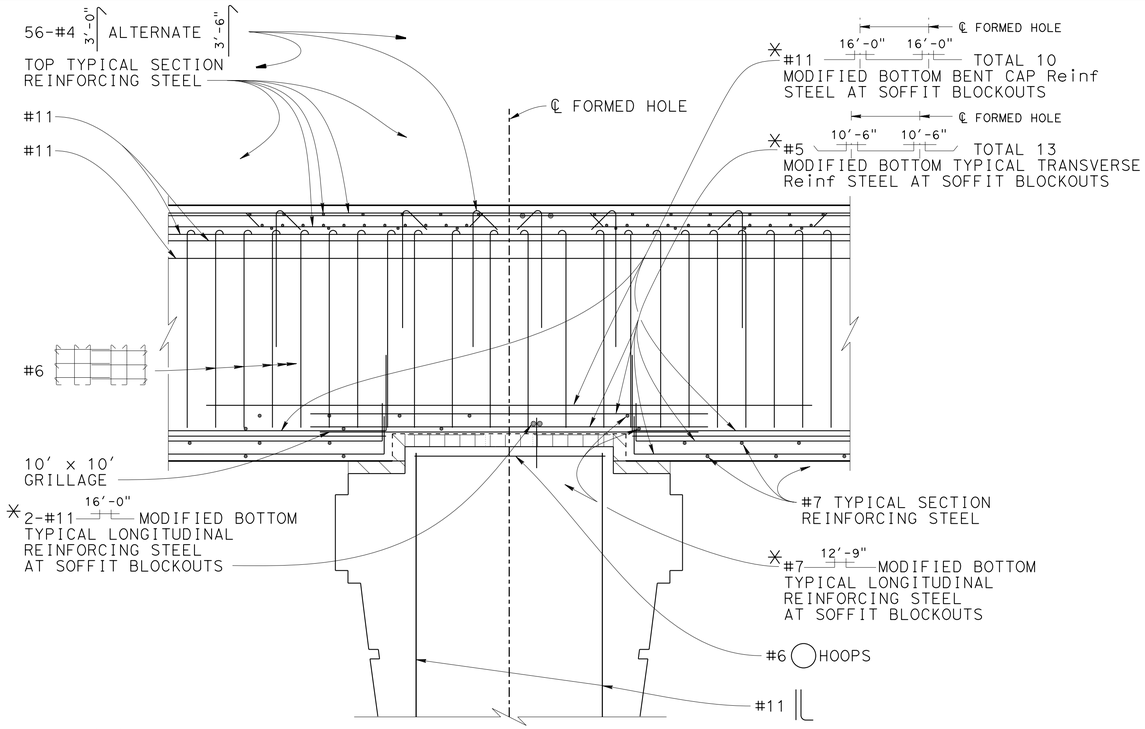

Notes:

- For clarity top longitudinal, girder reinforcement and column reinforcement not shown

✳ Place lower reinf steel 2¼" clear from face of Soffit Blockout

SECTION J-J

½" = 1'-0"

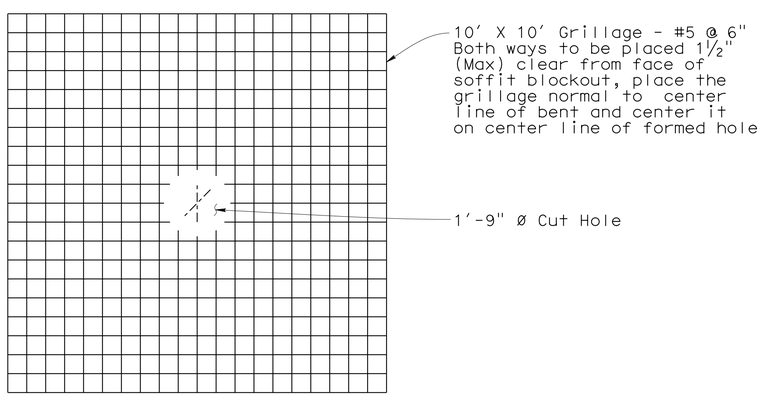

GRILLAGE DETAIL

½" = 1'-0"

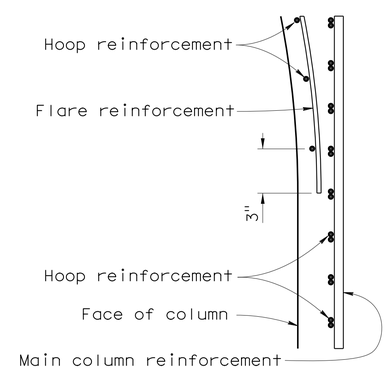

HOOP AND TIE DETAILS

NO SCALE

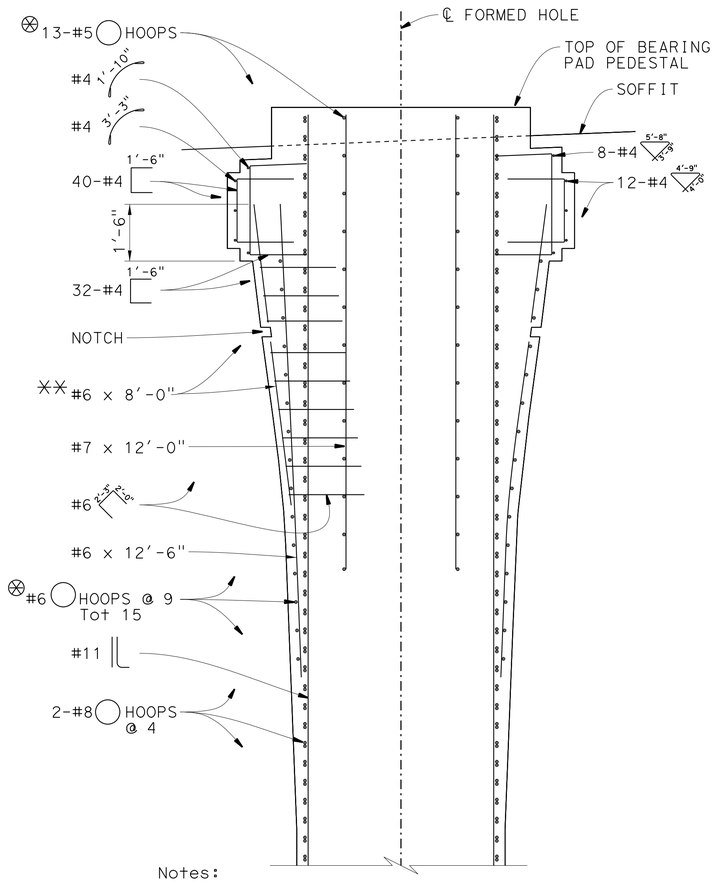

Notes:

⊗ ◯ Hoops made continuous with service butt splice.

✳✳ At notches, where 2" clearance is compromised, remove a 6" length of reinforcement.

SECTION L-L

½" = 1'-0"

DESIGN	BY P. Vijitakula	CHECKED Vadim Shostak	
DETAILS	BY G. M. Souza / Jin Zhou	CHECKED Vadim Shostak	
QUANTITIES	BY Art Herrera	CHECKED Mike Bergman	

STATE OF CALIFORNIA
DEPARTMENT OF TRANSPORTATION

DIVISION OF ENGINEERING SERVICES
STRUCTURE DESIGN
DESIGN BRANCH 1

BRIDGE NO. 53-3065
POST MILE 6.38

FLORENCE AVENUE OC (REPLACE)
BENT DETAILS NO. 3

STRUCTURES DESIGN DETAIL SHEET (ENGLISH) (REV. 09-01-10)

ORIGINAL SCALE IN INCHES FOR REDUCED PLANS 0 1 2 3

UNIT: 3576
PROJECT NUMBER & PHASE: 07000018351
CONTRACT NO.: 07-215954

DISREGARD PRINTS BEARING EARLIER REVISION DATES

REVISION DATES: 05-29-12 05/30/13 04/02/13

SHEET 21 OF 56

FILE => 53-3065-j-21-bent-dt03.dgn

USERNAME => s124496 DATE PLOTTED => 26-JUN-2013 TIME PLOTTED => 15:43

DIST	COUNTY	ROUTE	POST MILES TOTAL PROJECT	SHEET No.	TOTAL SHEETS
07	LA	5	0.0/7.6	637	985

P. Vijitakula 12-28-12
REGISTERED CIVIL ENGINEER DATE

6-24-13
PLANS APPROVAL DATE

REGISTERED PROFESSIONAL ENGINEER P. VIJITAKULA No. C 54701 Exp. 12-31-13 CIVIL STATE OF CALIFORNIA

The State of California or its officers or agents shall not be responsible for the accuracy or completeness of electronic copies of this plan sheet.

NOTES:

- Existing piles which interfere with a proposed CIDH pile shall be removed.
- Existing piles which do not interfere with a proposed CIDH pile shall be cut 3'± below bottom of Existing footing or as determined by the Engineer.
- The proposed CIDH piles shall be installed in sequence or as determined by the Engineer.

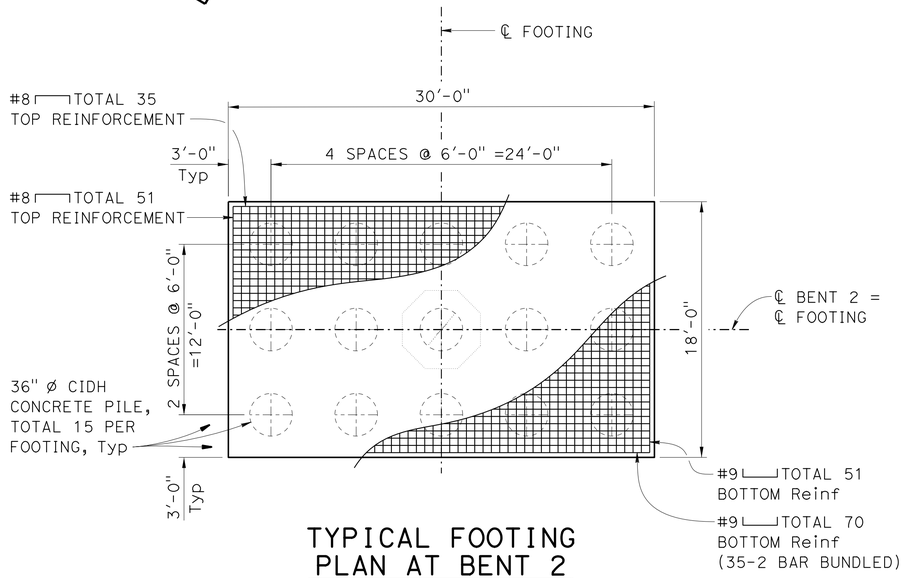

TYPICAL FOOTING PLAN AT BENT 2

3/16" = 1'-0"

NOTE: Bent 2 Footing details and dimensions shown, Bent 3 are similar.

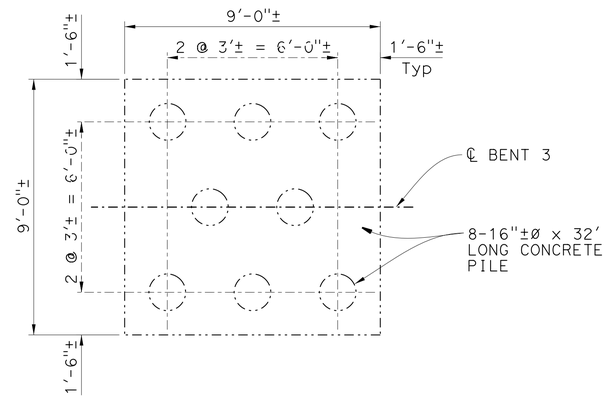

TYPICAL EXISTING EXTERIOR FOOTING AT BENT 3

3/8" = 1'-0"

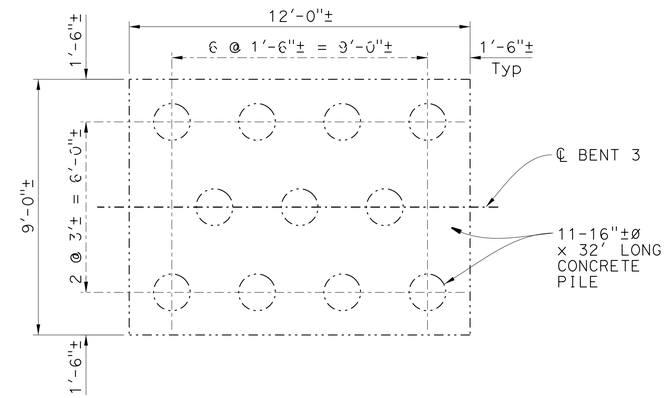

TYPICAL EXISTING INTERIOR FOOTING AT BENT 3

3/8" = 1'-0"

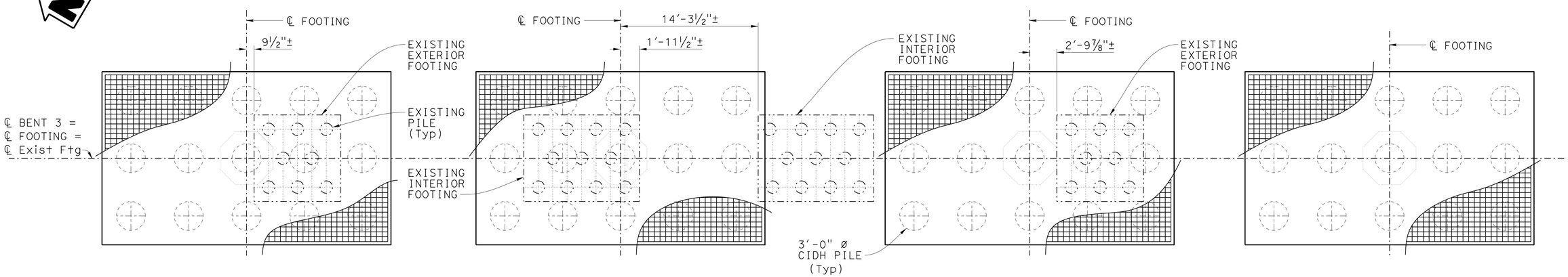

FOOTING A

FOOTING B

FOOTING C

FOOTING D

FOOTING PLAN AT BENT 3

3/16" = 1'-0"

DESIGN	BY P. Vijitakula	CHECKED Vadim Shostak	
DETAILS	BY G. M. Souza / Jin Zhou	CHECKED Vadim Shostak	
QUANTITIES	BY Art Herrera	CHECKED Mike Bergman	

STATE OF CALIFORNIA
DEPARTMENT OF TRANSPORTATION

DIVISION OF ENGINEERING SERVICES
STRUCTURE DESIGN
DESIGN BRANCH 1

BRIDGE NO. 53-3065
POST MILE 6.38

FLORENCE AVENUE OC (REPLACE)

BENT DETAILS NO. 4

STRUCTURES DESIGN DETAIL SHEET (ENGLISH) (REV. 09-01-10)

ORIGINAL SCALE IN INCHES FOR REDUCED PLANS 0 1 2 3

UNIT: 3576
PROJECT NUMBER & PHASE: 07000018351 CONTRACT NO.: 07-215954

DISREGARD PRINTS BEARING EARLIER REVISION DATES

REVISION DATES 07-13-12 04/02/13 08-09-13

SHEET 22 OF 56

FILE => 53-3065-j-22-misc-bent-dt04.dgn

USERNAME => s124436 DATE PLOTTED => 26-JUN-2013 TIME PLOTTED => 15:43

DIST	COUNTY	ROUTE	POST MILES TOTAL PROJECT	SHEET No.	TOTAL SHEETS
07	LA	5	0.0/7.6	638	985

P. Vijitakula 12-28-12
REGISTERED CIVIL ENGINEER DATE

6-24-13
PLANS APPROVAL DATE

REGISTERED PROFESSIONAL ENGINEER P. VIJITAKULA No. C 54701 Exp. 12-31-13 CIVIL STATE OF CALIFORNIA

The State of California or its officers or agents shall not be responsible for the accuracy or completeness of electronic copies of this plan sheet.

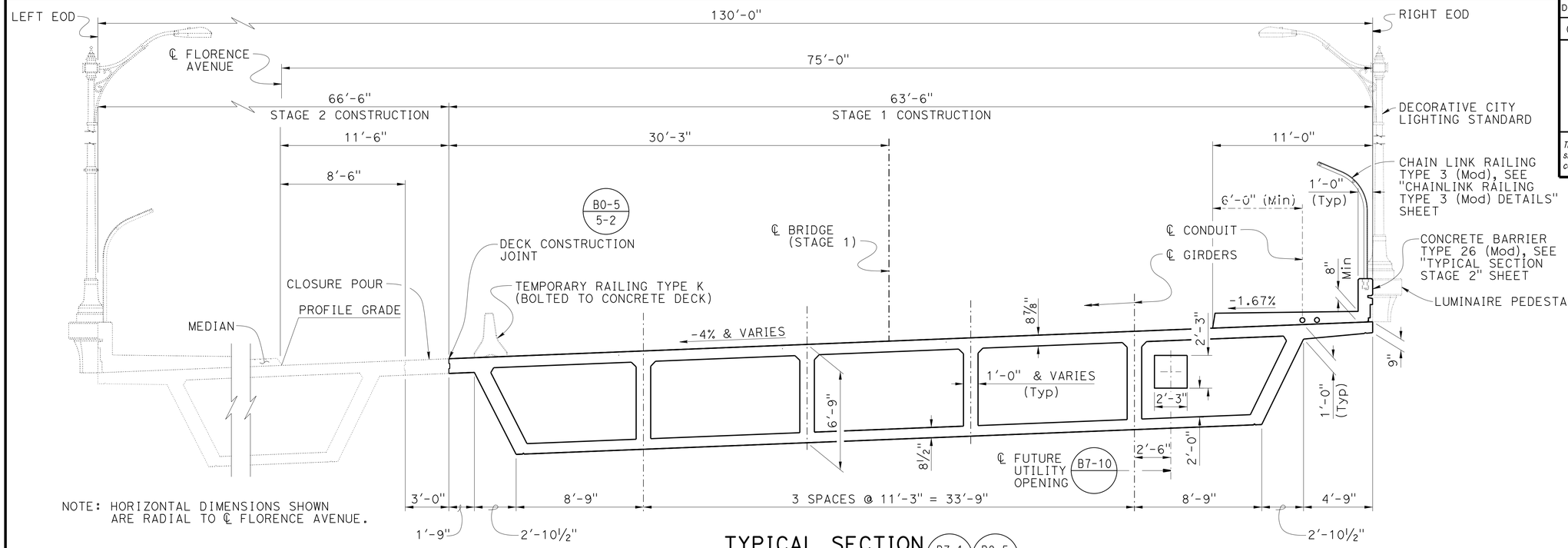

NOTE: HORIZONTAL DIMENSIONS SHOWN ARE RADIAL TO ℄ FLORENCE AVENUE.

TYPICAL SECTION (B7-1 / B8-5)

¼" = 1'-0"

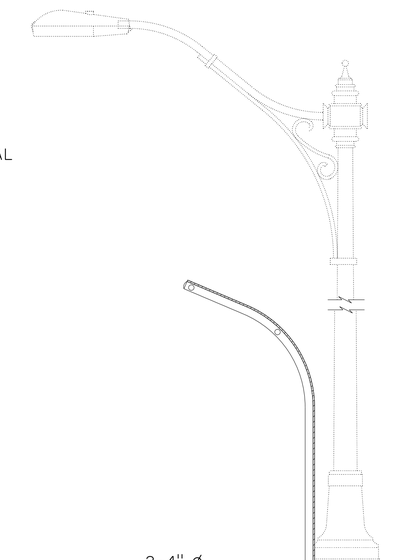

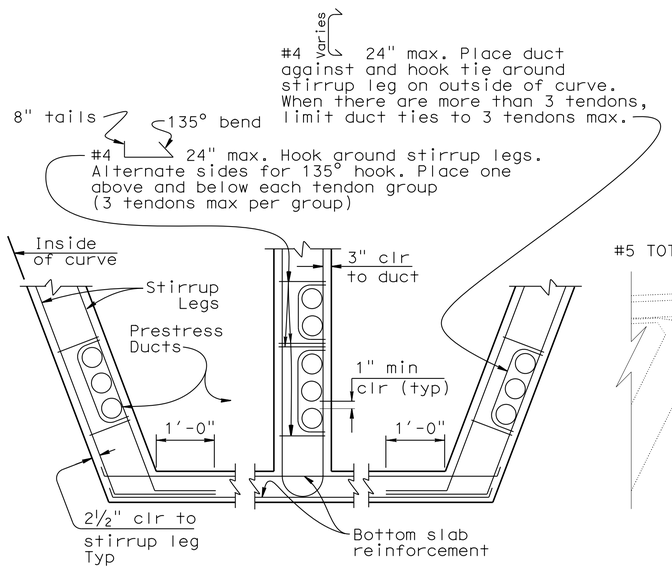

NOTE: This detail supercedes duct patterns shown in Standard Plans B8-5.

PART GIRDER SECTION

No Scale

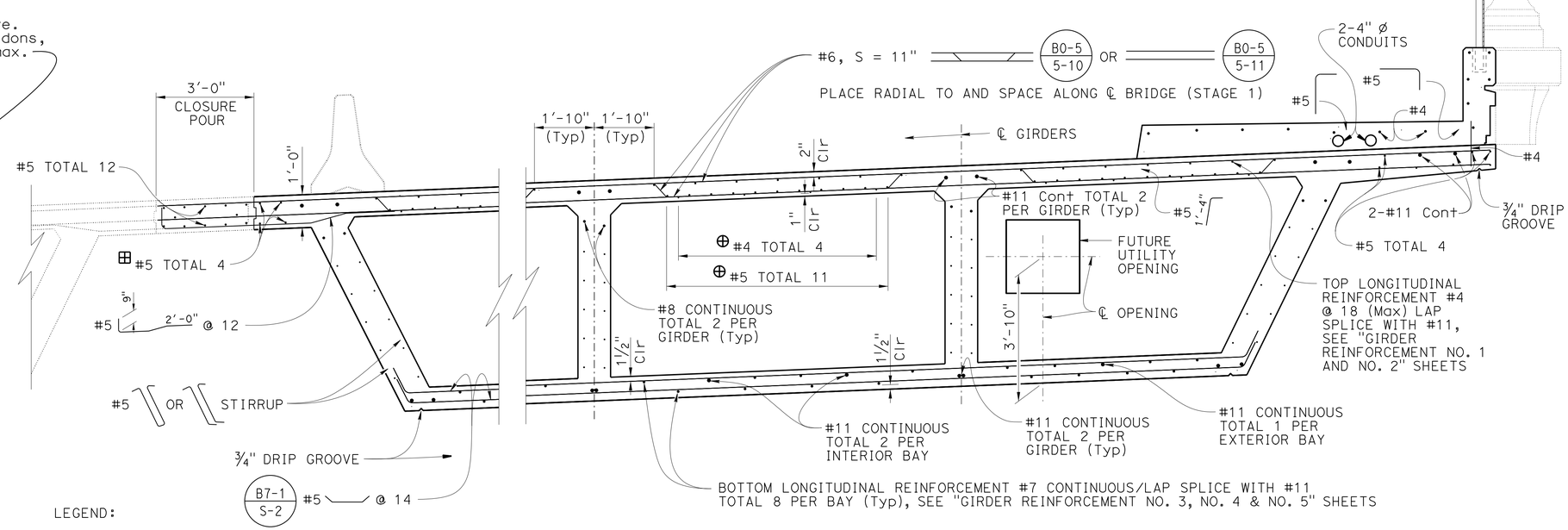

LEGEND:

⊞ LAP SPLICE TOP TWO #5 BARS WITH #11, SEE "GIRDER REINFORCEMENT NO. 1 & 2" SHEETS

⊕ DISTRIBUTION REINFORCEMENT (Typ)

PART TYPICAL SECTION (B7-1 / B8-5)

½" = 1'-0"

	BY	CHECKED
DESIGN	P. Vijitakula	Vadim Shostak
DETAILS	G. M. Souza	Vadim Shostak
QUANTITIES	Art Herrera	Mike Bergman

STATE OF CALIFORNIA
DEPARTMENT OF TRANSPORTATION

DIVISION OF ENGINEERING SERVICES
STRUCTURE DESIGN
DESIGN BRANCH 1

BRIDGE NO. 53-3065
POST MILE 6.38

FLORENCE AVENUE OC (REPLACE)
TYPICAL SECTION STAGE 1

STRUCTURES DESIGN DETAIL SHEET (ENGLISH) (REV. 09-01-10)

ORIGINAL SCALE IN INCHES FOR REDUCED PLANS 0 1 2 3

UNIT: 3576
PROJECT NUMBER & PHASE: 07000018351
CONTRACT NO.: 07-215954

DISREGARD PRINTS BEARING EARLIER REVISION DATES

REVISION DATES 11-03-11 05/30/13 04/02/13

SHEET 23 OF 56

FILE => 53-3065-k-23-typ-sec-stg-01.dgn

USERNAME => s124496 DATE PLOTTED => 26-JUN-2013 TIME PLOTTED => 13:43

DIST	COUNTY	ROUTE	POST MILES TOTAL PROJECT	SHEET No.	TOTAL SHEETS
07	LA	5	0.0/7.6	639	985

P. Vijitakula 12-28-12
REGISTERED CIVIL ENGINEER DATE

6-24-13
PLANS APPROVAL DATE

REGISTERED PROFESSIONAL ENGINEER P. VIJITAKULA No. C 54701 Exp. 12-31-13 CIVIL STATE OF CALIFORNIA

The State of California or its officers or agents shall not be responsible for the accuracy or completeness of electronic copies of this plan sheet.

Legend:

- ⊕ TO BE PLACED BEFORE DECK CONCRETE POUR
- ⊞ MODIFIED STANDARD PLAN REINFORCEMENT
- ⊛ DISTRIBUTION REINFORCEMENT (Typ)
- ⊠ LAP SPLICE TOP TWO #5 BARS WITH #11, SEE "GIRDER REINFORCEMENT NO. 1 & 2" SHEETS

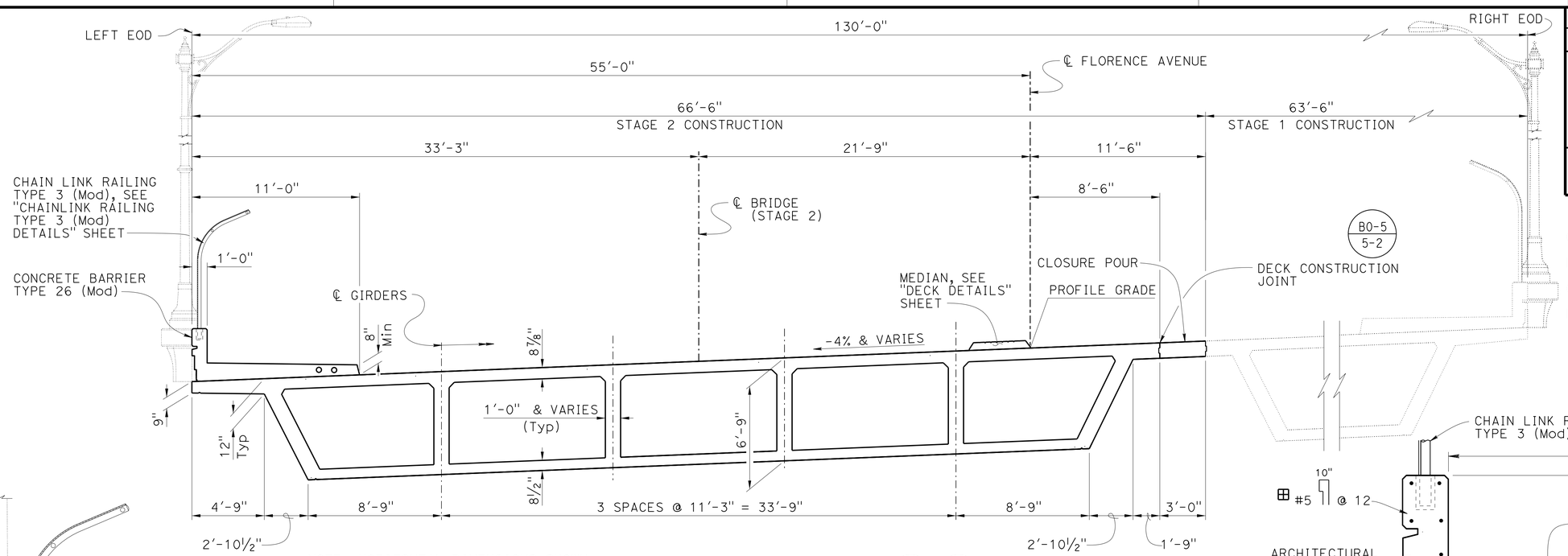

NOTE: HORIZONTAL DIMENSIONS SHOWN ARE RADIAL TO ℄ FLORENCE AVENUE.

TYPICAL SECTION (B7-1 / B8-5)

1/4" = 1'-0"

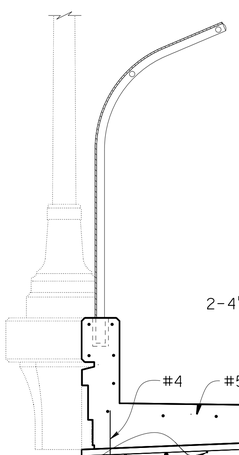

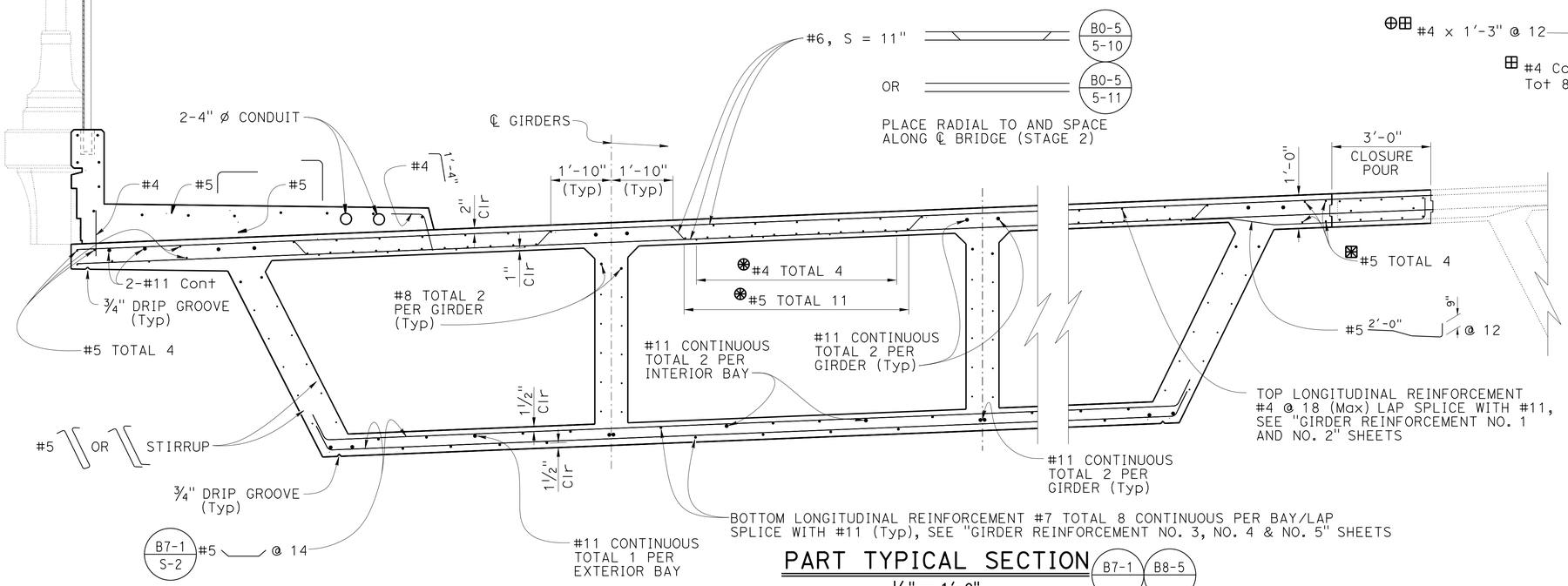

PART TYPICAL SECTION (B7-1 / B8-5)

1/2" = 1'-0"

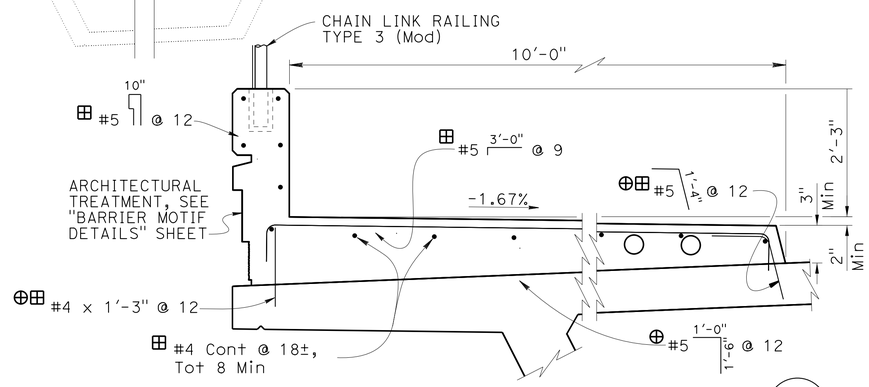

Notes:
- For Details and Reinf not shown see B11-54
- Luminaire Pedestal not shown
- Left EOD shown, Right EOD similar but opposite hand

BARRIER TYPE 26 (MOD)

No Scale

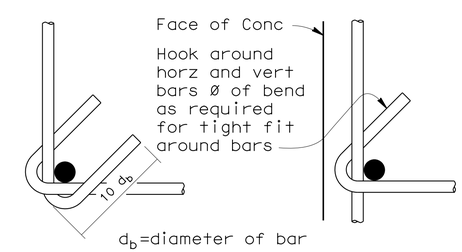

Note: Detail is Typical to all locations

TIE BAR DETAIL

No Scale

DESIGN	BY P. Vijitakula	CHECKED Vadim Shostak	
DETAILS	BY G. M. Souza	CHECKED Vadim Shostak	
QUANTITIES	BY Art Herrera	CHECKED Mike Bergman	

STATE OF CALIFORNIA
DEPARTMENT OF TRANSPORTATION

DIVISION OF ENGINEERING SERVICES
STRUCTURE DESIGN
DESIGN BRANCH 1

BRIDGE NO. 53-3065
POST MILE 6.38

FLORENCE AVENUE OC (REPLACE)
TYPICAL SECTION STAGE 2

STRUCTURES DESIGN DETAIL SHEET (ENGLISH) (REV. 09-01-10)

ORIGINAL SCALE IN INCHES FOR REDUCED PLANS 0 1 2 3

UNIT: 3576
PROJECT NUMBER & PHASE: 07000018351 CONTRACT NO.: 07-215954

DISREGARD PRINTS BEARING EARLIER REVISION DATES

REVISION DATES 11-03-11 03-28-13 04/02/13

SHEET 24 OF 56

FILE => 53-3065-k-24-typ-sec-stg-02.dgn

USERNAME => s124496 DATE PLOTTED => 26-JUN-2013 TIME PLOTTED => 15:43

DIST	COUNTY	ROUTE	POST MILES TOTAL PROJECT	SHEET No.	TOTAL SHEETS
07	LA	5	0.0/7.6	640	985

P. Vijitakula 12-28-12
REGISTERED CIVIL ENGINEER DATE

6-24-13
PLANS APPROVAL DATE

REGISTERED PROFESSIONAL ENGINEER P. VIJITAKULA No. C 54701 Exp. 12-31-13 CIVIL STATE OF CALIFORNIA

The State of California or its officers or agents shall not be responsible for the accuracy or completeness of electronic copies of this plan sheet.

LEGEND:

- Decorative City Lighting Standard, see "ROAD PLANS"
- ✳ Place radial to and space along ℄ Girder
- ⊗⊗ Measured along ℄ Girder

Notes:
1. Girder stem thickness in inches shown thus: 00
2. Extend alternate top deck transverse reinforcement to ℄ Abutment, stop remaining transverse reinforcement 3" from face of Abutment.
3. Extend alternate bottom slab transverse reinforcement to ℄ Abutment, stop remaining transverse reinforcement 3" from face of Abutment.
4. All longitudinal dimensions are measured along ℄ Florence Avenue, except as noted
5. For intermediate diaphragm dimensions and details see B7-1 / D-1
6. For prestressing notes see "INDEX TO PLANS" sheet
7. ℄ Intermediate diaphragms are parallel to ℄ Bent
8. Girders are parallel to ℄ Florence Avenue
9. For Section X-X, see "ABUTMENT DETAILS NO. 1" sheet
10. For locations of Luminarie Pedestals and Overhead Signs, see "DECK DETAILS" sheet

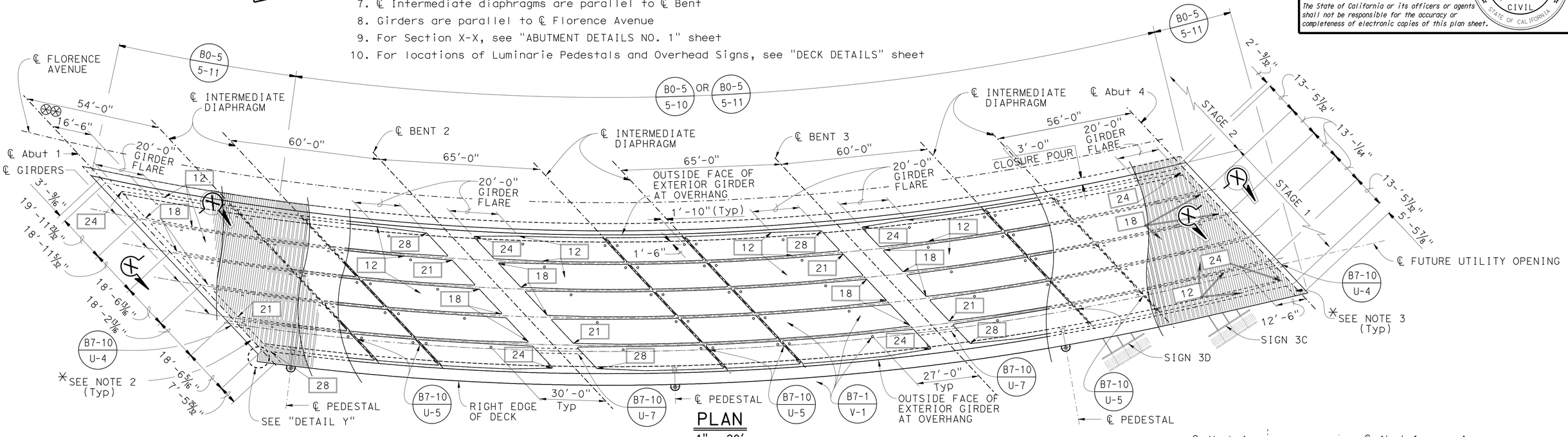

PLAN
1" = 20'

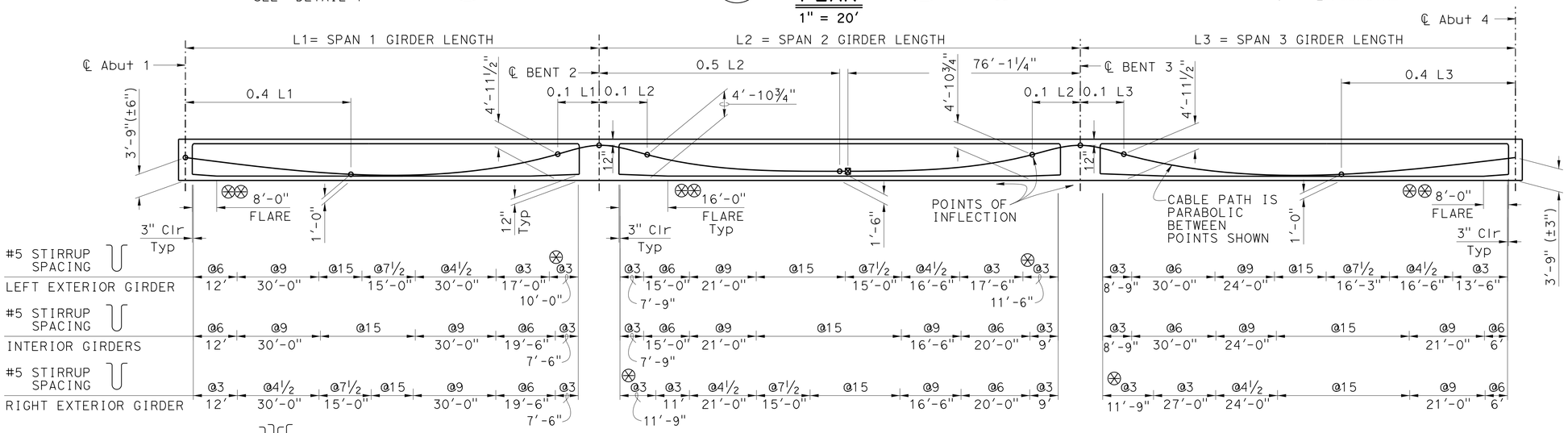

LONGITUDINAL SECTION
NO SCALE

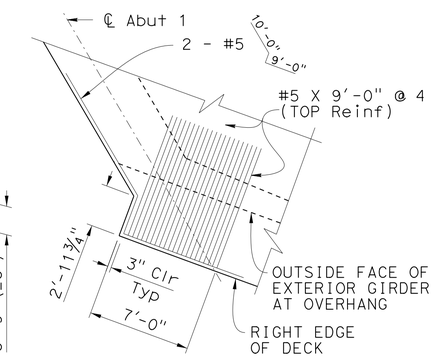

DETAIL Y
3/16" = 1'-0"

DESIGN	BY P. Vijitakula	CHECKED Vadim Shostak	STATE OF CALIFORNIA DEPARTMENT OF TRANSPORTATION
DETAILS	BY G. M. Souza / Jin Zhou	CHECKED Vadim Shostak	
QUANTITIES	BY Art Herrera	CHECKED Mike Bergman	

DIVISION OF ENGINEERING SERVICES STRUCTURE DESIGN
DESIGN BRANCH 1

BRIDGE NO. 53-3065
POST MILE 6.38

FLORENCE AVENUE OC (REPLACE)
GIRDER LAYOUT STAGE 1

STRUCTURES DESIGN DETAIL SHEET (ENGLISH) (REV. 09-01-10)

ORIGINAL SCALE IN INCHES FOR REDUCED PLANS 0 1 2 3

UNIT: 3576
PROJECT NUMBER & PHASE: 07000018351 CONTRACT NO.: 07-215954

DISREGARD PRINTS BEARING EARLIER REVISION DATES

REVISION DATES 11-14-11 05/24/13 04/03/13

SHEET 25 OF 56

FILE => 53-3065-n-25-girder-lyt-stg-01.dgn

USERNAME => s124496 DATE PLOTTED => 26-JUN-2013 TIME PLOTTED => 15:43

DIST	COUNTY	ROUTE	POST MILES TOTAL PROJECT	SHEET No.	TOTAL SHEETS
07	LA	5	0.0/7.6	641	985

P. Vijitakula
REGISTERED CIVIL ENGINEER — DATE 12-28-12

6-24-13
PLANS APPROVAL DATE

REGISTERED PROFESSIONAL ENGINEER — P. VIJITAKULA — No. C 54701 — Exp. 12-31-13 — CIVIL — STATE OF CALIFORNIA

The State of California or its officers or agents shall not be responsible for the accuracy or completeness of electronic copies of this plan sheet.

LEGEND:

- Decorative City Lighting Standard, see "ROAD PLANS"
- Place radial to and space along ℄ Girder
- Measured along ℄ Girder

Notes:
1. Girder stem thickness in inches shown thus: 00
2. Extend alternate top deck transverse reinforcement to ℄ Abutment, stop remaining transverse reinforcement 3" from face of Abutment.
3. Extend alternate bottom slab transverse reinforcement to ℄ Abutment, stop remaining transverse reinforcement 3" from face of Abutment.
4. All longitudinal dimensions are measured along ℄ Florence Avenue, except as noted
5. For intermediate diaphragm dimensions and details see B7-1 / D-1
6. For prestressing notes see "INDEX TO PLANS" sheet
7. ℄ Intermediate diaphragms are parallel to ℄ Bent
8. Girders are parallel to ℄ Florence Avenue
9. For Section X-X, see "ABUTMENT DETAILS NO. 1" sheet
10. For locations of Luminarie Pedestals, see "DECK DETAILS" sheet

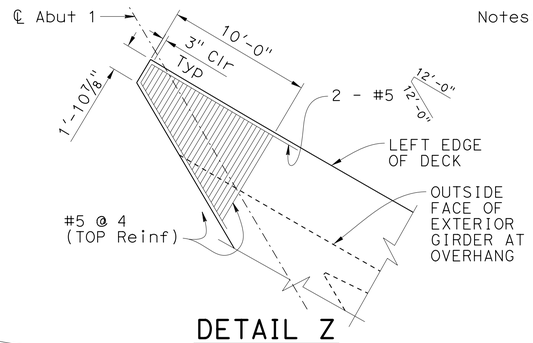

DETAIL Z
3/16" = 1'-0"

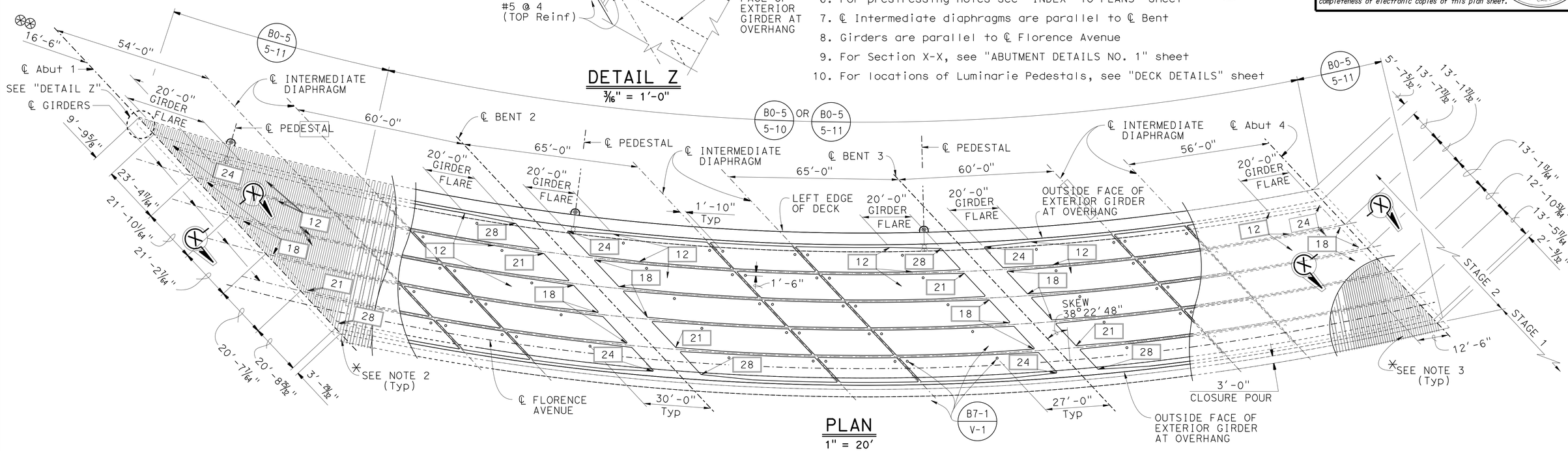

PLAN
1" = 20'

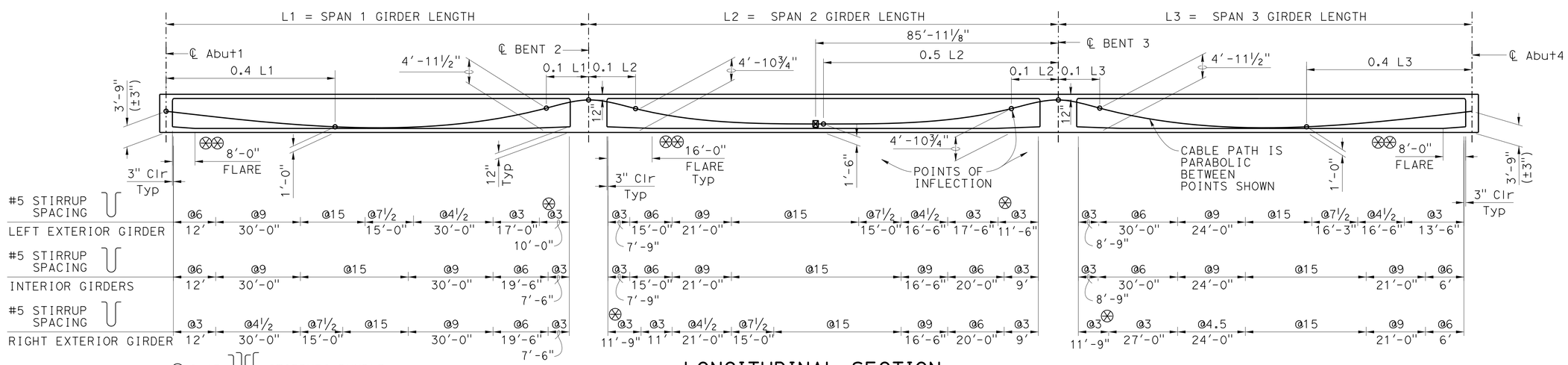

LONGITUDINAL SECTION
NO SCALE

	BY	CHECKED
DESIGN	P. Vijitakula	Vadim Shostak
DETAILS	G. M. Souza / Jin Zhou	Vadim Shostak
QUANTITIES	Art Herrera	Mike Bergman

STATE OF CALIFORNIA
DEPARTMENT OF TRANSPORTATION

DIVISION OF ENGINEERING SERVICES
STRUCTURE DESIGN
DESIGN BRANCH 1

BRIDGE NO. 53-3065
POST MILE 6.38

FLORENCE AVENUE OC (REPLACE)
GIRDER LAYOUT STAGE 2

STRUCTURES DESIGN DETAIL SHEET (ENGLISH) (REV. 09-01-10)

ORIGINAL SCALE IN INCHES FOR REDUCED PLANS 0 1 2 3

UNIT: 3576
PROJECT NUMBER & PHASE: 07000018351
CONTRACT NO.: 07-215954

DISREGARD PRINTS BEARING EARLIER REVISION DATES

REVISION DATES: 12-21-11 | 05-24-12 | 08-24-12 | 04/03/13

SHEET 26 OF 56

FILE => 53-3065-n-26-girder-iyt-stg-02.dgn

USERNAME => s124496 DATE PLOTTED => 26-JUN-2013 TIME PLOTTED => 15:44

DIST	COUNTY	ROUTE	POST MILES TOTAL PROJECT	SHEET No.	TOTAL SHEETS
07	LA	5	0.0/7.6	642	985

P. Vijitakula 12-28-12
REGISTERED CIVIL ENGINEER DATE

6-24-13
PLANS APPROVAL DATE

REGISTERED PROFESSIONAL ENGINEER
P. VIJITAKULA
No. C 54701
Exp. 12-31-13
CIVIL
STATE OF CALIFORNIA

The State of California or its officers or agents shall not be responsible for the accuracy or completeness of electronic copies of this plan sheet.

LEGEND:

∝ - Indicates bundled bars

NOTES:

1. Top longitudinal Reinf at stage 1 shown, top longitudinal Reinf at stage 2 is similar
2. All longitudinal reinforcements and dimensions are parallel to ℄ Girder
3. All reinforcement is #11 unless otherwise noted
4. No lap splices permitted at ℄ Bents unless otherwise shown
5. Splices in top longitudinal reinforcement shall adhere to service splice criteria

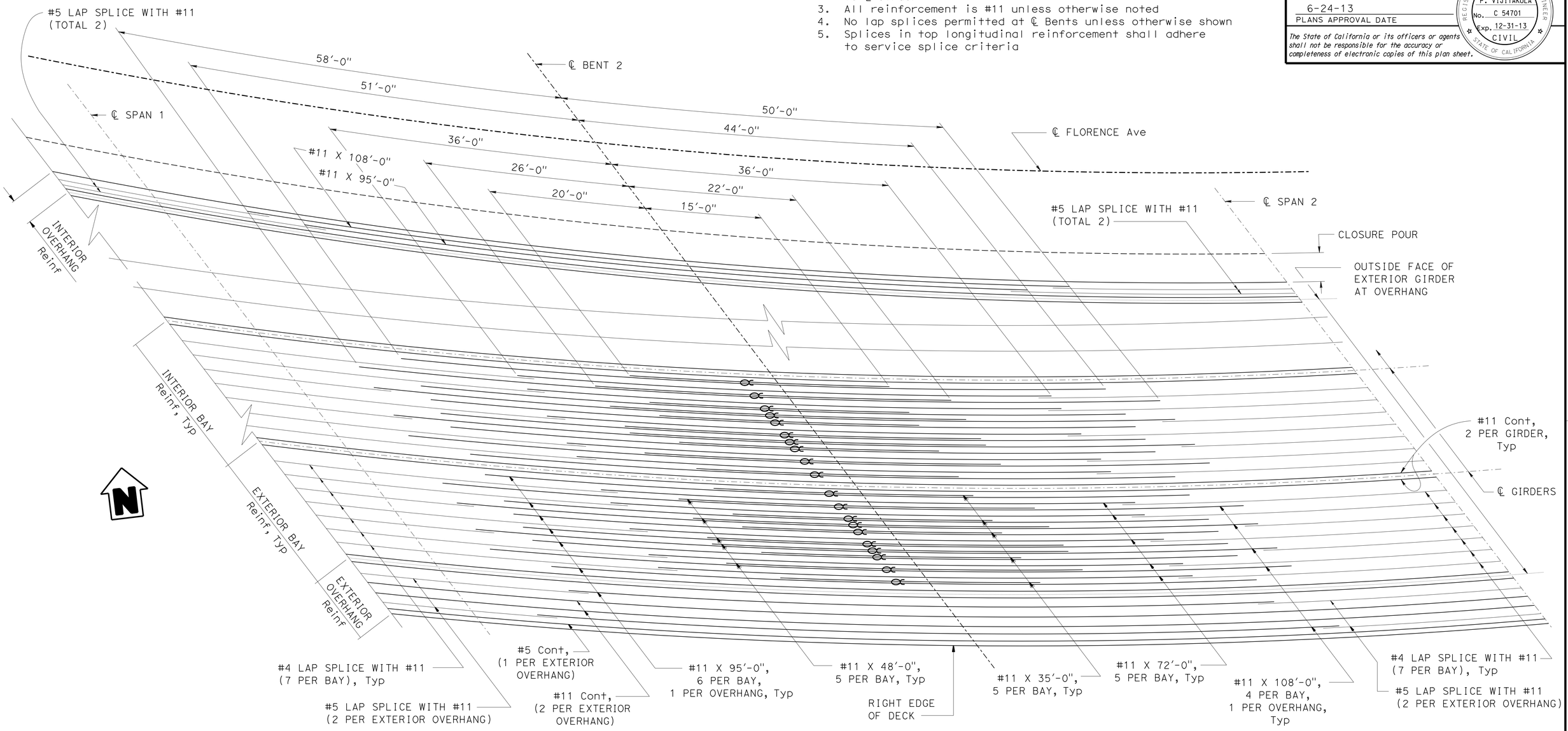

TOP LONGITUDINAL REINFORCEMENT AT BENT 2

NO SCALE

DESIGN	BY P. Vijitakula	CHECKED Vadim Shostak	
DETAILS	BY Bob Huddleston/Jie Tang	CHECKED Vadim Shostak	
QUANTITIES	BY Art Herrera	CHECKED Mike Bergman	

STATE OF CALIFORNIA
DEPARTMENT OF TRANSPORTATION

DIVISION OF ENGINEERING SERVICES
STRUCTURE DESIGN
DESIGN BRANCH 1

BRIDGE NO. 53-3065
POST MILE 6.38

FLORENCE AVENUE OC (REPLACE)
GIRDER REINFORCEMENT NO. 1

STRUCTURES DESIGN DETAIL SHEET (ENGLISH) (REV. 09-01-10)

ORIGINAL SCALE IN INCHES FOR REDUCED PLANS 0 1 2 3

UNIT: 3576
PROJECT NUMBER & PHASE: 07000018351
CONTRACT NO.: 07-215954

DISREGARD PRINTS BEARING EARLIER REVISION DATES

REVISION DATES: 12-02-11 05-30-12 04-03-13

SHEET 27 OF 56

FILE => 53-3065-n-27-girder-reinf01.dgn

USERNAME => s124496 DATE PLOTTED => 26-JUN-2013 TIME PLOTTED => 15:44

DIST	COUNTY	ROUTE	POST MILES TOTAL PROJECT	SHEET No.	TOTAL SHEETS
07	LA	5	0.0/7.6	643	985

P. Vijitakula 12-28-12
REGISTERED CIVIL ENGINEER DATE

6-24-13
PLANS APPROVAL DATE

REGISTERED PROFESSIONAL ENGINEER
P. VIJITAKULA
No. C 54701
Exp. 12-31-13
CIVIL
STATE OF CALIFORNIA

The State of California or its officers or agents shall not be responsible for the accuracy or completeness of electronic copies of this plan sheet.

LEGEND:

∝ - Indicates bundled bars

NOTES:

1. Top longitudinal Reinf at stage 1 shown, top longitudinal Reinf at stage 2 is similar
2. All longitudinal reinforcements and dimensions are parallel to ℄ Girder
3. All reinforcement is #11 unless otherwise noted
4. No lap splices permitted at ℄ Bents unless otherwise shown
5. Splices in top longitudinal reinforcement shall adhere to service splice criteria

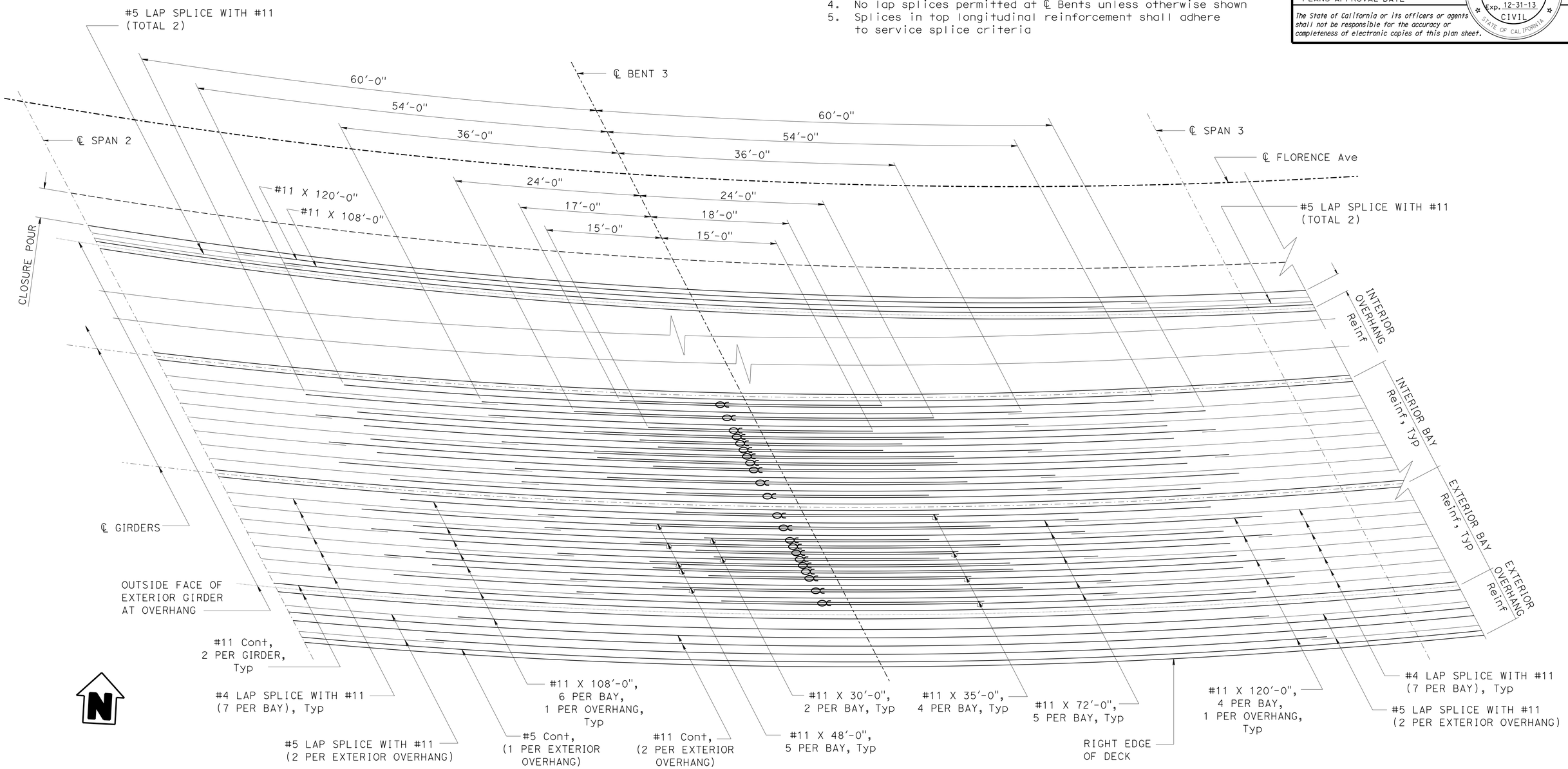

TOP LONGITUDINAL REINFORCEMENT AT BENT 3

NO SCALE

	BY	CHECKED
DESIGN	P. Vijitakula	Vadim Shostak
DETAILS	Bob Huddleston/Jie Tang	Vadim Shostak
QUANTITIES	Art Herrera	Mike Bergman

STATE OF CALIFORNIA
DEPARTMENT OF TRANSPORTATION

DIVISION OF ENGINEERING SERVICES
STRUCTURE DESIGN
DESIGN BRANCH 1

BRIDGE NO. 53-3065
POST MILE 6.38

FLORENCE AVENUE OC (REPLACE)
GIRDER REINFORCEMENT NO. 2

STRUCTURES DESIGN DETAIL SHEET (ENGLISH) (REV. 09-01-10)

ORIGINAL SCALE IN INCHES FOR REDUCED PLANS 0 1 2 3

UNIT: 3576
PROJECT NUMBER & PHASE: 07000018351
CONTRACT NO.: 07-215954

DISREGARD PRINTS BEARING EARLIER REVISION DATES

REVISION DATES: 12-02-11 04/03/13 06-24-13

SHEET 28 OF 56

FILE => 53-3065-n-28-girder-reinf02.dgn

USERNAME => s124036 DATE PLOTTED => 26-JUN-2013 TIME PLOTTED => 15:44

DIST	COUNTY	ROUTE	POST MILES TOTAL PROJECT	SHEET No.	TOTAL SHEETS
07	LA	5	0.0/7.6	644	985

P. Vijitakula 12-28-12
REGISTERED CIVIL ENGINEER DATE

6-24-13
PLANS APPROVAL DATE

REGISTERED PROFESSIONAL ENGINEER
P. VIJITAKULA
No. C 54701
Exp. 12-31-13
CIVIL
STATE OF CALIFORNIA

The State of California or its officers or agents shall not be responsible for the accuracy or completeness of electronic copies of this plan sheet.

LEGEND:

ᗡ - Indicates bundled bars

NOTES:

1. Bottom longitudinal Reinf at stage 1 shown, bottom longitudinal Reinf at stage 2 is similar
2. All reinforcements and dimensions are parallel to ℄ Girder
3. All reinforcements are #11 unless otherwise noted and shall be placed in between #5 transvers bars
4. No lap splices permitted at ℄ Span unless otherwise shown
5. Splices in bottom longitudinal reinforcement shall adhere to service splice criteria
6. Dimensions are varied; stop reinforcing bars 2" from back face of end diaphragm

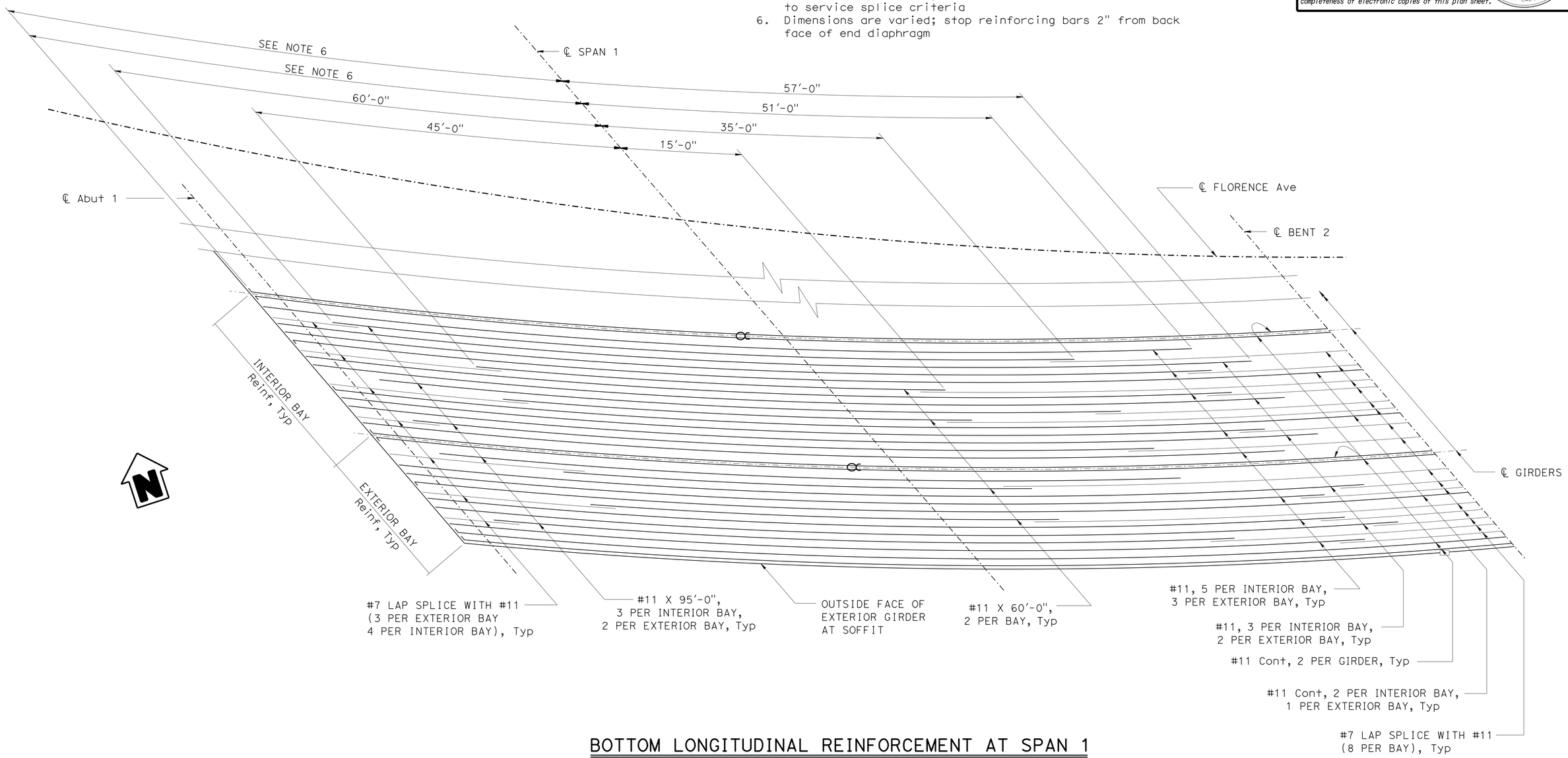

BOTTOM LONGITUDINAL REINFORCEMENT AT SPAN 1

NO SCALE

DESIGN	BY P. Vijitakula	CHECKED Vadim Shostak
DETAILS	BY Bob Huddleston/Jie Tang	CHECKED Vadim Shostak
QUANTITIES	BY Art Herrera	CHECKED Mike Bergman

STATE OF CALIFORNIA
DEPARTMENT OF TRANSPORTATION

DIVISION OF ENGINEERING SERVICES
STRUCTURE DESIGN
DESIGN BRANCH 1

BRIDGE NO. 53-3065
POST MILE 6.38

FLORENCE AVENUE OC (REPLACE)
GIRDER REINFORCEMENT NO. 3

STRUCTURES DESIGN DETAIL SHEET (ENGLISH) (REV. 09-01-10)

ORIGINAL SCALE IN INCHES FOR REDUCED PLANS 0 1 2 3

UNIT: 3576
PROJECT NUMBER & PHASE: 07000018351
CONTRACT NO.: 07-215954

DISREGARD PRINTS BEARING EARLIER REVISION DATES

REVISION DATES 11-26-12 06/06/12 08/29/12 04/03/13

SHEET 29 OF 56

FILE => 53-3065-n-29-girder-reinf03.dgn

USERNAME => s124496 DATE PLOTTED => 26-JUN-2013 TIME PLOTTED => 15:44

DIST	COUNTY	ROUTE	POST MILES TOTAL PROJECT	SHEET No.	TOTAL SHEETS
07	LA	5	0.0/7.6	645	985

P. Vijitakula 12-28-12
REGISTERED CIVIL ENGINEER DATE

6-24-13
PLANS APPROVAL DATE

REGISTERED PROFESSIONAL ENGINEER
P. VIJITAKULA
No. C 54701
Exp. 12-31-13
CIVIL
STATE OF CALIFORNIA

The State of California or its officers or agents shall not be responsible for the accuracy or completeness of electronic copies of this plan sheet.

LEGEND:

ᴄ - Indicates bundled bars

NOTES:

1. Bottom longitudinal Reinf at stage 1 shown, bottom longitudinal Reinf at stage 2 is similar
2. All reinforcements and dimensions are parallel to ℄ Girder
3. All reinforcements are #11 unless otherwise noted and shall be placed in between #5 transvers bars
4. No lap splices permitted at ℄ Span unless otherwise shown
5. Splices in bottom longitudinal reinforcement shall adhere to service splice criteria

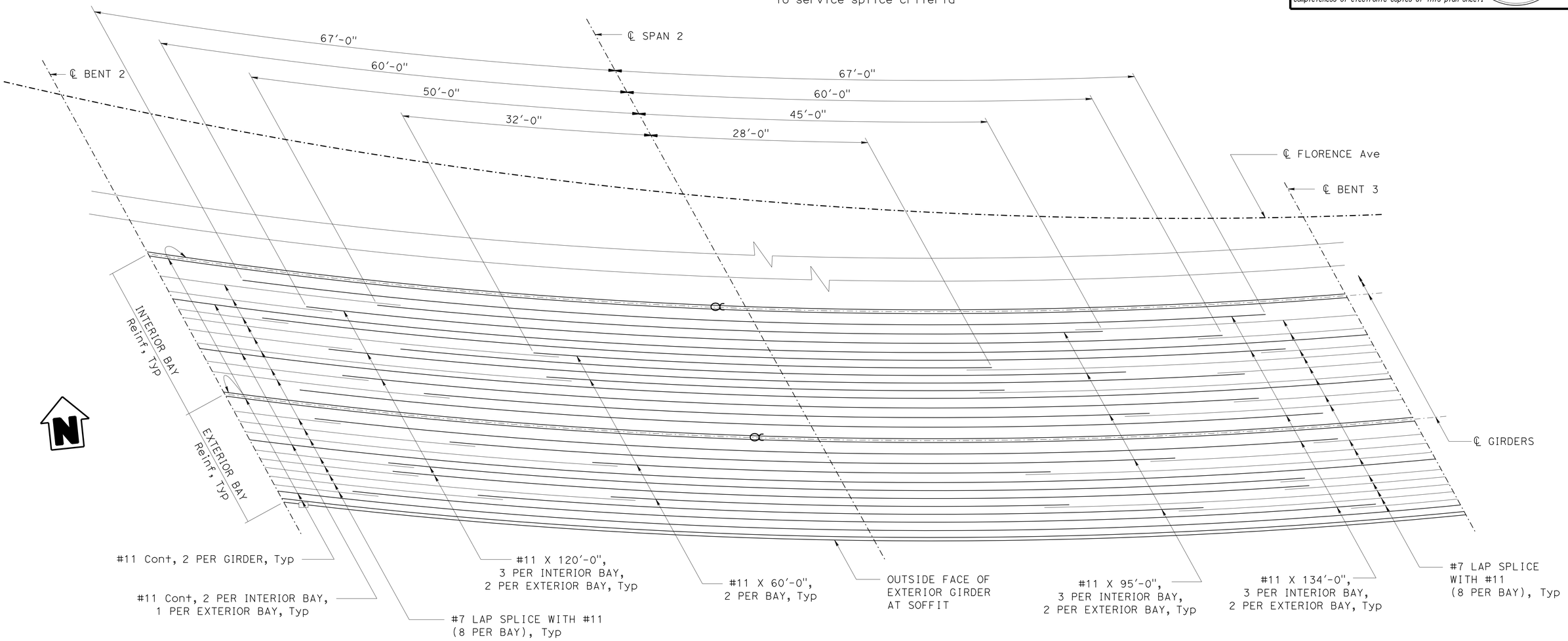

BOTTOM LONGITUDINAL REINFORCEMENT AT SPAN 2

NO SCALE

	BY	CHECKED
DESIGN	P. Vijitakula	Vadim Shostak
DETAILS	Bob Huddleston/Jie Tang	Vadim Shostak
QUANTITIES	Art Herrera	Mike Bergman

STATE OF CALIFORNIA
DEPARTMENT OF TRANSPORTATION

DIVISION OF ENGINEERING SERVICES
STRUCTURE DESIGN
DESIGN BRANCH 1

BRIDGE NO. 53-3065
POST MILE 6.38

FLORENCE AVENUE OC (REPLACE)
GIRDER REINFORCEMENT NO. 4

STRUCTURES DESIGN DETAIL SHEET (ENGLISH) (REV. 09-01-10)

ORIGINAL SCALE IN INCHES FOR REDUCED PLANS 0 1 2 3

UNIT: 3576
PROJECT NUMBER & PHASE: 07000018351 CONTRACT NO.: 07-215954

DISREGARD PRINTS BEARING EARLIER REVISION DATES

REVISION DATES: 11-26-12 06/06/12 08/29/12

SHEET 30 OF 56

FILE => 53-3065-n-30-girder-reinf04.dgn

USERNAME => s124496 DATE PLOTTED => 26-JUN-2013 TIME PLOTTED => 15:44

DIST	COUNTY	ROUTE	POST MILES TOTAL PROJECT	SHEET No.	TOTAL SHEETS
07	LA	5	0.0/7.6	646	985

P. Vijitakula 12-28-12
REGISTERED CIVIL ENGINEER DATE

6-24-13
PLANS APPROVAL DATE

REGISTERED PROFESSIONAL ENGINEER
P. VIJITAKULA
No. C 54701
Exp. 12-31-13
CIVIL
STATE OF CALIFORNIA

The State of California or its officers or agents shall not be responsible for the accuracy or completeness of electronic copies of this plan sheet.

LEGEND:

ᘐ - Indicates bundled bars

NOTES:

1. Bottom longitudinal Reinf at stage 1 shown, bottom longitudinal Reinf at stage 2 is similar
2. All reinforcements and dimensions are parallel to ℄ Girder
3. All reinforcements are #11 unless otherwise noted and shall be placed in between #5 transvers bars
4. No lap splices permitted at ℄ Span unless otherwise shown
5. Splices in bottom longitudinal reinforcement shall adhere to service splice criteria
6. Dimensions are varied; stop reinforcing bars 2" from back face of end diaphragm
7. Dimensions are varied; reinforcing bars with hook at terminations

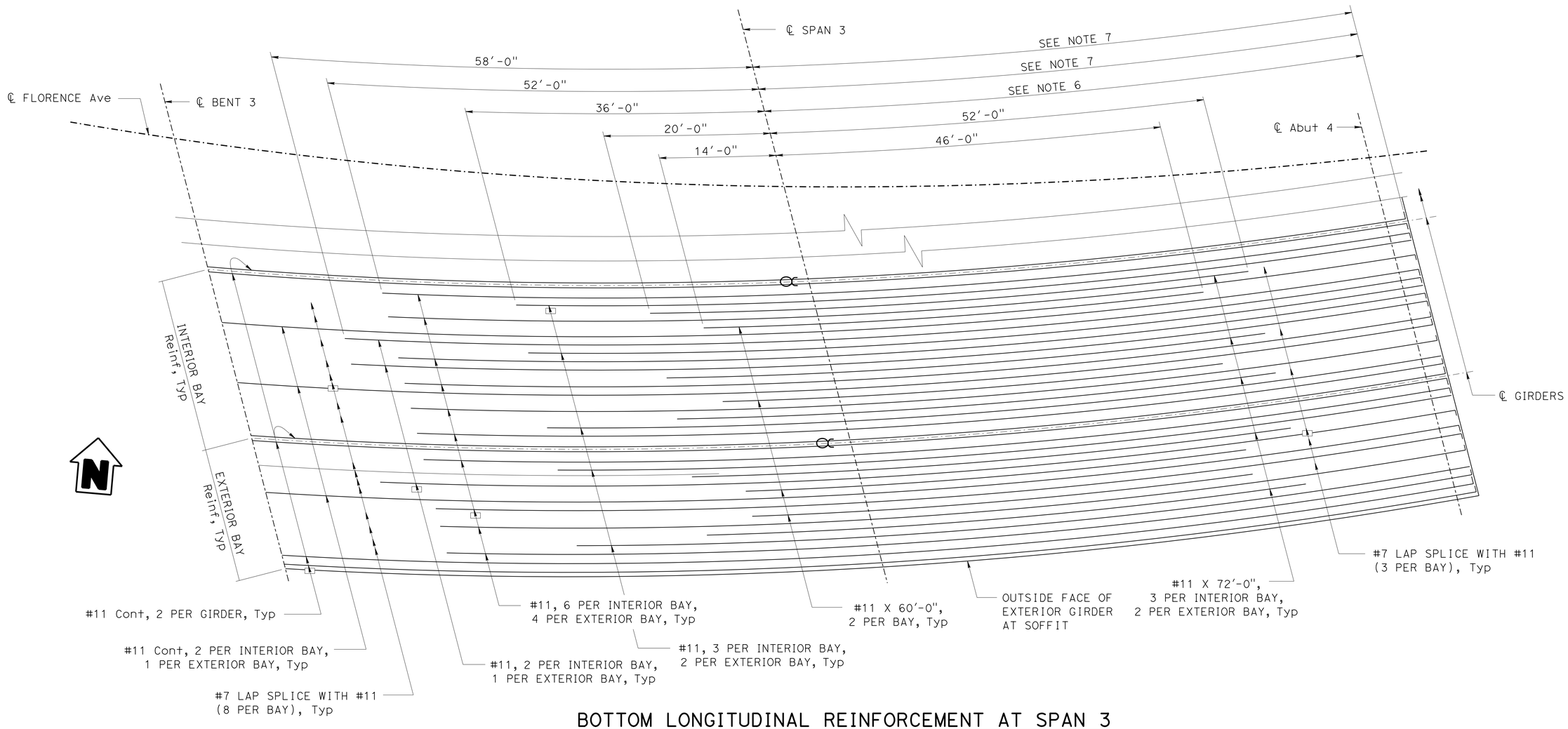

BOTTOM LONGITUDINAL REINFORCEMENT AT SPAN 3

NO SCALE

	BY	CHECKED
DESIGN	P. Vijitakula	Vadim Shostak
DETAILS	Bob Huddleston/Jie Tang	Vadim Shostak
QUANTITIES	Art Herrera	Mike Bergman

STATE OF CALIFORNIA
DEPARTMENT OF TRANSPORTATION

DIVISION OF ENGINEERING SERVICES
STRUCTURE DESIGN
DESIGN BRANCH 1

BRIDGE NO. 53-3065
POST MILE 6.38

FLORENCE AVENUE OC (REPLACE)
GIRDER REINFORCEMENT NO. 5

STRUCTURES DESIGN DETAIL SHEET (ENGLISH) (REV. 09-01-10)

ORIGINAL SCALE IN INCHES FOR REDUCED PLANS 0 1 2 3

UNIT: 3576
PROJECT NUMBER & PHASE: 07000018351
CONTRACT NO.: 07-215954

DISREGARD PRINTS BEARING EARLIER REVISION DATES

REVISION DATES: 01-26-12 09-12-12 04/03/13

SHEET 31 OF 56

FILE => 53-3065-n-31-girder-reinf05.dgn

USERNAME => s124496 DATE PLOTTED => 26-JUN-2013 TIME PLOTTED => 15:44

DIST	COUNTY	ROUTE	POST MILES TOTAL PROJECT	SHEET No.	TOTAL SHEETS
07	LA	5	0.0/7.6	647	985

P. Vijitakula
REGISTERED CIVIL ENGINEER 12-28-12 DATE

6-24-13
PLANS APPROVAL DATE

REGISTERED PROFESSIONAL ENGINEER P. VIJITAKULA No. C 54701 Exp. 12-31-13 CIVIL STATE OF CALIFORNIA

The State of California or its officers or agents shall not be responsible for the accuracy or completeness of electronic copies of this plan sheet.

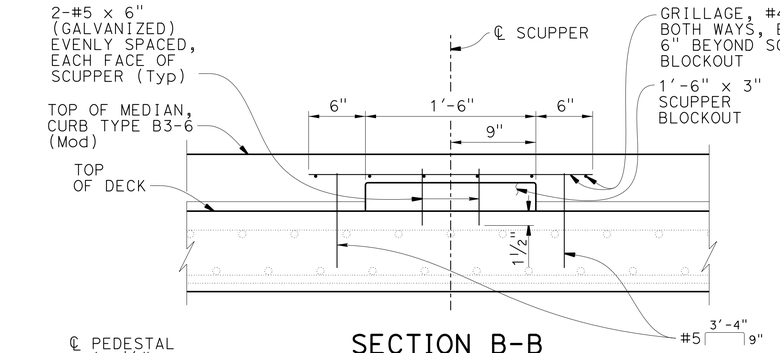

SECTION B-B
1½" = 1'-0"

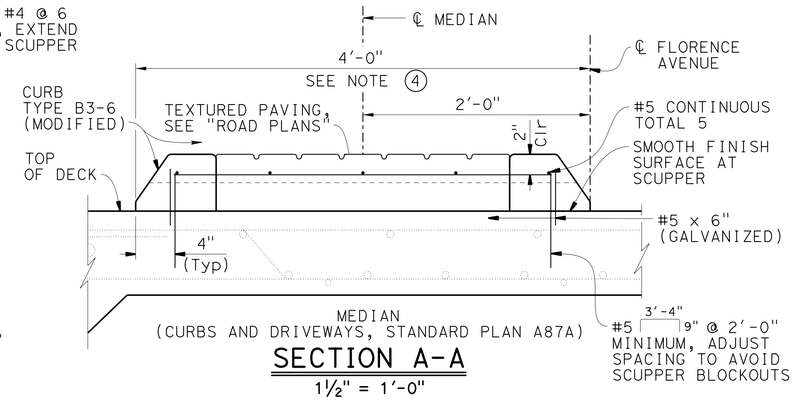

SECTION A-A
1½" = 1'-0"

SIDEWALK ACCESS OPENING (MANHOLE) B7-11 U-42 / B7-11 U-46

LOCATION	OFFSET DISTANCE AND STATION FROM ℄ FLORENCE AVENUE	
℄ MANHOLE A	66'-0" RIGHT	Sta 98+15.00
℄ MANHOLE B	66'-0" RIGHT	Sta 98+38.00
℄ MANHOLE C	66'-0" RIGHT	Sta 98+55.00
℄ MANHOLE D	66'-0" RIGHT	Sta 99+57.00
℄ MANHOLE E	66'-0" RIGHT	Sta 99+75.00
℄ MANHOLE F	66'-0" RIGHT	Sta 99+93.00
℄ MANHOLE G	66'-0" RIGHT	Sta 101+00.00
℄ MANHOLE H	66'-0" RIGHT	Sta 101+20.00
℄ MANHOLE I	66'-0" RIGHT	Sta 101+32.00

Notes:

1. Drain outlet pipe details, see "Road Plans"
2. Drain outlet location, see "Road Plans"
3. See Sidewalk Access Opening Table on this sheet
4. Limit of median curb

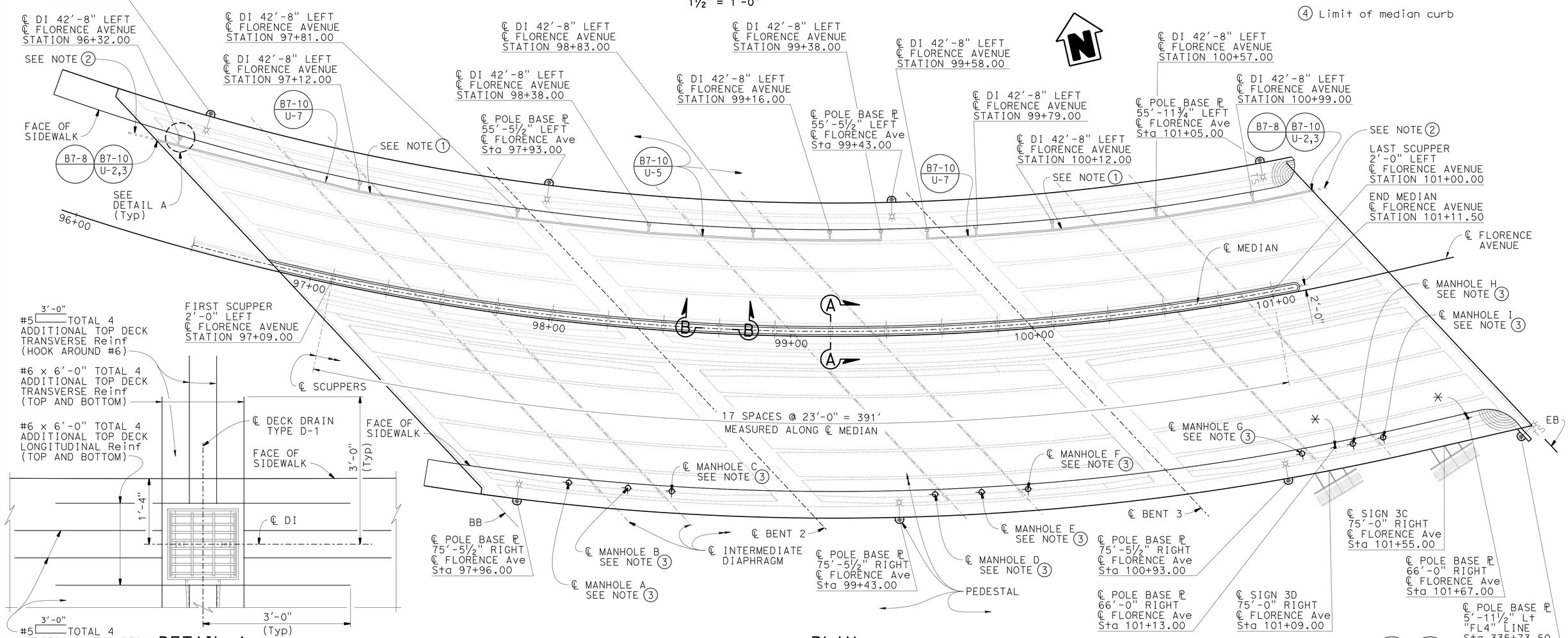

PLAN
1" = 20'

✳ BASE ℙ FOR SIGNAL AND LIGHTING STANDARD, TYPE 1-A, see "Road Plans" and ES-6B ES-7B

DETAIL A
1" = 1'-0"

NOTE: FOR DETAILS AND DIMENSIONS NOT SHOWN, SEE STANDARD PLAN B7-6

DESIGN	BY P. Vijitakula/D. Sessions	CHECKED H. Fang / V. Shostak	
DETAILS	BY Gary Souza	CHECKED H. Fang / V. Shostak	
QUANTITIES	BY Art Herrera	CHECKED Mike Bergman	

STATE OF CALIFORNIA
DEPARTMENT OF TRANSPORTATION

DIVISION OF ENGINEERING SERVICES
STRUCTURE DESIGN
DESIGN BRANCH 1

BRIDGE NO. 53-3065
POST MILE 6.38

FLORENCE AVENUE OC (REPLACE)
DECK DETAILS

STRUCTURES DESIGN DETAIL SHEET (ENGLISH) (REV. 09-01-10)

ORIGINAL SCALE IN INCHES FOR REDUCED PLANS 0 1 2 3

UNIT: 3576
PROJECT NUMBER & PHASE: 07000018351
CONTRACT NO.: 07-215954

DISREGARD PRINTS BEARING EARLIER REVISION DATES

REVISION DATES 07-19-12 12/19/12 04/03/13

SHEET 32 OF 56

FILE => 53-3065-q-32-deck-det.dgn

USERNAME => s128843 DATE PLOTTED => 03-JUL-2013 TIME PLOTTED => 13:56

DIST	COUNTY	ROUTE	POST MILES TOTAL PROJECT	SHEET No.	TOTAL SHEETS
07	LA	5	0.0/7.6	648	985

P. Vijitakula 12-28-12
REGISTERED CIVIL ENGINEER DATE

6-24-13
PLANS APPROVAL DATE

REGISTERED PROFESSIONAL ENGINEER P. VIJITAKULA No. C 54701 Exp. 12-31-13 CIVIL STATE OF CALIFORNIA

The State of California or its officers or agents shall not be responsible for the accuracy or completeness of electronic copies of this plan sheet.

Legend:

⊗ For Barrier Architectural Treatment See "BARRIER MOTIF DETAILS" sheet

Notes:

1. For SECTION D-D & SECTION E-E, See "LUMINAIRE PEDESTAL DETAILS NO. 2" sheet
2. Chain Link Railing Type 3(Mod) and Decorative City Lighting Standard not shown

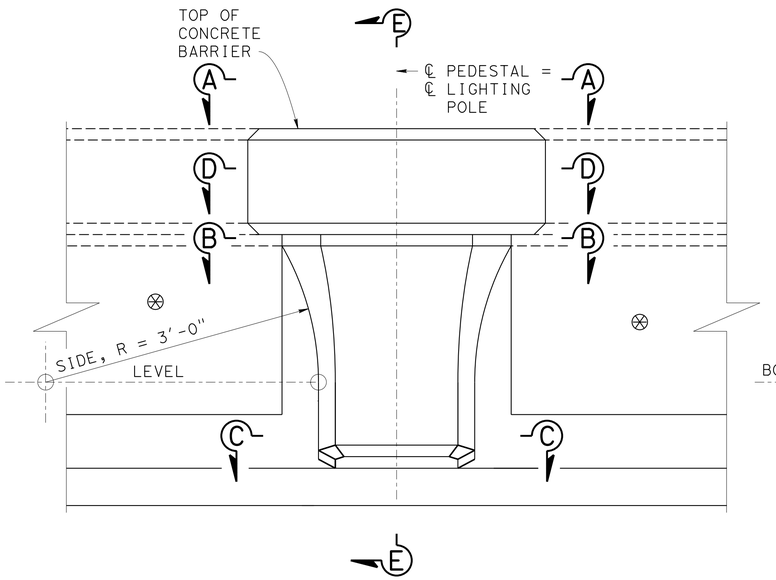

ELEVATION
NO SCALE

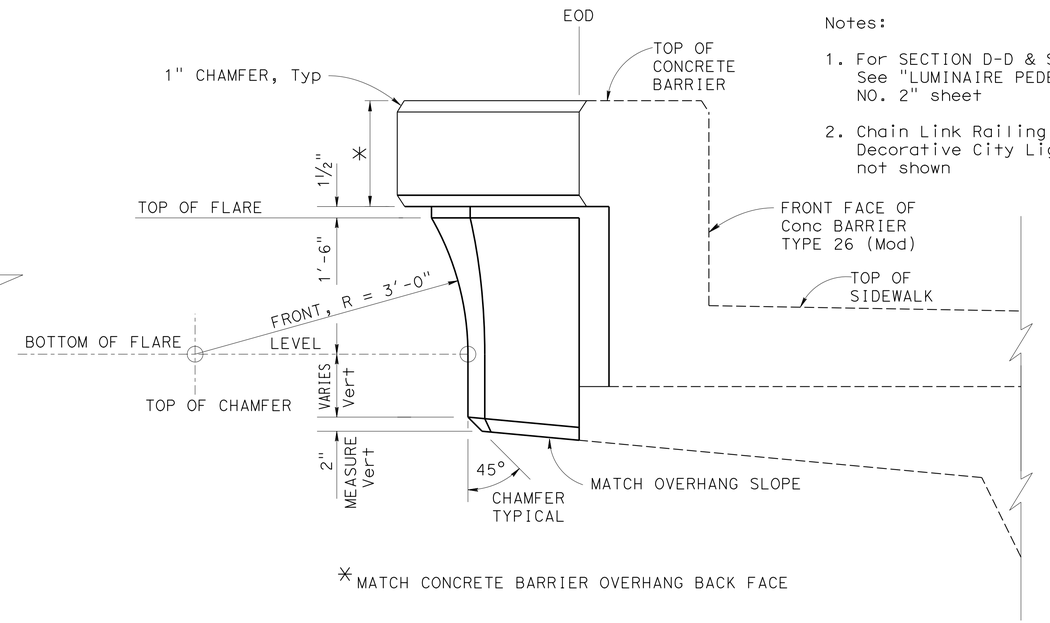

SIDE VIEW
NO SCALE

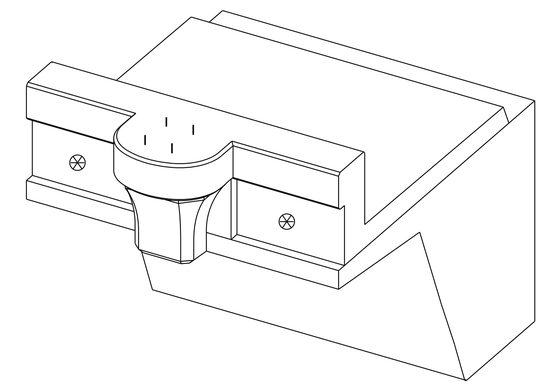

PICTORIAL VIEW
NO SCALE

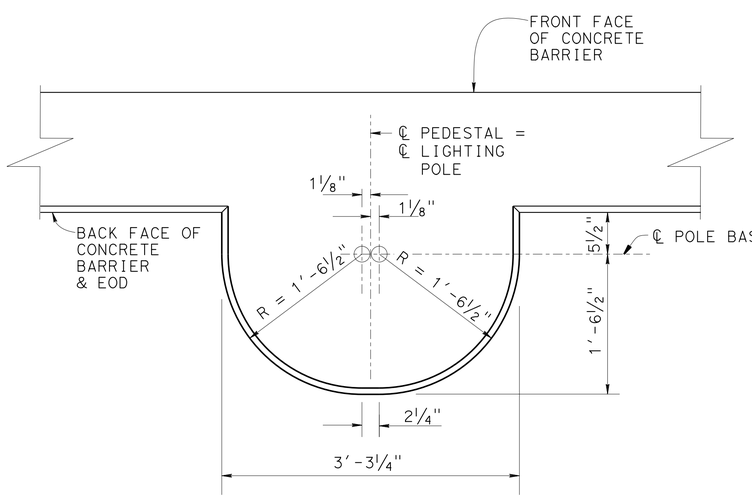

VIEW A-A
NO SCALE

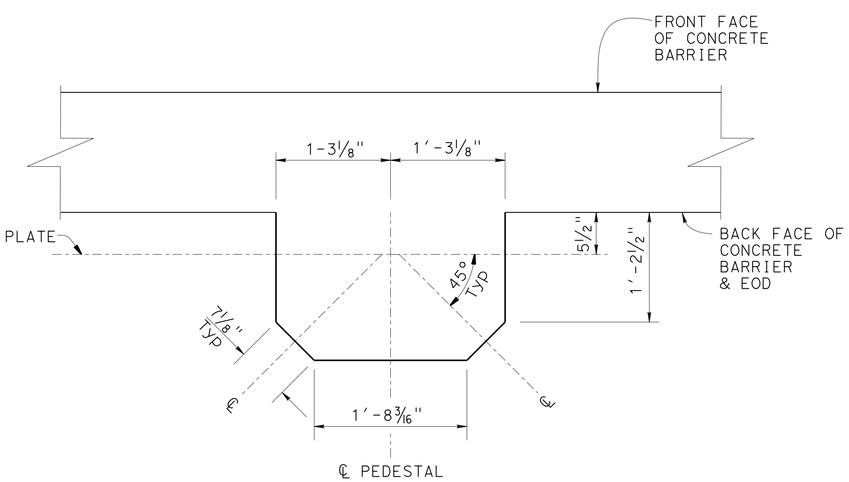

SECTION B-B
NO SCALE

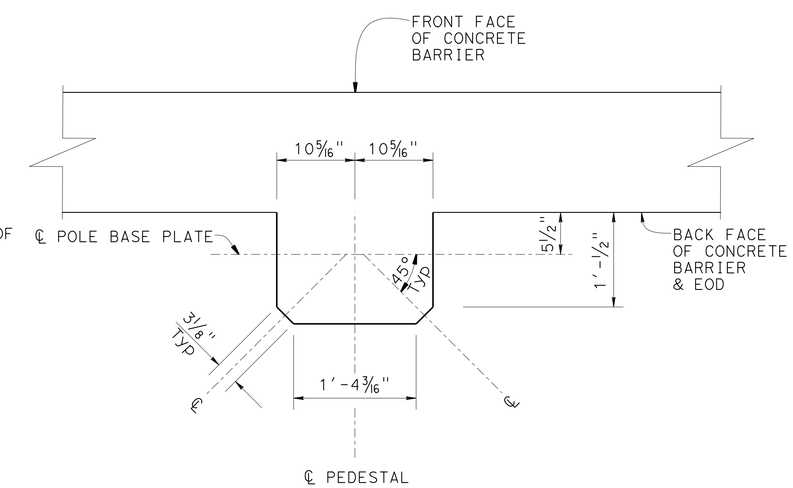

SECTION C-C
NO SCALE

Note: Reinforcing steel not shown

	BY	CHECKED
DESIGN	Krishnakant Andurlekar	Eric Watson/Henry Fang
DETAILS	Jaime Ramirez/G.S.	Eric Watson/Henry Fang
QUANTITIES	Art Herrera	Mike Bergman

STATE OF CALIFORNIA
DEPARTMENT OF TRANSPORTATION

DIVISION OF ENGINEERING SERVICES
STRUCTURE DESIGN
DESIGN BRANCH 1

BRIDGE NO. 53-3065
POST MILE 6.38

FLORENCE AVENUE OC (REPLACE)
LUMINAIRE PEDESTAL DETAILS NO. 1

STRUCTURES DESIGN DETAIL SHEET (ENGLISH) (REV. 09-01-10)

ORIGINAL SCALE IN INCHES FOR REDUCED PLANS 0 1 2 3

UNIT: 3576
PROJECT NUMBER & PHASE: 07000018351
CONTRACT NO.: 07-215954

DISREGARD PRINTS BEARING EARLIER REVISION DATES

REVISION DATES: 04-28-11 03-22-13 09-12-12

SHEET 33 OF 56

FILE => 53-3065-u-33-misc-det01.dgn

USERNAME => s124496 DATE PLOTTED => 26-JUN-2013 TIME PLOTTED => 15:44

DIST	COUNTY	ROUTE	POST MILES TOTAL PROJECT	SHEET No.	TOTAL SHEETS
07	LA	5	0.0/7.6	649	985

P. Vijitakula 12-28-12
REGISTERED CIVIL ENGINEER DATE

6-24-13
PLANS APPROVAL DATE

REGISTERED PROFESSIONAL ENGINEER
P. VIJITAKULA
No. C 54701
Exp. 12-31-13
CIVIL
STATE OF CALIFORNIA

The State of California or its officers or agents shall not be responsible for the accuracy or completeness of electronic copies of this plan sheet.

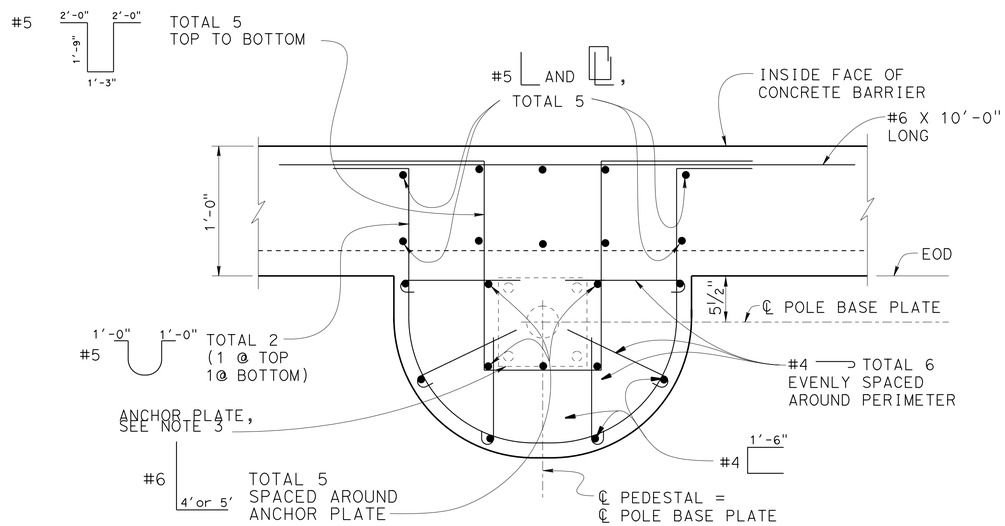

SECTION D-D
NO SCALE

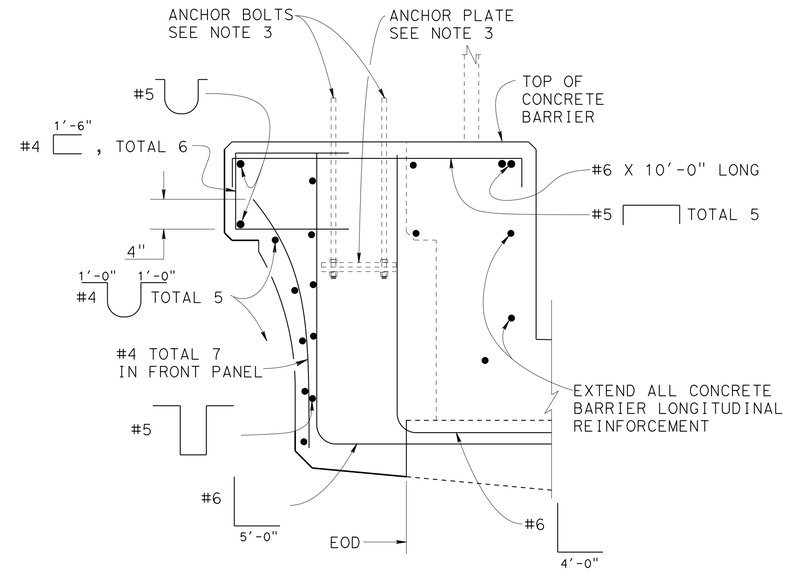

SECTION E-E
NO SCALE

Notes:

1. For other details, see "LUMINAIRE PEDESTAL DETAILS No. 1" sheet.
2. All bars not shown, For Barrier Details, see B11-54
3. For Electrolier Details see "ROAD PLANS"
4. No splice allowed in concrete barrier longitudinal reinf within 10 ft distance on each side of Electrolier location.

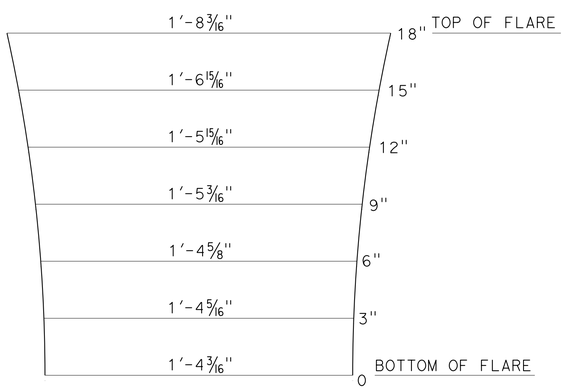

FRONT PANEL FACE
NO SCALE

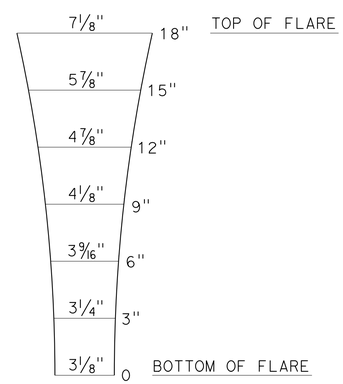

CORNER PANEL FACE
NO SCALE

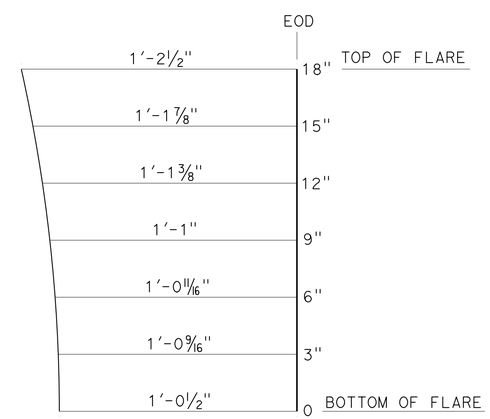

SIDE PANEL FACE
NO SCALE

DESIGN	BY Krishnakant Andurlekar	CHECKED Eric Watson/Henry Fang	
DETAILS	BY Jaime Ramirez/G.S.	CHECKED Eric Watson/Henry Fang	
QUANTITIES	BY Art Herrera	CHECKED Mike Bergman	

STATE OF CALIFORNIA
DEPARTMENT OF TRANSPORTATION

DIVISION OF ENGINEERING SERVICES
STRUCTURE DESIGN
DESIGN BRANCH 1

BRIDGE NO. 53-3065
POST MILE 6.38

FLORENCE AVENUE OC (REPLACE)
LUMINAIRE PEDESTAL DETAILS NO. 2

STRUCTURES DESIGN DETAIL SHEET (ENGLISH) (REV. 09-01-10)

ORIGINAL SCALE IN INCHES FOR REDUCED PLANS 0 1 2 3

UNIT: 3576
PROJECT NUMBER & PHASE: 07000018351
CONTRACT NO.: 07-215954

DISREGARD PRINTS BEARING EARLIER REVISION DATES

REVISION DATES: 05-02-11 10-15-12 09-12-12

SHEET 34 OF 56

FILE => 53-3065-u-34-misc-det02.dgn

USERNAME => s124496 DATE PLOTTED => 26-JUN-2013 TIME PLOTTED => 15:24

DIST	COUNTY	ROUTE	POST MILES TOTAL PROJECT	SHEET No.	TOTAL SHEETS
07	LA	5	0.0/7.6	650	985

P. Vijitakula 12-28-12
REGISTERED CIVIL ENGINEER DATE

6-24-13
PLANS APPROVAL DATE

REGISTERED PROFESSIONAL ENGINEER P. VIJITAKULA No. C 54701 Exp. 12-31-13 CIVIL STATE OF CALIFORNIA

The State of California or its officers or agents shall not be responsible for the accuracy or completeness of electronic copies of this plan sheet.

Legend:

⊗ For Barrier Architectural Treatment See "BARRIER MOTIF DETAILS" sheet

Notes:

1. For SECTION D-D & SECTION E-E, See "SIGNAL AND LIGHTING PEDESTAL DETAILS NO. 2" sheet
2. Signal and Lighting Standard Type 21TS not shown

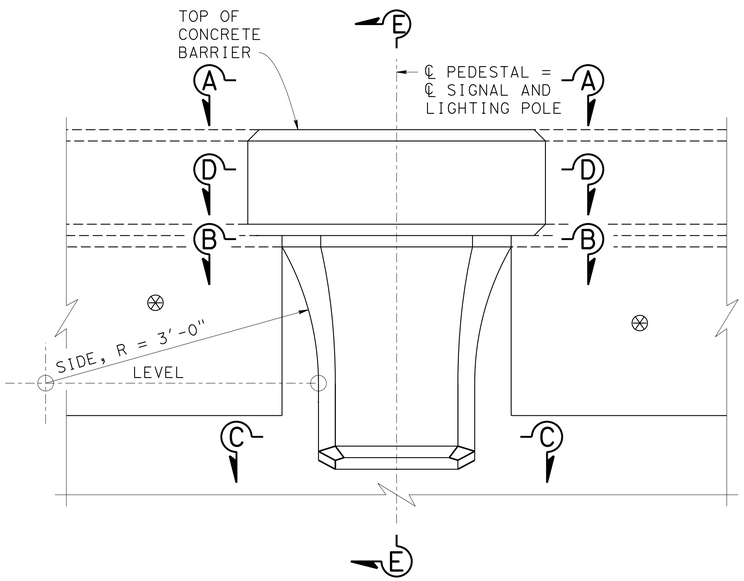

ELEVATION
NO SCALE

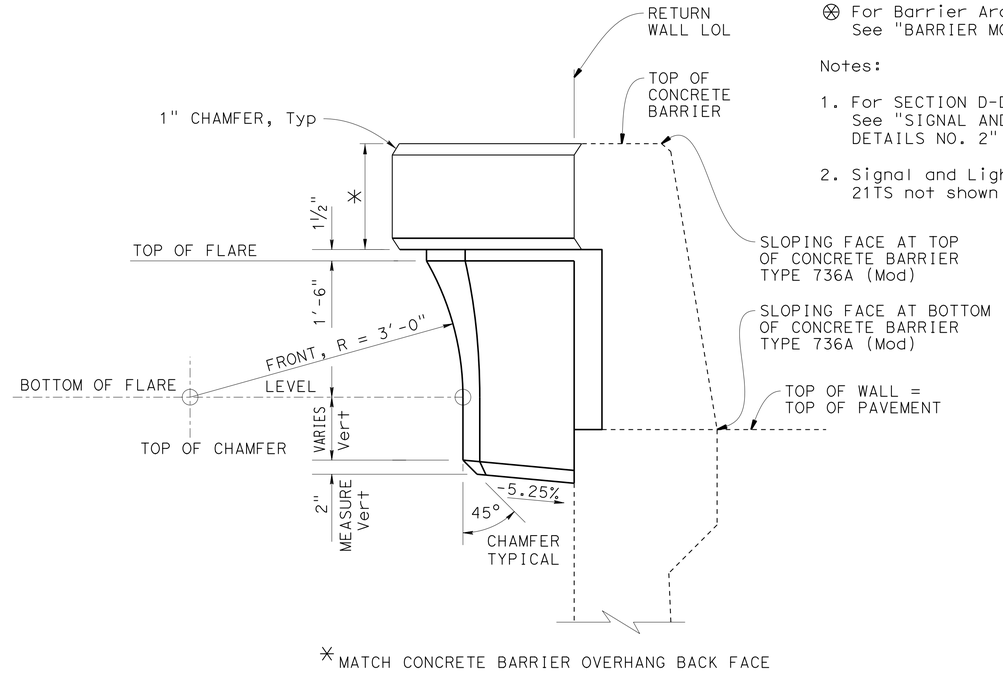

* MATCH CONCRETE BARRIER OVERHANG BACK FACE

SIDE VIEW
NO SCALE

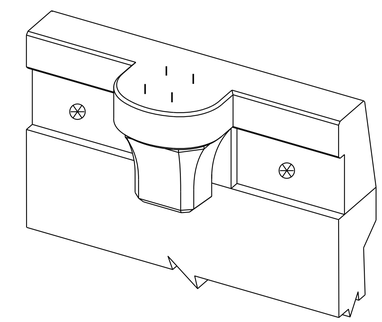

PICTORIAL VIEW
NO SCALE

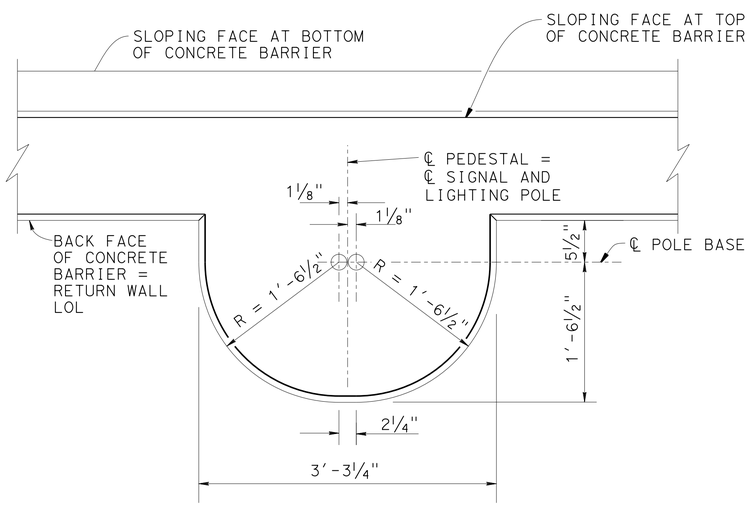

VIEW A-A
NO SCALE

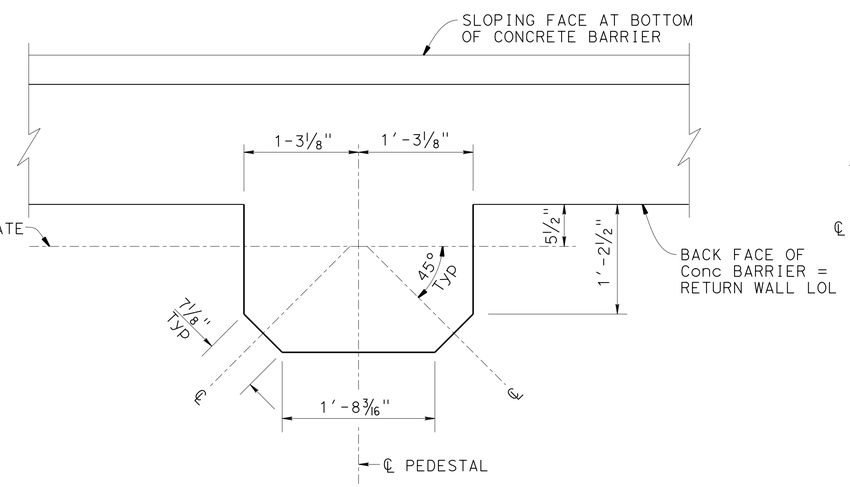

SECTION B-B
NO SCALE

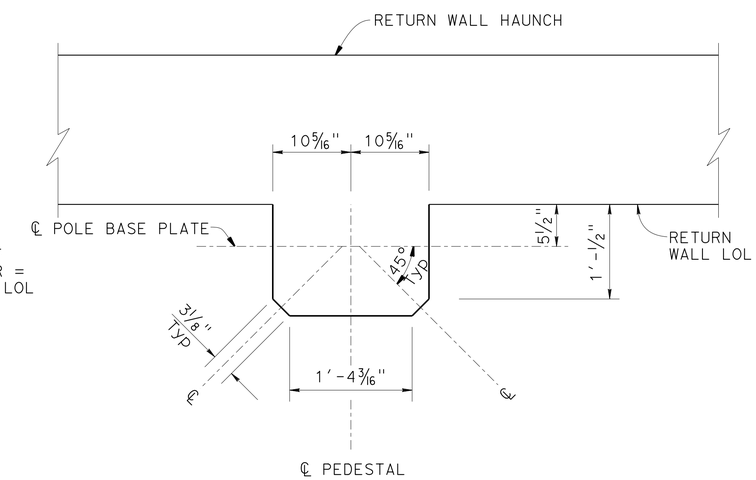

SECTION C-C
NO SCALE

Note: Reinforcing steel not shown

	BY	CHECKED
DESIGN	Krishnakant Andurlekar	Eric Watson/Henry Fang
DETAILS	Jaime Ramirez/G.S.	Eric Watson/Henry Fang
QUANTITIES	Art Herrera	Mike Bergman

STATE OF CALIFORNIA
DEPARTMENT OF TRANSPORTATION

DIVISION OF ENGINEERING SERVICES
STRUCTURE DESIGN
DESIGN BRANCH 1

BRIDGE NO. 53-3065
POST MILE 6.38

FLORENCE AVENUE OC (REPLACE)

SIGNAL AND LIGHTING PEDESTAL DETAILS NO. 1

STRUCTURES DESIGN DETAIL SHEET (ENGLISH) (REV. 09-01-10)

ORIGINAL SCALE IN INCHES FOR REDUCED PLANS 0 1 2 3

UNIT: 3576
PROJECT NUMBER & PHASE: 07000018351 CONTRACT NO.: 07-215954

DISREGARD PRINTS BEARING EARLIER REVISION DATES

REVISION DATES 08-22-12 09-13-12 03-22-13

SHEET 35 OF 56

FILE => 53-3065-u-35-signal-light-det01.dgn

USERNAME => s124496 DATE PLOTTED => 26-JUN-2013 TIME PLOTTED => 15:44

DIST	COUNTY	ROUTE	POST MILES TOTAL PROJECT	SHEET No.	TOTAL SHEETS
07	LA	5	0.0/7.6	651	985

P. Vijitakula 12-28-12
REGISTERED CIVIL ENGINEER DATE

6-24-13
PLANS APPROVAL DATE

REGISTERED PROFESSIONAL ENGINEER
P. VIJITAKULA
No. C 54701
Exp. 12-31-13
CIVIL
STATE OF CALIFORNIA

The State of California or its officers or agents shall not be responsible for the accuracy or completeness of electronic copies of this plan sheet.

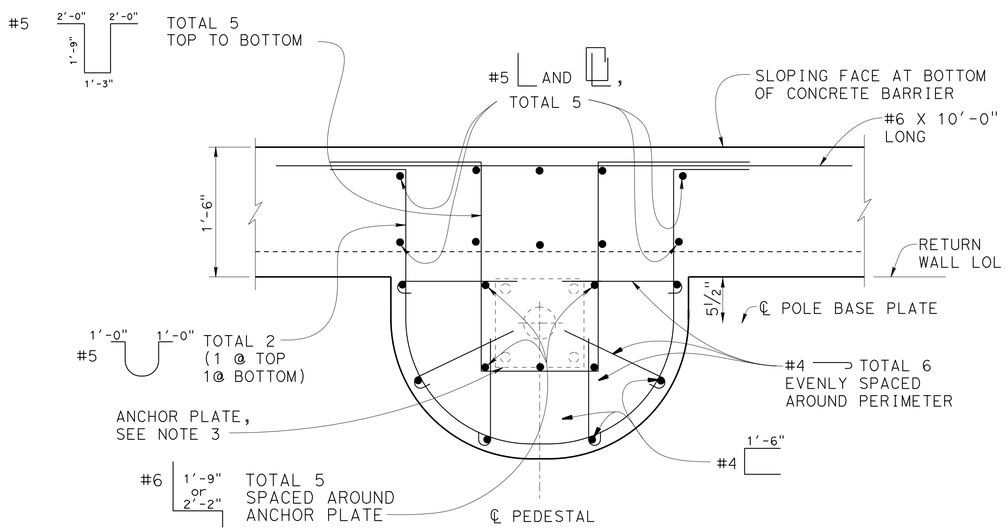

SECTION D-D
NO SCALE

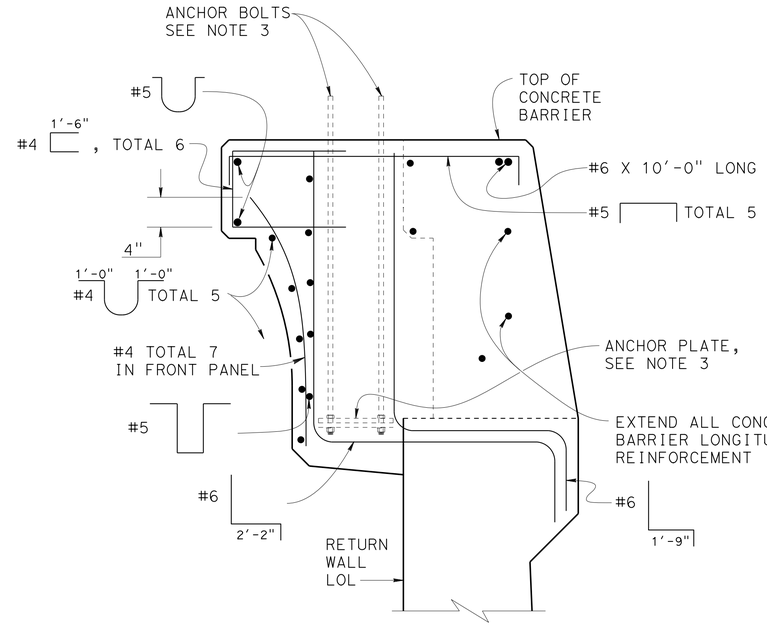

SECTION E-E
NO SCALE

Notes:

1. For details not shown, see "SIGNAL AND LIGHTING PEDESTAL DETAILS No. 1" sheet.
2. For Barrier Details, see B11-56
3. For Signal and Lighting Standard, Type 21TS Details, see "Road Plans" and ES-7A
4. No splice allowed in concrete barrier longitudinal reinf within 10 ft distance on each side of Signal and Lighting Post location.

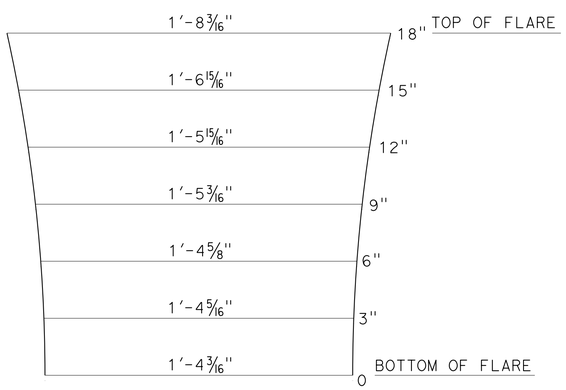

FRONT PANEL FACE
NO SCALE

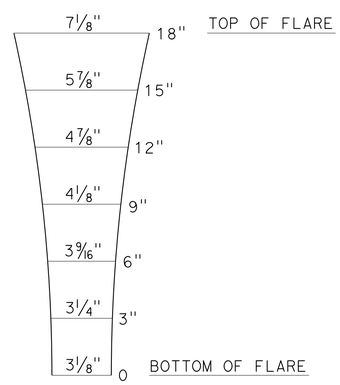

CORNER PANEL FACE
NO SCALE

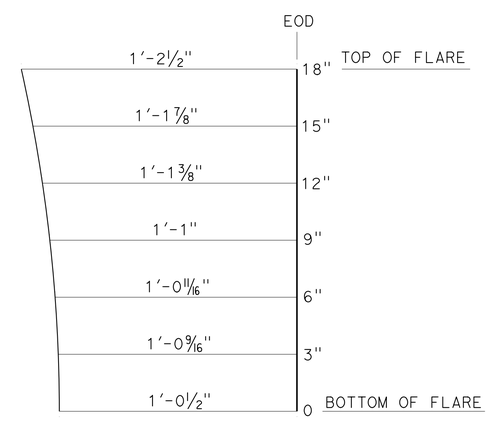

SIDE PANEL FACE
NO SCALE

DESIGN	BY Krishnakant Andurlekar	CHECKED Eric Watson/Henry Fang	
DETAILS	BY Jaime Ramirez/G.S.	CHECKED Eric Watson/Henry Fang	
QUANTITIES	BY Art Herrera	CHECKED Mike Bergman	

STATE OF CALIFORNIA
DEPARTMENT OF TRANSPORTATION

DIVISION OF ENGINEERING SERVICES
STRUCTURE DESIGN
DESIGN BRANCH 1

BRIDGE NO. 53-3065
POST MILE 6.38

FLORENCE AVENUE OC (REPLACE)
SIGNAL AND LIGHTING PEDESTAL DETAILS NO. 2

STRUCTURES DESIGN DETAIL SHEET (ENGLISH) (REV. 09-01-10)

ORIGINAL SCALE IN INCHES FOR REDUCED PLANS 0 1 2 3

UNIT: 3576
PROJECT NUMBER & PHASE: 07000018351
CONTRACT NO.: 07-215954

DISREGARD PRINTS BEARING EARLIER REVISION DATES

REVISION DATES: 08-22-12 09-12-12 10-15-12

SHEET 36 OF 56

FILE => 53-3065-u-36-signal-lighting-det02.dgn

USERNAME => s124496 DATE PLOTTED => 26-JUN-2013 TIME PLOTTED => 15:44

DIST	COUNTY	ROUTE	POST MILES TOTAL PROJECT	SHEET No.	TOTAL SHEETS
07	LA	5	0.0/7.6	652	985

P. Vijitakula 12-28-12
REGISTERED CIVIL ENGINEER DATE

6-24-13
PLANS APPROVAL DATE

REGISTERED PROFESSIONAL ENGINEER P. VIJITAKULA No. C 54701 Exp. 12-31-13 CIVIL STATE OF CALIFORNIA

The State of California or its officers or agents shall not be responsible for the accuracy or completeness of electronic copies of this plan sheet.

Legend:

⊗ For Barrier Architectural Treatment See "BARRIER MOTIF DETAILS" sheet

Notes:

1. For SECTION D-D & SECTION E-E, See "SIGNAL AND LIGHTING PEDESTAL DETAILS NO. 4" sheet
2. Chain Link Railing Type 3(Mod) and Decorative City Lighting Standard not shown

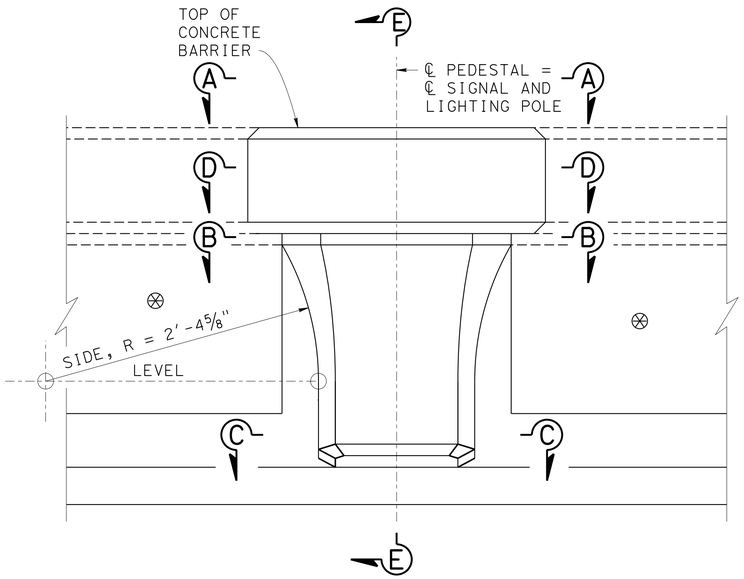

ELEVATION
NO SCALE

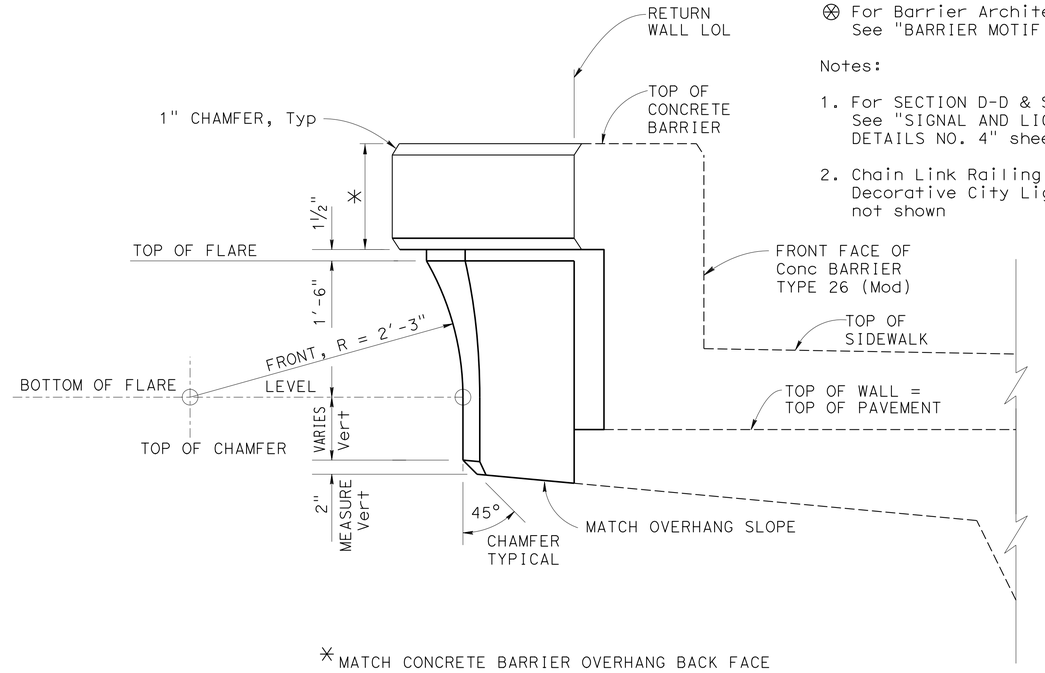

* MATCH CONCRETE BARRIER OVERHANG BACK FACE

SIDE VIEW
NO SCALE

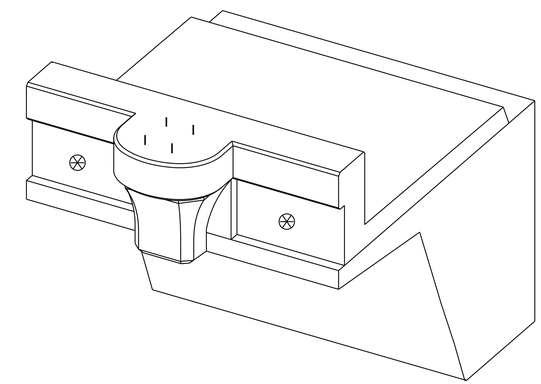

PICTORIAL VIEW
NO SCALE

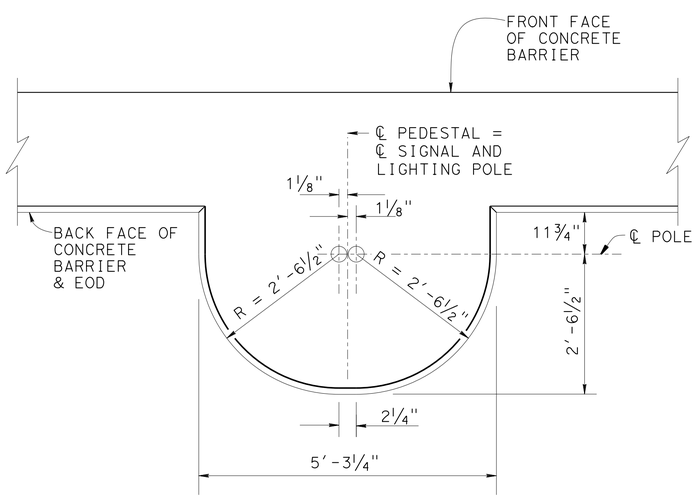

VIEW A-A
NO SCALE

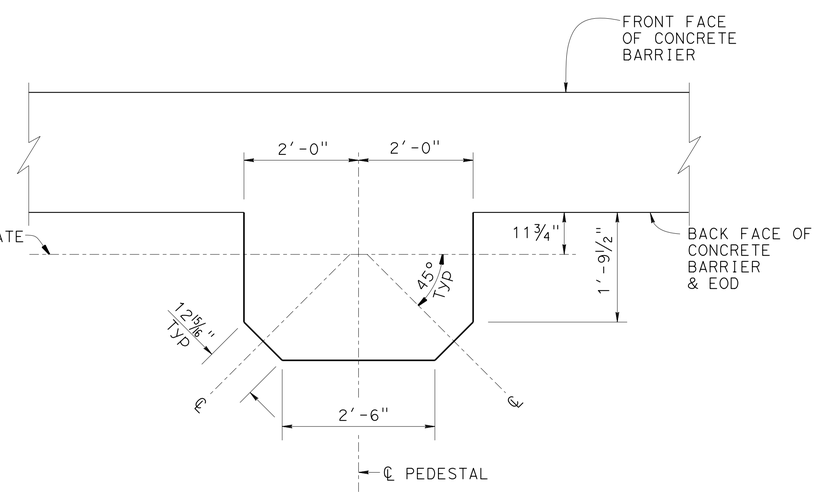

SECTION B-B
NO SCALE

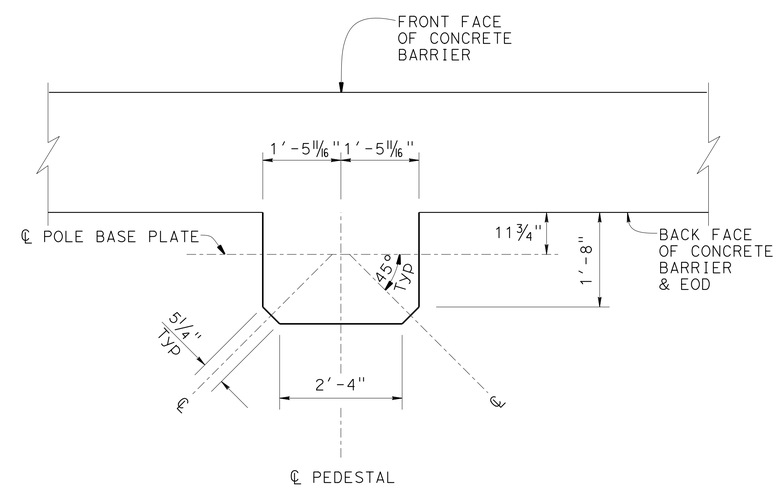

SECTION C-C
NO SCALE

Note: Reinforcing steel not shown

DESIGN	BY K. Andurlekar/H. Fang	CHECKED Vadim Shostak	
DETAILS	BY Jaime Ramirez/G.S.	CHECKED Vadim Shostak	
QUANTITIES	BY Art Herrera	CHECKED Mike Bergman	

STATE OF CALIFORNIA
DEPARTMENT OF TRANSPORTATION

DIVISION OF ENGINEERING SERVICES
STRUCTURE DESIGN
DESIGN BRANCH 1

BRIDGE NO. 53-3065
POST MILE 6.38

FLORENCE AVENUE OC (REPLACE)

SIGNAL AND LIGHTING PEDESTAL DETAILS NO. 3

STRUCTURES DESIGN DETAIL SHEET (ENGLISH) (REV. 09-01-10)

ORIGINAL SCALE IN INCHES FOR REDUCED PLANS 0 1 2 3

UNIT: 3576
PROJECT NUMBER & PHASE: 07000018351 CONTRACT NO.: 07-215954

DISREGARD PRINTS BEARING EARLIER REVISION DATES

REVISION DATES 09-19-12 03-21-13 03-22-13

SHEET 37 OF 56

FILE => 53-3065-w-37-signal-light-det03.dgn

USERNAME => s124496 DATE PLOTTED => 26-JUN-2013 TIME PLOTTED => 15:44

DIST	COUNTY	ROUTE	POST MILES TOTAL PROJECT	SHEET No.	TOTAL SHEETS
07	LA	5	0.0/7.6	653	985

P. Vijitakula 12-28-12
REGISTERED CIVIL ENGINEER DATE

6-24-13
PLANS APPROVAL DATE

REGISTERED PROFESSIONAL ENGINEER
P. VIJITAKULA
No. C 54701
Exp. 12-31-13
CIVIL
STATE OF CALIFORNIA

The State of California or its officers or agents shall not be responsible for the accuracy or completeness of electronic copies of this plan sheet.

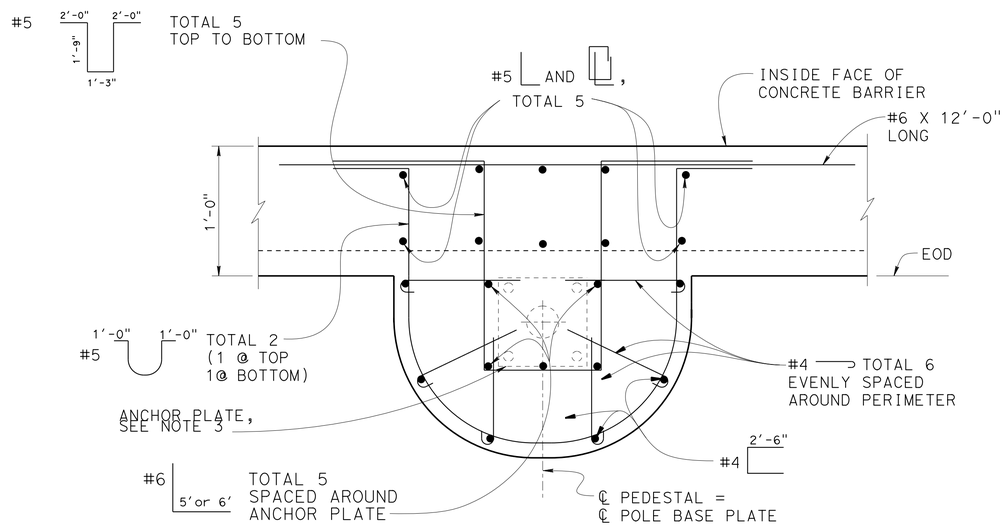

SECTION D-D
NO SCALE

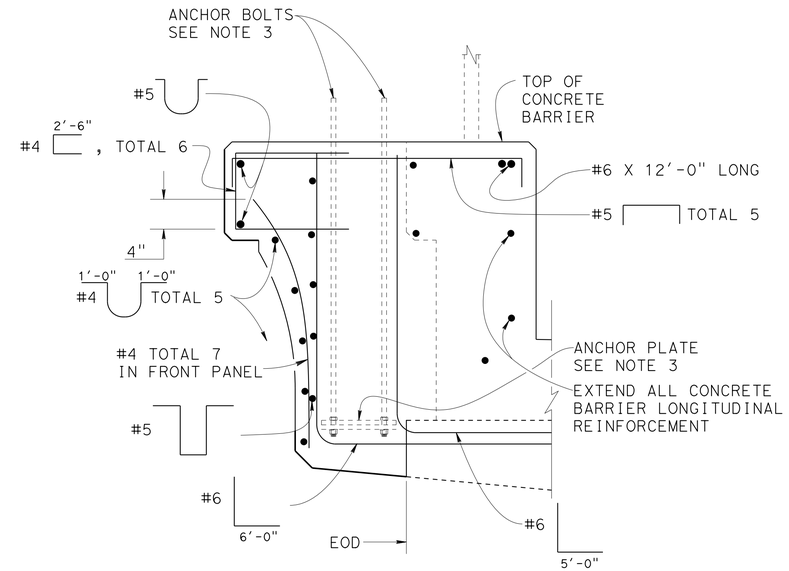

SECTION E-E
NO SCALE

Notes:

1. For details not shown, see "SIGNAL AND LIGHTING PEDESTAL DETAILS No. 3" sheet.
2. For Barrier Details, see B11-56
3. For Signal and Lighting Standard, Type 21TS Details, see "Road Plans" and ES-7A
4. No splice allowed in concrete barrier longitudinal reinf within 10 ft distance on each side of Signal and Lighting Post location.

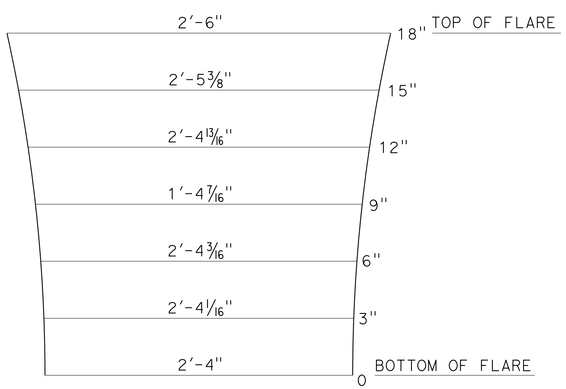

FRONT PANEL FACE
NO SCALE

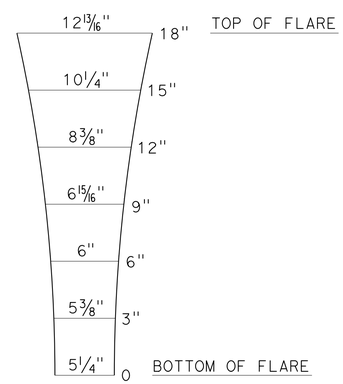

CORNER PANEL FACE
NO SCALE

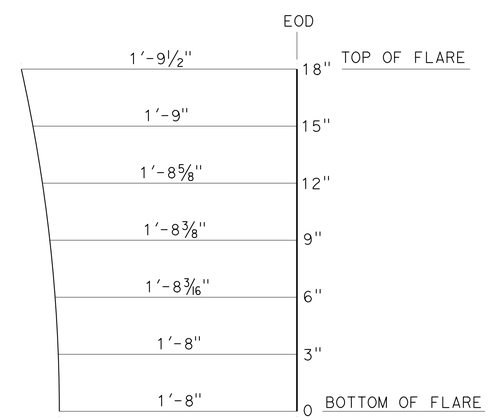

SIDE PANEL FACE
NO SCALE

DESIGN	BY K. Andurlekar/H. Fang	CHECKED Vadim Shostak	
DETAILS	BY Jaime Ramirez/G.S.	CHECKED Vadim Shostak	
QUANTITIES	BY Art Herrera	CHECKED Mike Bergman	

STATE OF CALIFORNIA
DEPARTMENT OF TRANSPORTATION

DIVISION OF ENGINEERING SERVICES
STRUCTURE DESIGN
DESIGN BRANCH 1

BRIDGE NO. 53-3065
POST MILE 6.38

FLORENCE AVENUE OC (REPLACE)
SIGNAL AND LIGHTING PEDESTAL DETAILS NO. 4

STRUCTURES DESIGN DETAIL SHEET (ENGLISH) (REV. 09-01-10)

ORIGINAL SCALE IN INCHES FOR REDUCED PLANS 0 1 2 3

UNIT: 3576
PROJECT NUMBER & PHASE: 07000018351 CONTRACT NO.: 07-215954

DISREGARD PRINTS BEARING EARLIER REVISION DATES

REVISION DATES: 09-19-12 09-21-12 10-15-12 04/03/13

SHEET 38 OF 56

FILE => 53-3065-u-38-signal-lighting-det04.dgn

USERNAME => s124496 DATE PLOTTED => 26-JUN-2013 TIME PLOTTED => 15:24

DIST	COUNTY	ROUTE	POST MILES TOTAL PROJECT	SHEET No.	TOTAL SHEETS
07	LA	5	0.0/7.6	654	985

P. Vijitakula
REGISTERED CIVIL ENGINEER 12-28-12 DATE

6-24-13
PLANS APPROVAL DATE

REGISTERED PROFESSIONAL ENGINEER P. VIJITAKULA No. C 54701 Exp. 12-31-13 CIVIL STATE OF CALIFORNIA

The State of California or its officers or agents shall not be responsible for the accuracy or completeness of electronic copies of this plan sheet.

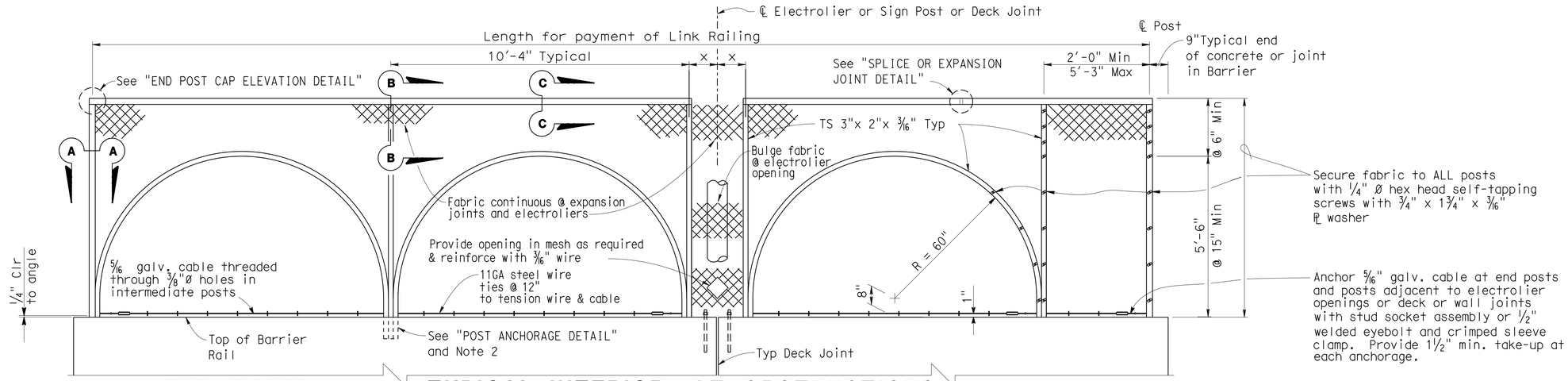

END PANEL | **TYPICAL INTERIOR PANEL** | **AT OBSTRUCTIONS & DECK JOINTS** | **ALTERNATE END PANEL**

ELEVATION

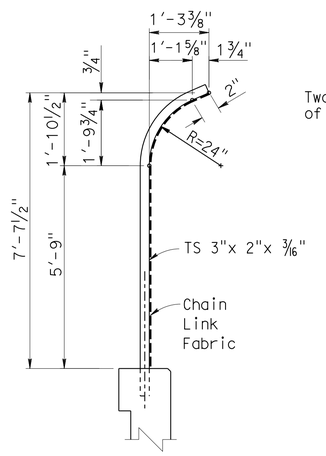

TYPICAL SECTION

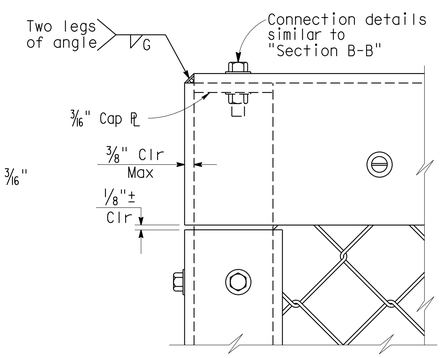

END POST CAP ELEVATION

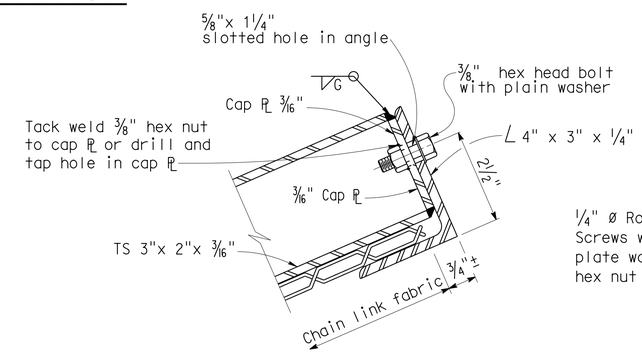

SECTION B-B

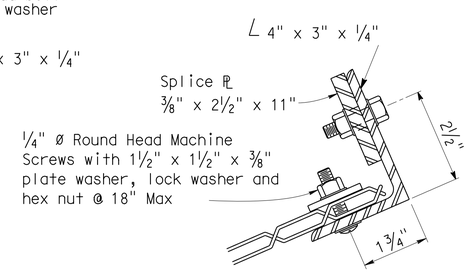

SECTION C-C

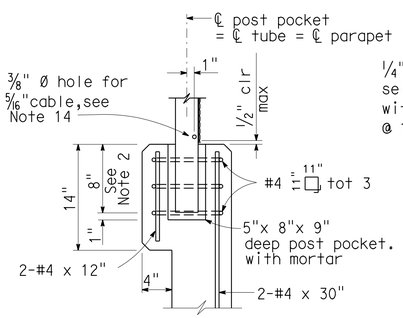

POST ANCHORAGE DETAIL

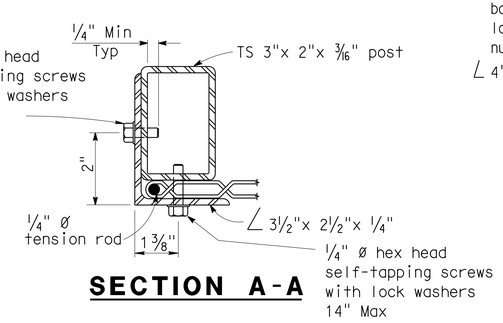

SECTION A-A

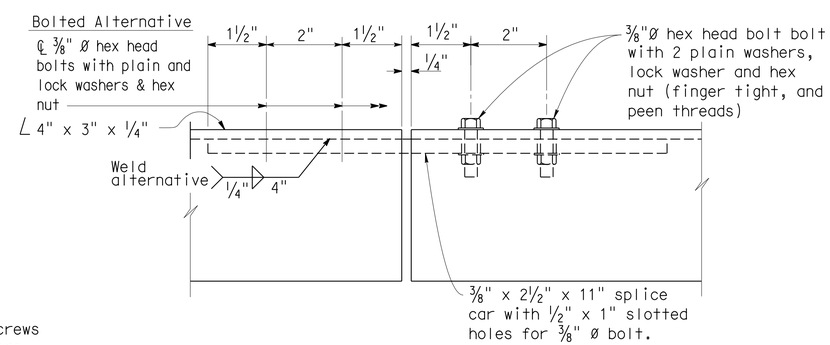

SPLICE OR EXPANSION JOINT DETAIL

NOTES:

X = 1'-0" Min @ Electroiliers & Sign Post
2'-0" Max

X = 1'-0" Min @ Deck Joints
1'-4" Max

1. Horizontal angle shall be continuous over not less than two intermediate posts except that a shorter length is permitted at expansion joints,electroliers and other rail discontinuities.
2. One post may be embedded 12" minimum to accommodate grade changes, otherwise fabricate post lengths as required.
3. Curved posts may be rotated in plan within its post pocket to accommodate curved horizontal alignment.
4. Straight posts and straight portions of curved posts shall be installed normal to bridge profile grade.
5. Top horizontal angle shall be parallel to bridge profile grade and shall be shop bent to fit horizontal curves.
6. When railing is on slope, fabric shall be placed parallel to slope.
7. Alternative details may be submitted by Contractor for Engineer's approval.
8. Railing assembly except chain link fabric shall be galvanized after fabrication.
9. For details and reinforcement not shown for Type 26 Mod Barrier, see B11-54
10. See Bridge Plans for limits of Chain Link Railing.
11. Provide thimbles at all cable loops.
12. Chain link fabric to be 96" wide with 1" mesh and with knuckled selvage top and bottom.
13. When railing is placed on a horizontal alignment with a radius of 150'-0" or less, thread 5/16" cable through 3/8" Ø welded eye rods embedded 4" into the top of the concrete parapet and equally spaced to limit the middle ordinate distance between the 5/16" cable and the curve to 1" max.
14. Holes in posts for 5/16" cable and its anchorage may be field drilled and painted with zinc rich paint.

	BY	CHECKED
DESIGN	Bill Kemp	Eric Watson/V. Shostak
DETAILS	J. Ramirez/B. Jenko/G.S	Eric Watson/V. Shostak
QUANTITIES	Art Herrera	Mike Bergman

STATE OF CALIFORNIA
DEPARTMENT OF TRANSPORTATION

DIVISION OF ENGINEERING SERVICES
STRUCTURE DESIGN
DESIGN BRANCH 1

BRIDGE NO. 53-3065
POST MILE 6.38

FLORENCE AVENUE OC (REPLACE)
CHAIN LINK RAILING TYPE 3 (MODIFIED) DETAILS

STRUCTURES DESIGN DETAIL SHEET (ENGLISH) (REV. 09-01-10)

ORIGINAL SCALE IN INCHES FOR REDUCED PLANS 0 1 2 3

UNIT: 3576
PROJECT NUMBER & PHASE: 07000018351
CONTRACT NO.: 07-215954

DISREGARD PRINTS BEARING EARLIER REVISION DATES

REVISION DATES: 03-31-11 04-27-12

SHEET 39 OF 56

FILE => 53-3065-v-39-chain-link-det.dgn

USERNAME => s124496 DATE PLOTTED => 26-JUN-2013 TIME PLOTTED => 15:46

DIST	COUNTY	ROUTE	POST MILES TOTAL PROJECT	SHEET No.	TOTAL SHEETS
07	LA	5	0.0/7.6	655	985

P. Vijitakula 12-28-12
REGISTERED CIVIL ENGINEER DATE

6-24-13
PLANS APPROVAL DATE

REGISTERED PROFESSIONAL ENGINEER P. VIJITAKULA No. C 54701 Exp. 12-31-13 CIVIL STATE OF CALIFORNIA

The State of California or its officers or agents shall not be responsible for the accuracy or completeness of electronic copies of this plan sheet.

Notes:

- Partial existing structure not shown
- All piles not shown
- For General Construction Sequence (Suggested), see "Construction Sequence Notes" sheet

Legend:

Indicates void to be filled after Superstructure is in the final position.

- At All jacking recess areas, weld or mechanical splice abutment reinforcement to make continuous, fill void with structural concrete to complete architectural treatment on face of abutments.
- At abutment 10" Ø formed holes, remove 8" Ø stabalization pipes and fill holes with structural concrete.

Indicates limits of uniformly distributed load area for Temporary Support Jacking Towers.

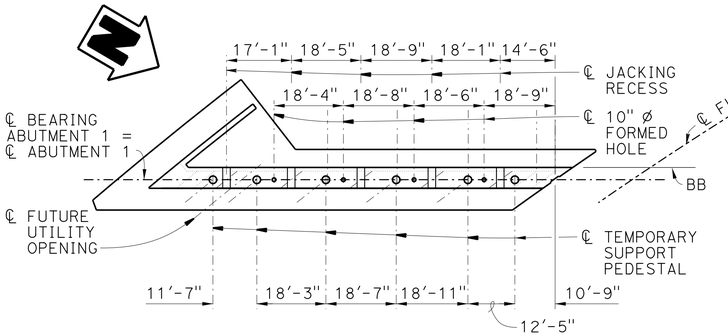

PLAN - ABUTMENT 1

1" = 20'

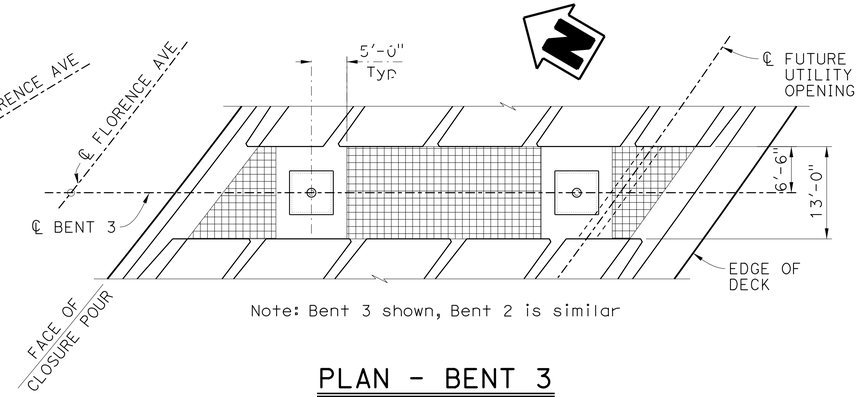

Note: Bent 3 shown, Bent 2 is similar

PLAN - BENT 3

NO SCALE

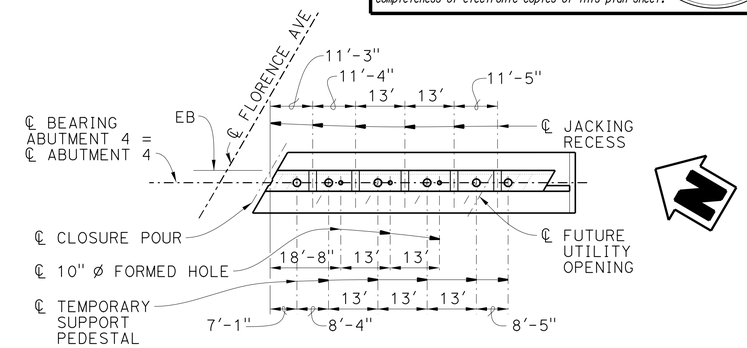

PLAN - ABUTMENT 4

1" = 20'

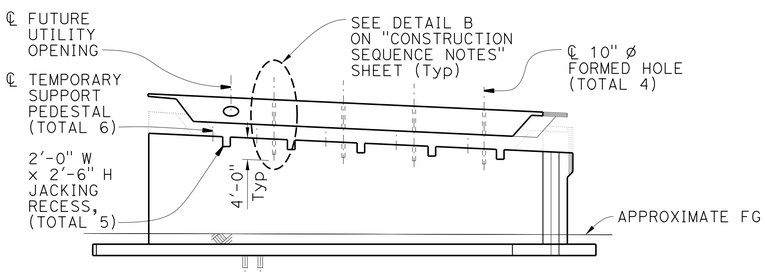

ELEVATION - ABUTMENT 1 IN RAISED POSITION

1" = 20'

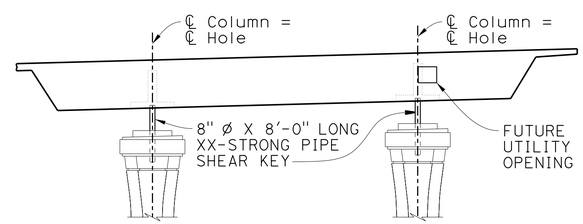

Note: Bent 3 shown, Bent 2 is similar

ELEVATION - BENT 3 IN RAISED POSITION

NO SCALE

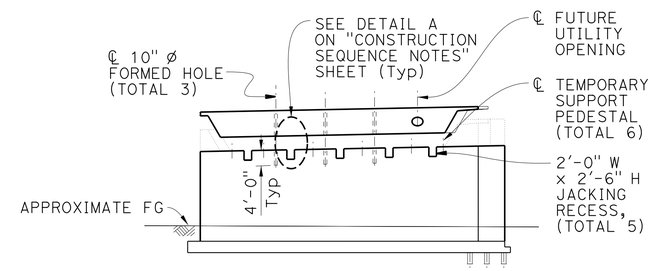

ELEVATION - ABUTMENT 4 IN RAISED POSITION

1" = 20'

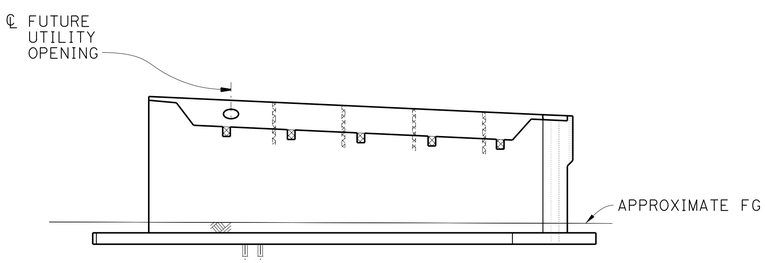

ELEVATION - ABUTMENT 1 IN FINAL POSITION

1" = 20'

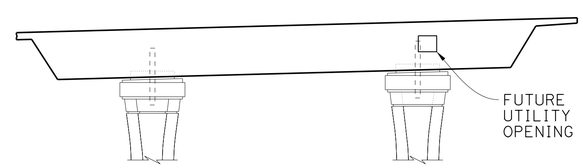

Note: Bent 3 shown, Bent 2 is similar

ELEVATION - BENT 3 IN FINAL POSITION

NO SCALE

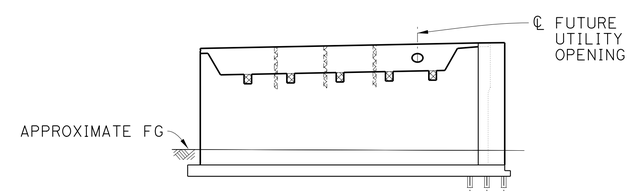

ELEVATION - ABUTMENT 4 IN FINAL POSITION

1" = 20'

	BY	CHECKED
DESIGN	P. Vijitakula	Vadim Shostak
DETAILS	G. M. Souza	Vadim Shostak
QUANTITIES	Art Herrera	Mike Bergman

STATE OF CALIFORNIA
DEPARTMENT OF TRANSPORTATION

DIVISION OF ENGINEERING SERVICES
STRUCTURE DESIGN
DESIGN BRANCH 1

BRIDGE NO. 53-3065
POST MILE 6.38

FLORENCE AVENUE OC (REPLACE)
CONSTRUCTION SEQUENCE STAGE 1

STRUCTURES DESIGN DETAIL SHEET (ENGLISH) (REV. 09-01-10)

ORIGINAL SCALE IN INCHES FOR REDUCED PLANS 0 1 2 3

UNIT: 3576
PROJECT NUMBER & PHASE: 07000018351
CONTRACT NO.: 07-215954

DISREGARD PRINTS BEARING EARLIER REVISION DATES

REVISION DATES 06-24-12 09-20-12 04/03/13

SHEET 40 OF 56

FILE => 53-3065-w-40-con-seq-stg-01.dgn

USERNAME => s124496 DATE PLOTTED => 26-JUN-2013 TIME PLOTTED => 15:45

DIST	COUNTY	ROUTE	POST MILES TOTAL PROJECT	SHEET No.	TOTAL SHEETS
07	LA	5	0.0/7.6	656	985

P. Vijitakula 12-28-12
REGISTERED CIVIL ENGINEER DATE

6-24-13
PLANS APPROVAL DATE

REGISTERED PROFESSIONAL ENGINEER P. VIJITAKULA No. C 54701 Exp. 12-31-13 CIVIL STATE OF CALIFORNIA

The State of California or its officers or agents shall not be responsible for the accuracy or completeness of electronic copies of this plan sheet.

Notes:

- All piles not shown
- For General Construction Sequence Notes (Suggested), see "Construction Sequence Notes" sheet

Legend:

Indicates void to be filled after Superstructure is in the final position.

- At All jacking recess areas, weld or mechanical splice abutment reinforcement to make continuous, fill void with structural concrete to complete architectural treatment on face of abutments.
- At abutment 10" Ø formed holes, remove 8" Ø stabalization pipes and fill holes with structural concrete.

Indicates limits of uniformly distributed load area for Temporary Support Jacking Towers.

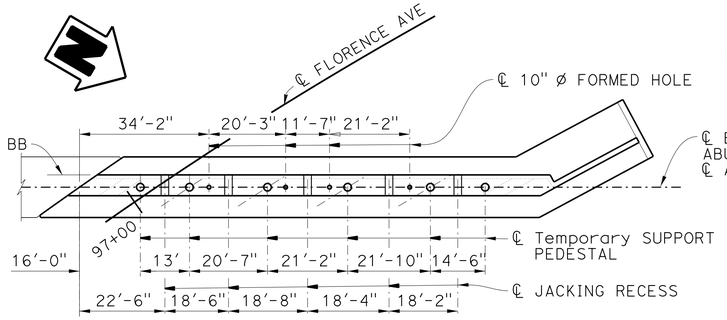

PLAN - ABUTMENT 1

1" = 20'

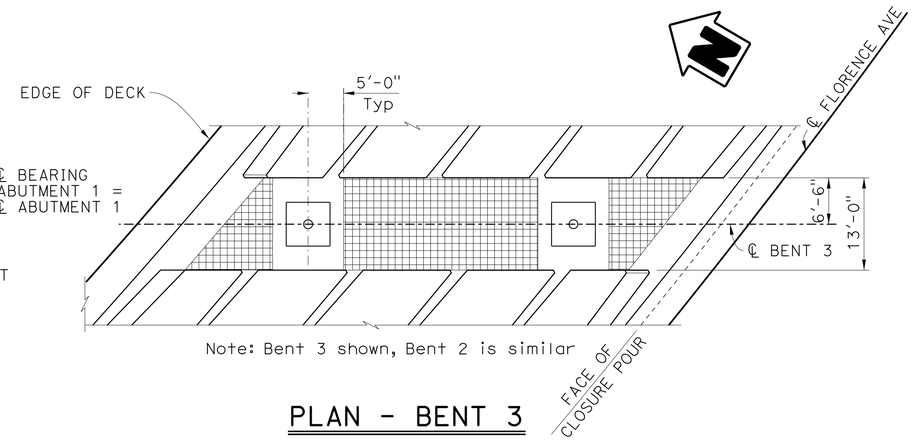

Note: Bent 3 shown, Bent 2 is similar

PLAN - BENT 3

NO SCALE

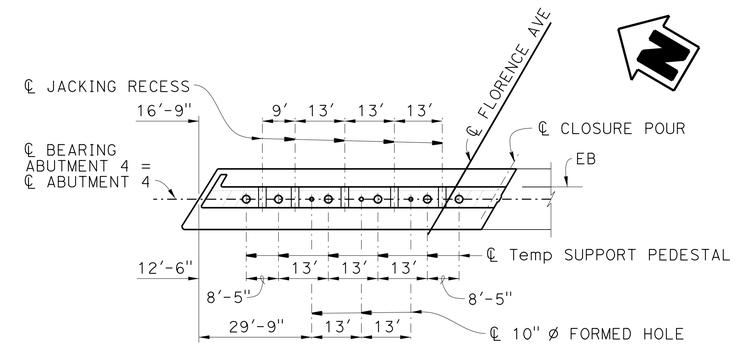

PLAN - ABUTMENT 4

1" = 20'

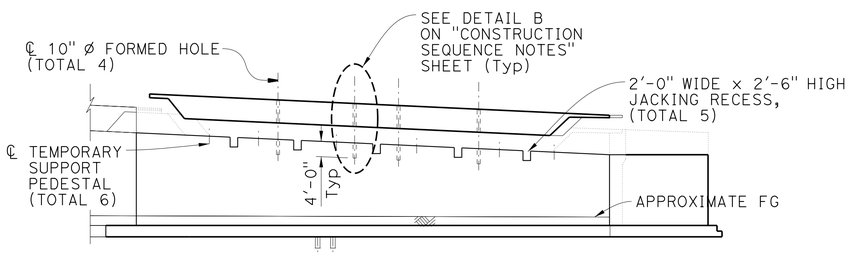

ELEVATION - ABUTMENT 1 IN RAISED POSITION

1" = 20'

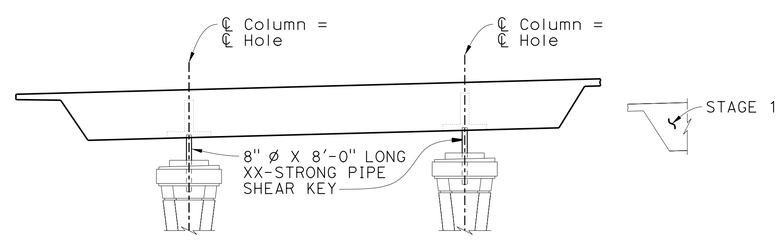

Note: Bent 3 shown, Bent 2 is similar

ELEVATION - BENT 3 IN RAISED POSITION

NO SCALE

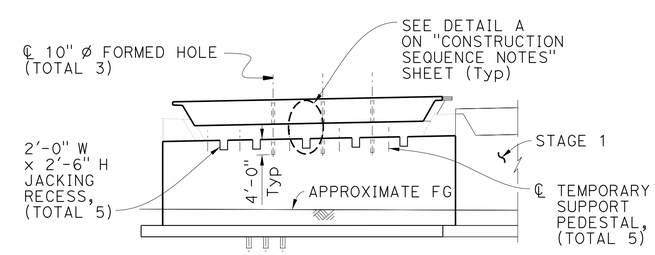

ELEVATION - ABUTMENT 4 IN RAISED POSITION

1" = 20'

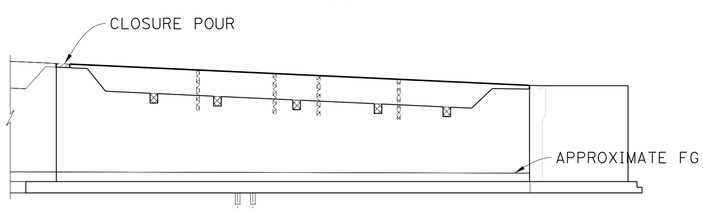

ELEVATION - ABUTMENT 1 IN FINAL POSITION

1" = 20'

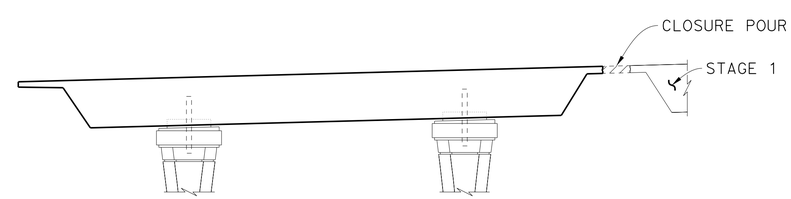

Note: Bent 3 shown, Bent 2 is similar

ELEVATION - BENT 3 IN FINAL POSITION

NO SCALE

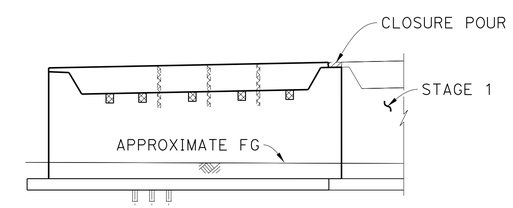

ELEVATION - ABUTMENT 4 IN FINAL POSITION

1" = 20'

DESIGN	BY P. Vijitakula	CHECKED Vadim Shostak	
DETAILS	BY G. M. Souza	CHECKED Vadim Shostak	
QUANTITIES	BY Art Herrera	CHECKED Mike Bergman	

STATE OF CALIFORNIA
DEPARTMENT OF TRANSPORTATION

DIVISION OF ENGINEERING SERVICES
STRUCTURE DESIGN
DESIGN BRANCH 1

BRIDGE NO. 53-3065
POST MILE 6.38

FLORENCE AVENUE OC (REPLACE)
CONSTRUCTION SEQUENCE STAGE 2

STRUCTURES DESIGN DETAIL SHEET (ENGLISH) (REV. 09-01-10)

ORIGINAL SCALE IN INCHES FOR REDUCED PLANS 0 1 2 3

UNIT: 3576
PROJECT NUMBER & PHASE: 07000018351 CONTRACT NO.: 07-215954

DISREGARD PRINTS BEARING EARLIER REVISION DATES → 07-04-12 04/03/13 07-14-12

SHEET 41 OF 56

FILE => 53-3065-w-41-con-seq-stg-02.dgn

USERNAME => s124496 DATE PLOTTED => 26-JUN-2013 TIME PLOTTED => 15:45

DIST	COUNTY	ROUTE	POST MILES TOTAL PROJECT	SHEET No.	TOTAL SHEETS
07	LA	5	0.0/7.6	657	985

P. Vijitakula 12-28-12
REGISTERED CIVIL ENGINEER DATE

6-24-13
PLANS APPROVAL DATE

REGISTERED PROFESSIONAL ENGINEER P. VIJITAKULA No. C 54701 Exp. 12-31-13 CIVIL STATE OF CALIFORNIA

The State of California or its officers or agents shall not be responsible for the accuracy or completeness of electronic copies of this plan sheet.

CONSTRUCTION REQUIREMENTS

1. Stage 1 construction sequence operation items shall be performed by contractor as first order of work.
2. The minimum falsework vertical clearance shall not be lesser than 15'-0" over the traveled way and 14'-6" above the shoulder.
3. The prestressing forces (Pjack) shall be applied from minimum 15% to maximum 20% of the total Pjack at each stage construction, prior to lowering of the superstructure into the final position.
4. Vehicles are prohibited on the bridge prior to lowering it into the final position and completing the prestressing operations.
5. The Contractor shall demonstrate to the satisfaction of the Engineer that all jacks are capable of lifting the superstructure up prior to removing the supports.
6. In the final position of superstructure, contractor shall secure the bridge soffit surface to fully bear on bearing pads by taking into account the roadway profile grade, superelevation diagram, camber diagram and elevation differential between abutments and bents and bent to bent. The galvanized shim plates can be placed to provide uniform loading at bearing pads as approved by the Engineer.
7. Work at abutments and column footings will require shoring.
8. See "General Temporary Support Notes"

TEMPORARY SUPPORT DESIGN NOTES:

1. The Minimum Temporary Support Design Load (MTSDL) is equal to 1.5 times Dead Load. MTSDL does not include the weight of temporary supports, jacks or construction live loads.
2. The Minimum Lateral Temporary Support Design Loads are based on distributing the application of dead Loads, wind loads and thermal forces at each jack support, but shall not be less than 0.10g for any individual Temporary Support Location. The "g" shall be equal to the Dead Load on the Temporary Support location without the 1.5 factor in the cases using 0.10g.
3. Initial Jacking Loads are estimated forces that should be applied to the structure at jacking points before lowering the structure to achieve zero load condition in the abutments and columns. Initial jacking loads shown are due to structure dead load.
4. The allowable concrete bearing pressure at jacking point is 2200 psi.
5. Support members shall evenly distribute jacking forces to superstructure girders and abutment diaphragms. Differential stresses between girders shall be limited to 2% of their stress.

GENERAL TEMPORARY SUPPORT NOTES:

1. Temporary support design calculations and plans shall be submitted to the Engineer for approval.
2. The Temporary Support Jacking Tower, Temporary Support Pedestal, Formed Hole and Jacking Recess locations, initial jacking loads and minimum temporary support design loads requirements shown are only applicable with Construction Sequence shown.
3. The Contractor shall monitor vertical and horizontal displacement of the installed temporary supports and the structure during all jacking and temporary support operations.
4. The contractor shall provide the monitoring and control devices to secure proper load distribution during the lowering operation.
5. All Temporary Support Jacks shall remain in place until the superstructure is in the final position.
6. All jacking loads shall be applied simultaneously at each temporary support location.
7. After required construction is complete, release all jacks simultaneously.
8. For limits of temporary support foundations, see "Road Plans"

INITIAL JACKING LOADS & MINIMUM TEMPORARY SUPPORT DESIGN LOADS AT EACH STAGE OF CONSTRUCTION

LOCATION	INITIAL JACKING LOAD (Kips)	MINIMUM TEMPORARY SUPPORT DESIGN LOAD (Kips)
ABUTMENT 1	1600	2400
BENT 2	5200	7800
BENT 3	5200	8000
ABUTMENT 4	1400	2100

MINIMUM LATERAL TEMPORARY SUPPORT DESIGN VALUES AT EACH STAGE OF CONSTRUCTION

LOCATION	LONGITUDINAL FORCE (Kips)	TRANSVERSE FORCE (Kips)	LONGITUDINAL STIFFNESS (Kips/Ft.)	TRANSVERSE STIFFNESS (Kips/Ft.)
Abut 1	160	160	4150	6750
BENT 2	520	520	550	1050
BENT 3	530	530	550	1050
Abut 4	140	140	3200	5500

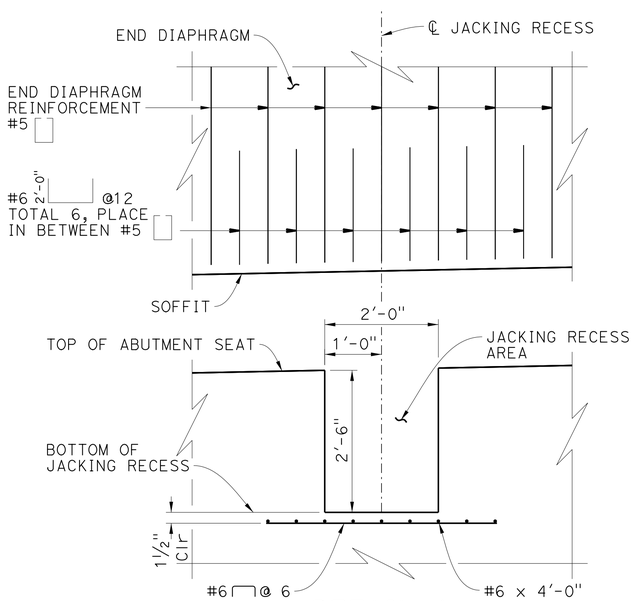

DETAIL A
NO SCALE

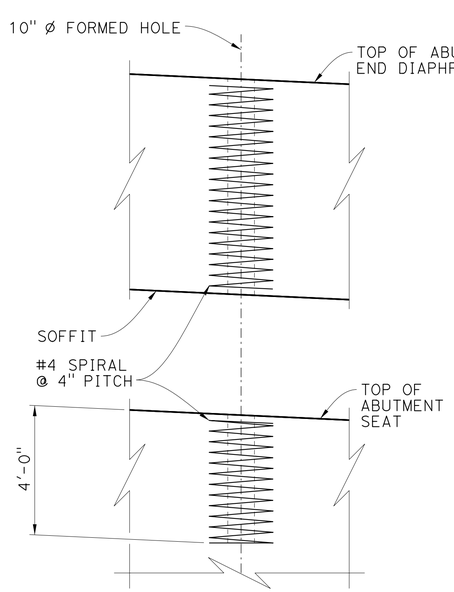

DETAIL B
NO SCALE

GENERAL CONSTRUCTION SEQUENCE (SUGGESTED)

CONSTRUCTION SEQUENCE	OPERATION
1.	- Construct abutments (with jacking recesses and 10" ø x 4'-0" deep formed holes in place but without backwalls or shear keys and Install temporary pedestals on top of abutment stems - Construct Bent Columns
2.	- Construct superstructure (without concrete barrier or other added dead load elements) in raised position on conventional falsework system. - Provide 10" ø formed holes at end diaphragms to align with 10" ø formed holes at abutment stems.
3.	ABUTMENTS: - Place stabilization 8" ø x 12'-0" long XX strong pipe into 10" ø formed holes. - Place hydraulic jacks along ℄ abutments in jacking recesses. - Stack of 12" x 12" x 1" steel plates shall be placed as backup support, and shall be removed one by one as bridge is lowered. Steel plates shall be maintained within 1¼" of the superstructure soffit during lowering. - Provide the necessary temporary lateral supports. BENTS: - Construct jacking tower which will be jacked up under the uniformly distributed load area. - Provide the necessary temporary lateral supports.
4.	- Simultaneously apply initial jacking loads at all temporary support locations, remove conventional falsework and temporary support pedestals.
5.	- Simultaneously release jacking loads to lower superstructure on to final position, complete stressing of the superstructure, and grout tendons.
6.	ABUTMENTS: - Remove 8" ø stabilization XX strong pipes and fill 10" ø formed holes with structural concrete. - Remove jacks, weld mechanical splices to make all reinforcements continuous through jacking recesses, fill jacking recesses with structural concrete. - Remove all temporary supports. - Cast abutmment backwalls and shear keys. BENTS: - Remove jacks, jacking towers and all temporary supports.
7.	- Complete all other required contract items.

	BY	CHECKED
DESIGN	P. Vijitakula	Vadim Shostak
DETAILS	G. M. Souza	Vadim Shostak
QUANTITIES	Art Herrera	Mike Bergman

STATE OF CALIFORNIA
DEPARTMENT OF TRANSPORTATION

DIVISION OF ENGINEERING SERVICES
STRUCTURE DESIGN
DESIGN BRANCH 1

BRIDGE NO. 53-3065
POST MILE 6.38

FLORENCE AVENUE OC (REPLACE)
CONSTRUCTION SEQUENCE NOTES

STRUCTURES DESIGN DETAIL SHEET (ENGLISH) (REV. 09-01-10)

ORIGINAL SCALE IN INCHES FOR REDUCED PLANS 0 1 2 3

UNIT: 3576
PROJECT NUMBER & PHASE: 07000018351
CONTRACT NO.: 07-215954

DISREGARD PRINTS BEARING EARLIER REVISION DATES

REVISION DATES: 06-29-12 08-02-12 04/15/13

SHEET 42 OF 56

FILE => 53-3065-w-42-con-seq-notes.dgn

USERNAME => s124496 DATE PLOTTED => 26-JUN-2013 TIME PLOTTED => 15:45

DIST	COUNTY	ROUTE	POST MILES TOTAL PROJECT	SHEET No.	TOTAL SHEETS
07	LA	5	0.0/7.6	658	985

P. Vijitakula 12-28-12
REGISTERED CIVIL ENGINEER DATE

6-24-13
PLANS APPROVAL DATE

REGISTERED PROFESSIONAL ENGINEER P. VIJITAKULA No. C 54701 Exp. 12-31-13 CIVIL STATE OF CALIFORNIA

The State of California or its officers or agents shall not be responsible for the accuracy or completeness of electronic copies of this plan sheet.

NOTES:

1. Dimensions Typical for opposite side
2. Chain Link Railing Type 3 (Mod) and Concrete Barrier not shown
3. For sections A-A and B-B, see "SECTIONS AT ABUTMENTS & RETAINING WALLS" sheet.
4. For sections C-C and D-D, see "ARCHITECTURAL MOTIF DETAILS AT ABUTMENT 1" sheet.

LEGEND:

- Textured Concrete Surface = Split Slate Texture
- Smooth Concrete Surface
- Working Point

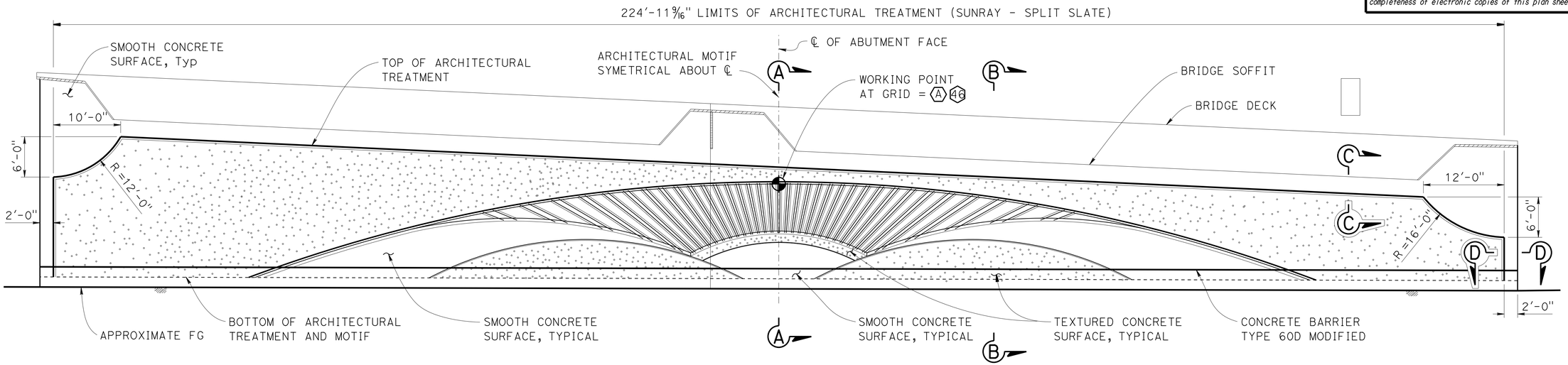

ARCHITECTURAL ELEVATION

NO SCALE

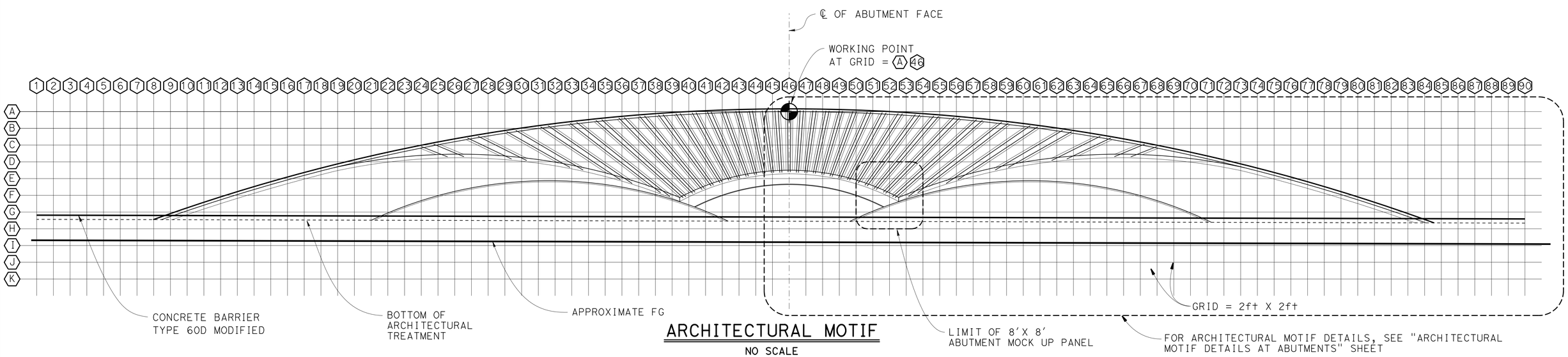

ARCHITECTURAL MOTIF

NO SCALE

	BY	CHECKED
DESIGN	Isacc Tasabia	H. Javier Chavez
DETAILS	G. M. Souza	H. Javier Chavez
QUANTITIES	Art Herrera	Mike Bergman

STATE OF CALIFORNIA
DEPARTMENT OF TRANSPORTATION

DIVISION OF ENGINEERING SERVICES
STRUCTURE DESIGN
DESIGN BRANCH 1

BRIDGE NO. 53-3065
POST MILE 6.38

FLORENCE AVENUE OC (REPLACE)
ABUTMENT 1 ARCHITECTURAL ELEVATION

STRUCTURES DESIGN DETAIL SHEET (ENGLISH) (REV. 09-01-10)

ORIGINAL SCALE IN INCHES FOR REDUCED PLANS 0 1 2 3

UNIT: 3576
PROJECT NUMBER & PHASE: 07000018351
CONTRACT NO.: 07-215954

DISREGARD PRINTS BEARING EARLIER REVISION DATES

REVISION DATES 02/04/12 04/02/13 05/22/13

SHEET 43 OF 56

FILE => 53-3065-x-43-abut1-arch-surf.dgn

USERNAME => s124496 DATE PLOTTED => 26-JUN-2013 TIME PLOTTED => 15:45

DIST	COUNTY	ROUTE	POST MILES TOTAL PROJECT	SHEET No.	TOTAL SHEETS
07	LA	5	0.0/7.6	659	985

P. Vijitakula 12-28-12
REGISTERED CIVIL ENGINEER DATE

6-24-13
PLANS APPROVAL DATE

REGISTERED PROFESSIONAL ENGINEER P. VIJITAKULA No. C 54701 Exp. 12-31-13 CIVIL STATE OF CALIFORNIA

The State of California or its officers or agents shall not be responsible for the accuracy or completeness of electronic copies of this plan sheet.

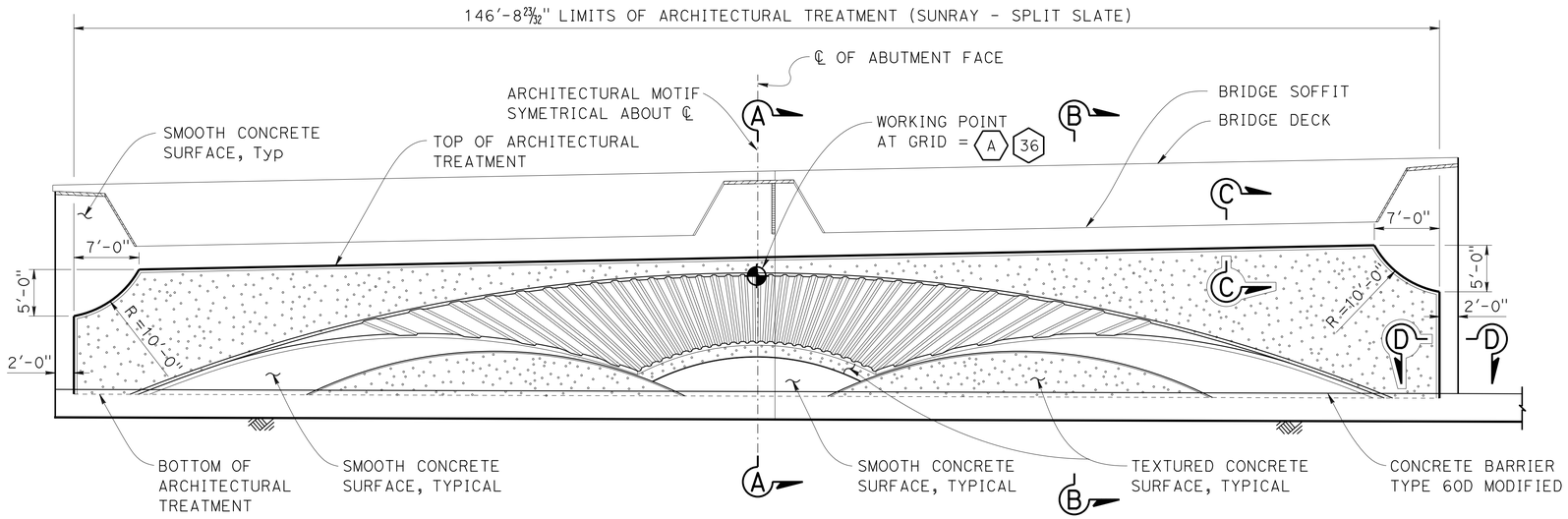

ARCHITECTURAL ELEVATION

NO SCALE

NOTES:

1. Dimensions Typical for opposite side
2. Chain Link Railing Type 3 (Mod) and Concrete Barrier not shown
3. For sections A-A and B-B, see "SECTIONS AT ABUTMENTS & RETAINING WALLS" sheet.
4. For sections C-C and D-D, see "ARCHITECTURAL MOTIF DETAILS AT ABUTMENT 1" sheet.

LEGEND:

- Textured Concrete Surface = Split Slate Texture
- Smooth Concrete Surface
- Working Point

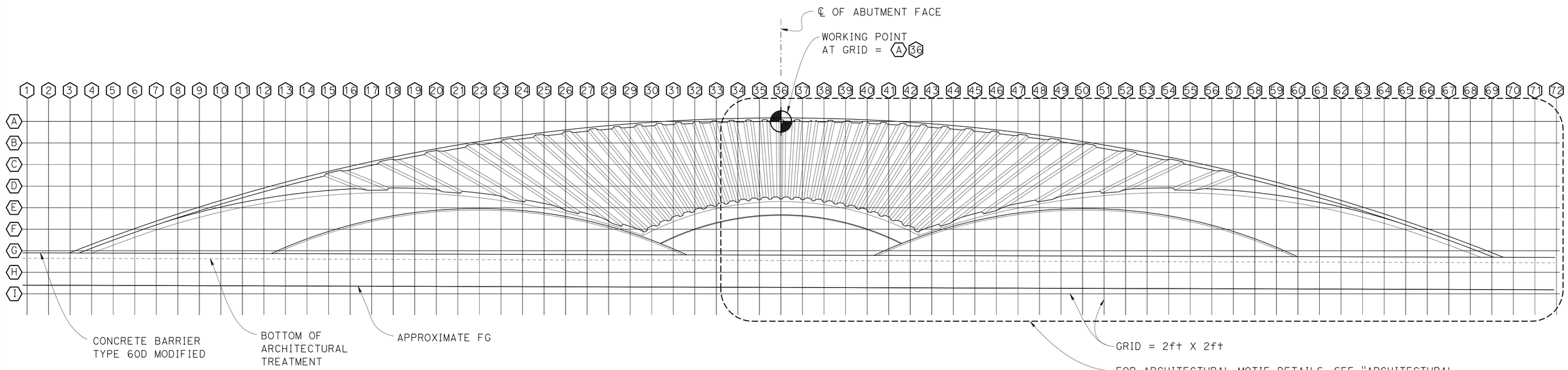

ARCHITECTURAL MOTIF

NO SCALE

	BY	CHECKED
DESIGN	Isacc Tasabia	H. Javier Chavez
DETAILS	G. M. Souza	H. Javier Chavez
QUANTITIES	Art Herrera	Mike Bergman

ORIGINAL SCALE IN INCHES FOR REDUCED PLANS 0 1 2 3

STATE OF CALIFORNIA DEPARTMENT OF TRANSPORTATION

DIVISION OF ENGINEERING SERVICES STRUCTURE DESIGN DESIGN BRANCH 1

BRIDGE NO. 53-3065
POST MILE 6.38

FLORENCE AVENUE OC (REPLACE)
ABUTMENT 4 ARCHITECTURAL ELEVATION

UNIT: 3576
PROJECT NUMBER & PHASE: 07000018351 CONTRACT NO.: 07-215954

DISREGARD PRINTS BEARING EARLIER REVISION DATES

REVISION DATES 01-04-12 04-02-13 05/22/13

SHEET 44 OF 56

FILE => 53-3065-x-44-abut4-arch-surf.dgn

USERNAME => s124496 DATE PLOTTED => 26-JUN-2013 TIME PLOTTED => 15:45

DIST	COUNTY	ROUTE	POST MILES TOTAL PROJECT	SHEET No.	TOTAL SHEETS
07	LA	5	0.0/7.6	660	985

P. Vijitakula
REGISTERED CIVIL ENGINEER 12-28-12 DATE

6-24-13
PLANS APPROVAL DATE

REGISTERED PROFESSIONAL ENGINEER
P. VIJITAKULA
No. C 54701
Exp. 12-31-13
CIVIL
STATE OF CALIFORNIA

The State of California or its officers or agents shall not be responsible for the accuracy or completeness of electronic copies of this plan sheet.

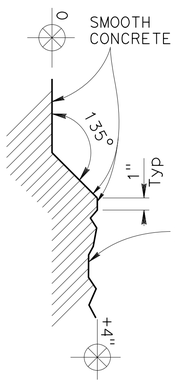

SECTION C-C
NO SCALE

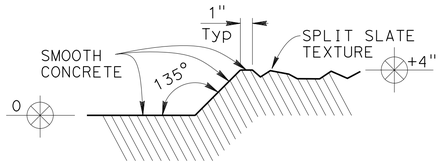

SECTION D-D
NO SCALE

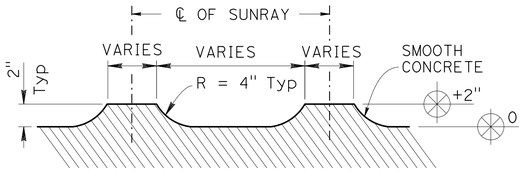

SECTION H-H
NO SCALE

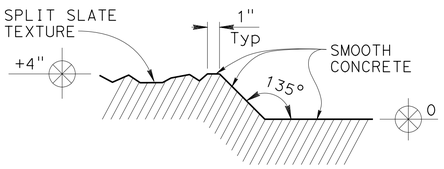

SECTION E-E
NO SCALE

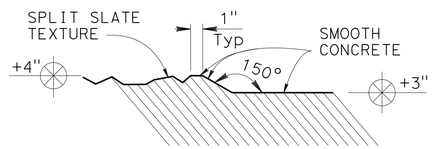

SECTION F-F
NO SCALE

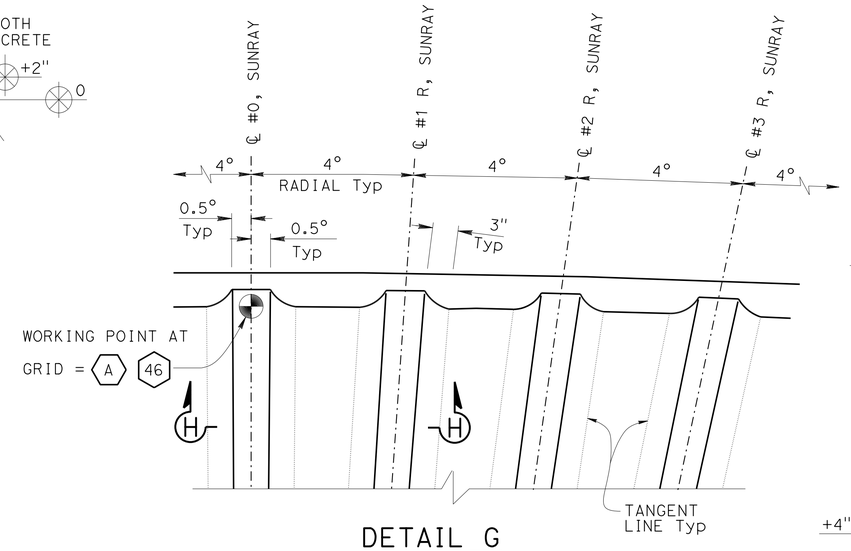

DETAIL G
NO SCALE

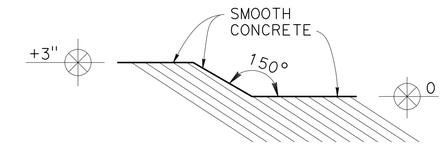

SECTION J-J
NO SCALE

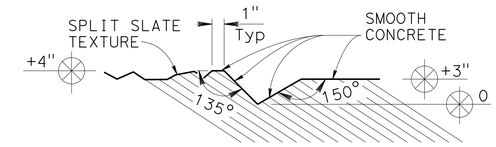

SECTION K-K
NO SCALE

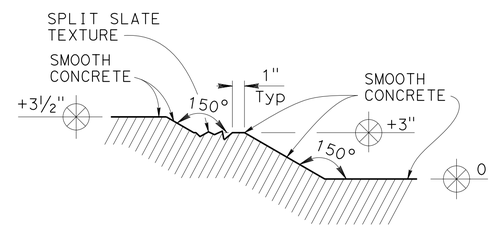

SECTION L-L
NO SCALE

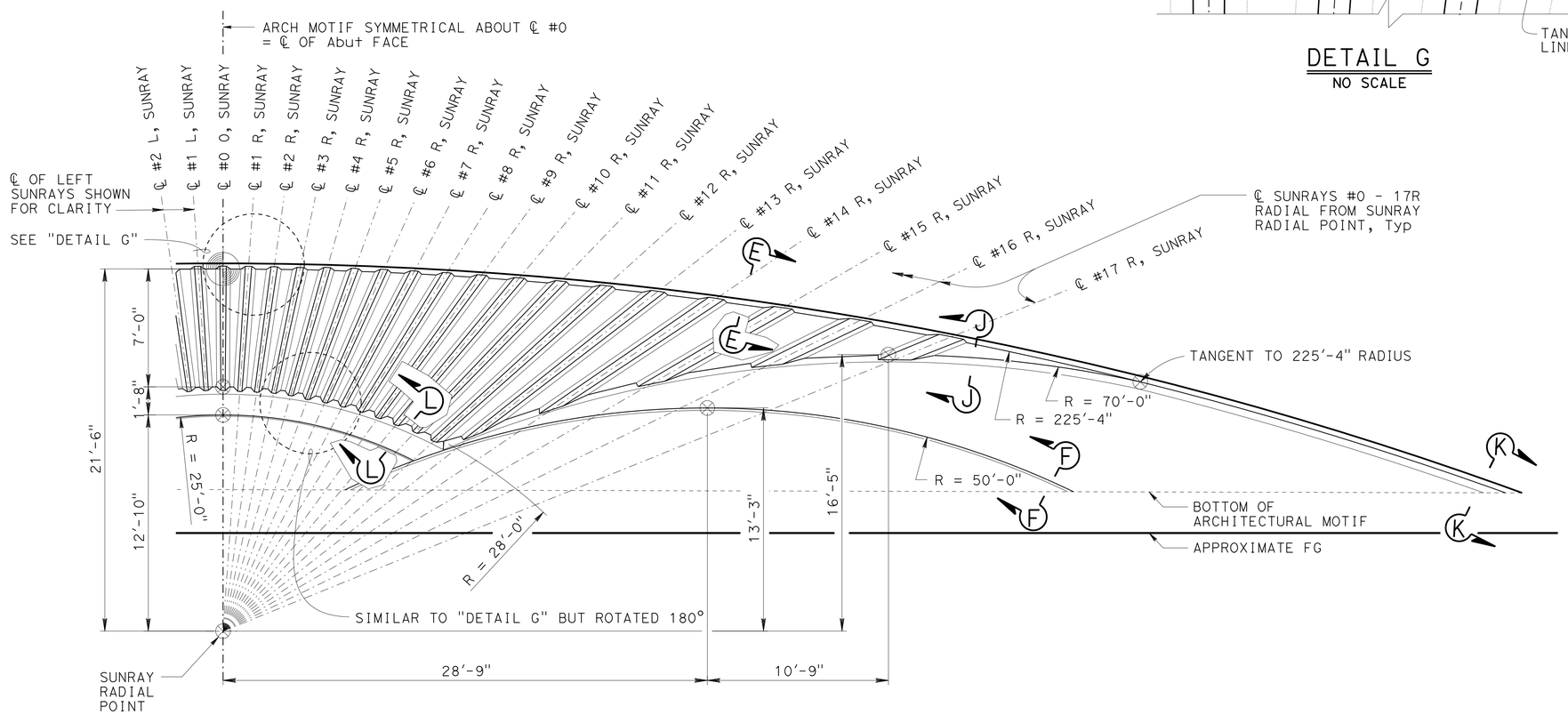

PARTIAL ARCHITECTURAL MOTIF ELEVATION
¼" = 1'-0"

LEGEND:

- Working Point
- Secondary Working Point

Notes:

1. All reference to surface dimensions of wall details are from Datum 0 = face of Abutment typical.
2. For Section C-C & Section D-D locations, see "ABUTMENT 1 ARCHITECTURAL ELEVATION" and "ABUTMENT 4 ARCHITECTURAL ELEVATION" sheets.

	BY	CHECKED
DESIGN	Isacc Tasabia	H. Javier Chavez
DETAILS	Jie Tang/G. Souza	H. Javier Chavez
QUANTITIES	Art Herrera	Mike Bergman

STATE OF CALIFORNIA
DEPARTMENT OF TRANSPORTATION

DIVISION OF ENGINEERING SERVICES
STRUCTURE DESIGN
DESIGN BRANCH 1

BRIDGE NO. 53-3065
POST MILE 6.38

FLORENCE AVENUE OC (REPLACE)
ARCHITECTURAL MOTIF DETAILS AT ABUTMENT 1

STRUCTURES DESIGN DETAIL SHEET (ENGLISH) (REV. 09-01-10)

ORIGINAL SCALE IN INCHES FOR REDUCED PLANS 0 1 2 3

UNIT: 3576
PROJECT NUMBER & PHASE: 07000018351
CONTRACT NO.: 07-215954

DISREGARD PRINTS BEARING EARLIER REVISION DATES

REVISION DATES: 01-30-12 07-17-12 11-28-12 04/03/13

SHEET 45 OF 56

FILE => 53-3065-x-45-arch-mdaa01.dgn

USERNAME => s124496 DATE PLOTTED => 26-JUN-2013 TIME PLOTTED => 15:45

DIST	COUNTY	ROUTE	POST MILES TOTAL PROJECT	SHEET No.	TOTAL SHEETS
07	LA	5	0.0/7.6	661	985

P. Vijitakula 12-28-12
REGISTERED CIVIL ENGINEER DATE

6-24-13
PLANS APPROVAL DATE

REGISTERED PROFESSIONAL ENGINEER
P. VIJITAKULA
No. C 54701
Exp. 12-31-13
CIVIL
STATE OF CALIFORNIA

The State of California or its officers or agents shall not be responsible for the accuracy or completeness of electronic copies of this plan sheet.

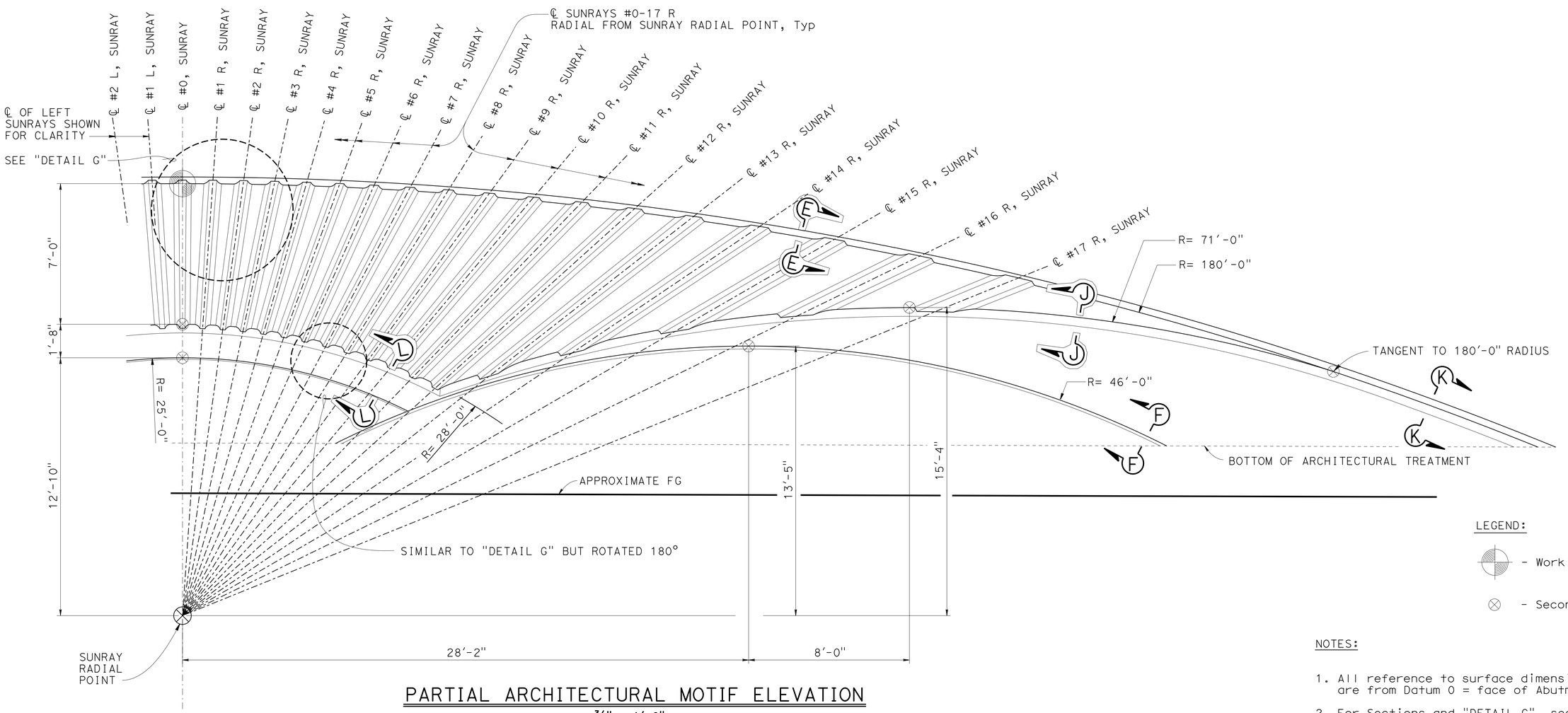

PARTIAL ARCHITECTURAL MOTIF ELEVATION

3/8" = 1'-0"

LEGEND:

- Working Point
- Secondary Working Point

NOTES:

1. All reference to surface dimensions of wall details are from Datum 0 = face of Abutment typical.
2. For Sections and "DETAIL G", see "ARCHITECTURAL MOTIF DETAILS AT ABUTMENT 1" sheet.

	BY	CHECKED
DESIGN	Isacc Tasabia	H. Javier Chavez
DETAILS	Jie Tang	H. Javier Chavez
QUANTITIES	Art Herrera	Mike Bergman

STATE OF CALIFORNIA
DEPARTMENT OF TRANSPORTATION

DIVISION OF ENGINEERING SERVICES
STRUCTURE DESIGN
DESIGN BRANCH 1

BRIDGE NO. 53-3065
POST MILE 6.38

FLORENCE AVENUE OC (REPLACE)

ARCHITECTURAL MOTIF DETAILS AT ABUTMENT 4

STRUCTURES DESIGN DETAIL SHEET (ENGLISH) (REV. 09-01-10)

ORIGINAL SCALE IN INCHES FOR REDUCED PLANS 0 1 2 3

UNIT: 3576
PROJECT NUMBER & PHASE: 07000018351
CONTRACT NO.: 07-215954

DISREGARD PRINTS BEARING EARLIER REVISION DATES

REVISION DATES: 01-30-12 07-17-12 11-28-12 04/03/13

SHEET 46 OF 56

FILE => 53-3065-x-46-arch-mdaa02.dgn

USERNAME => s124496 DATE PLOTTED => 26-JUN-2013 TIME PLOTTED => 15:45

DIST	COUNTY	ROUTE	POST MILES TOTAL PROJECT	SHEET No.	TOTAL SHEETS
07	LA	5	0.0/7.6	662	985

P. Vijitakula 12-28-12
REGISTERED CIVIL ENGINEER DATE

6-24-13
PLANS APPROVAL DATE

REGISTERED PROFESSIONAL ENGINEER
P. VIJITAKULA
No. C 54701
Exp. 12-31-13
CIVIL
STATE OF CALIFORNIA

The State of California or its officers or agents shall not be responsible for the accuracy or completeness of electronic copies of this plan sheet.

NOTES:

1. For Concrete Barrier Motif Details, see "BARRIER MOTIF DETAILS" sheet.
2. For Chain Link Railing Type 3 (Mod), see "CHAIN LINK RAILING TYPE 3 (MODIFIED) DETAILS" sheet.
3. For Luminaire Details see "LUMINAIRE PEDESTAL DETAILS No. 1" AND "LUMINAIRE PEDESTAL DETAILS No. 2" sheets.
4. For Section P-P, see "BARRIER MOTIF DETAILS" sheet.

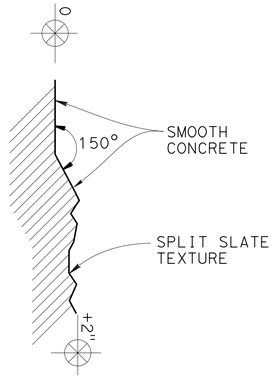

SECTION Q-Q
NO SCALE

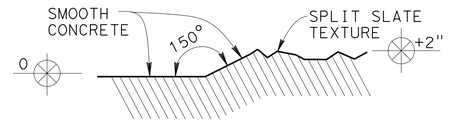

SECTION R-R
NO SCALE

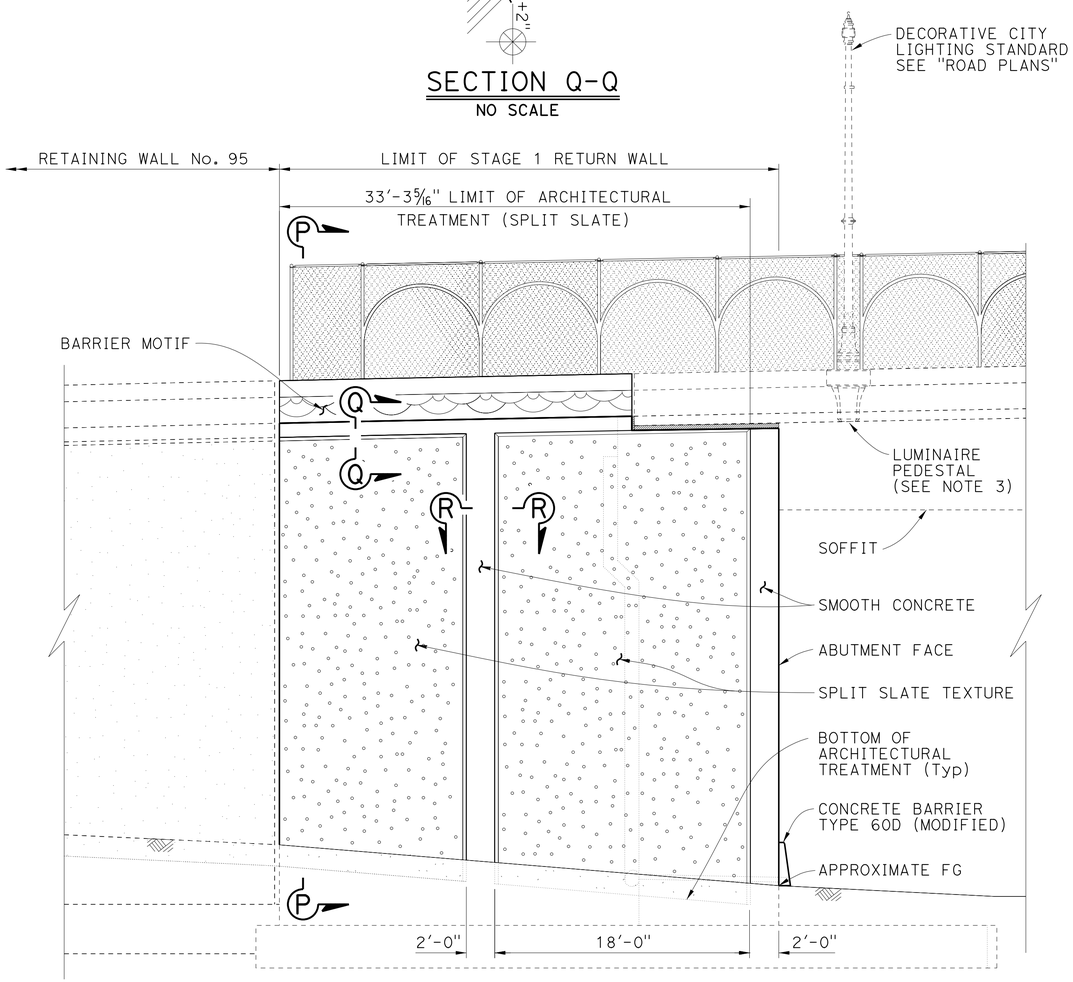

NOTE: PILES NOT SHOWN

ELEVATION - STAGE 1 (RIGHT)
3/16" = 1'-0"

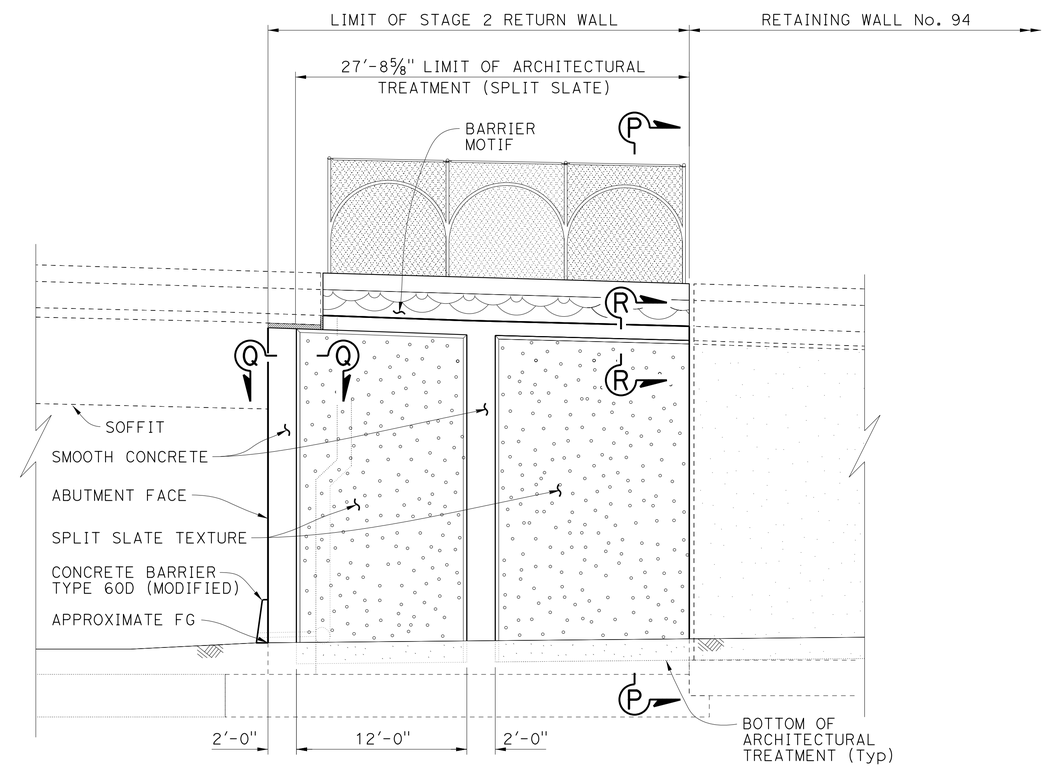

NOTE: PILES NOT SHOWN

ELEVATION - STAGE 2 (LEFT)
3/16" = 1'-0"

DESIGN	BY Isacc Tasabia	CHECKED H. Javier Chavez	
DETAILS	BY G. M. Souza	CHECKED P. Vijitakula/V. Shostak	
QUANTITIES	BY Art Herrera	CHECKED Mike Bergman	

STATE OF CALIFORNIA
DEPARTMENT OF TRANSPORTATION

DIVISION OF ENGINEERING SERVICES
STRUCTURE DESIGN
DESIGN BRANCH 1

BRIDGE NO. 53-3065
POST MILE 6.38

FLORENCE AVENUE OC (REPLACE)
ABUTMENT 1 RETURN WALL ELEVATIONS

STRUCTURES DESIGN DETAIL SHEET (ENGLISH) (REV. 09-01-10)

ORIGINAL SCALE IN INCHES FOR REDUCED PLANS 0 1 2 3

UNIT: 3576
PROJECT NUMBER & PHASE: 07000018351
CONTRACT NO.: 07-215954

DISREGARD PRINTS BEARING EARLIER REVISION DATES

REVISION DATES: 01-24-12 04/03/13 11-28-12

SHEET 47 OF 56

FILE => 53-3065-x-47-p-elev-at-rw1&2.dgn

USERNAME => s124496 DATE PLOTTED => 26-JUN-2013 TIME PLOTTED => 15:45

DIST	COUNTY	ROUTE	POST MILES TOTAL PROJECT	SHEET No.	TOTAL SHEETS
07	LA	5	0.0/7.6	663	985

P. Vijitakula 12-28-12
REGISTERED CIVIL ENGINEER DATE

6-24-13
PLANS APPROVAL DATE

REGISTERED PROFESSIONAL ENGINEER
P. VIJITAKULA
No. C 54701
Exp. 12-31-13
CIVIL
STATE OF CALIFORNIA

The State of California or its officers or agents shall not be responsible for the accuracy or completeness of electronic copies of this plan sheet.

NOTES:

1. For Concrete Barrier Motif Details, see "BARRIER MOTIF DETAILS" sheet.
2. For Chain Link Railing Type 3 (Mod), see "CHAIN LINK RAILING TYPE 3 (MODIFIED) DETAILS" sheet.
3. For Sections Q-Q and R-R, see "ABUTMENT 1 RETURN WALL ELEVATIONS" sheet.

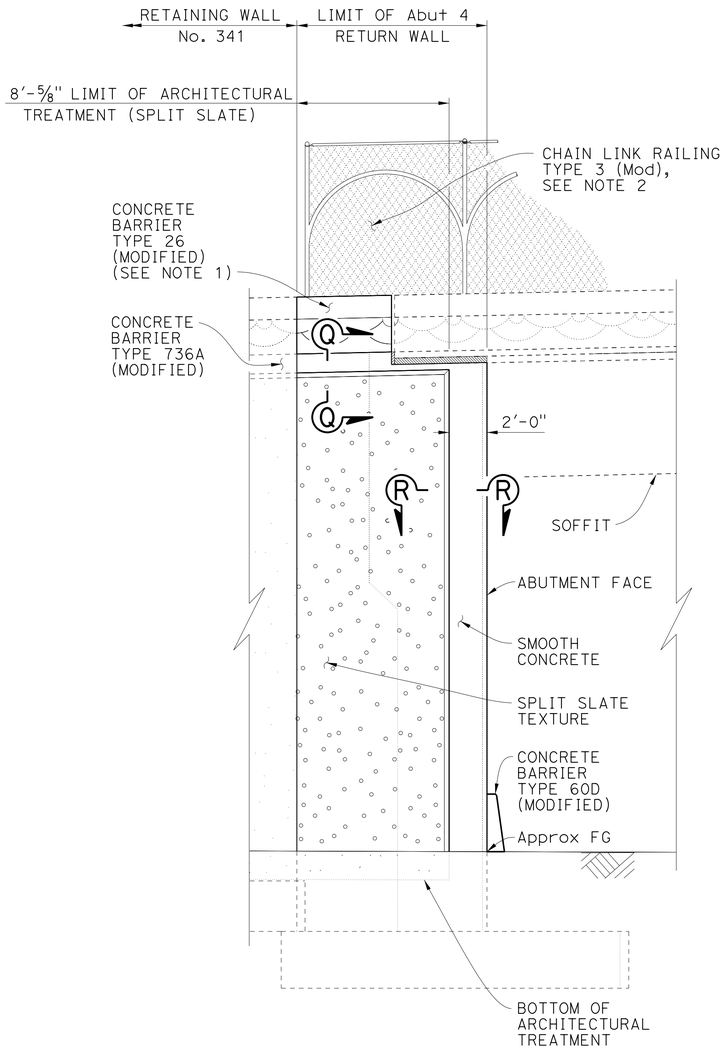

NOTE: PILES NOT SHOWN

ELEVATION - STAGE 2 (LEFT)

1/4" = 1'-0"

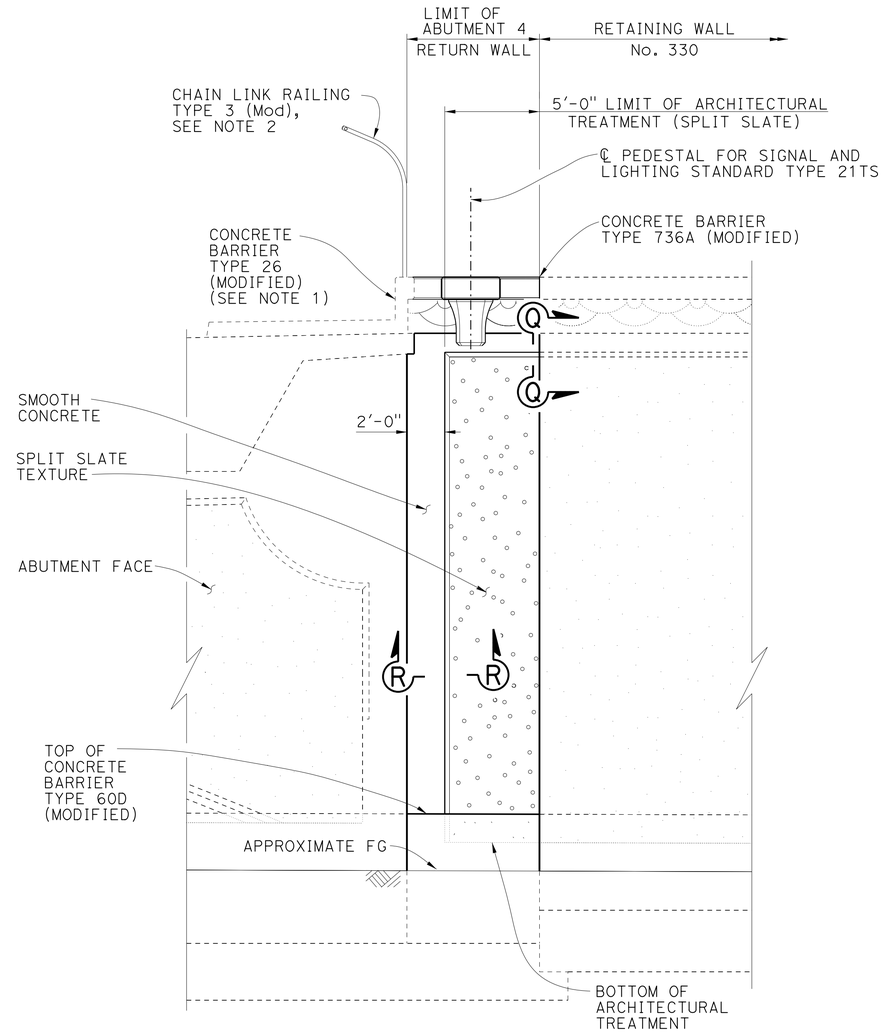

NOTE: PILES NOT SHOWN

ELEVATION - STAGE 1 (RIGHT)

1/4" = 1'-0"

DESIGN	BY Isacc Tasabia	CHECKED H. Javier Chavez	
DETAILS	BY G. M. Souza	CHECKED P. Vijitakula/V. Shostak	
QUANTITIES	BY Art Herrera	CHECKED Mike Bergman	

STATE OF CALIFORNIA
DEPARTMENT OF TRANSPORTATION

DIVISION OF ENGINEERING SERVICES
STRUCTURE DESIGN
DESIGN BRANCH 1

BRIDGE NO. 53-3065
POST MILE 6.38

FLORENCE AVENUE OC (REPLACE)
ABUTMENT 4 RETURN WALL ELEVATIONS

STRUCTURES DESIGN DETAIL SHEET (ENGLISH) (REV. 09-01-10)

ORIGINAL SCALE IN INCHES FOR REDUCED PLANS 0 1 2 3

UNIT: 3576
PROJECT NUMBER & PHASE: 07000018351
CONTRACT NO.: 07-215954

DISREGARD PRINTS BEARING EARLIER REVISION DATES

REVISION DATES: 07-13-12 08-26-12 12-11-12 04/15/13

SHEET 48 OF 56

FILE => 53-3065-x-48-p-elev-at-rw3&4.dgn

USERNAME => s124496 DATE PLOTTED => 26-JUN-2013 TIME PLOTTED => 15:45

DIST	COUNTY	ROUTE	POST MILES TOTAL PROJECT	SHEET No.	TOTAL SHEETS
07	LA	5	0.0/7.6	664	985

P. Vijitakula 12-28-12
REGISTERED CIVIL ENGINEER DATE

6-24-13
PLANS APPROVAL DATE

REGISTERED PROFESSIONAL ENGINEER
P. VIJITAKULA
No. C 54701
Exp. 12-31-13
CIVIL
STATE OF CALIFORNIA

The State of California or its officers or agents shall not be responsible for the accuracy or completeness of electronic copies of this plan sheet.

Note:

- For Section A-A, and Section B-B locations, see "ABUTMENT 1 ARCHITECTURAL ELEVATION" and "ABUTMENT 4 ARCHITECTURAL ELEVATION" sheets.

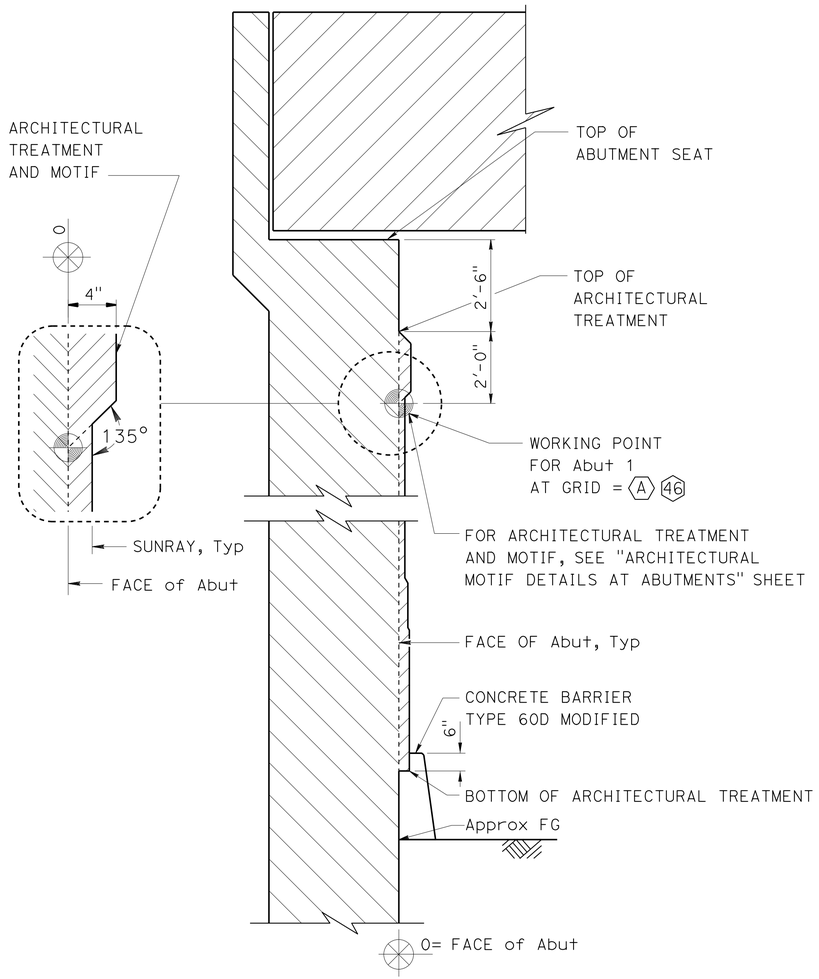

SECTION A-A
NO SCALE

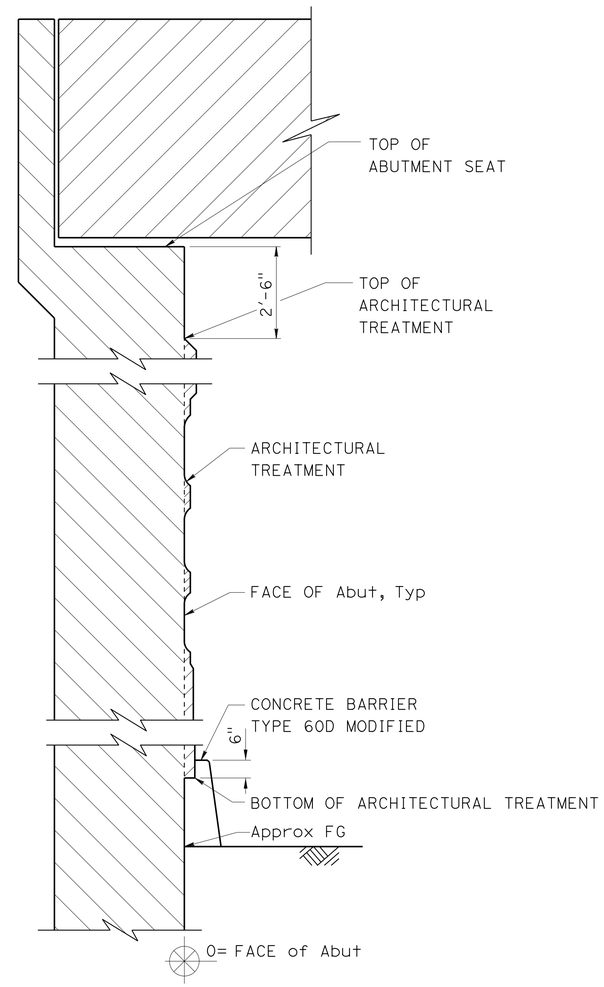

SECTION B-B
NO SCALE

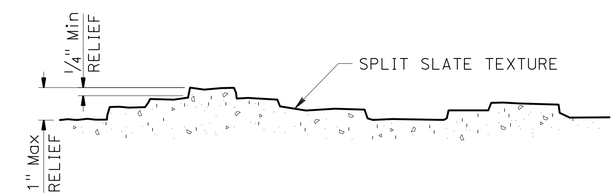

SECTION C-C
NO SCALE

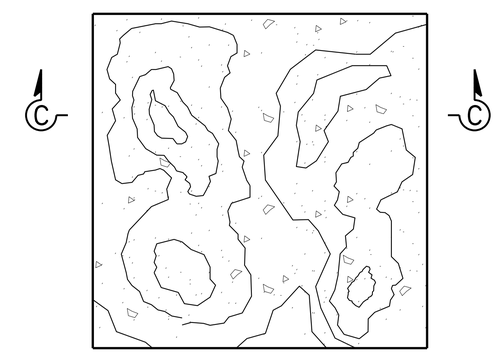

SPLIT SLATE TEXTURE
NO SCALE

DESIGN	BY Isacc Tasabia	CHECKED H. Javier Chavez	
DETAILS	BY Jie Tang	CHECKED H. Javier Chavez	
QUANTITIES	BY Art Herrera	CHECKED Mike Bergman	

STATE OF CALIFORNIA
DEPARTMENT OF TRANSPORTATION

DIVISION OF ENGINEERING SERVICES
STRUCTURE DESIGN
DESIGN BRANCH 1

BRIDGE NO. 53-3065
POST MILE 6.38

FLORENCE AVENUE OC (REPLACE)
SECTIONS AT ABUTMENTS & RETAINING WALLS

STRUCTURES DESIGN DETAIL SHEET (ENGLISH) (REV. 09-01-10)

ORIGINAL SCALE IN INCHES FOR REDUCED PLANS 0 1 2 3

UNIT: 3576
PROJECT NUMBER & PHASE: 07000018351
CONTRACT NO.: 07-215954

DISREGARD PRINTS BEARING EARLIER REVISION DATES

REVISION DATES: 01-23-12 11-26-12 03-21-13 04/15/13

SHEET 49 OF 56

FILE => 53-3065-x-49-sec-at-abut&rw.dgn

USERNAME => s124496 DATE PLOTTED => 26-JUN-2013 TIME PLOTTED => 15:45

DIST	COUNTY	ROUTE	POST MILES TOTAL PROJECT	SHEET No.	TOTAL SHEETS
07	LA	5	0.0/7.6	665	985

P. Vijitakula 12-28-12
REGISTERED CIVIL ENGINEER DATE

6-24-13
PLANS APPROVAL DATE

REGISTERED PROFESSIONAL ENGINEER
P. VIJITAKULA
No. C 54701
Exp. 12-31-13
CIVIL
STATE OF CALIFORNIA

The State of California or its officers or agents shall not be responsible for the accuracy or completeness of electronic copies of this plan sheet.

LEGEND:

- Textured concrete surface = split slate texture, see "PARTIAL ELEVATIONS AT RETAINING WALLS 1 & 2" sheet
- Smooth Concrete Surface
- Secondary Working Point

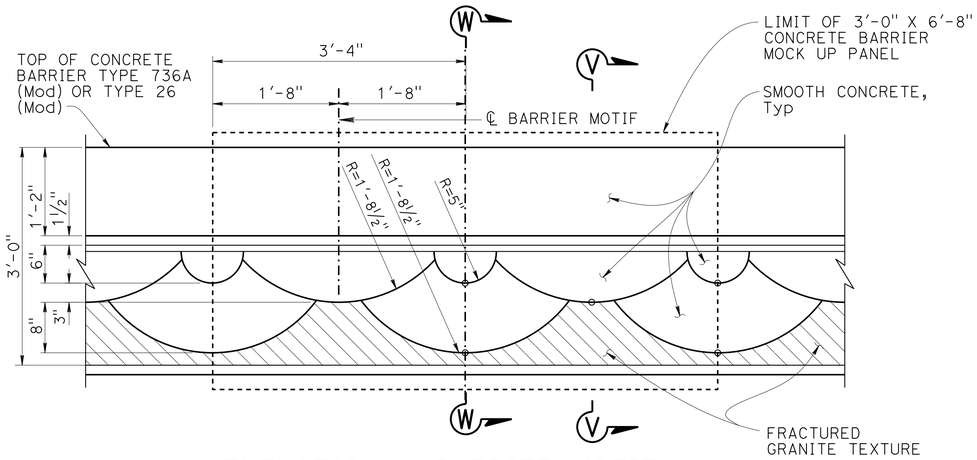

ELEVATION - BARRIER MOTIF

NO SCALE

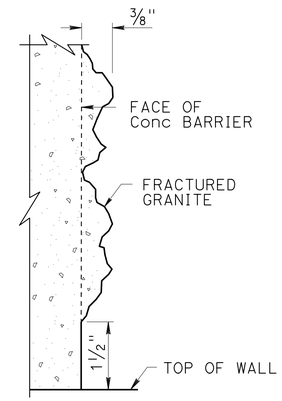

DETAIL E

NO SCALE

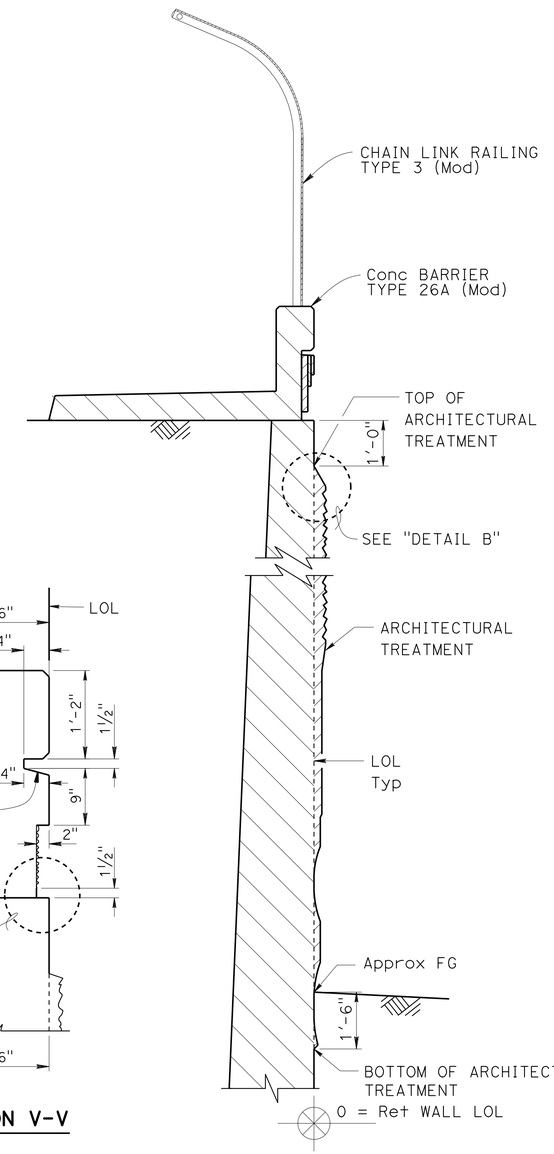

SECTION P-P

NO SCALE

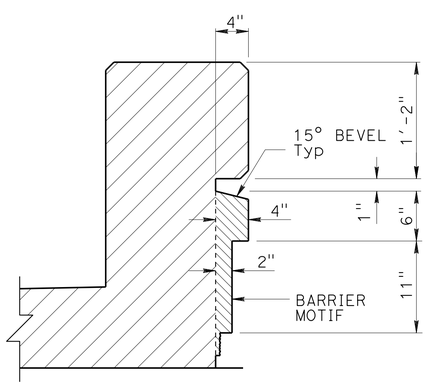

SECTION W-W

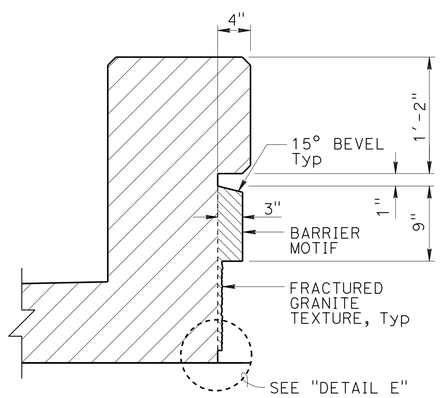

SECTION V-V

CONCRETE BARRIER TYPE 26 (MODIFIED)

NO SCALE

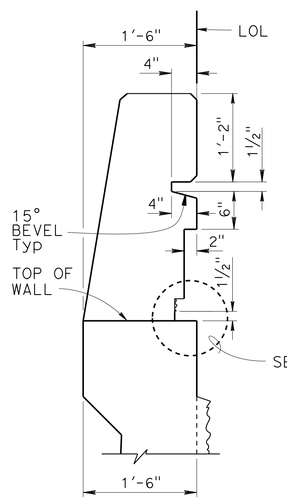

SECTION W-W

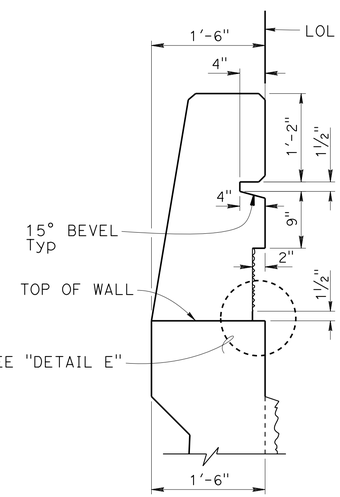

SECTION V-V

CONCRETE BARRIER TYPE 736A (MODIFIED)

NO SCALE

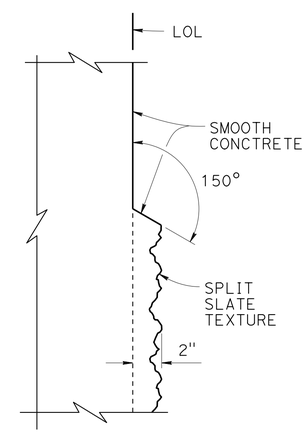

DETAIL B

NO SCALE

DESIGN	BY Isacc Tasabia	CHECKED H. Javier Chavez	
DETAILS	BY Jie Tang	CHECKED H. Javier Chavez	
QUANTITIES	BY Art Herrera	CHECKED Mike Bergman	

STATE OF CALIFORNIA
DEPARTMENT OF TRANSPORTATION

DIVISION OF ENGINEERING SERVICES
STRUCTURE DESIGN
DESIGN BRANCH 1

BRIDGE NO. 53-3065
POST MILE 6.38

FLORENCE AVENUE OC (REPLACE)
BARRIER MOTIF DETAILS

STRUCTURES DESIGN DETAIL SHEET (ENGLISH) (REV. 09-01-10)

ORIGINAL SCALE IN INCHES FOR REDUCED PLANS 0 1 2 3

UNIT: 3576
PROJECT NUMBER & PHASE: 07000018351
CONTRACT NO.: 07-215954

DISREGARD PRINTS BEARING EARLIER REVISION DATES

REVISION DATES 01-30-12 04/15/13 05/22/13

SHEET 50 OF 56

FILE => 53-3065-x-50-barrier-motif-det.dgn

USERNAME => s124496 DATE PLOTTED => 26-JUN-2013 TIME PLOTTED => 15:45

BENCH MARKS

LA 5 PM 6.1, 1995 Elev. 126.778′
2.5" CADT Disk in Concrete Curb
Located at the nose of the southbound I-5 FWY
Onramp Gore from Orr & Day Rd
N=1797387.8, E=6534371.3
VERTICAL NAVD88, 0405-CALIFORNIA 5 US Ft

LA 5 PM 6.4, 1995 Elev. Not shown
2.5" CADT Disk in Asphalt
Located along the northbound shoulder of I-5 FWY,
150 ft north of the Florence Avenue Overcrossing
N=1799072.3, E=6533513.4
VERTICAL NAVD88, 0405-CALIFORNIA 5 US Ft

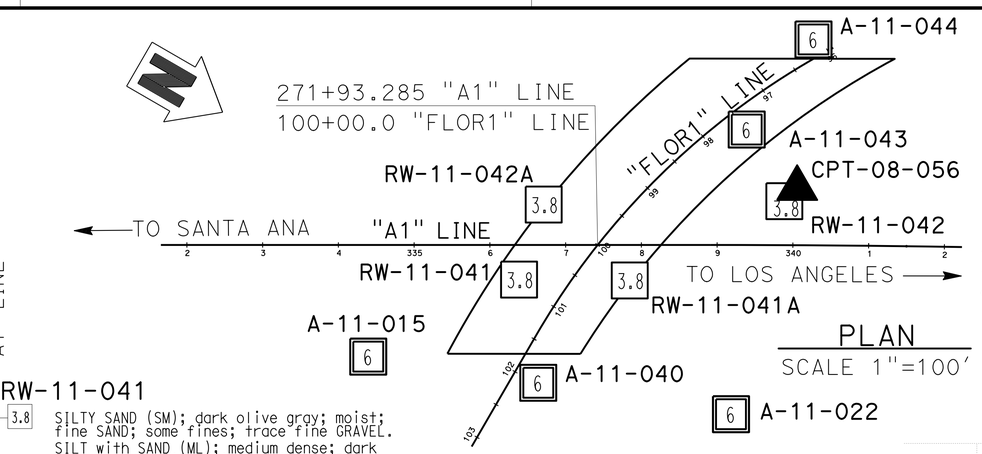

DIST	COUNTY	ROUTE	POST MILES TOTAL PROJECT	SHEET No.	TOTAL SHEETS
07	LA	5	0.0/7.6	666	985

REGISTERED CIVIL ENGINEER — DATE 6/2012

6-24-13
PLANS APPROVAL DATE

REGISTERED PROFESSIONAL ENGINEER — Nadeem Srour No. 2801 Exp. 12-31-2013 GEOTECHNICAL — STATE OF CALIFORNIA

The State of California or its officers or agents shall not be responsible for the accuracy or completeness of electronic copies of this plan sheet.

This LOTB sheet was prepared in accordance with the Caltrans Soil & Rock Logging, Classification, & Presentation Manual (2010 Edition).

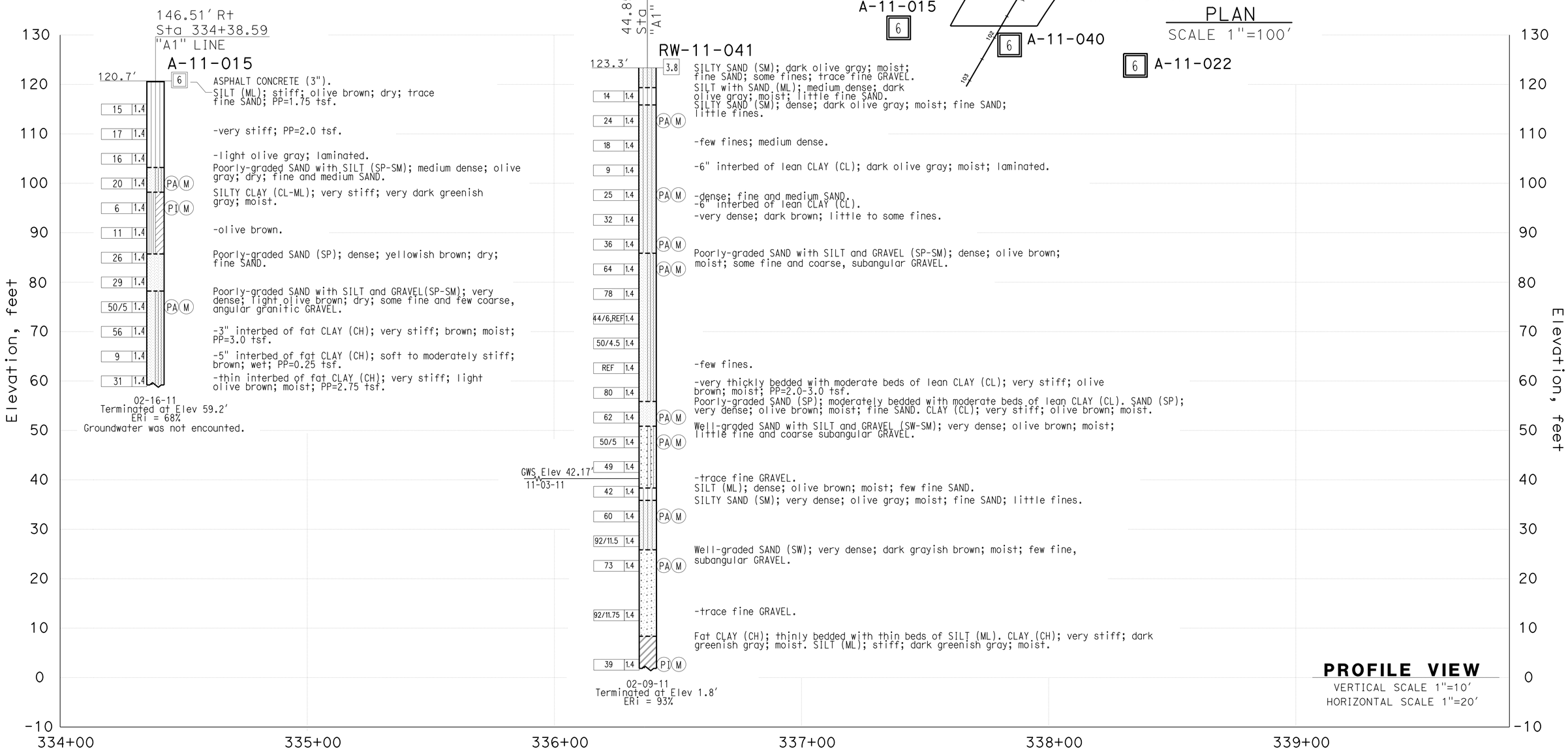

ENGINEERING SERVICES	MATERIALS AND GEOTECHNICAL SERVICES	STATE OF CALIFORNIA DEPARTMENT OF TRANSPORTATION	DIVISION OF ENGINEERING SERVICES STRUCTURE DESIGN DESIGN BRANCH 1	BRIDGE NO. 53-3065 POST MILE 6.38	FLORENCE AVENUE OC (REPLACE)
FUNCTIONAL SUPERVISOR NAME: S.SUKIASIAN	DRAWN BY: T.PANAH (URS CORP) CHECKED BY: M.AHMED	FIELD INVESTIGATION BY: K.BARKER			LOG OF TEST BORINGS SHEET 1 OF 6

OGS CIVIL LOG OF TEST BORINGS SHEET

ORIGINAL SCALE IN INCHES FOR REDUCED PLANS 0 1 2 3

UNIT: 3576
PROJECT NUMBER & PHASE: 07000018351 CONTRACT NO.: 07-215954

DISREGARD PRINTS BEARING EARLIER REVISION DATES → 03-12-12

REVISION DATES | SHEET 51 OF 56

FILE => 53-3065-z-51-lotb-01.dgn

USERNAME => s124496 DATE PLOTTED => 26-JUN-2013 TIME PLOTTED => 13:45

DIST	COUNTY	ROUTE	POST MILES TOTAL PROJECT	SHEET No.	TOTAL SHEETS
07	LA	5	0.0/7.6	667	985

REGISTERED CIVIL ENGINEER — DATE 6/2012

6-24-13
PLANS APPROVAL DATE

REGISTERED PROFESSIONAL ENGINEER — Nadeem Srour — No. 2801 — Exp. 12-31-2013 — GEOTECHNICAL — STATE OF CALIFORNIA

The State of California or its officers or agents shall not be responsible for the accuracy or completeness of electronic copies of this plan sheet.

This LOTB sheet was prepared in accordance with the Caltrans Soil & Rock Logging, Classification, & Presentation Manual (2010 Edition).

FOR PLAN VIEW, SEE
"LOG OF TEST BORINGS" 1 OF 8

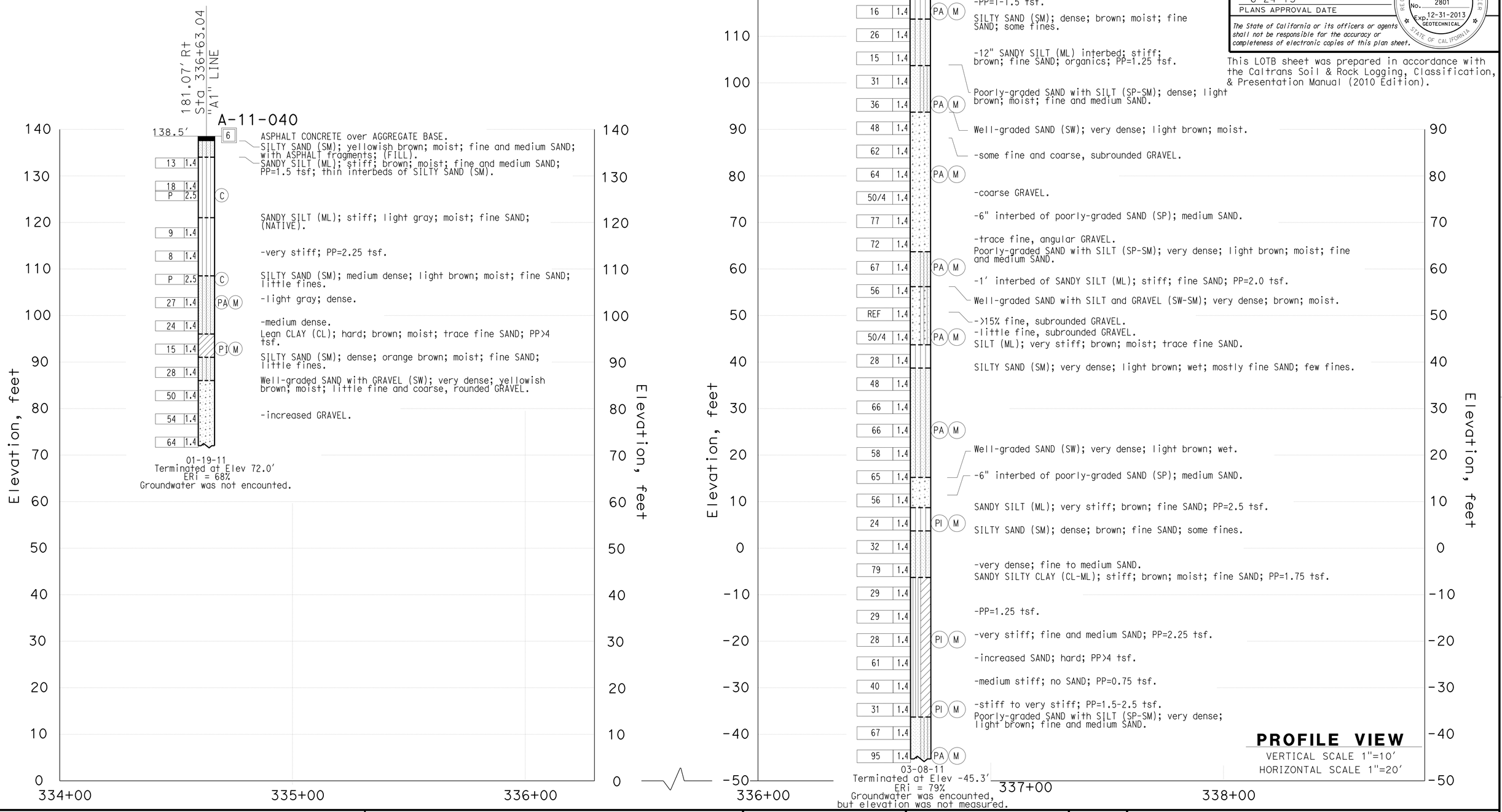

ENGINEERING SERVICES	MATERIALS AND GEOTECHNICAL SERVICES	STATE OF CALIFORNIA DEPARTMENT OF TRANSPORTATION	DIVISION OF ENGINEERING SERVICES STRUCTURE DESIGN DESIGN BRANCH 1	BRIDGE NO. 53-3065 / POST MILE 6.38	FLORENCE AVENUE OC (REPLACE)
FUNCTIONAL SUPERVISOR	DRAWN BY: T.PANAH (URS CORP)	FIELD INVESTIGATION BY:			LOG OF TEST BORINGS SHEET 2 OF 6
NAME: S.SUKIASIAN	CHECKED BY: M.AHMED	N.SROUR			

OGS CIVIL LOG OF TEST BORINGS SHEET

ORIGINAL SCALE IN INCHES FOR REDUCED PLANS 0 1 2 3

UNIT: 3576
PROJECT NUMBER & PHASE: 07000018351 CONTRACT NO.: 07-215954

DISREGARD PRINTS BEARING EARLIER REVISION DATES

REVISION DATES 03-12-12 — SHEET 52 OF 56

FILE => 53-3065-z-52-lotb-02.dgn

USERNAME => s124496 DATE PLOTTED => 26-JUN-2013 TIME PLOTTED => 15:46

DIST	COUNTY	ROUTE	POST MILES TOTAL PROJECT	SHEET No.	TOTAL SHEETS
07	LA	5	0.0/7.6	668	985

REGISTERED CIVIL ENGINEER 6/2012 DATE

6-24-13
PLANS APPROVAL DATE

REGISTERED PROFESSIONAL ENGINEER Nadeem Srour No. 2801 Exp. 12-31-2013 GEOTECHNICAL STATE OF CALIFORNIA

The State of California or its officers or agents shall not be responsible for the accuracy or completeness of electronic copies of this plan sheet.

This LOTB sheet was prepared in accordance with the Caltrans Soil & Rock Logging, Classification, & Presentation Manual (2010 Edition).

FOR PLAN VIEW, SEE "LOG OF TEST BORINGS" 1 OF 8

ENGINEERING SERVICES	MATERIALS AND GEOTECHNICAL SERVICES	STATE OF CALIFORNIA DEPARTMENT OF TRANSPORTATION	DIVISION OF ENGINEERING SERVICES STRUCTURE DESIGN DESIGN BRANCH 1	BRIDGE NO. 53-3065 POST MILE 6.38	FLORENCE AVENUE OC (REPLACE)
FUNCTIONAL SUPERVISOR NAME: S.SUKIASIAN	DRAWN BY: T.PANAH (URS CORP) CHECKED BY: M.AHMED	FIELD INVESTIGATION BY: K.BARKER/N.SROUR			LOG OF TEST BORINGS SHEET 3 OF 6

OGS CIVIL LOG OF TEST BORINGS SHEET

ORIGINAL SCALE IN INCHES FOR REDUCED PLANS 0 1 2 3

UNIT: 3576
PROJECT NUMBER & PHASE: 07000018351 CONTRACT NO.: 07-215954

DISREGARD PRINTS BEARING EARLIER REVISION DATES → 03-12-12

REVISION DATES | SHEET 53 | OF 56

FILE => 53-3065-z-53-lotb-03.dgn

USERNAME => s124496 DATE PLOTTED => 26-JUN-2013 TIME PLOTTED => 15:46

DIST	COUNTY	ROUTE	POST MILES TOTAL PROJECT	SHEET No.	TOTAL SHEETS
07	LA	5	0.0/7.6	669	985

REGISTERED CIVIL ENGINEER — DATE 6/2012

6-24-13
PLANS APPROVAL DATE

REGISTERED PROFESSIONAL ENGINEER — Nadeem Srour — No. 2801 — Exp. 12-31-2013 — GEOTECHNICAL — STATE OF CALIFORNIA

The State of California or its officers or agents shall not be responsible for the accuracy or completeness of electronic copies of this plan sheet.

This LOTB sheet was prepared in accordance with the Caltrans Soil & Rock Logging, Classification, & Presentation Manual (2010 Edition).

FOR PLAN VIEW, SEE
"LOG OF TEST BORINGS" 1 OF 8

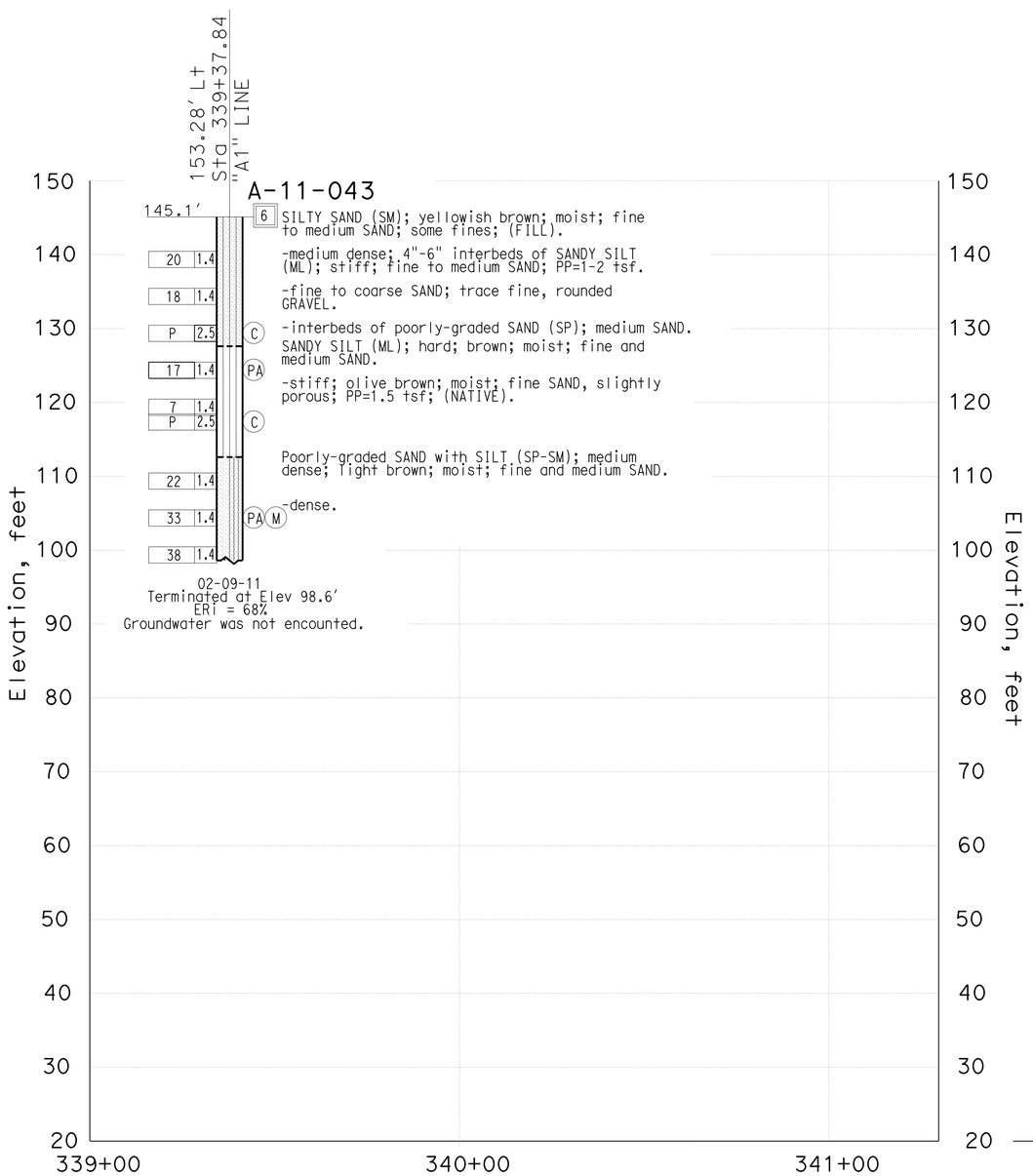

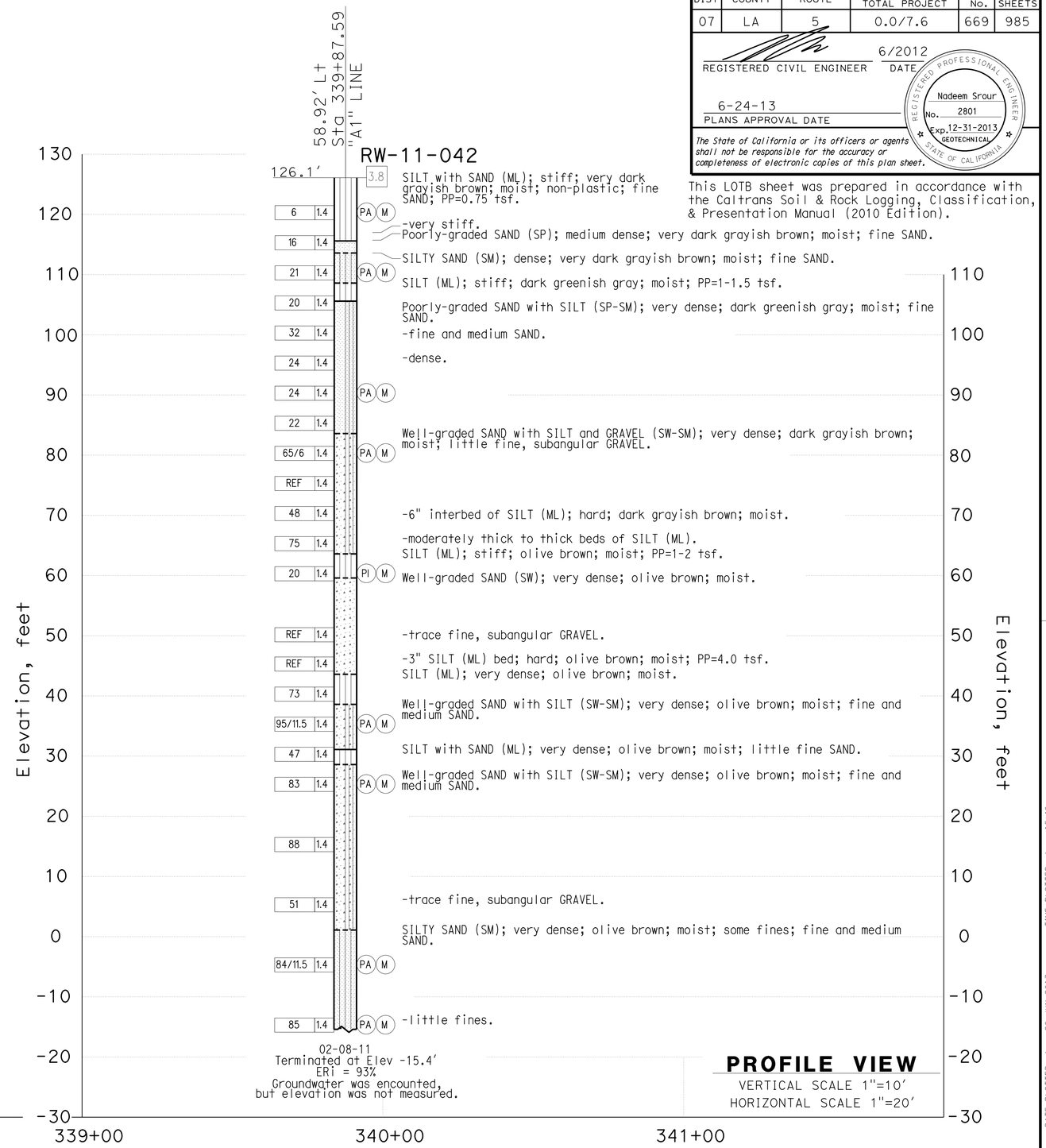

ENGINEERING SERVICES	MATERIALS AND GEOTECHNICAL SERVICES	STATE OF CALIFORNIA DEPARTMENT OF TRANSPORTATION	DIVISION OF ENGINEERING SERVICES STRUCTURE DESIGN DESIGN BRANCH 1	BRIDGE NO. 53-3065 POST MILE 6.38	FLORENCE AVENUE OC (REPLACE)
FUNCTIONAL SUPERVISOR NAME: S.SUKIASIAN	DRAWN BY: T.PANAH (URS CORP) CHECKED BY: M.AHMED	FIELD INVESTIGATION BY: K.BARKER/N.SROUR			LOG OF TEST BORINGS SHEET 4 OF 6

OGS CIVIL LOG OF TEST BORINGS SHEET

ORIGINAL SCALE IN INCHES FOR REDUCED PLANS 0 1 2 3

UNIT: 3576
PROJECT NUMBER & PHASE: 07000018351 CONTRACT NO.: 07-215954

DISREGARD PRINTS BEARING EARLIER REVISION DATES

REVISION DATES 03-12-12 — SHEET 54 OF 56

FILE => 53-3065-z-54-lotb-04.dgn

USERNAME => s124496 DATE PLOTTED => 26-JUN-2013 TIME PLOTTED => 15:46

DIST	COUNTY	ROUTE	POST MILES TOTAL PROJECT	SHEET No.	TOTAL SHEETS
07	LA	5	0.0/7.6	670	985

REGISTERED CIVIL ENGINEER — DATE 6/2012

6-24-13
PLANS APPROVAL DATE

REGISTERED PROFESSIONAL ENGINEER — Nadeem Srour — No. 2801 — Exp. 12-31-2013 — GEOTECHNICAL — STATE OF CALIFORNIA

The State of California or its officers or agents shall not be responsible for the accuracy or completeness of electronic copies of this plan sheet.

This LOTB sheet was prepared in accordance with the Caltrans Soil & Rock Logging, Classification, & Presentation Manual (2010 Edition).

FOR PLAN VIEW, SEE
"LOG OF TEST BORINGS" 1 OF 8

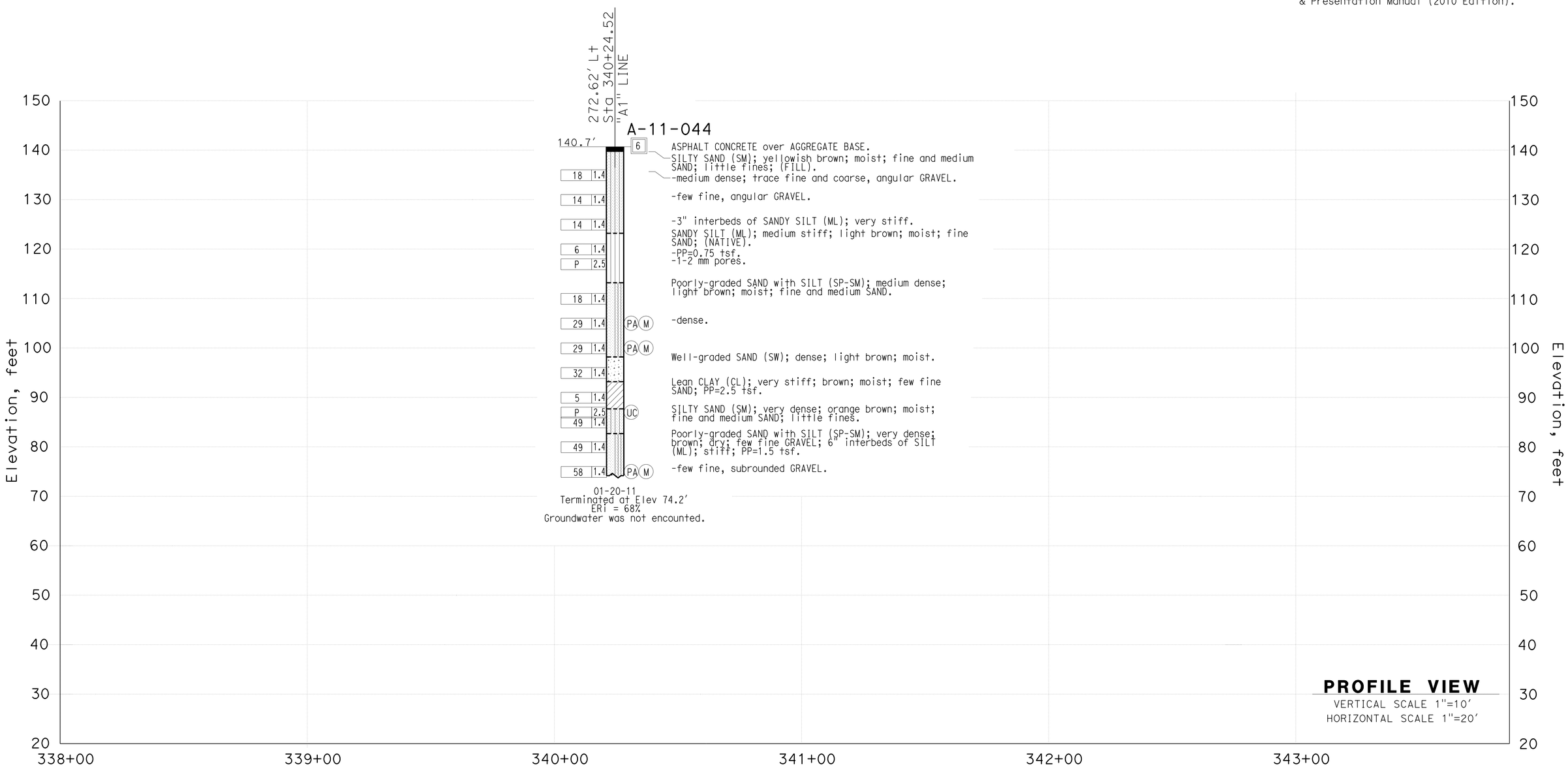

ENGINEERING SERVICES	MATERIALS AND GEOTECHNICAL SERVICES	STATE OF CALIFORNIA DEPARTMENT OF TRANSPORTATION	DIVISION OF ENGINEERING SERVICES STRUCTURE DESIGN DESIGN BRANCH 1	BRIDGE NO. 53-3065 / POST MILE 6.38	FLORENCE AVENUE OC (REPLACE)
FUNCTIONAL SUPERVISOR	DRAWN BY: T.PANAH (URS CORP)	FIELD INVESTIGATION BY:			LOG OF TEST BORINGS SHEET 5 OF 6
NAME: S.SUKIASIAN	CHECKED BY: M.AHMED	N.SROUR			

OGS CIVIL LOG OF TEST BORINGS SHEET

ORIGINAL SCALE IN INCHES FOR REDUCED PLANS 0 1 2 3

UNIT: 3576
PROJECT NUMBER & PHASE: 07000018351 CONTRACT NO.: 07-215954

DISREGARD PRINTS BEARING EARLIER REVISION DATES → 03-12-12

REVISION DATES | SHEET 55 | OF 56

FILE => 53-3065-z-55-lotb-05.dgn

USERNAME => s124496 DATE PLOTTED => 26-JUN-2013 TIME PLOTTED => 15:46

DIST	COUNTY	ROUTE	POST MILES TOTAL PROJECT	SHEET No.	TOTAL SHEETS
07	LA	5	0.0/7.6	671	985

REGISTERED CIVIL ENGINEER 12/2011 DATE

6-24-13
PLANS APPROVAL DATE

REGISTERED PROFESSIONAL ENGINEER MICHAEL G. SMITH No. 2229 Exp. 3-31-2012 GEOTECHNICAL STATE OF CALIFORNIA

The State of California or its officers or agents shall not be responsible for the accuracy or completeness of electronic copies of this plan sheet.

This LOTB sheet was prepared in accordance with the Caltrans Soil & Rock Logging, Classification, & Presentation Manual (2010 Edition).

FOR PLAN VIEW, SEE
"LOG OF TEST BORINGS" 1 OF 8

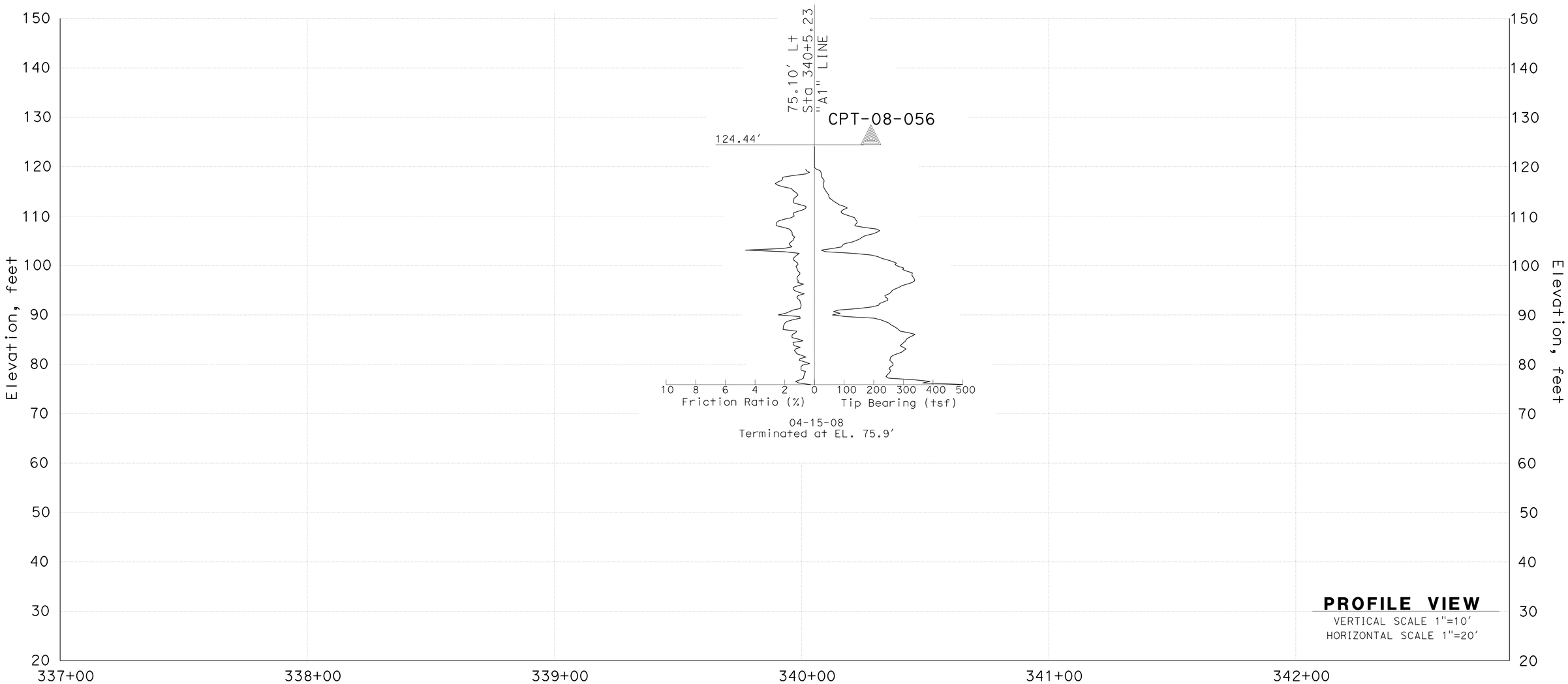

ENGINEERING SERVICES	MATERIALS AND GEOTECHNICAL SERVICES	STATE OF CALIFORNIA DEPARTMENT OF TRANSPORTATION	DIVISION OF ENGINEERING SERVICES STRUCTURE DESIGN DESIGN BRANCH 1	BRIDGE NO. 53-3065 POST MILE 6.38	FLORENCE AVENUE OC (REPLACE)
FUNCTIONAL SUPERVISOR NAME: M.SMITH	DRAWN BY: T.PANAH (URS CORP) CHECKED BY: D.ORRIS	FIELD INVESTIGATION BY: P.MCDONALD			LOG OF TEST BORINGS SHEET 6 OF 6

OGS CIVIL LOG OF TEST BORINGS SHEET

ORIGINAL SCALE IN INCHES FOR REDUCED PLANS 0 1 2 3

UNIT: 3576
PROJECT NUMBER & PHASE: 07000018351 CONTRACT NO.: 07-215954

DISREGARD PRINTS BEARING EARLIER REVISION DATES → 03-12-12

REVISION DATES | SHEET 56 OF 56

FILE => 53-3065-z-56-lotb-06.dgn

USERNAME => s124496 DATE PLOTTED => 26-JUN-2013 TIME PLOTTED => 15:46

DIST	COUNTY	ROUTE	POST MILES TOTAL PROJECT	SHEET No.	TOTAL SHEETS
07	LA	5	0.0/7.6	672	985

P. Vijitakula 12-28-12
REGISTERED CIVIL ENGINEER DATE

6-24-13
PLANS APPROVAL DATE

REGISTERED PROFESSIONAL ENGINEER P. VIJITAKULA No. C 54701 Exp. 12-31-13 CIVIL STATE OF CALIFORNIA

The State of California or its officers or agents shall not be responsible for the accuracy or completeness of electronic copies of this plan sheet.

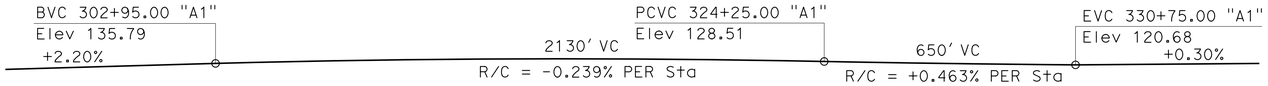

PROFILE GRADE

NO SCALE

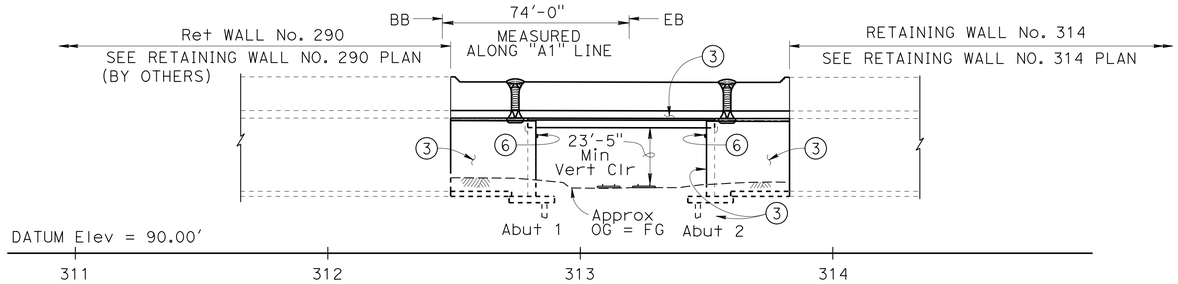

ELEVATION

1" = 30'

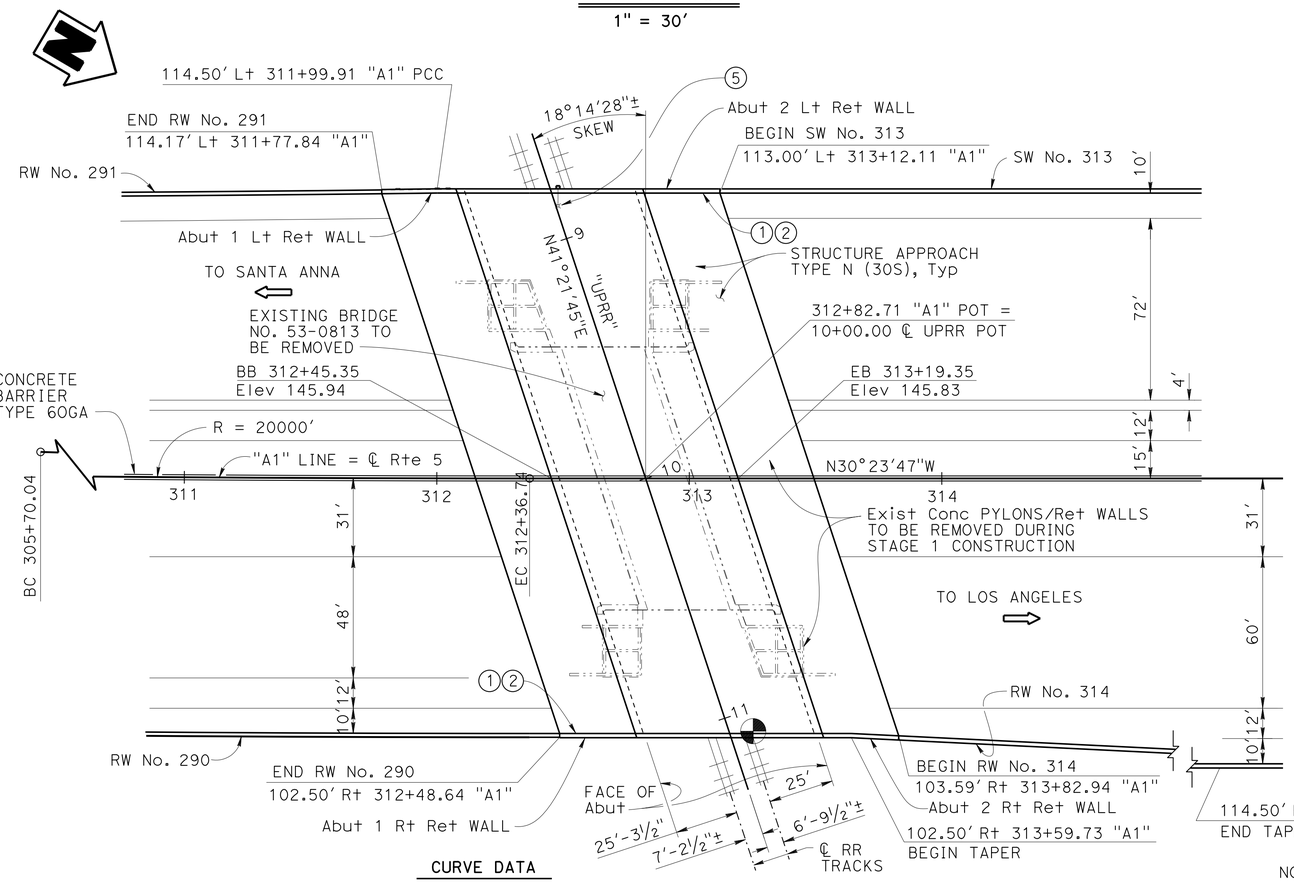

CURVE DATA

"A1" LINE

R = 20,000.00'
Δ = 1°54'36"
T = 333.38'
L = 666.70'

PLAN

1" = 30'

LEGEND:

Indicates existing structure
Indicates bridge removal
Indicates point of minimum vertical clearance at top of right rail

NOTES:

1. Paint "Bridge No. 53-3063"
2. Paint "ORR AND DAY ROAD OH"
3. Architectural texture and details, see "ARCHITECTURAL DETAILS" sheets.
4. Communication conduit with support hangers, see "MISCELLANEOUS DETAILS" sheet and "ROAD PLANS".
5. Electrolier, see "ELECTROLIER PEDESTAL DETAILS" sheet and "ROAD PLANS" for location.
6. Wall mounted Luminaire, see "ROAD PLANS"

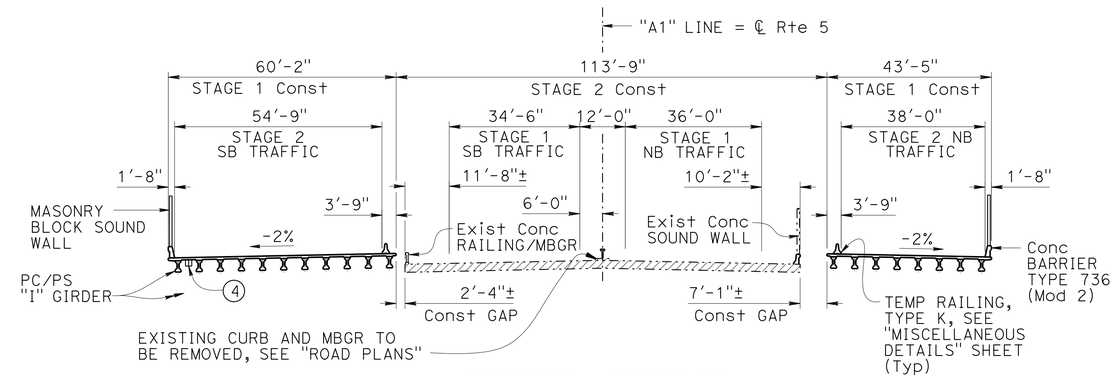

TYPICAL SECTION CONSTRUCTIONS STAGING

1" = 20'

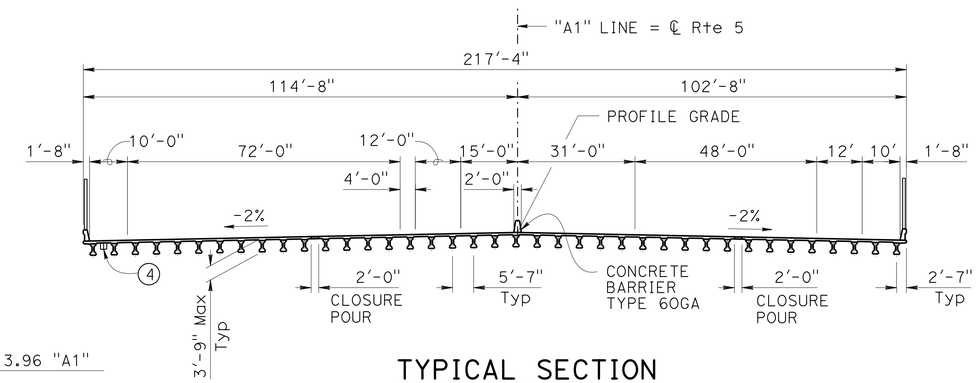

TYPICAL SECTION

1" = 20'

NOTES:

1. For "GENERAL NOTES" , "INDEX TO PLANS", "QUANTITIES" and "PILE DATE TABLE", see "INDEX TO PLANS" sheet.
2. Stage traffic and construction shown shall apply to bridge work only. For additional details, see "ROAD PLANS".
3. Existing Bridge and Pylons are not shown in "ELEVATION" for clarity.
4. Dimensions shown in "TYPICAL SECTION" are to edge of deck.

Jeff Sims
DESIGN ENGINEER

	BY	CHECKED			
DESIGN	Daniel Sessions	Greg Jones	LOAD & RESISTANCE FACTOR DESIGN	LIVE LOADING: HL93 W/"LOW-BOY"; PERMIT DESIGN VEHICLE	
DETAILS	S. Jiang / J. Tang	Greg Jones	LAYOUT	Daniel Sessions	Greg Jones
QUANTITIES	Manode Kodsuntie	Grant Schuster	SPECIFICATIONS	Xiahong Li	PLANS AND SPECS COMPARED Xiahong Li

ORIGINAL SCALE IN INCHES FOR REDUCED PLANS 0 1 2 3

STATE OF CALIFORNIA
DEPARTMENT OF TRANSPORTATION

DIVISION OF ENGINEERING SERVICES
STRUCTURE DESIGN
DESIGN BRANCH 1

BRIDGE NO. 53-3063
POST MILE 5.92

ORR AND DAY ROAD OVERHEAD (REPLACE)
GENERAL PLAN

UNIT: 3576
PROJECT NUMBER & PHASE: 07000018351
CONTRACT NO.: 07-215954

DISREGARD PRINTS BEARING EARLIER REVISION DATES

REVISION DATES: 9-21-10 12-28-10 02/04/13

SHEET 1 OF 42

USERNAME => s124496 DATE PLOTTED => 26-JUN-2013 TIME PLOTTED => 15:46

FILE => 53-3063-a-gp01_gp.dgn

DIST	COUNTY	ROUTE	POST MILES TOTAL PROJECT	SHEET No.	TOTAL SHEETS
07	LA	5	0.0/7.6	673	985

P. Vijitakula 12-28-12
REGISTERED CIVIL ENGINEER DATE

6-24-13
PLANS APPROVAL DATE

REGISTERED PROFESSIONAL ENGINEER P. VIJITAKULA No. C 54701 Exp. 12-31-13 CIVIL STATE OF CALIFORNIA

The State of California or its officers or agents shall not be responsible for the accuracy or completeness of electronic copies of this plan sheet.

INDEX TO PLANS

SHEET NO.	TITLE
1.	GENERAL PLAN
2.	INDEX TO PLANS
3.	DECK CONTOURS
4.	FOUNDATION PLAN
5.	ABUTMENT 1 RIGHT STAGE 1 LAYOUT
6.	ABUTMENT 1 LEFT STAGE 1 LAYOUT
7.	ABUTMENT 1 STAGE 2 LAYOUT
8.	ABUTMENT 2 RIGHT STAGE 1 LAYOUT
9.	ABUTMENT 2 LEFT STAGE 1 LAYOUT
10.	ABUTMENT FOOTING LAYOUT
11.	ABUTMENT 2 STAGE 2 LAYOUT
12.	ABUTMENT RETAINING WALL ELEVATIONS
13.	RETAINING WALL DETAILS
14.	ABUTMENT DETAILS NO. 1
15.	ABUTMENT DETAILS NO. 2
16.	ABUTMENT DETAILS NO. 3
17.	ABUTMENT DETAILS NO. 4
18.	ABUTMENT DETAILS NO. 5
19.	TYPICAL SECTION
20.	GIRDER LAYOUT
21.	MISCELLANEOUS DETAILS
22.	ELECTROLIER PEDESTAL DETAILS
23.	SOUND WALL - MASONRY BLOCK ON BRIDGE
24.	RETAINING WALL ARCHITECTURAL DETAILS NO. 1
25.	RETAINING WALL ARCHITECTURAL DETAILS NO. 2
26.	ABUTMENT ARCHITECTURAL DETAILS
27.	CONCRETE BARRIER ARCHITECTURAL DETAILS
28.	SOUND WALL ARCHITECTURAL DETAILS
29.	PILASTER ARCHITECTURAL DETAILS NO. 1
30.	PILASTER ARCHITECTURAL DETAILS NO. 2
31.	PILASTER ARCHITECTURAL DETAILS NO. 3
32.	PILASTER ARCHITECTURAL DETAILS NO. 4
33.	PILASTER STRUCTURAL DETAILS NO. 1
34.	PILASTER STRUCTURAL DETAILS NO. 2
35.	PRECAST PRESTRESSED I GIRDER
36.	STRUCTURE APPROACH TYPE N (30S)
37.	STRUCTURE APPROACH DRAINAGE DETAILS
38.	MASONRY BLOCK SOUND WALL WITH BARRIER ON RETAINING WALL DETAILS NO. 1
39.	MASONRY BLOCK SOUND WALL WITH BARRIER ON RETAINING WALL DETAILS NO. 2
40.	LOG OF TEST BORINGS 1 OF 3
41.	LOG OF TEST BORINGS 2 OF 3
42.	LOG OF TEST BORINGS 3 OF 3

STANDARD PLANS DATED MAY 2010

	A10A	ABBREVIATIONS (SHEET 1 OF 2)
	A10B	ABBREVIATIONS (SHEET 2 OF 2)
	A10C	LINES AND SYMBOLS (SHEET 1 OF 3)
	A10D	LINES AND SYMBOLS (SHEET 2 OF 3)
	A10E	LINES AND SYMBOLS (SHEET 3 OF 3)
	A10F	LEGEND - SOIL (SHEET 1 OF 2)
	A10G	LEGEND - SOIL (SHEET 2 OF 2)
	A10H	LEGEND - ROCK
	A62B	LIMITS OF PAYMENT FOR EXCAVATION AND BACKFILL BRIDGE SURCHARGE AND WALL
	A62C	LIMITS OF PAYMENT FOR EXCAVATION AND BACKFILL BRIDGE
	A76D	CONCRETE BARRIER TYPE 60G
	B0-3	BRIDGE DETAILS
	B0-5	BRIDGE DETAILS
	B0-13	BRIDGE DETAILS
	B2-3	16" AND 24" CAST-IN-DRILLED-HOLE CONCRETE PILE
RSP	B3-5	RETAINING WALL DETAILS No. 1
	B6-10	UTILITY OPENINGS, TBEAM
	B6-21	JOINT SEALS (MAXIMUM MOVEMENT RATING = 2")
	B11-56	CONCRETE BARRIER TYPE 736
	B15-9	SOUND WALL MASONRY BLOCK MISCELLANEOUS DETAILS
	ES-6B	ELECTRICAL SYSTEMS (ELECTROLIER ANCHORAGE AND GROUTING FOR TYPE 15 AND TYPE 21 BARRIER RAIL MOUNTED)
	ES-9E	ELECTRICAL SYSTEMS (FLUSH SOFFIT, PENDANT SOFFIT AND WALL LUMINAIRE STRUCTURE INSTALLATIONS)
	T3A	TEMPORARY RAILING (TYPE K)

STANDARD PLAN SHEET NO.

DETAIL NO.

QUANTITIES

BRIDGE REMOVAL, LOCATION B	LUMP SUM
STRUCTURE EXCAVATION (BRIDGE)	8,210 CY
STRUCTURE EXCAVATION (RETAINING WALL)	280 CY
STRUCTURE EXCAVATION (TYPE Y-2)(AERIALLY DEPOSITED LEAD)	800 CY
STRUCTURE BACKFILL (BRIDGE)	5,660 CY
STRUCTURE BACKFILL (RETAINING WALL)	890 CY
24" CAST-IN-DRILLED-HOLE CONCRETE PILING	19,450 LF
STRUCTURAL CONCRETE, BRIDGE FOOTING	1,135 CY
STRUCTURAL CONCRETE, BRIDGE	2,335 CY
STRUCTURAL CONCRETE, RETAINING WALL	315 CY
STRUCTURAL CONCRETE, APPROACH SLAB (TYPE N)	476 CY
ARCHITECTURAL TREATMENT (SPLIT SLATE-FRACTURED RIB)	13,700 SQFT
FURNISH PRECAST PRESTRESSED CONCRETE GIRDER (70'-80')	39 EA
ERECT PRECAST PRESTRESSED CONCRETE GIRDER	39 EA
PILASTER, SOUND WALL	8 CY
JOINT SEAL (MR 1")	460 LF
BAR REINFORCING STEEL (BRIDGE)	1,215,000 LB
BAR REINFORCING STEEL (RETAINING WALL)	121,000 LB
SOUND WALL (MASONRY BLOCK)	3,050 SQFT
CONCRETE BARRIER (TYPE 60GA)	136 LF
CONCRETE BARRIER (TYPE 736 MODIFIED)	268 LF

GENERAL NOTES
LOAD AND RESISTANCE FACTOR DESIGN

DESIGN: AASHTO LRFD Bridge Design Specifications, Fourth Edition and the California Amendments preface dated November 2011

SEISMIC DESIGN: Caltrans Seismic Design Criteria (SDC), Version 1.6, November 2010

DEAD LOAD: Includes 35 psf for initial and future wearing surface

The deck dead load between the girders has been increased by a factor of 10% to allow for the use of steel deck forms.

The sound wall dead load is distributed on the left and right side of the bridge with 75% of the moment and 75% of the shear forces to the exterior girder, and 25% of the moment and 25% of the shear to the first interior girder.

LIVE LOADING: HL 93 and permit design vehicle

SEISMIC LOADING: Site specific Acceleration Response Spectra (ARS) Curve

Soil Profile: Type D, V_{S30} = 1100ft/sec
Moment Magnatude: M_{Max} = 7.3
Peak Ground Acceleration = 0.7g

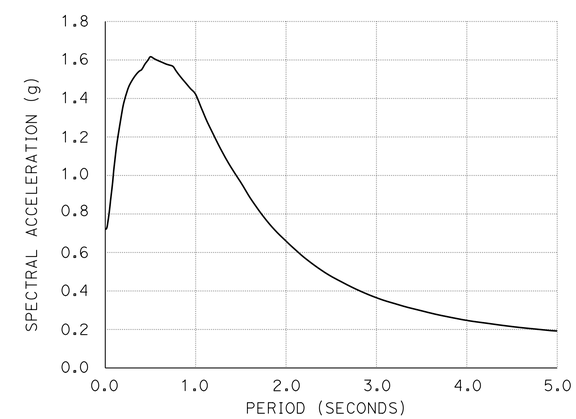

SITE SPECIFIC ARS CURVE
NO SCALE

CONCRETE: f_y = 60 ksi
f'_c = 3.6 ksi

See "PRECAST PRESTRESSED I GIRDER (LRFD)" sheet

PILE DATA TABLE

LOCATION	PILE TYPE	DESIGN LOAD (kips)	NOMINAL RESISTANCE		DESIGN TIP ELEVATION (ft)	SPECIFIED TIP ELEVATION (ft)
			COMPRESSION (kips)	TENSION (kips)		
Abut 1	24" CIDH	150	300	0	55.0 ① 84.0 ② 70.0 ③	55.0
Abut 2	24" CIDH	150	300	0	55.0 ① 84.0 ② 70.0 ③	55.0
Abut 1 Lt & Rt RETAINING WALLS	24" CIDH	125	250	-42	61.0 ① 88.0 ② 83.0 ③	61.0
Abut 2 Lt & Rt RETAINING WALLS	24" CIDH	125	250	-42	61.0 ① 88.0 ② 83.0 ③	61.0

NOTES: 1. Design tip elevations are controlled by: ① Compression, ② Settlement and ③ Lateral load.
2. The CIDH specified tip elevations shall not be raised, unless directed by Engineer.

	BY	CHECKED
DESIGN	Daniel Sessions	Greg Jones
DETAILS	Jie Tang	Greg Jones
QUANTITIES	Manode Kodsuntie	Grant Schuster

STATE OF CALIFORNIA
DEPARTMENT OF TRANSPORTATION

DIVISION OF ENGINEERING SERVICES
STRUCTURE DESIGN
DESIGN BRANCH 1

BRIDGE NO. 53-3063
POST MILE 5.92

ORR AND DAY ROAD OVERHEAD (REPLACE)
INDEX TO PLANS

STRUCTURES DESIGN DETAIL SHEET (ENGLISH) (REV. 09-01-10)

ORIGINAL SCALE IN INCHES FOR REDUCED PLANS 0 1 2 3

UNIT: 3576
PROJECT NUMBER & PHASE: 07000018351
CONTRACT NO.: 07-215954

DISREGARD PRINTS BEARING EARLIER REVISION DATES

REVISION DATES 09/23/11 10/08/12 11/14/12

SHEET 2 OF 42

FILE => 53-3063-a-itp.dgn

USERNAME => s124936 DATE PLOTTED => 26-JUN-2013 TIME PLOTTED => 15:46

DIST	COUNTY	ROUTE	POST MILES TOTAL PROJECT	SHEET No.	TOTAL SHEETS
07	LA	5	0.0/7.6	674	985

P. Vijitakula 12-28-12
REGISTERED CIVIL ENGINEER DATE

6-24-13
PLANS APPROVAL DATE

REGISTERED PROFESSIONAL ENGINEER P. VIJITAKULA No. C 54701 Exp. 12-31-13 CIVIL STATE OF CALIFORNIA

The State of California or its officers or agents shall not be responsible for the accuracy or completeness of electronic copies of this plan sheet.

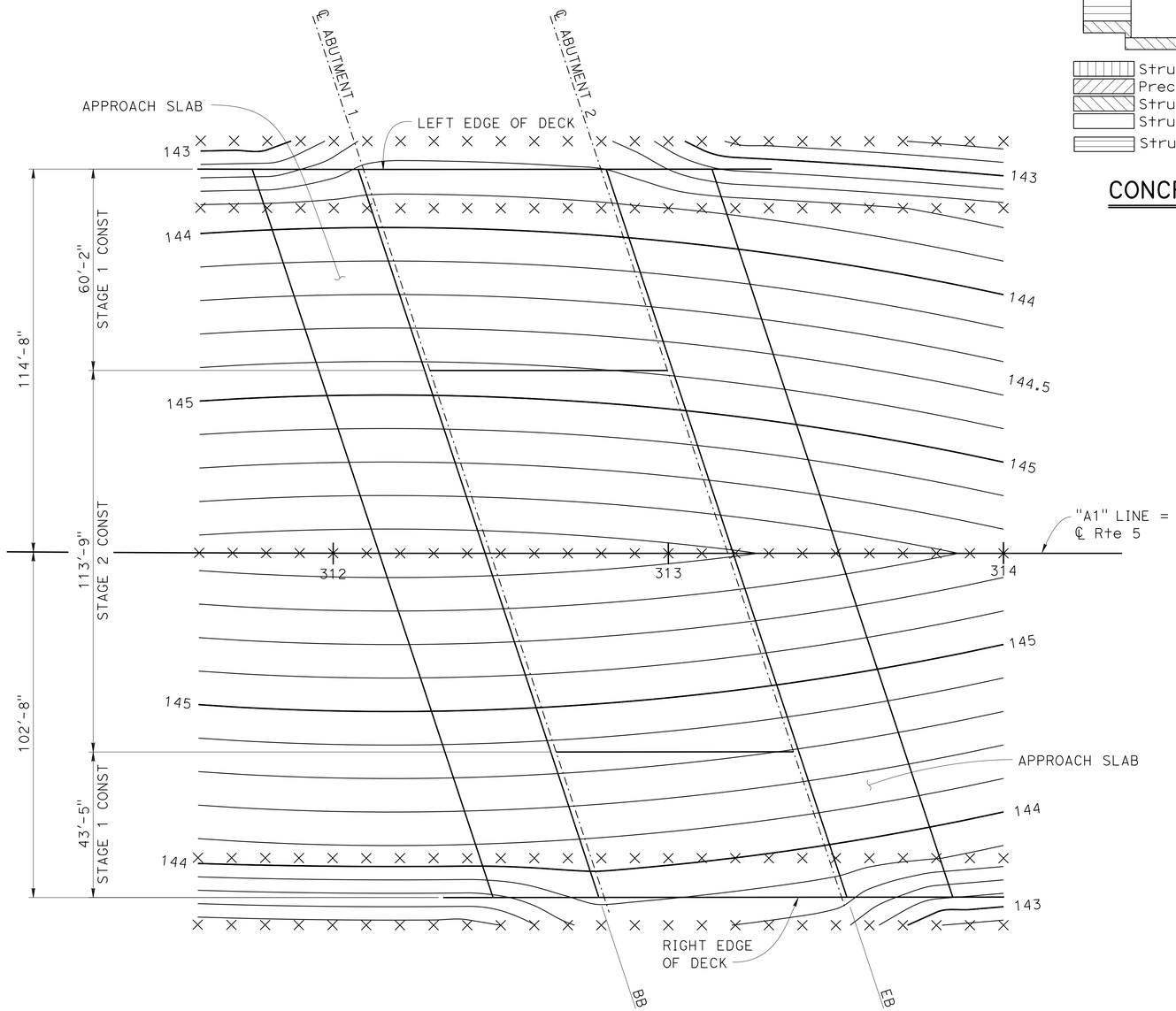

DECK CONTOURS

1" = 20'

NOTES:
Contours do not include camber
0.20' contour interval
X-10' intervals along mainline

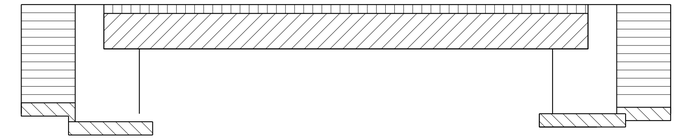

Structural Concrete, Bridge (4 ksi @ 28 days)
Precast Prestressed I Girder (see "Prestressed I Girder" sheet)
Structural Concrete, Bridge Footing
Structural Concrete, Bridge
Structural Concrete, Retaining Wall

CONCRETE STRENGTH AND TYPE LIMITS

No Scale

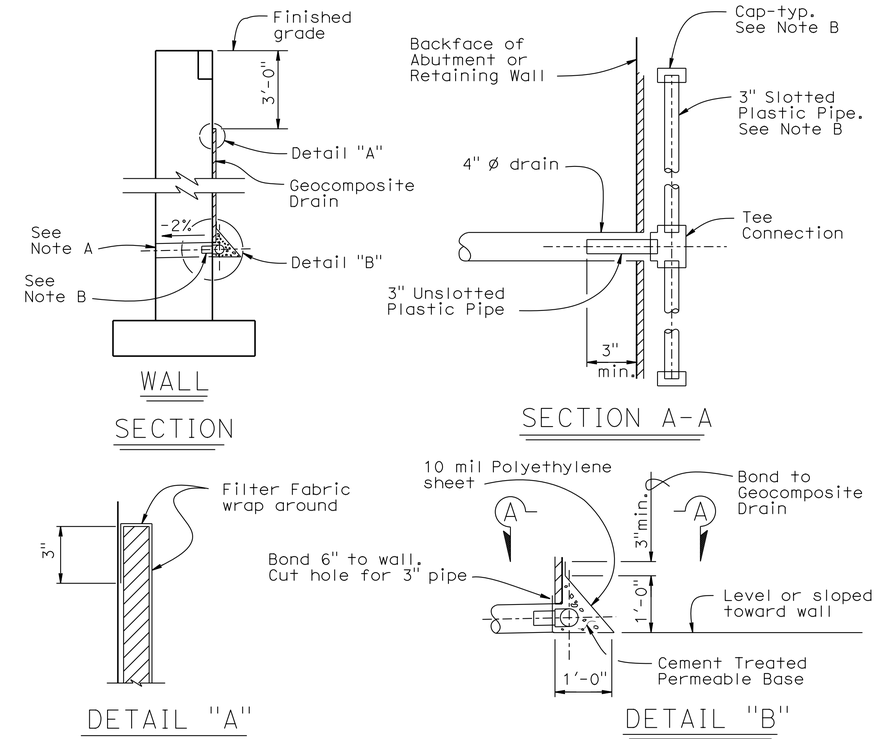

WEEP HOLE AND GEOCOMPOSITE DRAIN

ALTERNATIVE TO BRIDGE DETAIL (BO-3 / 3-1)

NOTES:

A. 4" ø drains at intermediate sag points and at 25' max center to center
For walls adjacent to sidewalks or curbs, provide 4" cast iron or asbestos cement pipe under the sidewalk to discharge through curb face.
Exposed wall drains shall be located 3"± above finished grade.

B. Geocomposite drain, cement treated permeable base, and 3"ø slotted plastic pipe continuous behind retaining wall or abutment. Cap ends of pipe. Provide "Tee" connection at each 4" ø drain.

C. Connect the low end of plastic pipe to the main outlet pipe as apprlicable.

	BY	CHECKED
DESIGN	Daniel Sessions	Greg Jones
DETAILS	Jin Zhou	Greg Jones
QUANTITIES	Manode Kodsuntie	Grant Schuster

STATE OF CALIFORNIA
DEPARTMENT OF TRANSPORTATION

DIVISION OF ENGINEERING SERVICES
STRUCTURE DESIGN
DESIGN BRANCH 1

BRIDGE NO. 53-3063
POST MILE 5.92

ORR AND DAY ROAD OVERHEAD (REPLACE)

DECK CONTOURS

STRUCTURES DESIGN DETAIL SHEET (ENGLISH) (REV. 09-01-10)

ORIGINAL SCALE IN INCHES FOR REDUCED PLANS 0 1 2 3

UNIT: 3576
PROJECT NUMBER & PHASE: 07000018351
CONTRACT NO.: 07-215954

DISREGARD PRINTS BEARING EARLIER REVISION DATES
REVISION DATES 01/06/12 02/04/13 09/25/13

SHEET 3 OF 42

FILE => 53-3063-c-deck01.dgn

USERNAME => s124496 DATE PLOTTED => 26-JUN-2013 TIME PLOTTED => 15:46

DIST	COUNTY	ROUTE	POST MILES TOTAL PROJECT	SHEET No.	TOTAL SHEETS
07	LA	5	0.0/7.6	675	985

P. Vijitakula
REGISTERED CIVIL ENGINEER 12-28-12 DATE

6-24-13
PLANS APPROVAL DATE

REGISTERED PROFESSIONAL ENGINEER P. VIJITAKULA No. C 54701 Exp. 12-31-13 CIVIL STATE OF CALIFORNIA

The State of California or its officers or agents shall not be responsible for the accuracy or completeness of electronic copies of this plan sheet.

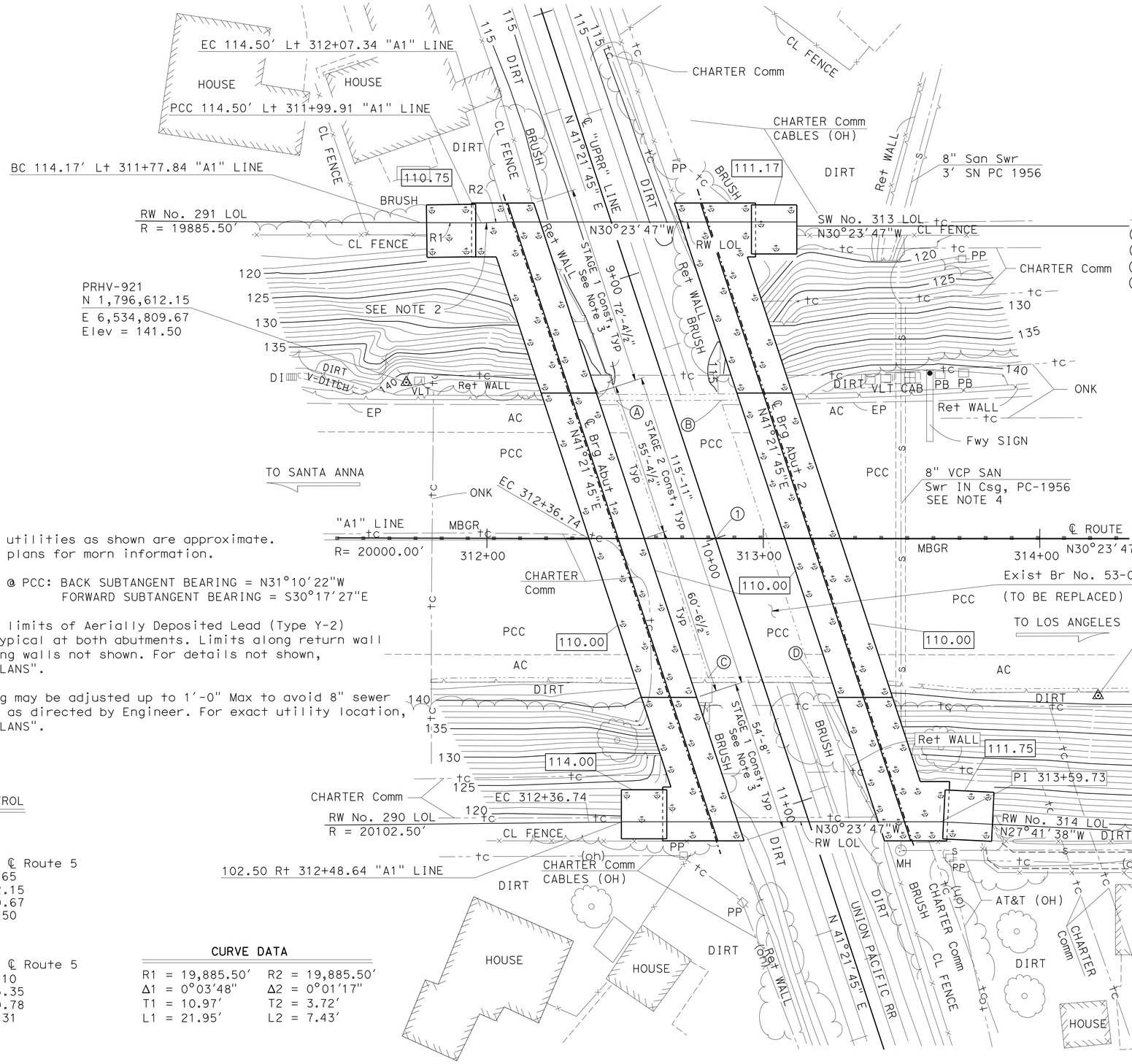

BRIDGE LOCATION (Exist Br No. 53-0813)

Ⓐ 49.93 Ft Lt "A1" Line, ℄ Route 5, Sta 312+46.90, Elev = 142.23±
Ⓑ 50.01 Ft Lt "A1" Line, ℄ Route 5, Sta 312+84.58, Elev = 142.30±
Ⓒ 50.44 Ft Rt "A1" Line, ℄ Route 5, Sta 312+80.02, Elev = 142.05±
Ⓓ 50.18 Ft Rt "A1" Line, ℄ Route 5, Sta 313+17.87, Elev = 141.99±

LEGEND:

STRUCTURE EXCAVATION (TYPE Y-2)

STRUCTURE EXCAVATION

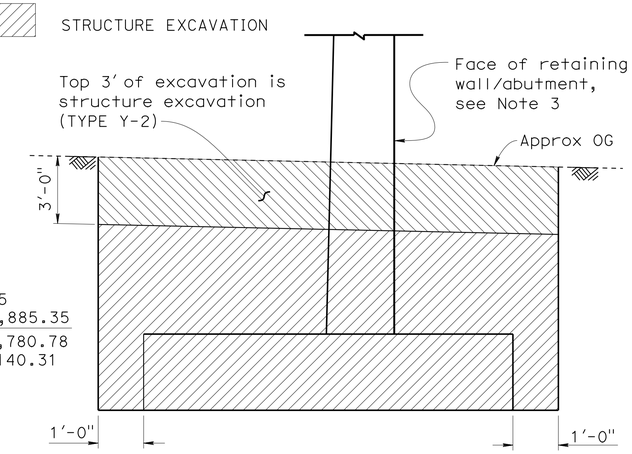

LIMITS OF PAYMENT FOR STRUCTURE EXCAVATION (TYPE Y-2) (AERIALLY DEPOSITED LEAD)

NO SCALE

NOTES:

1. Underground utilities as shown are approximate. See utility plans for morn information.
2. Angle point @ PCC: BACK SUBTANGENT BEARING = N31°10'22"W
   FORWARD SUBTANGENT BEARING = S30°17'27"E
3. Approximate limits of Aerially Deposited Lead (Type Y-2) shown are typical at both abutments. Limits along return wall and retaining walls not shown. For details not shown, see "ROAD PLANS".
4. Pile spacing may be adjusted up to 1'-0" Max to avoid 8" sewer line chain, as directed by Engineer. For exact utility location, see "ROAD PLANS".

SURVEY CONTROL

PRHV-921
FND: 2x2
56.33 Ft Lt Lt ℄ Route 5
Sta 311+70.65
N 1,796,612.15
E 6,534,809.67
Elev = 141.50

PRHV-915
FND: Spk
56.87 Ft Rt Rt ℄ Route 5
Sta 314+21.10
N 1,796,885.35
E 6,534,780.78
Elev = 140.31

CURVE DATA

R1 = 19,885.50'	R2 = 19,885.50'
Δ1 = 0°03'48"	Δ2 = 0°01'17"
T1 = 10.97'	T2 = 3.72'
L1 = 21.95'	L2 = 7.43'

LEGEND:

XXX.XX - Indicates bottom of footing elevation

- Indicates 24" Ø CIDH piles (Not all piles shown)

① Sta 312+82.71 "A1" POT = Sta 10+00.00 "UPRR" POT

PRELIMINARY INVESTIGATION SECTION

SCALE	VERT.DATUM NAVD88	PHOTOGRAMMETRY AS OF: X			
1"=20'	HORZ.DATUM NAD83 (1986)	SURVEYED	BY DISTRICT 07	CHECKED	BY T.PHUNG 04/2011
ALIGNMENT TIES Dist. Traverse Sheet		DRAFTED	BY V.PHAM 04/2011	CHECKED	BY S.ALIVIO 04/2011

	BY	CHECKED
DESIGN	Daniel Sessions	Greg Jones
DETAILS	B. Huddleston/J. Tang	Greg Jones
QUANTITIES	Manode Kodsuntie	Grant Schuster

STATE OF CALIFORNIA DEPARTMENT OF TRANSPORTATION

DIVISION OF ENGINEERING SERVICES STRUCTURE DESIGN DESIGN BRANCH 1

BRIDGE NO. 53-3063
POST MILE 5.92

ORR AND DAY ROAD OVERHEAD (REPLACE)
FOUNDATION PLAN

STRUCTURES FOUNDATION PLAN SHEET (ENGLISH) (REV. 09-01-10)

ORIGINAL SCALE IN INCHES FOR REDUCED PLANS 0 1 2 3

UNIT: 3576
PROJECT NUMBER & PHASE: 07000018351
CONTRACT NO.: 07-215954

DISREGARD PRINTS BEARING EARLIER REVISION DATES

REVISION DATES 4/26/11 02/05/13 09/26/13

SHEET 4 OF 42

FILE => 53-3063-e-fdp101.dgn

USERNAME => s124496 DATE PLOTTED => 26-JUN-2013 TIME PLOTTED => 15:46

DIST	COUNTY	ROUTE	POST MILES TOTAL PROJECT	SHEET No.	TOTAL SHEETS
07	LA	5	0.0/7.6	676	985

P. Vijitakula 12-28-12
REGISTERED CIVIL ENGINEER DATE

6-24-13
PLANS APPROVAL DATE

REGISTERED PROFESSIONAL ENGINEER P. VIJITAKULA No. C 54701 Exp. 12-31-13 CIVIL STATE OF CALIFORNIA

The State of California or its officers or agents shall not be responsible for the accuracy or completeness of electronic copies of this plan sheet.

NOTE:
Abutment 1 shown, Abutment 2 is similar
Approach Slab Type (30S) is not shown.

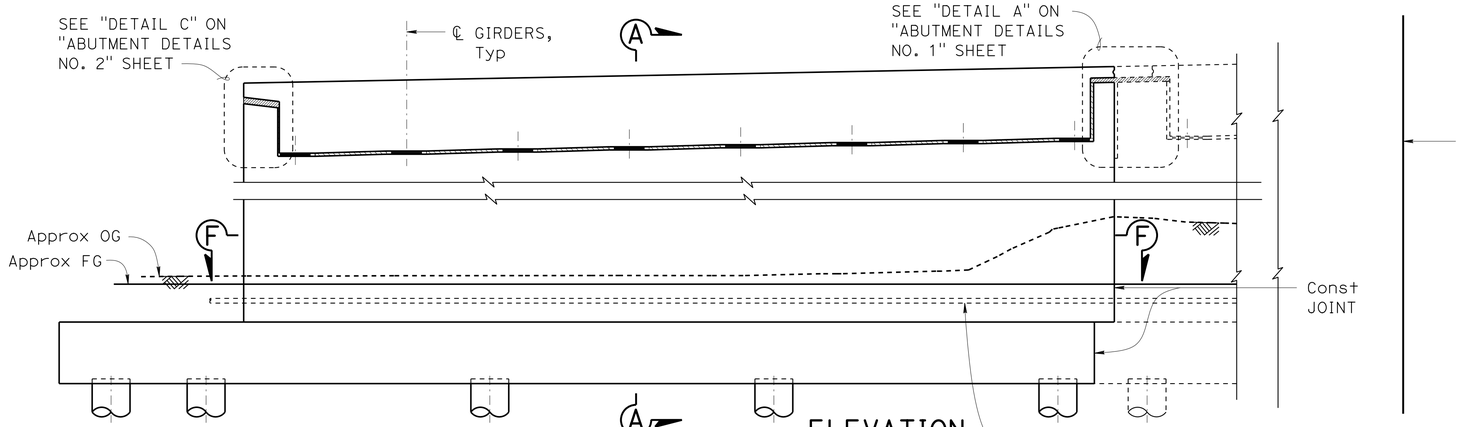

ELEVATION
1/4" = 1'-0"

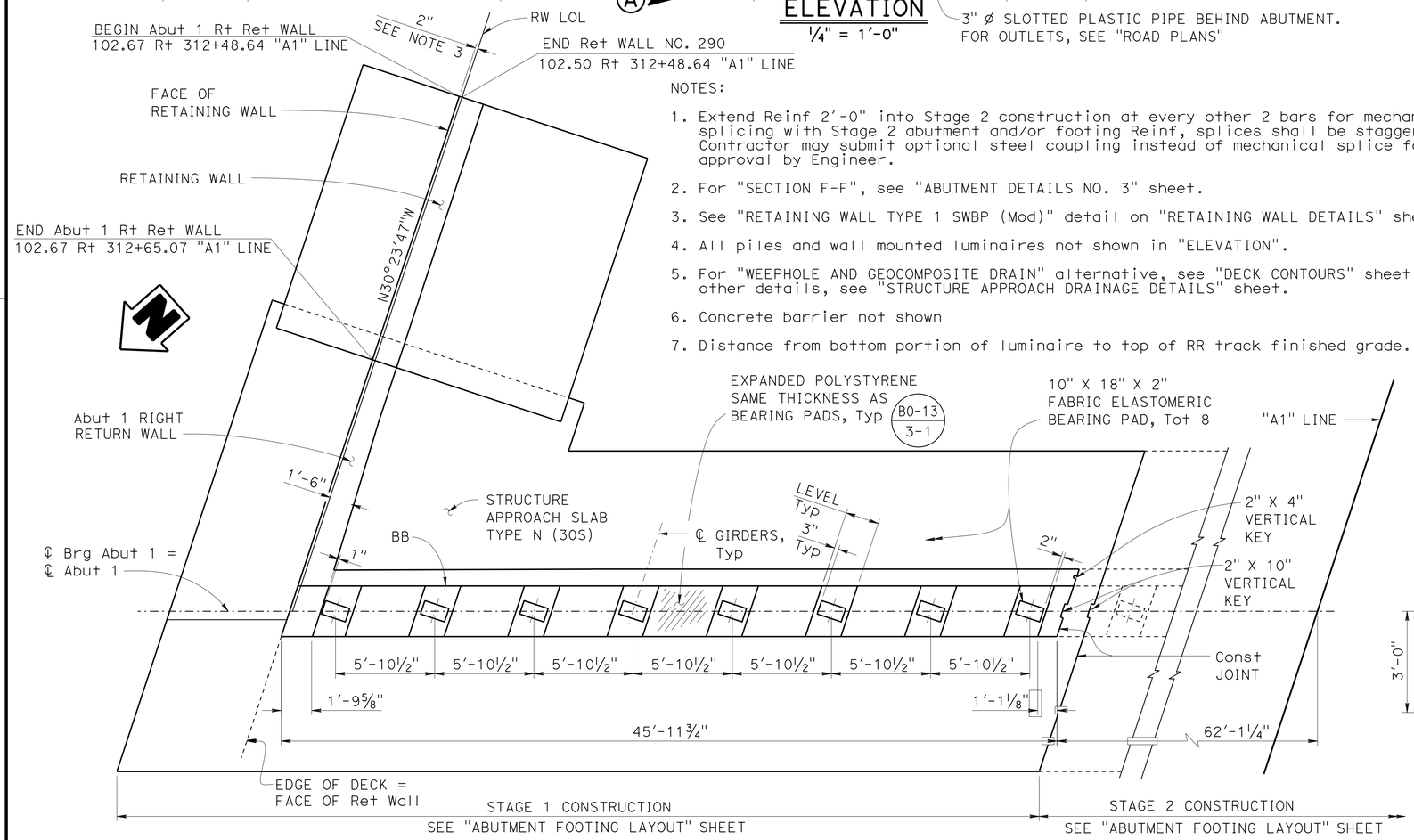

NOTES:

1. Extend Reinf 2'-0" into Stage 2 construction at every other 2 bars for mechanical splicing with Stage 2 abutment and/or footing Reinf, splices shall be staggered. Contractor may submit optional steel coupling instead of mechanical splice for approval by Engineer.
2. For "SECTION F-F", see "ABUTMENT DETAILS NO. 3" sheet.
3. See "RETAINING WALL TYPE 1 SWBP (Mod)" detail on "RETAINING WALL DETAILS" sheet.
4. All piles and wall mounted luminaires not shown in "ELEVATION".
5. For "WEEPHOLE AND GEOCOMPOSITE DRAIN" alternative, see "DECK CONTOURS" sheet. For other details, see "STRUCTURE APPROACH DRAINAGE DETAILS" sheet.
6. Concrete barrier not shown
7. Distance from bottom portion of luminaire to top of RR track finished grade.

PLAN
1/4" = 1'-0"

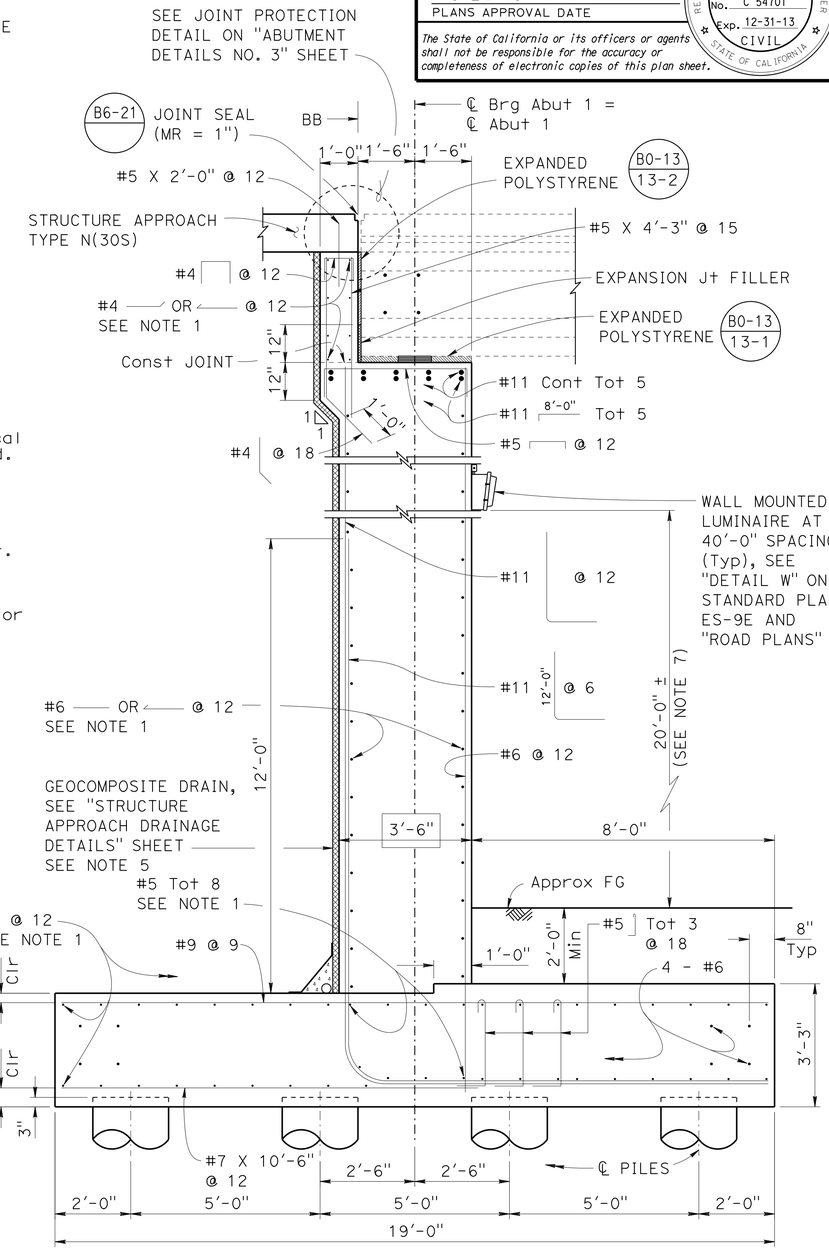

SECTION A-A
1/2" = 1'-0"

	BY	CHECKED
DESIGN	Daniel Sessions	Grant Schuster
DETAILS	Jie Tang	Grant Schuster
QUANTITIES	Manode Kodsuntie	Grant Schuster

STATE OF CALIFORNIA
DEPARTMENT OF TRANSPORTATION

DIVISION OF ENGINEERING SERVICES
STRUCTURE DESIGN
DESIGN BRANCH 1

BRIDGE NO. 53-3063
POST MILE 5.92

ORR AND DAY ROAD OVERHEAD (REPLACE)
ABUTMENT 1 RIGHT STAGE 1 LAYOUT

STRUCTURES DESIGN DETAIL SHEET (ENGLISH) (REV. 09-01-10)

ORIGINAL SCALE IN INCHES FOR REDUCED PLANS 0 1 2 3

UNIT: 3576
PROJECT NUMBER & PHASE: 07000018351
CONTRACT NO.: 07-215954

DISREGARD PRINTS BEARING EARLIER REVISION DATES

REVISION DATES 09/23/11 05/31/13 09/26/13

SHEET 5 OF 42

FILE => 53-3063-f-a1_lo1.dgn

USERNAME => s124496 DATE PLOTTED => 26-JUN-2013 TIME PLOTTED => 15:46

DIST	COUNTY	ROUTE	POST MILES TOTAL PROJECT	SHEET No.	TOTAL SHEETS
07	LA	5	0.0/7.6	677	985

P. Vijitakula
REGISTERED CIVIL ENGINEER 12-28-12
DATE

6-24-13
PLANS APPROVAL DATE

REGISTERED PROFESSIONAL ENGINEER
P. VIJITAKULA
No. C 54701
Exp. 12-31-13
CIVIL
STATE OF CALIFORNIA

The State of California or its officers or agents shall not be responsible for the accuracy or completeness of electronic copies of this plan sheet.

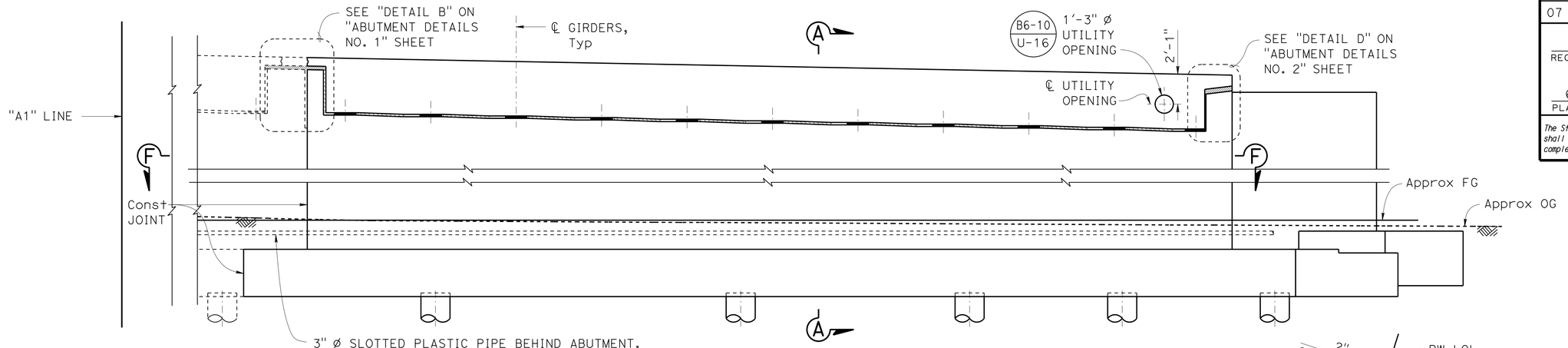

ELEVATION
¼" = 1'-0"

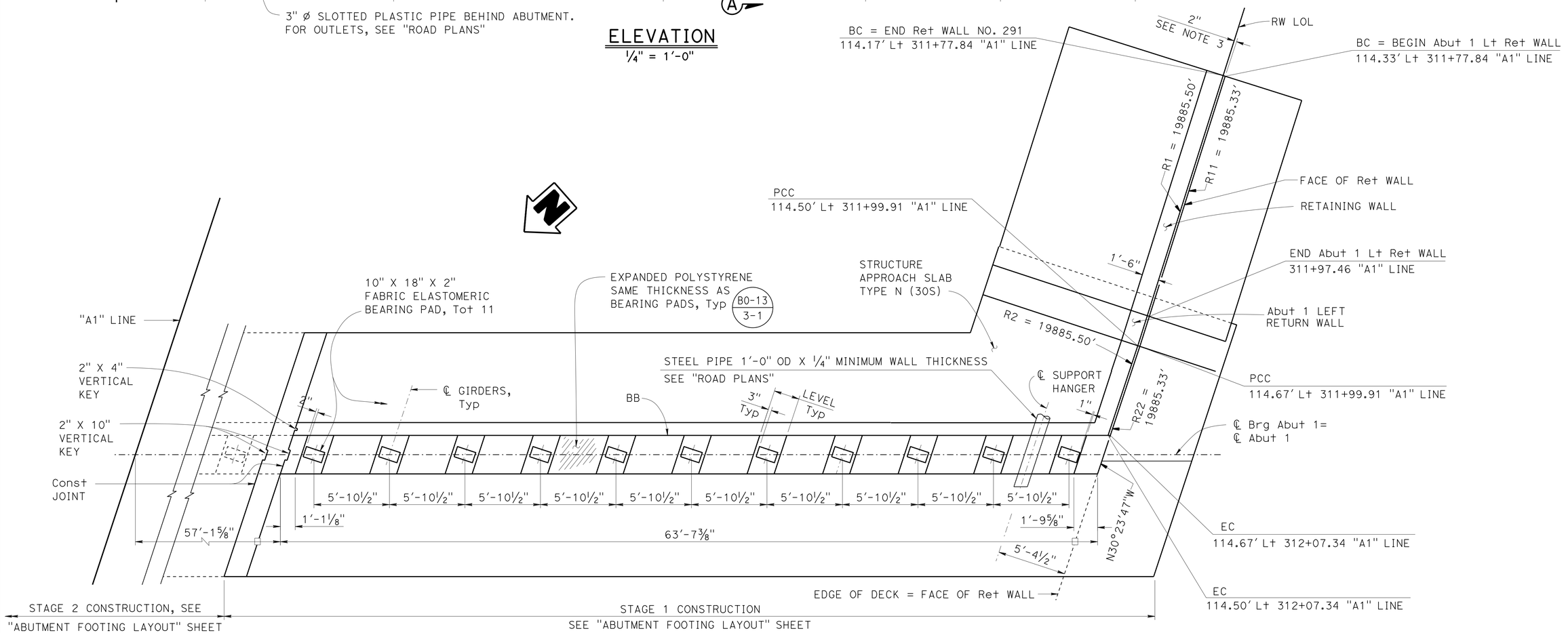

PLAN
¼" = 1'-0"

NOTE: For NOTES, see "ABUTMENT 1 RIGHT STAGE 1 LAYOUT" sheet.
Approach Slab Type N (30S) is not shown.

	BY	CHECKED
DESIGN	Daniel Sessions	Grant Schuster
DETAILS	Jie Tang	Grant Schuster
QUANTITIES	Manode Kodsuntie	Grant Schuster

STATE OF CALIFORNIA
DEPARTMENT OF TRANSPORTATION

DIVISION OF ENGINEERING SERVICES
STRUCTURE DESIGN
DESIGN BRANCH 1

BRIDGE NO. 53-3063
POST MILE 5.92

ORR AND DAY ROAD OVERHEAD (REPLACE)
ABUTMENT 1 LEFT STAGE 1 LAYOUT

STRUCTURES DESIGN DETAIL SHEET (ENGLISH) (REV. 09-01-10)

ORIGINAL SCALE IN INCHES FOR REDUCED PLANS 0 1 2 3

UNIT: 3576
PROJECT NUMBER & PHASE: 07000018351
CONTRACT NO.: 07-215954

DISREGARD PRINTS BEARING EARLIER REVISION DATES
REVISION DATES 09/28/11 05/30/13 02/05/13
SHEET 6 OF 42

FILE => 53-3063-f-a1_lo2.dgn

USERNAME => s124936 DATE PLOTTED => 26-JUN-2013 TIME PLOTTED => 15:46

DIST	COUNTY	ROUTE	POST MILES TOTAL PROJECT	SHEET No.	TOTAL SHEETS
07	LA	5	0.0/7.6	678	985

P. Vijitakula 12-28-12
REGISTERED CIVIL ENGINEER DATE

6-24-13
PLANS APPROVAL DATE

REGISTERED PROFESSIONAL ENGINEER
P. VIJITAKULA
No. C 54701
Exp. 12-31-13
CIVIL
STATE OF CALIFORNIA

The State of California or its officers or agents shall not be responsible for the accuracy or completeness of electronic copies of this plan sheet.

NOTES:
For "NOTES", see "ABUTMENT 1 RIGHT STAGE 1 LAYOUT" sheet.
Approach slab Type N (30S) is not shown.

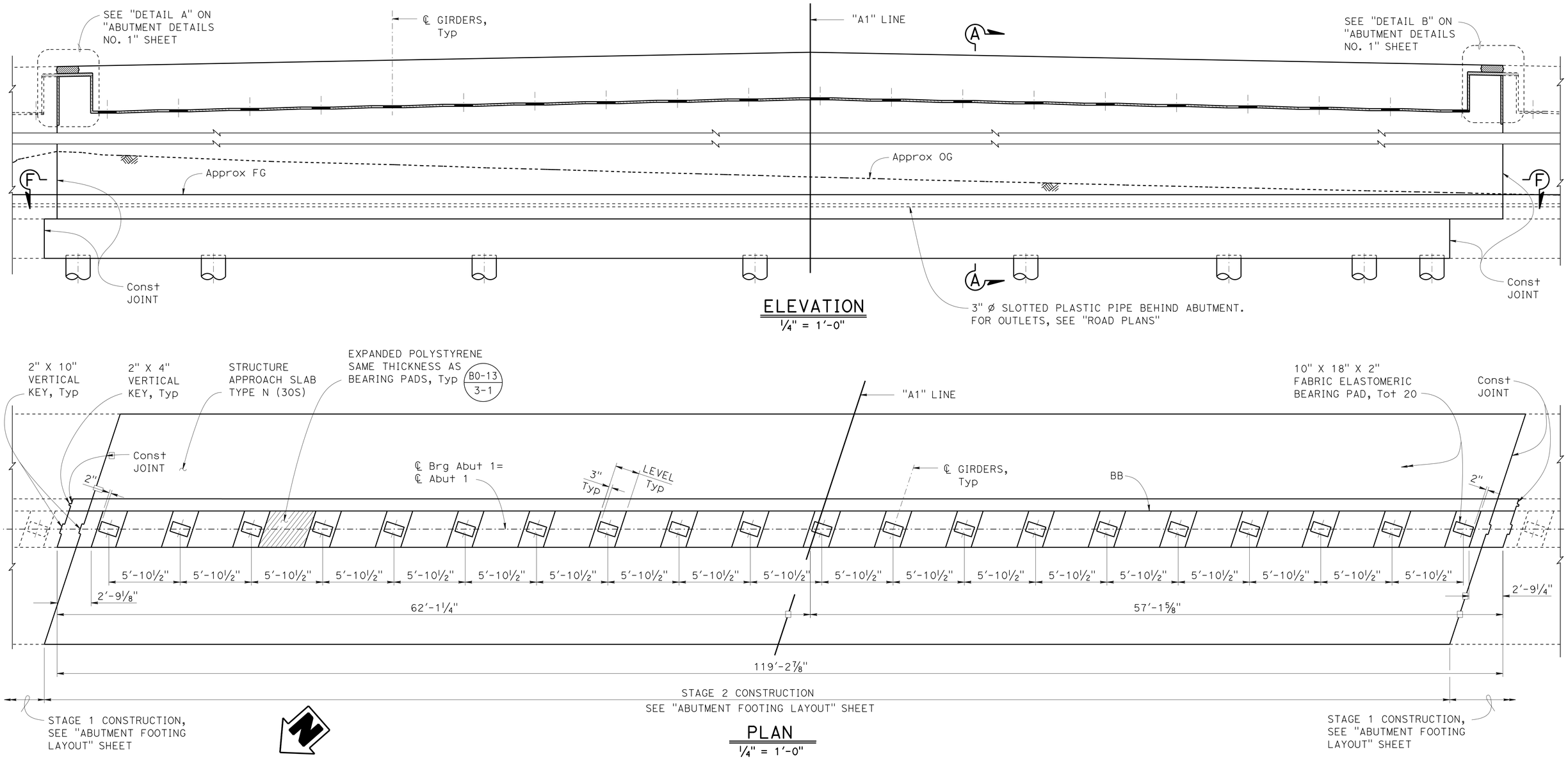

	BY	CHECKED
DESIGN	Daniel Sessions	Grant Schuster
DETAILS	Jie Tang	Grant Schuster
QUANTITIES	Manode Kodsuntie	Grant Schuster

STATE OF CALIFORNIA
DEPARTMENT OF TRANSPORTATION

DIVISION OF ENGINEERING SERVICES
STRUCTURE DESIGN
DESIGN BRANCH 1

BRIDGE NO. 53-3063
POST MILE 5.92

ORR AND DAY ROAD OVERHEAD (REPLACE)
ABUTMENT 1 STAGE 2 LAYOUT

STRUCTURES DESIGN DETAIL SHEET (ENGLISH) (REV. 09-01-10)

ORIGINAL SCALE IN INCHES FOR REDUCED PLANS 0 1 2 3

UNIT: 3576
PROJECT NUMBER & PHASE: 07000018351
CONTRACT NO.: 07-215954

DISREGARD PRINTS BEARING EARLIER REVISION DATES
REVISION DATES 09/29/11 03/26/12 07/25/12 10/18/12

SHEET 7 OF 42

FILE => 53-3063-f-a1_lo3.dgn

USERNAME => s124496 DATE PLOTTED => 26-JUN-2013 TIME PLOTTED => 15:46

DIST	COUNTY	ROUTE	POST MILES TOTAL PROJECT	SHEET No.	TOTAL SHEETS
07	LA	5	0.0/7.6	679	985

P. Vijitakula
REGISTERED CIVIL ENGINEER 12-28-12 DATE

6-24-13
PLANS APPROVAL DATE

REGISTERED PROFESSIONAL ENGINEER P. VIJITAKULA No. C 54701 Exp. 12-31-13 CIVIL STATE OF CALIFORNIA

The State of California or its officers or agents shall not be responsible for the accuracy or completeness of electronic copies of this plan sheet.

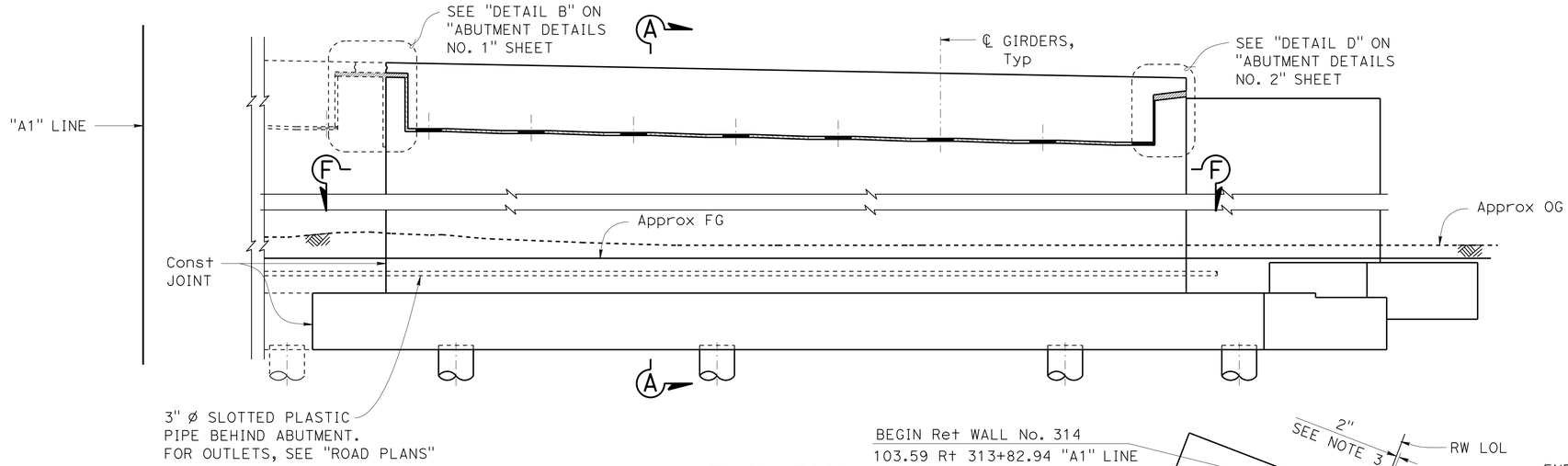

ELEVATION
1/4" = 1'-0"

NOTES: For NOTES, see "ABUTMENT 1 RIGHT STAGE 1 LAYOUT" sheet.
Approach Slab Type N (30S) is not shown.

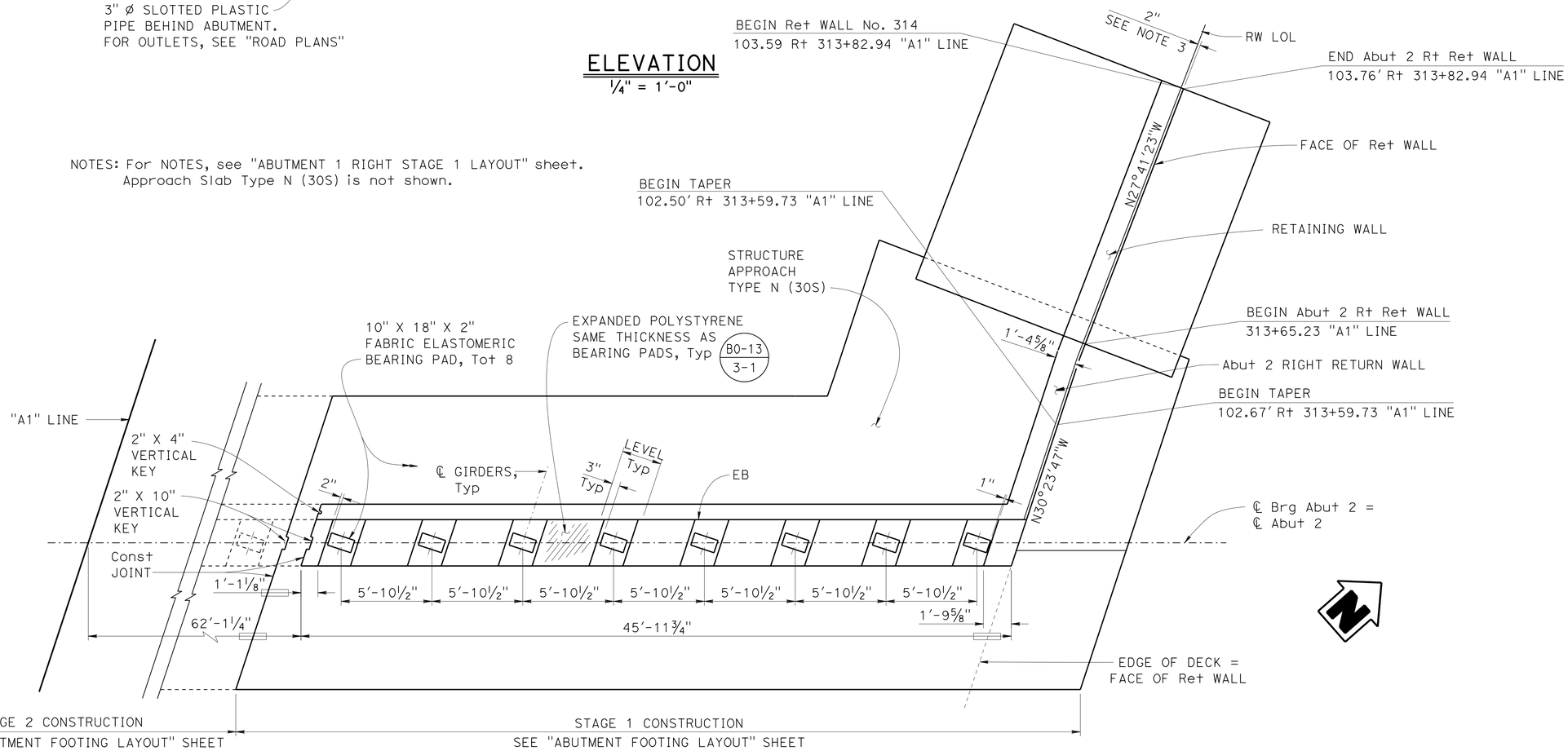

PLAN
1/4" = 1'-0"

	BY	CHECKED
DESIGN	Daniel Sessions	Grant Schuster
DETAILS	Jie Tang	Grant Schuster
QUANTITIES	Manode Kodsuntie	Grant Schuster

STATE OF CALIFORNIA
DEPARTMENT OF TRANSPORTATION

DIVISION OF ENGINEERING SERVICES
STRUCTURE DESIGN
DESIGN BRANCH 1

BRIDGE NO. 53-3063
POST MILE 5.92

ORR AND DAY ROAD OVERHEAD (REPLACE)
ABUTMENT 2 RIGHT STAGE 1 LAYOUT

STRUCTURES DESIGN DETAIL SHEET (ENGLISH) (REV. 09-01-10)

ORIGINAL SCALE IN INCHES FOR REDUCED PLANS 0 1 2 3

UNIT: 3576
PROJECT NUMBER & PHASE: 07000018351
CONTRACT NO.: 07-215954

DISREGARD PRINTS BEARING EARLIER REVISION DATES

REVISION DATES: 10/03/11 02/05/13 09/24/12

SHEET 8 OF 42

FILE => 53-3063-f-a2_ia1.dgn

USERNAME => s124496 DATE PLOTTED => 26-JUN-2013 TIME PLOTTED => 15:47

DIST	COUNTY	ROUTE	POST MILES TOTAL PROJECT	SHEET No.	TOTAL SHEETS
07	LA	5	0.0/7.6	680	985

P. Vijitakula
REGISTERED CIVIL ENGINEER 12-28-12 DATE

6-24-13
PLANS APPROVAL DATE

REGISTERED PROFESSIONAL ENGINEER
P. VIJITAKULA
No. C 54701
Exp. 12-31-13
CIVIL
STATE OF CALIFORNIA

The State of California or its officers or agents shall not be responsible for the accuracy or completeness of electronic copies of this plan sheet.

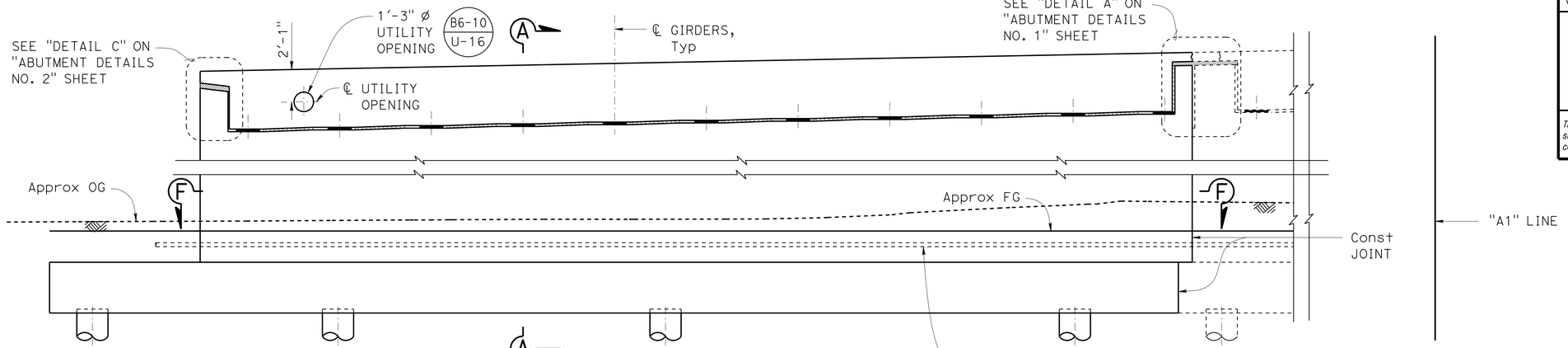

ELEVATION
1/4" = 1'-0"

NOTES: For NOTES, see "ABUTMENT 1 RIGHT STAGE 1 LAYOUT" sheet.
Approach Slab Type N (30S) is not shown.

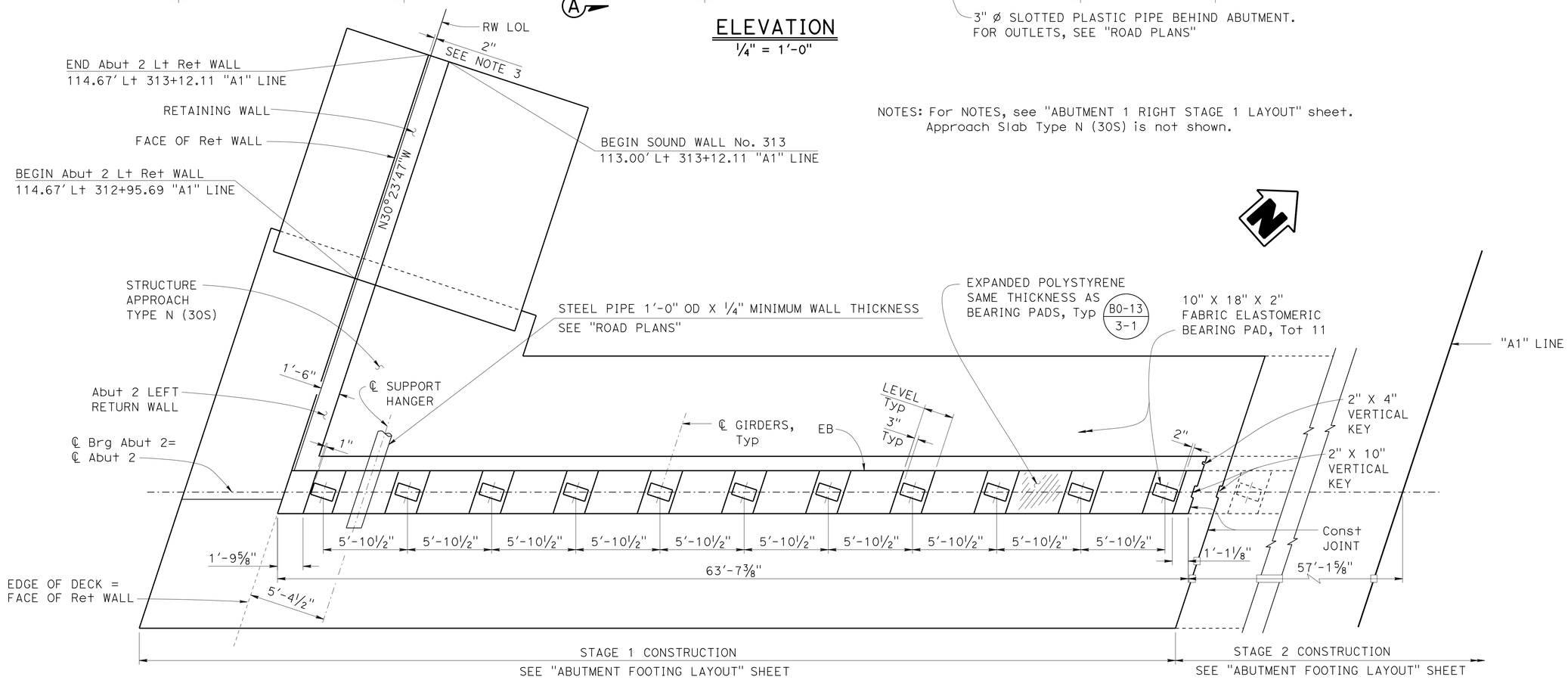

PLAN
1/4" = 1'-0"

	BY	CHECKED
DESIGN	Daniel Sessions	Grant Schuster
DETAILS	Jie Tang	Grant Schuster
QUANTITIES	Manode Kodsuntie	Grant Schuster

STATE OF CALIFORNIA
DEPARTMENT OF TRANSPORTATION

DIVISION OF ENGINEERING SERVICES
STRUCTURE DESIGN
DESIGN BRANCH 1

BRIDGE NO. 53-3063
POST MILE 5.92

ORR AND DAY ROAD OVERHEAD (REPLACE)
ABUTMENT 2 LEFT STAGE 1 LAYOUT

STRUCTURES DESIGN DETAIL SHEET (ENGLISH) (REV. 09-01-10)

ORIGINAL SCALE IN INCHES FOR REDUCED PLANS 0 1 2 3

UNIT: 3576
PROJECT NUMBER & PHASE: 07000018351
CONTRACT NO.: 07-215954

DISREGARD PRINTS BEARING EARLIER REVISION DATES

REVISION DATES: 10/05/11 05/30/13 02/05/13

SHEET 9 OF 42

FILE => 53-3063-f-a2_lo2.dgn

USERNAME => s124496 DATE PLOTTED => 26-JUN-2013 TIME PLOTTED => 15:47

DIST	COUNTY	ROUTE	POST MILES TOTAL PROJECT	SHEET No.	TOTAL SHEETS
07	LA	5	0.0/7.6	681	985

P. Vijitakula 12-28-12
REGISTERED CIVIL ENGINEER DATE

6-24-13
PLANS APPROVAL DATE

REGISTERED PROFESSIONAL ENGINEER
P. VIJITAKULA
No. C 54701
Exp. 12-31-13
CIVIL
STATE OF CALIFORNIA

The State of California or its officers or agents shall not be responsible for the accuracy or completeness of electronic copies of this plan sheet.

NOTES: For NOTES, see "ABUTMENT 1 RIGHT STAGE 1 LAYOUT" sheet.
Approach Slab Type N (30S) is not shown.

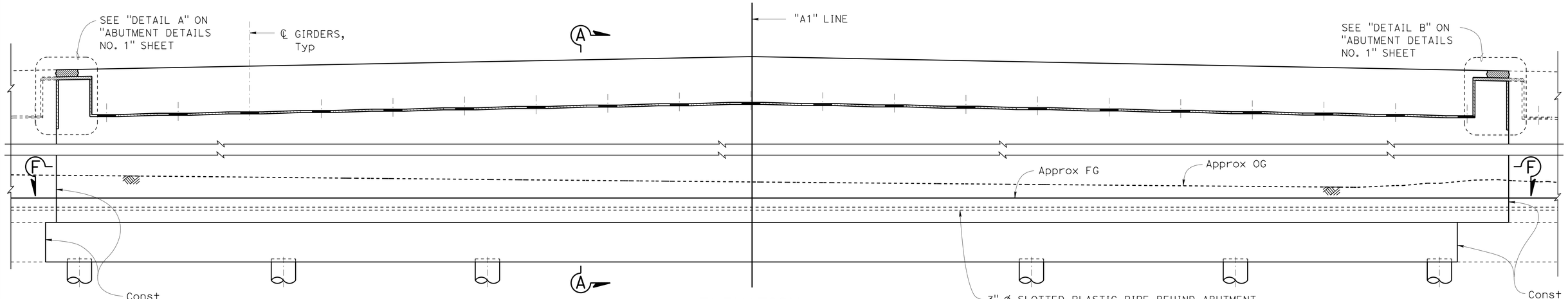

ELEVATION
1/4" = 1'-0"

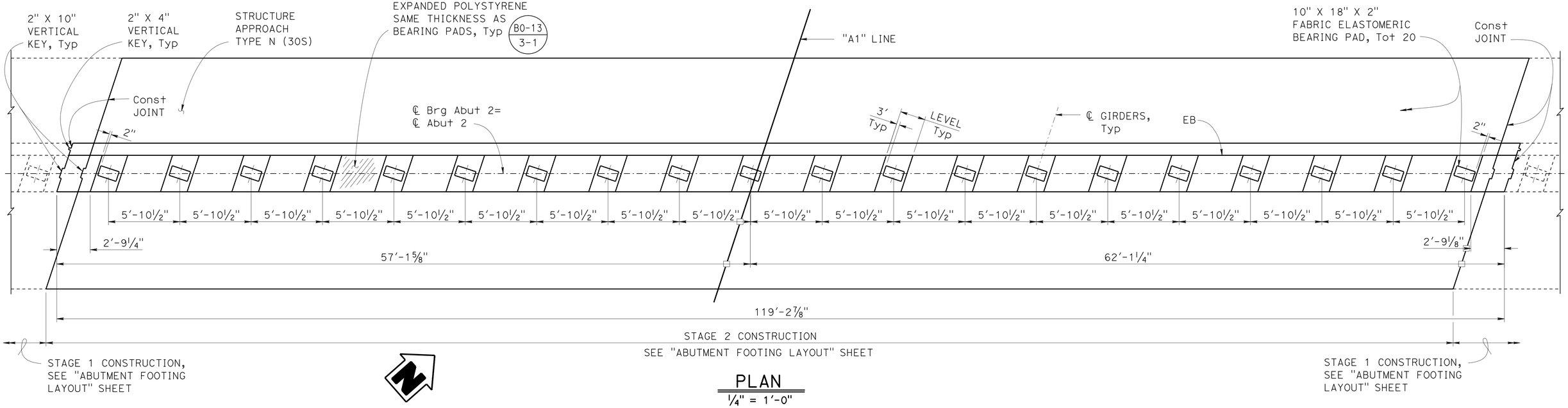

PLAN
1/4" = 1'-0"

	BY	CHECKED
DESIGN	Daniel Sessions	Grant Schuster
DETAILS	Jie Tang	Grant Schuster
QUANTITIES	Manode Kodsuntie	Grant Schuster

STATE OF CALIFORNIA
DEPARTMENT OF TRANSPORTATION

DIVISION OF ENGINEERING SERVICES
STRUCTURE DESIGN
DESIGN BRANCH 1

BRIDGE NO. 53-3063
POST MILE 5.92

ORR AND DAY ROAD OVERHEAD (REPLACE)
ABUTMENT 2 STAGE 2 LAYOUT

STRUCTURES DESIGN DETAIL SHEET (ENGLISH) (REV. 09-01-10)

ORIGINAL SCALE IN INCHES FOR REDUCED PLANS 0 1 2 3

UNIT: 3576
PROJECT NUMBER & PHASE: 07000018351
CONTRACT NO.: 07-215954

DISREGARD PRINTS BEARING EARLIER REVISION DATES
REVISION DATES 10/06/11 10/18/12 09/24/12
SHEET 10 OF 42

FILE => 53-3063-f-a2_lo3.dgn

USERNAME => s124496 DATE PLOTTED => 26-JUN-2013 TIME PLOTTED => 15:47

DIST	COUNTY	ROUTE	POST MILES TOTAL PROJECT	SHEET No.	TOTAL SHEETS
07	LA	5	0.0/7.6	682	985

P. Vijitakula 12-28-12
REGISTERED CIVIL ENGINEER DATE

6-24-13
PLANS APPROVAL DATE

REGISTERED PROFESSIONAL ENGINEER P. VIJITAKULA No. C 54701 Exp. 12-31-13 CIVIL STATE OF CALIFORNIA

The State of California or its officers or agents shall not be responsible for the accuracy or completeness of electronic copies of this plan sheet.

NOTES:

1. Limits of piles to be placed during stage 1 construction.
2. ℄ Pile to edge of footing = 2'-0", Typ
3. Abutment 1 pile layout shown, Abutment 2 pile layout is simialr except otherwise noted.

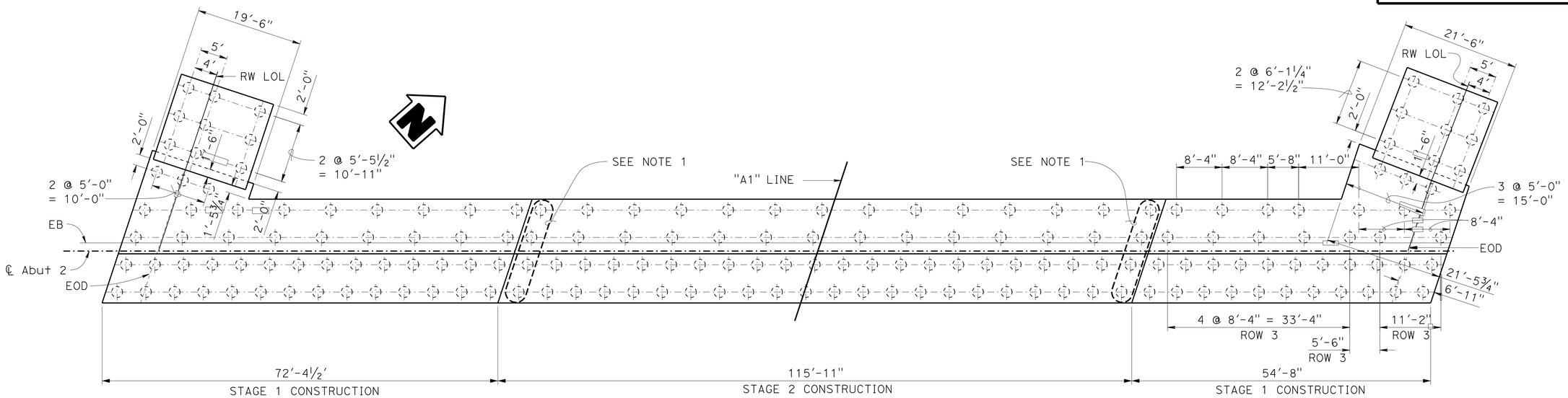

ABUTMENT 2 PILE LAYOUT

1" = 10'

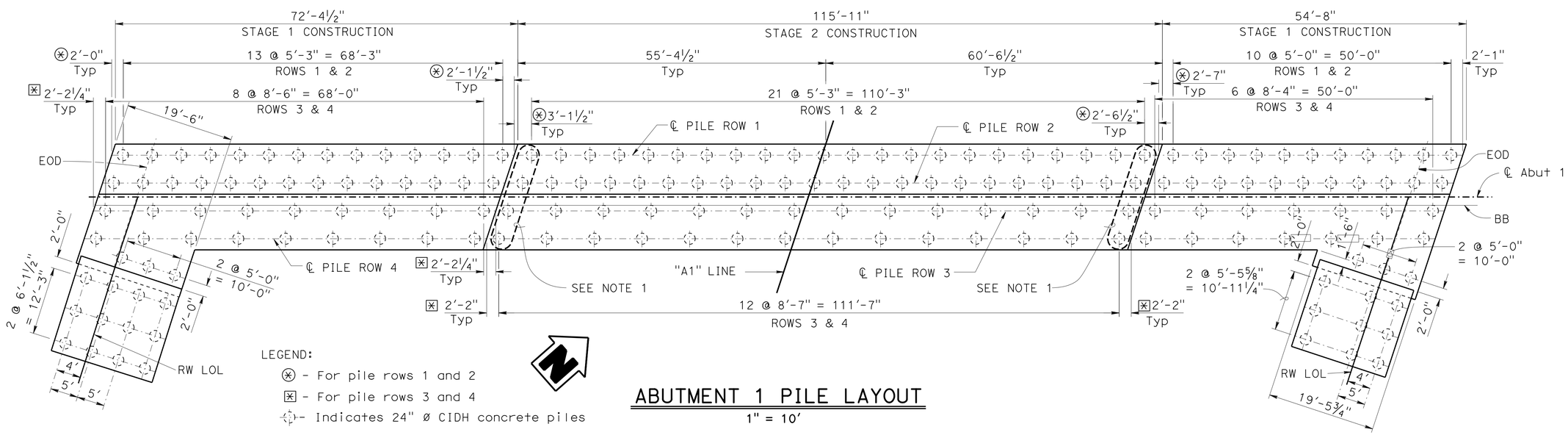

LEGEND:

⊛ - For pile rows 1 and 2

⊠ - For pile rows 3 and 4

-⊕- Indicates 24" Ø CIDH concrete piles

ABUTMENT 1 PILE LAYOUT

1" = 10'

	BY	CHECKED
DESIGN	Daniel Sessions	Grant Schuster
DETAILS	Jie Tang	Grant Schuster
QUANTITIES	Manode Kodsuntie	Grant Schuster

STATE OF CALIFORNIA
DEPARTMENT OF TRANSPORTATION

DIVISION OF ENGINEERING SERVICES
STRUCTURE DESIGN
DESIGN BRANCH 1

BRIDGE NO. 53-3063
POST MILE 5.92

ORR AND DAY ROAD OVERHEAD (REPLACE)

ABUTMENT FOOTING LAYOUT

STRUCTURES DESIGN DETAIL SHEET (ENGLISH) (REV. 09-01-10)

ORIGINAL SCALE IN INCHES FOR REDUCED PLANS 0 1 2 3

UNIT: 3576
PROJECT NUMBER & PHASE: 07000018351
CONTRACT NO.: 07-215954

DISREGARD PRINTS BEARING EARLIER REVISION DATES

REVISION DATES 12/14/11 02/06/13 10/04/13

SHEET 11 OF 42

FILE => 53-3063-f-aftfto.dgn

USERNAME => s124496 DATE PLOTTED => 26-JUN-2013 TIME PLOTTED => 15:47

DIST	COUNTY	ROUTE	POST MILES TOTAL PROJECT	SHEET No.	TOTAL SHEETS
07	LA	5	0.0/7.6	683	985

P. Vijitakula
REGISTERED CIVIL ENGINEER 12-28-12 DATE

6-24-13
PLANS APPROVAL DATE

REGISTERED PROFESSIONAL ENGINEER P. VIJITAKULA No. C 54701 Exp. 12-31-13 CIVIL STATE OF CALIFORNIA

The State of California or its officers or agents shall not be responsible for the accuracy or completeness of electronic copies of this plan sheet.

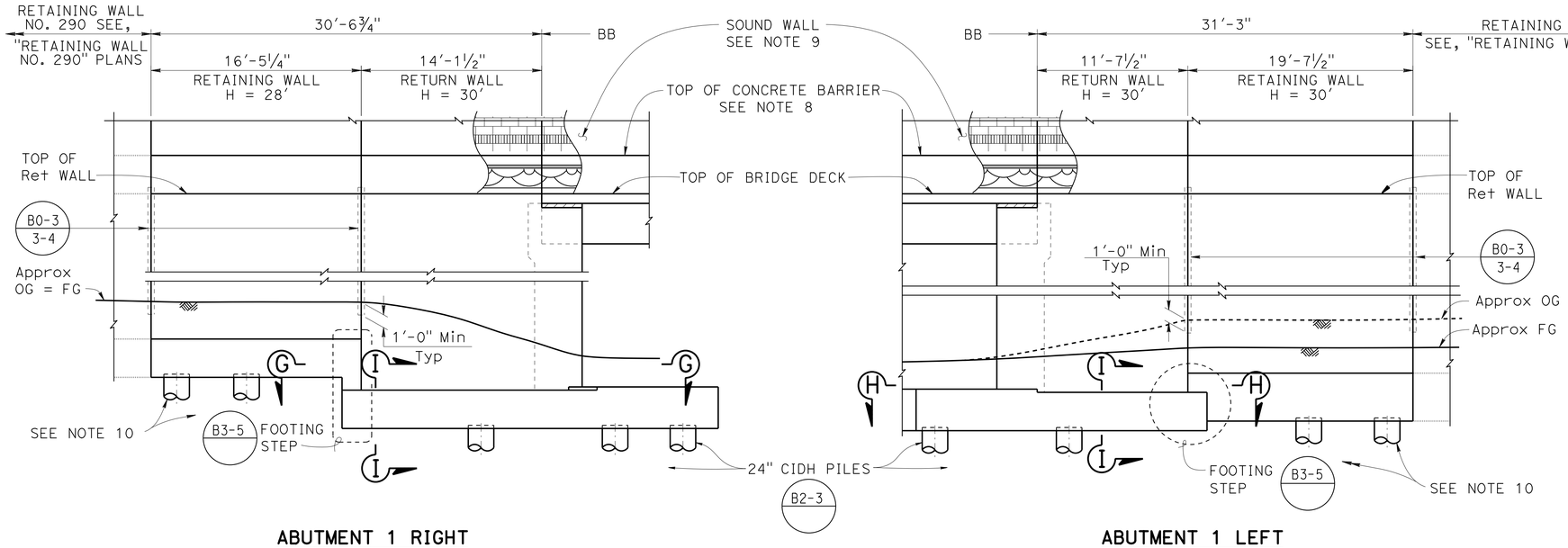

ABUTMENT 1 RIGHT

ABUTMENT 1 LEFT

NOTES:

1. All longitudinal dimensions measured along RW LOL.
2. Waterstops at expansion joints shall be extended 6" into concrete barrier. For details and drainage notes not shown, see Standard Plans B3-5.
3. For RETAINING WALL TYPE 1 SWBP (Mod) and "SECTION I-I" details, see "RETAINING WALL DETAILS" sheet.
4. For barrier dimensions and details not shown, see "BARRIER SECTION" on "RETAINING WALL DETAILS" sheet.
5. For "SECTION G-G", see "ABUTMENT DETAILS NO. 3" sheet.
6. For "SECTION H-H", see "ABUTMENT DETAILS NO. 4" sheet.
7. For retaining wall architectural treatment, see "RETAINING WALL ARCHITECTURAL DETAILS" sheet.
8. For concrete barrier architectural treatment, see "CONCRETE BARRIER ARCHITECTURAL DETAILS" sheet.
9. For sound wall architectural treatment, see "SOUND WALL ARCHITECTURAL DETAILS" sheet.
10. For pile details, see "MISCELLANEOUS DETAILS" sheet. Not all piles shown in "ELEVATION"
11. Wall Mounted Luminaire Not Shown.

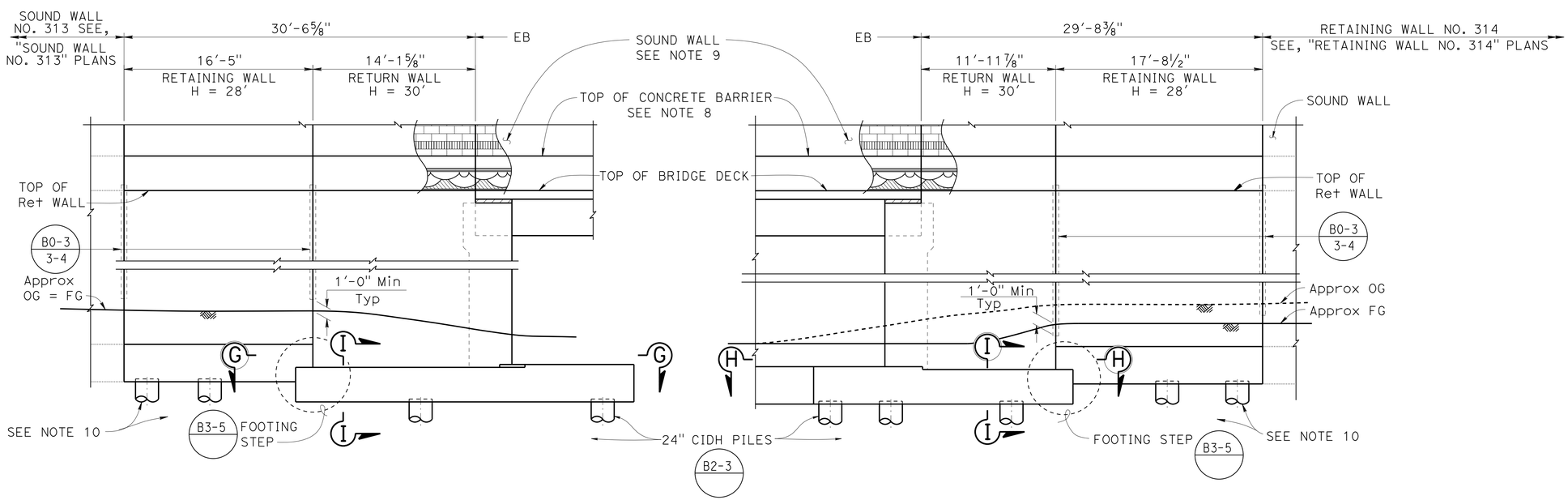

ABUTMENT 2 LEFT

ELEVATION
3/16" = 1'-0"

ABUTMENT 2 RIGHT

	BY	CHECKED
DESIGN	Daniel Sessions	Grant Schuster
DETAILS	Jie Tang	Grant Schuster
QUANTITIES	Manode Kodsuntie	Grant Schuster

STATE OF CALIFORNIA
DEPARTMENT OF TRANSPORTATION

DIVISION OF ENGINEERING SERVICES
STRUCTURE DESIGN
DESIGN BRANCH 1

BRIDGE NO. 53-3063
POST MILE 5.92

ORR AND DAY ROAD OVERHEAD (REPLACE)
ABUTMENT RETAINING WALL ELEVATIONS

STRUCTURES DESIGN DETAIL SHEET (ENGLISH) (REV. 09-01-10)

ORIGINAL SCALE IN INCHES FOR REDUCED PLANS 0 1 2 3

UNIT: 3576
PROJECT NUMBER & PHASE: 07000018351
CONTRACT NO.: 07-215954

DISREGARD PRINTS BEARING EARLIER REVISION DATES

REVISION DATES 01/14/12 12/13/12 10/18/12

SHEET 12 OF 42

FILE => 53-3063-f-atretwall01.dgn

USERNAME => s124496 DATE PLOTTED => 26-JUN-2013 TIME PLOTTED => 15:47

DIST	COUNTY	ROUTE	POST MILES TOTAL PROJECT	SHEET No.	TOTAL SHEETS
07	LA	5	0.0/7.6	684	985

P. Vijitakula 12-28-12
REGISTERED CIVIL ENGINEER DATE

6-24-13
PLANS APPROVAL DATE

REGISTERED PROFESSIONAL ENGINEER P. VIJITAKULA No. C 54701 Exp. 12-31-13 CIVIL STATE OF CALIFORNIA

The State of California or its officers or agents shall not be responsible for the accuracy or completeness of electronic copies of this plan sheet.

REINFORCEMENT TABLE

DESIGN H	28′	30′
W	17′-9″	19′-0″
C	6′-0″	6′-3″
B	11′-9″	12′-9″
F	3′-3″	3′-9″
BATTER	7/8 : 12	1 : 12
ⓐ BARS	#6 @ 6	#8 @ 9
ⓑ BARS	#8 @ 6	#10 @ 9
ha	9′-3″	15′-0″
hb	18′-9″	21′-0″
ⓒ BARS	#11 @ 6	#10 @ 9
ⓓ BARS	#7 @ 12	#6 @ 9

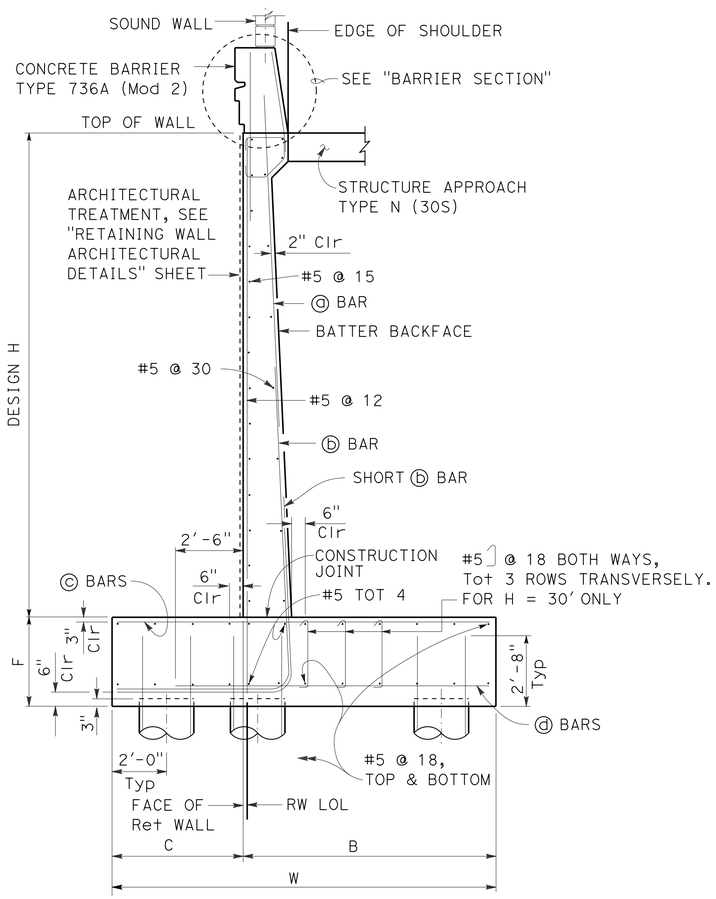

RETAINING WALL TYPE 1 SWBP (Mod)

No scale

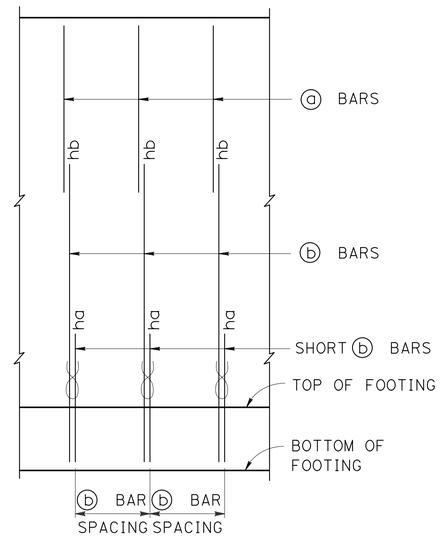

ELEVATION

No scale

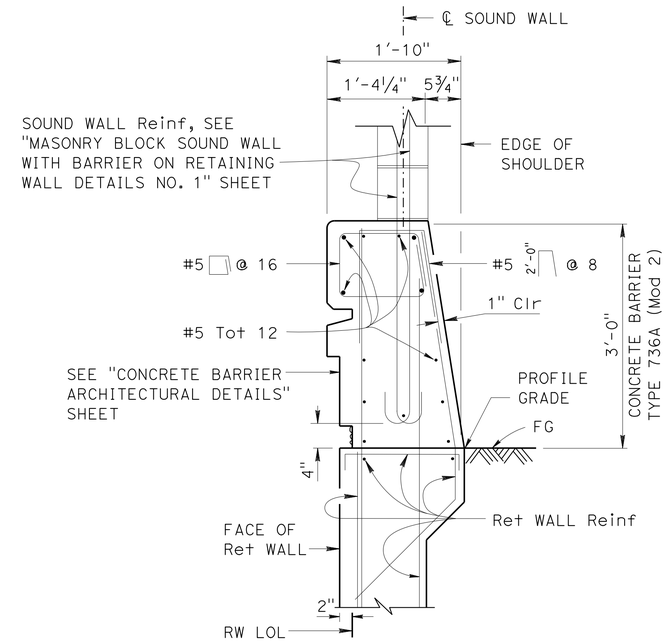

BARRIER SECTION

NO SCALE

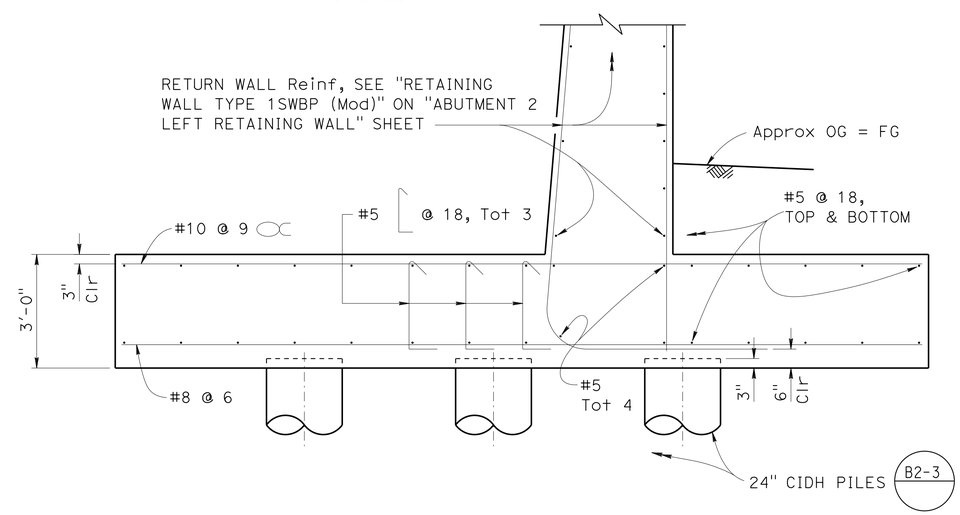

SECTION I-I

½" = 1′-0"

NOTE: Abutment 2 right return wall shown in "SECTION I-I", Abutment 1 left/right retaining walls and Abutment 2 left return wall are similar.

DESIGN	BY Daniel Sessions	CHECKED Grant Schuster	
DETAILS	BY Jie Tang	CHECKED Grant Schuster	
QUANTITIES	BY Manode Kodsuntie	CHECKED Grant Schuster	

STATE OF CALIFORNIA
DEPARTMENT OF TRANSPORTATION

DIVISION OF ENGINEERING SERVICES
STRUCTURE DESIGN
DESIGN BRANCH 1

BRIDGE NO. 53-3063
POST MILE 5.92

ORR AND DAY ROAD OVERHEAD (REPLACE)
RETAINING WALL DETAILS

STRUCTURES DESIGN DETAIL SHEET (ENGLISH) (REV. 09-01-10)

ORIGINAL SCALE IN INCHES FOR REDUCED PLANS 0 1 2 3

UNIT: 3576
PROJECT NUMBER & PHASE: 07000018351
CONTRACT NO.: 07-215954

DISREGARD PRINTS BEARING EARLIER REVISION DATES

REVISION DATES 10-04-12 10-18-12

SHEET 13 OF 42

FILE => 53-3063-f-retwalldt04.dgn

USERNAME => s124496 DATE PLOTTED => 26-JUN-2013 TIME PLOTTED => 15:47

DIST	COUNTY	ROUTE	POST MILES TOTAL PROJECT	SHEET No.	TOTAL SHEETS
07	LA	5	0.0/7.6	685	985

P. Vijitakula 12-28-12
REGISTERED CIVIL ENGINEER DATE

6-24-13
PLANS APPROVAL DATE

REGISTERED PROFESSIONAL ENGINEER P. VIJITAKULA No. C 54701 Exp. 12-31-13 CIVIL STATE OF CALIFORNIA

The State of California or its officers or agents shall not be responsible for the accuracy or completeness of electronic copies of this plan sheet.

NOTES:

1. Abutment reinforcement shown shall be extended to bottom mat of footing reinforcement.
2. For locations of "DETAIL A" , see "ABUTMENT 1 R+ STAGE 1 LAYOUT", "ABUTMENT 1 STAGE 2 LAYOUT", ABUTMENT 2 L+ STAGE 1 LAYOUT" and "ABUTMENT 2 STAGE 2 LAYOUT" sheets.
3. For locations of "DETAIL B" , see "ABUTMENT 1 L+ STAGE 1 LAYOUT", "ABUTMENT 1 STAGE 2 LAYOUT", ABUTMENT 2 R+ STAGE 1 LAYOUT" and "ABUTMENT 2 STAGE 2 LAYOUT" sheets.

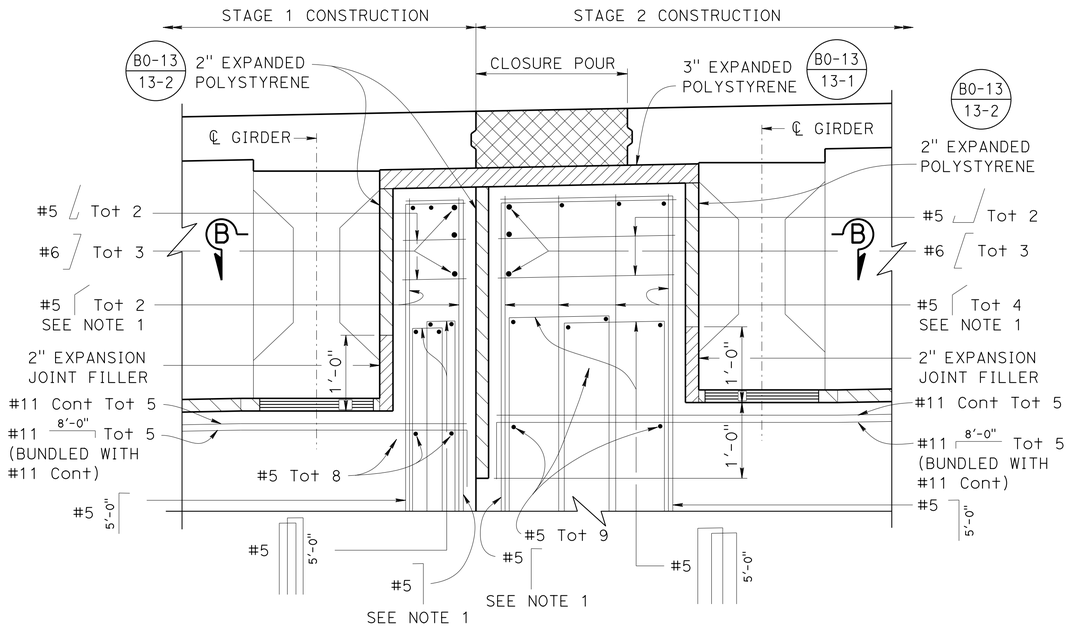

DETAIL A
1" = 1'-0"

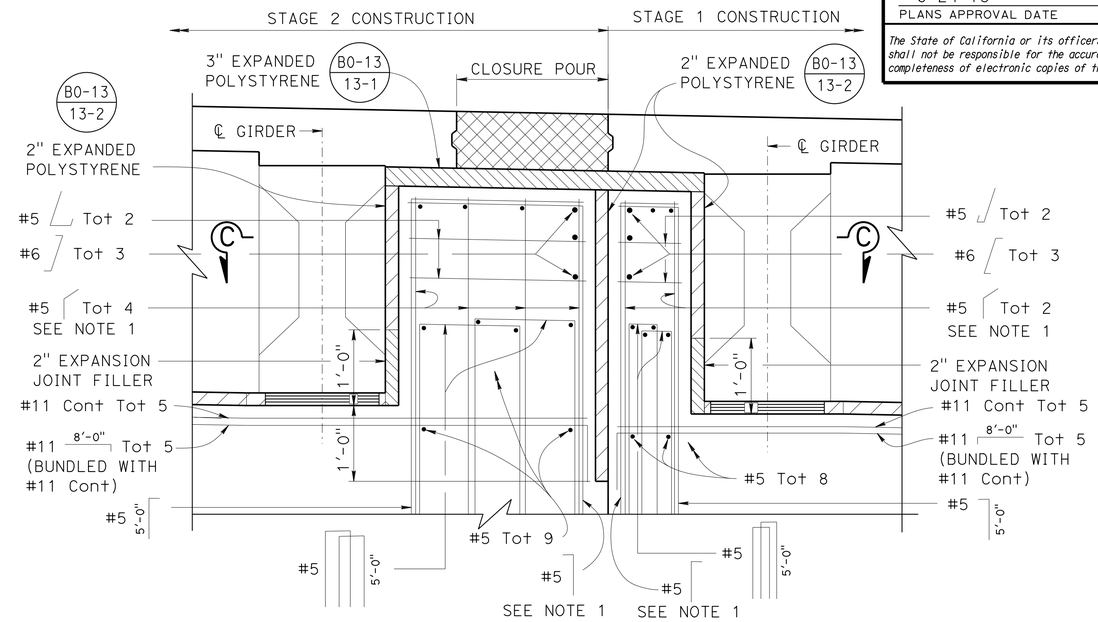

DETAIL B
1" = 1'-0"

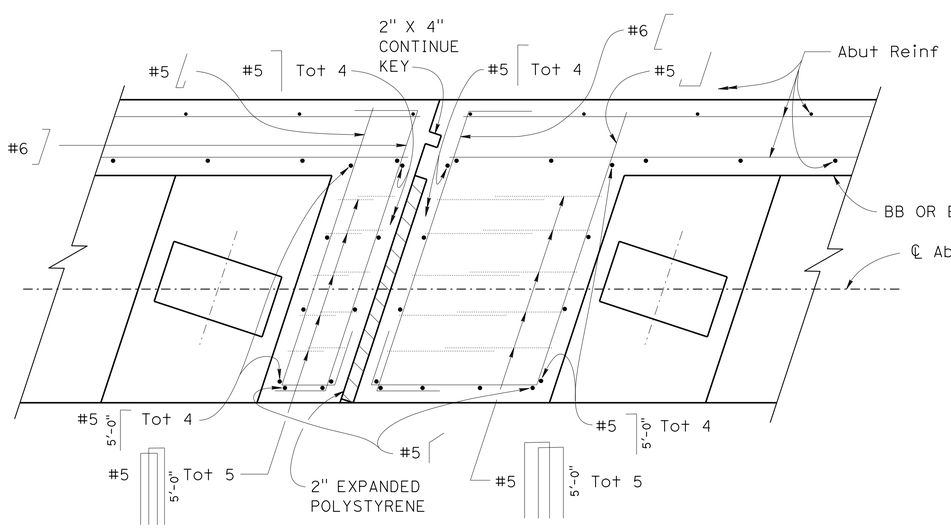

SECTION B-B
1" = 1'-0"

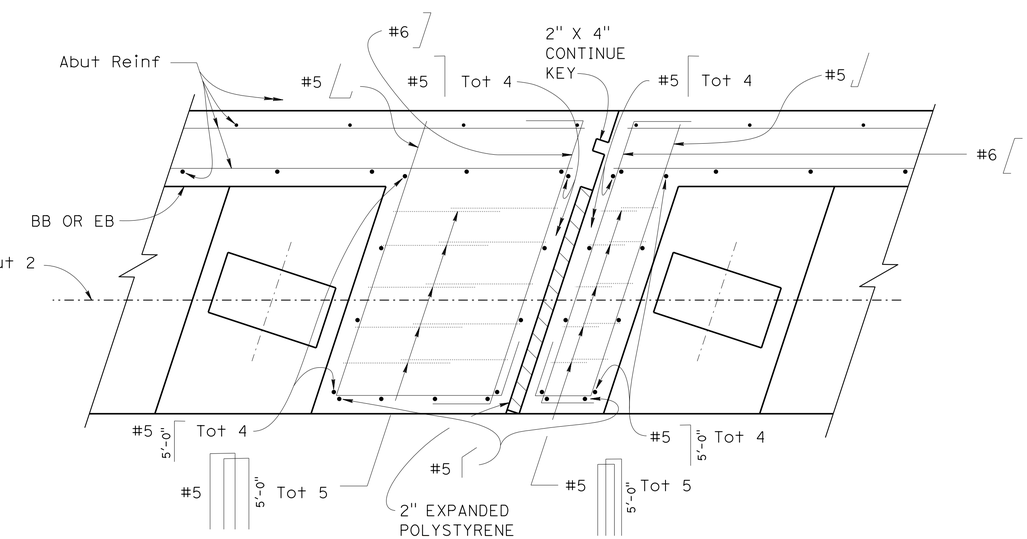

SECTION C-C
1" = 1'-0"

DESIGN	BY Daniel Sessions	CHECKED Grant Schuster	
DETAILS	BY Jie Tang	CHECKED Grant Schuster	
QUANTITIES	BY Manode Kodsuntie	CHECKED Grant Schuster	

STATE OF CALIFORNIA
DEPARTMENT OF TRANSPORTATION

DIVISION OF ENGINEERING SERVICES
STRUCTURE DESIGN
DESIGN BRANCH 1

BRIDGE NO. 53-3063
POST MILE 5.92

ORR AND DAY ROAD OVERHEAD (REPLACE)
ABUTMENT DETAILS NO. 1

STRUCTURES DESIGN DETAIL SHEET (ENGLISH) (REV. 09-01-10)

ORIGINAL SCALE IN INCHES FOR REDUCED PLANS 0 1 2 3

UNIT: 3576
PROJECT NUMBER & PHASE: 07000018351
CONTRACT NO.: 07-215954

DISREGARD PRINTS BEARING EARLIER REVISION DATES

REVISION DATES 12/16/11 04/09/12 07/25/12 10/18/12

SHEET 14 OF 42

FILE => 53-3063-g-abutdet01.dgn

USERNAME => s124496 DATE PLOTTED => 26-JUN-2013 TIME PLOTTED => 15:47

DIST	COUNTY	ROUTE	POST MILES TOTAL PROJECT	SHEET No.	TOTAL SHEETS
07	LA	5	0.0/7.6	686	985

P. Vijitakula
REGISTERED CIVIL ENGINEER 12-28-12 DATE

6-24-13
PLANS APPROVAL DATE

REGISTERED PROFESSIONAL ENGINEER
P. VIJITAKULA
No. C 54701
Exp. 12-31-13
CIVIL
STATE OF CALIFORNIA

The State of California or its officers or agents shall not be responsible for the accuracy or completeness of electronic copies of this plan sheet.

NOTES:

1. Abutment reinforcement shown shall be extended to bottom mat of footing reinforcement.
2. For locations of "DETAIL C", see "ABUTMENT 1 Rt STAGE 1 LAYOUT" and "ABUTMENT 2 Lt STAGE 1 LAYOUT" sheets.
3. For locations of "DETAIL D", see "ABUTMENT 1 Lt STAGE 1 LAYOUT" and "ABUTMENT 2 Rt STAGE 1 LAYOUT" sheets.

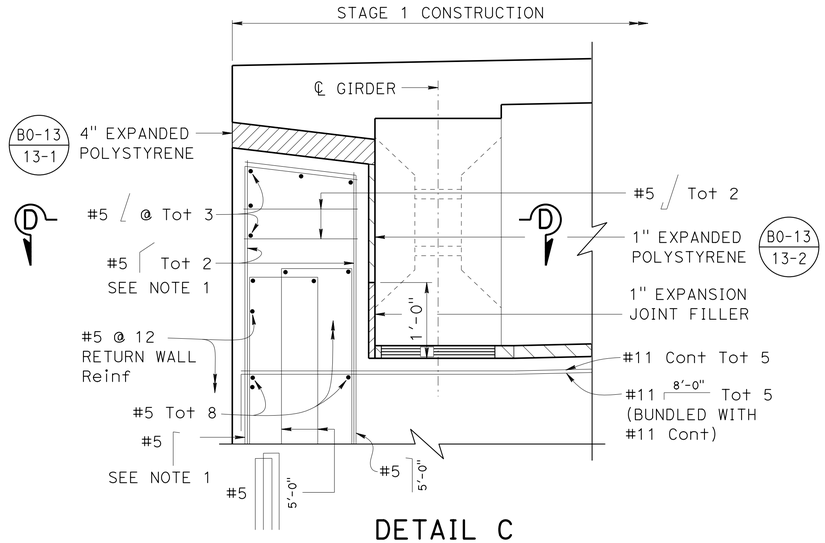

DETAIL C
1" = 1'-0"

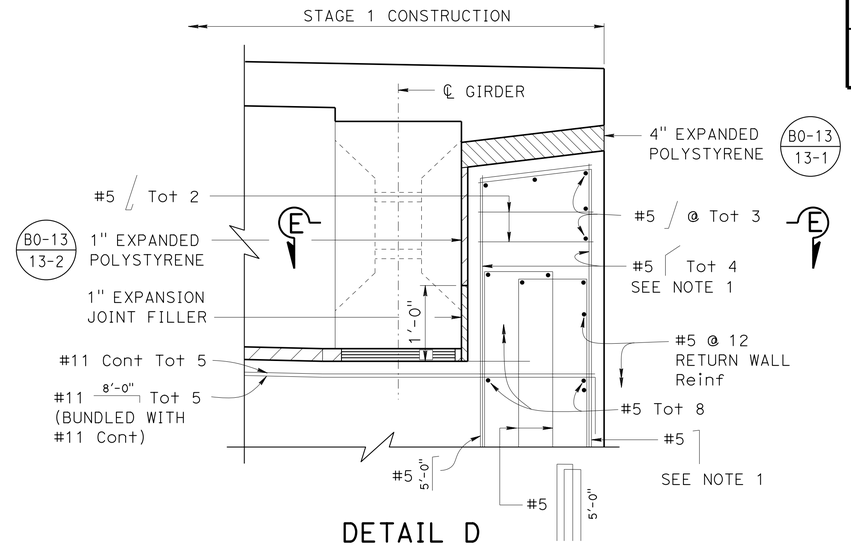

DETAIL D
1" = 1'-0"

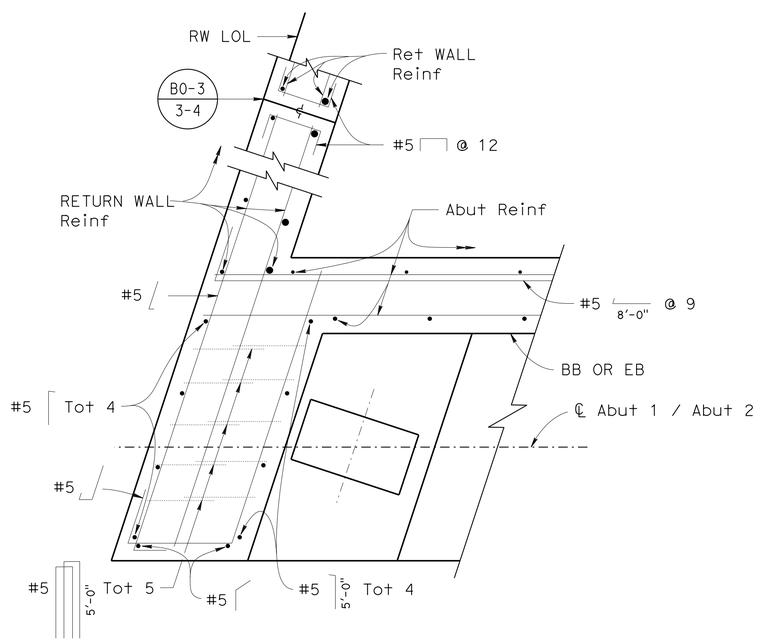

SECTION D-D
1" = 1'-0"

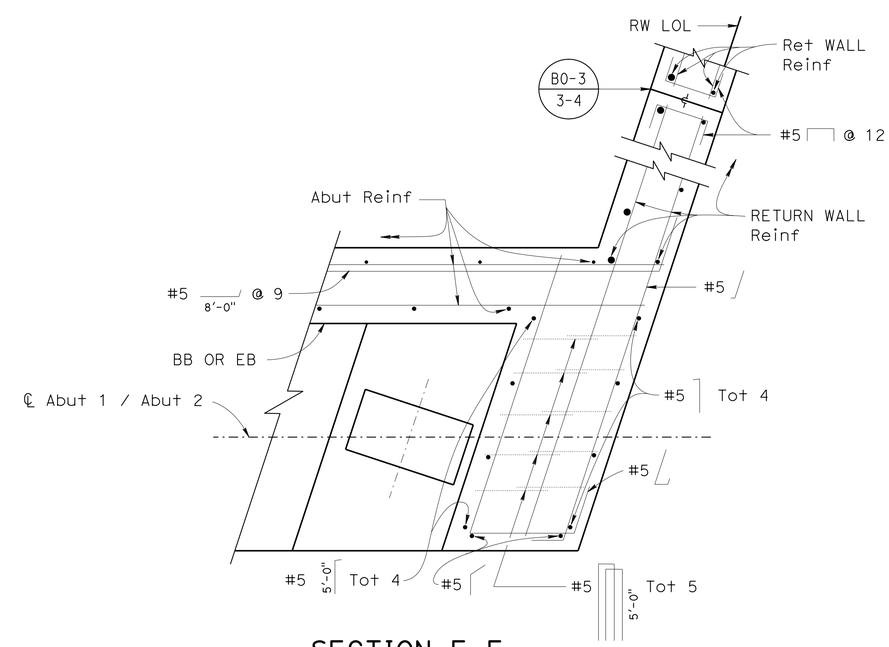

SECTION E-E
1" = 1'-0"

DESIGN	BY Daniel Sessions	CHECKED Grant Schuster	
DETAILS	BY Jie Tang	CHECKED Grant Schuster	
QUANTITIES	BY Manode Kodsuntie	CHECKED Grant Schuster	

STATE OF CALIFORNIA
DEPARTMENT OF TRANSPORTATION

DIVISION OF ENGINEERING SERVICES
STRUCTURE DESIGN
DESIGN BRANCH 1

BRIDGE NO. 53-3063
POST MILE 5.92

ORR AND DAY ROAD OVERHEAD (REPLACE)
ABUTMENT DETAILS NO. 2

STRUCTURES DESIGN DETAIL SHEET (ENGLISH) (REV. 09-01-10)

ORIGINAL SCALE IN INCHES FOR REDUCED PLANS 0 1 2 3

UNIT: 3576
PROJECT NUMBER & PHASE: 07000018351
CONTRACT NO.: 07-215954

DISREGARD PRINTS BEARING EARLIER REVISION DATES
REVISION DATES 12/22/11 10/18/12 10/26/12

SHEET 15 OF 42

FILE => 53-3063-g-abutdet02.dgn

USERNAME => s124496 DATE PLOTTED => 26-JUN-2013 TIME PLOTTED => 15:47

DIST	COUNTY	ROUTE	POST MILES TOTAL PROJECT	SHEET No.	TOTAL SHEETS
07	LA	5	0.0/7.6	687	985

P. Vijitakula 12-28-12
REGISTERED CIVIL ENGINEER DATE

6-24-13
PLANS APPROVAL DATE

REGISTERED PROFESSIONAL ENGINEER
P. VIJITAKULA
No. C 54701
Exp. 12-31-13
CIVIL
STATE OF CALIFORNIA

The State of California or its officers or agents shall not be responsible for the accuracy or completeness of electronic copies of this plan sheet.

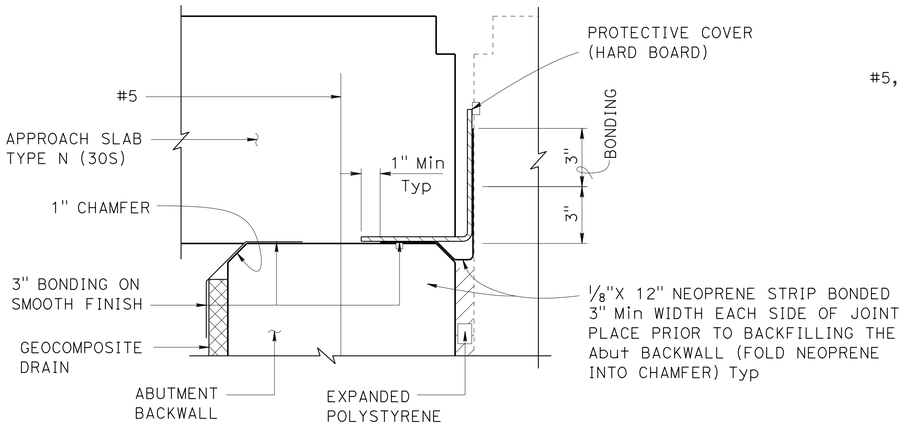

JOINT PROTECTION DETAIL

3" = 1'-0"

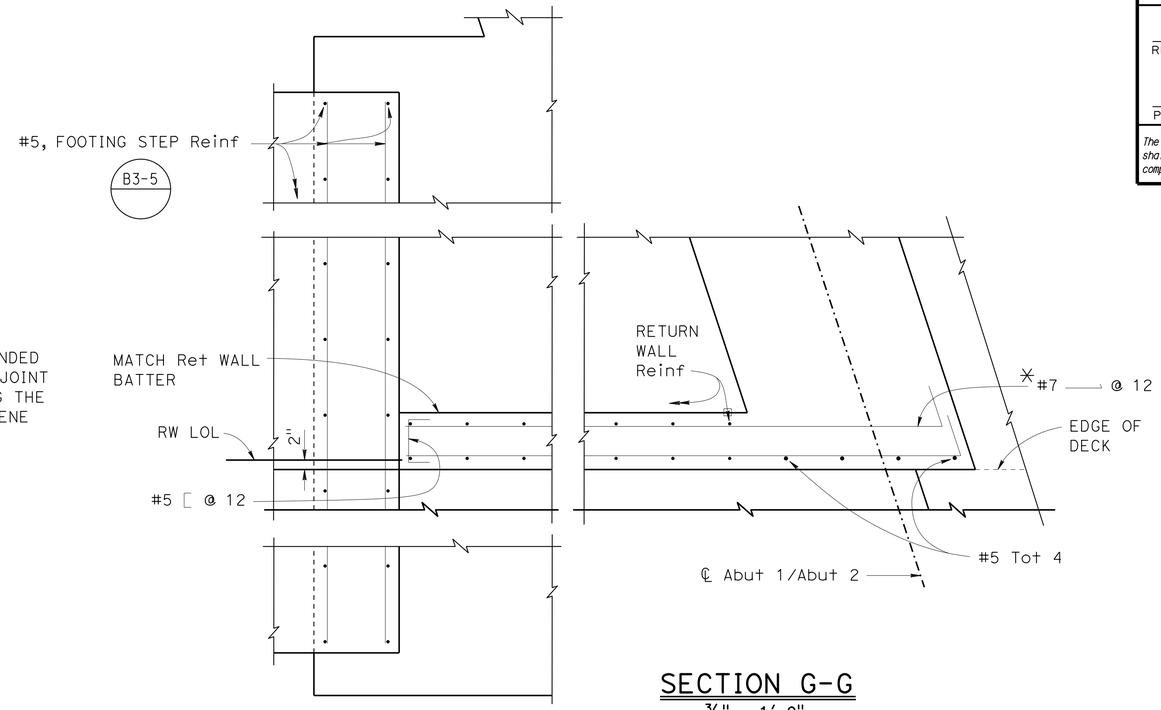

SECTION G-G

3/4" = 1'-0"

* Place in addition to reinforcement shown on RETAINING WALL TYPE 1 SWBP (Mod)" detail on "RETAINING WALL DETAIL" sheet

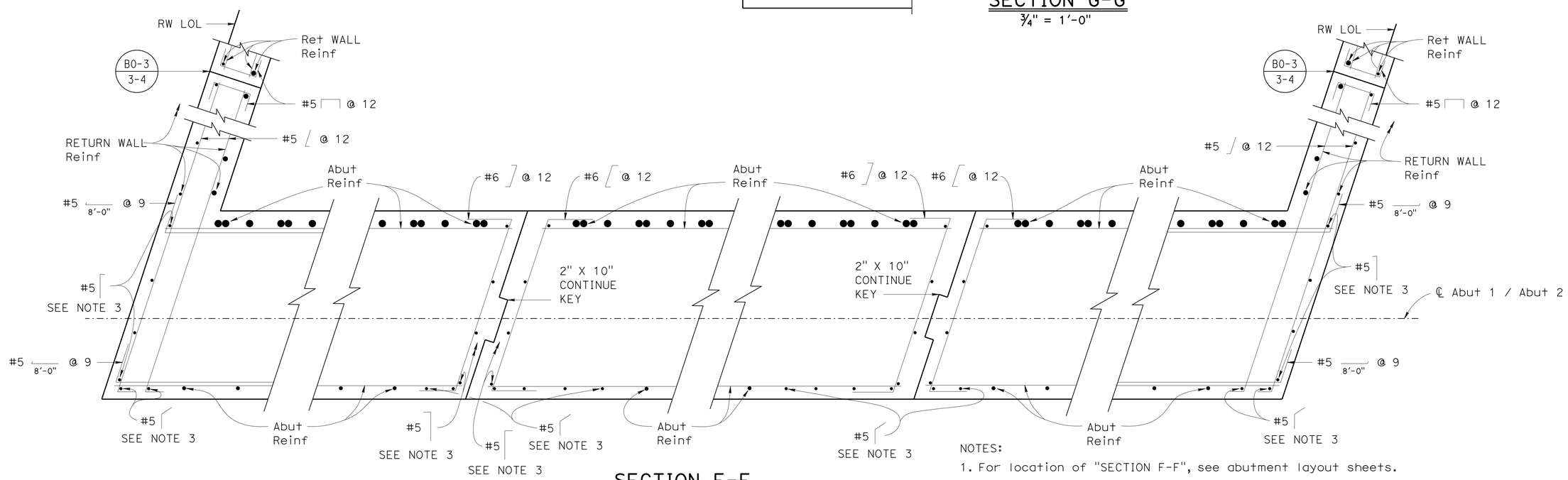

SECTION F-F

1" = 1'-0"

NOTES:

1. For location of "SECTION F-F", see abutment layout sheets.
2. For location of "SECTION G-G", see ABUTMENT RETAINING WALL ELEVATIONS sheets.
3. Abutment reinforcement shown shall be extended to bottom mat of footing reinforcement.

	BY	CHECKED
DESIGN	Daniel Sessions	Grant Schuster
DETAILS	Jie Tang	Grant Schuster
QUANTITIES	Manode Kodsuntie	Grant Schuster

STATE OF CALIFORNIA
DEPARTMENT OF TRANSPORTATION

DIVISION OF ENGINEERING SERVICES
STRUCTURE DESIGN
DESIGN BRANCH 1

BRIDGE NO. 53-3063
POST MILE 5.92

ORR AND DAY ROAD OVERHEAD (REPLACE)

ABUTMENT DETAILS NO. 3

STRUCTURES DESIGN DETAIL SHEET (ENGLISH) (REV. 09-01-10)

ORIGINAL SCALE IN INCHES FOR REDUCED PLANS 0 1 2 3

UNIT: 3576
PROJECT NUMBER & PHASE: 07000018351
CONTRACT NO.: 07-215954

DISREGARD PRINTS BEARING EARLIER REVISION DATES

REVISION DATES: 01/09/12 04/06/12 07/25/12 10/18/12

SHEET 16 OF 42

FILE => 53-3063-g-abutdet03.dgn

USERNAME => s124496 DATE PLOTTED => 26-JUN-2013 TIME PLOTTED => 15:47

DIST	COUNTY	ROUTE	POST MILES TOTAL PROJECT	SHEET No.	TOTAL SHEETS
07	LA	5	0.0/7.6	688	985

P. Vijitakula 12-28-12
REGISTERED CIVIL ENGINEER DATE

6-24-13
PLANS APPROVAL DATE

REGISTERED PROFESSIONAL ENGINEER
P. VIJITAKULA
No. C 54701
Exp. 12-31-13
CIVIL
STATE OF CALIFORNIA

The State of California or its officers or agents shall not be responsible for the accuracy or completeness of electronic copies of this plan sheet.

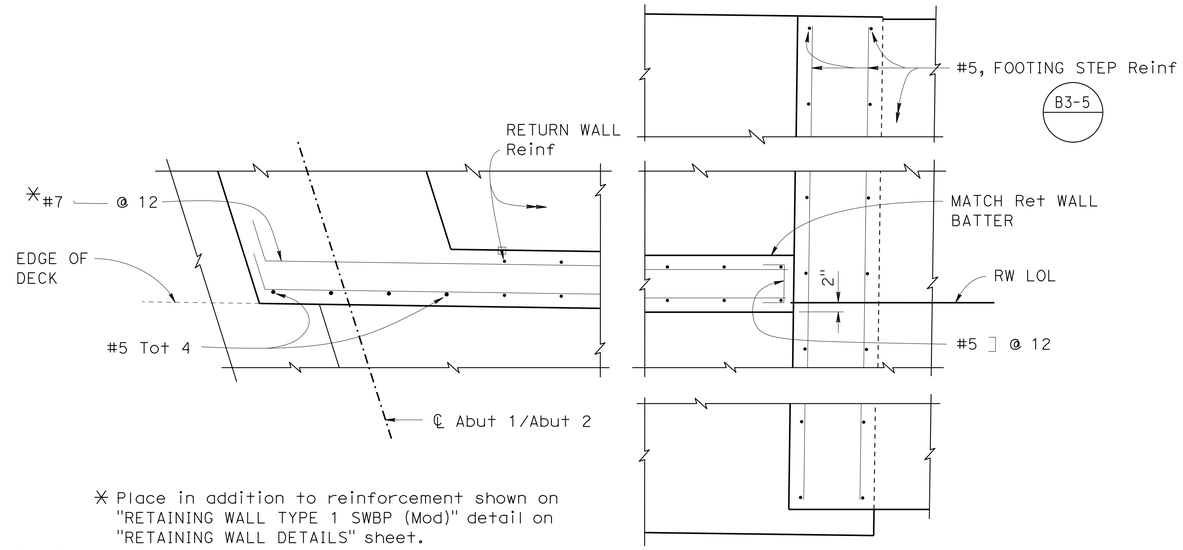

✳ Place in addition to reinforcement shown on "RETAINING WALL TYPE 1 SWBP (Mod)" detail on "RETAINING WALL DETAILS" sheet.

SECTION H-H

¾" = 1'-0"

NOTES:

(A) Top mat of abutment footing reinforcement, extend to outside edge of footing

(B) Bottom of abutment footing reinforcement, extended to outside edge of footing

(C) Limits of reinforcement shown on "SECTION I-I" on "ABUTMENT RETAINING WALL ELEVATIONS" sheet.

(D) Extend every other 2 horizontal reinforcement (both faces)

∝ Indicates Bundled Bars.

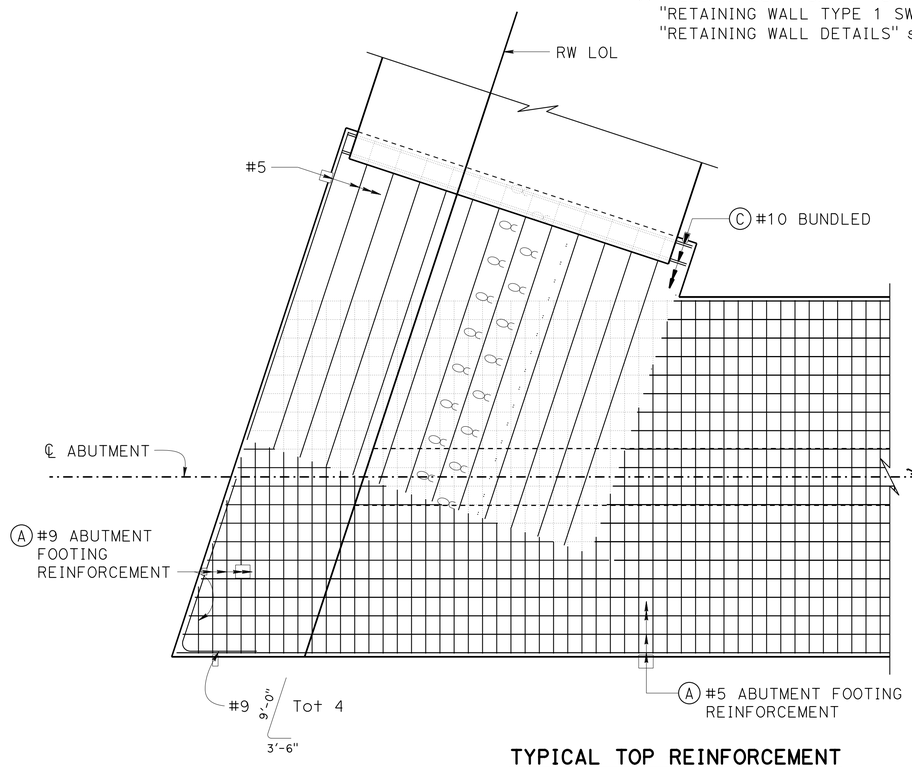

TYPICAL TOP REINFORCEMENT

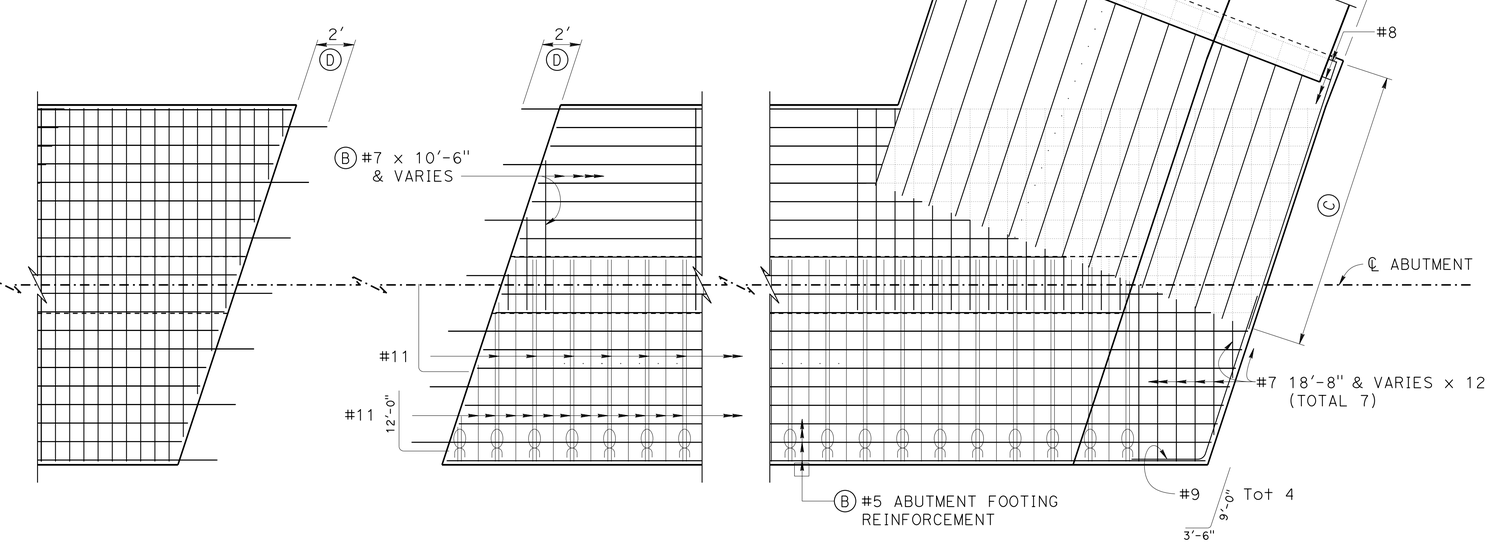

TYPICAL BOTTOM REINFORCEMENT

PART FOOTING AT CORNER PLAN

¼" = 1'-0"

NOTE:

Abutment 2 shown, Abutment 1 similar

DESIGN	BY Daniel Sessions	CHECKED Grant Schuster	
DETAILS	BY Jie Tang	CHECKED Grant Schuster	
QUANTITIES	BY Manode Kodsuntie	CHECKED Grant Schuster	

STATE OF CALIFORNIA
DEPARTMENT OF TRANSPORTATION

DIVISION OF ENGINEERING SERVICES
STRUCTURE DESIGN
DESIGN BRANCH 1

BRIDGE NO. 53-3063
POST MILE 5.92

ORR AND DAY ROAD OVERHEAD (REPLACE)

ABUTMENT DETAILS NO. 4

STRUCTURES DESIGN DETAIL SHEET (ENGLISH) (REV. 09-01-10)

ORIGINAL SCALE IN INCHES FOR REDUCED PLANS 0 1 2 3

UNIT: 3576
PROJECT NUMBER & PHASE: 07000018351
CONTRACT NO.: 07-215954

DISREGARD PRINTS BEARING EARLIER REVISION DATES → 01/09/12 10/18/12 10/04/13

SHEET 17 OF 42

FILE => 53-3063-g-abutdet04.dgn

USERNAME => s124496 DATE PLOTTED => 26-JUN-2013 TIME PLOTTED => 15:47

DIST	COUNTY	ROUTE	POST MILES TOTAL PROJECT	SHEET No.	TOTAL SHEETS
07	LA	5	0.0/7.6	689	985

P. Vijitakula
REGISTERED CIVIL ENGINEER 12-28-12 DATE

6-24-13
PLANS APPROVAL DATE

REGISTERED PROFESSIONAL ENGINEER
P. VIJITAKULA
No. C 54701
Exp. 12-31-13
CIVIL
STATE OF CALIFORNIA

The State of California or its officers or agents shall not be responsible for the accuracy or completeness of electronic copies of this plan sheet.

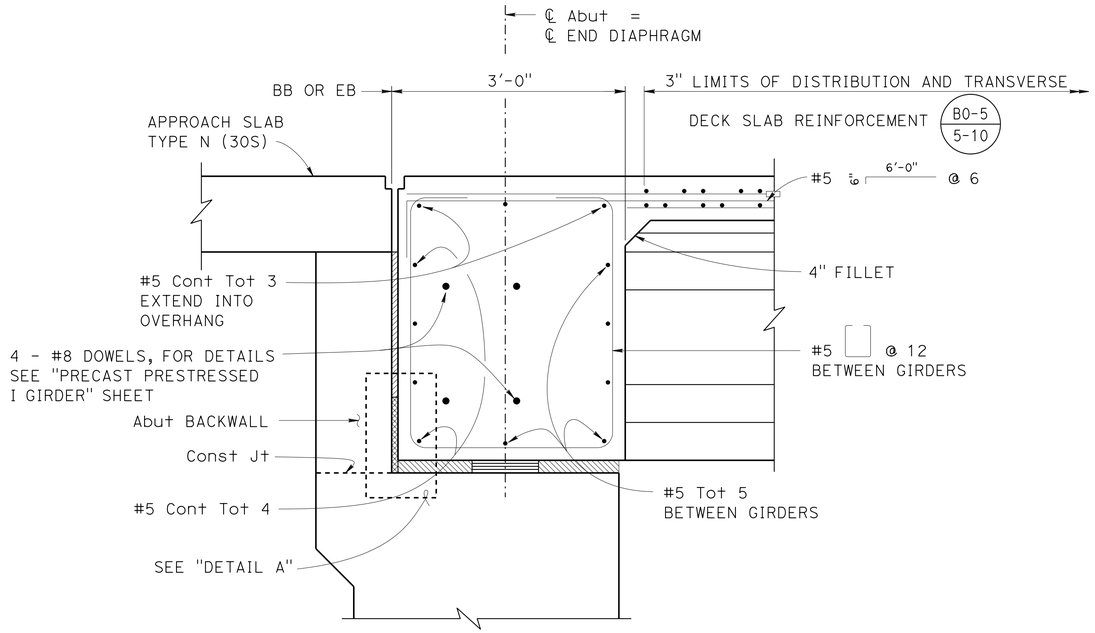

SECTION F-F

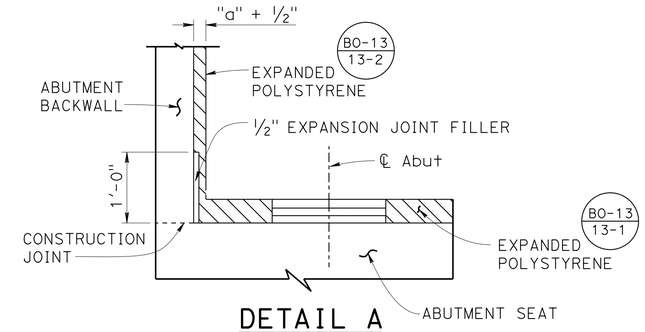

DETAIL A
NO SCALE

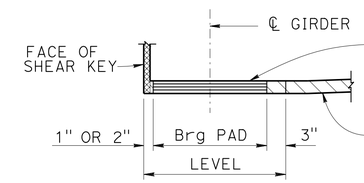

SECTION J-J
1" = 1'-0"

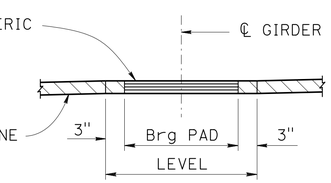

SECTION K-K
1" = 1'-0"

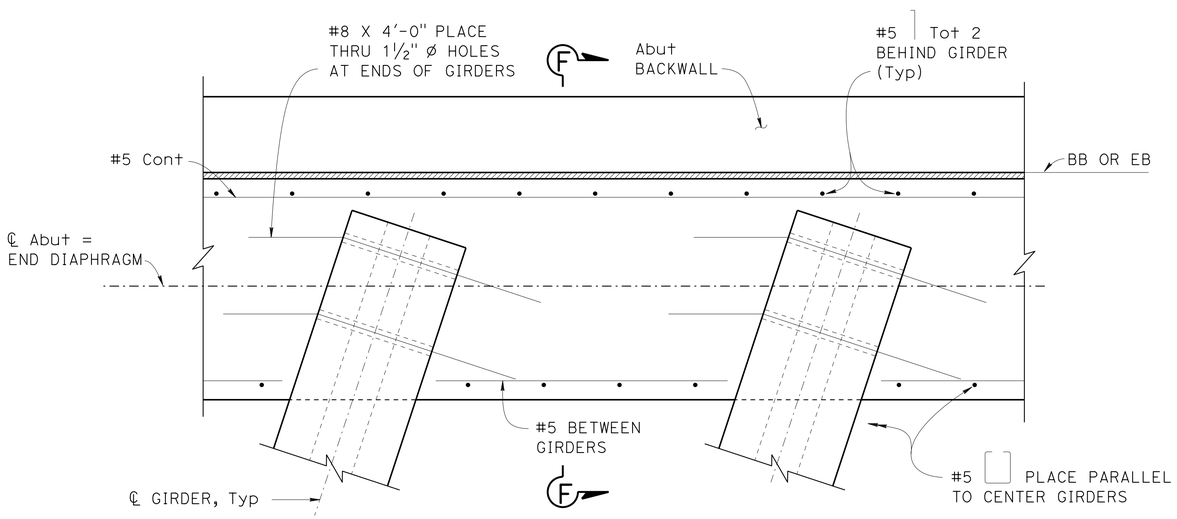

PART PLAN

ABUTMENT END DIAPHRAGM
1" = 1'-0"

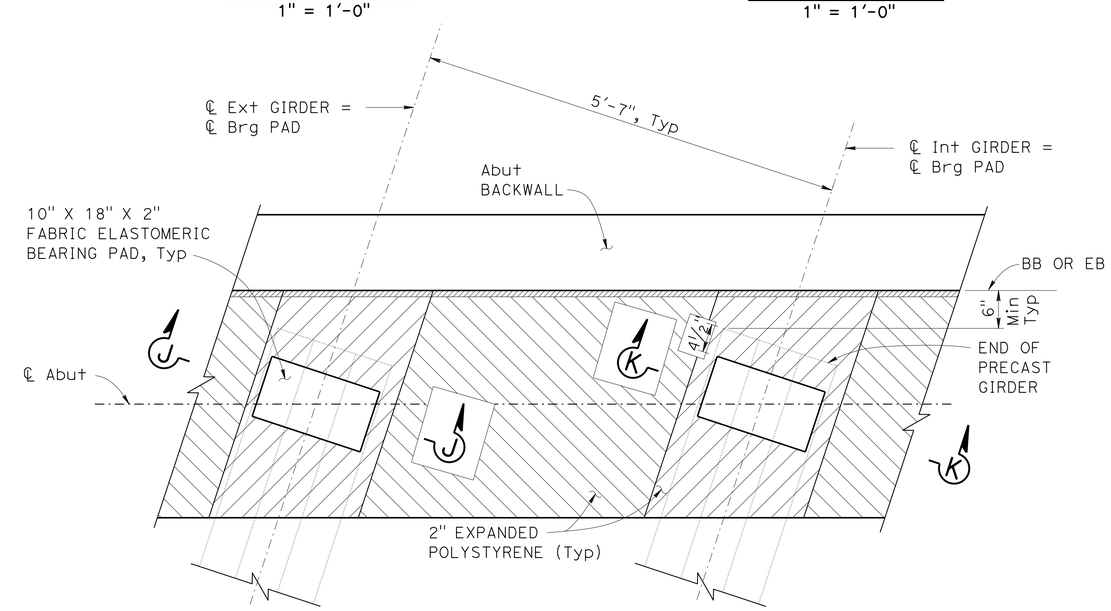

PART PLAN
1" = 1'-0"

DESIGN	BY Daniel Sessions	CHECKED Grant Schuster	
DETAILS	BY Jie Tang	CHECKED Grant Schuster	
QUANTITIES	BY Manode Kodsuntie	CHECKED Grant Schuster	

STATE OF CALIFORNIA
DEPARTMENT OF TRANSPORTATION

DIVISION OF ENGINEERING SERVICES
STRUCTURE DESIGN
DESIGN BRANCH 1

BRIDGE NO. 53-3063
POST MILE 5.92

ORR AND DAY ROAD OVERHEAD (REPLACE)
ABUTMENT DETAILS NO. 5

STRUCTURES DESIGN DETAIL SHEET (ENGLISH) (REV. 09-01-10)

ORIGINAL SCALE IN INCHES FOR REDUCED PLANS 0 1 2 3

UNIT: 3576
PROJECT NUMBER & PHASE: 07000018351
CONTRACT NO.: 07-215954

DISREGARD PRINTS BEARING EARLIER REVISION DATES

REVISION DATES 01/12/12 10/17/12 10/02/12

SHEET 18 OF 42

FILE => 53-3063-g-abutdet05.dgn

USERNAME => s124436 DATE PLOTTED => 26-JUN-2013 TIME PLOTTED => 15:47

DIST	COUNTY	ROUTE	POST MILES TOTAL PROJECT	SHEET No.	TOTAL SHEETS
07	LA	5	0.0/7.6	690	985

P. Vijitakula
REGISTERED CIVIL ENGINEER 12-28-12 DATE

6-24-13
PLANS APPROVAL DATE

REGISTERED PROFESSIONAL ENGINEER
P. VIJITAKULA
No. C 54701
Exp. 12-31-13
CIVIL
STATE OF CALIFORNIA

The State of California or its officers or agents shall not be responsible for the accuracy or completeness of electronic copies of this plan sheet.

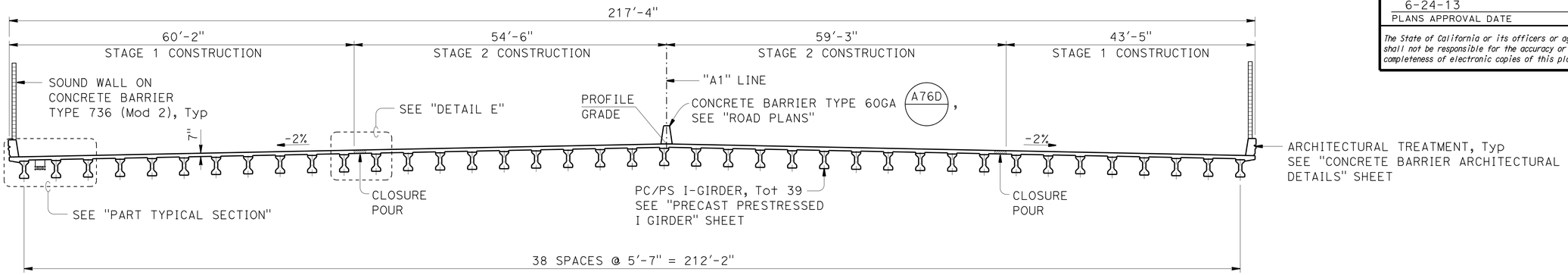

TYPICAL SECTION

1" = 10'

NOTES:

1. At closure pour location, closure pour and intermediate diaphragm concrete shall not be placed until 15 days after adjacent deck slab pours are completed.

2. Structure depth at ℄ Brg = 3'-9", Minimum structure depth at mid span = 3'-7", Structure depth is measured to top of PCC deck.

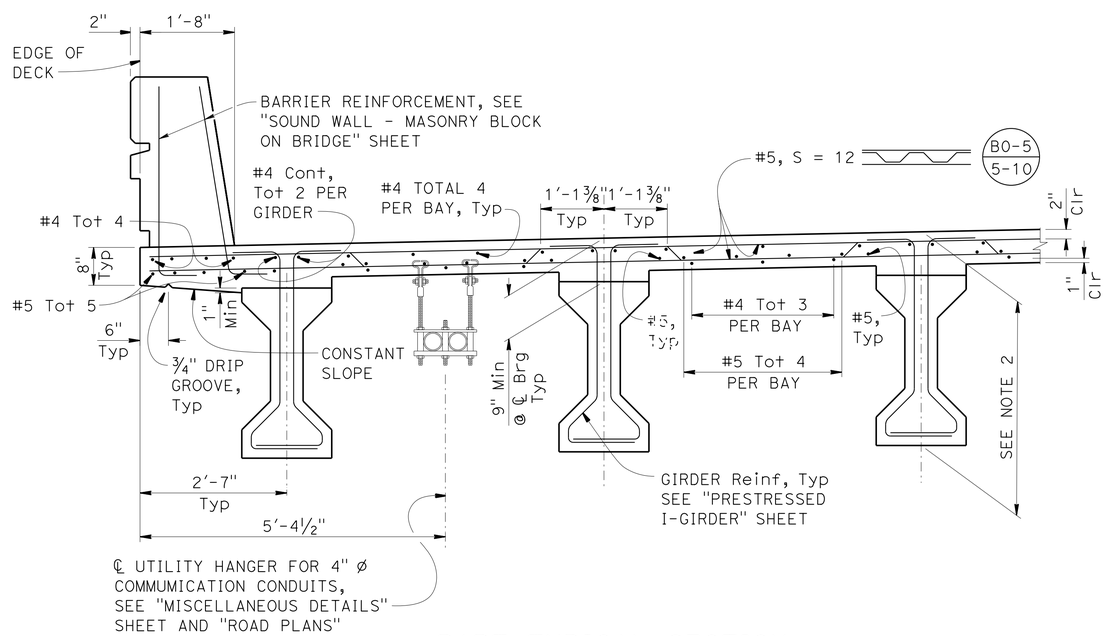

PART TYPICAL SECTION

3/4" = 1'-0"

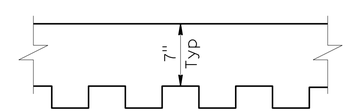

CONCRETE DECK WITH STAY-IN-PLACE FORM

NO SCALE

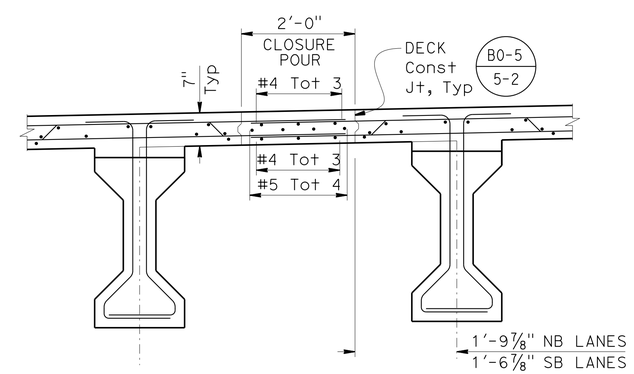

DETAIL E

3/4" = 1'-0"

DESIGN	BY Daniel Sessions	CHECKED Greg Jones	
DETAILS	BY Bob Huddleston/Jie Tang	CHECKED Greg Jones	
QUANTITIES	BY Manode Kodsuntie	CHECKED Grant Schuster	

STATE OF CALIFORNIA
DEPARTMENT OF TRANSPORTATION

DIVISION OF ENGINEERING SERVICES
STRUCTURE DESIGN
DESIGN BRANCH 1

BRIDGE NO. 53-3063
POST MILE 5.92

ORR AND DAY ROAD OVERHEAD (REPLACE)
TYPICAL SECTION

STRUCTURES DESIGN DETAIL SHEET (ENGLISH) (REV. 09-01-10)

ORIGINAL SCALE IN INCHES FOR REDUCED PLANS 0 1 2 3

UNIT: 3576
PROJECT NUMBER & PHASE: 07000018351
CONTRACT NO.: 07-215954

DISREGARD PRINTS BEARING EARLIER REVISION DATES

REVISION DATES 01-05-12 02/06/13 12/13/13

SHEET 19 OF 42

FILE => 53-3063-h-tsd01.dgn

USERNAME => s124496 DATE PLOTTED => 14-AUG-2013 TIME PLOTTED => 09:04

DIST	COUNTY	ROUTE	POST MILES TOTAL PROJECT	SHEET No.	TOTAL SHEETS
07	LA	5	0.0/7.6	691	985

P. Vijitakula
REGISTERED CIVIL ENGINEER 12-28-12 DATE

6-24-13
PLANS APPROVAL DATE

REGISTERED PROFESSIONAL ENGINEER
P. VIJITAKULA
No. C 54701
Exp. 12-31-13
CIVIL
STATE OF CALIFORNIA

The State of California or its officers or agents shall not be responsible for the accuracy or completeness of electronic copies of this plan sheet.

NOTES:

1. For girder and intermediate diaphragm details and dimensions, see "PRECAST PRESTRESSED I GIRDER" sheet.
2. Extend alternate top bars 2'-0" into diaphragm. Stop remaining reinforcement 3" from face of abutment.
3. Centerlines of intermediate diaphragms and abutments are parallel.
4. Lap splice top deck transverse reinforcing steel between stage construction or as determined by the Engineer.
5. For utility opening details not shown, see "MISCELLANEOUS DETAILS" sheets.

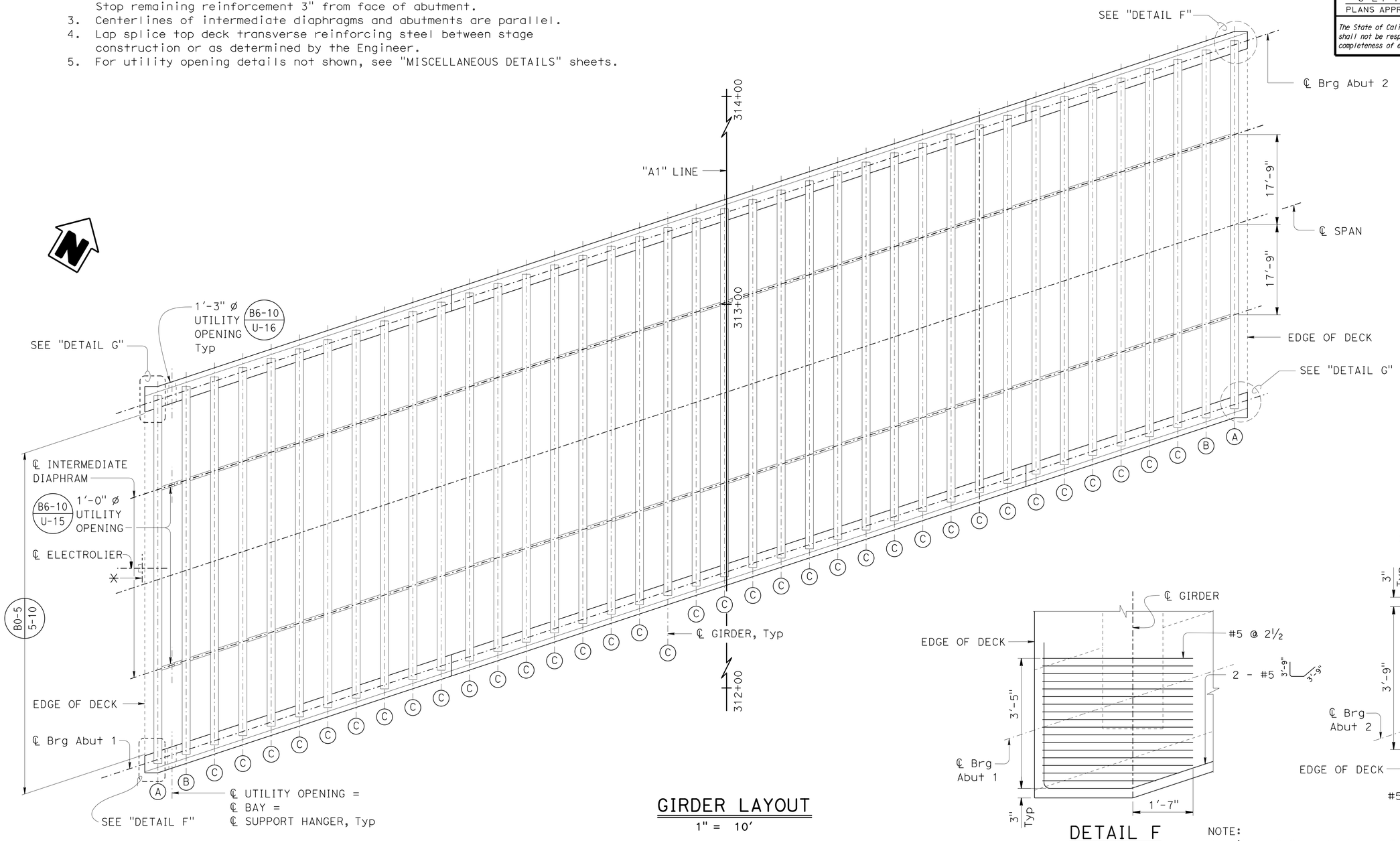

GIRDER LAYOUT

1" = 10'

✳ ℄ POST 115'-2" LEFT "A1" LINE STATION 312+48.00

DETAIL F

¾" = 1'-0"

NOTE:
Details F & G at Abutment 2 are similar, but opposite hand

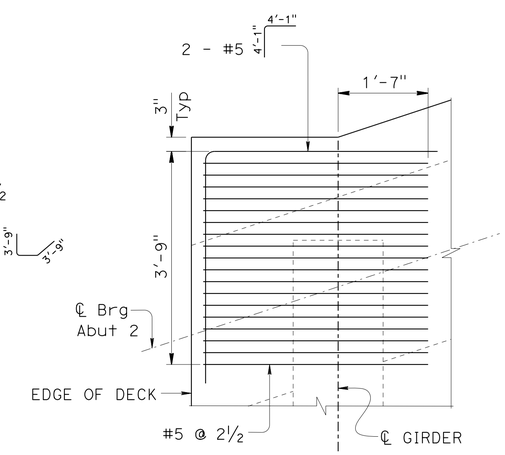

DETAIL G

¾" = 1'-0"

DESIGN	BY Daniel Sessions	CHECKED G. Jones / M. Kodsuntie	
DETAILS	BY Bob Huddleston/Jie Tang	CHECKED G. Jones / M. Kodsuntie	
QUANTITIES	BY Manode Kodsuntie	CHECKED Grant Schuster	

STATE OF CALIFORNIA
DEPARTMENT OF TRANSPORTATION

DIVISION OF ENGINEERING SERVICES
STRUCTURE DESIGN
DESIGN BRANCH 1

BRIDGE NO. 53-3063
POST MILE 5.92

ORR AND DAY ROAD OVERHEAD (REPLACE)
GIRDER LAYOUT

STRUCTURES DESIGN DETAIL SHEET (ENGLISH) (REV. 09-01-10)

ORIGINAL SCALE IN INCHES FOR REDUCED PLANS 0 1 2 3

UNIT: 3576
PROJECT NUMBER & PHASE: 07000018351
CONTRACT NO.: 07-215954

DISREGARD PRINTS BEARING EARLIER REVISION DATES

REVISION DATES 01-30-12 04-04-12 07-24-12 05/30/13

SHEET 20 OF 42

FILE => 53-3063-i-g_lo01.dgn

USERNAME => s124496 DATE PLOTTED => 26-JUN-2013 TIME PLOTTED => 15:47

DIST	COUNTY	ROUTE	POST MILES TOTAL PROJECT	SHEET No.	TOTAL SHEETS
07	LA	5	0.0/7.6	692	985

P. Vijitakula 12-28-12
REGISTERED CIVIL ENGINEER DATE

6-24-13
PLANS APPROVAL DATE

REGISTERED PROFESSIONAL ENGINEER
P. VIJITAKULA
No. C 54701
Exp. 12-31-13
CIVIL
STATE OF CALIFORNIA

The State of California or its officers or agents shall not be responsible for the accuracy or completeness of electronic copies of this plan sheet.

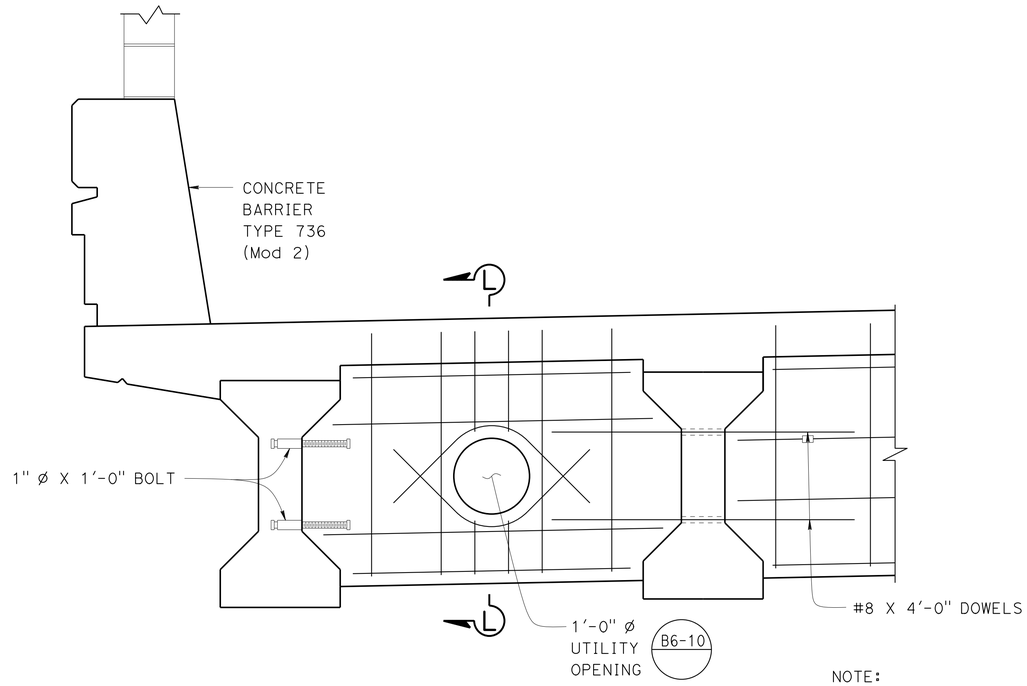

INTERMEDIATE DIAPHRAM UTILITY OPENING DETAILS

1" = 1'-0"

NOTE:
For more details, see "PRECAST PRESTRESSED I-GIRDER" sheet and Std Plan B6-10 U-15

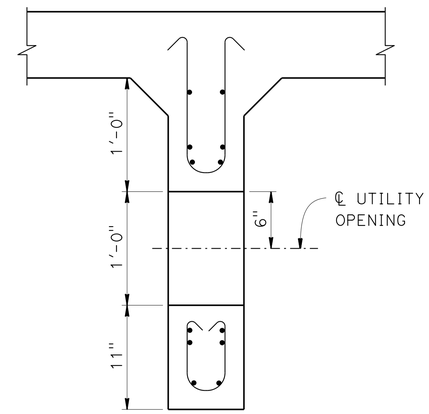

SECTION L-L

1½" = 1'-0"

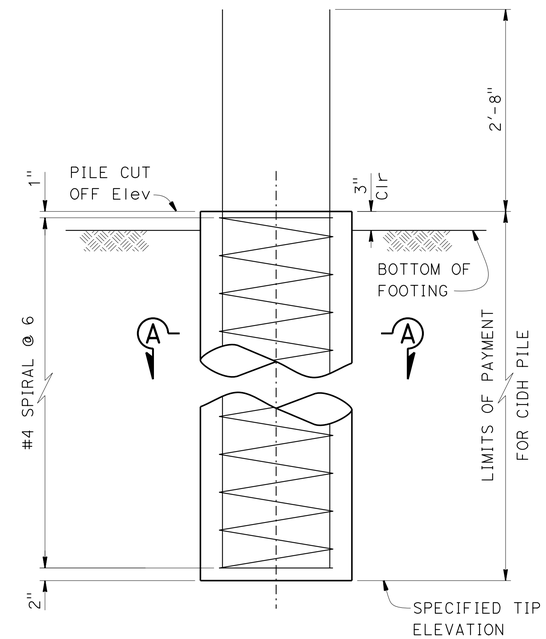

24" CIDH CONCRETE PILE ELEVATION

1" = 1'-0"

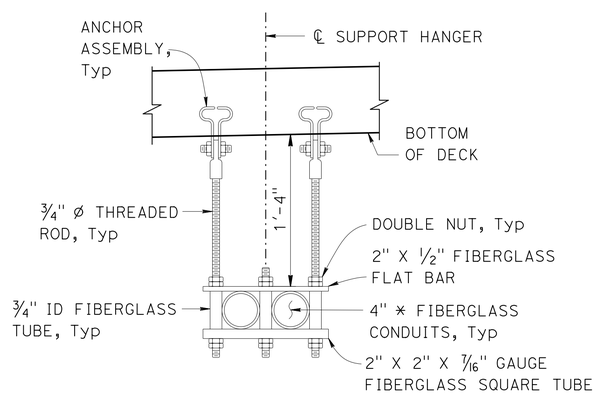

NOTES:

1. Place support hangers at 5'-0" intervals.
2. All metallic pieces shall be galvanized after fabrication.
3. See "Road Plans" for more details.

COMMUNICATION CONDUIT SUPPORT HANGER DETAILS

1½" = 1'-0"

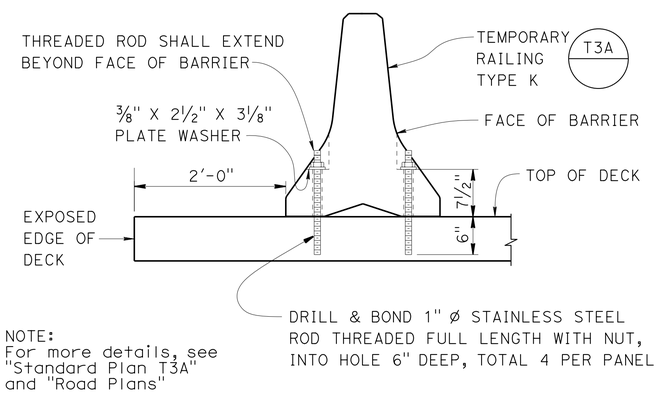

NOTE:
For more details, see "Standard Plan T3A" and "Road Plans"

TEMPORARY TYPE K RAILING ATTACHMENT DETAILS

1" = 1'-0"

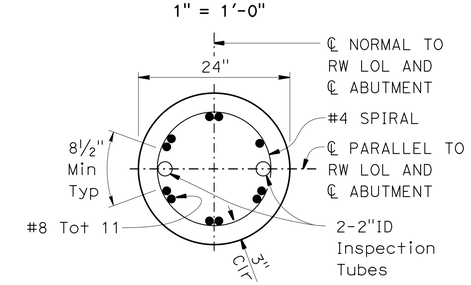

SECTION A-A

1" = 1'-0"

DESIGN	BY Daniel Sessions	CHECKED Greg Jones	
DETAILS	BY Bob Huddleston/Jie Tang	CHECKED Greg Jones	
QUANTITIES	BY Manode Kodsuntie	CHECKED Grant Schuster	

STATE OF CALIFORNIA
DEPARTMENT OF TRANSPORTATION

DIVISION OF ENGINEERING SERVICES
STRUCTURE DESIGN
DESIGN BRANCH 1

BRIDGE NO. 53-3063
POST MILE 5.92

ORR AND DAY ROAD OVERHEAD (REPLACE)
MISCELLANEOUS DETAILS

STRUCTURES DESIGN DETAIL SHEET (ENGLISH) (REV. 09-01-10)

ORIGINAL SCALE IN INCHES FOR REDUCED PLANS 0 1 2 3

UNIT: 3576
PROJECT NUMBER & PHASE: 07000018351
CONTRACT NO.: 07-215954

DISREGARD PRINTS BEARING EARLIER REVISION DATES

REVISION DATES 01/12/12 10/12/12 05/30/13

SHEET 21 OF 42

FILE => 53-3063-i-miscdt01.dgn

USERNAME => s124496 DATE PLOTTED => 26-JUN-2013 TIME PLOTTED => 15:47

DIST	COUNTY	ROUTE	POST MILES TOTAL PROJECT	SHEET No.	TOTAL SHEETS
07	LA	5	0.0/7.6	693	985

P. Vijitakula 12-28-12
REGISTERED CIVIL ENGINEER DATE

6-24-13
PLANS APPROVAL DATE

REGISTERED PROFESSIONAL ENGINEER P. VIJITAKULA No. C 54701 Exp. 12-31-13 CIVIL STATE OF CALIFORNIA

The State of California or its officers or agents shall not be responsible for the accuracy or completeness of electronic copies of this plan sheet.

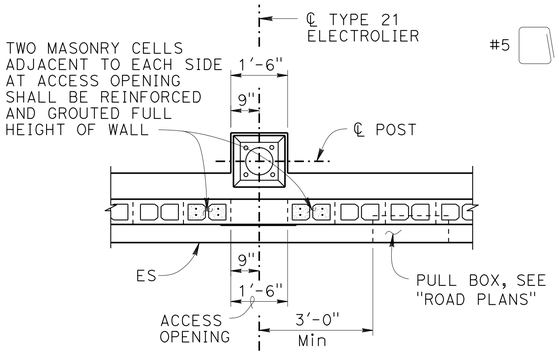

PLAN
½" = 1'-0"

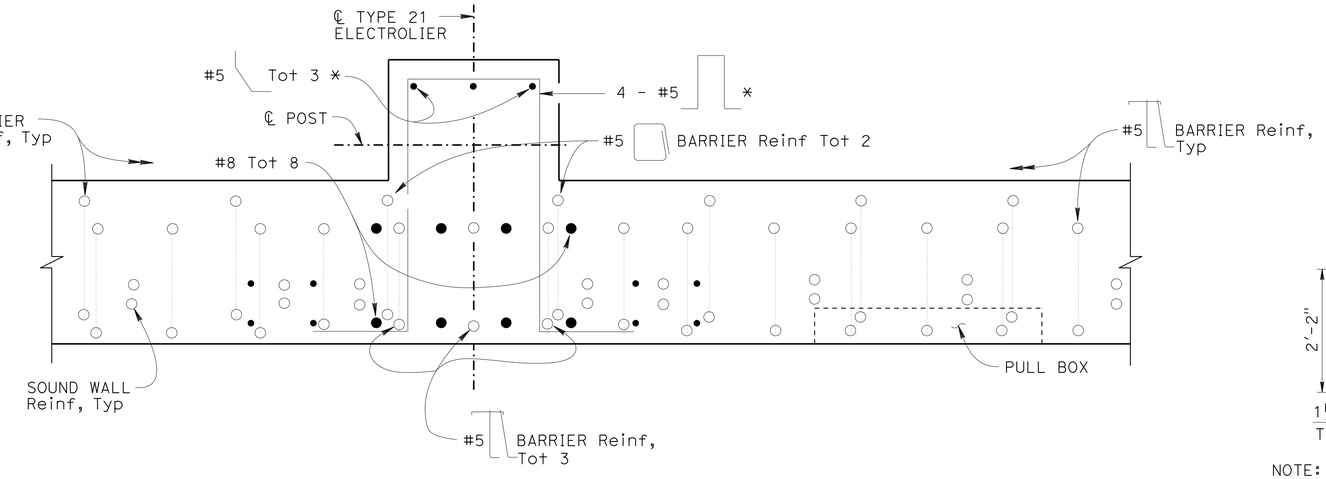

SECTION P-P
1½" = 1'-0"

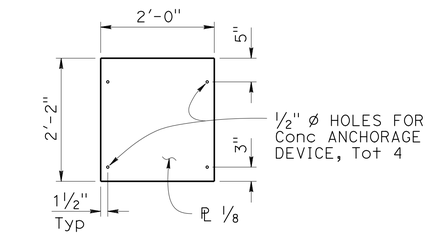

NOTE: Paint cover PL to match color of masonry blocks

COVER PLATE
¾" = 1'-0"

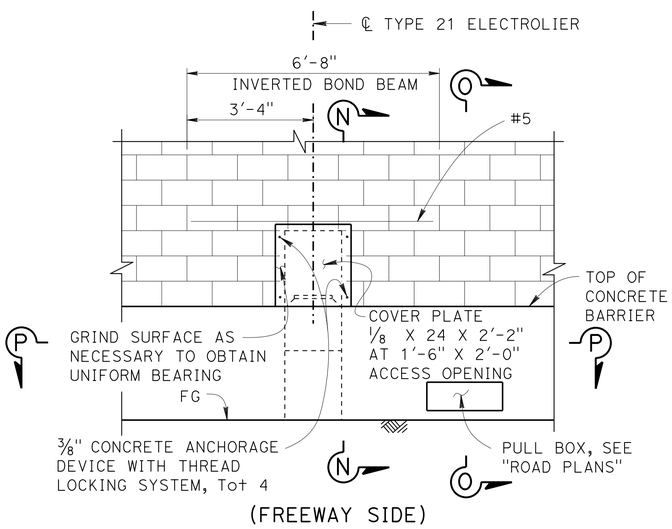

ELEVATION
½" = 1'-0"

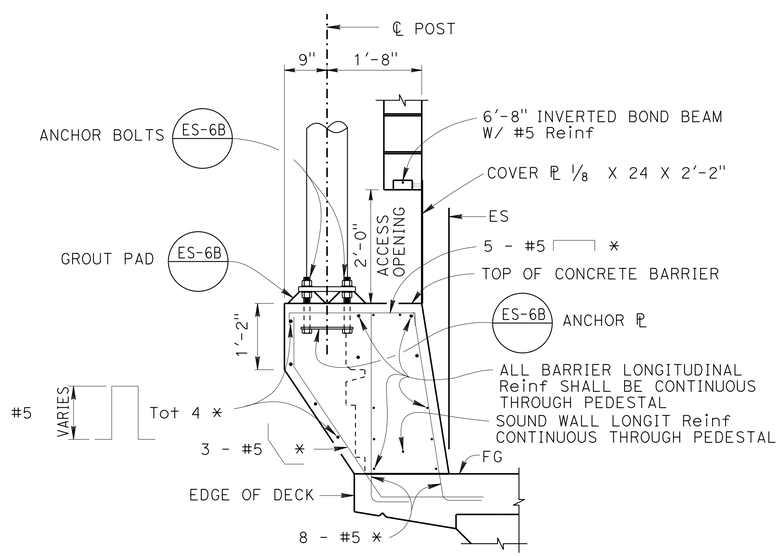

NOTE: * - Indicates Reinf is additional to typical barrier, see Std Plan B11-56.

SECTION N-N
¾" = 1'-0"

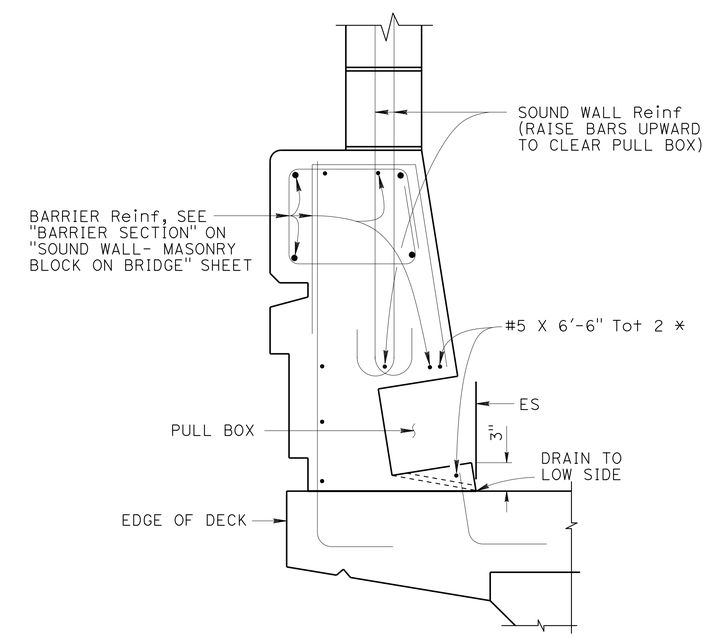

SECTION O-O
1½" = 1'-0"

NOTES:

1. For electrolier and electrical details, see "ROAD PLANS".
2. The maximum number of conduits in the barrier is limited to (2) 2" conduits along with (1) 3" conduit.

	BY	CHECKED
DESIGN	Daniel Sessions	P. Vijitakula
DETAILS	Jie Tang	P. Vijitakula
QUANTITIES	Manode Kodsuntie	Grant Schuster

STATE OF CALIFORNIA
DEPARTMENT OF TRANSPORTATION

DIVISION OF ENGINEERING SERVICES
STRUCTURE DESIGN
DESIGN BRANCH 1

BRIDGE NO. 53-3063
POST MILE 5.92

ORR AND DAY ROAD OVERHEAD (REPLACE)
ELECTROLIER PEDESTAL DETAILS

STRUCTURES DESIGN DETAIL SHEET (ENGLISH) (REV. 09-01-10)

ORIGINAL SCALE IN INCHES FOR REDUCED PLANS 0 1 2 3

UNIT: 3576
PROJECT NUMBER & PHASE: 07000018351
CONTRACT NO.: 07-215954

DISREGARD PRINTS BEARING EARLIER REVISION DATES

REVISION DATES 03/22/12 10/17/12 09/24/12

SHEET 22 OF 42

FILE => 53-3063-j-epd.dgn

USERNAME => s124496 DATE PLOTTED => 26-JUN-2013 TIME PLOTTED => 15:48

DIST	COUNTY	ROUTE	POST MILES TOTAL PROJECT	SHEET No.	TOTAL SHEETS
07	LA	5	0.0/7.6	694	985

P. Vijitakula 12-28-12
REGISTERED CIVIL ENGINEER DATE

6-24-13
PLANS APPROVAL DATE

REGISTERED PROFESSIONAL ENGINEER P. VIJITAKULA No. C 54701 Exp. 12-31-13 CIVIL STATE OF CALIFORNIA

The State of California or its officers or agents shall not be responsible for the accuracy or completeness of electronic copies of this plan sheet.

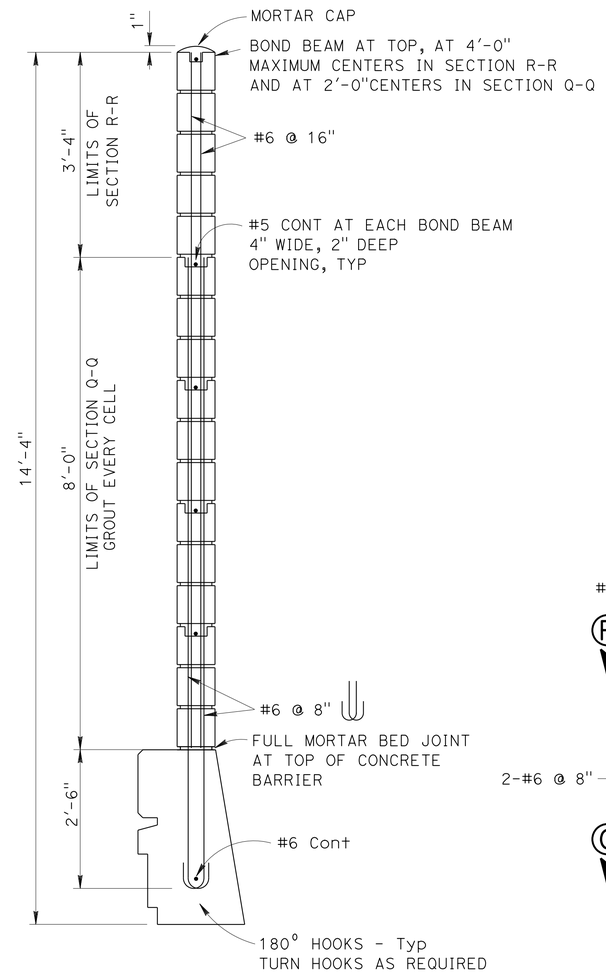

SOUND WALL SECTION
No Scale

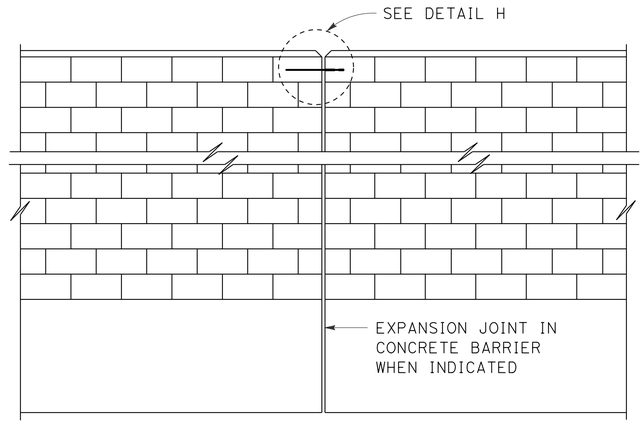

ALIGNMENT KEY DETAIL
No Scale

NOTES:

1. For type of block, see "Soundwall Architectural Details" sheet. For type of block bond and joint finish, see "Road Plans".
2. When blocks are laid in stacked bond, ladder type, galvanized joint reinforcement shall be provided. A minimum of 2 - 12 gauge wires continuous at 4'-0" maximum to be used. Locate reinforcement in joints that are at the approximate midpoint between bond beams.
3. Horizontal joints shall be tooled concave or may be weathered. Vertical joints shall be tooled concave or may be raked.
4. All masonry to be high strength unless otherwise noted.
5. Concrete to be used for the barrier shall contain not less than 590 pounds of cementitious material per cubic yard.
6. Expansion joints in concrete barrier and masonry block to match deck joints and at ends of wing walls.
7. Expansion joints in Sound Wall (Masonry Block) shall be at each support, center of span, and at ends of each wingwall.

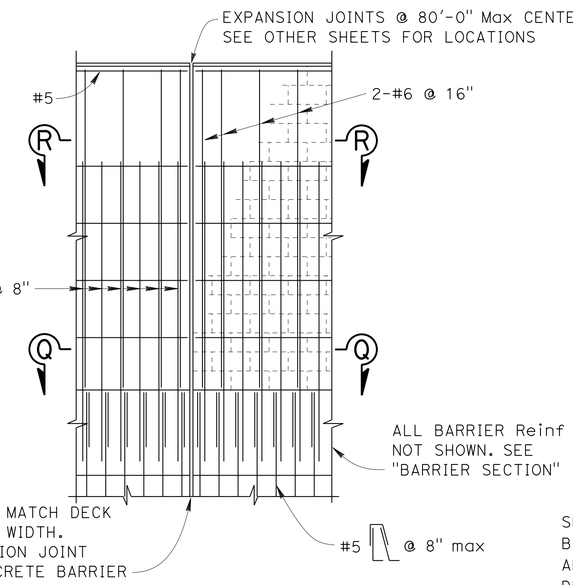

DECK AND WALL JOINT ELEVATION
No Scale

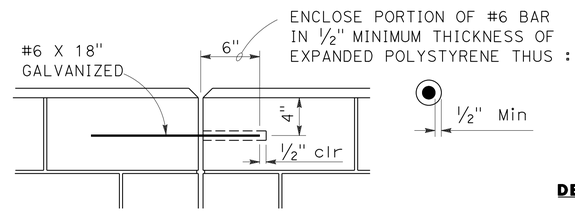

DETAIL H
No Scale

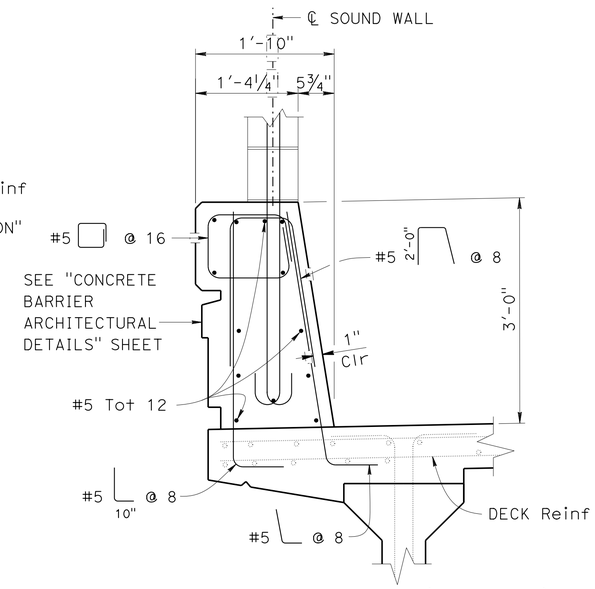

BARRIER SECTION (BRIDGE)
1" = 1'-0"

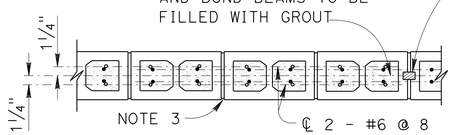

SECTION Q-Q
No Scale

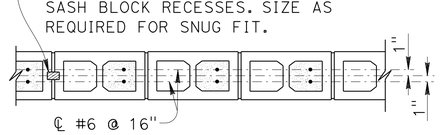

SECTION R-R
No Scale

NOTE:
For dimensions and reinforcement not shown, see Standard Plan B11-56 and "CONCRETE BARRIER ARCHITECTURAL DETAILS" sheet.

DESIGN NOTES

DESIGN
Uniform Building Code,1997 Edition and the Bridge Design Specifications.

DESIGN WIND LOAD
37 psf

DESIGN SEISMIC LOAD
2.0 Dead load

REINFORCED CONCRETE
f'c = 3.6 ksi
fy = 60 ksi

CONCRETE MASONRY HIGH STRENGTH
f'm = 2500 psi
fy = 60 ksi

LOAD FACTORS AND LOAD COMBINATIONS

Load Factor Design (LFD)

Group A: βD +1.7 E + 1.7 SC
Group B: βD +1.7 E + 1.3 W
Group C: βD +1.3 E + 1.0 EQE
Group D: βD +1.3 E + 1.0 EQD
Group E: βD +1.1 E + 0.85 (EQE + EQD)

Where : β = 0.9 or 1.2, whichever controls in design
D = Dead load
E = Lateral earth pressure
SC = Live load surcharge
W = Wind load
EQD = Seismic dead load
EQE = Seismic earth load

STRENGTH REDUCTION FACTORS, Ø

Reinforced Concrete :
For flexure ..... Ø = 0.90
For shear ..... Ø = 0.85

Concrete masonry:
For flexure ..... Ø = 0.80
For shear ..... Ø = 0.60

Note 1:
Barrier, Deck and Concrete Masonry are designed by the Strength Design Method.

	BY	CHECKED
DESIGN	Daniel Sessions	Greg Jones
DETAILS	Jie Tang	Greg Jones
QUANTITIES	Manode Kodsuntie	Grant Schuster

STATE OF CALIFORNIA
DEPARTMENT OF TRANSPORTATION

DIVISION OF ENGINEERING SERVICES
STRUCTURE DESIGN
DESIGN BRANCH 1

BRIDGE NO. 53-3063
POST MILE 5.92

ORR AND DAY ROAD OVERHEAD (REPLACE)
SOUND WALL - MASONRY BLOCK ON BRIDGE

STRUCTURES DESIGN DETAIL SHEET (ENGLISH) (REV. 09-01-10)

ORIGINAL SCALE IN INCHES FOR REDUCED PLANS 0 1 2 3

UNIT: 3576
PROJECT NUMBER & PHASE: 07000018351
CONTRACT NO.: 07-215954

DISREGARD PRINTS BEARING EARLIER REVISION DATES

REVISION DATES 04/10/12 10/12/12 05/24/13

SHEET 23 OF 42

FILE => 53-3063-j-swob.dgn

USERNAME => s124496 DATE PLOTTED => 26-JUN-2013 TIME PLOTTED => 15:48

DIST	COUNTY	ROUTE	POST MILES TOTAL PROJECT	SHEET No.	TOTAL SHEETS
07	LA	5	0.0/7.6	695	985

P. Vijitakula
REGISTERED CIVIL ENGINEER 12-28-12 DATE

6-24-13
PLANS APPROVAL DATE

REGISTERED PROFESSIONAL ENGINEER
P. VIJITAKULA
No. C 54701
Exp. 12-31-13
CIVIL
STATE OF CALIFORNIA

The State of California or its officers or agents shall not be responsible for the accuracy or completeness of electronic copies of this plan sheet.

NOTES:

1. For sound wall architectural treatment, see "SOUND WALL ARCHITECTURAL DETAILS" sheet.
2. For concrete barrier architectural treatment, see "CONCRETE BARRIER ARCHITECTURAL DETAILS" sheet.
3. For "SECTION C-C", "DETAIL A", "DETAIL B" and "DETAIL C", see "ABUTMENT ARCHITECTURAL DETAILS" sheet.
4. For sound wall details on bridge, see "SOUND WALL - MASONRY BLOCK ON BRIDGE" sheet.
5. For sound wall details on retaining wall, see "MASONRY BLOCK SOUND WALL WITH BARRIER ON RETAINING WALLDETAILS NO. 1 & NO. 2" sheets.
6. Begin top of sound wall step down one full block length beyond expansion joint or as determined by the Engineer.
7. Not all piles shown in "ABUTMENT 1 RIGHT/LEFT ELEVATION".
8. For wall mounted luminaire conduit information and other details not shown, see "ROAD PLANS".

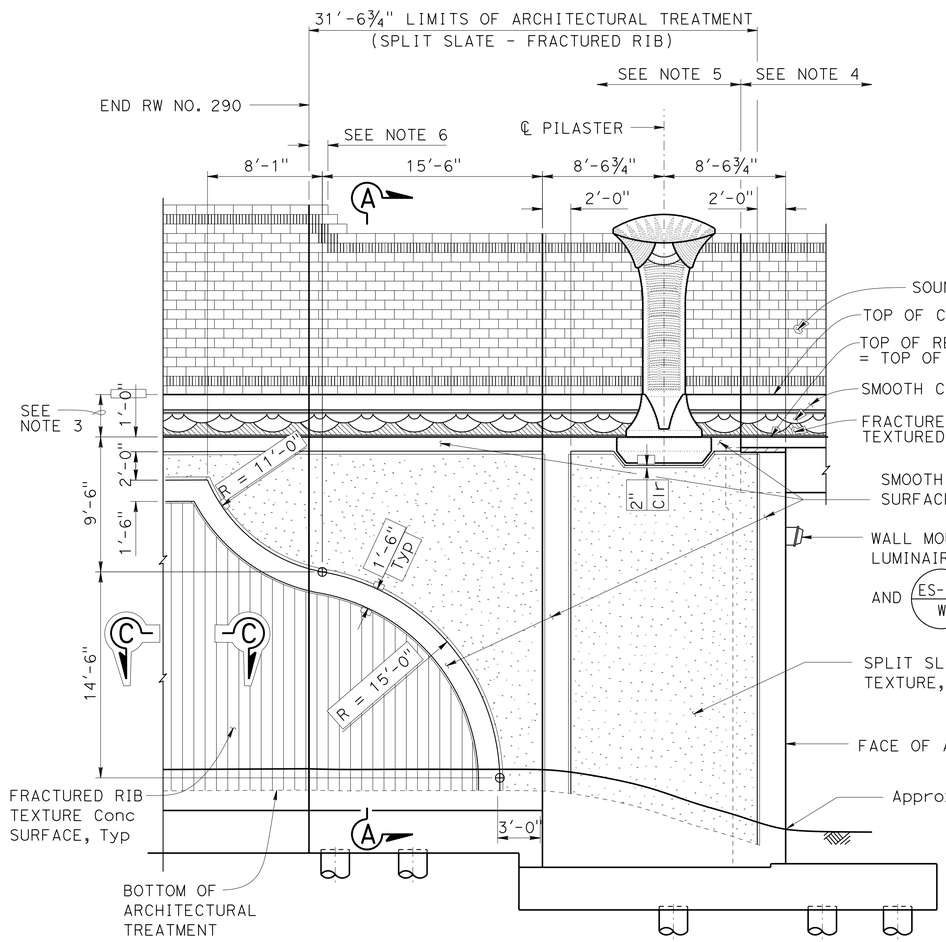

ABUTMENT 1 RIGHT ELEVATION

3/16" = 1'-0"

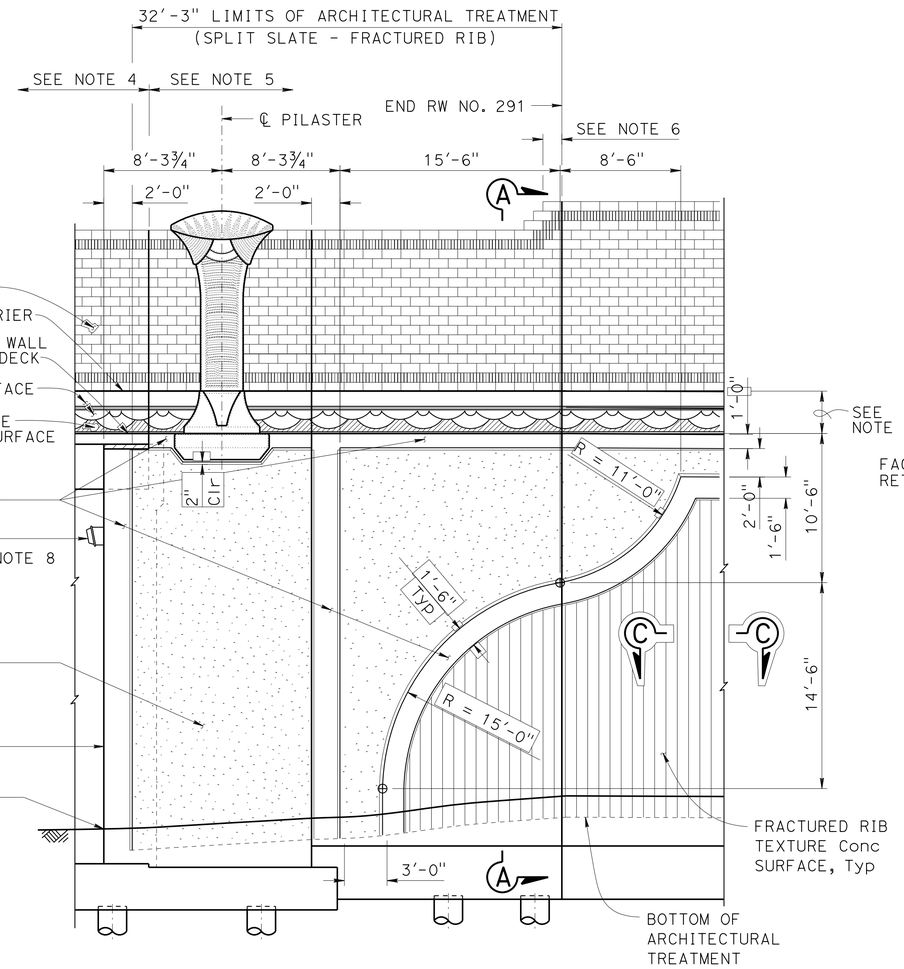

ABUTMENT 1 LEFT ELEVATION

3/16" = 1'-0"

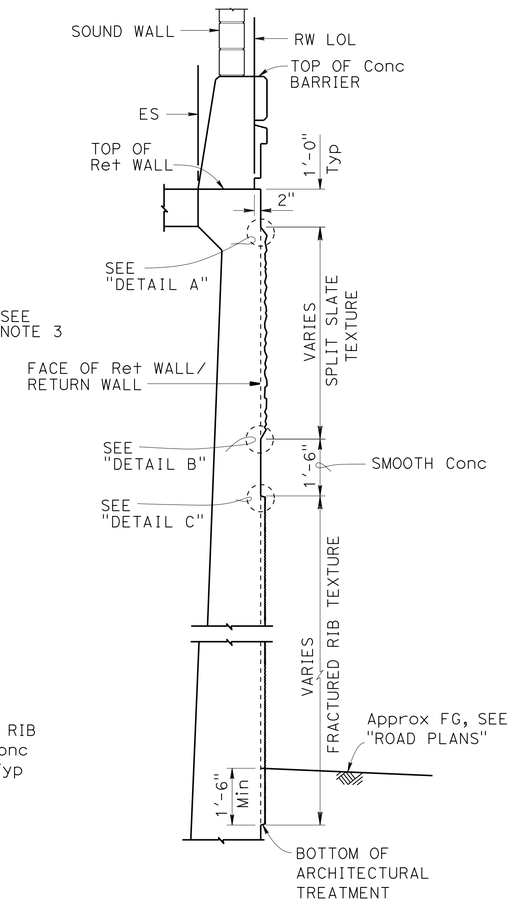

SECTION A-A

1/2" = 1'-0"

	BY	CHECKED
DESIGN	Isaac Tasabia	Javier Chavez
DETAILS	Jie Tang/G. S.	D. Sessions/P. Vijitakula
QUANTITIES	Manode Kodsuntie	Grant Schuster

STATE OF CALIFORNIA
DEPARTMENT OF TRANSPORTATION

DIVISION OF ENGINEERING SERVICES
STRUCTURE DESIGN
DESIGN BRANCH 1

BRIDGE NO. 53-3063
POST MILE 5.92

ORR AND DAY ROAD OVERHEAD (REPLACE)
RETAINING WALL ARCHITECTURAL DETAILS NO. 1

STRUCTURES DESIGN DETAIL SHEET (ENGLISH) (REV. 09-01-10)

ORIGINAL SCALE IN INCHES FOR REDUCED PLANS 0 1 2 3

UNIT: 3576
PROJECT NUMBER & PHASE: 07000018351
CONTRACT NO.: 07-215954

DISREGARD PRINTS BEARING EARLIER REVISION DATES

REVISION DATES 01/14/12 12/04/12 02/06/13

SHEET 24 OF 42

FILE => 53-3063-k-rwade101.dgn

USERNAME => s124496 DATE PLOTTED => 26-JUN-2013 TIME PLOTTED => 15:48

DIST	COUNTY	ROUTE	POST MILES TOTAL PROJECT	SHEET No.	TOTAL SHEETS
07	LA	5	0.0/7.6	696	985

P. Vijitakula 12-28-12
REGISTERED CIVIL ENGINEER DATE

6-24-13
PLANS APPROVAL DATE

REGISTERED PROFESSIONAL ENGINEER
P. VIJITAKULA
No. C 54701
Exp. 12-31-13
CIVIL
STATE OF CALIFORNIA

The State of California or its officers or agents shall not be responsible for the accuracy or completeness of electronic copies of this plan sheet.

NOTE:

For SECTION A-A, SECTION C-C and all other notes, see "RETAINING WALL ARCHITECTURAL DETAILS NO. 1" sheet.

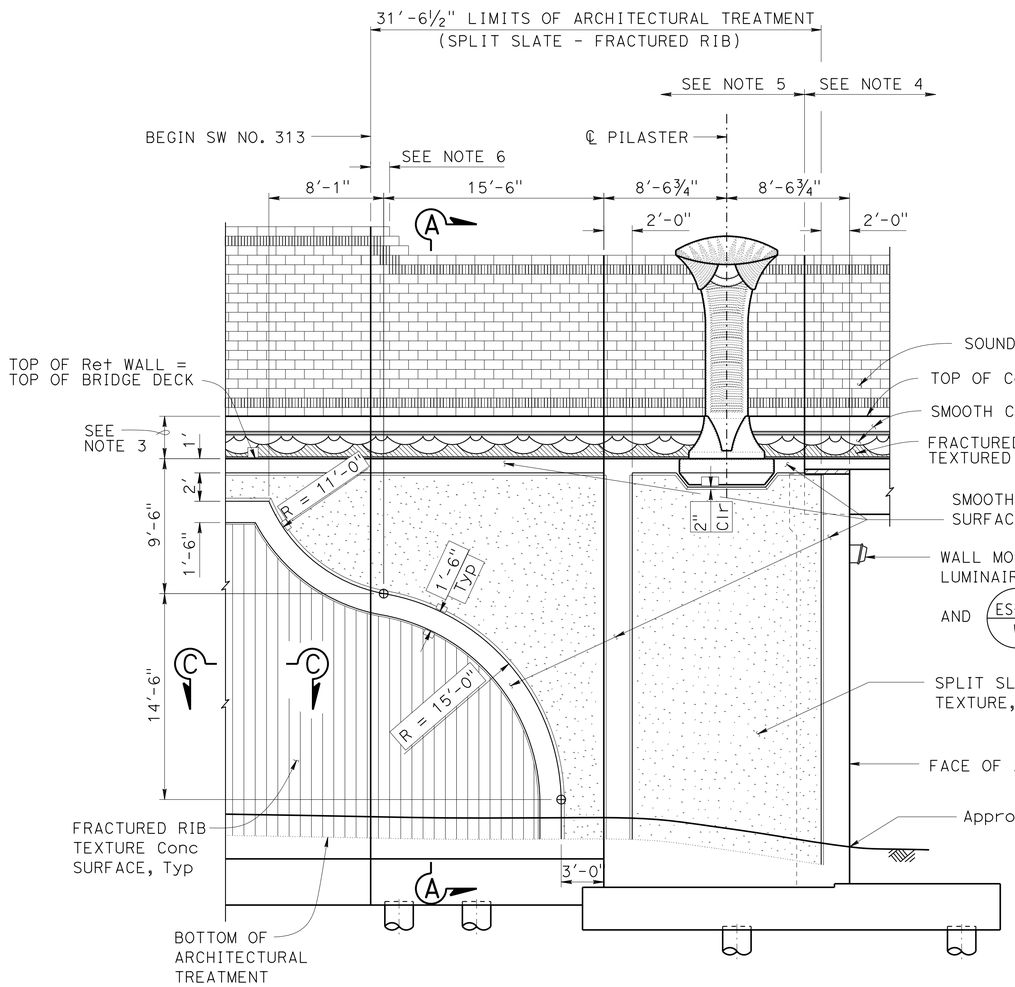

ABUTMENT 2 LEFT ELEVATION

3/16" = 1'-0"

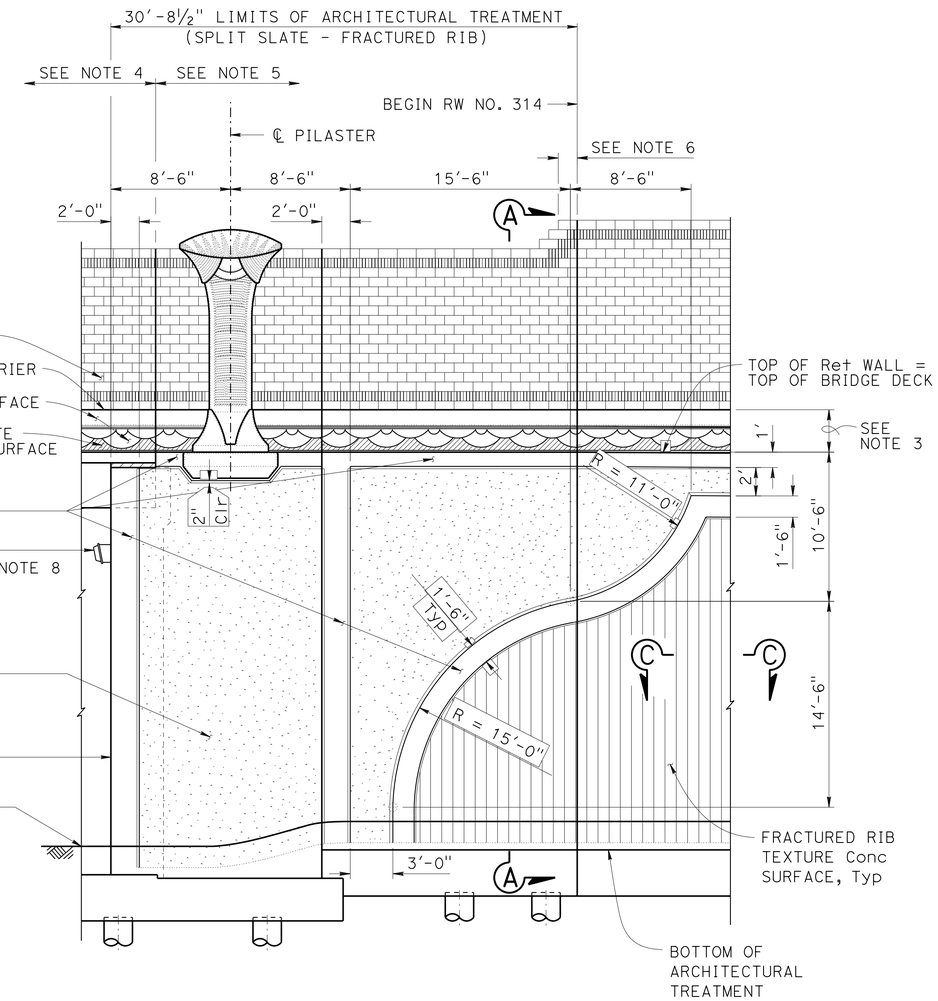

ABUTMENT 2 RIGHT ELEVATION

3/16" = 1'-0"

DESIGN	BY Isaac Tasabia	CHECKED Javier Chavez	
DETAILS	BY Jie Tang /G. S.	CHECKED D. Sessions/P. Vijitakula	
QUANTITIES	BY Manode Kodsuntie	CHECKED Grant Schuster	

STATE OF CALIFORNIA
DEPARTMENT OF TRANSPORTATION

DIVISION OF ENGINEERING SERVICES
STRUCTURE DESIGN
DESIGN BRANCH 1

BRIDGE NO. 53-3063
POST MILE 5.92

ORR AND DAY ROAD OVERHEAD (REPLACE)

RETAINING WALL ARCHITECTURAL DETAILS NO. 2

STRUCTURES DESIGN DETAIL SHEET (ENGLISH) (REV. 09-01-10)

ORIGINAL SCALE IN INCHES FOR REDUCED PLANS 0 1 2 3

UNIT: 3576
PROJECT NUMBER & PHASE: 07000018351
CONTRACT NO.: 07-215954

DISREGARD PRINTS BEARING EARLIER REVISION DATES

REVISION DATES 07/19/12 02/06/13 12/19/12

SHEET 25 OF 42

FILE => 53-3063-k-rwadet02.dgn

USERNAME => s124496 DATE PLOTTED => 26-JUN-2013 TIME PLOTTED => 15:48

DIST	COUNTY	ROUTE	POST MILES TOTAL PROJECT	SHEET No.	TOTAL SHEETS
07	LA	5	0.0/7.6	697	985

P. Vijitakula
REGISTERED CIVIL ENGINEER 12-28-12 DATE

6-24-13
PLANS APPROVAL DATE

REGISTERED PROFESSIONAL ENGINEER P. VIJITAKULA No. C 54701 Exp. 12-31-13 CIVIL STATE OF CALIFORNIA

The State of California or its officers or agents shall not be responsible for the accuracy or completeness of electronic copies of this plan sheet.

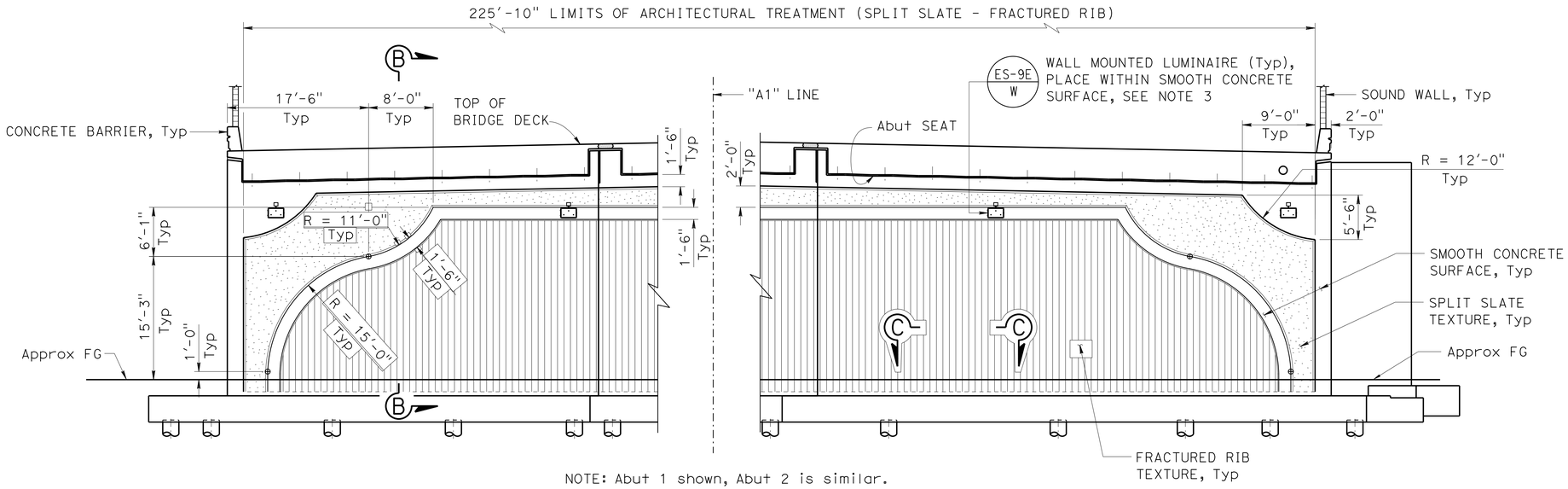

NOTE: Abut 1 shown, Abut 2 is similar.

PART ELEVATION
1/8" = 1'-0"

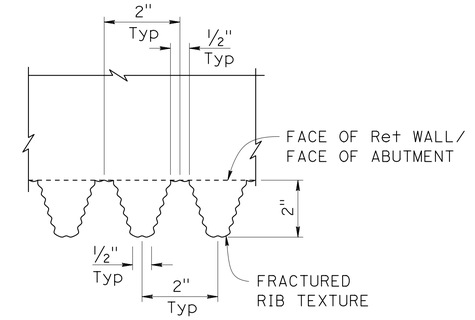

SECTION C-C
1/2" = 1'-0"

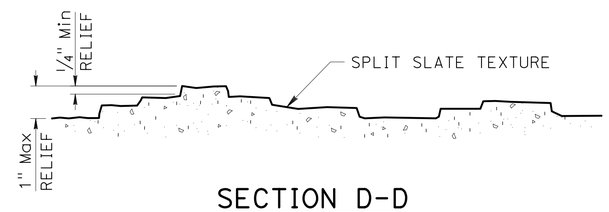

SECTION D-D
NO SCALE

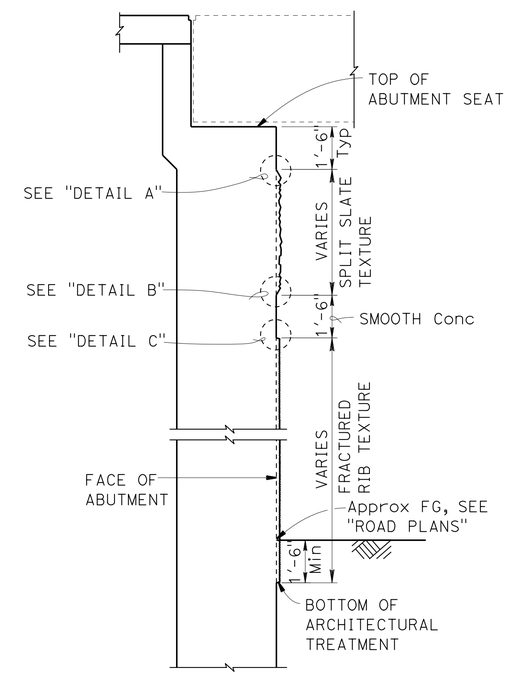

SECTION B-B
3/8" = 1'-0"

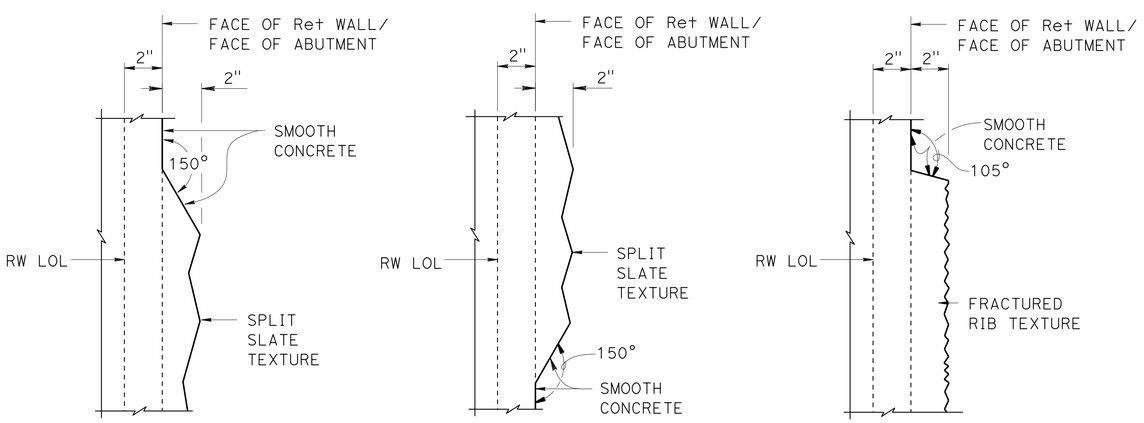

DETAIL A
3" = 1'-0"

DETAIL B
3" = 1'-0"

DETAIL C
3" = 1'-0"

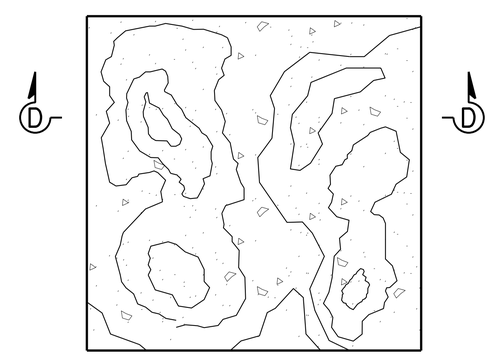

SPLIT SLATE TEXTURE
NO SCALE

NOTES:

1. For concrete barrier architectural treatment, see "CONCRETE BARRIER ARCHITECTURAL DETAILS" sheet.
2. For sound wall architectural treatment, see "SOUND WALL ARCHITECTURAL DETAILS" sheet.
3. For wall mounted luminaire conduit information and other details not shown, see "ROAD PLANS"

	BY	CHECKED
DESIGN	Isaac Tasabia	Javier Chavez
DETAILS	Jie Tang	D. Sessions/P. Vijitakula
QUANTITIES	Manode Kodsuntie	Grant Schuster

STATE OF CALIFORNIA DEPARTMENT OF TRANSPORTATION

DIVISION OF ENGINEERING SERVICES STRUCTURE DESIGN
DESIGN BRANCH 1

BRIDGE NO. 53-3063
POST MILE 5.92

ORR AND DAY ROAD OVERHEAD (REPLACE)
ABUTMENT ARCHITECTURAL DETAILS

STRUCTURES DESIGN DETAIL SHEET (ENGLISH) (REV. 09-01-10)

ORIGINAL SCALE IN INCHES FOR REDUCED PLANS 0 1 2 3

UNIT: 3576
PROJECT NUMBER & PHASE: 07000018351
CONTRACT NO.: 07-215954

DISREGARD PRINTS BEARING EARLIER REVISION DATES

REVISION DATES 01/14/12 02/06/13 12/18/12

SHEET 26 OF 42

FILE => 53-3063-1-abutadet.dgn

USERNAME => s124496 DATE PLOTTED => 26-JUN-2013 TIME PLOTTED => 15:48

DIST	COUNTY	ROUTE	POST MILES TOTAL PROJECT	SHEET No.	TOTAL SHEETS
07	LA	5	0.0/7.6	698	985

P. Vijitakula
REGISTERED CIVIL ENGINEER 12-28-12 DATE

6-24-13
PLANS APPROVAL DATE

REGISTERED PROFESSIONAL ENGINEER
P. VIJITAKULA
No. C 54701
Exp. 12-31-13
CIVIL
STATE OF CALIFORNIA

The State of California or its officers or agents shall not be responsible for the accuracy or completeness of electronic copies of this plan sheet.

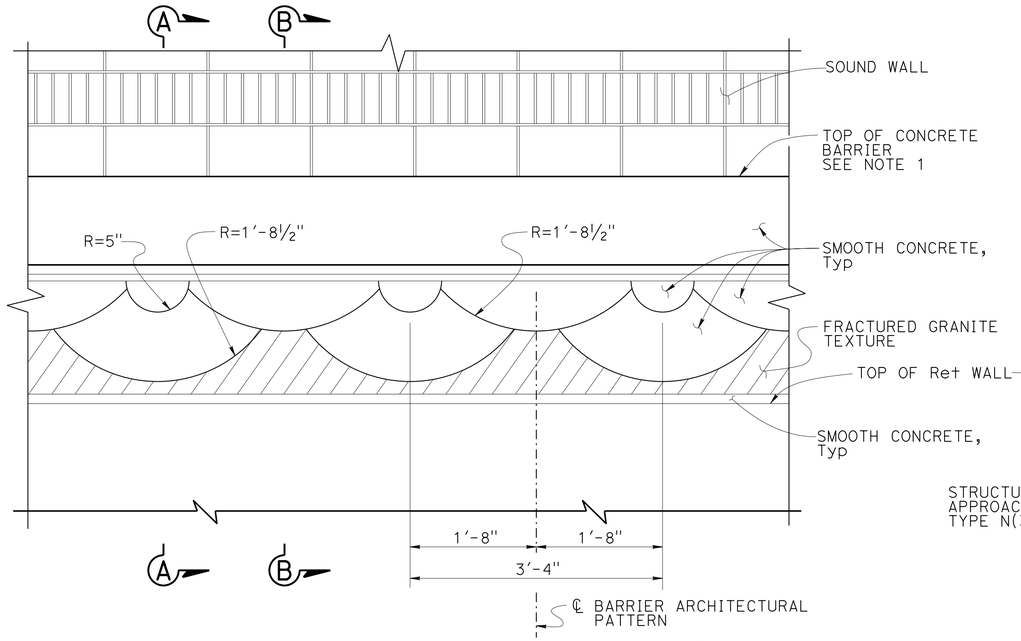

ELEVATION CONCRETE BARRIER TYPE 736A (MOD 2)

1" = 1'-0"

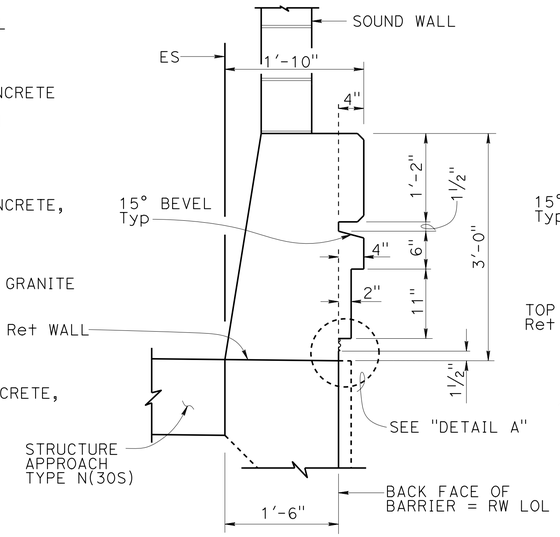

SECTION A-A

1" = 1'-0"

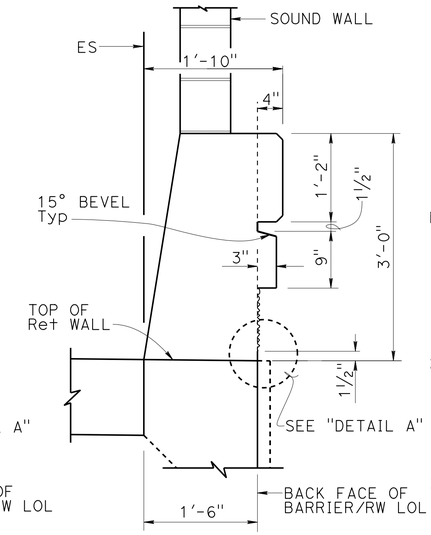

SECTION B-B

1" = 1'-0"

NOTES:

1. For Concrete Barrier Type 736A (Mod 2) details not shown, see "BARRIER SECTION" on "RETAINING WALL DETAILS" sheet.
2. For Concrete Barrier Type 736 (Mod 2) details not shown, see "BARRIER SECTION" on "SOUND WALL-MASONRY BLOCK ON BRIDGE" sheet.
3. For sound wall architectural details, see "SOUND WALL ARCHITECTURAL DETAILS" sheet.

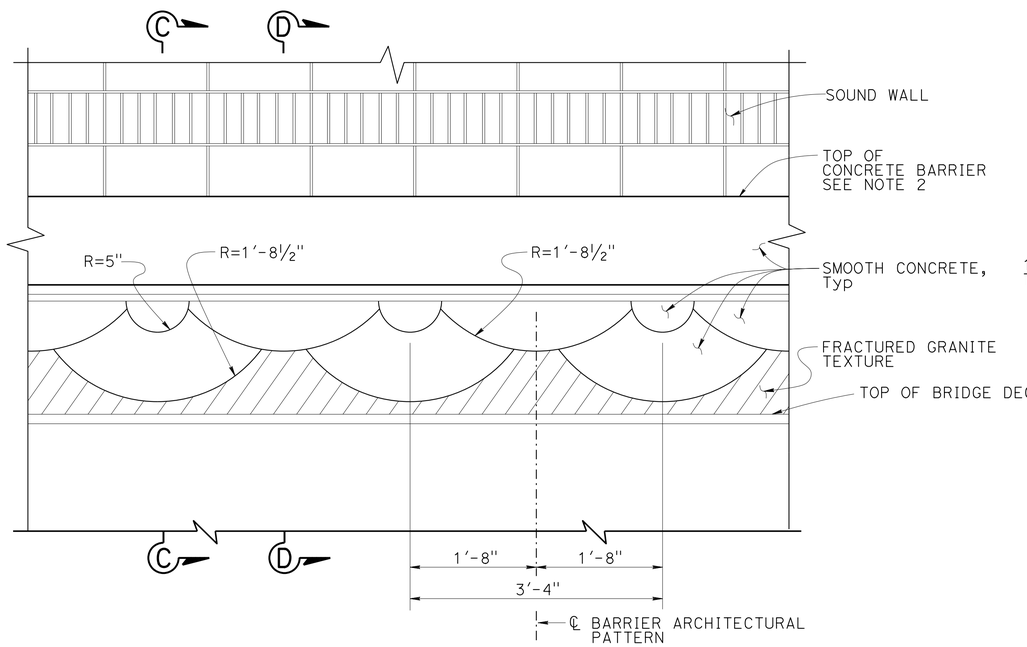

ELEVATION CONCRETE BARRIER TYPE 736 (Mod 2)

1" = 1'-0"

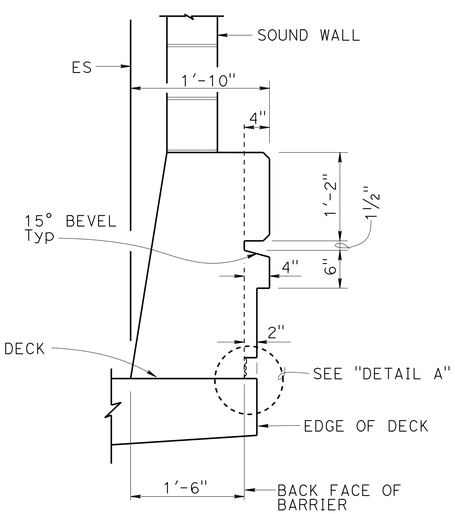

SECTION C-C

1" = 1'-0"

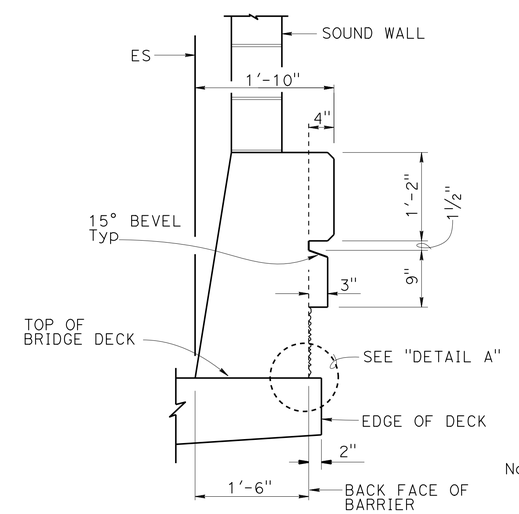

SECTION D-D

1" = 1'-0"

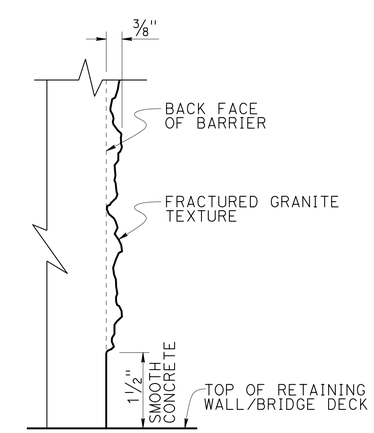

Note: Detail at "SECTION B-B" shown, other locations similar.

DETAIL A

NO SCALE

DESIGN	BY Isaac Tasabia	CHECKED Javier Chavez	
DETAILS	BY Jin Zhou/Jie Tang	CHECKED D. Sessions/P. Vijitakula	
QUANTITIES	BY Manode Kodsuntie	CHECKED Grant Schuster	

STATE OF CALIFORNIA
DEPARTMENT OF TRANSPORTATION

DIVISION OF ENGINEERING SERVICES
STRUCTURE DESIGN
DESIGN BRANCH 1

BRIDGE NO. 53-3063
POST MILE 5.92

ORR AND DAY ROAD OVERHEAD (REPLACE)
CONCRETE BARRIER ARCHITECTURAL DETAILS

STRUCTURES DESIGN DETAIL SHEET (ENGLISH) (REV. 09-01-10)

ORIGINAL SCALE IN INCHES FOR REDUCED PLANS 0 1 2 3

UNIT: 3576
PROJECT NUMBER & PHASE: 07000018351
CONTRACT NO.: 07-215954

DISREGARD PRINTS BEARING EARLIER REVISION DATES

REVISION DATES 01/24/12 02/06/13 10/24/12

SHEET 27 OF 42

FILE => 53-3063-1-barrieradet01.dgn

USERNAME => s124496 DATE PLOTTED => 26-JUN-2013 TIME PLOTTED => 15:48

DIST	COUNTY	ROUTE	POST MILES TOTAL PROJECT	SHEET No.	TOTAL SHEETS
07	LA	5	0.0/7.6	699	985

P. Vijitakula
REGISTERED CIVIL ENGINEER 12-28-12 DATE

6-24-13
PLANS APPROVAL DATE

REGISTERED PROFESSIONAL ENGINEER
P. VIJITAKULA
No. C 54701
Exp. 12-31-13
CIVIL
STATE OF CALIFORNIA

The State of California or its officers or agents shall not be responsible for the accuracy or completeness of electronic copies of this plan sheet.

NOTE:
1. All Masonry Block shall be Precision both sides, unless otherwise noted.

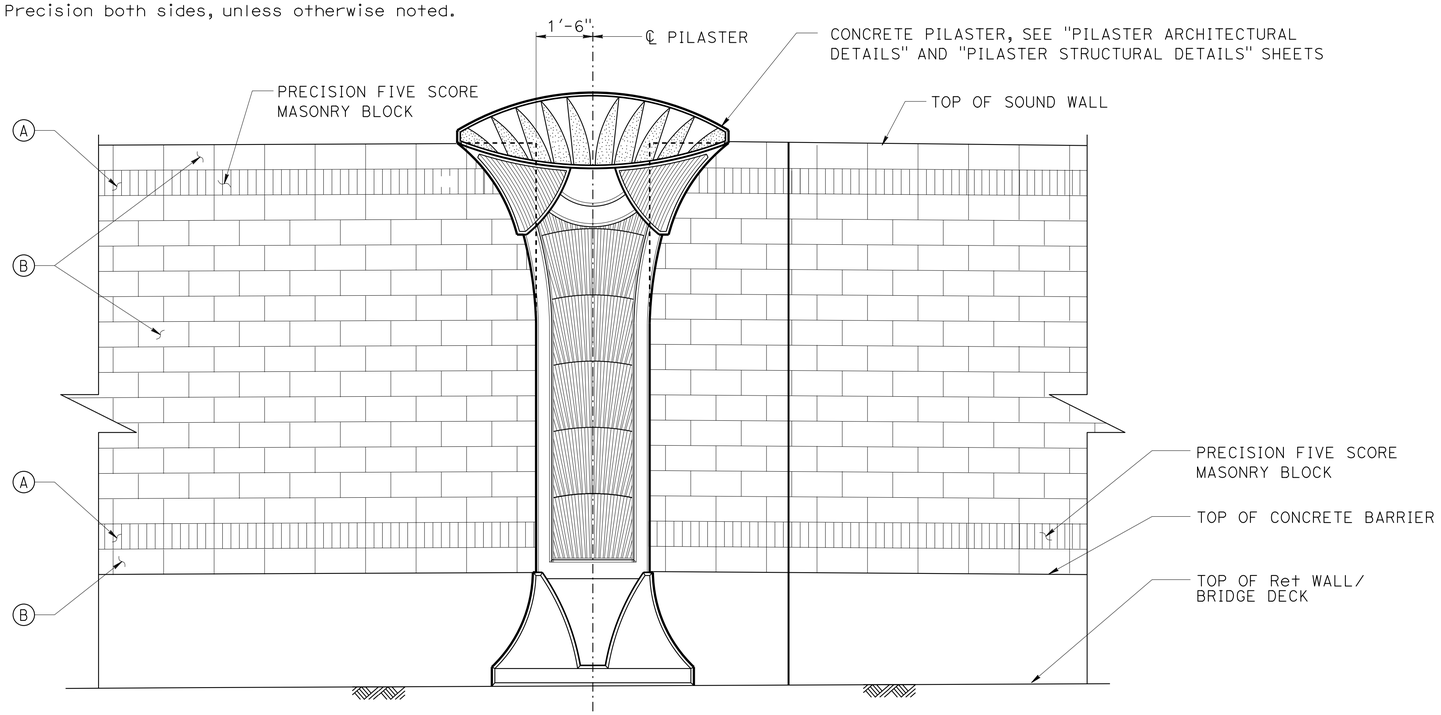

PART SOUND WALL ELEVATION - FREEWAY SIDE

½" = 1'-0"

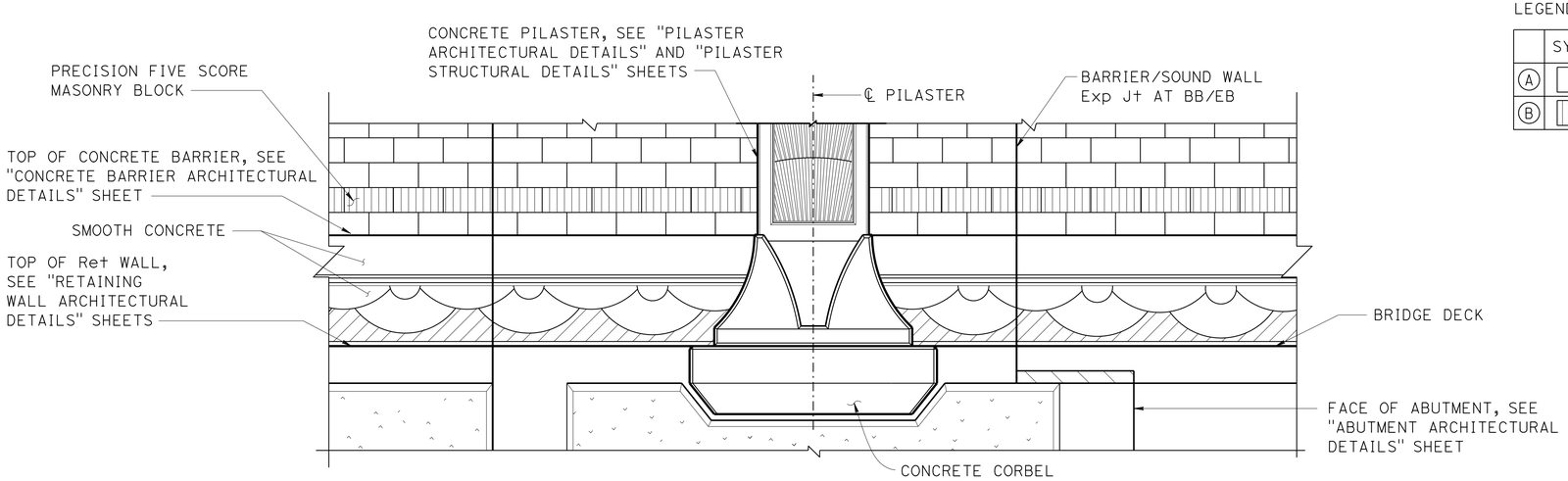

PART SOUND WALL ELEVATION - BACK SIDE

½" = 1'-0"

LEGEND:

	SYMBOL	NOMINAL SIZE	TEXTURE	COLOR
A		8" x 8" x 16"	PRECISION 5 SCORE	TAN (FEDERAL COLOR #22648)
B		8" x 8" x 16"	PRECISION	TAN (FEDERAL COLOR #22648)

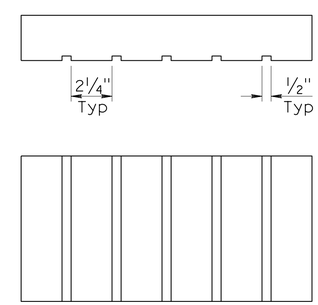

PRECISION 5 SCORE PLAIN

NO SCALE

	BY	CHECKED
DESIGN	Isaac Tasabia	Javier Chavez
DETAILS	Jin Zhou/Jie Tang	D. Sessions/P. Vijitakula
QUANTITIES	Manode Kodsuntie	Grant Schuster

STATE OF CALIFORNIA
DEPARTMENT OF TRANSPORTATION

DIVISION OF ENGINEERING SERVICES
STRUCTURE DESIGN
DESIGN BRANCH 1

BRIDGE NO. 53-3063
POST MILE 5.92

ORR AND DAY ROAD OVERHEAD (REPLACE)
SOUND WALL ARCHITECTURAL DETAILS

STRUCTURES DESIGN DETAIL SHEET (ENGLISH) (REV. 09-01-10)

ORIGINAL SCALE IN INCHES FOR REDUCED PLANS 0 1 2 3

UNIT: 3576
PROJECT NUMBER & PHASE: 07000018351
CONTRACT NO.: 07-215954

DISREGARD PRINTS BEARING EARLIER REVISION DATES

REVISION DATES: 07/24/12 10/17/12 09/24/12

SHEET 28 OF 42

FILE => 53-3063-1-swadet.dgn

USERNAME => s124496 DATE PLOTTED => 26-JUN-2013 TIME PLOTTED => 15:48

DIST	COUNTY	ROUTE	POST MILES TOTAL PROJECT	SHEET No.	TOTAL SHEETS
07	LA	5	0.0/7.6	700	985

P. Vijitakula
REGISTERED CIVIL ENGINEER 12-28-12 DATE

6-24-13
PLANS APPROVAL DATE

REGISTERED PROFESSIONAL ENGINEER P. VIJITAKULA No. C 54701 Exp. 12-31-13 CIVIL STATE OF CALIFORNIA

The State of California or its officers or agents shall not be responsible for the accuracy or completeness of electronic copies of this plan sheet.

NOTES:
1. All dimensions symetrical about ℄ Pilaster.
2. For location of "DETAIL E", see "PILASTER ARCHITECTURAL DETAILS NO. 2" sheet.
3. Beveled edges are 45° unless otherwise noted.
4. All vertical dimensions are measured along the ℄ Pilaster (Pilaster shall be vertical).

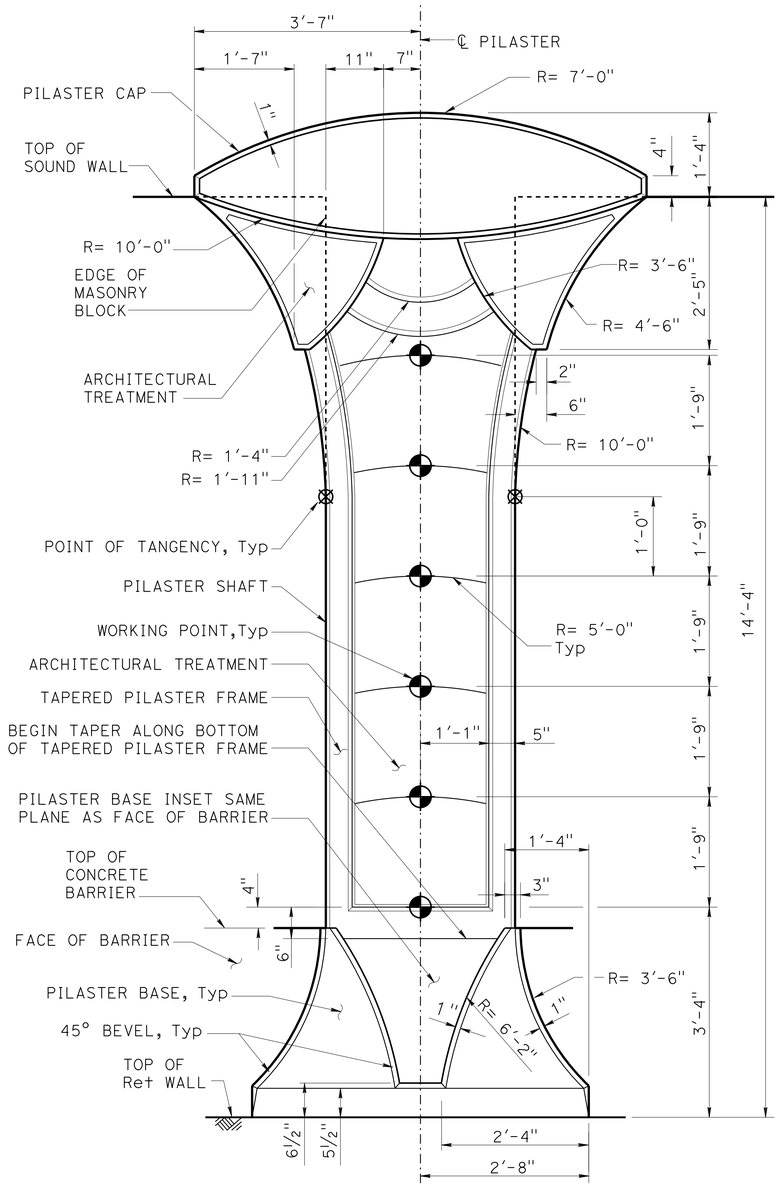

14'-4" SOUND WALL

PILASTER ELEVATION - FREEWAY SIDE

NO SCALE

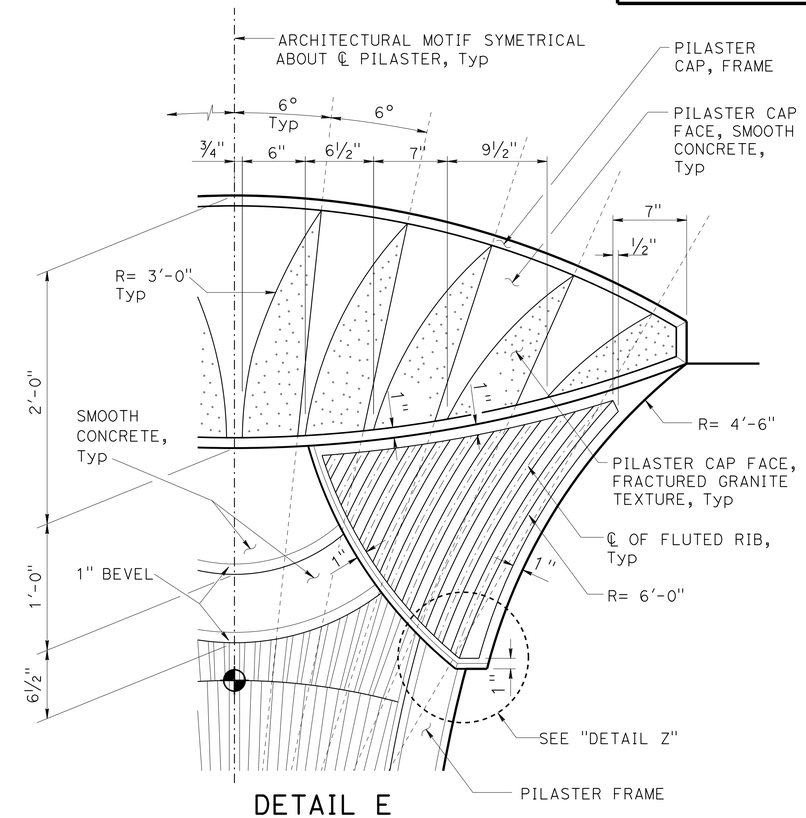

DETAIL E

NO SCALE

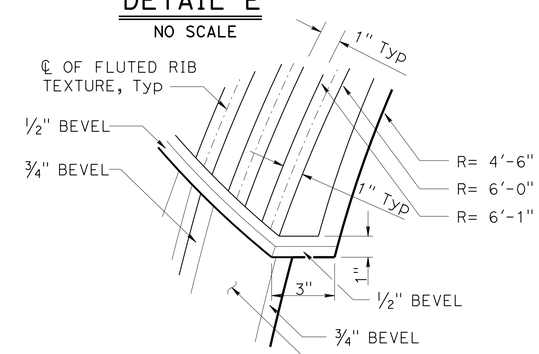

DETAIL Z

NO SCALE

DESIGN	BY Isaac Tasabia	CHECKED Javier Chavez	
DETAILS	BY Jin Zhou / Jie Tang	CHECKED D. Sessions/P. Vijitakula	
QUANTITIES	BY Manode Kodsuntie	CHECKED Grant Schuster	

STATE OF CALIFORNIA
DEPARTMENT OF TRANSPORTATION

DIVISION OF ENGINEERING SERVICES
STRUCTURE DESIGN
DESIGN BRANCH 1

BRIDGE NO. 53-3063
POST MILE 5.92

ORR AND DAY ROAD OVERHEAD (REPLACE)
PILASTER ARCHITECTURAL DETAILS NO. 1

STRUCTURES DESIGN DETAIL SHEET (ENGLISH) (REV. 09-01-10)

ORIGINAL SCALE IN INCHES FOR REDUCED PLANS 0 1 2 3

UNIT: 3576
PROJECT NUMBER & PHASE: 07000018351
CONTRACT NO.: 07-215954

DISREGARD PRINTS BEARING EARLIER REVISION DATES

REVISION DATES 01/12/12 10/17/12 09/24/12

SHEET 29 OF 42

FILE => 53-3063-m-parch01.dgn

USERNAME => s124496 DATE PLOTTED => 26-JUN-2013 TIME PLOTTED => 16:16