REFERENCE: CALTRANS SOIL & ROCK LOGGING, CLASSIFICATION, AND PRESENTATION MANUAL (2010)

DIST	COUNTY	ROUTE	POST MILES TOTAL PROJECT	SHEET No.	TOTAL SHEETS
07	LA	5	2.4/4.0	1001	1288

GEOTECHNICAL PROFESSIONAL — 06/2011 DATE

3-26-12
PLANS APPROVAL DATE

REGISTERED PROFESSIONAL ENGINEER — MICHAEL G. SMITH No. 2229 Exp. 3-31-2012 GEOTECHNICAL — STATE OF CALIFORNIA

The State of California or its officers or agents shall not be responsible for the accuracy or completeness of electronic copies of this plan sheet.

GROUP SYMBOLS AND NAMES

Graphic/Symbol	Group Names	Graphic/Symbol	Group Names
GW	Well-graded GRAVEL Well-graded GRAVEL with SAND	CL	Lean CLAY Lean CLAY with SAND Lean CLAY with GRAVEL SANDY lean CLAY SANDY lean CLAY with GRAVEL GRAVELLY lean CLAY GRAVELLY lean CLAY with SAND
GP	Poorly-graded GRAVEL Poorly-graded GRAVEL with SAND		
GW-GM	Well-graded GRAVEL with SILT Well-graded GRAVEL with SILT and SAND	CL-ML	SILTY CLAY SILTY CLAY with SAND SILTY CLAY with GRAVEL SANDY SILTY CLAY SANDY SILTY CLAY with GRAVEL GRAVELLY SILTY CLAY GRAVELLY SILTY CLAY with SAND
GW-GC	Well-graded GRAVEL with CLAY (or SILTY CLAY) Well-graded GRAVEL with CLAY and SAND (or SILTY CLAY and SAND)		
GP-GM	Poorly-graded GRAVEL with SILT Poorly-graded GRAVEL with SILT and SAND	ML	SILT SILT with SAND SILT with GRAVEL SANDY SILT SANDY SILT with GRAVEL GRAVELLY SILT GRAVELLY SILT with SAND
GP-GC	Poorly-graded GRAVEL with CLAY (or SILTY CLAY) Poorly-graded GRAVEL with CLAY and SAND (or SILTY CLAY and SAND)		
GM	SILTY GRAVEL SILTY GRAVEL with SAND	OL	ORGANIC lean CLAY ORGANIC lean CLAY with SAND ORGANIC lean CLAY with GRAVEL SANDY ORGANIC lean CLAY SANDY ORGANIC lean CLAY with GRAVEL GRAVELLY ORGANIC lean CLAY GRAVELLY ORGANIC lean CLAY with SAND
GC	CLAYEY GRAVEL CLAYEY GRAVEL with SAND		
GC-GM	SILTY, CLAYEY GRAVEL SILTY, CLAYEY GRAVEL with SAND	OL	ORGANIC SILT ORGANIC SILT with SAND ORGANIC SILT with GRAVEL SANDY ORGANIC SILT SANDY ORGANIC SILT with GRAVEL GRAVELLY ORGANIC SILT GRAVELLY ORGANIC SILT with SAND
SW	Well-graded SAND Well-graded SAND with GRAVEL		
SP	Poorly-graded SAND Poorly-graded SAND with GRAVEL	CH	Fat CLAY Fat CLAY with SAND Fat CLAY with GRAVEL SANDY fat CLAY SANDY fat CLAY with GRAVEL GRAVELLY fat CLAY GRAVELLY fat CLAY with SAND
SW-SM	Well-graded SAND with SILT Well-graded SAND with SILT and GRAVEL		
SW-SC	Well-graded SAND with CLAY (or SILTY CLAY) Well-graded SAND with CLAY and GRAVEL (or SILTY CLAY and GRAVEL)	MH	Elastic SILT Elastic SILT with SAND Elastic SILT with GRAVEL SANDY elastic SILT SANDY elastic SILT with GRAVEL GRAVELLY elastic SILT GRAVELLY elastic SILT with SAND
SP-SM	Poorly-graded SAND with SILT Poorly-graded SAND with SILT and GRAVEL		
SP-SC	Poorly-graded SAND with CLAY (or SILTY CLAY) Poorly-graded SAND with CLAY and GRAVEL (or SILTY CLAY and GRAVEL)	OH	ORGANIC fat CLAY ORGANIC fat CLAY with SAND ORGANIC fat CLAY with GRAVEL SANDY ORGANIC fat CLAY SANDY ORGANIC fat CLAY with GRAVEL GRAVELLY ORGANIC fat CLAY GRAVELLY ORGANIC fat CLAY with SAND
SM	SILTY SAND SILTY SAND with GRAVEL		
SC	CLAYEY SAND CLAYEY SAND with GRAVEL	OH	ORGANIC elastic SILT ORGANIC elastic SILT with SAND ORGANIC elastic SILT with GRAVEL SANDY ORGANIC elastic SILT SANDY ORGANIC elastic SILT with GRAVEL GRAVELLY ORGANIC elastic SILT GRAVELLY ORGANIC elastic SILT with SAND
SC-SM	SILTY, CLAYEY SAND SILTY, CLAYEY SAND with GRAVEL		
PT	PEAT	OL/OH	ORGANIC SOIL ORGANIC SOIL with SAND ORGANIC SOIL with GRAVEL SANDY ORGANIC SOIL SANDY ORGANIC SOIL with GRAVEL GRAVELLY ORGANIC SOIL GRAVELLY ORGANIC SOIL with SAND
	COBBLES COBBLES and BOULDERS BOULDERS		

FIELD AND LABORATORY TESTING

- (C) Consolidation (ASTM D 2435)
- (CL) Collapse Potential (ASTM D 5333)
- (CP) Compaction Curve (CTM 216)
- (CR) Corrosivity Testing (CTM 643, CTM 422, CTM 417)
- (CU) Consolidated Undrained Triaxial (ASTM D 4767)
- (DS) Direct Shear (ASTM D 3080)
- (EI) Expansion Index (ASTM D 4829)
- (M) Moisture Content (ASTM D 2216)
- (OC) Organic Content-% (ASTM D 2974)
- (P) Permeability (CTM 220)
- (PA) Particle Size Analysis (ASTM D 422)
- (PI) Plasticity Index (AASHTO T 90) Liquid Limit (AASHTO T 89)
- (PL) Point Load Index (ASTM D 5731)
- (PM) Pressure Meter
- (R) R-Value (CTM 301)
- (SE) Sand Equivalent (CTM 217)
- (SG) Specific Gravity (AASHTO T 100)
- (SL) Shrinkage Limit (ASTM D 427)
- (SW) Swell Potential (ASTM D 4546)
- (UC) Unconfined Compression-Soil (ASTM D 2166) Unconfined Compression-Rock (ASTM D 2938)
- (UU) Unconsolidated Undrained Triaxial (ASTM D 2850)
- (UW) Unit Weight (ASTM D 4767)

APPARENT DENSITY OF COHESIONLESS SOILS

Description	SPT N_{60} (Blows / 12 in.)
Very Loose	0 - 5
Loose	5 - 10
Medium Dense	10 - 30
Dense	30 - 50
Very Dense	Greater than 50

MOISTURE

Description	Criteria
Dry	No discernable moisture
Moist	Moisture present, but no free water
Wet	Visible free water

PERCENT OR PROPORTION OF SOILS

Description	Criteria
Trace	Particles are present but estimated to be less than 5%
Few	5% - 10%
Little	15% - 25%
Some	30% - 45%
Mostly	50% - 100%

PARTICLE SIZE

Description		Size (in.)
Boulder		Greater than 12
Cobble		3 - 12
Gravel	Coarse	3/4 - 3
	Fine	1/5 - 3/4
Sand	Coarse	1/16 - 1/5
	Medium	1/64 - 1/16
	Fine	1/300 - 1/64
Silt and Clay		Less than 1/300

ENGINEERING SERVICES — MATERIALS AND GEOTECHNICAL SERVICES

FUNCTIONAL SUPERVISOR
NAME: M. SMITH
DRAWN BY: P.QUACH
CHECKED BY: D.ORRIS
FIELD INVESTIGATION BY: P.MCDONALD/M.ISLAM

STATE OF CALIFORNIA DEPARTMENT OF TRANSPORTATION

DIVISION OF ENGINEERING SERVICES STRUCTURE DESIGN
DESIGN BRANCH 15

BRIDGE NO. 53-3043
POST MILE 3.97

SILVERBOW AVENUE PEDESTRIAN OC

LOG OF TEST BORINGS SHEET 7 OF 9

OGS CIVIL LOG OF TEST BORINGS SHEET

ORIGINAL SCALE IN INCHES FOR REDUCED PLANS 0 1 2 3

CU 07
EA 215931

DISREGARD PRINTS BEARING EARLIER REVISION DATES — REVISION DATES 06/17/11

SHEET 99 OF 101

FILE => 53-3043-z-lotb07.dgn

USERNAME => s103858 DATE PLOTTED => 28-MAR-2012 TIME PLOTTED => 12:41

DIST.	COUNTY	ROUTE	POST MILES TOTAL PROJECT	SHEET NO.	TOTAL SHEETS
07	LA	5	1.2/5.1	105	109

W. C. Cain
REGISTERED ENGINEERING GEOLOGIST

11-14-96
DATE APPROVAL DATE

REGISTERED GEOLOGIST W. C. CAIN No. 232 Exp. 9-30-96 CERTIFIED ENGINEERING GEOLOGIST STATE OF CALIFORNIA

THE STATE OF CALIFORNIA OR ITS OFFICERS OR AGENTS SHALL NOT BE RESPONSIBLE FOR THE ACCURACY OR COMPLETENESS OF ELECTRONIC COPIES OF THIS PLAN SHEET.

DIVISION OF ENGINEERING SERVICES - MATERIALS AND GEOTECHNICAL SERVICES

As-Built Log of Test Borings sheet is considered an informational document only. As such, the State of California registration seal with signature, license number and registration certificate expiration date confirm that this is a true and accurate copy of the original document. It does not attest to the accuracy or validity of the information contained in the original document. This drawing is available and presented only for the convenience of any bidder, contractor or other interested party.

DIST.	COUNTY	ROUTE	POST MILE-TOTAL PROJECT	Sheet No.	Total Sheets
07	LA	5	2.4/4.0	1002	1288

REGISTERED CIVIL ENGINEER — DATE 06/2011

REGISTERED PROFESSIONAL ENGINEER CHUNGKEUN LEE No. C69450 Exp. 6/30/12 CIVIL STATE OF CALIFORNIA

SILVERBOW AVENUE PEDESTRIAN OC

LOG OF TEST BORINGS 8 OF 9

UNIT: ENGLISH — PROJECT NUMBER & PHASE: EA 215931 — CONTRACT No. CU 59A0590 — BRIDGE No. 53-3043

NOTE: A COPY OF THIS LOG OF TEST BORINGS IS AVAILABLE AT OFFICE OF STRUCTURE MAINTENANCE AND INVESTIGATIONS, SACRAMENTO, CALIFORNIA — Sheet 100 of 101

TO ACCOMPANY PLANS DATED 3-26-12

NO AS-BUILT CHANGES
AS BUILT
CORRECTIONS BY L. F. FELLOWS
CONTRACT NO. 01-123604
DATE 2-26-98 MW

Notes

1. As-Built Vertical Datum = NGVD88

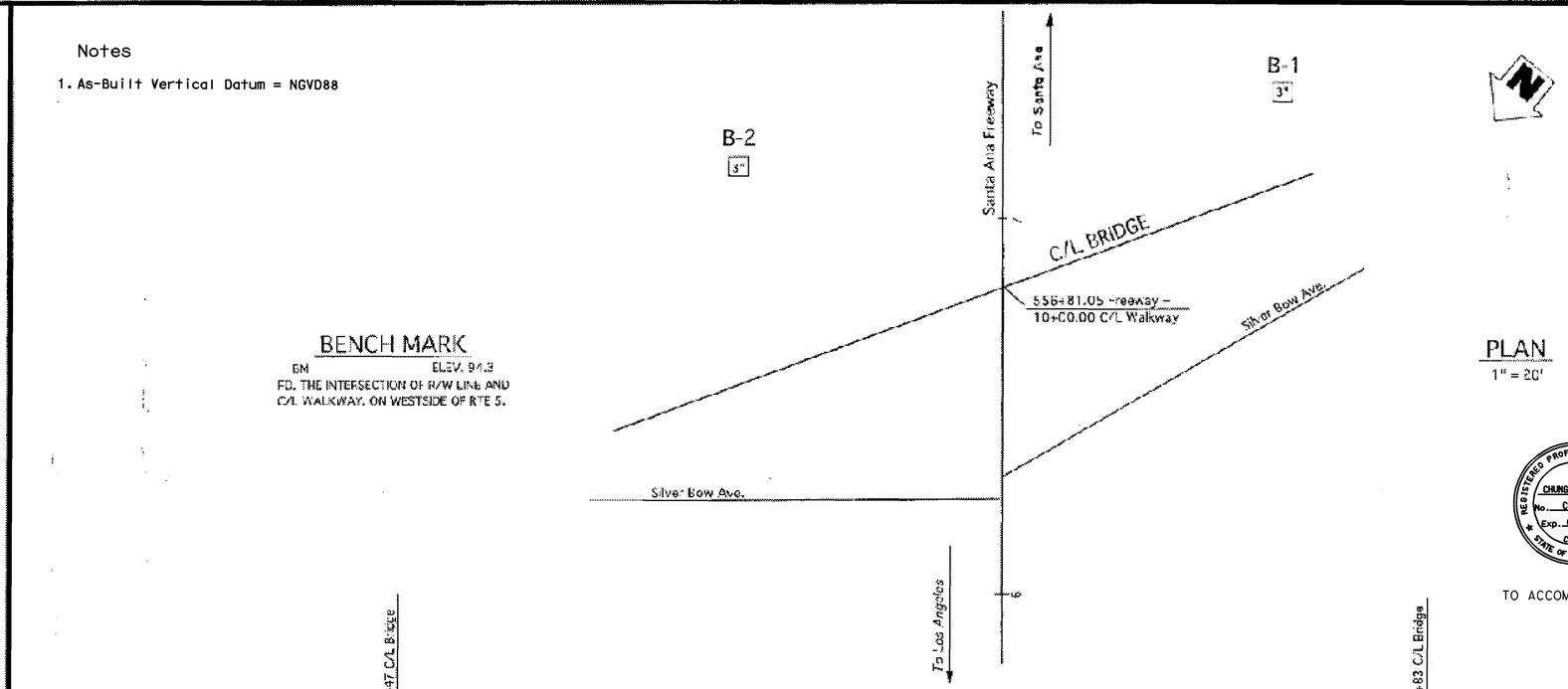

BENCH MARK
BM ELEV. 94.9
FD. THE INTERSECTION OF R/W LINE AND C/L WALKWAY. ON WESTSIDE OF RTE 5.

PLAN
1" = 20'

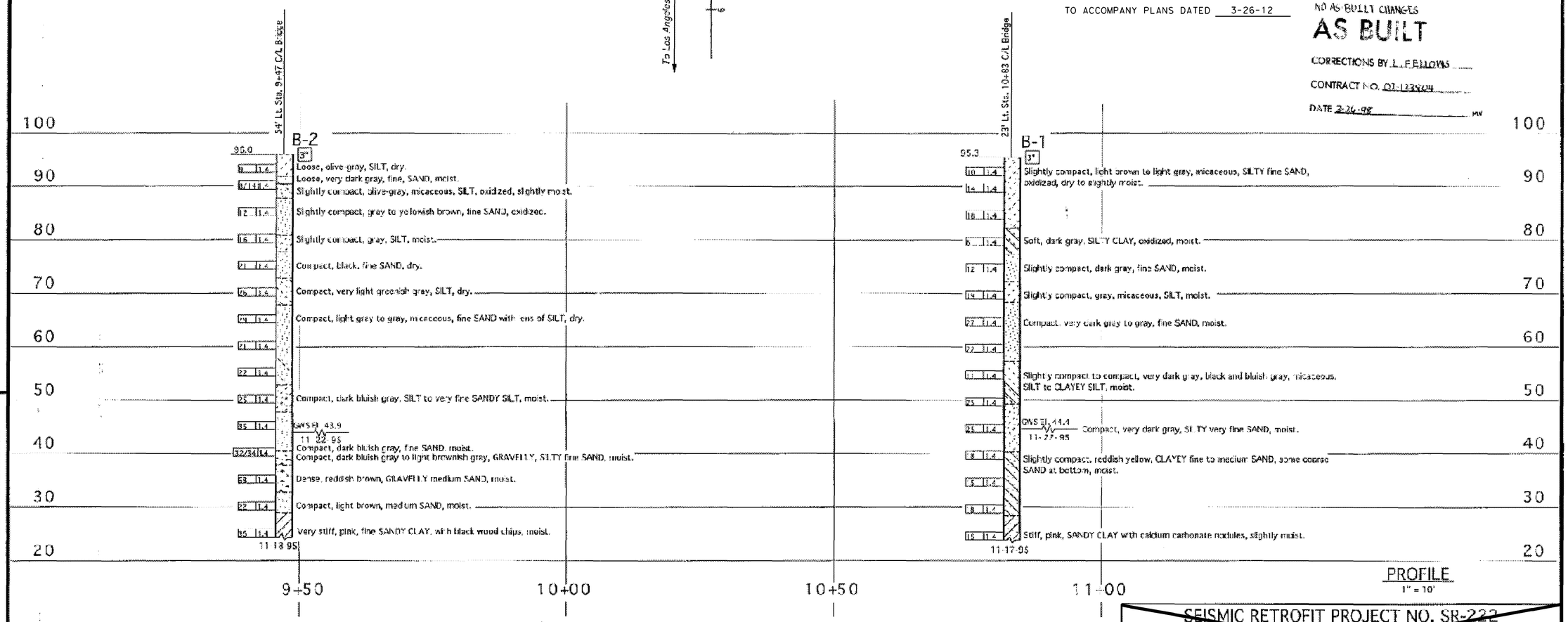

PROFILE
1" = 10'

LEGEND OF BORING OPERATIONS

LEGEND OF EARTH MATERIALS

CONSISTENCY CLASSIFICATION FOR SOILS
According to the Standard Penetration Test

Penetration Resistance (Blows/Ft)	Granular	Cohesive
0-4	Very Loose	Very Soft
5-9	Loose	Soft
10-15	Slightly compact	Stiff
16-30	Compact	Very Stiff
31-50	Dense	Hard
51+	Very Dense	Very Hard

NOTE: Classification of soil material as shown on this sheet is based upon field inspection and is not to be construed to imply mechanical analysis.

ENGINEERING SERVICE CENTER	STRUCTURE FOUNDATIONS
DRAWN BY Ron Nash 12 95	
CHECKED BY Rosemary Serrani 2-96	

FIELD INVESTIGATION BY: E. GERANI, S. PARVIZIAN

State of CALIFORNIA DEPARTMENT OF TRANSPORTATION

DIVISION OF STRUCTURES STRUCTURE MAINTENANCE DESIGN

BRIDGE NO. 53-1003 — POST MILE 3.97

SEISMIC RETROFIT PROJECT NO. SR-222
SILVER BOW PEDESTRIAN OVERCROSSING
LOG OF TEST BORINGS 1 OF 2

ORIGINAL SCALE IN INCHES FOR REDUCED PLANS → 0 1 2 3

CU: 07264
EA: 123801

DISREGARD PRINTS DEARING EARLIER REVISION DATES →

REVISION DATES (PRELIMINARY STAGE ONLY) — SHEET 5 OF 6

TL-0031 REV. 9/95

FILENAME => 53-3043-z-lotb08.tif

EL 405 (8)

DIST.	COUNTY	ROUTE	POST MILE-TOTAL PROJECT	Sheet No.	Total Sheets
07	LA	5	2.4/4.0	1003	1288

DIVISION OF ENGINEERING SERVICES - MATERIALS AND GEOTECHNICAL SERVICES

As-Built Log of Test Borings sheet is considered an informational document only. As such, the State of California registration seal with signature, license number and registration certificate expiration date confirms that this is a true and accurate copy of the original document. It does not attest to the accuracy or validity of the information contained in the original document. This drawing is available and presented only for the convenience of any bidder, contractor or other interested party.

REGISTERED CIVIL ENGINEER — DATE 06/2011

SILVERBOW AVENUE PEDESTRIAN OC

LOG OF TEST BORINGS 9 OF 9

UNIT: ENGLISH
PROJECT NUMBER & PHASE: EA 215931
CONTRACT No. CU 59A0590
BRIDGE No. 53-3043
Sheet 101 of 101

NOTE: A COPY OF THIS LOG OF TEST BORINGS IS AVAILABLE AT OFFICE OF STRUCTURE MAINTENANCE AND INVESTIGATIONS, SACRAMENTO, CALIFORNIA

REGISTERED PROFESSIONAL ENGINEER — CHUNGKEUN LEE — No. C69450 — Exp. 6/30/12 — CIVIL — STATE OF CALIFORNIA

TO ACCOMPANY PLANS DATED 3-26-12

Notes

1. As-Built Vertical Datum = NGVD29
2. Datum Conversion
   NAVD88 = NGVD29+2.408 ft

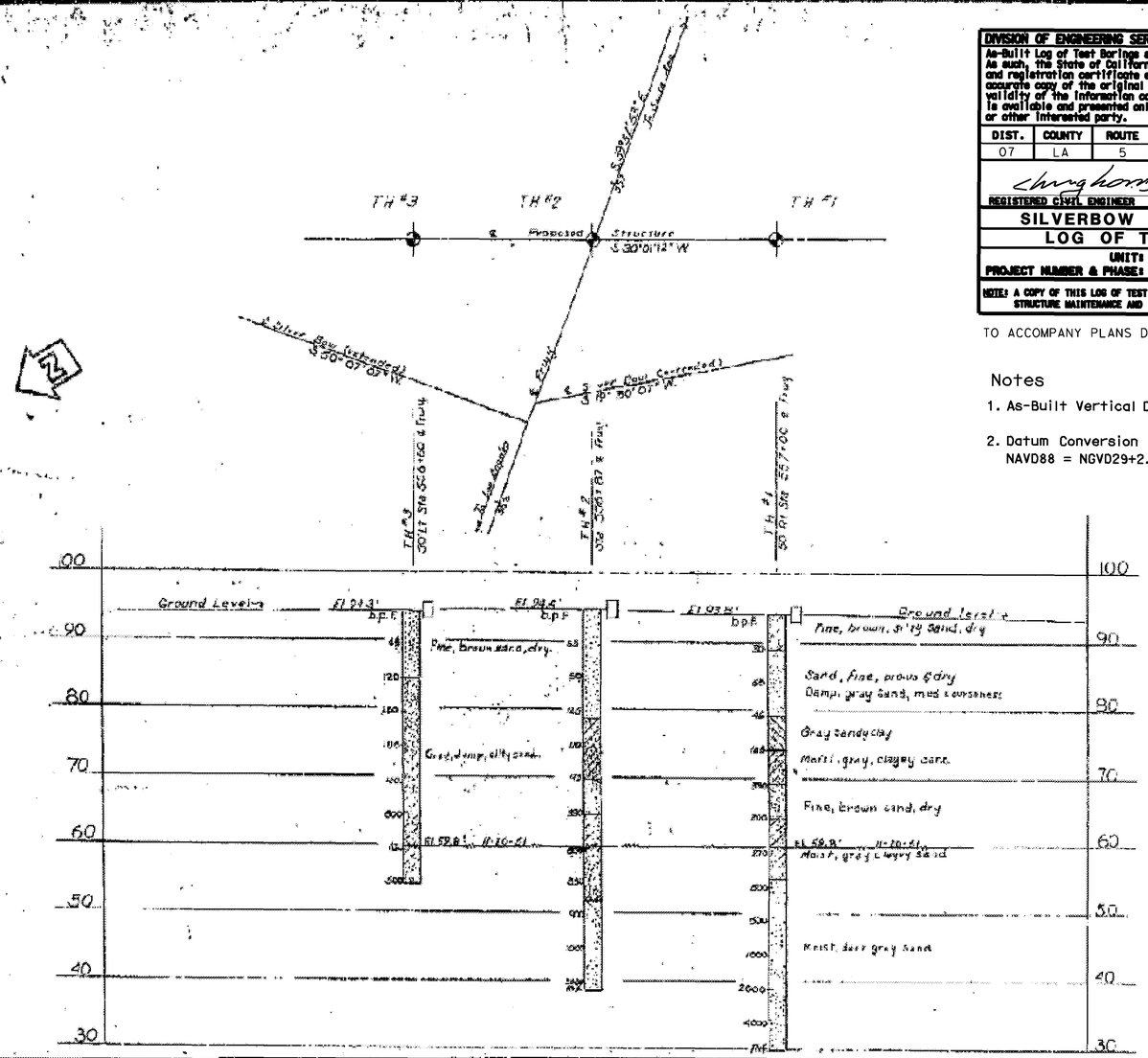

Test Boring By Bridge Dept.
Nov 20 1951

NOTE: [illegible] from a free fall of 12 inches.

B.M. "S"
Brass Cap in Conc Mon, County Surveyor, in E. 2127.7
Elev 95.947 [illegible] Elev 95.947

AS BUILT PLANS
Contract No. 53-7V038
Date Completed
Document No. 20002131

Classification of Material, Based on Standard Grade Size Limits

Diagram and table showing the basis for estimates of grade size distribution used in determination of class names.

Class Name	Percentage of Sizes Present: Sand	Silt	Clay
Sand	80-100	0-20	0-20
Silty Sand	45-80	0-45	0-20
Sandy Silt	0-45	55-80	0-20
Silt	0-20	80-100	0-20
Clayey Sand	45-80	0-45	20-55
Clayey Silt	0-20	80-100	20-55
Sandy Clay	45-80	0-20	20-55
Silty Clay	0-20	45-80	20-55
Clay	0-20	0-80	55-100

Read all percentages on this line to obtain the class name. To obtain the "gravelly" name, add "gravelly" to the class name, if gravel is present in appreciable amounts. The terms "coarse sand" and "fine" when used to describe gravel, sand and silt refer to Standard Grade Size Limits.

Legend of Boring Operations

- Plan of any boring
- 1" Sampler boring
- Rotary wash boring
- 1" Closed sampler driven
- Core boring
- 2½" Penetrometer driven
- 1⅜" Sampler boring
- 2" O.D. Auger boring
- 3" O.D. Auger boring
- Casing driven
- Jet boring
- (S) Sample taken
- 1⅜" A-100 driver

The appropriate boring symbols designating the method of operation are shown at the upper right-hand corner of the respective boring. Where tool changes were made during the boring operation numbers are shown at the point of change.

Legend of Earth Materials

- Gravel — G
- Sand — S
- Silt — Si
- Clay — C
- Silty Sand — Si S
- Clayey Sand — C S
- Sandy Silt — S Si
- Clayey Silt — C Si
- Sandy Clay — SC
- Silty Clay — Si C
- Peat and/or Organic Clay — O
- Sandstone — S S
- Shale — Sh
- Broken Rock (Fragments) — Br
- Rock — R
- Fill Material

Abbreviations

El. 60.4	Elevation of ground at test hole
bpf	Blows per foot — see note above
P	Pulled pipe
M	Moisture as % dry weight
El. 43.4 ± 8.4	Elevation of ground water and date

Notes

The contractor's attention is directed to Section 2, Article (c) of the Standard Specifications and to the Special Provisions accompanying this set of plans.

Classification of earth material as shown on this sheet is based upon field inspection and is not to be construed to imply mechanical analysis.

AS BUILT — The structure contains total details on this sheet
Corrections by
Date

Silver Bow Avenue Pedestrian OC
LOG OF TEST BORINGS
Scale Horiz. 1" = 20' Vert. 1" = 10' — File No.
Bridge No. 53-1003 — Drawing No. B-2874-8

TRE DRAWING NO. P-2874-8

I HEREBY CERTIFY THAT THIS IS A TRUE AND ACCURATE COPY OF THE ABOVE DOCUMENT TAKEN UNDER MY DIRECTION AND CONTROL ON THIS DATE IN SACRAMENTO, CALIFORNIA PURSUANT TO AUTHORIZATION BY THE DIRECTOR OF PUBLIC WORKS.

DATE 1/14/97 SIGNATURE [illegible] TITLE [illegible]

FILENAME => 53-3043-z-lotb09.tif

DIST	COUNTY	ROUTE	POST MILES TOTAL PROJECT	SHEET No	TOTAL SHEETS
07	LA	5	2.4/4.0	1004	1288

Traci Menard 12-12-11
REGISTERED CIVIL ENGINEER DATE

3-26-12
PLANS APPROVAL DATE

The State of California or its officers or agents shall not be responsible for the accuracy or completeness of electronic copies of this plan sheet.

REGISTERED PROFESSIONAL ENGINEER Traci Menard No. 54207 Exp. 12/31/13 CIVIL STATE OF CALIFORNIA

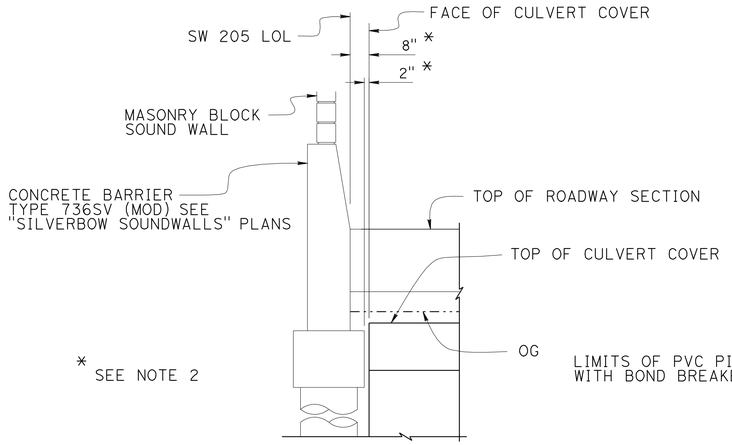

SECTION B-B

3/8" = 1'-0"

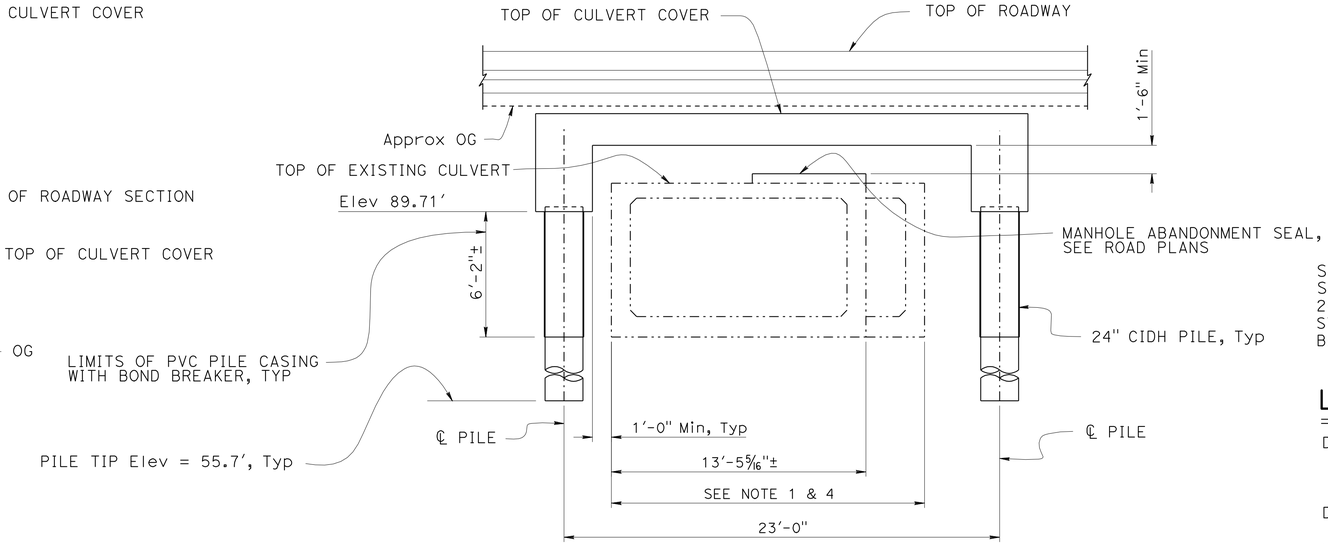

SECTION A-A

1/4" = 1'-0"

QUANTITIES

STRUCTURE EXCAVATION	322	CY
STRUCTURE BACKFILL	191	CY
24" CAST-IN-DRILLED-HOLE CONCRETE PILING	508	LF
STRUCTURAL CONCRETE	131	CY
BAR REINFORCING STEEL	37,290	LB

GENERAL NOTES
LOAD AND RESISTANCE FACTOR DESIGN

DESIGN: AASHTO LRFD BRIDGE DESIGN SPECIFICATIONS 4th Edition and California Amendments, dated December 2008

DEAD LOAD: Includes 35 psf for future overlay

LIVE LOADING: HL93 with "Low-Boy" and Permit Design Vehicle

REINFORCED CONCRETE: f_y = 60 ksi
f'_c = 4 ksi

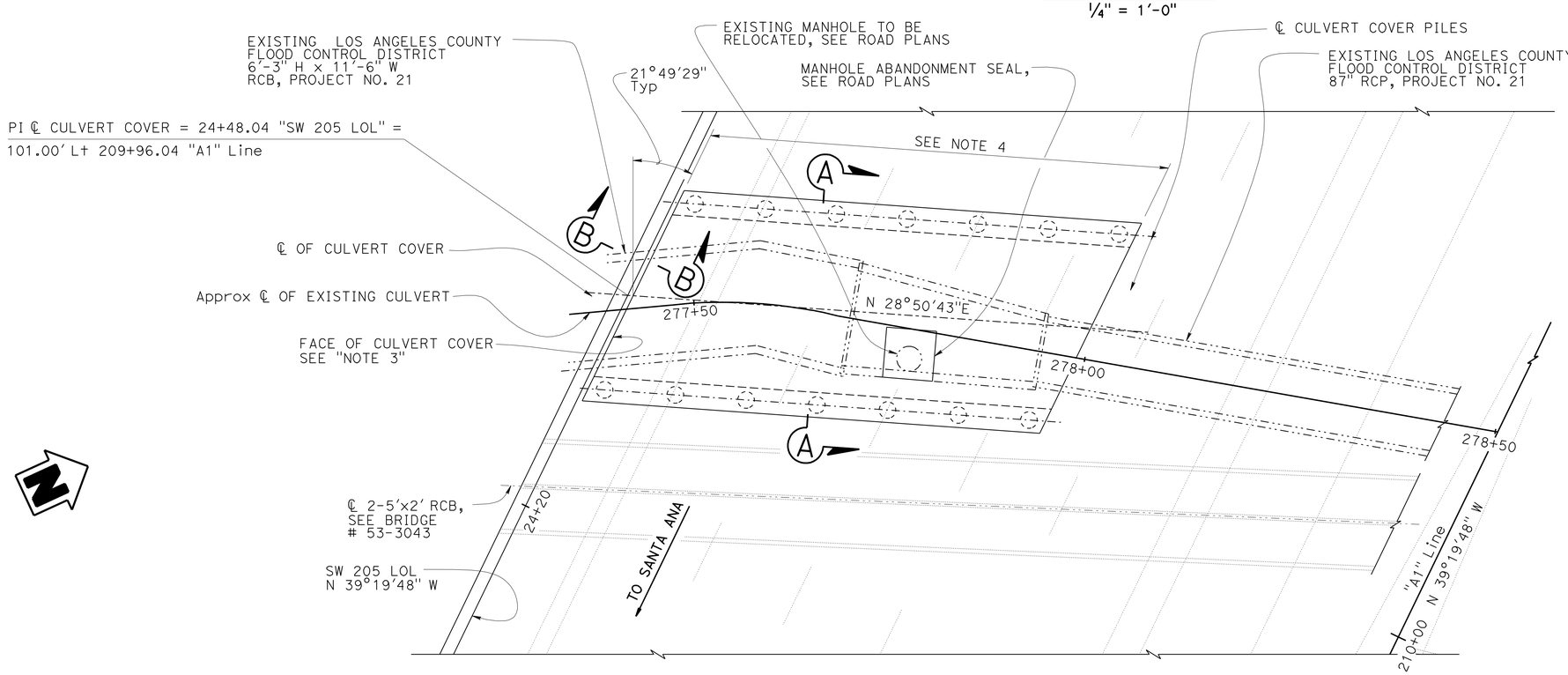

PLAN

1/8" = 1'-0"

INDEX TO PLANS

SHEET NO.	TITLE
1.	GENERAL PLAN
2.	FOUNDATION PLAN
3.	COVER DETAILS NO. 1
4.	COVER DETAILS NO. 2
5.	COVER DETAILS NO. 3
6.	LOG OF TEST BORINGS 1 OF 5
7.	LOG OF TEST BORINGS 2 OF 5
8.	LOG OF TEST BORINGS 3 OF 5
9.	LOG OF TEST BORINGS 4 OF 5
10.	LOG OF TEST BORINGS 5 OF 5

STANDARD PLANS DATED MAY 2006

A10A	ACRONYMS AND ABBREVIATIONS (SHEET 1 OF 2)
A10B	ACRONYMS AND ABBREVIATIONS (SHEET 2 OF 2)
B0-13	BRIDGE DETAILS
B2-3	16" AND 24" CAST-IN-DRILLED-HOLE CONCRETE PILE

STANDARD PLAN SHEET No.
DETAIL No.

Legend:
—·—·— Indicates Existing Structure

Notes:
1. Approximate Limits of Existing Culvert.
2. Measured perpendicular to Face of Culvert Cover.
3. Face of Culvert Cover parallel to SW 205 LOL.
4. Limits of Existing Channel not to be maintained by the Los Angeles County Department of Public Works/Los Angeles County Flood Control District.
5. The Contractor shall be extra cautious working in the vicinity of existing storm drain. For the purpose of soil compaction, the Contractor shall use hand held equipments when working adjacent to or over the existing storm drain in order to not cause any structural damage to storm drain.

NOTE:
THE CONTRACTOR SHALL VERIFY ALL CONTROLLING FIELD DIMENSIONS BEFORE ORDERING OR FABRICATING ANY MATERIAL.

Traci Menard
DESIGN ENGINEER

	BY	CHECKED			
DESIGN	Traci Menard	John Lane	LOAD & RESISTANCE FACTOR DESIGN	LIVE LOADING: HL93 W/"LOW-BOY"; PERMIT DESIGN VEHICLE	
DETAILS	Stan Cholda	John Lane	LAYOUT	Traci Menard	John Lane
QUANTITIES	Traci Menard	Suzan Moradi	SPECIFICATIONS	Theresa Nedwick	PLANS AND SPECS COMPARED John Lane

ORIGINAL SCALE IN INCHES FOR REDUCED PLANS 0 1 2 3

STATE OF CALIFORNIA
DEPARTMENT OF TRANSPORTATION

DIVISION OF ENGINEERING SERVICES
STRUCTURE DESIGN
DESIGN BRANCH 15

CU 07
EA 215931

BRIDGE NO. 53-3075M
POST MILE 3.98

SILVERBOW CULVERT COVER
GENERAL PLAN

DISREGARD PRINTS BEARING EARLIER REVISION DATES

REVISION DATES: 09-19-11 01-13-12 01-13-12 02-01-12 11-15-11 02-28-12 03-01-12 12-01-11 12-02-11 12-20-11

SHEET 1 OF 10

STRUCTURES DESIGN GENERAL PLAN SHEET (ENGLISH) (REV.07-24-06)

FILE => 53-3075m-a-gp.dgn

USERNAME => s109858 DATE PLOTTED => 28-MAR-2012 TIME PLOTTED => 12:42

DIST	COUNTY	ROUTE	POST MILES TOTAL PROJECT	SHEET No	TOTAL SHEETS
07	LA	5	2.4/4.0	1005	1288

Traci Menard 12-12-11
REGISTERED CIVIL ENGINEER DATE

3-26-12
PLANS APPROVAL DATE

REGISTERED PROFESSIONAL ENGINEER Traci Menard No. 54207 Exp. 12/31/13 CIVIL STATE OF CALIFORNIA

The State of California or its officers or agents shall not be responsible for the accuracy or completeness of electronic copies of this plan sheet.

Notes:
1. All piles not shown
2. Undeground Utilities as shown are approximate.

BRIDGE LOCATION (Exist Br.No 53-1003)

(A) 20.91 Ft Lt "A1" Line, Prop. ℄ Route 5, Sta 209+95.36, Elev= 114.58±
(B) 80.56 Ft Rt "A1" Line, Prop. ℄ Route 5, Sta 210+33.52, Elev= 114.41±
(C) 20.85 Ft Lt "A1" Line, Prop. ℄ Route 5, Sta 209+89.40, Elev= 114.60±
(D) 80.63 Ft Rt "A1" Line, Prop. ℄ Route 5, Sta 210+27.53, Elev= 114.51±

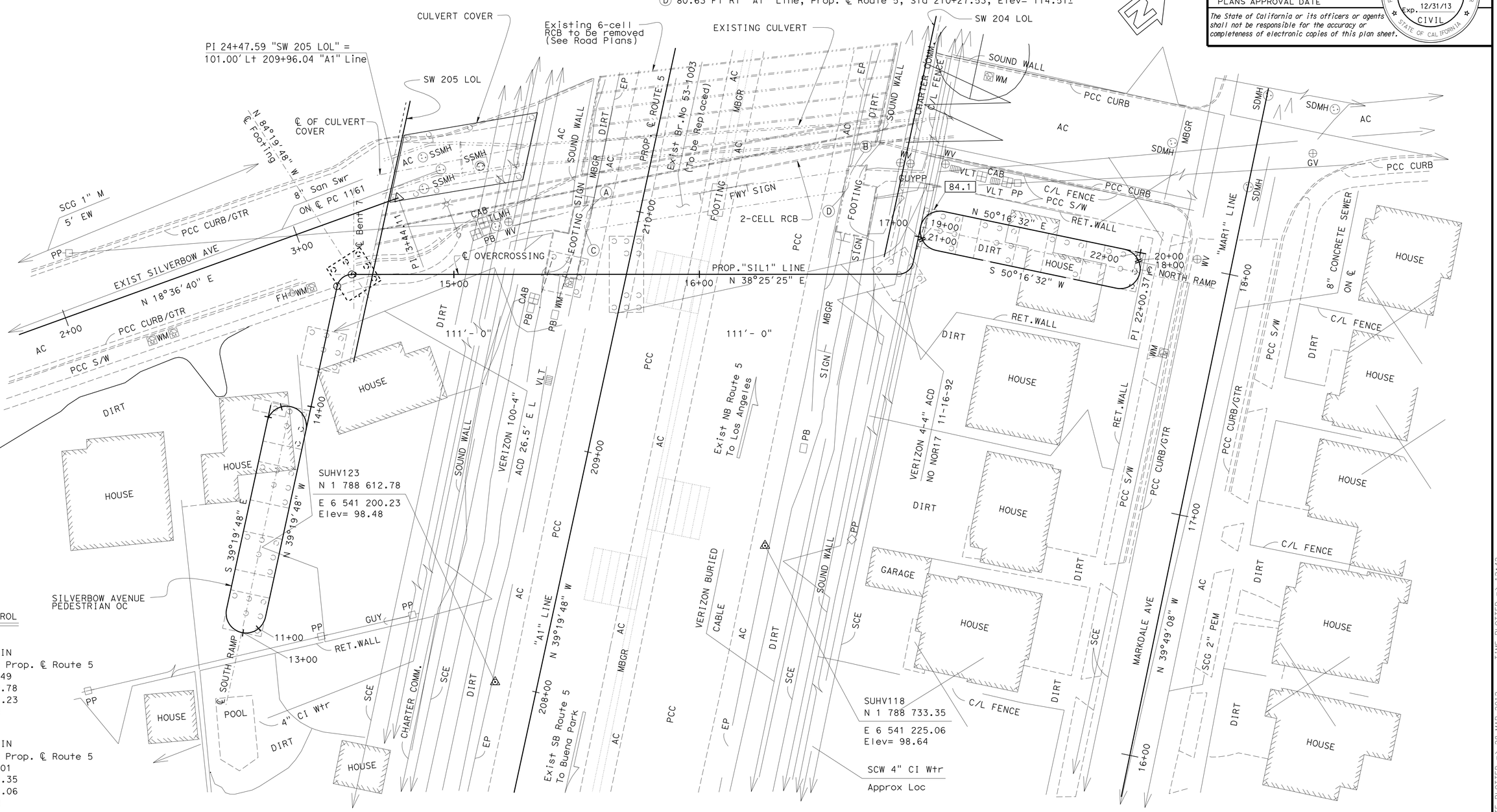

SURVEY CONTROL

SUHV-123

FND SPK & TIN
17.09 Ft Lt Prop. ℄ Route 5
Sta 208+00.49
N 1 788 612.78
E 6 541 200.23
Elev= 98.48

SUHV-118

FND SPK & TIN
78.53 Ft Rt Prop. ℄ Route 5
Sta 208+78.01
N 1 788 733.35
E 6 541 225.06
Elev= 98.64

PRELIMINARY INVESTIGATION SECTION

SCALE	VERT.DATUM NAVD88	PHOTOGRAMMETRY AS OF: X			
1"=20'	HORZ.DATUM NAD83 (1986)	SURVEYED	BY DISTRICT 07	CHECKED	BY T.PHUNG 02/2010
ALIGNMENT TIES DIST.TRAVERSE SHEETS		DRAFTED	BY V.PHAM 02/2010	CHECKED	BY S.ALIVIO 02/2010

	BY	CHECKED
DESIGN	H. Setberg	A. Logus/T. Menard
DETAILS	S. Cholda	A. Logus/T. Menard
QUANTITIES	T. Trefz	H. Mauroschadt

STATE OF CALIFORNIA
DEPARTMENT OF TRANSPORTATION

DIVISION OF ENGINEERING SERVICES
STRUCTURE DESIGN
DESIGN BRANCH 15

BRIDGE NO. 53-3075M
POST MILE 3.98

SILVERBOW CULVERT COVER FOUNDATION PLAN

STRUCTURES FOUNDATION PLAN SHEET (ENGLISH) (REV. 10/25/05)

ORIGINAL SCALE IN INCHES FOR REDUCED PLANS 0 1 2 3

CU 07
EA 215931

DISREGARD PRINTS BEARING EARLIER REVISION DATES

REVISION DATES: 02/03/10 01-18-12 01-19-12 01-11-12 02-01-12 8-16-11 11-03-11 01-04-12 01-05-12 01-06-12

SHEET 2 OF 10

FILE => 53-3075m-e-fp.dgn

USERNAME => s109858 DATE PLOTTED => 28-MAR-2012 TIME PLOTTED => 12:42

DIST	COUNTY	ROUTE	POST MILES TOTAL PROJECT	SHEET No	TOTAL SHEETS
07	LA	5	2.4/4.0	1006	1288

Traci Menard 12-12-11
REGISTERED CIVIL ENGINEER DATE

3-26-12
PLANS APPROVAL DATE

REGISTERED PROFESSIONAL ENGINEER
Traci Menard
No. 54207
Exp. 12/31/13
CIVIL
STATE OF CALIFORNIA

The State of California or its officers or agents shall not be responsible for the accuracy or completeness of electronic copies of this plan sheet.

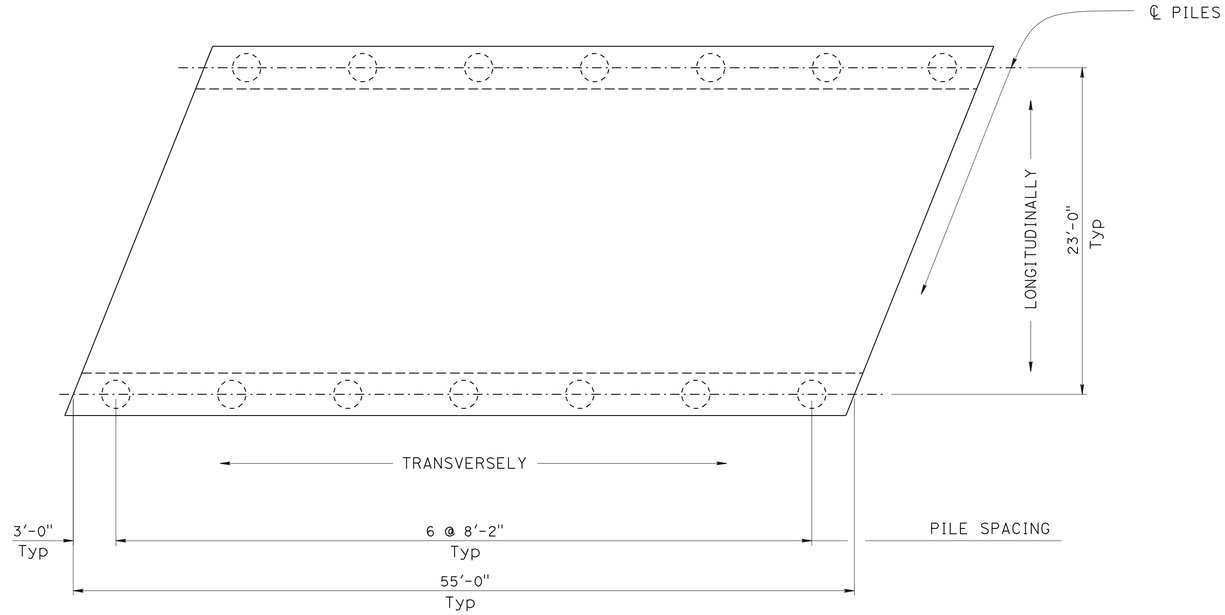

PLAN
3/16" = 1'-0"

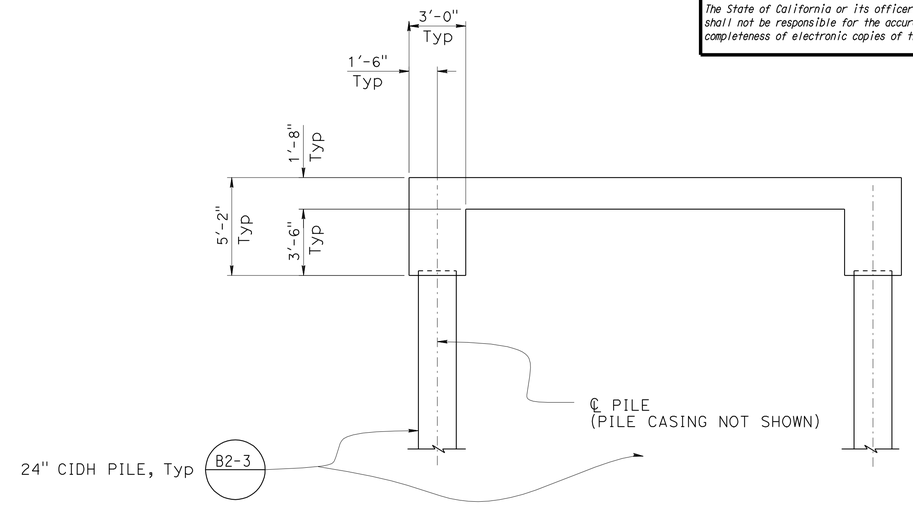

TYPICAL SECTION
1/4" = 1'-0"

COVER DETAILS

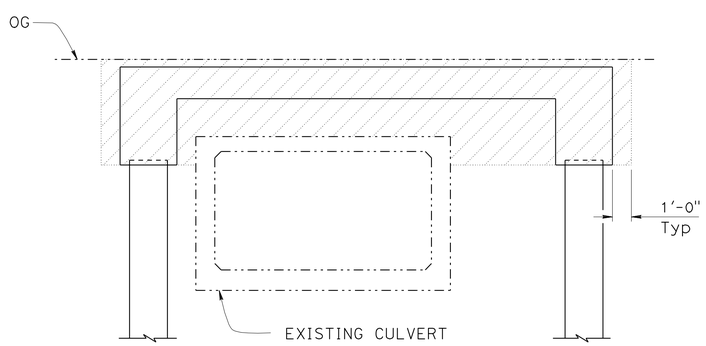

EXCAVATION
1/4" = 1'-0"

LEGEND:

STRUCTURE EXCAVATION

STRUCTURE BACKFILL

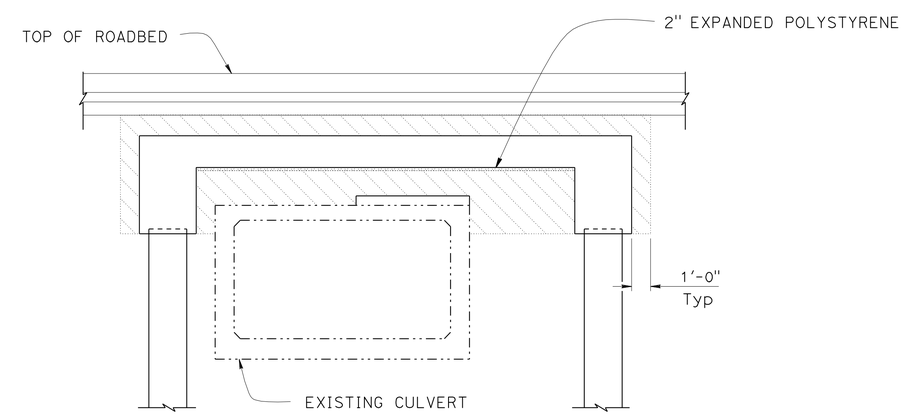

BACKFILL
1/4" = 1'-0"

EXCAVATION AND BACKFILL LIMITS

DESIGN	BY Traci Menard	CHECKED John Lane	
DETAILS	BY Stan Cholda	CHECKED John Lane	
QUANTITIES	BY Traci Menard	CHECKED Suzan Moradi	

STATE OF CALIFORNIA
DEPARTMENT OF TRANSPORTATION

DIVISION OF ENGINEERING SERVICES
STRUCTURE DESIGN
DESIGN BRANCH 15

BRIDGE NO. 53-3075M
POST MILE 3.98

SILVERBOW CULVERT COVER
COVER DETAILS NO. 1

STRUCTURES DESIGN DETAIL SHEET (ENGLISH) (REV. 10/25/05)

ORIGINAL SCALE IN INCHES FOR REDUCED PLANS 0 1 2 3

CU 07
EA 215931

DISREGARD PRINTS BEARING EARLIER REVISION DATES

REVISION DATES: 09-23-11 03-01-12 11-09-11 11-10-11 11-29-11 12-01-11 12-21-11 01-10-12 01-13-12 02-01-12

SHEET 3 OF 10

FILE => 53-3075m-g-det01.dgn

USERNAME => s109858 DATE PLOTTED => 28-MAR-2012 TIME PLOTTED => 12:42

DIST	COUNTY	ROUTE	POST MILES TOTAL PROJECT	SHEET No	TOTAL SHEETS
07	LA	5	2.4/4.0	1007	1288

Traci Menard 12-12-11
REGISTERED CIVIL ENGINEER DATE

3-26-12
PLANS APPROVAL DATE

REGISTERED PROFESSIONAL ENGINEER Traci Menard No. 54207 Exp. 12/31/13 CIVIL STATE OF CALIFORNIA

The State of California or its officers or agents shall not be responsible for the accuracy or completeness of electronic copies of this plan sheet.

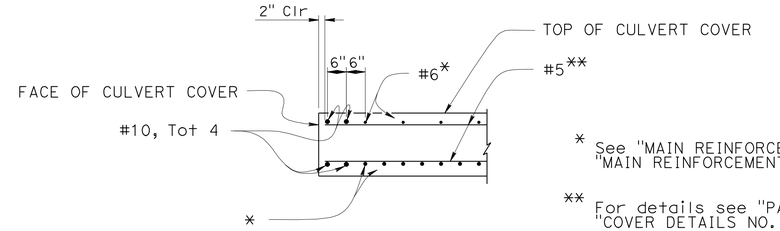

* See "MAIN REINFORCEMENT-TOP" and "MAIN REINFORCEMENT-BOTOM".

** For details see "PART TYPICAL SECTION" on "COVER DETAILS NO. 3" sheet.

FACE OF SLAB DETAIL (TYP)

½" = 1'-0"

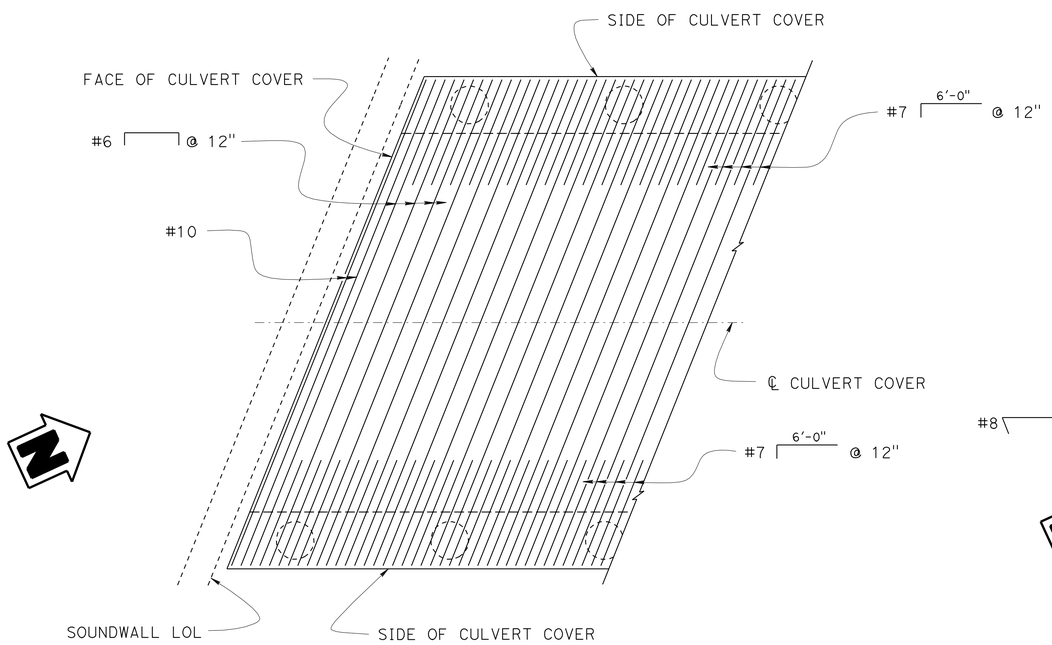

MAIN REINFORCEMENT-TOP

¼" = 1'-0"

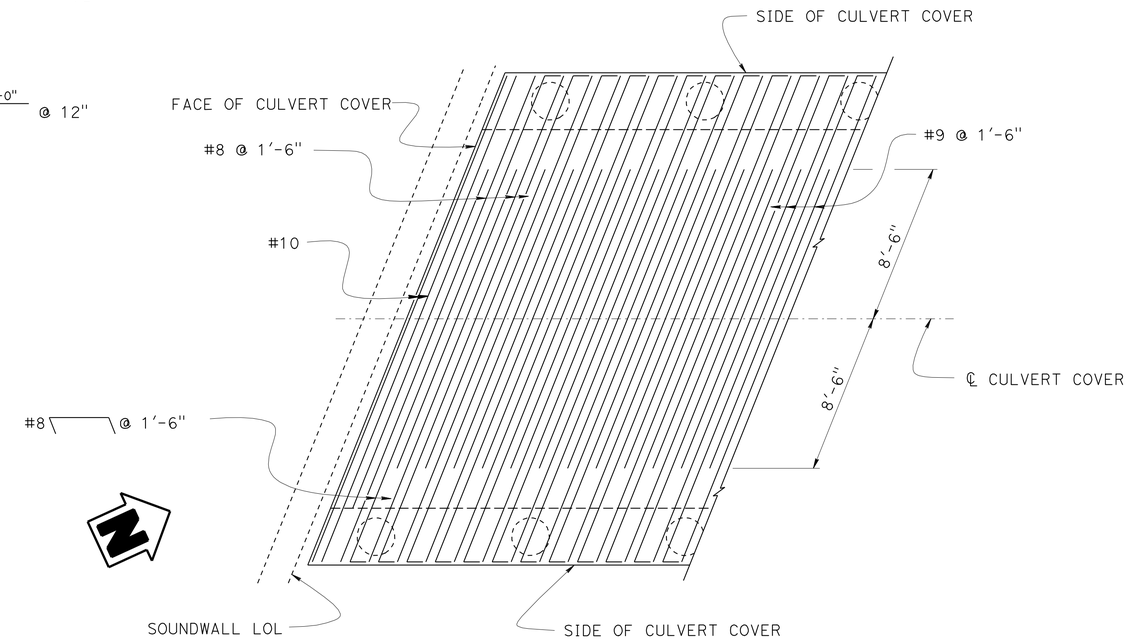

MAIN REINFORCEMENT-BOTTOM

¼" = 1'-0"

DESIGN	BY Traci Menard	CHECKED John Lane	
DETAILS	BY Stan Cholda	CHECKED John Lane	
QUANTITIES	BY Traci Menard	CHECKED Suzan Moradi	

STATE OF CALIFORNIA
DEPARTMENT OF TRANSPORTATION

DIVISION OF ENGINEERING SERVICES
STRUCTURE DESIGN
DESIGN BRANCH 15

BRIDGE NO. 53-3075M
POST MILE 3.98

SILVERBOW CULVERT COVER
COVER DETAILS NO. 2

STRUCTURES DESIGN DETAIL SHEET (ENGLISH) (REV. 10/25/05)

ORIGINAL SCALE IN INCHES FOR REDUCED PLANS 0 1 2 3

CU 07
EA 215931

DISREGARD PRINTS BEARING EARLIER REVISION DATES

REVISION DATES: 09-19-11, 11-03-11, 11-09-11, 11-10-11, 11-22-11, 12-27-11, 01-15-12

SHEET 4 OF 10

FILE => 53-3075m-g-det02.dgn

USERNAME => s109858 DATE PLOTTED => 28-MAR-2012 TIME PLOTTED => 12:42

DIST	COUNTY	ROUTE	POST MILES TOTAL PROJECT	SHEET No	TOTAL SHEETS
07	LA	5	2.4/4.0	1008	1288

Traci Menard 12-12-11
REGISTERED CIVIL ENGINEER DATE

3-26-12
PLANS APPROVAL DATE

REGISTERED PROFESSIONAL ENGINEER
Traci Menard
No. 54207
Exp. 12/31/13
CIVIL
STATE OF CALIFORNIA

The State of California or its officers or agents shall not be responsible for the accuracy or completeness of electronic copies of this plan sheet.

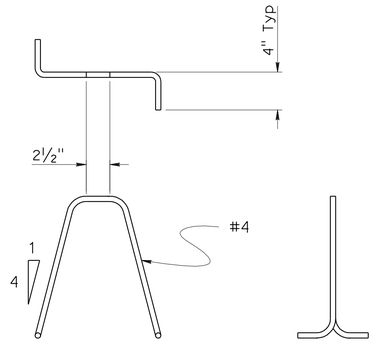

BAR CHAIR DETAIL

1" = 1'-0"

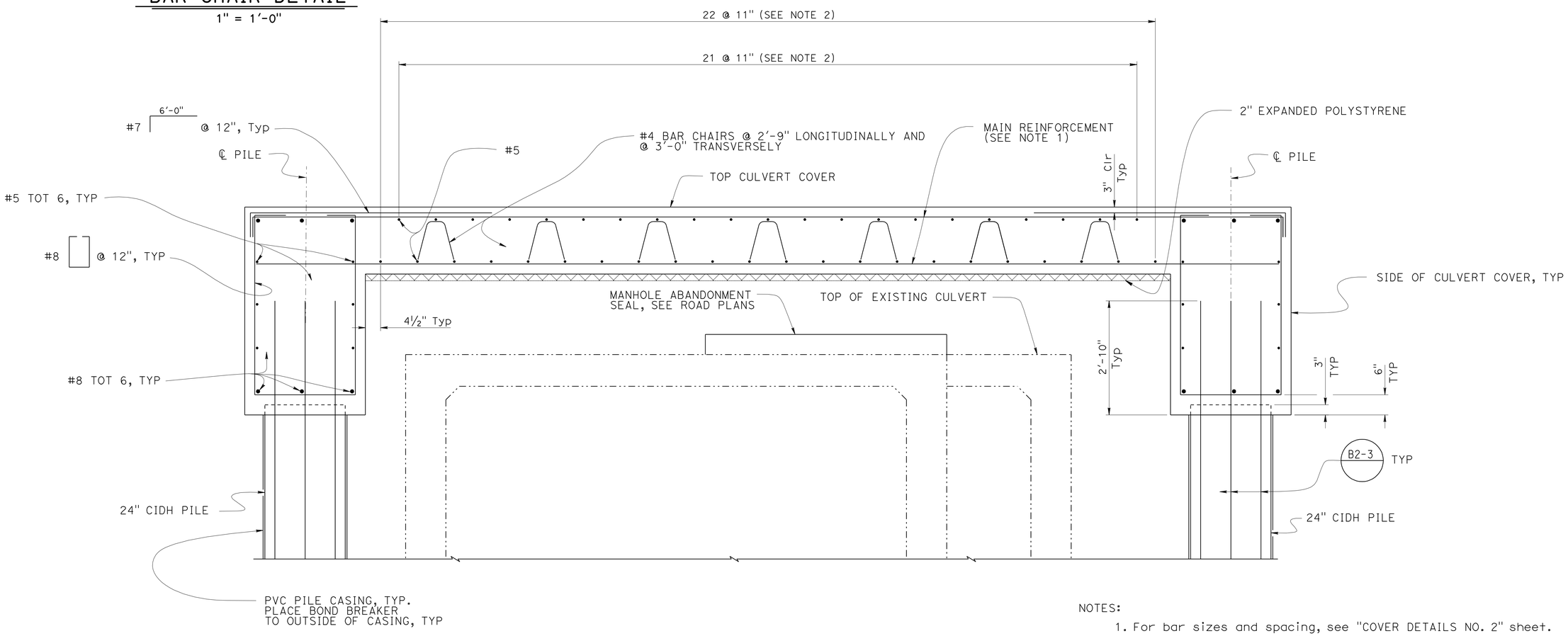

PART TYPICAL SECTION

¾" = 1'-0"

NOTES:

1. For bar sizes and spacing, see "COVER DETAILS NO. 2" sheet.
2. Place bars parallel to ℄ Culvert Cover. Stagger top and bottom bars.

	BY	CHECKED
DESIGN	Traci Menard	John Lane
DETAILS	Stan Cholda	John Lane
QUANTITIES	Traci Menard	Suzan Moradi

STATE OF CALIFORNIA
DEPARTMENT OF TRANSPORTATION

DIVISION OF ENGINEERING SERVICES
STRUCTURE DESIGN
DESIGN BRANCH 15

BRIDGE NO. 53-3075M
POST MILE 3.98

SILVERBOW CULVERT COVER
COVER DETAILS NO. 3

STRUCTURES DESIGN DETAIL SHEET (ENGLISH) (REV. 10/25/05)

ORIGINAL SCALE IN INCHES FOR REDUCED PLANS 0 1 2 3

CU 07
EA 215931

DISREGARD PRINTS BEARING EARLIER REVISION DATES

REVISION DATES: 09-19-11 11-09-11 10-24-11 11-10-11 11-22-11 12-01-11 12-20-11 12-27-11

SHEET 5 OF 10

FILE => 53-3075m-g-det03.dgn

USERNAME => s109858 DATE PLOTTED => 28-MAR-2012 TIME PLOTTED => 12:42

DIST	COUNTY	ROUTE	POST MILES TOTAL PROJECT	SHEET No.	TOTAL SHEETS
07	LA	5	2.4/4.0	1009	1288

GEOTECHNICAL PROFESSIONAL — DATE 06/2011

3-26-12
PLANS APPROVAL DATE

REGISTERED PROFESSIONAL ENGINEER — MICHAEL G. SMITH — No. 2229 — Exp. 3-31-2012 — GEOTECHNICAL — STATE OF CALIFORNIA

The State of California or its officers or agents shall not be responsible for the accuracy or completeness of electronic copies of this plan sheet.

BENCH MARK

PRHV 119 Elev 99.46′
FOUND PK NAIL & TIN @ NB 1-5 SHOULDER, +/-120′
N/O SILVERBOW PEDESTRIAN OVERCROSSING
NAVD 88

PRHV 122 Elev 99.50′
FOUND PK NAIL & TIN @ SB 1-5 SHOULDER, +/-210′
N/O SILVERBOW PEDESTRIAN OVERCROSSING
NAVD 88

Notes

1. This LOTB sheet was prepared in accordance with the Caltrans Soil & Rock Logging, Classification, and Presentation Manual (2010) except three digit sequence number in boring identification starting with the segment number per exception request approved on April 08, 2009.

2. For protection of underground utility lines, hand-auger was used to remove top 5 to 10 feet of subsurface material for exploratory borings and cone penetration testings.

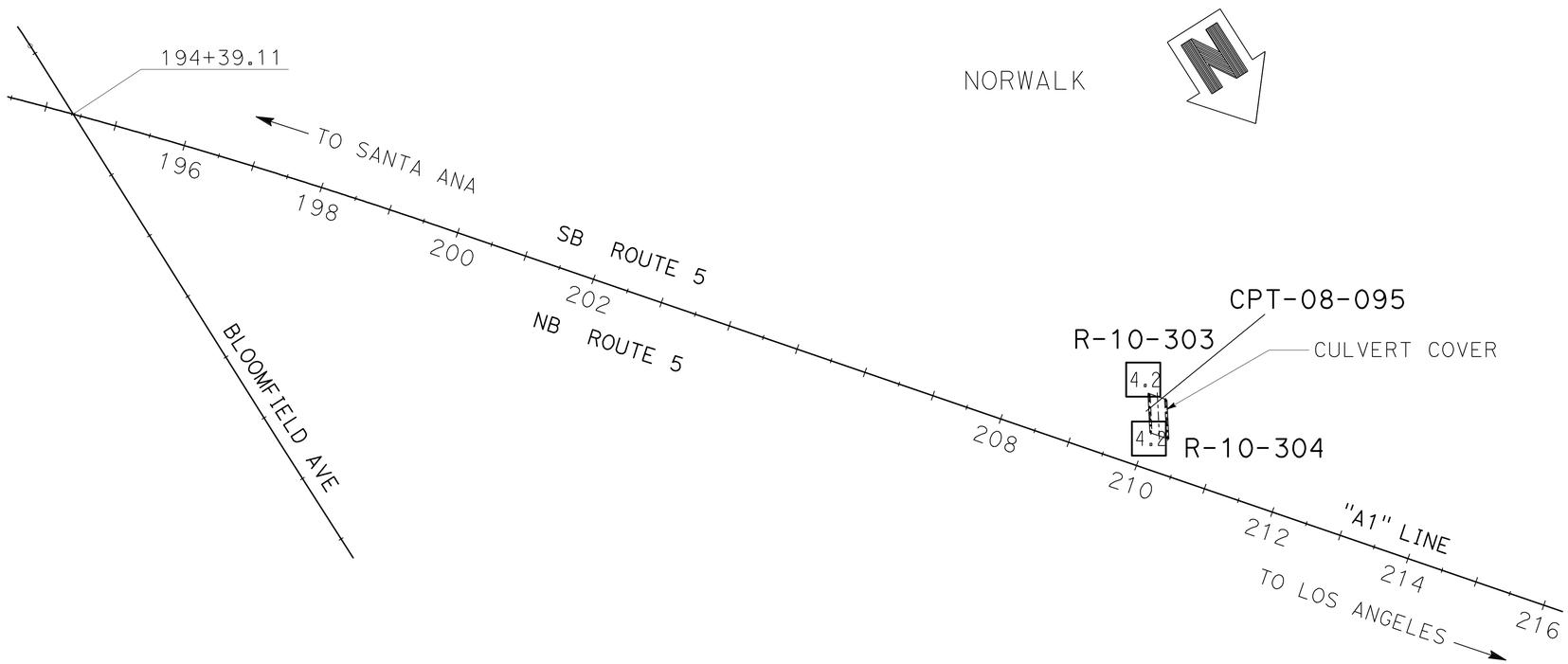

PLAN
SCALE 1"=100′

ENGINEERING SERVICES	MATERIALS AND GEOTECHNICAL SERVICES	STATE OF CALIFORNIA DEPARTMENT OF TRANSPORTATION	DIVISION OF ENGINEERING SERVICES STRUCTURE DESIGN DESIGN BRANCH 15	BRIDGE NO. 53-3075M POST MILE 3.98	SILVERBOW CULVERT COVER LOG OF TEST BORINGS SHEET 1 OF 5
FUNCTIONAL SUPERVISOR NAME: M. SMITH	DRAWN BY: P.QUACH CHECKED BY: D.ORRIS	FIELD INVESTIGATION BY: P.MCDONALD/M.ISLAM			

OGS CIVIL LOG OF TEST BORINGS SHEET — ORIGINAL SCALE IN INCHES FOR REDUCED PLANS 0 1 2 3

UNIT: 3604
PROJECT NUMBER & PHASE: 0700001833 — CONTRACT NO.: 07-215931

DISREGARD PRINTS BEARING EARLIER REVISION DATES → REVISION DATES 06/17/11 — SHEET 6 OF 10

FILE => 53-3075m-z-lotb01.dgn

USERNAME => s109858 DATE PLOTTED => 28-MAR-2012 TIME PLOTTED => 12:43

DIST	COUNTY	ROUTE	POST MILES TOTAL PROJECT	SHEET No	TOTAL SHEETS
07	LA	5	2.4/4.0	1010	1288

REGISTERED CIVIL ENGINEER 06/2011 DATE

3-26-12
PLANS APPROVAL DATE

REGISTERED PROFESSIONAL ENGINEER CHUNGKEUN LEE No. C69450 Exp. 6/30/12 CIVIL STATE OF CALIFORNIA

The State of California or its officers or agents shall not be responsible for the accuracy or completeness of electronic copies of this plan sheet.

FOR PLAN VIEW, SEE
"LOG OF TEST BORINGS" 1 OF 5

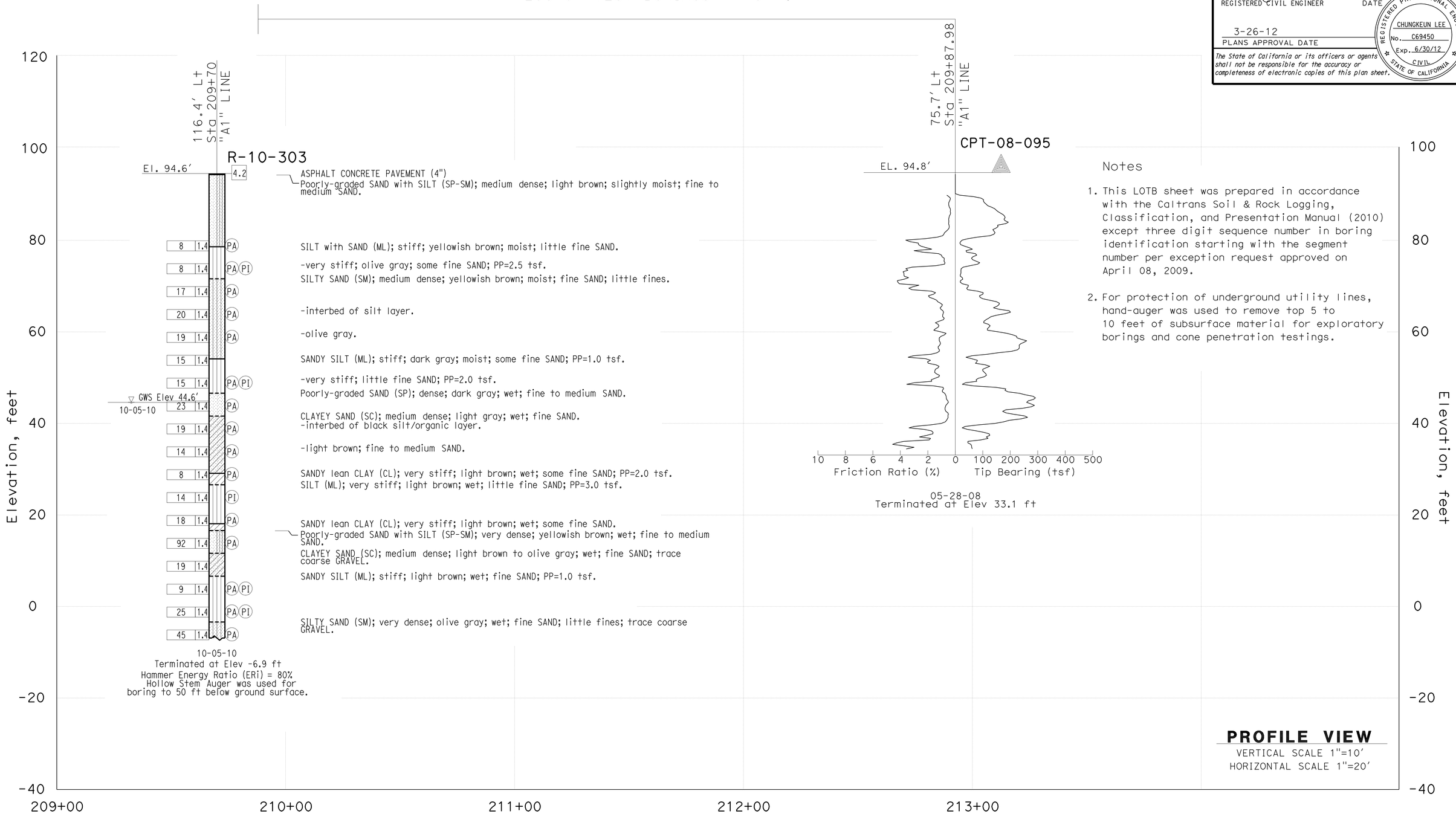

Notes

1. This LOTB sheet was prepared in accordance with the Caltrans Soil & Rock Logging, Classification, and Presentation Manual (2010) except three digit sequence number in boring identification starting with the segment number per exception request approved on April 08, 2009.

2. For protection of underground utility lines, hand-auger was used to remove top 5 to 10 feet of subsurface material for exploratory borings and cone penetration testings.

PROFILE VIEW
VERTICAL SCALE 1"=10'
HORIZONTAL SCALE 1"=20'

ENGINEERING SERVICES	GEOTECHNICAL SERVICES	STATE OF CALIFORNIA DEPARTMENT OF TRANSPORTATION	DIVISION OF ENGINEERING SERVICES STRUCTURE DESIGN	BRIDGE NO. 53-3075M	SILVERBOW CULVERT COVER
FUNCTIONAL SUPERVISOR	DRAWN BY: P.QUACH (URS)	FIELD INVESTIGATION BY:	DESIGN BRANCH 15	POST MILE 3.98	LOG OF TEST BORINGS SHEET 2 OF 5
NAME: C.LIU	CHECKED BY: C.HARRIS	M.ISLAM			

OGS CIVIL LOG OF TEST BORINGS SHEET

ORIGINAL SCALE IN INCHES FOR REDUCED PLANS 0 1 2 3

CU 07
EA 215931

DISREGARD PRINTS BEARING EARLIER REVISION DATES → 06/17/11

REVISION DATES

SHEET 7 OF 10

FILE => 53-3075m-z-lotb02.dgn

USERNAME => s109858 DATE PLOTTED => 28-MAR-2012 TIME PLOTTED => 12:43

DIST	COUNTY	ROUTE	POST MILES TOTAL PROJECT	SHEET No	TOTAL SHEETS
07	LA	5	2.4/4.0	1011	1288

REGISTERED CIVIL ENGINEER — DATE 06/2011

3-26-12
PLANS APPROVAL DATE

REGISTERED PROFESSIONAL ENGINEER — CHUNGKEUN LEE — No. C69450 — Exp. 6/30/12 — CIVIL — STATE OF CALIFORNIA

The State of California or its officers or agents shall not be responsible for the accuracy or completeness of electronic copies of this plan sheet.

FOR PLAN VIEW, SEE
"LOG OF TEST BORINGS" 1 OF 5

Notes

1. This LOTB sheet was prepared in accordance with the Caltrans Soil & Rock Logging, Classification, and Presentation Manual (2010) except three digit sequence number in boring identification starting with the segment number per exception request approved on April 08, 2009.

2. For protection of underground utility lines, hand-auger was used to remove top 5 to 10 feet of subsurface material for exploratory borings and cone penetration testings.

ENGINEERING SERVICES		GEOTECHNICAL SERVICES	STATE OF CALIFORNIA DEPARTMENT OF TRANSPORTATION	DIVISION OF ENGINEERING SERVICES STRUCTURE DESIGN DESIGN BRANCH 15	BRIDGE NO. 53-3075M POST MILE 3.98	SILVERBOW CULVERT COVER
FUNCTIONAL SUPERVISOR	DRAWN BY: P.QUACH (URS)	FIELD INVESTIGATION BY:				LOG OF TEST BORINGS SHEET 3 OF 5
NAME: C.LIU	CHECKED BY: C.HARRIS	M.ISLAM				

OGS CIVIL LOG OF TEST BORINGS SHEET

ORIGINAL SCALE IN INCHES FOR REDUCED PLANS 0 1 2 3

CU 07
EA 215931

DISREGARD PRINTS BEARING EARLIER REVISION DATES → 06/17/11

REVISION DATES

SHEET 8 OF 10

FILE => 53-3075m-z-lotb03.dgn

USERNAME => s109858 DATE PLOTTED => 28-MAR-2012 TIME PLOTTED => 12:43

REFERENCE: CALTRANS SOIL & ROCK LOGGING, CLASSIFICATION, AND PRESENTATION MANUAL (2010)

DIST	COUNTY	ROUTE	POST MILES TOTAL PROJECT	SHEET No.	TOTAL SHEETS
07	LA	5	2.4/4.0	1012	1288

GEOTECHNICAL PROFESSIONAL — DATE 06/2011

3-26-12
PLANS APPROVAL DATE

REGISTERED PROFESSIONAL ENGINEER — MICHAEL G. SMITH No. 2229 Exp. 3-31-2012 GEOTECHNICAL — STATE OF CALIFORNIA

The State of California or its officers or agents shall not be responsible for the accuracy or completeness of electronic copies of this plan sheet.

CEMENTATION

Description	Criteria
Weak	Crumbles or breaks with handling or little finger pressure.
Moderate	Crumbles or breaks with considerable finger pressure.
Strong	Will not crumble or break with finger pressure.

BOREHOLE IDENTIFICATION

Symbol	Hole Type	Description
Size	A	Auger Boring (hollow or solid stem bucket)
Size	R RW RC P	Rotary drilled boring (conventional) Rotary drilled with self-casing wire-line Rotary core with continuously-sampled, self-casing wire-line Rotary percussion boring (air)
Size	R	Rotary drilled diamond core
Size	HD HA	Hand driven (1-inch soil tube) Hand Auger
●	D	Dynamic Cone Penetration Boring
▲	CPT	Cone Penetration Test (ASTM D 5778)
⬚	O	Other (note on LOTB)

Note: Size in inches.

CONSISTENCY OF COHESIVE SOILS

Description	Shear Strength (tsf)	Pocket Penetrometer Measurement, PP, (tsf)	Torvane Measurement, TV, (tsf)	Vane Shear Measurement, VS, (tsf)
Very Soft	Less than 0.12	Less than 0.25	Less than 0.12	Less than 0.12
Soft	0.12 - 0.25	0.25 - 0.5	0.12 - 0.25	0.12 - 0.25
Medium Stiff	0.25 - 0.5	0.5 - 1	0.25 - 0.5	0.25 - 0.5
Stiff	0.5 - 1	1 - 2	0.5 - 1	0.5 - 1
Very Stiff	1 - 2	2 - 4	1 - 2	1 - 2
Hard	Greater than 2	Greater than 4	Greater than 2	Greater than 2

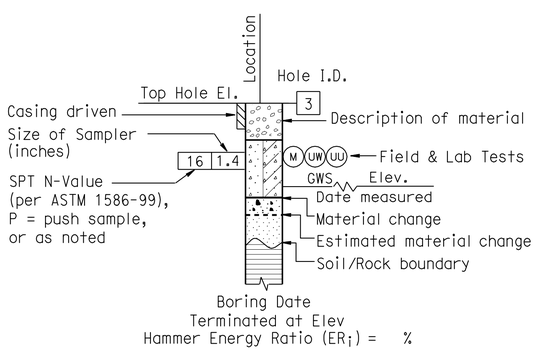

ROTARY BORING

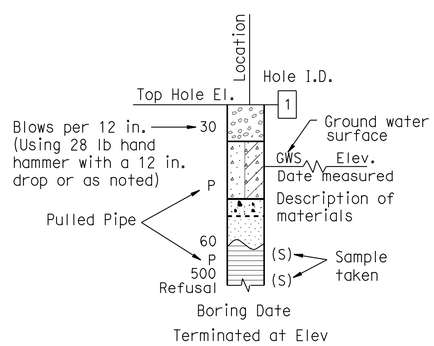

HAND BORING

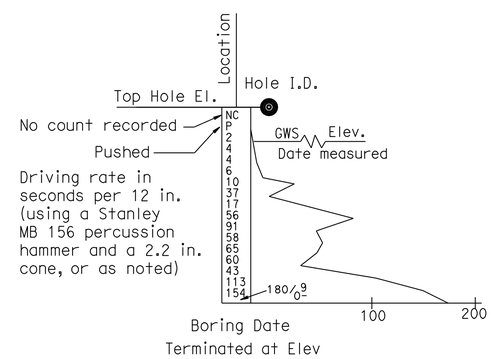

DYNAMIC CONE PENETRATION BORING

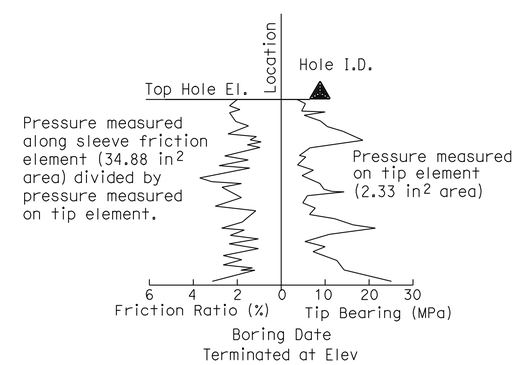

CONE PENETRATION TEST (CPT) BORING

ENGINEERING SERVICES	MATERIALS AND GEOTECHNICAL SERVICES	STATE OF CALIFORNIA DEPARTMENT OF TRANSPORTATION	DIVISION OF ENGINEERING SERVICES STRUCTURE DESIGN DESIGN BRANCH 15	BRIDGE NO. 53-3075M POST MILE 3.98	SILVERBOW CULVERT COVER
FUNCTIONAL SUPERVISOR NAME: M. SMITH	DRAWN BY: P.QUACH CHECKED BY: D.ORRIS	FIELD INVESTIGATION BY: P.MCDONALD/M.ISLAM			LOG OF TEST BORINGS SHEET 4 OF 5

OGS CIVIL LOG OF TEST BORINGS SHEET — ORIGINAL SCALE IN INCHES FOR REDUCED PLANS 0 1 2 3

UNIT: 3604
PROJECT NUMBER & PHASE: 0700001833 — CONTRACT NO.: 07-215931

DISREGARD PRINTS BEARING EARLIER REVISION DATES → 06/17/11 — REVISION DATES — SHEET 9 OF 10

FILE => 53-3075m-z-lotb04.dgn

USERNAME => s109858 DATE PLOTTED => 28-MAR-2012 TIME PLOTTED => 12:43

REFERENCE: CALTRANS SOIL & ROCK LOGGING, CLASSIFICATION, AND PRESENTATION MANUAL (2010)

DIST	COUNTY	ROUTE	POST MILES TOTAL PROJECT	SHEET No.	TOTAL SHEETS
07	LA	5	2.4/4.0	1013	1288

GEOTECHNICAL PROFESSIONAL — 06/2011 DATE

3-26-12
PLANS APPROVAL DATE

REGISTERED PROFESSIONAL ENGINEER — MICHAEL G. SMITH No. 2229 Exp. 3-31-2012 GEOTECHNICAL — STATE OF CALIFORNIA

The State of California or its officers or agents shall not be responsible for the accuracy or completeness of electronic copies of this plan sheet.

GROUP SYMBOLS AND NAMES

Graphic/Symbol	Group Names
GW	Well-graded GRAVEL Well-graded GRAVEL with SAND
GP	Poorly-graded GRAVEL Poorly-graded GRAVEL with SAND
GW-GM	Well-graded GRAVEL with SILT Well-graded GRAVEL with SILT and SAND
GW-GC	Well-graded GRAVEL with CLAY (or SILTY CLAY) Well-graded GRAVEL with CLAY and SAND (or SILTY CLAY and SAND)
GP-GM	Poorly-graded GRAVEL with SILT Poorly-graded GRAVEL with SILT and SAND
GP-GC	Poorly-graded GRAVEL with CLAY (or SILTY CLAY) Poorly-graded GRAVEL with CLAY and SAND (or SILTY CLAY and SAND)
GM	SILTY GRAVEL SILTY GRAVEL with SAND
GC	CLAYEY GRAVEL CLAYEY GRAVEL with SAND
GC-GM	SILTY, CLAYEY GRAVEL SILTY, CLAYEY GRAVEL with SAND
SW	Well-graded SAND Well-graded SAND with GRAVEL
SP	Poorly-graded SAND Poorly-graded SAND with GRAVEL
SW-SM	Well-graded SAND with SILT Well-graded SAND with SILT and GRAVEL
SW-SC	Well-graded SAND with CLAY (or SILTY CLAY) Well-graded SAND with CLAY and GRAVEL (or SILTY CLAY and GRAVEL)
SP-SM	Poorly-graded SAND with SILT Poorly-graded SAND with SILT and GRAVEL
SP-SC	Poorly-graded SAND with CLAY (or SILTY CLAY) Poorly-graded SAND with CLAY and GRAVEL (or SILTY CLAY and GRAVEL)
SM	SILTY SAND SILTY SAND with GRAVEL
SC	CLAYEY SAND CLAYEY SAND with GRAVEL
SC-SM	SILTY, CLAYEY SAND SILTY, CLAYEY SAND with GRAVEL
PT	PEAT
	COBBLES COBBLES and BOULDERS BOULDERS

Graphic/Symbol	Group Names
CL	Lean CLAY Lean CLAY with SAND Lean CLAY with GRAVEL SANDY lean CLAY SANDY lean CLAY with GRAVEL GRAVELLY lean CLAY GRAVELLY lean CLAY with SAND
CL-ML	SILTY CLAY SILTY CLAY with SAND SILTY CLAY with GRAVEL SANDY SILTY CLAY SANDY SILTY CLAY with GRAVEL GRAVELLY SILTY CLAY GRAVELLY SILTY CLAY with SAND
ML	SILT SILT with SAND SILT with GRAVEL SANDY SILT SANDY SILT with GRAVEL GRAVELLY SILT GRAVELLY SILT with SAND
OL	ORGANIC lean CLAY ORGANIC lean CLAY with SAND ORGANIC lean CLAY with GRAVEL SANDY ORGANIC lean CLAY SANDY ORGANIC lean CLAY with GRAVEL GRAVELLY ORGANIC lean CLAY GRAVELLY ORGANIC lean CLAY with SAND
OL	ORGANIC SILT ORGANIC SILT with SAND ORGANIC SILT with GRAVEL SANDY ORGANIC SILT SANDY ORGANIC SILT with GRAVEL GRAVELLY ORGANIC SILT GRAVELLY ORGANIC SILT with SAND
CH	Fat CLAY Fat CLAY with SAND Fat CLAY with GRAVEL SANDY fat CLAY SANDY fat CLAY with GRAVEL GRAVELLY fat CLAY GRAVELLY fat CLAY with SAND
MH	Elastic SILT Elastic SILT with SAND Elastic SILT with GRAVEL SANDY elastic SILT SANDY elastic SILT with GRAVEL GRAVELLY elastic SILT GRAVELLY elastic SILT with SAND
OH	ORGANIC fat CLAY ORGANIC fat CLAY with SAND ORGANIC fat CLAY with GRAVEL SANDY ORGANIC fat CLAY SANDY ORGANIC fat CLAY with GRAVEL GRAVELLY ORGANIC fat CLAY GRAVELLY ORGANIC fat CLAY with SAND
OH	ORGANIC elastic SILT ORGANIC elastic SILT with SAND ORGANIC elastic SILT with GRAVEL SANDY ORGANIC elastic SILT SANDY ORGANIC elastic SILT with GRAVEL GRAVELLY ORGANIC elastic SILT GRAVELLY ORGANIC elastic SILT with SAND
OL/OH	ORGANIC SOIL ORGANIC SOIL with SAND ORGANIC SOIL with GRAVEL SANDY ORGANIC SOIL SANDY ORGANIC SOIL with GRAVEL GRAVELLY ORGANIC SOIL GRAVELLY ORGANIC SOIL with SAND

FIELD AND LABORATORY TESTING

- (C) Consolidation (ASTM D 2435)
- (CL) Collapse Potential (ASTM D 5333)
- (CP) Compaction Curve (CTM 216)
- (CR) Corrosivity Testing (CTM 643, CTM 422, CTM 417)
- (CU) Consolidated Undrained Triaxial (ASTM D 4767)
- (DS) Direct Shear (ASTM D 3080)
- (EI) Expansion Index (ASTM D 4829)
- (M) Moisture Content (ASTM D 2216)
- (OC) Organic Content-% (ASTM D 2974)
- (P) Permeability (CTM 220)
- (PA) Particle Size Analysis (ASTM D 422)
- (PI) Plasticity Index (AASHTO T 90) Liquid Limit (AASHTO T 89)
- (PL) Point Load Index (ASTM D 5731)
- (PM) Pressure Meter
- (R) R-Value (CTM 301)
- (SE) Sand Equivalent (CTM 217)
- (SG) Specific Gravity (AASHTO T 100)
- (SL) Shrinkage Limit (ASTM D 427)
- (SW) Swell Potential (ASTM D 4546)
- (UC) Unconfined Compression-Soil (ASTM D 2166) Unconfined Compression-Rock (ASTM D 2938)
- (UU) Unconsolidated Undrained Triaxial (ASTM D 2850)
- (UW) Unit Weight (ASTM D 4767)

APPARENT DENSITY OF COHESIONLESS SOILS

Description	SPT N_{60} (Blows / 12 in.)
Very Loose	0 - 5
Loose	5 - 10
Medium Dense	10 - 30
Dense	30 - 50
Very Dense	Greater than 50

MOISTURE

Description	Criteria
Dry	No discernable moisture
Moist	Moisture present, but no free water
Wet	Visible free water

PERCENT OR PROPORTION OF SOILS

Description	Criteria
Trace	Particles are present but estimated to be less than 5%
Few	5% - 10%
Little	15% - 25%
Some	30% - 45%
Mostly	50% - 100%

PARTICLE SIZE

Description		Size (in.)
Boulder		Greater than 12
Cobble		3 - 12
Gravel	Coarse	3/4 - 3
	Fine	1/5 - 3/4
Sand	Coarse	1/16 - 1/5
	Medium	1/64 - 1/16
	Fine	1/300 - 1/64
Silt and Clay		Less than 1/300

ENGINEERING SERVICES — MATERIALS AND GEOTECHNICAL SERVICES

FUNCTIONAL SUPERVISOR
NAME: M. SMITH

DRAWN BY: P.QUACH
CHECKED BY: D.ORRIS

FIELD INVESTIGATION BY:
P.MCDONALD/M.ISLAM

STATE OF CALIFORNIA
DEPARTMENT OF TRANSPORTATION

DIVISION OF ENGINEERING SERVICES
STRUCTURE DESIGN
DESIGN BRANCH 15

BRIDGE NO. 53-3075M
POST MILE 3.98

SILVERBOW CULVERT COVER
LOG OF TEST BORINGS SHEET 5 OF 5

OGS CIVIL LOG OF TEST BORINGS SHEET

ORIGINAL SCALE IN INCHES FOR REDUCED PLANS 0 1 2 3

UNIT: 3604
PROJECT NUMBER & PHASE: 0700001833
CONTRACT NO.: 07-215931

DISREGARD PRINTS BEARING EARLIER REVISION DATES

REVISION DATES 06/17/11 — SHEET 10 OF 10

FILE => 53-3075m-z-lotb05.dgn

USERNAME => s109858 DATE PLOTTED => 28-MAR-2012 TIME PLOTTED => 12:43

DIST	COUNTY	ROUTE	POST MILES TOTAL PROJECT	SHEET No.	TOTAL SHEETS
07	LA	5	2.4/4.0	1014	1288

REGISTERED CIVIL ENGINEER 12-12-11 DATE

3-26-12
PLANS APPROVAL DATE

REGISTERED PROFESSIONAL ENGINEER KEVIN HARPER No. 42221 Exp. 3-31-12 CIVIL STATE OF CALIFORNIA

The State of California or its officers or agents shall not be responsible for the accuracy or completeness of electronic copies of this plan sheet.

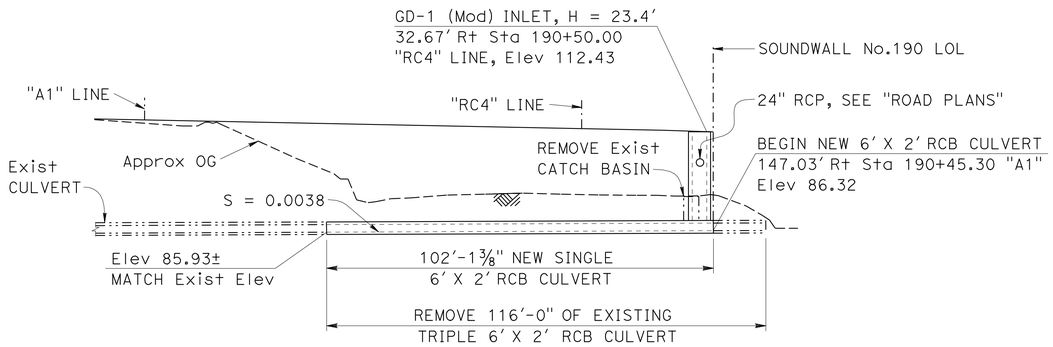

LONGITUDINAL SECTION

1" = 20'

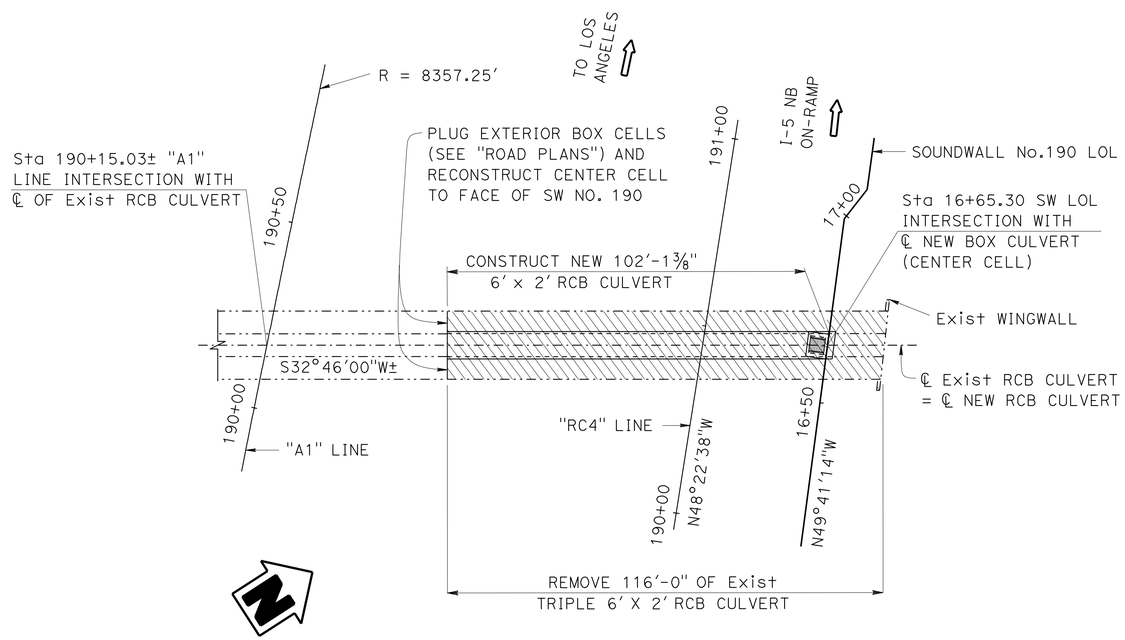

CURVE DATA
"A1" LINE

R = 8357.25'
Δ = 17°36'01"
T = 1293.80'
L = 2567.22'

PLAN

1" = 20'

LEGEND:

Indicates remove existing culvert

Indicates existing structure

INDEX TO PLANS

SHEET #	TITLE
1	GENERAL PLAN
2	FOUNDATION PLAN
3	CULVERT DETAILS NO. 1
4	CULVERT DETAILS NO. 2
5	CULVERT DETAILS NO. 3

STANDARD PLANS DATED MAY 2006

A10A	ACRONYMS AND ABBREVIATIONS (1 OF 2)
A10B	ACRONYMS AND ABBREVIATIONS (2 OF 2)
A10C	SYMBOLS (1 OF 2)
A10D	SYMBOLS (2 OF 2)
A62E	EXCAVATION AND BACKFILL CAST-IN-PLACE REINFORCED CONCRETE BOX AND ARCH CULVERTS
D74C	DRAINAGE INLET DETAILS
RSP D77A	GRATE DETAILS

STANDARD PLAN SHEET NO.

DETAIL NO.

QUANTITIES

BRIDGE REMOVAL (PORTION), LOCATION B	LUMP	SUM
STRUCTURE EXCAVATION (TYPE Y-2) (AERIALLY DEPOSITED LEAD)	87	CY
STRUCTURAL CONCRETE, BOX CULVERT	46	CY
MINOR CONCRETE (MINOR STRUCTURE)	15	CY
DRILL AND BOND DOWEL	15	LF
BAR REINFORCING STEEL (BOX CULVERT)	17,990	LB
MISCELLANEOUS IRON AND STEEL	600	LB

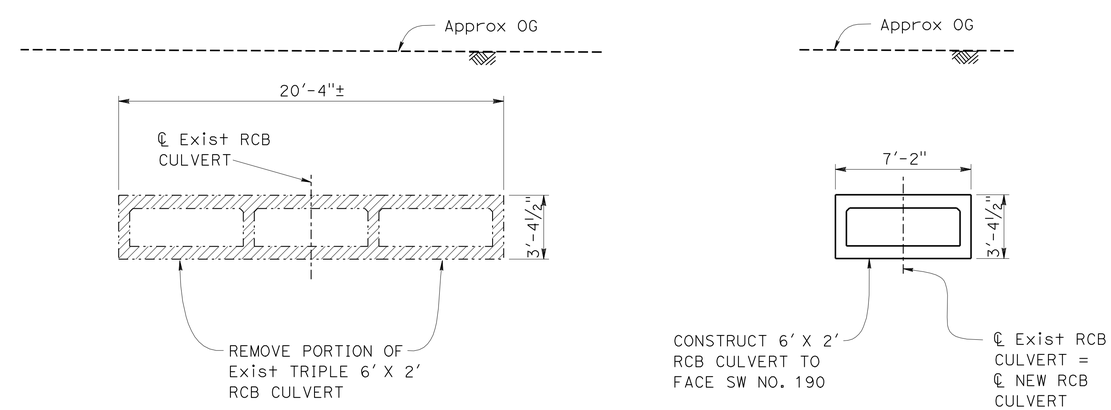

STAGE 1

STAGE 2

TYPICAL SECTION

¼" = 1'-0"

NOTE:
THE CONTRACTOR SHALL VERIFY ALL CONTROLLING FIELD DIMENSIONS BEFORE ORDERING OR FABRICATING ANY MATERIAL.

FOR "GENERAL NOTES" SEE "CULVERT DETAILS NO. 1" SHEET

Jeff Sims, DESIGN ENGINEER	DESIGN	BY Greg Jones	CHECKED Kyoung Lee	LOAD FACTOR DESIGN	LIVE LOADING HS 20-44
	DETAILS	BY Bob Huddleston	CHECKED Kyoung Lee	LAYOUT: BY Greg Jones	CHECKED Kyoung Lee
	QUANTITIES	BY Daniel Sessions	CHECKED Eric Watson	SPECIFICATIONS: BY Theresa Nedwick	PLANS AND SPECS COMPARED Theresa Nedwick

ORIGINAL SCALE IN INCHES FOR REDUCED PLANS 0 1 2 3

STATE OF CALIFORNIA
DEPARTMENT OF TRANSPORTATION

DIVISION OF ENGINEERING SERVICES
STRUCTURE DESIGN
DESIGN BRANCH 1

UNIT: 3576
PROJECT NUMBER & PHASE: 07000018331
CONTRACT NO.: 07-215934

BRIDGE NO. X
POST MILE 3.59

6' X 2' CULVERT AT PM 3.59 N
GENERAL PLAN

DISREGARD PRINTS BEARING EARLIER REVISION DATES

REVISION DATES 3-26-11 7-28-11 8-31-11

SHEET 1 OF 5

STRUCTURES DESIGN GENERAL PLAN SHEET (ENGLISH) (REV.09-01-10)

FILE => culv3.59-a-gp01.dgn

USERNAME => s109858 DATE PLOTTED => 28-MAR-2012 TIME PLOTTED => 12:44

DIST	COUNTY	ROUTE	POST MILES TOTAL PROJECT	SHEET No.	TOTAL SHEETS
07	LA	5	2.4/4.0	1015	1288

REGISTERED CIVIL ENGINEER 12-12-11 DATE

3-26-12
PLANS APPROVAL DATE

REGISTERED PROFESSIONAL ENGINEER Kevin Harper No. 42221 Exp. 3-31-12 CIVIL STATE OF CALIFORNIA

The State of California or its officers or agents shall not be responsible for the accuracy or completeness of electronic copies of this plan sheet.

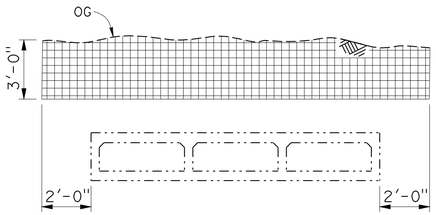

LIMITS OF PAYMENT FOR STRUCTURE EXCAVATION
(TYPE Y-2) (AERIALLY DEPOSITED LEAD)

SECTION A-A

NO SCALE

LEGEND:

▦ - STRUCTURE EXCAVATION (TYPE Y-2)

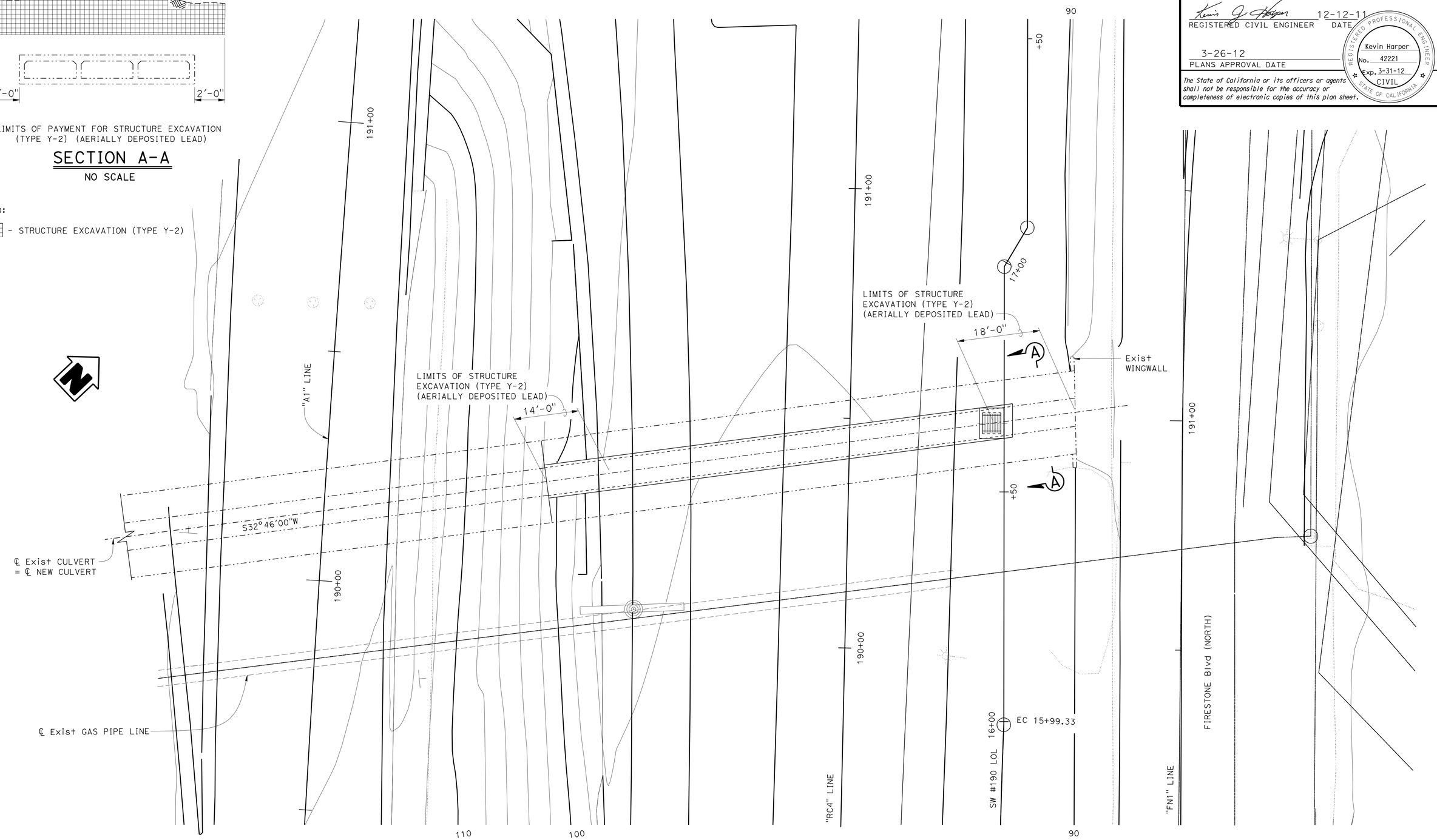

SCALE 1" = 10'					
DESIGN	BY Greg Jones	CHECKED Kyoung Lee	STATE OF CALIFORNIA DEPARTMENT OF TRANSPORTATION	DIVISION OF ENGINEERING SERVICES STRUCTURE DESIGN DESIGN BRANCH 1	BRIDGE NO.
DETAILS	BY Bob Huddleston	CHECKED Kyoung Lee			POST MILE 3.59
QUANTITIES	BY Daniel Sessions	CHECKED Eric Watson			

6' x 2' CULVERT AT PM 3.59 N

FOUNDATION PLAN

STRUCTURES DESIGN DETAIL SHEET (ENGLISH) (REV. 09-01-10)

ORIGINAL SCALE IN INCHES FOR REDUCED PLANS 0 1 2 3

UNIT: 3576
PROJECT NUMBER & PHASE: 07000018331 CONTRACT NO.: 07-215934

DISREGARD PRINTS BEARING EARLIER REVISION DATES

REVISION DATES 4-26-11 8-31-11 1-26-11

SHEET 2 OF 5

FILE => culv3.59-e-fp101.dgn

USERNAME => s109858 DATE PLOTTED => 28-MAR-2012 TIME PLOTTED => 12:44

DIST	COUNTY	ROUTE	POST MILES TOTAL PROJECT	SHEET No.	TOTAL SHEETS
07	LA	5	2.4/4.0	1016	1288

REGISTERED CIVIL ENGINEER 12-12-11 DATE

3-26-12
PLANS APPROVAL DATE

REGISTERED PROFESSIONAL ENGINEER KEVIN HARPER No. 42221 Exp. 3-31-12 CIVIL STATE OF CALIFORNIA

The State of California or its officers or agents shall not be responsible for the accuracy or completeness of electronic copies of this plan sheet.

GENERAL NOTES
LOAD FACTOR DESIGN

DESIGN: Caltrans Bridge Design Specifications - April 2000 (LFD)
(1996 AASHTO wirh interims and revisions by Caltrans)

Load Factors: 1.5D + 1.5E + 2.5L
Where: D = Dead Load
E = Earth Load
L = Live Load

Capacity Reduction Factor is included

LIVE LOADING: HS20-44
No impact applied
No surcharge

EARTH LOAD: Earth pressures for two conditions:
140 lbs/cf vertical, 42 lbs/cf horizontal
140 lbs/cf vertical, 140 lbs/cf horizontal

REINFORCED CONCRETE: f'c = 3600 psi
fy = 60,000 psi

Shear: Maximum allowable shear
$vc = 3.5 \sqrt{f'c}$, psi

CONSTRUCTION NOTES

EXPANSION JOINTS:

Invert: No expansion joints shall be permitted

Roof and Walls: Place ½" premolded joint filler at 30'-0"± centers

CONSTRUCTION JOINTS:

Temporary joints may be permitted if normal to ℄ RCB. Otherwise, the contractor is to submit a proposal for consideration.

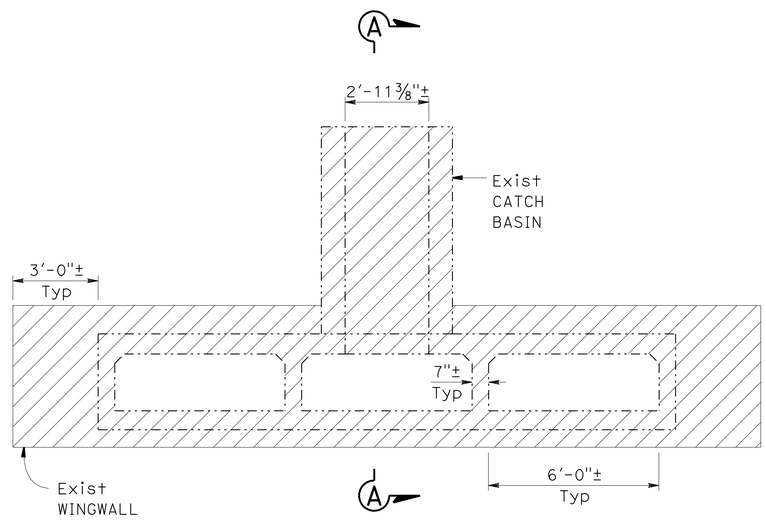

ELEVATION

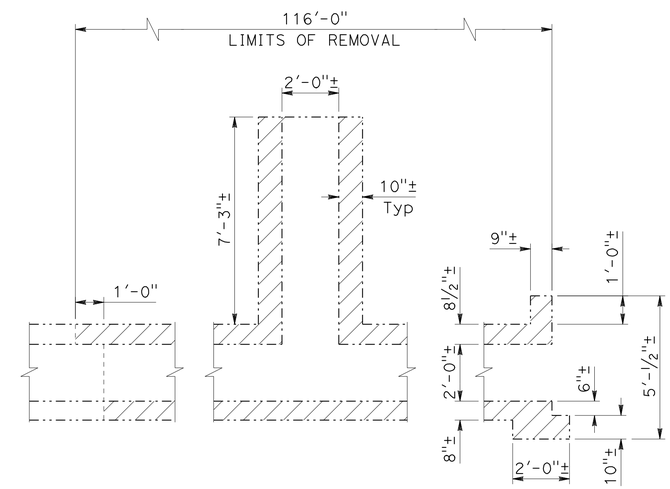

SECTION A-A

LEGEND:

- Indicates Limits of Existing Culvert Removal

- Indicates Existing Structure

EXISTING CULVERT REMOVAL DETAILS
⅜" = 1'-0"

DESIGN	BY Greg Jones	CHECKED Kyoung Lee	
DETAILS	BY Bob Huddleston	CHECKED Kyoung Lee	
QUANTITIES	BY Daniel Sessions	CHECKED Eric Watson	

STATE OF CALIFORNIA
DEPARTMENT OF TRANSPORTATION

DIVISION OF ENGINEERING SERVICES
STRUCTURE DESIGN
DESIGN BRANCH 1

BRIDGE NO. X
POST MILE 3.59

6' X 2' CULVERT AT PM 3.59 N
CULVERT DETAILS NO. 1

STRUCTURES DESIGN DETAIL SHEET (ENGLISH) (REV. 09-01-10)

ORIGINAL SCALE IN INCHES FOR REDUCED PLANS 0 1 2 3

UNIT: 3576
PROJECT NUMBER & PHASE: 07000018331
CONTRACT NO.: 07-215934

DISREGARD PRINTS BEARING EARLIER REVISION DATES

REVISION DATES 4-04-11 7-29-11 8-31-11

SHEET 3 OF 5

FILE => culv3.59-g-culdt01.dgn

USERNAME => s109858 DATE PLOTTED => 28-MAR-2012 TIME PLOTTED => 12:44

DIST	COUNTY	ROUTE	POST MILES TOTAL PROJECT	SHEET No.	TOTAL SHEETS
07	LA	5	2.4/4.0	1017	1288

REGISTERED CIVIL ENGINEER 12-12-11 DATE

3-26-12
PLANS APPROVAL DATE

REGISTERED PROFESSIONAL ENGINEER KEVIN HARPER No. 42221 Exp. 3-31-12 CIVIL STATE OF CALIFORNIA

The State of California or its officers or agents shall not be responsible for the accuracy or completeness of electronic copies of this plan sheet.

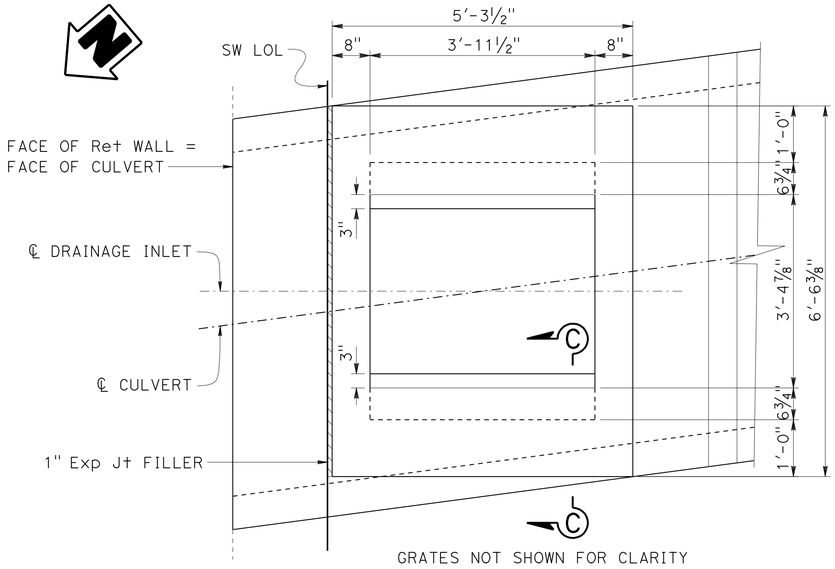

GRATES NOT SHOWN FOR CLARITY

PLAN
¾" = 1'-0"

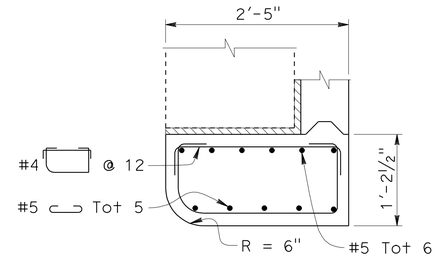

DETAIL A
1" = 1'-0"

NOTES:

1. For "SECTION B-B" and "SECTION D-D", see "CULVERT DETAILS NO. 3" sheet.
2. For drainage inlet notes, see "CULVERT DETAILS NO. 3" sheet.

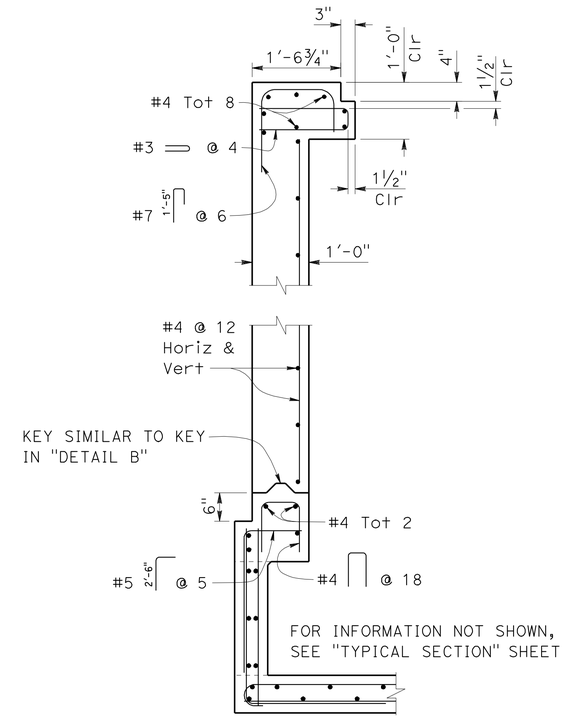

SECTION C-C
¾" = 1'-0"

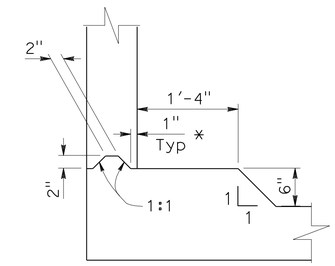

* 3" FOR KEY IN "SECTION C-C"
Reinf NOT SHOWN FOR CLARITY

DETAIL B
1" = 1'-0"

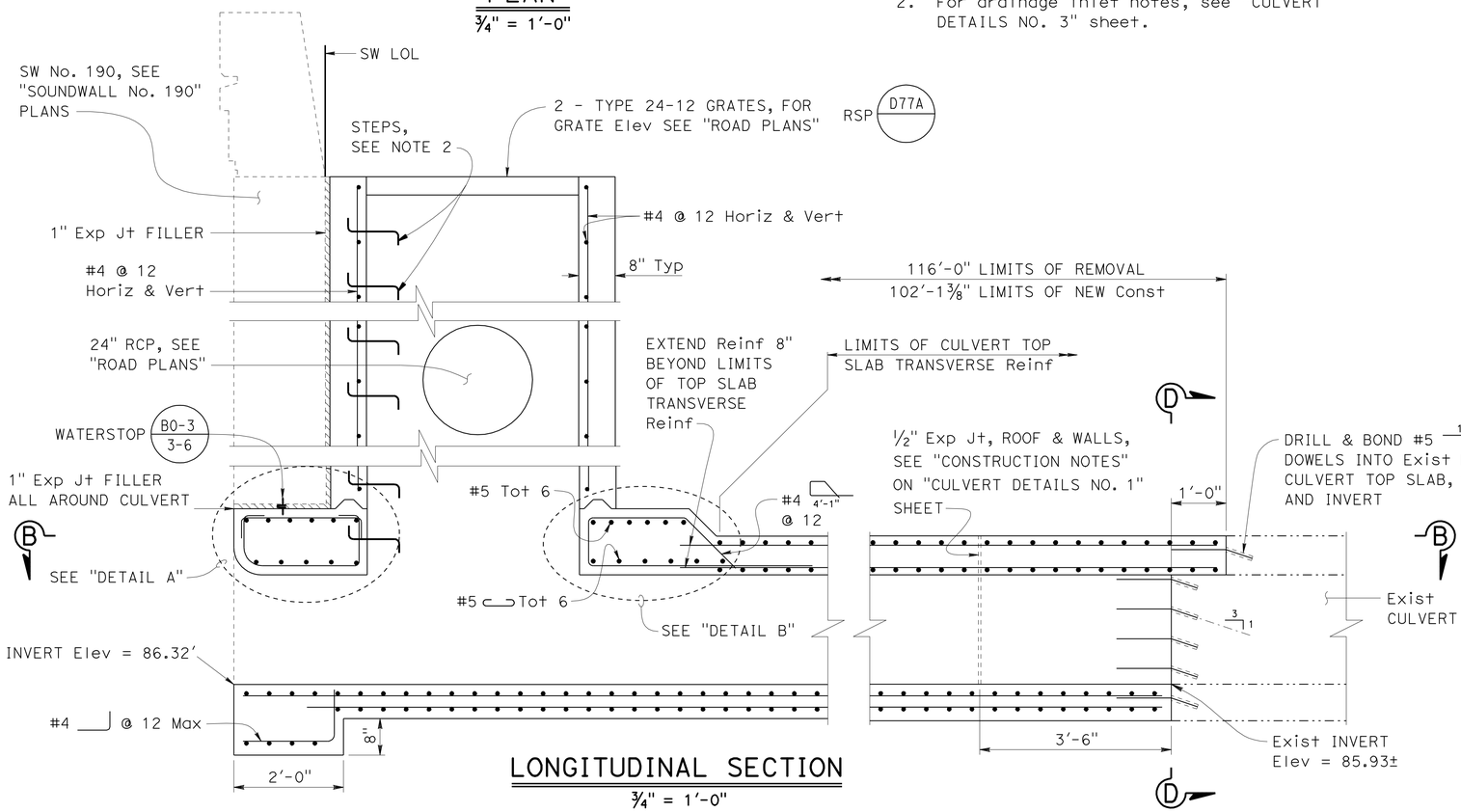

LONGITUDINAL SECTION
¾" = 1'-0"

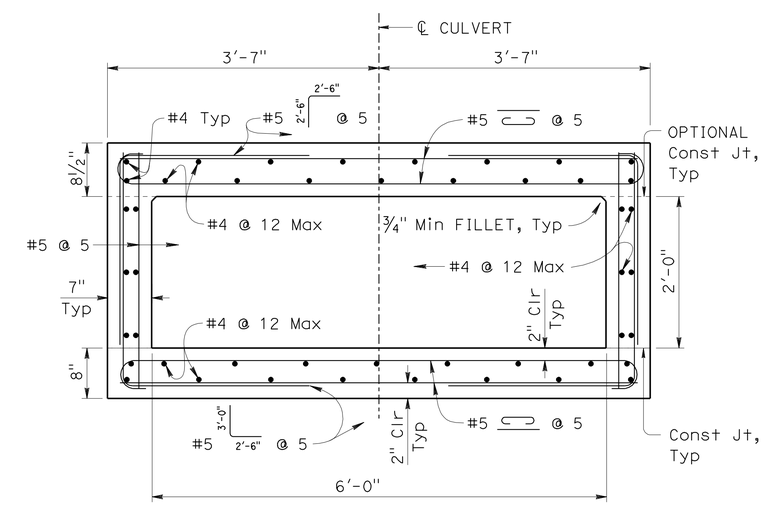

TYPICAL SECTION
1" = 1'-0"

DESIGN	BY Greg Jones	CHECKED Kyoung Lee	
DETAILS	BY Bob Huddleston	CHECKED Kyoung Lee	
QUANTITIES	BY Daniel Sessions	CHECKED Eric Watson	

STATE OF CALIFORNIA
DEPARTMENT OF TRANSPORTATION

DIVISION OF ENGINEERING SERVICES
STRUCTURE DESIGN
DESIGN BRANCH 1

BRIDGE NO. X
POST MILE 3.59

6' X 2' CULVERT AT PM 3.59 N
CULVERT DETAILS NO. 2

STRUCTURES DESIGN DETAIL SHEET (ENGLISH) (REV. 09-01-10)

ORIGINAL SCALE IN INCHES FOR REDUCED PLANS 0 1 2 3

UNIT: 3576
PROJECT NUMBER & PHASE: 07000018331
CONTRACT NO.: 07-215934

DISREGARD PRINTS BEARING EARLIER REVISION DATES

REVISION DATES 4-06-11 8-31-11 8-09-11

SHEET 4 OF 5

FILE => culv3.59-g-culdt02.dgn

USERNAME => s109858 DATE PLOTTED => 28-MAR-2012 TIME PLOTTED => 12:44

DIST	COUNTY	ROUTE	POST MILES TOTAL PROJECT	SHEET No.	TOTAL SHEETS
07	LA	5	2.4/4.0	1018	1288

REGISTERED CIVIL ENGINEER 12-12-11 DATE

3-26-12
PLANS APPROVAL DATE

REGISTERED PROFESSIONAL ENGINEER KEVIN HARPER No. 42221 Exp. 3-31-12 CIVIL STATE OF CALIFORNIA

The State of California or its officers or agents shall not be responsible for the accuracy or completeness of electronic copies of this plan sheet.

DRAINAGE INLET NOTES:

1. Steps - Install steps with lowest rung 1'-0" above the top of culvert and highest rung not more than 6" below top of inlet. The distance between the steps shall not exceed 1'-0" and be uniform throughout the length of the wall. Step inserts may be substituted for the bar steps. Step inserts shall comply with State Industrial Safety requirements. See Standard Plan D74C for step details.
2. For grate details see RSP D77A.
3. ½" ø frame anchors may be bent as necessary to clear Reinf.
4. Cast-in-place or precast alternative is optional with contractor.
5. Cast-in-place inlets shall be formed around the pipe that intersects the inlet, and concrete poured in one continuous operation. Precast inlets shall have mortared connections conforming to details for Type GCP Inlet shown on Standard Plan D75B. See Standard Specifications for mortar composition.
6. Weight for two Type 24-12 grates and frame = 580 lbs.
7. Pipe can be placed in the DI wall.

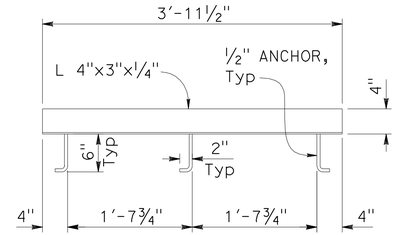

SEE NOTE 3

ANCHOR PLACEMENT

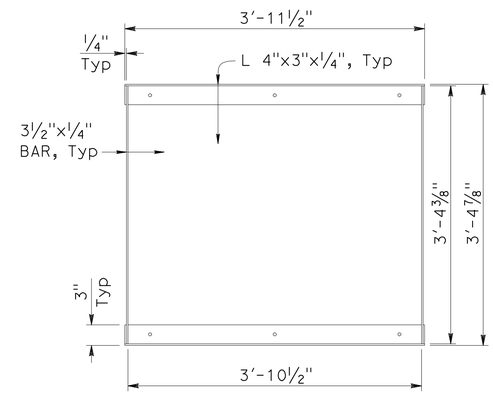

GRATE FRAME

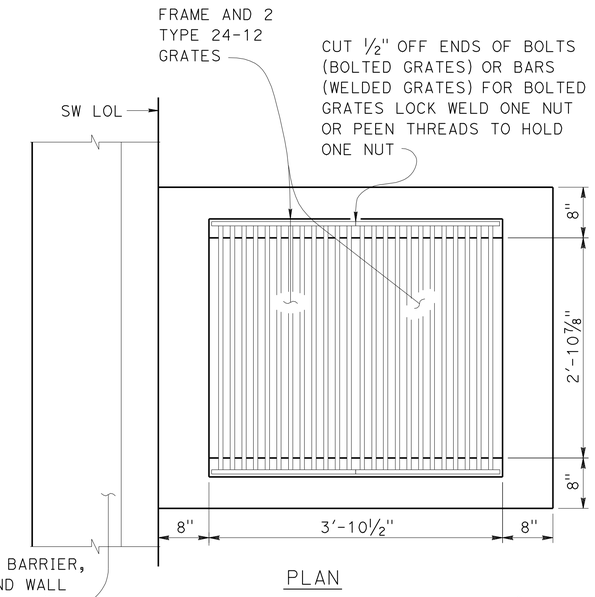

PLAN

GRATE DETAILS

1" = 1'-0"

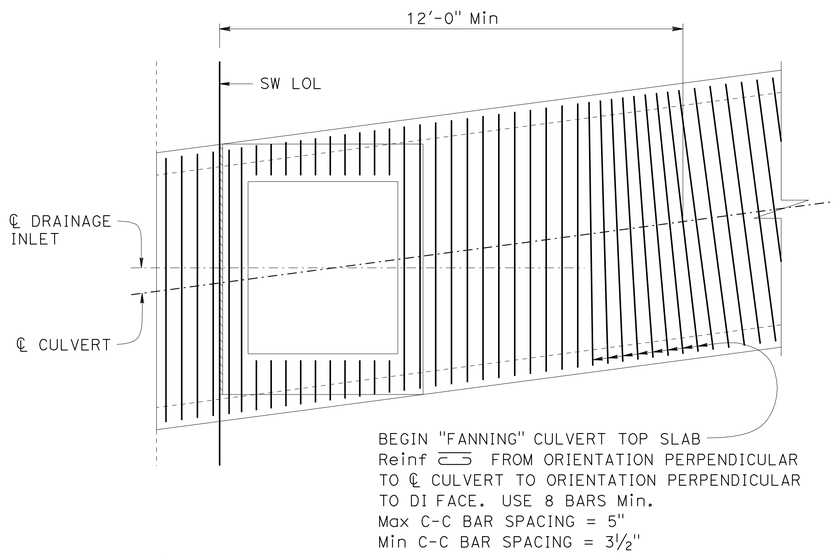

SECTION B-B

½" = 1'-0"

NOTE: Not all Reinf shown.

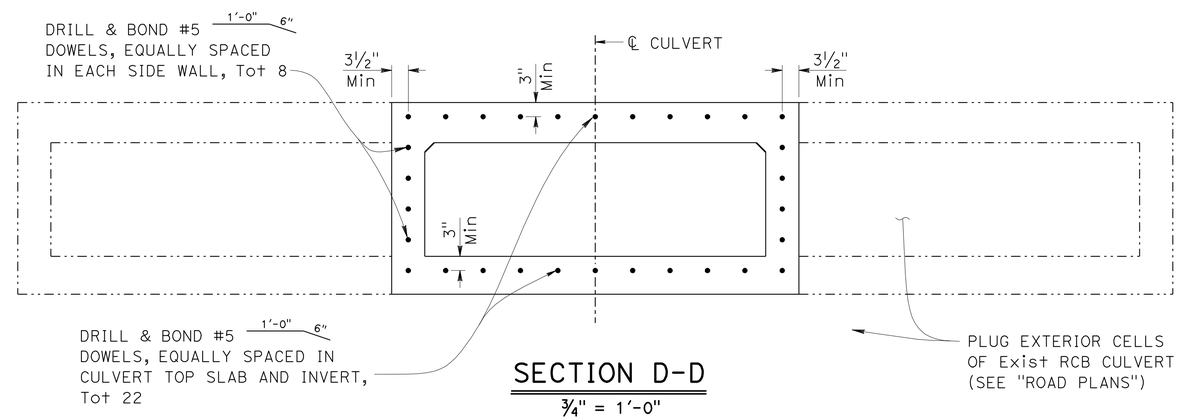

SECTION D-D

¾" = 1'-0"

DESIGN	BY Greg Jones	CHECKED Kyoung Lee	
DETAILS	BY Bob Huddleston	CHECKED Kyoung Lee	
QUANTITIES	BY Daniel Sessions	CHECKED Eric Watson	

STATE OF CALIFORNIA DEPARTMENT OF TRANSPORTATION

DIVISION OF ENGINEERING SERVICES STRUCTURE DESIGN DESIGN BRANCH 1

BRIDGE NO. X

POST MILE 3.59

6' X 2' CULVERT AT PM 3.59 N

CULVERT DETAILS NO. 3

STRUCTURES DESIGN DETAIL SHEET (ENGLISH) (REV. 09-01-10)

ORIGINAL SCALE IN INCHES FOR REDUCED PLANS 0 1 2 3

UNIT: 3576
PROJECT NUMBER & PHASE: 07000018331 CONTRACT NO.: 07-215934

DISREGARD PRINTS BEARING EARLIER REVISION DATES

REVISION DATES 4-20-11 8-8-11 8-31-11

SHEET 5 OF 5

FILE => culv3.59-g-culdt03.dgn

USERNAME => s108858 DATE PLOTTED => 28-MAR-2012 TIME PLOTTED => 12:44

DIST	COUNTY	ROUTE	POST MILES TOTAL PROJECT	SHEET No.	TOTAL SHEETS
07	LA	5	2.4/4.0	1019	1288

REGISTERED CIVIL ENGINEER 12-07-11 DATE

3-26-12
PLANS APPROVAL DATE

REGISTERED PROFESSIONAL ENGINEER Kevin Harper No. 42221 Exp. 3-31-12 CIVIL STATE OF CALIFORNIA

The State of California or its officers or agents shall not be responsible for the accuracy or completeness of electronic copies of this plan sheet.

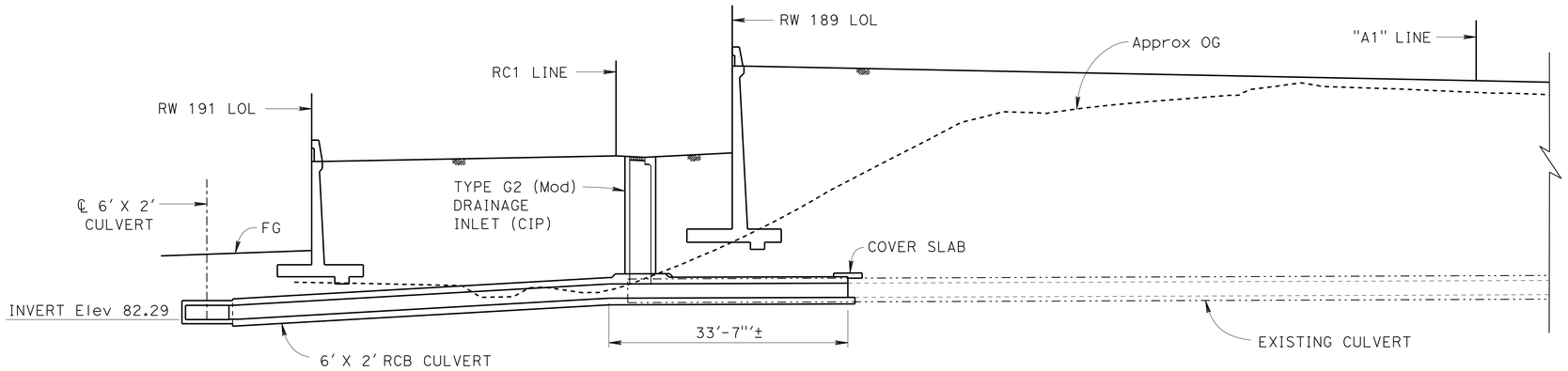

LONGITUDINAL SECTION

1" = 10'

QUANTITIES

BRIDGE REMOVAL (PORTION), LOCATION C	LUMP	SUM
STRUCTURE EXCAVATION (TYPE Y-2) (AERIALLY DEPOSITED LEAD)	105	CY
STRUCTURAL CONCRETE, BOX CULVERT	55	CY
MINOR CONCRETE (MINOR STRUCTURE)	7	CY
BAR REINFORCING STEEL (BOX CULVERT)	16,900	LB
MISCELLANEOUS IRON AND STEEL	330	LB

INDEX TO PLANS

SHEET NO.	TITLE
1.	GENERAL PLAN
2.	FOUNDATION PLAN
3.	CULVERT DETAILS NO. 1
4.	CULVERT DETAILS NO. 2
5.	CULVERT DETAILS NO. 3
6.	CULVERT DETAILS NO. 4
7.	CULVERT DETAILS NO. 5

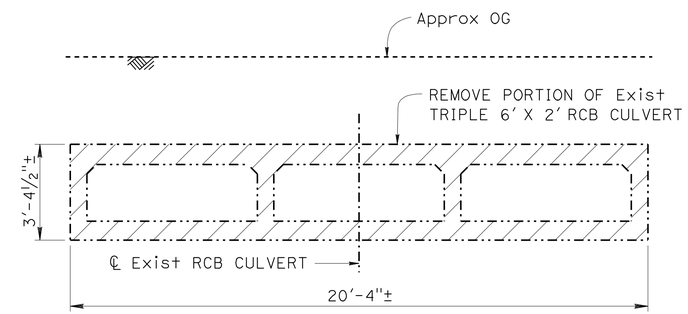

STAGE 1

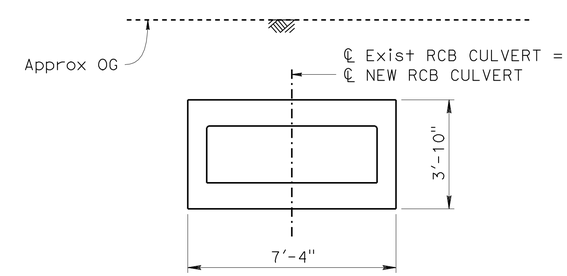

STAGE 2

TYPICAL SECTION

⅜" = 1'-0"

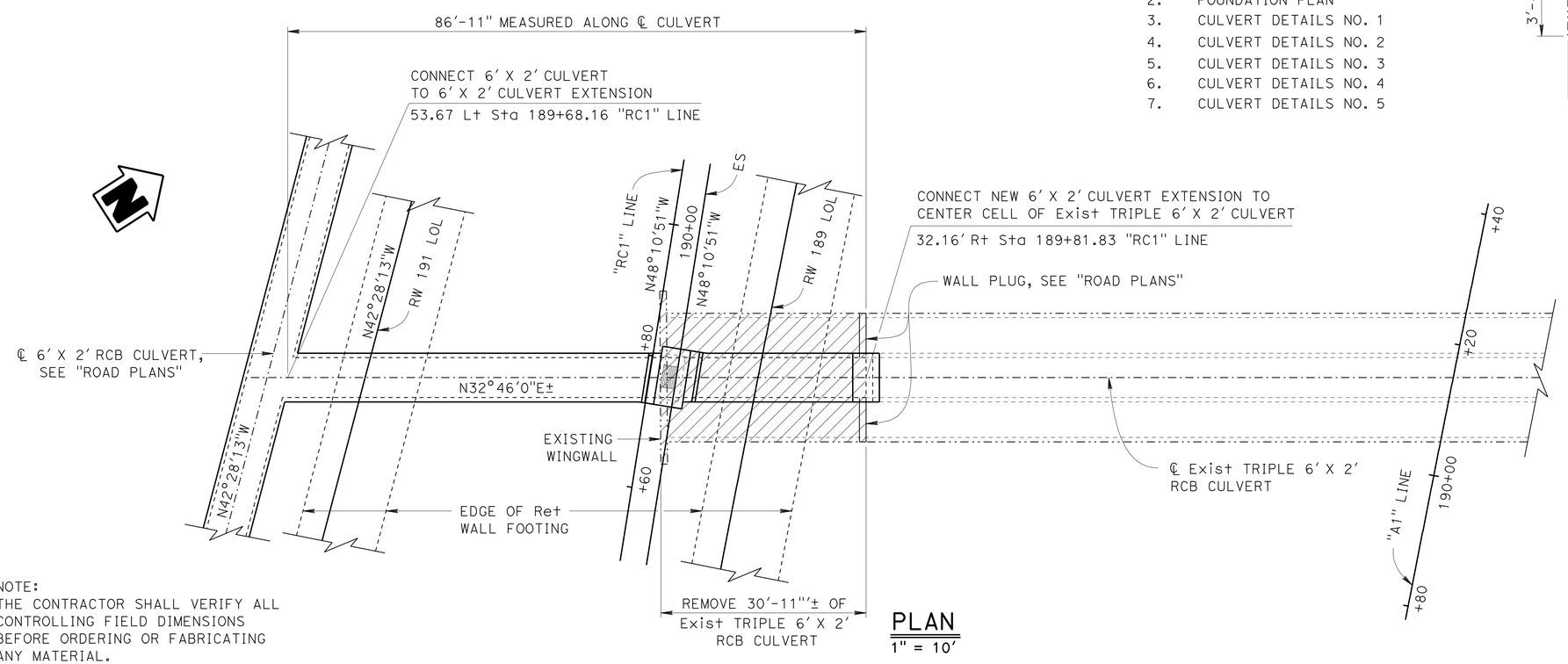

PLAN

1" = 10'

NOTE:
THE CONTRACTOR SHALL VERIFY ALL CONTROLLING FIELD DIMENSIONS BEFORE ORDERING OR FABRICATING ANY MATERIAL.

LEGEND:

- Indicates remove existing culvert

- Indicates existing structure

Jeff Sims, DESIGN ENGINEER	DESIGN	BY Vadim Shostak	CHECKED Kyoung Lee	LOAD FACTOR DESIGN	LIVE LOADING: HS 20-44 TRUCK
	DETAILS	BY Jie Tang	CHECKED Kyoung Lee	LAYOUT BY Vadim Shostak	CHECKED Kyoung Lee
	QUANTITIES	BY Rizia da Cruz Ferreira	CHECKED April Pearson	SPECIFICATIONS BY Theresa Nedwick	PLANS AND SPECS COMPARED Theresa Nedwick

ORIGINAL SCALE IN INCHES FOR REDUCED PLANS 0 1 2 3

STATE OF CALIFORNIA
DEPARTMENT OF TRANSPORTATION

DIVISION OF ENGINEERING SERVICES
STRUCTURE DESIGN
DESIGN BRANCH 1

BRIDGE NO.
POST MILE 3.54

6' X 2' CULVERT EXTENSION AT PM 3.54
GENERAL PLAN

UNIT: 3576
PROJECT NUMBER & PHASE: 0700001833-1
CONTRACT NO.: 07-215934

DISREGARD PRINTS BEARING EARLIER REVISION DATES → 01/24/11 08/24/11 12/06/11

SHEET 1 OF 7

FILE => culvertpm3.54-a-gp.dgn

USERNAME => s109858 DATE PLOTTED => 28-MAR-2012 TIME PLOTTED => 12:44

STRUCTURES DESIGN GENERAL PLAN SHEET (ENGLISH) (REV.09-01-10)

DIST	COUNTY	ROUTE	POST MILES TOTAL PROJECT	SHEET No.	TOTAL SHEETS
07	LA	5	2.4/4.0	1020	1288

REGISTERED CIVIL ENGINEER 12-08/11 DATE

3-26-12
PLANS APPROVAL DATE

REGISTERED PROFESSIONAL ENGINEER Kevin Harper No. 42221 Exp. 3-31-12 CIVIL STATE OF CALIFORNIA

The State of California or its officers or agents shall not be responsible for the accuracy or completeness of electronic copies of this plan sheet.

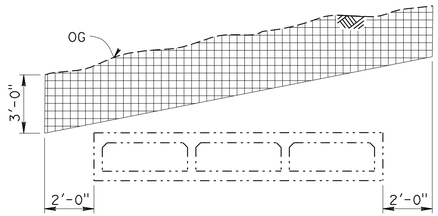

LIMITS OF PAYMENT FOR STRUCTURE EXCAVATION
(TYPE Y-2) (AERIALLY DEPOSITED LEAD)

SECTION A-A

NO SCALE

LEGEND:

▦ - STRUCTURE EXCAVATION (TYPE Y-2)

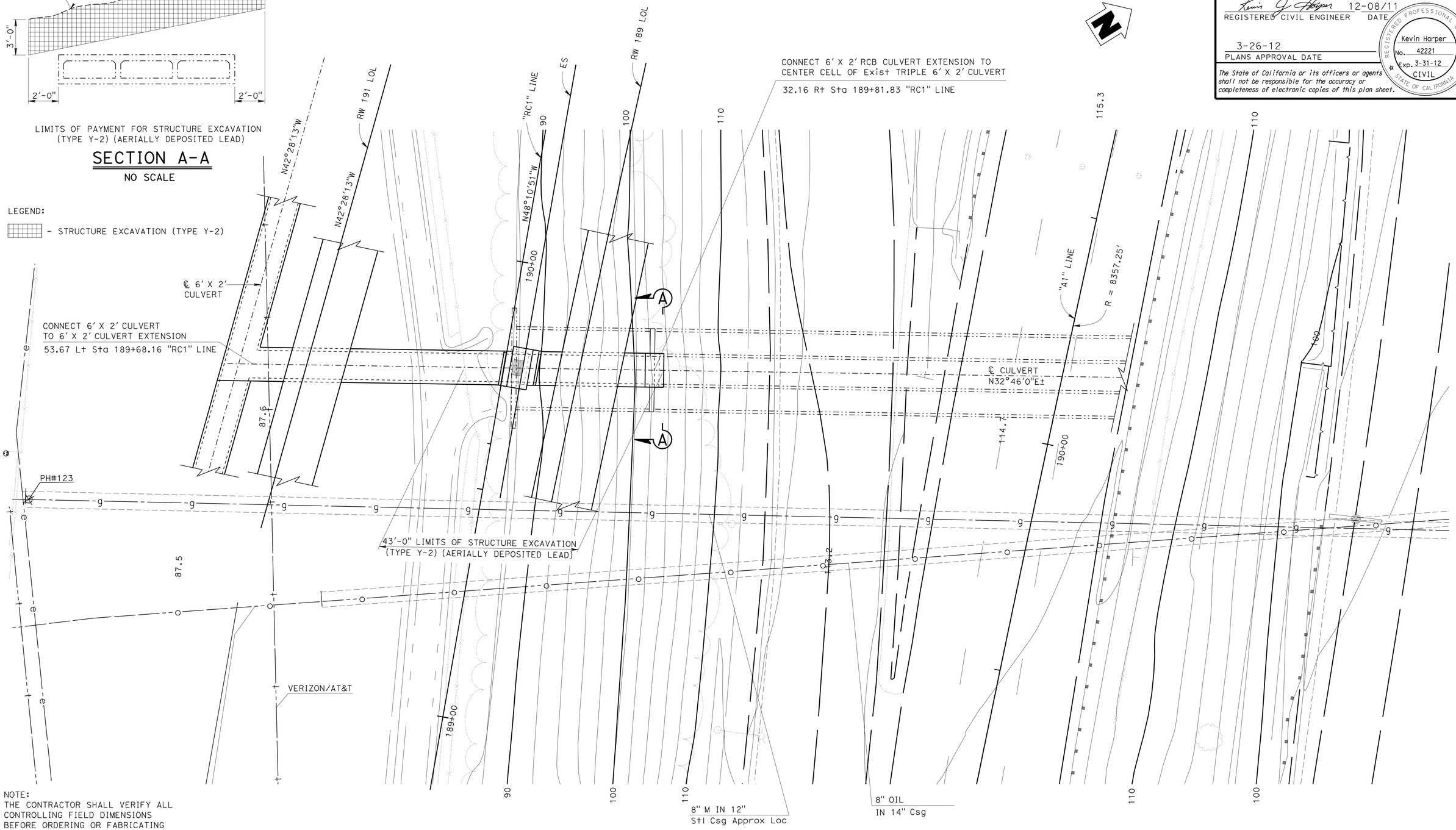

NOTE:
THE CONTRACTOR SHALL VERIFY ALL CONTROLLING FIELD DIMENSIONS BEFORE ORDERING OR FABRICATING ANY MATERIAL.

SCALE				
1" = 10'	DESIGN	BY Vadim Shostak	CHECKED Kyoung Lee	
	DETAILS	BY Jie Tang	CHECKED Kyoung Lee	
	QUANTITIES	BY Rizia da Cruz Ferreira	CHECKED April Pearson	

STATE OF CALIFORNIA
DEPARTMENT OF TRANSPORTATION

DIVISION OF ENGINEERING SERVICES
STRUCTURE DESIGN
DESIGN BRANCH 1

BRIDGE NO.
POST MILE 3.54

6' X 2' CULVERT EXTENSION AT PM 3.54

FOUNDATION PLAN

STRUCTURES DESIGN DETAIL SHEET (ENGLISH) (REV. 09-01-10)

ORIGINAL SCALE IN INCHES FOR REDUCED PLANS 0 1 2 3

UNIT: 3576
PROJECT NUMBER & PHASE: 0700001833-1
CONTRACT NO.: 07-215934

DISREGARD PRINTS BEARING EARLIER REVISION DATES

REVISION DATES 07/29/11 07/29/11 8-2-11 08/31/11

SHEET 2 OF 7

FILE => culvertpm3.54-e-fp101.dgn

USERNAME => s109858 DATE PLOTTED => 28-MAR-2012 TIME PLOTTED => 12:45

DIST	COUNTY	ROUTE	POST MILES TOTAL PROJECT	SHEET No.	TOTAL SHEETS
07	LA	5	2.4/4.0	1021	1288

REGISTERED CIVIL ENGINEER 12-07-11 DATE

3-26-12
PLANS APPROVAL DATE

REGISTERED PROFESSIONAL ENGINEER KEVIN HARPER No. 42221 Exp. 3-31-12 CIVIL STATE OF CALIFORNIA

The State of California or its officers or agents shall not be responsible for the accuracy or completeness of electronic copies of this plan sheet.

DESIGN NOTES
LOAD FACTOR DESIGN

DESIGN: Bridge Design Specifications - April 2000 (LFD)
(1996 AASHTO with interims and revisions by Caltrans)

Load Factors: 1.5D + 1.5E + 2.5L
Where: D = Dead Load
E = Earth Load
L = Live Load

Capacity Reduction Factor is included

LIVE LOADING: HS20-44
No impact applied
No surcharge

EARTH LOAD: Earth pressures for two conditions:
140 lbs/cf vertical, 42 lbs/cf horizontal
140 lbs/cf vertical, 140 lbs/cf horizontal

REINFORCED CONCRETE: f'c = 3600 psi
fy = 60,000 psi

Shear: Maximum allowable shear
$vc = 3.5 \sqrt{f'c}$, psi

STANDARD PLANS DATED MAY 2006

	A10A	ACRONYMS AND ABBREVIATIONS (SHEET 1 OF 2)
	A10B	ACRONYMS AND ABBREVIATIONS (SHEET 2 OF 2)
	A10C	SYMBOLS (SHEET 1 OF 2)
	A10D	SYMBOLS (SHEET 2 OF 2)
	A62E	EXCAVATION AND BACKFILL CAST-IN-PLACE REINFORCED CONCRETE BOX AND ARCH CULVERTS
	D73	DRAINAGE INLETS
	D74C	DRAINAGE INLETS DETAILS
RSP	D77A	GRATE DETAILS
	D80	CAST-IN-PLACE REINFORCED CONCRETE SINGLE BOX CULVERT
	D82	CAST-IN-PLACE REINFORCED CONCRETE BOX CULVERT MISCELLANEOUS DETAILS

STANDARD PLAN SHEET NO.
DETAIL NO.

CONSTRUCTION NOTES

EXPANSION JOINTS:

Invert: No expansion joints shall be permitted

Roof and Walls: Place ½" premolded joint filler at 30'-0"± centers

CONSTRUCTION JOINTS:

Temporary joints may be permitted if normal to ℄ RCB. Otherwise, the contractor is to submit a proposal for consideration.

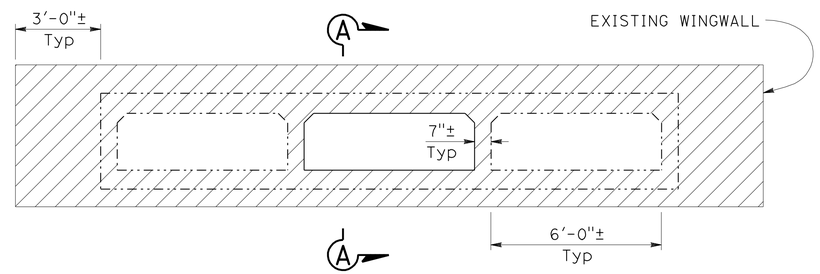

ELEVATION

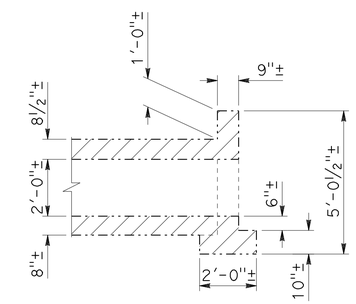

SECTION A-A

LEGEND:

- Indicates limits of existing culvert removal

- Indicates existing structure

NOTE:
For length of culvert removal, see "GENERAL PLAN" sheet.

EXISTING CULVERT REMOVAL DETAILS
⅜" = 1'-0"

NOTE:
THE CONTRACTOR SHALL VERIFY ALL CONTROLLING FIELD DIMENSIONS BEFORE ORDERING OR FABRICATING ANY MATERIAL.

	BY	CHECKED
DESIGN	Vadim Shostak	Kyoung Lee
DETAILS	Jie Tang	Kyoung Lee
QUANTITIES	Rizia da Cruz Ferreira	April Pearson

STATE OF CALIFORNIA
DEPARTMENT OF TRANSPORTATION

DIVISION OF ENGINEERING SERVICES
STRUCTURE DESIGN
DESIGN BRANCH 1

BRIDGE NO.
POST MILE 3.54

6' X 2' CULVERT EXTENSION AT PM 3.54
CULVERT DETAILS NO. 1

STRUCTURES DESIGN DETAIL SHEET (ENGLISH) (REV. 09-01-10)

ORIGINAL SCALE IN INCHES FOR REDUCED PLANS 0 1 2 3

UNIT: 3576
PROJECT NUMBER & PHASE: 07000018331
CONTRACT NO.: 07-215934

DISREGARD PRINTS BEARING EARLIER REVISION DATES

REVISION DATES 06/08/11 07/21/11 07/29/11 08/31/11

SHEET 3 OF 7

FILE => culvertpm3.54-u-det01.dgn

USERNAME => s103858 DATE PLOTTED => 28-MAR-2012 TIME PLOTTED => 12:45

DIST	COUNTY	ROUTE	POST MILES TOTAL PROJECT	SHEET No.	TOTAL SHEETS
07	LA	5	2.4/4.0	1022	1288

REGISTERED CIVIL ENGINEER 12-07-11 DATE

3-26-12
PLANS APPROVAL DATE

REGISTERED PROFESSIONAL ENGINEER Kevin Harper No. 42221 Exp. 3-31-12 CIVIL STATE OF CALIFORNIA

The State of California or its officers or agents shall not be responsible for the accuracy or completeness of electronic copies of this plan sheet.

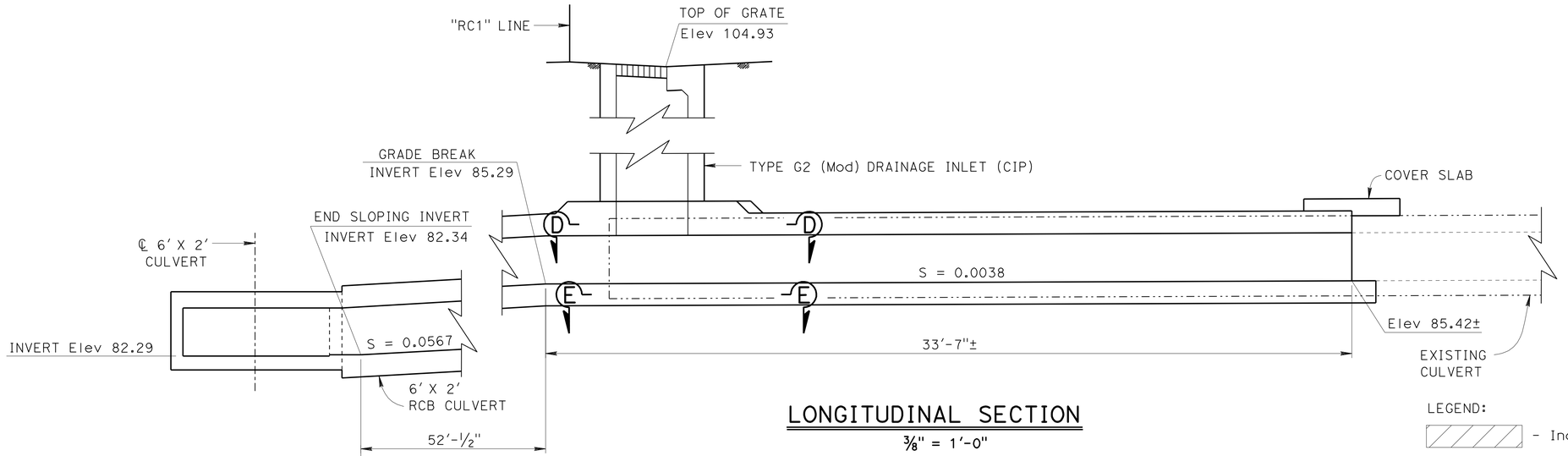

LONGITUDINAL SECTION

3/8" = 1'-0"

LEGEND:

- Indicates remove Exist culvert
- Indicates flat invert
- Indicates Exist structure

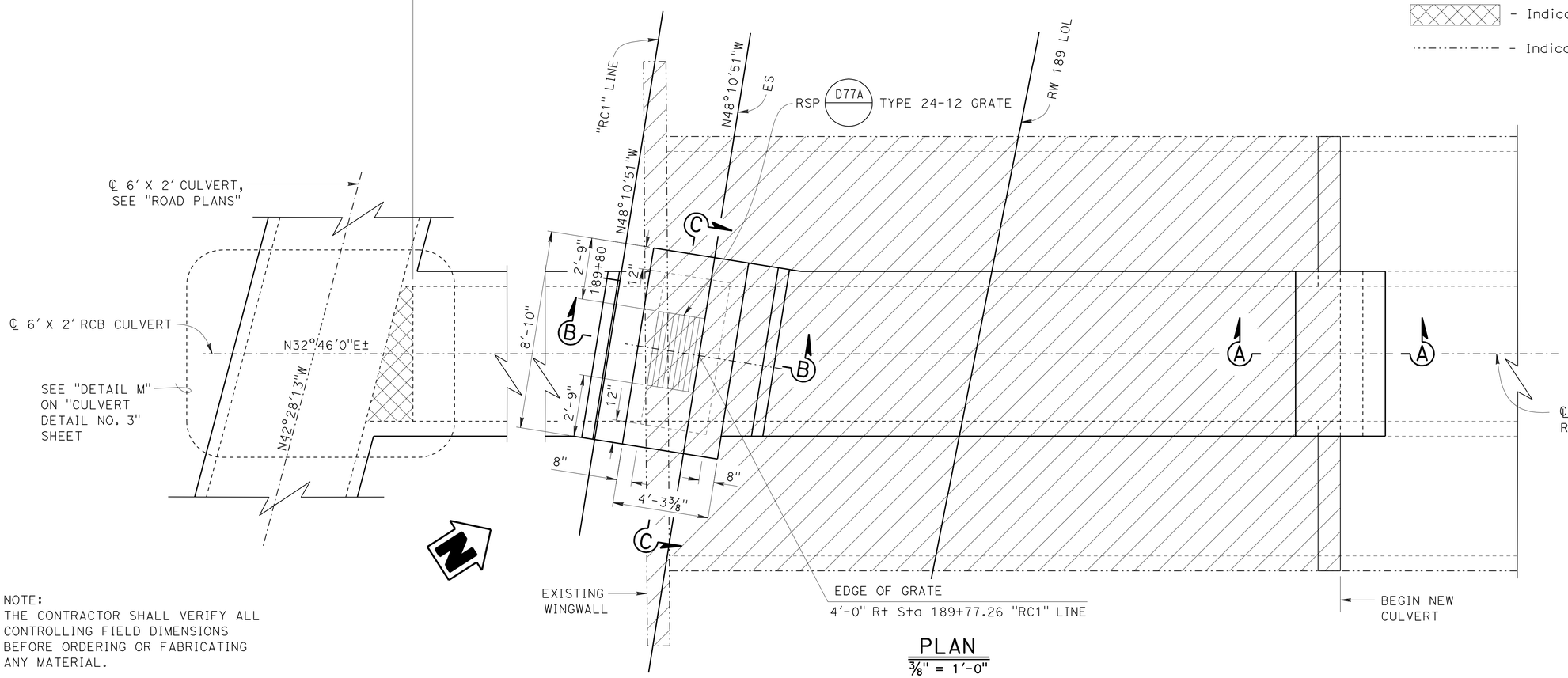

NOTES:

1. For SECTION A-A, see "CULVERT DETAILS NO. 3" sheet.
2. For SECTION B-B and SECTION C-C, see "CULVERT DETAILS NO. 4" sheet.
3. For SECTION D-D and SECTION E-E, see "CULVERT DETAILS NO. 5" sheet.
4. For "GENERAL NOTES" see "Standard Plan D82".

PLAN

3/8" = 1'-0"

NOTE:
THE CONTRACTOR SHALL VERIFY ALL CONTROLLING FIELD DIMENSIONS BEFORE ORDERING OR FABRICATING ANY MATERIAL.

	BY	CHECKED
DESIGN	Vadim Shostak	Kyoung Lee
DETAILS	Jie Tang	Kyoung Lee
QUANTITIES	Rizia da Cruz Ferreira	April Pearson

STATE OF CALIFORNIA
DEPARTMENT OF TRANSPORTATION

DIVISION OF ENGINEERING SERVICES
STRUCTURE DESIGN
DESIGN BRANCH 1

BRIDGE NO.
POST MILE 3.54

6' X 2' CULVERT EXTENSION AT PM 3.54
CULVERT DETAILS NO. 2

STRUCTURES DESIGN DETAIL SHEET (ENGLISH) (REV. 09-01-10)

ORIGINAL SCALE IN INCHES FOR REDUCED PLANS 0 1 2 3

UNIT: 3576
PROJECT NUMBER & PHASE: 0700001833-1
CONTRACT NO.: 07-215934

DISREGARD PRINTS BEARING EARLIER REVISION DATES

REVISION DATES 06/13/11 08/31/11 07/12/11 07/20/11

SHEET 4 OF 7

FILE => culvertpm3.54-u-det02.dgn

USERNAME => s109858 DATE PLOTTED => 28-MAR-2012 TIME PLOTTED => 12:45

DIST	COUNTY	ROUTE	POST MILES TOTAL PROJECT	SHEET No.	TOTAL SHEETS
07	LA	5	2.4/4.0	1023	1288

REGISTERED CIVIL ENGINEER 12-07-11 DATE

3-26-12
PLANS APPROVAL DATE

REGISTERED PROFESSIONAL ENGINEER Kevin Harper No. 42221 Exp. 3-31-12 CIVIL STATE OF CALIFORNIA

The State of California or its officers or agents shall not be responsible for the accuracy or completeness of electronic copies of this plan sheet.

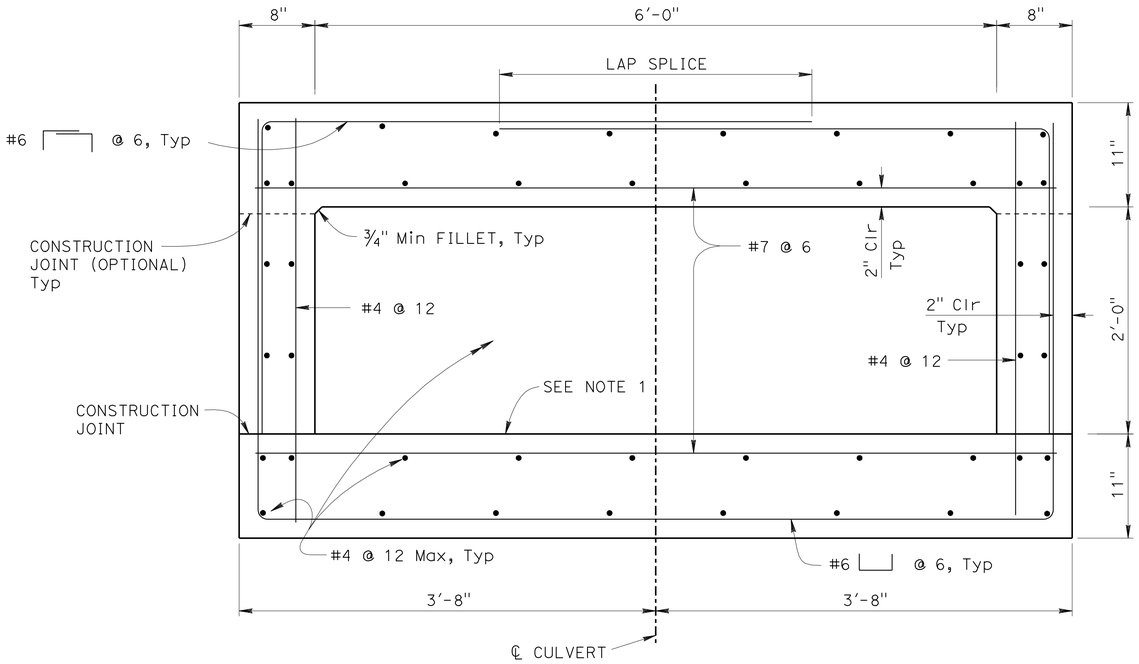

TYPICAL SECTION

1½" = 1'-0"

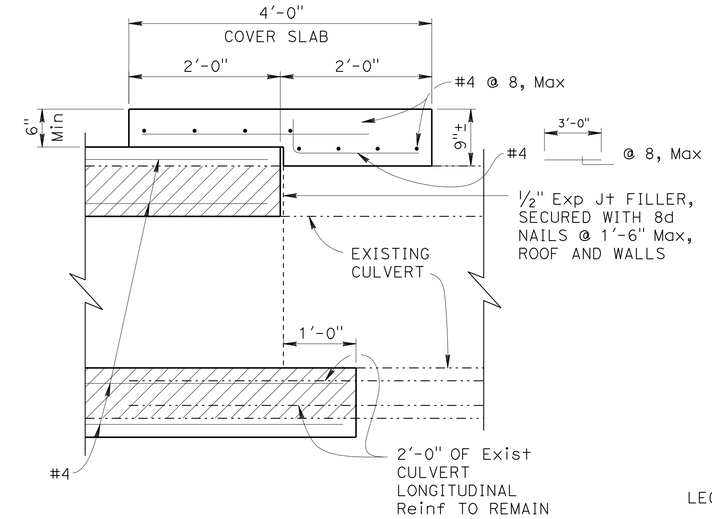

SECTION A-A

1" = 1'-0"

NOTES:

1. Match invert to Exist culvert, see Standard Plan D80 for "ALTERNATIVE INVERTS".
2. For location of "SECTION A-A", see "CULVERT DETAILS NO. 2" sheet.
3. For location of "DETAIL M", see "CULVERT DETAILS NO. 2" sheet.
4. Culvert transverse reinforcement not shown in "SECTION A-A".

LEGEND:

- Indicates remove existing culvert
- Indicates existing structure

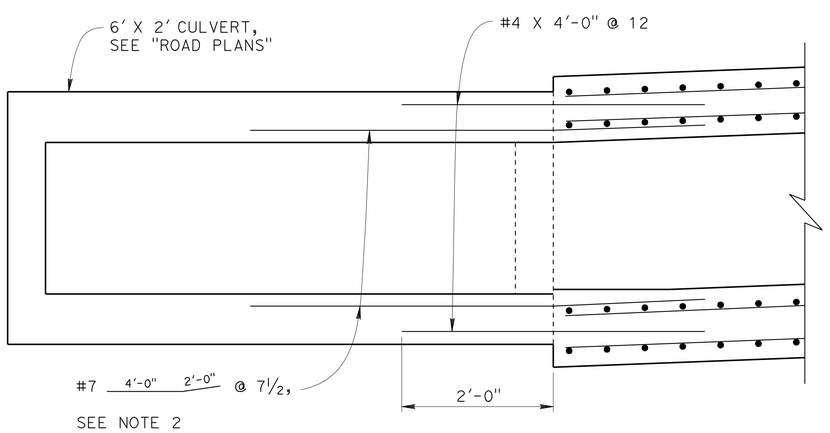

SECTION F-F

1" = 1'-0"

NOTE:
THE CONTRACTOR SHALL VERIFY ALL CONTROLLING FIELD DIMENSIONS BEFORE ORDERING OR FABRICATING ANY MATERIAL.

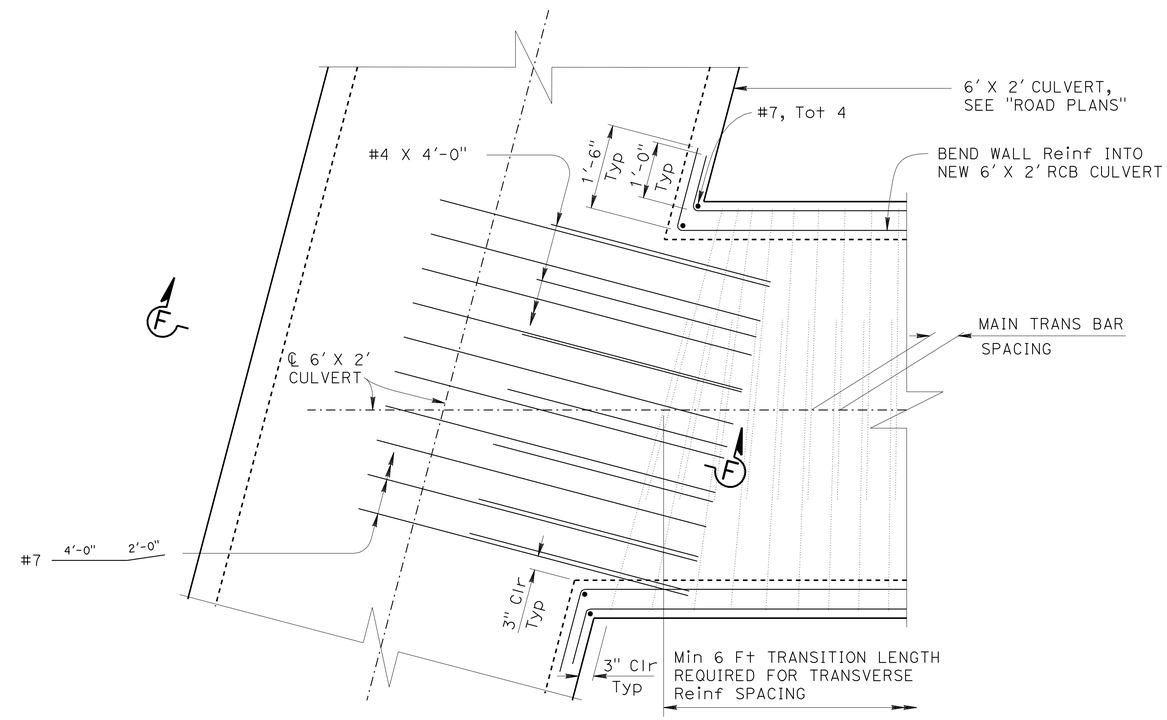

DETAIL M

¾" = 1'-0"

	BY	CHECKED
DESIGN	Vadim Shostak	Kyoung Lee
DETAILS	Jie Tang	Kyoung Lee
QUANTITIES	Rizia da Cruz Ferreira	April Pearson

STATE OF CALIFORNIA
DEPARTMENT OF TRANSPORTATION

DIVISION OF ENGINEERING SERVICES
STRUCTURE DESIGN
DESIGN BRANCH 1

BRIDGE NO.
POST MILE 3.54

6' X 2' CULVERT EXTENSION AT PM 3.54

CULVERT DETAILS NO. 3

STRUCTURES DESIGN DETAIL SHEET (ENGLISH) (REV. 09-01-10)

ORIGINAL SCALE IN INCHES FOR REDUCED PLANS 0 1 2 3

UNIT: 3576
PROJECT NUMBER & PHASE: 0700001833-1
CONTRACT NO.: 07-215934

DISREGARD PRINTS BEARING EARLIER REVISION DATES

REVISION DATES 07/12/11 8-11-11 07/29/11

SHEET 5 OF 7

FILE => culvertpm3.54-u-det03.dgn

USERNAME => s109858 DATE PLOTTED => 28-MAR-2012 TIME PLOTTED => 12:45

DIST	COUNTY	ROUTE	POST MILES TOTAL PROJECT	SHEET No.	TOTAL SHEETS
07	LA	5	2.4/4.0	1024	1288

REGISTERED CIVIL ENGINEER 12-07-11 DATE

3-26-12
PLANS APPROVAL DATE

REGISTERED PROFESSIONAL ENGINEER Kevin Harper No. 42221 Exp. 3-31-12 CIVIL STATE OF CALIFORNIA

The State of California or its officers or agents shall not be responsible for the accuracy or completeness of electronic copies of this plan sheet.

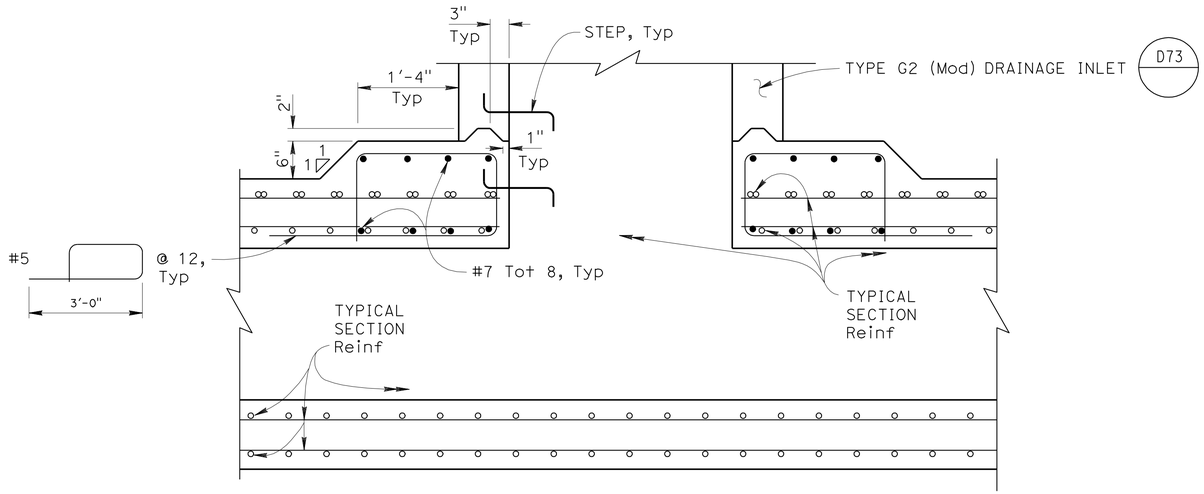

SECTION B-B

1" = 1'-0"

NOTES:

1. For location of "SECTION B-B" and "SECTION C-C", see "CULVERT DETAILS NO. 2" sheet.
2. Steps - Install steps with lowest rung 6" above the top of culvert and highest rung not more than 6" below top of inlet. The distance between the steps shall not exceed 1'-0" and be uniform throughout the length of the wall. Step inserts may be substituted for the bar steps. Step inserts shall comply with State Industrial Safety requirements. See Standard Plan D74C for step details.
3. For CIP drainage inlet notes, see Standard Plan "D73".

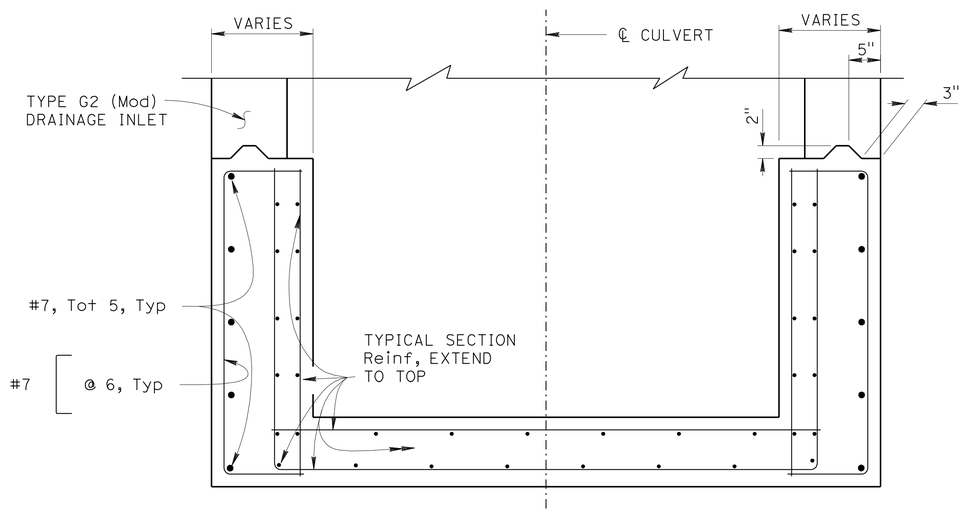

SECTION C-C

1" = 1'-0"

NOTE:
THE CONTRACTOR SHALL VERIFY ALL CONTROLLING FIELD DIMENSIONS BEFORE ORDERING OR FABRICATING ANY MATERIAL.

	BY	CHECKED
DESIGN	Vadim Shostak	Kyoung Lee
DETAILS	Jie Tang	Kyoung Lee
QUANTITIES	Rizia da Cruz Ferreira	April Pearson

STATE OF CALIFORNIA
DEPARTMENT OF TRANSPORTATION

DIVISION OF ENGINEERING SERVICES
STRUCTURE DESIGN
DESIGN BRANCH 1

BRIDGE NO.
POST MILE 3.54

6' X 2' CULVERT EXTENSION AT PM 3.54

CULVERT DETAILS NO. 4

STRUCTURES DESIGN DETAIL SHEET (ENGLISH) (REV. 09-01-10)

ORIGINAL SCALE IN INCHES FOR REDUCED PLANS 0 1 2 3

UNIT: 3576
PROJECT NUMBER & PHASE: 0700001833-1
CONTRACT NO.: 07-215934

DISREGARD PRINTS BEARING EARLIER REVISION DATES

REVISION DATES 06/15/11 08/31/11 07/29/11 8-08-11

SHEET 6 OF 7

FILE => culvertpm3.54-u-det04.dgn

USERNAME => s109858 DATE PLOTTED => 28-MAR-2012 TIME PLOTTED => 12:45

DIST	COUNTY	ROUTE	POST MILES TOTAL PROJECT	SHEET No.	TOTAL SHEETS
07	LA	5	2.4/4.0	1025	1288

REGISTERED CIVIL ENGINEER 12-07-11 DATE

3-26-12
PLANS APPROVAL DATE

REGISTERED PROFESSIONAL ENGINEER Kevin Harper No. 42221 Exp. 3-31-12 CIVIL STATE OF CALIFORNIA

The State of California or its officers or agents shall not be responsible for the accuracy or completeness of electronic copies of this plan sheet.

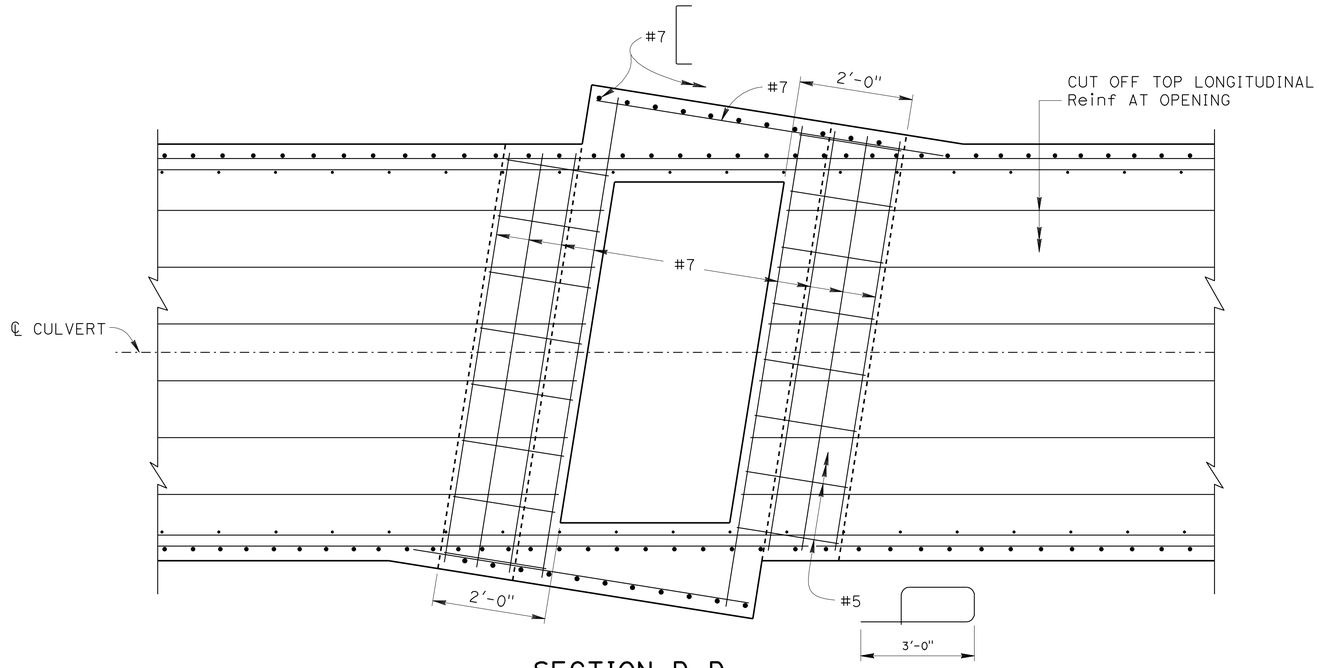

SECTION D-D

¾" = 1'-0"

NOTES:

1. Transition top and bottom transverse Reinf from orientation perpendicular to ℄ Culvert to orientation parallel to DI face.
2. Typical section transverse Reinf not show on "SECTION D-D".
3. For location of "SECTION D-D" and "SECTION E-E", see "CULVERT DETAILS NO. 2" sheet.

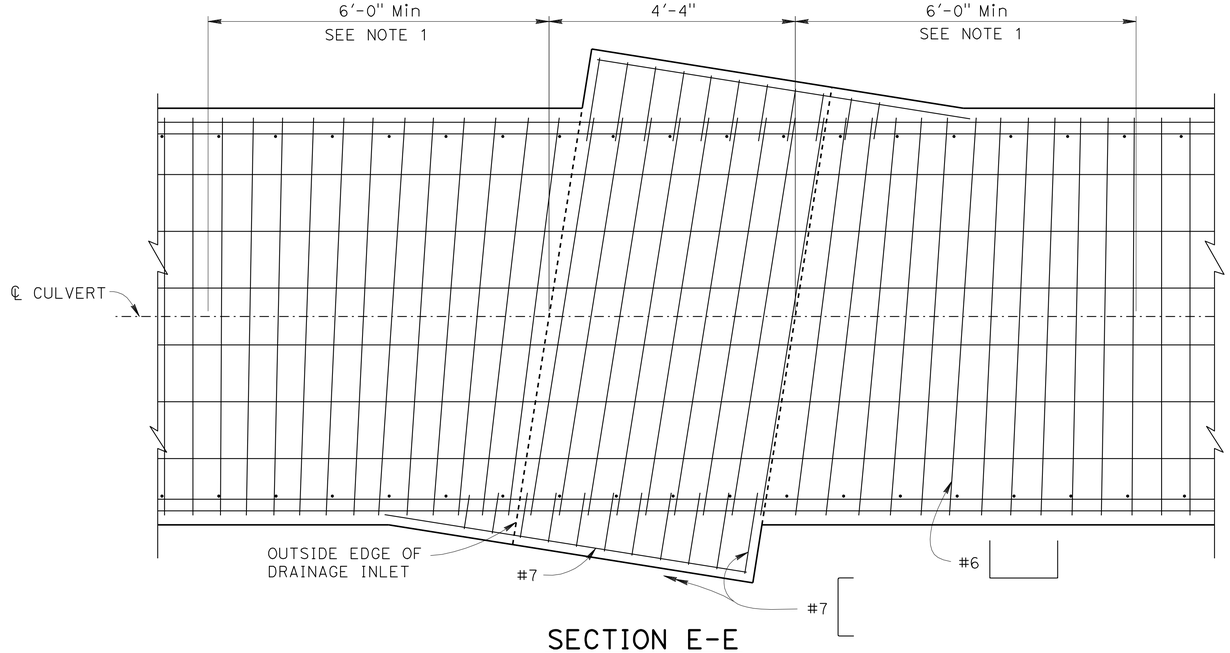

SECTION E-E

¾" = 1'-0"

NOTE:
THE CONTRACTOR SHALL VERIFY ALL CONTROLLING FIELD DIMENSIONS BEFORE ORDERING OR FABRICATING ANY MATERIAL.

	BY	CHECKED
DESIGN	Vadim Shostak	Kyoung Lee
DETAILS	Jie Tang	Kyoung Lee
QUANTITIES	Rizia da Cruz Ferreira	April Pearson

STATE OF CALIFORNIA
DEPARTMENT OF TRANSPORTATION

DIVISION OF ENGINEERING SERVICES
STRUCTURE DESIGN
DESIGN BRANCH 1

BRIDGE NO.
POST MILE 3.54

6' X 2' CULVERT EXTENSION AT PM 3.54

CULVERT DETAILS NO. 5

STRUCTURES DESIGN DETAIL SHEET (ENGLISH) (REV. 09-01-10)

ORIGINAL SCALE IN INCHES FOR REDUCED PLANS 0 1 2 3

UNIT: 3576
PROJECT NUMBER & PHASE: 0700001833-1
CONTRACT NO.: 07-215934

DISREGARD PRINTS BEARING EARLIER REVISION DATES

REVISION DATES 06/14/11 06/28/11 07/20/11

SHEET 7 OF 7

FILE => culvertpm3.54-u-det05.dgn

USERNAME => s103858 DATE PLOTTED => 28-MAR-2012 TIME PLOTTED => 12:45

DIST	COUNTY	ROUTE	POST MILES TOTAL PROJECT	SHEET No.	TOTAL SHEETS
07	LA	5	2.4/4.0	1026	1288

Traci Menard 2/29/2012
REGISTERED CIVIL ENGINEER DATE

3-26-12
PLANS APPROVAL DATE

REGISTERED PROFESSIONAL ENGINEER
Traci Menard
No. 54207
Exp. 12/31/13
CIVIL
STATE OF CALIFORNIA

The State of California or its officers or agents shall not be responsible for the accuracy or completeness of electronic copies of this plan sheet.

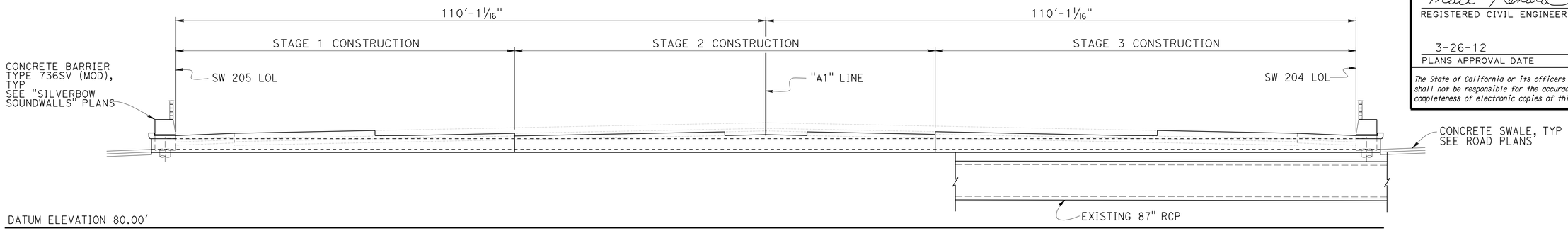

NOTE:
EXISTING 6-CELL - 6' x 2' RCB (TO BE REMOVED) NOT SHOWN FOR CLARITY

ELEVATION
1" = 10'-0"

QUANTITIES

STRUCTURAL CONCRETE, BOX CULVERT	182	CY
BAR REINFORCING STEEL (BOX CULVERT)	47,890	LB

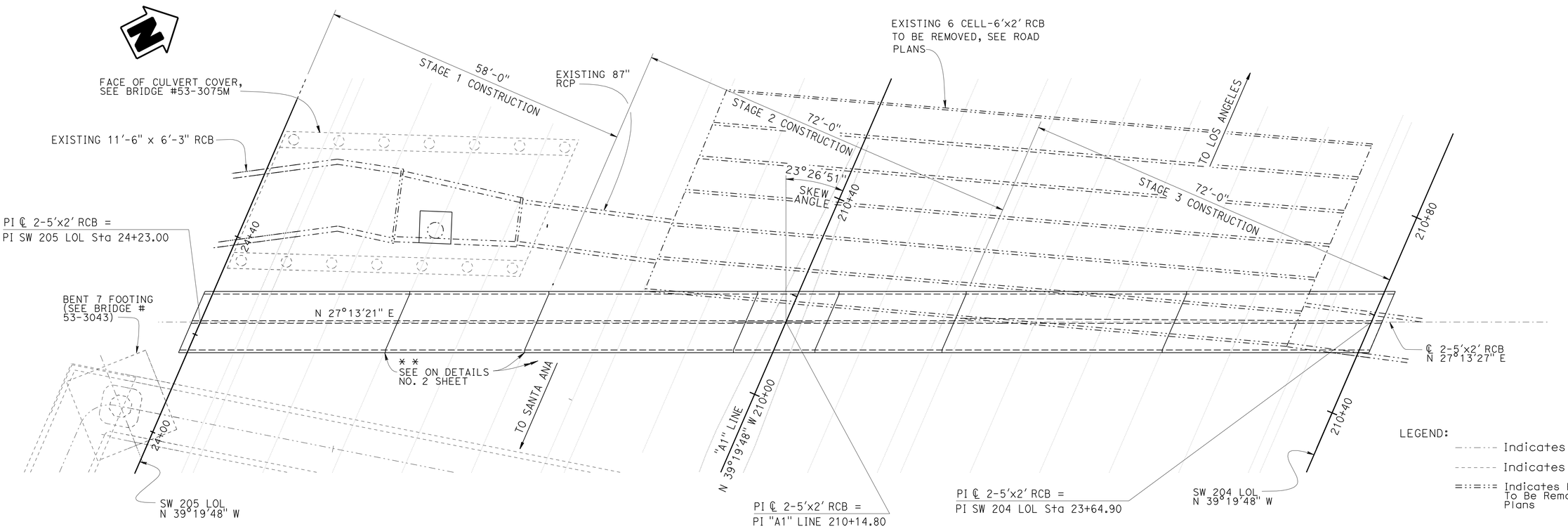

LEGEND:
- Indicates Existing Structure
- Indicates Adjacent Structure
- Indicates Existing Structure To Be Removed, See Road Plans

NOTE:
THE CONTRACTOR SHALL VERIFY ALL CONTROLLING FIELD DIMENSIONS BEFORE ORDERING OR FABRICATING ANY MATERIAL.

PLAN
1" = 10'-0"

Traci Menard
DESIGN ENGINEER

	BY	CHECKED
DESIGN	Traci Menard	S. Moradi/F. Feng
DETAILS	Stan Cholda/T. Cotton	S. Moradi/F. Feng
QUANTITIES	Fred Feng	S. Moradi

LOAD FACTOR DESIGN — LIVE LOADING: HS20-44 TRUCK
LAYOUT — BY Traci Menard — CHECKED S. Moradi/F. Feng
SPECIFICATIONS — BY Theresa Nedwick — PLANS AND SPECS COMPARED Traci Menard

ORIGINAL SCALE IN INCHES FOR REDUCED PLANS 0 1 2 3

STATE OF CALIFORNIA
DEPARTMENT OF TRANSPORTATION

DIVISION OF ENGINEERING SERVICES
STRUCTURE DESIGN
DESIGN BRANCH 15

BRIDGE NO. n/a
POST MILE 3.97

DOUBLE BOX CULVERT
GENERAL PLAN NO. 1

UNIT: 3604
PROJECT NUMBER & PHASE: 0700001833
CONTRACT NO.: 07-215931

DISREGARD PRINTS BEARING EARLIER REVISION DATES
REVISION DATES: 03-07-12 01-31-12 03-01-12
SHEET 1 OF 5

USERNAME => s103858 DATE PLOTTED => 28-MAR-2012 TIME PLOTTED => 12:45

DIST	COUNTY	ROUTE	POST MILES TOTAL PROJECT	SHEET No.	TOTAL SHEETS
07	LA	5	2.4/4.0	1027	1288

Traci Menard 2/29/2012
REGISTERED CIVIL ENGINEER DATE

3-26-12
PLANS APPROVAL DATE

REGISTERED PROFESSIONAL ENGINEER Traci Menard No. 54207 Exp. 12/31/13 CIVIL STATE OF CALIFORNIA

The State of California or its officers or agents shall not be responsible for the accuracy or completeness of electronic copies of this plan sheet.

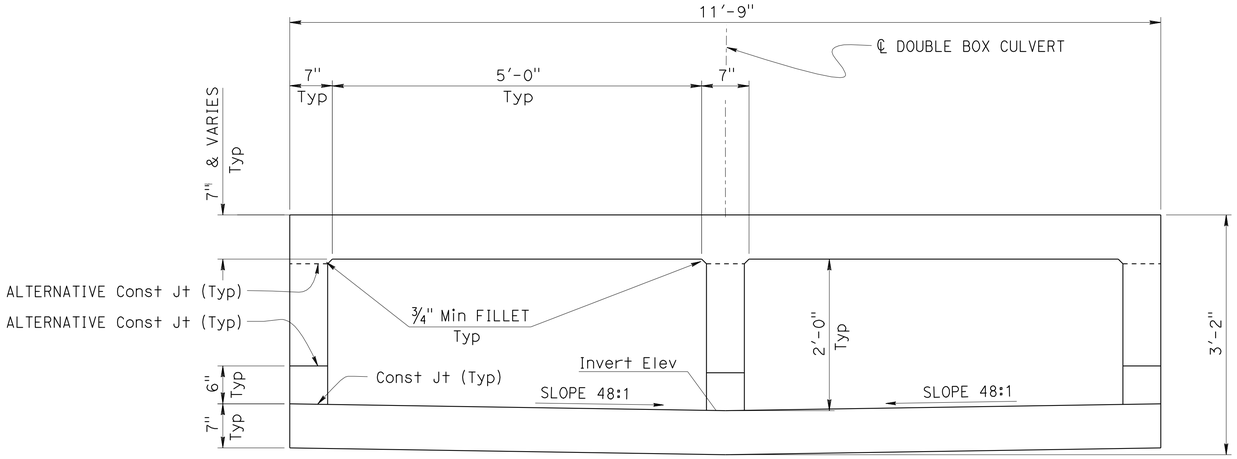

TYPICAL SECTION

1" = 1'-0"

GENERAL NOTES

CONCRETE:
f'c = 4.0 ksi

INDEX TO PLANS

SHEET NO.	TITLE
1.	GENERAL PLAN NO. 1
2.	GENERAL PLAN NO. 2
3.	CULVERT LAYOUT
4.	DETAILS NO. 1
5.	DETAILS NO. 2

STANDARD PLANS DATED MAY 2006

A10A	ACRONYMS AND ABBREVIATIONS (SHEET 1 OF 2)
A10B	ACRONYMS AND ABBREVIATIONS (SHEET 2 OF 2)
A62E	EXCAVATION AND BACKFILL CAST-IN-PLACE REINFORCED CONCRETE BOX AND ARCH CULVERT
PI	JOINTED PLAIN CONCRETE PAVEMENT
P10	CONCRETE PAVEMENT - DOWEL BAR DETAILS
D81	CAST-IN-PLACE REINFORCED CONCRETE DOUBLE BOX CULVERT
D82	CAST-IN-PLACE REINFORCED CONCRETE BOX CULVERT MISCELLANEOUS DETAILS
D88	CONSTRUCTION LOADS ON CULVERT
B0-3	BRIDGE DETAILS
B0-13	BRIDGE DETAILS

STANDARD PLAN SHEET No.

DETAIL No.

Traci Menard
DESIGN ENGINEER

	BY	CHECKED			
DESIGN	Traci Menard	S. Moradi/F. Feng	LOAD FACTOR DESIGN	LIVE LOADING: HS20-44 TRUCK	
DETAILS	T. Cotton	S. Moradi/F. Feng	LAYOUT	Traci Menard	S. Moradi/F. Feng
QUANTITIES	Fred Feng	S. Moradi	SPECIFICATIONS	Theresa Nedwick	PLANS AND SPECS COMPARED Traci Menard

ORIGINAL SCALE IN INCHES FOR REDUCED PLANS 0 1 2 3

STATE OF CALIFORNIA
DEPARTMENT OF TRANSPORTATION

DIVISION OF ENGINEERING SERVICES
STRUCTURE DESIGN
DESIGN BRANCH 15

BRIDGE NO. n/a
POST MILE 3.97

DOUBLE BOX CULVERT
GENERAL PLAN NO. 2

UNIT: 3604
PROJECT NUMBER & PHASE: 0700001833
CONTRACT NO.: 07-215931

DISREGARD PRINTS BEARING EARLIER REVISION DATES

REVISION DATES: 02-01-12 02-02-12 02-29-12 03-07-12

SHEET 2 OF 5

USERNAME => s109858 DATE PLOTTED => 28-MAR-2012 TIME PLOTTED => 12:45

DIST	COUNTY	ROUTE	POST MILES TOTAL PROJECT	SHEET No.	TOTAL SHEETS
07	LA	5	2.4/4.0	1028	1288

Traci Menard 2/29/2012
REGISTERED CIVIL ENGINEER DATE

3-26-12
PLANS APPROVAL DATE

REGISTERED PROFESSIONAL ENGINEER
Traci Menard
No. 54207
Exp. 12/31/13
CIVIL
STATE OF CALIFORNIA

The State of California or its officers or agents shall not be responsible for the accuracy or completeness of electronic copies of this plan sheet.

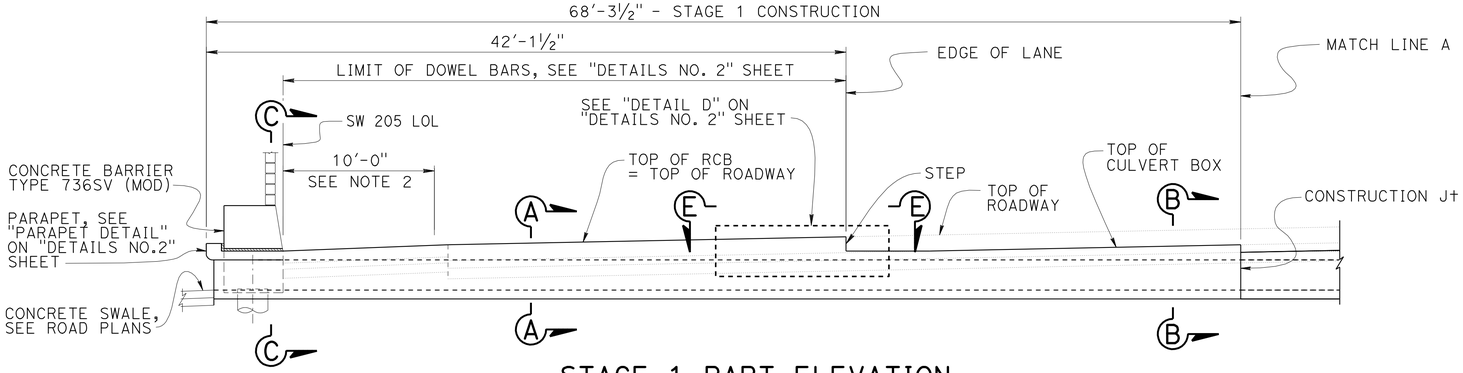

STAGE 1 PART ELEVATION

1" = 5'-0"

NOTES:

1. For roadway section details, see Roadway Plans.
2. Transition from "SECTION C-C" to "SECTION A-A".
3. For "View E-E" See "Details No. 2" sheet.

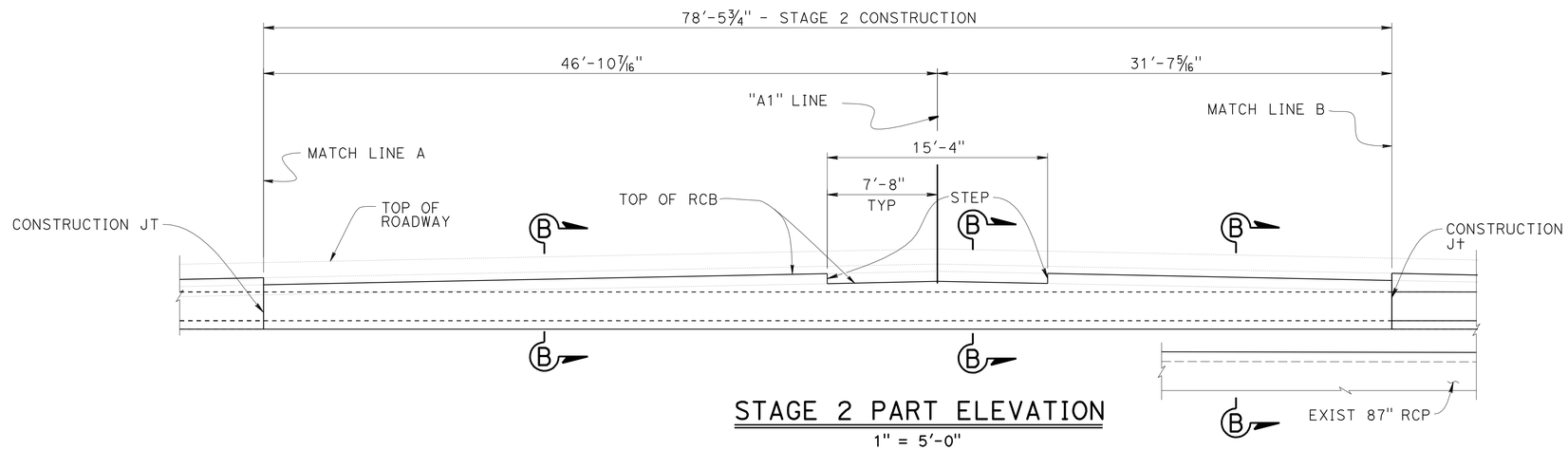

STAGE 2 PART ELEVATION

1" = 5'-0"

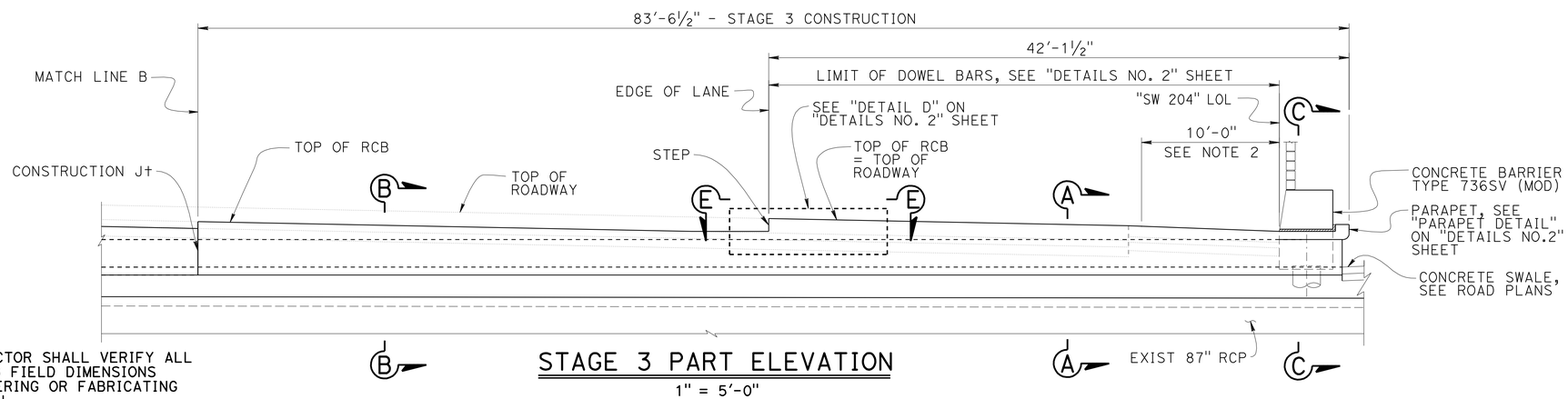

STAGE 3 PART ELEVATION

1" = 5'-0"

NOTE:
THE CONTRACTOR SHALL VERIFY ALL CONTROLLING FIELD DIMENSIONS BEFORE ORDERING OR FABRICATING ANY MATERIAL.

	BY	CHECKED
DESIGN	Traci Menard	S. Moradi/F. Feng
DETAILS	S. Cholda/M. Lane/T. Cotton	S. Moradi/F. Feng
QUANTITIES	Fred Feng	S. Moradi

STATE OF CALIFORNIA
DEPARTMENT OF TRANSPORTATION

DIVISION OF ENGINEERING SERVICES
STRUCTURE DESIGN
DESIGN BRANCH 15

BRIDGE NO. n/a
POST MILE 3.97

DOUBLE BOX CULVERT
CULVERT LAYOUT

STRUCTURES DESIGN DETAIL SHEET (ENGLISH) (REV. 09-01-10)

ORIGINAL SCALE IN INCHES FOR REDUCED PLANS 0 1 2 3

UNIT: 3604
PROJECT NUMBER & PHASE: 0700001833
CONTRACT NO.: 07-215931

DISREGARD PRINTS BEARING EARLIER REVISION DATES

REVISION DATES 02-24-12 02-29-12 03-05-12

SHEET 3 OF 5

FILE => drainage-f-culvert _layout01.dgn

USERNAME => s103858 DATE PLOTTED => 28-MAR-2012 TIME PLOTTED => 12:46

DIST	COUNTY	ROUTE	POST MILES TOTAL PROJECT	SHEET No.	TOTAL SHEETS
07	LA	5	2.4/4.0	1029	1288

Traci Menard 2/29/2012
REGISTERED CIVIL ENGINEER DATE

3-26-12
PLANS APPROVAL DATE

REGISTERED PROFESSIONAL ENGINEER Traci Menard No. 54207 Exp. 12/31/13 CIVIL STATE OF CALIFORNIA

The State of California or its officers or agents shall not be responsible for the accuracy or completeness of electronic copies of this plan sheet.

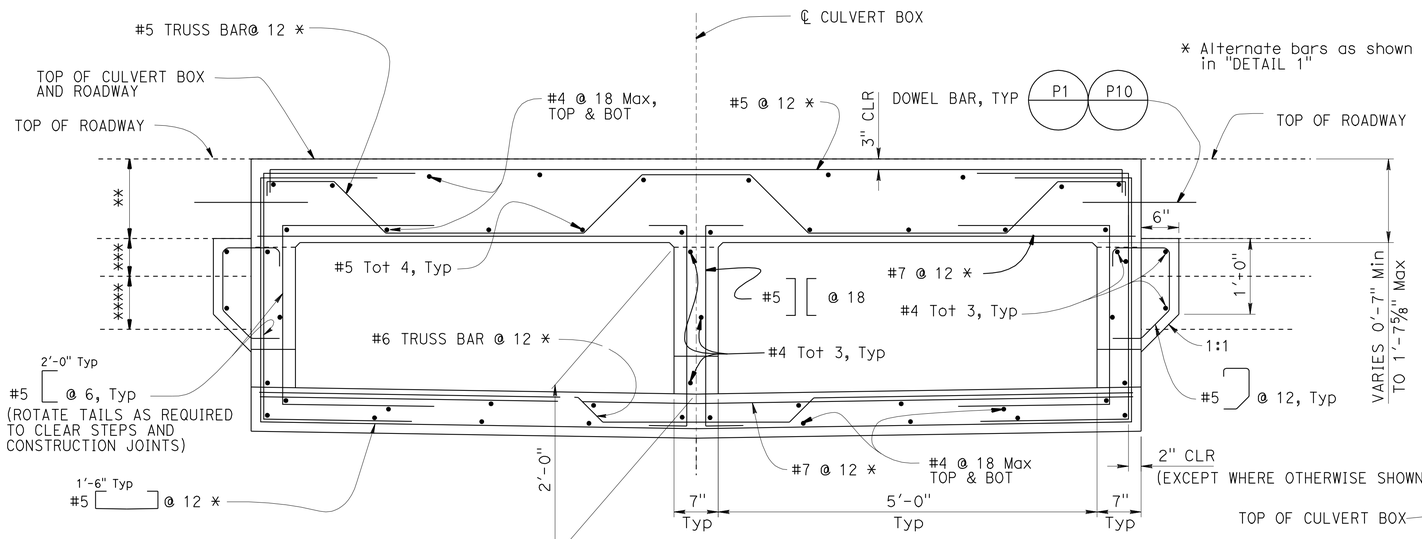

SECTION A-A

1" = 1'-0"

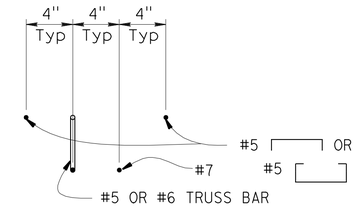

DETAIL 1

NO SCALE

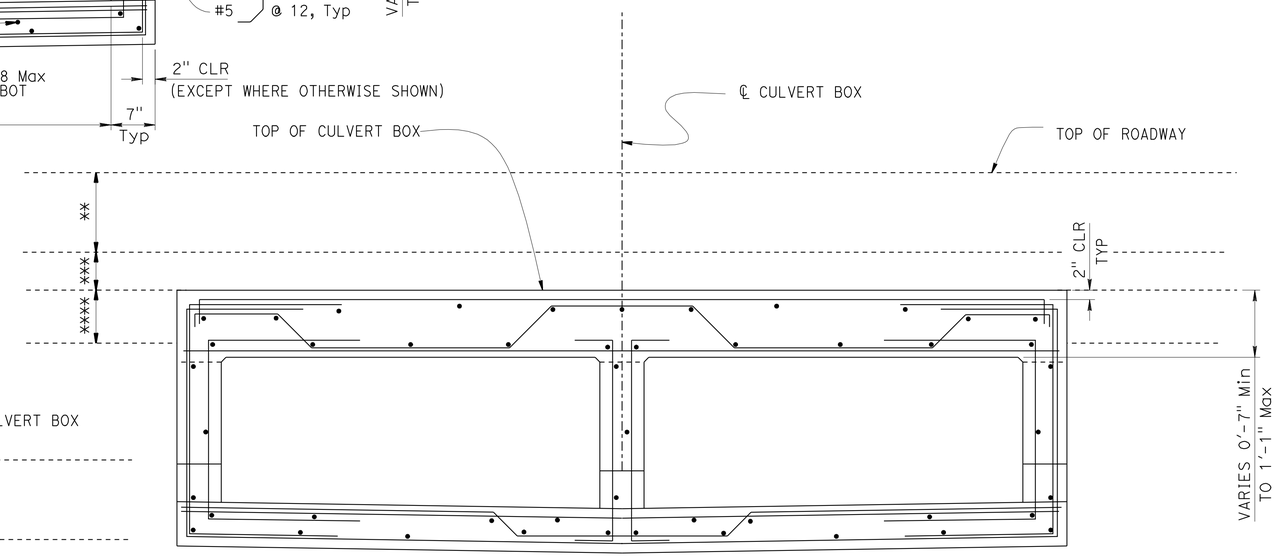

SECTION B-B

1" = 1'-0"

NOTES:

1. "SECTION B-B" from STAGE 2 shown. "SECTION B-B" from STAGE 1 and STAGE 3 similar.
2. For details not shown, see "SECTION A-A".

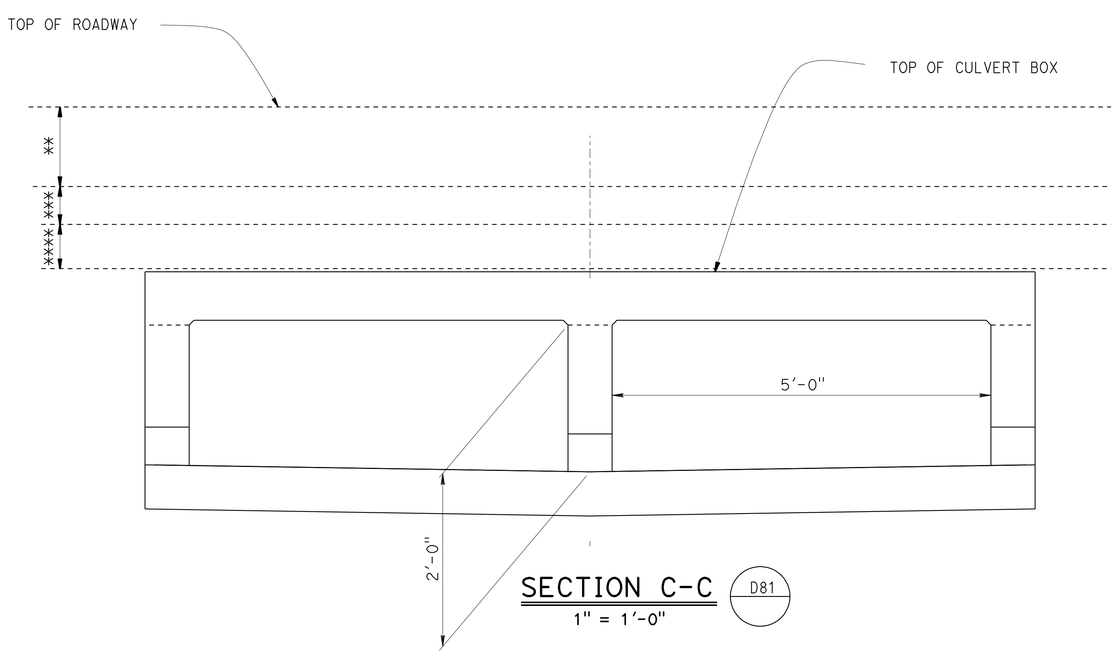

SECTION C-C

D81

1" = 1'-0"

NOTES:

1. FOR REINFORCING DETAILS AT STEPS AND CONSTRUCTION JOINTS, SEE "DETAIL D" AND "VIEW E-E" ON "DETAILS NO. 2" SHEET.
2. LONGITUDIONAL REINFORCING AT CONSTRUCTION JOINTS SHALL BE LAPPED OR BUTT SPLICED CONTINUOUS WITH NEXT STAGE.
3. For information not shown see D81

LEGEND:

** Jointed plain concrete pavement (See "ROAD PLANS")

*** Lean concrete base (See "ROAD PLANS")

**** Class 3 aggregate base (See "ROAD PLANS")

DESIGN	BY Traci Menard	CHECKED S. Moradi/F. Feng	
DETAILS	BY S. Cholda/M. Lane/T. Cotton	CHECKED S. Moradi/F. Feng	
QUANTITIES	BY Fred Feng	CHECKED S. Moradi	

STATE OF CALIFORNIA
DEPARTMENT OF TRANSPORTATION

DIVISION OF ENGINEERING SERVICES
STRUCTURE DESIGN
DESIGN BRANCH 15

BRIDGE NO. n/a
POST MILE 3.97

DOUBLE BOX CULVERT
DETAILS NO. 1

STRUCTURES DESIGN DETAIL SHEET (ENGLISH) (REV. 09-01-10)

ORIGINAL SCALE IN INCHES FOR REDUCED PLANS 0 1 2 3

UNIT: 3604
PROJECT NUMBER & PHASE: 0700001833
CONTRACT NO.: 07-215931

DISREGARD PRINTS BEARING EARLIER REVISION DATES

REVISION DATES 02/08/12 02/27/12

SHEET 4 OF 5

FILE => drainage-h-culvert_layout02.dgn

USERNAME => s109858 DATE PLOTTED => 28-MAR-2012 TIME PLOTTED => 12:46

DIST	COUNTY	ROUTE	POST MILES TOTAL PROJECT	SHEET No.	TOTAL SHEETS
07	LA	5	2.4/4.0	1030	1288

Traci Menard 2/29/2012
REGISTERED CIVIL ENGINEER DATE

3-26-12
PLANS APPROVAL DATE

REGISTERED PROFESSIONAL ENGINEER
Traci Menard
No. 54207
Exp. 12/31/13
CIVIL
STATE OF CALIFORNIA

The State of California or its officers or agents shall not be responsible for the accuracy or completeness of electronic copies of this plan sheet.

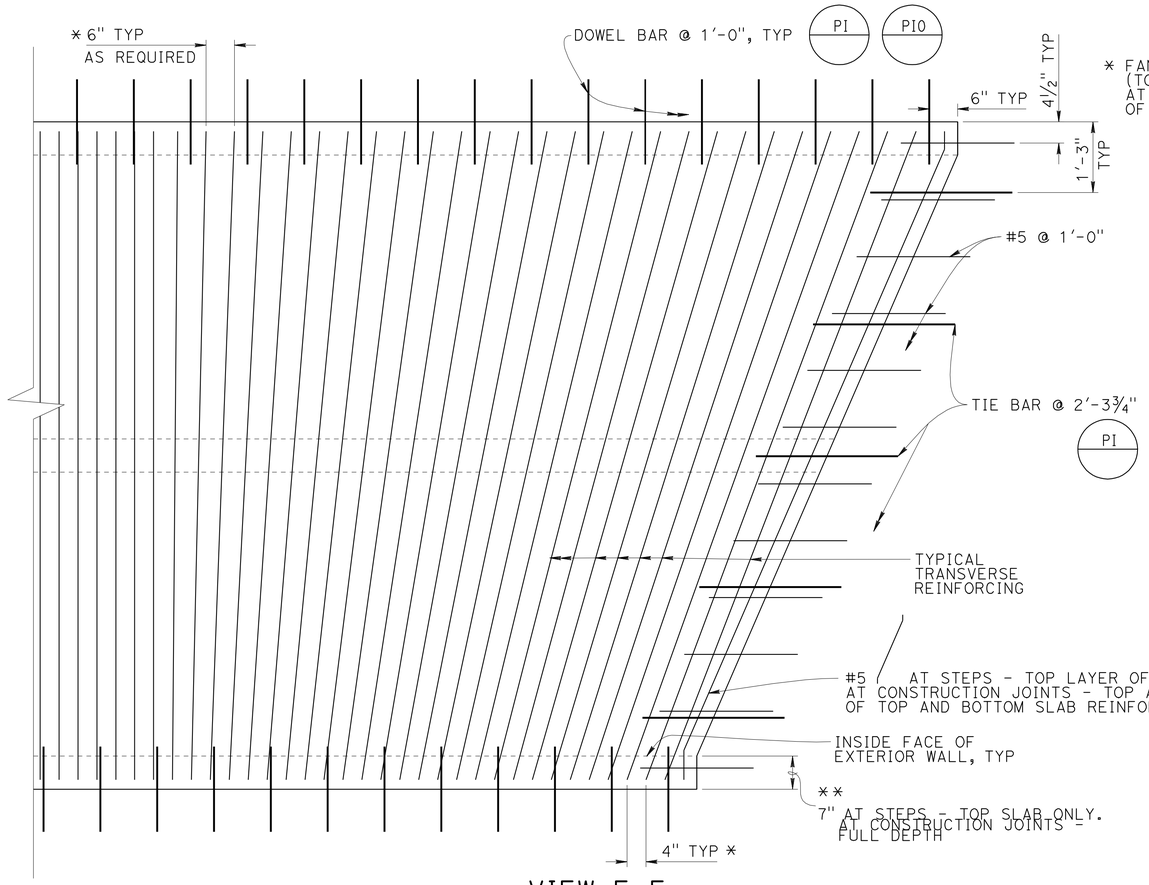

* FAN TRANSVERSE REINFORCING AS SHOWN AT STEPS (TOP LAYER OF TOP SLAB REINFORCING ONLY) AND AT CONSTRUCTION JOINTS (TOP AND BOTTOM LAYERS OF TOP AND BOTTOM SLAB REINFORCING).

VIEW E-E
3/4" = 1'-0"

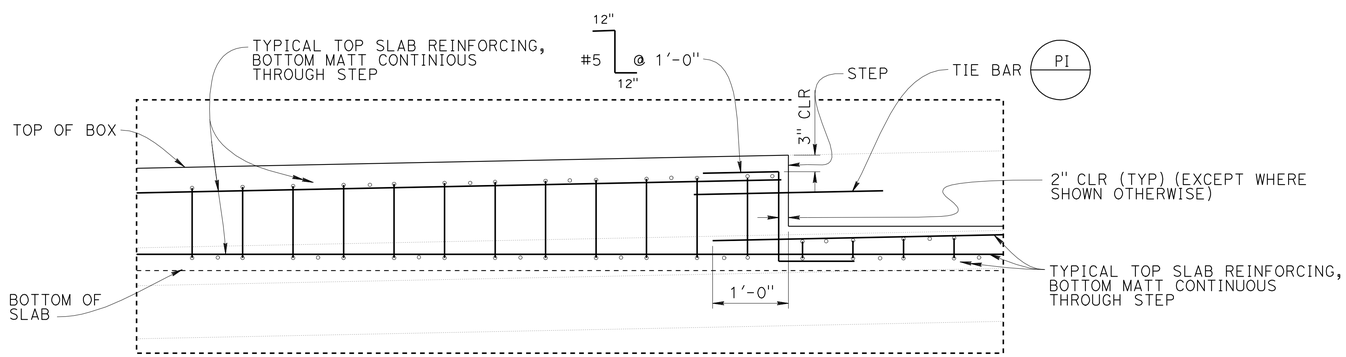

NOTE;
VIEW D-D FOR STAGE 1 CONSTRUCTION SHOWN, VIEW D-D FOR STAGE 3 CONSTRUCTION SIMILAR.

DETAIL D
1" = 1'-0"

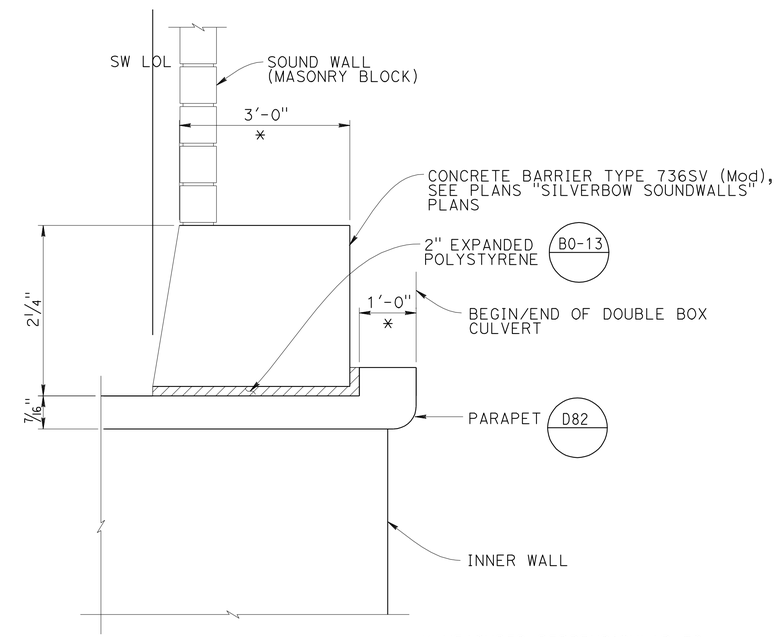

* MEASURED PERPENDICULAR TO SW LINE

PARAPET DETAIL
3/4" = 1'-0"

DESIGN	BY Traci Menard	CHECKED S. Moradi/F. Feng	
DETAILS	BY T. Cotton	CHECKED S. Moradi/F. Feng	
QUANTITIES	BY Fred Feng	CHECKED S. Moradi	

STATE OF CALIFORNIA
DEPARTMENT OF TRANSPORTATION

DIVISION OF ENGINEERING SERVICES
STRUCTURE DESIGN
DESIGN BRANCH 15

BRIDGE NO. n/a
POST MILE 3.97

DOUBLE BOX CULVERT
DETAILS NO. 2

STRUCTURES DESIGN DETAIL SHEET (ENGLISH) (REV. 09-01-10)

ORIGINAL SCALE IN INCHES FOR REDUCED PLANS 0 1 2 3

UNIT: 3604
PROJECT NUMBER & PHASE: 0700001833
CONTRACT NO.: 07-215931

DISREGARD PRINTS BEARING EARLIER REVISION DATES

REVISION DATES: 02-29-12

SHEET 5 OF 5

FILE => drainage-h-details02.dgn

USERNAME => s109858 DATE PLOTTED => 28-MAR-2012 TIME PLOTTED => 12:46

DIST	COUNTY	ROUTE	POST MILES TOTAL PROJECT	SHEET No.	TOTAL SHEETS
07	LA	5	2.4/4.0	1031	1288

REGISTERED CIVIL ENGINEER 12-7-11 DATE

3-26-12
PLANS APPROVAL DATE

REGISTERED PROFESSIONAL ENGINEER Kevin Harper No. 42221 Exp. 3-31-12 CIVIL STATE OF CALIFORNIA

The State of California or its officers or agents shall not be responsible for the accuracy or completeness of electronic copies of this plan sheet.

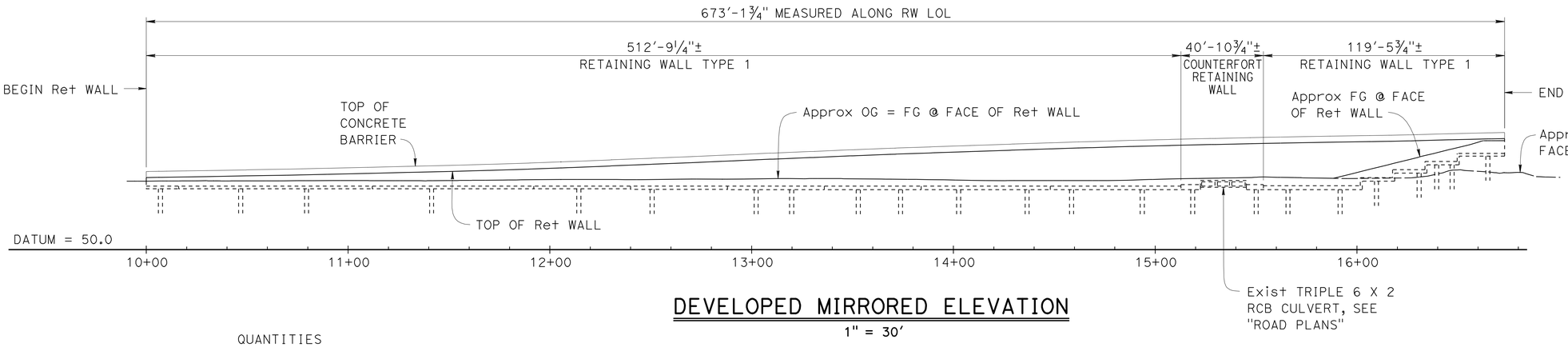

DEVELOPED MIRRORED ELEVATION

1" = 30'

QUANTITIES

STRUCTURE EXCAVATION (RETAINING WALL)	550	CY
STRUCTURE EXCAVATION (TYPE Y-2) (AERIALLY DEPOSITED LEAD)	650	CY
STRUCTURE BACKFILL (RETAINING WALL)	1,695	CY
PERVIOUS BACKFILL MATERIAL (RETAINING WALL)	162	CY
FURNISH PILING (CLASS 90)	6,159	LF
DRIVE PILE (CLASS 90)	155	EA
STRUCTURAL CONCRETE, RETAINING WALL	777	CY
ARCHITECTURAL TREATMENT (SPLIT SLATE - FRACTURED RIB)	5,200	SQFT
BAR REINFORCING STEEL (RETAINING WALL)	113,810	LB
CONCRETE BARRIER (TYPE 736A MODIFIED 1)	674	LF

NOTES:

1. For "DESIGN NOTES" see Standard Plan B3-8.
2. All piles not shown in "DEVELOPED MIRRORED ELEVATION".

(A) Angle Point @ BC: Curve Subtangent Brg = N61°22'55"W

(B) Angle Point @ PCC: Curve Subtangent Brg = N66°46'15"W, Forward Subtangent Brg = S64°01'23"E

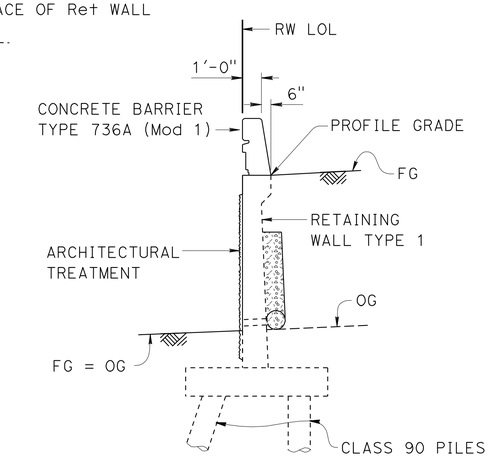

TYPICAL SECTION

¼" = 1'-0"

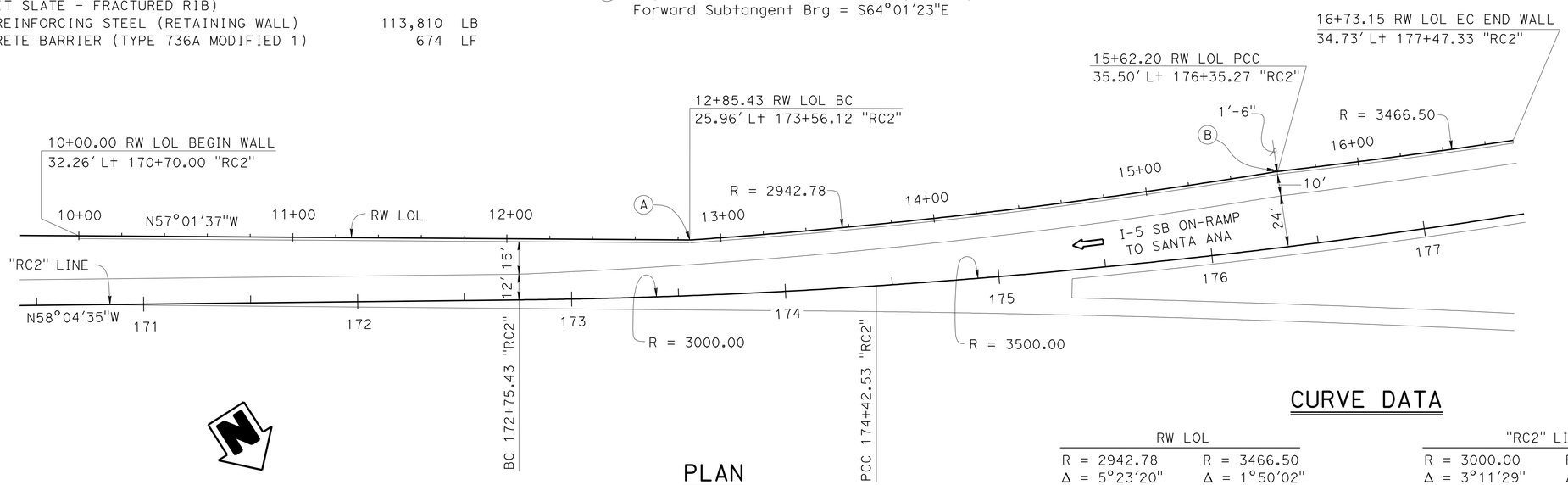

PLAN

1" = 30'

CURVE DATA

RW LOL		"RC2" LINE	
R = 2942.78	R = 3466.50	R = 3000.00	R = 3500.00
Δ = 5°23'20"	Δ = 1°50'02"	Δ = 3°11'29"	Δ = 7°53'11"
T = 138.49	T = 55.48	T = 83.57	T = 241.25
L = 276.77	L = 110.95	L = 167.10	L = 481.74

Jeff Sims
DESIGN ENGINEER

	BY	CHECKED		BY	CHECKED
DESIGN	Daniel Sessions	Christa Siegenthaler	LOAD FACTOR DESIGN		
DETAILS	Bob Huddleston	Christa Siegenthaler	LAYOUT	Daniel Sessions	Christa Siegenthaler
QUANTITIES	R. Da Cruz / E. Watson	Jeff Sims	SPECIFICATIONS	Theresa Nedwick	PLANS AND SPECS COMPARED Theresa Nedwick

ORIGINAL SCALE IN INCHES FOR REDUCED PLANS 0 1 2 3

STATE OF CALIFORNIA
DEPARTMENT OF TRANSPORTATION

DIVISION OF ENGINEERING SERVICES
STRUCTURE DESIGN
DESIGN BRANCH 1

BRIDGE NO. X
POST MILE 3.14

RETAINING WALL NO. 173
GENERAL PLAN

UNIT: 3576
PROJECT NUMBER & PHASE: 07000018331
CONTRACT NO.: 07-215934

DISREGARD PRINTS BEARING EARLIER REVISION DATES

REVISION DATES: 10-17-11 11-11-11

SHEET 1 OF 16

FILE => rw173-a-gp01.dgn

USERNAME => s103858 DATE PLOTTED => 28-MAR-2012 TIME PLOTTED => 12:46

STRUCTURES DESIGN GENERAL PLAN SHEET (ENGLISH) (REV.09-01-10)

DIST	COUNTY	ROUTE	POST MILES TOTAL PROJECT	SHEET No.	TOTAL SHEETS
07	LA	5	2.4/4.0	1032	1288

REGISTERED CIVIL ENGINEER 12-7-11 DATE

3-26-12
PLANS APPROVAL DATE

REGISTERED PROFESSIONAL ENGINEER Kevin Harper No. 42221 Exp. 3-31-12 CIVIL STATE OF CALIFORNIA

The State of California or its officers or agents shall not be responsible for the accuracy or completeness of electronic copies of this plan sheet.

INDEX TO PLANS

SHEET NO.	TITLE
1.	GENERAL PLAN
2.	INDEX TO PLANS
3.	STRUCTURE PLAN NO. 1
4.	STRUCTURE PLAN NO. 2
5.	STRUCTURE PLAN NO. 3
6.	FOUNDATION PLAN NO. 1
7.	FOUNDATION PLAN NO. 2
8.	COUNTERFORT RETAINING WALL DETAILS
9.	ELECTROLIER/RAMP METER PEDESTAL DETAILS
10.	RETAINING WALL ARCHITECTURAL TREATMENT
11.	RETAINING WALL ARCHITECTURAL DETAILS
12.	CONCRETE BARRIER TYPE 736A (MOD 1)
13.	LOG OF TEST BORINGS 1 OF 4
14.	LOG OF TEST BORINGS 2 OF 4
15.	LOG OF TEST BORINGS 3 OF 4
16.	LOG OF TEST BORINGS 4 OF 4

STANDARD PLANS DATED MAY 2006

A10A	ACRONYMS AND ABBREVIATIONS (SHEET 1 OF 2)
A10B	ACRONYMS AND ABBREVIATIONS (SHEET 2 OF 2)
A10C	SYMBOLS (SHEET 1 OF 2)
A10D	SYMBOLS (SHEET 2 OF 2)
A62B	LIMITS OF PAYMENT FOR EXCAVATION AND BACKFILL - BRIDGE SURCHARGE AND WALL
B0-1	BRIDGE DETAILS
B0-3	BRIDGE DETAILS
B2-5	PILE DETAILS CLASS 90 AND CLASS 140
B3-1	RETAINING WALL TYPE 1 H = 4′ - 30′
B3-8	RETAINING WALL DETAILS No. 1
B11-56	CONCRETE BARRIER TYPE 736
ES-6B	ELECTRICAL SYSTEMS (LIGHTING STANDARD TYPES 15 AND 21 BARRIER RAIL MOUNTED DETAILS)
RSP ES-7B	ELECTRICAL SYSTEMS (SIGNAL AND LIGHTING STANDARD TYPE 1 STANDARD AND EQUIPMENT NUMBERING)

STANDARD PLAN SHEET NO.

DETAIL NO.

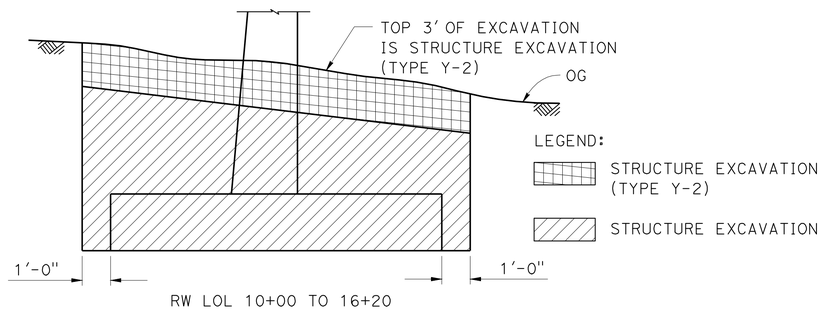

LIMITS OF PAYMENT FOR STRUCTURE EXCAVATION (TYPE Y-2) (AERIALLY DEPOSITED LEAD)

NO SCALE

PILE DATA TABLE

LOCATION	PILE TYPE	NOMINAL RESISTANCE (Kip)		SPECIFIED TIP ELEVATION	NOMINAL DRIVING RESISTANCE (Kip)
		COMPRESSION	TENSION		
Ret WALL TYPE 1 RW LOL 10+00 to 16+02.66	CLASS 90	180	0	41.8	180
Ret WALL TYPE 1 RW LOL 16+02.66 to 16+18.66	CLASS 90	180	0	45.9	180
Ret WALL TYPE 1 RW LOL 16+18.66 to 16+34.66	CLASS 90	180	0	49.9	180
Ret WALL TYPE 1 RW LOL 16+34.66 to 16+50.66	CLASS 90	180	0	54.1	180
Ret WALL TYPE 1 RW LOL 16+50.66 to 16+73.15	CLASS 90	180	0	58.3	180
COUNTERFORT RETAINING WALL	CLASS 90	180	0	41.8	180

NOTES:

1. Class 90 Alternative "X" Piles shall have a dimension "T" not less than 14 inches.
2. All Design tips are controlled by compression.

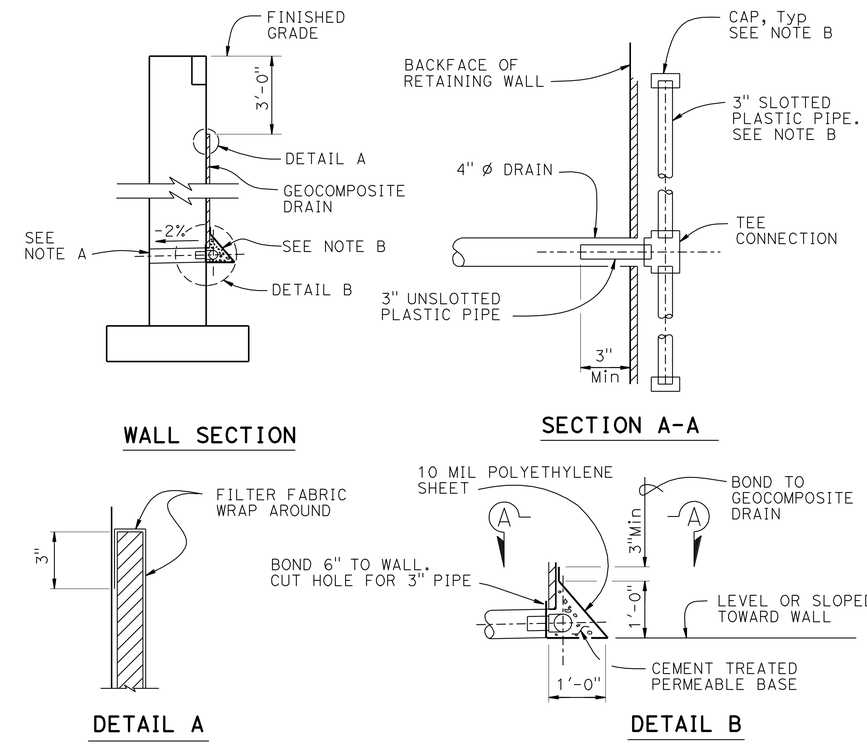

WEEP HOLE AND GEOCOMPOSITE DRAIN

ALTERNATIVE TO BRIDGE DETAIL B0-3 / 3-1

NOTES:

A. 4" Ø drains at 25′ max center to center.
For walls adjacent to sidewalks or curbs, provide 4" cast iron or asbestos cement pipe under the sidewalk to discharge through curb face.
Exposed wall drains shall be located 3"± above finished grade.

B. Geocomposite drain, cement treated permeable base, and 3"Ø slotted plastic pipe continuous behind retaining wall. Cap ends of pipe. Provide "Tee" connection at each 4" Ø drain.

	BY	CHECKED
DESIGN	Daniel Sessions	Christa Siegenthaler
DETAILS	Bob Huddleston	Christa Siegenthaler
QUANTITIES	R. Da Cruz / E. Watson	Jeff Sims

STATE OF CALIFORNIA
DEPARTMENT OF TRANSPORTATION

DIVISION OF ENGINEERING SERVICES
STRUCTURE DESIGN
DESIGN BRANCH 1

BRIDGE NO. X
POST MILE 3.14

RETAINING WALL NO. 173
INDEX TO PLANS

STRUCTURES DESIGN DETAIL SHEET (ENGLISH) (REV. 09-01-10)

ORIGINAL SCALE IN INCHES FOR REDUCED PLANS 0 1 2 3

UNIT: 3576
PROJECT NUMBER & PHASE: 0700001833-1
CONTRACT NO.: 07-215934

DISREGARD PRINTS BEARING EARLIER REVISION DATES

REVISION DATES 10-18-11 11-04-11 11-22-11

SHEET 2 OF 16

FILE => rw173-a-ltp.dgn

USERNAME => s109858 DATE PLOTTED => 28-MAR-2012 TIME PLOTTED => 12:46

DIST	COUNTY	ROUTE	POST MILES TOTAL PROJECT	SHEET No.	TOTAL SHEETS
07	LA	5	2.4/4.0	1033	1288

REGISTERED CIVIL ENGINEER 12-7-11 DATE

3-26-12
PLANS APPROVAL DATE

REGISTERED PROFESSIONAL ENGINEER Kevin Harper No. 42221 Exp. 3-31-12 CIVIL STATE OF CALIFORNIA

The State of California or its officers or agents shall not be responsible for the accuracy or completeness of electronic copies of this plan sheet.

NOTES:

1. For barrier details, see "CONCRETE BARRIER TYPE 736A (MOD 1) DETAILS"
2. Retaining wall expansion joints, weakened planes and weep holes shall be placed per B0-3/3-3.
3. All longitudinal dimensions are measured along the RW LOL.
4. Not all piles are shown in "DEVELOPED MIRRORED ELEVATION".
5. For "WEEP HOLE AND GEOCOMPOSITE DRAIN" alternative, see "INDEX TO PLANS" sheet.

LEGEND:

- Indicates vertical class 90 pile.
- Indicates 1:3 battered class 90 pile.

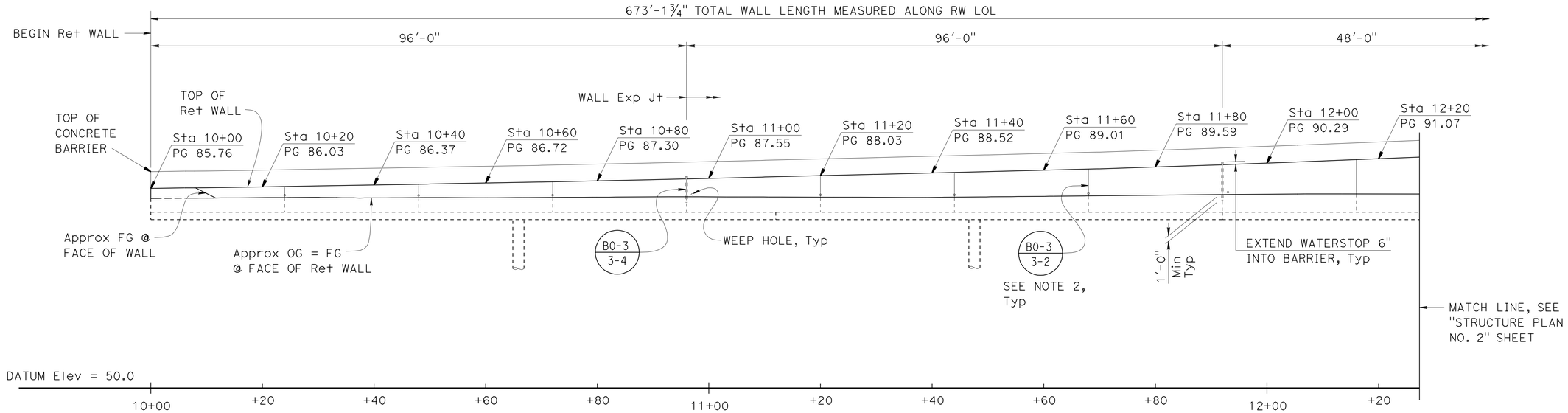

DEVELOPED MIRRORED ELEVATION (B3-1)

1" = 10'

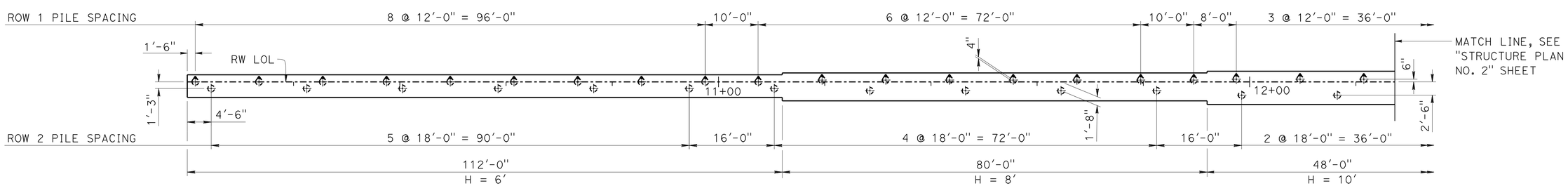

FOOTING PLAN (B3-1)

1" = 10'

DESIGN	BY Daniel Sessions	CHECKED Christa Siegenthaler	
DETAILS	BY Bob Huddleston	CHECKED Christa Siegenthaler	
QUANTITIES	BY R. Da Cruz / E. Watson	CHECKED Jeff Sims	

STATE OF CALIFORNIA
DEPARTMENT OF TRANSPORTATION

DIVISION OF ENGINEERING SERVICES
STRUCTURE DESIGN
DESIGN BRANCH 1

BRIDGE NO. X
POST MILE 3.14

RETAINING WALL NO. 173
STRUCTURE PLAN NO. 1

STRUCTURES DESIGN DETAIL SHEET (ENGLISH) (REV. 09-01-10)

ORIGINAL SCALE IN INCHES FOR REDUCED PLANS 0 1 2 3

UNIT: 3576
PROJECT NUMBER & PHASE: 07000018331
CONTRACT NO.: 07-215934

DISREGARD PRINTS BEARING EARLIER REVISION DATES

REVISION DATES 10-19-11 10-26-11

SHEET 3 OF 16

FILE => rw173-c-sp01.dgn

USERNAME => s109858 DATE PLOTTED => 28-MAR-2012 TIME PLOTTED => 12:46

DIST	COUNTY	ROUTE	POST MILES TOTAL PROJECT	SHEET No.	TOTAL SHEETS
07	LA	5	2.4/4.0	1034	1288

REGISTERED CIVIL ENGINEER 12-7-11 DATE

3-26-12
PLANS APPROVAL DATE

REGISTERED PROFESSIONAL ENGINEER Kevin Harper No. 42221 Exp. 3-31-12 CIVIL STATE OF CALIFORNIA

The State of California or its officers or agents shall not be responsible for the accuracy or completeness of electronic copies of this plan sheet.

For "NOTES", see "STRUCTURE PLAN NO. 1" sheet.

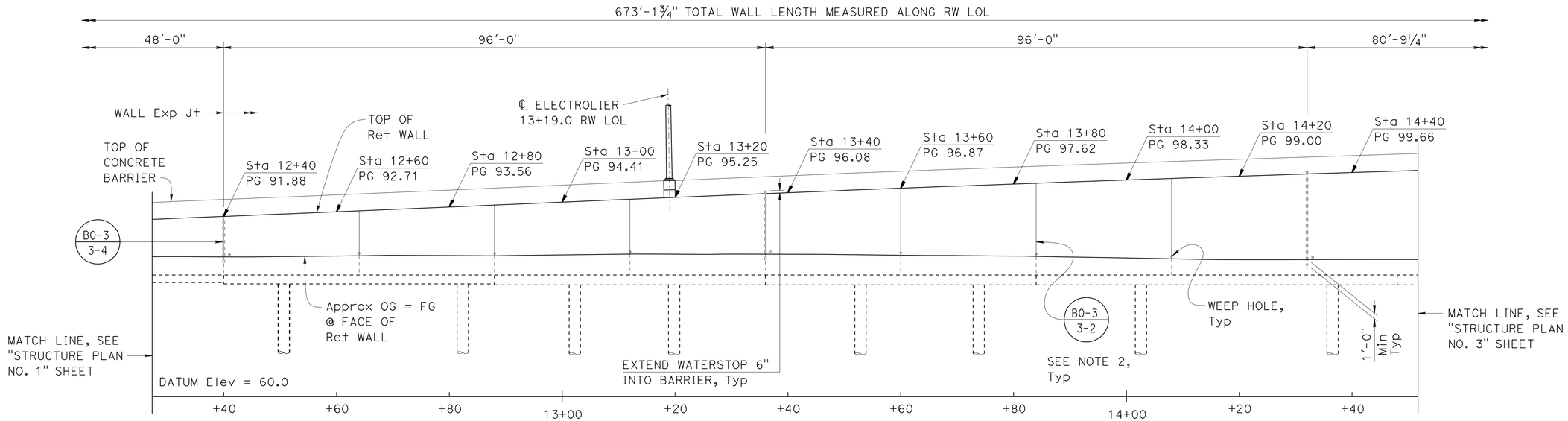

DEVELOPED MIRRORED ELEVATION B3-1

1" = 10'

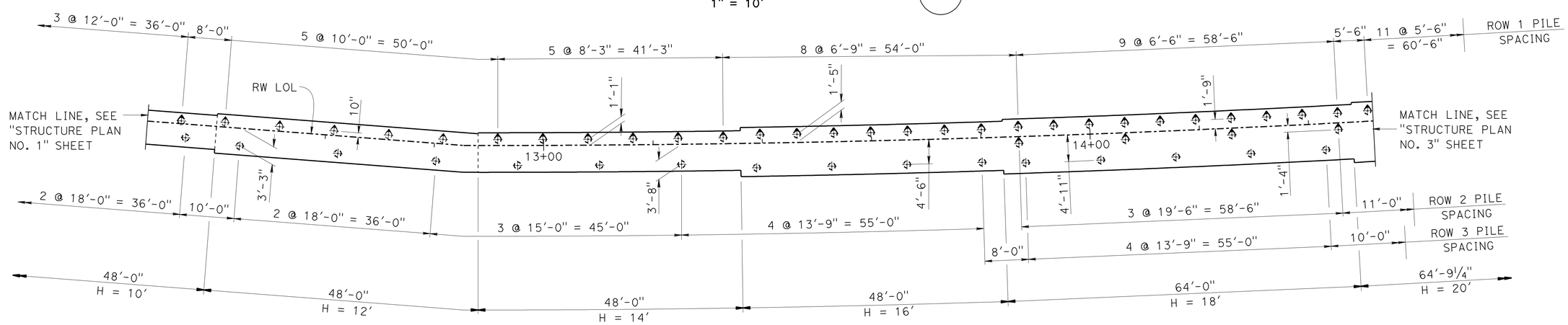

FOOTING PLAN B3-1

1" = 10'

	BY	CHECKED
DESIGN	Daniel Sessions	Christa Siegenthaler
DETAILS	Bob Huddleston	Christa Siegenthaler
QUANTITIES	R. Da Cruz / E. Watson	Jeff Sims

STATE OF CALIFORNIA
DEPARTMENT OF TRANSPORTATION

DIVISION OF ENGINEERING SERVICES
STRUCTURE DESIGN
DESIGN BRANCH 1

BRIDGE NO. X
POST MILE 3.14

RETAINING WALL NO. 173
STRUCTURE PLAN NO. 2

STRUCTURES DESIGN DETAIL SHEET (ENGLISH) (REV. 09-01-10)

ORIGINAL SCALE IN INCHES FOR REDUCED PLANS 0 1 2 3

UNIT: 3576
PROJECT NUMBER & PHASE: 07000018331
CONTRACT NO.: 07-215934

DISREGARD PRINTS BEARING EARLIER REVISION DATES → 10-20-11 10-31-11

SHEET 4 OF 16

FILE => rw173-c-sp02.dgn

USERNAME => s109858 DATE PLOTTED => 28-MAR-2012 TIME PLOTTED => 12:46

DIST	COUNTY	ROUTE	POST MILES TOTAL PROJECT	SHEET No.	TOTAL SHEETS
07	LA	5	2.4/4.0	1035	1288

REGISTERED CIVIL ENGINEER 12-7-11 DATE

3-26-12
PLANS APPROVAL DATE

REGISTERED PROFESSIONAL ENGINEER Kevin Harper No. 42221 Exp. 3-31-12 CIVIL STATE OF CALIFORNIA

The State of California or its officers or agents shall not be responsible for the accuracy or completeness of electronic copies of this plan sheet.

For "NOTES", see "STRUCTURE PLAN NO. 1" sheet.

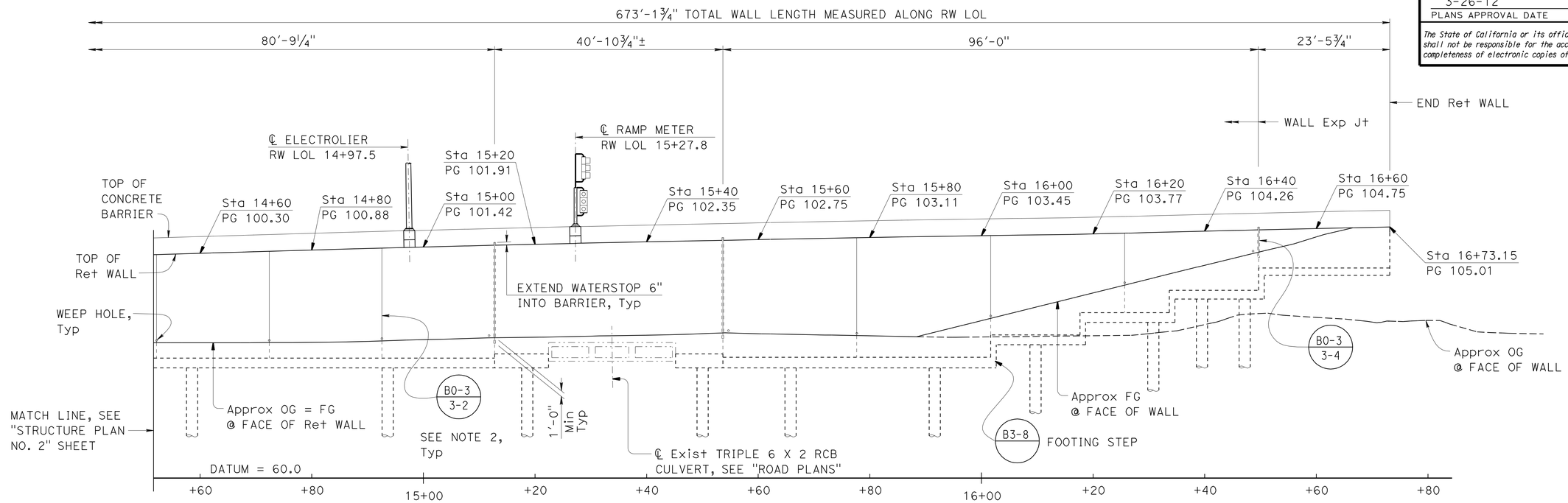

DEVELOPED MIRRORED ELEVATION (B3-1)

1" = 10'

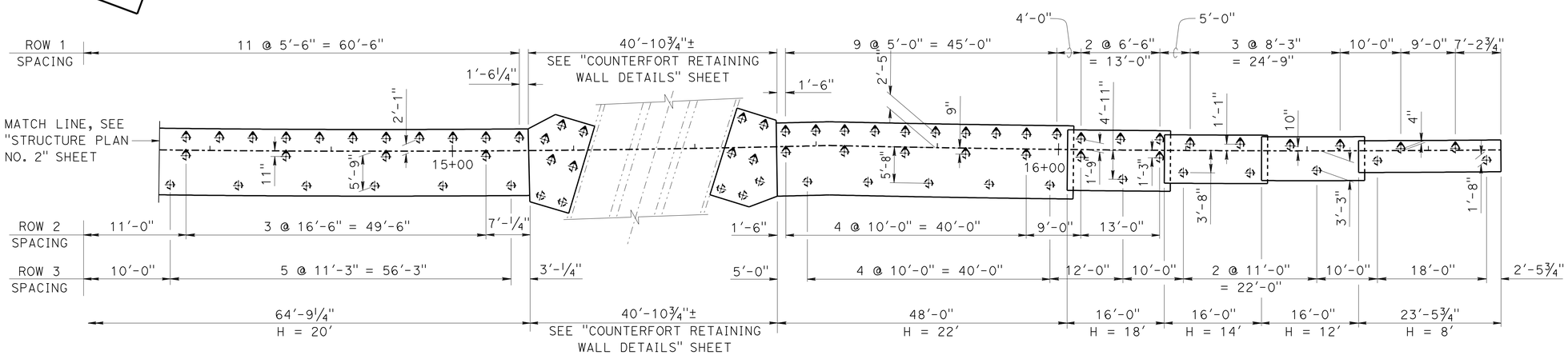

FOOTING PLAN (B3-1)

1" = 10'

DESIGN	BY Daniel Sessions	CHECKED Christa Siegenthaler	
DETAILS	BY Bob Huddleston	CHECKED Christa Siegenthaler	
QUANTITIES	BY R. Da Cruz / E. Watson	CHECKED Jeff Sims	

STATE OF CALIFORNIA
DEPARTMENT OF TRANSPORTATION

DIVISION OF ENGINEERING SERVICES
STRUCTURE DESIGN
DESIGN BRANCH 1

BRIDGE NO. X
POST MILE 3.14

RETAINING WALL NO. 173
STRUCTURE PLAN NO. 3

STRUCTURES DESIGN DETAIL SHEET (ENGLISH) (REV. 09-01-10)

ORIGINAL SCALE IN INCHES FOR REDUCED PLANS 0 1 2 3

UNIT: 3576
PROJECT NUMBER & PHASE: 07000018331
CONTRACT NO.: 07-215934

DISREGARD PRINTS BEARING EARLIER REVISION DATES

REVISION DATES 10-31-11 11-01-11 11-22-11

SHEET 5 OF 16

FILE => rw173-c-sp03.dgn

USERNAME => s103858 DATE PLOTTED => 28-MAR-2012 TIME PLOTTED => 12:47

DIST	COUNTY	ROUTE	POST MILES TOTAL PROJECT	SHEET No.	TOTAL SHEETS
07	LA	5	2.4/4.0	1036	1288

REGISTERED CIVIL ENGINEER 12-7-11 DATE

3-26-12
PLANS APPROVAL DATE

REGISTERED PROFESSIONAL ENGINEER Kevin Harper No. 42221 Exp. 3-31-12 CIVIL STATE OF CALIFORNIA

The State of California or its officers or agents shall not be responsible for the accuracy or completeness of electronic copies of this plan sheet.

NOTE:
Underground utilities as shown are approximate

LEGEND:
+ - Denotes spot elevation
⊕ - Denotes piles (not all piles shown)
[xx.x] - Indicates bottom of Ftg elevation

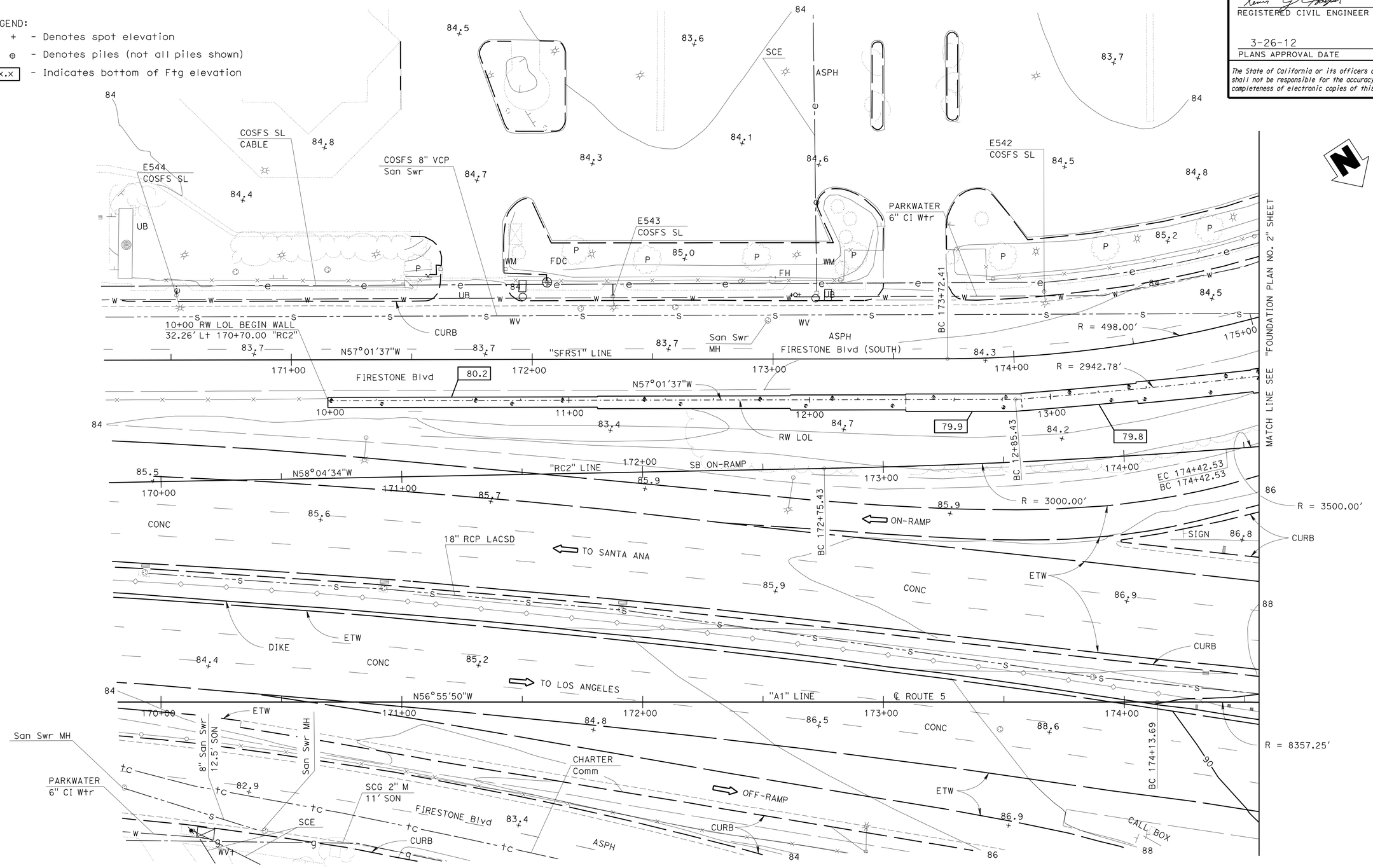

SCALE					
1" = 20'	DESIGN	BY Daniel Sessions	CHECKED Christa Siegenthaler	STATE OF CALIFORNIA DEPARTMENT OF TRANSPORTATION	DIVISION OF ENGINEERING SERVICES STRUCTURE DESIGN DESIGN BRANCH 1
	DETAILS	BY Rizia da Cruz Ferreira	CHECKED Christa Siegenthaler		
	QUANTITIES	BY R. Da Cruz / E. Watson	CHECKED Jeff Sims		

BRIDGE NO. X
POST MILE 3.14

RETAINING WALL NO. 173
FOUNDATION PLAN NO. 1

STRUCTURES DESIGN DETAIL SHEET (ENGLISH) (REV. 09-01-10)

ORIGINAL SCALE IN INCHES FOR REDUCED PLANS 0 1 2 3

UNIT: 3576
PROJECT NUMBER & PHASE: 07000018331
CONTRACT NO.: 07-215934

DISREGARD PRINTS BEARING EARLIER REVISION DATES

REVISION DATES: 10/06/11 10/24/11 11-01-11

SHEET 6 OF 16

FILE => rw173-e-fp01.dgn

USERNAME => s109858 DATE PLOTTED => 28-MAR-2012 TIME PLOTTED => 12:47

DIST	COUNTY	ROUTE	POST MILES TOTAL PROJECT	SHEET No.	TOTAL SHEETS
07	LA	5	2.4/4.0	1037	1288

REGISTERED CIVIL ENGINEER 12-7-11 DATE

3-26-12
PLANS APPROVAL DATE

REGISTERED PROFESSIONAL ENGINEER Kevin Harper No. 42221 Exp. 3-31-12 CIVIL STATE OF CALIFORNIA

The State of California or its officers or agents shall not be responsible for the accuracy or completeness of electronic copies of this plan sheet.

For "NOTES", see "FOUNDATION PLAN NO. 1" sheet.

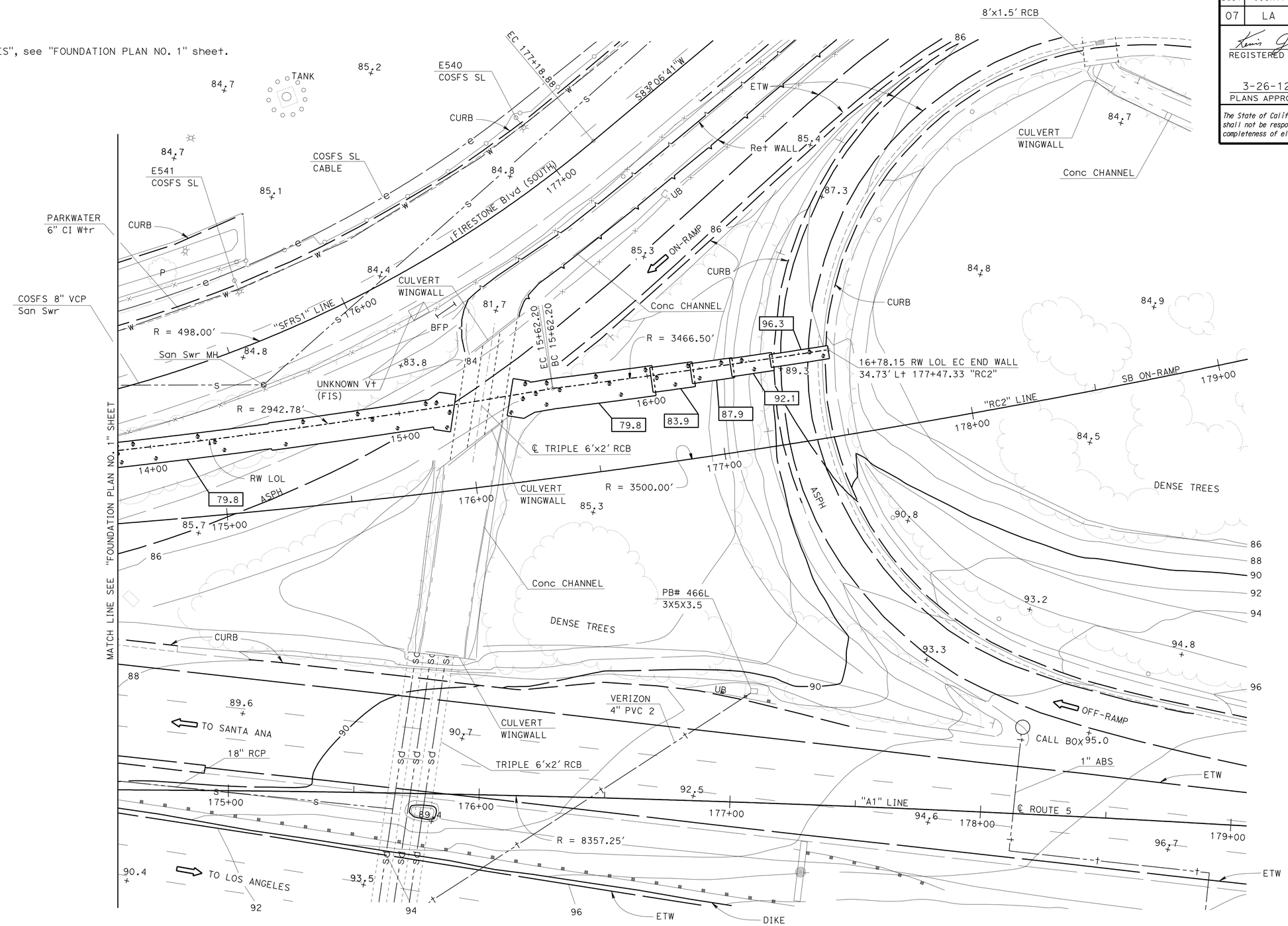

SCALE 1" = 20'						
	DESIGN	BY Daniel Sessions	CHECKED Christa Siegenthaler	STATE OF CALIFORNIA DEPARTMENT OF TRANSPORTATION	DIVISION OF ENGINEERING SERVICES STRUCTURE DESIGN DESIGN BRANCH 1	BRIDGE NO. X
	DETAILS	BY Rizia da Cruz Ferreira	CHECKED Christa Siegenthaler			POST MILE 3.14
	QUANTITIES	BY R. Da Cruz / E. Watson	CHECKED Jeff Sims			

RETAINING WALL NO. 173
FOUNDATION PLAN NO. 2

STRUCTURES DESIGN DETAIL SHEET (ENGLISH) (REV. 09-01-10)

ORIGINAL SCALE IN INCHES FOR REDUCED PLANS 0 1 2 3

UNIT: 3576
PROJECT NUMBER & PHASE: 0700001833-1
CONTRACT NO.: 07-215934

DISREGARD PRINTS BEARING EARLIER REVISION DATES → 10/07/11 11/01/11

SHEET 7 OF 16

FILE => rw173-e-fp02.dgn

USERNAME => s109858 DATE PLOTTED => 28-MAR-2012 TIME PLOTTED => 12:47

DIST	COUNTY	ROUTE	POST MILES TOTAL PROJECT	SHEET No.	TOTAL SHEETS
07	LA	5	2.4/4.0	1038	1288

REGISTERED CIVIL ENGINEER 12-7-11 DATE

3-26-12
PLANS APPROVAL DATE

REGISTERED PROFESSIONAL ENGINEER Kevin Harper No. 42221 Exp. 3-31-12 CIVIL STATE OF CALIFORNIA

The State of California or its officers or agents shall not be responsible for the accuracy or completeness of electronic copies of this plan sheet.

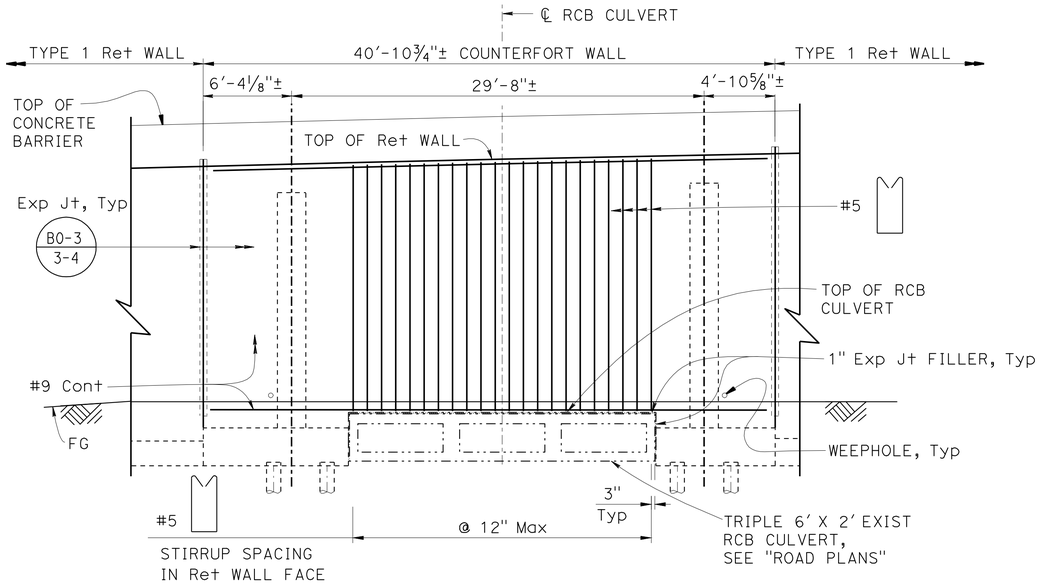

DEVELOPED MIRRORED ELEVATION

3/16" = 1'-0"

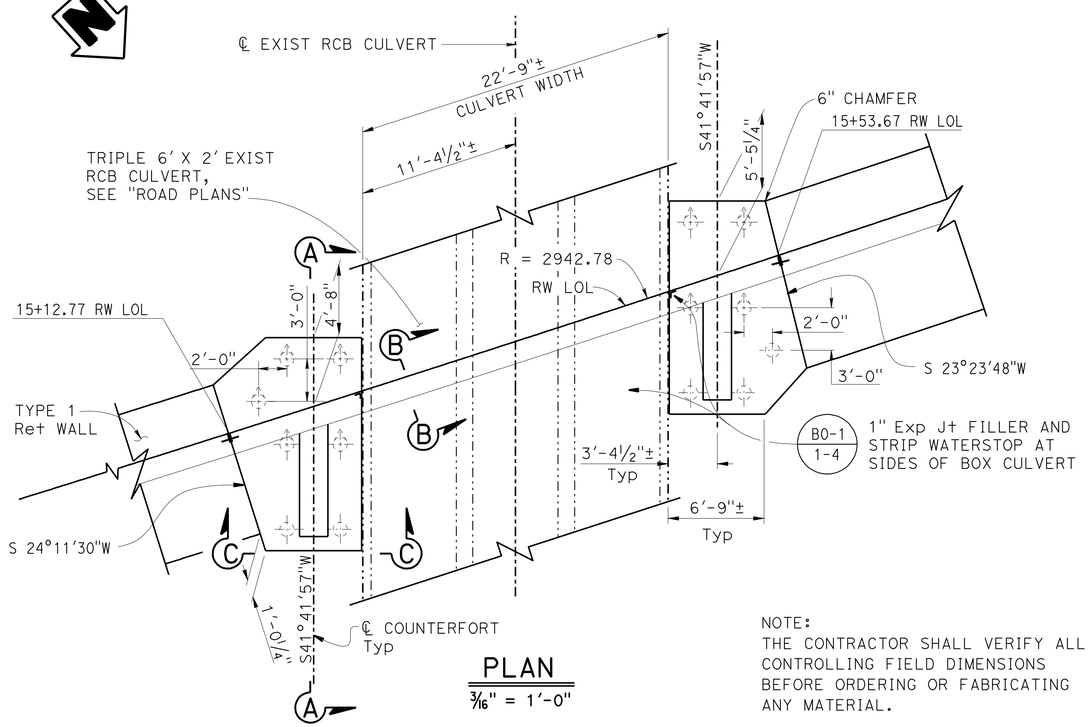

PLAN

3/16" = 1'-0"

NOTE:
THE CONTRACTOR SHALL VERIFY ALL CONTROLLING FIELD DIMENSIONS BEFORE ORDERING OR FABRICATING ANY MATERIAL.

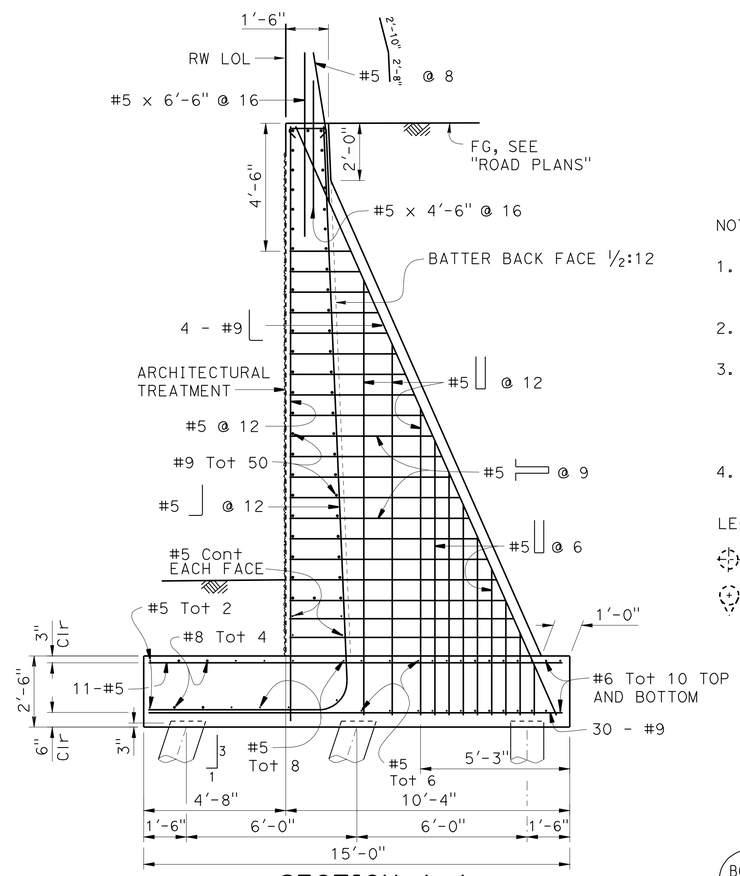

SECTION A-A

3/8" = 1'-0"

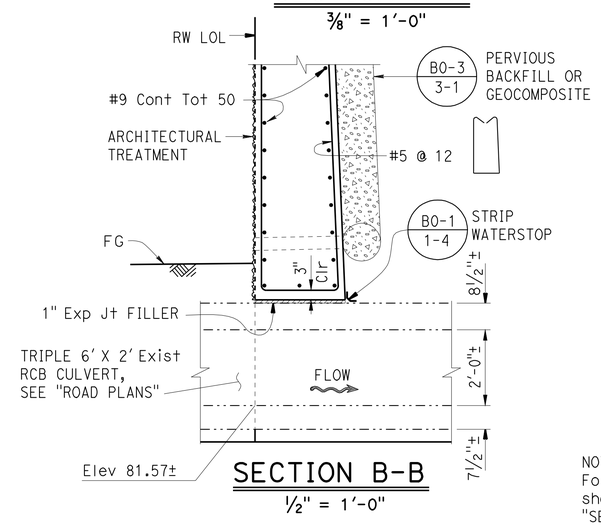

SECTION B-B

½" = 1'-0"

NOTES:

1. Expansion joint waterstop shall be extended 6" into concrete barrier.
2. For barrier details not shown, see Standard Plan B11-56.
3. For retaining wall and barrier architectural treatment, see "RETAINING WALL ARCHITECTURAL DETAILS" and "CONCRETE BARRIER TYPE 736A (MOD 1) DETAILS" sheets.
4. All longitudinal dimensions measured along RW LOL.

LEGEND:

- Indicates vertical class 90 pile
- Indicates 1:3 battered class 90 pile

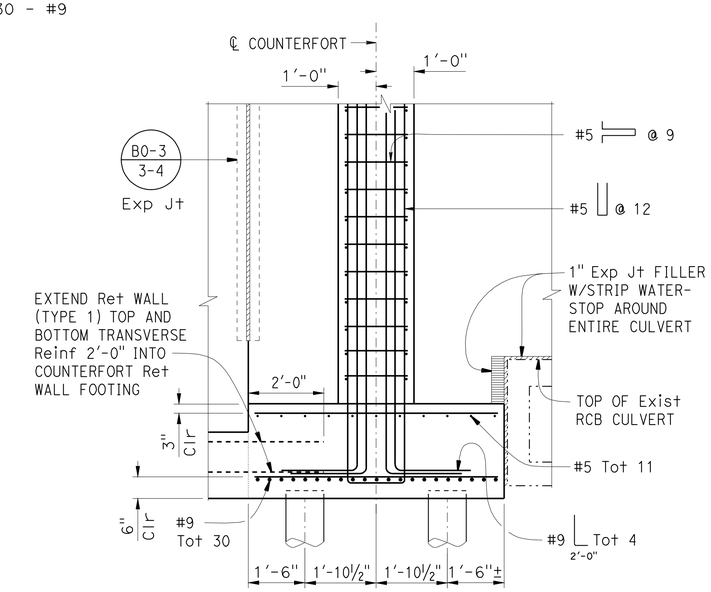

SECTION C-C

½" = 1'-0"

NOTE:
For Reinf and dimensions not shown on "SECTION B-B" and "SECTION C-C", see "SECTION A-A".

	BY	CHECKED
DESIGN	Daniel Sessions	Christa Siegenthaler
DETAILS	B.Huddleston / J.Zhou	E. Watson/C.Siegenthaler
QUANTITIES	R. Da Cruz / E. Watson	Jeff Sims

STATE OF CALIFORNIA
DEPARTMENT OF TRANSPORTATION

DIVISION OF ENGINEERING SERVICES
STRUCTURE DESIGN
DESIGN BRANCH 1

BRIDGE NO. X
POST MILE 3.14

RETAINING WALL NO. 173
COUNTERFORT RETAINING WALL DETAILS

STRUCTURES DESIGN DETAIL SHEET (ENGLISH) (REV. 09-01-10)

ORIGINAL SCALE IN INCHES FOR REDUCED PLANS 0 1 2 3

UNIT: 3576
PROJECT NUMBER & PHASE: 07000018331 CONTRACT NO.: 07-215934

DISREGARD PRINTS BEARING EARLIER REVISION DATES

REVISION DATES 10-24-11 10-25-11

SHEET 8 OF 16

FILE => rw173-f-ctfdt01.dgn

USERNAME => s109858 DATE PLOTTED => 28-MAR-2012 TIME PLOTTED => 12:47

DIST	COUNTY	ROUTE	POST MILES TOTAL PROJECT	SHEET No.	TOTAL SHEETS
07	LA	5	2.4/4.0	1039	1288

REGISTERED CIVIL ENGINEER 12-7-11 DATE

3-26-12
PLANS APPROVAL DATE

REGISTERED PROFESSIONAL ENGINEER Kevin Harper No. 42221 Exp. 3-31-12 CIVIL STATE OF CALIFORNIA

The State of California or its officers or agents shall not be responsible for the accuracy or completeness of electronic copies of this plan sheet.

NOTES:

1. For barrier details not shown, see Standard Plan B11-56.
2. For locations of electroliers and ramp meter, see "STRUCTURE PLAN" sheets.
3. For electrolier, ramp meter and electrical details, see "ROAD PLANS".
4. The maximum number of conduits in the barrier is limited to (2) 2" conduits along with (1) 3" conduit.

LEGEND:

* - Indicates Reinf is additional to typical barrier and retaining wall Reinf.

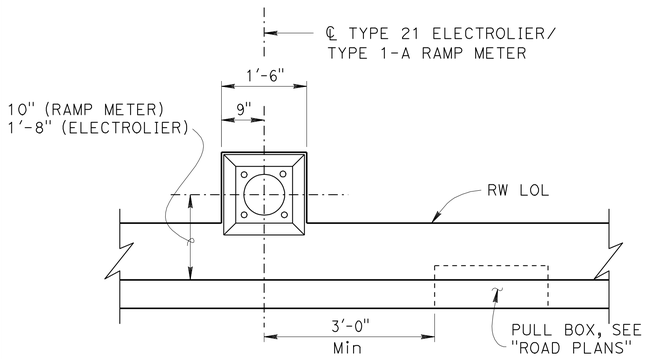

PLAN
¾" = 1'-0"

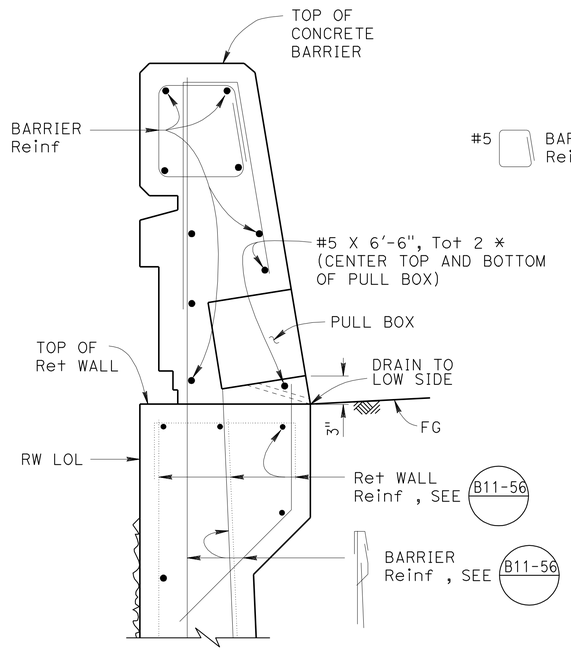

SECTION B-B
1½" = 1'-0"

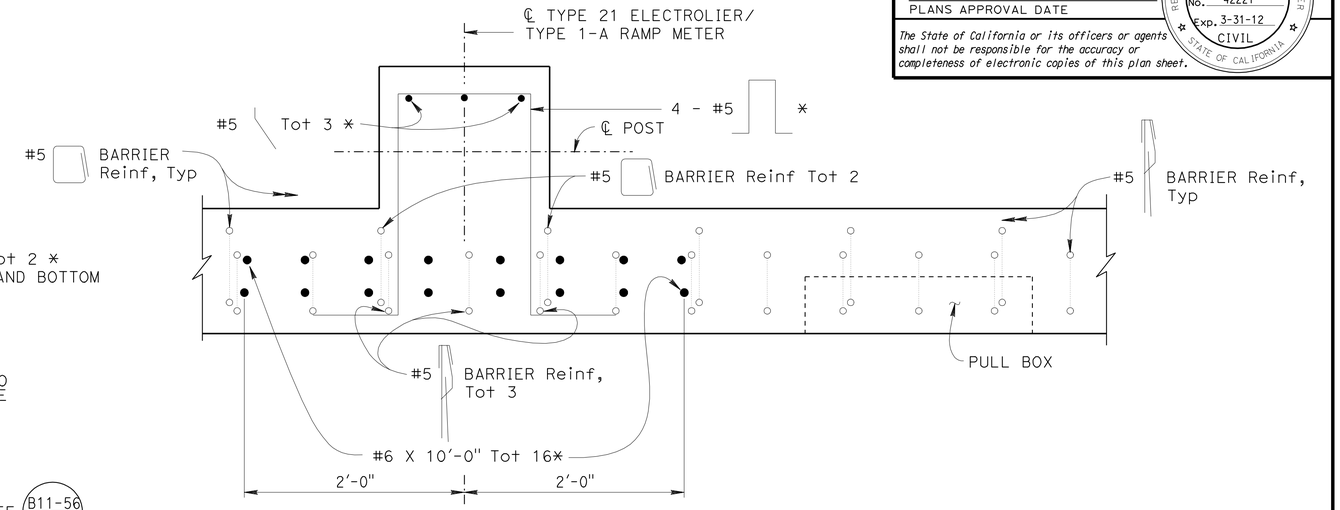

SECTION C-C
1½" = 1'-0"

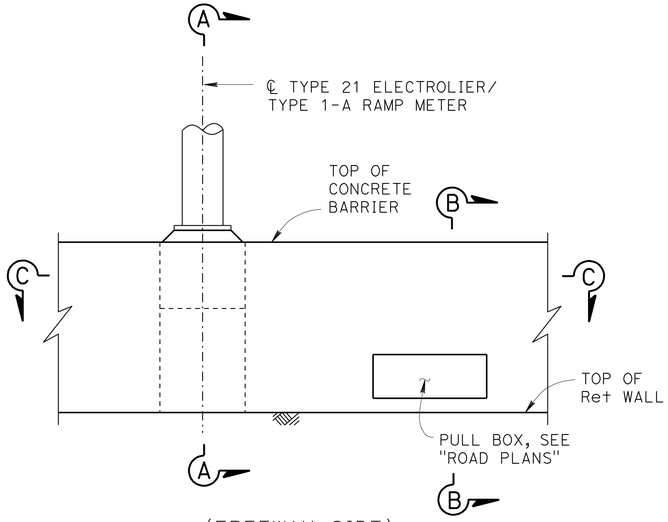

(FREEWAY SIDE)

ELEVATION
¾" = 1'-0"

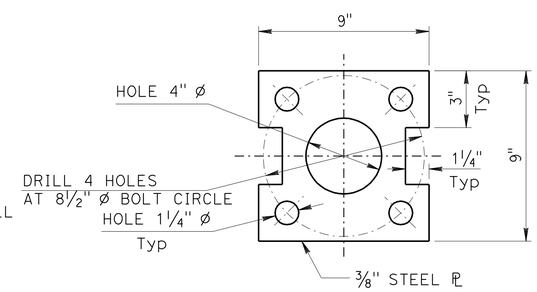

DETAIL X
3" = 1'-0"

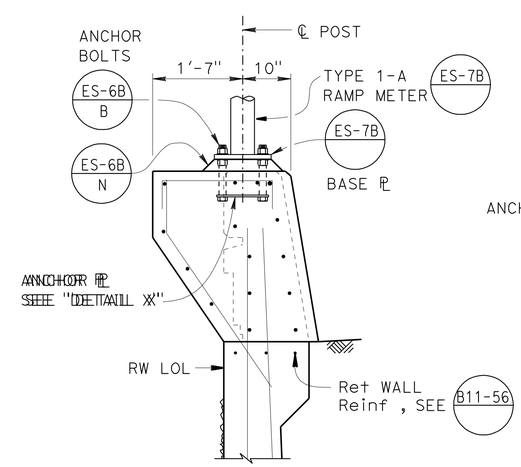

FOR DETAILS NOT SHOWN,
SEE "SECTION A-A (ELECTROLIER)"

RAMP METER

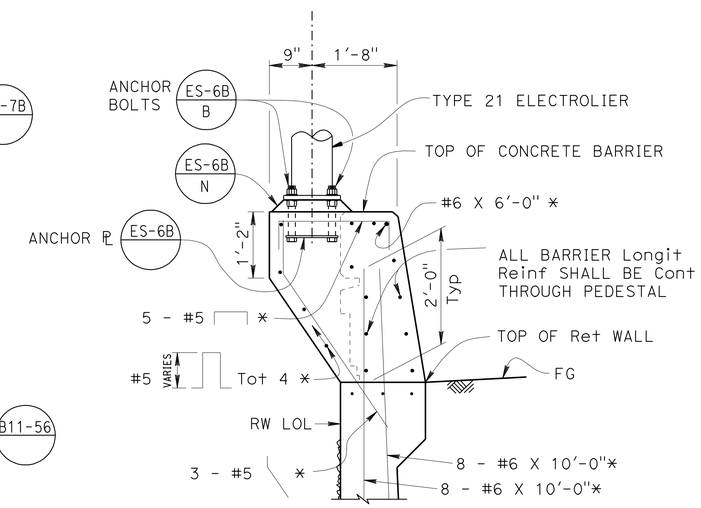

ELECTROLIER

SECTION A-A
¾" = 1'-0"

	BY	CHECKED
DESIGN	Daniel Sessions	Christa Siegenthaler
DETAILS	Bob Huddleston	Christa Siegenthaler
QUANTITIES	R. Da Cruz / E. Watson	Jeff Sims

STATE OF CALIFORNIA
DEPARTMENT OF TRANSPORTATION

DIVISION OF ENGINEERING SERVICES
STRUCTURE DESIGN
DESIGN BRANCH 1

BRIDGE NO. X
POST MILE 3.14

RETAINING WALL NO. 173
ELECTROLIER/RAMP METER PEDESTAL DETAILS

STRUCTURES DESIGN DETAIL SHEET (ENGLISH) (REV. 09-01-10)

ORIGINAL SCALE IN INCHES FOR REDUCED PLANS 0 1 2 3

UNIT: 3576
PROJECT NUMBER & PHASE: 07000018331
CONTRACT NO.: 07-215934

DISREGARD PRINTS BEARING EARLIER REVISION DATES

REVISION DATES: 11/22/11 11/23/11

SHEET 9 OF 16

FILE => rw173-g-epd.dgn

USERNAME => s103858 DATE PLOTTED => 28-MAR-2012 TIME PLOTTED => 12:47

DIST	COUNTY	ROUTE	POST MILES TOTAL PROJECT	SHEET No.	TOTAL SHEETS
07	LA	5	2.4/4.0	1040	1288

REGISTERED CIVIL ENGINEER 12-7-11 DATE

3-26-12
PLANS APPROVAL DATE

REGISTERED PROFESSIONAL ENGINEER Kevin Harper No. 42221 Exp. 3-31-12 CIVIL STATE OF CALIFORNIA

The State of California or its officers or agents shall not be responsible for the accuracy or completeness of electronic copies of this plan sheet.

NOTES:

1. For "SECTION A-A", "SECTION B-B" and other retaining wall architectural details, see "RETAINING WALL ARCHITECTURAL DETAILS" sheet.
2. For barrier architectural details, see "CONCRETE BARRIER TYPE 736 (MOD 1) DETAILS" sheet.
3. Retaining wall architectural pay limits shall include all split slate and fractured rib texture shown in "DEVELOPED MIRRORED ELEVATION".
4. All longitudinal dimensions are measured along Ret Wall LOL.

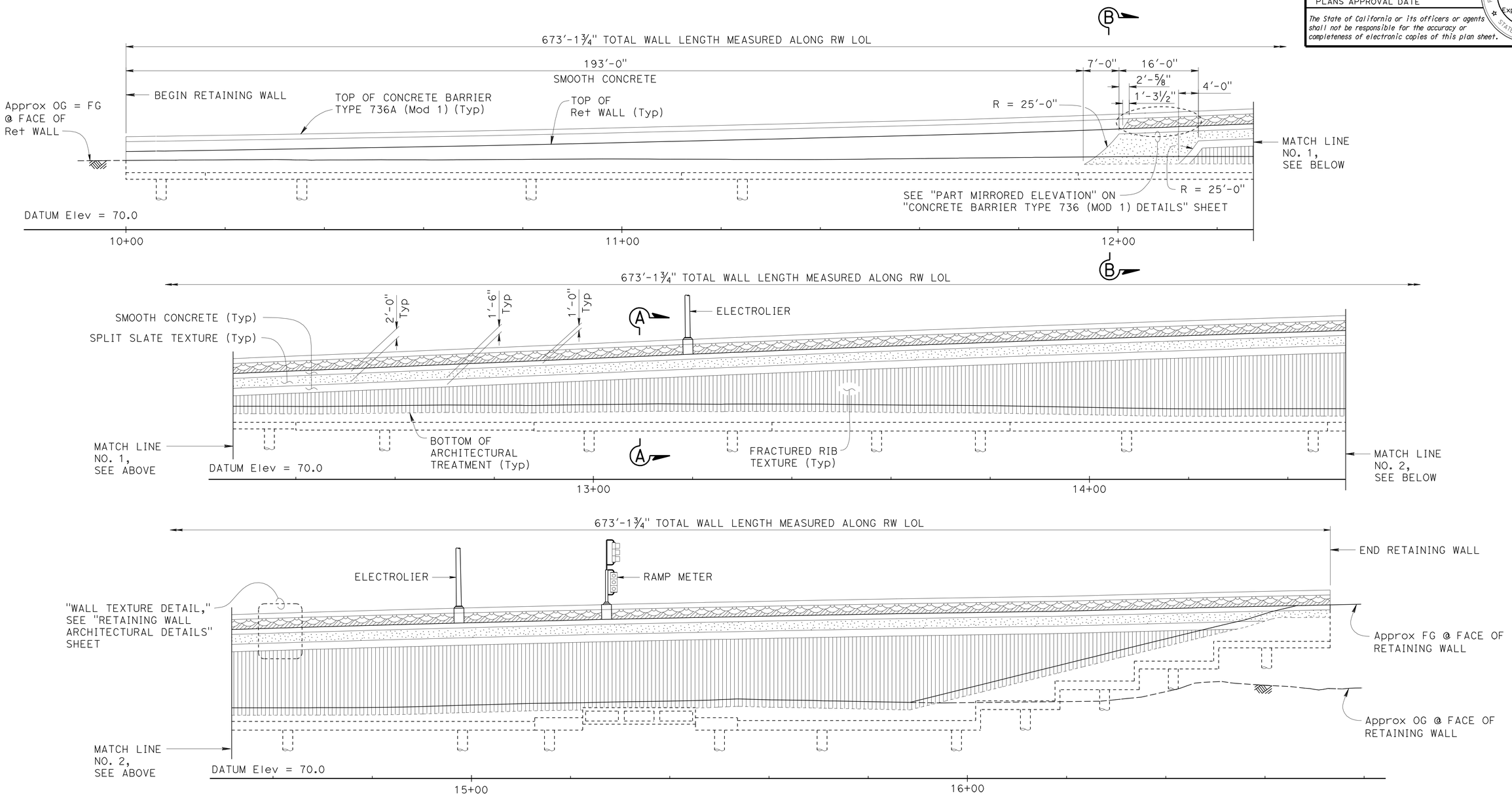

DEVELOPED MIRRORED ELEVATION

1" = 10'

	BY	CHECKED
DESIGN	Isaac Tasabia	Javier Chavez
DETAILS	Bob Huddleston	D. Sessions/C.Siegenthaler
QUANTITIES	R. Da Cruz / E. Watson	Jeff Sims

STATE OF CALIFORNIA
DEPARTMENT OF TRANSPORTATION

DIVISION OF ENGINEERING SERVICES
STRUCTURE DESIGN
DESIGN BRANCH 1

BRIDGE NO. X
POST MILE 3.14

RETAINING WALL NO. 173

RETAINING WALL ARCHITECTURAL TREATMENT

STRUCTURES DESIGN DETAIL SHEET (ENGLISH) (REV. 09-01-10)

ORIGINAL SCALE IN INCHES FOR REDUCED PLANS 0 1 2 3

UNIT: 3576
PROJECT NUMBER & PHASE: 07000018331
CONTRACT NO.: 07-215934

DISREGARD PRINTS BEARING EARLIER REVISION DATES

REVISION DATES 11/03/11 12/01/11

SHEET 10 OF 16

FILE => rw173-h-arch.dgn

USERNAME => s109858 DATE PLOTTED => 28-MAR-2012 TIME PLOTTED => 12:48

DIST	COUNTY	ROUTE	POST MILES TOTAL PROJECT	SHEET No.	TOTAL SHEETS
07	LA	5	2.4/4.0	1041	1288

REGISTERED CIVIL ENGINEER 12-7-11 DATE

3-26-12
PLANS APPROVAL DATE

REGISTERED PROFESSIONAL ENGINEER Kevin Harper No. 42221 Exp. 3-31-12 CIVIL STATE OF CALIFORNIA

The State of California or its officers or agents shall not be responsible for the accuracy or completeness of electronic copies of this plan sheet.

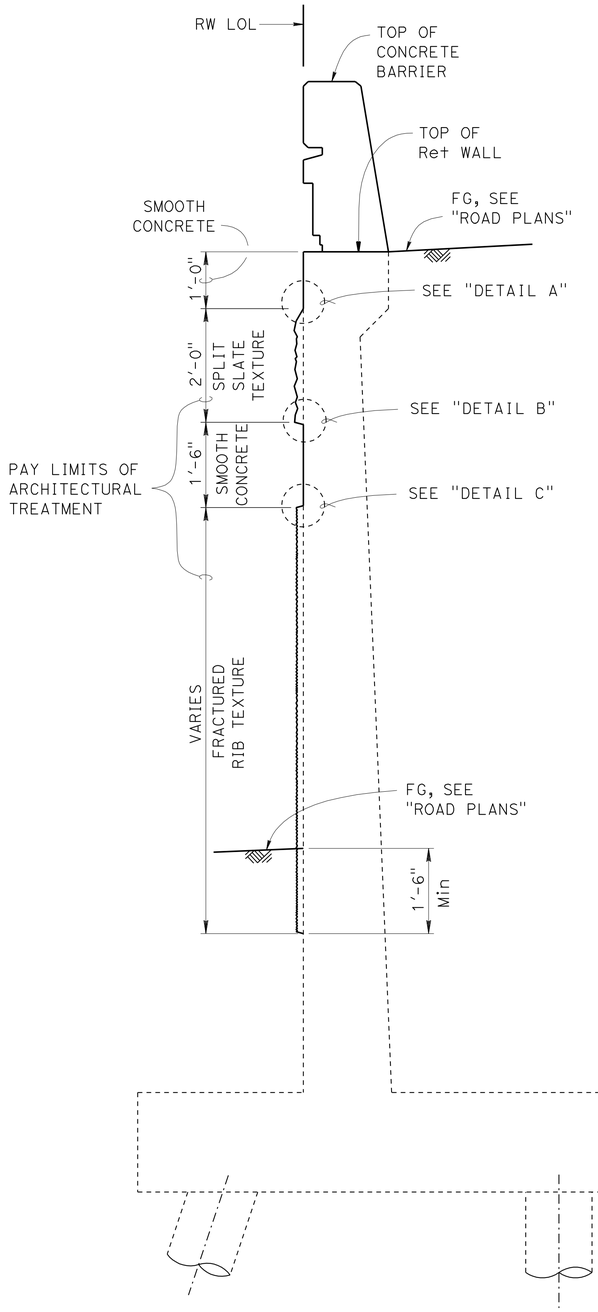

SECTION A-A

¾" = 1'-0"

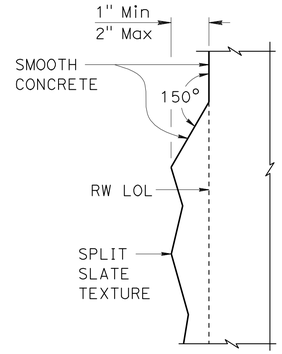

DETAIL A

3" = 1'-0"

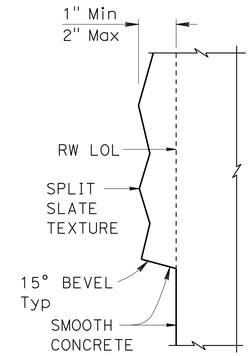

DETAIL B

3" = 1'-0"

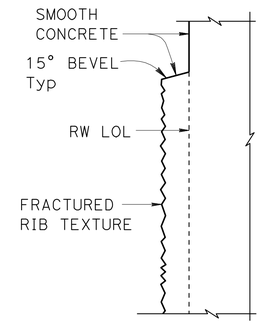

DETAIL C

3" = 1'-0"

NOTES:

1. For locations of "SECTION A-A", "SECTION B-B" and "WALL TEXTURE DETAIL", see "RETAINING WALL ARCHITECTURAL TREATMENT" sheet.
2. For barrier architectural treatment, see "CONCRETE BARRIER TYPE 736 (MOD 1) DETAILS" sheet.

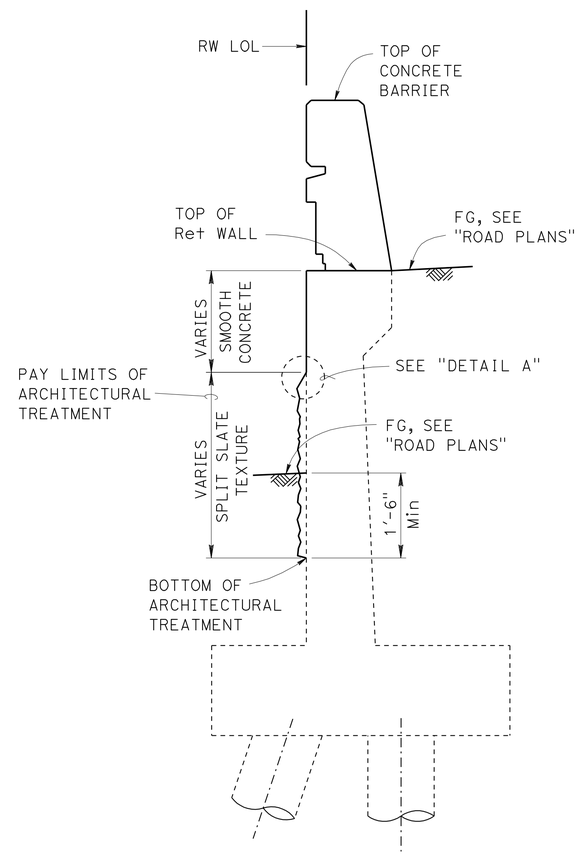

SECTION B-B

¾" = 1'-0"

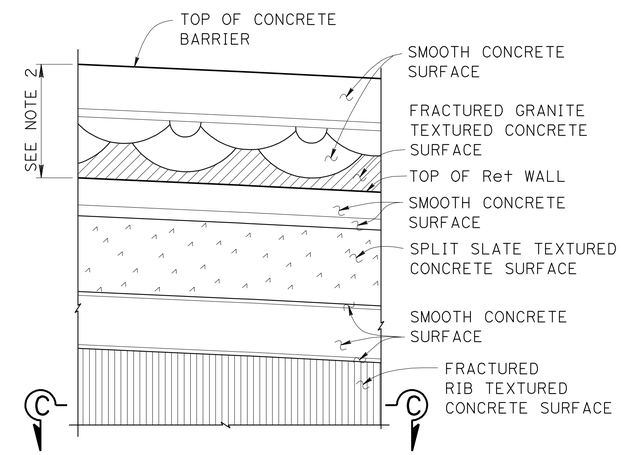

PARTIAL MIRRORED ELEVATION

WALL TEXTURE DETAIL

½" = 1'-0"

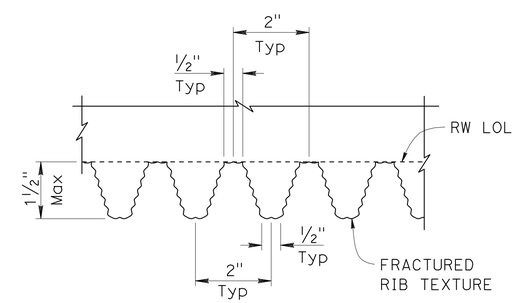

SECTION C-C

6" = 1'-0"

DESIGN	BY Issac Tasabia	CHECKED Javier Chavez	
DETAILS	BY Jie Tang	CHECKED D. Sessions/C.Siegenthaler	
QUANTITIES	BY R. Da Cruz / E. Watson	CHECKED Jeff Sims	

STATE OF CALIFORNIA
DEPARTMENT OF TRANSPORTATION

DIVISION OF ENGINEERING SERVICES
STRUCTURE DESIGN
DESIGN BRANCH 1

BRIDGE NO. X
POST MILE 3.14

RETAINING WALL NO. 173

RETAINING WALL ARCHITECTURAL DETAILS

STRUCTURES DESIGN DETAIL SHEET (ENGLISH) (REV. 09-01-10)

ORIGINAL SCALE IN INCHES FOR REDUCED PLANS 0 1 2 3

UNIT: 3576
PROJECT NUMBER & PHASE: 07000018331
CONTRACT NO.: 07-215934

DISREGARD PRINTS BEARING EARLIER REVISION DATES

REVISION DATES 10/30/11 10/31/11

SHEET 11 OF 16

FILE => rw173-h-rwadet.dgn

USERNAME => s108858 DATE PLOTTED => 28-MAR-2012 TIME PLOTTED => 12:48

DIST	COUNTY	ROUTE	POST MILES TOTAL PROJECT	SHEET No.	TOTAL SHEETS
07	LA	5	2.4/4.0	1042	1288

REGISTERED CIVIL ENGINEER 12-7-11 DATE

3-26-12
PLANS APPROVAL DATE

REGISTERED PROFESSIONAL ENGINEER Kevin Harper No. 42221 Exp. 3-31-12 CIVIL STATE OF CALIFORNIA

The State of California or its officers or agents shall not be responsible for the accuracy or completeness of electronic copies of this plan sheet.

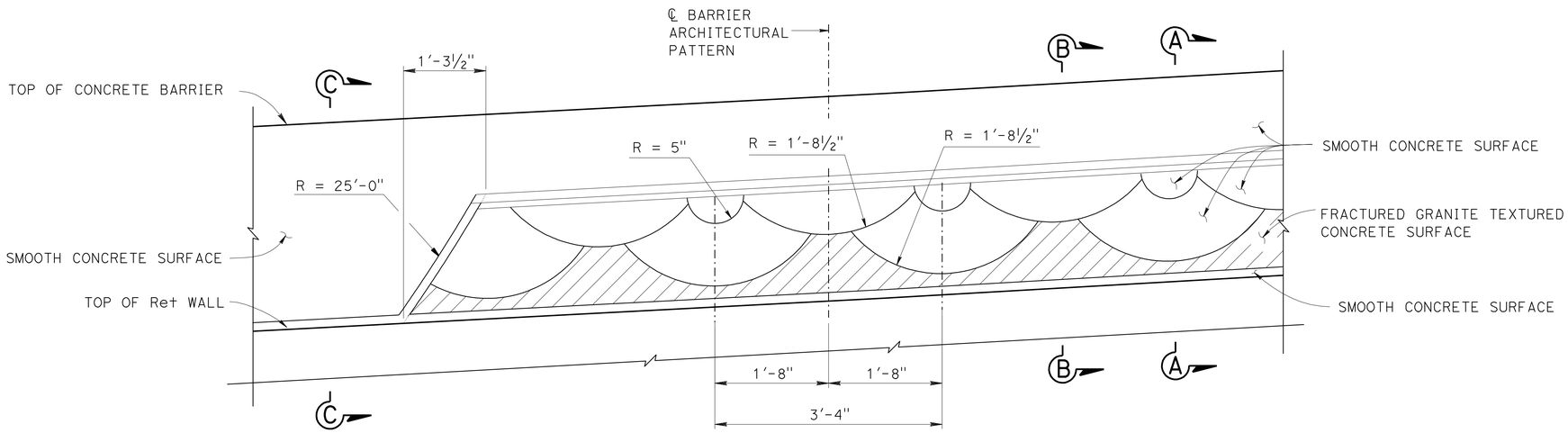

PART MIRRORED ELEVATION CONCRETE BARRIER TYPE 736A (MOD 1)

1" = 1'-0"

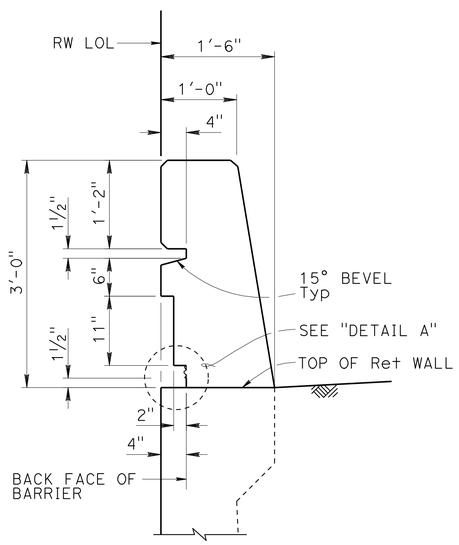

SECTION A-A

1" = 1'-0"

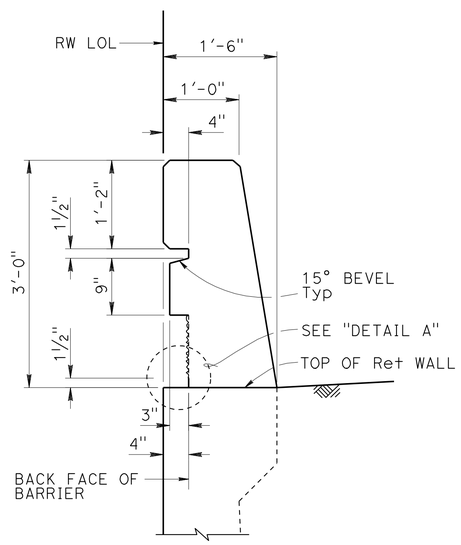

SECTION B-B

1" = 1'-0"

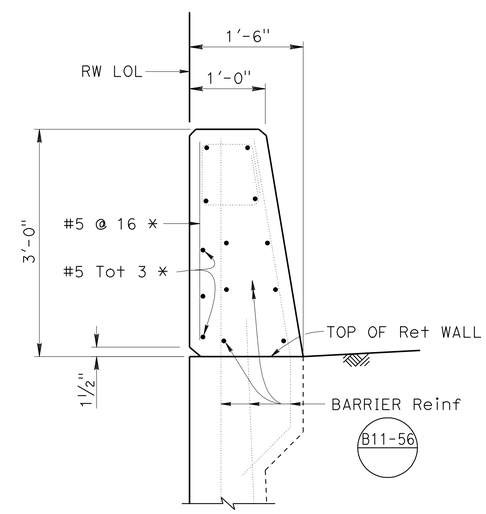

SECTION C-C

1" = 1'-0"

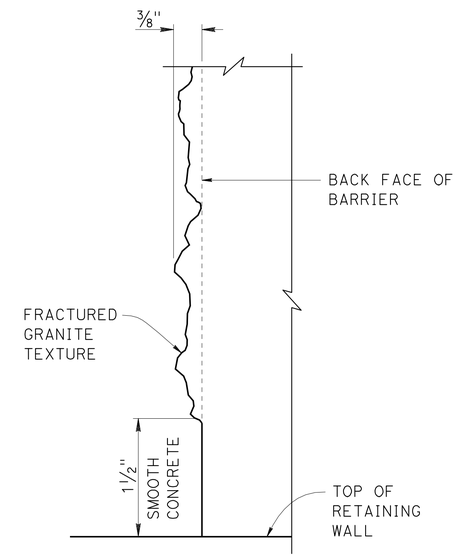

NOTE: Detail at "SECTION B-B" shown, "SECTION A-A" similar.

DETAIL A

NO SCALE

NOTES:

For barrier details not shown, see STANDARD PLAN B11-56.

* - Indicates Reinf is additional to typical barrier Reinf.

	BY	CHECKED
DESIGN	Isaac Tasabia	Javier Chavez
DETAILS	Jie Tang	D. Sessions/C.Siegenthaler
QUANTITIES	R. Da Cruz / E. Watson	Jeff Sims

STATE OF CALIFORNIA DEPARTMENT OF TRANSPORTATION

DIVISION OF ENGINEERING SERVICES STRUCTURE DESIGN DESIGN BRANCH 1

BRIDGE NO. X

POST MILE 3.14

RETAINING WALL NO. 173

CONCRETE BARRIER TYPE 736A (Mod 1) DETAILS

STRUCTURES DESIGN DETAIL SHEET (ENGLISH) (REV. 09-01-10)

ORIGINAL SCALE IN INCHES FOR REDUCED PLANS 0 1 2 3

UNIT: 3576
PROJECT NUMBER & PHASE: 07000018331 CONTRACT NO.: 07-215934

DISREGARD PRINTS BEARING EARLIER REVISION DATES

REVISION DATES 10-19-11 11-02-11 12-01-11

SHEET 12 OF 16

FILE => rw173-1-barr01.dgn

USERNAME => s109858 DATE PLOTTED => 28-MAR-2012 TIME PLOTTED => 12:48

DIST	COUNTY	ROUTE	POST MILES TOTAL PROJECT	SHEET No.	TOTAL SHEETS
07	LA	5	2.4/4.0	1043	1288

GEOTECHNICAL PROFESSIONAL — DATE 06/2011

3-26-12
PLANS APPROVAL DATE

REGISTERED PROFESSIONAL ENGINEER — MICHAEL G. SMITH — No. 2229 — Exp. 3-31-2012 — GEOTECHNICAL — STATE OF CALIFORNIA

The State of California or its officers or agents shall not be responsible for the accuracy or completeness of electronic copies of this plan sheet.

BENCH MARK

PRHV 102 Elev 86.67′
FOUND PK NAIL & TIN SET BY OTHERS ON ISLAND @ THE BEGINNING OF SB 1-5 ON-RAMP AND ROSECRANS AVE PER SR 09-037-000010
NAVD 88

PRHV 103 Elev 84.50′
FOUND CHISELED "X" ON BACK WALK @ INLET AT SE CORNER OF ROSECRANS AVE AND FIRESTONE BLVD PER SR 09-037-000010
NAVD 88

PRHV 110 Elev 78.31′
FOUND L & "LACO DPW" TAG @ NE CORNER OF FIRESTONE BLVD AND SHOEMAKER AVE, N/O 1-5
NAVD 88

PRHV 115 Elev 79.95′
FOUND PK NAIL & TIN ON TC @ SE CORNER OF SHOEMAKER AVE AND FIRESTONE BLVD, S/O 1-5
NAVD 88

Notes

1. This LOTB sheet was prepared in accordance with the Caltrans Soil & Rock Logging, Classification, and Presentation Manual (2010) except three digit sequence number in boring identification starting with the segment number per exception request approved on April 08, 2009.

2. For protection of underground utility lines, hand-auger was used to remove top 5 to 10 feet of subsurface material for exploratory borings and cone penetration testings.

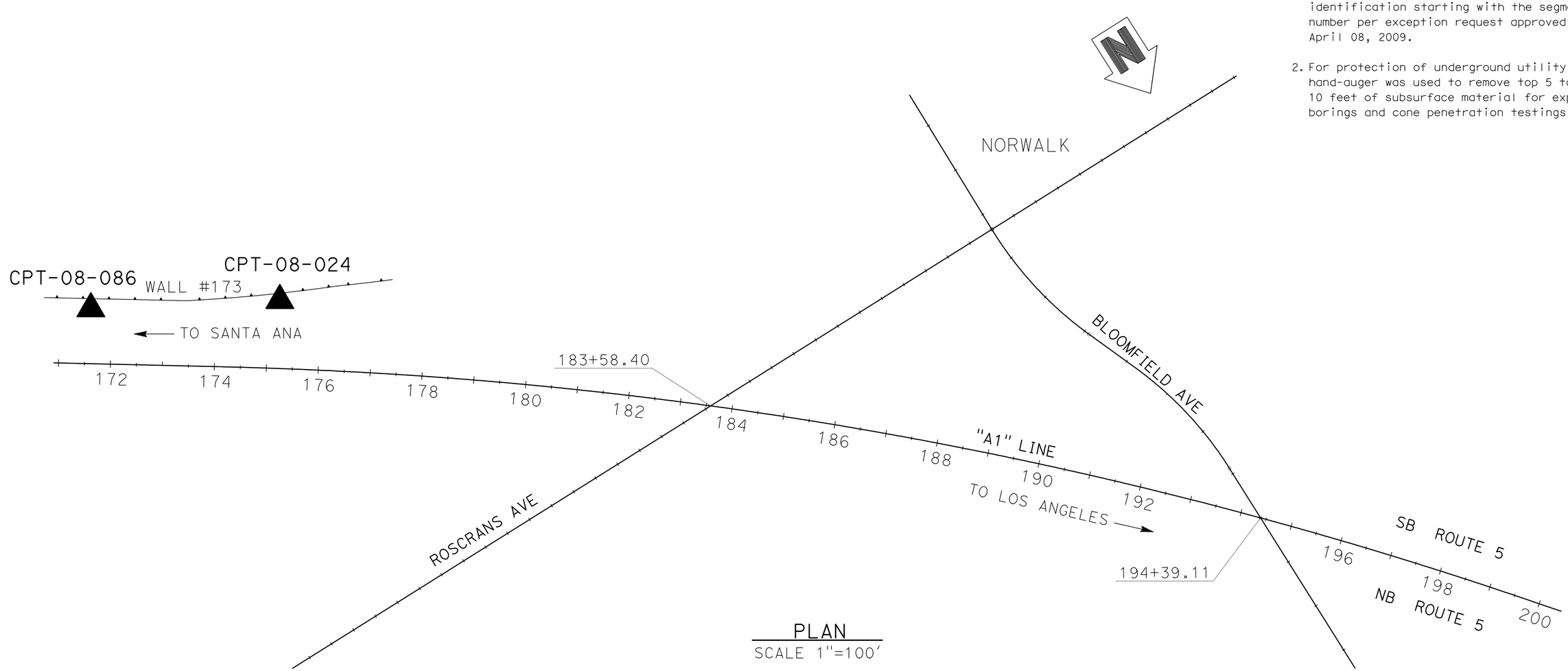

PLAN
SCALE 1"=100′

ENGINEERING SERVICES	MATERIALS AND GEOTECHNICAL SERVICES	STATE OF CALIFORNIA DEPARTMENT OF TRANSPORTATION	DIVISION OF ENGINEERING SERVICES STRUCTURE DESIGN DESIGN BRANCH 1	BRIDGE NO. X / POST MILE 3.64	RETAINING WALL NO. 173 LOG OF TEST BORINGS 1 OF 4
FUNCTIONAL SUPERVISOR NAME: M. SMITH	DRAWN BY: P.QUACH / CHECKED BY: D.ORRIS	FIELD INVESTIGATION BY: P.MCDONALD/EJ.JEON/C.CARBINO/L.BOEBUCK			

OGS CIVIL LOG OF TEST BORINGS SHEET — ORIGINAL SCALE IN INCHES FOR REDUCED PLANS 0 1 2 3 — UNIT: 3576 — PROJECT NUMBER & PHASE: 07000018331 — CONTRACT NO.: 07-215934 — DISREGARD PRINTS BEARING EARLIER REVISION DATES → REVISION DATES 06/17/11 — SHEET 13 OF 16

FILE => rw173-z-lltb01.dgn

USERNAME => s109858 DATE PLOTTED => 28-MAR-2012 TIME PLOTTED => 12:48

DIST	COUNTY	ROUTE	POST MILES TOTAL PROJECT	SHEET No.	TOTAL SHEETS
07	LA	5	2.4/4.0	1044	1288

GEOTECHNICAL PROFESSIONAL — DATE 06/2011

3-26-12
PLANS APPROVAL DATE

REGISTERED PROFESSIONAL ENGINEER — MICHAEL G. SMITH No. 2229 Exp. 3-31-2012 GEOTECHNICAL — STATE OF CALIFORNIA

The State of California or its officers or agents shall not be responsible for the accuracy or completeness of electronic copies of this plan sheet.

Notes

1. This LOTB sheet was prepared in accordance with the Caltrans Soil & Rock Logging, Classification, and Presentation Manual (2010) except three digit sequence number in boring identification starting with the segment number per exception request approved on April 08, 2009.

2. For protection of underground utility lines, hand-auger was used to remove top 5 to 10 feet of subsurface material for exploratory borings and cone penetration testings.

FOR PLAN VIEW, SEE
"LOG OF TEST BORINGS" 1 OF 4

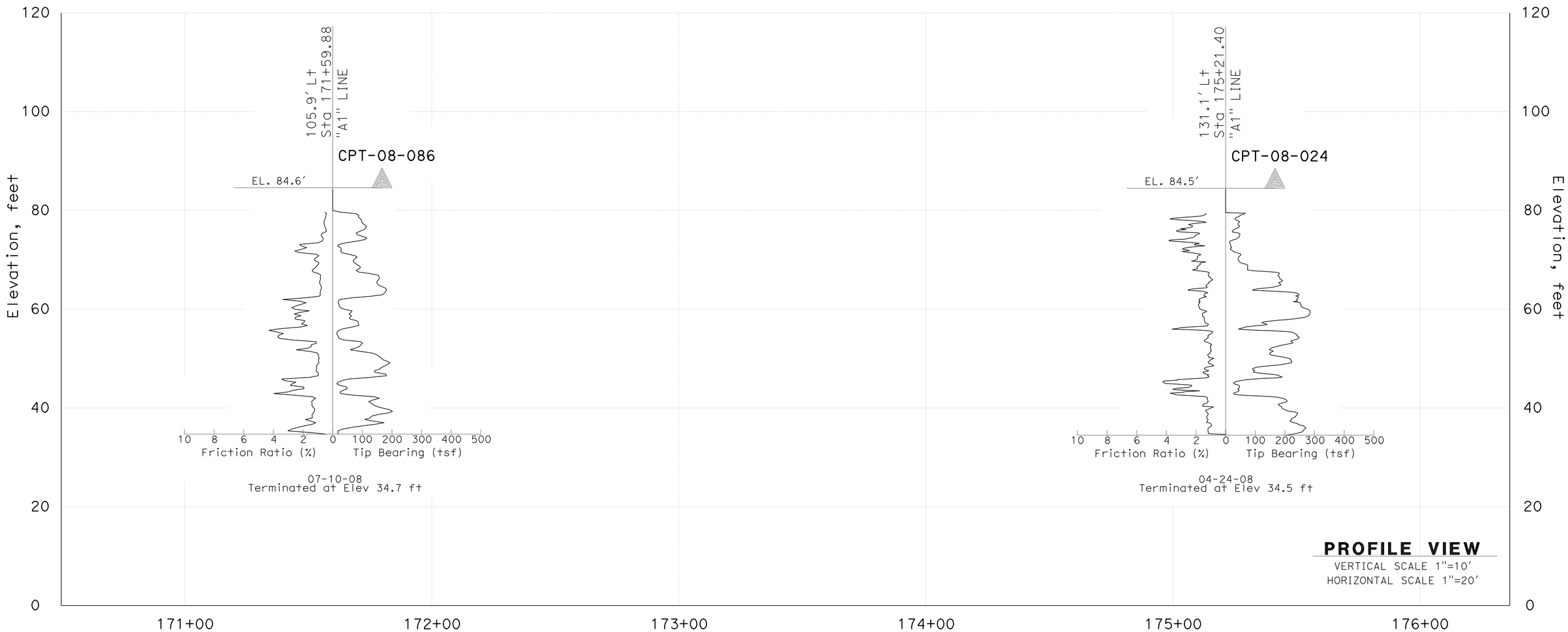

PROFILE VIEW
VERTICAL SCALE 1"=10'
HORIZONTAL SCALE 1"=20'

ENGINEERING SERVICES	MATERIALS AND GEOTECHNICAL SERVICES	STATE OF CALIFORNIA DEPARTMENT OF TRANSPORTATION	DIVISION OF ENGINEERING SERVICES STRUCTURE DESIGN DESIGN BRANCH 1	BRIDGE NO. X / POST MILE 3.64	RETAINING WALL NO. 173 LOG OF TEST BORINGS 2 OF 4
FUNCTIONAL SUPERVISOR NAME: M. SMITH	DRAWN BY: P.QUACH CHECKED BY: D.ORRIS	FIELD INVESTIGATION BY: P.MCDONALD/EJ.JEON/C.CARBINO/L.ROEBUCK			

OGS CIVIL LOG OF TEST BORINGS SHEET — ORIGINAL SCALE IN INCHES FOR REDUCED PLANS 0 1 2 3

UNIT: 3576
PROJECT NUMBER & PHASE: 07000018331 — CONTRACT NO.: 07-215934

DISREGARD PRINTS BEARING EARLIER REVISION DATES → REVISION DATES 06/17/11 — SHEET 14 OF 16

FILE => rw173-z-ltb02.dgn

USERNAME => s109858 DATE PLOTTED => 28-MAR-2012 TIME PLOTTED => 12:48

DIST	COUNTY	ROUTE	POST MILES TOTAL PROJECT	SHEET No.	TOTAL SHEETS
07	LA	5	2.4/4.0	1045	1288

GEOTECHNICAL PROFESSIONAL — DATE 06/2011

3-26-12
PLANS APPROVAL DATE

REGISTERED PROFESSIONAL ENGINEER — MICHAEL G. SMITH No. 2229 Exp. 3-31-2012 GEOTECHNICAL — STATE OF CALIFORNIA

The State of California or its officers or agents shall not be responsible for the accuracy or completeness of electronic copies of this plan sheet.

REFERENCE: CALTRANS SOIL & ROCK LOGGING, CLASSIFICATION, AND PRESENTATION MANUAL (2010)

CEMENTATION

Description	Criteria
Weak	Crumbles or breaks with handling or little finger pressure.
Moderate	Crumbles or breaks with considerable finger pressure.
Strong	Will not crumble or break with finger pressure.

BOREHOLE IDENTIFICATION

Symbol	Hole Type	Description
Size	A	Auger Boring (hollow or solid stem bucket)
Size	R RW RC P	Rotary drilled boring (conventional) Rotary drilled with self-casing wire-line Rotary core with continuously-sampled, self-casing wire-line Rotary percussion boring (air)
Size	R	Rotary drilled diamond core
Size	HD HA	Hand driven (1-inch soil tube) Hand Auger
●	D	Dynamic Cone Penetration Boring
▲	CPT	Cone Penetration Test (ASTM D 5778)
⬚	O	Other (note on LOTB)

Note: Size in inches.

CONSISTENCY OF COHESIVE SOILS

Description	Shear Strength (tsf)	Pocket Penetrometer Measurement, PP, (tsf)	Torvane Measurement, TV, (tsf)	Vane Shear Measurement, VS, (tsf)
Very Soft	Less than 0.12	Less than 0.25	Less than 0.12	Less than 0.12
Soft	0.12 - 0.25	0.25 - 0.5	0.12 - 0.25	0.12 - 0.25
Medium Stiff	0.25 - 0.5	0.5 - 1	0.25 - 0.5	0.25 - 0.5
Stiff	0.5 - 1	1 - 2	0.5 - 1	0.5 - 1
Very Stiff	1 - 2	2 - 4	1 - 2	1 - 2
Hard	Greater than 2	Greater than 4	Greater than 2	Greater than 2

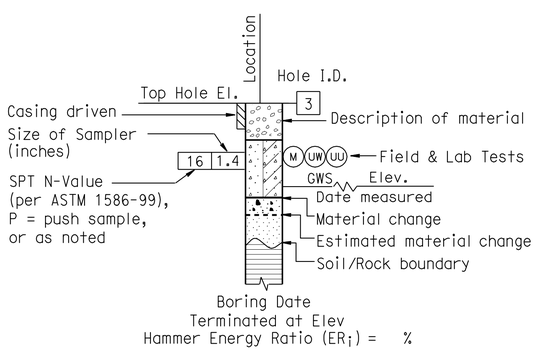

ROTARY BORING

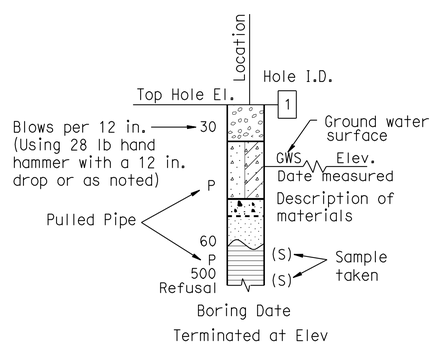

HAND BORING

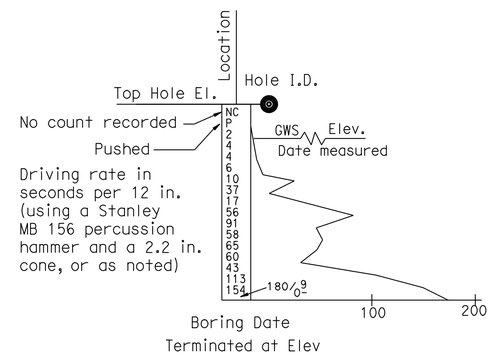

DYNAMIC CONE PENETRATION BORING

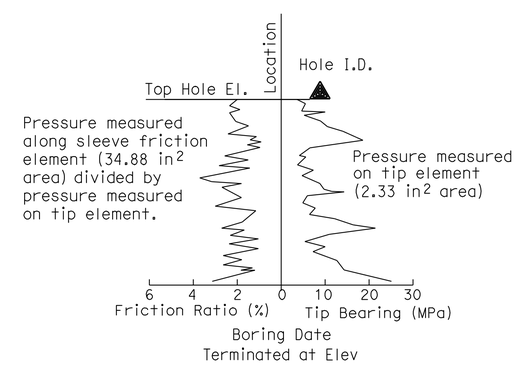

CONE PENETRATION TEST (CPT) BORING

ENGINEERING SERVICES	MATERIALS AND GEOTECHNICAL SERVICES	STATE OF CALIFORNIA DEPARTMENT OF TRANSPORTATION	DIVISION OF ENGINEERING SERVICES STRUCTURE DESIGN DESIGN BRANCH 1	BRIDGE NO. X / POST MILE 3.64	RETAINING WALL NO. 173
FUNCTIONAL SUPERVISOR	DRAWN BY: P.QUACH	FIELD INVESTIGATION BY:			LOG OF TEST BORINGS 3 OF 4
NAME: M. SMITH	CHECKED BY: D.ORRIS	P.MCDONALD/EJ.JEON/C.CARBINO/L.ROEBUCK			

OGS CIVIL LOG OF TEST BORINGS SHEET — ORIGINAL SCALE IN INCHES FOR REDUCED PLANS 0 1 2 3

UNIT: 3576
PROJECT NUMBER & PHASE: 07000018331 — CONTRACT NO.: 07-215934

DISREGARD PRINTS BEARING EARLIER REVISION DATES → REVISION DATES 06/17/11 — SHEET 15 OF 16

FILE => rw173-z-ltb03.dgn

USERNAME => s109858 DATE PLOTTED => 28-MAR-2012 TIME PLOTTED => 12:48

REFERENCE: CALTRANS SOIL & ROCK LOGGING, CLASSIFICATION, AND PRESENTATION MANUAL (2010)

DIST	COUNTY	ROUTE	POST MILES TOTAL PROJECT	SHEET No.	TOTAL SHEETS
07	LA	5	2.4/4.0	1046	1288

GEOTECHNICAL PROFESSIONAL — 06/2011 DATE

3-26-12
PLANS APPROVAL DATE

REGISTERED PROFESSIONAL ENGINEER — MICHAEL G. SMITH No. 2229 Exp. 3-31-2012 GEOTECHNICAL — STATE OF CALIFORNIA

The State of California or its officers or agents shall not be responsible for the accuracy or completeness of electronic copies of this plan sheet.

GROUP SYMBOLS AND NAMES

Graphic/Symbol	Group Names	Graphic/Symbol	Group Names
GW	Well-graded GRAVEL Well-graded GRAVEL with SAND	CL	Lean CLAY Lean CLAY with SAND Lean CLAY with GRAVEL SANDY lean CLAY SANDY lean CLAY with GRAVEL GRAVELLY lean CLAY GRAVELLY lean CLAY with SAND
GP	Poorly-graded GRAVEL Poorly-graded GRAVEL with SAND		
GW-GM	Well-graded GRAVEL with SILT Well-graded GRAVEL with SILT and SAND	CL-ML	SILTY CLAY SILTY CLAY with SAND SILTY CLAY with GRAVEL SANDY SILTY CLAY SANDY SILTY CLAY with GRAVEL GRAVELLY SILTY CLAY GRAVELLY SILTY CLAY with SAND
GW-GC	Well-graded GRAVEL with CLAY (or SILTY CLAY) Well-graded GRAVEL with CLAY and SAND (or SILTY CLAY and SAND)		
GP-GM	Poorly-graded GRAVEL with SILT Poorly-graded GRAVEL with SILT and SAND	ML	SILT SILT with SAND SILT with GRAVEL SANDY SILT SANDY SILT with GRAVEL GRAVELLY SILT GRAVELLY SILT with SAND
GP-GC	Poorly-graded GRAVEL with CLAY (or SILTY CLAY) Poorly-graded GRAVEL with CLAY and SAND (or SILTY CLAY and SAND)		
GM	SILTY GRAVEL SILTY GRAVEL with SAND	OL	ORGANIC lean CLAY ORGANIC lean CLAY with SAND ORGANIC lean CLAY with GRAVEL SANDY ORGANIC lean CLAY SANDY ORGANIC lean CLAY with GRAVEL GRAVELLY ORGANIC lean CLAY GRAVELLY ORGANIC lean CLAY with SAND
GC	CLAYEY GRAVEL CLAYEY GRAVEL with SAND		
GC-GM	SILTY, CLAYEY GRAVEL SILTY, CLAYEY GRAVEL with SAND	OL	ORGANIC SILT ORGANIC SILT with SAND ORGANIC SILT with GRAVEL SANDY ORGANIC SILT SANDY ORGANIC SILT with GRAVEL GRAVELLY ORGANIC SILT GRAVELLY ORGANIC SILT with SAND
SW	Well-graded SAND Well-graded SAND with GRAVEL		
SP	Poorly-graded SAND Poorly-graded SAND with GRAVEL	CH	Fat CLAY Fat CLAY with SAND Fat CLAY with GRAVEL SANDY fat CLAY SANDY fat CLAY with GRAVEL GRAVELLY fat CLAY GRAVELLY fat CLAY with SAND
SW-SM	Well-graded SAND with SILT Well-graded SAND with SILT and GRAVEL		
SW-SC	Well-graded SAND with CLAY (or SILTY CLAY) Well-graded SAND with CLAY and GRAVEL (or SILTY CLAY and GRAVEL)	MH	Elastic SILT Elastic SILT with SAND Elastic SILT with GRAVEL SANDY elastic SILT SANDY elastic SILT with GRAVEL GRAVELLY elastic SILT GRAVELLY elastic SILT with SAND
SP-SM	Poorly-graded SAND with SILT Poorly-graded SAND with SILT and GRAVEL		
SP-SC	Poorly-graded SAND with CLAY (or SILTY CLAY) Poorly-graded SAND with CLAY and GRAVEL (or SILTY CLAY and GRAVEL)	OH	ORGANIC fat CLAY ORGANIC fat CLAY with SAND ORGANIC fat CLAY with GRAVEL SANDY ORGANIC fat CLAY SANDY ORGANIC fat CLAY with GRAVEL GRAVELLY ORGANIC fat CLAY GRAVELLY ORGANIC fat CLAY with SAND
SM	SILTY SAND SILTY SAND with GRAVEL		
SC	CLAYEY SAND CLAYEY SAND with GRAVEL	OH	ORGANIC elastic SILT ORGANIC elastic SILT with SAND ORGANIC elastic SILT with GRAVEL SANDY ORGANIC elastic SILT SANDY ORGANIC elastic SILT with GRAVEL GRAVELLY ORGANIC elastic SILT GRAVELLY ORGANIC elastic SILT with SAND
SC-SM	SILTY, CLAYEY SAND SILTY, CLAYEY SAND with GRAVEL		
PT	PEAT	OL/OH	ORGANIC SOIL ORGANIC SOIL with SAND ORGANIC SOIL with GRAVEL SANDY ORGANIC SOIL SANDY ORGANIC SOIL with GRAVEL GRAVELLY ORGANIC SOIL GRAVELLY ORGANIC SOIL with SAND
	COBBLES COBBLES and BOULDERS BOULDERS		

FIELD AND LABORATORY TESTING

- (C) Consolidation (ASTM D 2435)
- (CL) Collapse Potential (ASTM D 5333)
- (CP) Compaction Curve (CTM 216)
- (CR) Corrosivity Testing (CTM 643, CTM 422, CTM 417)
- (CU) Consolidated Undrained Triaxial (ASTM D 4767)
- (DS) Direct Shear (ASTM D 3080)
- (EI) Expansion Index (ASTM D 4829)
- (M) Moisture Content (ASTM D 2216)
- (OC) Organic Content-% (ASTM D 2974)
- (P) Permeability (CTM 220)
- (PA) Particle Size Analysis (ASTM D 422)
- (PI) Plasticity Index (AASHTO T 90) Liquid Limit (AASHTO T 89)
- (PL) Point Load Index (ASTM D 5731)
- (PM) Pressure Meter
- (R) R-Value (CTM 301)
- (SE) Sand Equivalent (CTM 217)
- (SG) Specific Gravity (AASHTO T 100)
- (SL) Shrinkage Limit (ASTM D 427)
- (SW) Swell Potential (ASTM D 4546)
- (UC) Unconfined Compression-Soil (ASTM D 2166) Unconfined Compression-Rock (ASTM D 2938)
- (UU) Unconsolidated Undrained Triaxial (ASTM D 2850)
- (UW) Unit Weight (ASTM D 4767)

APPARENT DENSITY OF COHESIONLESS SOILS

Description	SPT N_{60} (Blows / 12 in.)
Very Loose	0 - 5
Loose	5 - 10
Medium Dense	10 - 30
Dense	30 - 50
Very Dense	Greater than 50

MOISTURE

Description	Criteria
Dry	No discernable moisture
Moist	Moisture present, but no free water
Wet	Visible free water

PERCENT OR PROPORTION OF SOILS

Description	Criteria
Trace	Particles are present but estimated to be less than 5%
Few	5% - 10%
Little	15% - 25%
Some	30% - 45%
Mostly	50% - 100%

PARTICLE SIZE

Description		Size (in.)
Boulder		Greater than 12
Cobble		3 - 12
Gravel	Coarse	3/4 - 3
	Fine	1/5 - 3/4
Sand	Coarse	1/16 - 1/5
	Medium	1/64 - 1/16
	Fine	1/300 - 1/64
Silt and Clay		Less than 1/300

ENGINEERING SERVICES — MATERIALS AND GEOTECHNICAL SERVICES

FUNCTIONAL SUPERVISOR
NAME: M. SMITH

DRAWN BY: P.QUACH
CHECKED BY: D.ORRIS

FIELD INVESTIGATION BY:
P.MCDONALD/EJ.JEON/C.CARBINO/L.ROEBUCK

STATE OF CALIFORNIA
DEPARTMENT OF TRANSPORTATION

DIVISION OF ENGINEERING SERVICES
STRUCTURE DESIGN
DESIGN BRANCH 1

BRIDGE NO. X
POST MILE 3.64

RETAINING WALL NO. 173
LOG OF TEST BORINGS 4 OF 4

OGS CIVIL LOG OF TEST BORINGS SHEET

ORIGINAL SCALE IN INCHES FOR REDUCED PLANS 0 1 2 3

UNIT: 3576
PROJECT NUMBER & PHASE: 07000018331
CONTRACT NO.: 07-215934

DISREGARD PRINTS BEARING EARLIER REVISION DATES

REVISION DATES 06/17/11 — SHEET 16 OF 16

FILE => rw173-z-ltb04.dgn

USERNAME => s103858 DATE PLOTTED => 28-MAR-2012 TIME PLOTTED => 12:48

DIST	COUNTY	ROUTE	POST MILES TOTAL PROJECT	SHEET No.	TOTAL SHEETS
07	LA	5	2.4/4.0	1047	1288

REGISTERED CIVIL ENGINEER — DATE 12-7-11

3-26-12
PLANS APPROVAL DATE

REGISTERED PROFESSIONAL ENGINEER — Kevin Harper — No. 42221 — Exp. 3-31-12 — CIVIL — STATE OF CALIFORNIA

The State of California or its officers or agents shall not be responsible for the accuracy or completeness of electronic copies of this plan sheet.

NOTES:

1. For "DESIGN NOTES", see Standard Plan B3-8.
2. All piles not shown in "DEVELOPED ELEVATION".

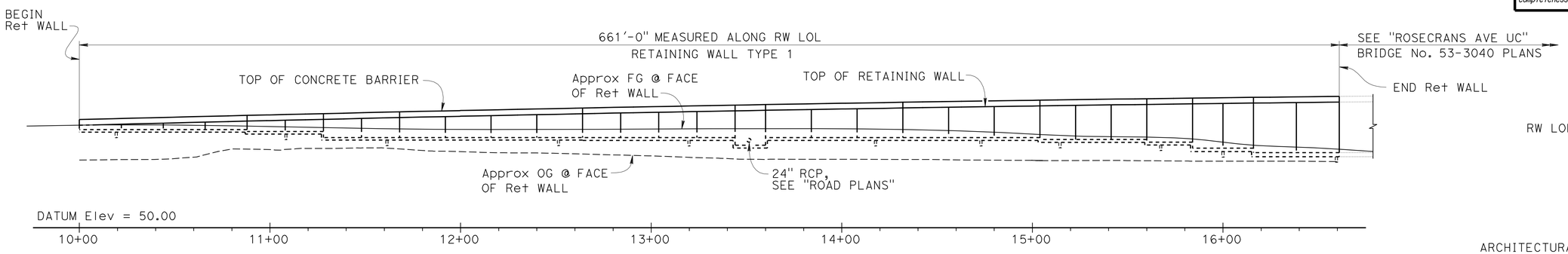

DEVELOPED MIRRORED ELEVATION

1" = 30'

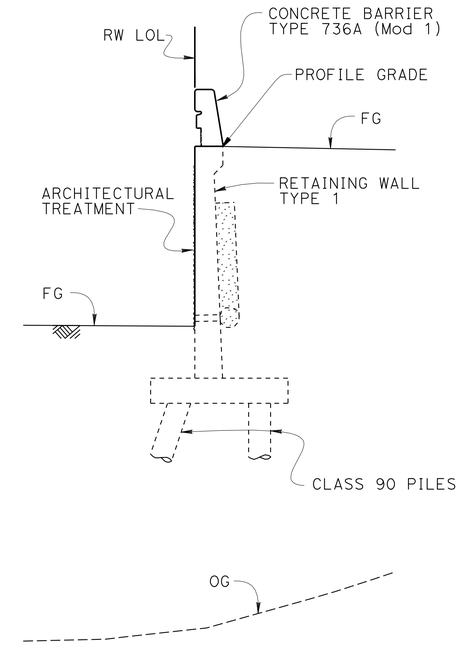

TYPICAL SECTION

¼" = 1'-0"

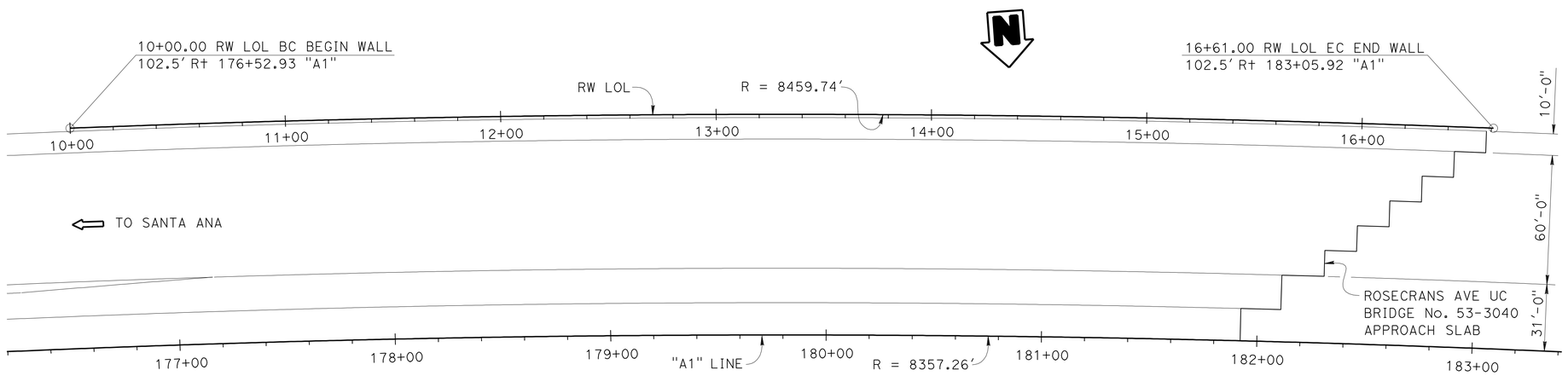

PLAN

1" = 30'

CURVE DATA

RW LOL	"A1" LINE
R = 8459.74'	R = 8357.26'
Δ = 4°28'36"	Δ = 17°36'01"
T = 330.67	T = 1293.80
L = 661.00'	L = 2567.22'

QUANTITIES

STRUCTURE EXCAVATION (RETAINING WALL)	1,330	CY
STRUCTURE BACKFILL (RETAINING WALL)	2,020	CY
PERVIOUS BACKFILL MATERIAL (RETAINING WALL)	190	CY
FURNISH PILING (CLASS 90)	5,895	LF
DRIVE PILE (CLASS 90)	157	EA
STRUCTURAL CONCRETE, RETAINING WALL	830	CY
ARCHITECTURAL TREATMENT (SPLIT SLATE - FRACTURED RIB)	5,870	SQFT
BAR REINFORCING STEEL (RETAINING WALL)	113,300	LB
CONCRETE BARRIER (TYPE 736A MODIFIED 1)	661	LF

Jeff Sims
DESIGN ENGINEER

	BY	CHECKED
DESIGN	April Pearson	Greg Jones
DETAILS	Gerald Dickerson	Greg Jones
QUANTITIES	Greg Thornton	Christa Siegenthaler

LOAD FACTOR DESIGN

	BY	CHECKED
LAYOUT	April Pearson	Greg Jones
SPECIFICATIONS	Theresa Nedwick	PLANS AND SPECS COMPARED Theresa Nedwick

ORIGINAL SCALE IN INCHES FOR REDUCED PLANS 0 1 2 3

STATE OF CALIFORNIA
DEPARTMENT OF TRANSPORTATION

DIVISION OF ENGINEERING SERVICES
STRUCTURE DESIGN
DESIGN BRANCH 1

BRIDGE NO.
POST MILE 3.31

RETAINING WALL NO. 181
GENERAL PLAN

UNIT: 3576
PROJECT NUMBER & PHASE: 07000018331
CONTRACT NO.: 07-215934

DISREGARD PRINTS BEARING EARLIER REVISION DATES
REVISION DATES 10-26-11 11-18-11 11-23-11

SHEET 1 OF 16

STRUCTURES DESIGN GENERAL PLAN SHEET (ENGLISH) (REV.09-01-10)

FILE => rw181-a-gp.dgn

USERNAME => s109858 DATE PLOTTED => 28-MAR-2012 TIME PLOTTED => 12:49

DIST	COUNTY	ROUTE	POST MILES TOTAL PROJECT	SHEET No.	TOTAL SHEETS
07	LA	5	2.4/4.0	1048	1288

REGISTERED CIVIL ENGINEER 12-7-11 DATE

3-26-12
PLANS APPROVAL DATE

REGISTERED PROFESSIONAL ENGINEER Kevin Harper No. 42221 Exp. 3-31-12 CIVIL STATE OF CALIFORNIA

The State of California or its officers or agents shall not be responsible for the accuracy or completeness of electronic copies of this plan sheet.

INDEX TO PLANS

SHEET NO.	TITLE
1.	GENERAL PLAN
2.	INDEX TO PLANS
3.	STRUCTURE PLAN NO. 1
4.	STRUCTURE PLAN NO. 2
5.	STRUCTURE PLAN NO. 3
6.	FOUNDATION PLAN NO. 1
7.	FOUNDATION PLAN NO. 2
8.	RETAINING WALL ARCHITECTURAL TREATMENT
9.	RETAINING WALL ARCHITECTURAL DETAILS NO. 1
10.	RETAINING WALL ARCHITECTURAL DETAILS NO. 2
11.	CONCRETE BARRIER TYPE 736A (Mod 1) DETAILS
12.	LOG OF TEST BORINGS 1 OF 5
13.	LOG OF TEST BORINGS 2 OF 5
14.	LOG OF TEST BORINGS 3 OF 5
15.	LOG OF TEST BORINGS 4 OF 5
16.	LOG OF TEST BORINGS 5 OF 5

STANDARD PLANS DATED MAY 2006

A10A	ACRONYMS AND ABBREVIATIONS (SHEET 1 OF 2)
A10B	ACRONYMS AND ABBREVIATIONS (SHEET 2 OF 2)
A10C	SYMBOLS (SHEET 1 OF 2)
A10D	SYMBOLS (SHEET 2 OF 2)
A62B	LIMITS OF PAYMENT FOR EXCAVATION AND BACKFILL - BRIDGE SURCHARGE AND WALL
B0-3	BRIDGE DETAILS
B2-5	PILE DETAILS CLASS 90 AND CLASS 140
B3-1	RETAINING WALL TYPE 1 H=4′ THROUGH 30′
B3-8	RETAINING WALL DETAILS No. 1
B3-9	RETAINING WALL DETAILS NO. 2
B11-56	CONCRETE BARRIER TYPE 736

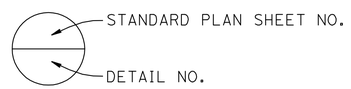

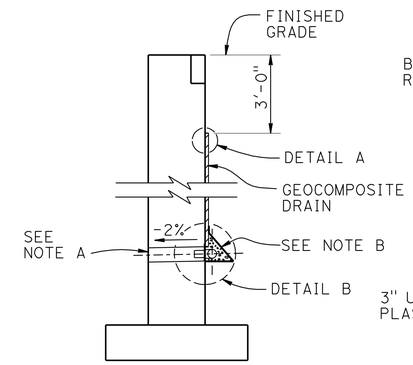

WALL SECTION

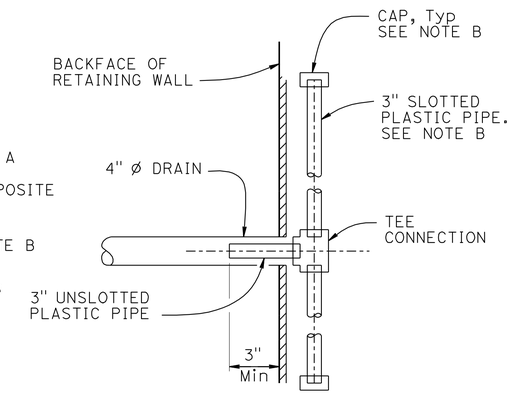

SECTION A-A

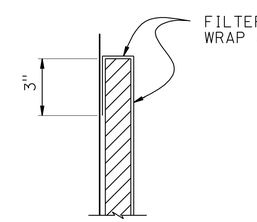

DETAIL A

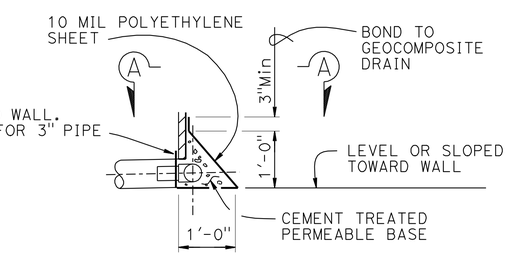

DETAIL B

PILE DATA TABLE

LOCATION	PILE TYPE	NOMINAL RESISTANCE (Kip)		SPECIFIED TIP ELEVATION	NOMINAL DRIVING RESISTANCE (Kip)
		COMPRESSION	TENSION		
Ret WALL TYPE 1 RW LOL 10+00 to 10+88	CLASS 90	180	0	64.2	180
Ret WALL TYPE 1 RW LOL 10+88 to 11+28	CLASS 90	180	0	63.2	180
Ret WALL TYPE 1 RW LOL 11+28 to 13+44	CLASS 90	180	0	60.0	180
Ret WALL TYPE 1 RW LOL 13+44 to 13+60	CLASS 90	180	0	55.7	180
Ret WALL TYPE 1 RW LOL 13+60 to 15+04	CLASS 90	180	0	59.8	180
Ret WALL TYPE 1 RW LOL 15+04 to 15+60	CLASS 90	180	0	58.8	180
Ret WALL TYPE 1 RW LOL 15+60+to 15+84	CLASS 90	180	0	57.4	180
Ret WALL TYPE 1 RW LOL 15+84 to 16+16	CLASS 90	180	0	53.9	180
Ret WALL TYPE 1 RW LOL 16+16 to 16+61	CLASS 90	180	0	51.3	180

NOTES:
1. Class 90 Alternative "X" Piles shall have a dimension "T" not less than 14 inches.
2. All Design tips are controlled by compression.

WEEP HOLE AND GEOCOMPOSITE DRAIN

NOTES: ALTERNATIVE TO BRIDGE DETAIL B0-3 / 3-1

A. 4" Ø drains at 25′ max center to center.
For walls adjacent to sidewalks or curbs, provide 4" cast iron or asbestos cement pipe under the sidewalk to discharge through curb face.
Exposed wall drains shall be located 3"± above finished grade.

B. Geocomposite drain, cement treated permeable base, and 3"Ø slotted plastic pipe continuous behind retaining wall. Cap ends of pipe. Provide "Tee" connection at each 4" Ø drain.

	BY	CHECKED
DESIGN	A. Pearson	G. Jones
DETAILS	G. Dickerson	G. Jones
QUANTITIES	Greg Thornton	Christa Siegenthaler

STATE OF CALIFORNIA
DEPARTMENT OF TRANSPORTATION

DIVISION OF ENGINEERING SERVICES
STRUCTURE DESIGN
DESIGN BRANCH 1

BRIDGE NO.
POST MILE 3.31

RETAINING WALL NO. 181
INDEX TO PLANS

STRUCTURES DESIGN DETAIL SHEET (ENGLISH) (REV. 09-01-10)

ORIGINAL SCALE IN INCHES FOR REDUCED PLANS 0 1 2 3

UNIT: 3576
PROJECT NUMBER & PHASE: 07000018331
CONTRACT NO.: 07-215934

DISREGARD PRINTS BEARING EARLIER REVISION DATES

REVISION DATES 10-26-11 11-16-11 11-29-11

SHEET 2 OF 16

FILE => rw181-b-itp.dgn

USERNAME => s109858 DATE PLOTTED => 28-MAR-2012 TIME PLOTTED => 12:49

DIST	COUNTY	ROUTE	POST MILES TOTAL PROJECT	SHEET No.	TOTAL SHEETS
07	LA	5	2.4/4.0	1049	1288

REGISTERED CIVIL ENGINEER 12-7-11 DATE

3-26-12
PLANS APPROVAL DATE

REGISTERED PROFESSIONAL ENGINEER Kevin Harper No. 42221 Exp. 3-31-12 CIVIL STATE OF CALIFORNIA

The State of California or its officers or agents shall not be responsible for the accuracy or completeness of electronic copies of this plan sheet.

NOTES:

1. For barrier details, see "CONCRETE BARRIER TYPE 736A (Mod 1) DETAILS" sheet.
2. Retaining wall expansion joints, weakened planes and weep holes shall be placed per B0-3/3-3.
3. All longitudinal dimensions are measured along the RW LOL.
4. Not all piles shown in "DEVELOPED MIRRORED ELEVATION".
5. For "WEEP HOLE AND GEOCOMPOSITE DRAIN" alternative, see "INDEX TO PLANS" sheet.

LEGEND:

⊙ - Indicates Vertical Class 90 Pile

⚲ - Indicates 1:3 Battered Class 90 Pile

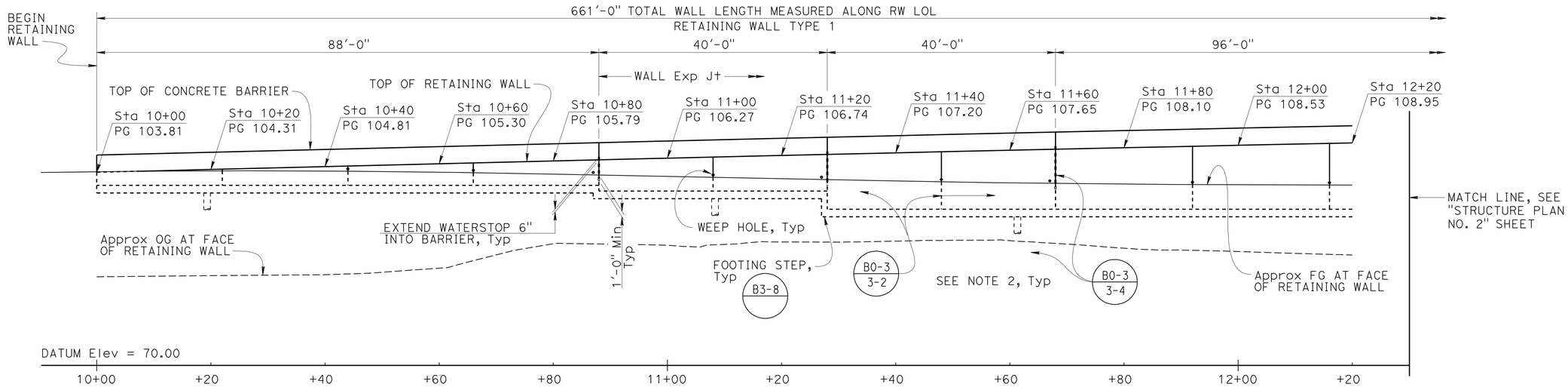

DEVELOPED MIRRORED ELEVATION (B3-1)

1" = 10'

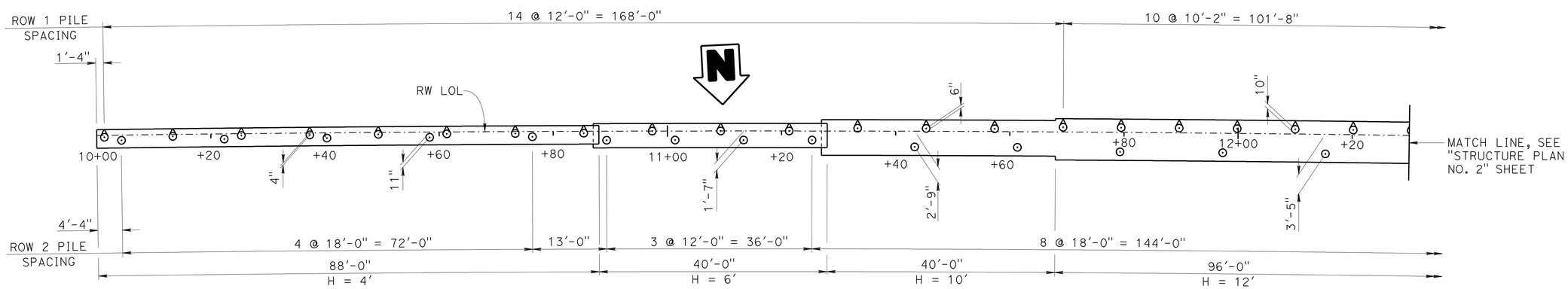

FOOTING PLAN (B3-1)

1" = 10'

DESIGN	BY A. Pearson	CHECKED Greg Jones	
DETAILS	BY G. Dickerson	CHECKED Greg Jones	
QUANTITIES	BY Greg Thornton	CHECKED Christa Siegenthaler	

STATE OF CALIFORNIA DEPARTMENT OF TRANSPORTATION

DIVISION OF ENGINEERING SERVICES STRUCTURE DESIGN DESIGN BRANCH 1

BRIDGE NO.

POST MILE 3.31

RETAINING WALL NO. 181

STRUCTURE PLAN NO. 1

STRUCTURES DESIGN DETAIL SHEET (ENGLISH) (REV. 09-01-10)

ORIGINAL SCALE IN INCHES FOR REDUCED PLANS 0 1 2 3

UNIT: 3576
PROJECT NUMBER & PHASE: 07000018331 CONTRACT NO.: 07-215934

DISREGARD PRINTS BEARING EARLIER REVISION DATES → REVISION DATES 10-26-11 11-18-11 11-29-11

SHEET 3 OF 16

FILE => rw181-c-sp01.dgn

USERNAME => s103958 DATE PLOTTED => 28-MAR-2012 TIME PLOTTED => 12:49

DIST	COUNTY	ROUTE	POST MILES TOTAL PROJECT	SHEET No.	TOTAL SHEETS
07	LA	5	2.4/4.0	1050	1288

REGISTERED CIVIL ENGINEER 12-7-11 DATE

3-26-12
PLANS APPROVAL DATE

REGISTERED PROFESSIONAL ENGINEER Kevin Harper No. 42221 Exp. 3-31-12 CIVIL STATE OF CALIFORNIA

The State of California or its officers or agents shall not be responsible for the accuracy or completeness of electronic copies of this plan sheet.

FOR NOTES, SEE "STRUCTURE PLAN NO. 1"

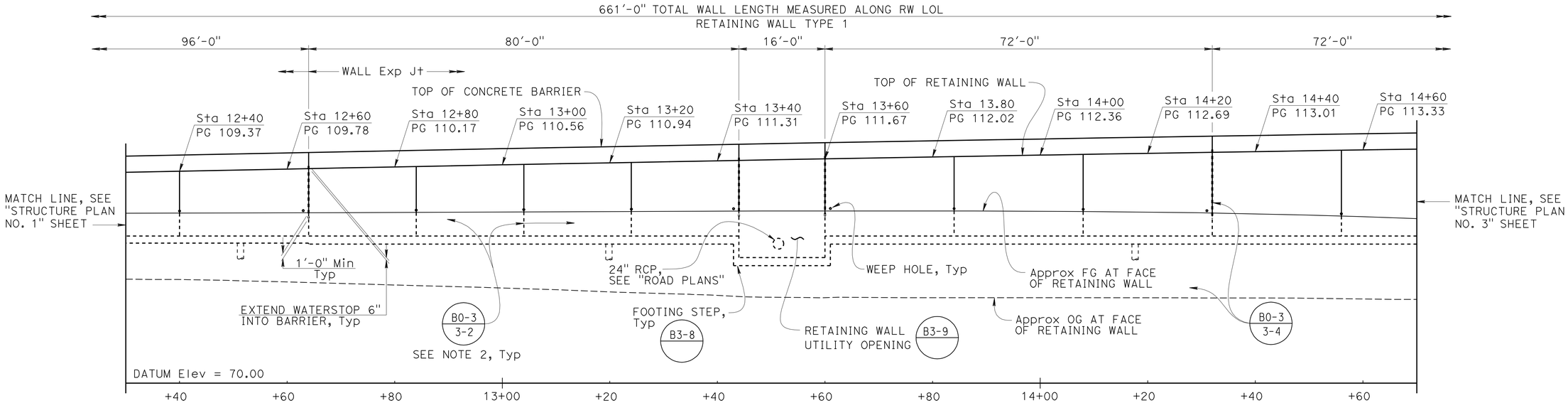

DEVELOPED MIRRORED ELEVATION (B3-1)

1" = 10'

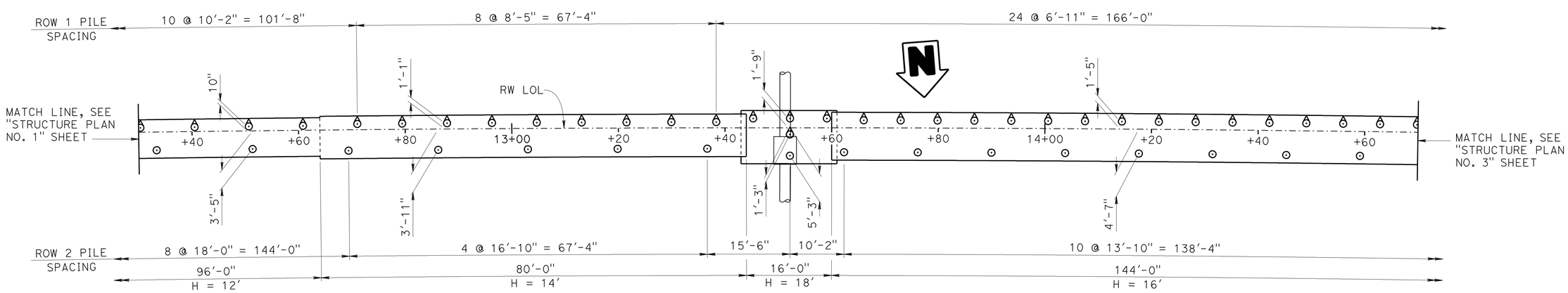

FOOTING PLAN (B3-1)

1" = 10'

DESIGN	BY April Pearson	CHECKED Greg Jones	
DETAILS	BY G. Dickerson	CHECKED Greg Jones	
QUANTITIES	BY Greg Thornton	CHECKED Christa Siegenthaler	

STATE OF CALIFORNIA
DEPARTMENT OF TRANSPORTATION

DIVISION OF ENGINEERING SERVICES
STRUCTURE DESIGN
DESIGN BRANCH 1

BRIDGE NO.
POST MILE 3.31

RETAINING WALL NO. 181
STRUCTURE PLAN NO. 2

STRUCTURES DESIGN DETAIL SHEET (ENGLISH) (REV. 09-01-10)

ORIGINAL SCALE IN INCHES FOR REDUCED PLANS 0 1 2 3

UNIT: 3576
PROJECT NUMBER & PHASE: 07000018331
CONTRACT NO.: 07-215934

DISREGARD PRINTS BEARING EARLIER REVISION DATES

REVISION DATES 10-21-11 11-16-11 11-21-11 11-29-11

SHEET 4 OF 16

FILE => rw181-c-sp02.dgn

USERNAME => s109858 DATE PLOTTED => 28-MAR-2012 TIME PLOTTED => 12:49

DIST	COUNTY	ROUTE	POST MILES TOTAL PROJECT	SHEET No.	TOTAL SHEETS
07	LA	5	2.4/4.0	1051	1288

REGISTERED CIVIL ENGINEER 12-7-11 DATE

3-26-12
PLANS APPROVAL DATE

REGISTERED PROFESSIONAL ENGINEER Kevin Harper No. 42221 Exp. 3-31-12 CIVIL STATE OF CALIFORNIA

The State of California or its officers or agents shall not be responsible for the accuracy or completeness of electronic copies of this plan sheet.

FOR NOTES, SEE "STRUCTURE PLAN NO. 1"

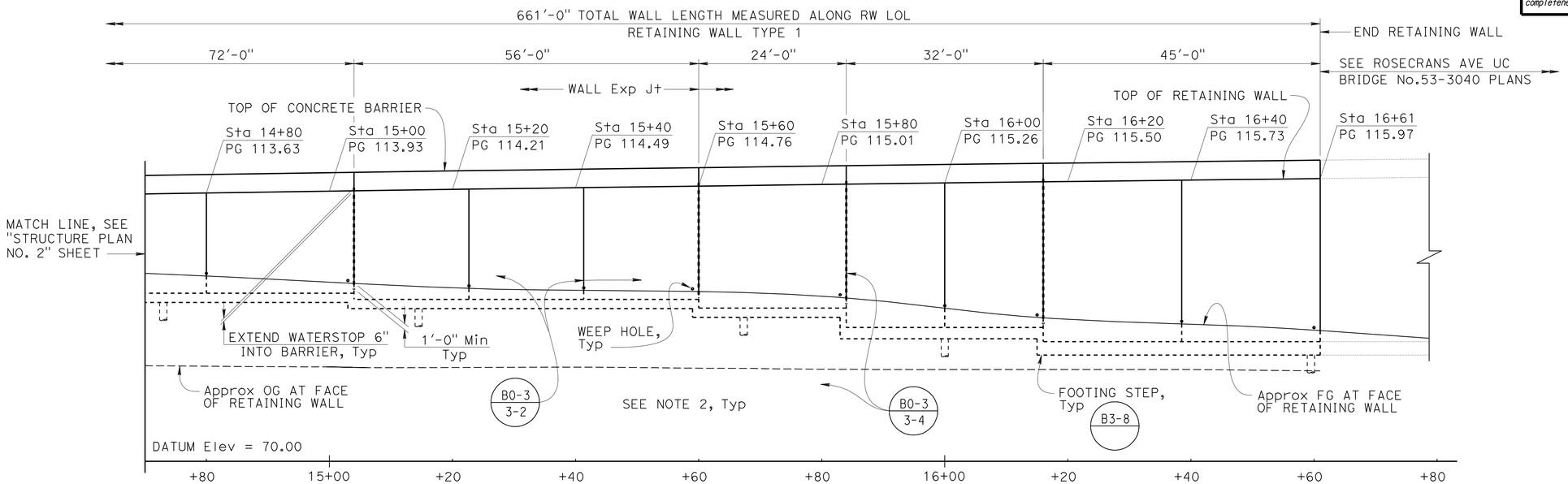

DEVELOPED MIRRORED ELEVATION (B3-1)

1" = 10'

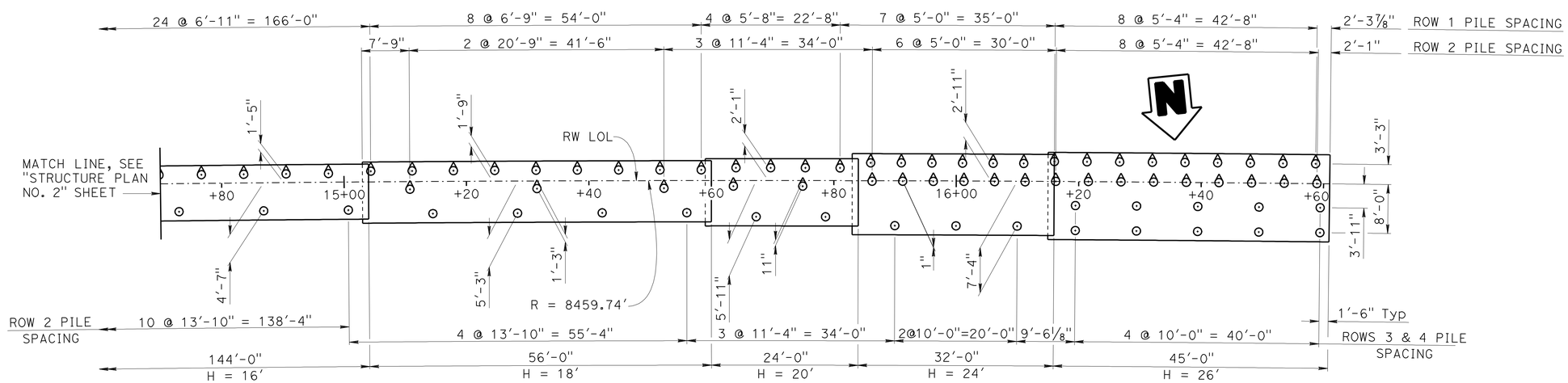

FOOTING PLAN (B3-1)

1" = 10'

DESIGN	BY April Pearson	CHECKED Greg Jones	
DETAILS	BY G. Dickerson	CHECKED Greg Jones	
QUANTITIES	BY Greg Thornton	CHECKED Christa Siegenthaler	

STATE OF CALIFORNIA
DEPARTMENT OF TRANSPORTATION

DIVISION OF ENGINEERING SERVICES
STRUCTURE DESIGN
DESIGN BRANCH 1

BRIDGE NO.

POST MILE 3.31

RETAINING WALL NO. 181
STRUCTURE PLAN NO. 3

STRUCTURES DESIGN DETAIL SHEET (ENGLISH) (REV. 09-01-10)

ORIGINAL SCALE IN INCHES FOR REDUCED PLANS 0 1 2 3

UNIT: 3576
PROJECT NUMBER & PHASE: 07000018331
CONTRACT NO.: 07-215934

DISREGARD PRINTS BEARING EARLIER REVISION DATES

REVISION DATES 10-27-11 11-18-11 11-29-11

SHEET 5 OF 16

FILE => rw181-c-sp03.dgn

USERNAME => s109858 DATE PLOTTED => 28-MAR-2012 TIME PLOTTED => 12:49

DIST	COUNTY	ROUTE	POST MILES TOTAL PROJECT	SHEET No.	TOTAL SHEETS
07	LA	5	2.4/4.0	1052	1288

REGISTERED CIVIL ENGINEER 12-7-11 DATE

3-26-12
PLANS APPROVAL DATE

REGISTERED PROFESSIONAL ENGINEER Kevin Harper No. 42221 Exp. 3-31-12 CIVIL STATE OF CALIFORNIA

The State of California or its officers or agents shall not be responsible for the accuracy or completeness of electronic copies of this plan sheet.

NOTES:
Underground utilities as shown are approximate
+ - Denotes spot elevation
o - Denotes piles (not all piles shown)
xx.x - Indicates bottom of footing elevation

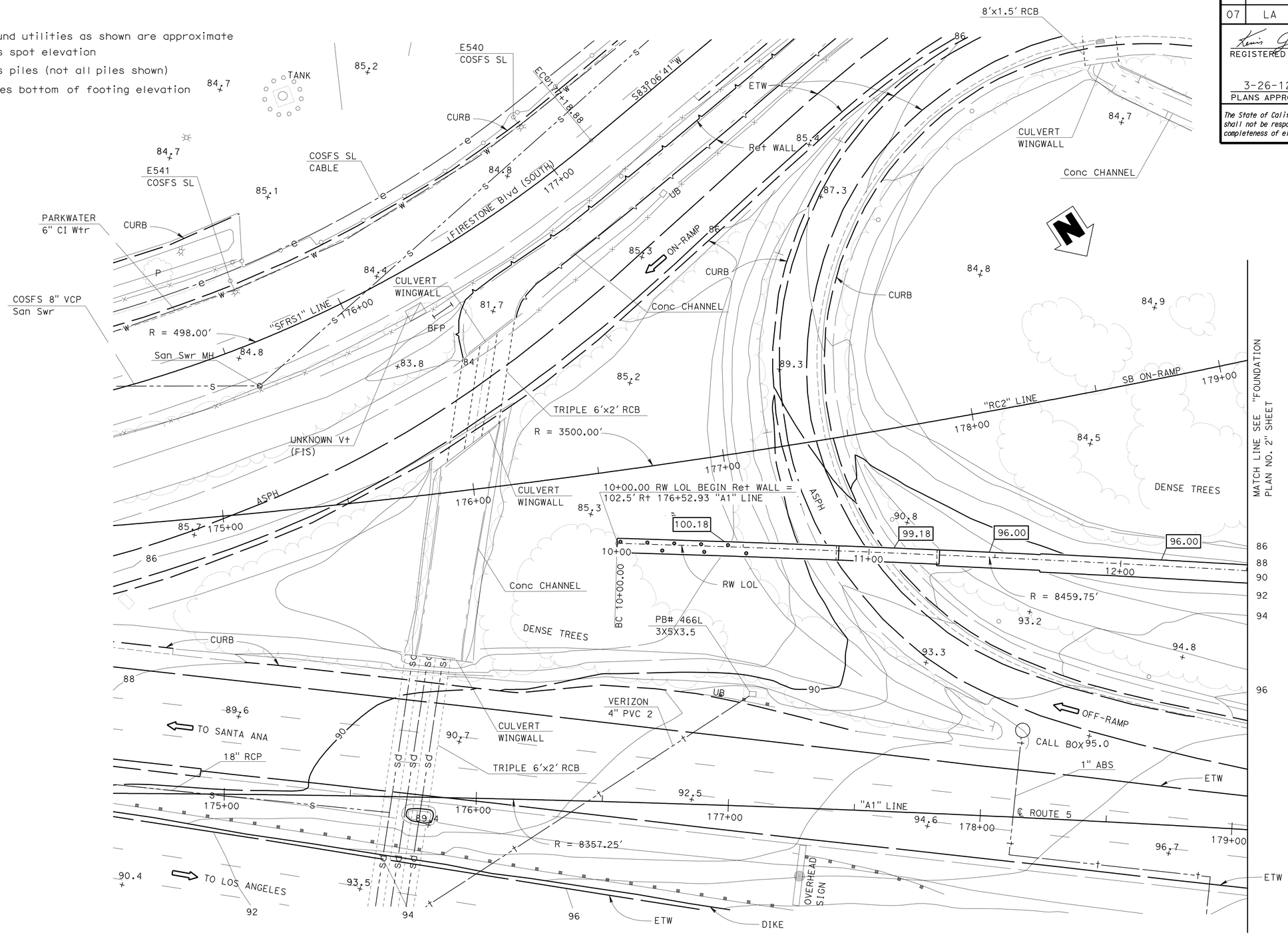

SCALE					
1" = 20'	DESIGN	BY April Pearson	CHECKED Greg Jones		
	DETAILS	BY Rizia da Cruz Ferreira	CHECKED Greg Jones		
	QUANTITIES	BY Greg Thornton	CHECKED Christa Siegenthaler		

STATE OF CALIFORNIA
DEPARTMENT OF TRANSPORTATION

DIVISION OF ENGINEERING SERVICES
STRUCTURE DESIGN
DESIGN BRANCH 1

BRIDGE NO.
POST MILE 3.31

RETAINING WALL NO. 181
FOUNDATION PLAN NO. 1

STRUCTURES DESIGN DETAIL SHEET (ENGLISH) (REV. 09-01-10)

ORIGINAL SCALE IN INCHES FOR REDUCED PLANS 0 1 2 3

UNIT: 3576
PROJECT NUMBER & PHASE: 07000018331
CONTRACT NO.: 07-215934

DISREGARD PRINTS BEARING EARLIER REVISION DATES

REVISION DATES 10/07/11 11/07/11 11/21/11

SHEET 6 OF 16

FILE => rw181-e-fp01.dgn

USERNAME => s109858 DATE PLOTTED => 28-MAR-2012 TIME PLOTTED => 12:49

DIST	COUNTY	ROUTE	POST MILES TOTAL PROJECT	SHEET No.	TOTAL SHEETS
07	LA	5	2.4/4.0	1053	1288

REGISTERED CIVIL ENGINEER 12-7-11 DATE

3-26-12
PLANS APPROVAL DATE

REGISTERED PROFESSIONAL ENGINEER Kevin Harper No. 42221 Exp. 3-31-12 CIVIL STATE OF CALIFORNIA

The State of California or its officers or agents shall not be responsible for the accuracy or completeness of electronic copies of this plan sheet.

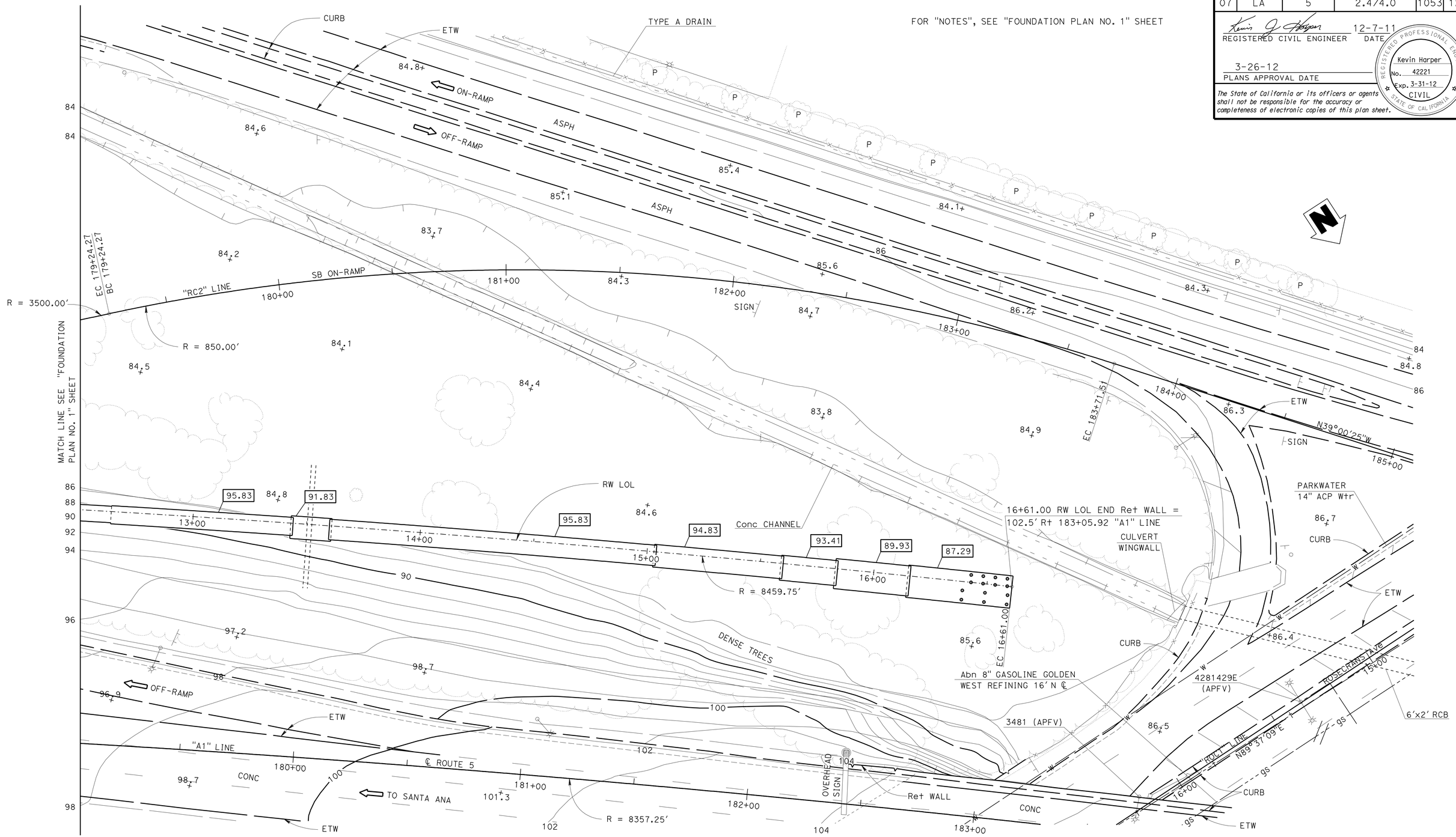

SCALE					
1" = 20'	DESIGN	BY April Pearson	CHECKED Greg Jones		
	DETAILS	BY Rizia da Cruz Ferreira	CHECKED Greg Jones		
	QUANTITIES	BY Greg Thornton	CHECKED Christa Siegenthaler		

STATE OF CALIFORNIA
DEPARTMENT OF TRANSPORTATION

DIVISION OF ENGINEERING SERVICES
STRUCTURE DESIGN
DESIGN BRANCH 1

BRIDGE NO.
POST MILE 3.31

RETAINING WALL NO. 181
FOUNDATION PLAN NO. 2

STRUCTURES DESIGN DETAIL SHEET (ENGLISH) (REV. 09-01-10)

ORIGINAL SCALE IN INCHES FOR REDUCED PLANS 0 1 2 3

UNIT: 3576
PROJECT NUMBER & PHASE: 07000018331
CONTRACT NO.: 07-215934

DISREGARD PRINTS BEARING EARLIER REVISION DATES

REVISION DATES 10/20/11 11/08/11 11/21/11

SHEET 7 OF 16

FILE => rw181-e-fp02.dgn

USERNAME => s103858 DATE PLOTTED => 28-MAR-2012 TIME PLOTTED => 12:50

DIST	COUNTY	ROUTE	POST MILES TOTAL PROJECT	SHEET No.	TOTAL SHEETS
07	LA	5	2.4/4.0	1054	1288

REGISTERED CIVIL ENGINEER 12-7-11 DATE

3-26-12
PLANS APPROVAL DATE

REGISTERED PROFESSIONAL ENGINEER Kevin Harper No. 42221 Exp. 3-31-12 CIVIL STATE OF CALIFORNIA

The State of California or its officers or agents shall not be responsible for the accuracy or completeness of electronic copies of this plan sheet.

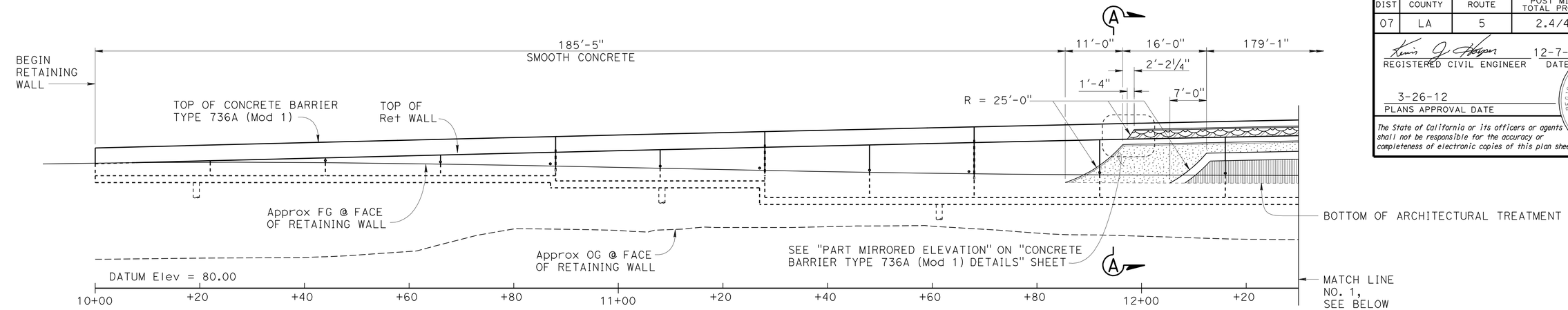

DEVELOPED MIRRORED ELEVATION

1" = 10'

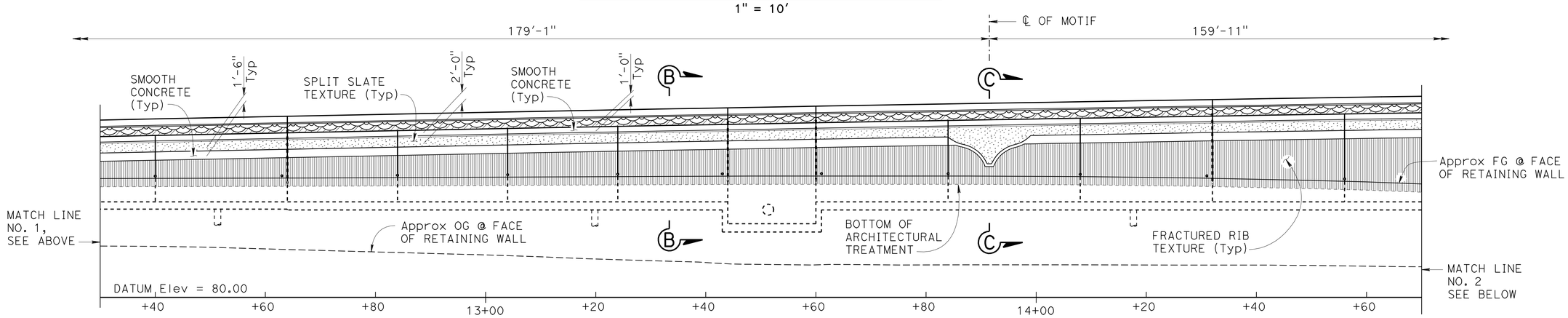

DEVELOPED MIRRORED ELEVATION

1" = 10'

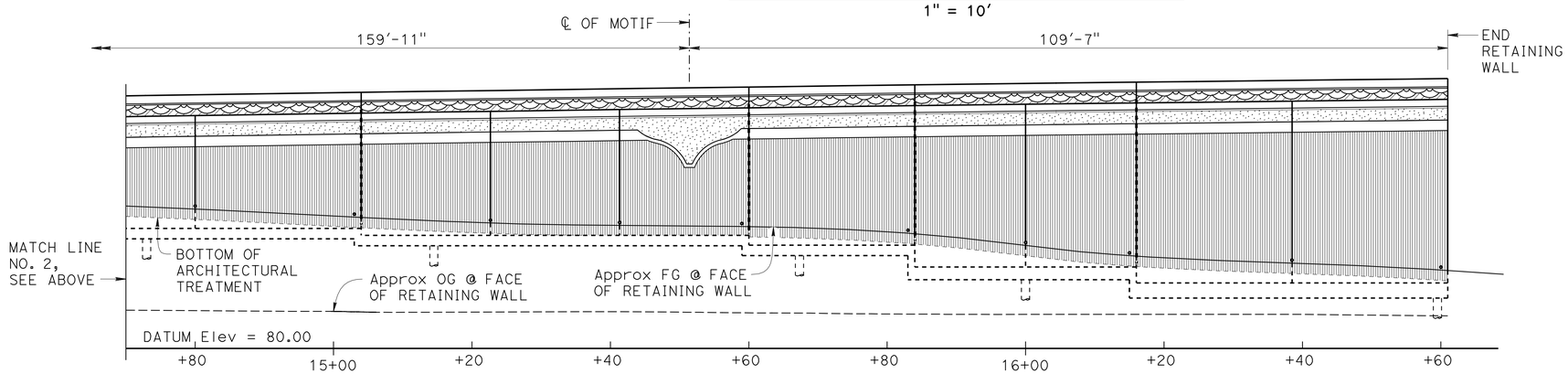

DEVELOPED MIRRORED ELEVATION

1" = 10'

NOTES:

1. For "SECTION A-A", "SECTION B-B", "SECTION C-C" and other retaining wall architectural details, see "RETAINING WALL ARCHITECTURAL DETAILS NO. 1 and NO. 2" sheets.
2. For barrier architectural details, see "CONCRETE BARRIER TYPE 736A (Mod 1) DETAILS" sheet.
3. Retaining wall architectural pay limits shall include all split slate and fractured rib texture shown in "DEVELOPED MIRRORED ELEVATION".
4. All longitudinal dimensions are measured along RW LOL.

	BY	CHECKED
DESIGN	Isaac Tasabia	Javier Chavez
DETAILS	G. Dickerson	D.Sessions / A.Pearson
QUANTITIES	Greg Thornton	Christa Siegenthaler

STATE OF CALIFORNIA
DEPARTMENT OF TRANSPORTATION

DIVISION OF ENGINEERING SERVICES
STRUCTURE DESIGN
DESIGN BRANCH 1

BRIDGE NO.
POST MILE 3.31

RETAINING WALL NO. 181

RETAINING WALL ARCHITECTURAL TREATMENT

STRUCTURES DESIGN DETAIL SHEET (ENGLISH) (REV. 09-01-10)

ORIGINAL SCALE IN INCHES FOR REDUCED PLANS 0 1 2 3

UNIT: 3576
PROJECT NUMBER & PHASE: 07000018331
CONTRACT NO.: 07-215934

DISREGARD PRINTS BEARING EARLIER REVISION DATES

REVISION DATES 11-02-11 11-14-11 11-21-11 11-30-11

SHEET 8 OF 16

FILE => rw181-f-rwatrt.dgn

USERNAME => s109858 DATE PLOTTED => 28-MAR-2012 TIME PLOTTED => 12:50

DIST	COUNTY	ROUTE	POST MILES TOTAL PROJECT	SHEET No.	TOTAL SHEETS
07	LA	5	2.4/4.0	1055	1288

REGISTERED CIVIL ENGINEER 12-7-11 DATE

3-26-12
PLANS APPROVAL DATE

REGISTERED PROFESSIONAL ENGINEER Kevin Harper No. 42221 Exp. 3-31-12 CIVIL STATE OF CALIFORNIA

The State of California or its officers or agents shall not be responsible for the accuracy or completeness of electronic copies of this plan sheet.

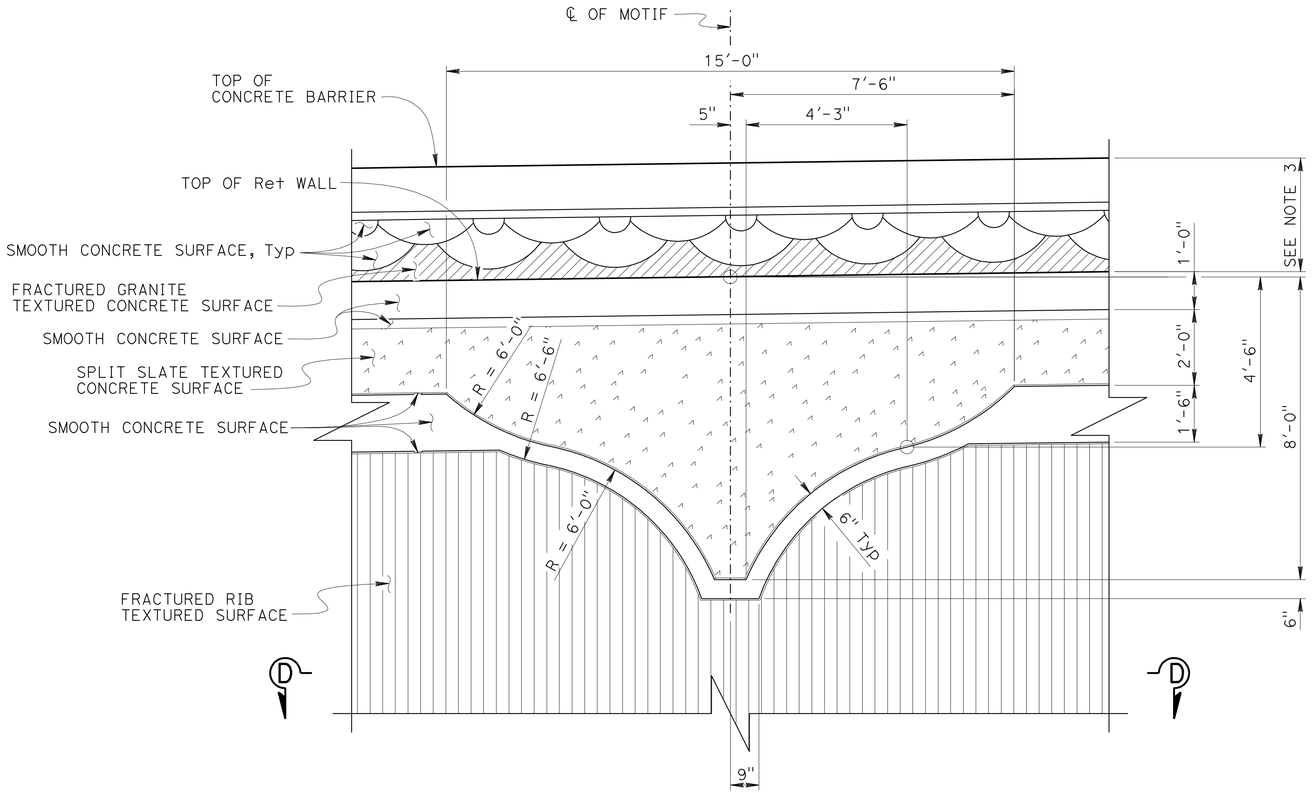

PART ELEVATION
MOTIF TEXTURE DETAIL
½" = 1'-0"

NOTES:
Motif symmetrical about ℄ of motif

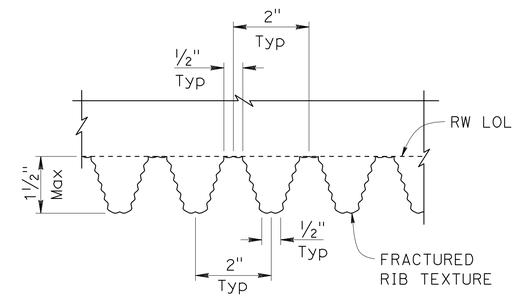

SECTION D-D
6" = 1'-0"

NOTES:

1. For location of "MOTIF TEXTURE DETAIL", see "RETAINING WALL ARCHITECTURAL TREATMENT" sheet.
2. For other retaining wall architectural details not shown, see "RETAINING WALL ARCHITECTURAL DETAILS NO. 2" sheet.
3. For barrier architectural treatment, see "CONCRETE BARRIER TYPE 736A (Mod 1) DETAILS" sheet.

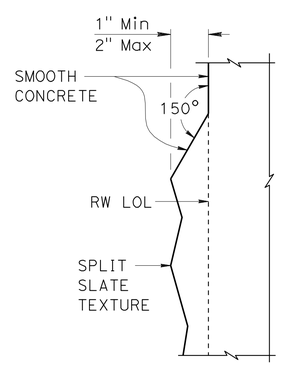

DETAIL A
3" = 1'-0"

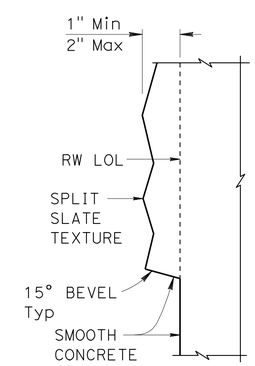

DETAIL B
3" = 1'-0"

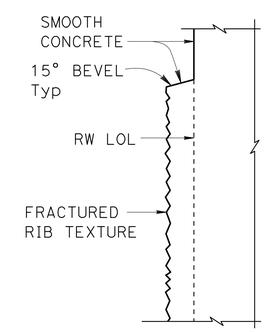

DETAIL C
3" = 1'-0"

DESIGN	BY Isaac Tasabia	CHECKED Javier Chavez	
DETAILS	BY G. Dickerson	CHECKED Daniel Sessions	
QUANTITIES	BY Greg Thornton	CHECKED Christa Siegenthaler	

STATE OF CALIFORNIA
DEPARTMENT OF TRANSPORTATION

DIVISION OF ENGINEERING SERVICES
STRUCTURE DESIGN
DESIGN BRANCH 1

BRIDGE NO.
POST MILE 3.31

RETAINING WALL NO. 181
RETAINING WALL ARCHITECTURAL DETAILS NO. 1

STRUCTURES DESIGN DETAIL SHEET (ENGLISH) (REV. 09-01-10)

ORIGINAL SCALE IN INCHES FOR REDUCED PLANS 0 1 2 3

UNIT: 3576
PROJECT NUMBER & PHASE: 07000018331
CONTRACT NO.: 07-215934

DISREGARD PRINTS BEARING EARLIER REVISION DATES

REVISION DATES 11-04-11 11-30-11

SHEET 9 OF 16

FILE => rw181-g-rwadet01.dgn

USERNAME => s109858 DATE PLOTTED => 28-MAR-2012 TIME PLOTTED => 12:50

DIST	COUNTY	ROUTE	POST MILES TOTAL PROJECT	SHEET No.	TOTAL SHEETS
07	LA	5	2.4/4.0	1056	1288

REGISTERED CIVIL ENGINEER 12-7-11 DATE

3-26-12
PLANS APPROVAL DATE

REGISTERED PROFESSIONAL ENGINEER Kevin Harper No. 42221 Exp. 3-31-12 CIVIL STATE OF CALIFORNIA

The State of California or its officers or agents shall not be responsible for the accuracy or completeness of electronic copies of this plan sheet.

NOTES:

1. For location of "SECTION A-A", "SECTION B-B" and "SECTION C-C", see "RETAINING WALL ARCHITECTURAL TREATMENT" sheet.
2. For "DETAIL A", "DETAIL B" and "DETAIL C", see "RETAINING WALL ARCHITECTURAL DETAILS NO. 1" sheet.
3. For architectural details not shown, see "RETAINING WALL ARCHITECTURAL DETAILS NO. 1" sheet.
4. For barrier architectural details , see "CONCRETE BARRIER TYPE 736A (Mod 1) DETAILS" sheet.

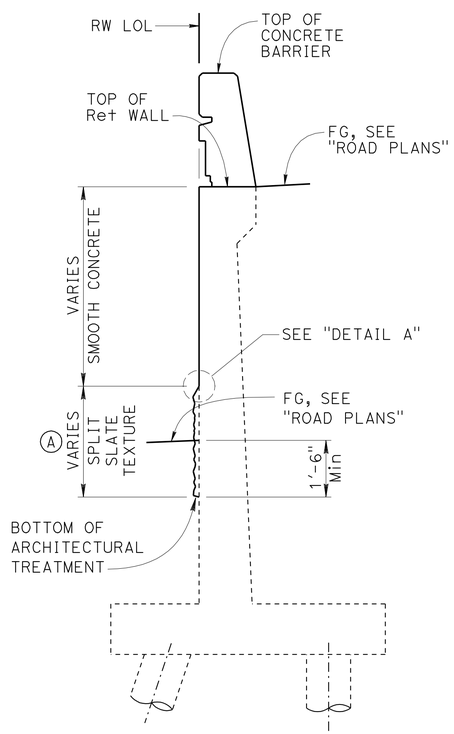

SECTION A-A
½" = 1'-0"

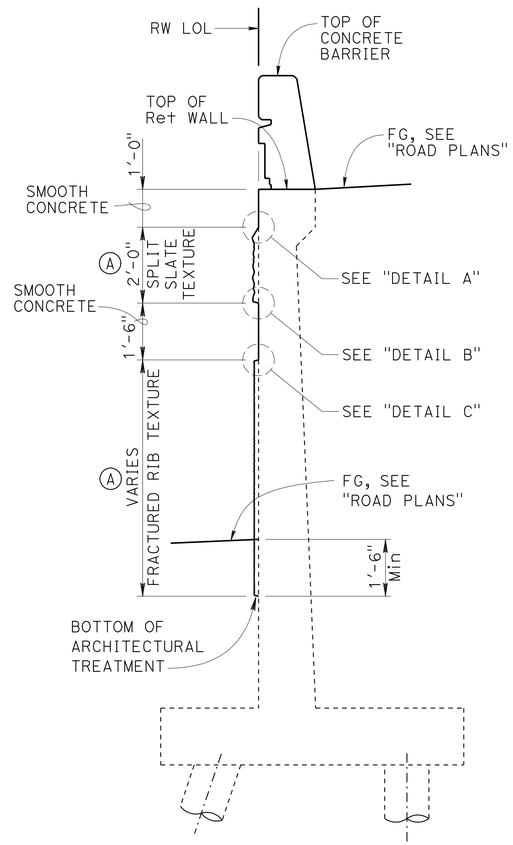

SECTION B-B
½" = 1'-0"

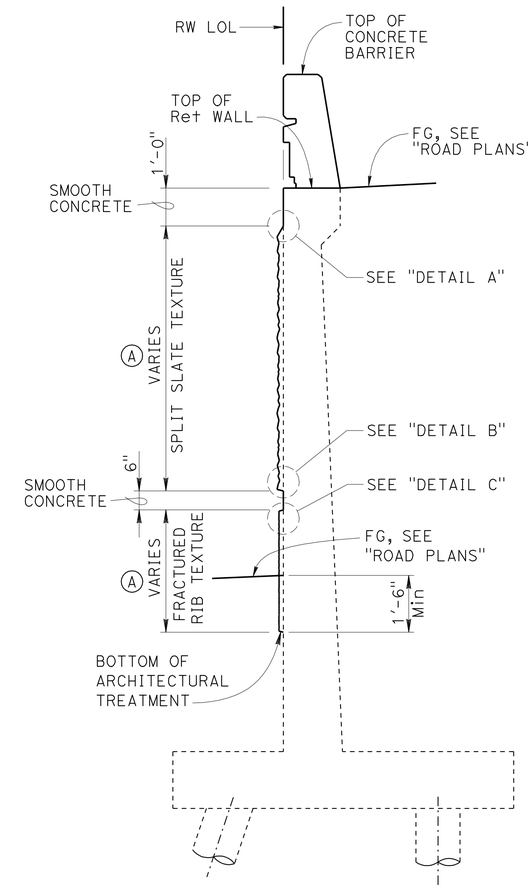

SECTION C-C
½" = 1'-0"

LEGEND:

(A) Pay limits of architectural treatment

DESIGN	BY Isaac Tasabia	CHECKED Javier Chavez	
DETAILS	BY G. Dickerson	CHECKED Daniel Sessions	
QUANTITIES	BY Greg Thornton	CHECKED Christa Siegenthaler	

STATE OF CALIFORNIA
DEPARTMENT OF TRANSPORTATION

DIVISION OF ENGINEERING SERVICES
STRUCTURE DESIGN
DESIGN BRANCH 1

BRIDGE NO.
POST MILE 3.31

RETAINING WALL NO. 181

RETAINING WALL ARCHITECTURAL DETAILS NO. 2

STRUCTURES DESIGN DETAIL SHEET (ENGLISH) (REV. 09-01-10)

ORIGINAL SCALE IN INCHES FOR REDUCED PLANS 0 1 2 3

UNIT: 3576
PROJECT NUMBER & PHASE: 07000018331
CONTRACT NO.: 07-215934

DISREGARD PRINTS BEARING EARLIER REVISION DATES

REVISION DATES 11-18-11 11-30-11

SHEET 10 OF 16

FILE => rw181-g-rwadet02.dgn

USERNAME => s109858 DATE PLOTTED => 28-MAR-2012 TIME PLOTTED => 12:50

DIST	COUNTY	ROUTE	POST MILES TOTAL PROJECT	SHEET No.	TOTAL SHEETS
07	LA	5	2.4/4.0	1057	1288

REGISTERED CIVIL ENGINEER 12-7-11 DATE

3-26-12
PLANS APPROVAL DATE

REGISTERED PROFESSIONAL ENGINEER Kevin Harper No. 42221 Exp. 3-31-12 CIVIL STATE OF CALIFORNIA

The State of California or its officers or agents shall not be responsible for the accuracy or completeness of electronic copies of this plan sheet.

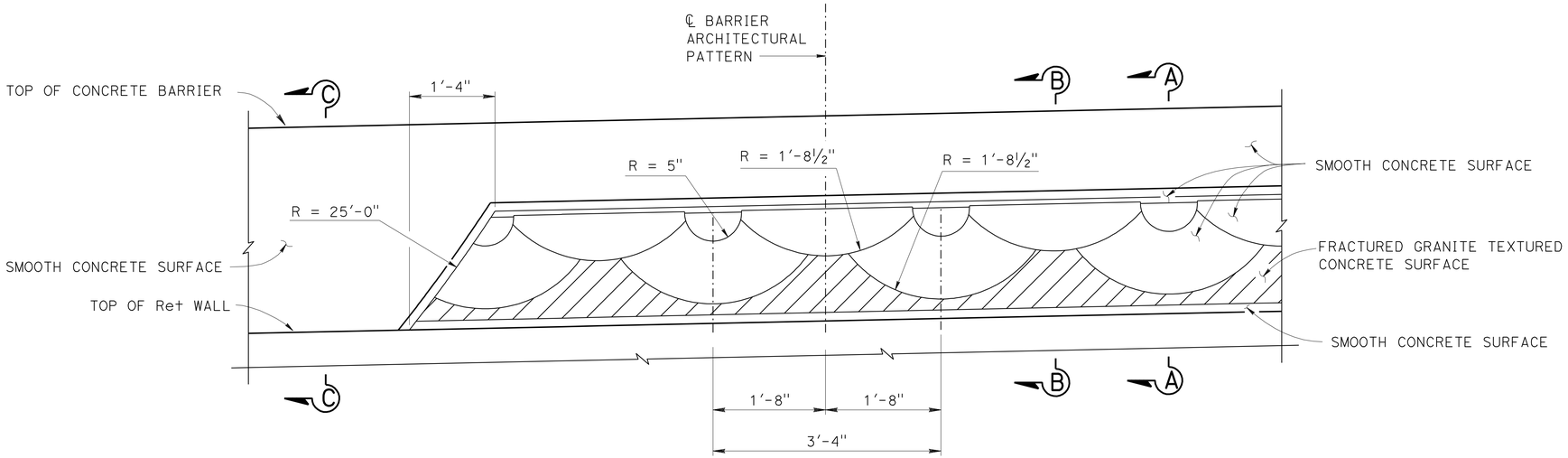

PART MIRRORED ELEVATION

1" = 1'-0"

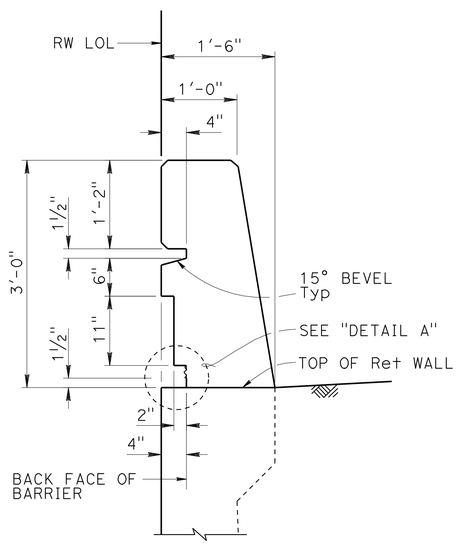

SECTION A-A

1" = 1'-0"

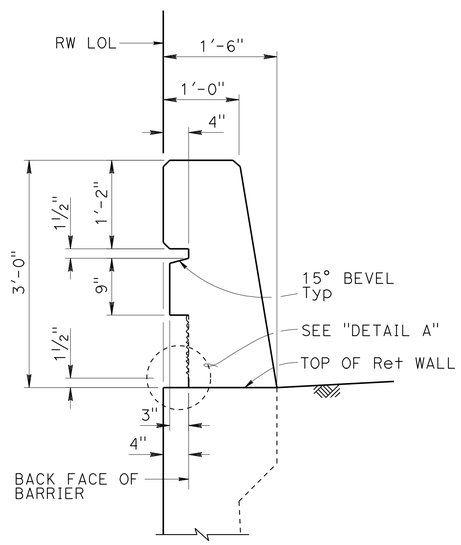

SECTION B-B

1" = 1'-0"

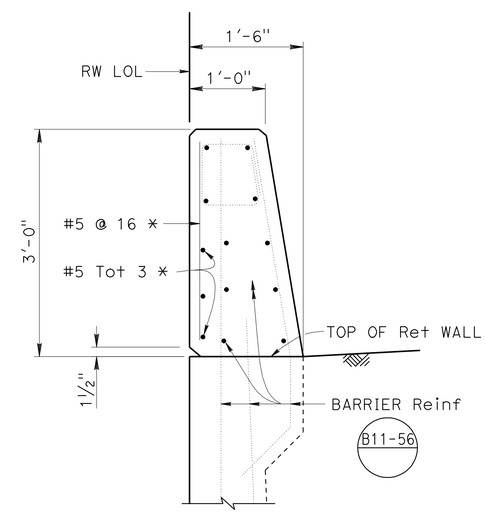

SECTION C-C

1" = 1'-0"

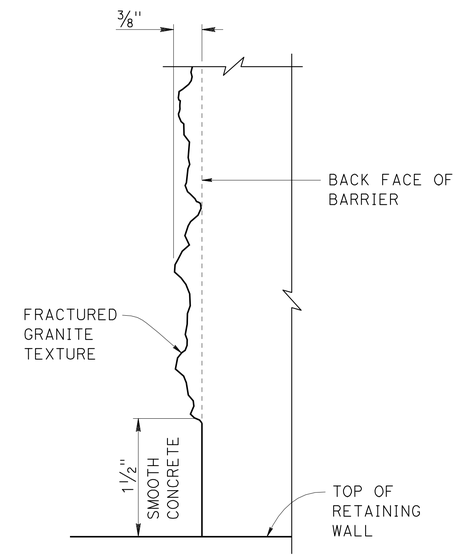

NOTE: Detail at "SECTION B-B" shown, "SECTION A-A" similar.

DETAIL A

NO SCALE

NOTES:

For barrier details not shown, see STANDARD PLAN B11-56.

* - Indicates reinforcement is additional to typical barrier reinforcement.

	BY	CHECKED
DESIGN	Isaac Tasabia	Javier Chavez
DETAILS	G. Dickerson	Daniel Sessions
QUANTITIES	Greg Thornton	Christa Siegenthaler

STATE OF CALIFORNIA
DEPARTMENT OF TRANSPORTATION

DIVISION OF ENGINEERING SERVICES
STRUCTURE DESIGN
DESIGN BRANCH 1

BRIDGE NO.
POST MILE 3.31

RETAINING WALL NO. 181
CONCRETE BARRIER TYPE 736A (Mod 1) DETAILS

STRUCTURES DESIGN DETAIL SHEET (ENGLISH) (REV. 09-01-10)

ORIGINAL SCALE IN INCHES FOR REDUCED PLANS 0 1 2 3

UNIT: 3576
PROJECT NUMBER & PHASE: 07000018331
CONTRACT NO.: 07-215934

DISREGARD PRINTS BEARING EARLIER REVISION DATES

REVISION DATES 11-10-11 11-30-11

SHEET 11 OF 16

FILE => rw181-h-barr01.dgn

USERNAME => s109858 DATE PLOTTED => 28-MAR-2012 TIME PLOTTED => 12:50

DIST	COUNTY	ROUTE	POST MILES TOTAL PROJECT	SHEET No.	TOTAL SHEETS
07	LA	5	2.4/4.0	1058	1288

GEOTECHNICAL PROFESSIONAL — DATE 06/2011

3-26-12
PLANS APPROVAL DATE

REGISTERED PROFESSIONAL ENGINEER — MICHAEL G. SMITH — No. 2229 — Exp. 3-31-2012 — GEOTECHNICAL — STATE OF CALIFORNIA

The State of California or its officers or agents shall not be responsible for the accuracy or completeness of electronic copies of this plan sheet.

BENCH MARK

PRHV 102 Elev 86.67′
FOUND PK NAIL & TIN SET BY OTHERS ON ISLAND @ THE BEGINNING OF SB 1-5 ON-RAMP AND ROSECRANS AVE PER SR 09-037-000010
NAVD 88

PRHV 103 Elev 84. 50′
FOUND CHISELED "X" ON BACK WALK @ INLET AT SE CORNER OF ROSECRANS AVE AND FIRESTONE BLVD PER SR 09-037-000010
NAVD 88

PRHV 110 Elev 78.31′
FOUND L & "LACO DPW" TAG @ NE CORNER OF FIRESTONE BLVD AND SHOEMAKER AVE, N/O 1-5
NAVD 88

PRHV 115 Elev 79.95′
FOUND PK NAIL & TIN ON TC @ SE CORNER OF SHOEMAKER AVE AND FIRESTONE BLVD, S/O 1-5
NAVD 88

Notes

1. This LOTB sheet was prepared in accordance with the Caltrans Soil & Rock Logging, Classification, and Presentation Manual (2010) except three digit sequence number in boring identification starting with the segment number per exception request approved on April 08, 2009.

2. For protection of underground utility lines, hand-auger was used to remove top 5 to 10 feet of subsurface material for exploratory borings and cone penetration testings.

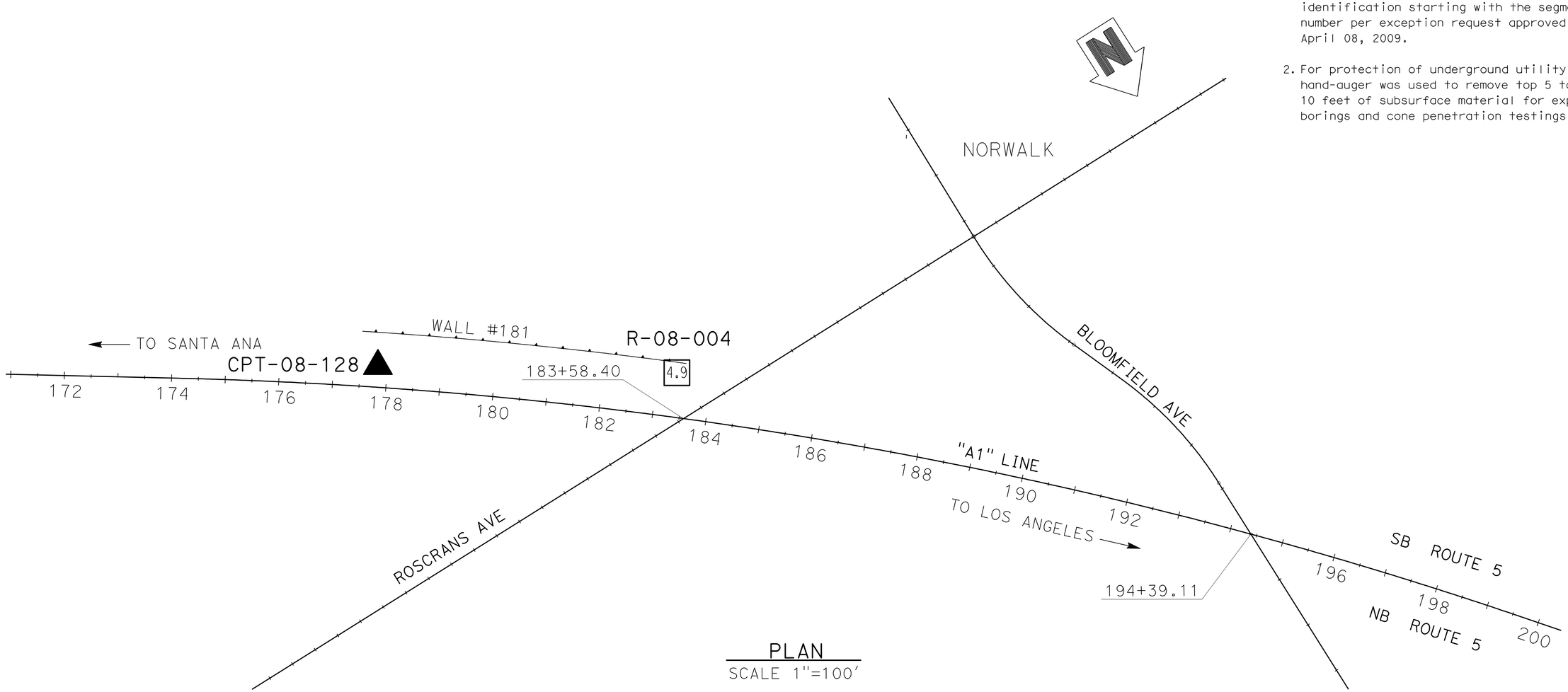

PLAN
SCALE 1"=100′

ENGINEERING SERVICES	MATERIALS AND GEOTECHNICAL SERVICES	STATE OF CALIFORNIA DEPARTMENT OF TRANSPORTATION	DIVISION OF ENGINEERING SERVICES STRUCTURE DESIGN DESIGN BRANCH 1	BRIDGE NO. X / POST MILE 3.64	RETAINING WALL NO. 181 LOG OF TEST BORINGS 1 OF 5
FUNCTIONAL SUPERVISOR NAME: M. SMITH	DRAWN BY: P.QUACH / CHECKED BY: D.ORRIS	FIELD INVESTIGATION BY: P.MCDONALD/EJ.JEON/C.CARBINO/L.ROEBUCK			

OGS CIVIL LOG OF TEST BORINGS SHEET — ORIGINAL SCALE IN INCHES FOR REDUCED PLANS 0 1 2 3

UNIT: 3576
PROJECT NUMBER & PHASE: 07000018331 — CONTRACT NO.: 07-215934

DISREGARD PRINTS BEARING EARLIER REVISION DATES → REVISION DATES 06/17/11 — SHEET 12 OF 16

FILE => rw181-z-ltb01.dgn

USERNAME => s109858 DATE PLOTTED => 28-MAR-2012 TIME PLOTTED => 12:50

DIST	COUNTY	ROUTE	POST MILES TOTAL PROJECT	SHEET No.	TOTAL SHEETS
07	LA	5	2.4/4.0	1059	1288

GEOTECHNICAL PROFESSIONAL — DATE 06/2011

3-26-12
PLANS APPROVAL DATE

REGISTERED PROFESSIONAL ENGINEER — MICHAEL G. SMITH No. 2229 Exp. 3-31-2012 GEOTECHNICAL — STATE OF CALIFORNIA

The State of California or its officers or agents shall not be responsible for the accuracy or completeness of electronic copies of this plan sheet.

Notes

1. This LOTB sheet was prepared in accordance with the Caltrans Soil & Rock Logging, Classification, and Presentation Manual (2010) except three digit sequence number in boring identification starting with the segment number per exception request approved on April 08, 2009.

2. For protection of underground utility lines, hand-auger was used to remove top 5 to 10 feet of subsurface material for exploratory borings and cone penetration testings.

FOR PLAN VIEW, SEE
"LOG OF TEST BORINGS" 1 OF 5

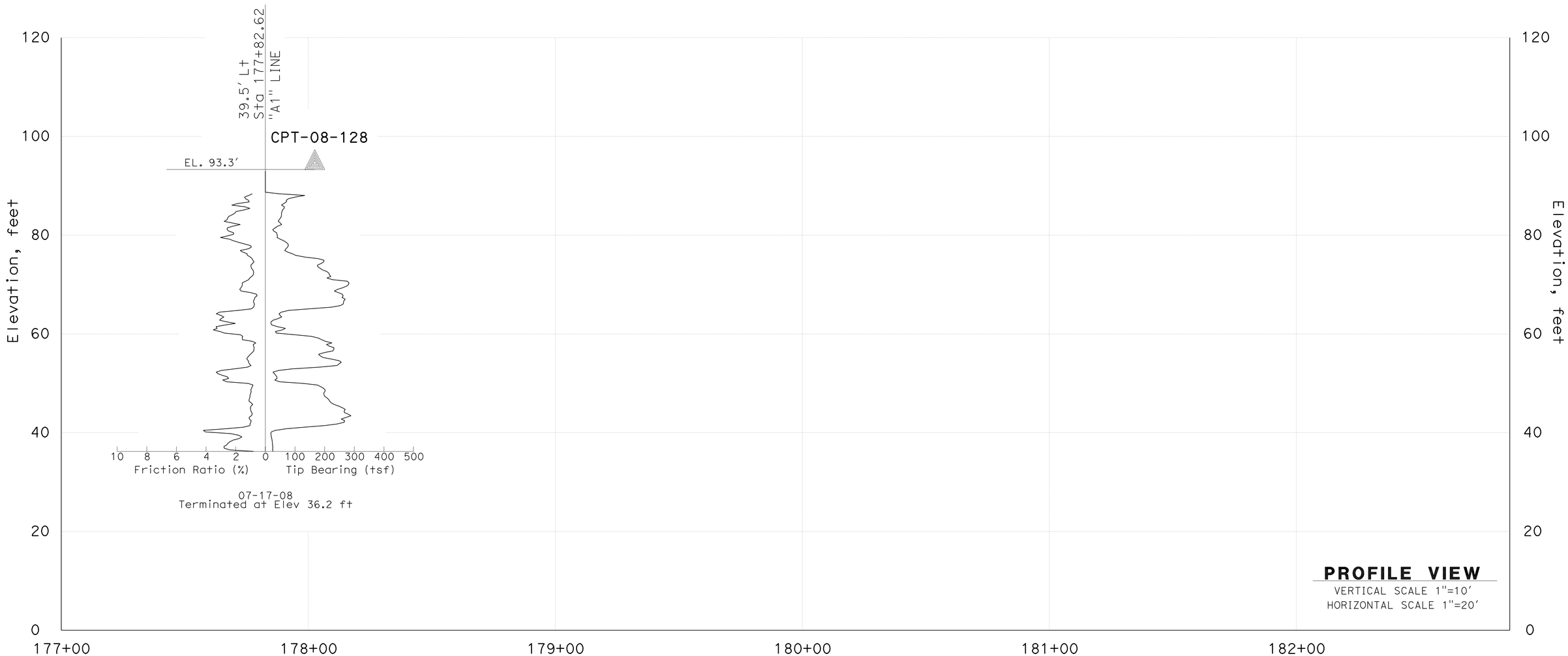

ENGINEERING SERVICES	MATERIALS AND GEOTECHNICAL SERVICES	STATE OF CALIFORNIA DEPARTMENT OF TRANSPORTATION	DIVISION OF ENGINEERING SERVICES STRUCTURE DESIGN DESIGN BRANCH 1	BRIDGE NO. X / POST MILE 3.64	RETAINING WALL NO. 181
FUNCTIONAL SUPERVISOR NAME: M. SMITH	DRAWN BY: P.QUACH / CHECKED BY: D.ORRIS	FIELD INVESTIGATION BY: P.MCDONALD/EJ.JEON/C.CARBINO/L.ROEBUCK			LOG OF TEST BORINGS 2 OF 5

OGS CIVIL LOG OF TEST BORINGS SHEET

ORIGINAL SCALE IN INCHES FOR REDUCED PLANS 0 1 2 3

UNIT: 3576
PROJECT NUMBER & PHASE: 07000018331 CONTRACT NO.: 07-215934

DISREGARD PRINTS BEARING EARLIER REVISION DATES → REVISION DATES 06/17/11

SHEET 13 OF 16

FILE => rw181-z-ltb02.dgn

USERNAME => s109858 DATE PLOTTED => 28-MAR-2012 TIME PLOTTED => 12:51

DIST	COUNTY	ROUTE	POST MILES TOTAL PROJECT	SHEET No.	TOTAL SHEETS
07	LA	5	2.4/4.0	1060	1288

GEOTECHNICAL PROFESSIONAL — DATE 06/2011

3-26-12
PLANS APPROVAL DATE

REGISTERED PROFESSIONAL ENGINEER — MICHAEL G. SMITH — No. 2229 — Exp. 3-31-2012 — GEOTECHNICAL — STATE OF CALIFORNIA

The State of California or its officers or agents shall not be responsible for the accuracy or completeness of electronic copies of this plan sheet.

FOR PLAN VIEW, SEE
"LOG OF TEST BORINGS" 1 OF 5

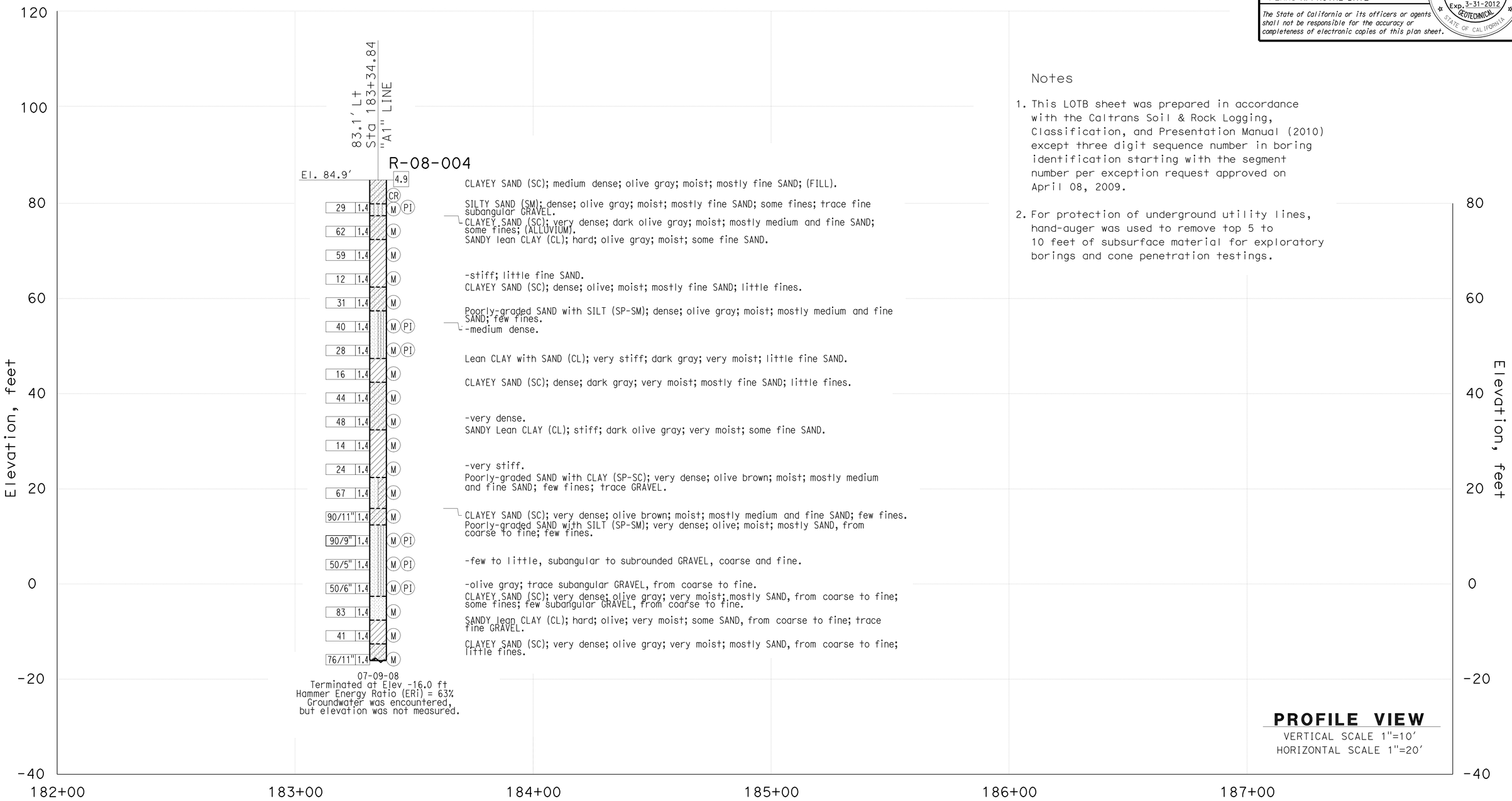

Notes

1. This LOTB sheet was prepared in accordance with the Caltrans Soil & Rock Logging, Classification, and Presentation Manual (2010) except three digit sequence number in boring identification starting with the segment number per exception request approved on April 08, 2009.

2. For protection of underground utility lines, hand-auger was used to remove top 5 to 10 feet of subsurface material for exploratory borings and cone penetration testings.

ENGINEERING SERVICES	MATERIALS AND GEOTECHNICAL SERVICES	STATE OF CALIFORNIA DEPARTMENT OF TRANSPORTATION	DIVISION OF ENGINEERING SERVICES STRUCTURE DESIGN DESIGN BRANCH 1	BRIDGE NO. X / POST MILE 3.64	RETAINING WALL NO. 181
FUNCTIONAL SUPERVISOR	DRAWN BY: P.QUACH	FIELD INVESTIGATION BY: P.MCDONALD/EJ.JEON/C.CARBINO/L.ROEBUCK			LOG OF TEST BORINGS 3 OF 5
NAME: M. SMITH	CHECKED BY: D.ORRIS				

OGS CIVIL LOG OF TEST BORINGS SHEET

ORIGINAL SCALE IN INCHES FOR REDUCED PLANS 0 1 2 3

UNIT: 3576
PROJECT NUMBER & PHASE: 07000018331 CONTRACT NO.: 07-215934

DISREGARD PRINTS BEARING EARLIER REVISION DATES → 06/17/11

REVISION DATES | SHEET 14 | OF 16

FILE => rw181-z-lltb03.dgn

USERNAME => s109858 DATE PLOTTED => 28-MAR-2012 TIME PLOTTED => 12:51

DIST	COUNTY	ROUTE	POST MILES TOTAL PROJECT	SHEET No.	TOTAL SHEETS
07	LA	5	2.4/4.0	1061	1288

GEOTECHNICAL PROFESSIONAL — DATE 06/2011

3-26-12
PLANS APPROVAL DATE

REGISTERED PROFESSIONAL ENGINEER — MICHAEL G. SMITH No. 2229 Exp. 3-31-2012 GEOTECHNICAL — STATE OF CALIFORNIA

The State of California or its officers or agents shall not be responsible for the accuracy or completeness of electronic copies of this plan sheet.

REFERENCE: CALTRANS SOIL & ROCK LOGGING, CLASSIFICATION, AND PRESENTATION MANUAL (2010)

CEMENTATION

Description	Criteria
Weak	Crumbles or breaks with handling or little finger pressure.
Moderate	Crumbles or breaks with considerable finger pressure.
Strong	Will not crumble or break with finger pressure.

BOREHOLE IDENTIFICATION

Symbol	Hole Type	Description
Size	A	Auger Boring (hollow or solid stem bucket)
Size	R RW RC P	Rotary drilled boring (conventional) Rotary drilled with self-casing wire-line Rotary core with continuously-sampled, self-casing wire-line Rotary percussion boring (air)
Size	R	Rotary drilled diamond core
Size	HD HA	Hand driven (1-inch soil tube) Hand Auger
●	D	Dynamic Cone Penetration Boring
▲	CPT	Cone Penetration Test (ASTM D 5778)
⬚	O	Other (note on LOTB)

Note: Size in inches.

CONSISTENCY OF COHESIVE SOILS

Description	Shear Strength (tsf)	Pocket Penetrometer Measurement, PP, (tsf)	Torvane Measurement, TV, (tsf)	Vane Shear Measurement, VS, (tsf)
Very Soft	Less than 0.12	Less than 0.25	Less than 0.12	Less than 0.12
Soft	0.12 - 0.25	0.25 - 0.5	0.12 - 0.25	0.12 - 0.25
Medium Stiff	0.25 - 0.5	0.5 - 1	0.25 - 0.5	0.25 - 0.5
Stiff	0.5 - 1	1 - 2	0.5 - 1	0.5 - 1
Very Stiff	1 - 2	2 - 4	1 - 2	1 - 2
Hard	Greater than 2	Greater than 4	Greater than 2	Greater than 2

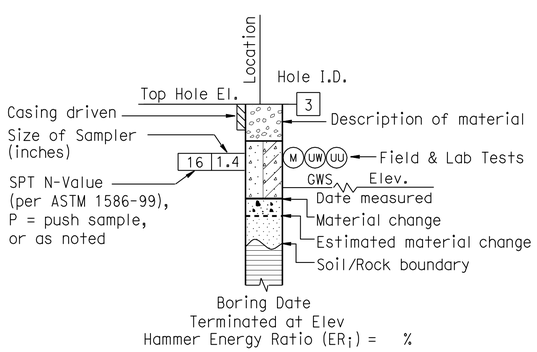

ROTARY BORING

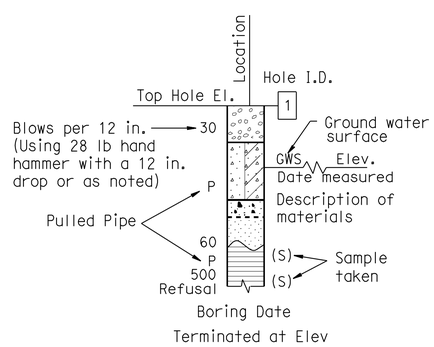

HAND BORING

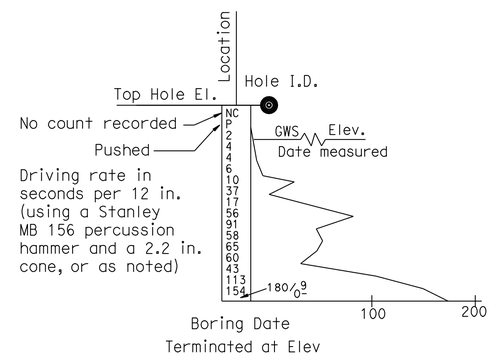

DYNAMIC CONE PENETRATION BORING

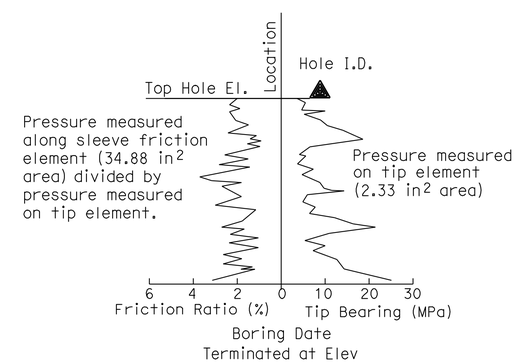

CONE PENETRATION TEST (CPT) BORING

ENGINEERING SERVICES	MATERIALS AND GEOTECHNICAL SERVICES	STATE OF CALIFORNIA DEPARTMENT OF TRANSPORTATION	DIVISION OF ENGINEERING SERVICES STRUCTURE DESIGN DESIGN BRANCH 1	BRIDGE NO. X / POST MILE 3.64	RETAINING WALL NO. 181
FUNCTIONAL SUPERVISOR NAME: M. SMITH	DRAWN BY: P.QUACH CHECKED BY: D.ORRIS	FIELD INVESTIGATION BY: P.MCDONALD/EJ.JEON/C.CARBINO/L.ROEBUCK			LOG OF TEST BORINGS 4 OF 5

OGS CIVIL LOG OF TEST BORINGS SHEET

ORIGINAL SCALE IN INCHES FOR REDUCED PLANS 0 1 2 3

UNIT: 3576
PROJECT NUMBER & PHASE: 07000018331 CONTRACT NO.: 07-215934

DISREGARD PRINTS BEARING EARLIER REVISION DATES → REVISION DATES 06/17/11

SHEET 15 OF 16

FILE => rw181-z-ltb04.dgn

USERNAME => s109858 DATE PLOTTED => 28-MAR-2012 TIME PLOTTED => 12:51

REFERENCE: CALTRANS SOIL & ROCK LOGGING, CLASSIFICATION, AND PRESENTATION MANUAL (2010)

DIST	COUNTY	ROUTE	POST MILES TOTAL PROJECT	SHEET No.	TOTAL SHEETS
07	LA	5	2.4/4.0	1062	1288

GEOTECHNICAL PROFESSIONAL — 06/2011 DATE

3-26-12
PLANS APPROVAL DATE

REGISTERED PROFESSIONAL ENGINEER — MICHAEL G. SMITH No. 2229 Exp. 3-31-2012 GEOTECHNICAL — STATE OF CALIFORNIA

The State of California or its officers or agents shall not be responsible for the accuracy or completeness of electronic copies of this plan sheet.

GROUP SYMBOLS AND NAMES

Graphic/Symbol	Group Names
GW	Well-graded GRAVEL Well-graded GRAVEL with SAND
GP	Poorly-graded GRAVEL Poorly-graded GRAVEL with SAND
GW-GM	Well-graded GRAVEL with SILT Well-graded GRAVEL with SILT and SAND
GW-GC	Well-graded GRAVEL with CLAY (or SILTY CLAY) Well-graded GRAVEL with CLAY and SAND (or SILTY CLAY and SAND)
GP-GM	Poorly-graded GRAVEL with SILT Poorly-graded GRAVEL with SILT and SAND
GP-GC	Poorly-graded GRAVEL with CLAY (or SILTY CLAY) Poorly-graded GRAVEL with CLAY and SAND (or SILTY CLAY and SAND)
GM	SILTY GRAVEL SILTY GRAVEL with SAND
GC	CLAYEY GRAVEL CLAYEY GRAVEL with SAND
GC-GM	SILTY, CLAYEY GRAVEL SILTY, CLAYEY GRAVEL with SAND
SW	Well-graded SAND Well-graded SAND with GRAVEL
SP	Poorly-graded SAND Poorly-graded SAND with GRAVEL
SW-SM	Well-graded SAND with SILT Well-graded SAND with SILT and GRAVEL
SW-SC	Well-graded SAND with CLAY (or SILTY CLAY) Well-graded SAND with CLAY and GRAVEL (or SILTY CLAY and GRAVEL)
SP-SM	Poorly-graded SAND with SILT Poorly-graded SAND with SILT and GRAVEL
SP-SC	Poorly-graded SAND with CLAY (or SILTY CLAY) Poorly-graded SAND with CLAY and GRAVEL (or SILTY CLAY and GRAVEL)
SM	SILTY SAND SILTY SAND with GRAVEL
SC	CLAYEY SAND CLAYEY SAND with GRAVEL
SC-SM	SILTY, CLAYEY SAND SILTY, CLAYEY SAND with GRAVEL
PT	PEAT
	COBBLES COBBLES and BOULDERS BOULDERS

Graphic/Symbol	Group Names
CL	Lean CLAY Lean CLAY with SAND Lean CLAY with GRAVEL SANDY lean CLAY SANDY lean CLAY with GRAVEL GRAVELLY lean CLAY GRAVELLY lean CLAY with SAND
CL-ML	SILTY CLAY SILTY CLAY with SAND SILTY CLAY with GRAVEL SANDY SILTY CLAY SANDY SILTY CLAY with GRAVEL GRAVELLY SILTY CLAY GRAVELLY SILTY CLAY with SAND
ML	SILT SILT with SAND SILT with GRAVEL SANDY SILT SANDY SILT with GRAVEL GRAVELLY SILT GRAVELLY SILT with SAND
OL	ORGANIC lean CLAY ORGANIC lean CLAY with SAND ORGANIC lean CLAY with GRAVEL SANDY ORGANIC lean CLAY SANDY ORGANIC lean CLAY with GRAVEL GRAVELLY ORGANIC lean CLAY GRAVELLY ORGANIC lean CLAY with SAND
OL	ORGANIC SILT ORGANIC SILT with SAND ORGANIC SILT with GRAVEL SANDY ORGANIC SILT SANDY ORGANIC SILT with GRAVEL GRAVELLY ORGANIC SILT GRAVELLY ORGANIC SILT with SAND
CH	Fat CLAY Fat CLAY with SAND Fat CLAY with GRAVEL SANDY fat CLAY SANDY fat CLAY with GRAVEL GRAVELLY fat CLAY GRAVELLY fat CLAY with SAND
MH	Elastic SILT Elastic SILT with SAND Elastic SILT with GRAVEL SANDY elastic SILT SANDY elastic SILT with GRAVEL GRAVELLY elastic SILT GRAVELLY elastic SILT with SAND
OH	ORGANIC fat CLAY ORGANIC fat CLAY with SAND ORGANIC fat CLAY with GRAVEL SANDY ORGANIC fat CLAY SANDY ORGANIC fat CLAY with GRAVEL GRAVELLY ORGANIC fat CLAY GRAVELLY ORGANIC fat CLAY with SAND
OH	ORGANIC elastic SILT ORGANIC elastic SILT with SAND ORGANIC elastic SILT with GRAVEL SANDY ORGANIC elastic SILT SANDY ORGANIC elastic SILT with GRAVEL GRAVELLY ORGANIC elastic SILT GRAVELLY ORGANIC elastic SILT with SAND
OL/OH	ORGANIC SOIL ORGANIC SOIL with SAND ORGANIC SOIL with GRAVEL SANDY ORGANIC SOIL SANDY ORGANIC SOIL with GRAVEL GRAVELLY ORGANIC SOIL GRAVELLY ORGANIC SOIL with SAND

FIELD AND LABORATORY TESTING

- (C) Consolidation (ASTM D 2435)
- (CL) Collapse Potential (ASTM D 5333)
- (CP) Compaction Curve (CTM 216)
- (CR) Corrosivity Testing (CTM 643, CTM 422, CTM 417)
- (CU) Consolidated Undrained Triaxial (ASTM D 4767)
- (DS) Direct Shear (ASTM D 3080)
- (EI) Expansion Index (ASTM D 4829)
- (M) Moisture Content (ASTM D 2216)
- (OC) Organic Content-% (ASTM D 2974)
- (P) Permeability (CTM 220)
- (PA) Particle Size Analysis (ASTM D 422)
- (PI) Plasticity Index (AASHTO T 90) Liquid Limit (AASHTO T 89)
- (PL) Point Load Index (ASTM D 5731)
- (PM) Pressure Meter
- (R) R-Value (CTM 301)
- (SE) Sand Equivalent (CTM 217)
- (SG) Specific Gravity (AASHTO T 100)
- (SL) Shrinkage Limit (ASTM D 427)
- (SW) Swell Potential (ASTM D 4546)
- (UC) Unconfined Compression-Soil (ASTM D 2166) Unconfined Compression-Rock (ASTM D 2938)
- (UU) Unconsolidated Undrained Triaxial (ASTM D 2850)
- (UW) Unit Weight (ASTM D 4767)

APPARENT DENSITY OF COHESIONLESS SOILS

Description	SPT N_{60} (Blows / 12 in.)
Very Loose	0 - 5
Loose	5 - 10
Medium Dense	10 - 30
Dense	30 - 50
Very Dense	Greater than 50

MOISTURE

Description	Criteria
Dry	No discernable moisture
Moist	Moisture present, but no free water
Wet	Visible free water

PERCENT OR PROPORTION OF SOILS

Description	Criteria
Trace	Particles are present but estimated to be less than 5%
Few	5% - 10%
Little	15% - 25%
Some	30% - 45%
Mostly	50% - 100%

PARTICLE SIZE

Description		Size (in.)
Boulder		Greater than 12
Cobble		3 - 12
Gravel	Coarse	3/4 - 3
	Fine	1/5 - 3/4
Sand	Coarse	1/16 - 1/5
	Medium	1/64 - 1/16
	Fine	1/300 - 1/64
Silt and Clay		Less than 1/300

ENGINEERING SERVICES	MATERIALS AND GEOTECHNICAL SERVICES	STATE OF CALIFORNIA DEPARTMENT OF TRANSPORTATION	DIVISION OF ENGINEERING SERVICES STRUCTURE DESIGN DESIGN BRANCH 1	BRIDGE NO. X / POST MILE 3.64	RETAINING WALL NO. 181
FUNCTIONAL SUPERVISOR NAME: M. SMITH	DRAWN BY: P.QUACH CHECKED BY: D.ORRIS	FIELD INVESTIGATION BY: P.MCDONALD/EJ.JEON/C.CARBINO/L.ROEBUCK			LOG OF TEST BORINGS 5 OF 5

OGS CIVIL LOG OF TEST BORINGS SHEET

ORIGINAL SCALE IN INCHES FOR REDUCED PLANS 0 1 2 3

UNIT: 3576
PROJECT NUMBER & PHASE: 07000018331 CONTRACT NO.: 07-215934

DISREGARD PRINTS BEARING EARLIER REVISION DATES → REVISION DATES 06/17/11

SHEET 16 OF 16

FILE => rw181-z-ltb05.dgn

USERNAME => s109838 DATE PLOTTED => 28-MAR-2012 TIME PLOTTED => 12:51

DIST	COUNTY	ROUTE	POST MILES TOTAL PROJECT	SHEET No.	TOTAL SHEETS
07	LA	5	2.4/4.0	1063	1288

REGISTERED CIVIL ENGINEER 12-7-11 DATE

3-26-12
PLANS APPROVAL DATE

REGISTERED PROFESSIONAL ENGINEER Kevin Harper No. 42221 Exp. 3-31-12 CIVIL STATE OF CALIFORNIA

The State of California or its officers or agents shall not be responsible for the accuracy or completeness of electronic copies of this plan sheet.

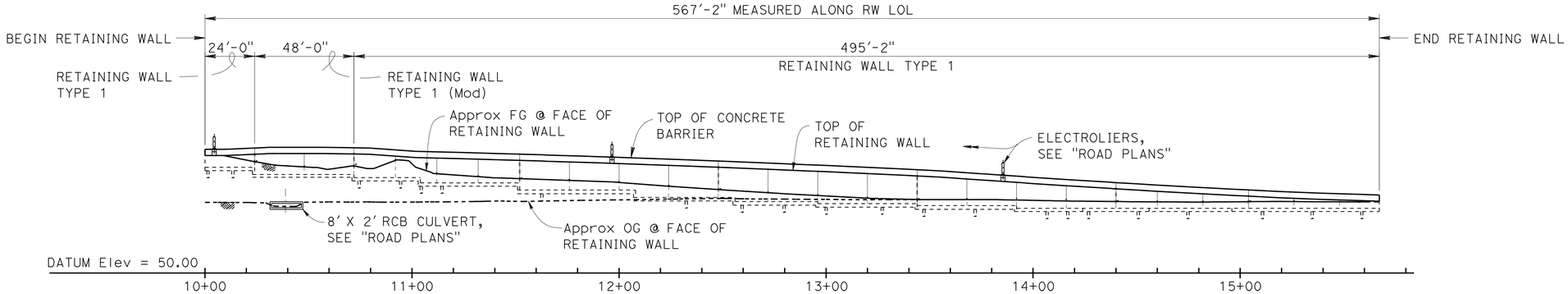

DEVELOPED MIRRORED ELEVATION

1" = 30'

NOTES:

1. For Design Notes, see STANDARD PLAN B3-8.
2. All piles are not shown in "DEVELOPED MIRRORED ELEVATION".

Ⓐ Angle point @ BC: Subtangent Brg = S67°08'08"E
Ⓑ Angle point @ EC: Subtangent Brg = N64°13'19"W
Ⓒ Angle point @ BC: Subtangent Brg = S62°55'11"E
Ⓓ Angle point @ EC: Subtangent Brg = N40°20'04"W

QUANTITIES

STRUCTURE EXCAVATION (RETAINING WALL)	1,145	CY
STRUCTURE BACKFILL (RETAINING WALL)	1,130	CY
PERVIOUS BACKFILL MATERIAL (RETAINING WALL)	92	CY
FURNISH PILING (CLASS 90)	3,389	LF
DRIVE PILE (CLASS 90)	93	EA
STRUCTURAL CONCRETE, RETAINING WALL	550	CY
ARCHITECTURAL TREATMENT (SPLIT SLATE - FRACTURED RIB)	3,590	SQFT
BAR REINFORCING STEEL (RETAINING WALL)	73,500	LB
CONCRETE BARRIER (TYPE 736A MODIFIED 1)	567	LF

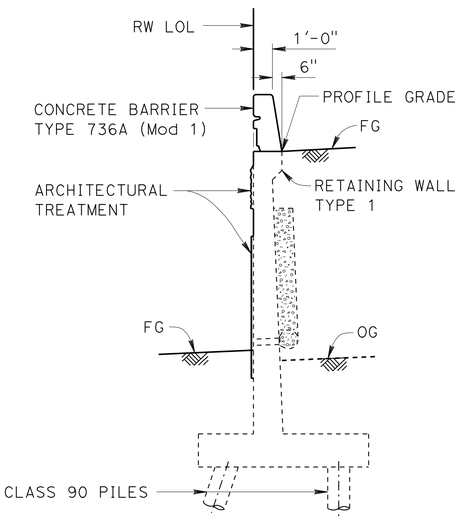

TYPICAL SECTION

¼" = 1'-0"

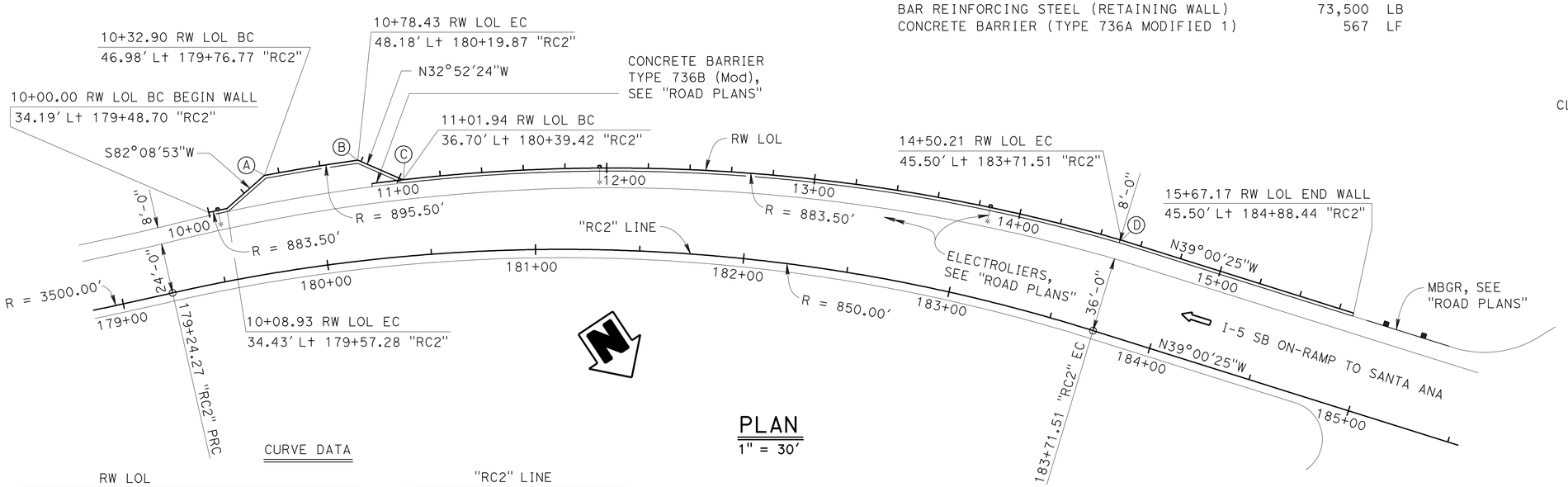

PLAN

1" = 30'

CURVE DATA

RW LOL		
R = 883.50	R = 895.50	R = 883.50
D = 0°34'46"	D = 2°54'49"	D = 22°35'07"
T = 4.47	T = 22.77	T = 176.42
L = 8.93	L = 45.54	L = 348.27

"RC2" LINE	
R = 3500.00	R = 850.00
D = 7°53'11"	D = 30°08'49"
T = 241.25	T = 228.93
L = 481.74	L = 447.24

Jeff Sims
DESIGN ENGINEER

	BY	CHECKED			
DESIGN	Daniel Sessions	Christa Siegenthaler	LOAD FACTOR DESIGN		
DETAILS	Jie Tang	Christa Siegenthaler	LAYOUT	Daniel Sessions	Christa Siegenthaler
QUANTITIES	Rizia Da Cruz Ferreira	Eric Watson	SPECIFICATIONS	Theresa Nedwick	PLANS AND SPECS COMPARED Theresa Nedwick

ORIGINAL SCALE IN INCHES FOR REDUCED PLANS 0 1 2 3

STATE OF CALIFORNIA
DEPARTMENT OF TRANSPORTATION

DIVISION OF ENGINEERING SERVICES
STRUCTURE DESIGN
DESIGN BRANCH 1

BRIDGE NO. X
POST MILE 3.17

RETAINING WALL NO. 183
GENERAL PLAN

UNIT: 3576
PROJECT NUMBER & PHASE: 07000018331
CONTRACT NO.: 07-215934

DISREGARD PRINTS BEARING EARLIER REVISION DATES

REVISION DATES 10/13/11 10/26/11 11/22/11 11/23/11

SHEET 1 OF 13

STRUCTURES DESIGN GENERAL PLAN SHEET (ENGLISH) (REV.09-01-10)

FILE => rw183-a-gp.dgn

USERNAME => s128843 DATE PLOTTED => 28-MAR-2012 TIME PLOTTED => 11:14

DIST	COUNTY	ROUTE	POST MILES TOTAL PROJECT	SHEET No.	TOTAL SHEETS
07	LA	5	2.4/4.0	1064	1288

REGISTERED CIVIL ENGINEER 12-7-11 DATE

3-26-12
PLANS APPROVAL DATE

REGISTERED PROFESSIONAL ENGINEER Kevin Harper No. 42221 Exp. 3-31-12 CIVIL STATE OF CALIFORNIA

The State of California or its officers or agents shall not be responsible for the accuracy or completeness of electronic copies of this plan sheet.

INDEX TO PLANS

SHEET NO.	TITLE
1.	GENERAL PLAN
2.	INDEX TO PLANS
3.	STRUCTURE PLAN NO. 1
4.	STRUCTURE PLAN NO. 2
5.	FOUNDATION PLAN
6.	ELECTROLIER PEDESTAL DETAILS
7.	RETAINING WALL ARCHITECTURAL TREATMENT
8.	RETAINING WALL ARCHITECTURAL DETAILS
9.	CONCRETE BARRIER TYPE 736A (Mod 1) DETAILS
10.	LOG OF TEST BORINGS 1 OF 4
11.	LOG OF TEST BORINGS 2 OF 4
12.	LOG OF TEST BORINGS 3 OF 4
13.	LOG OF TEST BORINGS 4 OF 4

STANDARD PLANS DATED MAY 2006

A10A	ACRONYMS AND ABBREVIATIONS (SHEET 1 OF 2)
A10B	ACRONYMS AND ABBREVIATIONS (SHEET 2 OF 2)
A10C	SYMBOLS (SHEET 1 OF 2)
A10D	SYMBOLS (SHEET 2 OF 2)
A62B	LIMITS OF PAYMENT FOR EXCAVATION AND BACKFILL BRIDGE SURCHARGE AND WALL
B0-3	BRIDGE DETAILS
B2-5	PILE DETAILS CLASS 90 AND CLASS 140
B3-1	RETAINING WALL TYPE 1 H = 4′ THROUGH 30′
B3-8	RETAINING WALL DETAILS No. 1
B11-56	CONCRETE BARRIER TYPE 736
ES-6B	ELECTRICAL SYSTEMS (LIGHTING STANDARD TYPES 15 AND 21 BARRIER RAIL MOUNTED DETAILS)

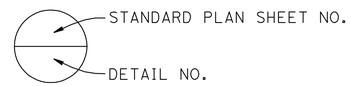

SPREAD FOOTING DATA TABLE

LOCATION	WORKING STRESS DESIGN (WSD)	
	GROSS MAXIMUM BEARING STRESS (ksf)	ALLOWABLE GROSS BEARING CAPACITY (ksf)
H = 10′	1.5	1.5

PILE DATA TABLE

LOCATION	PILE TYPE	NOMINAL RESISTANCE (KIP)		SPECIFIED TIP ELEVATION	NOMINAL DRIVING RESISTANCE (KIPS)
		COMPRESSION	TENSION		
Ret WALL TYPE 1 RW LOL 10+00 TO 10+23	CLASS 90	180	0	64.4	180
Ret WALL TYPE 1 RW LOL 10+71 TO 11+03	CLASS 90	180	0	59.4	180
Ret WALL TYPE 1 RW LOL 11+03 to 11+51	CLASS 90	180	0	56.9	180
Ret WALL TYPE 1 RW LOL 11+51 to 12+07	CLASS 90	180	0	53.3	180
Ret WALL TYPE 1 RW LOL 12+07 to 12+55	CLASS 90	180	0	49.8	180
Ret WALL TYPE 1 RW LOL 12+55 to 12+95	CLASS 90	180	0	47.8	180
Ret WALL TYPE 1 RW LOL 12+95 to 13+43	CLASS 90	180	0	46.8	180
Ret WALL TYPE 1 RW LOL 13+43 to 13+91	CLASS 90	180	0	45.8	180
Ret WALL TYPE 1 RW LOL 13+91 to 15+67.17	CLASS 90	180	0	44.7	180

NOTES:

1. Class 90 Alternative "X" Piles shall have a dimension "T" not less than 14 inches.
2. All Design tips are controlled by compression.

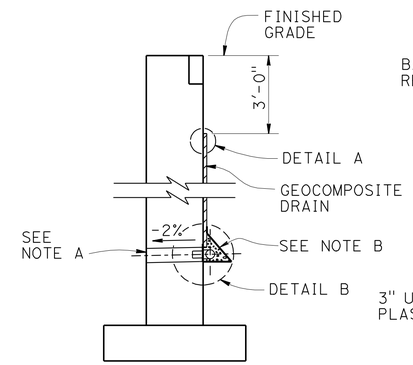

WALL SECTION

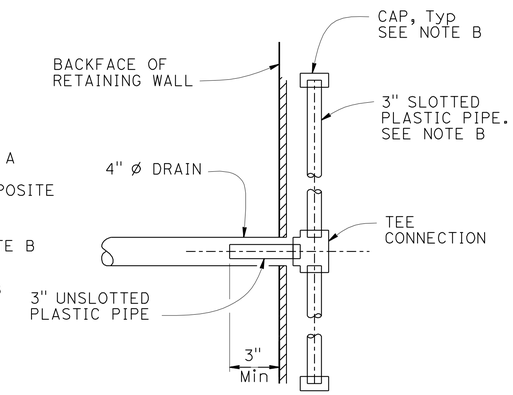

SECTION A-A

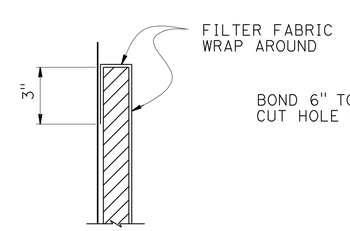

DETAIL A

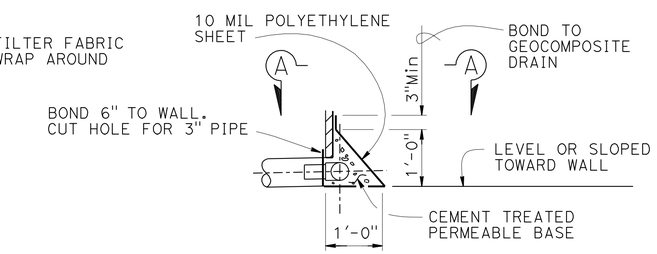

DETAIL B

WEEP HOLE AND GEOCOMPOSITE DRAIN

ALTERNATIVE TO BRIDGE DETAIL (B0-3 / 3-1)

NOTES:

A. 4" ø drains at 25′ max center to center.
For walls adjacent to sidewalks or curbs, provide 4" cast iron or asbestos cement pipe under the sidewalk to discharge through curb face.
Exposed wall drains shall be located 3"± above finished grade.

B. Geocomposite drain, cement treated permeable base, and 3"ø slotted plastic pipe continuous behind retaining wall. Cap ends of pipe. Provide "Tee" connection at each 4" ø drain.

	BY	CHECKED
DESIGN	Daniel Sessions	Christa Siegenthaler
DETAILS	Jie Tang	Christa Siegenthaler
QUANTITIES	Rizia Da Cruz Ferreira	Eric Watson

STATE OF CALIFORNIA
DEPARTMENT OF TRANSPORTATION

DIVISION OF ENGINEERING SERVICES
STRUCTURE DESIGN
DESIGN BRANCH 1

BRIDGE NO. X
POST MILE 3.17

RETAINING WALL NO. 183
INDEX TO PLANS

STRUCTURES DESIGN DETAIL SHEET (ENGLISH) (REV. 09-01-10)

ORIGINAL SCALE IN INCHES FOR REDUCED PLANS 0 1 2 3

UNIT: 3576
PROJECT NUMBER & PHASE: 0700001833-1
CONTRACT NO.: 07-215934

DISREGARD PRINTS BEARING EARLIER REVISION DATES

REVISION DATES 10/18/11 10/24/11 11/22/11

SHEET 2 OF 13

FILE => rw183-a-ltp.dgn

USERNAME => s128843 DATE PLOTTED => 28-MAR-2012 TIME PLOTTED => 11:14

DIST	COUNTY	ROUTE	POST MILES TOTAL PROJECT	SHEET No.	TOTAL SHEETS
07	LA	5	2.4/4.0	1065	1288

REGISTERED CIVIL ENGINEER 12-7-11 DATE

3-26-12
PLANS APPROVAL DATE

REGISTERED PROFESSIONAL ENGINEER Kevin Harper No. 42221 Exp. 3-31-12 CIVIL STATE OF CALIFORNIA

The State of California or its officers or agents shall not be responsible for the accuracy or completeness of electronic copies of this plan sheet.

NOTES:

1. For barrier details, see "CONCRETE BARRIER TYPE 736A (Mod 1) DETAILS" sheet.
2. Retaining wall expansion joints, weakened planes, and weep holes shall be placed per B0-3/3-3.
3. All longitudinal dimensions are measured along the RW LOL.
4. Not all piles shown in "DEVELOPED MIRRORED ELEVATION".
5. For "WEEP HOLE AND GEOCOMPOSITE DRAIN" alternative, see "INDEX TO PLANS" sheet.

LEGEND:

- Indicates Vertical Class 90 Pile
- Indicates 1:3 Battered Class 90 Pile

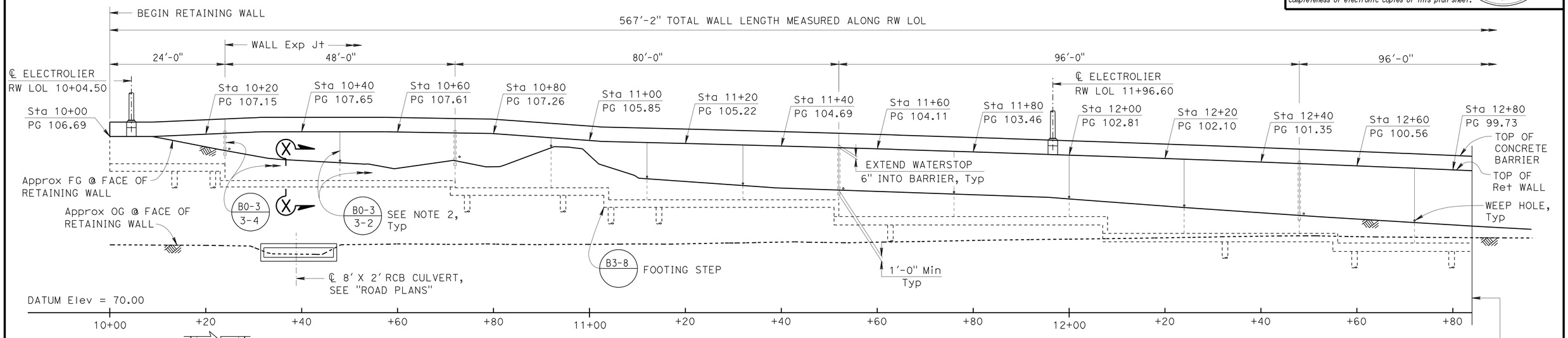

DEVELOPED MIRRORED ELEVATION (B3-1)

1" = 10'

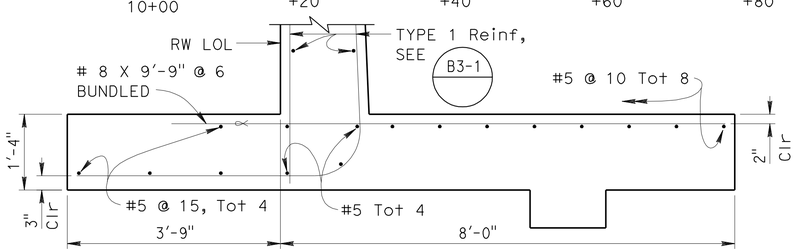

SECTION X-X

¾" = 1'-0"

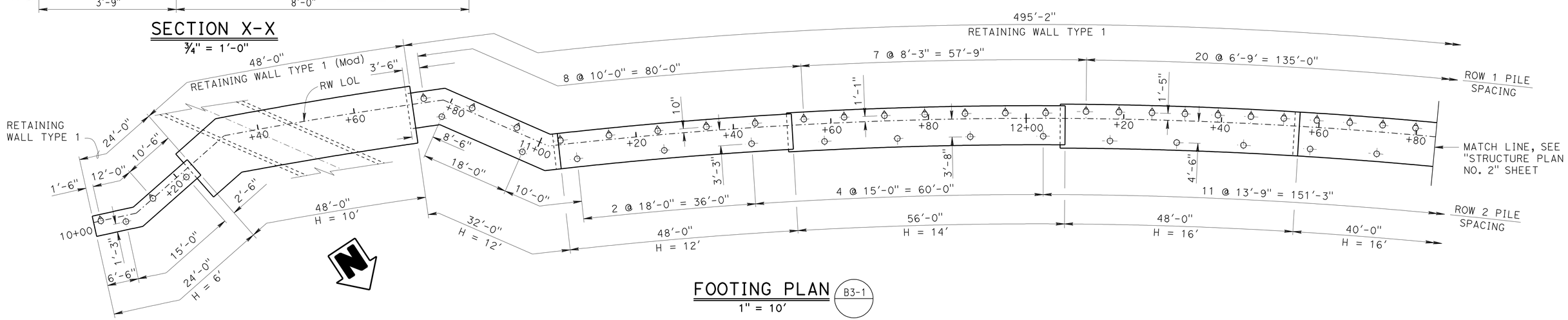

FOOTING PLAN (B3-1)

1" = 10'

DESIGN	BY Daniel Sessions	CHECKED Christa Siegenthaler	
DETAILS	BY Jie Tang	CHECKED Christa Siegenthaler	
QUANTITIES	BY Rizia Da Cruz Ferreira	CHECKED Eric Watson	

STATE OF CALIFORNIA DEPARTMENT OF TRANSPORTATION

DIVISION OF ENGINEERING SERVICES STRUCTURE DESIGN DESIGN BRANCH 1

BRIDGE NO. X

POST MILE 3.17

RETAINING WALL NO. 183

STRUCTURE PLAN NO. 1

STRUCTURES DESIGN DETAIL SHEET (ENGLISH) (REV. 09-01-10)

ORIGINAL SCALE IN INCHES FOR REDUCED PLANS 0 1 2 3

UNIT: 3576

PROJECT NUMBER & PHASE: 07000018331

CONTRACT NO.: 07-215934

DISREGARD PRINTS BEARING EARLIER REVISION DATES

REVISION DATES 10/14/11 10/28/11 11/22/11 11/23/11

SHEET 3 OF 13

FILE => rw183-c-sp01.dgn

USERNAME => s128843 DATE PLOTTED => 28-MAR-2012 TIME PLOTTED => 11:14

DIST	COUNTY	ROUTE	POST MILES TOTAL PROJECT	SHEET No.	TOTAL SHEETS
07	LA	5	2.4/4.0	1066	1288

REGISTERED CIVIL ENGINEER — DATE 12-7-11

PLANS APPROVAL DATE 3-26-12

REGISTERED PROFESSIONAL ENGINEER — Kevin Harper — No. 42221 — Exp. 3-31-12 — CIVIL — STATE OF CALIFORNIA

The State of California or its officers or agents shall not be responsible for the accuracy or completeness of electronic copies of this plan sheet.

For "NOTES", see "STRUCTURE PLAN NO. 1" sheet.

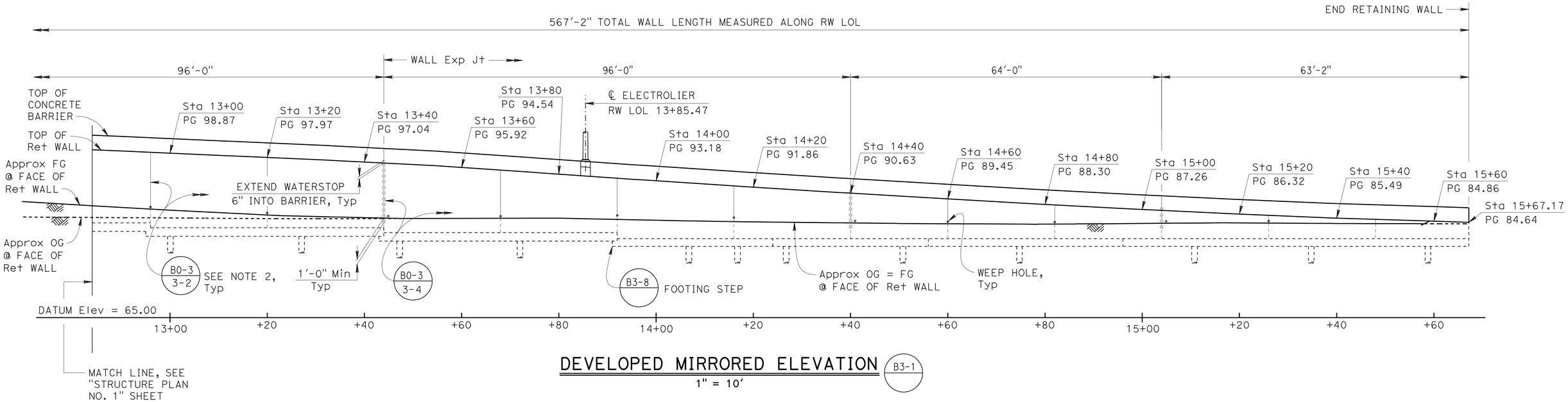

DEVELOPED MIRRORED ELEVATION (B3-1)

1" = 10'

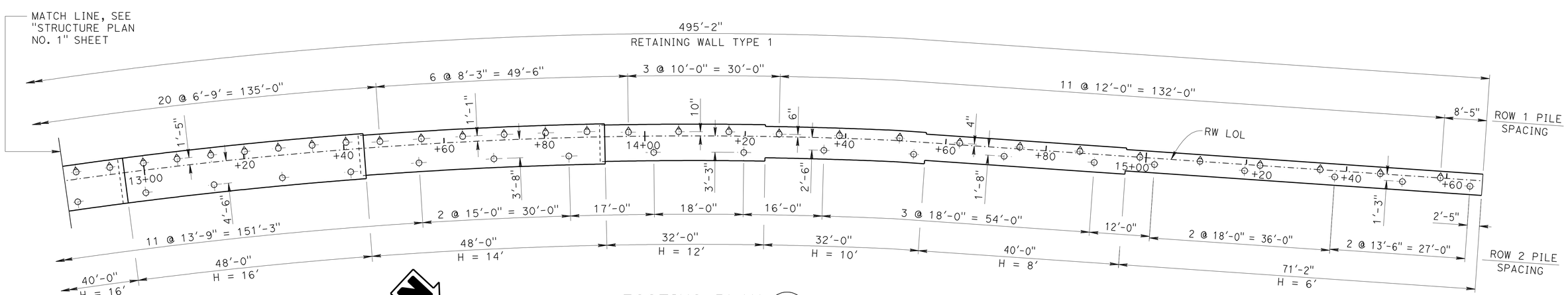

FOOTING PLAN (B3-1)

1" = 10'

DESIGN	BY Daniel Sessions	CHECKED Christa Siegenthaler	
DETAILS	BY Jie Tang	CHECKED Christa Siegenthaler	
QUANTITIES	BY Rizia Da Cruz Ferreira	CHECKED Eric Watson	

STATE OF CALIFORNIA DEPARTMENT OF TRANSPORTATION

DIVISION OF ENGINEERING SERVICES STRUCTURE DESIGN — DESIGN BRANCH 1

BRIDGE NO. X — POST MILE 3.17

RETAINING WALL NO. 183

STRUCTURE PLAN NO. 2

STRUCTURES DESIGN DETAIL SHEET (ENGLISH) (REV. 09-01-10)

ORIGINAL SCALE IN INCHES FOR REDUCED PLANS 0 1 2 3

UNIT: 3576

PROJECT NUMBER & PHASE: 07000018331

CONTRACT NO.: 07-215934

DISREGARD PRINTS BEARING EARLIER REVISION DATES

REVISION DATES 10/12/11 10/28/11 11/22/11 11/23/11

SHEET 4 OF 13

FILE => rw183-c-sp02.dgn

USERNAME => s128843 DATE PLOTTED => 28-MAR-2012 TIME PLOTTED => 11:14

DIST	COUNTY	ROUTE	POST MILES TOTAL PROJECT	SHEET No.	TOTAL SHEETS
07	LA	5	2.4/4.0	1067	1288

REGISTERED CIVIL ENGINEER — DATE 12-7-11

3-26-12
PLANS APPROVAL DATE

REGISTERED PROFESSIONAL ENGINEER — Kevin Harper — No. 42221 — Exp. 3-31-12 — CIVIL — STATE OF CALIFORNIA

The State of California or its officers or agents shall not be responsible for the accuracy or completeness of electronic copies of this plan sheet.

NOTES:
Underground utilities as shown are approximate
+ - Denotes spot elevation
⊕ - Denotes piles (not all piles shown)
[xx.x] - Indicates bottom of Ftg elevation

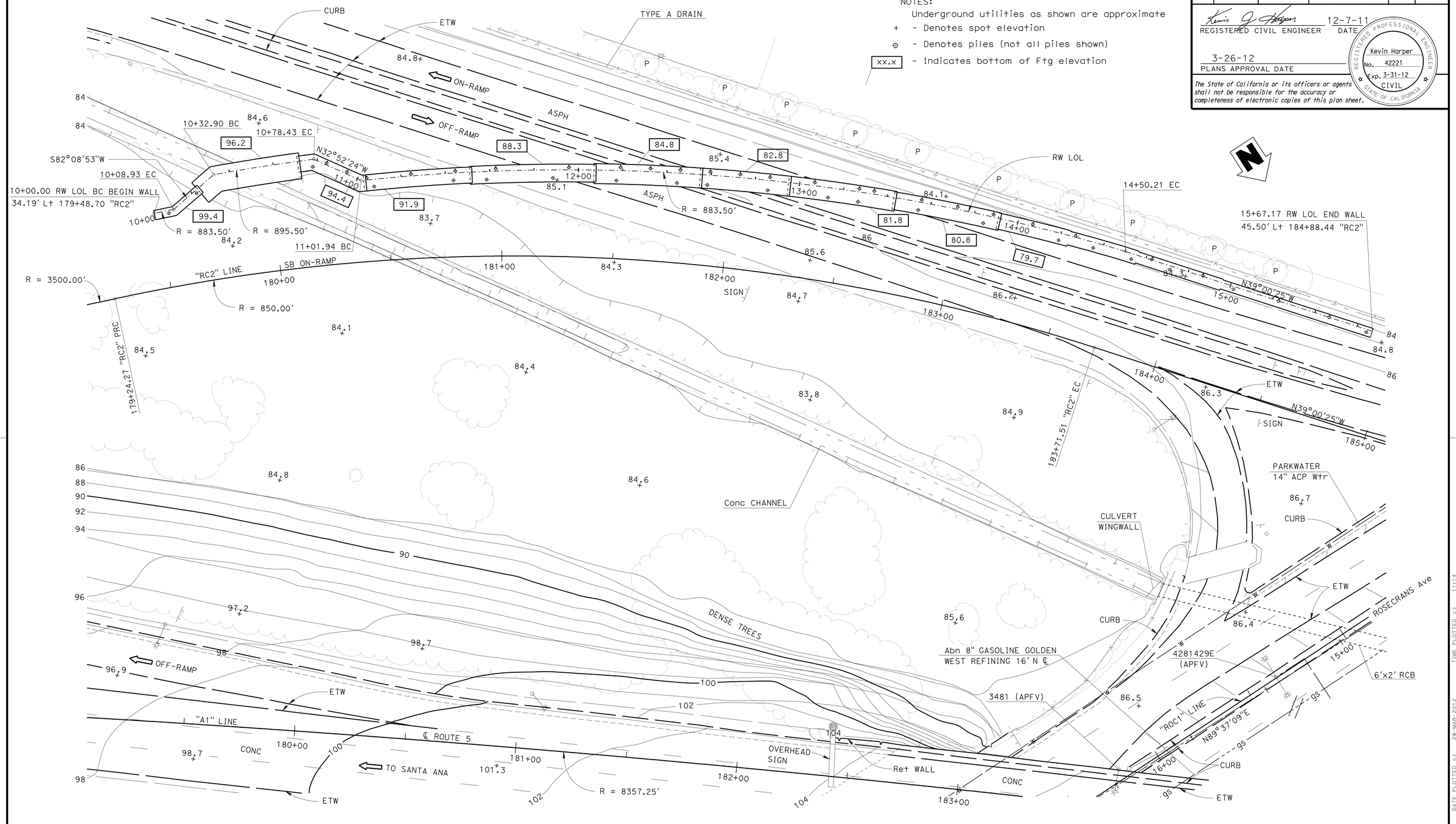

SCALE					
1" = 20'	DESIGN	BY Daniel Sessions	CHECKED Christa Siegenthaler		
	DETAILS	BY R. Ferreira / J. Tang	CHECKED Christa Siegenthaler		
	QUANTITIES	BY Rizia Da Cruz Ferreira	CHECKED Eric Watson		

STATE OF CALIFORNIA
DEPARTMENT OF TRANSPORTATION

DIVISION OF ENGINEERING SERVICES
STRUCTURE DESIGN
DESIGN BRANCH 1

BRIDGE NO. X
POST MILE 3.17

RETAINING WALL NO. 183
FOUNDATION PLAN

STRUCTURES DESIGN DETAIL SHEET (ENGLISH) (REV. 09-01-10)

ORIGINAL SCALE IN INCHES FOR REDUCED PLANS 0 1 2 3

UNIT: 3576
PROJECT NUMBER & PHASE: 0700001833-1
CONTRACT NO.: 07-215934

DISREGARD PRINTS BEARING EARLIER REVISION DATES
REVISION DATES 10/10/11 10/31/11 11/22/11

SHEET 5 OF 13

FILE => rw183-e-fp01.dgn

USERNAME => s128843 DATE PLOTTED => 28-MAR-2012 TIME PLOTTED => 11:14

DIST	COUNTY	ROUTE	POST MILES TOTAL PROJECT	SHEET No.	TOTAL SHEETS
07	LA	5	2.4/4.0	1068	1288

REGISTERED CIVIL ENGINEER 12-7-11 DATE

3-26-12
PLANS APPROVAL DATE

REGISTERED PROFESSIONAL ENGINEER Kevin Harper No. 42221 Exp. 3-31-12 CIVIL STATE OF CALIFORNIA

The State of California or its officers or agents shall not be responsible for the accuracy or completeness of electronic copies of this plan sheet.

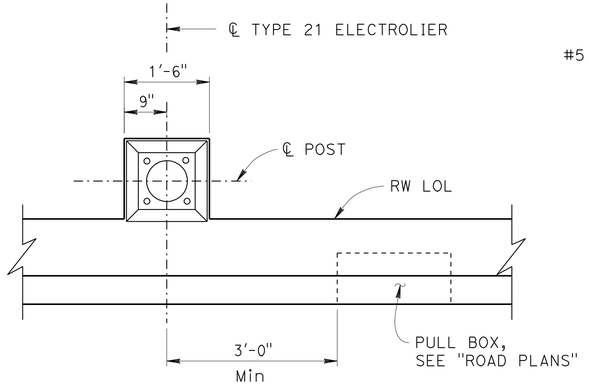

PLAN
¾" = 1'-0"

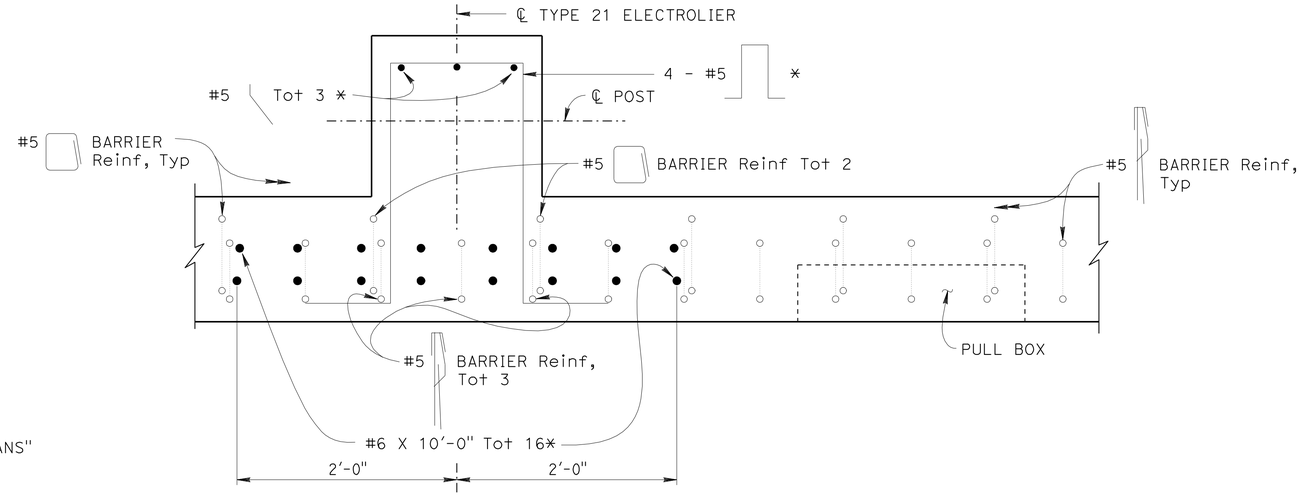

SECTION C-C
1½" = 1'-0"

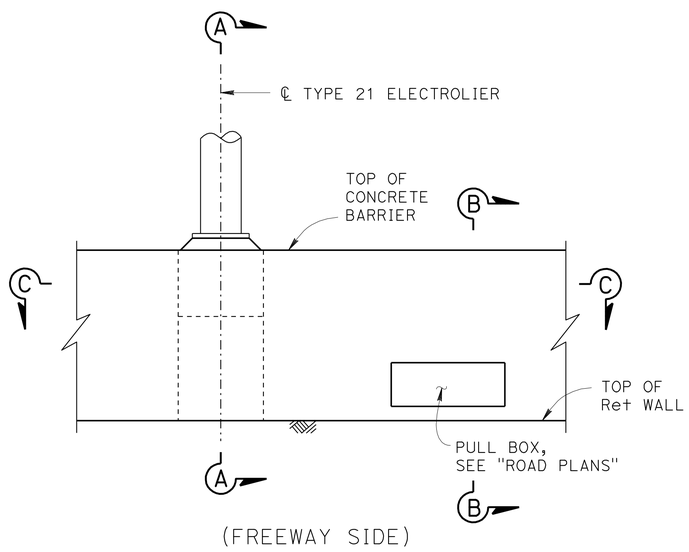

ELEVATION
¾" = 1'-0"

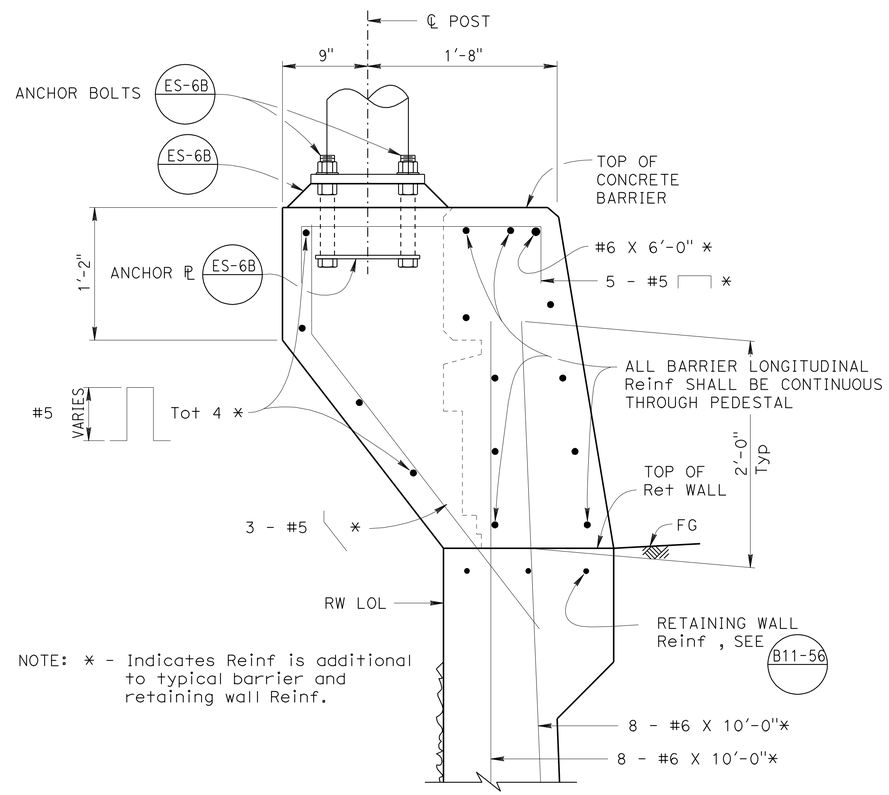

NOTE: * - Indicates Reinf is additional to typical barrier and retaining wall Reinf.

SECTION A-A
1½" = 1'-0"

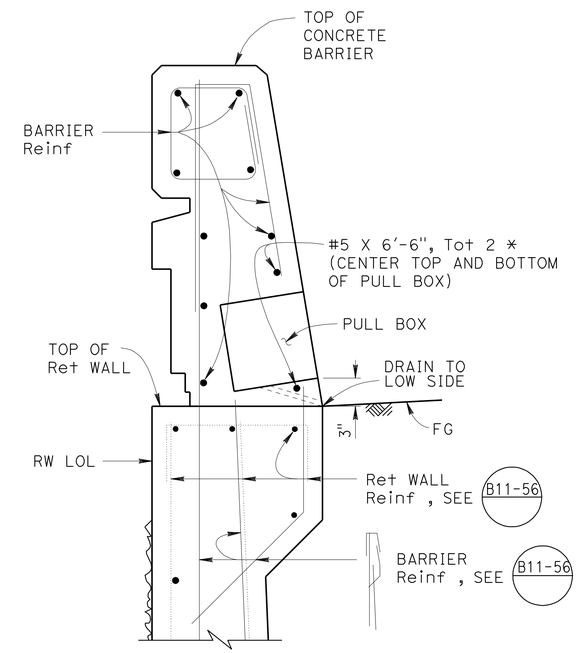

SECTION B-B
1½" = 1'-0"

NOTES:

1. For barrier details not shown, see Standard Plan B11-56.
2. For locations of electroliers, see "STRUCTURE PLAN" sheets.
3. For electrolier and electrical details, see "ROAD PLANS".
4. The maximum number of conduits in the barrier is limited to (2) 2" conduits along with (1) 3" conduit.

	BY	CHECKED
DESIGN	Daniel Sessions	Christa Siegenthaler
DETAILS	Jie Tang	Christa Siegenthaler
QUANTITIES	Rizia Da Cruz Ferreira	Eric Watson

STATE OF CALIFORNIA
DEPARTMENT OF TRANSPORTATION

DIVISION OF ENGINEERING SERVICES
STRUCTURE DESIGN
DESIGN BRANCH 1

BRIDGE NO. X
POST MILE 3.17

RETAINING WALL NO. 183
ELECTROLIER PEDESTAL DETAILS

STRUCTURES DESIGN DETAIL SHEET (ENGLISH) (REV. 09-01-10)

ORIGINAL SCALE IN INCHES FOR REDUCED PLANS 0 1 2 3

UNIT: 3576
PROJECT NUMBER & PHASE: 07000018331
CONTRACT NO.: 07-215934

DISREGARD PRINTS BEARING EARLIER REVISION DATES

REVISION DATES 10/26/11 11/08/11 11/22/11

SHEET 6 OF 13

FILE => rw183-f-epd.dgn

USERNAME => s128813 DATE PLOTTED => 28-MAR-2012 TIME PLOTTED => 11:14

DIST	COUNTY	ROUTE	POST MILES TOTAL PROJECT	SHEET No.	TOTAL SHEETS
07	LA	5	2.4/4.0	1069	1288

REGISTERED CIVIL ENGINEER 12-7-11 DATE

3-26-12
PLANS APPROVAL DATE

REGISTERED PROFESSIONAL ENGINEER Kevin Harper No. 42221 Exp. 3-31-12 CIVIL STATE OF CALIFORNIA

The State of California or its officers or agents shall not be responsible for the accuracy or completeness of electronic copies of this plan sheet.

NOTES:

1. For "SECTION A-A", "SECTION B-B" and other retaining wall architectural details, see "RETAINING WALL ARCHITECTURAL DETAILS" sheet.
2. For barrier architectural details, see "CONCRETE BARRIER TYPE 736A (Mod 1) DETAILS" sheet.
3. Retaining wall architectural treatment pay limits shall include all split slate and fractured rib texture shown in "DEVELOPED MIRRORED ELEVATION".
4. All longitudinal dimensions are measured along Ret Wall LOL.

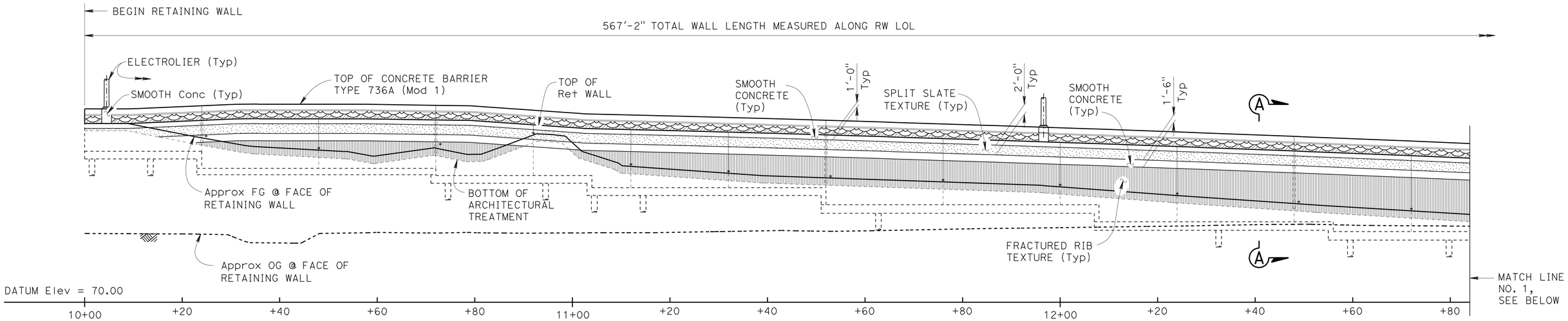

DEVELOPED MIRRORED ELEVATION

1" = 10'

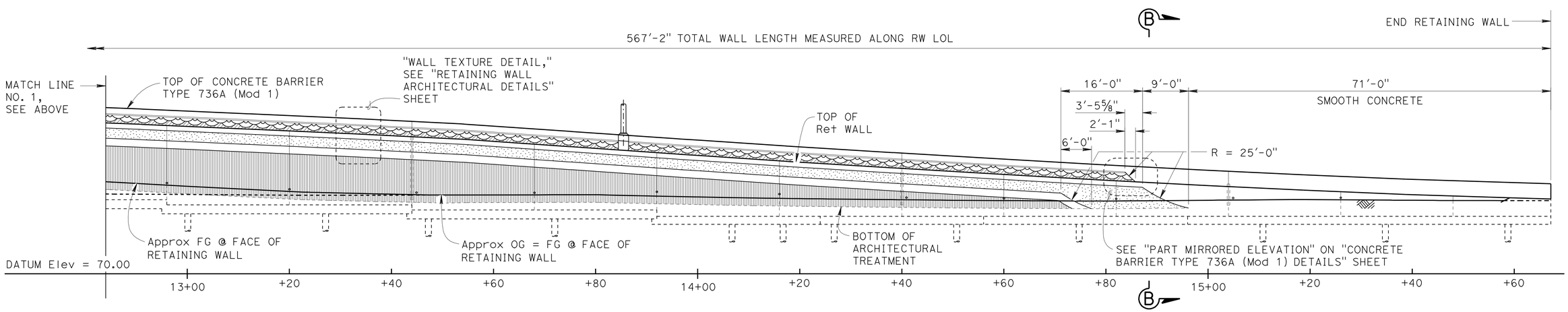

DEVELOPED MIRRORED ELEVATION

1" = 10'

	BY	CHECKED
DESIGN	Isaac Tasabia	Javier Chavez
DETAILS	Jie Tang	D. Sessions/C. Siegenthaler
QUANTITIES	Rizia Da Cruz Ferreira	Eric Watson

STATE OF CALIFORNIA
DEPARTMENT OF TRANSPORTATION

DIVISION OF ENGINEERING SERVICES
STRUCTURE DESIGN
DESIGN BRANCH 1

BRIDGE NO. X
POST MILE 3.17

RETAINING WALL NO. 183

RETAINING WALL ARCHITECTURAL TREATMENT

STRUCTURES DESIGN DETAIL SHEET (ENGLISH) (REV. 09-01-10)

ORIGINAL SCALE IN INCHES FOR REDUCED PLANS 0 1 2 3

UNIT: 3576
PROJECT NUMBER & PHASE: 0700001833-1
CONTRACT NO.: 07-215934

DISREGARD PRINTS BEARING EARLIER REVISION DATES

REVISION DATES 10/24/11 10/31/11 12/22/11

SHEET 7 OF 13

FILE => rw183-f-rwatrt.dgn

USERNAME => s128843 DATE PLOTTED => 28-MAR-2012 TIME PLOTTED => 11:14

DIST	COUNTY	ROUTE	POST MILES TOTAL PROJECT	SHEET No.	TOTAL SHEETS
07	LA	5	2.4/4.0	1070	1288

Kevin J. Harper 12-7-11
REGISTERED CIVIL ENGINEER DATE

3-26-12
PLANS APPROVAL DATE

REGISTERED PROFESSIONAL ENGINEER Kevin Harper No. 42221 Exp. 3-31-12 CIVIL STATE OF CALIFORNIA

The State of California or its officers or agents shall not be responsible for the accuracy or completeness of electronic copies of this plan sheet.

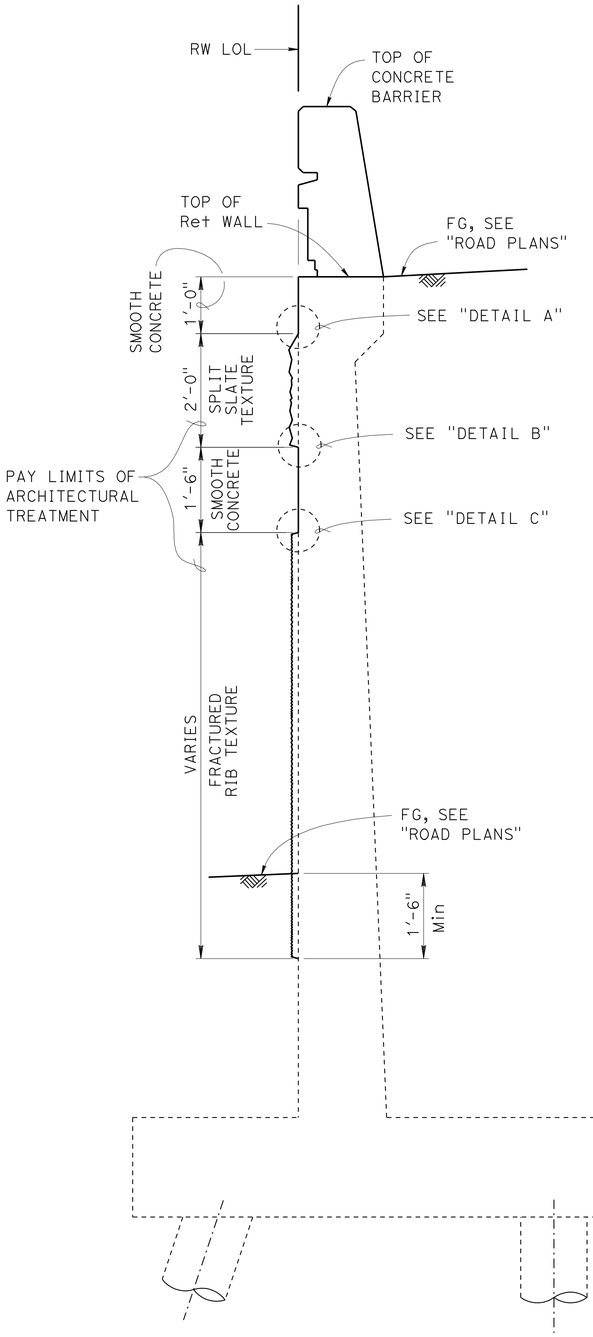

SECTION A-A

¾" = 1'-0"

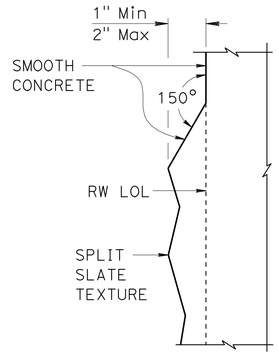

DETAIL A

3" = 1'-0"

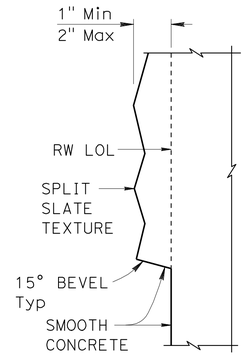

DETAIL B

3" = 1'-0"

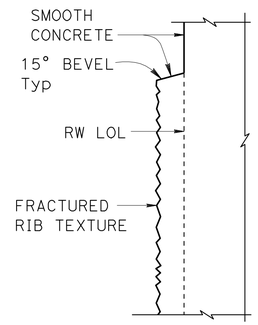

DETAIL C

3" = 1'-0"

NOTES:

1. For locations of "SECTION A-A", "SECTION B-B" AND "WALL TEXTURE DETAIL", see "RETAINING WALL ARCHITECTURAL TREATMENT" sheet.
2. For barrier architectural treatment, see "CONCRETE BARRIER TYPE 736A (Mod 1) DETAILS" sheet.

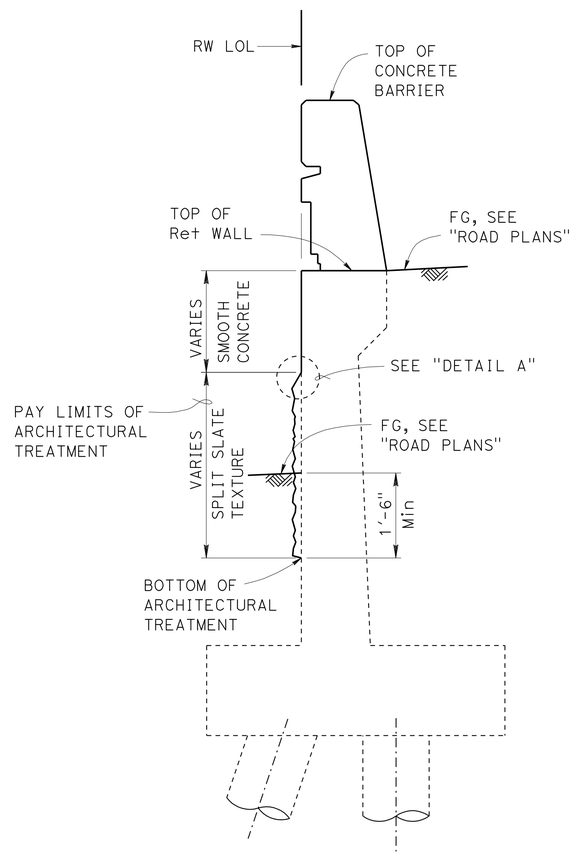

SECTION B-B

¾" = 1'-0"

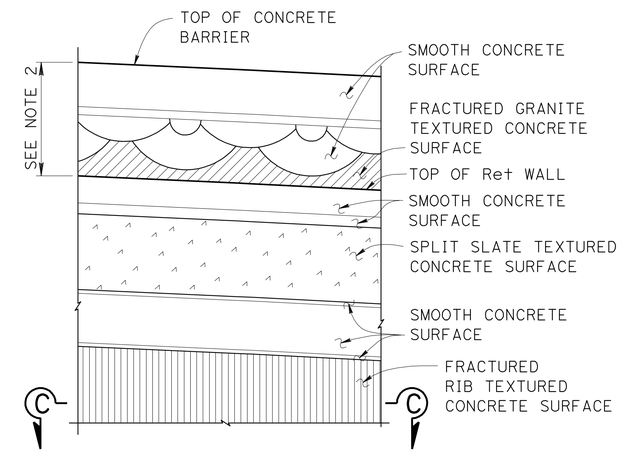

PARTIAL MIRRORED ELEVATION

WALL TEXTURE DETAIL

½" = 1'-0"

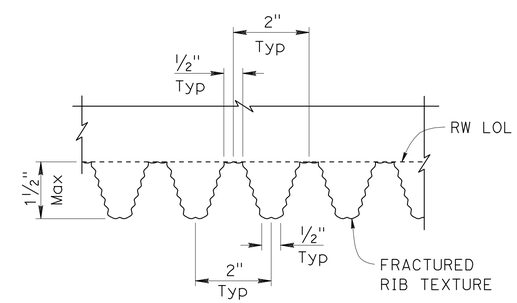

SECTION C-C

6" = 1'-0"

	BY	CHECKED
DESIGN	Issac Tasabia	Javier Chavez
DETAILS	Jie Tang	D. Sessions/C. Siegenthaler
QUANTITIES	Rizia Da Cruz Ferreira	Eric Watson

STATE OF CALIFORNIA
DEPARTMENT OF TRANSPORTATION

DIVISION OF ENGINEERING SERVICES
STRUCTURE DESIGN
DESIGN BRANCH 1

BRIDGE NO. X
POST MILE 3.17

RETAINING WALL NO. 183

RETAINING WALL ARCHITECTURAL DETAILS

STRUCTURES DESIGN DETAIL SHEET (ENGLISH) (REV. 09-01-10)

ORIGINAL SCALE IN INCHES FOR REDUCED PLANS 0 1 2 3

UNIT: 3576
PROJECT NUMBER & PHASE: 0700001833-1
CONTRACT NO.: 07-215934

DISREGARD PRINTS BEARING EARLIER REVISION DATES

REVISION DATES: 10/20/11 10/31/11 11/22/11

SHEET 8 OF 13

FILE => rw183-g-rwadet.dgn

USERNAME => s128843 DATE PLOTTED => 28-MAR-2012 TIME PLOTTED => 11:15

DIST	COUNTY	ROUTE	POST MILES TOTAL PROJECT	SHEET No.	TOTAL SHEETS
07	LA	5	2.4/4.0	1071	1288

REGISTERED CIVIL ENGINEER 12-7-11 DATE

3-26-12
PLANS APPROVAL DATE

REGISTERED PROFESSIONAL ENGINEER Kevin Harper No. 42221 Exp. 3-31-12 CIVIL STATE OF CALIFORNIA

The State of California or its officers or agents shall not be responsible for the accuracy or completeness of electronic copies of this plan sheet.

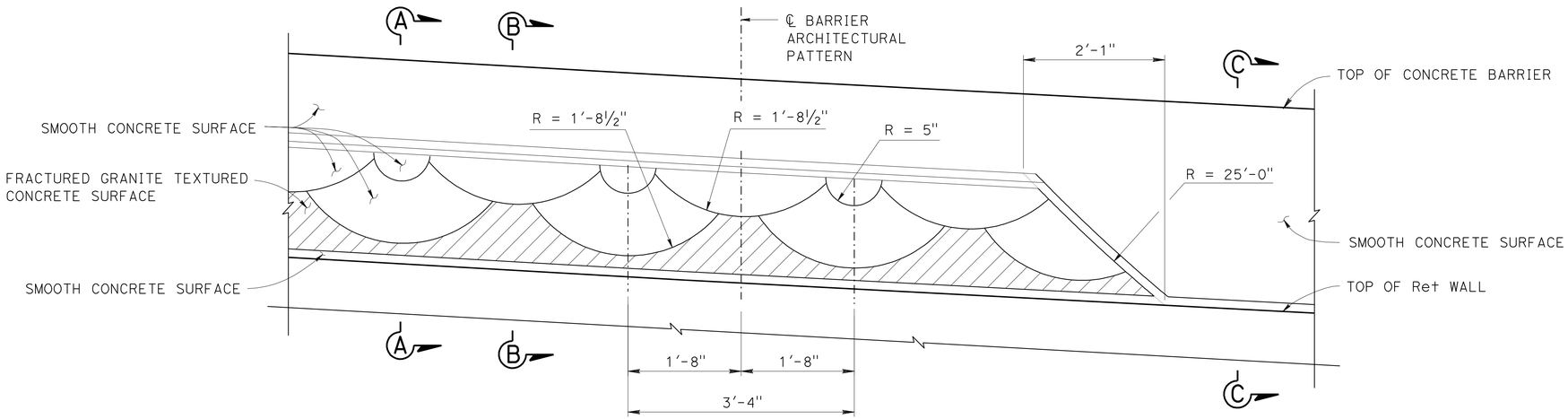

PART MIRRORED ELEVATION CONCRETE BARRIER TYPE 736A (MOD 1)

1" = 1'-0"

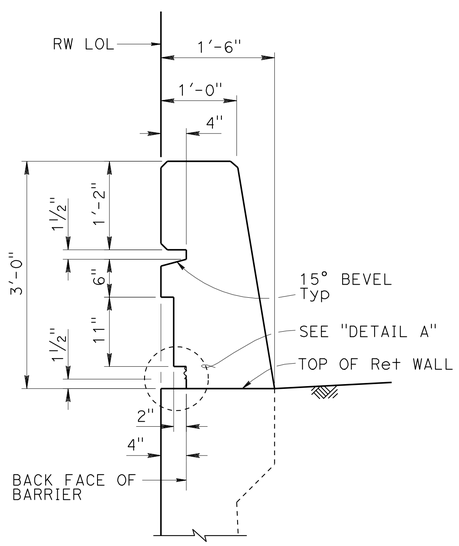

SECTION A-A

1" = 1'-0"

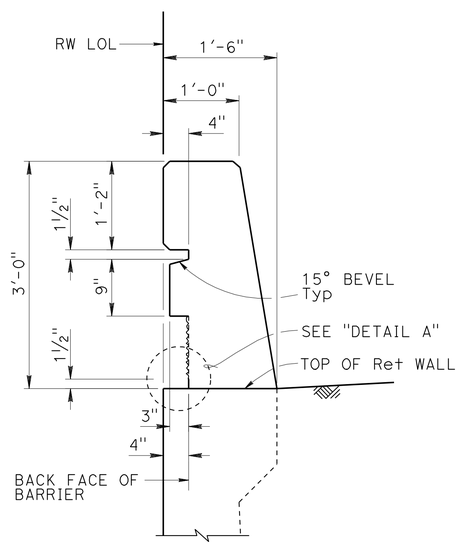

SECTION B-B

1" = 1'-0"

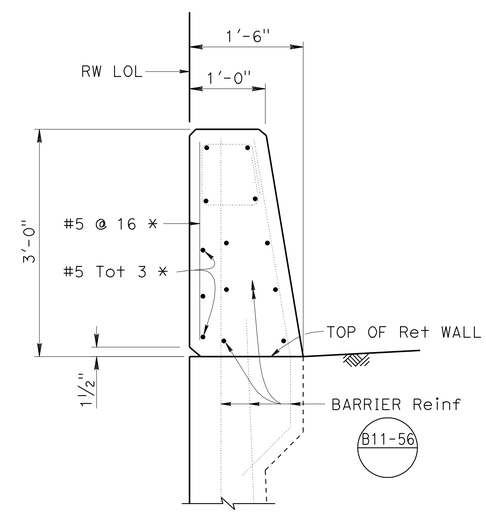

SECTION C-C

1" = 1'-0"

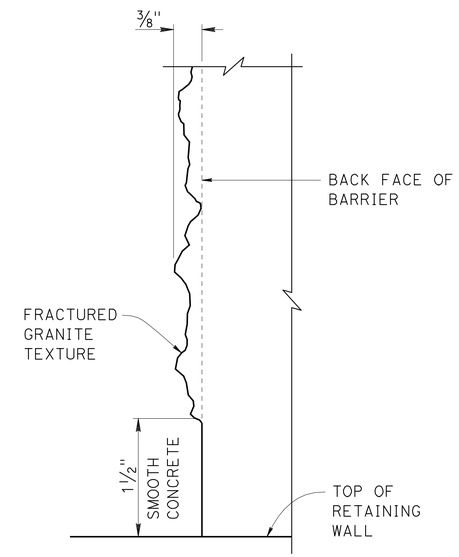

NOTE: Detail at "SECTION B-B" shown, "SECTION A-A" similar.

DETAIL A

NO SCALE

NOTES:

For barrier details not shown, see STANDARD PLAN B11-56.

* - Indicates Reinf is additional to typical barrier Reinf.

	BY	CHECKED
DESIGN	Issac Tasabia	Javier Chavez
DETAILS	Jie Tang	D. Sessions/C. Siegenthaler
QUANTITIES	Rizia Da Cruz Ferreira	Eric Watson

STATE OF CALIFORNIA
DEPARTMENT OF TRANSPORTATION

DIVISION OF ENGINEERING SERVICES
STRUCTURE DESIGN
DESIGN BRANCH 1

BRIDGE NO. X
POST MILE 3.17

RETAINING WALL NO. 183

CONCRETE BARRIER TYPE 736A (Mod 1) DETAILS

STRUCTURES DESIGN DETAIL SHEET (ENGLISH) (REV. 09-01-10)

ORIGINAL SCALE IN INCHES FOR REDUCED PLANS 0 1 2 3

UNIT: 3576
PROJECT NUMBER & PHASE: 0700001833-1
CONTRACT NO.: 07-215934

DISREGARD PRINTS BEARING EARLIER REVISION DATES

REVISION DATES 10/19/11 11/02/11 11/22/11

SHEET 9 OF 13

FILE => rw183-h-barr01.dgn

USERNAME => s128843 DATE PLOTTED => 28-MAR-2012 TIME PLOTTED => 11:15

DIST	COUNTY	ROUTE	POST MILES TOTAL PROJECT	SHEET No.	TOTAL SHEETS
07	LA	5	2.4/4.0	1072	1288

GEOTECHNICAL PROFESSIONAL — DATE 06/2011

3-26-12
PLANS APPROVAL DATE

REGISTERED PROFESSIONAL ENGINEER — MICHAEL G. SMITH — No. 2229 — Exp. 3-31-2012 — GEOTECHNICAL — STATE OF CALIFORNIA

The State of California or its officers or agents shall not be responsible for the accuracy or completeness of electronic copies of this plan sheet.

BENCH MARK

PRHV 102 Elev 86.67′
FOUND PK NAIL & TIN SET BY OTHERS ON ISLAND @ THE BEGINNING OF SB 1-5 ON-RAMP AND ROSECRANS AVE PER SR 09-037-000010
NAVD 88

PRHV 103 Elev 84.50′
FOUND CHISELED "X" ON BACK WALK @ INLET AT SE CORNER OF ROSECRANS AVE AND FIRESTONE BLVD PER SR 09-037-000010
NAVD 88

PRHV 110 Elev 78.31′
FOUND L & "LACO DPW" TAG @ NE CORNER OF FIRESTONE BLVD AND SHOEMAKER AVE, N/O 1-5
NAVD 88

PRHV 115 Elev 79.95′
FOUND PK NAIL & TIN ON TC @ SE CORNER OF SHOEMAKER AVE AND FIRESTONE BLVD, S/O 1-5
NAVD 88

Notes

1. This LOTB sheet was prepared in accordance with the Caltrans Soil & Rock Logging, Classification, and Presentation Manual (2010) except three digit sequence number in boring identification starting with the segment number per exception request approved on April 08, 2009.

2. For protection of underground utility lines, hand-auger was used to remove top 5 to 10 feet of subsurface material for exploratory borings and cone penetration testings.

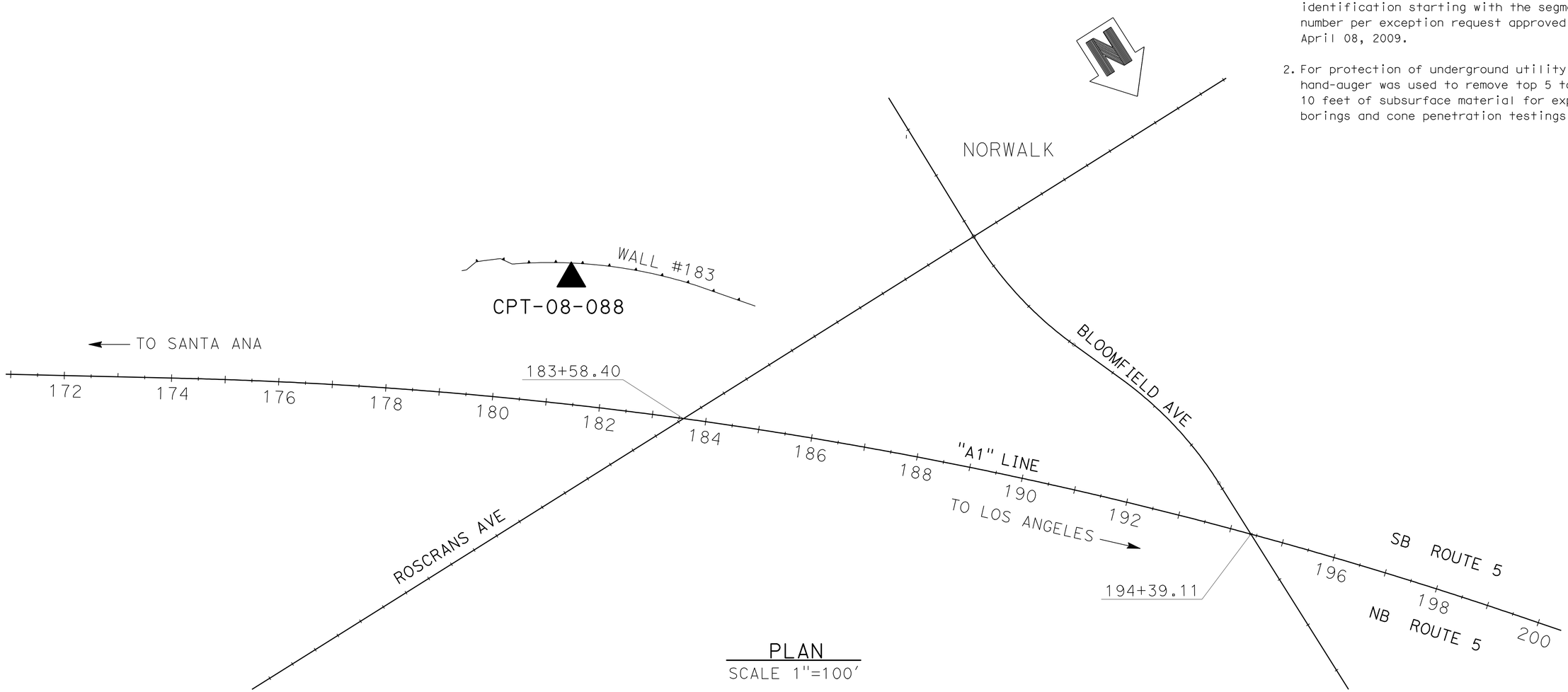

PLAN
SCALE 1"=100′

ENGINEERING SERVICES	MATERIALS AND GEOTECHNICAL SERVICES	STATE OF CALIFORNIA DEPARTMENT OF TRANSPORTATION	DIVISION OF ENGINEERING SERVICES STRUCTURE DESIGN DESIGN BRANCH 1	BRIDGE NO. X / POST MILE 3.17	RETAINING WALL NO. 183 LOG OF TEST BORINGS 1 OF 4
FUNCTIONAL SUPERVISOR NAME: M. SMITH	DRAWN BY: P.QUACH / CHECKED BY: D.ORRIS	FIELD INVESTIGATION BY: P.MCDONALD/EJ.JEON/C.CARBINO/L.ROEBUCK			

OGS CIVIL LOG OF TEST BORINGS SHEET — ORIGINAL SCALE IN INCHES FOR REDUCED PLANS 0 1 2 3 — UNIT: 3576 — PROJECT NUMBER & PHASE: 07000018331 — CONTRACT NO.: 07-215934 — DISREGARD PRINTS BEARING EARLIER REVISION DATES — REVISION DATES 06/22/11 11/22/11 — SHEET 10 OF 13

FILE => rw183-z-lltb01.dgn

USERNAME => s128843 DATE PLOTTED => 28-MAR-2012 TIME PLOTTED => 11:15

DIST	COUNTY	ROUTE	POST MILES TOTAL PROJECT	SHEET No.	TOTAL SHEETS
07	LA	5	2.4/4.0	1073	1288

GEOTECHNICAL PROFESSIONAL — DATE 06/2011

3-26-12
PLANS APPROVAL DATE

REGISTERED PROFESSIONAL ENGINEER — MICHAEL G. SMITH No. 2229 Exp. 3-31-2012 GEOTECHNICAL — STATE OF CALIFORNIA

The State of California or its officers or agents shall not be responsible for the accuracy or completeness of electronic copies of this plan sheet.

Notes

1. This LOTB sheet was prepared in accordance with the Caltrans Soil & Rock Logging, Classification, and Presentation Manual (2010) except three digit sequence number in boring identification starting with the segment number per exception request approved on April 08, 2009.

2. For protection of underground utility lines, hand-auger was used to remove top 5 to 10 feet of subsurface material for exploratory borings and cone penetration testings.

FOR PLAN VIEW, SEE
"LOG OF TEST BORINGS" 1 OF 4

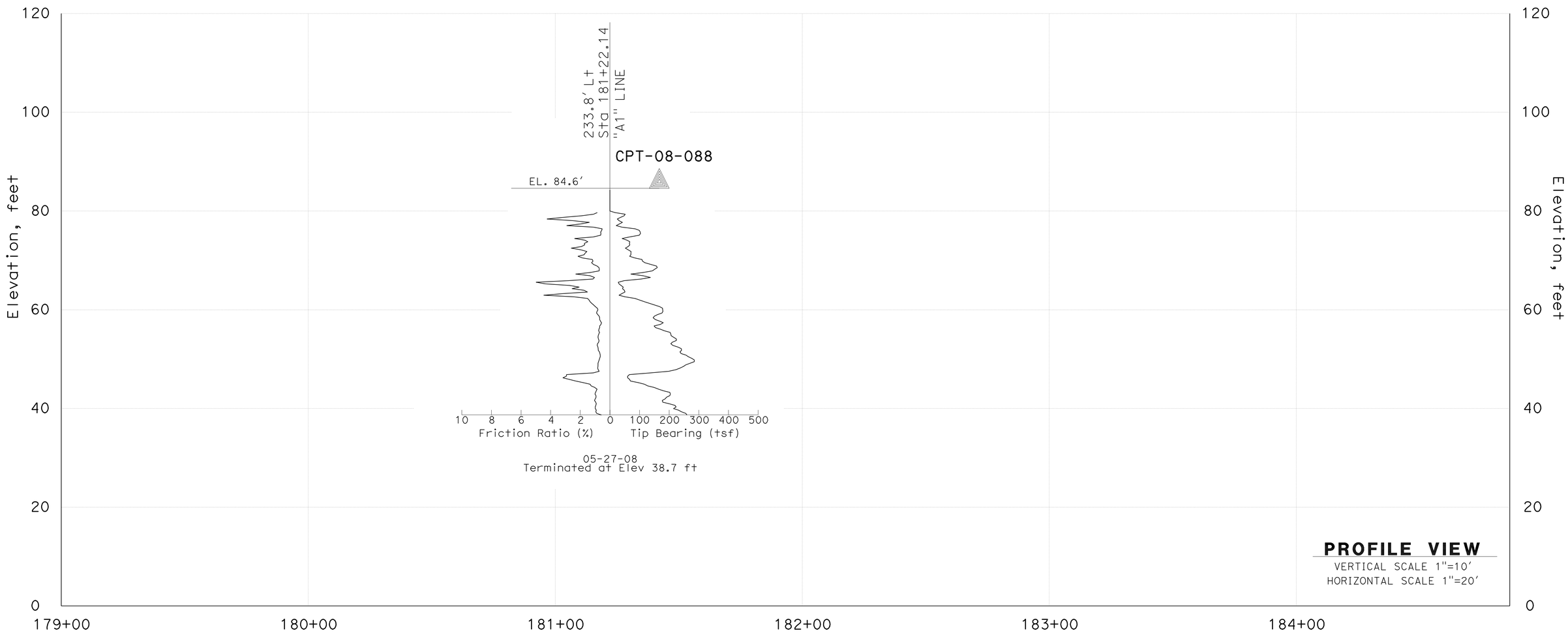

ENGINEERING SERVICES	MATERIALS AND GEOTECHNICAL SERVICES	STATE OF CALIFORNIA DEPARTMENT OF TRANSPORTATION	DIVISION OF ENGINEERING SERVICES STRUCTURE DESIGN DESIGN BRANCH 1	BRIDGE NO. X / POST MILE 3.17	RETAINING WALL NO. 183 LOG OF TEST BORINGS 2 OF 4
FUNCTIONAL SUPERVISOR NAME: M. SMITH	DRAWN BY: P.QUACH CHECKED BY: D.ORRIS	FIELD INVESTIGATION BY: P.MCDONALD/EJ.JEON/C.CARBINO/L.ROEBUCK			

OGS CIVIL LOG OF TEST BORINGS SHEET — ORIGINAL SCALE IN INCHES FOR REDUCED PLANS 0 1 2 3

UNIT: 3576
PROJECT NUMBER & PHASE: 07000018331 — CONTRACT NO.: 07-215934

DISREGARD PRINTS BEARING EARLIER REVISION DATES → REVISION DATES 06/27/11 11/22/11

SHEET 11 OF 13

FILE => rw183-z-ltb02.dgn

USERNAME => s128843 DATE PLOTTED => 28-MAR-2012 TIME PLOTTED => 11:15

REFERENCE: CALTRANS SOIL & ROCK LOGGING, CLASSIFICATION, AND PRESENTATION MANUAL (2010)

DIST	COUNTY	ROUTE	POST MILES TOTAL PROJECT	SHEET No.	TOTAL SHEETS
07	LA	5	2.4/4.0	1074	1288

GEOTECHNICAL PROFESSIONAL — DATE 06/2011

3-26-12
PLANS APPROVAL DATE

REGISTERED PROFESSIONAL ENGINEER — MICHAEL G. SMITH No. 2229 Exp. 3-31-2012 GEOTECHNICAL — STATE OF CALIFORNIA

The State of California or its officers or agents shall not be responsible for the accuracy or completeness of electronic copies of this plan sheet.

CEMENTATION

Description	Criteria
Weak	Crumbles or breaks with handling or little finger pressure.
Moderate	Crumbles or breaks with considerable finger pressure.
Strong	Will not crumble or break with finger pressure.

BOREHOLE IDENTIFICATION

Symbol	Hole Type	Description
Size	A	Auger Boring (hollow or solid stem bucket)
Size	R RW RC P	Rotary drilled boring (conventional) Rotary drilled with self-casing wire-line Rotary core with continuously-sampled, self-casing wire-line Rotary percussion boring (air)
Size	R	Rotary drilled diamond core
Size	HD HA	Hand driven (1-inch soil tube) Hand Auger
●	D	Dynamic Cone Penetration Boring
▲	CPT	Cone Penetration Test (ASTM D 5778)
⬚	O	Other (note on LOTB)

Note: Size in inches.

CONSISTENCY OF COHESIVE SOILS

Description	Shear Strength (tsf)	Pocket Penetrometer Measurement, PP, (tsf)	Torvane Measurement, TV, (tsf)	Vane Shear Measurement, VS, (tsf)
Very Soft	Less than 0.12	Less than 0.25	Less than 0.12	Less than 0.12
Soft	0.12 - 0.25	0.25 - 0.5	0.12 - 0.25	0.12 - 0.25
Medium Stiff	0.25 - 0.5	0.5 - 1	0.25 - 0.5	0.25 - 0.5
Stiff	0.5 - 1	1 - 2	0.5 - 1	0.5 - 1
Very Stiff	1 - 2	2 - 4	1 - 2	1 - 2
Hard	Greater than 2	Greater than 4	Greater than 2	Greater than 2

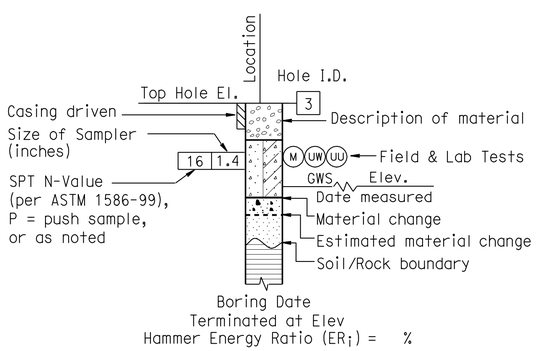

ROTARY BORING

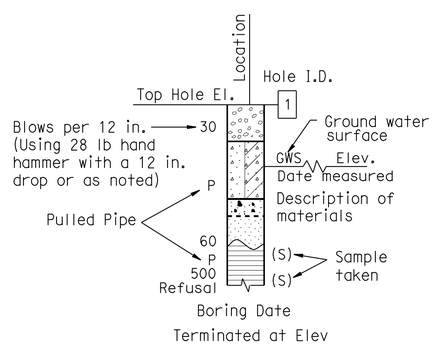

HAND BORING

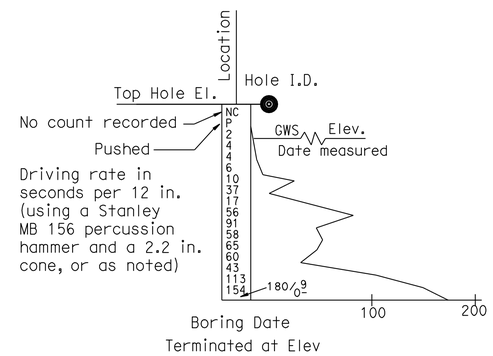

DYNAMIC CONE PENETRATION BORING

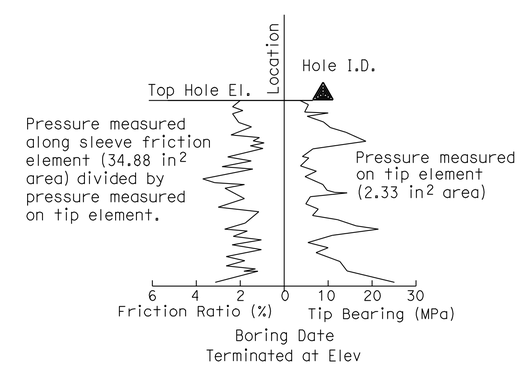

CONE PENETRATION TEST (CPT) BORING

ENGINEERING SERVICES	MATERIALS AND GEOTECHNICAL SERVICES	STATE OF CALIFORNIA DEPARTMENT OF TRANSPORTATION	DIVISION OF ENGINEERING SERVICES STRUCTURE DESIGN DESIGN BRANCH 1	BRIDGE NO. X / POST MILE 3.17	RETAINING WALL NO. 183
FUNCTIONAL SUPERVISOR NAME: M. SMITH	DRAWN BY: P.QUACH CHECKED BY: D.ORRIS	FIELD INVESTIGATION BY: P.MCDONALD/EJ.JEON/C.CARBINO/L.ROEBUCK			LOG OF TEST BORINGS 3 OF 4

OGS CIVIL LOG OF TEST BORINGS SHEET

ORIGINAL SCALE IN INCHES FOR REDUCED PLANS 0 1 2 3

UNIT:
PROJECT NUMBER & PHASE: 07000018331 CONTRACT NO.: 07-215934

DISREGARD PRINTS BEARING EARLIER REVISION DATES → REVISION DATES 06/22/11 11/22/11

SHEET 12 OF 13

FILE => rw183-z-ltb03.dgn

USERNAME => s128843 DATE PLOTTED => 28-MAR-2012 TIME PLOTTED => 11:15

REFERENCE: CALTRANS SOIL & ROCK LOGGING, CLASSIFICATION, AND PRESENTATION MANUAL (2010)

DIST	COUNTY	ROUTE	POST MILES TOTAL PROJECT	SHEET No.	TOTAL SHEETS
07	LA	5	2.4/4.0	1075	1288

GEOTECHNICAL PROFESSIONAL — 06/2011 DATE

3-26-12
PLANS APPROVAL DATE

REGISTERED PROFESSIONAL ENGINEER — MICHAEL G. SMITH No. 2229 Exp. 3-31-2012 GEOTECHNICAL — STATE OF CALIFORNIA

The State of California or its officers or agents shall not be responsible for the accuracy or completeness of electronic copies of this plan sheet.

GROUP SYMBOLS AND NAMES

Graphic/Symbol	Group Names	Graphic/Symbol	Group Names
GW	Well-graded GRAVEL Well-graded GRAVEL with SAND	CL	Lean CLAY Lean CLAY with SAND Lean CLAY with GRAVEL SANDY lean CLAY SANDY lean CLAY with GRAVEL GRAVELLY lean CLAY GRAVELLY lean CLAY with SAND
GP	Poorly-graded GRAVEL Poorly-graded GRAVEL with SAND		
GW-GM	Well-graded GRAVEL with SILT Well-graded GRAVEL with SILT and SAND	CL-ML	SILTY CLAY SILTY CLAY with SAND SILTY CLAY with GRAVEL SANDY SILTY CLAY SANDY SILTY CLAY with GRAVEL GRAVELLY SILTY CLAY GRAVELLY SILTY CLAY with SAND
GW-GC	Well-graded GRAVEL with CLAY (or SILTY CLAY) Well-graded GRAVEL with CLAY and SAND (or SILTY CLAY and SAND)		
GP-GM	Poorly-graded GRAVEL with SILT Poorly-graded GRAVEL with SILT and SAND	ML	SILT SILT with SAND SILT with GRAVEL SANDY SILT SANDY SILT with GRAVEL GRAVELLY SILT GRAVELLY SILT with SAND
GP-GC	Poorly-graded GRAVEL with CLAY (or SILTY CLAY) Poorly-graded GRAVEL with CLAY and SAND (or SILTY CLAY and SAND)		
GM	SILTY GRAVEL SILTY GRAVEL with SAND	OL	ORGANIC lean CLAY ORGANIC lean CLAY with SAND ORGANIC lean CLAY with GRAVEL SANDY ORGANIC lean CLAY SANDY ORGANIC lean CLAY with GRAVEL GRAVELLY ORGANIC lean CLAY GRAVELLY ORGANIC lean CLAY with SAND
GC	CLAYEY GRAVEL CLAYEY GRAVEL with SAND		
GC-GM	SILTY, CLAYEY GRAVEL SILTY, CLAYEY GRAVEL with SAND	OL	ORGANIC SILT ORGANIC SILT with SAND ORGANIC SILT with GRAVEL SANDY ORGANIC SILT SANDY ORGANIC SILT with GRAVEL GRAVELLY ORGANIC SILT GRAVELLY ORGANIC SILT with SAND
SW	Well-graded SAND Well-graded SAND with GRAVEL		
SP	Poorly-graded SAND Poorly-graded SAND with GRAVEL	CH	Fat CLAY Fat CLAY with SAND Fat CLAY with GRAVEL SANDY fat CLAY SANDY fat CLAY with GRAVEL GRAVELLY fat CLAY GRAVELLY fat CLAY with SAND
SW-SM	Well-graded SAND with SILT Well-graded SAND with SILT and GRAVEL		
SW-SC	Well-graded SAND with CLAY (or SILTY CLAY) Well-graded SAND with CLAY and GRAVEL (or SILTY CLAY and GRAVEL)	MH	Elastic SILT Elastic SILT with SAND Elastic SILT with GRAVEL SANDY elastic SILT SANDY elastic SILT with GRAVEL GRAVELLY elastic SILT GRAVELLY elastic SILT with SAND
SP-SM	Poorly-graded SAND with SILT Poorly-graded SAND with SILT and GRAVEL		
SP-SC	Poorly-graded SAND with CLAY (or SILTY CLAY) Poorly-graded SAND with CLAY and GRAVEL (or SILTY CLAY and GRAVEL)	OH	ORGANIC fat CLAY ORGANIC fat CLAY with SAND ORGANIC fat CLAY with GRAVEL SANDY ORGANIC fat CLAY SANDY ORGANIC fat CLAY with GRAVEL GRAVELLY ORGANIC fat CLAY GRAVELLY ORGANIC fat CLAY with SAND
SM	SILTY SAND SILTY SAND with GRAVEL		
SC	CLAYEY SAND CLAYEY SAND with GRAVEL	OH	ORGANIC elastic SILT ORGANIC elastic SILT with SAND ORGANIC elastic SILT with GRAVEL SANDY ORGANIC elastic SILT SANDY ORGANIC elastic SILT with GRAVEL GRAVELLY ORGANIC elastic SILT GRAVELLY ORGANIC elastic SILT with SAND
SC-SM	SILTY, CLAYEY SAND SILTY, CLAYEY SAND with GRAVEL		
PT	PEAT	OL/OH	ORGANIC SOIL ORGANIC SOIL with SAND ORGANIC SOIL with GRAVEL SANDY ORGANIC SOIL SANDY ORGANIC SOIL with GRAVEL GRAVELLY ORGANIC SOIL GRAVELLY ORGANIC SOIL with SAND
	COBBLES COBBLES and BOULDERS BOULDERS		

FIELD AND LABORATORY TESTING

- (C) Consolidation (ASTM D 2435)
- (CL) Collapse Potential (ASTM D 5333)
- (CP) Compaction Curve (CTM 216)
- (CR) Corrosivity Testing (CTM 643, CTM 422, CTM 417)
- (CU) Consolidated Undrained Triaxial (ASTM D 4767)
- (DS) Direct Shear (ASTM D 3080)
- (EI) Expansion Index (ASTM D 4829)
- (M) Moisture Content (ASTM D 2216)
- (OC) Organic Content-% (ASTM D 2974)
- (P) Permeability (CTM 220)
- (PA) Particle Size Analysis (ASTM D 422)
- (PI) Plasticity Index (AASHTO T 90) Liquid Limit (AASHTO T 89)
- (PL) Point Load Index (ASTM D 5731)
- (PM) Pressure Meter
- (R) R-Value (CTM 301)
- (SE) Sand Equivalent (CTM 217)
- (SG) Specific Gravity (AASHTO T 100)
- (SL) Shrinkage Limit (ASTM D 427)
- (SW) Swell Potential (ASTM D 4546)
- (UC) Unconfined Compression-Soil (ASTM D 2166) Unconfined Compression-Rock (ASTM D 2938)
- (UU) Unconsolidated Undrained Triaxial (ASTM D 2850)
- (UW) Unit Weight (ASTM D 4767)

APPARENT DENSITY OF COHESIONLESS SOILS

Description	SPT N_{60} (Blows / 12 in.)
Very Loose	0 - 5
Loose	5 - 10
Medium Dense	10 - 30
Dense	30 - 50
Very Dense	Greater than 50

MOISTURE

Description	Criteria
Dry	No discernable moisture
Moist	Moisture present, but no free water
Wet	Visible free water

PERCENT OR PROPORTION OF SOILS

Description	Criteria
Trace	Particles are present but estimated to be less than 5%
Few	5% - 10%
Little	15% - 25%
Some	30% - 45%
Mostly	50% - 100%

PARTICLE SIZE

Description		Size (in.)
Boulder		Greater than 12
Cobble		3 - 12
Gravel	Coarse	3/4 - 3
	Fine	1/5 - 3/4
Sand	Coarse	1/16 - 1/5
	Medium	1/64 - 1/16
	Fine	1/300 - 1/64
Silt and Clay		Less than 1/300

ENGINEERING SERVICES — MATERIALS AND GEOTECHNICAL SERVICES

FUNCTIONAL SUPERVISOR
NAME: M. SMITH
DRAWN BY: P.QUACH
CHECKED BY: D.ORRIS
FIELD INVESTIGATION BY: P.MCDONALD/EJ.JEON/C.CARBINO/L.ROEBUCK

STATE OF CALIFORNIA DEPARTMENT OF TRANSPORTATION

DIVISION OF ENGINEERING SERVICES STRUCTURE DESIGN — DESIGN BRANCH 1

BRIDGE NO. X
POST MILE 3.17

RETAINING WALL NO. 183

LOG OF TEST BORINGS 4 OF 4

OGS CIVIL LOG OF TEST BORINGS SHEET

ORIGINAL SCALE IN INCHES FOR REDUCED PLANS 0 1 2 3

UNIT: 3576
PROJECT NUMBER & PHASE: 07000018331
CONTRACT NO.: 07-215934

DISREGARD PRINTS BEARING EARLIER REVISION DATES → 06/22/11 11/22/11

SHEET 13 OF 13

FILE => rw183-z-ltb04.dgn

USERNAME => s128843 DATE PLOTTED => 28-MAR-2012 TIME PLOTTED => 11:15

DIST	COUNTY	ROUTE	POST MILES TOTAL PROJECT	SHEET No.	TOTAL SHEETS
07	LA	5	2.4/4.0	1076	1288

REGISTERED CIVIL ENGINEER 12/7/2011 DATE

3-26-12
PLANS APPROVAL DATE

REGISTERED PROFESSIONAL ENGINEER Kevin Harper No. 42221 Exp. 3-31-12 CIVIL STATE OF CALIFORNIA

The State of California or its officers or agents shall not be responsible for the accuracy or completeness of electronic copies of this plan sheet.

NOTES:

1. For design notes, see STANDARD PLAN B3-8.
2. All piles are not shown in "DEVELOPED MIRRORED ELEVATION".

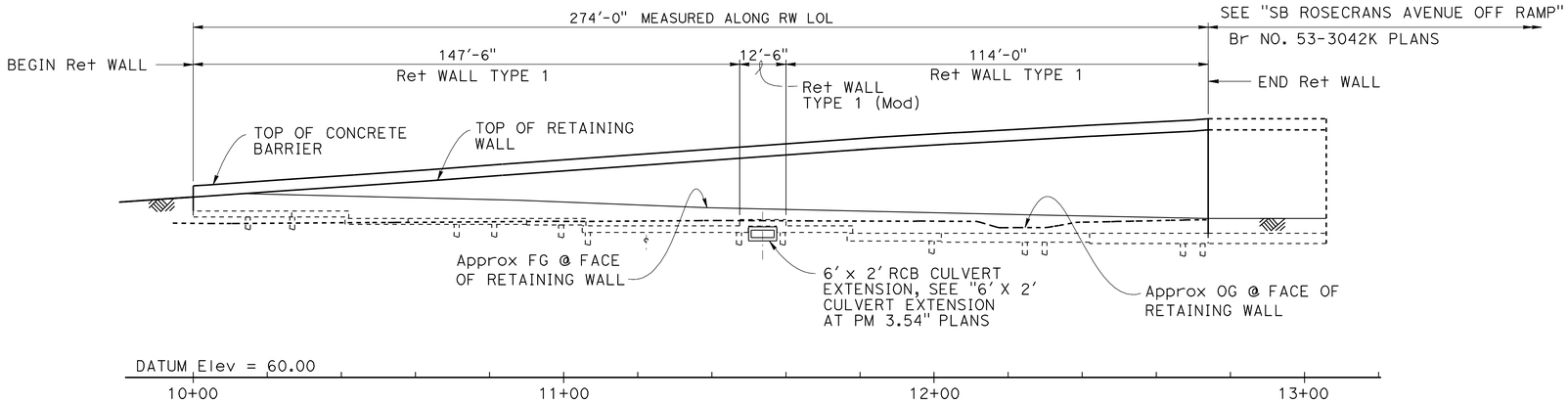

DEVELOPED MIRRORED ELEVATION

1" = 20'

QUANTITIES

STRUCTURE EXCAVATION (RETAINING WALL)	873	CY
STRUCTURE BACKFILL (RETAINING WALL)	1,300	CY
PERVIOUS BACKFILL MATERIAL (RETAINING WALL)	95	CY
FURNISH PILING (CLASS 90)	3,725	LF
DRIVE PILE (CLASS 90)	101	EA
STRUCTURAL CONCRETE, RETAINING WALL	480	CY
ARCHITECTURAL TREATMENT (SPLIT SLATE - FRACTURED RIB)	3,465	SQFT
BAR REINFORCING STEEL (RETAINING WALL)	78,200	LB
CONCRETE BARRIER (TYPE 736A MODIFIED 1)	274	LF

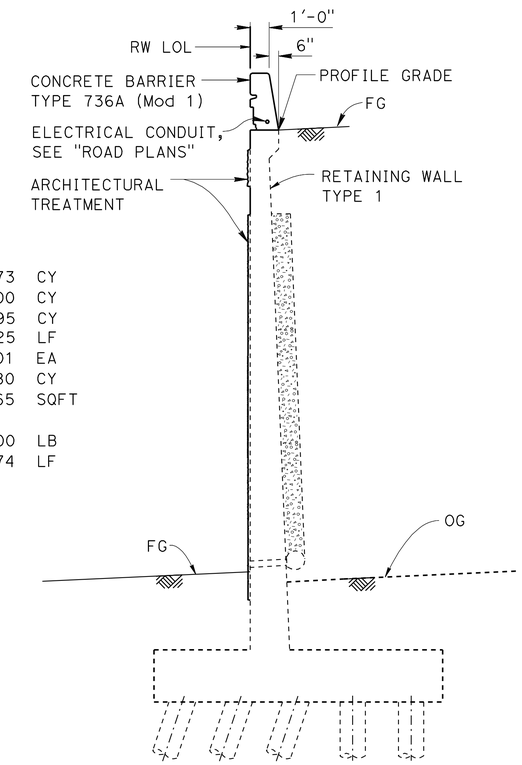

TYPICAL SECTION

¼" = 1'-0"

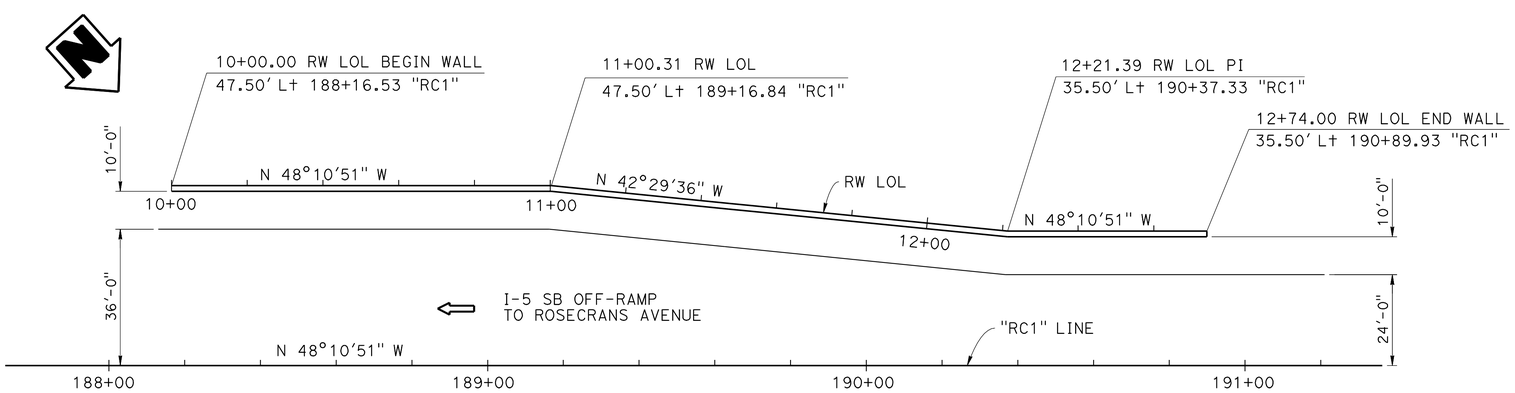

PLAN

1" = 20'

Jeff Sims
DESIGN ENGINEER

	BY	CHECKED		BY	CHECKED
DESIGN	Greg Thornton	Christa Siegenthaler	LOAD FACTOR DESIGN		
DETAILS	Shumei Jiang	Christa Siegenthaler	LAYOUT	Greg Thornton	Christa Siegenthaler
QUANTITIES	R. da Cruz F. / E. Watson	Christa Siegenthaler	SPECIFICATIONS	Theresa Nedwick	Theresa Nedwick

PLANS AND SPECS COMPARED

ORIGINAL SCALE IN INCHES FOR REDUCED PLANS 0 1 2 3

STATE OF CALIFORNIA
DEPARTMENT OF TRANSPORTATION

DIVISION OF ENGINEERING SERVICES
STRUCTURE DESIGN
DESIGN BRANCH 1

BRIDGE NO. X
POST MILE 3.6

RETAINING WALL NO. 191
GENERAL PLAN

UNIT: 3576
PROJECT NUMBER & PHASE: 07000018331
CONTRACT NO.: 07-215934

DISREGARD PRINTS BEARING EARLIER REVISION DATES

REVISION DATES 10-28-11 11-16-11 11/29/11 12/02/11

SHEET 1 OF 11

STRUCTURES DESIGN GENERAL PLAN SHEET (ENGLISH) (REV.09-01-10)

FILE => rw191-a-gp.dgn

USERNAME => s128843 DATE PLOTTED => 28-MAR-2012 TIME PLOTTED => 11:15

DIST	COUNTY	ROUTE	POST MILES TOTAL PROJECT	SHEET No.	TOTAL SHEETS
07	LA	5	2.4/4.0	1077	1288

REGISTERED CIVIL ENGINEER 12/7/2011 DATE

3-26-12
PLANS APPROVAL DATE

REGISTERED PROFESSIONAL ENGINEER Kevin Harper No. 42221 Exp. 3-31-12 CIVIL STATE OF CALIFORNIA

The State of California or its officers or agents shall not be responsible for the accuracy or completeness of electronic copies of this plan sheet.

INDEX TO PLANS

SHEET NO. TITLE

1. GENERAL PLAN
2. INDEX TO PLANS
3. STRUCTURE PLAN
4. FOUNDATION PLAN
5. RETAINING WALL ARCHITECTURAL TREATMENT
6. RETAINING WALL ARCHITECTURAL DETAILS
7. CONCRETE BARRIER TYPE 736A (Mod 1) DETAILS
8. LOG OF TEST BORINGS 1 OF 4
9. LOG OF TEST BORINGS 2 OF 4
10. LOG OF TEST BORINGS 3 OF 4
11. LOG OF TEST BORINGS 4 OF 4

STANDARD PLANS DATED MAY 2006

A10A	ACRONYMS AND ABBREVIATIONS (SHEET 1 OF 2)
A10B	ACRONYMS AND ABBREVIATIONS (SHEET 2 OF 2)
A10C	SYMBOLS (SHEET 1 OF 2)
A10D	SYMBOLS (SHEET 2 OF 2)
A62B	LIMITS OF PAYMENT FOR EXCAVATION AND BACKFILL - BRIDGE SURCHARGE AND WALL
B0-1	BRIDGE DETAILS
B0-3	BRIDGE DETAILS
B2-5	PILE DETAILS CLASS 90 AND CLASS 140
B3-1	RETAINING WALL TYPE 1 - H=4' THROUGH 30'
B3-8	RETAINING WALL DETAILS No. 1
B11-56	CONCRETE BARRIER TYPE 736

STANDARD PLAN SHEET NO.

DETAIL NO.

PILE DATA TABLE

LOCATION	PILE TYPE	NOMINAL RESISTANCE (KIP)		SPECIFIED TIP ELEVATION	NOMINAL DRIVING RESISTANCE (KIPS)
		COMPRESSION	TENSION		
Rt WALL TYPE 1 RW LOL 10+00.00 to 10+41.00	CLASS 90	180	0	53.5	180
Rt WALL TYPE 1 RW LOL 10+41.00 to 11+05	CLASS 90	180	0	51.3	180
Rt WALL TYPE 1 RW LOL 11+05.00 to 11+49.85 AND RW LOL 11+57.60 to 11+76.50	CLASS 90	180	0	49.3	180
Rt WALL TYPE 1 RW LOL 11+76.50 to 12+74.00	CLASS 90	180	0	46.3	180

NOTES:

1. Class 90 alternative "X" piles shall have a dimension "T" not less than 14 inches.
2. All design tips are controlled by compression.

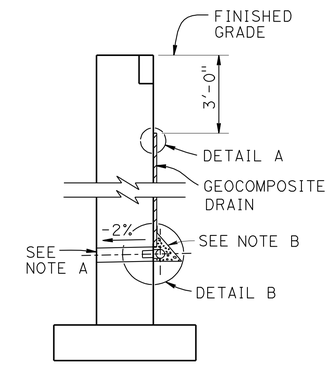

WALL SECTION

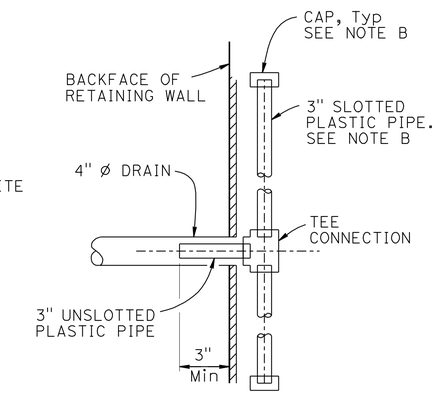

SECTION A-A

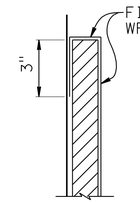

DETAIL A

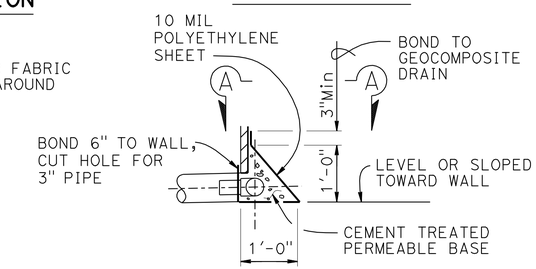

DETAIL B

WEEP HOLE AND GEOCOMPOSITE DRAIN

ALTERNATIVE TO BRIDGE DETAIL B0-3 / 3-1

NOTES:

A. 4" Ø drains at 25' max center to center.
For walls adjacent to sidewalks or curbs, provide 4" cast iron or asbestos cement pipe under the sidewalk to discharge through curb face.
Exposed wall drains shall be located 3"± above finished grade.

B. Geocomposite drain, cement treated permeable base, and 3"Ø slotted plastic pipe continuous behind retaining wall. Cap ends of pipe. Provide "Tee" connection at each 4" Ø drain.

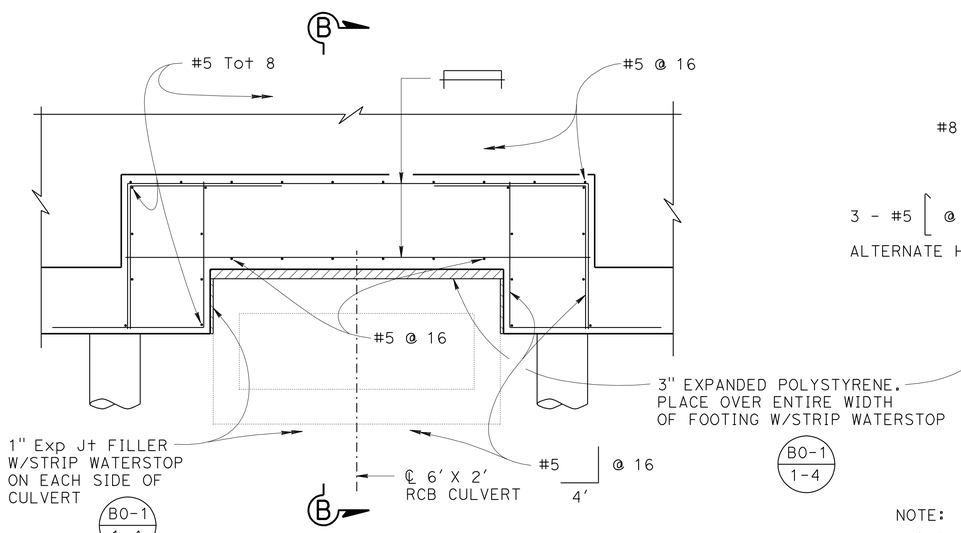

DETAIL C
½" = 1'-0"

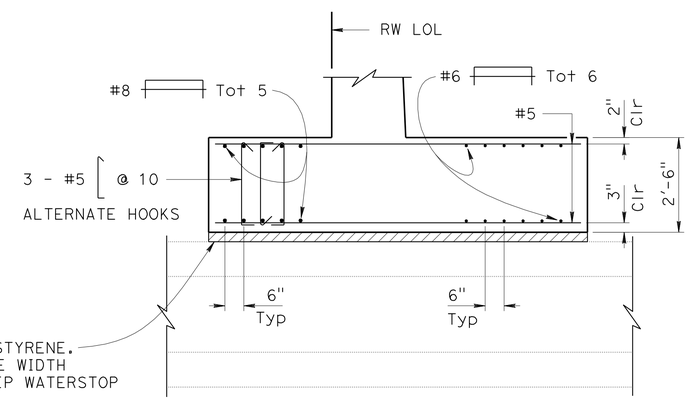

SECTION B-B
½" = 1'-0"

NOTE:

1. Reinforcement detailed is to be placed in addition to that shown on B3-1 "SPREAD FOOTING SECTION".

DESIGN	BY Greg Thornton	CHECKED Christa Siegenthaler	
DETAILS	BY Shumei Jiang	CHECKED Christa Siegenthaler	
QUANTITIES	BY R. da Cruz F. / E. Watson	CHECKED Christa Siegenthaler	

STATE OF CALIFORNIA
DEPARTMENT OF TRANSPORTATION

DIVISION OF ENGINEERING SERVICES
STRUCTURE DESIGN
DESIGN BRANCH 1

BRIDGE NO. X
POST MILE 3.6

RETAINING WALL NO. 191
INDEX TO PLANS

STRUCTURES DESIGN DETAIL SHEET (ENGLISH) (REV. 09-01-10)

ORIGINAL SCALE IN INCHES FOR REDUCED PLANS 0 1 2 3

UNIT: 3576
PROJECT NUMBER & PHASE: 07000018331
CONTRACT NO.: 07-215934

DISREGARD PRINTS BEARING EARLIER REVISION DATES

REVISION DATES 11-03-11 11-15-11 12-01-11 12/02/11

SHEET 2 OF 11

FILE => rw191-a-itp.dgn

USERNAME => s128813 DATE PLOTTED => 28-MAR-2012 TIME PLOTTED => 11:16

DIST	COUNTY	ROUTE	POST MILES TOTAL PROJECT	SHEET No.	TOTAL SHEETS
07	LA	5	2.4/4.0	1078	1288

REGISTERED CIVIL ENGINEER 12/7/2011 DATE

3-26-12
PLANS APPROVAL DATE

REGISTERED PROFESSIONAL ENGINEER Kevin Harper No. 42221 Exp. 3-31-12 CIVIL STATE OF CALIFORNIA

The State of California or its officers or agents shall not be responsible for the accuracy or completeness of electronic copies of this plan sheet.

NOTES:

1. For barrier details, see "CONCRETE BARRIER TYPE 736A (Mod 1) DETAILS" sheet.
2. Retaining wall expansion joints, weakened planes, and weep holes shall be placed per B0-3/3-3.
3. All longitudinal dimensions are measured along the RW LOL.
4. Not all piles shown in "DEVELOPED MIRRORED ELEVATION".
5. For "WEEP HOLE AND GEOCOMPOSITE DRAIN" alternative, see "INDEX TO PLANS" sheet.
6. ℄ Row 2 Piles (H = 24′) is 1" on the heel side of RW LOL.

LEGEND:

⊕ - Indicates Vertical Class 90 Pile
⊕ - Indicates 1:3 Battered Class 90 Pile

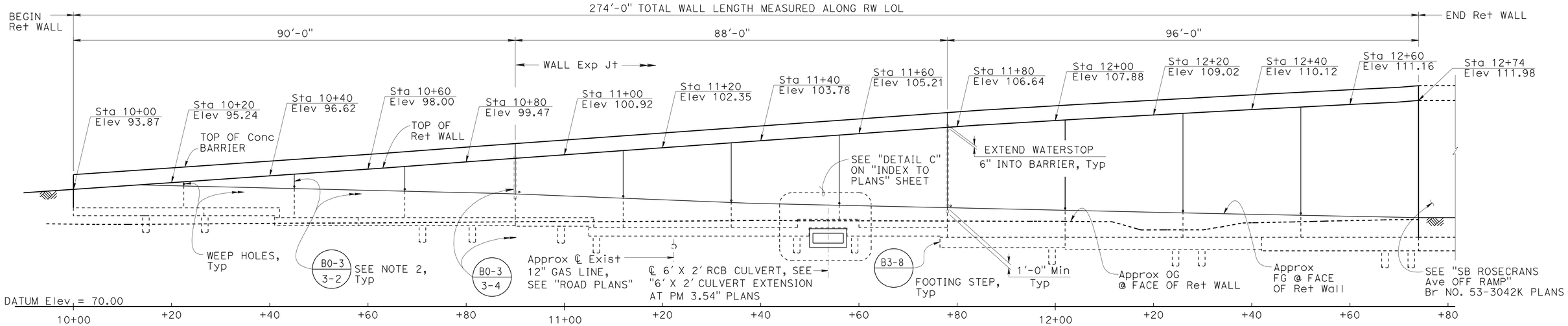

DEVELOPED MIRRORED ELEVATION

1" = 10′

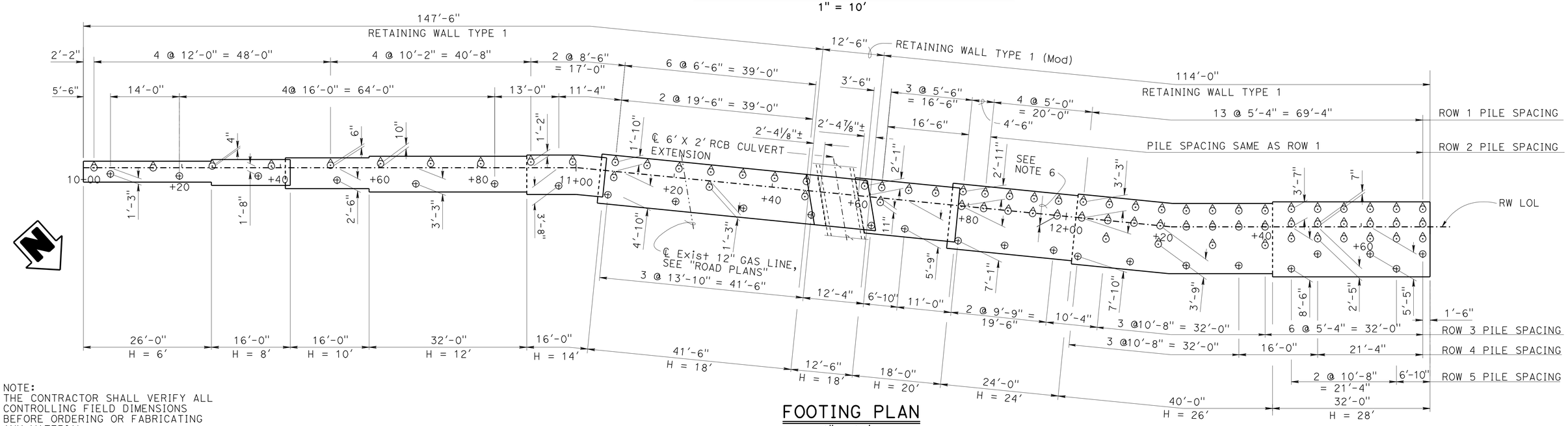

FOOTING PLAN

1" = 10′

NOTE:
THE CONTRACTOR SHALL VERIFY ALL CONTROLLING FIELD DIMENSIONS BEFORE ORDERING OR FABRICATING ANY MATERIAL.

	BY	CHECKED
DESIGN	Greg Thornton	Christa Siegenthaler
DETAILS	Shumei Jiang	Christa Siegenthaler
QUANTITIES	R. da Cruz F. / E. Watson	Christa Siegenthaler

STATE OF CALIFORNIA
DEPARTMENT OF TRANSPORTATION

DIVISION OF ENGINEERING SERVICES
STRUCTURE DESIGN
DESIGN BRANCH 1

BRIDGE NO. ×
POST MILE 3.6

RETAINING WALL NO. 191
STRUCTURE PLAN

STRUCTURES DESIGN DETAIL SHEET (ENGLISH) (REV. 09-01-10)

ORIGINAL SCALE IN INCHES FOR REDUCED PLANS 0 1 2 3

UNIT: 3576
PROJECT NUMBER & PHASE: 07000018331
CONTRACT NO.: 07-215934

DISREGARD PRINTS BEARING EARLIER REVISION DATES

REVISION DATES 11-03-11 11-15-11 11-30-11 12/05/11

SHEET 3 OF 11

FILE => rw191-c-sp01.dgn

USERNAME => s128843 DATE PLOTTED => 28-MAR-2012 TIME PLOTTED => 11:16

DIST	COUNTY	ROUTE	POST MILES TOTAL PROJECT	SHEET No.	TOTAL SHEETS
07	LA	5	2.4/4.0	1079	1288

Kevin J Harper 12/7/2011
REGISTERED CIVIL ENGINEER DATE

3-26-12
PLANS APPROVAL DATE

REGISTERED PROFESSIONAL ENGINEER Kevin Harper No. 42221 Exp. 3-31-12 CIVIL STATE OF CALIFORNIA

The State of California or its officers or agents shall not be responsible for the accuracy or completeness of electronic copies of this plan sheet.

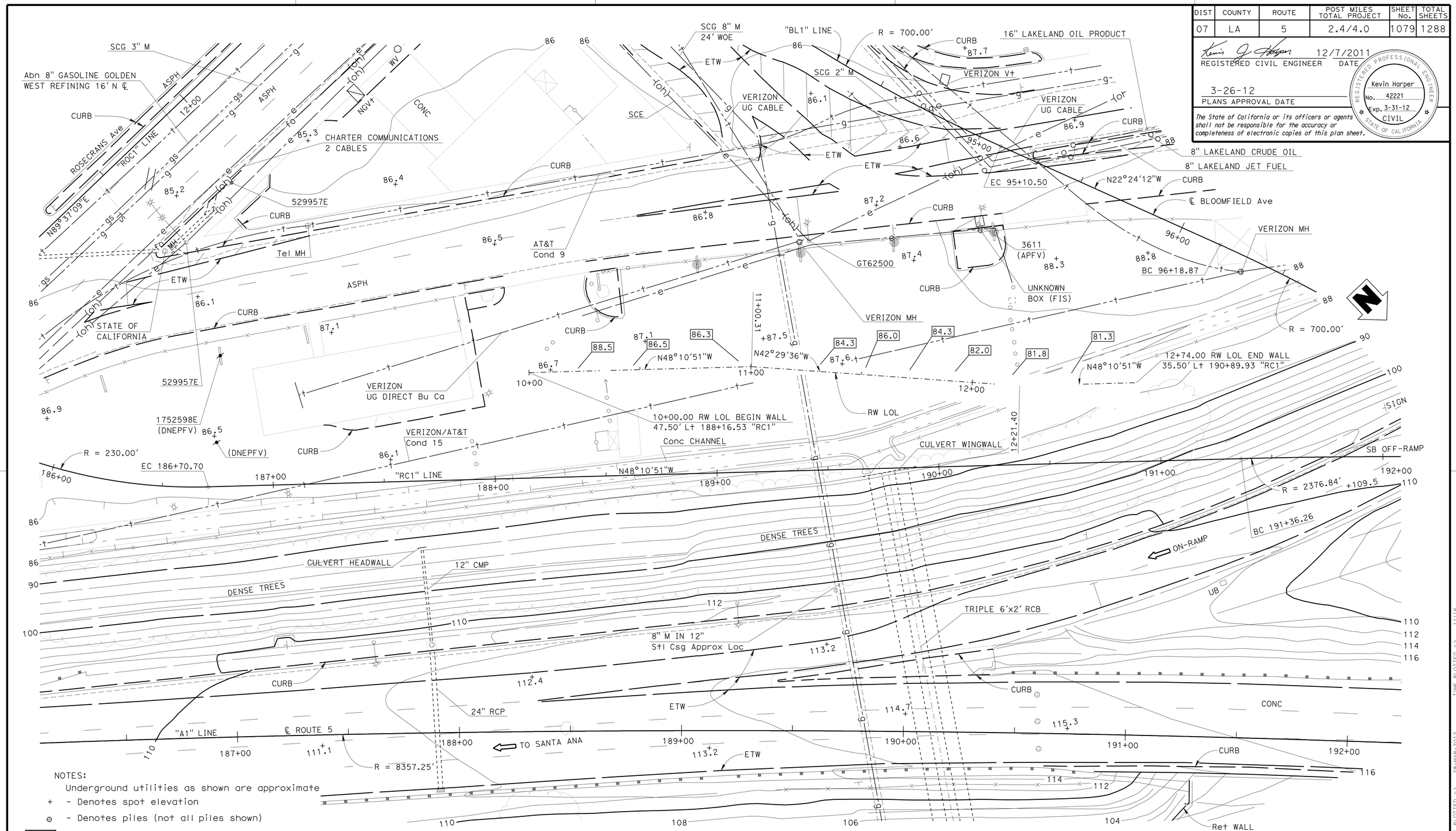

NOTES:

Underground utilities as shown are approximate

\+ - Denotes spot elevation

⊕ - Denotes piles (not all piles shown)

xx.x - Indicates bottom of Ftg elevation

SCALE 1" = 20'

	BY	CHECKED
DESIGN	Greg Thornton	Christa Siegenthaler
DETAILS	R. da Cruz F. / S. Jiang	Christa Siegenthaler
QUANTITIES	R. da Cruz F. / E. Watson	Christa Siegenthaler

STATE OF CALIFORNIA DEPARTMENT OF TRANSPORTATION

DIVISION OF ENGINEERING SERVICES STRUCTURE DESIGN DESIGN BRANCH 1

BRIDGE NO. X

POST MILE 3.6

RETAINING WALL NO. 191

FOUNDATION PLAN

STRUCTURES DESIGN DETAIL SHEET (ENGLISH) (REV. 09-01-10)

ORIGINAL SCALE IN INCHES FOR REDUCED PLANS 0 1 2 3

UNIT: 3576

PROJECT NUMBER & PHASE: 07000018331

CONTRACT NO.: 07-215934

DISREGARD PRINTS BEARING EARLIER REVISION DATES

REVISION DATES 10/19/11 11/16/11 11/30/11 12/05/11

SHEET 4 OF 11

FILE => rw191-e-fp01.dgn

USERNAME => s128843 DATE PLOTTED => 28-MAR-2012 TIME PLOTTED => 11:16

NOTES:

1. For "DETAIL A", "DETAIL B", "DETAIL C" and other retaining wall details, see "RETAINING WALL ARCHITECTURAL DETAILS" sheet.
2. For barrier architectural details, see "CONCRETE BARRIER TYPE 736A (Mod 1) DETAILS" sheet.
3. Retaining wall architectural pay limits shall include all split slate and fractured rib texture shown in "DEVELOPED MIRRORED ELEVATION".
4. All longitudinal dimensions are measured along RW LOL.

DIST	COUNTY	ROUTE	POST MILES TOTAL PROJECT	SHEET No.	TOTAL SHEETS
07	LA	5	2.4/4.0	1080	1288

REGISTERED CIVIL ENGINEER 12/7/2011 DATE

3-26-12
PLANS APPROVAL DATE

REGISTERED PROFESSIONAL ENGINEER Kevin Harper No. 42221 Exp. 3-31-12 CIVIL STATE OF CALIFORNIA

The State of California or its officers or agents shall not be responsible for the accuracy or completeness of electronic copies of this plan sheet.

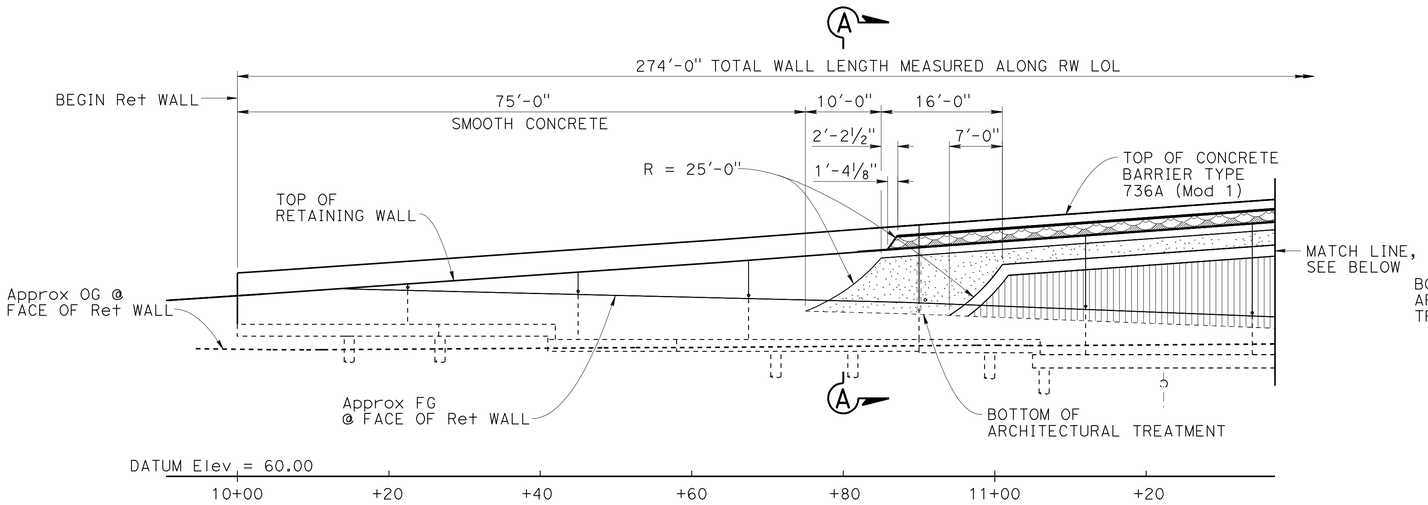

DEVELOPED MIRRORED ELEVATION

1" = 10'

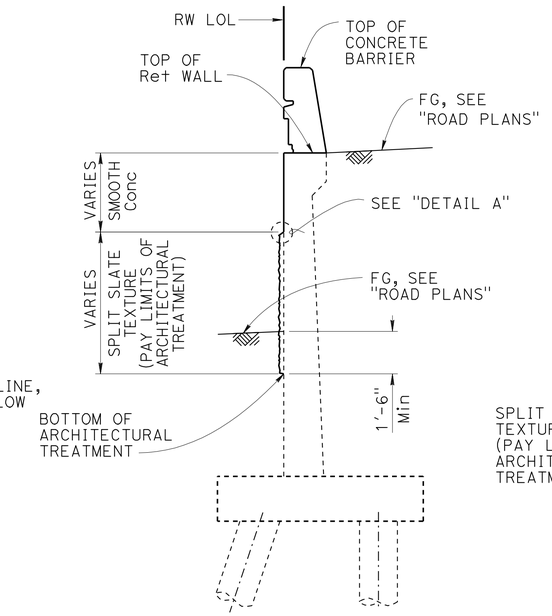

SECTION A-A

⅜" = 1'-0"

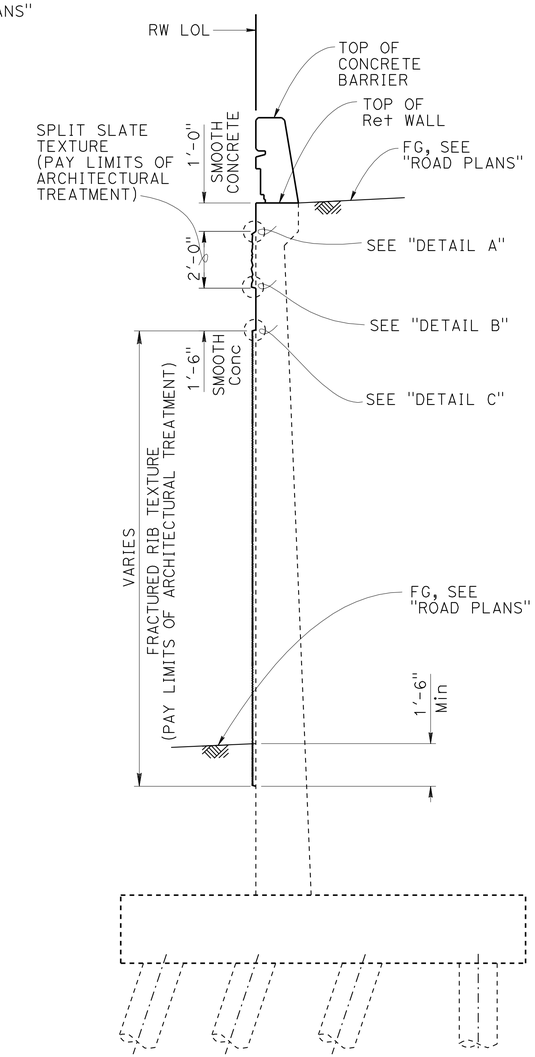

SECTION B-B

⅜" = 1'-0"

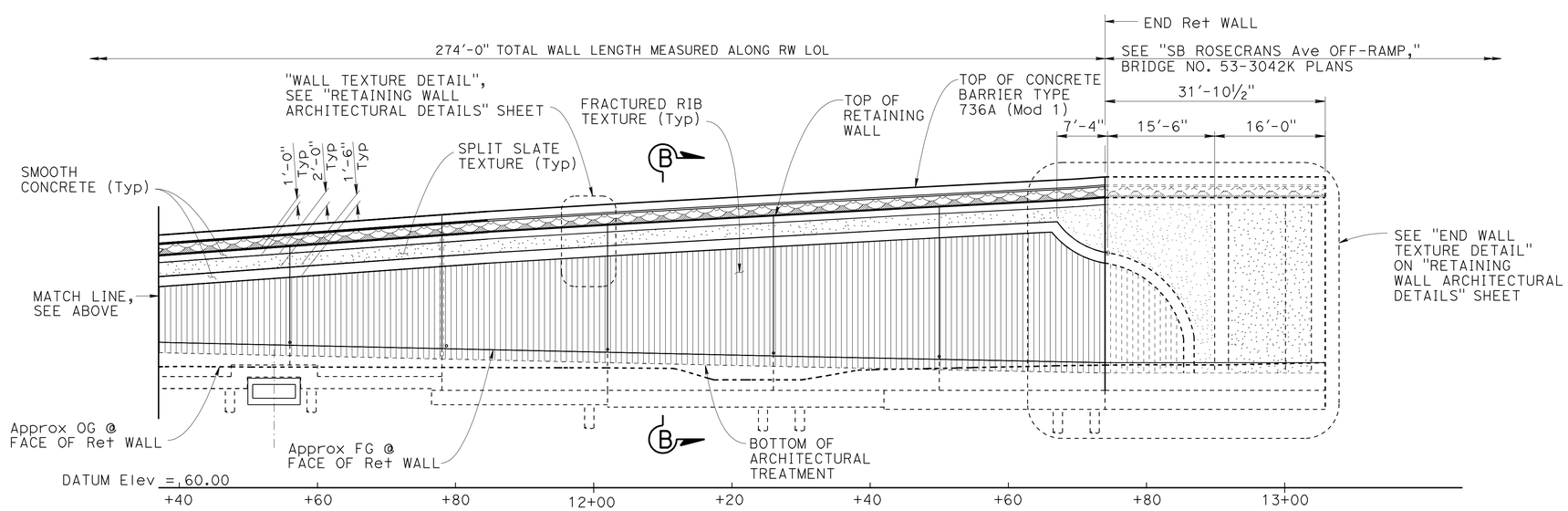

DEVELOPED MIRRORED ELEVATION

1" = 10'

DESIGN	BY Isaac Tasabia	CHECKED Javier Chavez	
DETAILS	BY Shumei Jiang	CHECKED G. Thornton/C. Siegenthaler	
QUANTITIES	BY R. de Cruz Ferrreira/E. Watson	CHECKED Christa Siegenthaler	

STATE OF CALIFORNIA
DEPARTMENT OF TRANSPORTATION

DIVISION OF ENGINEERING SERVICES
STRUCTURE DESIGN
DESIGN BRANCH 1

BRIDGE NO. ×
POST MILE 3.6

RETAINING WALL NO. 191

RETAINING WALL ARCHITECTURAL TREATMENT

STRUCTURES DESIGN DETAIL SHEET (ENGLISH) (REV. 09-01-10)

ORIGINAL SCALE IN INCHES FOR REDUCED PLANS 0 1 2 3

UNIT: 3576
PROJECT NUMBER & PHASE: 07000018331
CONTRACT NO.: 07-215934

DISREGARD PRINTS BEARING EARLIER REVISION DATES

REVISION DATES 11-10-11 11-16-11 12/05/11

SHEET 5 OF 11

FILE => rw191-f-arc01.dgn

USERNAME => s128843 DATE PLOTTED => 28-MAR-2012 TIME PLOTTED => 11:16

DIST	COUNTY	ROUTE	POST MILES TOTAL PROJECT	SHEET No.	TOTAL SHEETS
07	LA	5	2.4/4.0	1081	1288

REGISTERED CIVIL ENGINEER 12/7/2011 DATE

3-26-12
PLANS APPROVAL DATE

REGISTERED PROFESSIONAL ENGINEER Kevin Harper No. 42221 Exp. 3-31-12 CIVIL STATE OF CALIFORNIA

The State of California or its officers or agents shall not be responsible for the accuracy or completeness of electronic copies of this plan sheet.

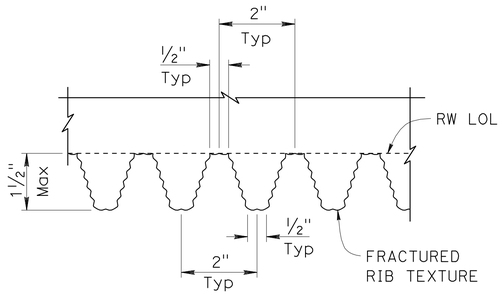

SECTION C-C

6" = 1'-0"

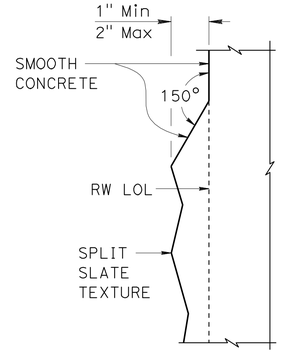

DETAIL A

3" = 1'-0"

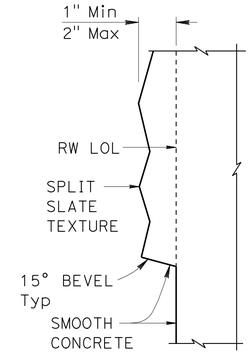

DETAIL B

3" = 1'-0"

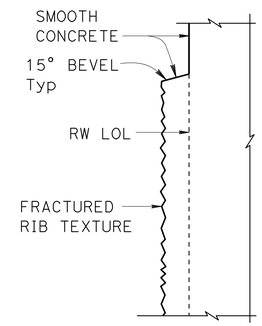

DETAIL C

3" = 1'-0"

NOTES:

1. For locations of "WALL TEXTURE DETAIL", "END WALL TEXTURE DETAIL", and other retaining wall architectural details not shown, see "RETAINING WALL ARCHITECTURAL TREATMENT" sheet.
2. For barrier architectural treatment, see "CONCRETE BARRIER TYPE 736A (Mod 1) DETAILS" sheet.

NOTE:

Detail at "SECTION A-A" shown, "SECTION B-B" similar.

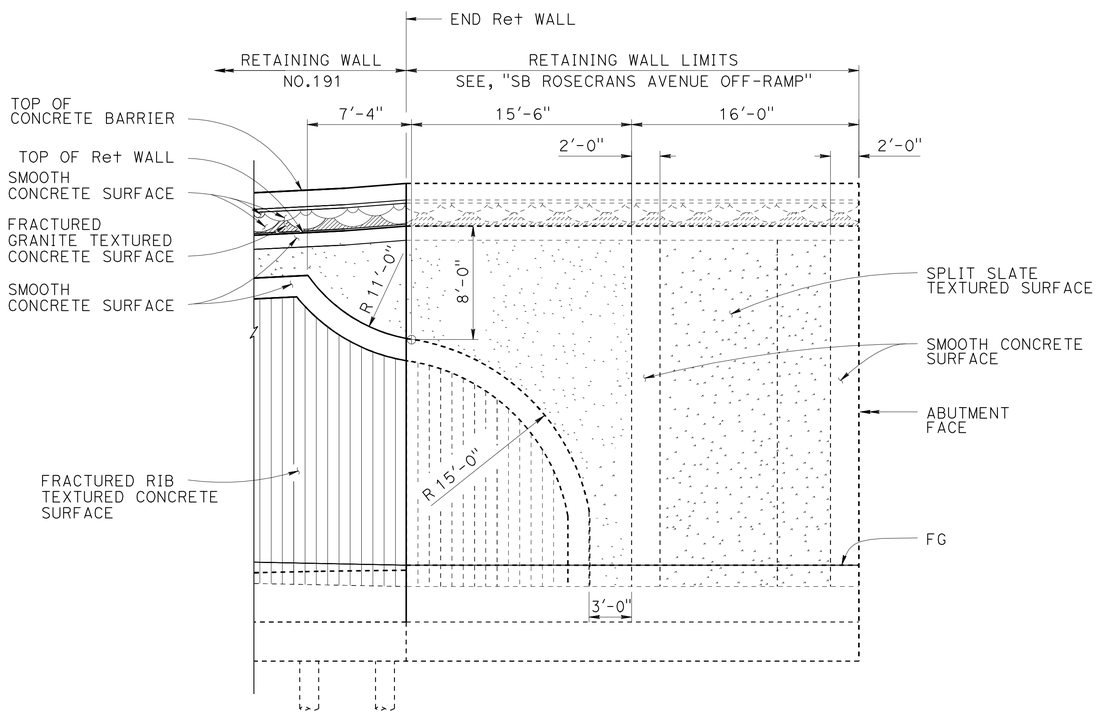

END WALL TEXTURE DETAIL

3/16" = 1'

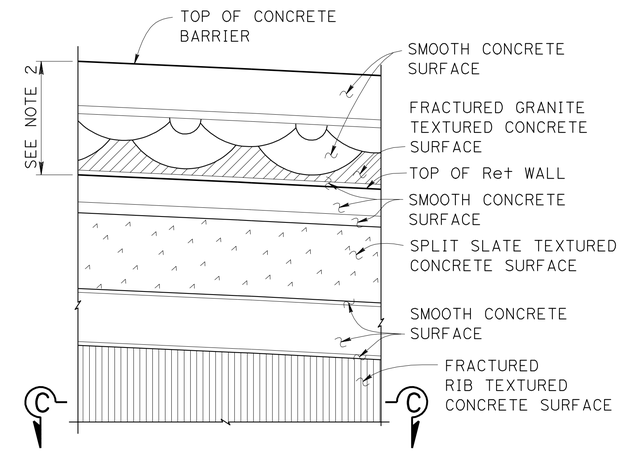

PARTIAL MIRRORED ELEVATION WALL TEXTURE DETAIL

½" = 1'-0"

	BY	CHECKED
DESIGN	Isaac Tasabia	Javier Chavez
DETAILS	Jie Tang/Shumei Jiang	G. Thornton/C. Siegenthaler
QUANTITIES	R. de Cruz Ferrreira/E. Watson	Christa Siegenthaler

STATE OF CALIFORNIA
DEPARTMENT OF TRANSPORTATION

DIVISION OF ENGINEERING SERVICES
STRUCTURE DESIGN
DESIGN BRANCH 1

BRIDGE NO. ×
POST MILE 3.6

RETAINING WALL NO. 191
RETAINING WALL ARCHITECTURAL DETAILS

STRUCTURES DESIGN DETAIL SHEET (ENGLISH) (REV. 09-01-10)

ORIGINAL SCALE IN INCHES FOR REDUCED PLANS 0 1 2 3

UNIT: 3576
PROJECT NUMBER & PHASE: 07000018331
CONTRACT NO.: 07-215934

DISREGARD PRINTS BEARING EARLIER REVISION DATES

REVISION DATES 10/30/11 10/31/11 11/14/11 12/05/11

SHEET 6 OF 11

FILE => rw191-g-rwadet01.dgn

USERNAME => s128843 DATE PLOTTED => 28-MAR-2012 TIME PLOTTED => 11:16

DIST	COUNTY	ROUTE	POST MILES TOTAL PROJECT	SHEET No.	TOTAL SHEETS
07	LA	5	2.4/4.0	1082	1288

REGISTERED CIVIL ENGINEER — DATE 12/7/2011

PLANS APPROVAL DATE 3-26-12

REGISTERED PROFESSIONAL ENGINEER — Kevin Harper — No. 42221 — Exp. 3-31-12 — CIVIL — STATE OF CALIFORNIA

The State of California or its officers or agents shall not be responsible for the accuracy or completeness of electronic copies of this plan sheet.

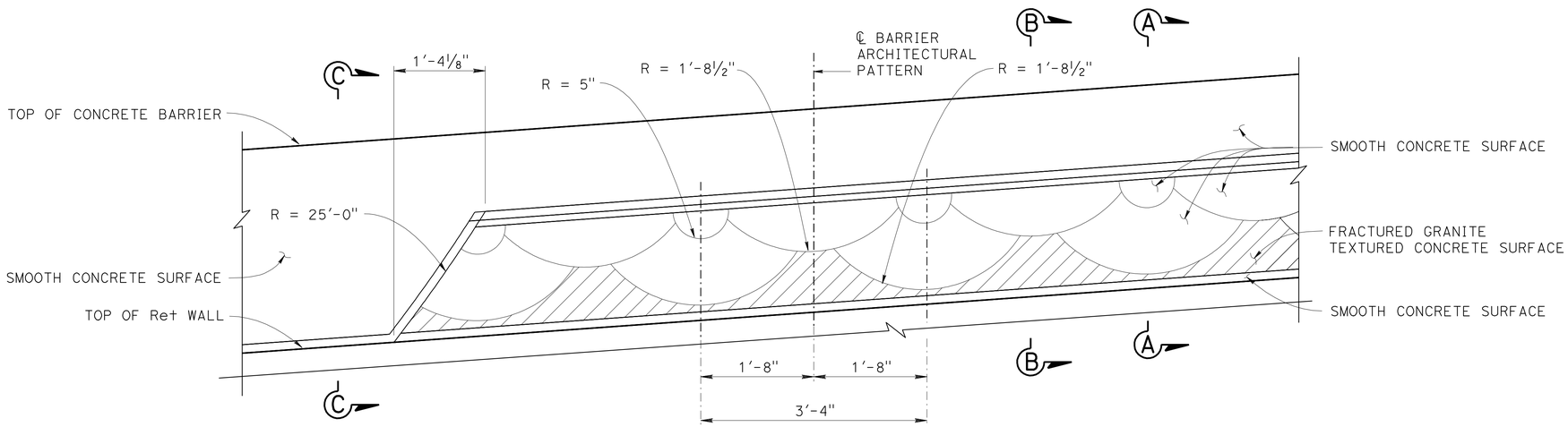

PART MIRRORED ELEVATION CONCRETE BARRIER TYPE 736A (MOD 1)

1" = 1'-0"

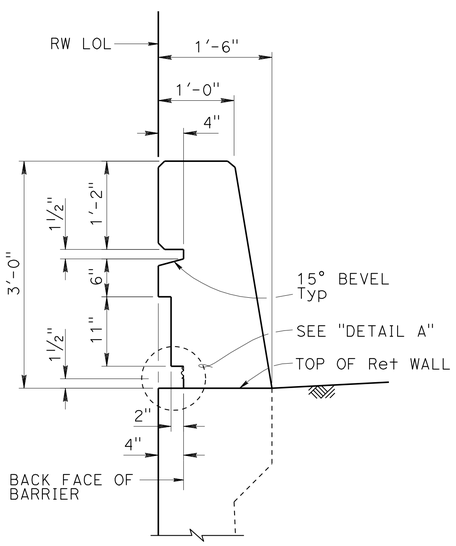

SECTION A-A

1" = 1'-0"

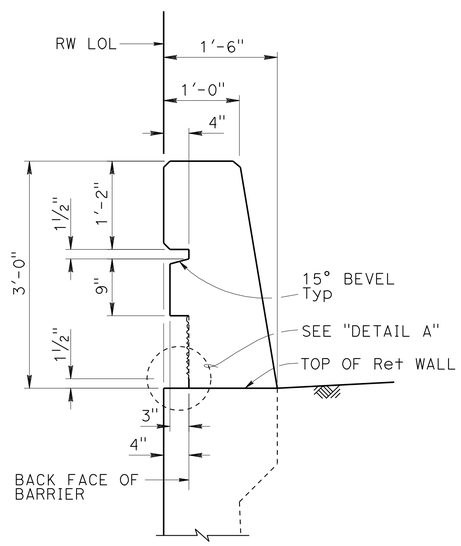

SECTION B-B

1" = 1'-0"

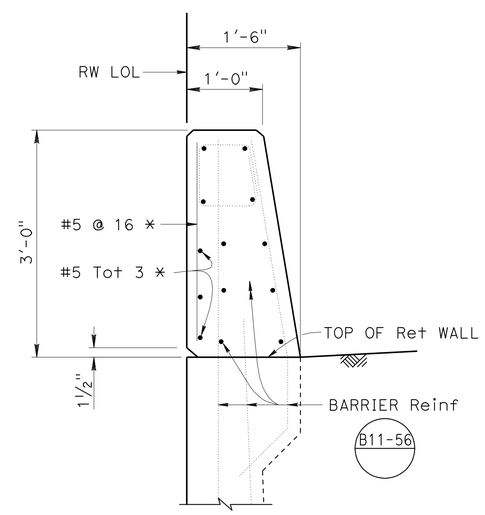

SECTION C-C

1" = 1'-0"

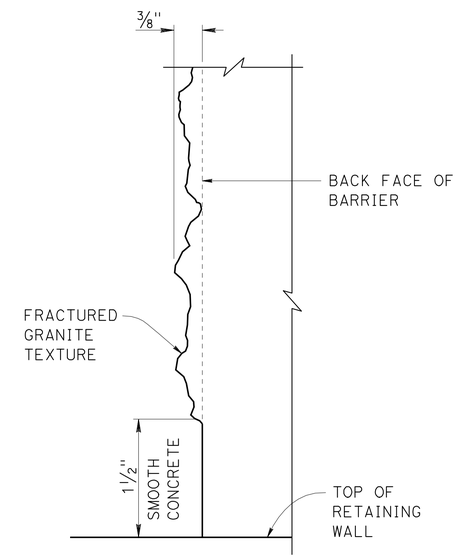

NOTE: Detail at "SECTION B-B" shown, "SECTION A-A" similar.

DETAIL A

NO SCALE

NOTES:

For barrier details not shown, see STANDARD PLAN B11-56.

* - Indicates Reinf is additional to typical barrier Reinf.

	BY	CHECKED
DESIGN	Isaac Tasabia	Javier Chavez
DETAILS	Jie Tang/Shumei Jiang	G. Thornton/C. Siegenthaler
QUANTITIES	R. de Cruz Ferrreira/E. Watson	C. Siegenthaler

STATE OF CALIFORNIA DEPARTMENT OF TRANSPORTATION

DIVISION OF ENGINEERING SERVICES STRUCTURE DESIGN — DESIGN BRANCH 1

BRIDGE NO. X — POST MILE 3.6

RETAINING WALL NO. 191

CONCRETE BARRIER TYPE 736A (Mod 1) DETAILS

STRUCTURES DESIGN DETAIL SHEET (ENGLISH) (REV. 09-01-10)

ORIGINAL SCALE IN INCHES FOR REDUCED PLANS 0 1 2 3

UNIT: 3576

PROJECT NUMBER & PHASE: 07000018331

CONTRACT NO.: 07-215934

DISREGARD PRINTS BEARING EARLIER REVISION DATES — REVISION DATES 10/19/11 11/16/11 12/05/11

SHEET 7 OF 11

FILE => rw191-h-barr01.dgn

USERNAME => s128843 DATE PLOTTED => 28-MAR-2012 TIME PLOTTED => 11:16

DIST	COUNTY	ROUTE	POST MILES TOTAL PROJECT	SHEET No.	TOTAL SHEETS
07	LA	5	2.4/4.0	1083	1288

GEOTECHNICAL PROFESSIONAL — DATE 06/2011

3-26-12
PLANS APPROVAL DATE

REGISTERED PROFESSIONAL ENGINEER — MICHAEL G. SMITH — No. 2229 — Exp. 3-31-2012 — GEOTECHNICAL — STATE OF CALIFORNIA

The State of California or its officers or agents shall not be responsible for the accuracy or completeness of electronic copies of this plan sheet.

BENCH MARK

PRHV 102 Elev 86.67′
FOUND PK NAIL & TIN SET BY OTHERS ON ISLAND @ THE BEGINNING OF SB 1-5 ON-RAMP AND ROSECRANS AVE PER SR 09-037-000010
NAVD 88

PRHV 103 Elev 84.50′
FOUND CHISELED "X" ON BACK WALK @ INLET AT SE CORNER OF ROSECRANS AVE AND FIRESTONE BLVD PER SR 09-037-000010
NAVD 88

PRHV 104 Elev 94.31′
FOUND CHISLED "X" ON S′LY TC @ +/- 250′ W/O NB 1-5 TO WB FIRESTONE BLVD OFF-RAMP TUNNEL PER SR 09-033-000011
NAVD 88

PRHV 105 Elev 96.88′
FOUND CHISLED "X" ON W′LY CURB BCR @ EB FIRESTONE BL TO SB 1-5 ON-RAMP & FIRESTONE BL INTERSECTION PER SR 09-033-000011
NAVD 88

Notes

1. This LOTB sheet was prepared in accordance with the Caltrans Soil & Rock Logging, Classification, and Presentation Manual (2010) except three digit sequence number in boring identification starting with the segment number per exception request approved on April 08, 2009.

2. For protection of underground utility lines, hand-auger was used to remove top 5 to 10 feet of subsurface material for exploratory borings and cone penetration testings.

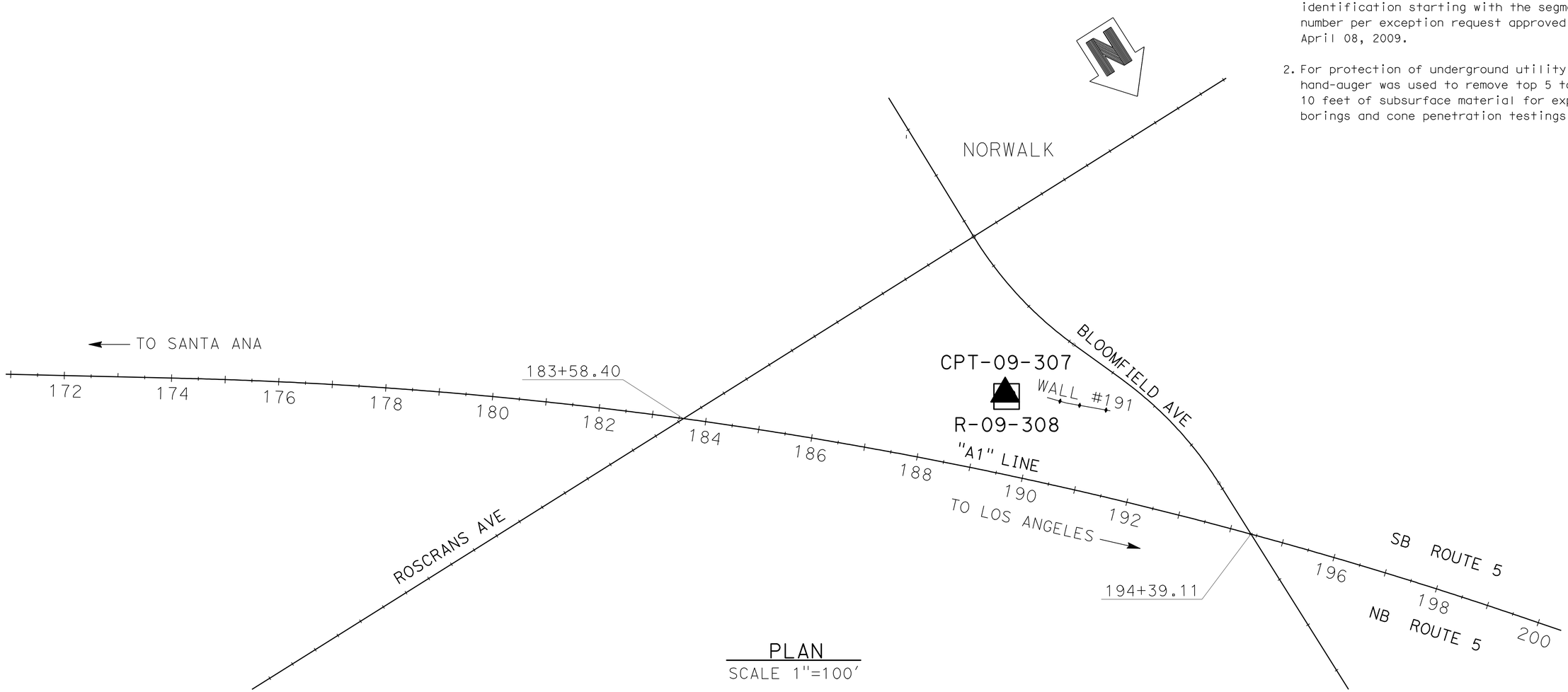

PLAN
SCALE 1"=100′

ENGINEERING SERVICES	MATERIALS AND GEOTECHNICAL SERVICES	STATE OF CALIFORNIA DEPARTMENT OF TRANSPORTATION	DIVISION OF ENGINEERING SERVICES STRUCTURE DESIGN DESIGN BRANCH 1	BRIDGE NO. X / POST MILE 3.6	RETAINING WALL NO. 191 LOG OF TEST BORINGS SHEET 1 OF 4
FUNCTIONAL SUPERVISOR NAME: M. SMITH	DRAWN BY: P.QUACH CHECKED BY: D.ORRIS	FIELD INVESTIGATION BY: P.MCDONALD/EJ.JEON/C.CARBINO/L.ROEBUCK			

OGS CIVIL LOG OF TEST BORINGS SHEET — ORIGINAL SCALE IN INCHES FOR REDUCED PLANS 0 1 2 3

UNIT: 3576
PROJECT NUMBER & PHASE: 07000018331 — CONTRACT NO.: 07-215934

DISREGARD PRINTS BEARING EARLIER REVISION DATES → REVISION DATES 06/17/11 — SHEET 8 OF 11

FILE => rw191-z-lltb01.dgn

USERNAME => s128843 DATE PLOTTED => 28-MAR-2012 TIME PLOTTED => 11:16

DIST	COUNTY	ROUTE	POST MILES TOTAL PROJECT	SHEET No.	TOTAL SHEETS
07	LA	5	2.4/4.0	1084	1288

GEOTECHNICAL PROFESSIONAL — DATE 06/2011

3-26-12
PLANS APPROVAL DATE

REGISTERED PROFESSIONAL ENGINEER — MICHAEL G. SMITH No. 2229 Exp. 3-31-2012 GEOTECHNICAL — STATE OF CALIFORNIA

The State of California or its officers or agents shall not be responsible for the accuracy or completeness of electronic copies of this plan sheet.

FOR PLAN VIEW, SEE
"LOG OF TEST BORINGS" 1 OF 4

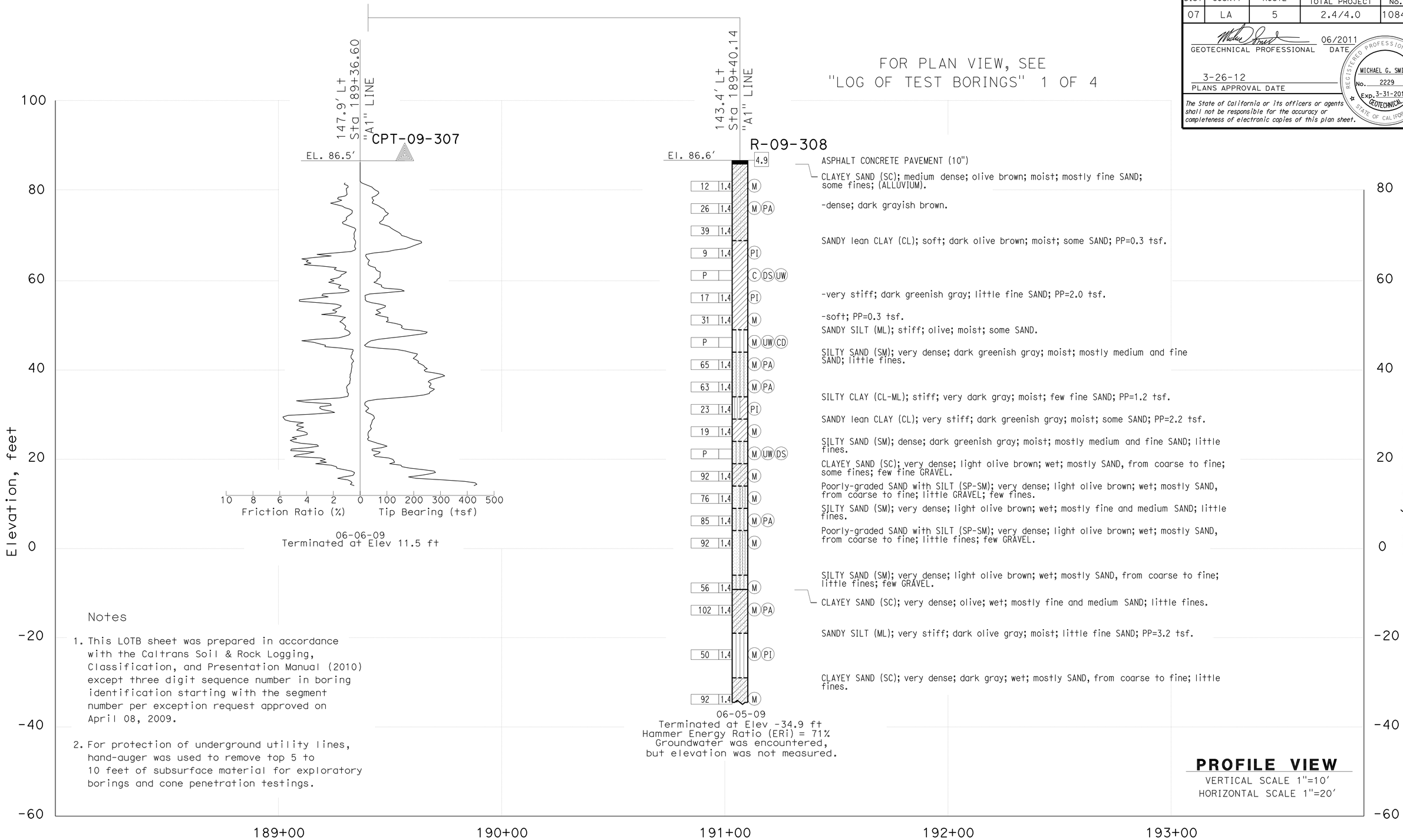

Notes

1. This LOTB sheet was prepared in accordance with the Caltrans Soil & Rock Logging, Classification, and Presentation Manual (2010) except three digit sequence number in boring identification starting with the segment number per exception request approved on April 08, 2009.

2. For protection of underground utility lines, hand-auger was used to remove top 5 to 10 feet of subsurface material for exploratory borings and cone penetration testings.

PROFILE VIEW
VERTICAL SCALE 1"=10'
HORIZONTAL SCALE 1"=20'

ENGINEERING SERVICES	MATERIALS AND GEOTECHNICAL SERVICES	STATE OF CALIFORNIA DEPARTMENT OF TRANSPORTATION	DIVISION OF ENGINEERING SERVICES STRUCTURE DESIGN DESIGN BRANCH 1	BRIDGE NO. X / POST MILE 3.6	RETAINING WALL NO. 191
FUNCTIONAL SUPERVISOR	DRAWN BY: P.QUACH	FIELD INVESTIGATION BY:			LOG OF TEST BORINGS SHEET 2 OF 4
NAME: M. SMITH	CHECKED BY: D.ORRIS	P.MCDONALD/EJ.JEON/C.CARBINO/L.ROEBUCK			

OGS CIVIL LOG OF TEST BORINGS SHEET

ORIGINAL SCALE IN INCHES FOR REDUCED PLANS 0 1 2 3

UNIT: 3576
PROJECT NUMBER & PHASE: 07000018331 CONTRACT NO.: 07-215934

DISREGARD PRINTS BEARING EARLIER REVISION DATES → REVISION DATES 06/17/11 SHEET 9 OF 11

FILE => rw191-z-ltb02.dgn

USERNAME => s128843 DATE PLOTTED => 28-MAR-2012 TIME PLOTTED => 11:17

DIST	COUNTY	ROUTE	POST MILES TOTAL PROJECT	SHEET No.	TOTAL SHEETS
07	LA	5	2.4/4.0	1085	1288

GEOTECHNICAL PROFESSIONAL — DATE 06/2011

3-26-12
PLANS APPROVAL DATE

REGISTERED PROFESSIONAL ENGINEER — MICHAEL G. SMITH No. 2229 Exp. 3-31-2012 GEOTECHNICAL — STATE OF CALIFORNIA

The State of California or its officers or agents shall not be responsible for the accuracy or completeness of electronic copies of this plan sheet.

REFERENCE: CALTRANS SOIL & ROCK LOGGING, CLASSIFICATION, AND PRESENTATION MANUAL (2010)

CEMENTATION

Description	Criteria
Weak	Crumbles or breaks with handling or little finger pressure.
Moderate	Crumbles or breaks with considerable finger pressure.
Strong	Will not crumble or break with finger pressure.

BOREHOLE IDENTIFICATION

Symbol	Hole Type	Description
Size	A	Auger Boring (hollow or solid stem bucket)
Size	R RW RC P	Rotary drilled boring (conventional) Rotary drilled with self-casing wire-line Rotary core with continuously-sampled, self-casing wire-line Rotary percussion boring (air)
Size	R	Rotary drilled diamond core
Size	HD HA	Hand driven (1-inch soil tube) Hand Auger
●	D	Dynamic Cone Penetration Boring
▲	CPT	Cone Penetration Test (ASTM D 5778)
⬚	O	Other (note on LOTB)

Note: Size in inches.

CONSISTENCY OF COHESIVE SOILS

Description	Shear Strength (tsf)	Pocket Penetrometer Measurement, PP, (tsf)	Torvane Measurement, TV, (tsf)	Vane Shear Measurement, VS, (tsf)
Very Soft	Less than 0.12	Less than 0.25	Less than 0.12	Less than 0.12
Soft	0.12 - 0.25	0.25 - 0.5	0.12 - 0.25	0.12 - 0.25
Medium Stiff	0.25 - 0.5	0.5 - 1	0.25 - 0.5	0.25 - 0.5
Stiff	0.5 - 1	1 - 2	0.5 - 1	0.5 - 1
Very Stiff	1 - 2	2 - 4	1 - 2	1 - 2
Hard	Greater than 2	Greater than 4	Greater than 2	Greater than 2

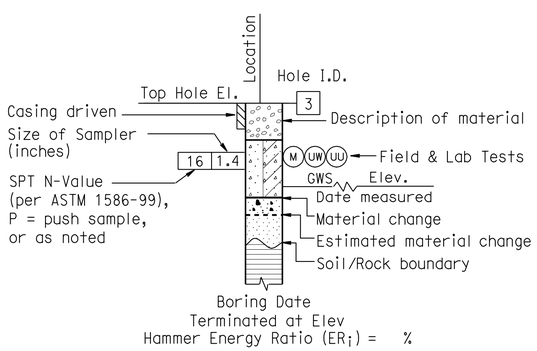

ROTARY BORING

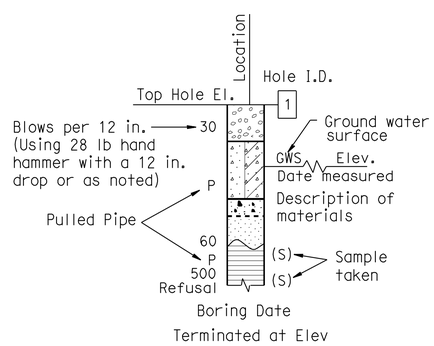

HAND BORING

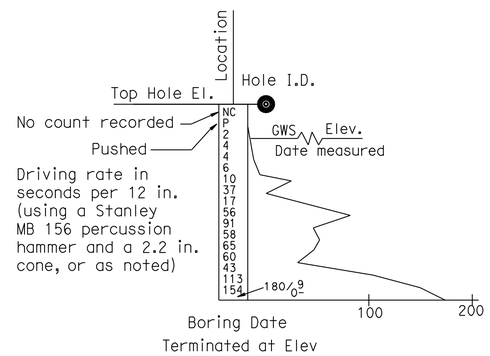

DYNAMIC CONE PENETRATION BORING

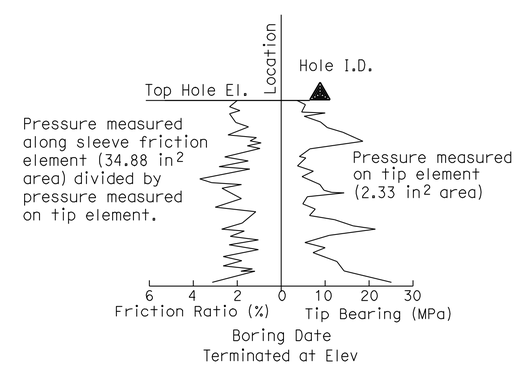

CONE PENETRATION TEST (CPT) BORING

ENGINEERING SERVICES	MATERIALS AND GEOTECHNICAL SERVICES	STATE OF CALIFORNIA DEPARTMENT OF TRANSPORTATION	DIVISION OF ENGINEERING SERVICES STRUCTURE DESIGN DESIGN BRANCH 1	BRIDGE NO. X / POST MILE 3.6	RETAINING WALL NO. 191
FUNCTIONAL SUPERVISOR NAME: M. SMITH	DRAWN BY: P.QUACH CHECKED BY: D.ORRIS	FIELD INVESTIGATION BY: P.MCDONALD/EJ.JEON/C.CARBINO/L.ROEBUCK			LOG OF TEST BORINGS SHEET 3 OF 4

OGS CIVIL LOG OF TEST BORINGS SHEET

ORIGINAL SCALE IN INCHES FOR REDUCED PLANS 0 1 2 3

UNIT: 3576
PROJECT NUMBER & PHASE: 07000018331 CONTRACT NO.: 07-215934

DISREGARD PRINTS BEARING EARLIER REVISION DATES → 06/17/11

SHEET 10 OF 11

FILE => rw191-z-ltb03.dgn

USERNAME => s128843 DATE PLOTTED => 28-MAR-2012 TIME PLOTTED => 11:17

REFERENCE: CALTRANS SOIL & ROCK LOGGING, CLASSIFICATION, AND PRESENTATION MANUAL (2010)

DIST	COUNTY	ROUTE	POST MILES TOTAL PROJECT	SHEET No.	TOTAL SHEETS
07	LA	5	2.4/4.0	1086	1288

GEOTECHNICAL PROFESSIONAL — DATE 06/2011

3-26-12
PLANS APPROVAL DATE

REGISTERED PROFESSIONAL ENGINEER — MICHAEL G. SMITH No. 2229 Exp. 3-31-2012 GEOTECHNICAL — STATE OF CALIFORNIA

The State of California or its officers or agents shall not be responsible for the accuracy or completeness of electronic copies of this plan sheet.

GROUP SYMBOLS AND NAMES

Graphic/Symbol	Group Names	Graphic/Symbol	Group Names
GW	Well-graded GRAVEL Well-graded GRAVEL with SAND	CL	Lean CLAY Lean CLAY with SAND Lean CLAY with GRAVEL SANDY lean CLAY SANDY lean CLAY with GRAVEL GRAVELLY lean CLAY GRAVELLY lean CLAY with SAND
GP	Poorly-graded GRAVEL Poorly-graded GRAVEL with SAND		
GW-GM	Well-graded GRAVEL with SILT Well-graded GRAVEL with SILT and SAND	CL-ML	SILTY CLAY SILTY CLAY with SAND SILTY CLAY with GRAVEL SANDY SILTY CLAY SANDY SILTY CLAY with GRAVEL GRAVELLY SILTY CLAY GRAVELLY SILTY CLAY with SAND
GW-GC	Well-graded GRAVEL with CLAY (or SILTY CLAY) Well-graded GRAVEL with CLAY and SAND (or SILTY CLAY and SAND)		
GP-GM	Poorly-graded GRAVEL with SILT Poorly-graded GRAVEL with SILT and SAND	ML	SILT SILT with SAND SILT with GRAVEL SANDY SILT SANDY SILT with GRAVEL GRAVELLY SILT GRAVELLY SILT with SAND
GP-GC	Poorly-graded GRAVEL with CLAY (or SILTY CLAY) Poorly-graded GRAVEL with CLAY and SAND (or SILTY CLAY and SAND)		
GM	SILTY GRAVEL SILTY GRAVEL with SAND	OL	ORGANIC lean CLAY ORGANIC lean CLAY with SAND ORGANIC lean CLAY with GRAVEL SANDY ORGANIC lean CLAY SANDY ORGANIC lean CLAY with GRAVEL GRAVELLY ORGANIC lean CLAY GRAVELLY ORGANIC lean CLAY with SAND
GC	CLAYEY GRAVEL CLAYEY GRAVEL with SAND		
GC-GM	SILTY, CLAYEY GRAVEL SILTY, CLAYEY GRAVEL with SAND	OL	ORGANIC SILT ORGANIC SILT with SAND ORGANIC SILT with GRAVEL SANDY ORGANIC SILT SANDY ORGANIC SILT with GRAVEL GRAVELLY ORGANIC SILT GRAVELLY ORGANIC SILT with SAND
SW	Well-graded SAND Well-graded SAND with GRAVEL		
SP	Poorly-graded SAND Poorly-graded SAND with GRAVEL	CH	Fat CLAY Fat CLAY with SAND Fat CLAY with GRAVEL SANDY fat CLAY SANDY fat CLAY with GRAVEL GRAVELLY fat CLAY GRAVELLY fat CLAY with SAND
SW-SM	Well-graded SAND with SILT Well-graded SAND with SILT and GRAVEL		
SW-SC	Well-graded SAND with CLAY (or SILTY CLAY) Well-graded SAND with CLAY and GRAVEL (or SILTY CLAY and GRAVEL)	MH	Elastic SILT Elastic SILT with SAND Elastic SILT with GRAVEL SANDY elastic SILT SANDY elastic SILT with GRAVEL GRAVELLY elastic SILT GRAVELLY elastic SILT with SAND
SP-SM	Poorly-graded SAND with SILT Poorly-graded SAND with SILT and GRAVEL		
SP-SC	Poorly-graded SAND with CLAY (or SILTY CLAY) Poorly-graded SAND with CLAY and GRAVEL (or SILTY CLAY and GRAVEL)	OH	ORGANIC fat CLAY ORGANIC fat CLAY with SAND ORGANIC fat CLAY with GRAVEL SANDY ORGANIC fat CLAY SANDY ORGANIC fat CLAY with GRAVEL GRAVELLY ORGANIC fat CLAY GRAVELLY ORGANIC fat CLAY with SAND
SM	SILTY SAND SILTY SAND with GRAVEL		
SC	CLAYEY SAND CLAYEY SAND with GRAVEL	OH	ORGANIC elastic SILT ORGANIC elastic SILT with SAND ORGANIC elastic SILT with GRAVEL SANDY ORGANIC elastic SILT SANDY ORGANIC elastic SILT with GRAVEL GRAVELLY ORGANIC elastic SILT GRAVELLY ORGANIC elastic SILT with SAND
SC-SM	SILTY, CLAYEY SAND SILTY, CLAYEY SAND with GRAVEL		
PT	PEAT	OL/OH	ORGANIC SOIL ORGANIC SOIL with SAND ORGANIC SOIL with GRAVEL SANDY ORGANIC SOIL SANDY ORGANIC SOIL with GRAVEL GRAVELLY ORGANIC SOIL GRAVELLY ORGANIC SOIL with SAND
	COBBLES COBBLES and BOULDERS BOULDERS		

FIELD AND LABORATORY TESTING

- (C) Consolidation (ASTM D 2435)
- (CL) Collapse Potential (ASTM D 5333)
- (CP) Compaction Curve (CTM 216)
- (CR) Corrosivity Testing (CTM 643, CTM 422, CTM 417)
- (CU) Consolidated Undrained Triaxial (ASTM D 4767)
- (DS) Direct Shear (ASTM D 3080)
- (EI) Expansion Index (ASTM D 4829)
- (M) Moisture Content (ASTM D 2216)
- (OC) Organic Content-% (ASTM D 2974)
- (P) Permeability (CTM 220)
- (PA) Particle Size Analysis (ASTM D 422)
- (PI) Plasticity Index (AASHTO T 90) Liquid Limit (AASHTO T 89)
- (PL) Point Load Index (ASTM D 5731)
- (PM) Pressure Meter
- (R) R-Value (CTM 301)
- (SE) Sand Equivalent (CTM 217)
- (SG) Specific Gravity (AASHTO T 100)
- (SL) Shrinkage Limit (ASTM D 427)
- (SW) Swell Potential (ASTM D 4546)
- (UC) Unconfined Compression-Soil (ASTM D 2166) Unconfined Compression-Rock (ASTM D 2938)
- (UU) Unconsolidated Undrained Triaxial (ASTM D 2850)
- (UW) Unit Weight (ASTM D 4767)

APPARENT DENSITY OF COHESIONLESS SOILS

Description	SPT N_{60} (Blows / 12 in.)
Very Loose	0 - 5
Loose	5 - 10
Medium Dense	10 - 30
Dense	30 - 50
Very Dense	Greater than 50

MOISTURE

Description	Criteria
Dry	No discernable moisture
Moist	Moisture present, but no free water
Wet	Visible free water

PERCENT OR PROPORTION OF SOILS

Description	Criteria
Trace	Particles are present but estimated to be less than 5%
Few	5% - 10%
Little	15% - 25%
Some	30% - 45%
Mostly	50% - 100%

PARTICLE SIZE

Description		Size (in.)
Boulder		Greater than 12
Cobble		3 - 12
Gravel	Coarse	3/4 - 3
	Fine	1/5 - 3/4
Sand	Coarse	1/16 - 1/5
	Medium	1/64 - 1/16
	Fine	1/300 - 1/64
Silt and Clay		Less than 1/300

ENGINEERING SERVICES — MATERIALS AND GEOTECHNICAL SERVICES

FUNCTIONAL SUPERVISOR
NAME: M. SMITH
DRAWN BY: P.QUACH
CHECKED BY: D.ORRIS
FIELD INVESTIGATION BY: P.MCDONALD/EJ.JEON/C.CARBINO/L.ROEBUCK

STATE OF CALIFORNIA DEPARTMENT OF TRANSPORTATION

DIVISION OF ENGINEERING SERVICES STRUCTURE DESIGN — DESIGN BRANCH 1

BRIDGE NO. X
POST MILE 3.6

RETAINING WALL NO. 191
LOG OF TEST BORINGS SHEET 4 OF 4

OGS CIVIL LOG OF TEST BORINGS SHEET

ORIGINAL SCALE IN INCHES FOR REDUCED PLANS 0 1 2 3

UNIT: 3576
PROJECT NUMBER & PHASE: 07000018331
CONTRACT NO.: 07-215934

DISREGARD PRINTS BEARING EARLIER REVISION DATES — REVISION DATES 06/17/11

SHEET 11 OF 11

FILE => rw191-z-ltb04.dgn

USERNAME => s128843 DATE PLOTTED => 28-MAR-2012 TIME PLOTTED => 11:17

DIST	COUNTY	ROUTE	POST MILES TOTAL PROJECT	SHEET No.	TOTAL SHEETS
07	LA	5	2.4/4.0	1087	1288

REGISTERED CIVIL ENGINEER 12/7/2011 DATE

3-26-12
PLANS APPROVAL DATE

REGISTERED PROFESSIONAL ENGINEER Kevin Harper No. 42221 Exp. 3-31-12 CIVIL STATE OF CALIFORNIA

The State of California or its officers or agents shall not be responsible for the accuracy or completeness of electronic copies of this plan sheet.

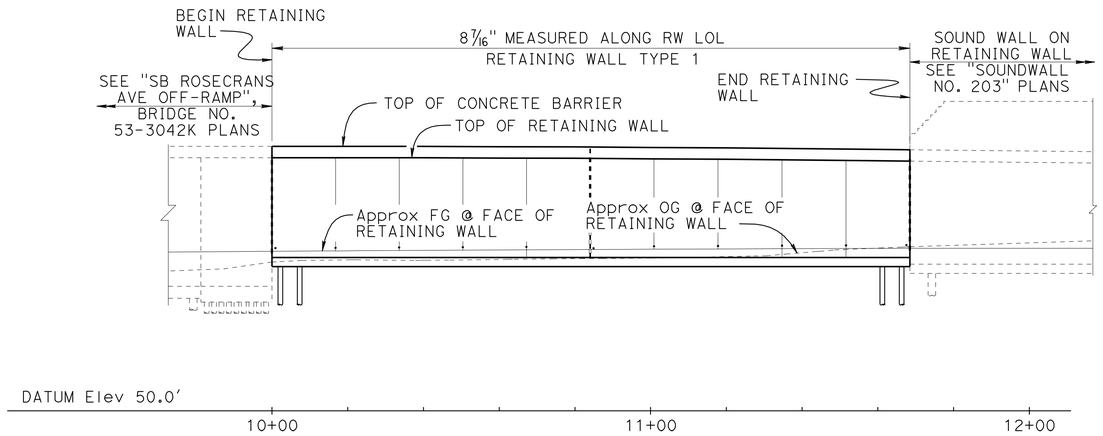

DEVELOPED MIRRORED ELEVATION

1" = 20'

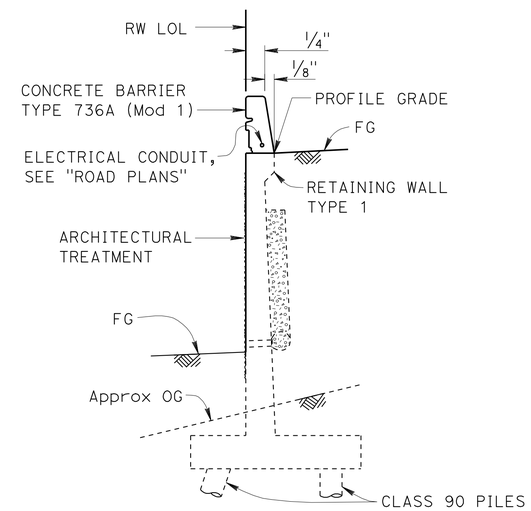

TYPICAL SECTION

1/4" = 1'-0"

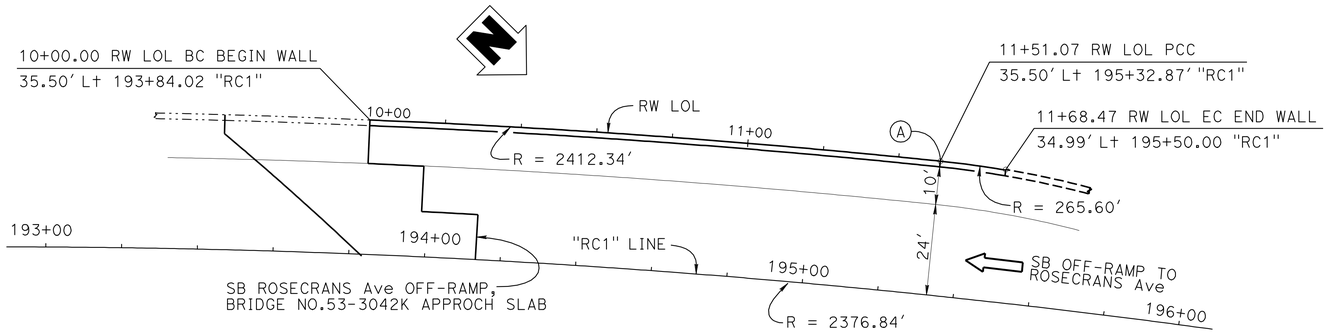

CURVE DATA

"RC1" Line	RW LOL	
R = 2376.84'	R = 2412.34'	R = 265.60'
Δ = 12°23'26"	Δ = 3°35'17"	Δ = 3°45'12"
T = 258.01'	T = 75.56'	T = 8.70'
L = 514.01'	L = 151.07'	L = 17.40'

PLAN

1" = 20'

QUANTITIES

STRUCTURE EXCAVATION (RETAINING WALL)	106	CY
STRUCTURE EXCAVATION (TYPE Y-2) (AERIALLY DEPOSITED LEAD)	214	CY
STRUCTURE BACKFILL (RETAINING WALL)	1,440	CY
PERVIOUS BACKFILL MATERIAL (RETAINING WALL)	133	CY
FURNISH PILING (CLASS 90)	3,478	LF
DRIVE PILE (CLASS 90)	95	EA
STRUCTURAL CONCRETE, RETAINING WALL	505	CY
ARCHITECTURAL TREATMENT (SPLIT SLATE - FRACTURED RIB)	3,950	SQFT
BAR REINFORCING STEEL (RETAINING WALL)	111,550	LB
CONCRETE BARRIER (TYPE 736A MODIFIED 1)	168	LF

NOTES:

1. For "DESIGN NOTES", see Standard Plan B3-8.
2. All piles are not shown in "DEVELOPED MIRRORED ELEVATION".

(A) Angle point @ PCC: Tangent Ahead Brg = N38°37'14"W,
Tangent Back Brg = N38°36'38"W

DESIGN	BY Rizia da Cruz Ferreira	CHECKED April Pearson	LOAD FACTOR DESIGN
DETAILS	BY Jay Reid	CHECKED April Pearson	LAYOUT — BY Rizia da Cruz Ferreira — CHECKED April Pearson
QUANTITIES	BY Christa Siegenthaler	CHECKED Kyoung-Hyeog Lee	SPECIFICATIONS — BY Theresa Nedwick — PLANS AND SPECS COMPARED Theresa Nedwick

Jeff Sims
DESIGN ENGINEER

STATE OF CALIFORNIA
DEPARTMENT OF TRANSPORTATION

DIVISION OF ENGINEERING SERVICES
STRUCTURE DESIGN
DESIGN BRANCH 1

BRIDGE NO. X
POST MILE 3.64

RETAINING WALL NO. 195
GENERAL PLAN

ORIGINAL SCALE IN INCHES FOR REDUCED PLANS 0 1 2 3

UNIT: 3576
PROJECT NUMBER & PHASE: 07000018331
CONTRACT NO.: 07-215934

DISREGARD PRINTS BEARING EARLIER REVISION DATES

REVISION DATES: 10-31-11 11/28/11 11/29/11

SHEET 1 OF 12

USERNAME => s128843 DATE PLOTTED => 28-MAR-2012 TIME PLOTTED => 11:17

STRUCTURES DESIGN GENERAL PLAN SHEET (ENGLISH) (REV.09-01-10)

FILE => rw195-a-gp01.dgn

DIST	COUNTY	ROUTE	POST MILES TOTAL PROJECT	SHEET No.	TOTAL SHEETS
07	LA	5	2.4/4.0	1088	1288

REGISTERED CIVIL ENGINEER 12/7/2011 DATE

3-26-12
PLANS APPROVAL DATE

REGISTERED PROFESSIONAL ENGINEER Kevin Harper No. 42221 Exp. 3-31-12 CIVIL STATE OF CALIFORNIA

The State of California or its officers or agents shall not be responsible for the accuracy or completeness of electronic copies of this plan sheet.

INDEX TO PLANS

SHEET NO.	TITLE
1.	GENERAL PLAN
2.	INDEX TO PLANS
3.	STRUCTURE PLAN
4.	FOUNDATION PLAN
5.	RETAINING WALL ARCHITECTURAL TREATMENT
6.	RETAINING WALL ARCHITECTURAL DETAILS
7.	CONCRETE BARRIER TYPE 736A (MOD 1) DETAILS
8.	LOG OF TEST BORINGS 1 OF 5
9.	LOG OF TEST BORINGS 2 OF 5
10.	LOG OF TEST BORINGS 3 OF 5
11.	LOG OF TEST BORINGS 4 OF 5
12.	LOG OF TEST BORINGS 5 OF 5

STANDARD PLANS DATED MAY 2006

A10A	ACRONYMS AND ABBREVIATIONS (SHEET 1 OF 2)
A10B	ACRONYMS AND ABBREVIATIONS (SHEET 2 OF 2)
A10C	SYMBOLS (SHEET 1 OF 2)
A10D	SYMBOLS (SHEET 2 OF 2)
A62B	LIMITS OF PAYMENT FOR EXCAVATION AND BACKFILL BRIDGE SURCHARGE AND WALL
B0-3	BRIDGE DETAILS
B2-5	PILE DETAILS CLASS 90 AND CLASS 140
B3-1	RETAINING WALL TYPE 1 H = 4' THROUGH 30'
B3-8	RETAINING WALL DETAILS No. 1
B11-56	CONCRETE BARRIER TYPE 736

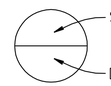

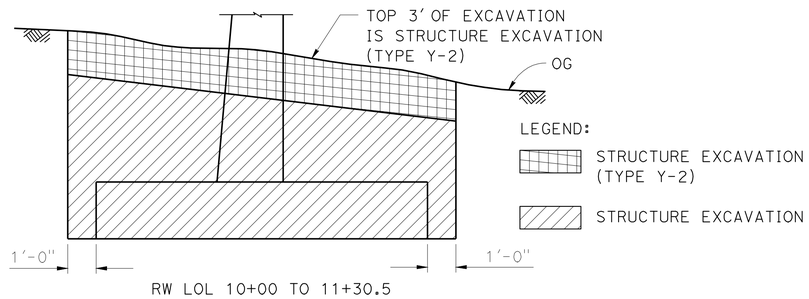

LIMITS OF PAYMENT FOR STRUCTURE EXCAVATION (TYPE Y-2) (AERIALLY DEPOSITED LEAD)

NO SCALE

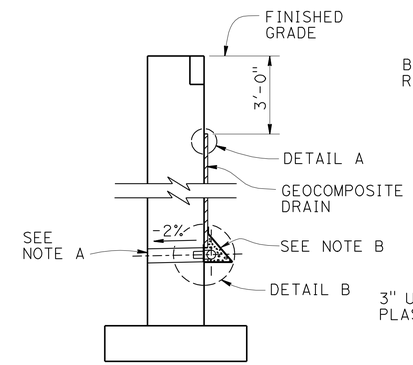

WALL SECTION

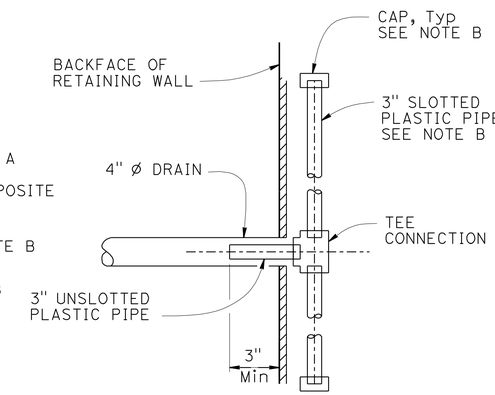

SECTION A-A

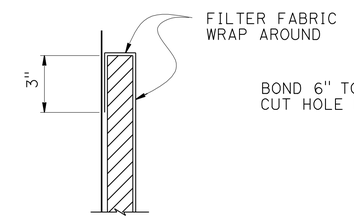

DETAIL A

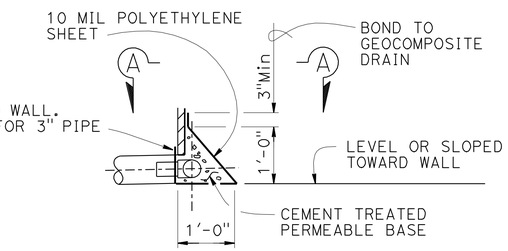

DETAIL B

WEEP HOLE AND GEOCOMPOSITE DRAIN

ALTERNATIVE TO BRIDGE DETAIL B0-3 / 3-1

NOTES:

A. 4" ø drains at 25' max center to center. For walls adjacent to sidewalks or curbs, provide 4" cast iron or asbestos cement pipe under the sidewalk to discharge through curb face. Exposed wall drains shall be located 3"± above finished grade.

B. Geocomposite drain, cement treated permeable base, and 3"ø slotted plastic pipe continuous behind retaining wall. Cap ends of pipe. Provide "Tee" connection at each 4" ø drain.

PILE DATA TABLE

LOCATION	PILE TYPE	NOMINAL RESISTANCE (KIP)		SPECIFIED TIP ELEVATION	NOMINAL DRIVING RESISTANCE (KIPS)
		COMPRESSION	TENSION		
Ret WALL TYPE 1 RW LOL 10+00 TO 11+68.47	CLASS 90	180	0	53.1	180

NOTES:

1. Class 90 Alternative "X" Piles shall have a dimension "T" not less than 14 inches.
2. All Design tips are controlled by compression.

	BY	CHECKED
DESIGN	Rizia da Cruz Ferreira	April Pearson
DETAILS	Jay Reid	April Pearson
QUANTITIES	Christa Siegenthaler	Kyoung-Hyeog Lee

STATE OF CALIFORNIA DEPARTMENT OF TRANSPORTATION

DIVISION OF ENGINEERING SERVICES STRUCTURE DESIGN DESIGN BRANCH 1

BRIDGE NO. X

POST MILE 3.64

RETAINING WALL NO. 195

INDEX TO PLANS

STRUCTURES DESIGN DETAIL SHEET (ENGLISH) (REV. 09-01-10)

ORIGINAL SCALE IN INCHES FOR REDUCED PLANS 0 1 2 3

UNIT: 3576
PROJECT NUMBER & PHASE: 07000018331
CONTRACT NO.: 07-215934

DISREGARD PRINTS BEARING EARLIER REVISION DATES

REVISION DATES 10-31-11 11-4-11 11-15-11 11/28/11

SHEET 2 OF 12

FILE => rw195-a-itp.dgn

USERNAME => s128843 DATE PLOTTED => 28-MAR-2012 TIME PLOTTED => 11:17

DIST	COUNTY	ROUTE	POST MILES TOTAL PROJECT	SHEET No.	TOTAL SHEETS
07	LA	5	2.4/4.0	1089	1288

REGISTERED CIVIL ENGINEER 12/7/2011 DATE

3-26-12
PLANS APPROVAL DATE

REGISTERED PROFESSIONAL ENGINEER Kevin Harper No. 42221 Exp. 3-31-12 CIVIL STATE OF CALIFORNIA

The State of California or its officers or agents shall not be responsible for the accuracy or completeness of electronic copies of this plan sheet.

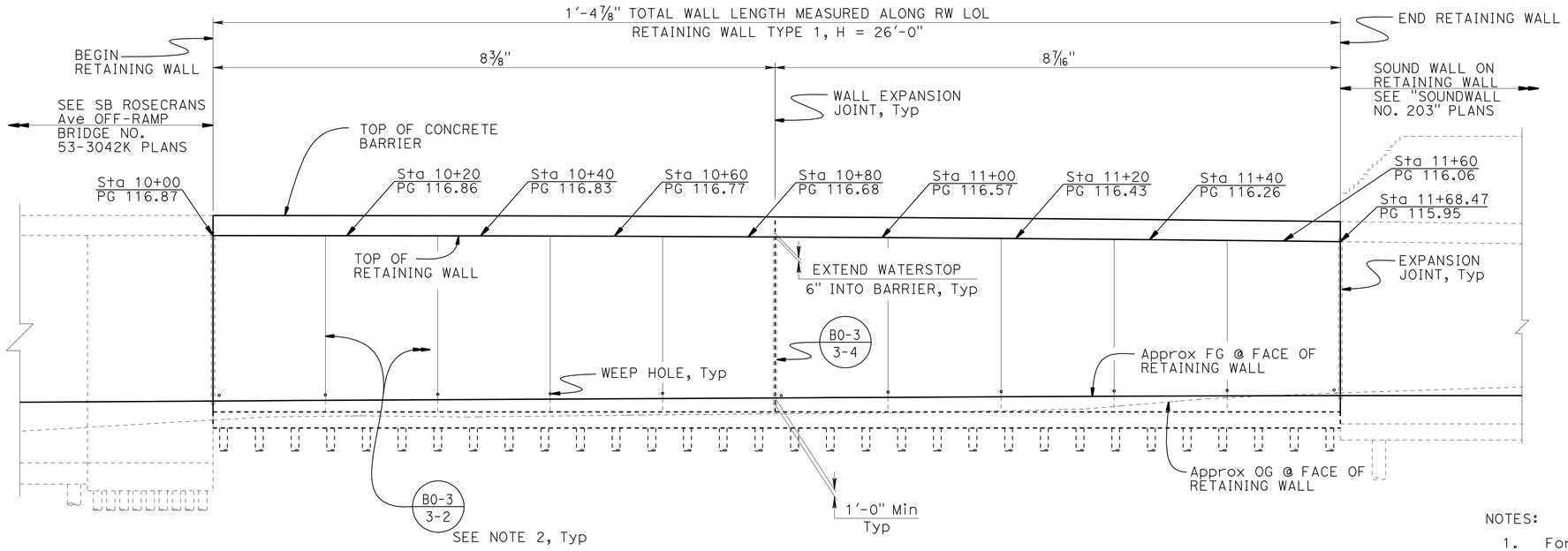

DEVELOPED MIRRORED ELEVATION (B3-1)

1" = 10'

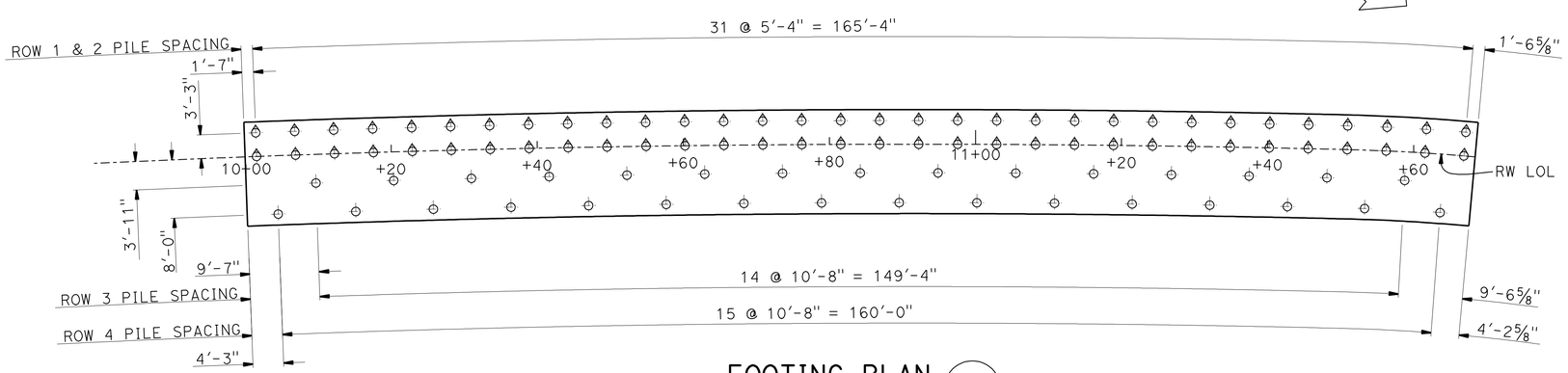

FOOTING PLAN (B3-1)

1" = 10'

NOTES:

1. For barrier details, see "CONCRETE BARRIER TYPE 736A (MOD 1) DETAILS" SHEET.
2. Retaining wall expansion joints, weakened planes, and weep holes shall be placed per (B0-3 / 3-3).
3. All longitudinal dimensions are measured along the RW LOL.
4. Not all piles shown in "DEVELOPED MIRRORED ELEVATION".
5. For "WEEP HOLE AND GEOCOMPOSITE DRAIN" alternative, see "INDEX TO PLANS" sheet.

LEGEND:

- Indicates Vertical Class 90 Pile
- Indicates 1:3 Battered Class 90 Pile

	BY	CHECKED
DESIGN	Rizia da Cruz Ferreira	April Pearson
DETAILS	Jay Reid	April Pearson
QUANTITIES	Christa Siegenthaler	Kyoung-Hyeog Lee

STATE OF CALIFORNIA
DEPARTMENT OF TRANSPORTATION

DIVISION OF ENGINEERING SERVICES
STRUCTURE DESIGN
DESIGN BRANCH 1

BRIDGE NO. X
POST MILE 3.64

RETAINING WALL NO. 195
STRUCTURE PLAN

STRUCTURES DESIGN DETAIL SHEET (ENGLISH) (REV. 09-01-10)

ORIGINAL SCALE IN INCHES FOR REDUCED PLANS 0 1 2 3

UNIT: 3576
PROJECT NUMBER & PHASE: 07000018331
CONTRACT NO.: 07-215934

DISREGARD PRINTS BEARING EARLIER REVISION DATES

REVISION DATES 10-31-11 11-4-11 11-15-11 11/28/11

SHEET 3 OF 12

FILE => rw195-c-sp01.dgn

USERNAME => s128843 DATE PLOTTED => 28-MAR-2012 TIME PLOTTED => 11:17

DIST	COUNTY	ROUTE	POST MILES TOTAL PROJECT	SHEET No.	TOTAL SHEETS
07	LA	5	2.4/4.0	1090	1288

Kevin J. Harper 12/7/2011
REGISTERED CIVIL ENGINEER DATE

3-26-12
PLANS APPROVAL DATE

REGISTERED PROFESSIONAL ENGINEER
Kevin Harper
No. 42221
Exp. 3-31-12
CIVIL
STATE OF CALIFORNIA

The State of California or its officers or agents shall not be responsible for the accuracy or completeness of electronic copies of this plan sheet.

NOTE:
Underground utilities as shown are approximate

LEGEND:
+ - Denotes spot elevation
⊕ - Denotes piles (not all piles shown)
[xx.x] - Indicates bottom of Ftg elevation

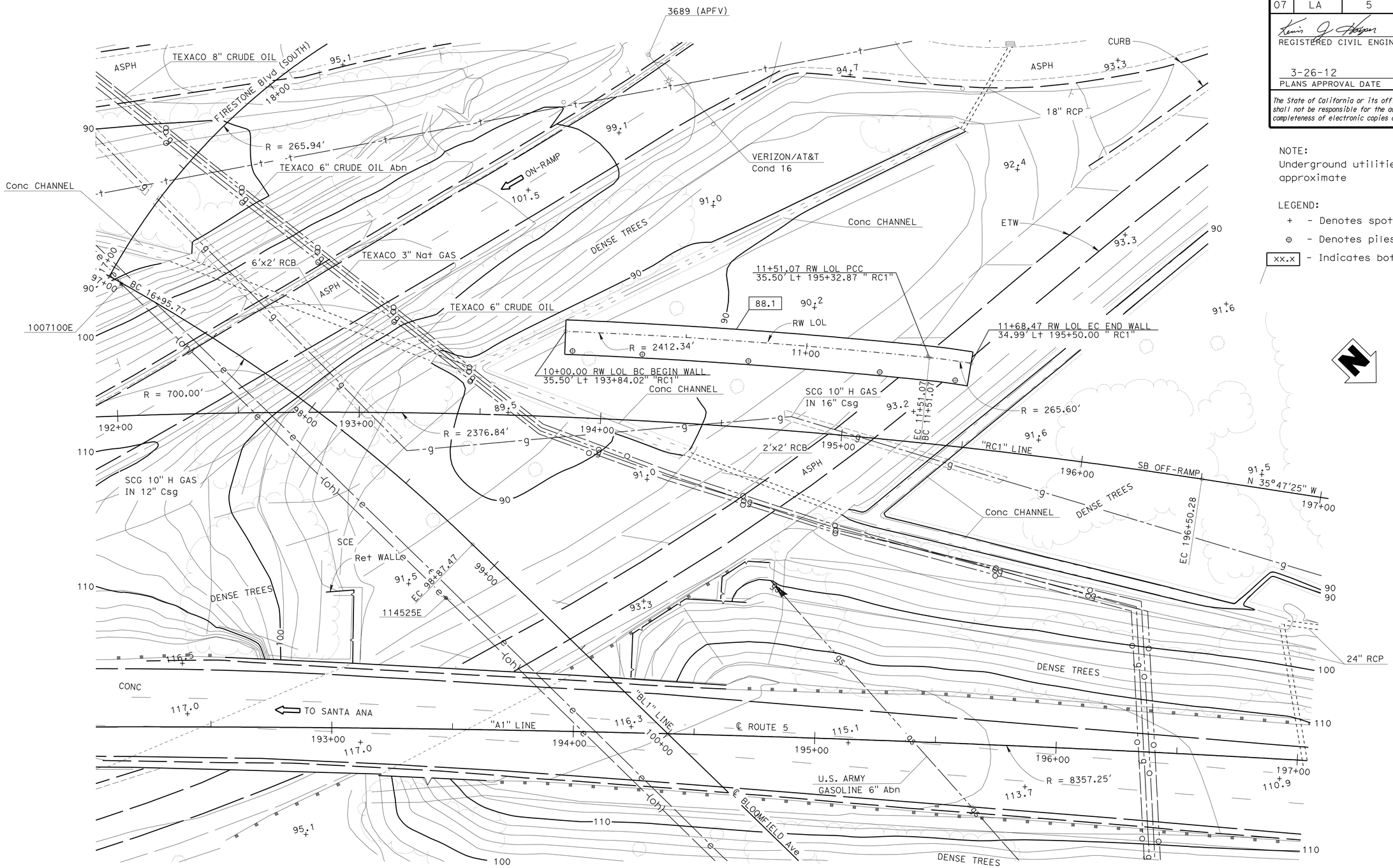

SCALE					
1" = 20'	DESIGN	BY Rizia da Cruz Ferreira	CHECKED April Pearson		
	DETAILS	BY Rizia da Cruz Ferreira	CHECKED April Pearson		
	QUANTITIES	BY Christa Siegenthaler	CHECKED Kyoung-Hyeog Lee		

STATE OF CALIFORNIA
DEPARTMENT OF TRANSPORTATION

DIVISION OF ENGINEERING SERVICES
STRUCTURE DESIGN
DESIGN BRANCH 1

BRIDGE NO. X
POST MILE 3.64

RETAINING WALL NO. 195
FOUNDATION PLAN

STRUCTURES DESIGN DETAIL SHEET (ENGLISH) (REV. 09-01-10)

ORIGINAL SCALE IN INCHES FOR REDUCED PLANS 0 1 2 3

UNIT: 3576
PROJECT NUMBER & PHASE: 07000018331
CONTRACT NO.: 07-215934

DISREGARD PRINTS BEARING EARLIER REVISION DATES

REVISION DATES: 10/31/11 11/16/11 11/23/11

SHEET 4 OF 12

FILE => rw195-e-fp01.dgn

USERNAME => s128843 DATE PLOTTED => 28-MAR-2012 TIME PLOTTED => 11:18

DIST	COUNTY	ROUTE	POST MILES TOTAL PROJECT	SHEET No.	TOTAL SHEETS
07	LA	5	2.4/4.0	1091	1288

REGISTERED CIVIL ENGINEER 12/7/2011 DATE

3-26-12
PLANS APPROVAL DATE

REGISTERED PROFESSIONAL ENGINEER Kevin Harper No. 42221 Exp. 3-31-12 CIVIL STATE OF CALIFORNIA

The State of California or its officers or agents shall not be responsible for the accuracy or completeness of electronic copies of this plan sheet.

NOTES:

1. For "SECTION A-A" and other retaining wall architectural details, see "RETAINING WALL ARCHITECTURAL DETAILS" sheet.
2. For barrier architectural details, see "CONCRETE BARRIER TYPE 736A (MOD 1) DETAILS" sheet.
3. Retaining wall architectural treatment pay limits shall include all split slate and fractured rib texture shown in "DEVELOPED MIRRORED ELEVATION".
4. All longitudinal dimensions are measured along Ret Wall LOL.

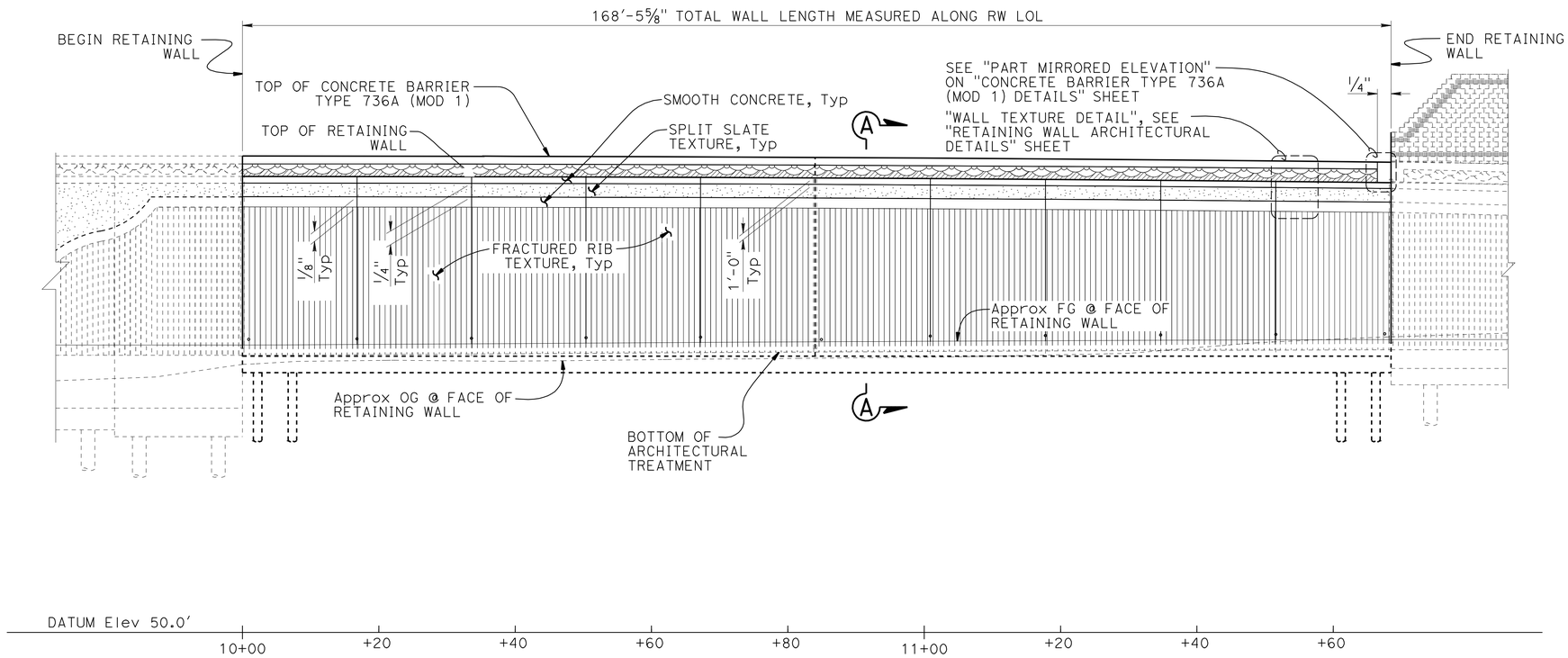

DEVELOPED MIRRORED ELEVATION

1" = 10'

DESIGN	BY Isaac Tasabia	CHECKED Javier Chavez	
DETAILS	BY Jay Reid	CHECKED R. da Cruz F. / A. Pearson	
QUANTITIES	BY Christa Siegenthaler	CHECKED Kyoung-Hyeog Lee	

STATE OF CALIFORNIA
DEPARTMENT OF TRANSPORTATION

DIVISION OF ENGINEERING SERVICES
STRUCTURE DESIGN
DESIGN BRANCH 1

BRIDGE NO. X
POST MILE 3.64

RETAINING WALL NO. 195
RETAINING WALL ARCHITECTURAL TREATMENT

STRUCTURES DESIGN DETAIL SHEET (ENGLISH) (REV. 09-01-10)

ORIGINAL SCALE IN INCHES FOR REDUCED PLANS 0 1 2 3

UNIT: 3576
PROJECT NUMBER & PHASE: 07000018331
CONTRACT NO.: 07-215934

DISREGARD PRINTS BEARING EARLIER REVISION DATES

REVISION DATES: 10-31-11 11-4-11 11-15-11 11/28/11

SHEET 5 OF 12

FILE => rw195-f-rwatrt.dgn

USERNAME => s114640 DATE PLOTTED => 28-MAR-2012 TIME PLOTTED => 12:43

DIST	COUNTY	ROUTE	POST MILES TOTAL PROJECT	SHEET No.	TOTAL SHEETS
07	LA	5	2.4/4.0	1092	1288

REGISTERED CIVIL ENGINEER 12/7/2011 DATE

3-26-12
PLANS APPROVAL DATE

REGISTERED PROFESSIONAL ENGINEER Kevin Harper No. 42221 Exp. 3-31-12 CIVIL STATE OF CALIFORNIA

The State of California or its officers or agents shall not be responsible for the accuracy or completeness of electronic copies of this plan sheet.

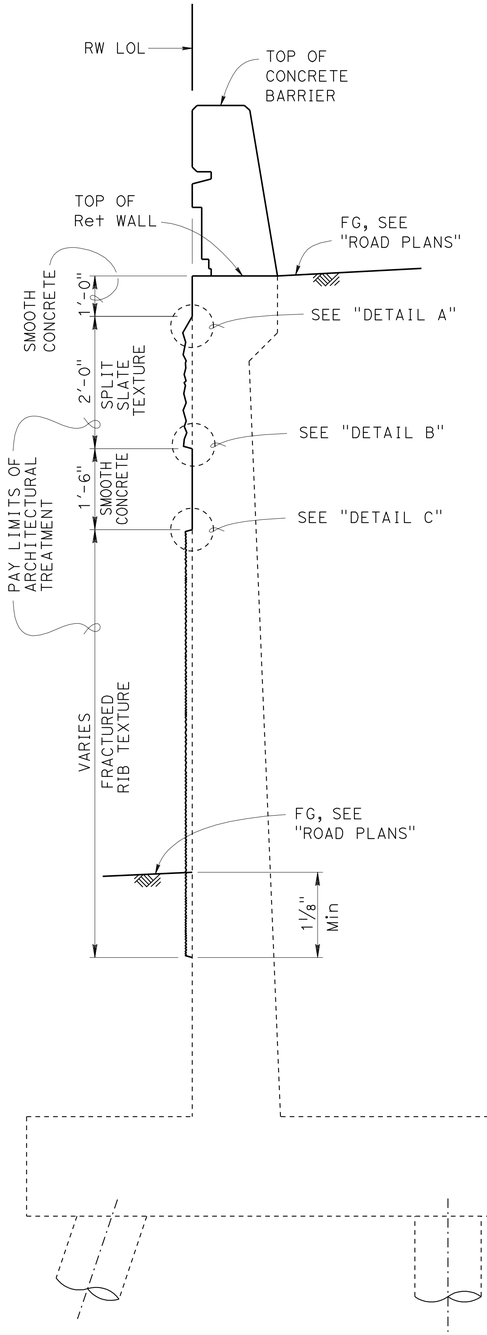

SECTION A-A

3/4" = 1'-0"

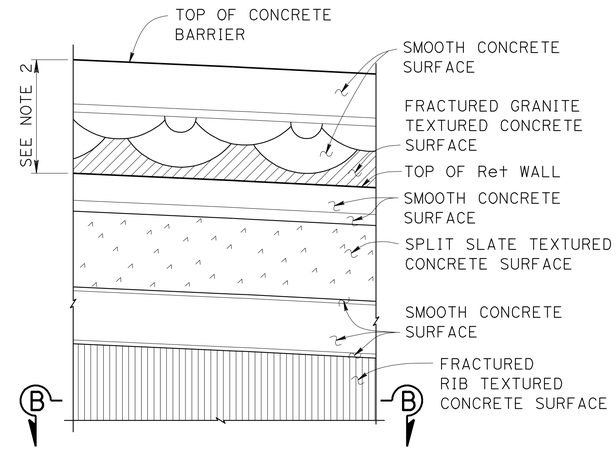

PARTIAL MIRRORED ELEVATION

WALL TEXTURE DETAIL

1/2" = 1'-0"

NOTES:

1. For locations of "SECTION A-A" AND "WALL TEXTURE DETAIL", see "RETAINING WALL ARCHITECTURAL TREATMENT" sheet.
2. For barrier architectural treatment, see "CONCRETE BARRIER TYPE 736 A (MOD 1) DETAILS" sheet.

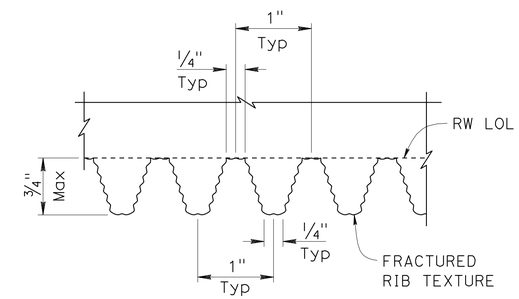

SECTION B-B

6" = 1'-0"

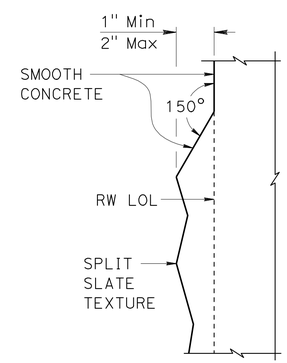

DETAIL A

3" = 1'-0"

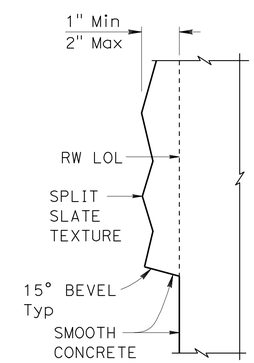

DETAIL B

3" = 1'-0"

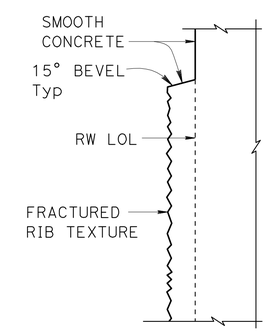

DETAIL C

3" = 1'-0"

DESIGN	BY Issac Tasabia	CHECKED Javier Chavez	
DETAILS	BY Jay Reid	CHECKED R. da Cruz F. / A. Pearson	
QUANTITIES	BY Christa Siegenthaler	CHECKED Kyoung-Hyeog Lee	

STATE OF CALIFORNIA DEPARTMENT OF TRANSPORTATION

DIVISION OF ENGINEERING SERVICES STRUCTURE DESIGN DESIGN BRANCH 1

BRIDGE NO. X

POST MILE 3.64

RETAINING WALL NO. 195

RETAINING WALL ARCHITECTURAL DETAILS

STRUCTURES DESIGN DETAIL SHEET (ENGLISH) (REV. 09-01-10)

ORIGINAL SCALE IN INCHES FOR REDUCED PLANS 0 1 2 3

UNIT: 3576
PROJECT NUMBER & PHASE: 07000018331
CONTRACT NO.: 07-215934

DISREGARD PRINTS BEARING EARLIER REVISION DATES

REVISION DATES 10-31-11 11-4-11 11-15-11 11/28/11

SHEET 6 OF 12

FILE => rw195-g-rwadet.dgn

USERNAME => s114640 DATE PLOTTED => 28-MAR-2012 TIME PLOTTED => 12:44

DIST	COUNTY	ROUTE	POST MILES TOTAL PROJECT	SHEET No.	TOTAL SHEETS
07	LA	5	2.4/4.0	1093	1288

REGISTERED CIVIL ENGINEER 12/7/2011 DATE

3-26-12
PLANS APPROVAL DATE

REGISTERED PROFESSIONAL ENGINEER Kevin Harper No. 42221 Exp. 3-31-12 CIVIL STATE OF CALIFORNIA

The State of California or its officers or agents shall not be responsible for the accuracy or completeness of electronic copies of this plan sheet.

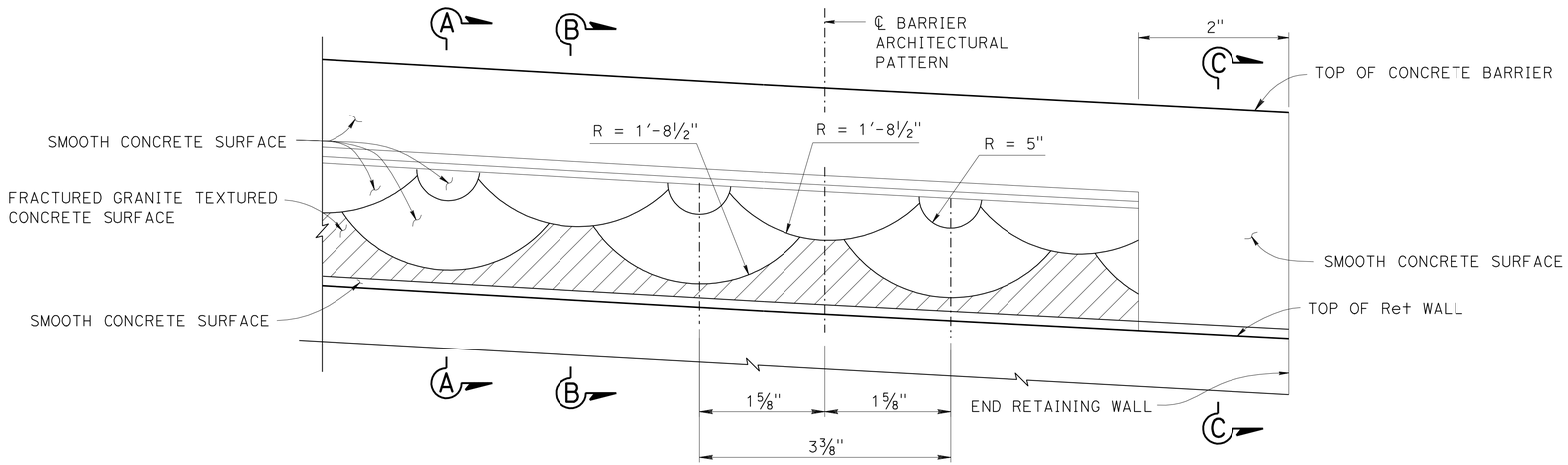

PART MIRRORED ELEVATION CONCRETE BARRIER TYPE 736A (MOD 1)

1" = 1'-0"

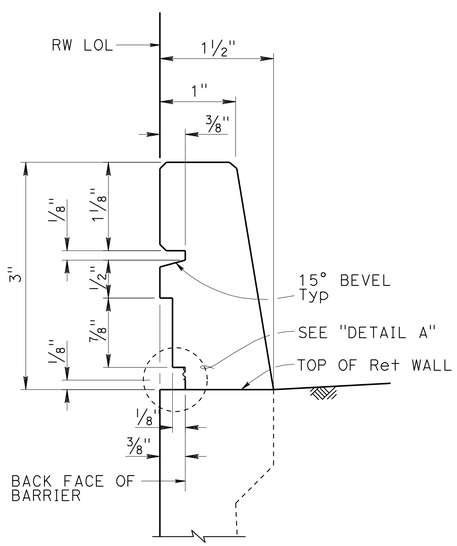

SECTION A-A

1" = 1'-0"

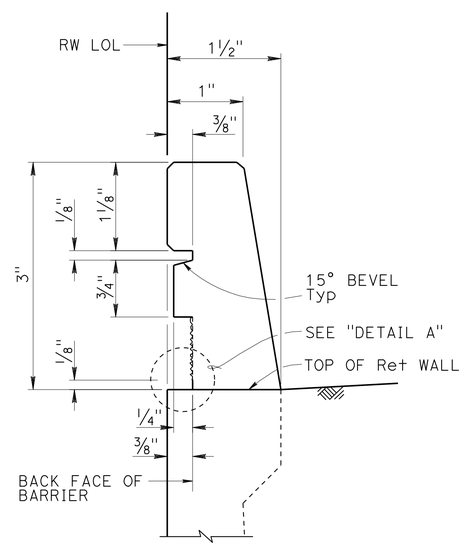

SECTION B-B

1" = 1'-0"

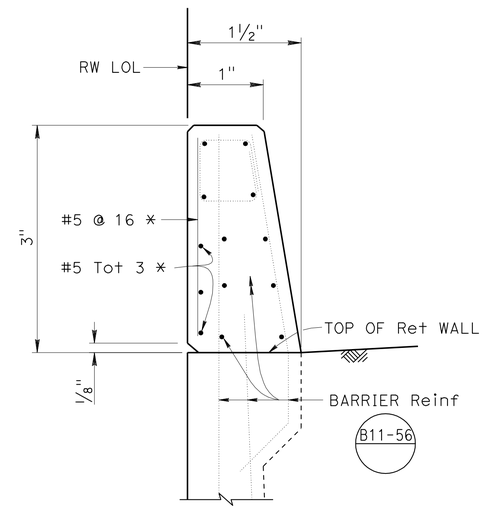

SECTION C-C

1" = 1'-0"

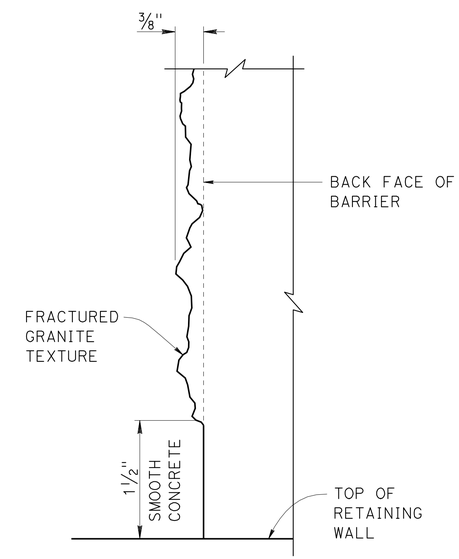

NOTE: Detail at "SECTION B-B" shown, "SECTION A-A" similar.

DETAIL A

1'-0" = 1'-0"

NOTES:

For barrier details not shown, see STANDARD PLAN B11-56.

* - Indicates Reinf is additional to typical barrier Reinf.

	BY	CHECKED
DESIGN	Isaac Tasabia	Javier Chavez
DETAILS	Jay Reid	R. da Cruz F. / A. Pearson
QUANTITIES	Christa Siegenthaler	Kyoung-Hyeog Lee

STATE OF CALIFORNIA
DEPARTMENT OF TRANSPORTATION

DIVISION OF ENGINEERING SERVICES
STRUCTURE DESIGN
DESIGN BRANCH 1

BRIDGE NO. X
POST MILE 3.64

RETAINING WALL NO. 195

CONCRETE BARRIER TYPE 736A (MOD 1) DETAILS

STRUCTURES DESIGN DETAIL SHEET (ENGLISH) (REV. 09-01-10)

ORIGINAL SCALE IN INCHES FOR REDUCED PLANS 0 1 2 3

UNIT: 3576
PROJECT NUMBER & PHASE: 07000018331
CONTRACT NO.: 07-215934

DISREGARD PRINTS BEARING EARLIER REVISION DATES

REVISION DATES 10-31-11 11-4-11 11-15-11 11/28/11

SHEET 7 OF 12

FILE => rw195-h-barr01.dgn

USERNAME => s114640 DATE PLOTTED => 28-MAR-2012 TIME PLOTTED => 12:44

DIST	COUNTY	ROUTE	POST MILES TOTAL PROJECT	SHEET No.	TOTAL SHEETS
07	LA	5	2.4/4.0	1094	1288

GEOTECHNICAL PROFESSIONAL — DATE 06/2011

3-26-12
PLANS APPROVAL DATE

REGISTERED PROFESSIONAL ENGINEER — MICHAEL G. SMITH — No. 2229 — Exp. 3-31-2012 — GEOTECHNICAL — STATE OF CALIFORNIA

The State of California or its officers or agents shall not be responsible for the accuracy or completeness of electronic copies of this plan sheet.

BENCH MARK

PRHV 104 Elev 94.31′
FOUND CHISLED "X" ON S′LY TC @ +/- 250′ W/O NB 1-5 TO WB FIRESTONE BLVD OFF-RAMP
TUNNEL PER SR 09-033-000011
NAVD 88

PRHV 105 Elev 96.88′
FOUND CHISLED "X" ON W′LY CURB BCR @ EB FIRESTONE BL
TO SB 1-5 ON-RAMP & FIRESTONE BL INTERSECTION PER SR 09-033-000011
NAVD 88

PRHV 119 Elev 99.46′
FOUND PK NAIL & TIN @ NB 1-5 SHOULDER, +/-120′ N/O SILVERBOW PEDESTRIAN OVERCROSSING
NAVD 88

PRHV 122 Elev 99.50′
FOUND PK NAIL & TIN @ SB 1-5 SHOULDER, +/-210′ N/O SILVERBOW PEDESTRIAN OVERCROSSING
NAVD 88

Notes

1. This LOTB sheet was prepared in accordance with the Caltrans Soil & Rock Logging, Classification, and Presentation Manual (2010) except three digit sequence number in boring identification starting with the segment number per exception request approved on April 08, 2009.

2. For protection of underground utility lines, hand-auger was used to remove top 5 to 10 feet of subsurface material for exploratory borings and cone penetration testings.

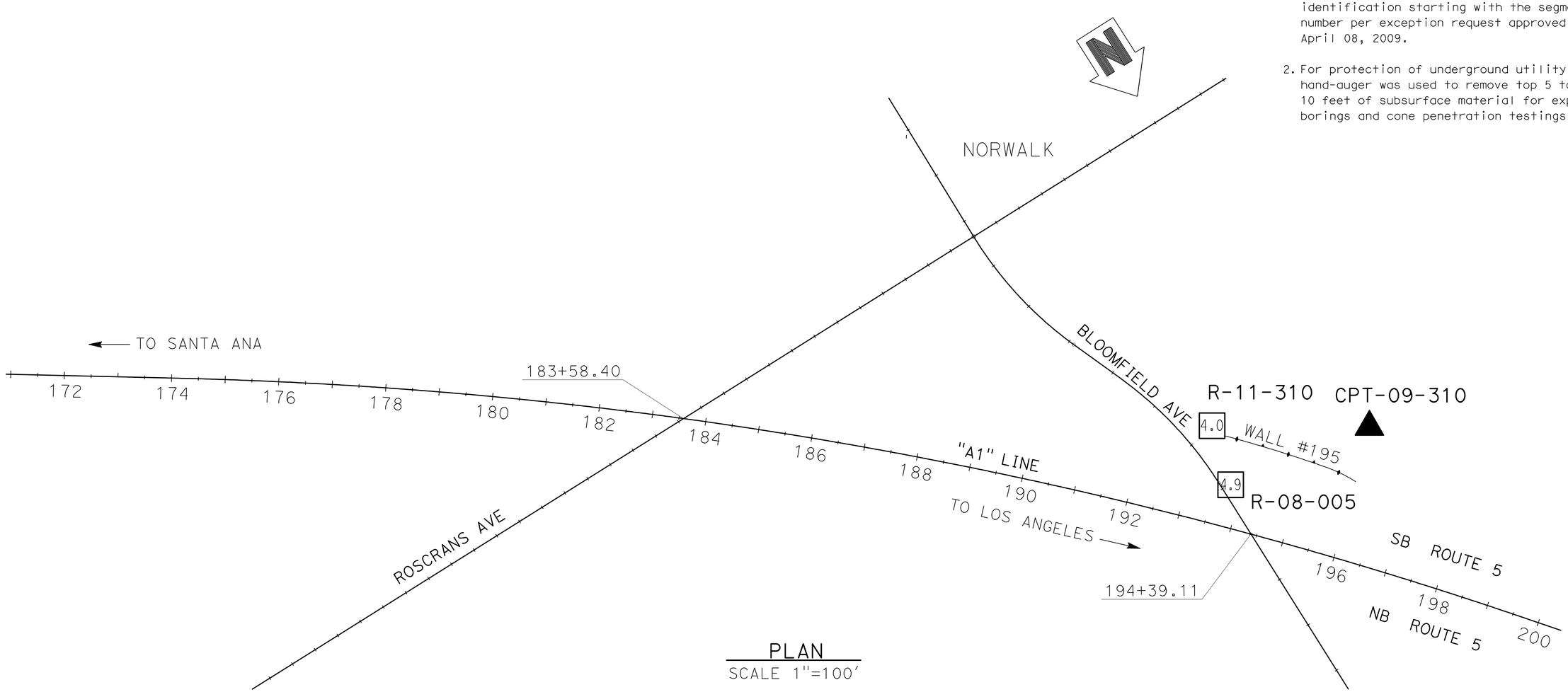

PLAN
SCALE 1"=100′

ENGINEERING SERVICES	MATERIALS AND GEOTECHNICAL SERVICES	STATE OF CALIFORNIA DEPARTMENT OF TRANSPORTATION	DIVISION OF ENGINEERING SERVICES STRUCTURE DESIGN DESIGN BRANCH 1	BRIDGE NO. X / POST MILE 3.64	RETAINING WALL NO. 195
FUNCTIONAL SUPERVISOR / NAME: M. SMITH	DRAWN BY: P.QUACH / CHECKED BY: D.ORRIS	FIELD INVESTIGATION BY: P.MCDONALD/EJ.JEON/C.CARBINO/L.ROEBUCK			LOG OF TEST BORINGS SHEET 1 OF 5

OGS CIVIL LOG OF TEST BORINGS SHEET — ORIGINAL SCALE IN INCHES FOR REDUCED PLANS 0 1 2 3 — UNIT: 3576 — PROJECT NUMBER & PHASE: 07000018331 — CONTRACT NO.: 07-215934 — DISREGARD PRINTS BEARING EARLIER REVISION DATES → REVISION DATES 06/17/11 — SHEET 8 OF 12

FILE => rw195-z-lltb01.dgn

USERNAME => s114640 DATE PLOTTED => 28-MAR-2012 TIME PLOTTED => 12:44

DIST	COUNTY	ROUTE	POST MILES TOTAL PROJECT	SHEET No.	TOTAL SHEETS
07	LA	5	2.4/4.0	1095	1288

GEOTECHNICAL PROFESSIONAL — DATE 06/2011

3-26-12
PLANS APPROVAL DATE

REGISTERED PROFESSIONAL ENGINEER — MICHAEL G. SMITH No. 2229 Exp. 3-31-2012 GEOTECHNICAL — STATE OF CALIFORNIA

The State of California or its officers or agents shall not be responsible for the accuracy or completeness of electronic copies of this plan sheet.

FOR PLAN VIEW, SEE
"LOG OF TEST BORINGS" 1 OF 5

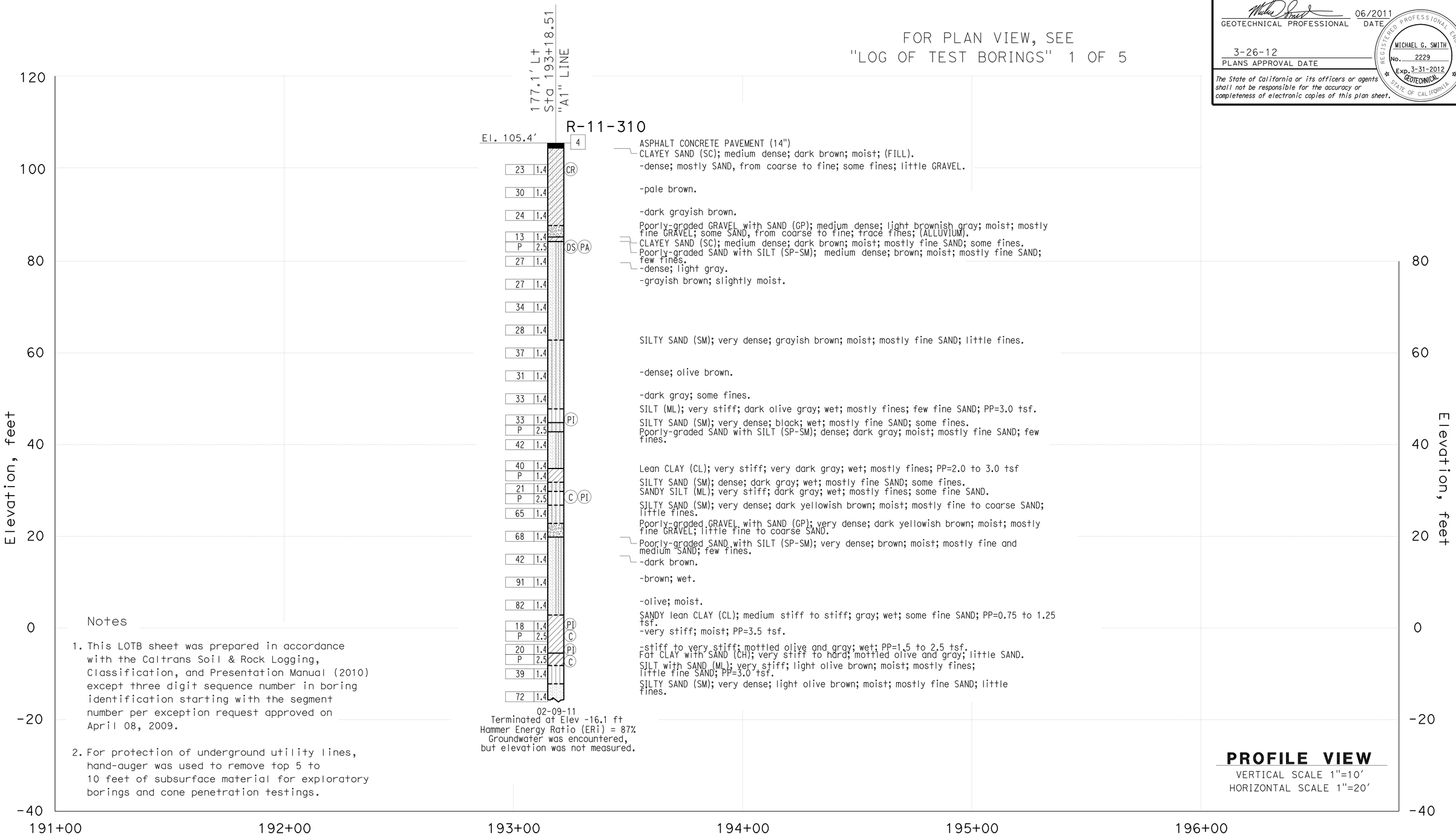

Notes

1. This LOTB sheet was prepared in accordance with the Caltrans Soil & Rock Logging, Classification, and Presentation Manual (2010) except three digit sequence number in boring identification starting with the segment number per exception request approved on April 08, 2009.

2. For protection of underground utility lines, hand-auger was used to remove top 5 to 10 feet of subsurface material for exploratory borings and cone penetration testings.

PROFILE VIEW
VERTICAL SCALE 1"=10'
HORIZONTAL SCALE 1"=20'

ENGINEERING SERVICES	MATERIALS AND GEOTECHNICAL SERVICES	STATE OF CALIFORNIA DEPARTMENT OF TRANSPORTATION	DIVISION OF ENGINEERING SERVICES STRUCTURE DESIGN DESIGN BRANCH 1	BRIDGE NO. X / POST MILE 3.64	RETAINING WALL NO. 195
FUNCTIONAL SUPERVISOR / NAME: M. SMITH	DRAWN BY: P.QUACH / CHECKED BY: D.ORRIS	FIELD INVESTIGATION BY: P.MCDONALD/EJ.JEON/C.CARBINO/L.ROEBUCK			LOG OF TEST BORINGS SHEET 2 OF 5

OGS CIVIL LOG OF TEST BORINGS SHEET — ORIGINAL SCALE IN INCHES FOR REDUCED PLANS 0 1 2 3 — UNIT: 3576 — PROJECT NUMBER & PHASE: 07000018331 — CONTRACT NO.: 07-215934 — DISREGARD PRINTS BEARING EARLIER REVISION DATES → REVISION DATES 06/17/11 — SHEET 9 OF 12

FILE => rw195-z-ltb02.dgn

USERNAME => s114640 DATE PLOTTED => 28-MAR-2012 TIME PLOTTED => 12:44

DIST	COUNTY	ROUTE	POST MILES TOTAL PROJECT	SHEET No.	TOTAL SHEETS
07	LA	5	2.4/4.0	1096	1288

GEOTECHNICAL PROFESSIONAL — DATE 06/2011

3-26-12
PLANS APPROVAL DATE

REGISTERED PROFESSIONAL ENGINEER — MICHAEL G. SMITH No. 2229 Exp. 3-31-2012 GEOTECHNICAL — STATE OF CALIFORNIA

The State of California or its officers or agents shall not be responsible for the accuracy or completeness of electronic copies of this plan sheet.

FOR PLAN VIEW, SEE
"LOG OF TEST BORINGS" 1 OF 5

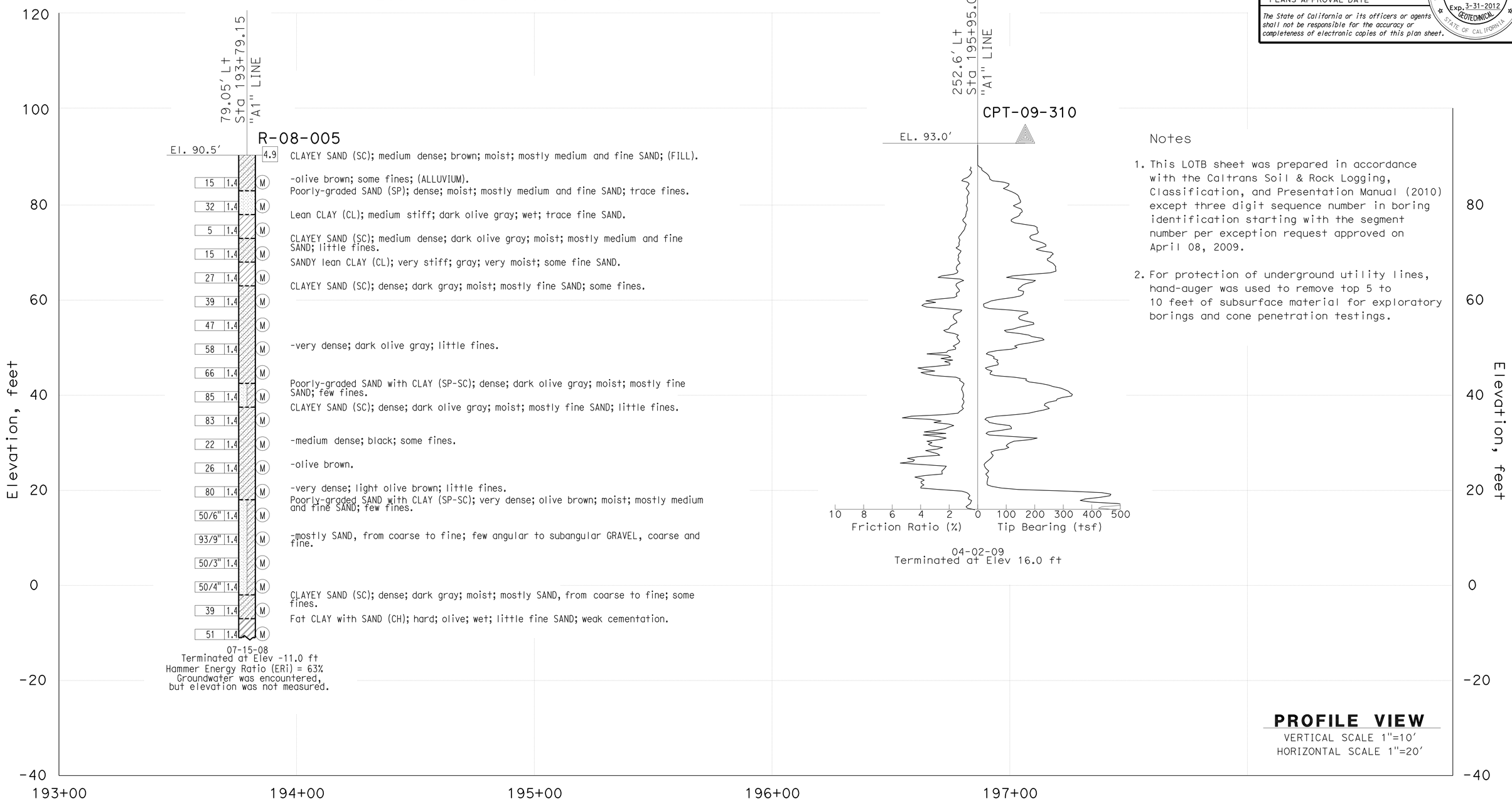

Notes

1. This LOTB sheet was prepared in accordance with the Caltrans Soil & Rock Logging, Classification, and Presentation Manual (2010) except three digit sequence number in boring identification starting with the segment number per exception request approved on April 08, 2009.

2. For protection of underground utility lines, hand-auger was used to remove top 5 to 10 feet of subsurface material for exploratory borings and cone penetration testings.

ENGINEERING SERVICES	MATERIALS AND GEOTECHNICAL SERVICES	STATE OF CALIFORNIA DEPARTMENT OF TRANSPORTATION	DIVISION OF ENGINEERING SERVICES STRUCTURE DESIGN DESIGN BRANCH 1	BRIDGE NO. X / POST MILE 3.64	RETAINING WALL NO. 195
FUNCTIONAL SUPERVISOR	DRAWN BY: P.QUACH	FIELD INVESTIGATION BY:			LOG OF TEST BORINGS SHEET 3 OF 5
NAME: M. SMITH	CHECKED BY: D.ORRIS	P.MCDONALD/EJ.JEON/C.CARBINO/L.ROEBUCK			

OGS CIVIL LOG OF TEST BORINGS SHEET

ORIGINAL SCALE IN INCHES FOR REDUCED PLANS 0 1 2 3

UNIT: 3576
PROJECT NUMBER & PHASE: 07000018331 CONTRACT NO.: 07-215934

DISREGARD PRINTS BEARING EARLIER REVISION DATES → 06/17/11

REVISION DATES | SHEET 10 | OF 12

FILE => rw195-z-lltb03.dgn

USERNAME => s114640 DATE PLOTTED => 28-MAR-2012 TIME PLOTTED => 12:44

DIST	COUNTY	ROUTE	POST MILES TOTAL PROJECT	SHEET No.	TOTAL SHEETS
07	LA	5	2.4/4.0	1097	1288

GEOTECHNICAL PROFESSIONAL — DATE 06/2011

3-26-12
PLANS APPROVAL DATE

REGISTERED PROFESSIONAL ENGINEER — MICHAEL G. SMITH No. 2229 Exp. 3-31-2012 GEOTECHNICAL — STATE OF CALIFORNIA

The State of California or its officers or agents shall not be responsible for the accuracy or completeness of electronic copies of this plan sheet.

REFERENCE: CALTRANS SOIL & ROCK LOGGING, CLASSIFICATION, AND PRESENTATION MANUAL (2010)

CEMENTATION

Description	Criteria
Weak	Crumbles or breaks with handling or little finger pressure.
Moderate	Crumbles or breaks with considerable finger pressure.
Strong	Will not crumble or break with finger pressure.

BOREHOLE IDENTIFICATION

Symbol	Hole Type	Description
Size	A	Auger Boring (hollow or solid stem bucket)
Size	R RW RC P	Rotary drilled boring (conventional) Rotary drilled with self-casing wire-line Rotary core with continuously-sampled, self-casing wire-line Rotary percussion boring (air)
Size	R	Rotary drilled diamond core
Size	HD HA	Hand driven (1-inch soil tube) Hand Auger
●	D	Dynamic Cone Penetration Boring
▲	CPT	Cone Penetration Test (ASTM D 5778)
⬚	O	Other (note on LOTB)

Note: Size in inches.

CONSISTENCY OF COHESIVE SOILS

Description	Shear Strength (tsf)	Pocket Penetrometer Measurement, PP, (tsf)	Torvane Measurement, TV, (tsf)	Vane Shear Measurement, VS, (tsf)
Very Soft	Less than 0.12	Less than 0.25	Less than 0.12	Less than 0.12
Soft	0.12 - 0.25	0.25 - 0.5	0.12 - 0.25	0.12 - 0.25
Medium Stiff	0.25 - 0.5	0.5 - 1	0.25 - 0.5	0.25 - 0.5
Stiff	0.5 - 1	1 - 2	0.5 - 1	0.5 - 1
Very Stiff	1 - 2	2 - 4	1 - 2	1 - 2
Hard	Greater than 2	Greater than 4	Greater than 2	Greater than 2

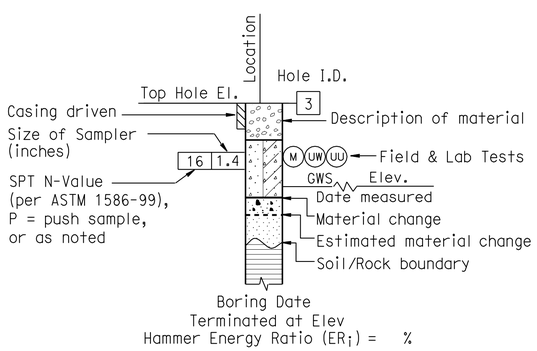

ROTARY BORING

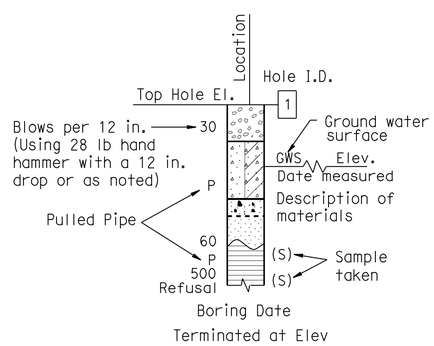

HAND BORING

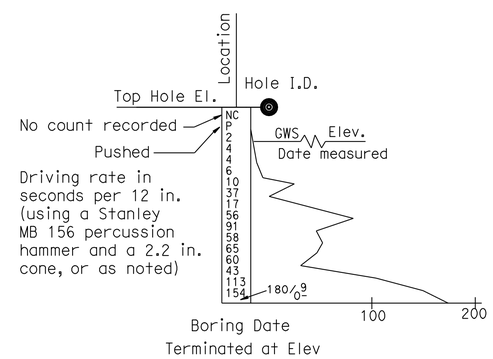

DYNAMIC CONE PENETRATION BORING

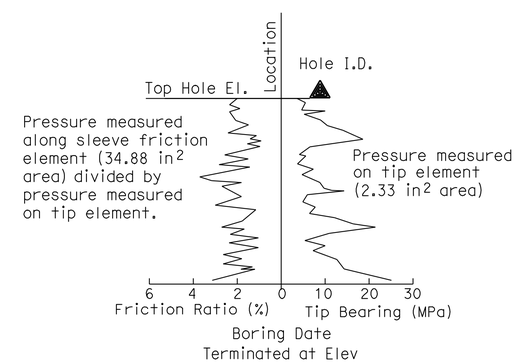

CONE PENETRATION TEST (CPT) BORING

ENGINEERING SERVICES	MATERIALS AND GEOTECHNICAL SERVICES	STATE OF CALIFORNIA DEPARTMENT OF TRANSPORTATION	DIVISION OF ENGINEERING SERVICES STRUCTURE DESIGN DESIGN BRANCH 1	BRIDGE NO. X / POST MILE 3.64	RETAINING WALL NO. 195
FUNCTIONAL SUPERVISOR NAME: M. SMITH	DRAWN BY: P.QUACH CHECKED BY: D.ORRIS	FIELD INVESTIGATION BY: P.MCDONALD/EJ.JEON/C.CARBINO/L.ROEBUCK			LOG OF TEST BORINGS SHEET 4 OF 5

OGS CIVIL LOG OF TEST BORINGS SHEET — ORIGINAL SCALE IN INCHES FOR REDUCED PLANS 0 1 2 3

UNIT: 3576
PROJECT NUMBER & PHASE: 07000018331 — CONTRACT NO.: 07-215934

DISREGARD PRINTS BEARING EARLIER REVISION DATES → REVISION DATES 06/17/11 — SHEET 11 OF 12

FILE => rw195-z-ltb04.dgn

USERNAME => s114640 DATE PLOTTED => 28-MAR-2012 TIME PLOTTED => 12:44

REFERENCE: CALTRANS SOIL & ROCK LOGGING, CLASSIFICATION, AND PRESENTATION MANUAL (2010)

DIST	COUNTY	ROUTE	POST MILES TOTAL PROJECT	SHEET No.	TOTAL SHEETS
07	LA	5	2.4/4.0	1098	1288

GEOTECHNICAL PROFESSIONAL — DATE 06/2011

3-26-12
PLANS APPROVAL DATE

REGISTERED PROFESSIONAL ENGINEER — MICHAEL G. SMITH No. 2229 Exp. 3-31-2012 GEOTECHNICAL — STATE OF CALIFORNIA

The State of California or its officers or agents shall not be responsible for the accuracy or completeness of electronic copies of this plan sheet.

GROUP SYMBOLS AND NAMES

Graphic/Symbol	Group Names	Graphic/Symbol	Group Names
GW	Well-graded GRAVEL Well-graded GRAVEL with SAND	CL	Lean CLAY Lean CLAY with SAND Lean CLAY with GRAVEL SANDY lean CLAY SANDY lean CLAY with GRAVEL GRAVELLY lean CLAY GRAVELLY lean CLAY with SAND
GP	Poorly-graded GRAVEL Poorly-graded GRAVEL with SAND		
GW-GM	Well-graded GRAVEL with SILT Well-graded GRAVEL with SILT and SAND	CL-ML	SILTY CLAY SILTY CLAY with SAND SILTY CLAY with GRAVEL SANDY SILTY CLAY SANDY SILTY CLAY with GRAVEL GRAVELLY SILTY CLAY GRAVELLY SILTY CLAY with SAND
GW-GC	Well-graded GRAVEL with CLAY (or SILTY CLAY) Well-graded GRAVEL with CLAY and SAND (or SILTY CLAY and SAND)		
GP-GM	Poorly-graded GRAVEL with SILT Poorly-graded GRAVEL with SILT and SAND	ML	SILT SILT with SAND SILT with GRAVEL SANDY SILT SANDY SILT with GRAVEL GRAVELLY SILT GRAVELLY SILT with SAND
GP-GC	Poorly-graded GRAVEL with CLAY (or SILTY CLAY) Poorly-graded GRAVEL with CLAY and SAND (or SILTY CLAY and SAND)		
GM	SILTY GRAVEL SILTY GRAVEL with SAND	OL	ORGANIC lean CLAY ORGANIC lean CLAY with SAND ORGANIC lean CLAY with GRAVEL SANDY ORGANIC lean CLAY SANDY ORGANIC lean CLAY with GRAVEL GRAVELLY ORGANIC lean CLAY GRAVELLY ORGANIC lean CLAY with SAND
GC	CLAYEY GRAVEL CLAYEY GRAVEL with SAND		
GC-GM	SILTY, CLAYEY GRAVEL SILTY, CLAYEY GRAVEL with SAND	OL	ORGANIC SILT ORGANIC SILT with SAND ORGANIC SILT with GRAVEL SANDY ORGANIC SILT SANDY ORGANIC SILT with GRAVEL GRAVELLY ORGANIC SILT GRAVELLY ORGANIC SILT with SAND
SW	Well-graded SAND Well-graded SAND with GRAVEL		
SP	Poorly-graded SAND Poorly-graded SAND with GRAVEL	CH	Fat CLAY Fat CLAY with SAND Fat CLAY with GRAVEL SANDY fat CLAY SANDY fat CLAY with GRAVEL GRAVELLY fat CLAY GRAVELLY fat CLAY with SAND
SW-SM	Well-graded SAND with SILT Well-graded SAND with SILT and GRAVEL		
SW-SC	Well-graded SAND with CLAY (or SILTY CLAY) Well-graded SAND with CLAY and GRAVEL (or SILTY CLAY and GRAVEL)	MH	Elastic SILT Elastic SILT with SAND Elastic SILT with GRAVEL SANDY elastic SILT SANDY elastic SILT with GRAVEL GRAVELLY elastic SILT GRAVELLY elastic SILT with SAND
SP-SM	Poorly-graded SAND with SILT Poorly-graded SAND with SILT and GRAVEL		
SP-SC	Poorly-graded SAND with CLAY (or SILTY CLAY) Poorly-graded SAND with CLAY and GRAVEL (or SILTY CLAY and GRAVEL)	OH	ORGANIC fat CLAY ORGANIC fat CLAY with SAND ORGANIC fat CLAY with GRAVEL SANDY ORGANIC fat CLAY SANDY ORGANIC fat CLAY with GRAVEL GRAVELLY ORGANIC fat CLAY GRAVELLY ORGANIC fat CLAY with SAND
SM	SILTY SAND SILTY SAND with GRAVEL		
SC	CLAYEY SAND CLAYEY SAND with GRAVEL	OH	ORGANIC elastic SILT ORGANIC elastic SILT with SAND ORGANIC elastic SILT with GRAVEL SANDY ORGANIC elastic SILT SANDY ORGANIC elastic SILT with GRAVEL GRAVELLY ORGANIC elastic SILT GRAVELLY ORGANIC elastic SILT with SAND
SC-SM	SILTY, CLAYEY SAND SILTY, CLAYEY SAND with GRAVEL		
PT	PEAT	OL/OH	ORGANIC SOIL ORGANIC SOIL with SAND ORGANIC SOIL with GRAVEL SANDY ORGANIC SOIL SANDY ORGANIC SOIL with GRAVEL GRAVELLY ORGANIC SOIL GRAVELLY ORGANIC SOIL with SAND
	COBBLES COBBLES and BOULDERS BOULDERS		

FIELD AND LABORATORY TESTING

- (C) Consolidation (ASTM D 2435)
- (CL) Collapse Potential (ASTM D 5333)
- (CP) Compaction Curve (CTM 216)
- (CR) Corrosivity Testing (CTM 643, CTM 422, CTM 417)
- (CU) Consolidated Undrained Triaxial (ASTM D 4767)
- (DS) Direct Shear (ASTM D 3080)
- (EI) Expansion Index (ASTM D 4829)
- (M) Moisture Content (ASTM D 2216)
- (OC) Organic Content-% (ASTM D 2974)
- (P) Permeability (CTM 220)
- (PA) Particle Size Analysis (ASTM D 422)
- (PI) Plasticity Index (AASHTO T 90) Liquid Limit (AASHTO T 89)
- (PL) Point Load Index (ASTM D 5731)
- (PM) Pressure Meter
- (R) R-Value (CTM 301)
- (SE) Sand Equivalent (CTM 217)
- (SG) Specific Gravity (AASHTO T 100)
- (SL) Shrinkage Limit (ASTM D 427)
- (SW) Swell Potential (ASTM D 4546)
- (UC) Unconfined Compression-Soil (ASTM D 2166) Unconfined Compression-Rock (ASTM D 2938)
- (UU) Unconsolidated Undrained Triaxial (ASTM D 2850)
- (UW) Unit Weight (ASTM D 4767)

APPARENT DENSITY OF COHESIONLESS SOILS

Description	SPT N_{60} (Blows / 12 in.)
Very Loose	0 - 5
Loose	5 - 10
Medium Dense	10 - 30
Dense	30 - 50
Very Dense	Greater than 50

MOISTURE

Description	Criteria
Dry	No discernable moisture
Moist	Moisture present, but no free water
Wet	Visible free water

PERCENT OR PROPORTION OF SOILS

Description	Criteria
Trace	Particles are present but estimated to be less than 5%
Few	5% - 10%
Little	15% - 25%
Some	30% - 45%
Mostly	50% - 100%

PARTICLE SIZE

Description		Size (in.)
Boulder		Greater than 12
Cobble		3 - 12
Gravel	Coarse	3/4 - 3
	Fine	1/5 - 3/4
Sand	Coarse	1/16 - 1/5
	Medium	1/64 - 1/16
	Fine	1/300 - 1/64
Silt and Clay		Less than 1/300

ENGINEERING SERVICES — MATERIALS AND GEOTECHNICAL SERVICES

FUNCTIONAL SUPERVISOR
NAME: M. SMITH

DRAWN BY: P.QUACH
CHECKED BY: D.ORRIS

FIELD INVESTIGATION BY:
P.MCDONALD/EJ.JEON/C.CARBINO/L.ROEBUCK

STATE OF CALIFORNIA
DEPARTMENT OF TRANSPORTATION

DIVISION OF ENGINEERING SERVICES
STRUCTURE DESIGN
DESIGN BRANCH 1

BRIDGE NO. X
POST MILE 3.64

RETAINING WALL NO. 195
LOG OF TEST BORINGS SHEET 5 OF 5

OGS CIVIL LOG OF TEST BORINGS SHEET

ORIGINAL SCALE IN INCHES FOR REDUCED PLANS 0 1 2 3

UNIT: 3576
PROJECT NUMBER & PHASE: 07000018331
CONTRACT NO.: 07-215934

DISREGARD PRINTS BEARING EARLIER REVISION DATES

REVISION DATES 06/17/11 — SHEET 12 OF 12

FILE => rw195-z-ltb05.dgn

USERNAME => s114640 DATE PLOTTED => 28-MAR-2012 TIME PLOTTED => 12:44

DIST	COUNTY	ROUTE	POST MILES TOTAL PROJECT	SHEET No.	TOTAL SHEETS
07	LA	5	2.4/4.0	1099	1288

REGISTERED CIVIL ENGINEER — DATE 12/7/2011

3-26-12
PLANS APPROVAL DATE

REGISTERED PROFESSIONAL ENGINEER — Kevin Harper — No. 42221 — Exp. 3-31-12 — CIVIL — STATE OF CALIFORNIA

The State of California or its officers or agents shall not be responsible for the accuracy or completeness of electronic copies of this plan sheet.

NOTES:

1. For Design Notes, see STANDARD PLAN B3-8.
2. All piles not shown in "DEVELOPED MIRRORED ELEVATION".

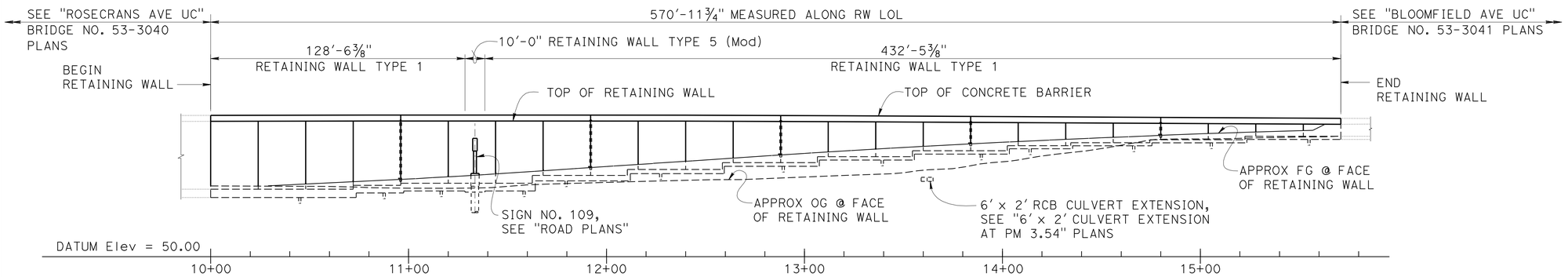

DEVELOPED MIRRORED ELEVATION

1' = 30'

QUANTITIES

STRUCTURE EXCAVATION (RETAINING WALL)	1,750	CY
STRUCTURE EXCAVATION (TYPE Y-2) (AERIALLY DEPOSITED LEAD)	715	CY
STRUCTURE BACKFILL (RETAINING WALL)	3,930	CY
PERVIOUS BACKFILL MATERIAL (RETAINING WALL)	315	CY
FURNISH PILING (CLASS 90)	10,699	LF
DRIVE PILE (CLASS 90)	301	EA
STRUCTURAL CONCRETE, RETAINING WALL	1,585	CY
ARCHITECTURAL TREATMENT (SPLIT SLATE - FRACTURED RIB)	9,300	SQFT
BAR REINFORCING STEEL (RETAINING WALL)	233,500	LB
CONCRETE BARRIER (TYPE 736A MODIFIED 1)	571	LF

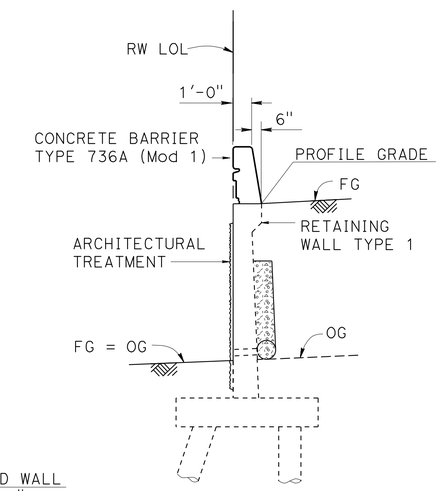

TYPICAL SECTION

¼" = 1'-0"

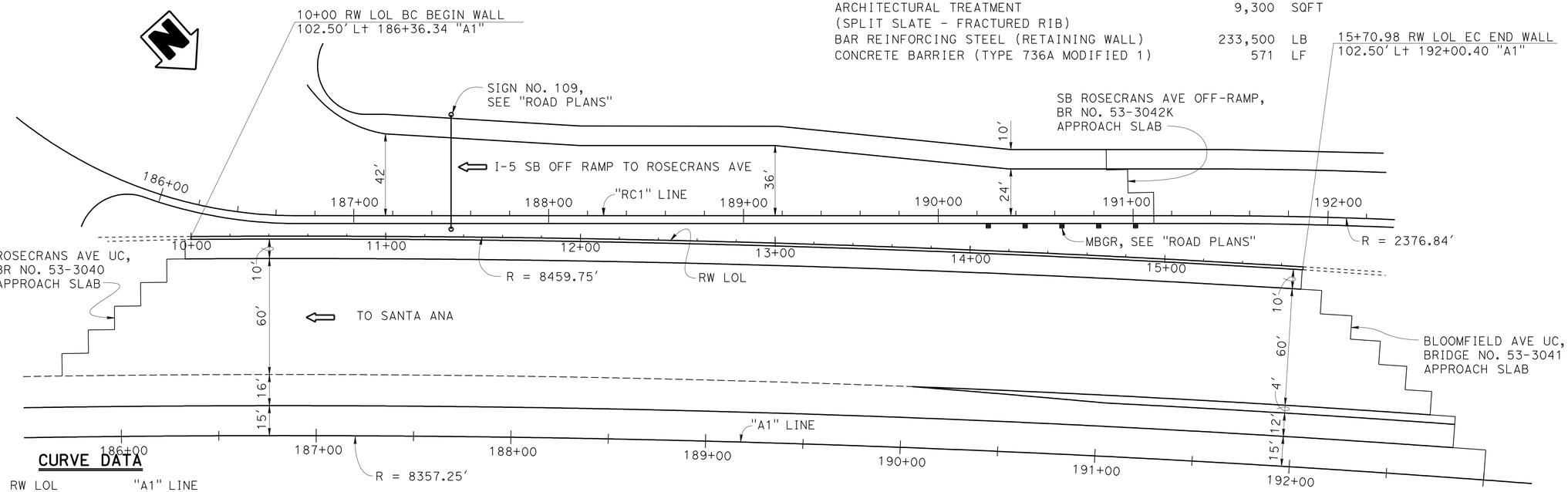

CURVE DATA

RW LOL	"A1" LINE
R = 8459.75	R = 8357.25
Δ = 3°52'02"	Δ = 17°36'01"
T = 285.60	T = 1293.80
L = 570.98	L = 2567.22

PLAN

1' = 30'

Jeff Sims
DESIGN ENGINEER

	BY	CHECKED				
DESIGN	Daniel Sessions	Kyoung-Hyeog Lee	LOAD FACTOR DESIGN			
DETAILS	Y.Feng / G.Dickerson	Kyoung-Hyeog Lee	LAYOUT	Daniel Sessions	Kyoung-Hyeog Lee	
QUANTITIES	April Pearson	Greg Jones	SPECIFICATIONS	Theresa Nedwick	PLANS AND SPECS COMPARED: Theresa Nedwick	

ORIGINAL SCALE IN INCHES FOR REDUCED PLANS 0 1 2 3

STATE OF CALIFORNIA
DEPARTMENT OF TRANSPORTATION

DIVISION OF ENGINEERING SERVICES
STRUCTURE DESIGN
DESIGN BRANCH 1

BRIDGE NO. X
POST MILE 3.50

RETAINING WALL NO. 189
GENERAL PLAN

UNIT: 3576
PROJECT NUMBER & PHASE: 07000018331
CONTRACT NO.: 07-215934

DISREGARD PRINTS BEARING EARLIER REVISION DATES
REVISION DATES: 10/26/11 11/18/11 11/23/11
SHEET 1 OF 14

USERNAME => s114640 DATE PLOTTED => 28-MAR-2012 TIME PLOTTED => 12:44

FILE => rw 189-a-gp.dgn

STRUCTURES DESIGN GENERAL PLAN SHEET (ENGLISH) (REV.09-01-10)

DIST	COUNTY	ROUTE	POST MILES TOTAL PROJECT	SHEET No.	TOTAL SHEETS
07	LA	5	2.4/4.0	1100	1288

REGISTERED CIVIL ENGINEER 12/7/2011 DATE

3-26-12
PLANS APPROVAL DATE

REGISTERED PROFESSIONAL ENGINEER Kevin Harper No. 42221 Exp. 3-31-12 CIVIL STATE OF CALIFORNIA

The State of California or its officers or agents shall not be responsible for the accuracy or completeness of electronic copies of this plan sheet.

INDEX TO PLANS

SHEET NO.	TITLE
1.	GENERAL PLAN
2.	INDEX TO PLANS
3.	STRUCTURE PLAN NO. 1
4.	STRUCTURE PLAN NO. 2
5.	FOUNDATION PLAN
6.	RETAINING WALL TYPE 5 (Mod)
7.	RETAINING WALL ARCHITECTURAL TREATMENT
8.	RETAINING WALL ARCHITECTURAL DETAILS NO. 1
9.	RETAINING WALL ARCHITECTURAL DETAILS NO. 2
10	CONCRETE BARRIER TYPE 736A (Mod 1) DETAILS
11.	LOG OF TEST BORINGS 1 OF 4
12.	LOG OF TEST BORINGS 2 OF 4
13.	LOG OF TEST BORINGS 3 OF 4
14.	LOG OF TEST BORINGS 4 OF 4

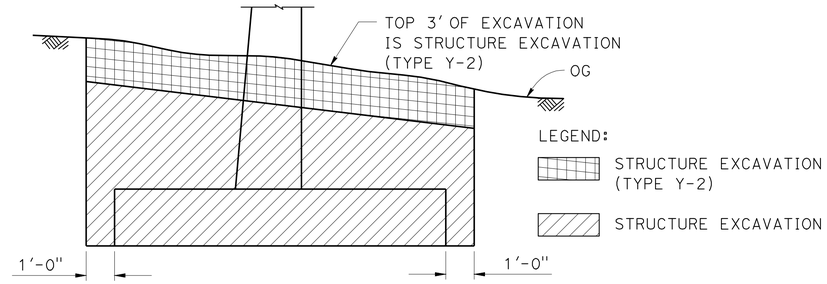

RW LOL 10+52 TO 14+95 AND 15+64 TO 15+70.98

LIMITS OF PAYMENT FOR STRUCTURE EXCAVATION (TYPE Y-2) (AERIALLY DEPOSITED LEAD)

NO SCALE

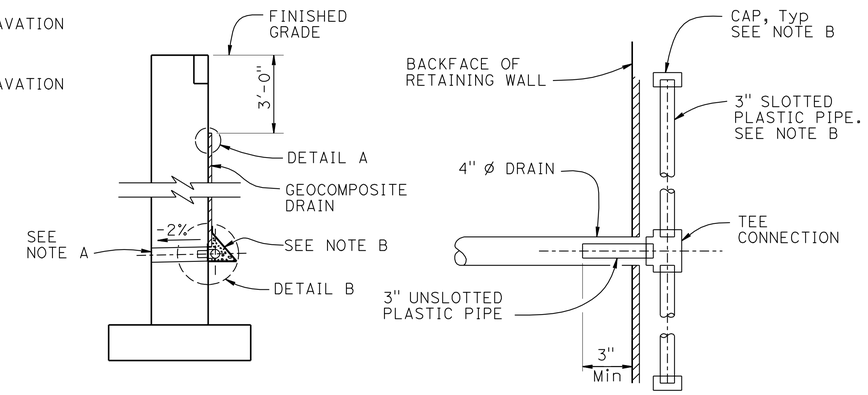

WALL SECTION

SECTION A-A

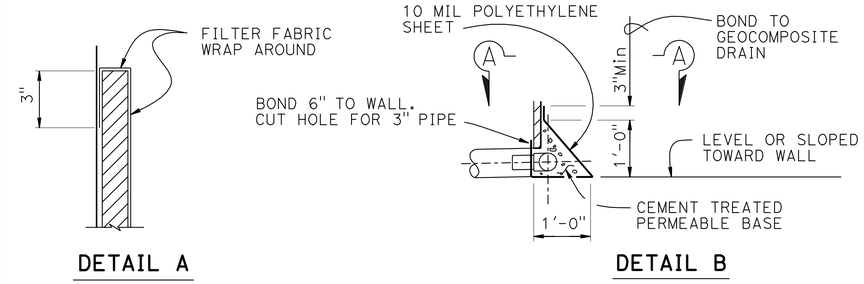

DETAIL A

DETAIL B

WEEP HOLE AND GEOCOMPOSITE DRAIN

ALTERNATIVE TO BRIDGE DETAIL BO-3 / 3-1

NOTES:

A. 4" Ø drains at 25' max center to center.
For walls adjacent to sidewalks or curbs, provide 4" cast iron or asbestos cement pipe under the sidewalk to discharge through curb face.
Exposed wall drains shall be located 3"± above finished grade.

B. Geocomposite drain, cement treated permeable base, and 3"Ø slotted plastic pipe continuous behind retaining wall. Cap ends of pipe. Provide "Tee" connection at each 4" Ø drain.

STANDARD PLANS DATED MAY 2006

A10A	ACRONYMS AND ABBREVIATIONS (SHEET 1 OF 2)
A10B	ACRONYMS AND ABBREVIATIONS (SHEET 2 OF 2)
A10C	SYMBOLS (SHEET 1 OF 2)
A10D	SYMBOLS (SHEET 2 OF 2)
A62B	LIMITS OF PAYMENT FOR EXCAVATION AND BACKFILL - BRIDGE SURCHARGE AND WALL
A87A	CURBS AND DRIVEWAYS
B0-1	BRIDGE DETAILS
B0-3	BRIDGE DETAILS
B2-5	PILE DETAILS CLASS 90 AND CLASS 140
B3-1	RETAINING WALL TYPE 1 H = 4' - 30'
B3-2	RETAINING WALL TYPE 1 H = 32' - 36'
B3-8	RETAINING WALL DETAILS No. 1
B11-56	CONCRETE BARRIER TYPE 736
S-49	OVERHEAD SIGNS - LIGHTWEIGHT FOUNDATION DETAILS

STANDARD PLAN SHEET NO.

DETAIL NO.

PILE DATA

LOCATION	PILE TYPE	NOMINAL RESISTANCE (Kip)		SPECIFIED TIP ELEVATION	NOMINAL DRIVING RESISTANCE (Kip)
		COMPRESSION	TENSION		
Ret WALL TYPE 1 RW LOL 10+00 to 10+73.50	CLASS 90	180	0	45.8	180
Ret WALL TYPE 1 RW LOL 10+73.50 to 10+97.50	CLASS 90	180	0	48.2	180
Ret WALL TYPE 1 RW LOL 10+97.50 to 11+28.53 AND 11+38.53 to 11+64.03	CLASS 90	180	0	49.5	180
Ret WALL TYPE 5 (Mod) RW LOL 11+28.53 to 11+38.53	CLASS 90	180	0	48.5	180
Ret WALL TYPE 1 RW LOL 11+64.03 to 12+12.03	CLASS 90	180	0	54.3	180
Ret WALL TYPE 1 RW LOL 12+12.03 to 12+60.03	CLASS 90	180	0	57.9	180
Ret WALL TYPE 1 RW LOL 12+60.03 to 13+06.53	CLASS 90	180	0	61.6	180
Ret WALL TYPE 1 RW LOL 13+06.53 to 13+54.53	CLASS 90	180	0	64.8	180
Ret WALL TYPE 1 RW LOL 13+54.53 to 14+02.53	CLASS 90	180	0	67.8	180
Ret WALL TYPE 1 RW LOL 14+02.53 to 14+34.53	CLASS 90	180	0	70.4	180
Ret WALL TYPE 1 RW LOL 14+34.53 to 14+74.53	CLASS 90	180	0	71.9	180
Ret WALL TYPE 1 RW LOL 14+74.53 to 15+22.53	CLASS 90	180	0	73.4	180
Ret WALL TYPE 1 RW LOL 15+22.53 to 15+70.98	CLASS 90	180	0	75.2	180

NOTES:

1. Class 90 Alternative "X" Piles shall have a dimension "T" not less than 14 inches.
2. All Design tips are controlled by compression.

	BY	CHECKED
DESIGN	Daniel Sessions	Kyoung-Hyeog Lee
DETAILS	Yingjue Feng	Kyoung-Hyeog Lee
QUANTITIES	April Pearson	Greg Jones

STATE OF CALIFORNIA
DEPARTMENT OF TRANSPORTATION

DIVISION OF ENGINEERING SERVICES
STRUCTURE DESIGN
DESIGN BRANCH 1

BRIDGE NO. X
POST MILE 3.50

RETAINING WALL NO. 189
INDEX TO PLANS

STRUCTURES DESIGN DETAIL SHEET (ENGLISH) (REV. 09-01-10)

ORIGINAL SCALE IN INCHES FOR REDUCED PLANS 0 1 2 3

UNIT: 3576
PROJECT NUMBER & PHASE: 07000018331
CONTRACT NO.: 07-215934

DISREGARD PRINTS BEARING EARLIER REVISION DATES

REVISION DATES 10/24/11 11/4/11 11/4/11

SHEET 2 OF 14

FILE => rw 189-a-itp.dgn

USERNAME => s114640 DATE PLOTTED => 28-MAR-2012 TIME PLOTTED => 12:44