| Dist | COUNTY | ROUTE | POST MILES TOTAL PROJECT | SHEET No. | TOTAL SHEETS |
|---|---|---|---|---|---|
| 07 | LA | 5 | 2.4/4.0 | 3 | 1288 |

REGISTERED CIVIL ENGINEER DATE 12-19-11

3-26-12
PLANS APPROVAL DATE

REGISTERED PROFESSIONAL ENGINEER NGIM NANCY PE No. 58161 Exp. 6-30-2012 CIVIL STATE OF CALIFORNIA

*THE STATE OF CALIFORNIA OR ITS OFFICERS OR AGENTS SHALL NOT BE RESPONSIBLE FOR THE ACCURACY OR COMPLETENESS OF SCANNED COPIES OF THIS PLAN SHEET.*

## PROPOSED STRUCTURAL SECTIONS

1
- 1.05' JPCP
- 0.50' LCB
- 0.70' CLASS 3 AB

2
- 0.80' JPCP
- 0.40' LCB
- 0.60' CLASS 3 AB

3
- 0.95' JPCP
- 0.50' LCB
- 0.70' CLASS 3 AB

4
- 0.70' HMA
- 0.70' LCB
- 1.30' CLASS 3 AB

5
- 0.70' HMA
- 0.60' LCB
- 1.15' CLASS 3 AB

6
- 0.50' HMA
- 0.50' LCB
- 0.95' CLASS 3 AB

7
- 0.35' Conc Pvmt
- 0.30' CLASS 3 AB

8
- 0.40' HMA
- GEOSYNTHETIC Pvmt INTERLAYER
- 0.30' HMA
- 0.70' LCB
- 1.30' CLASS 3 AB

9
- 0.20' COLD PLANE AC Pvmt
- 0.20' - 0.80' HMA OVERLAY

10
- 0.50' - 0.70' Conc Pvmt

11
- 0.50' HMA
- 0.70' CLASS 3 AB

12
- 0.70' INDIVIDUAL SLAB REPLACEMENT (RSC)
- 0.70' CLASS 3 AB

13
- 0.60' HMA
- 1.0' CLASS 2 AB
- 1.10' CLASS 4 ASB

14
- 1.05' JPCP (RSC)
- 0.50' LCB (RSC)
- 0.70' CLASS 3 AB

15
- 0.70' Conc Pvmt
- 1.10' CLASS 2 AB
- 1.25' CLASS 4 ASB

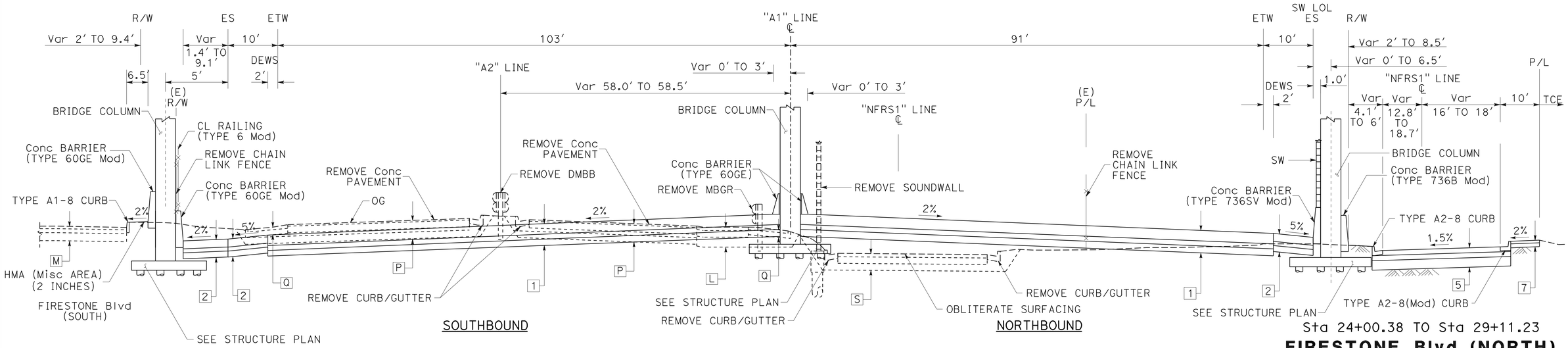


Sta 159+82.27 TO Sta 161+84.85

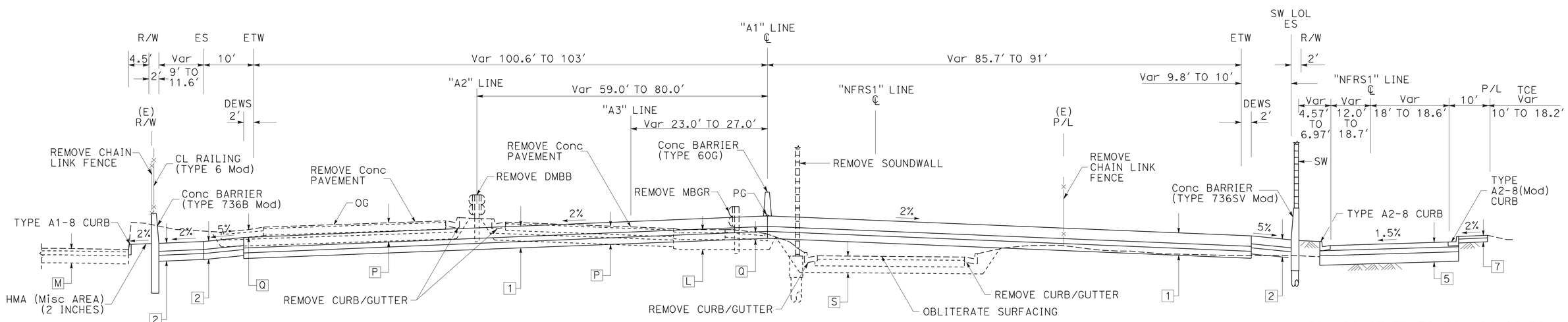


SOUTHBOUND
Sta 157+48.00 TO Sta 159+82.27
Sta 161+84.85 TO Sta 170+75.36

NORTHBOUND
Sta 157+48.00 TO Sta 159+82.27
Sta 161+84.85 TO Sta 168+38.19

**ROUTE 5**

# TYPICAL CROSS SECTIONS

NO SCALE

1 **REVISED PER ADDENDUM No. 1 DATED JULY 13, 2012**

X-2

REVISED BY | DATE REVISED
JANE YU | NGIM NANCY PE
CALCULATED-DESIGNED BY | CHECKED BY
FUNCTIONAL SUPERVISOR | NGIM NANCY PE

STATE OF CALIFORNIA - DEPARTMENT OF TRANSPORTATION
Caltrans® OFFICE OF DESIGN A

721593ca002.add

LAST REVISION 00-00-00 | DATE PLOTTED => 12-JUL-2012 | TIME PLOTTED => 14:05

| Dist | COUNTY | ROUTE | POST MILES TOTAL PROJECT | SHEET No. | TOTAL SHEETS |
|---|---|---|---|---|---|
| 07 | LA | 5 | 2.4/4.0 | 23 | 1288 |

REGISTERED CIVIL ENGINEER 12-19-11 DATE

3-26-12
PLANS APPROVAL DATE

REGISTERED PROFESSIONAL ENGINEER NGIM NANCY PE No. 58161 Exp. 6-30-2012 CIVIL STATE OF CALIFORNIA

*THE STATE OF CALIFORNIA OR ITS OFFICERS OR AGENTS SHALL NOT BE RESPONSIBLE FOR THE ACCURACY OR COMPLETENESS OF SCANNED COPIES OF THIS PLAN SHEET.*

1 **REVISED PER ADDENDUM No. 1 DATED JULY 13, 2012**

NOTE:
FOR ACCURATE RIGHT OF WAY DATA, CONTACT RIGHT OF WAY ENGINEERING AT THE DISTRICT OFFICE.

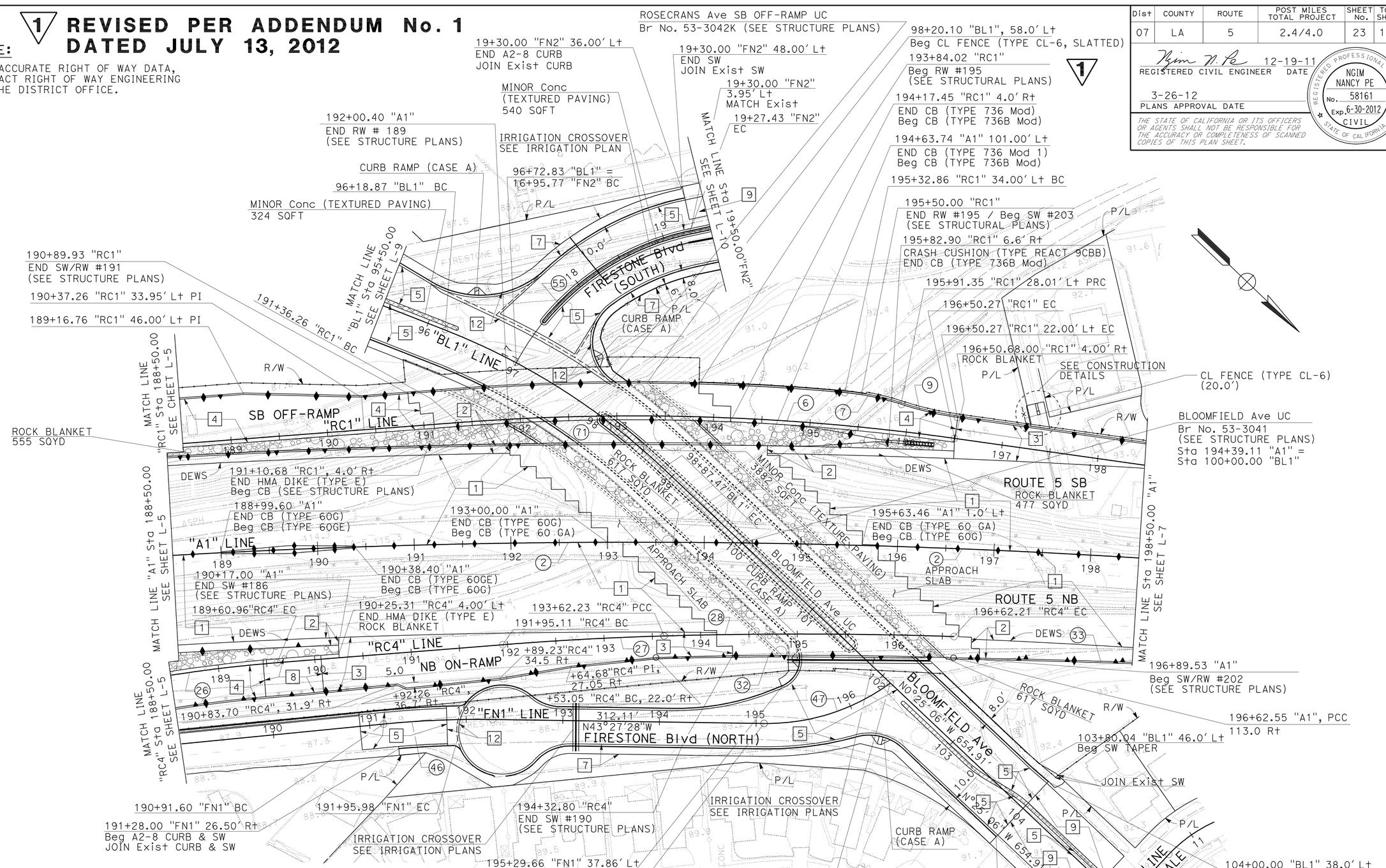


## CURVE DATA

| No. ⊕ | R | Δ | T | L |
|---|---|---|---|---|
| 2 | 8357.25′ | 17°36′01" | 1293.80′ | 2567.22′ |
| 6 | 2376.84′ | 12°23′26" | 258.01′ | 514.01′ |
| 7 | 264.10′ | 12°56′46" | 29.96′ | 59.67′ |
| 9 | 339.40′ | 10°6′57" | 30.04′ | 59.92′ |
| 26 | 1460.00′ | 12°30′29" | 160.00′ | 318.73′ |
| 27 | 3280.00′ | 2°55′09" | 83.58′ | 167.11′ |
| 28 | 4890.60′ | 3°30′52" | 150.04′ | 299.98′ |

## CURVE DATA

| No. ⊕ | R | Δ | T | L |
|---|---|---|---|---|
| 32 | 4868.60′ | 3°37′22" | 153.97′ | 307.83′ |
| 46 | 1000.00′ | 6°27′35" | 56.43′ | 112.74′ |
| 47 | 215.00′ | 37°11′29" | 72.34′ | 139.56′ |
| 55 | 265.94′ | 49°54′38" | 123.76′ | 231.66′ |
| 71 | 700.00′ | 21°59′06" | 135.97′ | 268.60′ |
| 33 | 9097.19′ | 3°46′36" | 299.92′ | 599.62′ |

# LAYOUT
SCALE: 1" = 50′

**L-6**

| REVISED BY | DATE REVISED | CALCULATED-DESIGNED BY | CHECKED BY | FUNCTIONAL SUPERVISOR |
|---|---|---|---|---|
| WILL CARPIO | NGIM NANCY PE | NGIM NANCY PE | NGIM NANCY PE | NGIM NANCY PE |

STATE OF CALIFORNIA - DEPARTMENT OF TRANSPORTATION
Caltrans® OFFICE OF DESIGN A

721593ea006.add

LAST REVISION DATE PLOTTED => 12-JUL-2012
00-00-00 TIME PLOTTED => 14:05

| Dist | COUNTY | ROUTE | POST MILES TOTAL PROJECT | SHEET No. | TOTAL SHEETS |
|---|---|---|---|---|---|
| 07 | LA | 5 | 2.4/4.0 | 27 | 1288 |

Ngim N. Pe 12-19-11
REGISTERED CIVIL ENGINEER DATE

3-26-12
PLANS APPROVAL DATE

REGISTERED PROFESSIONAL ENGINEER
NGIM NANCY PE
No. 58161
Exp. 6-30-2012
CIVIL
STATE OF CALIFORNIA

*THE STATE OF CALIFORNIA OR ITS OFFICERS OR AGENTS SHALL NOT BE RESPONSIBLE FOR THE ACCURACY OR COMPLETENESS OF SCANNED COPIES OF THIS PLAN SHEET.*

NOTE:

1. FOR ACCURATE RIGHT OF WAY DATA, CONTACT RIGHT OF WAY ENGINEERING AT THE DISTRICT OFFICE.

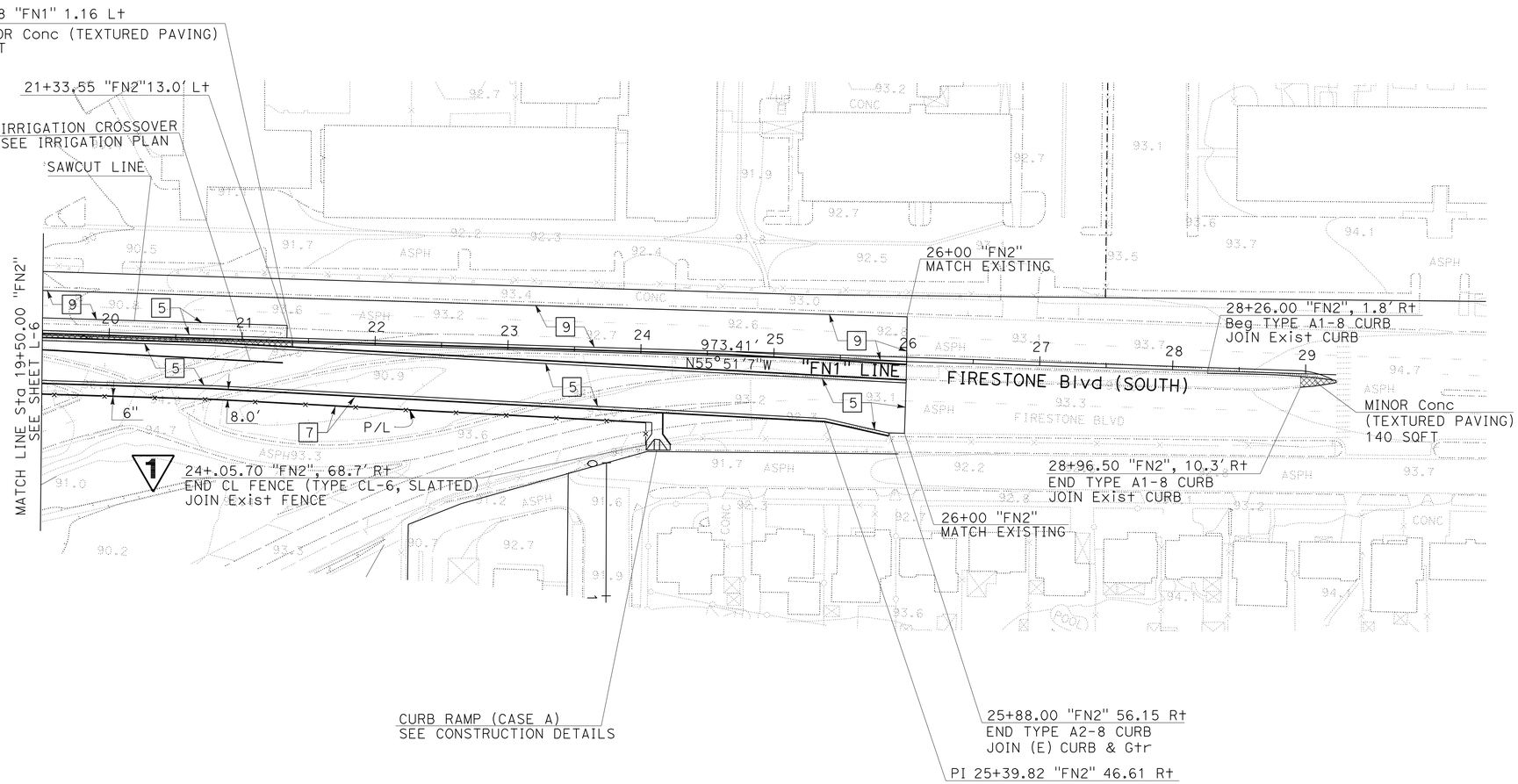


1 REVISED PER ADDENDUM No. 1 DATED JULY 13, 2012

**LAYOUT**
SCALE: 1" = 50'

**L-10**

| REVISED BY | DATE REVISED |
|---|---|
| WILL CARPIO | NGIM NANCY PE |

| CALCULATED-DESIGNED BY | CHECKED BY |
|---|---|
| FUNCTIONAL SUPERVISOR | NGIM NANCY PE |

STATE OF CALIFORNIA - DEPARTMENT OF TRANSPORTATION
Caltrans OFFICE OF DESIGN A

721593ea010.add

LAST REVISION 00-00-00 | DATE PLOTTED => 12-JUL-2012 | TIME PLOTTED => 14:05

BORDER LAST REVISED 7/2/2010 | USERNAME => s124496 | DGN FILE => 721593ea010.add | RELATIVE BORDER SCALE IS IN INCHES 0 1 2 3 | UNIT 1797 | PROJECT NUMBER & PHASE 07000018331

| Dist | COUNTY | ROUTE | POST MILES TOTAL PROJECT | SHEET No. | TOTAL SHEETS |
|---|---|---|---|---|---|
| 07 | LA | 5 | 2.4/4.0 | 60 | 1288 |

REGISTERED CIVIL ENGINEER 12-19-11 DATE

3-26-12
PLANS APPROVAL DATE

REGISTERED PROFESSIONAL ENGINEER NGIM NANCY PE No. 58161 Exp. 6-30-2012 CIVIL STATE OF CALIFORNIA

*THE STATE OF CALIFORNIA OR ITS OFFICERS OR AGENTS SHALL NOT BE RESPONSIBLE FOR THE ACCURACY OR COMPLETENESS OF SCANNED COPIES OF THIS PLAN SHEET.*

1 REVISED PER ADDENDUM No. 1 DATED JULY 13, 2012

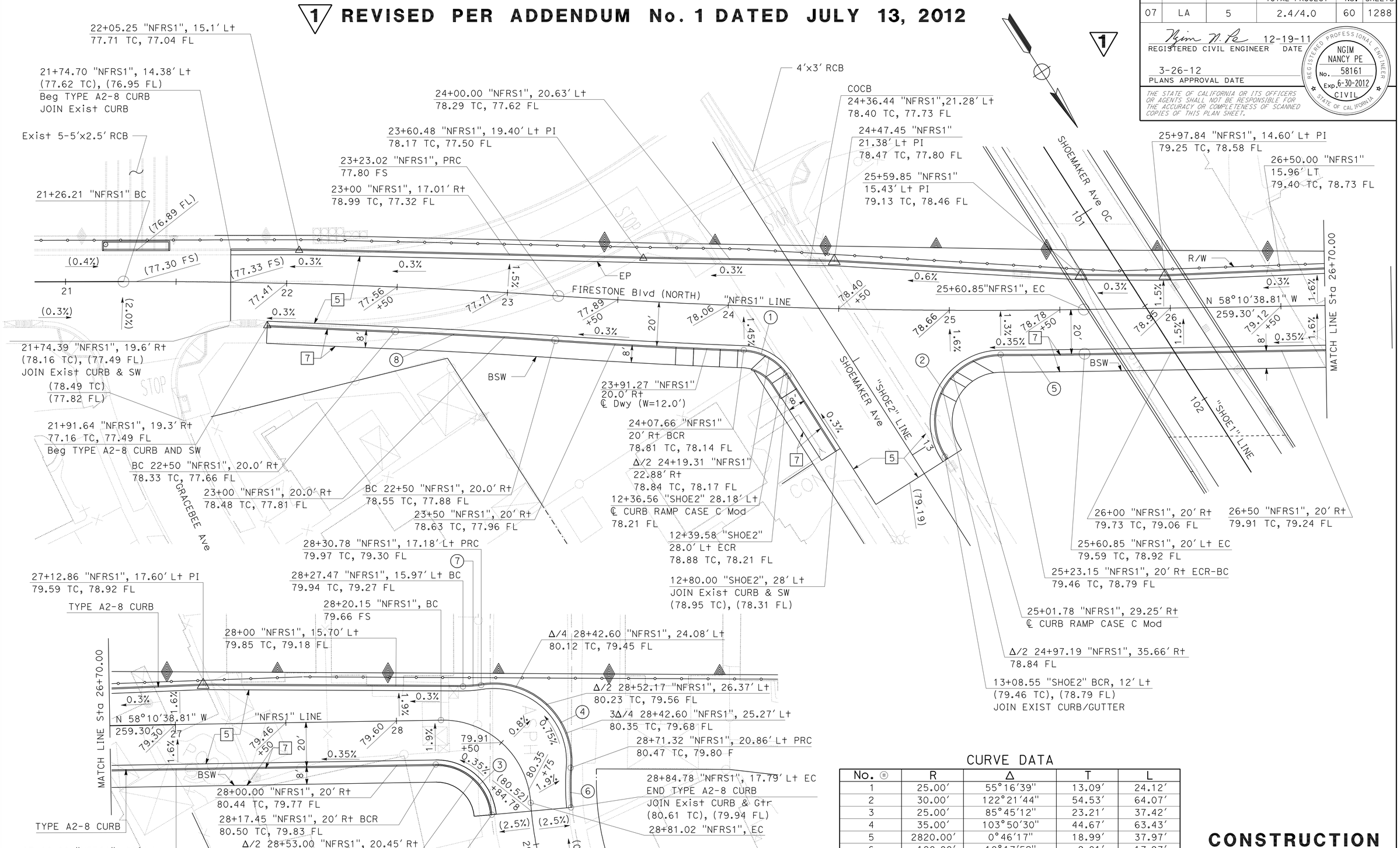


## CURVE DATA

| No. ⊕ | R | Δ | T | L |
|---|---|---|---|---|
| 1 | 25.00' | 55°16'39" | 13.09' | 24.12' |
| 2 | 30.00' | 122°21'44" | 54.53' | 64.07' |
| 3 | 25.00' | 85°45'12" | 23.21' | 37.42' |
| 4 | 35.00' | 103°50'30" | 44.67' | 63.43' |
| 5 | 2820.00' | 0°46'17" | 18.99' | 37.97' |
| 6 | 100.00' | 10°17'52" | 9.01' | 17.97' |
| 7 | 50.00' | 9°29'12" | 4.15' | 8.28' |
| 8 | 2780.00' | 1°29'39" | 36.25' | 72.50' |

# CONSTRUCTION DETAILS

SCALE: 1" = 20'

C-10

REVISED BY | DATE REVISED
WILL CARPIO | NGIM NANCY PE
CALCULATED-DESIGNED BY | CHECKED BY
FUNCTIONAL SUPERVISOR | NGIM NANCY PE

STATE OF CALIFORNIA - DEPARTMENT OF TRANSPORTATION
Caltrans® OFFICE OF DESIGN A

721593ga010.add

LAST REVISION | DATE PLOTTED => 12-JUL-2012
00-00-00 | TIME PLOTTED => 14:05

| Dist | COUNTY | ROUTE | POST MILES TOTAL PROJECT | SHEET No. | TOTAL SHEETS |
|---|---|---|---|---|---|
| 07 | LA | 5 | 2.4/4.0 | 61 | 1288 |

REGISTERED CIVIL ENGINEER 12-19-11 DATE

3-26-12
PLANS APPROVAL DATE

REGISTERED PROFESSIONAL ENGINEER NGIM NANCY PE No. 58161 Exp. 6-30-2012 CIVIL STATE OF CALIFORNIA

*THE STATE OF CALIFORNIA OR ITS OFFICERS OR AGENTS SHALL NOT BE RESPONSIBLE FOR THE ACCURACY OR COMPLETENESS OF SCANNED COPIES OF THIS PLAN SHEET.*

## CURVE DATA

| No. (R) | R | Δ | T | L |
|---|---|---|---|---|
| 1 | 250.187′ | 41°23′46″ | 94.528′ | 180.760′ |
| 2 | 25.000′ | 148°41′05″ | 89.193′ | 64.876′ |
| 3 | 150.000′ | 28°6′14″ | 37.544′ | 73.576′ |
| 4 | 227.000′ | 41°23′45″ | 85.770′ | 164.010′ |

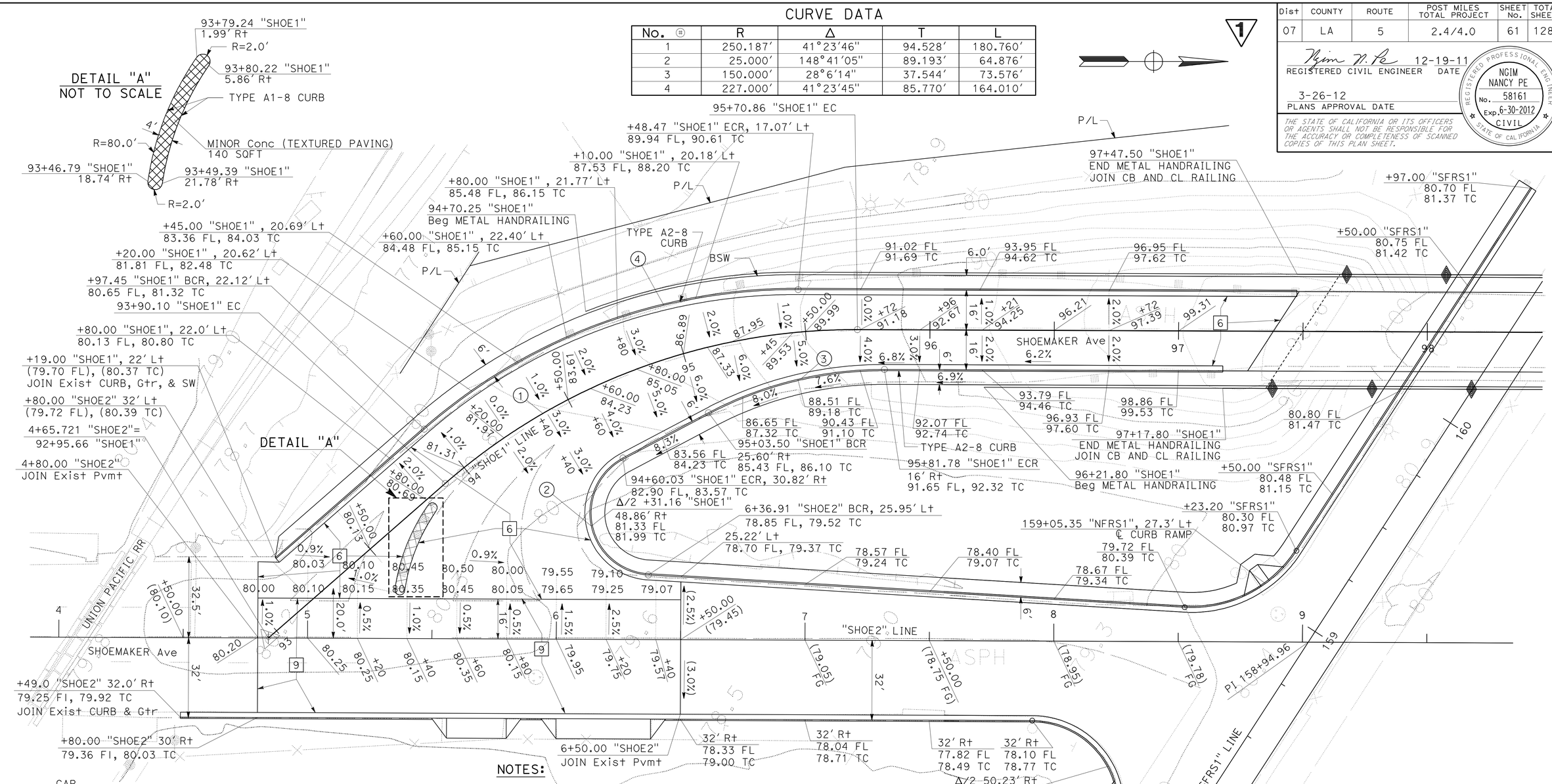


## NOTES:

1. RAILS AND POSTS SHALL BE GALVANIZED STEEL PIPE.
2. PROVIDE SLIP JOINTS AT STAIRWAY EXPANSION JOINTS, 24′ MAXIMUM.
3. MAXIMUM SPACING OF POSTS SHALL BE 8′-0″ ON STRAIGHT ALIGNMENTS, AND 6′-0″ ON CURVED ALIGNMENTS WITH LESS THAN 30′ RADIUS. MAKE SPACING UNIFORM BETWEEN CHANGES IN ALIGNMENT.
4. WELDS SHALL BE SLOT OR FILLET WELDS EQUAL TO THICKNESS OF PIPE. WELD JOINTS AROUND.

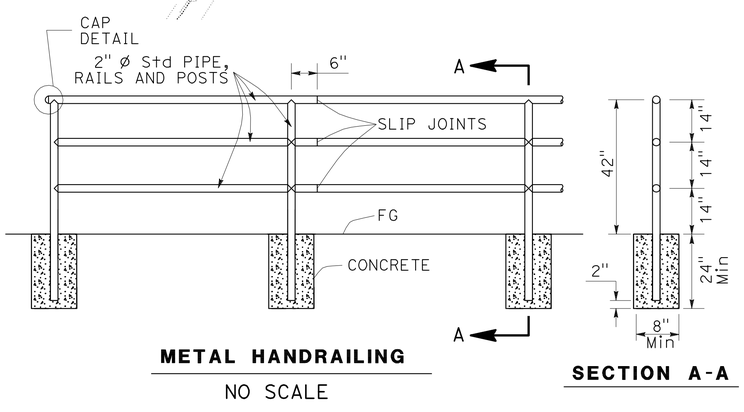


**METAL HANDRAILING**
NO SCALE

**SECTION A-A**

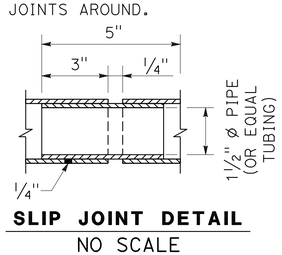


**SLIP JOINT DETAIL**
NO SCALE

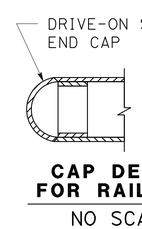


**CAP DETAIL FOR RAIL END**
NO SCALE

**1 REVISED PER ADDENDUM No. 1 DATED JULY 13, 2012**

# CONSTRUCTION DETAILS

SCALE: 1" = 20′

C-11

STATE OF CALIFORNIA - DEPARTMENT OF TRANSPORTATION
Caltrans OFFICE OF DESIGN A

FUNCTIONAL SUPERVISOR: NGIM NANCY PE
CALCULATED-DESIGNED BY: WILL CARPIO
CHECKED BY: NGIM NANCY PE
REVISED BY / DATE REVISED

LAST REVISION 00-00-00
DATE PLOTTED => 12-JUL-2012
TIME PLOTTED => 16:08

721593ga011.add

BORDER LAST REVISED 7/2/2010
USERNAME => s124496
DGN FILE => 721593ga011.add
RELATIVE BORDER SCALE IS IN INCHES 0 1 2 3
UNIT 1797
PROJECT NUMBER & PHASE 07000018331

| Dist | COUNTY | ROUTE | POST MILES TOTAL PROJECT | SHEET No. | TOTAL SHEETS |
|---|---|---|---|---|---|
| 07 | LA | 5 | 2.4/4.0 | 79 | 1288 |

REGISTERED CIVIL ENGINEER 12-19-11 DATE

3-26-12
PLANS APPROVAL DATE

REGISTERED PROFESSIONAL ENGINEER NGIM NANCY PE No. 58161 Exp. 6-30-2012 CIVIL STATE OF CALIFORNIA

*THE STATE OF CALIFORNIA OR ITS OFFICERS OR AGENTS SHALL NOT BE RESPONSIBLE FOR THE ACCURACY OR COMPLETENESS OF SCANNED COPIES OF THIS PLAN SHEET.*

NOTES:

1. WHEN SALVAGED GALVANIZED CHANNEL IS USED THE LAST PARAGRAPH OF SECTION 75-1.05 OF THE STANDARD SPECIFICATIONS REGARDING PAINTING SHALL APPLY.
2. ROADSIDE POST-ADAPTOR ASSEMBLY SHALL BE GALVANIZED AFTER FABRICATION.
3. 3/8" ℙ SHALL BE SET FLUSH WITH FACE OF THE CONCRETE BARRIER.
4. DRILL & BOND 1 1/4" Galv HS THREAD ROD OR ANCHOR BOLT IS OPTIONAL.

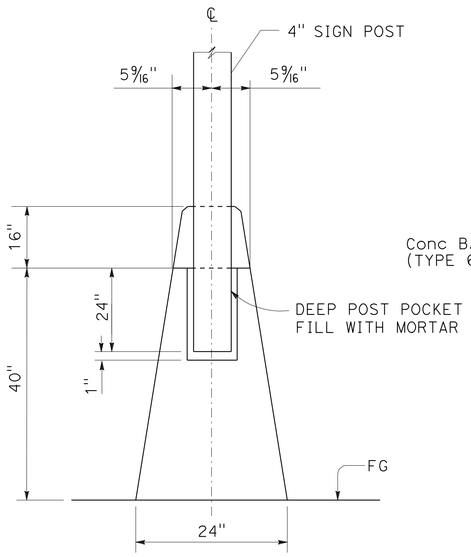


SECTION C-C
CONCRETE BARRIER TYPE 60G
SIGN POST LOCATION AT "A1" STATION
151+35, 164+50, 169+40, 183+70, 197+80 AND 202+79

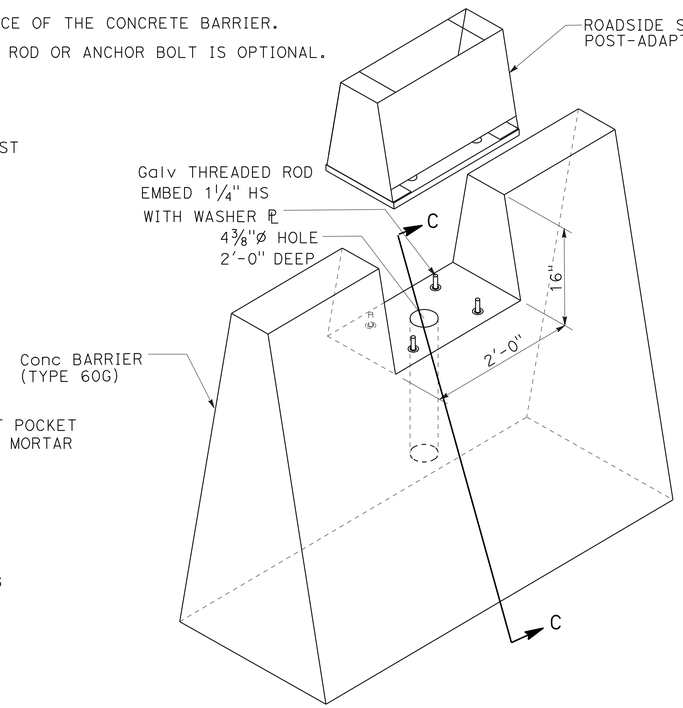


**ISOMETRIC VIEW**
CONCRETE BARRIER TYPE 60G (Mod)
SIGN POST LOCATION

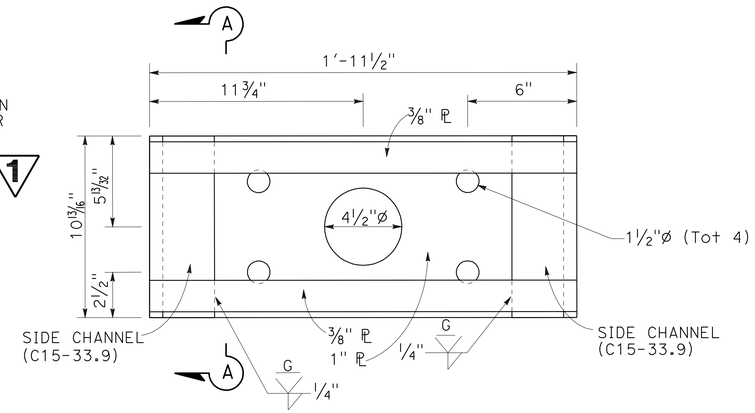


**PLAN**
ROADSIDE SIGN POST-ADAPTOR

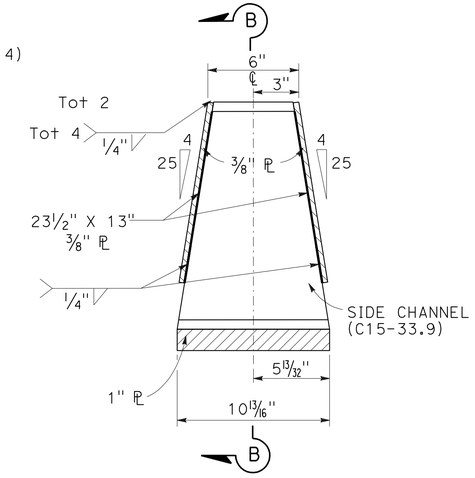


SECTION A-A

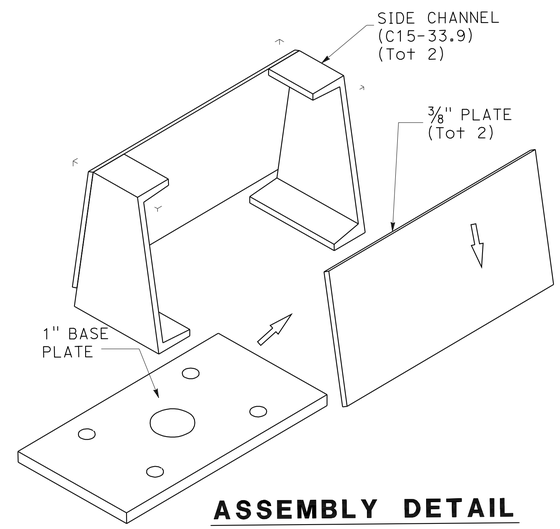


**ASSEMBLY DETAIL**
POST-ADAPTOR

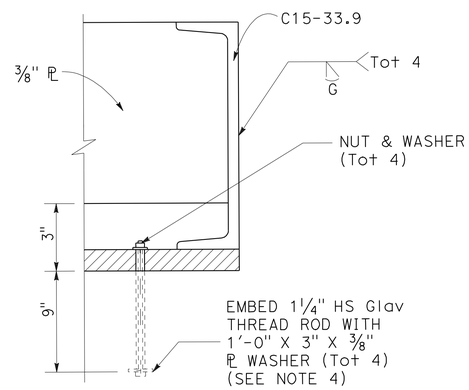


SECTION B-B

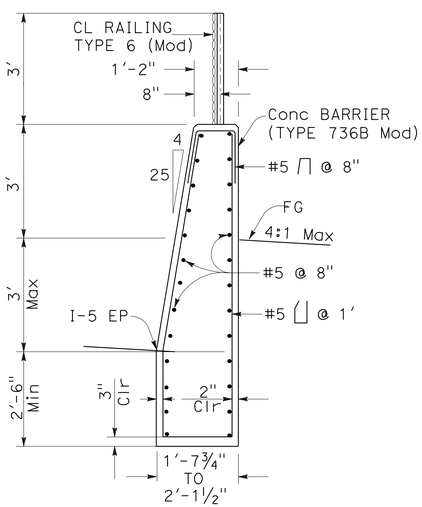


CONCRETE BARRIER TYPE 736B (Mod)
TYPICAL SECTION

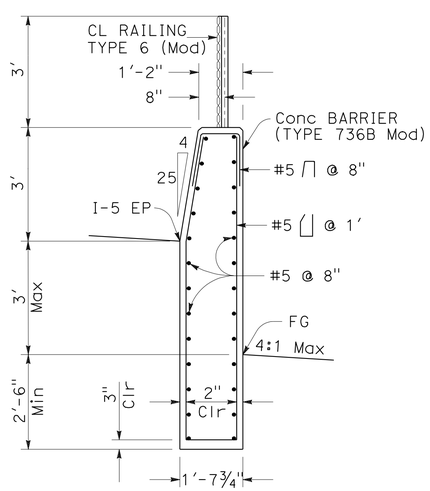


CONCRETE BARRIER TYPE 736B (Mod)
TYPICAL SECTION

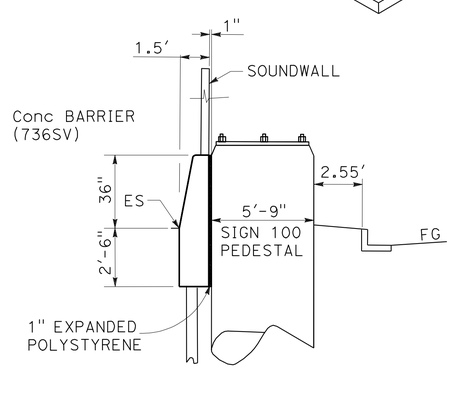


CROSS SECTION
AT SIGN No. 100

1 REVISED PER ADDENDUM No. 1 DATED JULY 13, 2012

# CONSTRUCTION DETAILS
**CONCRETE BARRIER MODIFICATION AND Trans**
NO SCALE

C-29

STATE OF CALIFORNIA - DEPARTMENT OF TRANSPORTATION
Caltrans OFFICE OF DESIGN A

FUNCTIONAL SUPERVISOR: NGIM NANCY PE
CALCULATED-DESIGNED BY / CHECKED BY
REVISED BY / DATE REVISED

LAST REVISION 00-00-00 | DATE PLOTTED => 12-JUL-2012 | TIME PLOTTED => 14:05

721593ga029.add

BORDER LAST REVISED 7/2/2010 | USERNAME => s124496 | DGN FILE => 721593ga029.add | RELATIVE BORDER SCALE IS IN INCHES 0 1 2 3 | UNIT 1797 | PROJECT NUMBER & PHASE 07000018331

| Dist | COUNTY | ROUTE | POST MILES TOTAL PROJECT | SHEET No. | TOTAL SHEETS |
|---|---|---|---|---|---|
| 07 | LA | 5 | 2.4/4.0 | 115 | 1288 |

REGISTERED CIVIL ENGINEER 12-19-11 DATE

3-26-12
PLANS APPROVAL DATE

REGISTERED PROFESSIONAL ENGINEER RALPH M. SASAKI No. 30849 Exp. 3/31/12 CIVIL STATE OF CALIFORNIA

*THE STATE OF CALIFORNIA OR ITS OFFICERS OR AGENTS SHALL NOT BE RESPONSIBLE FOR THE ACCURACY OR COMPLETENESS OF SCANNED COPIES OF THIS PLAN SHEET.*

1

NOTE:

FOR ACCURATE RIGHT OF WAY DATA, CONTACT RIGHT OF WAY ENGINEERING AT THE DISTRICT OFFICE.

## CURVE DATA

| No. □ | R | Δ | T | L |
|---|---|---|---|---|
| 1 | 22.50′ | 69°47′07" | 15.69′ | 27.40′ |
| 2 | 55.00′ | 57°24′10" | 30.11′ | 55.10′ |
| 3 | 22.50′ | 39°42′45" | 8.13′ | 15.60′ |
| 4 | 22.50′ | 33°24′09" | 6.75′ | 13.12′ |
| 5 | 22.50′ | 31°47′12" | 6.41′ | 12.48′ |
| 6 | 22.50′ | 33°37′09" | 6.80′ | 13.20′ |
| 7 | 22.50′ | 20°8′14" | 4.00′ | 7.91′ |
| 8 | 22.50′ | 18°24′13" | 3.64′ | 7.23′ |

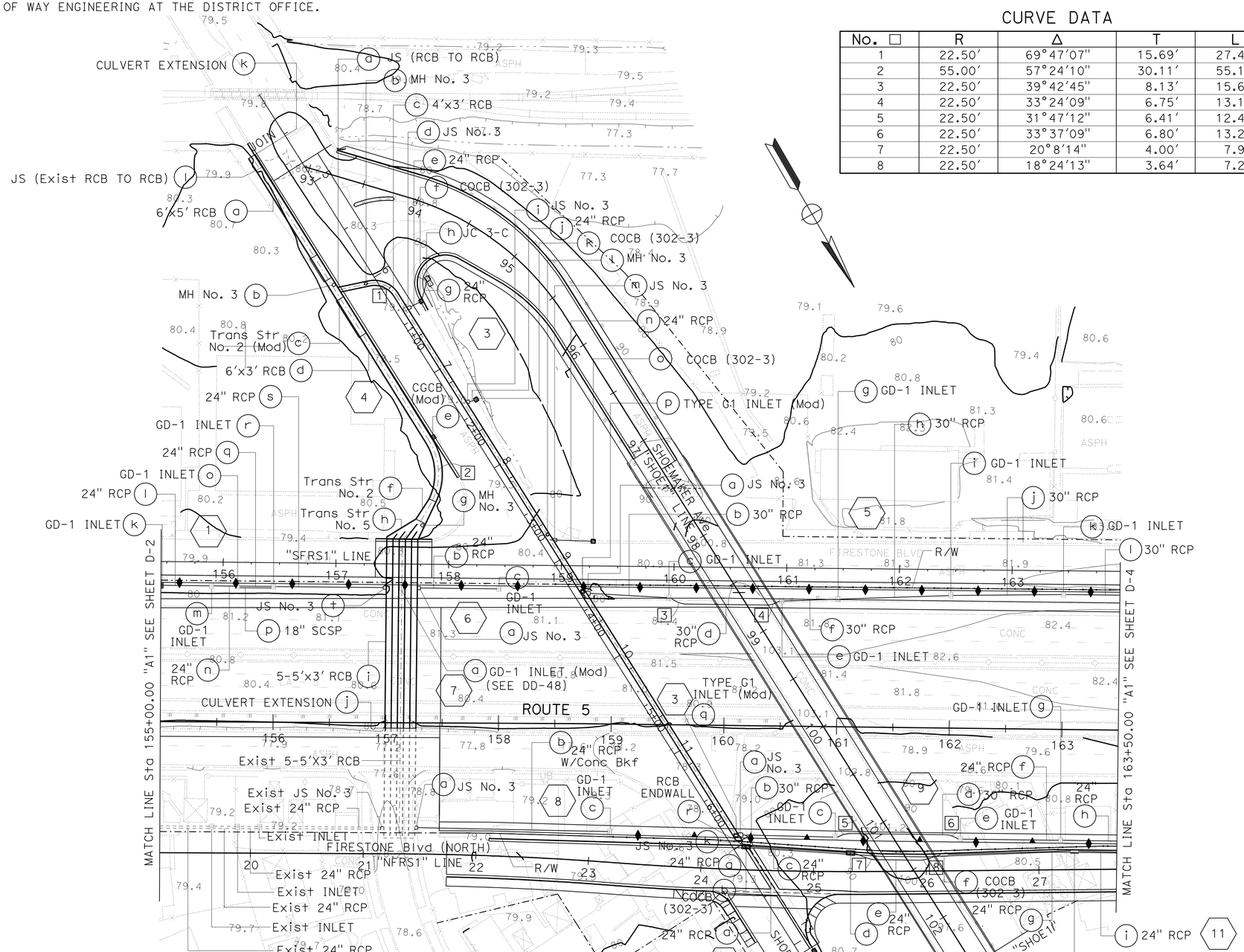


1 **REVISED PER ADDENDUM No. 1 DATED JULY 13, 2012**

*APPROVED FOR DRAINAGE WORK ONLY*

# DRAINAGE PLAN

SCALE: 1" = 50′

**D-3**

STATE OF CALIFORNIA - DEPARTMENT OF TRANSPORTATION
Caltrans® HYDRAULICS

FUNCTIONAL SUPERVISOR: JAI P. THAKUR
CALCULATED-DESIGNED BY: MARTIN CORONADO
CHECKED BY: RALPH M. SASAKI
REVISED BY
DATE REVISED

LAST REVISION 00-00-00
DATE PLOTTED => 12-JUL-2012
TIME PLOTTED => 14:05

| Dist | COUNTY | ROUTE | POST MILES TOTAL PROJECT | SHEET No. | TOTAL SHEETS |
|---|---|---|---|---|---|
| 07 | LA | 5 | 2.4/4.0 | 116 | 1288 |

REGISTERED CIVIL ENGINEER 12-19-11 DATE

3-26-12
PLANS APPROVAL DATE

REGISTERED PROFESSIONAL ENGINEER RALPH M. SASAKI No. 30849 Exp. 3/31/12 CIVIL STATE OF CALIFORNIA

*THE STATE OF CALIFORNIA OR ITS OFFICERS OR AGENTS SHALL NOT BE RESPONSIBLE FOR THE ACCURACY OR COMPLETENESS OF SCANNED COPIES OF THIS PLAN SHEET.*

1

NOTE:

FOR ACCURATE RIGHT OF WAY DATA, CONTACT RIGHT OF WAY ENGINEERING AT THE DISTRICT OFFICE.

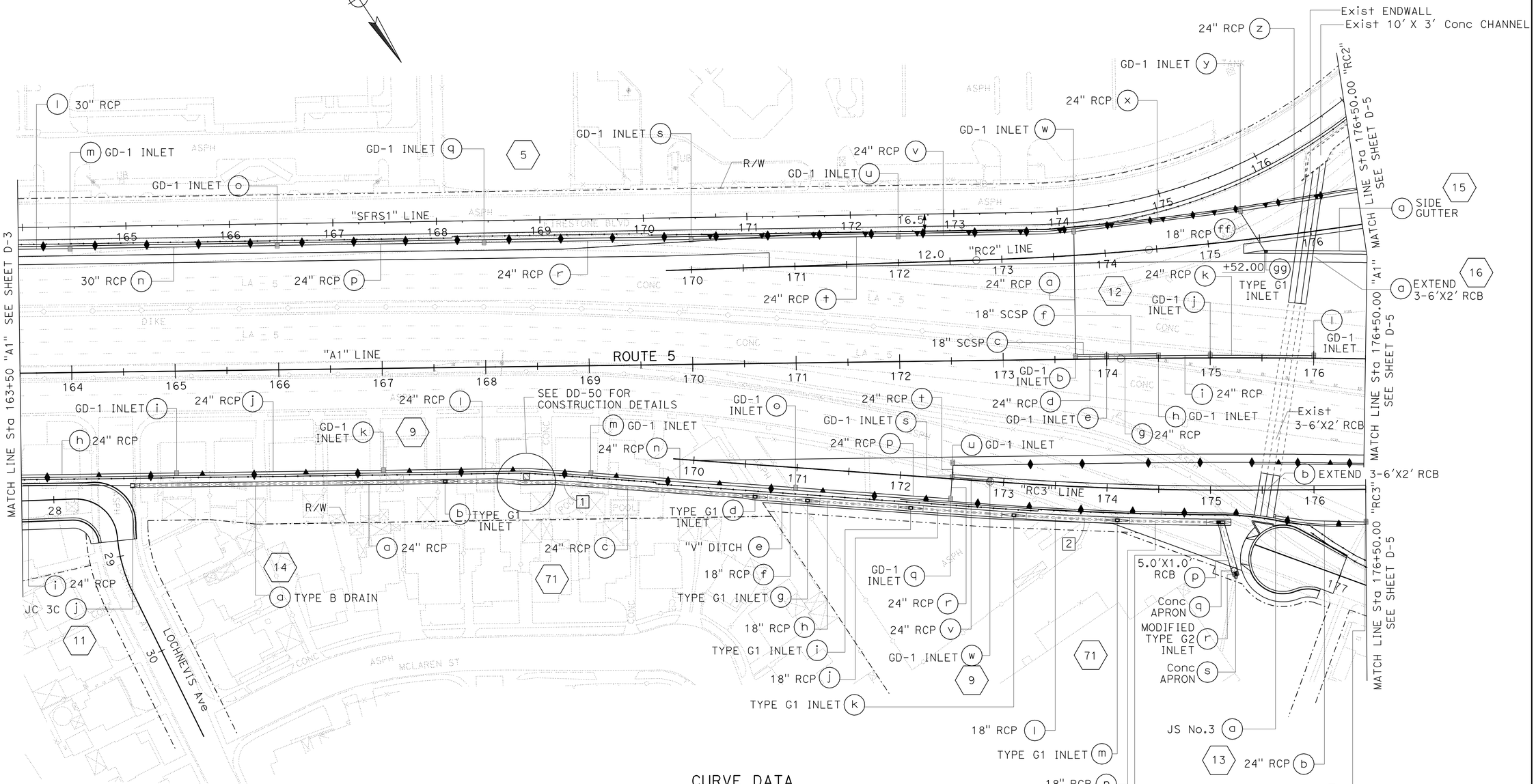


CURVE DATA

| No. □ | R | Δ | T | L |
|---|---|---|---|---|
| 1 | 2250.00' | 4°52'08" | 95.66' | 191.21' |
| 2 | 3311.83' | 3°53'56" | 112.73' | 225.36' |

1 **REVISED PER ADDENDUM No. 1 DATED JULY 13, 2012**

*APPROVED FOR DRAINAGE WORK ONLY*

# DRAINAGE PLAN

SCALE: 1" = 50'

**D-4**

STATE OF CALIFORNIA - DEPARTMENT OF TRANSPORTATION
Caltrans HYDRAULICS

FUNCTIONAL SUPERVISOR: JAI P. THAKUR
CALCULATED-DESIGNED BY: MARTIN CORONADO
CHECKED BY: RALPH M. SASAKI
REVISED BY
DATE REVISED

LAST REVISION 00-00-00
DATE PLOTTED => 12-JUL-2012
TIME PLOTTED => 14:05

| Dist | COUNTY | ROUTE | POST MILES TOTAL PROJECT | SHEET No. | TOTAL SHEETS |
|---|---|---|---|---|---|
| 07 | LA | 5 | 2.4/4.0 | 117 | 1288 |

REGISTERED CIVIL ENGINEER DATE 12-19-11

3-26-12
PLANS APPROVAL DATE

REGISTERED PROFESSIONAL ENGINEER RALPH M. SASAKI No. 30849 Exp. 3/31/12 CIVIL STATE OF CALIFORNIA

*THE STATE OF CALIFORNIA OR ITS OFFICERS OR AGENTS SHALL NOT BE RESPONSIBLE FOR THE ACCURACY OR COMPLETENESS OF SCANNED COPIES OF THIS PLAN SHEET.*

1

## NOTES:

1. FOR ACCURATE RIGHT OF WAY DATA, CONTACT RIGHT OF WAY ENGINEERING AT THE DISTRICT OFFICE.
2. SYSTEM 19 IS SHOWN ON SHEETS DP-12 TO DP-14 FOR CLARITY.
3. SYSTEM 20 IS SHOWN ON WATER POLLUTION CONTROL PLAN D-15.

### CURVE DATA

| No. | R | Δ | T | L |
|---|---|---|---|---|
| 1 | 90.00′ | 10°0′00″ | 7.87′ | 15.71′ |
| 2 | 90.00′ | 15°35′49″ | 12.33′ | 24.50′ |

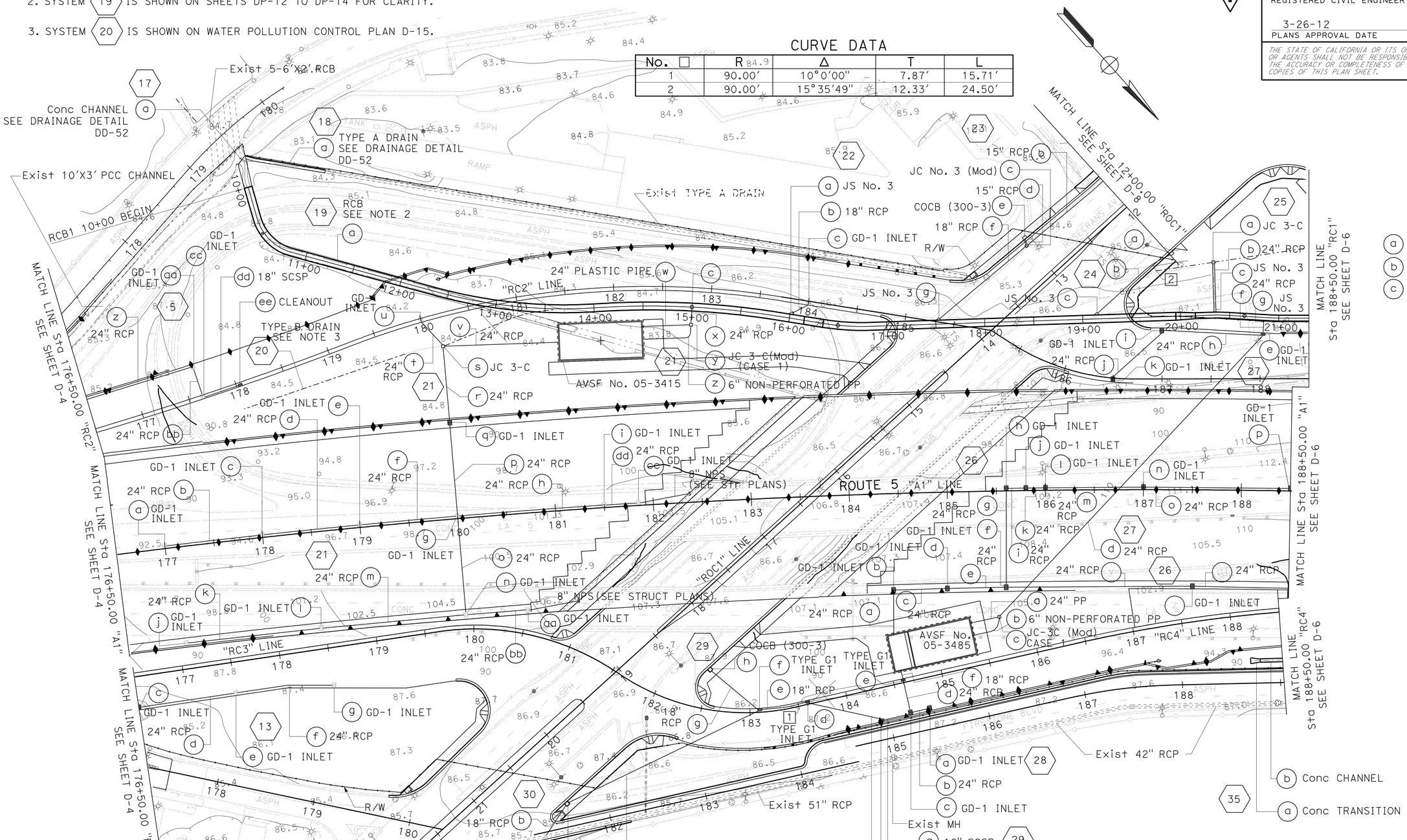


# DRAINAGE PLAN

SCALE: 1" = 50′

1 REVISED PER ADDENDUM No. 1 DATED JULY 13, 2012

*APPROVED FOR DRAINAGE WORK ONLY*

D-5

STATE OF CALIFORNIA - DEPARTMENT OF TRANSPORTATION
Caltrans HYDRAULICS

FUNCTIONAL SUPERVISOR: JAI P. THAKUR
CALCULATED-DESIGNED BY: MAY P. FUNG
CHECKED BY: RALPH M. SASAKI
REVISED BY / DATE REVISED

LAST REVISION 00-00-00 | DATE PLOTTED => 12-JUL-2012 | TIME PLOTTED => 14:05

BORDER LAST REVISED 7/2/2010 | USERNAME => s124496 | DGN FILE => 721593ia005.dgn | RELATIVE BORDER SCALE IS IN INCHES 0 1 2 3 | UNIT 1835 | PROJECT NUMBER & PHASE 07000018331

| Dist | COUNTY | ROUTE | POST MILES TOTAL PROJECT | SHEET No. | TOTAL SHEETS |
|---|---|---|---|---|---|
| 07 | LA | 5 | 2.4/4.0 | 118 | 1288 |

12-19-11
REGISTERED CIVIL ENGINEER DATE

3-26-12
PLANS APPROVAL DATE

REGISTERED PROFESSIONAL ENGINEER RALPH M. SASAKI No. 30849 Exp. 3/31/12 CIVIL STATE OF CALIFORNIA

*THE STATE OF CALIFORNIA OR ITS OFFICERS OR AGENTS SHALL NOT BE RESPONSIBLE FOR THE ACCURACY OR COMPLETENESS OF SCANNED COPIES OF THIS PLAN SHEET.*

1

**NOTE:**

FOR ACCURATE RIGHT OF WAY DATA, CONTACT RIGHT OF WAY ENGINEERING AT THE DISTRICT OFFICE.

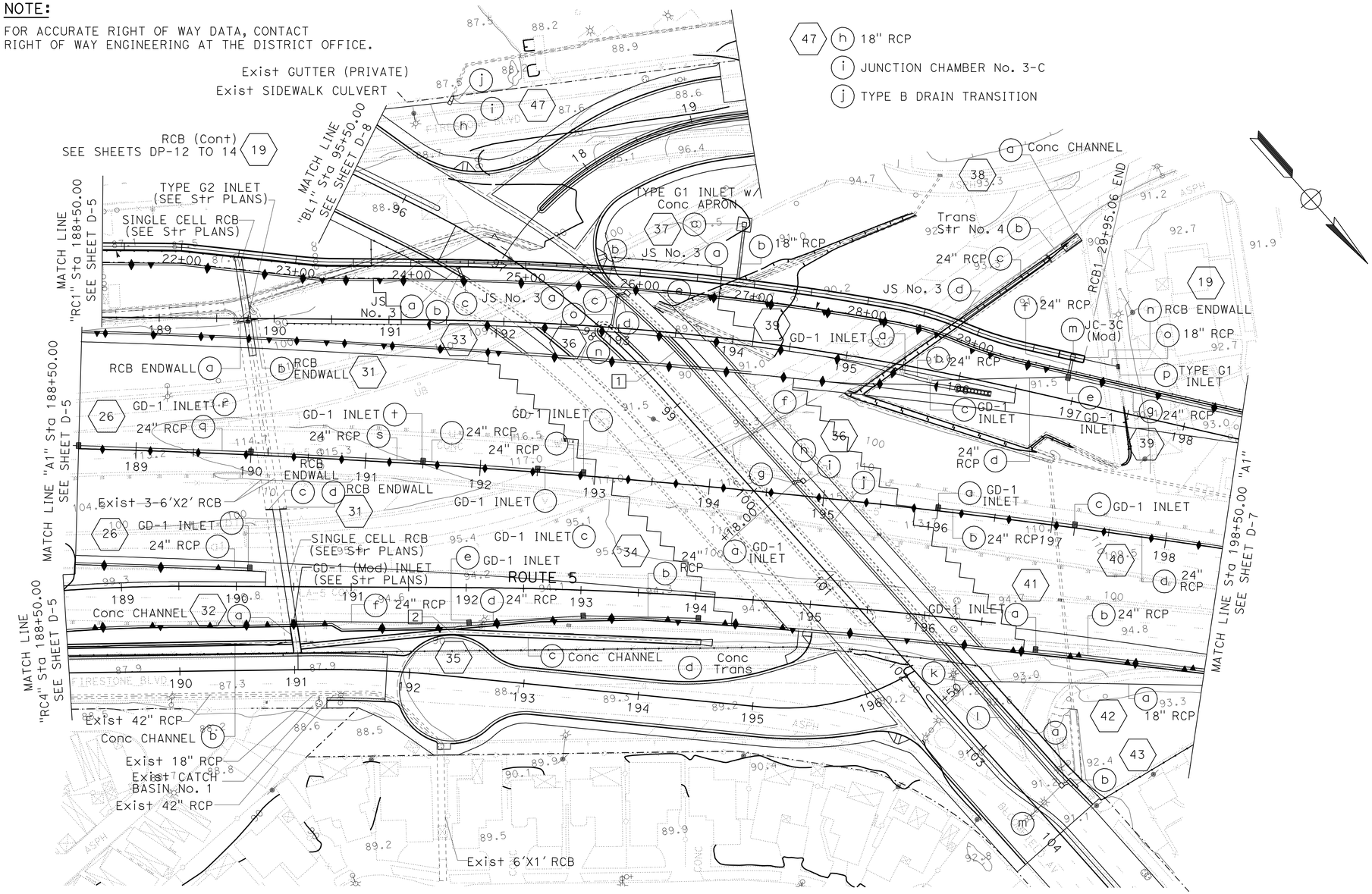


(47) (h) 18" RCP
(i) JUNCTION CHAMBER No. 3-C
(j) TYPE B DRAIN TRANSITION

(36) (a) JUNCTION STRUCTURE No. 3
(b) 24" RCP w/ Conc BACKFILL
(c) JUNCTION CHAMBER No. 3 Mod
(d) 18" RCP w/ Conc BACKFILL
(e) COCB (300-3)
(f) 24" RCP w/ Conc BACKFILL
(g) JUNCTION CHAMBER No. 3 Mod
(h) 18" RCP
(i) COCB (300-3)
(j) 24" RCP
(k) JUNCTION CHAMBER No. 3 Mod
(l) 24" RCP
(m) MANHOLE PIPE-TO-PIPE (321-1)
(n) TYPE G5 INLET
(o) 18" RCP

(43) (a) 24" RCP
(b) COCB (302-3)

(33) (a) JUNCTION STRUCTURE No. 3
(b) 24" RCP w/ Conc BACKFILL
(c) COCB (300-3)

CURVE DATA

| No. □ | R | Δ | T | L |
|---|---|---|---|---|
| 1 | 731.00′ | 34°39′46″ | 62.889 | 125.469′ |
| 2 | 100.00′ | 8°8′23″ | 7.12 | 14.21′ |

1 **REVISED PER ADDENDUM No. 1 DATED JULY 13, 2012**

*APPROVED FOR DRAINAGE WORK ONLY*

# DRAINAGE PLAN

SCALE: 1" = 50′

**D-6**

STATE OF CALIFORNIA - DEPARTMENT OF TRANSPORTATION
Caltrans HYDRAULICS
FUNCTIONAL SUPERVISOR: JAI P. THAKUR
CALCULATED-DESIGNED BY: MAY P. FUNG
CHECKED BY: RALPH M. SASAKI
REVISED BY / DATE REVISED

LAST REVISION 00-00-00 | DATE PLOTTED => 12-JUL-2012 | TIME PLOTTED => 14:06

| Dist | COUNTY | ROUTE | POST MILES TOTAL PROJECT | SHEET No. | TOTAL SHEETS |
|---|---|---|---|---|---|
| 07 | LA | 5 | 2.4/4.0 | 119 | 1288 |

REGISTERED CIVIL ENGINEER 12-19-11 DATE

3-26-12
PLANS APPROVAL DATE

REGISTERED PROFESSIONAL ENGINEER RALPH M. SASAKI No. 30849 Exp. 3/31/12 CIVIL STATE OF CALIFORNIA

*THE STATE OF CALIFORNIA OR ITS OFFICERS OR AGENTS SHALL NOT BE RESPONSIBLE FOR THE ACCURACY OR COMPLETENESS OF SCANNED COPIES OF THIS PLAN SHEET.*

**NOTE:**

FOR ACCURATE RIGHT OF WAY DATA, CONTACT RIGHT OF WAY ENGINEERING AT THE DISTRICT OFFICE.

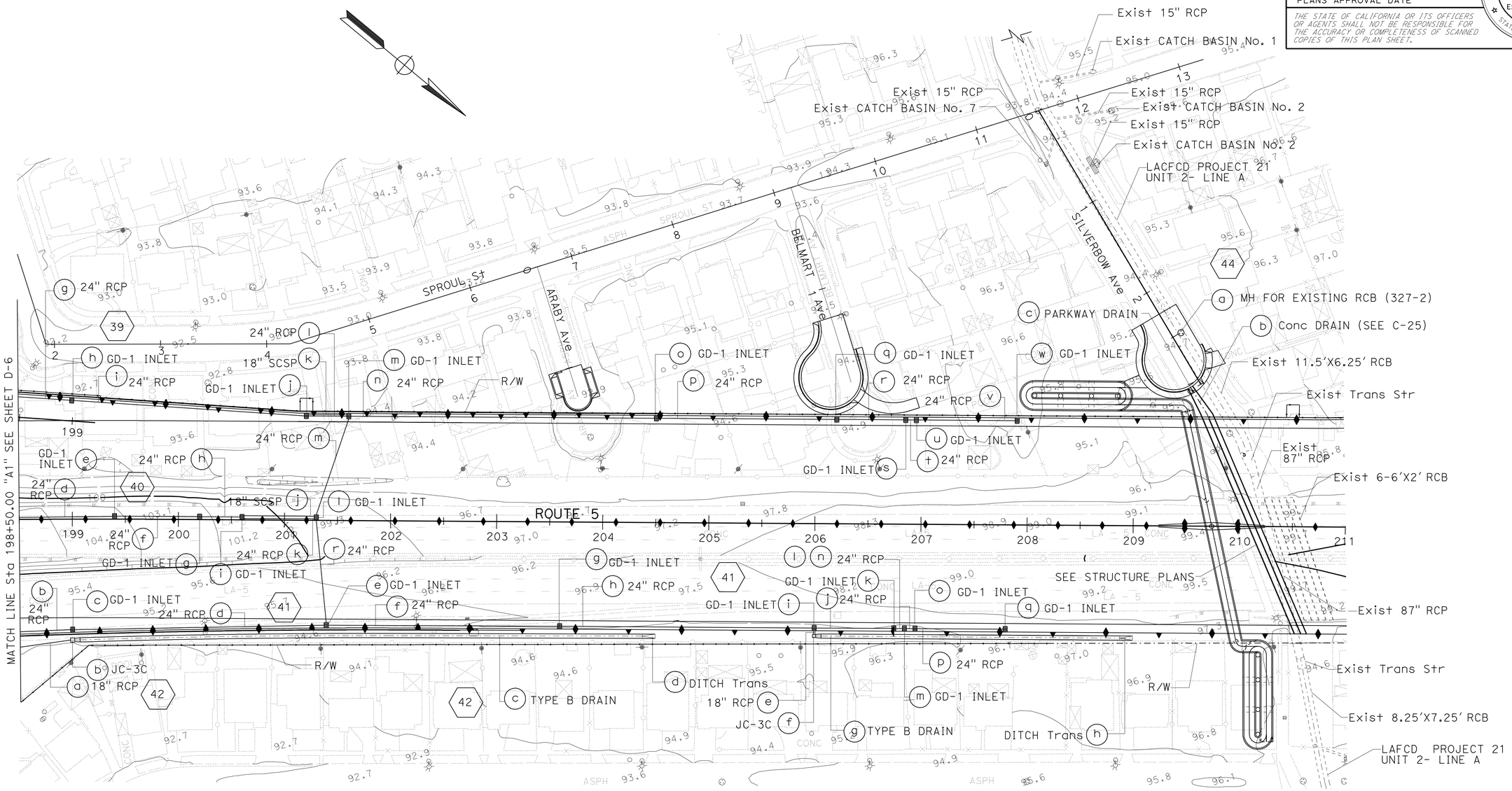


1 **REVISED PER ADDENDUM No. 1 DATED JULY 13, 2012**

*APPROVED FOR DRAINAGE WORK ONLY*

## DRAINAGE PLAN

SCALE: 1" = 50'

**D-7**

STATE OF CALIFORNIA - DEPARTMENT OF TRANSPORTATION
Caltrans HYDRAULICS

FUNCTIONAL SUPERVISOR: JAI P. THAKUR
CALCULATED-DESIGNED BY: MAY P. FUNG
CHECKED BY: RALPH M. SASAKI
REVISED BY / DATE REVISED

LAST REVISION 00-00-00 | DATE PLOTTED => 12-JUL-2012 | TIME PLOTTED => 14:06

| Dist | COUNTY | ROUTE | POST MILES TOTAL PROJECT | SHEET No. | TOTAL SHEETS |
|---|---|---|---|---|---|
| 07 | LA | 5 | 2.4/4.0 | 120 | 1288 |

REGISTERED CIVIL ENGINEER DATE 12-19-11

3-26-12
PLANS APPROVAL DATE

REGISTERED PROFESSIONAL ENGINEER RALPH M. SASAKI No. 30849 Exp. 3/31/12 CIVIL STATE OF CALIFORNIA

*THE STATE OF CALIFORNIA OR ITS OFFICERS OR AGENTS SHALL NOT BE RESPONSIBLE FOR THE ACCURACY OR COMPLETENESS OF SCANNED COPIES OF THIS PLAN SHEET.*

1

**NOTE:**

FOR ACCURATE RIGHT OF WAY DATA, CONTACT
RIGHT OF WAY ENGINEERING AT THE DISTRICT OFFICE.

## CURVE DATA

| No. ☐ | R | Δ | T | L |
|---|---|---|---|---|
| 1 | 90.00′ | 16°52′28″ | 13.35′ | 26.51′ |
| 2 | 45.00′ | 63°30′05″ | 27.85′ | 49.87′ |

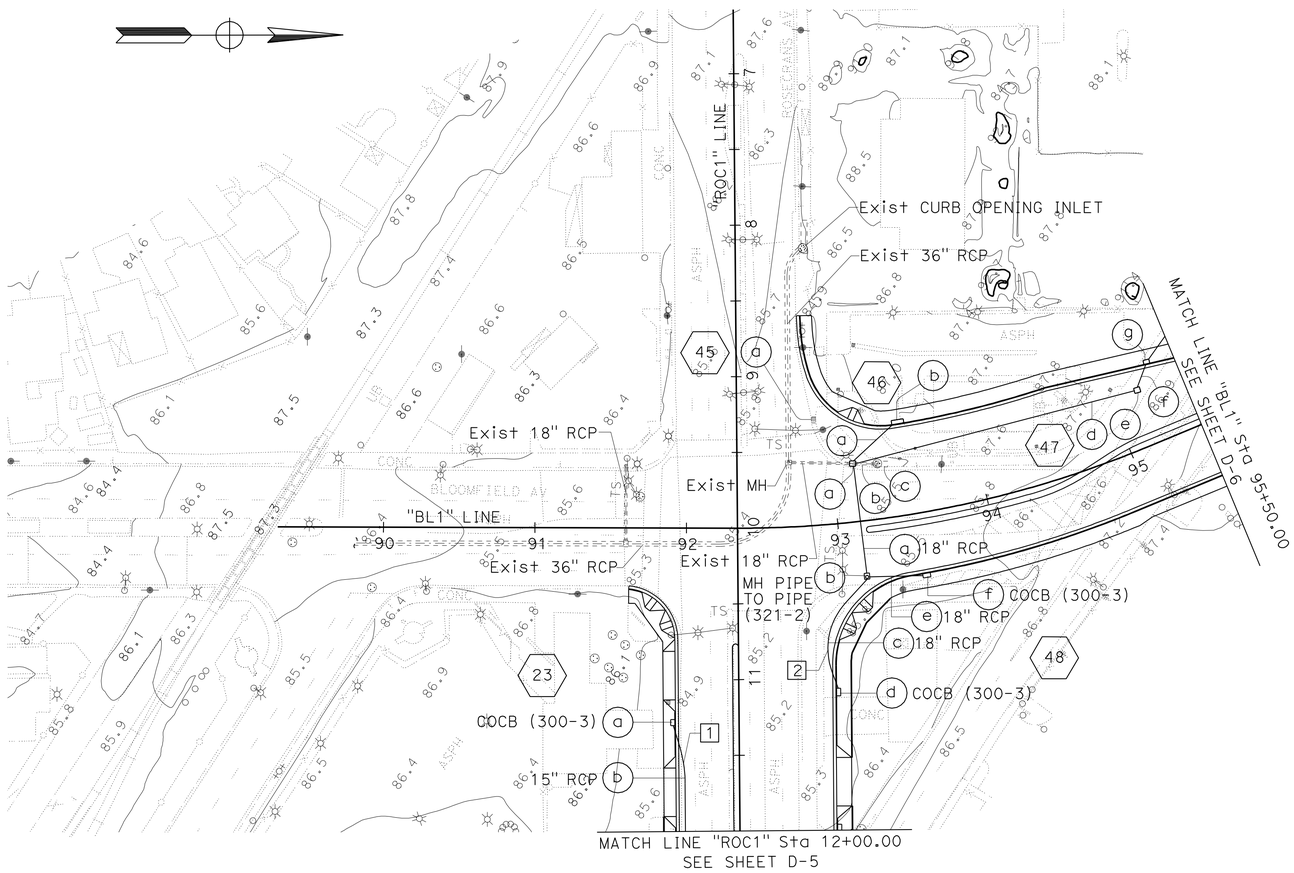


45 (a) CAP INLET

47
- (a) MH PIPE TO PIPE (321-2)
- (b) REMOVE 18" RCP
- (c) REMOVE CATCH BASIN
- (d) 18" RCP
- (e) MH PIPE TO PIPE (321-2)
- (f) 18" RCP
- (g) COCB (300-3)
- (h) 18" RCP
- (i) JUNCTION CHAMBER No. 3C
- (j) TYPE B DRAIN TRANS

46
- (a) 18" RCP
- (b) COCB (300-3)

1 **REVISED PER ADDENDUM No. 1 DATED JULY 13, 2012**

*APPROVED FOR DRAINAGE WORK ONLY*

# DRAINAGE PLAN

SCALE: 1" = 50′

**D-8**

STATE OF CALIFORNIA - DEPARTMENT OF TRANSPORTATION
Caltrans HYDRAULICS

FUNCTIONAL SUPERVISOR: JAI P. THAKUR

CALCULATED-DESIGNED BY: CEDRIC ESTRADA
CHECKED BY: RALPH M. SASAKI

REVISED BY
DATE REVISED

LAST REVISION 00-00-00 DATE PLOTTED => 12-JUL-2012 TIME PLOTTED => 14:06

| Dist | COUNTY | ROUTE | POST MILES TOTAL PROJECT | SHEET No. | TOTAL SHEETS |
|---|---|---|---|---|---|
| 07 | LA | 5 | 2.4/4.0 | 121 | 1288 |

REGISTERED CIVIL ENGINEER 12-19-11 DATE

3-26-12
PLANS APPROVAL DATE

REGISTERED PROFESSIONAL ENGINEER RALPH M. SASAKI No. 30849 Exp. 3/31/12 CIVIL STATE OF CALIFORNIA

*THE STATE OF CALIFORNIA OR ITS OFFICERS OR AGENTS SHALL NOT BE RESPONSIBLE FOR THE ACCURACY OR COMPLETENESS OF SCANNED COPIES OF THIS PLAN SHEET.*

1

## NOTE:

FOR ACCURATE RIGHT OF WAY DATA, CONTACT
RIGHT OF WAY ENGINEERING AT THE DISTRICT OFFICE.

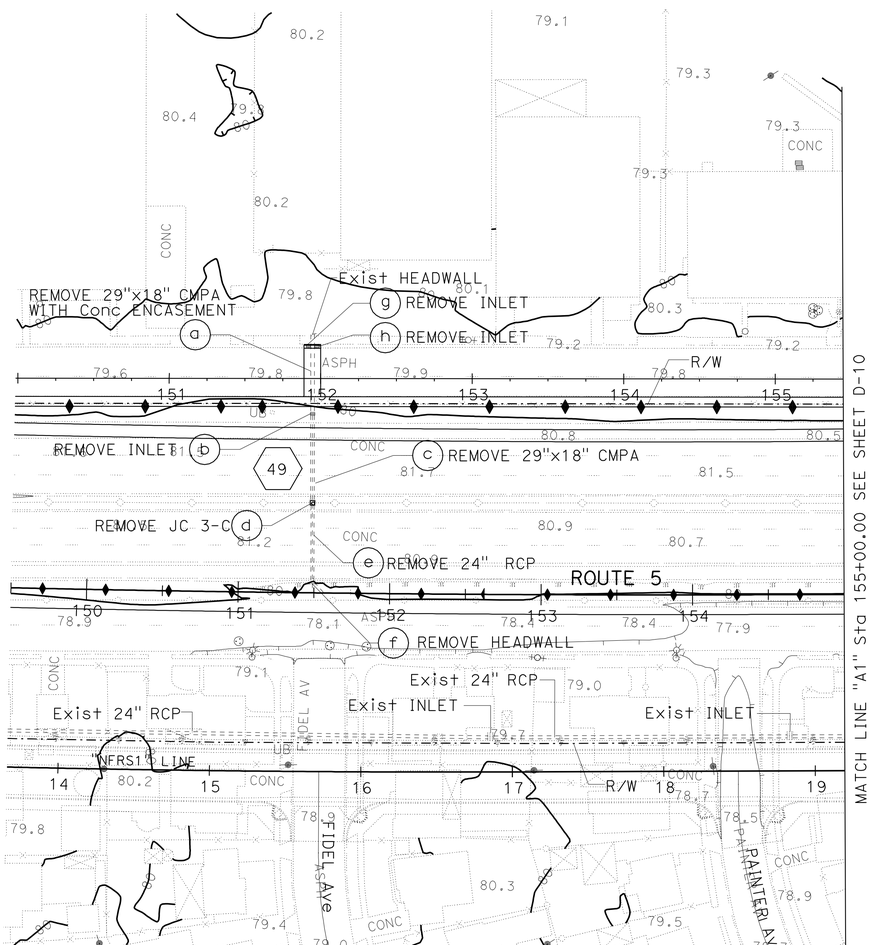


1 **REVISED PER ADDENDUM No. 1 DATED JULY 13, 2012**

*APPROVED FOR DRAINAGE WORK ONLY*

# DRAINAGE PLAN (REMOVAL ONLY)

SCALE: 1" = 50'

**D-9**

STATE OF CALIFORNIA - DEPARTMENT OF TRANSPORTATION
Caltrans HYDRAULICS

FUNCTIONAL SUPERVISOR: JAI P. THAKUR
CALCULATED-DESIGNED BY: MAY P. FUNG
CHECKED BY: RALPH M. SASAKI
REVISED BY
DATE REVISED

LAST REVISION 00-00-00
DATE PLOTTED => 12-JUL-2012
TIME PLOTTED => 14:06

| Dist | COUNTY | ROUTE | POST MILES TOTAL PROJECT | SHEET No. | TOTAL SHEETS |
|---|---|---|---|---|---|
| 07 | LA | 5 | 2.4/4.0 | 122 | 1288 |

REGISTERED CIVIL ENGINEER DATE 12-19-11

3-26-12
PLANS APPROVAL DATE

REGISTERED PROFESSIONAL ENGINEER RALPH M. SASAKI No. 30849 Exp. 3/31/12 CIVIL STATE OF CALIFORNIA

*THE STATE OF CALIFORNIA OR ITS OFFICERS OR AGENTS SHALL NOT BE RESPONSIBLE FOR THE ACCURACY OR COMPLETENESS OF SCANNED COPIES OF THIS PLAN SHEET.*

**NOTE:**

FOR ACCURATE RIGHT OF WAY DATA, CONTACT RIGHT OF WAY ENGINEERING AT THE DISTRICT OFFICE.

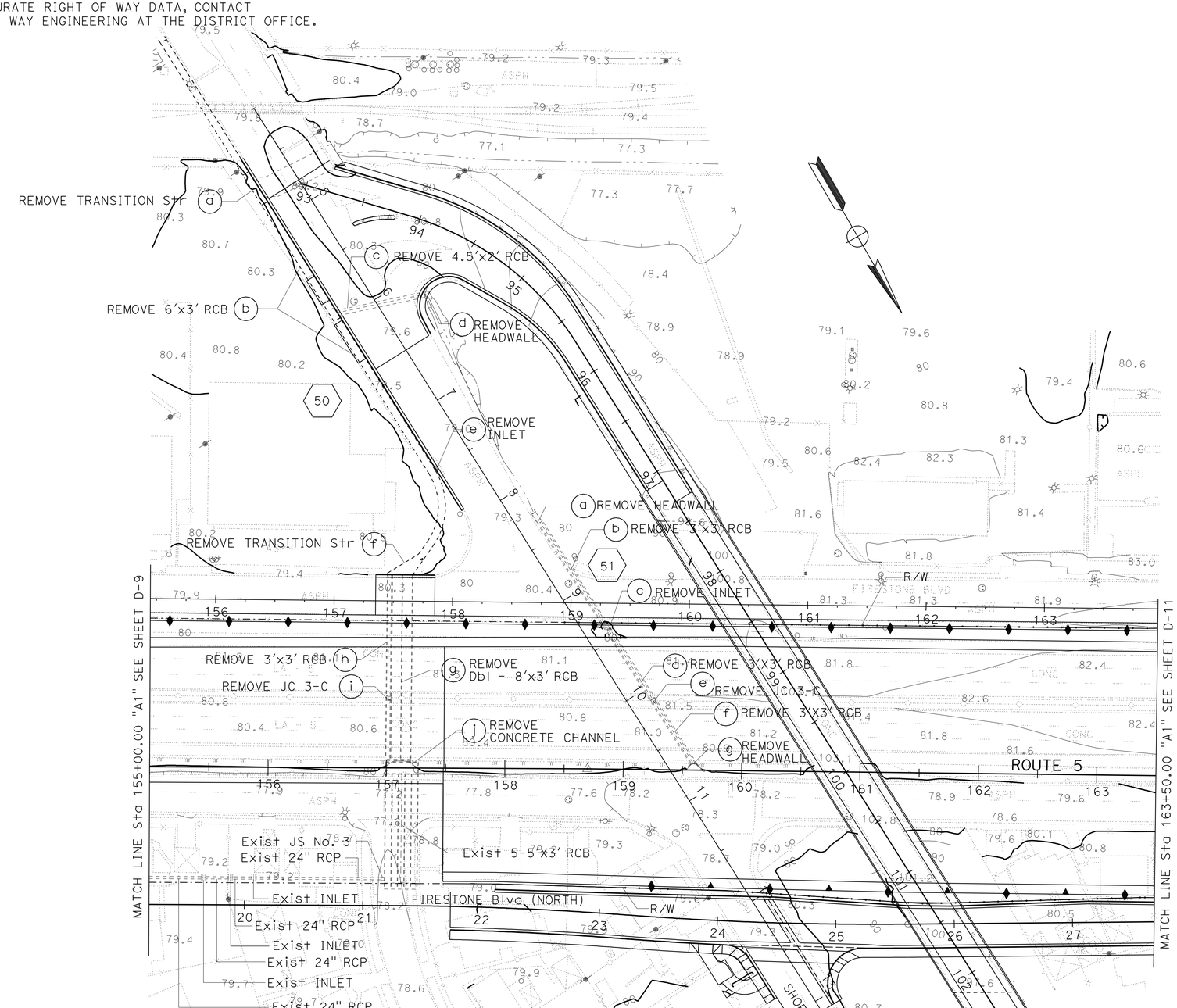


**1 REVISED PER ADDENDUM No. 1 DATED JULY 13, 2012**

*APPROVED FOR DRAINAGE WORK ONLY*

# DRAINAGE PLAN (REMOVAL ONLY)

SCALE: 1" = 50'

**D-10**

STATE OF CALIFORNIA - DEPARTMENT OF TRANSPORTATION
Caltrans® HYDRAULICS

FUNCTIONAL SUPERVISOR: JAI P. THAKUR
CALCULATED-DESIGNED BY: MAY P. FUNG
CHECKED BY: RALPH M. SASAKI
REVISED BY
DATE REVISED

LAST REVISION 00-00-00
DATE PLOTTED => 12-JUL-2012
TIME PLOTTED => 14:06

| Dist | COUNTY | ROUTE | POST MILES TOTAL PROJECT | SHEET No. | TOTAL SHEETS |
|---|---|---|---|---|---|
| 07 | LA | 5 | 2.4/4.0 | 123 | 1288 |

REGISTERED CIVIL ENGINEER 12-19-11 DATE

3-26-12
PLANS APPROVAL DATE

REGISTERED PROFESSIONAL ENGINEER RALPH M. SASAKI No. 30849 Exp. 3/31/12 CIVIL STATE OF CALIFORNIA

*THE STATE OF CALIFORNIA OR ITS OFFICERS OR AGENTS SHALL NOT BE RESPONSIBLE FOR THE ACCURACY OR COMPLETENESS OF SCANNED COPIES OF THIS PLAN SHEET.*

1

**NOTE:**

FOR ACCURATE RIGHT OF WAY DATA, CONTACT RIGHT OF WAY ENGINEERING AT THE DISTRICT OFFICE.

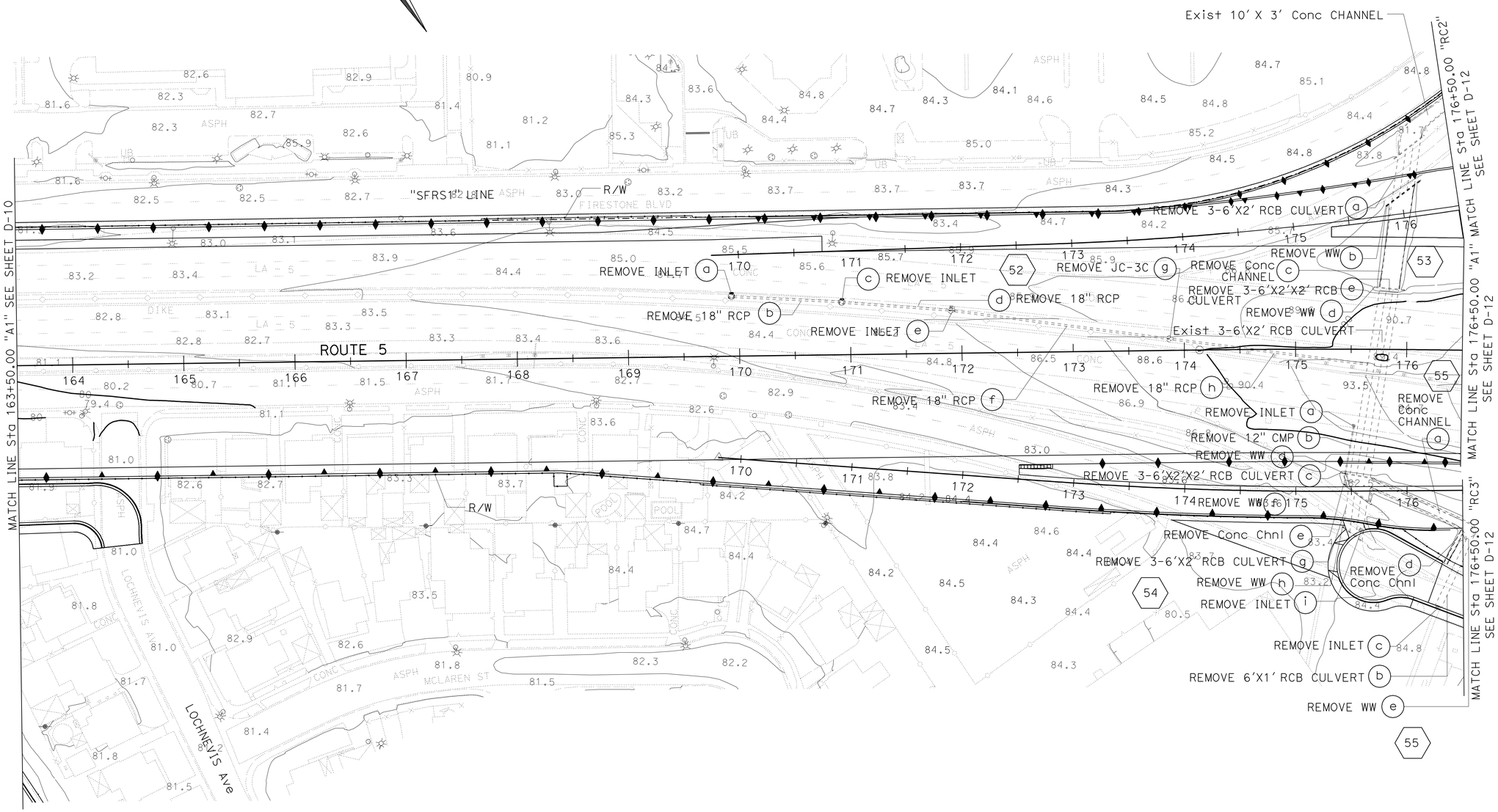


1 **REVISED PER ADDENDUM No. 1 DATED JULY 13, 2012**

*APPROVED FOR DRAINAGE WORK ONLY*

# DRAINAGE PLAN (REMOVAL ONLY)

SCALE: 1" = 50'

**D-11**

STATE OF CALIFORNIA - DEPARTMENT OF TRANSPORTATION
Caltrans® **HYDRAULICS**

FUNCTIONAL SUPERVISOR: JAI P. THAKUR

CALCULATED-DESIGNED BY: MAY P. FUNG
CHECKED BY: RALPH M. SASAKI

REVISED BY
DATE REVISED

LAST REVISION 00-00-00
DATE PLOTTED => 12-JUL-2012
TIME PLOTTED => 14:06

| Dist | COUNTY | ROUTE | POST MILES TOTAL PROJECT | SHEET No. | TOTAL SHEETS |
|---|---|---|---|---|---|
| 07 | LA | 5 | 2.4/4.0 | 124 | 1288 |

REGISTERED CIVIL ENGINEER 12-19-11 DATE

3-26-12
PLANS APPROVAL DATE

REGISTERED PROFESSIONAL ENGINEER RALPH M. SASAKI No. 30849 Exp. 3/31/12 CIVIL STATE OF CALIFORNIA

*THE STATE OF CALIFORNIA OR ITS OFFICERS OR AGENTS SHALL NOT BE RESPONSIBLE FOR THE ACCURACY OR COMPLETENESS OF SCANNED COPIES OF THIS PLAN SHEET.*

1

**NOTE:**

FOR ACCURATE RIGHT OF WAY DATA, CONTACT
RIGHT OF WAY ENGINEERING AT THE DISTRICT OFFICE.

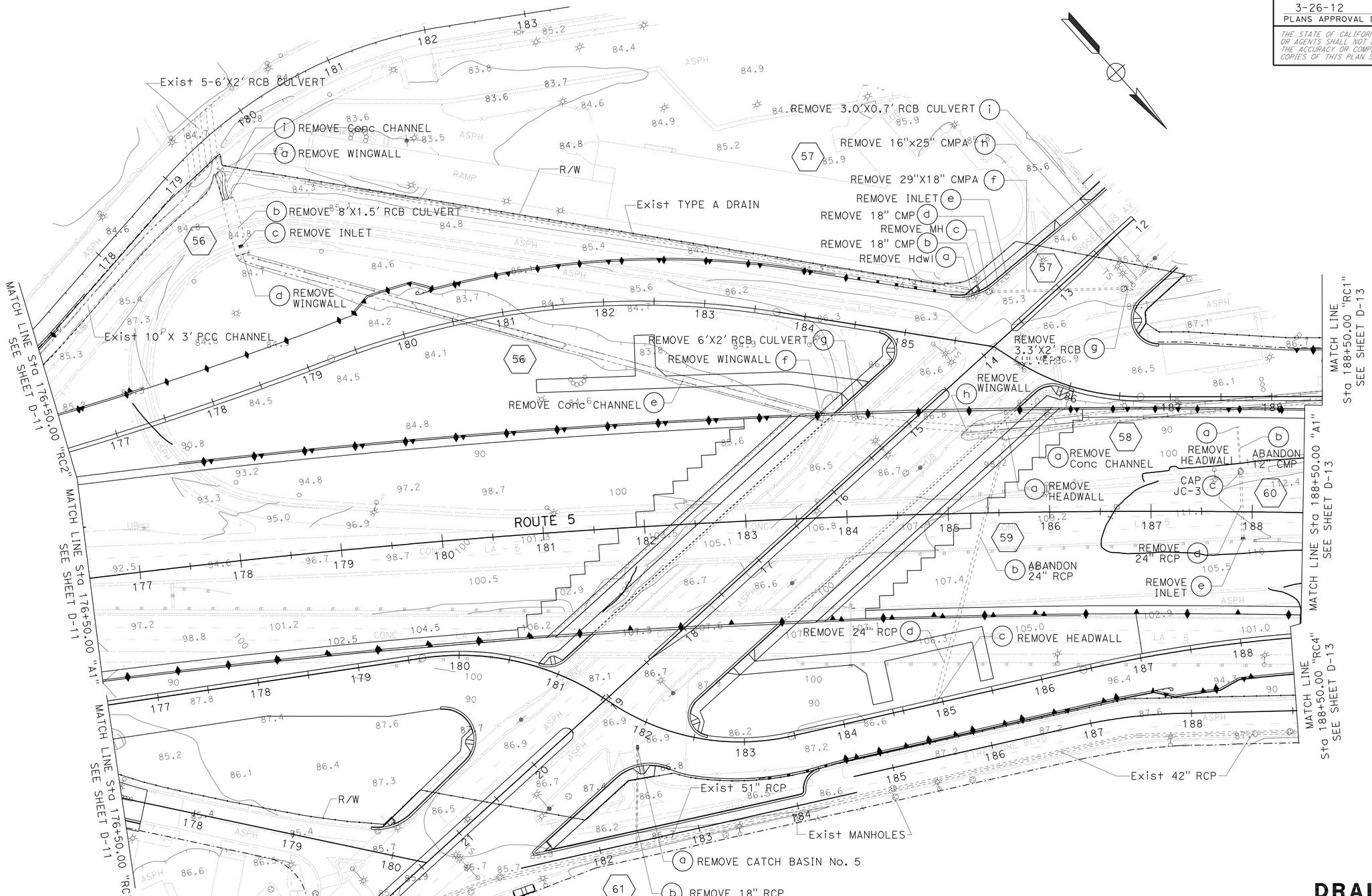


1 **REVISED PER ADDENDUM No. 1 DATED JULY 13, 2012**

*APPROVED FOR DRAINAGE WORK ONLY*

# DRAINAGE PLAN (REMOVAL ONLY)

SCALE: 1" = 50'

**D-12**

STATE OF CALIFORNIA - DEPARTMENT OF TRANSPORTATION
Caltrans® HYDRAULICS

FUNCTIONAL SUPERVISOR: JAI P. THAKUR
CALCULATED-DESIGNED BY: MAY P. FUNG
CHECKED BY: RALPH M. SASAKI
REVISED BY
DATE REVISED

LAST REVISION 00-00-00 | DATE PLOTTED => 12-JUL-2012 | TIME PLOTTED => 14:06

| Dist | COUNTY | ROUTE | POST MILES TOTAL PROJECT | SHEET No. | TOTAL SHEETS |
|---|---|---|---|---|---|
| 07 | LA | 5 | 2.4/4.0 | 125 | 1288 |

1

12-19-11
REGISTERED CIVIL ENGINEER DATE

3-26-12
PLANS APPROVAL DATE

REGISTERED PROFESSIONAL ENGINEER
RALPH M. SASAKI
No. 30849
Exp. 3/31/12
CIVIL
STATE OF CALIFORNIA

*THE STATE OF CALIFORNIA OR ITS OFFICERS OR AGENTS SHALL NOT BE RESPONSIBLE FOR THE ACCURACY OR COMPLETENESS OF SCANNED COPIES OF THIS PLAN SHEET.*

NOTE:

FOR ACCURATE RIGHT OF WAY DATA, CONTACT RIGHT OF WAY ENGINEERING AT THE DISTRICT OFFICE.

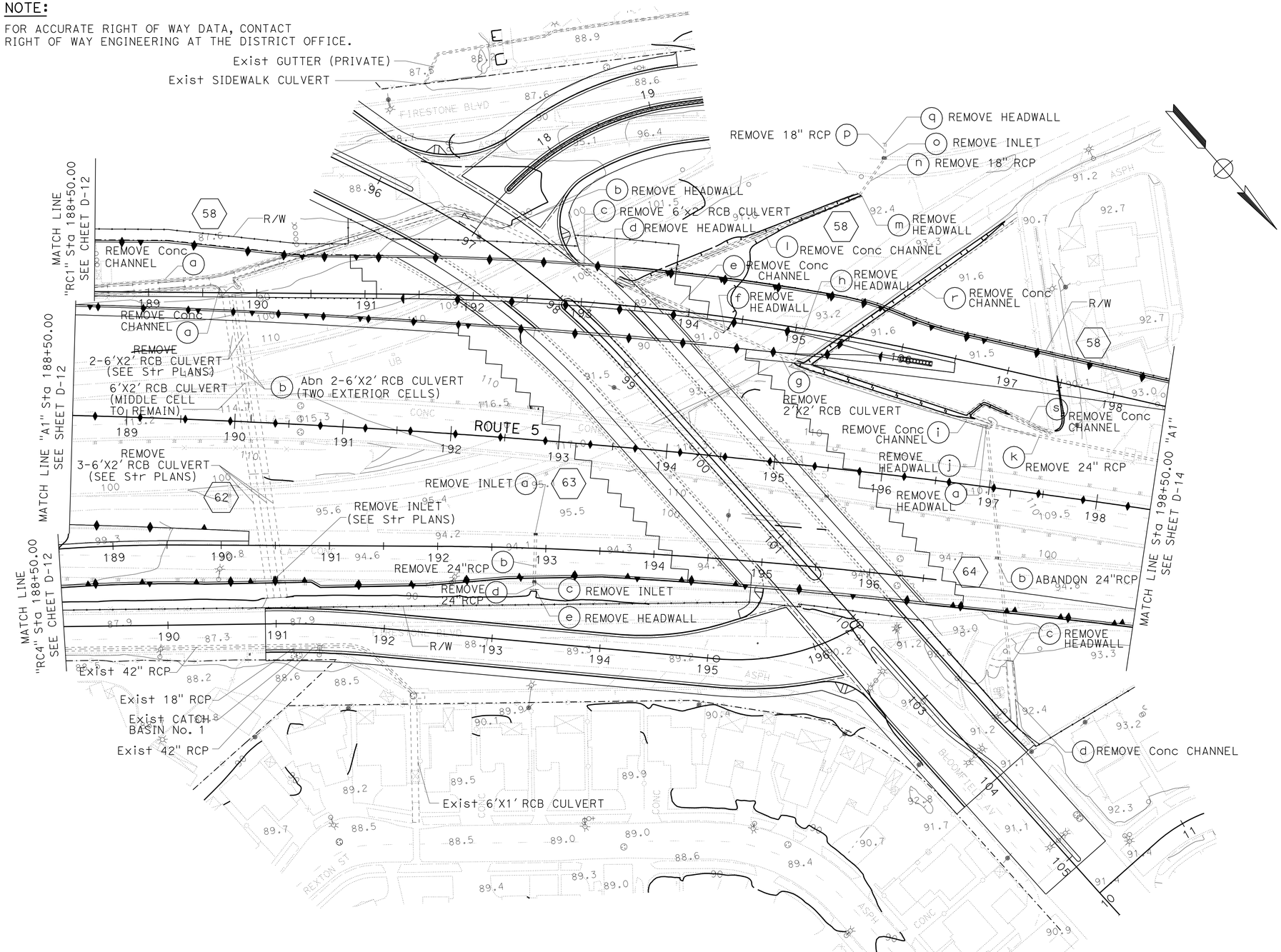


1 **REVISED PER ADDENDUM No. 1 DATED JULY 13, 2012**

*APPROVED FOR DRAINAGE WORK ONLY*

# DRAINAGE PLAN (REMOVAL ONLY)

SCALE: 1" = 50'

**D-13**

STATE OF CALIFORNIA - DEPARTMENT OF TRANSPORTATION
Caltrans
HYDRAULICS

FUNCTIONAL SUPERVISOR: JAI P. THAKUR
CALCULATED-DESIGNED BY: MAY P. FUNG
CHECKED BY: RALPH M. SASAKI
REVISED BY
DATE REVISED

LAST REVISION 00-00-00
DATE PLOTTED => 12-JUL-2012
TIME PLOTTED => 14:06

| Dist | COUNTY | ROUTE | POST MILES TOTAL PROJECT | SHEET No. | TOTAL SHEETS |
|---|---|---|---|---|---|
| 07 | LA | 5 | 2.4/4.0 | 126 | 1288 |

REGISTERED CIVIL ENGINEER DATE 12-19-11

3-26-12
PLANS APPROVAL DATE

REGISTERED PROFESSIONAL ENGINEER RALPH M. SASAKI No. 30849 Exp. 3/31/12 CIVIL STATE OF CALIFORNIA

*THE STATE OF CALIFORNIA OR ITS OFFICERS OR AGENTS SHALL NOT BE RESPONSIBLE FOR THE ACCURACY OR COMPLETENESS OF SCANNED COPIES OF THIS PLAN SHEET.*

**NOTE:**

FOR ACCURATE RIGHT OF WAY DATA, CONTACT RIGHT OF WAY ENGINEERING AT THE DISTRICT OFFICE.

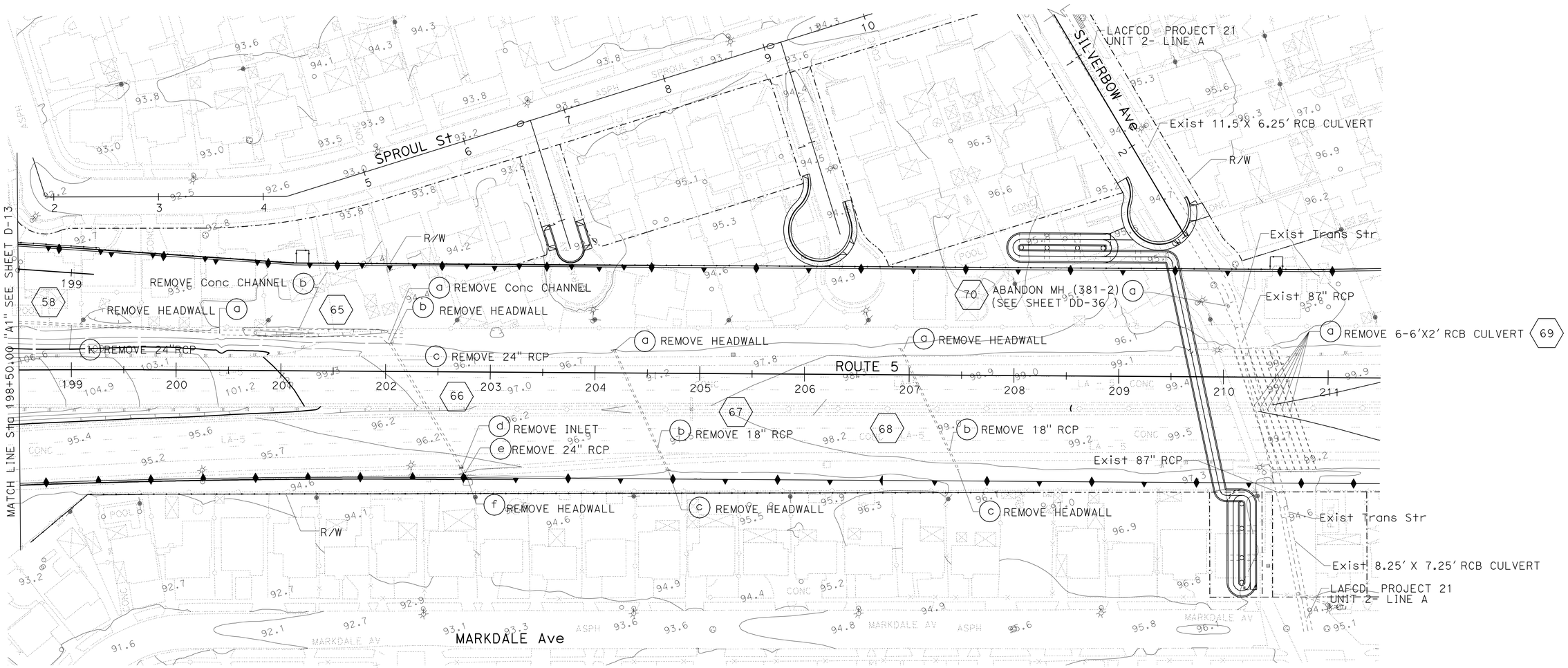


1 **REVISED PER ADDENDUM No. 1 DATED JULY 13, 2012**

*APPROVED FOR DRAINAGE WORK ONLY*

# DRAINAGE PLAN (REMOVAL ONLY)

SCALE: 1" = 50'

**D-14**

STATE OF CALIFORNIA - DEPARTMENT OF TRANSPORTATION
Caltrans HYDRAULICS

FUNCTIONAL SUPERVISOR: JAI P. THAKUR
CALCULATED-DESIGNED BY: MAY P. FUNG
CHECKED BY: RALPH M. SASAKI
REVISED BY
DATE REVISED

LAST REVISION 00-00-00
DATE PLOTTED => 12-JUL-2012
TIME PLOTTED => 14:06

| Dist | COUNTY | ROUTE | POST MILES TOTAL PROJECT | SHEET No. | TOTAL SHEETS |
|---|---|---|---|---|---|
| 07 | LA | 5 | 2.4/4.0 | 127 | 1288 |

REGISTERED CIVIL ENGINEER 12-19-11 DATE

3-26-12
PLANS APPROVAL DATE

REGISTERED PROFESSIONAL ENGINEER RALPH M. SASAKI No. 30849 Exp. 3/31/12 CIVIL STATE OF CALIFORNIA

*THE STATE OF CALIFORNIA OR ITS OFFICERS OR AGENTS SHALL NOT BE RESPONSIBLE FOR THE ACCURACY OR COMPLETENESS OF SCANNED COPIES OF THIS PLAN SHEET.*

1

## NOTES:

1. FOR ACCURATE RIGHT OF WAY DATA, CONTACT RIGHT OF WAY ENGINEERING AT THE DISTRICT OFFICE.
2. SYSTEM (19) ARE SHOWN ON SHEETS DP-12 TO DP-14 FOR CLARITY.

### CURVE DATA

| No. □ | R | Δ | T | L |
|---|---|---|---|---|
| 1 | 150.00′ | 14°27′19" | 19.02′ | 37.84′ |
| 2 | 150.00′ | 19°51′55" | 26.27′ | 52.01′ |
| 3 | 830.00′ | 6°4′26" | 44.03′ | 87.99′ |
| 4 | 5.00′ | 83°43′32" | 4.48′ | 7.31′ |
| 5 | 10.00′ | 62°7′25" | 6.02′ | 10.84′ |

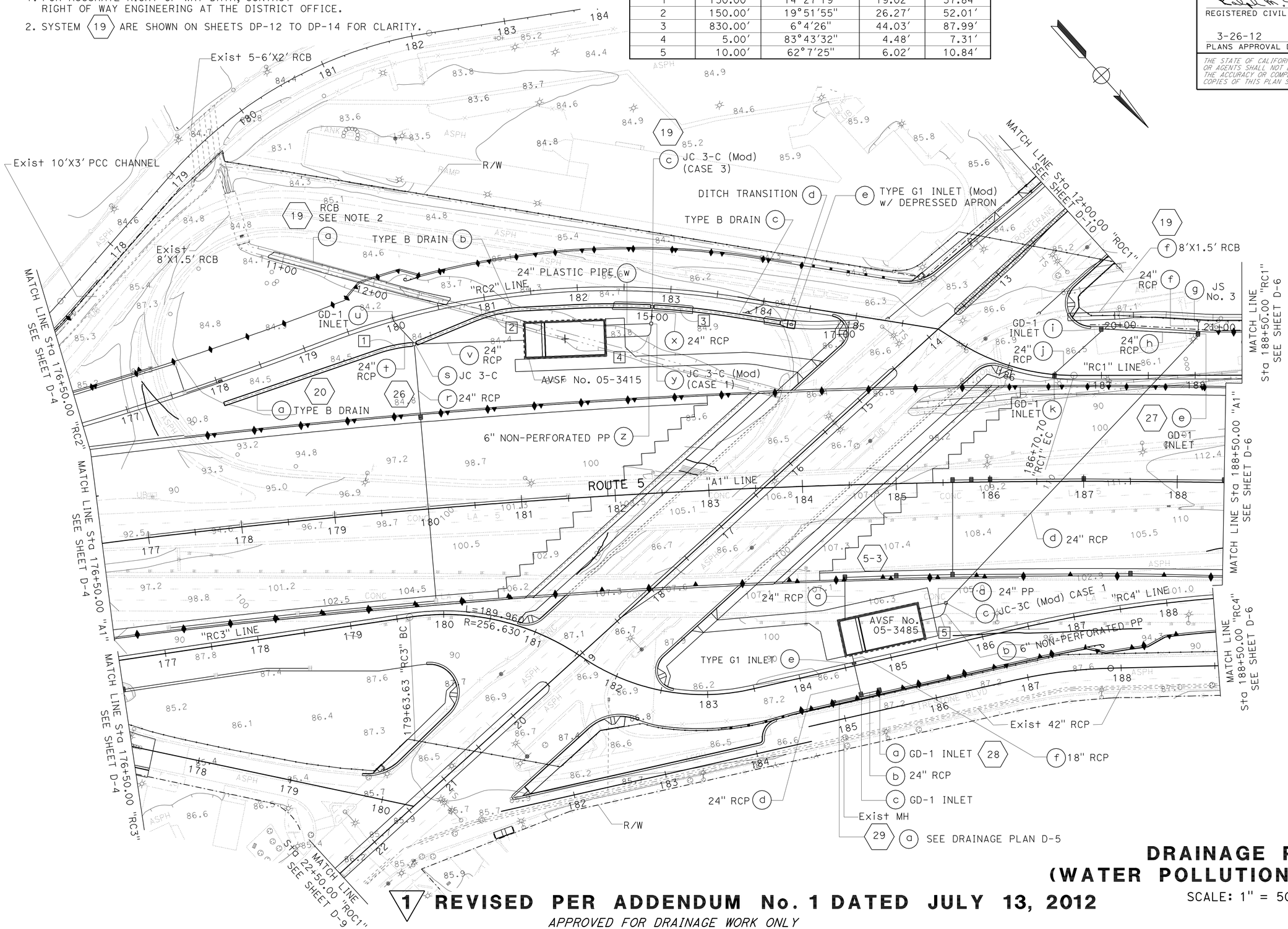


1 **REVISED PER ADDENDUM No. 1 DATED JULY 13, 2012**

*APPROVED FOR DRAINAGE WORK ONLY*

# DRAINAGE PLAN (WATER POLLUTION CONTROL)

SCALE: 1" = 50′

**D-15**

STATE OF CALIFORNIA - DEPARTMENT OF TRANSPORTATION
Caltrans® HYDRAULICS

FUNCTIONAL SUPERVISOR: JAI P. THAKUR
CALCULATED-DESIGNED BY: MAY P. FUNG
CHECKED BY: RALPH M. SASAKI
REVISED BY / DATE REVISED

LAST REVISION 00-00-00 | DATE PLOTTED => 12-JUL-2012 | TIME PLOTTED => 14:07

| Dist | COUNTY | ROUTE | POST MILES TOTAL PROJECT | SHEET No. | TOTAL SHEETS |
|---|---|---|---|---|---|
| 07 | LA | 5 | 2.4/4.0 | 130 | 1288 |

REGISTERED CIVIL ENGINEER DATE 12-19-11

3-26-12
PLANS APPROVAL DATE

REGISTERED PROFESSIONAL ENGINEER RALPH M. SASAKI No. 30849 Exp. 3/31/12 CIVIL STATE OF CALIFORNIA

*THE STATE OF CALIFORNIA OR ITS OFFICERS OR AGENTS SHALL NOT BE RESPONSIBLE FOR THE ACCURACY OR COMPLETENESS OF SCANNED COPIES OF THIS PLAN SHEET.*

1

NOTE:

1. THE CONTRACTOR SHALL VERIFY LOCATIONS AND ELEVATIONS OF EXISTING DRAINAGE SYSTEMS BEFORE COMMENCEMENT OF WORK.

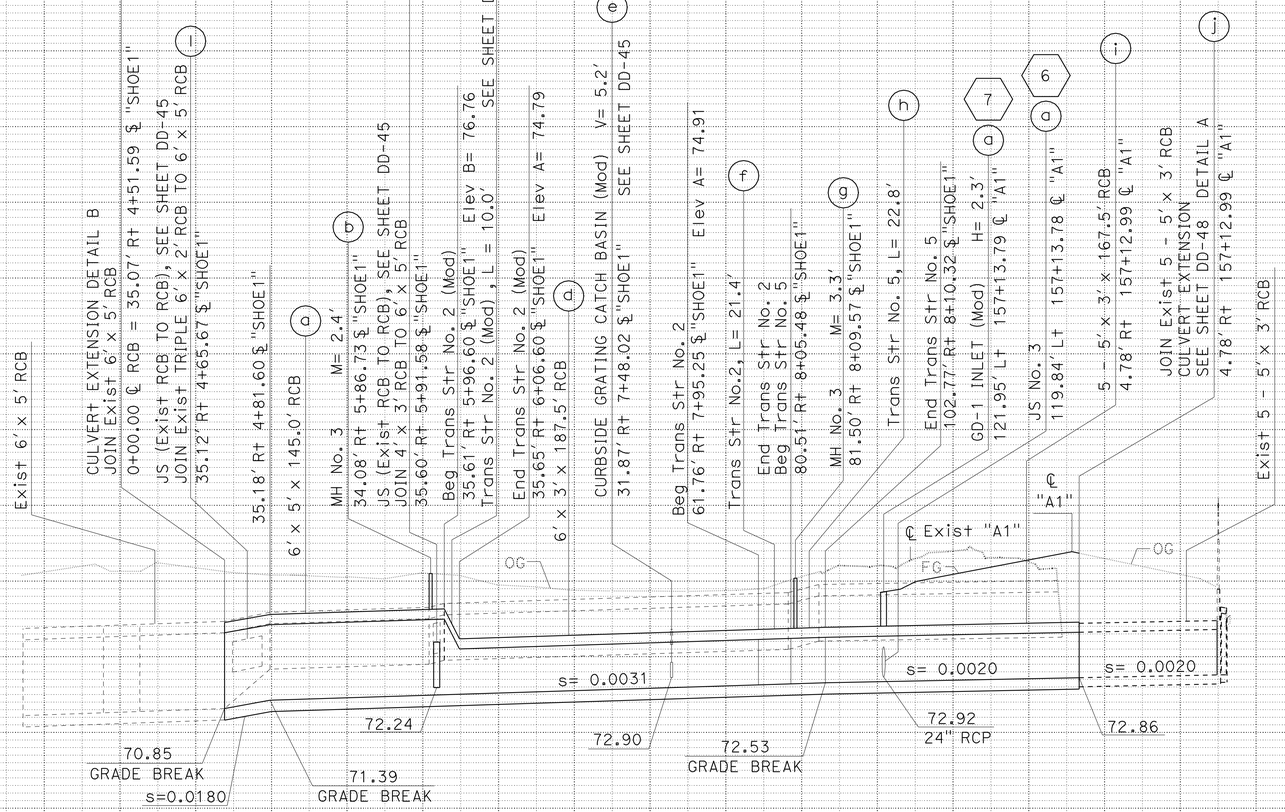


**DRAINAGE SYSTEM No. 4**

SCALE: Horiz 1"= 50'
Vert 1"= 5'

1 **REVISED PER ADDENDUM No. 1 DATED JULY 13, 2012**

# DRAINAGE PROFILES

SCALE AS SHOWN

**DP-3**

STATE OF CALIFORNIA - DEPARTMENT OF TRANSPORTATION
Caltrans
HYDRAULICS

FUNCTIONAL SUPERVISOR: JAI P. THAKUR
CALCULATED-DESIGNED BY: MARTIN CORONADO
CHECKED BY: RALPH M. SASAKI
REVISED BY
DATE REVISED

LAST REVISION 00-00-00
DATE PLOTTED => 12-JUL-2012
TIME PLOTTED => 14:07

| Dist | COUNTY | ROUTE | POST MILES TOTAL PROJECT | SHEET No. | TOTAL SHEETS |
|---|---|---|---|---|---|
| 07 | LA | 5 | 2.4/4.0 | 134 | 1288 |

REGISTERED CIVIL ENGINEER 12-19-11 DATE

3-26-12
PLANS APPROVAL DATE

REGISTERED PROFESSIONAL ENGINEER RALPH M. SASAKI No. 30849 Exp. 3/31/12 CIVIL STATE OF CALIFORNIA

*THE STATE OF CALIFORNIA OR ITS OFFICERS OR AGENTS SHALL NOT BE RESPONSIBLE FOR THE ACCURACY OR COMPLETENESS OF SCANNED COPIES OF THIS PLAN SHEET.*

1

NOTE:

1. THE CONTRACTOR SHALL VERIFY LOCATIONS AND ELEVATIONS OF EXISTING DRAINAGE SYSTEMS BEFORE COMMENCEMENT OF WORK.

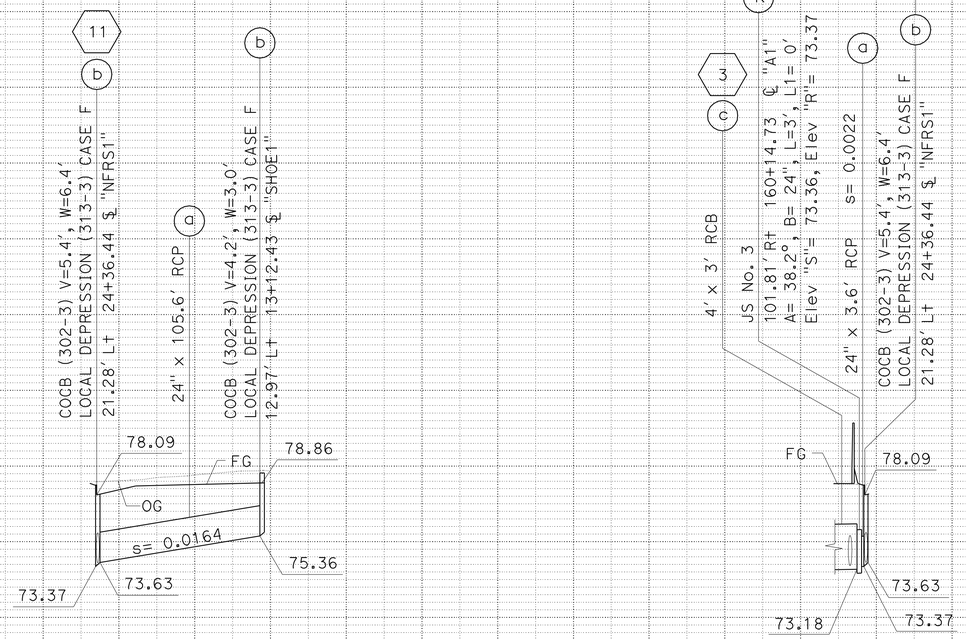


**DRAINAGE SYSTEM No. 10**

SCALE: Horiz 1"= 50'
Vert 1"= 5'

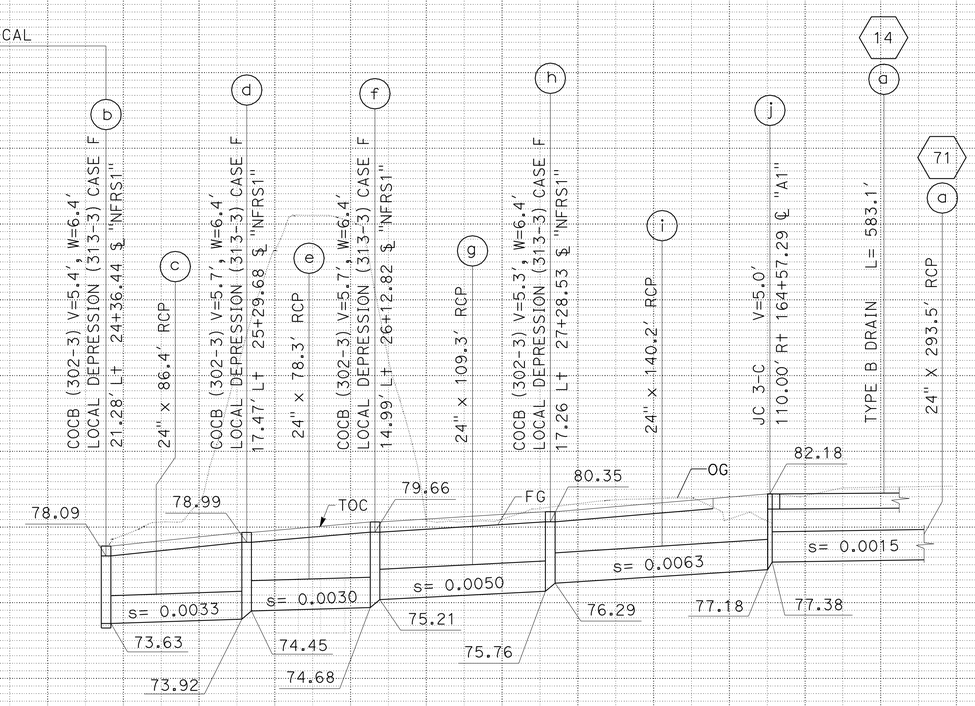


**DRAINAGE SYSTEM No. 11**

SCALE: Horiz 1"= 50'
Vert 1"= 5'

1 **REVISED PER ADDENDUM No. 1 DATED JULY 13, 2012**

# DRAINAGE PROFILES

SCALE AS SHOWN

**DP-7**

STATE OF CALIFORNIA - DEPARTMENT OF TRANSPORTATION
Caltrans® HYDRAULICS

FUNCTIONAL SUPERVISOR: JAI P. THAKUR
CALCULATED-DESIGNED BY: MARTIN CORONADO
CHECKED BY: RALPH M. SASAKI
REVISED BY
DATE REVISED

LAST REVISION 00-00-00
DATE PLOTTED => 12-JUL-2012
TIME PLOTTED => 14:07

| Dist | COUNTY | ROUTE | POST MILES TOTAL PROJECT | SHEET No. | TOTAL SHEETS |
|---|---|---|---|---|---|
| 07 | LA | 5 | 2.4/4.0 | 137 | 1288 |

REGISTERED CIVIL ENGINEER 12-19-11 DATE

3-26-12
PLANS APPROVAL DATE

REGISTERED PROFESSIONAL ENGINEER RALPH M. SASAKI No. 30849 Exp. 3/31/12 CIVIL STATE OF CALIFORNIA

*THE STATE OF CALIFORNIA OR ITS OFFICERS OR AGENTS SHALL NOT BE RESPONSIBLE FOR THE ACCURACY OR COMPLETENESS OF SCANNED COPIES OF THIS PLAN SHEET.*

NOTE:

1. THE CONTRACTOR SHALL VERIFY LOCATIONS AND ELEVATIONS OF EXISTING DRAINAGE SYSTEMS BEFORE COMMENCEMENT OF WORK.

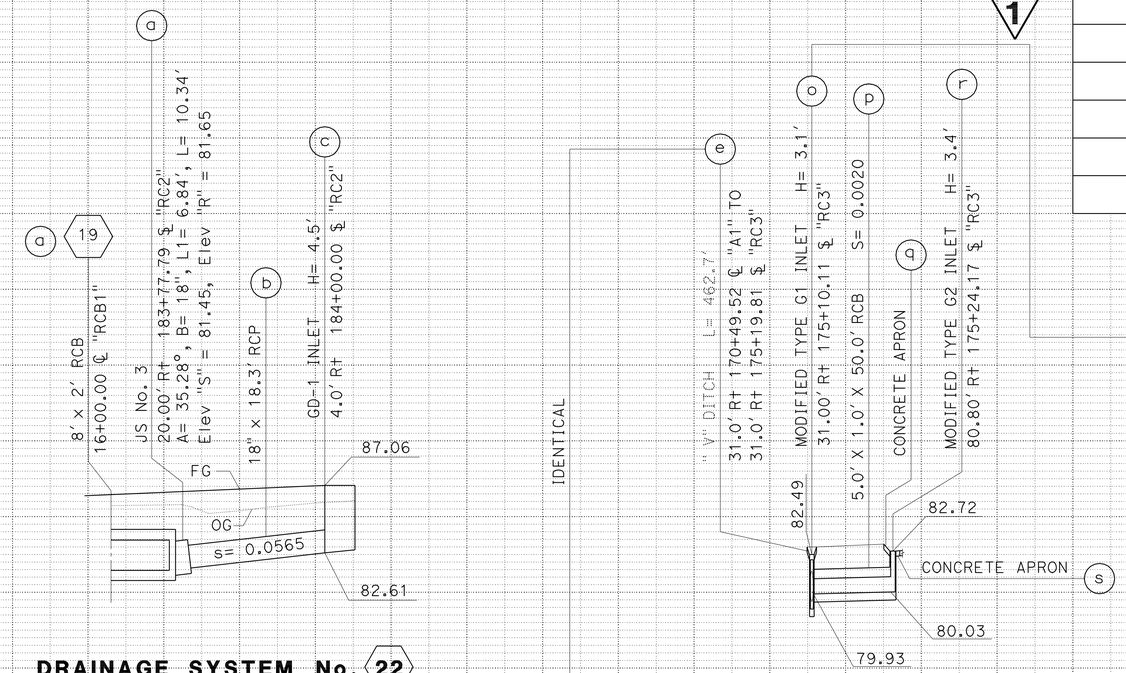


**DRAINAGE SYSTEM No. 22**

SCALE: Horiz 1"= 10'
Vert 1"= 5'

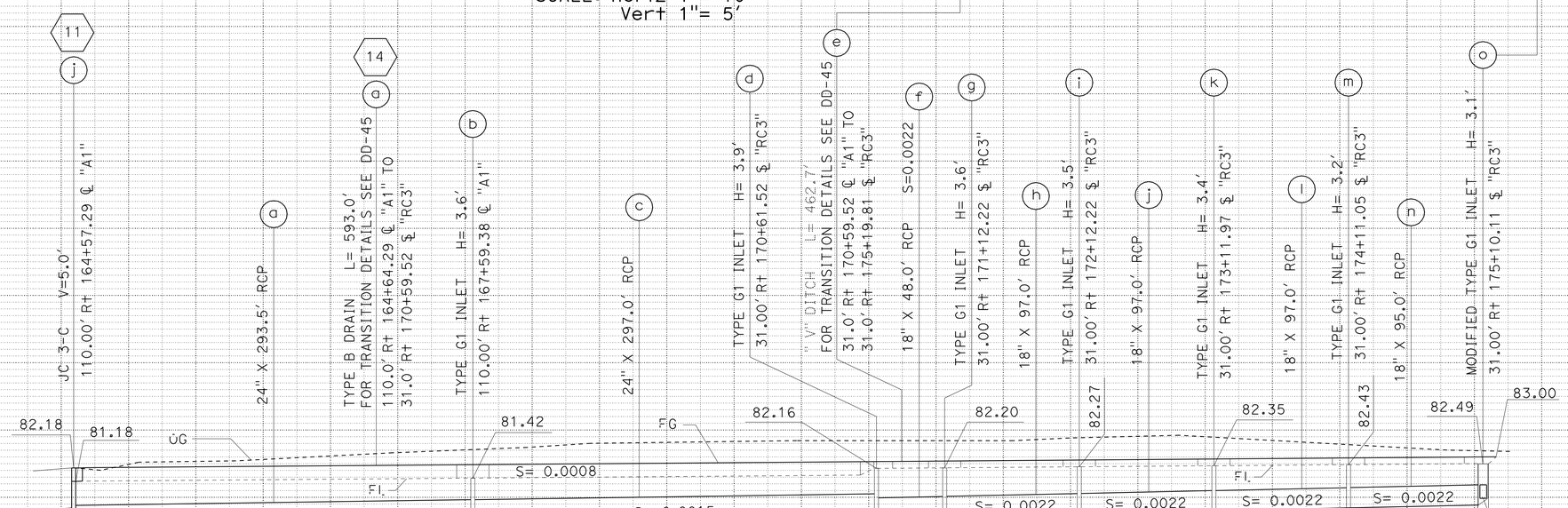


**DRAINAGE SYSTEM No. 14 71**

SCALE: Horiz 1"= 50'
Vert 1"= 5'

1 **REVISED PER ADDENDUM No. 1 DATED JULY 13, 2012**

# DRAINAGE PROFILES

SCALE AS SHOWN

**DP-10**

STATE OF CALIFORNIA - DEPARTMENT OF TRANSPORTATION
Caltrans® HYDRAULICS

FUNCTIONAL SUPERVISOR: JAI P. THAKUR
CALCULATED-DESIGNED BY: MARTIN CORONADO
CHECKED BY: RALPH M. SASAKI
REVISED BY / DATE REVISED

LAST REVISION 00-00-00 DATE PLOTTED => 12-JUL-2012 TIME PLOTTED => 14:07

| Dist | COUNTY | ROUTE | POST MILES TOTAL PROJECT | SHEET No. | TOTAL SHEETS |
|---|---|---|---|---|---|
| 07 | LA | 5 | 2.4/4.0 | 159 | 1288 |

REGISTERED CIVIL ENGINEER 12-19-11 DATE

3-26-12
PLANS APPROVAL DATE

REGISTERED PROFESSIONAL ENGINEER RALPH M. SASAKI No. 30849 Exp. 3/31/12 CIVIL STATE OF CALIFORNIA

*THE STATE OF CALIFORNIA OR ITS OFFICERS OR AGENTS SHALL NOT BE RESPONSIBLE FOR THE ACCURACY OR COMPLETENESS OF SCANNED COPIES OF THIS PLAN SHEET.*

1

NOTE:

1. THE CONTRACTOR SHALL VERIFY LOCATIONS AND ELEVATIONS OF EXISTING DRAINAGE SYSTEMS BEFORE COMMENCEMENT OF WORK.

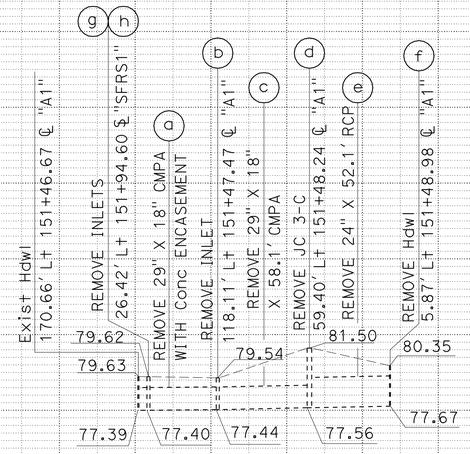


**DRAINAGE SYSTEM No. 49**

SCALE: Horiz 1"= 50'
Vert 1"= 5'

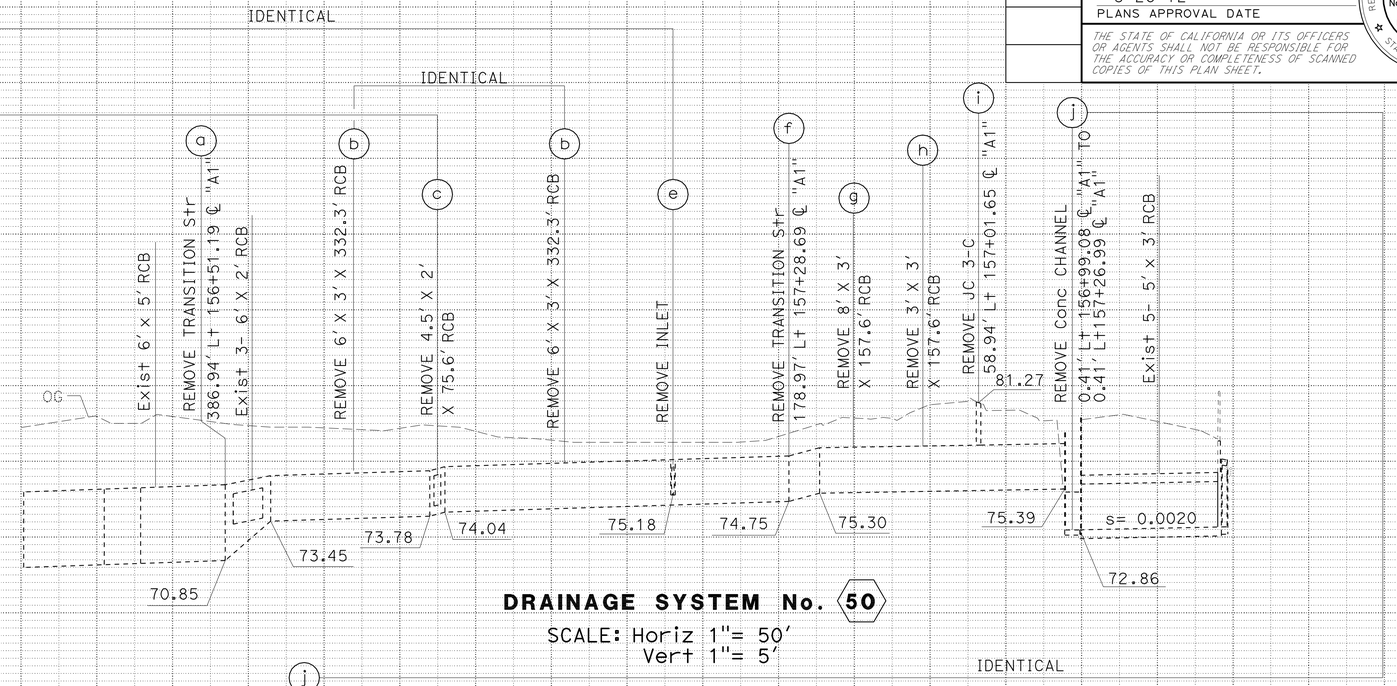


**DRAINAGE SYSTEM No. 50**

SCALE: Horiz 1"= 50'
Vert 1"= 5'

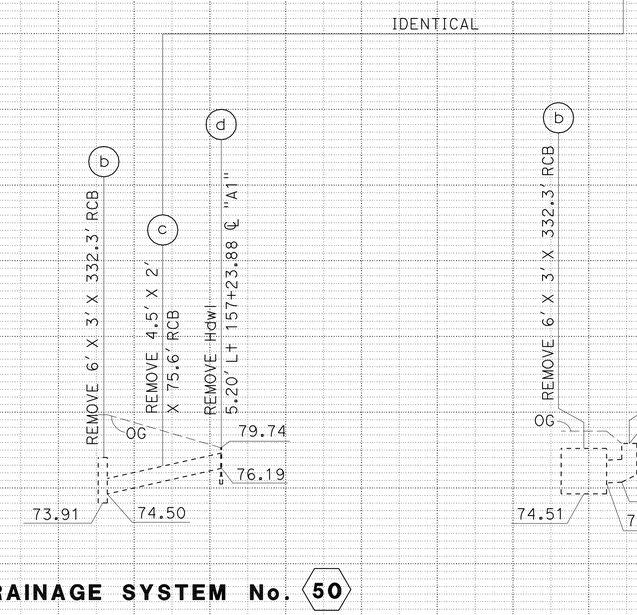


**DRAINAGE SYSTEM No. 50**

SCALE: Horiz 1"= 50'
Vert 1"= 5'

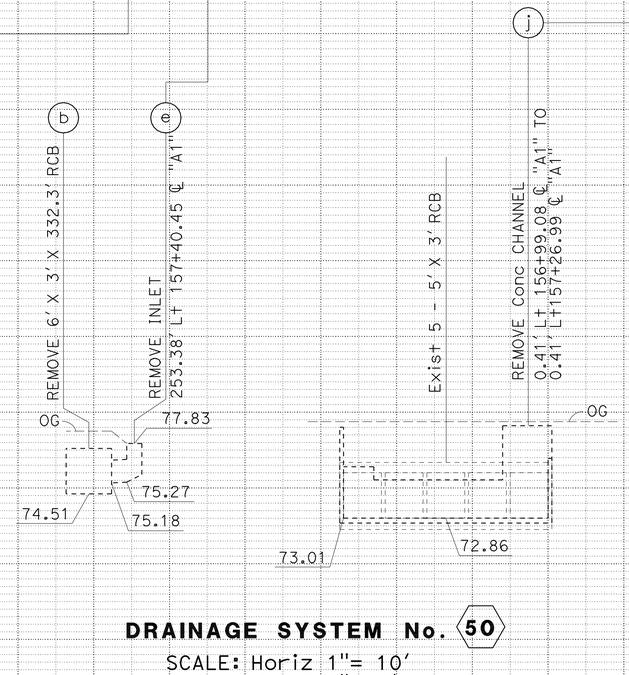


**DRAINAGE SYSTEM No. 50**

SCALE: Horiz 1"= 10'
Vert 1"= 5'

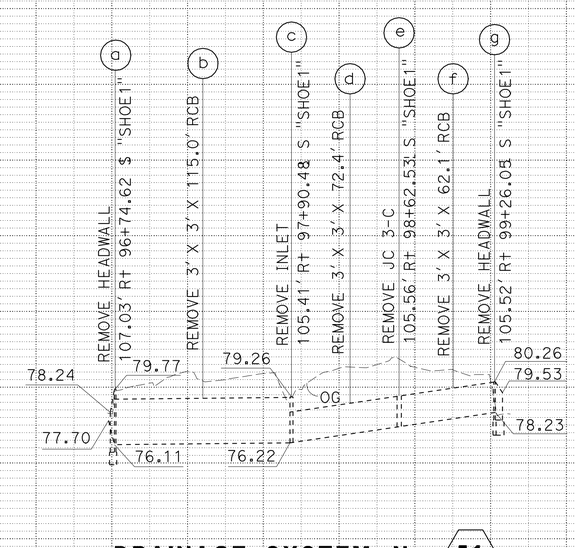


**DRAINAGE SYSTEM No. 51**

SCALE: Horiz 1"= 50'
Vert 1"= 5'

1 **REVISED PER ADDENDUM No. 1 DATED JULY 13, 2012**

# DRAINAGE PROFILES

SCALE AS SHOWN

**DP-32**

STATE OF CALIFORNIA - DEPARTMENT OF TRANSPORTATION
Caltrans HYDRAULICS
FUNCTIONAL SUPERVISOR: JAI P. THAKUR
CALCULATED-DESIGNED BY: MAY P. FUNG
CHECKED BY: RALPH M. SASAKI
REVISED BY / DATE REVISED

LAST REVISION 00-00-00
DATE PLOTTED => 12-JUL-2012
TIME PLOTTED => 15:09

| Dist | COUNTY | ROUTE | POST MILES TOTAL PROJECT | SHEET No. | TOTAL SHEETS |
|---|---|---|---|---|---|
| 07 | LA | 5 | 2.4/4.0 | 161 | 1288 |

REGISTERED CIVIL ENGINEER 12-19-11 DATE

3-26-12
PLANS APPROVAL DATE

REGISTERED PROFESSIONAL ENGINEER RALPH M. SASAKI No. 30849 Exp. 3/31/12 CIVIL STATE OF CALIFORNIA

*THE STATE OF CALIFORNIA OR ITS OFFICERS OR AGENTS SHALL NOT BE RESPONSIBLE FOR THE ACCURACY OR COMPLETENESS OF SCANNED COPIES OF THIS PLAN SHEET.*

1 REVISED PER ADDENDUM No. 1 DATED JULY 13, 2012

1

NOTES:

1. THE CONTRACTOR SHALL VERIFY LOCATIONS AND ELEVATIONS OF EXISTING DRAINAGE SYSTEMS BEFORE COMMENCEMENT OF WORK.
2. FOR THE SIZE OF THE CONCRETE CHANNEL SEE DD-56.

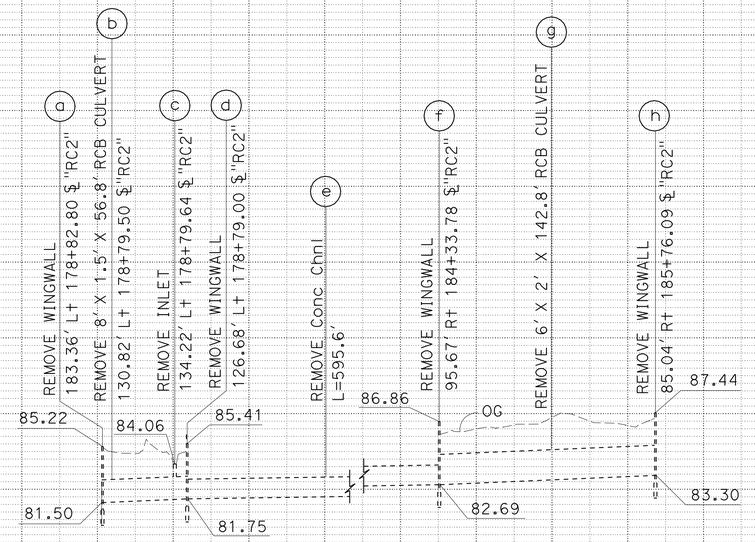


DRAINAGE SYSTEM No. 56

SCALE: Horiz 1"= 50'
Vert 1"= 5'

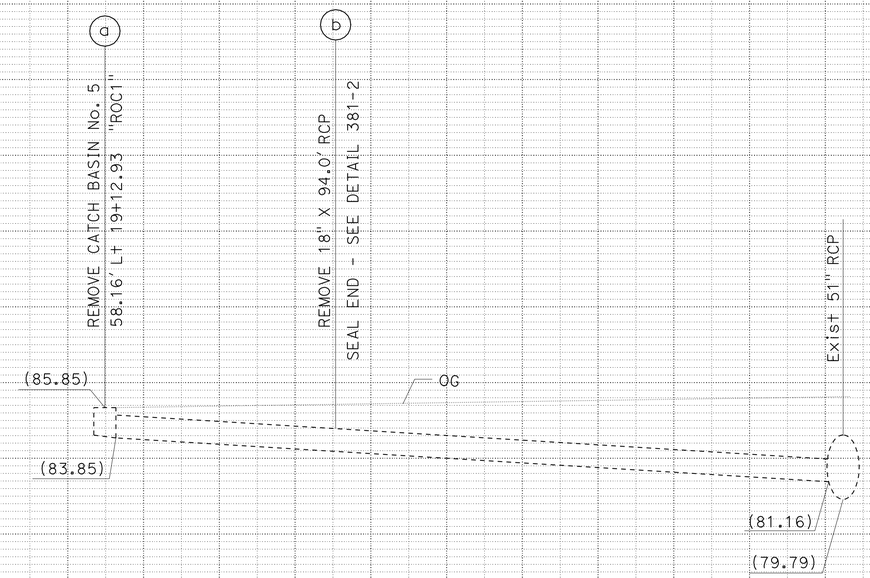


DRAINAGE SYSTEM No. 61

SCALE: Horiz 1"= 10'
Vert 1"= 5'

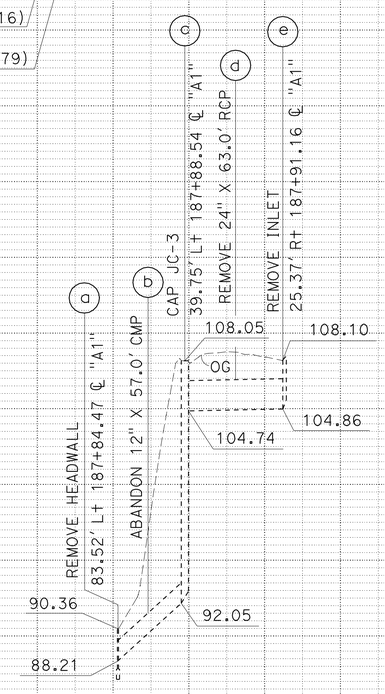


DRAINAGE SYSTEM No. 60

SCALE: Horiz 1"= 50'
Vert 1"= 5'

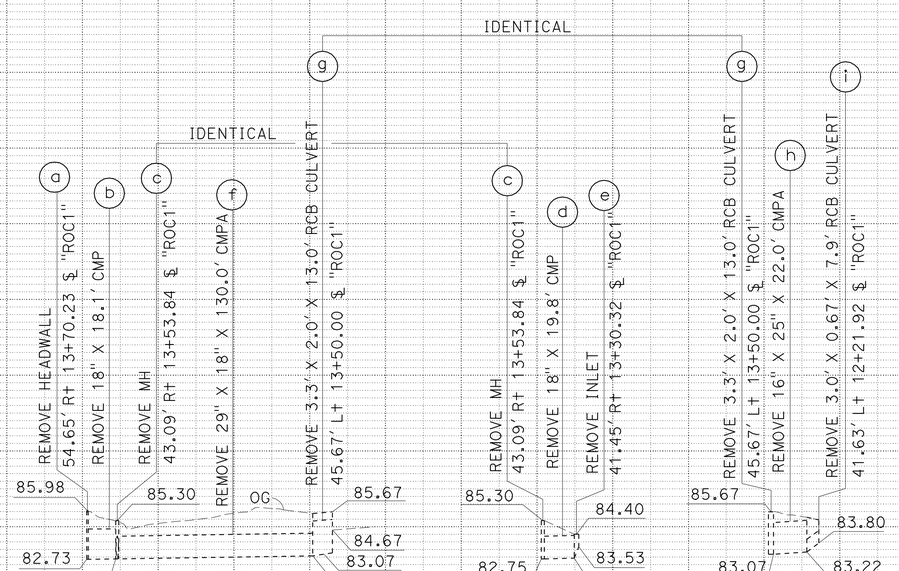


DRAINAGE SYSTEM No. 57

SCALE: Horiz 1"= 50'
Vert 1"= 5'

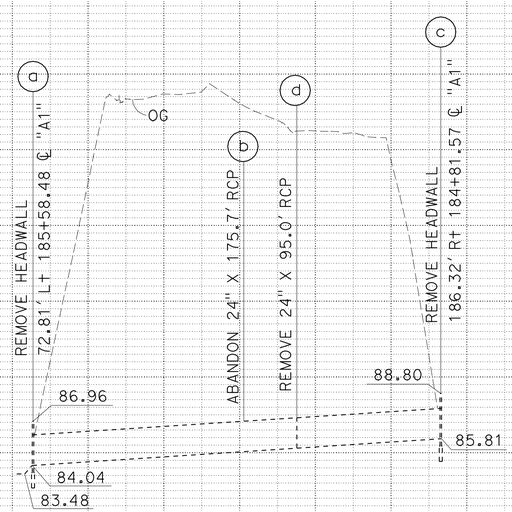


DRAINAGE SYSTEM No. 59

SCALE: Horiz 1"= 50'
Vert 1"= 5'

# DRAINAGE PROFILES

SCALE AS SHOWN

DP-34

| REVISED BY | DATE REVISED |
|---|---|
| | |

MAY P. FUNG — RALPH M. SASAKI — JAI P. THAKUR

CALCULATED-DESIGNED BY / CHECKED BY / FUNCTIONAL SUPERVISOR

STATE OF CALIFORNIA - DEPARTMENT OF TRANSPORTATION — HYDRAULICS — Caltrans

LAST REVISION 00-00-00 — DATE PLOTTED => 12-JUL-2012 — TIME PLOTTED => 14:07

| Dist | COUNTY | ROUTE | POST MILES TOTAL PROJECT | SHEET No. | TOTAL SHEETS |
|---|---|---|---|---|---|
| 07 | LA | 5 | 2.4/4.0 | 163 | 1288 |

REGISTERED CIVIL ENGINEER 12-19-11 DATE

3-26-12
PLANS APPROVAL DATE

REGISTERED PROFESSIONAL ENGINEER RALPH M. SASAKI No. 30849 Exp. 3/31/12 CIVIL STATE OF CALIFORNIA

*THE STATE OF CALIFORNIA OR ITS OFFICERS OR AGENTS SHALL NOT BE RESPONSIBLE FOR THE ACCURACY OR COMPLETENESS OF SCANNED COPIES OF THIS PLAN SHEET.*

1

## NOTES:

1. THE CONTRACTOR SHALL VERIFY LOCATIONS AND ELEVATIONS OF EXISTING DRAINAGE SYSTEMS BEFORE COMMENCEMENT OF WORK.
2. FOR THE SIZE OF THE CONCRETE CHANNEL SEE DD-56.

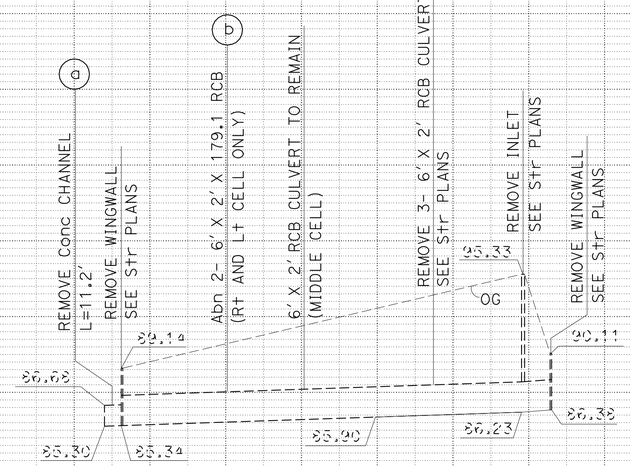


**DRAINAGE SYSTEM No. 62**

SCALE: Horiz 1"= 50'
Vert 1"= 5'

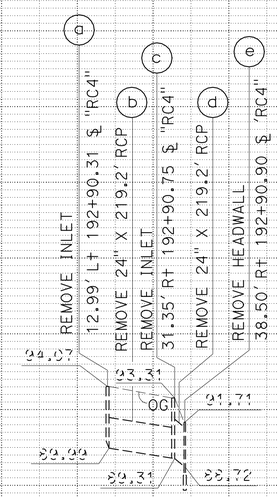


**DRAINAGE SYSTEM No. 63**

SCALE: Horiz 1"= 50'
Vert 1"= 5'

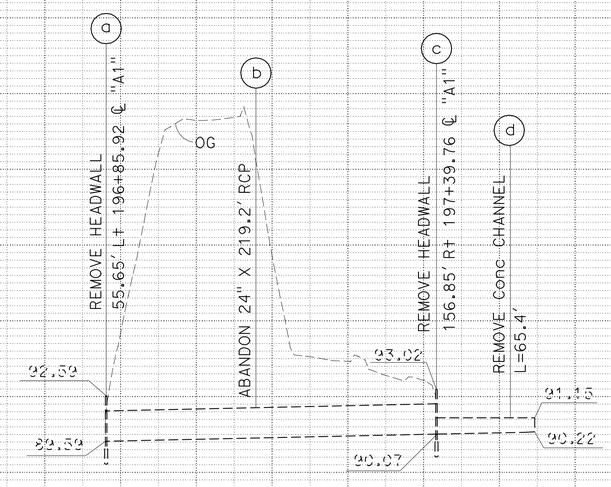


**DRAINAGE SYSTEM No. 64**

SCALE: Horiz 1"= 50'
Vert 1"= 5'

1 **REVISED PER ADDENDUM No. 1 DATED JULY 13, 2012**

# DRAINAGE PROFILES

SCALE AS SHOWN

**DP-36**

STATE OF CALIFORNIA - DEPARTMENT OF TRANSPORTATION
Caltrans® **HYDRAULICS**

FUNCTIONAL SUPERVISOR: JAI P. THAKUR
CALCULATED-DESIGNED BY: MAY P. FUNG
CHECKED BY: RALPH M. SASAKI
REVISED BY
DATE REVISED

LAST REVISION 00-00-00
DATE PLOTTED => 12-JUL-2012
TIME PLOTTED => 14:07

| Dist | COUNTY | ROUTE | POST MILES TOTAL PROJECT | SHEET No. | TOTAL SHEETS |
|---|---|---|---|---|---|
| 07 | LA | 5 | 2.4/4.0 | 165 | 1288 |

REGISTERED CIVIL ENGINEER 12-19-11 DATE

3-26-12
PLANS APPROVAL DATE

REGISTERED PROFESSIONAL ENGINEER RALPH M. SASAKI No. 30849 Exp. 3/31/12 CIVIL STATE OF CALIFORNIA

*THE STATE OF CALIFORNIA OR ITS OFFICERS OR AGENTS SHALL NOT BE RESPONSIBLE FOR THE ACCURACY OR COMPLETENESS OF SCANNED COPIES OF THIS PLAN SHEET.*

1

NOTE:

1. THE CONTRACTOR SHALL VERIFY LOCATIONS AND ELEVATIONS OF EXISTING DRAINAGE SYSTEMS BEFORE COMMENCEMENT OF WORK.

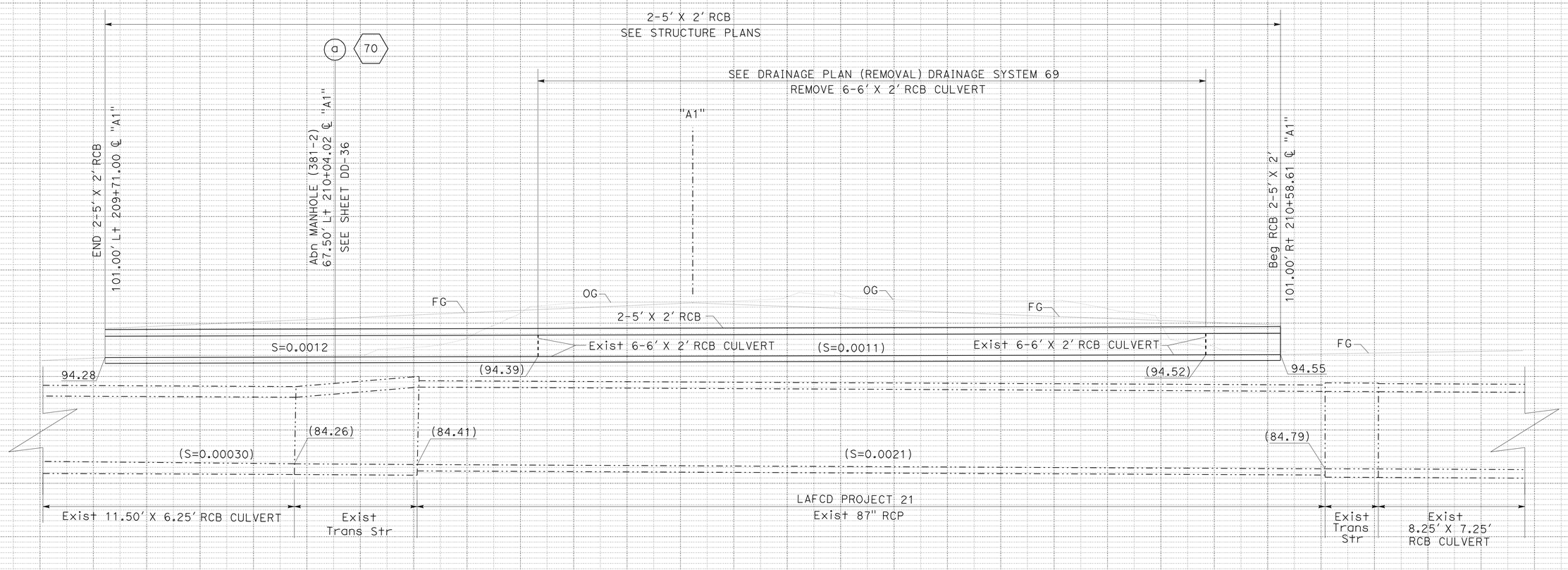


**DOUBLE CELL - 5' x 2' RCB**
**SILVERBOW Ave**
(SEE STRUCTURE PLANS)

1 **REVISED PER ADDENDUM No. 1 DATED JULY 13, 2012**

# DRAINAGE PROFILES

SCALE: Horiz 1"= 10'
Vert 1"= 5'

**DP-38**

REVISED BY | DATE REVISED
MAY P. FUNG | RALPH M. SASAKI
CALCULATED-DESIGNED BY | CHECKED BY
FUNCTIONAL SUPERVISOR
JAI P. THAKUR

STATE OF CALIFORNIA - DEPARTMENT OF TRANSPORTATION
Caltrans® HYDRAULICS

LAST REVISION 00-00-00 | DATE PLOTTED => 12-JUL-2012 | TIME PLOTTED => 14:07

| Dist | COUNTY | ROUTE | POST MILES TOTAL PROJECT | SHEET No. | TOTAL SHEETS |
|---|---|---|---|---|---|
| 07 | LA | 5 | 2.4/4.0 | 175 | 1288 |

REGISTERED CIVIL ENGINEER DATE 12-19-11

PLANS APPROVAL DATE 3-26-12

REGISTERED PROFESSIONAL ENGINEER RALPH M. SASAKI No. 30849 Exp. 3/31/12 CIVIL STATE OF CALIFORNIA

THE STATE OF CALIFORNIA OR ITS OFFICERS OR AGENTS SHALL NOT BE RESPONSIBLE FOR THE ACCURACY OR COMPLETENESS OF SCANNED COPIES OF THIS PLAN SHEET.

1

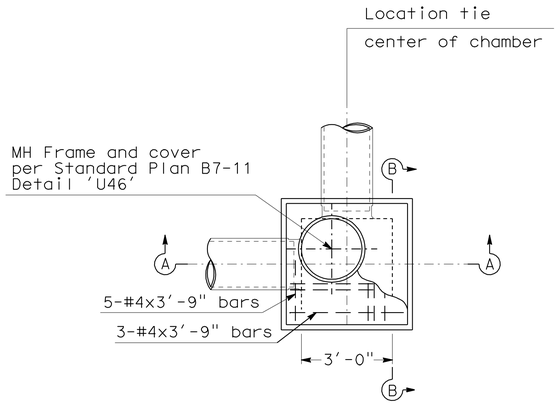


**PLAN**

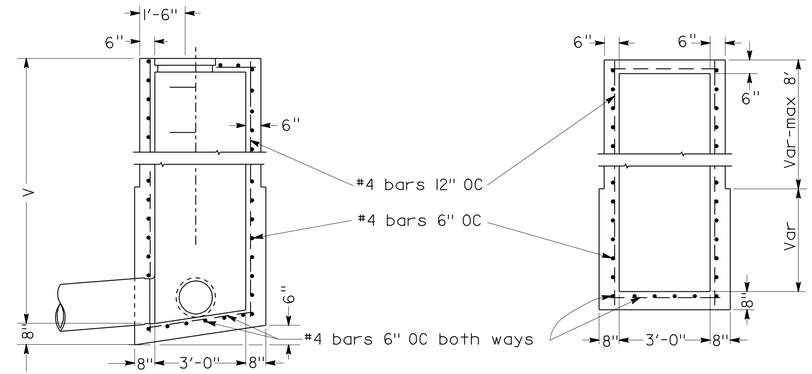


**SECTION A-A**

**SECTION B-B**

## JUNCTION CHAMBER No. 3-C (Mod) (CASE 1)

## (JC 3-C) (Mod) (CASE 1)

NOTES

1. CONNECTION pipes may be placed in any position around the walls provided they point in the proper direction and the position is otherwise consistent with the Drainage Plan.
2. DIMENSIONS: D=18" unless otherwise specified.
   V=3'-6" unless otherwise specified.
3. EXPOSED SURFACE of the Junction Chamber shall conform in slope, grade, color, finish and scoring to existing sidewalk adjacent to the Junction Chamber. Where no sidewalk exists, the top shall be finished to conform to standard sidewalk slopeand finish, and scoring lines shall conform as nearly as possible to 20" squares.
4. FLOOR of chamber shall be given a steel-troweled finish and shall slope from all directions to outlet.
5. MANHOLE shall be placed in corner nearest outlet.
6. OUTLET pipe shall be connected to Junction Chamber with Monolithic Connection.
7. REINFORCING steel is required in walls as shown.
8. Steps - None required where "V" is less than 2'-6". Where "V" is 2'-6" or more, install steps with lowest rung 1'-0" above the floor and highest rung not more than 6" below top of inlet. The distance between steps shall not exceed 1'-0" and shall be uniform throughout the length of the wall. Place steps in the wall without an opening. Steps inserts may be substituted for the bar steps. Step inserts shall comply with State Industrial Safety requirements. See Standard Plan D74C for step details.

1 **REVISED PER ADDENDUM No. 1 DATED JULY 13, 2012**

# DRAINAGE DETAILS

NO SCALE

**DD-8**

STATE OF CALIFORNIA - DEPARTMENT OF TRANSPORTATION
Caltrans HYDRAULICS

FUNCTIONAL SUPERVISOR: JAI P. THAKUR

CALCULATED-DESIGNED BY: MAY P. FUNG
CHECKED BY: RALPH M. SASAKI

REVISED BY
DATE REVISED

LAST REVISION 00-00-00
DATE PLOTTED => 12-JUL-2012
TIME PLOTTED => 14:07

| Dist | COUNTY | ROUTE | POST MILES TOTAL PROJECT | SHEET No. | TOTAL SHEETS |
|---|---|---|---|---|---|
| 07 | LA | 5 | 2.4/4.0 | 212 | 1288 |

REGISTERED CIVIL ENGINEER 12-19-11 DATE

3-26-12
PLANS APPROVAL DATE

REGISTERED PROFESSIONAL ENGINEER RALPH M. SASAKI No. 30849 Exp. 3/31/12 CIVIL STATE OF CALIFORNIA

*THE STATE OF CALIFORNIA OR ITS OFFICERS OR AGENTS SHALL NOT BE RESPONSIBLE FOR THE ACCURACY OR COMPLETENESS OF SCANNED COPIES OF THIS PLAN SHEET.*

1

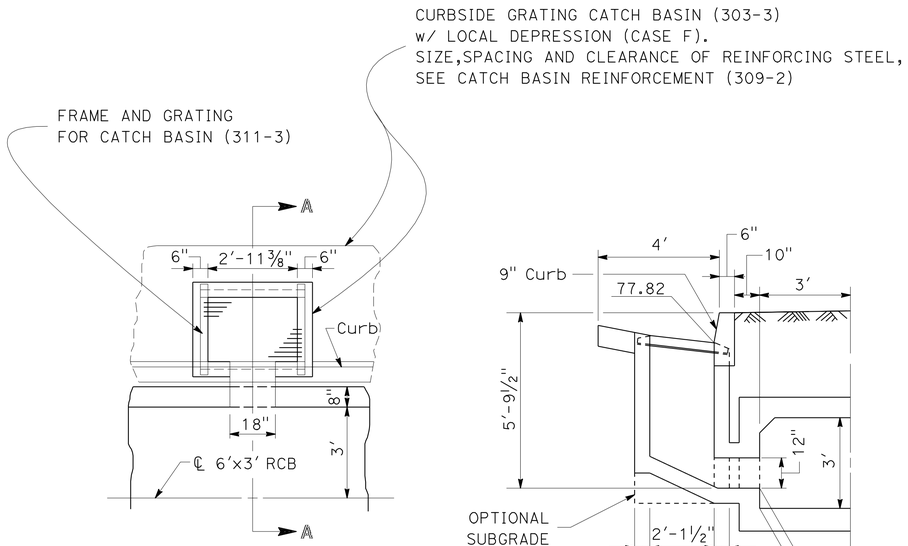


**PLAN**

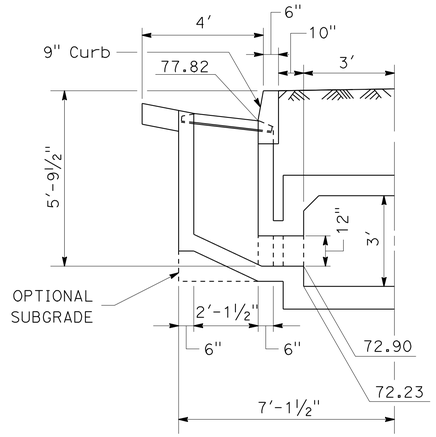


**SECTION A-A**

**CURBSIDE GRATING CATCH BASIN (Mod) INTO 6'x3' RCB**

**DRAINAGE SYSTEM No. 4 (e)**

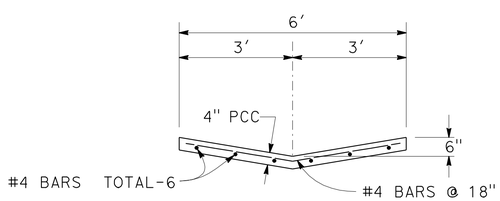


**"V" DITCH**
**TYPICAL SECTION**

**DRAINAGE SYSTEM No. 71 (e)**

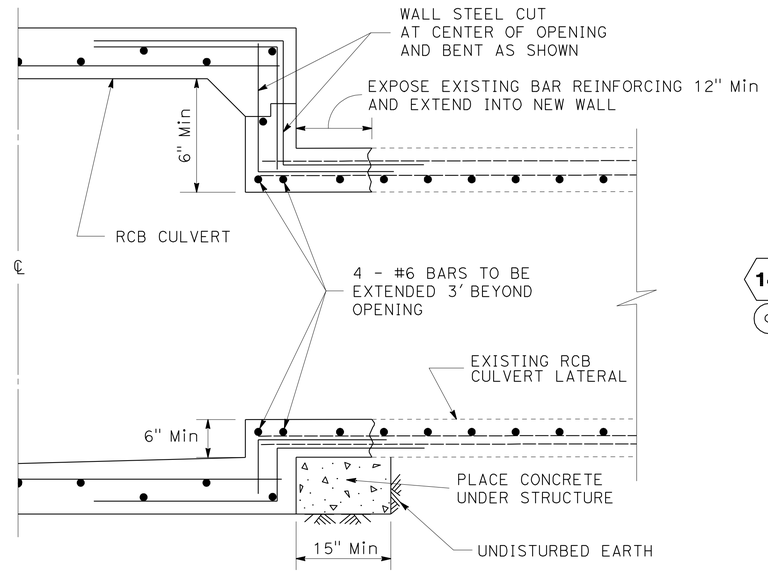


**EXISTING RCB TO RCB JUNCTION**

**DRAINAGE SYSTEM No. 4 (m)**

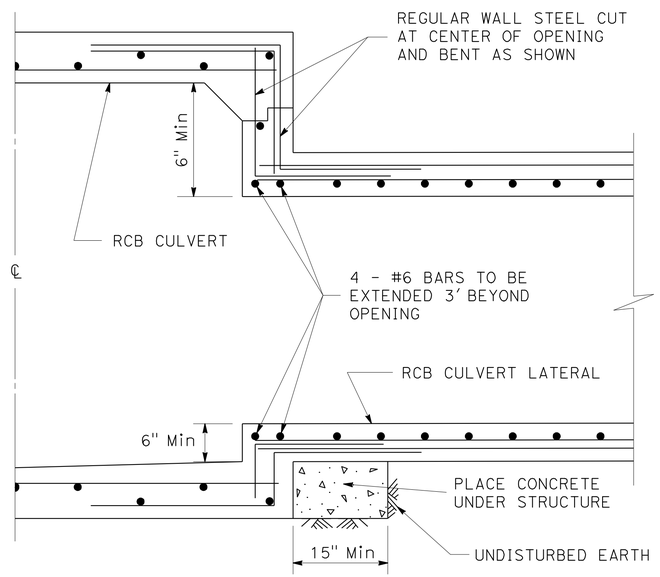


**RCB TO RCB JUNCTION**

**DRAINAGE SYSTEM No. 3 (a)**

14

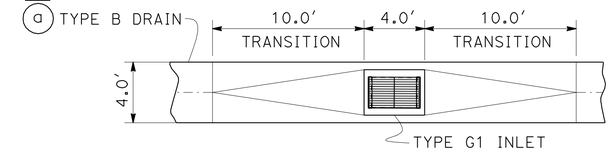


**TYPICAL TYPE B DRAIN TRANSITION AT INLET**

71

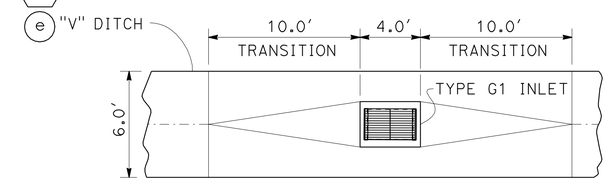


**TYPICAL "V" DITCH TRANSITION AT INLET**

14 71

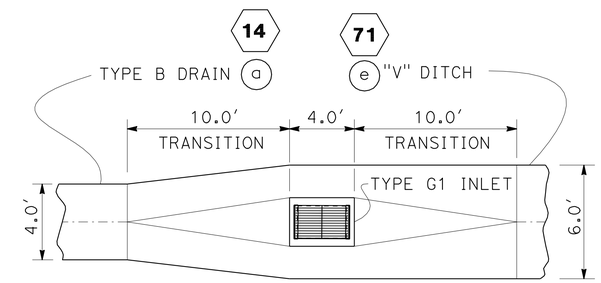


**TYPICAL "V" DITCH/TYPE B DRAIN TRANSITION AT INLET**

1 **REVISED PER ADDENDUM No. 1 DATED JULY 13, 2012**

# DRAINAGE DETAILS

NO SCALE

**DD-45**

STATE OF CALIFORNIA - DEPARTMENT OF TRANSPORTATION
Caltrans HYDRAULICS

FUNCTIONAL SUPERVISOR: JAI P. THAKUR
CALCULATED-DESIGNED BY: MARTIN CORONADO
CHECKED BY: RALPH M. SASAKI
REVISED BY
DATE REVISED

LAST REVISION 00-00-00
DATE PLOTTED => 12-JUL-2012
TIME PLOTTED => 14:07

| Dist | COUNTY | ROUTE | POST MILES TOTAL PROJECT | SHEET No. | TOTAL SHEETS |
|---|---|---|---|---|---|
| 07 | LA | 5 | 2.4/4.0 | 213 | 1288 |

REGISTERED CIVIL ENGINEER 12-19-11 DATE

3-26-12
PLANS APPROVAL DATE

RALPH M. SASAKI No. 30849 Exp. 3/31/12 CIVIL — REGISTERED PROFESSIONAL ENGINEER — STATE OF CALIFORNIA

*THE STATE OF CALIFORNIA OR ITS OFFICERS OR AGENTS SHALL NOT BE RESPONSIBLE FOR THE ACCURACY OR COMPLETENESS OF SCANNED COPIES OF THIS PLAN SHEET.*

1

NOTE:

1. FOR RCB REINFORCEMENT SEE STANDARD PLANS SHEET D80.
2. FOR INFORMATION NOT SHOWN FOR MODIFIED INLETS SEE STANDARD PLANS D73 AND D77A.

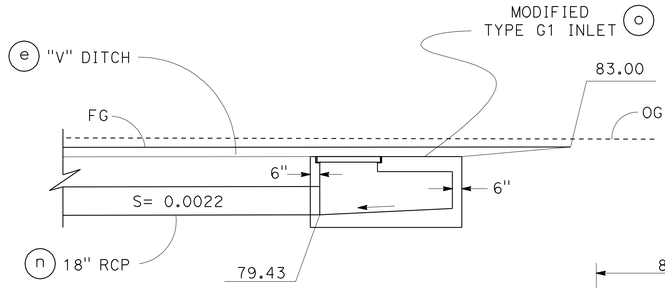


SECTION A-A

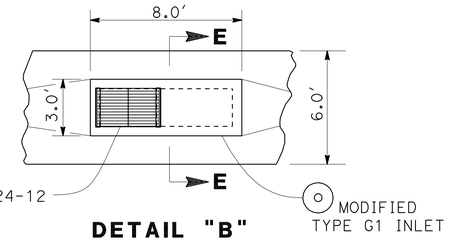


DETAIL "B"

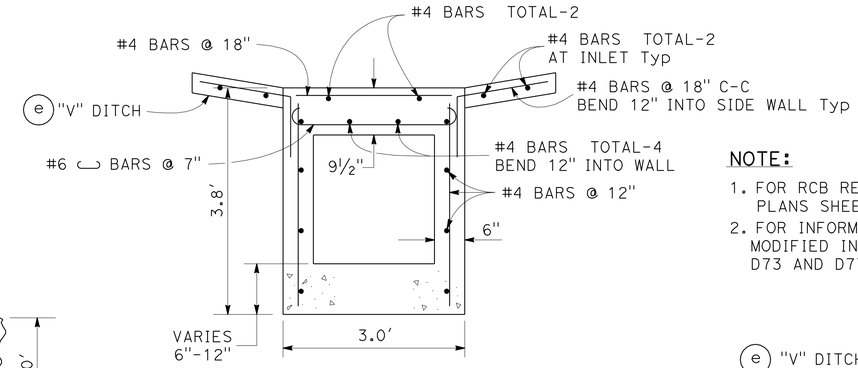


SECTION E-E
MODIFIED TYPE G1 INLET

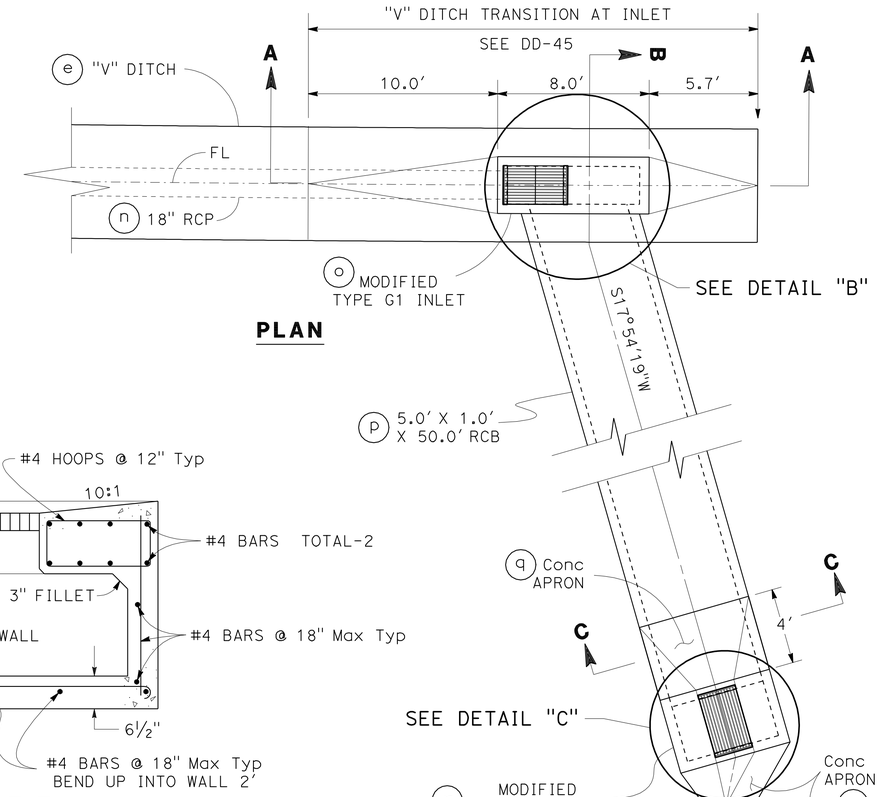


PLAN

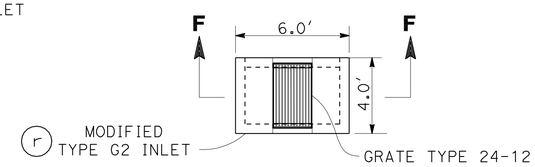


DETAIL "C"

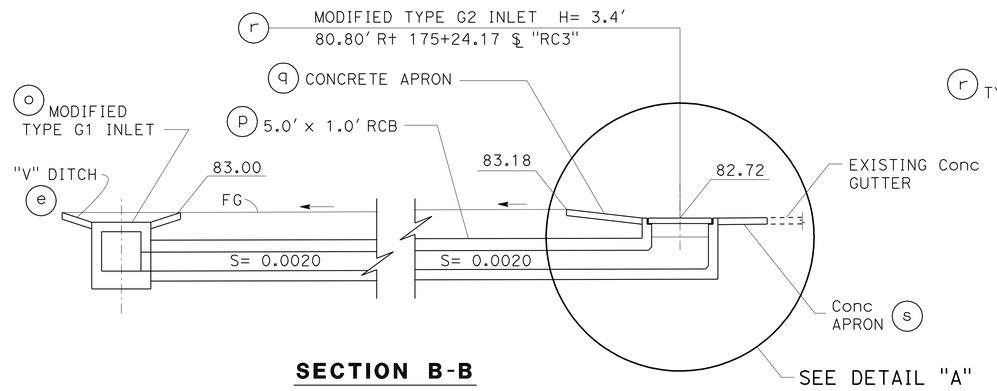


SECTION B-B

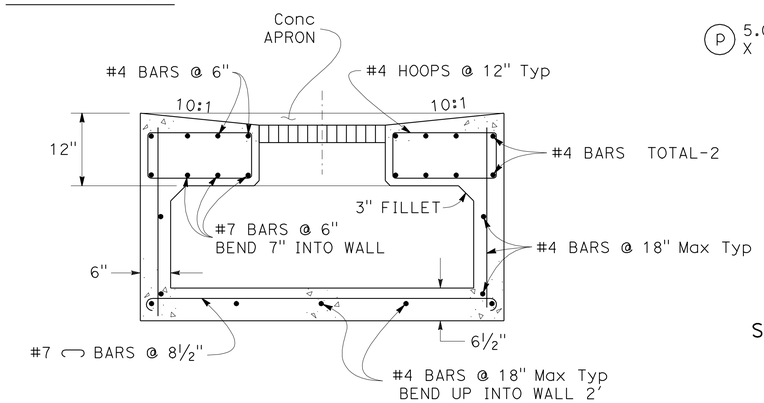


SECTION F-F
MODIFIED TYPE G2 INLET

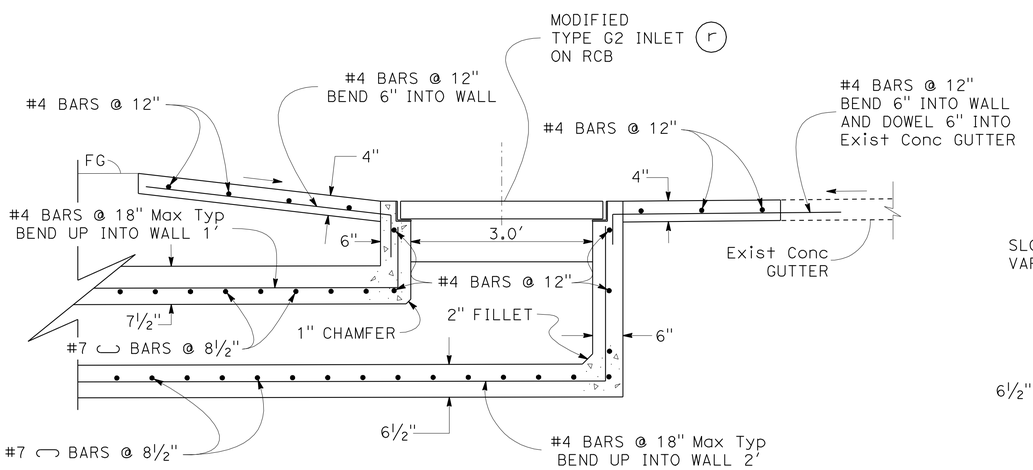


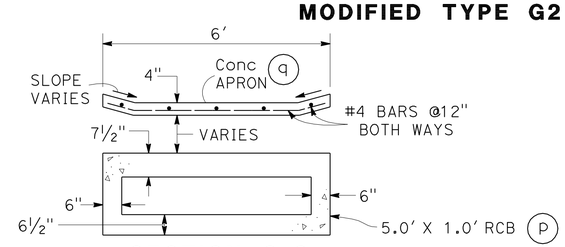


SECTION C-C

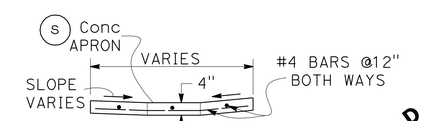


SECTION D-D

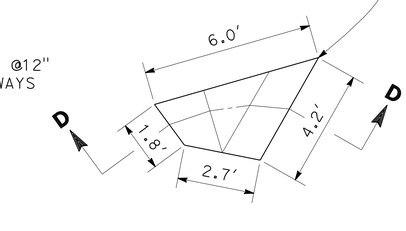


DETAIL "A"

1 REVISED PER ADDENDUM No. 1
DATED JULY 13, 2012

MODIFIED INLETS/RCB/"V" DITCH DETAIL

DRAINAGE SYSTEM No. 71 (e) (o) (p) (q) (r) (s)

DRAINAGE DETAILS

NO SCALE

DD-46

STATE OF CALIFORNIA - DEPARTMENT OF TRANSPORTATION
Caltrans HYDRAULICS

FUNCTIONAL SUPERVISOR: JAI P. THAKUR
CALCULATED-DESIGNED BY: MARTIN CORONADO
CHECKED BY: RALPH M. SASAKI
REVISED BY
DATE REVISED

LAST REVISION 00-00-00
DATE PLOTTED => 12-JUL-2012
TIME PLOTTED => 14:07

| Dist | COUNTY | ROUTE | POST MILES TOTAL PROJECT | SHEET No. | TOTAL SHEETS |
|---|---|---|---|---|---|
| 07 | LA | 5 | 2.4/4.0 | 215 | 1288 |

REGISTERED CIVIL ENGINEER 12-19-11 DATE

3-26-12
PLANS APPROVAL DATE

REGISTERED PROFESSIONAL ENGINEER RALPH M. SASAKI No. 30849 Exp. 3/31/12 CIVIL STATE OF CALIFORNIA

*THE STATE OF CALIFORNIA OR ITS OFFICERS OR AGENTS SHALL NOT BE RESPONSIBLE FOR THE ACCURACY OR COMPLETENESS OF SCANNED COPIES OF THIS PLAN SHEET.*

NOTES:

1. FOR 5 - 5.0'x 3.0' RCB BAR REINFORCEMENT DETAIL, SEE DOUBLE 5.0'x 3.0' RCB PER STANDARD PLAN D81.
2. FOR DETAILS AND INFORMATION NOT SHOWN FOR GD-1 INLET (Mod), REFER TO DRAINAGE DETAILS DD-1.

1

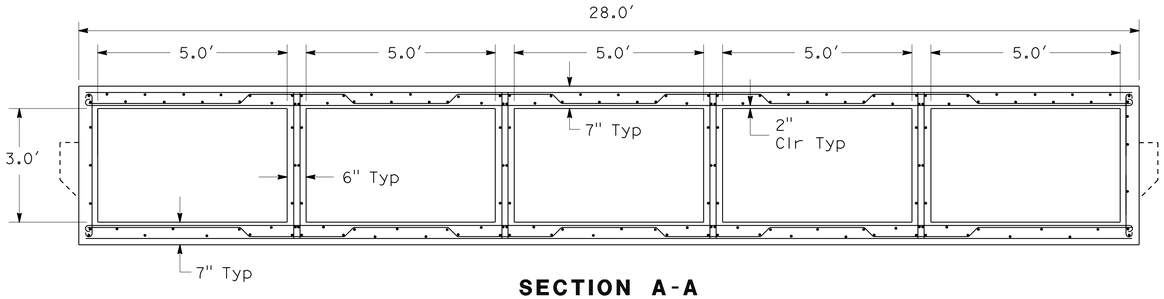


**SECTION A-A**

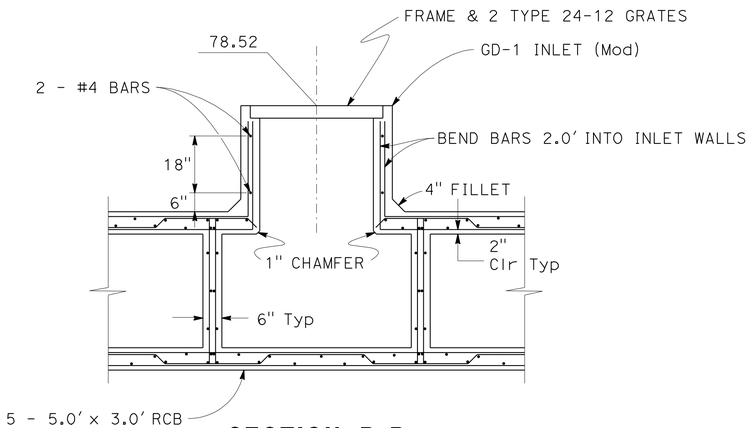


**SECTION B-B**

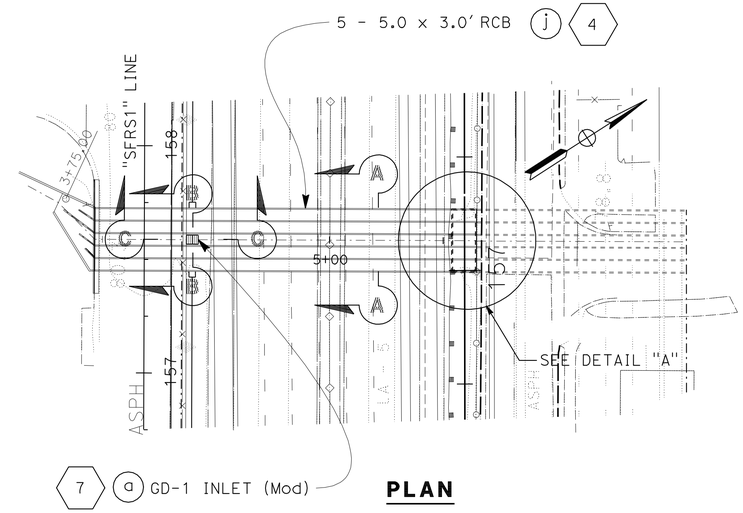


**PLAN**

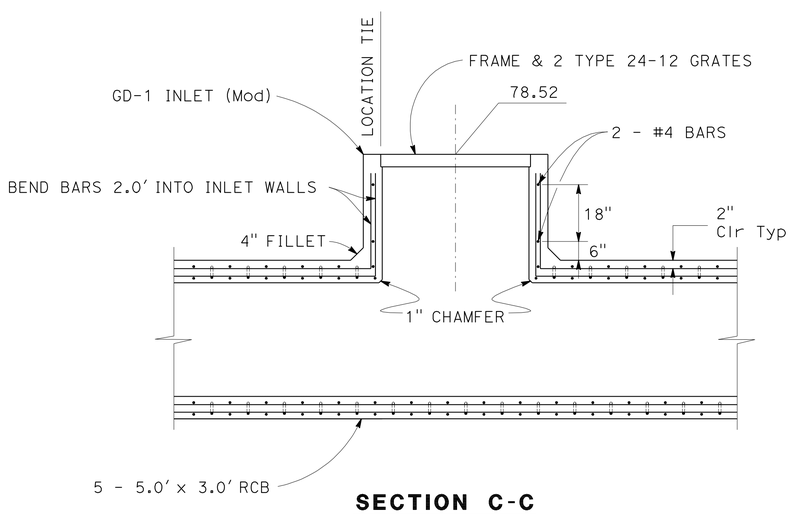


**SECTION C-C**

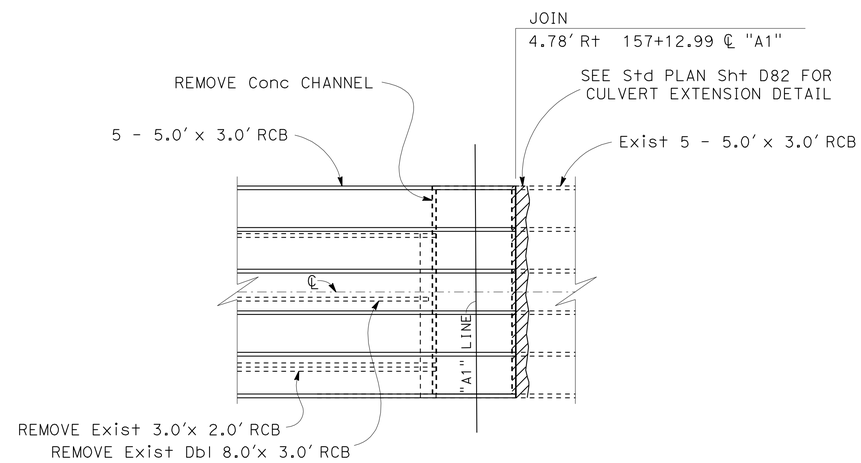


**DETAIL "A"**

**5 - 5.0' x 3.0' RCB / GD-1 INLET (Mod)**

**DRAINAGE SYSTEM No.** 4 j k 7 a

1 **REVISED PER ADDENDUM No. 1 DATED JULY 13, 2012**

# DRAINAGE DETAILS

NO SCALE

**DD-48**

STATE OF CALIFORNIA - DEPARTMENT OF TRANSPORTATION
Caltrans® HYDRAULICS

FUNCTIONAL SUPERVISOR: JAI P. THAKUR
CALCULATED-DESIGNED BY: MARTIN CORONADO
CHECKED BY: RALPH M. SASAKI
REVISED BY
DATE REVISED

LAST REVISION 00-00-00
DATE PLOTTED => 12-JUL-2012
TIME PLOTTED => 14:08

| Dist | COUNTY | ROUTE | POST MILES TOTAL PROJECT | SHEET No. | TOTAL SHEETS |
|---|---|---|---|---|---|
| 07 | LA | 5 | 2.4/4.0 | 216 | 1288 |

REGISTERED CIVIL ENGINEER 12-19-11 DATE

3-26-12
PLANS APPROVAL DATE

REGISTERED PROFESSIONAL ENGINEER RALPH M. SASAKI No. 30849 Exp. 3/31/12 CIVIL STATE OF CALIFORNIA

*THE STATE OF CALIFORNIA OR ITS OFFICERS OR AGENTS SHALL NOT BE RESPONSIBLE FOR THE ACCURACY OR COMPLETENESS OF SCANNED COPIES OF THIS PLAN SHEET.*

## NOTES:

1. EXTEND BARS 18" MINIMUM FROM RCB ROOF, INVERT, AND WALLS INTO TRANSITION STRUCTURE AND VISE VERSA. BEND BARS WHERE NECESSARY TO COMPLY WITH THESE DRAINAGE PLANS OR AS DIRECTED BY THE ENGINEER.

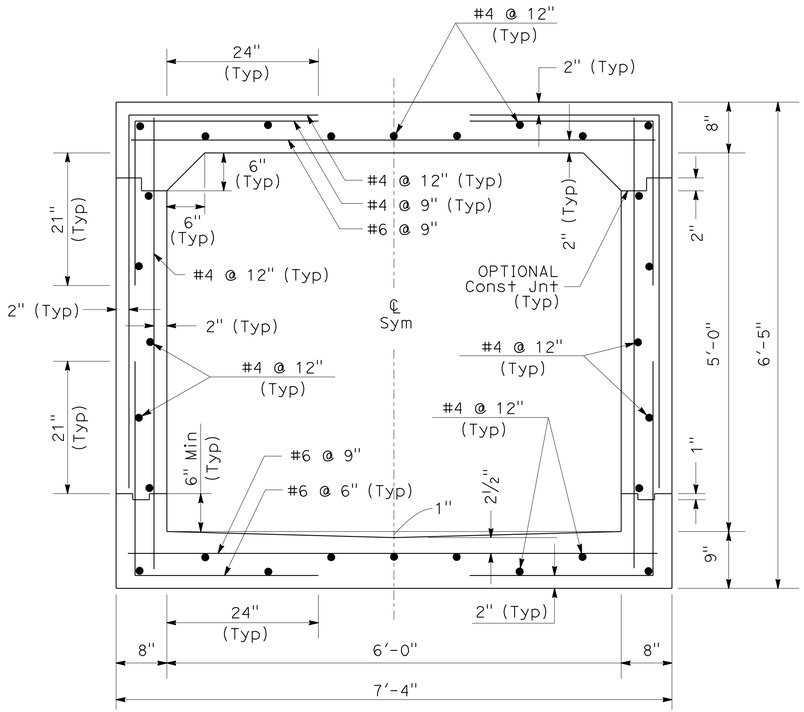


**TYPICAL**
**6'-0" x 5'-0" RCB**

**DRAINAGE SYSTEM No. 4 (a)**

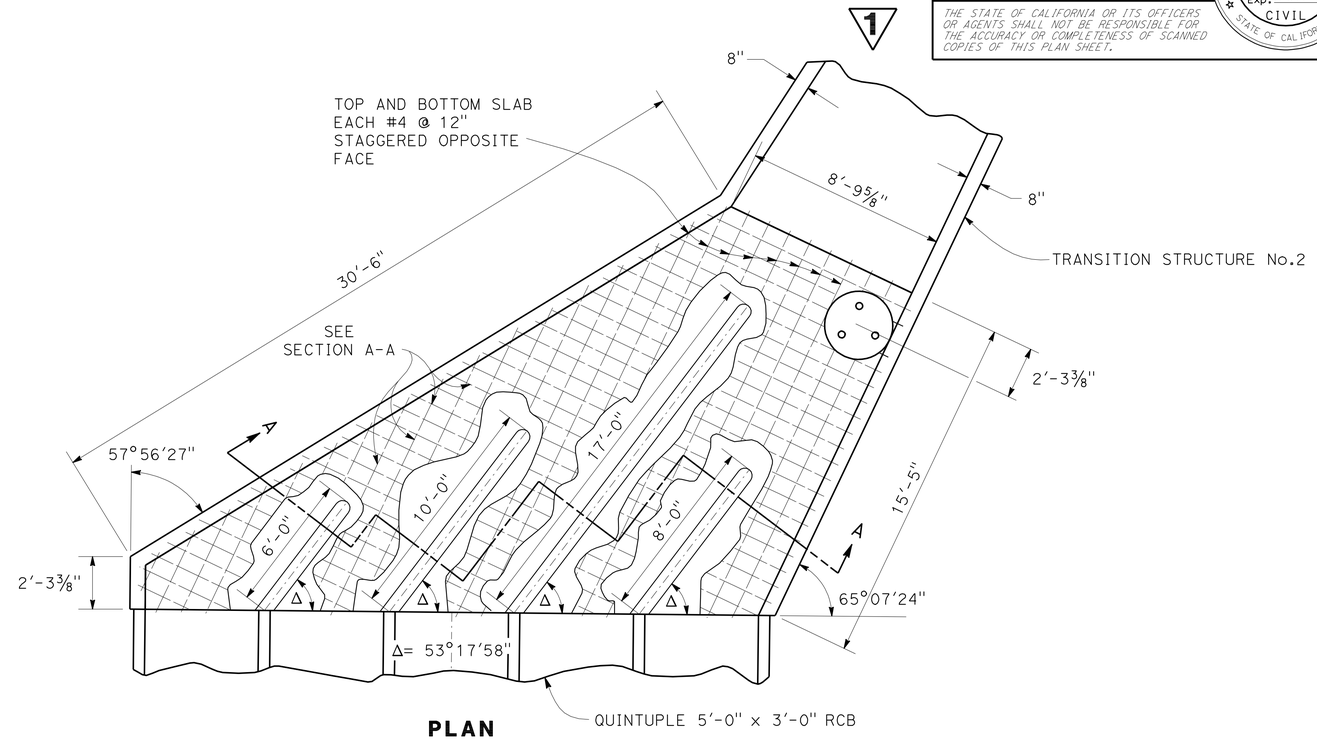


**PLAN**

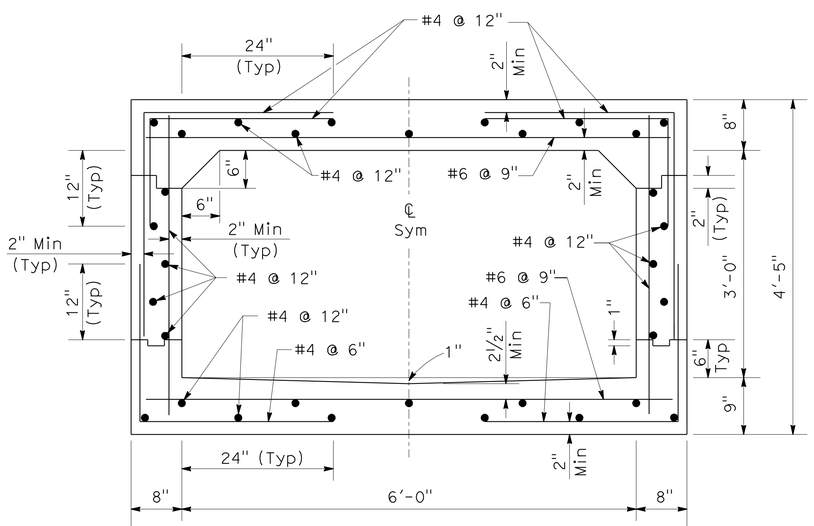


**TYPICAL**
**6'-0" x 3'-0" RCB**

**DRAINAGE SYSTEM No. 4 (d)**

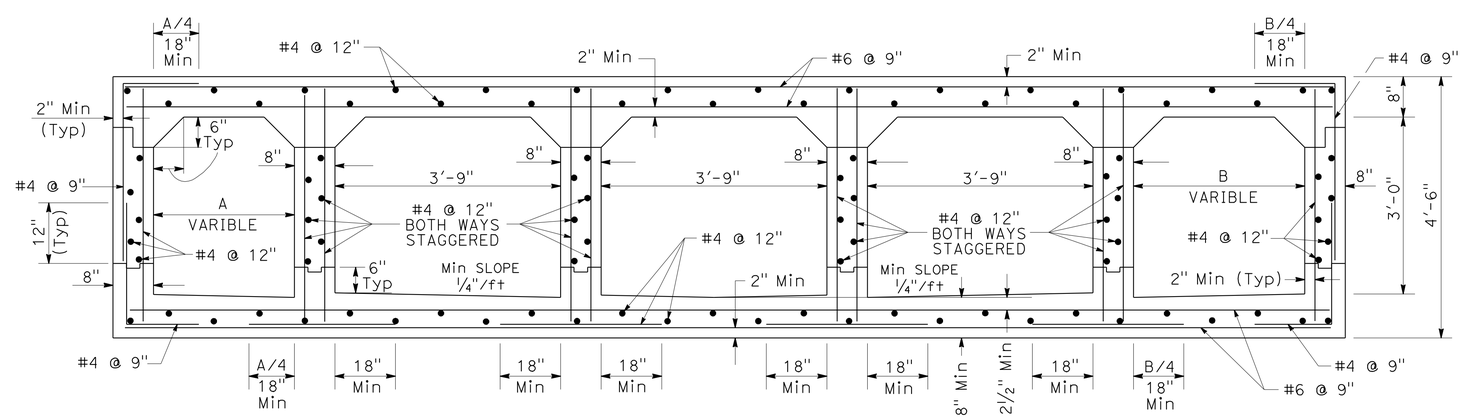


**SECTION A-A**

**TRANSITION STRUCTURE No. 5**

**DRAINAGE SYSTEM No. 4 (i)**

**1 REVISED PER ADDENDUM No. 1 DATED JULY 13, 2012**

# DRAINAGE DETAILS

NO SCALE

**DD-49**

STATE OF CALIFORNIA - DEPARTMENT OF TRANSPORTATION
Caltrans HYDRAULICS

FUNCTIONAL SUPERVISOR: JAI P. THAKUR
CALCULATED-DESIGNED BY: MARTIN CORONADO
CHECKED BY: RALPH M. SASAKI
REVISED BY
DATE REVISED

LAST REVISION 00-00-00 | DATE PLOTTED => 12-JUL-2012 | TIME PLOTTED => 14:08

| Dist | COUNTY | ROUTE | POST MILES TOTAL PROJECT | SHEET No. | TOTAL SHEETS |
|---|---|---|---|---|---|
| 07 | LA | 5 | 2.4/4.0 | 217 | 1288 |

REGISTERED CIVIL ENGINEER 12-19-11 DATE

3-26-12
PLANS APPROVAL DATE

REGISTERED PROFESSIONAL ENGINEER RALPH M. SASAKI No. 30849 Exp. 3/31/12 CIVIL STATE OF CALIFORNIA

*THE STATE OF CALIFORNIA OR ITS OFFICERS OR AGENTS SHALL NOT BE RESPONSIBLE FOR THE ACCURACY OR COMPLETENESS OF SCANNED COPIES OF THIS PLAN SHEET.*

1

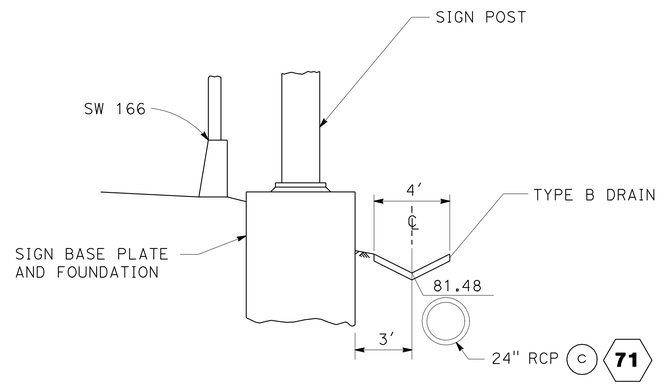


**SECTION A-A**

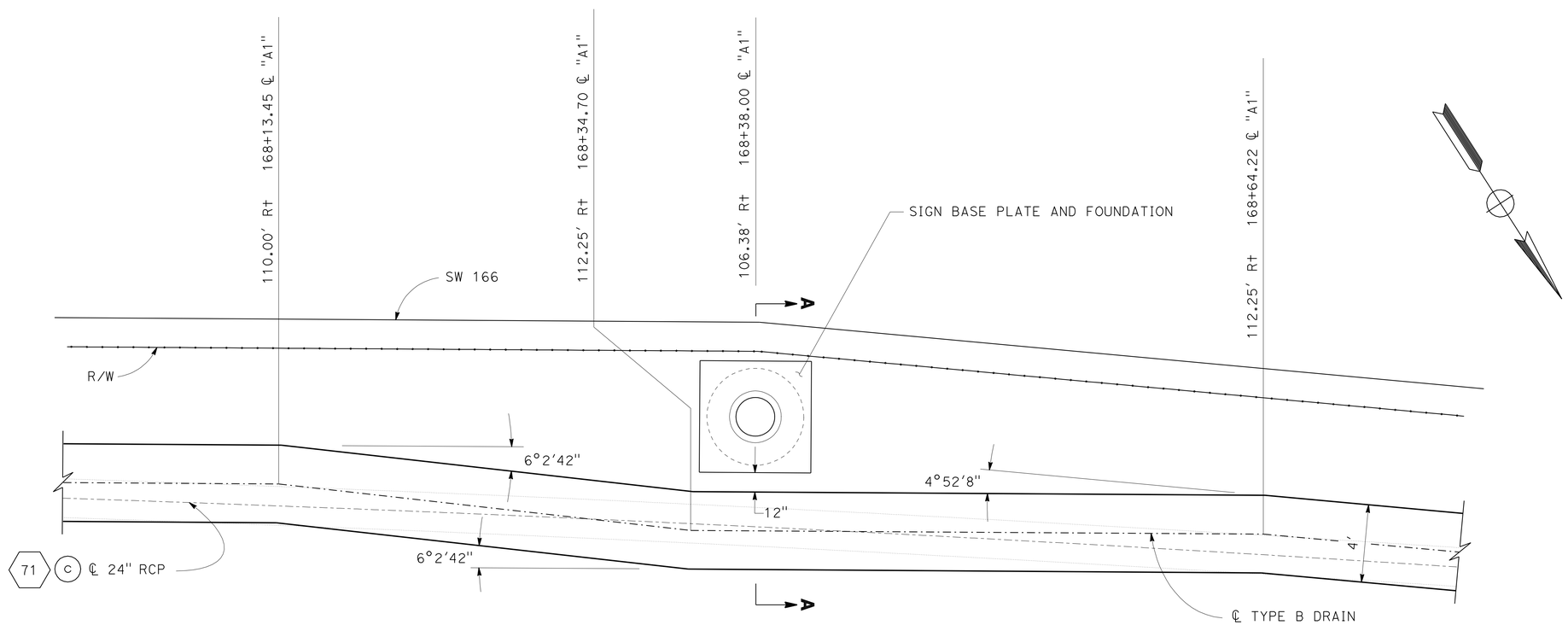


**PLAN**

**TYPE B DRAIN AT SIGN No. 102**

**DRAINAGE SYSTEM No. 14 (a)**

1 **REVISED PER ADDENDUM No. 1 DATED JULY 13, 2012**

# DRAINAGE DETAILS

NO SCALE

**DD-50**

STATE OF CALIFORNIA - DEPARTMENT OF TRANSPORTATION
Caltrans® HYDRAULICS

FUNCTIONAL SUPERVISOR: JAI P. THAKUR
CALCULATED-DESIGNED BY: MARTIN CORONADO
CHECKED BY: RALPH M. SASAKI
REVISED BY
DATE REVISED

LAST REVISION 00-00-00 | DATE PLOTTED => 12-JUL-2012 | TIME PLOTTED => 14:08

| Dist | COUNTY | ROUTE | POST MILES TOTAL PROJECT | SHEET No. | TOTAL SHEETS |
|---|---|---|---|---|---|
| 07 | LA | 5 | 2.4/4.0 | 226 | 1288 |

REGISTERED CIVIL ENGINEER 12-19-11 DATE

3-26-12
PLANS APPROVAL DATE

REGISTERED PROFESSIONAL ENGINEER RALPH M. SASAKI No. 30849 Exp. 3/31/12 CIVIL STATE OF CALIFORNIA

*THE STATE OF CALIFORNIA OR ITS OFFICERS OR AGENTS SHALL NOT BE RESPONSIBLE FOR THE ACCURACY OR COMPLETENESS OF SCANNED COPIES OF THIS PLAN SHEET.*

1

NOTES:

1. JOINTS ARE STANDARD JOINT TYPE
2. LD ( ) - LOCAL DEPRESSIONS (CASE)
3. FOR ADDITIONAL QUANTITIES, SEE STRUCTURAL PLANS

# SUMMARY OF DRAINAGE QUANTITIES

| DRAINAGE PLAN SHEET No. | DRAINAGE SYSTEM No. ⬡ | DRAINAGE UNIT ◯ | "H" OR "V" | MINOR CONCRETE (MINOR STRUCTURE) (SEE NOTE 3) | MINOR CONCRETE (DITCH LINING) | MINOR CONCRETE (CHANNEL LINING) | MINOR CONCRETE (GUTTER DEPRESSION) | MINOR CONCRETE (BACKFILL) | STRUCTURAL CONCRETE, BOX CULVERT (SEE NOTE 3) | BAR REINFORCING STEEL (BOX CULVERT) (SEE NOTE 3) | MISCELLANEOUS IRON AND STEEL (SEE NOTE 3) | 15" RCP | 18" RCP | 24" RCP | 30" RCP | 24" PLASTIC PIPE | 18" SLOTTED CSP (0.079" THICK) | 6" NON-PERFORATED PLASTIC PIPE UNDERDRAIN | 36" PRECAST CONCRETE PIPE MANHOLE | ABANDON CULVERT | ABANDON MANHOLE | SAND BACKFILL | PERVIOUS BACKFILL MATERIAL (N) | CAP INLET | REMOVE CONCRETE | REMOVE PIPE | REMOVE RCB CULVERT | REMOVE INLET | REMOVE MANHOLE | DITCH EXCAVATION | CABLE RAILING (*) | TYPE 18-9 FRAME AND GRATE (N) | TYPE 24-12 FRAME AND GRATE (N) | TYPE U45 MANHOLE FRAME AND COVER (N) | TYPE U46 MANHOLE FRAME AND COVER (N) | CATCH BASIN FRAME AND GRATE (N) | CATCH BASIN MH FRAME AND COVER (N) | MAXIMUM COVER | DESCRIPTION | STATION |
|---|---|---|---|---|---|---|---|---|---|---|---|---|---|---|---|---|---|---|---|---|---|---|---|---|---|---|---|---|---|---|---|---|---|---|---|---|---|---|---|---|
| | | | FT | CY | CY | CY | CY | CY | CY | LB | LB | LF | LF | LF | LF | LF | LF | LF | LF | LF | EA | CY | CY | EA | CY | LF | CY | EA | EA | CY | LF | EA | EA | EA | EA | EA | EA | FT | | |
| 3 | 4 | a | | | | | | | 91.94 | 16617 | | | | | | | | | | | | | | | | | | | | | | | | | | | | | 6' X 5' X 145' RCB | 35.07' Rt 4+51.59 ℄ "SHOE1" |
| | | b | 2.4 | | | | | | | | 435 | | | | | | | | 2.4 | | | | | | | | | | | | | | 1 | | | | | | MH No. 3 | |
| | | c | | | | | | | 5.82 | 917 | | | | | | | | | | | | | | | | | | | | | | | | | | | | | Trans Str No. 2 (Mod) | L = 10.0' |
| | | d | | | | | | | 104.68 | 13588 | | | | | | | | | | | | | | | | | | | | | | | | | | | | | 6' X 3' X 197.5' RCB | 35.65' Rt 6+06.60 ℄ "SHOE1" |
| | | e | 5.2 | 2.03 | | | | | | | 560 | | | | | | | | | | | | | | | | | | | | | | | | 1 | | | | CGCB (Mod) | 31.87' Rt 7+48.02 ℄ "SHOE1" |
| | | f | | | | | | | 12.63 | 1639 | | | | | | | | | | | | | | | | | | | | | | | | | | | | | Trans Str No. 2 | L = 21.4' |
| | | g | 3.3 | | | | | | | | 435 | | | | | | | | 3.3 | | | | | | | | | | | | | | 1 | | | | | | MH No. 3 | |
| | | h | | | | | | | 24.95 | 3486 | | | | | | | | | | | | | | | | | | | | | | | | | | | | | Trans Str No. 5 | L = 22.8' |
| | | i | | | | | | | 261.55 | 48447 | | | | | | | | | | | | | | | | | | | | | | | | | | | | | 5-5' X 3' X 167.5' RCB | 4.78' Rt 157+12.99 ℄ "A1" |
| | | j | | | | | | | 3.02 | | | | | | | | | | | | | | | | | | | | | | | | | | | | | | CULVERT EXTENSION | 4.78' Rt 157+12.99 ℄ "A1" |
| | | k | | | | | | | 0.54 | 65 | | | | | | | | | | | | | | | | | | | | | | | | | | | | | Culv EXTENSION Det B | 35.07' Rt 4+51.59 ℄ "SHOE1" |
| | | l | | | | | | | | 150 | | | | | | | | | | | | | | | | | | | | | | | | | | | | | JS (Exist RCB TO RCB) | 35.12' Rt 4+65.67 ℄ "SHOE1" |
| SHEET TOTAL | | | | 2.03 | | | | | 505.13 | 84909 | 1430 | | | | | | | | 5.7 | | | | | | | | | | | | | | 2 | | 1 | | | | | |

(*) - INCLUDED IN ROADWAY QUANTITIES
(N) - NOT A SEPARATE PAY ITEM, FOR INFORMATION ONLY

1 REVISED PER ADDENDUM No. 1 DATED JULY 13, 2012

## DRAINAGE QUANTITIES
## DQ-3

STATE OF CALIFORNIA - DEPARTMENT OF TRANSPORTATION
Caltrans® HYDRAULICS

CALCULATED-DESIGNED BY MAY P. FUNG
CHECKED BY RALPH M. SASAKI
FUNCTIONAL SUPERVISOR JAI P. THAKUR
REVISED BY
DATE REVISED

LAST REVISION 00-00-00
DATE PLOTTED => 12-JUL-2012
TIME PLOTTED => 14:08

| Dist | COUNTY | ROUTE | POST MILES TOTAL PROJECT | SHEET No. | TOTAL SHEETS |
|---|---|---|---|---|---|
| 07 | LA | 5 | 2.4/4.0 | 229 | 1288 |

REGISTERED CIVIL ENGINEER 12-19-11 DATE

3-26-12
PLANS APPROVAL DATE

REGISTERED PROFESSIONAL ENGINEER RALPH M. SASAKI No. 30849 Exp. 3/31/12 CIVIL STATE OF CALIFORNIA

*THE STATE OF CALIFORNIA OR ITS OFFICERS OR AGENTS SHALL NOT BE RESPONSIBLE FOR THE ACCURACY OR COMPLETENESS OF SCANNED COPIES OF THIS PLAN SHEET.*

NOTES:

1. JOINTS ARE STANDARD JOINT TYPE
2. LD ( ) - LOCAL DEPRESSIONS (CASE)
3. FOR ADDITIONAL QUANTITIES, SEE STRUCTURE PLANS

# SUMMARY OF DRAINAGE QUANTITIES

1

| DRAINAGE PLAN SHEET No. | DRAINAGE SYSTEM No. ⬡ | DRAINAGE UNIT ○ | "H" OR "V" FT | MINOR CONCRETE (MINOR STRUCTURE) (SEE NOTE 3) CY | MINOR CONCRETE (DITCH LINING) CY | MINOR CONCRETE (CHANNEL LINING) CY | MINOR CONCRETE (GUTTER DEPRESSION) CY | MINOR CONCRETE (BACKFILL) CY | STRUCTURAL CONCRETE, BOX CULVERT (SEE NOTE 3) CY | BAR REINFORCING STEEL (BOX CULVERT) (SEE NOTE 3) LB | MISCELLANEOUS IRON AND STEEL (SEE NOTE 3) LB | 15" RCP LF | 18" RCP LF | 24" RCP LF | 30" RCP LF | 24" PLASTIC PIPE LF | 18" SLOTTED CSP (0.079" THICK) LF | 6" NON-PERFORATED PLASTIC PIPE UNDERDRAIN LF | 36" PRECAST CONCRETE PIPE MANHOLE LF | ABANDON CULVERT LF | ABANDON MANHOLE EA | SAND BACKFILL CY | PERVIOUS BACKFILL MATERIAL (N) CY | CAP INLET EA | REMOVE CONCRETE CY | REMOVE PIPE LF | REMOVE RCB CULVERT CY | REMOVE INLET EA | REMOVE MANHOLE EA | DITCH EXCAVATION CY | CABLE RAILING (*) LF | TYPE 18-9 FRAME AND GRATE (N) EA | TYPE 24-12 FRAME AND GRATE (N) EA | TYPE U45 MANHOLE FRAME AND COVER (N) EA | TYPE U46 MANHOLE FRAME AND COVER (N) EA | CATCH BASIN FRAME AND GRATE (N) EA | CATCH BASIN MH FRAME AND COVER (N) EA | MAXIMUM COVER FT | DESCRIPTION | STATION |
|---|---|---|---|---|---|---|---|---|---|---|---|---|---|---|---|---|---|---|---|---|---|---|---|---|---|---|---|---|---|---|---|---|---|---|---|---|---|---|---|
| 3 | 6 | a | | 0.57 | | | | | | | | | | | | | | | | | | | | | | | | | | | | | | | | | | JS No. 3 | 119.84′ L+ 157+13.78 ℄ "A1" |
| | | b | | | | | | | | | | | | 71.4 | | | | | | | | | | | | | | | | | | | | | | | 3.6 | 24" RCP | |
| | | c | 5.2 | 1.99 | | | | | | | 580 | | | | | | | | | | | | | | | | | | | | 2 | | | | | | | GD-1 INLET | 121.48′ L+ 158+00.00 ℄ "A1" |
| 3 | 7 | a | 2.3 | 0.67 | | | | | | | 580 | | | | | | | | | | | | | | | | | | | | 2 | | | | | | | GD-1 INLET (Mod) | 121.95′ L+ 157+13.79 ℄ "A1" |
| 3 | 8 | a | | 0.57 | | | | | | | | | | | | | | | | | | | | | | | | | | | | | | | | | | JS No. 3 | 97.56′ R+ 157+12.61 ℄ "A1" |
| | | b | | | | | | 53.29 | | | | | | 171.9 | | | | | | | | | | | | | | | | | | | | | | | | 24" RCP W/ BACKFILL | Conc BACKFILL L = 171.9′ |
| | | c | 3.7 | 1.55 | | | | | | | 580 | | | | | | | | | | | | | | | | | | | | 2 | | | | | | | GD-1 INLET | 97.42′ R+ 159+00.00 ℄ "A1" |
| 3 | 9 | a | | 1.11 | | | | | | | | | | | | | | | | | | | | | | | | | | | | | | | | | | JS No. 3 | 96.93′ R+ 160+11.58 ℄ "A1" |
| | | b | | | | | | | | | | | | | 75.3 | | | | | | | | | | | | | | | | | | | | | | 4.1 | 30" RCP | |
| | | c | 6.3 | 2.31 | | | | | | | 580 | | | | | | | | | | | | | | | | | | | | 2 | | | | | | | GD-1 INLET | 100.43′ R+ 161+00.00 ℄ "A1" |
| | | d | | | | | | | | | | | | | 108.1 | | | | | | | | | | | | | | | | | | | | | | 3.9 | 30" RCP | |
| | | e | 5.8 | 2.16 | | | | | | | 580 | | | | | | | | | | | | | | | | | | | | 2 | | | | | | | GD-1 INLET | 101.00′ R+ 162+11.10 ℄ "A1" |
| | | f | | | | | | | | | | | | 85.9 | | | | | | | | | | | | | | | | | | | | | | | 3.6 | 24" RCP | |
| | | g | 5.2 | 1.99 | | | | | | | 580 | | | | | | | | | | | | | | | | | | | | 2 | | | | | | | GD-1 INLET | 101.00′ R+ 163+00.00 ℄ "A1" |
| SHEET TOTAL | | | | 12.92 | | | | 53.29 | | | 3480 | | | 329.2 | 183.4 | | | | | | | | | | | | | | | | 12 | | | | | | | | |

(*) - INCLUDED IN ROADWAY QUANTITIES
(N) - NOT A SEPARATE PAY ITEM, FOR INFORMATION ONLY

1 REVISED PER ADDENDUM No. 1 DATED JULY 13, 2012

## DRAINAGE QUANTITIES
## DQ-6

CALCULATED-DESIGNED BY MAY P. FUNG
CHECKED BY RALPH M. SASAKI
REVISED BY
DATE REVISED
FUNCTIONAL SUPERVISOR JAI P. THAKUR

STATE OF CALIFORNIA - DEPARTMENT OF TRANSPORTATION
Caltrans HYDRAULICS

LAST REVISION 00-00-00
DATE PLOTTED => 12-JUL-2012
TIME PLOTTED => 14:08

| Dist | COUNTY | ROUTE | POST MILES TOTAL PROJECT | SHEET No. | TOTAL SHEETS |
|---|---|---|---|---|---|
| 07 | LA | 5 | 2.4/4.0 | 233 | 1288 |

1

REGISTERED CIVIL ENGINEER 12-19-11 DATE

3-26-12
PLANS APPROVAL DATE

REGISTERED PROFESSIONAL ENGINEER RALPH M. SASAKI No. 30849 Exp. 3/31/12 CIVIL STATE OF CALIFORNIA

*THE STATE OF CALIFORNIA OR ITS OFFICERS OR AGENTS SHALL NOT BE RESPONSIBLE FOR THE ACCURACY OR COMPLETENESS OF SCANNED COPIES OF THIS PLAN SHEET.*

NOTES:

1. JOINTS ARE STANDARD JOINT TYPE
2. LD ( ) - LOCAL DEPRESSIONS (CASE)
3. " FOR ADDITIONAL QUANTITIES, SEE STRUCTURE PLANS"

# SUMMARY OF DRAINAGE QUANTITIES

| DRAINAGE PLAN SHEET No. | DRAINAGE SYSTEM No. ⬡ | DRAINAGE UNIT ◯ | "H" OR "V" OR "M" (FT) | MINOR CONCRETE (MINOR STRUCTURE) (SEE NOTE 3) (CY) | MINOR CONCRETE (DITCH LINING) (CY) | MINOR CONCRETE (CHANNEL LINING) (CY) | MINOR CONCRETE (GUTTER DEPRESSION) (CY) | MINOR CONCRETE (BACKFILL) (CY) | STRUCTURAL CONCRETE, BOX CULVERT (SEE NOTE 3) (CY) | BAR REINFORCING STEEL (BOX CULVERT) (SEE NOTE 3) (LB) | MISCELLANEOUS IRON AND STEEL (SEE NOTE 3) (LB) | 15" RCP (LF) | 18" RCP (LF) | 24" RCP (LF) | 30" RCP (LF) | 24" PLASTIC PIPE (LF) | 18" SLOTTED CSP (0.079" THICK) (LF) | 6" NON-PERFORATED PLASTIC PIPE UNDERDRAIN (LF) | 36" PRECAST CONCRETE PIPE MANHOLE (LF) | ABANDON CULVERT (EA) | ABANDON MANHOLE (EA) | SAND BACKFILL (CY) | PERVIOUS MATERIAL (N) (CY) | CAP INLET (EA) | REMOVE CONCRETE (CY) | REMOVE PIPE (LF) | REMOVE RCB CULVERT (CY) | REMOVE INLET (EA) | REMOVE MANHOLE (EA) | DITCH EXCAVATION (CY) | CABLE RAILING (*) (LF) | TYPE 18-9 FRAME AND GRATE (N) (EA) | TYPE 24-12 FRAME AND GRATE (N) (EA) | TYPE U45 MANHOLE FRAME AND COVER (N) (EA) | TYPE U46 MANHOLE FRAME AND COVER (N) (EA) | CATCH BASIN FRAME AND GRATE (N) (EA) | CATCH BASIN MH FRAME AND COVER (N) (EA) | MAXIMUM COVER (FT) | DESCRIPTION | STATION |
|---|---|---|---|---|---|---|---|---|---|---|---|---|---|---|---|---|---|---|---|---|---|---|---|---|---|---|---|---|---|---|---|---|---|---|---|---|---|---|---|
| 4 | 14 | a | | | 32.51 | | | | | | | | | | | | | | | | | | | | | | | | | | | | | | | | | TYPE B DRAIN, L=593.0′ | 110.00′ Rt 164+64.29 ℄ "A1"<br>31.00′ Rt 170+59.52 ⅊ "RC3" |
| 4 | 15 | a | | | 11.63 | | | | | | | | | | | | | | | | | | | | | | | | | | | | | | | | | SIDE GUTTER, L= 218.2′ | 101.00′ Lt 175+32.23 ℄ "A1"<br>101.00′ Lt 177+50.43 ℄ "A1" |
| 4 | 16 | a | | | | | | | 131.16 | 32680 | | | | | | | | | | | | | | | | | | | | | | | | | | | | 3-6′ X 2′ X 130.2′ RCB | 183.14′ Lt 176+00.00 ℄ "A1" |
| | | b | | | | | | | 41.92 | 10417 | | | | | | | | | | | | | | | | | | | | | | | | | | | | 3-6′ X 2′ X 41.5′ RCB | 154.61′ Rt 175+53.65 ℄ "A1" |
| 5 | 17 | a | | | | 6.91 | | | | | | | | | | | | | | | | | | | | | | | | | | | | | | | | Conc CHANNEL, L=28.4′ | 9+71.79 ℄ "RCB1" |
| 5 | 18 | a | | | 5.38 | | | | | | | | | | | | | | | | | | | | | | | | | | | | | | | | | TYPE A DRAIN, L=81.2′ | 172.20′ Lt 179+56.45 ⅊ "RC2" |
| SHEET TOTAL | | | | | 49.52 | 6.91 | | | 173.08 | 43097 | | | | | | | | | | | | | | | | | | | | | | | | | | | | | |

(*) - INCLUDED IN ROADWAY QUANTITIES
(N) - NOT A SEPARATE PAY ITEM, FOR INFORMATION ONLY

1 REVISED PER ADDENDUM No. 1 DATED JULY 13, 2012

DRAINAGE QUANTITIES
DQ-10

STATE OF CALIFORNIA - DEPARTMENT OF TRANSPORTATION
Caltrans HYDRAULICS

FUNCTIONAL SUPERVISOR: JAI P. THAKUR
CALCULATED-DESIGNED BY: MAY P. FUNG
CHECKED BY: RALPH M. SASAKI
REVISED BY
DATE REVISED

LAST REVISION 00-00-00 | DATE PLOTTED => 12-JUL-2012 | TIME PLOTTED => 14:08

| Dist | COUNTY | ROUTE | POST MILES TOTAL PROJECT | SHEET No. | TOTAL SHEETS |
|---|---|---|---|---|---|
| 07 | LA | 5 | 2.4/4.0 | 250 | 1288 |

REGISTERED CIVIL ENGINEER 12-19-11 DATE

3-26-12
PLANS APPROVAL DATE

REGISTERED PROFESSIONAL ENGINEER RALPH M. SASAKI No. 30849 Exp. 3/31/12 CIVIL STATE OF CALIFORNIA

*THE STATE OF CALIFORNIA OR ITS OFFICERS OR AGENTS SHALL NOT BE RESPONSIBLE FOR THE ACCURACY OR COMPLETENESS OF SCANNED COPIES OF THIS PLAN SHEET.*

1

NOTES:

1. JOINTS ARE STANDARD JOINT TYPE
2. LD ( ) - LOCAL DEPRESSIONS (CASE)
3. " FOR ADDITIONAL QUANTITIES, SEE STRUCTURE PLANS"

# SUMMARY OF DRAINAGE QUANTITIES

| DRAINAGE PLAN SHEET No. | DRAINAGE SYSTEM No. ⬡ | DRAINAGE UNIT ◯ | "H" OR "V" FT | MINOR CONCRETE (MINOR STRUCTURE) (SEE NOTE 3) CY | MINOR CONCRETE (DITCH LINING) CY | MINOR CONCRETE (CHANNEL LINING) CY | MINOR CONCRETE (GUTTER DEPRESSION) CY | MINOR CONCRETE (BACKFILL) CY | STRUCTURAL CONCRETE, BOX CULVERT (SEE NOTE 3) CY | BAR REINFORCING STEEL (BOX CULVERT) (SEE NOTE 3) LB | MISCELLANEOUS IRON AND STEEL (SEE NOTE 3) LB | 15" RCP LF | 18" RCP LF | 24" RCP LF | 30" RCP LF | 24" PLASTIC PIPE LF | 18" SLOTTED CSP (0.079" THICK) LF | 6" NON-PERFORATED PLASTIC PIPE UNDERDRAIN LF | 36" PRECAST CONCRETE PIPE MANHOLE LF | ABANDON CULVERT LF | ABANDON MANHOLE EA | SAND BACKFILL CY | PERVIOUS BACKFILL MATERIAL (N) CY | CAP INLET EA | REMOVE CONCRETE CY | REMOVE PIPE LF | REMOVE RCB CULVERT CY | REMOVE INLET EA | REMOVE MANHOLE EA | DITCH EXCAVATION CY | CABLE RAILING (*) LF | TYPE 18-9 FRAME AND GRATE (N) EA | TYPE 24-12 FRAME AND GRATE (N) EA | TYPE U45 MANHOLE FRAME AND COVER (N) EA | TYPE U46 MANHOLE FRAME AND COVER (N) EA | CATCH BASIN FRAME AND GRATE (N) EA | CATCH BASIN MH FRAME AND COVER (N) EA | MAXIMUM COVER FT | DESCRIPTION | STATION |
|---|---|---|---|---|---|---|---|---|---|---|---|---|---|---|---|---|---|---|---|---|---|---|---|---|---|---|---|---|---|---|---|---|---|---|---|---|---|---|---|---|
| 9 | 49 | a | | | | | | | | | | | | | | | | | | | | | | | | 51.7 | | | | | | | | | | | | 2.4 | REMOVE 18"X29" CMPA W/Conc ENCASEMENT | |
| | | b | | | | | | | | | | | | | | | | | | | | | | | | | | 1 | | | | | | | | | | | REMOVE INLET | 118.11' L+ 151+47.47 ℄ "A1" |
| | | c | | | | | | | | | | | | | | | | | | | | | | | | 58.1 | | | | | | | | | | | | | REMOVE 18"X29" CMPA | |
| | | d | | | | | | | | | | | | | | | | | | | | | | | | | | 1 | | | | | | | | | | | REMOVE JC 3-C | 59.40' L+ 151+48.24 ℄ "A1" |
| | | e | | | | | | | | | | | | | | | | | | | | | | | | 52.1 | | | | | | | | | | | | 2.4 | REMOVE 24" RCP | |
| | | f | | | | | | | | | | | | | | | | | | | | | | | 1.20 | | | | | | | | | | | | | | REMOVE HEADWALL | 5.87' L+ 151+48.98 ℄ "A1" |
| | | g | | | | | | | | | | | | | | | | | | | | | | | | | | 1 | | | | | | | | | | | REMOVE INLET | 20.42' L+ 151+94.60 ⅊"SFRS1" |
| | | h | | | | | | | | | | | | | | | | | | | | | | | | | | 1 | | | | | | | | | | | REMOVE INLET | 20.42' L+ 151+94.60 ⅊"SFRS1" |
| | | | | | | | | | | | | | | | | | | | | | | | | | | | | | | | | | | | | | | | | |
| 10 | 50 | a | | | | | | | | | | | | | | | | | | | | | | | 14.12 | | | | | | | | | | | | | | REMOVE TRANSITION Str | 386.94' L+ 156+51.19 ℄ "A1" |
| | | b | | | | | | | | | | | | | | | | | | | | | | | | | 144.00 | | | | | | | | | | | | REMOVE 6'X3'RCB | 36.33' R+ 04+51.74 ⅊"SHOE1" |
| | | c | | | | | | | | | | | | | | | | | | | | | | | | | 24.92 | | | | | | | | | | | | REMOVE 4.5'X2'RCB | 0.00' R+ 06+05.58 ⅊"SHOE1" |
| | | d | | | | | | | | | | | | | | | | | | | | | | | 2.00 | | | | | | | | | | | | | | REMOVE HEADWALL | 5.20' L+ 157+23.88 ℄ "A1" |
| | | e | | | | | | | | | | | | | | | | | | | | | | | | | | 1 | | | | | | | | | | | REMOVE INLET | 253.38' L+ 157+40.45 ℄ "A1" |
| | | f | | | | | | | | | | | | | | | | | | | | | | | 16.65 | | | | | | | | | | | | | | REMOVE TRANSITION Str | 178.97' L+ 157+28.69 ℄ "A1" |
| | | g | | | | | | | | | | | | | | | | | | | | | | | | | 86.39 | | | | | | | | | | | | REMOVE Dbl - 8'X3'RCB | 162.95' L+ 157+12.35 ℄ "A1" |
| | | h | | | | | | | | | | | | | | | | | | | | | | | | | 42.38 | | | | | | | | | | | | REMOVE 3'X3'RCB | 162.95' L+ 157+01.10 ℄ "A1" |
| | | i | | | | | | | | | | | | | | | | | | | | | | | | | | 1 | | | | | | | | | | | REMOVE JC 3-C | 58.94' L+ 157+01.65 ℄ "A1" |
| | | j | | | | | | | | | | | | | | | | | | | | | | | 9.04 | | | | | | | | | | | | | | REMOVE Conc CHANNEL | 156+99.00 ℄ "A1" TO 157+26.99 ℄ "A1" |
| SHEET TOTAL | | | | | | | | | | | | | | | | | | | | | | | | | 43.01 | 161.9 | 297.69 | 6 | | | | | | | | | | | | |

(*) - INCLUDED IN ROADWAY QUANTITIES
(N) - NOT A SEPARATE PAY ITEM, FOR INFORMATION ONLY

1 **REVISED PER ADDENDUM No. 1 DATED JULY 13, 2012**

**DRAINAGE QUANTITIES**
**DQ-27**

STATE OF CALIFORNIA - DEPARTMENT OF TRANSPORTATION
Caltrans HYDRAULICS

FUNCTIONAL SUPERVISOR: JAI P. THAKUR
CALCULATED-DESIGNED BY: MAY P. FUNG
CHECKED BY: RALPH M. SASAKI
REVISED BY
DATE REVISED

LAST REVISION 00-00-00
DATE PLOTTED => 12-JUL-2012
TIME PLOTTED => 14:08

| Dist | COUNTY | ROUTE | POST MILES TOTAL PROJECT | SHEET No. | TOTAL SHEETS |
|---|---|---|---|---|---|
| 07 | LA | 5 | 2.4/4.0 | 251 | 1288 |

REGISTERED CIVIL ENGINEER 12-19-11 DATE

3-26-12
PLANS APPROVAL DATE

REGISTERED PROFESSIONAL ENGINEER RALPH M. SASAKI No. 30849 Exp. 3/31/12 CIVIL STATE OF CALIFORNIA

*THE STATE OF CALIFORNIA OR ITS OFFICERS OR AGENTS SHALL NOT BE RESPONSIBLE FOR THE ACCURACY OR COMPLETENESS OF SCANNED COPIES OF THIS PLAN SHEET.*

1

NOTES:

1. JOINTS ARE STANDARD JOINT TYPE
2. LD ( ) - LOCAL DEPRESSIONS (CASE)
3. " FOR ADDITIONAL QUANTITIES, SEE STRUCTURE PLANS"

# SUMMARY OF DRAINAGE QUANTITIES

| DRAINAGE PLAN SHEET No. | DRAINAGE SYSTEM No. ⬡ | DRAINAGE UNIT ○ | "H" OR "V" FT | MINOR CONCRETE (MINOR STRUCTURE) (SEE NOTE 3) CY | MINOR CONCRETE (DITCH LINING) CY | MINOR CONCRETE (CHANNEL LINING) CY | MINOR CONCRETE (GUTTER DEPRESSION) CY | MINOR CONCRETE (BACKFILL) CY | STRUCTURAL CONCRETE, BOX CULVERT (SEE NOTE 3) CY | BAR REINFORCING STEEL (BOX CULVERT) (SEE NOTE 3) LB | MISCELLANEOUS IRON AND STEEL (SEE NOTE 3) LB | 15" RCP LF | 18" RCP LF | 24" RCP LF | 30" RCP LF | 24" PLASTIC PIPE LF | 18" SLOTTED CSP (0.079" THICK) LF | 6" NON-PERFORATED PLASTIC PIPE UNDERDRAIN LF | 36" PRECAST CONCRETE PIPE MANHOLE LF | ABANDON CULVERT LF | ABANDON MANHOLE EA | SAND BACKFILL CY | PERVIOUS BACKFILL MATERIAL (N) CY | CAP INLET EA | REMOVE CONCRETE CY | REMOVE PIPE LF | REMOVE RCB CULVERT CY | REMOVE INLET EA | REMOVE MANHOLE EA | DITCH EXCAVATION CY | CABLE RAILING (*) LF | TYPE 18-9 FRAME AND GRATE (N) EA | TYPE 24-12 FRAME AND GRATE (N) EA | TYPE U45 MANHOLE FRAME AND COVER (N) EA | TYPE U46 MANHOLE FRAME AND COVER (N) EA | CATCH BASIN FRAME AND GRATE (N) EA | CATCH BASIN MANHOLE FRAME AND COVER (N) EA | MAXIMUM COVER FT | DESCRIPTION | STATION |
|---|---|---|---|---|---|---|---|---|---|---|---|---|---|---|---|---|---|---|---|---|---|---|---|---|---|---|---|---|---|---|---|---|---|---|---|---|---|---|---|
| 10 | 51 | a | | | | | | | | | | | | | | | | | | | | | | | 1.90 | | | | | | | | | | | | | REMOVE HEADWALL | 107.03′ R+ 96+74.62 ℄ "SHOE1" |
| | | b | | | | | | | | | | | | | | | | | | | | | | | | | 30.92 | | | | | | | | | | | REMOVE 3′X3′ RCB | 18.45′ L+ 08+33.61 ℄ "SHOE1" |
| | | c | | | | | | | | | | | | | | | | | | | | | | | | | | 1 | | | | | | | | | | REMOVE INLET | 105.41′ R+ 97+90.48 ℄ "SHOE1" |
| | | d | | | | | | | | | | | | | | | | | | | | | | | | | 19.47 | | | | | | | | | | | REMOVE 3′X3′ RCB | 18.45′ L+ 09+42.34 ℄ "SHOE1" |
| | | e | | | | | | | | | | | | | | | | | | | | | | | | | | 1 | | | | | | | | | | REMOVE JC 3-C | 105.56′ R+ 98+62.53 ℄ "SHOE1" |
| | | f | | | | | | | | | | | | | | | | | | | | | | | | | 16.70 | | | | | | | | | | | REMOVE 3′X3′ RCB | 19.39′ L+ 10+14.36 ℄ "SHOE1" |
| | | g | | | | | | | | | | | | | | | | | | | | | | | 3.99 | | | | | | | | | | | | | REMOVE HEADWALL | 105.52′ R+ 99+26.05 ℄ "SHOE1" |
| 11 | 52 | a | | | | | | | | | | | | | | | | | | | | | | | | | | 1 | | | | | | | | | | REMOVE INLET | 55.86′ L+ 169+93.50 ℄ "A1" |
| | | b | | | | | | | | | | | | | | | | | | | | | | | | 99.4 | | | | | | | | | | | 0.9 | REMOVE 18" RCP | |
| | | c | | | | | | | | | | | | | | | | | | | | | | | | | | 1 | | | | | | | | | | REMOVE INLET | 49.08′ L+ 170+92.73 ℄ "A1" |
| | | d | | | | | | | | | | | | | | | | | | | | | | | | 99.3 | | | | | | | | | | | 1.3 | REMOVE 18" RCP | |
| | | e | | | | | | | | | | | | | | | | | | | | | | | | | | 1 | | | | | | | | | | REMOVE INLET | 40.00′ L+ 171+91.40 ℄ "A1" |
| | | f | | | | | | | | | | | | | | | | | | | | | | | | 197.8 | | | | | | | | | | | 4.4 | REMOVE 18" RCP | |
| | | g | | | | | | | | | | | | | | | | | | | | | | | | | | 1 | | | | | | | | | | REMOVE JC 3-C | 10.42′ L+ 173+86.98 ℄ "A1" |
| | | h | | | | | | | | | | | | | | | | | | | | | | | | 178.0 | | | | | | | | | | | 8.7 | REMOVE 18" RCP | |
| SHEET TOTAL | | | | | | | | | | | | | | | | | | | | | | | | | 5.89 | 574.5 | 67.09 | 6 | | | | | | | | | | | |

(*) - INCLUDED IN ROADWAY QUANTITIES
(N) - NOT A SEPARATE PAY ITEM, FOR INFORMATION ONLY

1 REVISED PER ADDENDUM No. 1 DATED JULY 13, 2012

## DRAINAGE QUANTITIES
## DQ-28

STATE OF CALIFORNIA - DEPARTMENT OF TRANSPORTATION
Caltrans® HYDRAULICS

FUNCTIONAL SUPERVISOR: JAI P. THAKUR
CALCULATED-DESIGNED BY: MAY P. FUNG
CHECKED BY: RALPH M. SASAKI
REVISED BY
DATE REVISED

LAST REVISION 00-00-00
DATE PLOTTED => 12-JUL-2012
TIME PLOTTED => 14:08

| Dist | COUNTY | ROUTE | POST MILES TOTAL PROJECT | SHEET No. | TOTAL SHEETS |
|---|---|---|---|---|---|
| 07 | LA | 5 | 2.4/4.0 | 257A | 1288 |

12-19-11
REGISTERED CIVIL ENGINEER DATE

3-26-12
PLANS APPROVAL DATE

REGISTERED PROFESSIONAL ENGINEER RALPH M. SASAKI No. 30849 Exp. 3/31/12 CIVIL STATE OF CALIFORNIA

*THE STATE OF CALIFORNIA OR ITS OFFICERS OR AGENTS SHALL NOT BE RESPONSIBLE FOR THE ACCURACY OR COMPLETENESS OF SCANNED COPIES OF THIS PLAN SHEET.*

1

NOTES:

1. JOINTS ARE STANDARD JOINT TYPE
2. LD ( ) - LOCAL DEPRESSIONS (CASE)
3. " FOR ADDITIONAL QUANTITIES, SEE STRUCTURE PLANS"

# SUMMARY OF DRAINAGE QUANTITIES

| DRAINAGE PLAN SHEET No. | DRAINAGE SYSTEM No. ⬡ | DRAINAGE UNIT ◯ | "H" OR "V" (FT) | MINOR CONCRETE (MINOR STRUCTURE) (CY) | MINOR CONCRETE (DITCH LINING) (CY) | MINOR CONCRETE (CHANNEL LINING) (CY) | MINOR CONCRETE (GUTTER DEPRESSION) (CY) | MINOR CONCRETE (BACKFILL) (CY) | STRUCTURAL CONCRETE, BOX CULVERT (CY) | BAR REINFORCING STEEL (BOX CULVERT) (LB) | MISCELLANEOUS IRON AND STEEL (LB) | 15" RCP (LF) | 18" RCP (LF) | 24" RCP (LF) | 30" RCP (LF) | 24" PLASTIC PIPE (LF) | 18" SLOTTED CSP (0.079" THICK) (LF) | 6" NON-PERFORATED PLASTIC PIPE UNDERDRAIN (LF) | 36" PRECAST CONCRETE PIPE MANHOLE (LF) | ABANDON CULVERT (LF) | ABANDON MANHOLE (EA) | SAND BACKFILL (CY) | PERVIOUS MATERIAL (N) (CY) | CAP INLET (EA) | REMOVE CONCRETE (CY) | REMOVE PIPE (LF) | REMOVE RCB CULVERT (CY) | REMOVE INLET (EA) | REMOVE MANHOLE (EA) | DITCH EXCAVATION (CY) | CABLE RAILING (*) (LF) | TYPE 18-9 FRAME AND GRATE (N) (EA) | TYPE 24-12 FRAME AND GRATE (N) (EA) | TYPE U45 MANHOLE FRAME AND COVER (N) (EA) | TYPE U46 MANHOLE FRAME AND COVER (N) (EA) | CATCH BASIN FRAME AND GRATE (N) (EA) | CATCH BASIN MH FRAME AND COVER (N) (EA) | MAXIMUM COVER (FT) | DESCRIPTION | STATION |
|---|---|---|---|---|---|---|---|---|---|---|---|---|---|---|---|---|---|---|---|---|---|---|---|---|---|---|---|---|---|---|---|---|---|---|---|---|---|---|---|
| 4 | 71 | a | | | | | | | | | | | | 293.5 | | | | | | | | | | | | | | | | | | | | | | | | 2.8 | 24" RCP | |
| | | b | 3.6 | 1.08 | | | | | | | 326 | | | | | | | | | | | | | | | | | | | | | 1 | | | | | | TYPE G1 INLET | 110.00′ R† 167+59.38 ℄ "A1" |
| | | c | | | | | | | | | | | | 297.0 | | | | | | | | | | | | | | | | | | | | | | | | 2.6 | 24" RCP | |
| | | d | 3.9 | 1.15 | | | | | | | 326 | | | | | | | | | | | | | | | | | | | | | 1 | | | | | | TYPE G1 INLET | 31.00′ R† 170+61.52 ⅊ "RC3" |
| | | e | | | 34.45 | | | | | | | | | | | | | | | | | | | | | | | | | | | | | | | | | "V" DITCH L= 462.7′ | 31.00′ R† 170+59.52 ℄ "A1"<br>31.00′ R† 175+19.81 ⅊ "RC3" |
| | | f | | | | | | | | | | | 48.0 | | | | | | | | | | | | | | | | | | | | | | | | | 2.7 | 18" RCP | |
| | | g | 3.6 | 1.08 | | | | | | | 326 | | | | | | | | | | | | | | | | | | | | | 1 | | | | | | TYPE G1 INLET | 31.00′ R† 171+12.22 ⅊ "RC3" |
| | | h | | | | | | | | | | | 97.0 | | | | | | | | | | | | | | | | | | | | | | | | | 2.6 | 18" RCP | |
| | | i | 3.5 | 1.06 | | | | | | | 326 | | | | | | | | | | | | | | | | | | | | | 1 | | | | | | TYPE G1 INLET | 31.00′ R† 172+12.22 ⅊ "RC3" |
| | | j | | | | | | | | | | | 97.0 | | | | | | | | | | | | | | | | | | | | | | | | | 2.5 | 18" RCP | |
| | | k | 3.4 | 1.04 | | | | | | | 326 | | | | | | | | | | | | | | | | | | | | | 1 | | | | | | TYPE G1 INLET | 31.00′ R† 173+11.97 ⅊ "RC3" |
| | | l | | | | | | | | | | | 97.0 | | | | | | | | | | | | | | | | | | | | | | | | | 2.4 | 18" RCP | |
| | | m | 3.2 | 1.00 | | | | | | | 326 | | | | | | | | | | | | | | | | | | | | | 1 | | | | | | TYPE G1 INLET | 31.00′ R† 174+11.05 ⅊ "RC3" |
| | | n | | | | | | | | | | | 95.0 | | | | | | | | | | | | | | | | | | | | | | | | | 2.2 | 18" RCP | |
| | | o | 3.1 | 1.87 | | | | | | | 326 | | | | | | | | | | | | | | | | | | | | | 1 | | | | | | MODIFIED TYPE G1 INLET | 31.00′ R† 175+10.11 ⅊ "RC3" |
| | | p | | | | | | | 14.85 | 2613 | | | | | | | | | | | | | | | | | | | | | | | | | | | | 5.0′ X 1.0′ RCB L= 50.0′ | |
| | | q | | | 0.30 | | | | | | | | | | | | | | | | | | | | | | | | | | | | | | | | | CONCRETE APRON | |
| | | r | 2.7 | 1.38 | | | | | | | 326 | | | | | | | | | | | | | | | | | | | | | 1 | | | | | | MODIFIED TYPE G2 INLET | 80.80′ R† 175+24.17 ⅊ "RC3" |
| | | s | | | 0.13 | | | | | | | | | | | | | | | | | | | | | | | | | | | | | | | | | CONCRETE APRON | |
| SHEET TOTAL | | | | 9.66 | 34.88 | | | | 14.85 | 2613 | 2608 | | 434.0 | 590.5 | | | | | | | | | | | | | | | | | | 8 | | | | | | | |

(*) - INCLUDED IN ROADWAY QUANTITIES
(N) - NOT A SEPARATE PAY ITEM, FOR INFORMATION ONLY

1 ADDED PER ADDENDUM No. 1 DATED JULY 13, 2012

## DRAINAGE QUANTITIES
## DQ-34A

STATE OF CALIFORNIA - DEPARTMENT OF TRANSPORTATION
Caltrans HYDRAULICS

FUNCTIONAL SUPERVISOR: JAI P. THAKUR
CALCULATED-DESIGNED BY: MAY P. FUNG
CHECKED BY: RALPH M. SASAKI
REVISED BY
DATE REVISED

LAST REVISION 00-00-00
DATE PLOTTED => 12-JUL-2012
TIME PLOTTED => 14:08

| Dist | COUNTY | ROUTE | POST MILES TOTAL PROJECT | SHEET No. | TOTAL SHEETS |
|---|---|---|---|---|---|
| 07 | LA | 5 | 2.4/4.0 | 258 | 1288 |

REGISTERED CIVIL ENGINEER 12-19-11 DATE

3-26-12
PLANS APPROVAL DATE

REGISTERED PROFESSIONAL ENGINEER RALPH M. SASAKI No. 30849 Exp. 3/31/12 CIVIL STATE OF CALIFORNIA

*THE STATE OF CALIFORNIA OR ITS OFFICERS OR AGENTS SHALL NOT BE RESPONSIBLE FOR THE ACCURACY OR COMPLETENESS OF SCANNED COPIES OF THIS PLAN SHEET.*

1

NOTES:

1. JOINTS ARE STANDARD JOINT TYPE
2. LD ( ) - LOCAL DEPRESSIONS (CASE)
3. " FOR ADDITIONAL QUANTITIES, SEE STRUCTURE PLANS"

# SUMMARY OF DRAINAGE QUANTITIES

| SHEET No. | MINOR CONCRETE (MINOR STRUCTURE) | MINOR CONCRETE (DITCH LINING) | MINOR CONCRETE (CHANNEL LINING) | MINOR CONCRETE (GUTTER DEPRESSION) | MINOR CONCRETE (BACKFILL) | STRUCTURAL CONCRETE, BOX CULVERT | BAR REINFORCING STEEL (BOX CULVERT) | MISCELLANEOUS IRON AND STEEL | 15" RCP | 18" RCP | 24" RCP | 30" RCP | 24" PLASTIC PIPE | 18" SLOTTED CSP (0.079" THICK) | 6" NON-PERFORATED PLASTIC PIPE UNDERDRAIN | 36" PRECAST CONCRETE PIPE MANHOLE | ABANDON CULVERT | ABANDON MANHOLE | SAND BACKFILL | PERVIOUS BACKFILL MATERIAL (N) | CAP INLET | REMOVE CONCRETE | REMOVE PIPE | REMOVE RCB CULVERT | REMOVE INLET | REMOVE MANHOLE | DITCH EXCAVATION | CABLE RAILING (*) | TYPE 18-9 FRAME AND GRATE (N) | TYPE 24-12 FRAME AND GRATE (N) | TYPE U45 MANHOLE FRAME AND COVER (N) | TYPE U46 MANHOLE FRAME AND COVER (N) | CATCH BASIN FRAME AND GRATE (N) | CATCH BASIN MANHOLE FRAME AND COVER (N) |
|---|---|---|---|---|---|---|---|---|---|---|---|---|---|---|---|---|---|---|---|---|---|---|---|---|---|---|---|---|---|---|---|---|---|---|
| | CY | CY | CY | CY | CY | CY | LB | LB | LF | LF | LF | LF | LF | LF | LF | LF | LF | EA | CY | CY | EA | CY | LF | CY | EA | EA | CY | LF | EA | EA | EA | EA | EA | EA |
| DQ-1 | 17.88 | | | | | | | 5220 | | | 1134.6 | | | 29.0 | | | | | | | | | | | | | | | | 18 | | | | |
| DQ-2 | 12.54 | | | 2.10 | | 195.48 | 31578 | 3639 | | | 62.6 | | | | | 7.9 | | | | | | | | | | | | | | 2 | 2 | 1 | 3 | |
| DQ-3 | 2.03 | | | | | 505.13 | 84909 | 1430 | | | | | | | | 5.7 | | | | | | | | | | | | | | | 2 | | 1 | |
| DQ-4 | 18.24 | | | | | | | 4640 | | | 394.0 | 702.9 | | | | | | | | | | | | | | | | | | 16 | | | | |
| DQ-5 | 14.94 | | | | | | | 4132 | | 42.8 | 776.5 | | | 37.0 | | | | | | | | | | | | | | | | 14 | | | | |
| DQ-6 | 12.92 | | | | 53.29 | | | 3480 | | | 329.2 | 183.4 | | | | | | | | | | | | | | | | | | 12 | | | | |
| DQ-7 | 15.85 | | | | | | | 4640 | | | 994.2 | | | | | | | | | | | | | | | | | | | 16 | | | | |
| DQ-8 | 14.97 | | | 3.50 | | | | 5115 | | | 523.4 | | | | | | | | | | | | | | | | | | | | | 1 | 9 | |
| DQ-9 | 18.99 | | | | | | | 4640 | | | 618.6 | | | 74.0 | | | | | | | | | | | | | | | | 16 | | | | |
| DQ-10 | | 49.52 | 6.91 | | | 173.08 | 43097 | | | | | | | | | | | | | | | | | | | | | | | | | | | |
| DQ-11 | 5.78 | | | | | 959.80 | 208647 | 3297 | | 37.0 | | | | | | 28.5 | | | | | | | | | | | | | | 2 | 5 | 2 | | |
| DQ-12 | 29.58 | 34.68 | | | | | | 4966 | | | 722.0 | | | | | | | | | | | | | | | | | | | 17 | | | | |
| DQ-13 | 19.93 | | | | | | | 3370 | | 18.3 | 518.3 | | 57.5 | | 60.6 | | | | | | | | | | | | | | | 10 | | 2 | | |
| DQ-14 | 9.95 | 9.04 | | | 46.42 | | | 1030 | 271.7 | 113.4 | 46.5 | | | | | | | | | | | | | | | | | | | | | 2 | | 3 |
| DQ-15 | 36.35 | | | | | | | 3480 | | | 382.0 | | | | | | | | | | | | | | | | | | | 12 | | | | |
| DQ-16 | 21.14 | | | | | | | 4640 | | | 1009.0 | | | | | | | | | | | | | | | | | | | 16 | | | | |
| DQ-17 | 18.95 | | | | 8.43 | | | 3461 | | 9.1 | 599.2 | | 17.6 | | 37.8 | | | | | | | | | | | | | | | 11 | | 1 | | |

(*) - INCLUDED IN ROADWAY QUANTITIES
(N) - NOT A SEPARATE PAY ITEM, FOR INFORMATION ONLY

1 REVISED PER ADDENDUM No. 1 DATED JULY 13, 2012

DRAINAGE QUANTITIES
DQ-35

STATE OF CALIFORNIA - DEPARTMENT OF TRANSPORTATION
Caltrans HYDRAULICS

FUNCTIONAL SUPERVISOR: JAI P. THAKUR
CALCULATED-DESIGNED BY: MAY P. FUNG
CHECKED BY: RALPH M. SASAKI
REVISED BY
DATE REVISED

LAST REVISION 00-00-00 | DATE PLOTTED => 12-JUL-2012 | TIME PLOTTED => 14:08

| Dist | COUNTY | ROUTE | POST MILES TOTAL PROJECT | SHEET No. | TOTAL SHEETS |
|---|---|---|---|---|---|
| 07 | LA | 5 | 2.4/4.0 | 259 | 1288 |

REGISTERED CIVIL ENGINEER 12-19-11 DATE

3-26-12
PLANS APPROVAL DATE

REGISTERED PROFESSIONAL ENGINEER RALPH M. SASAKI No. 30849 Exp. 3/31/12 CIVIL STATE OF CALIFORNIA

*THE STATE OF CALIFORNIA OR ITS OFFICERS OR AGENTS SHALL NOT BE RESPONSIBLE FOR THE ACCURACY OR COMPLETENESS OF SCANNED COPIES OF THIS PLAN SHEET.*

1

NOTES:

1. JOINTS ARE STANDARD JOINT TYPE
2. LD ( ) - LOCAL DEPRESSIONS (CASE)
3. " FOR ADDITIONAL QUANTITIES, SEE STRUCTURE PLANS"

# SUMMARY OF DRAINAGE QUANTITIES

| SHEET No. | MINOR CONCRETE (MINOR STRUCTURE) (SEE NOTE 3) | MINOR CONCRETE (DITCH LINING) | MINOR CONCRETE (CHANNEL LINING) | MINOR CONCRETE (GUTTER DEPRESSION) | MINOR CONCRETE (BACKFILL) | STRUCTURAL CONCRETE, BOX CULVERT (SEE NOTE 3) | BAR REINFORCING STEEL (BOX CULVERT) (SEE NOTE 3) | MISCELLANEOUS IRON AND STEEL (SEE NOTE 3) | 15" RCP | 18" RCP | 24" RCP | 30" RCP | 24" PLASTIC PIPE | 18" SLOTTED CSP (0.079" THICK) | 6" NON-PERFORATED PLASTIC PIPE UNDERDRAIN | 36" PRECAST CONCRETE PIPE MANHOLE | ABANDON CULVERT | ABANDON MANHOLE | SAND BACKFILL | PERVIOUS BACKFILL MATERIAL (N) | CAP INLET | REMOVE CONCRETE | REMOVE PIPE | REMOVE RCB CULVERT | REMOVE INLET | REMOVE MANHOLE | DITCH EXCAVATION | CABLE RAILING (*) | TYPE 18-9 FRAME AND GRATE (N) | TYPE 24-12 FRAME AND GRATE (N) | TYPE U45 MANHOLE FRAME AND COVER (N) | TYPE U46 MANHOLE FRAME AND COVER (N) | CATCH BASIN FRAME AND GRATE (N) | CATCH BASIN MANHOLE FRAME AND COVER (N) |
|---|---|---|---|---|---|---|---|---|---|---|---|---|---|---|---|---|---|---|---|---|---|---|---|---|---|---|---|---|---|---|---|---|---|---|
| | CY | CY | CY | CY | CY | CY | LB | LB | LF | LF | LF | LF | LF | LF | LF | LF | LF | EA | CY | CY | EA | CY | LF | CY | EA | EA | CY | LF | EA | EA | EA | EA | EA | EA |
| DQ-18 | 6.74 | | | | | | | 1218 | | 432.6 | | | | 26.0 | | | | | | | | | | | | | | | | 3 | | | | 2 |
| DQ-19 | 9.92 | | 4.18 | | 1.61 | 2.32 | 320 | 1860 | | | 349.0 | | | | | | | | | | | | | | | | | | | 6 | | | | 1 |
| DQ-20 | 14.97 | | 45.14 | | 45.61 | | | 2229 | | 35.2 | 592.4 | | | | | 1.4 | | | | | | | | | | | | | 1 | | 3 | | 2 | 1 |
| DQ-21 | 24.74 | 1.22 | 6.87 | | | | | 2066 | | 45.7 | 240.7 | | | | | | | | | 0.44 | | | | | | | 25.43 | 35.5 | | 7 | | | | |
| DQ-22 | 36.65 | | | | | | | 4640 | | | 1073.7 | | | 37.0 | | | | | | | | | | | | | | | | 16 | | | | |
| DQ-23 | 17.48 | | | | | | | 3480 | | | 612.0 | | | 67.0 | | | | | | | | | | | | | | | | 12 | | | | |
| DQ-24 | 18.22 | | | | | | | 5220 | | | 1154.0 | | | | | | | | | | | | | | | | | | | 18 | | | | |
| DQ-25 | 3.88 | 58.00 | | | | 0.92 | 213 | 1985 | | 252.9 | 4.0 | | | | | 3.2 | | | | | | | | | | | | | | | 1 | 2 | 2 | |
| DQ-26 | 19.83 | 0.30 | | 0.26 | | | | 2020 | | 511.6 | | | | | | 2.3 | | | | | 1 | | 18.2 | | 1 | | | | | | 3 | 1 | | 4 |
| DQ-27 | | | | | | | | | | | | | | | | | | | | | | 43.01 | 161.9 | 297.69 | 6 | | | | | | | | | |
| DQ-28 | | | | | | | | | | | | | | | | | | | | | | 5.89 | 574.5 | 67.09 | 6 | | | | | | | | | |
| DQ-29 | | | | | | | | | | | | | | | | | | | | | | 75.59 | 45.0 | 110.16 | 3 | | | | | | | | | |
| DQ-30 | | | | | | | | | | | | | | | | | | | | | | 96.18 | 189.9 | 156.53 | 2 | 1 | | | | | | | | |
| DQ-31 | | | | | | | | | | | | | | | | | | | | | | 214.75 | 306.5 | 116.15 | 1 | | | | | | | | | |
| DQ-32 | | | | | | | | | | | | | | | | | 590.9 | | 181.53 | | 1 | 6.54 | 252.0 | | 2 | | | | | | | | | |
| DQ-33 | | | | | | | | | | | | | | | | | 219.2 | | 25.51 | | | 35.21 | 586.2 | | 3 | | | | | | | | | |
| DQ-34 | | | | | | | | | | | | | | | | | | 1 | | | | 3.64 | 255.2 | 172.36 | | | | | | | | | | |
| DQ-35 | 9.66 | 34.88 | | | | 14.85 | 2613 | 2608 | | 434.0 | 590.5 | | | | | | | | | | | | | | | | | | | 8 | | | | |
| GRAND TOTAL | 432.13 | 187.64 | 63.10 | 5.86 | 155.36 | 1851.58 | 371377 | 88506 | 271.7 | 1932.6 | 12726.4 | 886.3 | 75.1 | 270.0 | 98.4 | 49.0 | 810.1 | 1 | 207.04 | 0.44 | 2 | 480.81 | 2389.4 | 919.98 | 24 | 1 | 25.43 | 35.5 | 1 | 232 | 16 | 12 | 17 | 11 |

(*) - INCLUDED IN ROADWAY QUANTITIES
(N) - NOT A SEPARATE PAY ITEM, FOR INFORMATION ONLY

1 REVISED PER ADDENDUM No. 1 DATED JULY 13, 2012

DRAINAGE QUANTITIES
DQ-36

STATE OF CALIFORNIA - DEPARTMENT OF TRANSPORTATION
Caltrans HYDRAULICS

FUNCTIONAL SUPERVISOR: JAI P. THAKUR
CALCULATED-DESIGNED BY: MAY P. FUNG
CHECKED BY: RALPH M. SASAKI
REVISED BY
DATE REVISED

LAST REVISION 00-00-00
DATE PLOTTED => 12-JUL-2012
TIME PLOTTED => 14:08

| Dist | COUNTY | ROUTE | POST MILES TOTAL PROJECT | SHEET No. | TOTAL SHEETS |
|---|---|---|---|---|---|
| 07 | LA | 5 | 2.4/4.0 | 286 | 1288 |

REGISTERED CIVIL ENGINEER 12-19-11 DATE

3-26-12
PLANS APPROVAL DATE

REGISTERED PROFESSIONAL ENGINEER TRUNG CHAU No. 61874 Exp. 9-30-13 CIVIL STATE OF CALIFORNIA

*THE STATE OF CALIFORNIA OR ITS OFFICERS OR AGENTS SHALL NOT BE RESPONSIBLE FOR THE ACCURACY OR COMPLETENESS OF SCANNED COPIES OF THIS PLAN SHEET.*

1. FOR ACCURATE RIGHT OF WAY DATA, CONTACT RIGHT OF WAY ENGINEERING AT THE DISTRICT OFFICE

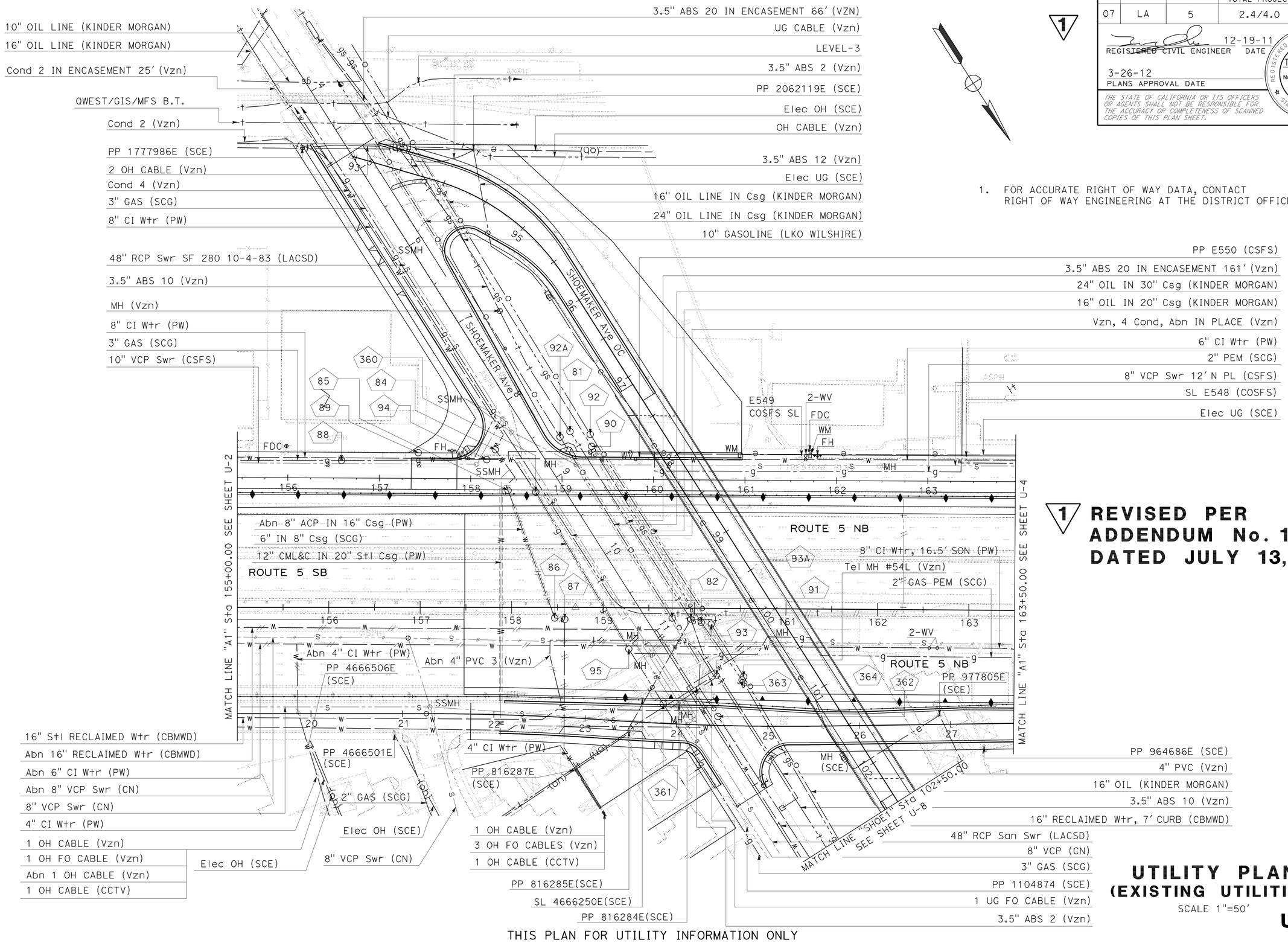


1 REVISED PER ADDENDUM No. 1 DATED JULY 13, 2012

THIS PLAN FOR UTILITY INFORMATION ONLY

# UTILITY PLAN (EXISTING UTILITIES)

SCALE 1"=50'

U-3

STATE OF CALIFORNIA - DEPARTMENT OF TRANSPORTATION
Caltrans
UTILITIES

FUNCTIONAL SUPERVISOR: ERIC CHAU
CALCULATED-DESIGNED BY: YIM T. TSE
CHECKED BY: ERIC CHAU
REVISED BY
DATE REVISED

LAST REVISION 00-00-00
DATE PLOTTED => 12-JUL-2012
TIME PLOTTED => 14:08

| Dist | COUNTY | ROUTE | POST MILES TOTAL PROJECT | SHEET No. | TOTAL SHEETS |
|---|---|---|---|---|---|
| 07 | LA | 5 | 2.4/4.0 | 289 | 1288 |

REGISTERED CIVIL ENGINEER 12-19-11 DATE

3-26-12
PLANS APPROVAL DATE

REGISTERED PROFESSIONAL ENGINEER TRUNG CHAU No. 61874 Exp. 9-30-13 CIVIL STATE OF CALIFORNIA

*THE STATE OF CALIFORNIA OR ITS OFFICERS OR AGENTS SHALL NOT BE RESPONSIBLE FOR THE ACCURACY OR COMPLETENESS OF SCANNED COPIES OF THIS PLAN SHEET.*

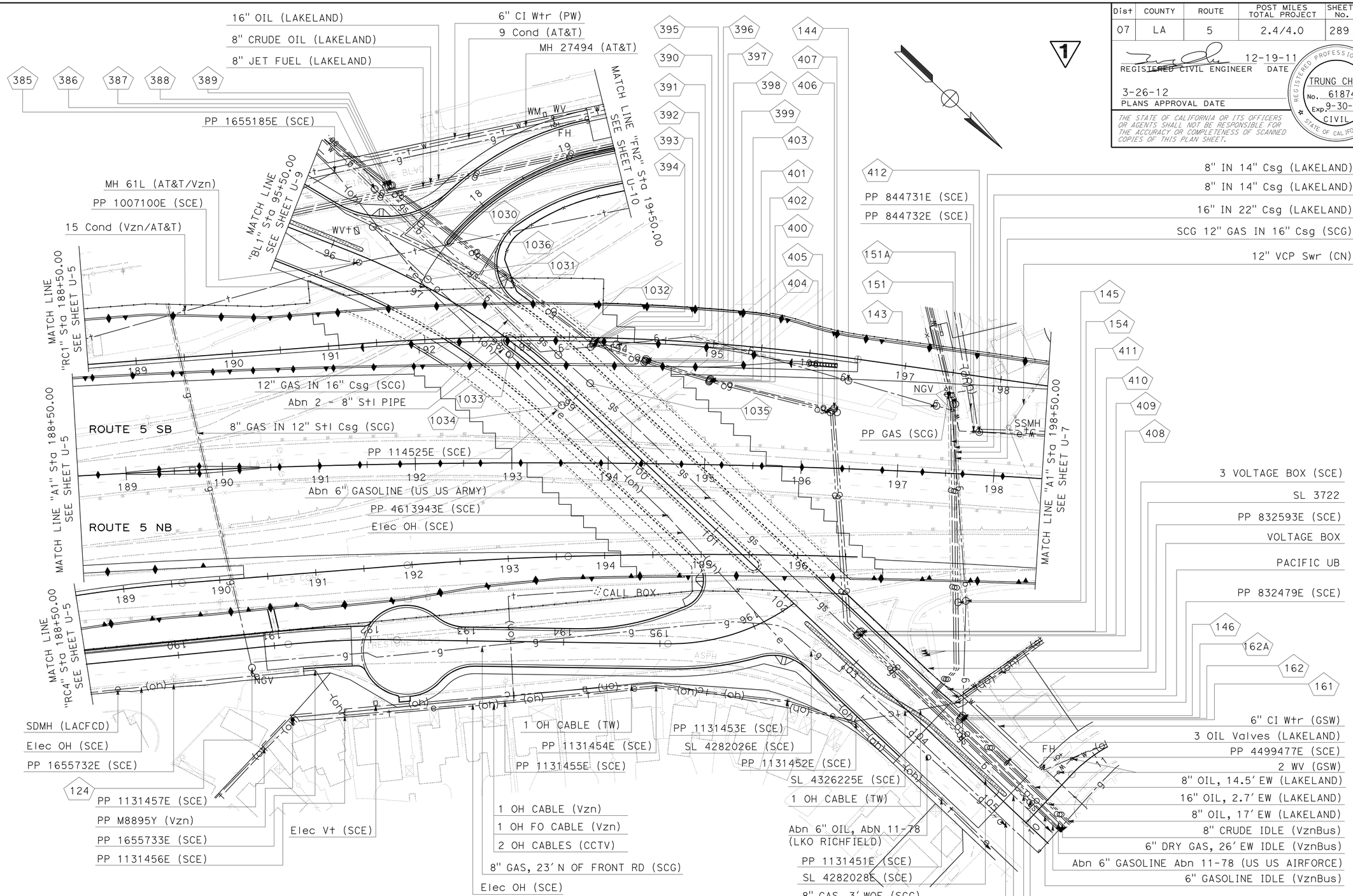


## 1 REVISED PER ADDENDUM No. 1 DATED JULY 13, 2012

1. FOR ACCURATE RIGHT OF WAY DATA, CONTACT RIGHT OF WAY ENGINEERING AT THE DISTRICT OFFICE

# UTILITY PLAN
## (EXISTING UTILITIES)

SCALE 1"=50'

**U-6**

THIS PLAN FOR UTILITY INFORMATION ONLY

STATE OF CALIFORNIA - DEPARTMENT OF TRANSPORTATION
Caltrans
UTILITIES

FUNCTIONAL SUPERVISOR: CELINA AVILES
CALCULATED-DESIGNED BY: TRUNG CHAU
CHECKED BY: TRUNG CHAU
REVISED BY
DATE REVISED

LAST REVISION 00-00-00
DATE PLOTTED => 12-JUL-2012
TIME PLOTTED => 14:08

| Dist | COUNTY | ROUTE | POST MILES TOTAL PROJECT | SHEET No. | TOTAL SHEETS |
|---|---|---|---|---|---|
| 07 | LA | 5 | 2.4/4.0 | 292 | 1288 |

REGISTERED CIVIL ENGINEER 12-19-11 DATE

3-26-12
PLANS APPROVAL DATE

REGISTERED PROFESSIONAL ENGINEER TRUNG CHAU No. 61874 Exp. 9-30-13 CIVIL STATE OF CALIFORNIA

*THE STATE OF CALIFORNIA OR ITS OFFICERS OR AGENTS SHALL NOT BE RESPONSIBLE FOR THE ACCURACY OR COMPLETENESS OF SCANNED COPIES OF THIS PLAN SHEET.*

1. FOR ACCURATE RIGHT OF WAY DATA, CONTACT RIGHT OF WAY ENGINEERING AT THE DISTRICT OFFICE

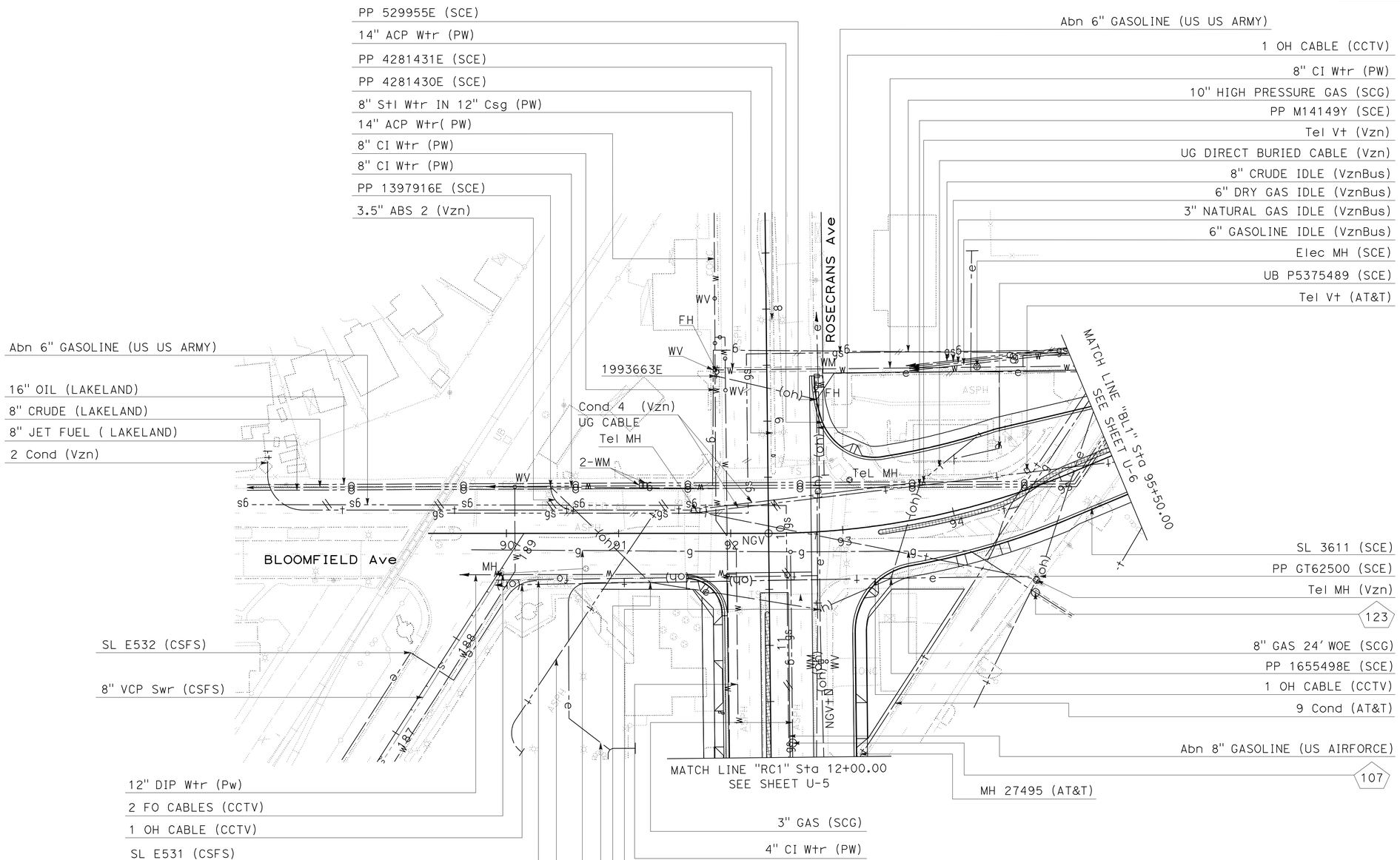


1 **REVISED PER ADDENDUM No. 1 DATED JULY 13, 2012**

THIS PLAN FOR UTILITY INFORMATION ONLY

# UTILITY PLAN
## (EXISTING UTILITIES)

SCALE 1"=50'

**U-9**

STATE OF CALIFORNIA - DEPARTMENT OF TRANSPORTATION
Caltrans
UTILITIES

FUNCTIONAL SUPERVISOR: CELINA AVILES
CALCULATED-DESIGNED BY: TRUNG CHAU
CHECKED BY: TRUNG CHAU
REVISED BY
DATE REVISED

LAST REVISION 00-00-00
DATE PLOTTED => 12-JUL-2012
TIME PLOTTED => 14:09

| Dist | COUNTY | ROUTE | POST MILES TOTAL PROJECT | SHEET No. | TOTAL SHEETS |
|---|---|---|---|---|---|
| 07 | LA | 5 | 2.4/4.0 | 295 | 1288 |

1

12-19-11
REGISTERED CIVIL ENGINEER DATE

3-26-12
PLANS APPROVAL DATE

REGISTERED PROFESSIONAL ENGINEER
TRUNG CHAU
No. 61874
Exp. 9-30-13
CIVIL
STATE OF CALIFORNIA

*THE STATE OF CALIFORNIA OR ITS OFFICERS OR AGENTS SHALL NOT BE RESPONSIBLE FOR THE ACCURACY OR COMPLETENESS OF SCANNED COPIES OF THIS PLAN SHEET.*

## U-6

| POTHOLE No. | NORTHING/EASTING | UTILITY COMPANY | SURFACE/GROUND ELEVATION (ft) | DEPTH (ft) |
|---|---|---|---|---|
| 124 | 1787433.87<br>6542525.17 | 12" Ø CONCRETE PROTECTION<br>(GAS LINE) | 87.47 | 2'-7" |
| 143 | 1787757.84<br>6541837.91 | SCG 8" Ø STL | 90.43 | 6'-0" |
| 144 | 1787673.97<br>6541882.19 | SCG 8" Ø STL | 91.40 | 6'-3" |
| 145 | 1787919.97<br>6541962.67 | LAKELAND 16" Ø STL<br>(GAS LINE) | 94.71 | 8'-0" |
| 146 | 1787999.91<br>6542050.91 | SCG 12" Ø STL<br>(GAS LINE) | 90.34 | 5'-0" |
| 151 | 1787770.74<br>6541823.03 | LAKELAND 20" Ø STL<br>(OIL LINE) | 90.08 | 3'-7" |
| 151A | 1787769.34<br>6541824.98 | GOLDEN STATE WATER<br>6" Ø STL (WATER LINE) | 89.83 | 3'-7" |
| 154 | 1787915.11<br>6541969.47 | SCG 16" Ø STL<br>(OIL LINE) | 95.18 | 8'-8" |
| 161 | 1788000.70<br>6542056.13 | LAKELAND 16" Ø STL<br>(OIL LINE) | 90.68 | 3'-8" |
| 162 | 1788000.62<br>6542054.42 | LAKELAND 16" Ø STL<br>(OIL LINE) | 90.57 | 3'-8" |
| 162A | 1788000.43<br>6542053.02 | LAKELAND 16" Ø STL<br>(OIL LINE) | 90.43 | 3'-0" |
| 385 | 1787181.92<br>6542078.73 | SCG<br>10" Ø STL in 12" Csg | 87.18 | 4'-6" |
| 386 | 1787188.54<br>6542068.97 | VERIZON BUSINESS<br>6" Ø CRUDE OIL | 87.24 | 5'-3" |
| 387 | 1787189.93<br>6542066.72 | VERIZON BUSINESS<br>3" Ø STL (NATURAL GAS) | 87.24 | 5'-3" |
| 388 | 1787191.28<br>6542064.78 | vERIZON BUSINESS<br>6" Ø STL (DRY GAS) | 87.23 | 5'-3" |
| 389 | 1787192.16<br>6542063.49 | VERIZON BUSINESS<br>8" Ø STL (CRUDE OIL) | 87.22 | 5'-3" |
| 390 | 1787456.87<br>6542041.83 | SCG<br>6" Ø STL | 89.85 | 5'-6" |
| 391 | 1787456.89<br>6542038.56 | VERIZON BUSINESS<br>6" Ø STL CRUDE OIL | 89.79 | 5'-6" |
| 392 | 1787456.43<br>6542037.21 | VERIZON BUSINESS<br>3" Ø STL (NATURAL GAS) | 89.61 | 5'-6" |
| 393 | 1787455.75<br>6542035.94 | VERIZON BUSINESS<br>6" Ø STL (DRY GAS) | 89.58 | 5'-5" |
| 394 | 1787455.36<br>6542034.42 | VERIZON BUSINESS<br>8" Ø STL (CRUDE OIL) | 89.63 | 6'-5" |
| 395 | 1787474.23<br>6542021.42 | SCG<br>6" Ø STL | 90.25 | 4'-6" |

## U-6

| POTHOLE No. | NORTHING/EASTING | UTILITY COMPANY | SURFACE/GROUND ELEVATION (ft) | DEPTH (ft) |
|---|---|---|---|---|
| 396 | 1787508.01<br>6542015.12 | VERIZON BUSINESS<br>6" Ø STL CRUDE OIL | 91.00 | 5'-1" |
| 397 | 1787507.95<br>6542013.35 | VERIZON BUSINESS<br>3" Ø STL (NATURAL GAS) | 90.96 | 4'-2" |
| 398 | 1787507.39<br>6542012.76 | VERIZON BUSINESS<br>6" Ø STL (DRY GAS) | 90.70 | 5'-0" |
| 399 | 1787506.81<br>6542011.24 | VERIZON BUSINESS<br>8" Ø STL (CRUDE OIL) | 90.76 | 5'-0" |
| 400 | 1787570.33<br>6541983.02 | VERIZON BUSINESS<br>6" Ø STL (CRUDE OIL) | 93.11 | 6'-2" |
| 401 | 1787569.89<br>6541981.01 | VERIZON BUSINESS<br>3" Ø STL (NATURAL GAS) | 92.83 | 6'-6" |
| 402 | 1787570.14<br>6541981.98 | VERIZON BUSINESS<br>6" Ø STL (DRY GAS) | 92.99 | 6'-6" |
| 403 | 1787569.40<br>6541980.00 | VERIZON BUSINESS<br>8" Ø STL (CRUDE OIL) | 92.81 | 5'-4" |
| 404 | 1787683.16<br>6541918.74 | VERIZON BUSINESS<br>6" Ø STL (CRUDE OIL) | 93.28 | 4'-0" |
| 405 | 1787683.36<br>6541916.04 | VERIZON BUSINESS<br>3" Ø STL (NATURAL GAS) | 92.83 | 4'-5" |
| 406 | 1787683.24<br>6541913.01 | VERIZON BUSINESS<br>6" Ø STL (DRY GAS) | 92.12 | 4'-5" |
| 407 | 1787688.10<br>6541914.11 | VERIZON BUSINESS<br>8" Ø STL (CRUDE OIL) | 93.18 | 6'-0" |
| 408 | 1787863.65<br>6542066.76 | VERIZON BUSINESS<br>6" Ø STL (CRUDE OIL) | 91.33 | 6'-8" |
| 409 | 1787863.26<br>6542065.69 | VERIZON BUSINESS<br>3" Ø STL (NATURAL GAS) | 91.42 | 6'-8" |
| 410 | 1787862.89<br>6542062.05 | VERIZON BUSINESS<br>6" Ø STL (DRY GAS) | 91.65 | 6'-9" |
| 411 | 1787863.52<br>6542060.58 | VERIZON BUSINESS<br>8" Ø STL (CRUDE OIL) | 91.75 | 6'-8" |
| 412 | 1787808.76<br>6541826.81 | GOLDEN STATE WATER<br>6" CI | 92.53 | 5'-8" |

1 **REVISED PER ADDENDUM No. 1 DATED JULY 13, 2012**

THIS PLAN FOR UTILITY INFORMATION ONLY

# UTILITY PLAN
## (POTHOLE TABLE)

**U-12**

STATE OF CALIFORNIA - DEPARTMENT OF TRANSPORTATION
Caltrans
UTILITIES
FUNCTIONAL SUPERVISOR: CELINA AVILES
CALCULATED-DESIGNED BY: TRUNG CHAU
CHECKED BY: TRUNG CHAU
REVISED BY
DATE REVISED

LAST REVISION 00-00-00
DATE PLOTTED => 12-JUL-2012
TIME PLOTTED => 14:09

| Dist | COUNTY | ROUTE | POST MILES TOTAL PROJECT | SHEET No. | TOTAL SHEETS |
|---|---|---|---|---|---|
| 07 | LA | 5 | 2.4/4.0 | 296 | 1288 |

12-19-11
REGISTERED CIVIL ENGINEER DATE

3-26-12
PLANS APPROVAL DATE

REGISTERED PROFESSIONAL ENGINEER
TRUNG CHAU
No. 61874
Exp. 9-30-13
CIVIL
STATE OF CALIFORNIA

*THE STATE OF CALIFORNIA OR ITS OFFICERS OR AGENTS SHALL NOT BE RESPONSIBLE FOR THE ACCURACY OR COMPLETENESS OF SCANNED COPIES OF THIS PLAN SHEET.*

1

## U-6

| POTHOLE No. | NORTHING/EASTING | UTILITY COMPANY | SURFACE/GROUND ELEVATION (ft) | DEPTH (ft) |
|---|---|---|---|---|
| 1035 | 1787482.49<br>6542069.53 | US AIR FORCE<br>6" Ø STL | 90.32 | 7'-2" |
| 1032 | 1787438.49<br>6542071.21 | US AIR FORCE<br>6" Ø STL | 90.15 | 6'-8" |
| 1034 | 1787477.18<br>6542106.35 | ABANDONED 8" Ø STL | 91.05 | 5'-0" |
| 1033 | 1787401.71<br>6542105.58 | ABANDONED 8" Ø STL | 93.53 | 8'-2" |
| 1036 | 1787241.29<br>6542071.46 | US AIR FORCE<br>6" Ø STL | 90.21 | 7'-5" |
| 1031 | 1787286.40<br>6542108.32 | ABANDONED 8" Ø STL | 88.96 | 7'-4" |
| 1030 | 1787207.68<br>6542108.42 | ABANDONED 8" Ø STL | 89.59 | 7'-9" |

## U-7

| POTHOLE No. | NORTHING/EASTING | UTILITY COMPANY | SURFACE/GROUND ELEVATION (ft) | DEPTH (ft) |
|---|---|---|---|---|
| 413 | 1788029.21<br>6541846.70 | GOLDEN STATE WATER<br>6" CI, 12" Ø STL | 94.48 | 5'-4" |

## U-9

| POTHOLE No. | NORTHING/EASTING | UTILITY COMPANY | SURFACE/GROUND ELEVATION (ft) | DEPTH (ft) |
|---|---|---|---|---|
| 107 | 1786858.46<br>6542424.53 | GOLDEN STATE WATER<br>3" Ø STL | 84.93 | 4'-0" |
| 123 | 1787075.52<br>6542291.24 | 12" Ø STL<br>(GAS LINE) | 87.41 | 4'-6" |

## U-10

| POTHOLE No. | NORTHING/EASTING | UTILITY COMPANY | SURFACE/GROUND ELEVATION (ft) | DEPTH (ft) |
|---|---|---|---|---|
| 152 | 1787637.23<br>6541739.21 | LAKELAND OIL CO.<br>8" Ø STL | 90.76 | 4'-6" |
| 414 | 1787533.04<br>6541699.28 | AT&T 15 DU | 93.59 | 7'-6" |
| 415 | 1787668.37<br>6541614.53 | SCG 2" GAS | 92.10 | 3'-3" |
| 416 | 1787683.48<br>6541547.86 | SCG 2" GAS | 92.02 | 3'-2" |
| 417 | 1787782.83<br>6541328.78 | AT&T 15 DU | 92.87 | 3'-6" |
| 418 | 1787862.90<br>6541272.35 | SCG 2" GAS | 92.97 | 3'-2" |

1 **REVISED PER ADDENDUM No. 1 DATED JULY 13, 2012**

THIS PLAN FOR UTILITY INFORMATION ONLY

# UTILITY PLAN
## (POTHOLE TABLE)

**U-13**

STATE OF CALIFORNIA - DEPARTMENT OF TRANSPORTATION
Caltrans
UTILITIES

FUNCTIONAL SUPERVISOR: CELINA AVILES
CALCULATED-DESIGNED BY: TRUNG CHAU
CHECKED BY
REVISED BY
DATE REVISED

LAST REVISION 00-00-00
DATE PLOTTED => 12-JUL-2012
TIME PLOTTED => 14:09

| Dist | COUNTY | ROUTE | POST MILES TOTAL PROJECT | SHEET No. | TOTAL SHEETS |
|---|---|---|---|---|---|
| 07 | LA | 5 | 2.4/4.0 | 297 | 1288 |

REGISTERED CIVIL ENGINEER 12-19-11 DATE

3-26-12
PLANS APPROVAL DATE

REGISTERED PROFESSIONAL ENGINEER
TRUNG CHAU
No. 61874
Exp. 9-30-13
CIVIL
STATE OF CALIFORNIA

*THE STATE OF CALIFORNIA OR ITS OFFICERS OR AGENTS SHALL NOT BE RESPONSIBLE FOR THE ACCURACY OR COMPLETENESS OF SCANNED COPIES OF THIS PLAN SHEET.*

1

NOTES:

1. FOR ACCURATE RIGHT OF WAY DATA, CONTACT RIGHT OF WAY ENGINEERING AT THE DISTRICT OFFICE.
2. LOCATION OF UTILITY FACILITIES SHOWN ON THESE PLANS ARE APPROXIMATE AND SHALL BE VERIFIED BY THE CONTRACTOR PRIOR TO CONSTUCTION.
3. FOR WORK RELATING TO SEWER FACILITIES REFER TO THE SEWER PLANS.

(*) : UTILITY FACILITY TO BE REMOVED DURING CONSTRUCTION BY OTHERS.
(**) : UTILITY FACILITY TO BE ABANDONED IN PLACE DURING CONSTRUCTION BY OTHERS.
(***) : UTILITY FACILITY TO BE INSTALLED PRIOR TO CONSTRUCTION BY OTHERS.
(****) : UTILITY FACILITY TO BE INSTALLED DURING CONSTRUCTION BY OTHERS.
(X) : UTILITY FACILITY TO BE REMOVED DURING CONSTRUCTION BY CONTRACTOR.
(AB*) : UTILITY FACILITY TO BE ABANDONED IN PLACE PRIOR TO CONSTRUCTION BY OTHERS.
(RM*) : UTILITY FACILITY TO BE REMOVED PRIOR TO CONSTRUCTION BY OTHERS.
(E) : EXISTING UTILITY TO REMAIN

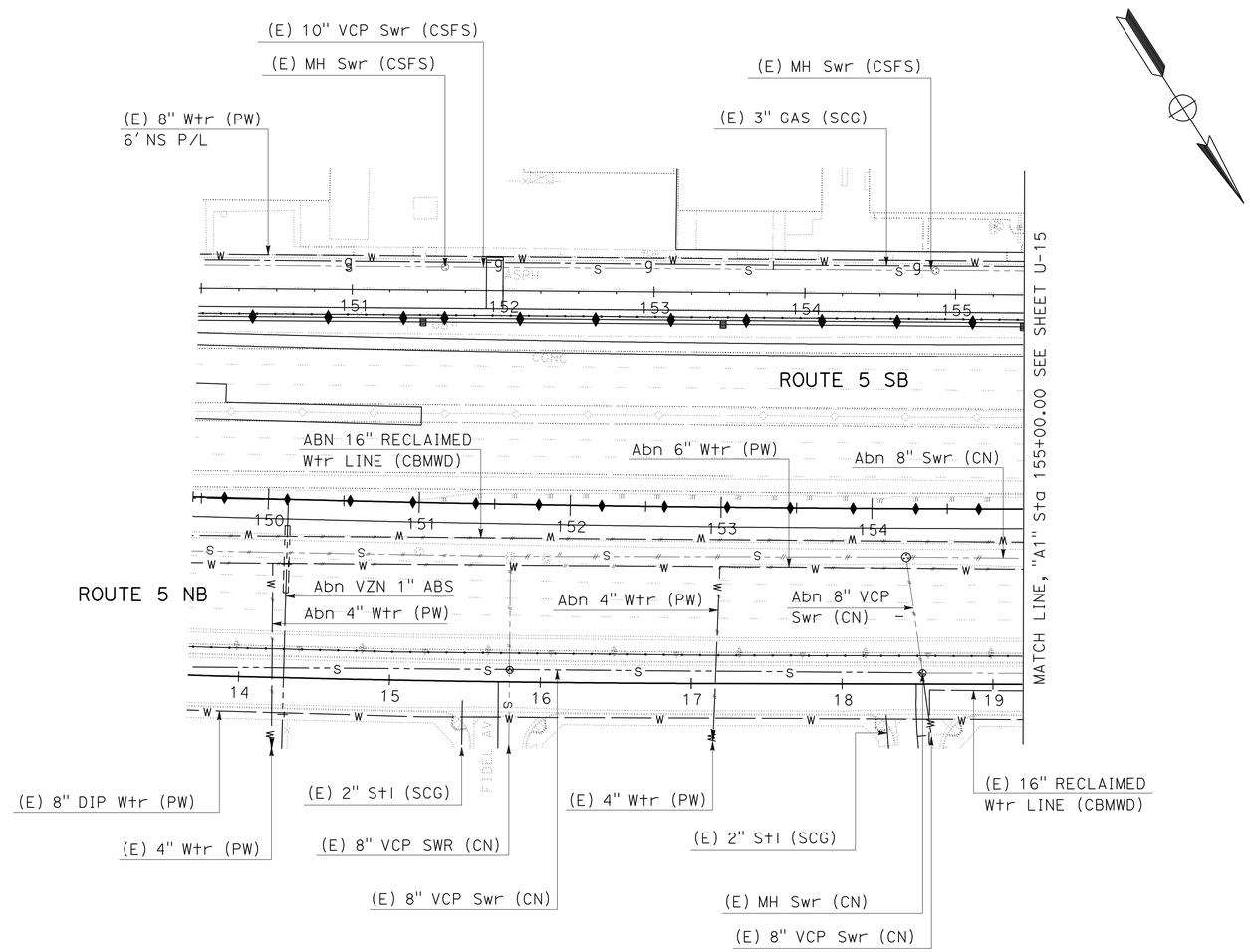


1 **REVISED PER ADDENDUM No. 1 DATED JULY 13, 2012**

THIS PLAN FOR UTILITY WORK ONLY

# UTILITY PLAN
## (RELOCATION UTILITIES)
SCALE 1"=50'

**U-14**

STATE OF CALIFORNIA - DEPARTMENT OF TRANSPORTATION
Caltrans
UTILITIES

FUNCTIONAL SUPERVISOR: CELINA AVILES
CALCULATED-DESIGNED BY: TRUNG CHAU
CHECKED BY: TRUNG CHAU
REVISED BY
DATE REVISED

LAST REVISION 00-00-00
DATE PLOTTED => 12-JUL-2012
TIME PLOTTED => 14:09

| Dist | COUNTY | ROUTE | POST MILES TOTAL PROJECT | SHEET No. | TOTAL SHEETS |
|---|---|---|---|---|---|
| 07 | LA | 5 | 2.4/4.0 | 298 | 1288 |

REGISTERED CIVIL ENGINEER 12-19-11 DATE

3-26-12
PLANS APPROVAL DATE

REGISTERED PROFESSIONAL ENGINEER TRUNG CHAU No. 61874 Exp. 9-30-13 CIVIL STATE OF CALIFORNIA

*THE STATE OF CALIFORNIA OR ITS OFFICERS OR AGENTS SHALL NOT BE RESPONSIBLE FOR THE ACCURACY OR COMPLETENESS OF SCANNED COPIES OF THIS PLAN SHEET.*

1. FOR ACCURATE RIGHT OF WAY DATA, CONTACT RIGHT OF WAY ENGINEERING AT THE DISTRICT OFFICE
2. REFER TO NOTES 1, 2, and 3 FROM UTILITY PLAN U-14

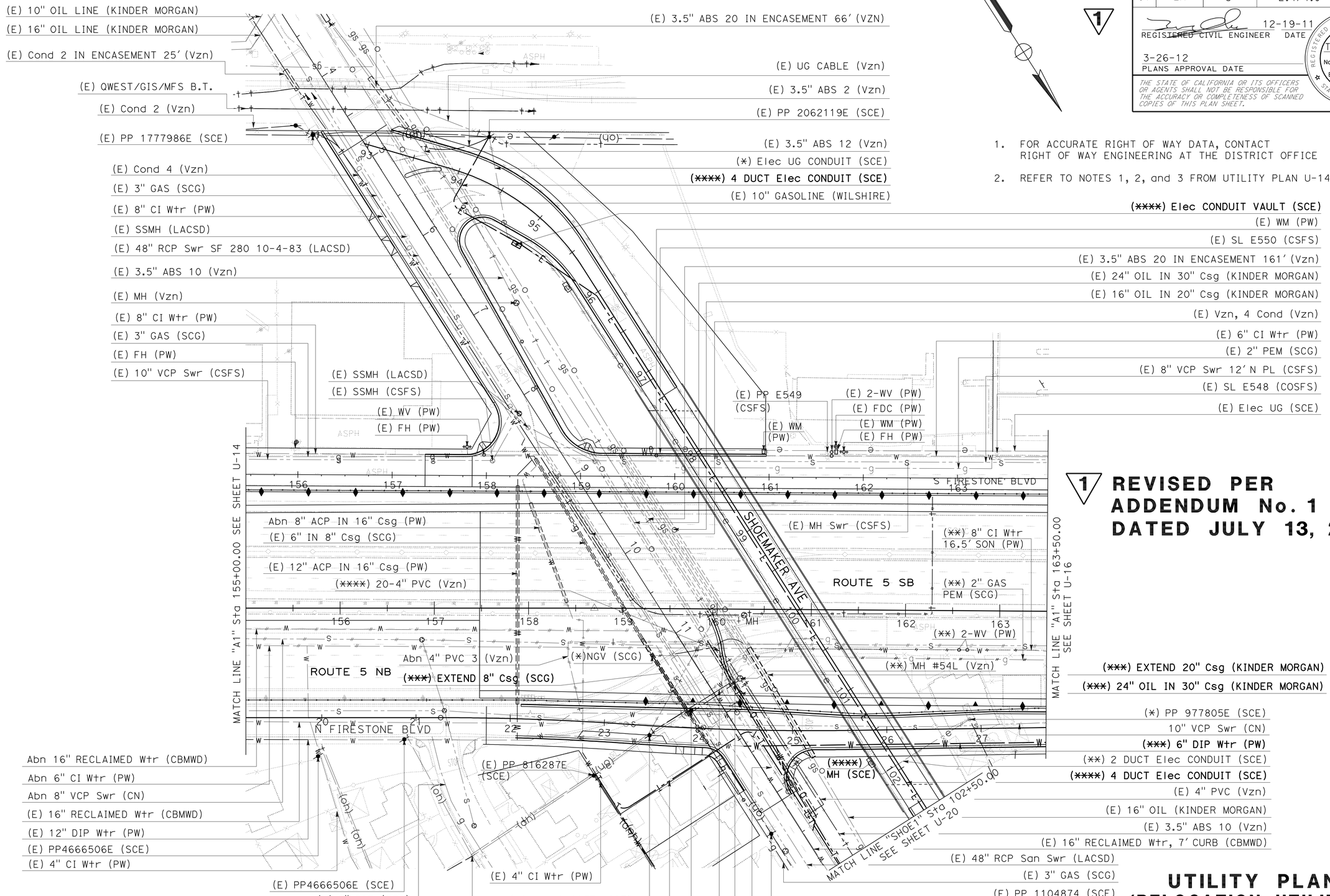


**1 REVISED PER ADDENDUM No. 1 DATED JULY 13, 2012**

THIS PLAN FOR UTILITY WORK ONLY

# UTILITY PLAN (RELOCATION UTILITIES)

SCALE 1"=50'

**U-15**

STATE OF CALIFORNIA - DEPARTMENT OF TRANSPORTATION
Caltrans
UTILITIES

FUNCTIONAL SUPERVISOR: CELINA AVILES
CALCULATED-DESIGNED BY: TRUNG CHAU
CHECKED BY: TRUNG CHAU
REVISED BY / DATE REVISED

LAST REVISION 00-00-00 | DATE PLOTTED => 12-JUL-2012 | TIME PLOTTED => 14:09

| Dist | COUNTY | ROUTE | POST MILES TOTAL PROJECT | SHEET No. | TOTAL SHEETS |
|---|---|---|---|---|---|
| 07 | LA | 5 | 2.4/4.0 | 299 | 1288 |

REGISTERED CIVIL ENGINEER 12-19-11 DATE

3-26-12
PLANS APPROVAL DATE

REGISTERED PROFESSIONAL ENGINEER TRUNG CHAU No. 61874 Exp. 9-30-13 CIVIL STATE OF CALIFORNIA

*THE STATE OF CALIFORNIA OR ITS OFFICERS OR AGENTS SHALL NOT BE RESPONSIBLE FOR THE ACCURACY OR COMPLETENESS OF SCANNED COPIES OF THIS PLAN SHEET.*

1. FOR ACCURATE RIGHT OF WAY DATA, CONTACT RIGHT OF WAY ENGINEERING AT THE DISTRICT OFFICE
2. REFER TO NOTES 1, 2, and 3 FROM UTILITY PLAN U-14

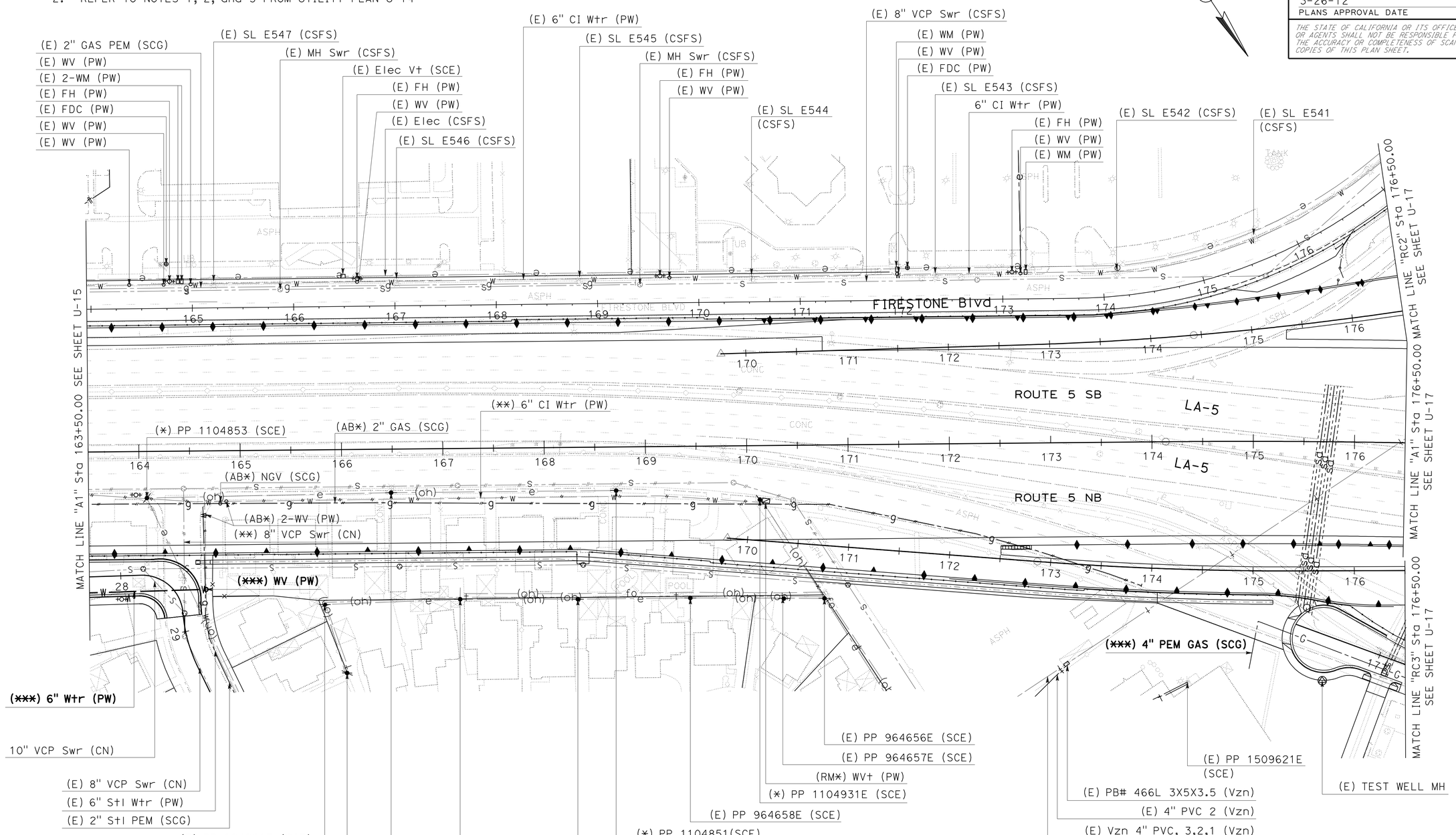


1 **REVISED PER ADDENDUM No. 1 DATED JULY 13, 2012**

THIS PLAN FOR UTILITY WORK ONLY

# UTILITY PLAN
## (RELOCATION UTILITIES)

SCALE 1"=50'

**U-16**

STATE OF CALIFORNIA - DEPARTMENT OF TRANSPORTATION
Caltrans
UTILITIES

FUNCTIONAL SUPERVISOR: CELINA AVILES
CALCULATED-DESIGNED BY: TRUNG CHAU
CHECKED BY: TRUNG CHAU
REVISED BY
DATE REVISED

LAST REVISION 00-00-00
DATE PLOTTED => 12-JUL-2012
TIME PLOTTED => 14:09

| Dist | COUNTY | ROUTE | POST MILES TOTAL PROJECT | SHEET No. | TOTAL SHEETS |
|---|---|---|---|---|---|
| 07 | LA | 5 | 2.4/4.0 | 300 | 1288 |

REGISTERED CIVIL ENGINEER 12-19-11 DATE

3-26-12
PLANS APPROVAL DATE

REGISTERED PROFESSIONAL ENGINEER TRUNG CHAU No. 61874 Exp. 9-30-13 CIVIL STATE OF CALIFORNIA

*THE STATE OF CALIFORNIA OR ITS OFFICERS OR AGENTS SHALL NOT BE RESPONSIBLE FOR THE ACCURACY OR COMPLETENESS OF SCANNED COPIES OF THIS PLAN SHEET.*

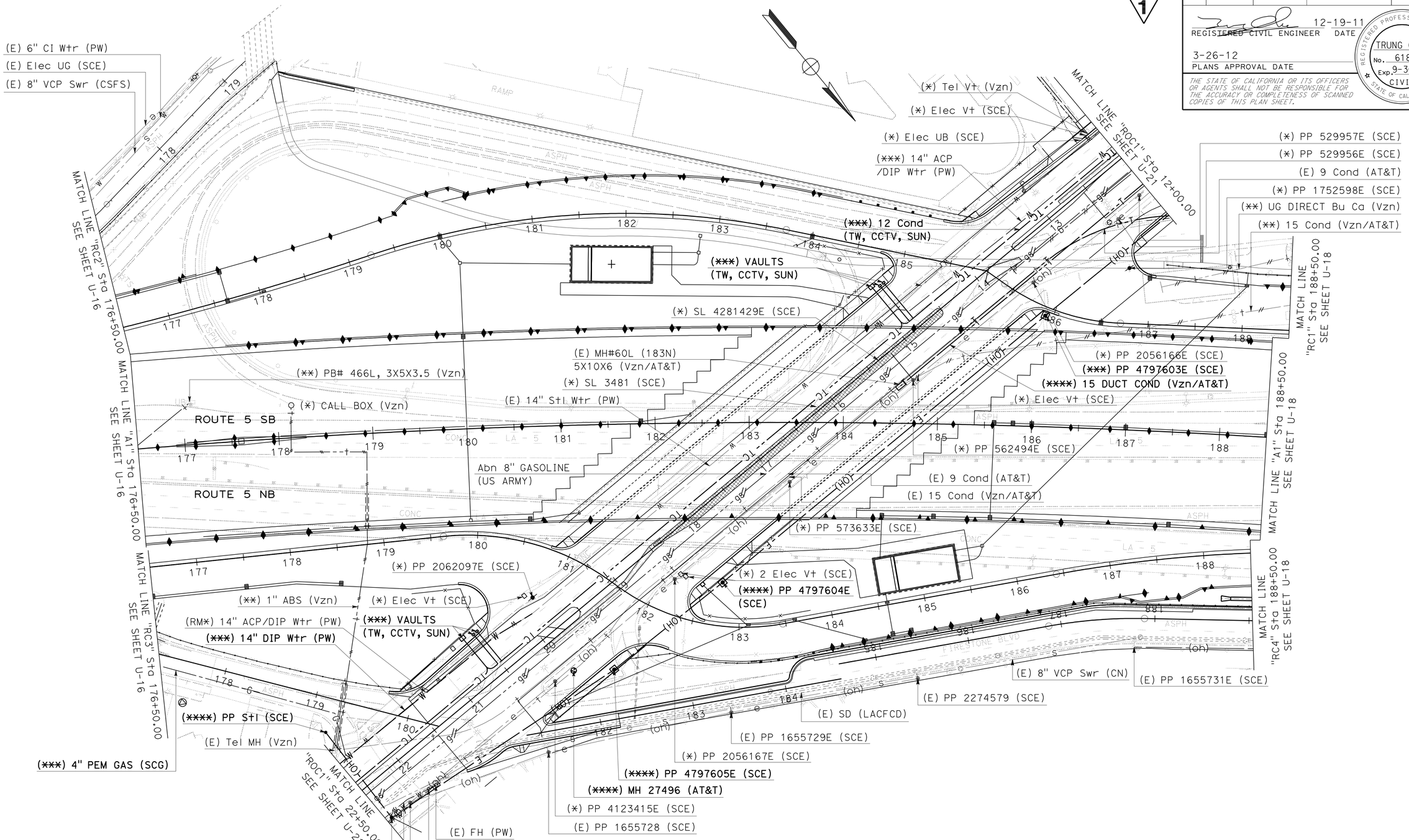


1. FOR ACCURATE RIGHT OF WAY DATA, CONTACT RIGHT OF WAY ENGINEERING AT THE DISTRICT OFFICE
2. REFER TO NOTES 1, 2, and 3 FROM UTILITY PLAN U-14

# UTILITY PLAN (RELOCATION UTILITIES)

SCALE 1"=50'

**U-17**

**1 REVISED PER ADDENDUM No. 1 DATED JULY 13, 2012**

THIS PLAN FOR UTILITY WORK ONLY

REVISED BY | DATE REVISED
TRUNG CHAU | TRUNG CHAU
CALCULATED-DESIGNED BY | CHECKED BY
FUNCTIONAL SUPERVISOR: CELINA AVILES

STATE OF CALIFORNIA - DEPARTMENT OF TRANSPORTATION
UTILITIES
Caltrans

LAST REVISION 00-00-00 | DATE PLOTTED => 12-JUL-2012 | TIME PLOTTED => 14:09

| Dist | COUNTY | ROUTE | POST MILES TOTAL PROJECT | SHEET No. | TOTAL SHEETS |
|---|---|---|---|---|---|
| 07 | LA | 5 | 2.4/4.0 | 301 | 1288 |

REGISTERED CIVIL ENGINEER 12-19-11 DATE

3-26-12
PLANS APPROVAL DATE

REGISTERED PROFESSIONAL ENGINEER TRUNG CHAU No. 61874 Exp. 9-30-13 CIVIL STATE OF CALIFORNIA

*THE STATE OF CALIFORNIA OR ITS OFFICERS OR AGENTS SHALL NOT BE RESPONSIBLE FOR THE ACCURACY OR COMPLETENESS OF SCANNED COPIES OF THIS PLAN SHEET.*

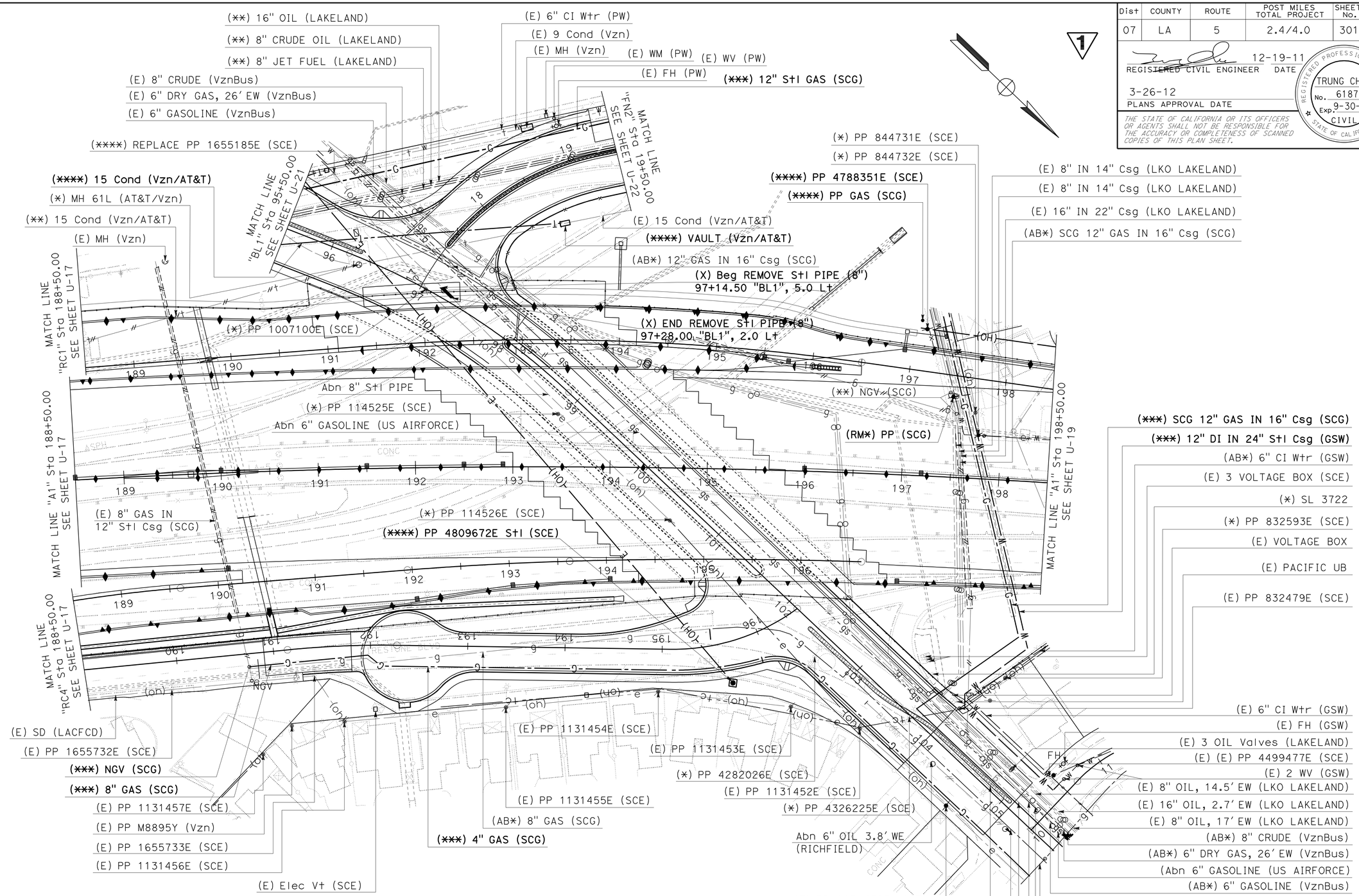


## 1 REVISED PER ADDENDUM No. 1 DATED JULY 13, 2012

LKO - LAST KNOW OWNER

1. FOR ACCURATE RIGHT OF WAY DATA, CONTACT RIGHT OF WAY ENGINEERING AT THE DISTRICT OFFICE
2. REFER TO NOTES 1, 2, 3, AND 4, FROM UTILITY PLAN U-14

| DESCRIPTION | LOCATION | LENGTH (LF) |
|---|---|---|
| REMOVE Stl PIPE | STA 97+14.5 to 97+28.0 "BL" | 28.0' |

THIS PLAN FOR UTILITY WORK ONLY

# UTILITY PLAN (RELOCATION UTILITIES)

SCALE 1"=50'

**U-18**

STATE OF CALIFORNIA - DEPARTMENT OF TRANSPORTATION
Caltrans
UTILITIES

FUNCTIONAL SUPERVISOR: CELINA AVILES
CALCULATED-DESIGNED BY: TRUNG CHAU
CHECKED BY: TRUNG CHAU
REVISED BY
DATE REVISED

LAST REVISION 00-00-00
DATE PLOTTED => 12-JUL-2012
TIME PLOTTED => 14:09

| Dist | COUNTY | ROUTE | POST MILES TOTAL PROJECT | SHEET No. | TOTAL SHEETS |
|---|---|---|---|---|---|
| 07 | LA | 5 | 2.4/4.0 | 302 | 1288 |

REGISTERED CIVIL ENGINEER 12-19-11 DATE

3-26-12
PLANS APPROVAL DATE

REGISTERED PROFESSIONAL ENGINEER TRUNG CHAU No. 61874 Exp. 9-30-13 CIVIL STATE OF CALIFORNIA

*THE STATE OF CALIFORNIA OR ITS OFFICERS OR AGENTS SHALL NOT BE RESPONSIBLE FOR THE ACCURACY OR COMPLETENESS OF SCANNED COPIES OF THIS PLAN SHEET.*

1. FOR ACCURATE RIGHT OF WAY DATA, CONTACT RIGHT OF WAY ENGINEERING AT THE DISTRICT OFFICE
2. REFER TO NOTES 1, 2, 3, AND 4, FROM UTILITY PLAN U-14

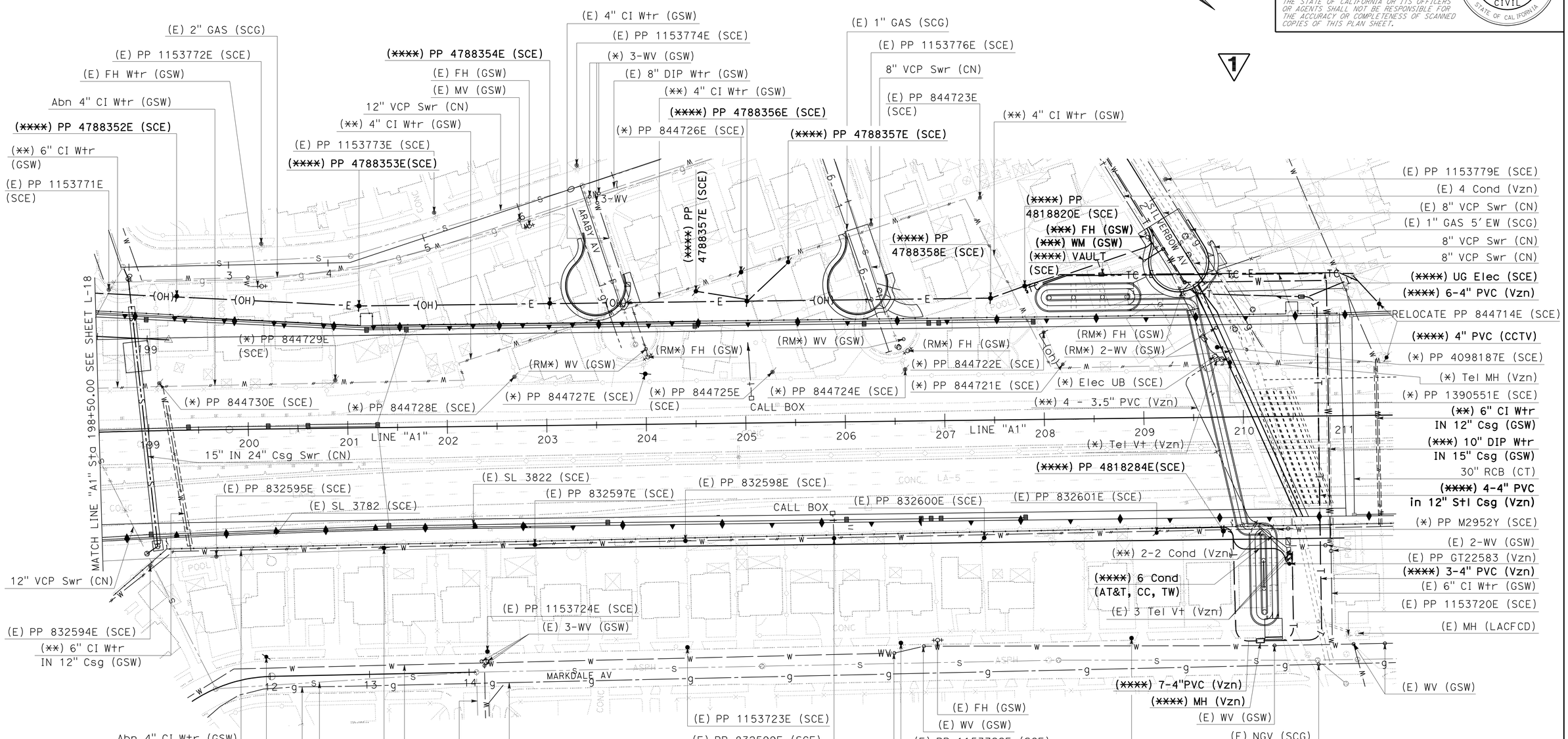


1 REVISED PER ADDENDUM No. 1 DATED JULY 13, 2012

THIS PLAN FOR UTILITY WORK ONLY

# UTILITY PLAN (RELOCATION UTILITIES)

SCALE 1"=50'

**U-19**

STATE OF CALIFORNIA - DEPARTMENT OF TRANSPORTATION
Caltrans
UTILITIES

FUNCTIONAL SUPERVISOR: CELINA AVILES

CALCULATED-DESIGNED BY: TRUNG CHAU
CHECKED BY: TRUNG CHAU

REVISED BY | DATE REVISED

LAST REVISION 00-00-00
DATE PLOTTED => 12-JUL-2012
TIME PLOTTED => 14:09

| Dist | COUNTY | ROUTE | POST MILES TOTAL PROJECT | SHEET No. | TOTAL SHEETS |
|---|---|---|---|---|---|
| 07 | LA | 5 | 2.4/4.0 | 304 | 1288 |

REGISTERED CIVIL ENGINEER 12-19-11 DATE

3-26-12
PLANS APPROVAL DATE

REGISTERED PROFESSIONAL ENGINEER TRUNG CHAU No. 61874 Exp. 9-30-13 CIVIL STATE OF CALIFORNIA

*THE STATE OF CALIFORNIA OR ITS OFFICERS OR AGENTS SHALL NOT BE RESPONSIBLE FOR THE ACCURACY OR COMPLETENESS OF SCANNED COPIES OF THIS PLAN SHEET.*

1. FOR ACCURATE RIGHT OF WAY DATA, CONTACT RIGHT OF WAY ENGINEERING AT THE DISTRICT OFFICE
2. REFER TO NOTES 1, 2, 3, AND 4, FROM UTILITY PLAN U-14

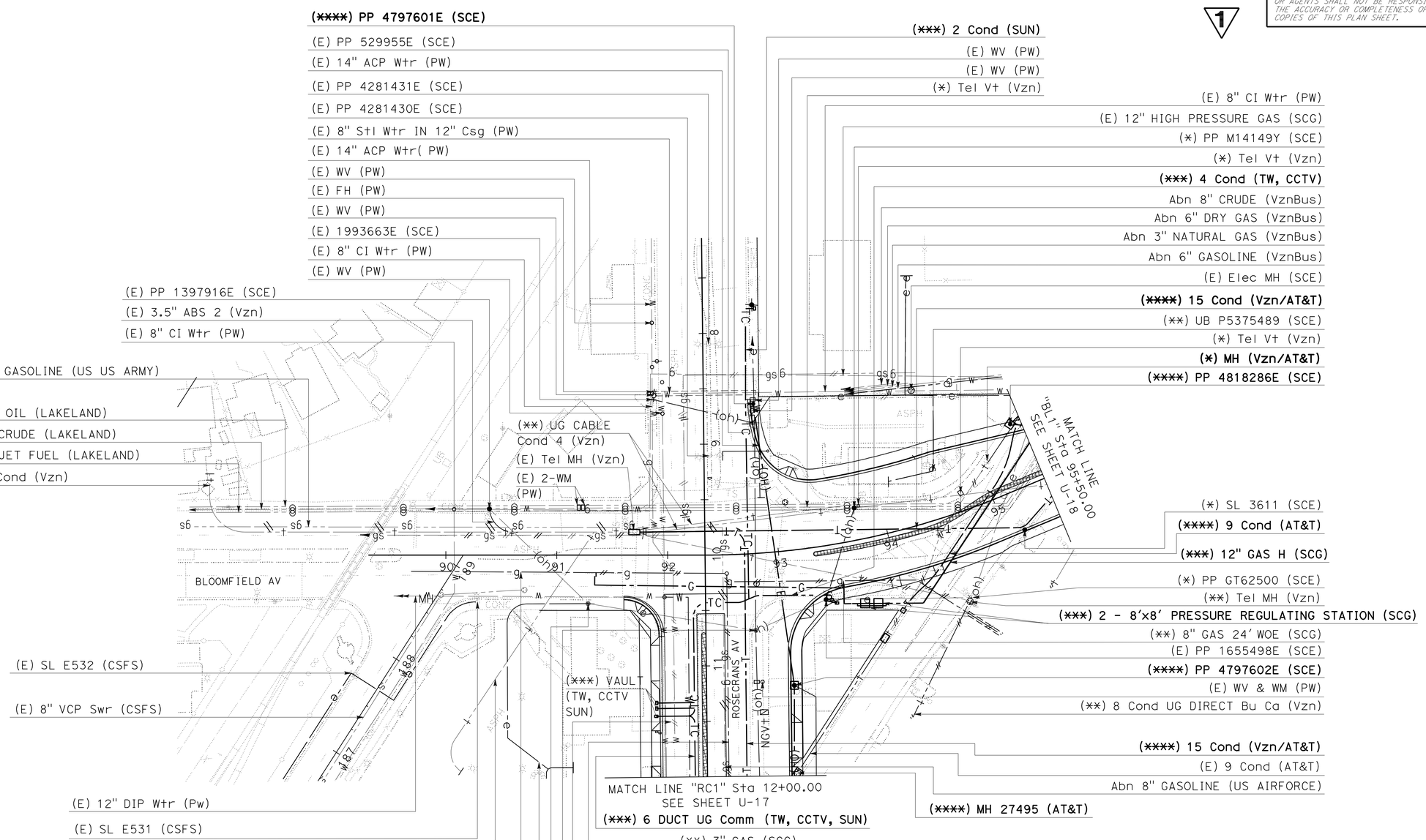


1 **REVISED PER ADDENDUM No. 1 DATED JULY 13, 2012**

THIS PLAN FOR UTILITY WORK ONLY

# UTILITY PLAN
## (RELOCATION UTILITIES)

SCALE 1"=50'

**U-21**

STATE OF CALIFORNIA - DEPARTMENT OF TRANSPORTATION
Caltrans
UTILITIES

FUNCTIONAL SUPERVISOR: CELINA AVILES
CALCULATED-DESIGNED BY: TRUNG CHAU
CHECKED BY: TRUNG CHAU
REVISED BY
DATE REVISED

LAST REVISION 00-00-00
DATE PLOTTED => 12-JUL-2012
TIME PLOTTED => 14:10

| Dist | COUNTY | ROUTE | POST MILES TOTAL PROJECT | SHEET No. | TOTAL SHEETS |
|---|---|---|---|---|---|
| 07 | LA | 5 | 2.4/4.0 | 305 | 1288 |

REGISTERED CIVIL ENGINEER 12-19-11 DATE

3-26-12
PLANS APPROVAL DATE

REGISTERED PROFESSIONAL ENGINEER TRUNG CHAU No. 61874 Exp. 9-30-13 CIVIL STATE OF CALIFORNIA

*THE STATE OF CALIFORNIA OR ITS OFFICERS OR AGENTS SHALL NOT BE RESPONSIBLE FOR THE ACCURACY OR COMPLETENESS OF SCANNED COPIES OF THIS PLAN SHEET.*

1. FOR ACCURATE RIGHT OF WAY DATA, CONTACT RIGHT OF WAY ENGINEERING AT THE DISTRICT OFFICE
2. REFER TO NOTES 1, 2, 3, AND 4, FROM UTILITY PLAN U-14

1

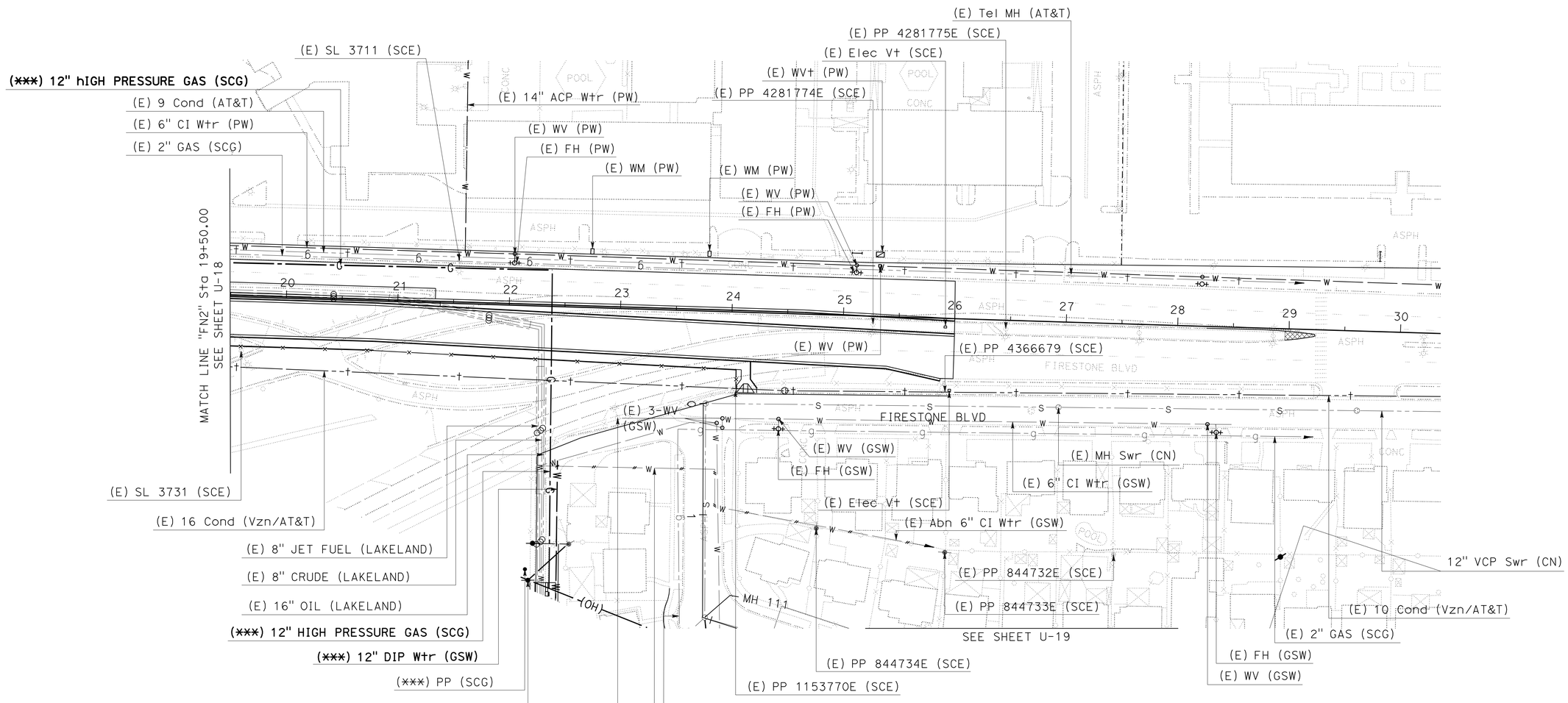


1 **REVISED PER ADDENDUM No. 1 DATED JULY 13, 2012**

THIS PLAN FOR UTILITY WORK ONLY

# UTILITY PLAN
## (RELOCATION UTILITIES)

SCALE 1"=50'

**U-22**

STATE OF CALIFORNIA - DEPARTMENT OF TRANSPORTATION
Caltrans
UTILITIES

FUNCTIONAL SUPERVISOR: CELINA AVILES
CALCULATED-DESIGNED BY: TRUNG CHAU
CHECKED BY
REVISED BY
DATE REVISED

LAST REVISION 00-00-00
DATE PLOTTED => 12-JUL-2012
TIME PLOTTED => 14:10

| Dist | COUNTY | ROUTE | POST MILES TOTAL PROJECT | SHEET No. | TOTAL SHEETS |
|---|---|---|---|---|---|
| 07 | LA | 5 | 2.4/4.0 | 306 | 1288 |

REGISTERED CIVIL ENGINEER 12-19-11 DATE

3-26-12
PLANS APPROVAL DATE

REGISTERED PROFESSIONAL ENGINEER TRUNG CHAU No. 61874 Exp. 9-30-13 CIVIL STATE OF CALIFORNIA

*THE STATE OF CALIFORNIA OR ITS OFFICERS OR AGENTS SHALL NOT BE RESPONSIBLE FOR THE ACCURACY OR COMPLETENESS OF SCANNED COPIES OF THIS PLAN SHEET.*

1

## NOTES:

1. FOR ACCURATE RIGHT OF WAY DATA, CONTACT RIGHT OF WAY ENGINEERING AT THE DISTRICT OFFICE
2. REFER TO NOTES 1, 2, and 3 FROM UTILITY PLAN U-14

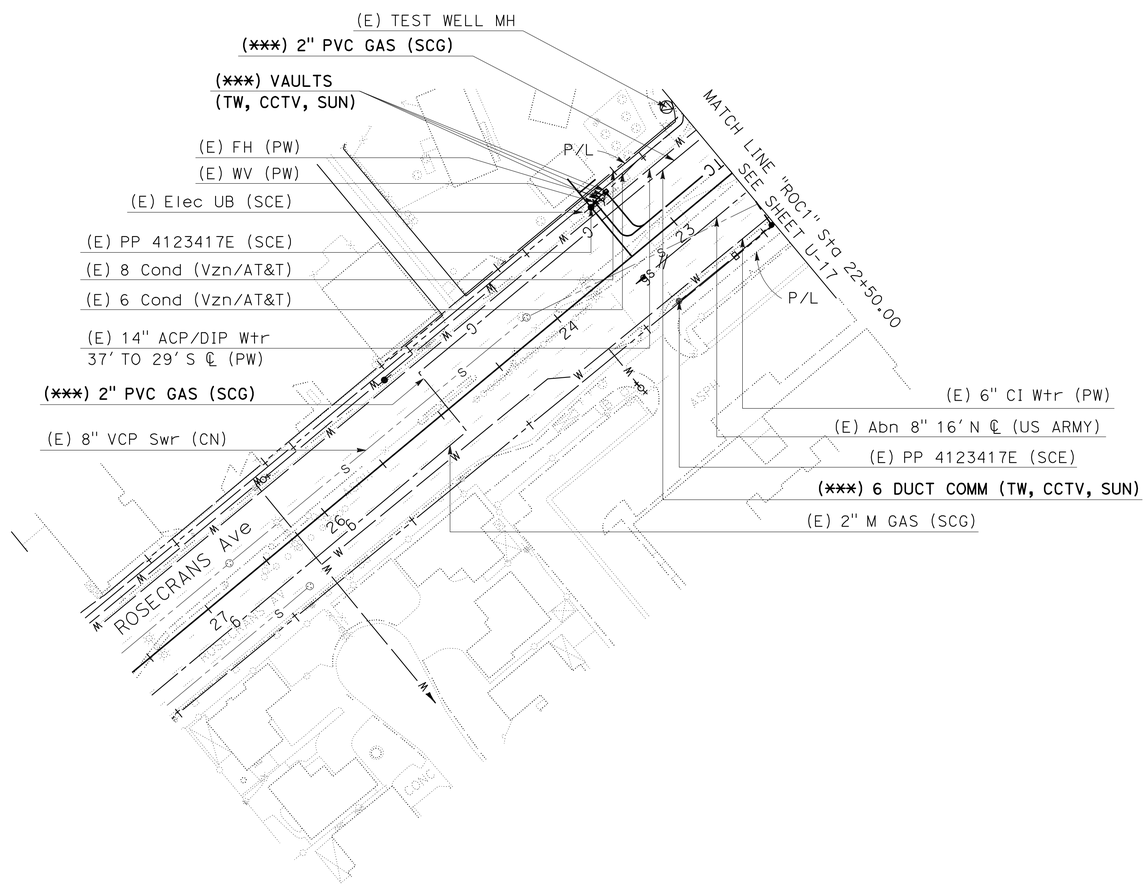


1 **REVISED PER ADDENDUM No. 1 DATED JULY 13, 2012**

*APPROVED FOR UTILITY WORK ONLY*

**(RELOCATION UTILITIES)**

**UTILITY PLAN**

SCALE 1"=50'

**U-23**

STATE OF CALIFORNIA - DEPARTMENT OF TRANSPORTATION
Caltrans OFFICE OF DESIGN A

FUNCTIONAL SUPERVISOR: CELINA AVILES

CALCULATED-DESIGNED BY: TRUNG CHAU
CHECKED BY: TRUNG CHAU

REVISED BY | DATE REVISED

LAST REVISION 00-00-00 | DATE PLOTTED => 12-JUL-2012 | TIME PLOTTED => 14:10

| Dist | COUNTY | ROUTE | POST MILES TOTAL PROJECT | SHEET No. | TOTAL SHEETS |
|---|---|---|---|---|---|
| 07 | LA | 5 | 2.4/4.0 | 309 | 1288 |

REGISTERED CIVIL ENGINEER 12-19-11

3-26-12
PLANS APPROVAL DATE

REGISTERED PROFESSIONAL ENGINEER NGIM NANCY PE No. 58161 Exp. 6-30-12 CIVIL STATE OF CALIFORNIA

*THE STATE OF CALIFORNIA OR ITS OFFICERS OR AGENTS SHALL NOT BE RESPONSIBLE FOR THE ACCURACY OR COMPLETENESS OF SCANNED COPIES OF THIS PLAN SHEET.*

1

## NOTES:

1. IF CARMENITA RD OVERCROSSING IS CLOSED, THEN DETOUR TRAFFIC SOUTH ON VALLEY VIEW AVE.
2. CONFLICTING SIGNS SHALL BE REMOVED OR COVERED WHILE DETOURS ARE IN PLACE.
3. IN LIEU OF WOOD POSTS, SIGNS MAY BE ATTACHED TO EXISTING UTILITY POLES BY STRAP AND SADDLE METHOD, UPON APPROVAL OF LOCAL AGENCIES.
4. SIGN AND PCMS LOCATIONS ARE APPROXIMATE. EXACT LOCATIONS WILL BE DETERMINED BY THE ENGINEER.
5. SEE STAGE CONSTRUCTION AND TRAFFIC HANDLING PLANS FOR ADDITIONAL CONSTRUCTION AREA SIGNS.

## LEGEND:

- ONE POST SIGN
- PORTABLE CHANGEABLE MESSAGE SIGN (PCMS)
- DIRECTION OF DETOUR TRAFFIC

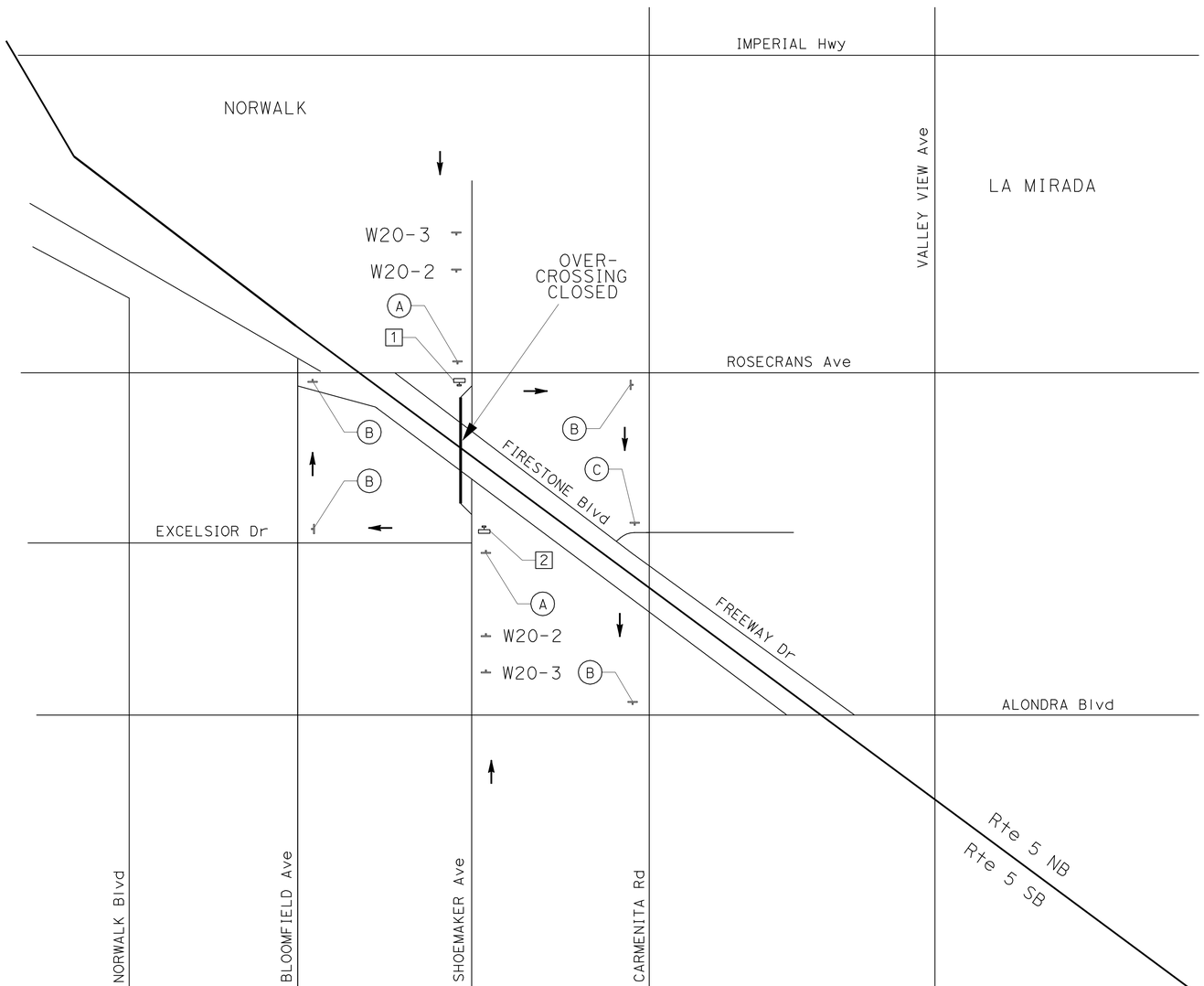


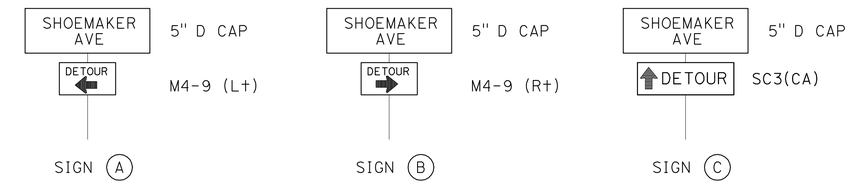


DIRECTIONAL SIGNS SHALL BE POSTED AS SHOWN BY A 4" x 6" WOOD POST, AND MAINTAINED FOR THE ENTIRE DURATION OF THE DETOUR.

| PCMS No. | LOCATION | MESSAGE | | DURATION |
|---|---|---|---|---|
| | | FIRST FLASH | SECOND FLASH | |
| 1 | NB SHOEMAKER Ave ON RAISED ISLAND NORTH END OF OC | SHOEMAKER BRIDGE CLOSED | STARTING MM-DD-YY | ACTIVATE TWO WEEKS PRIOR TO CLOSURE |
| 2 | SB SHOEMAKER Ave OUTSIDE OF SHOULDER SOUTH END OF OC | | | |

1 **REVISED PER ADDENDUM No. 1 DATED JULY 13, 2012**

*APPROVED FOR MOTORIST INFORMATION WORK ONLY*

**STAGE 1 - PHASE 1**

# MOTORIST INFORMATION PLAN (SIGNING AND PCMS LOCATIONS)

**SHOEMAKER Ave OVERCROSSING**

NO SCALE

**MI-1**

STATE OF CALIFORNIA - DEPARTMENT OF TRANSPORTATION
Caltrans DTM

| REVISED BY | DATE REVISED |
|---|---|
| | |

| CALCULATED-DESIGNED BY | R. MISHREKI |
|---|---|
| CHECKED BY | D. KATAYAMA |
| FUNCTIONAL SUPERVISOR | DENIS S. KATAYAMA |

LAST REVISION 00-00-00 | DATE PLOTTED => 12-JUL-2012 | TIME PLOTTED => 14:10

| Dist | COUNTY | ROUTE | POST MILES TOTAL PROJECT | SHEET No. | TOTAL SHEETS |
|---|---|---|---|---|---|
| 07 | LA | 5 | 2.4/4.0 | 310 | 1288 |

REGISTERED CIVIL ENGINEER 12-19-11 DATE

3-26-12
PLANS APPROVAL DATE

REGISTERED PROFESSIONAL ENGINEER NGIM NANCY PE No. 58161 Exp. 6-30-12 CIVIL STATE OF CALIFORNIA

*THE STATE OF CALIFORNIA OR ITS OFFICERS OR AGENTS SHALL NOT BE RESPONSIBLE FOR THE ACCURACY OR COMPLETENESS OF SCANNED COPIES OF THIS PLAN SHEET.*

1

## NOTES:

1. SIGN AND PCMS LOCATIONS ARE APPROXIMATE. EXACT LOCATIONS WILL BE DETERMINED BY THE ENGINEER.
2. SEE CONSTRUCTION AREA SIGNS, STAGE CONSTRUCTION, AND TRAFFIC HANDLING PLANS FOR ADDITIONAL CONSTRUCTION AREA SIGNS.
3. FOR SIGN (I), SEE MI-3.
4. CONFLICTING SIGNS SHALL BE REMOVED OR COVERED DURING CONSTRUCTION AS DIRECTED BY THE ENGINEER.
5. IN LIEU OF WOOD POSTS, SIGNS MAY BE ATTACHED TO EXISTING UTILITY POSTS BY STRAP AND SADDLE METHOD UPON APPROVAL OF LOCAL AGENCIES.
6. SIGNS SHALL BE MOUNTED WITH BOTTOM OF SIGNS A MINIMUM OF 7′ ABOVE GROUND.
7. FOR ADDITIONAL SIGN DETAILS, SEE SHEET MIQ-1.

## LEGEND:

- ONE POST SIGN
- PORTABLE CHANGEABLE MESSAGE SIGN (PCMS)
- DIRECTION OF DETOUR TRAFFIC
- WORK AREA

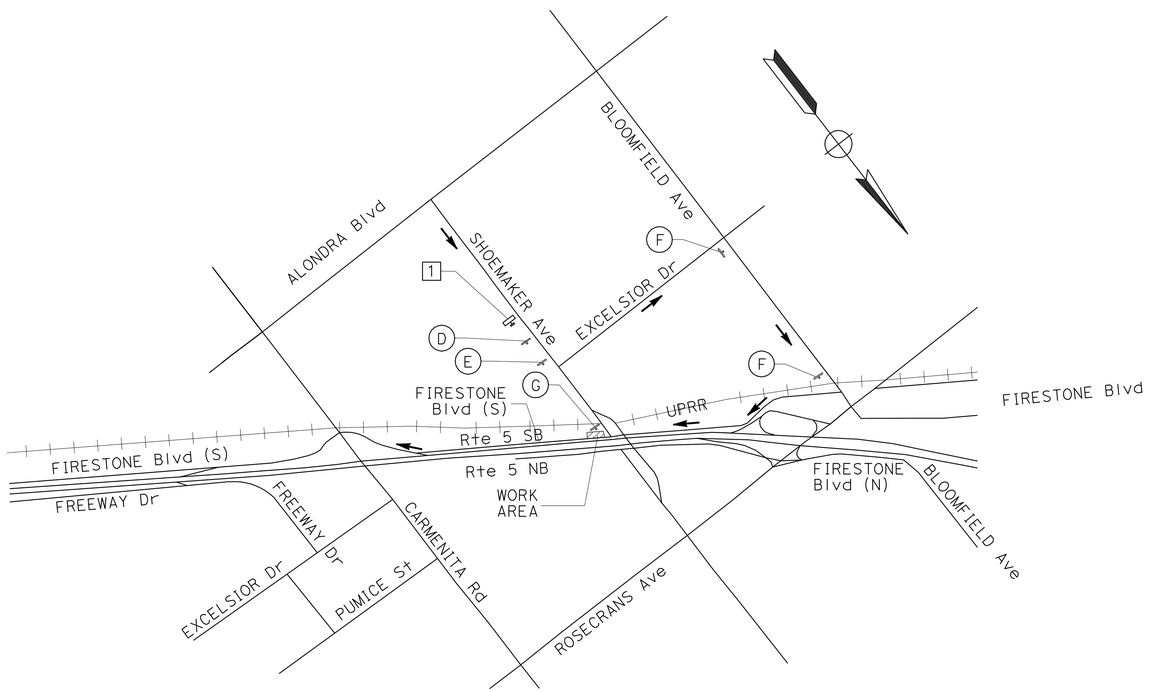


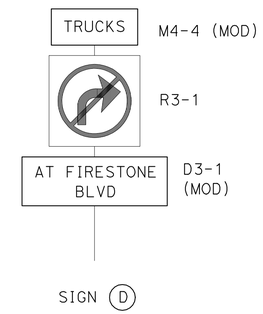


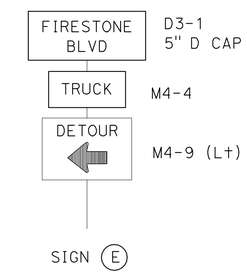


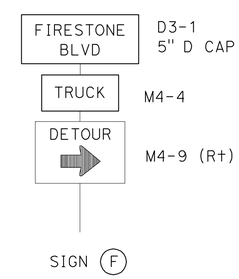


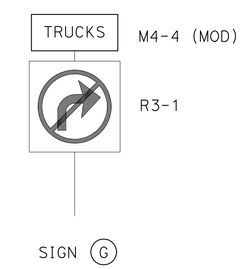


| PCMS No. | LOCATION | MESSAGE | | DURATION |
|---|---|---|---|---|
| | | FIRST FLASH | SECOND FLASH | |
| 1 | NB SHOEMAKER Ave 450′ SOUTH OF EXCELSIOR Dr | TRUCKS NO RIGHT TURN | AT FIRESTONE Blvd | DURING CONSTRUCTION AT FIRESTONE Blvd (S) AND SHOEMAKER Ave |

1 **REVISED PER ADDENDUM No. 1 DATED JULY 13, 2012**

*APPROVED FOR MOTORIST INFORMATION WORK ONLY*

**STAGE 1 - PHASE 3**

# MOTORIST INFORMATION PLAN (SIGNING AND PCMS LOCATIONS)

**CONSTRUCTION AT FIRESTONE Blvd (S) AND SHOEMAKER Ave**

NO SCALE

**MI-2**

REVISED BY | DATE REVISED
WILL CARPIO | NGIM NANCY PE
CALCULATED-DESIGNED BY | CHECKED BY
FUNCTIONAL SUPERVISOR | NGIM NANCY PE

STATE OF CALIFORNIA - DEPARTMENT OF TRANSPORTATION
Caltrans® OFFICE OF DESIGN A

7215931b002.add

LAST REVISION 00-00-00 | DATE PLOTTED => | TIME PLOTTED =>

BORDER LAST REVISED 7/2/2010 | USERNAME => s124496 | DGN FILE => 7215931b002.add | RELATIVE BORDER SCALE IS IN INCHES 0 1 2 3 | UNIT 1797 | PROJECT NUMBER & PHASE 07000018331

| Dist | COUNTY | ROUTE | POST MILES TOTAL PROJECT | SHEET No. | TOTAL SHEETS |
|---|---|---|---|---|---|
| 07 | LA | 5 | 2.4/4.0 | 311 | 1288 |

REGISTERED CIVIL ENGINEER 12-19-11 DATE

3-26-12
PLANS APPROVAL DATE

REGISTERED PROFESSIONAL ENGINEER NGIM NANCY PE No. 58161 Exp. 6-30-12 CIVIL STATE OF CALIFORNIA

*THE STATE OF CALIFORNIA OR ITS OFFICERS OR AGENTS SHALL NOT BE RESPONSIBLE FOR THE ACCURACY OR COMPLETENESS OF SCANNED COPIES OF THIS PLAN SHEET.*

1

## NOTES:

1. SIGN AND PCMS LOCATIONS ARE APPROXIMATE. EXACT LOCATIONS WILL BE DETERMINED BY THE ENGINEER.
2. SEE CONSTRUCTION AREA SIGNS, STAGE CONSTRUCTION, AND TRAFFIC HANDLING PLANS FOR ADDITIONAL CONSTRUCTION AREA SIGNS.
3. FOR SIGN (T), SEE MI-4.
4. CONFLICTING SIGNS SHALL BE REMOVED OR COVERED DURING CONSTRUCTION AS DIRECTED BY THE ENGINEER.
5. IN LIEU OF WOOD POSTS, SIGNS MAY BE ATTACHED TO EXISTING UTILITY POSTS BY STRAP AND SADDLE METHOD UPON APPROVAL OF LOCAL AGENCIES.
6. SIGNS SHALL BE MOUNTED WITH BOTTOM OF SIGNS A MINIMUM OF 7′ ABOVE GROUND.
7. FOR ADDITIONAL SIGN DETAILS, SEE SHEET MIQ-1.

## LEGEND:

- TWO POST SIGN
- ONE POST SIGN
- PORTABLE CHANGEABLE MESSAGE SIGN (PCMS)
- DIRECTION OF DETOUR TRAFFIC
- ROAD CLOSED

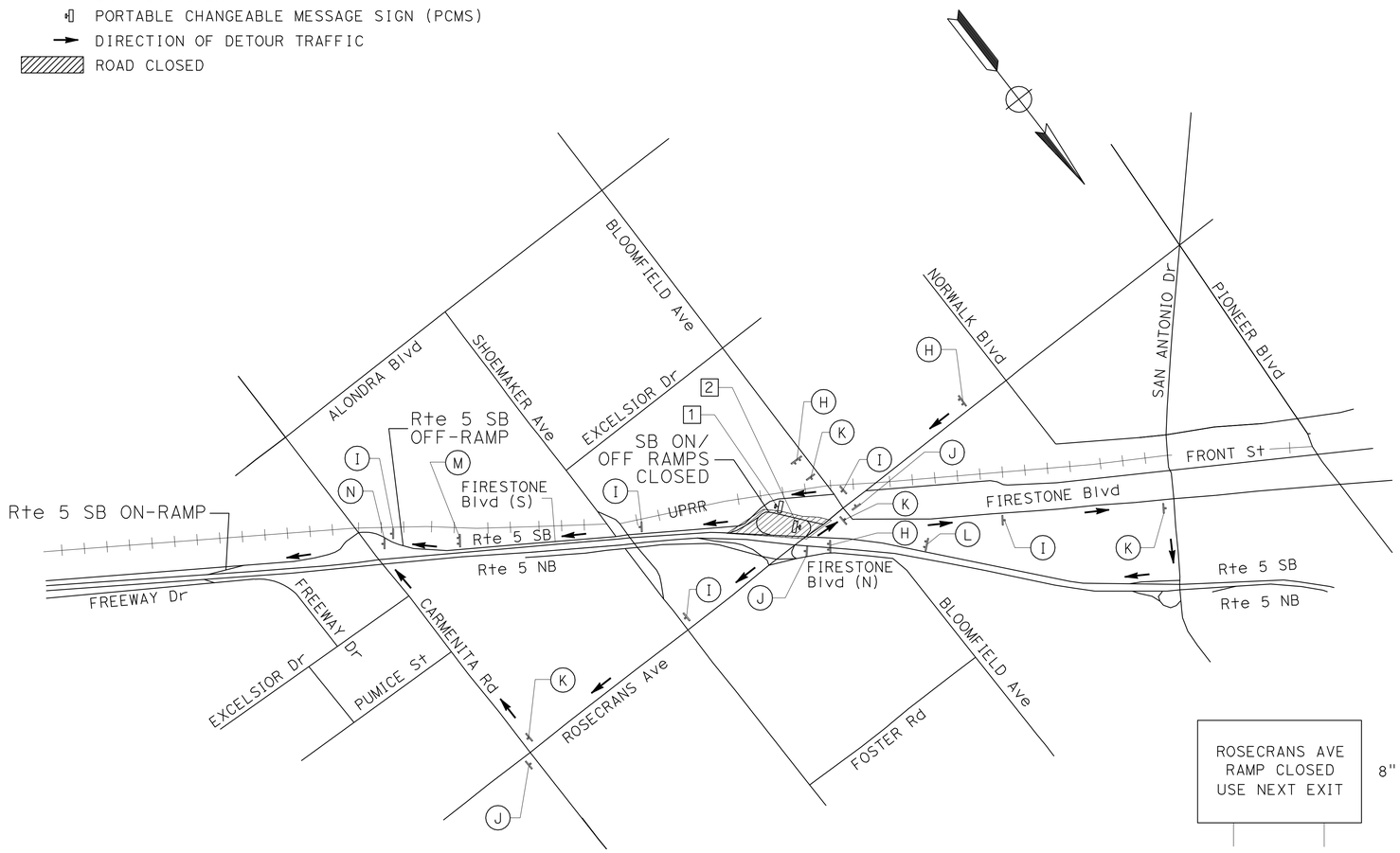


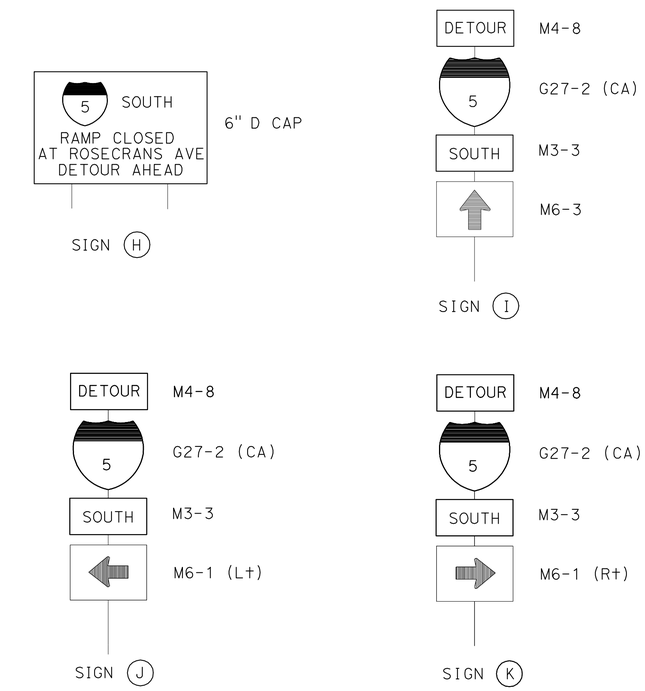


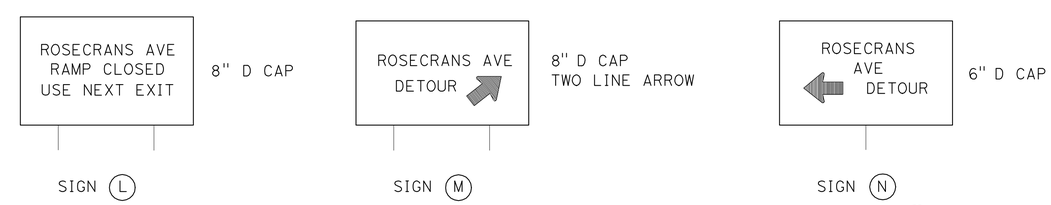


REPLACE SIGN (N) WITH SIGN (T) WHEN OFF-RAMP DOES NOT HAVE DIRECT CONNECTION TO CARMENITA Rd

| PCMS No. | LOCATION | MESSAGE | | DURATION |
|---|---|---|---|---|
| | | FIRST FLASH | SECOND FLASH | |
| 1 | Rte 5 SB ON-RAMP FROM ROSECRANS Ave ON RIGHT SHOULDER | RAMP WILL BE CLOSED | STARTING MM-DD-YY | TWO WEEKS PRIOR TO CLOSURE |
| 2 | Rte 5 SB OFF-RAMP TO ROSECRANS Ave ON RIGHT SHOULDER | RAMP WILL BE CLOSED | STARTING MM-DD-YY | |

1 **REVISED PER ADDENDUM No. 1 DATED JULY 13, 2012**

*APPROVED FOR MOTORIST INFORMATION WORK ONLY*

**STAGE 2**

# MOTORIST INFORMATION PLAN (SIGNING AND PCMS LOCATIONS)

**SB ROUTE 5 ROSECRANS Ave ON-RAMP & OFF-RAMP CLOSURE**

NO SCALE

**MI-3**

| REVISED BY | DATE REVISED |
|---|---|
| | |

| | |
|---|---|
| WILL CARPIO | NGIM NANCY PE |
| CALCULATED-DESIGNED BY | CHECKED BY |
| FUNCTIONAL SUPERVISOR | NGIM NANCY PE |

STATE OF CALIFORNIA - DEPARTMENT OF TRANSPORTATION
Caltrans® OFFICE OF DESIGN A

7215931b003.dds

LAST REVISION 00-00-00 | DATE PLOTTED => 12-JUL-2012 | TIME PLOTTED => 14:10

| Dist | COUNTY | ROUTE | POST MILES TOTAL PROJECT | SHEET No. | TOTAL SHEETS |
|---|---|---|---|---|---|
| 07 | LA | 5 | 2.4/4.0 | 312 | 1288 |

REGISTERED CIVIL ENGINEER 12-19-11 DATE

3-26-12
PLANS APPROVAL DATE

REGISTERED PROFESSIONAL ENGINEER NGIM NANCY PE No. 58161 Exp. 6-30-12 CIVIL STATE OF CALIFORNIA

*THE STATE OF CALIFORNIA OR ITS OFFICERS OR AGENTS SHALL NOT BE RESPONSIBLE FOR THE ACCURACY OR COMPLETENESS OF SCANNED COPIES OF THIS PLAN SHEET.*

## NOTES:

1. SIGN AND PCMS LOCATIONS ARE APPROXIMATE. EXACT LOCATIONS WILL BE DETERMINED BY THE ENGINEER.
2. SEE CONSTRUCTION AREA SIGNS, STAGE CONSTRUCTION, AND TRAFFIC HANDLING PLANS FOR ADDITIONAL CONSTRUCTION AREA SIGNS.
3. FOR SIGNS (L), AND (M), SEE MI-3.
4. CONFLICTING SIGNS SHALL BE REMOVED OR COVERED DURING CONSTRUCTION AS DIRECTED BY THE ENGINEER.
5. IN LIEU OF WOOD POSTS, SIGNS MAY BE ATTACHED TO EXISTING UTILITY POSTS BY STRAP AND SADDLE METHOD UPON APPROVAL OF LOCAL AGENCIES.
6. SIGNS SHALL BE MOUNTED WITH BOTTOM OF SIGNS A MINIMUM OF 7' ABOVE GROUND.
7. FOR ADDITIONAL SIGN DETAILS, SEE SHEET MIQ-1.

## LEGEND:

- TWO POST SIGN
- ONE POST SIGN
- PORTABLE CHANGEABLE MESSAGE SIGN (PCMS)
- DIRECTION OF DETOUR TRAFFIC
- ROAD CLOSED

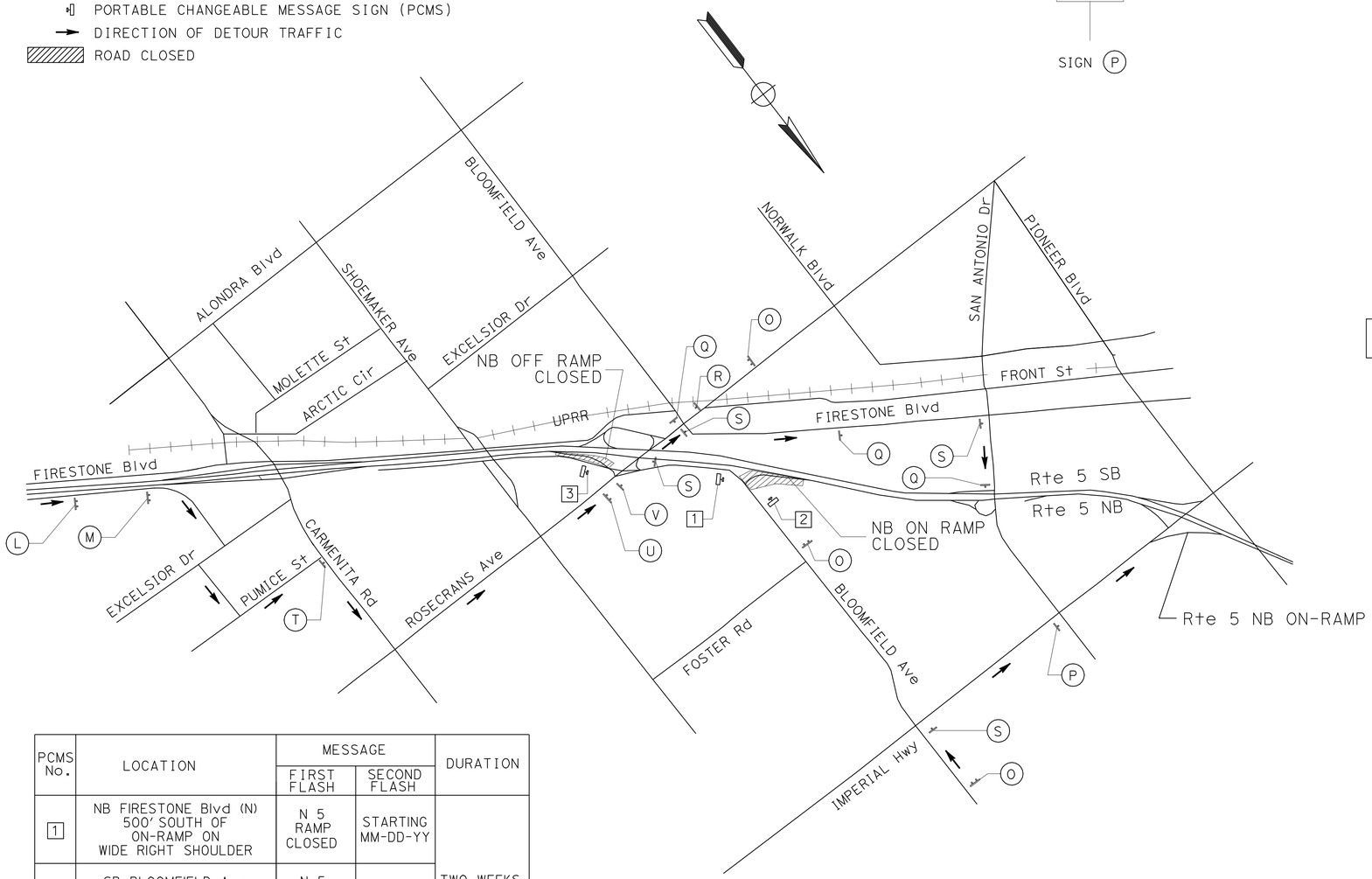


| PCMS No. | LOCATION | MESSAGE | | DURATION |
|---|---|---|---|---|
| | | FIRST FLASH | SECOND FLASH | |
| 1 | NB FIRESTONE Blvd (N) 500' SOUTH OF ON-RAMP ON WIDE RIGHT SHOULDER | N 5 RAMP CLOSED | STARTING MM-DD-YY | TWO WEEKS PRIOR TO CLOSURE |
| 2 | SB BLOOMFIELD Ave AT MARKDALE Ave ON RIGHT SHOULDER | N 5 RAMP CLOSED | STARTING MM-DD-YY | |
| 3 | Rte 5 NB OFF-RAMP TO ROSECRANS Ave ON RIGHT SHOULDER BEHIND TEMPORARY RAILING | RAMP WILL BE CLOSED | STARTING MM-DD-YY | |

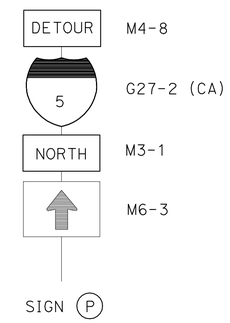


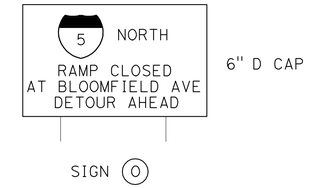


1

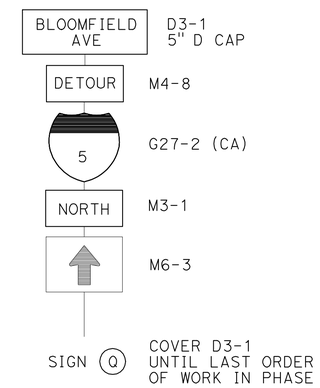


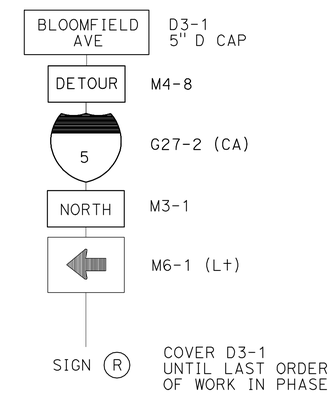


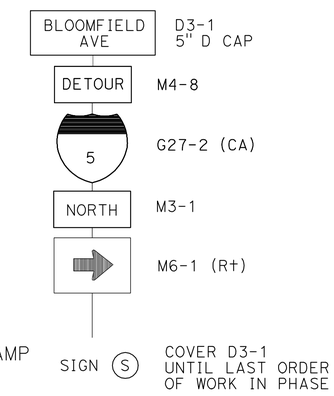


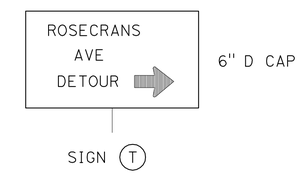


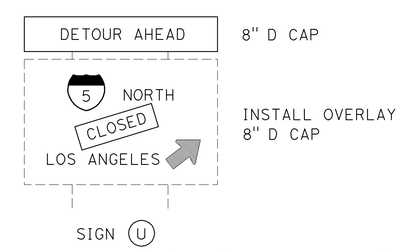


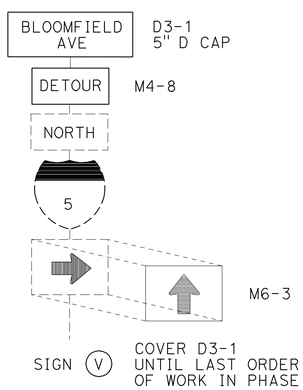


*APPROVED FOR MOTORIST INFORMATION WORK ONLY*

1 **REVISED PER ADDENDUM No. 1 DATED JULY 13, 2012**

NO SCALE

**STAGE 4 - PHASE 1**

# MOTORIST INFORMATION PLAN (SIGNING AND PCMS LOCATIONS)

**NB ROUTE 5 ROSECRANS Ave ON-RAMP & OFF-RAMP CLOSURE**

**MI-4**

REVISED BY | DATE REVISED

WILL CARPIO | NGIM NANCY PE

CALCULATED-DESIGNED BY | CHECKED BY

FUNCTIONAL SUPERVISOR | NGIM NANCY PE

STATE OF CALIFORNIA - DEPARTMENT OF TRANSPORTATION

Caltrans® OFFICE OF DESIGN A

7215931lb004.dgn

LAST REVISION 00-00-00 | DATE PLOTTED => 12-JUL-2012 | TIME PLOTTED => 14:10

| Dist | COUNTY | ROUTE | POST MILES TOTAL PROJECT | SHEET No. | TOTAL SHEETS |
|---|---|---|---|---|---|
| 07 | LA | 5 | 2.4/4.0 | 313 | 1288 |

REGISTERED CIVIL ENGINEER 12-19-11 DATE

3-26-12
PLANS APPROVAL DATE

REGISTERED PROFESSIONAL ENGINEER NGIM NANCY PE No. 58161 Exp. 6-30-12 CIVIL STATE OF CALIFORNIA

*THE STATE OF CALIFORNIA OR ITS OFFICERS OR AGENTS SHALL NOT BE RESPONSIBLE FOR THE ACCURACY OR COMPLETENESS OF SCANNED COPIES OF THIS PLAN SHEET.*

1

## NOTES:

1. SIGN AND PCMS LOCATIONS ARE APPROXIMATE. EXACT LOCATIONS WILL BE DETERMINED BY THE ENGINEER.
2. SEE CONSTRUCTION AREA SIGNS, STAGE CONSTRUCTION, AND TRAFFIC HANDLING PLANS FOR ADDITIONAL CONSTRUCTION AREA SIGNS.
3. FOR SIGN (Q), (R), AND (S), SEE MI-4.
4. CONFLICTING SIGNS SHALL BE REMOVED OR COVERED DURING CONSTRUCTION AS DIRECTED BY THE ENGINEER.
5. IN LIEU OF WOOD POSTS, SIGNS MAY BE ATTACHED TO EXISTING UTILITY POSTS BY STRAP AND SADDLE METHOD UPON APPROVAL OF LOCAL AGENCIES.
6. SIGNS SHALL BE MOUNTED WITH BOTTOM OF SIGNS A MINIMUM OF 7' ABOVE GROUND.
7. FOR ADDITIONAL SIGN DETAILS, SEE SHEET MIQ-1.

## LEGEND:

- TYPE II OR III BARRICADE
- TWO POST SIGN
- ONE POST SIGN
- PORTABLE CHANGEABLE MESSAGE SIGN (PCMS)
- DIRECTION OF DETOUR TRAFFIC
- ROAD CLOSED

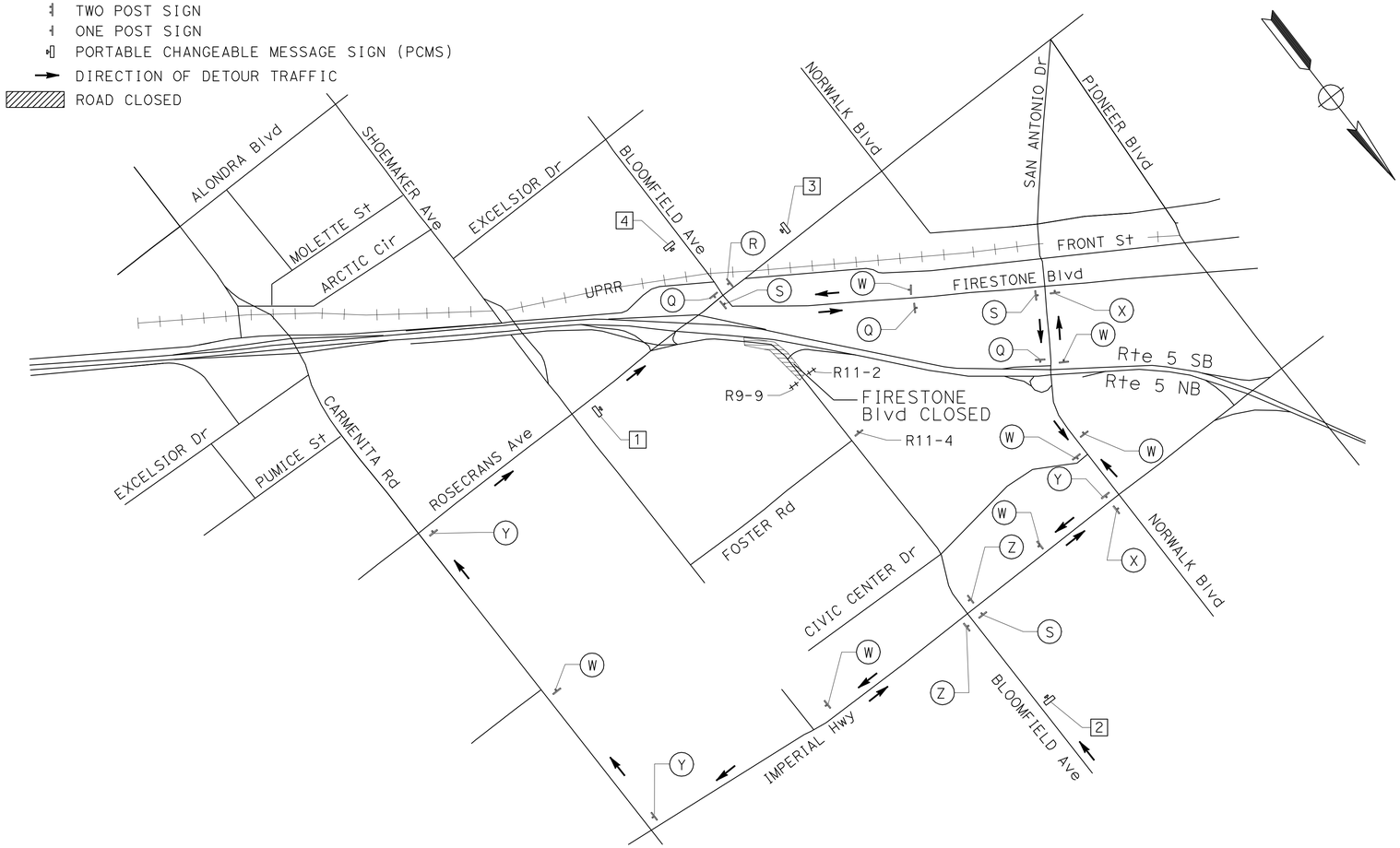


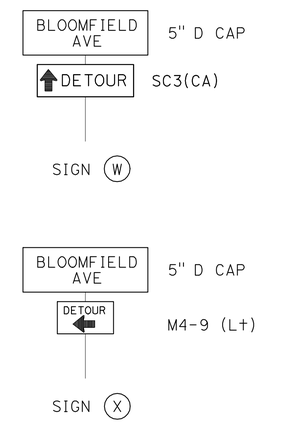


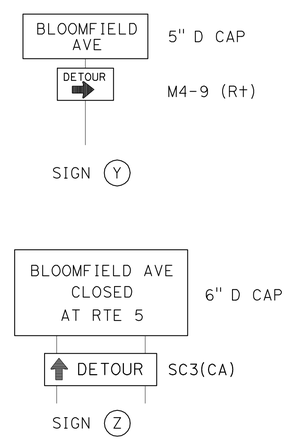


| PCMS No. | LOCATION | PRIMARY MESSAGE | | SECONDARY MESSAGE | | DURATION |
|---|---|---|---|---|---|---|
| | | FIRST FLASH | SECOND FLASH | FIRST FLASH | SECOND FLASH | |
| 1 | NB FIRESTONE Blvd (N) APPROACHING MARKDALE Ave ON WIDE RIGHT SHOULDER | ROAD WILL BE CLOSED | STARTING MM-DD-YY | BLOOMFIELD -NORTH 5 CLOSED | CONTINUE WEST TO FIRESTONE | 2 WEEKS PRIOR TO CLOSURE. DURING CLOSURE, MOVE PCMS AS SHOWN ON PLAN AND ACTIVATE SECONDARY MESSAGE FOR DURATION OF CLOSURE |
| 2 | SB FIRESTONE Blvd AT MARKDALE Ave ON RIGHT SHOULDER | ROAD WILL BE CLOSED | STARTING MM-DD-YY | BLOOMFIELD -N5 RAMP CLOSED | USE DETOUR AHEAD | |
| 3 | EB ROSECRANS Ave NEAR CAMEO Ave ON RIGHT SHOULDER | BLOOMFIELD -NORTH 5 CLOSED | DETOUR LEFT ON FIRESTNE | | | |
| 4 | NB BLOOMFIELD Ave APPROACHING ROSECRANS Ave ON RIGHT SHOULDER | BLOOMFIELD -NORTH 5 CLOSED | DETOUR CONTINUE STRAIGHT | | | |

*APPROVED FOR MOTORIST INFORMATION WORK ONLY* 1 **REVISED PER ADDENDUM No. 1 DATED JULY 13, 2012** NO SCALE

**STAGE 4 - PHASE 2**

# MOTORIST INFORMATION PLAN (SIGNING AND PCMS LOCATIONS)

**FIRESTONE Blvd (NORTH) / BLOOMFIELD Ave CLOSURE**

**MI-5**

REVISED BY | DATE REVISED
WILL CARPIO | NGIM NANCY PE
CALCULATED-DESIGNED BY | CHECKED BY
FUNCTIONAL SUPERVISOR | NGIM NANCY PE
STATE OF CALIFORNIA - DEPARTMENT OF TRANSPORTATION
Caltrans® OFFICE OF DESIGN A
7215931b005.add

LAST REVISION 00-00-00 | DATE PLOTTED => 12-JUL-2012 | TIME PLOTTED => 14:10

BORDER LAST REVISED 7/2/2010 | USERNAME => s124496 | DGN FILE => 7215931b005.add | RELATIVE BORDER SCALE IS IN INCHES 0 1 2 3 | UNIT 1797 | PROJECT NUMBER & PHASE 07000018331

| Dist | COUNTY | ROUTE | POST MILES TOTAL PROJECT | SHEET No. | TOTAL SHEETS |
|---|---|---|---|---|---|
| 07 | LA | 5 | 2.4/4.0 | 314 | 1288 |

REGISTERED CIVIL ENGINEER 12-19-11 DATE

3-26-12
PLANS APPROVAL DATE

REGISTERED PROFESSIONAL ENGINEER NGIM NANCY PE No. 58161 Exp. 6-30-12 CIVIL STATE OF CALIFORNIA

*THE STATE OF CALIFORNIA OR ITS OFFICERS OR AGENTS SHALL NOT BE RESPONSIBLE FOR THE ACCURACY OR COMPLETENESS OF SCANNED COPIES OF THIS PLAN SHEET.*

1

## NOTES:

1. SIGN AND PCMS LOCATIONS ARE APPROXIMATE. EXACT LOCATIONS WILL BE DETERMINED BY THE ENGINEER.
2. SEE CONSTRUCTION AREA SIGNS, STAGE CONSTRUCTION, AND TRAFFIC HANDLING PLANS FOR ADDITIONAL CONSTRUCTION AREA SIGNS.
3. CONFLICTING SIGNS SHALL BE REMOVED OR COVERED DURING CONSTRUCTION AS DIRECTED BY THE ENGINEER.
4. IN LIEU OF WOOD POSTS, SIGNS MAY BE ATTACHED TO EXISTING UTILITY POSTS BY STRAP AND SADDLE METHOD UPON APPROVAL OF LOCAL AGENCIES.
5. SIGNS SHALL BE MOUNTED WITH BOTTOM OF SIGNS A MINIMUM OF 7′ ABOVE GROUND.
6. FOR ADDITIONAL SIGN DETAILS, SEE SHEET MIQ-1.

| SIGN | SIZE | BORDER WIDTH | MARGIN WIDTH | LETTER SIZE | | | | | CORNER RADIUS |
|---|---|---|---|---|---|---|---|---|---|
| | | | | LINE 1 | LINE 2* | LINE 3 | LINE 4 | LINE 5* | |
| SPECIAL "EE" | 54" x 57" | 1¼" | ¾" | 4E | 4D | 6E | 4D | 4D | 3" |
| * CONDENSED SPACING IF NECESSARY | | | | | | | | | |

## LEGEND:

- TYPE III BARRICADE
- ONE POST SIGN
- PORTABLE CHANGEABLE MESSAGE SIGN (PCMS)
- DIRECTION OF DETOUR TRAFFIC
- ROAD CLOSED

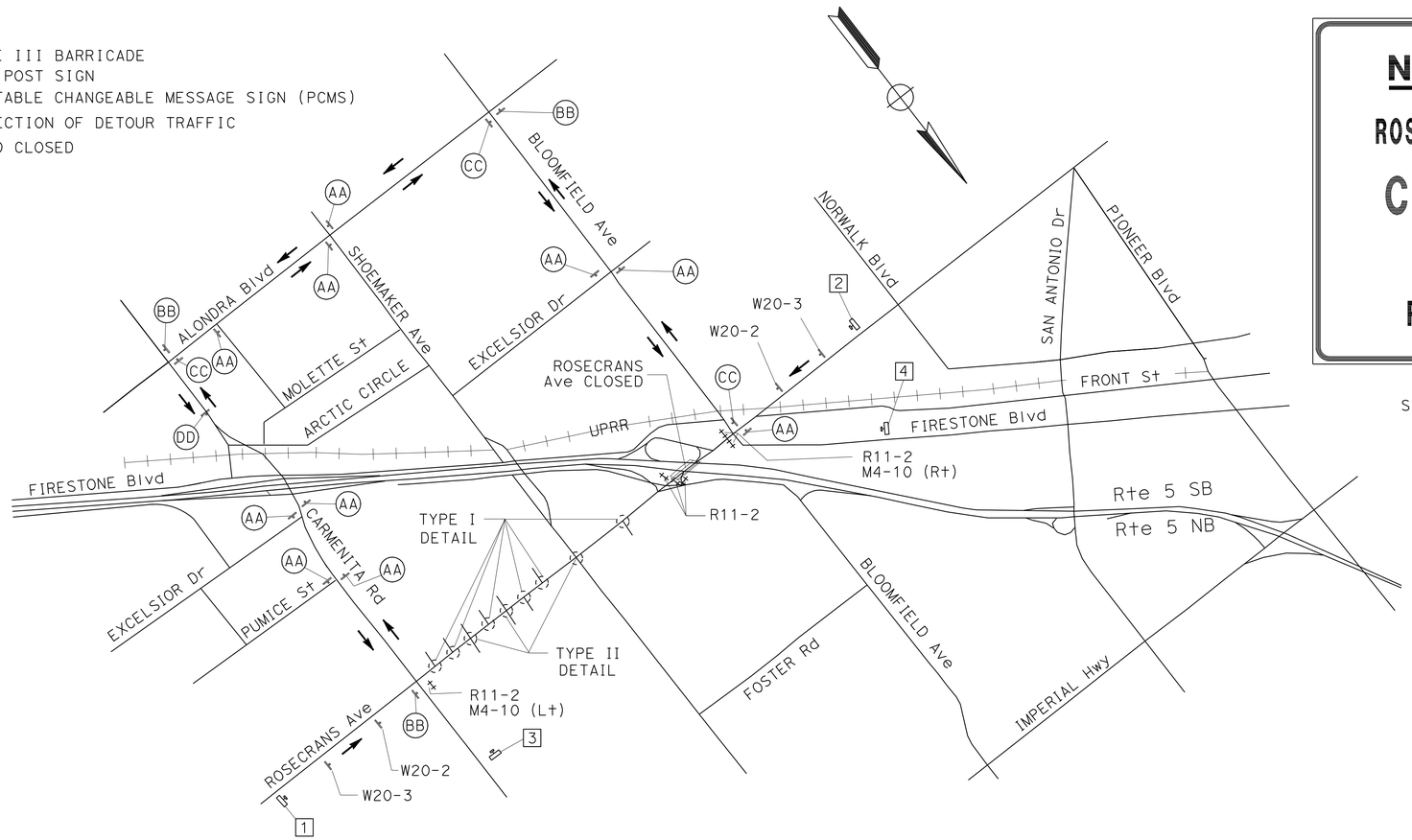


**NOTICE** ¾"

**ROSECRANS AVE**

**CLOSED**

**AT**

**ROUTE 5**

SPECIAL EE

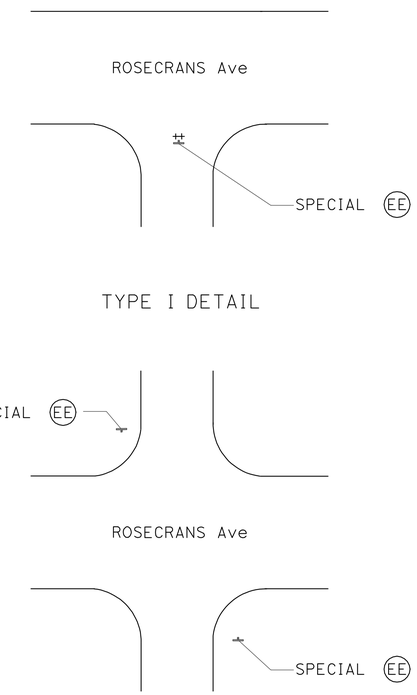


1 **REVISED PER ADDENDUM No. 1 DATED JULY 13, 2012**

| PCMS No. | LOCATION | PRIMARY MESSAGE | | SECONDARY MESSAGE | | DURATION |
|---|---|---|---|---|---|---|
| | | FIRST FLASH | SECOND FLASH | FIRST FLASH | SECOND FLASH | |
| 1 | WB ROSECRANS Ave 100′ EAST OF ROSECRANS Ave UC | ROSECRANS CLOSED AT Rte 5 | ON MM-DD-YY XPM-XAM | ROAD CLOSED AT Rte 5 | DETOUR LEFT ON CARMENITA | 2 WEEKS PRIOR TO CLOSURE. DURING CLOSURE, MOVE PCMS AS SHOWN ON PLAN AND ACTIVATE SECONDARY MESSAGE FOR DURATION OF CLOSURE. |
| 2 | EB ROSECRANS Ave 200′ EAST OF ROSECRANS Ave UC | ROSECRANS CLOSED AT Rte 5 | ON MM-DD-YY XPM-XAM | ROAD CLOSED AT Rte 5 | DETOUR RIGHT ON BLOOMFIELD | |
| 3 | SB CARMENITA Rd 500′ NORTH OF ROSECRANS Ave | | | ROAD CLOSED AT Rte 5 | DETOUR RIGHT ON BLOOMFIELD | DURING CLOSURE, PLACE PCMS AS SHOWN ON PLAN AND ACTIVATE SECONDARY MESSAGE FOR DURATION OF CLOSURE. |
| 4 | SB FIRESTONE Blvd 500′ NORTH OF ROSECRANS Ave | | | ROAD CLOSED AT Rte 5 | DETOUR CONTINUE STRAIGHT | |

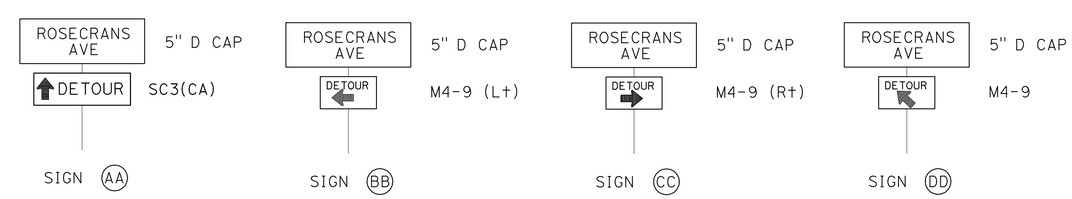


# MOTORIST INFORMATION PLAN (SIGNING AND PCMS LOCATIONS)

**ROSECRANS Ave CLOSURE**

NO SCALE

*APPROVED FOR MOTORIST INFORMATION WORK ONLY*

**MI-6**

REVISED BY | DATE REVISED
WILL CARPIO | NGIM NANCY PE
CALCULATED-DESIGNED BY | CHECKED BY
FUNCTIONAL SUPERVISOR | NGIM NANCY PE

STATE OF CALIFORNIA - DEPARTMENT OF TRANSPORTATION
Caltrans® OFFICE OF DESIGN A

7215931b006.add

LAST REVISION 11-19-11 | DATE PLOTTED => 12-JUL-2012 | TIME PLOTTED => 14:10

BORDER LAST REVISED 7/2/2010 | USERNAME => s124496 | DGN FILE => 7215931b006.add | RELATIVE BORDER SCALE IS IN INCHES 0 1 2 3 | UNIT 1797 | PROJECT NUMBER & PHASE 07000018331

| Dist | COUNTY | ROUTE | POST MILES TOTAL PROJECT | SHEET No. | TOTAL SHEETS |
|---|---|---|---|---|---|
| 07 | LA | 5 | 2.4/4.0 | 317 | 1288 |

REGISTERED CIVIL ENGINEER 12-19-11 DATE

3-26-12
PLANS APPROVAL DATE

REGISTERED PROFESSIONAL ENGINEER NGIM NANCY PE No. 58161 Exp. 6-30-2012 CIVIL STATE OF CALIFORNIA

*THE STATE OF CALIFORNIA OR ITS OFFICERS OR AGENTS SHALL NOT BE RESPONSIBLE FOR THE ACCURACY OR COMPLETENESS OF SCANNED COPIES OF THIS PLAN SHEET.*

## NOTE:

THIS PLAN IS FOR PARCEL LOCATION REFERENCE ONLY, SEE LAYOUT PLANS FOR EXACT LIMITS AND AREAS OF TCE AVAILABLE TO CONTRACTOR.

## LEGEND:

(No.) PARCEL NUMBER

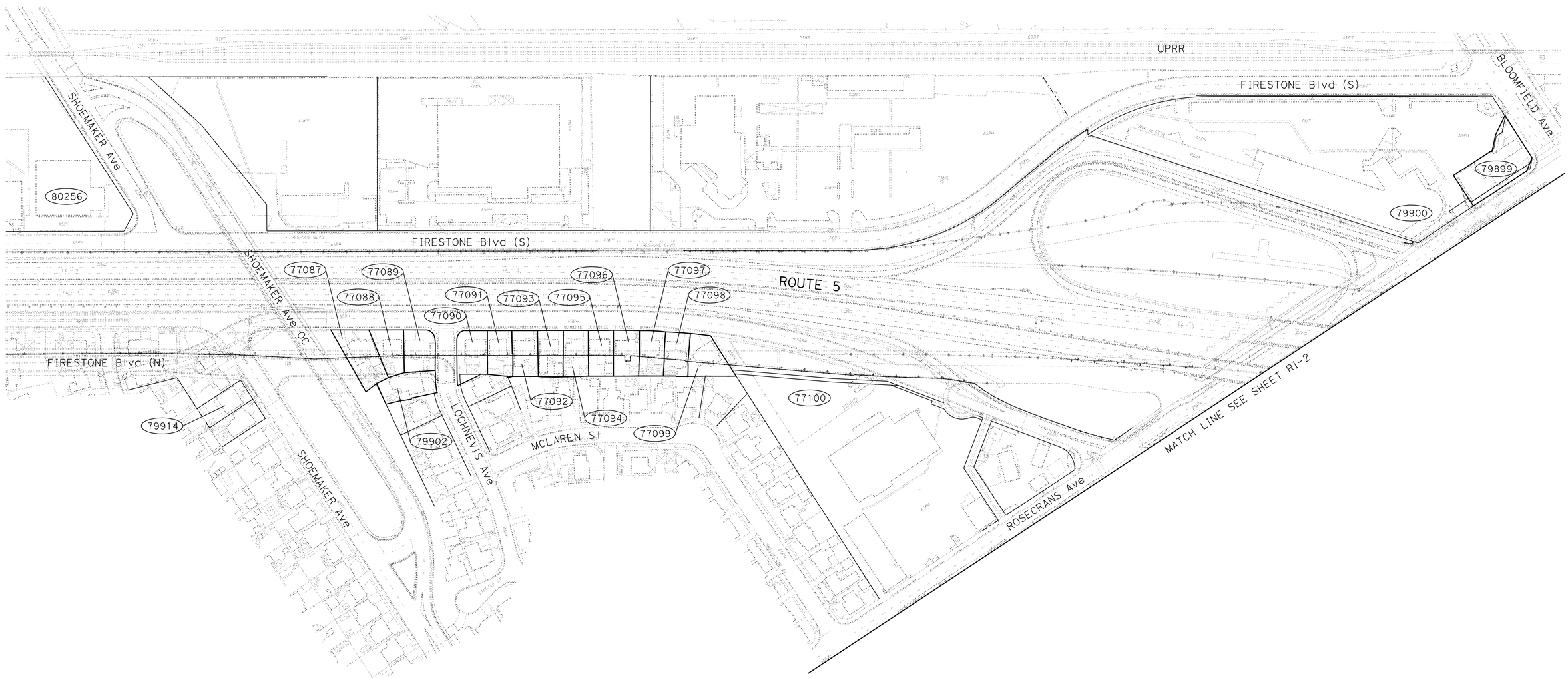


1 REVISED PER ADDENDUM No. 1 DATED JULY 13, 2012

*APPROVED FOR RIGHT-OF-WAY INFORMATION ONLY*

# RIGHT-OF-WAY INFORMATION

NO SCALE

**RI-1**

REVISED BY | DATE REVISED
WILL CARPIO | NGIM NANCY PE
CALCULATED-DESIGNED BY | CHECKED BY
FUNCTIONAL SUPERVISOR | NGIM NANCY PE

STATE OF CALIFORNIA - DEPARTMENT OF TRANSPORTATION
Caltrans® OFFICE OF DESIGN A

7215931g001.dds

LAST REVISION 00-00-00 | DATE PLOTTED => 12-JUL-2012 | TIME PLOTTED => 14:10

BORDER LAST REVISED 7/2/2010 | USERNAME => s124496 | DGN FILE => 7215931g001.dds | RELATIVE BORDER SCALE IS IN INCHES 0 1 2 3 | UNIT 1797 | PROJECT NUMBER & PHASE 07000018331

| Dist | COUNTY | ROUTE | POST MILES TOTAL PROJECT | SHEET No. | TOTAL SHEETS |
|---|---|---|---|---|---|
| 07 | LA | 5 | 2.4/4.0 | 318 | 1288 |

REGISTERED CIVIL ENGINEER 12-19-11 DATE

3-26-12
PLANS APPROVAL DATE

REGISTERED PROFESSIONAL ENGINEER
NGIM NANCY PE
No. 58161
Exp. 6-30-2012
CIVIL
STATE OF CALIFORNIA

*THE STATE OF CALIFORNIA OR ITS OFFICERS OR AGENTS SHALL NOT BE RESPONSIBLE FOR THE ACCURACY OR COMPLETENESS OF SCANNED COPIES OF THIS PLAN SHEET.*

NOTES

THIS PLAN IS FOR PARCEL LOCATION REFERENCE ONLY, SEE LAYOUT PLANS FOR EXACT LIMITS AND AREAS OF TCE AVAILABLE TO CONTRACTOR.

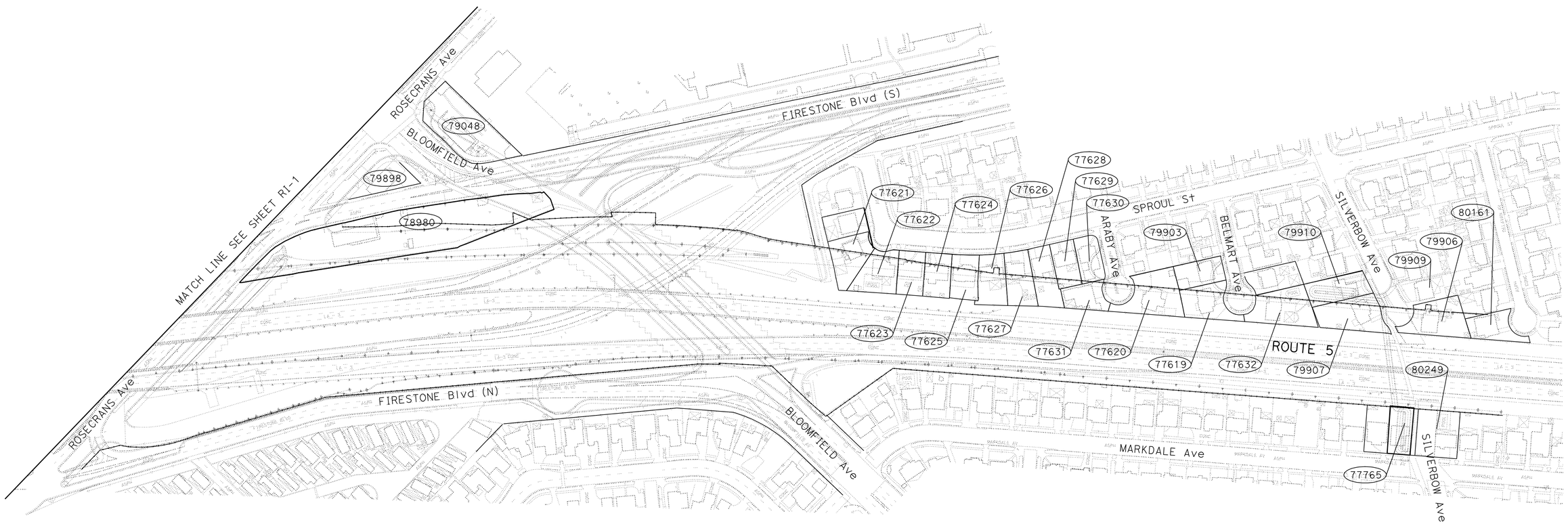


1 REVISED PER ADDENDUM No. 1 DATED JULY 13, 2012

*APPROVED FOR RIGHT-OF-WAY INFORMATION ONLY*

**RIGHT-OF-WAY INFORMATION**

NO SCALE

**RI-2**

REVISED BY | DATE REVISED

WILL CARPIO | NGIM NANCY PE

CALCULATED-DESIGNED BY | CHECKED BY

FUNCTIONAL SUPERVISOR | NGIM NANCY PE

STATE OF CALIFORNIA - DEPARTMENT OF TRANSPORTATION

Caltrans® OFFICE OF DESIGN A

LAST REVISION 00-00-00 | DATE PLOTTED => 12-JUL-2012 | TIME PLOTTED => 14:10

| Dist | COUNTY | ROUTE | POST MILES TOTAL PROJECT | SHEET No. | TOTAL SHEETS |
|---|---|---|---|---|---|
| 07 | LA | 5 | 2.4/4.0 | 323 | 1288 |

REGISTERED CIVIL ENGINEER 12-19-11 DATE

3-26-12
PLANS APPROVAL DATE

REGISTERED PROFESSIONAL ENGINEER NGIM NANCY PE No. 58161 Exp. 6-30-2012 CIVIL STATE OF CALIFORNIA

*THE STATE OF CALIFORNIA OR ITS OFFICERS OR AGENTS SHALL NOT BE RESPONSIBLE FOR THE ACCURACY OR COMPLETENESS OF SCANNED COPIES OF THIS PLAN SHEET.*

## NOTES:

1. ELECTROLIERS AT NB OFF RAMP SHALL REMAIN IN PLACE UNTIL THE TEMPORARY OFF RAMP IS OPENED.
2. TEMPORARY PAVEMENT WORK AT NB OFF RAMP TO ROSECRANS Ave SHALL BE THE LAST ORDER OF WORK AND SHALL BE PERFORMED DURING WEEKEND CLOSURE.
3. REFER TO STAGE CONSTRUCTION DETAILS (SCD) FOR NB DETOUR ROAD, OFF RAMP PROFILES AND SPECIAL SIGN INFORMATION.

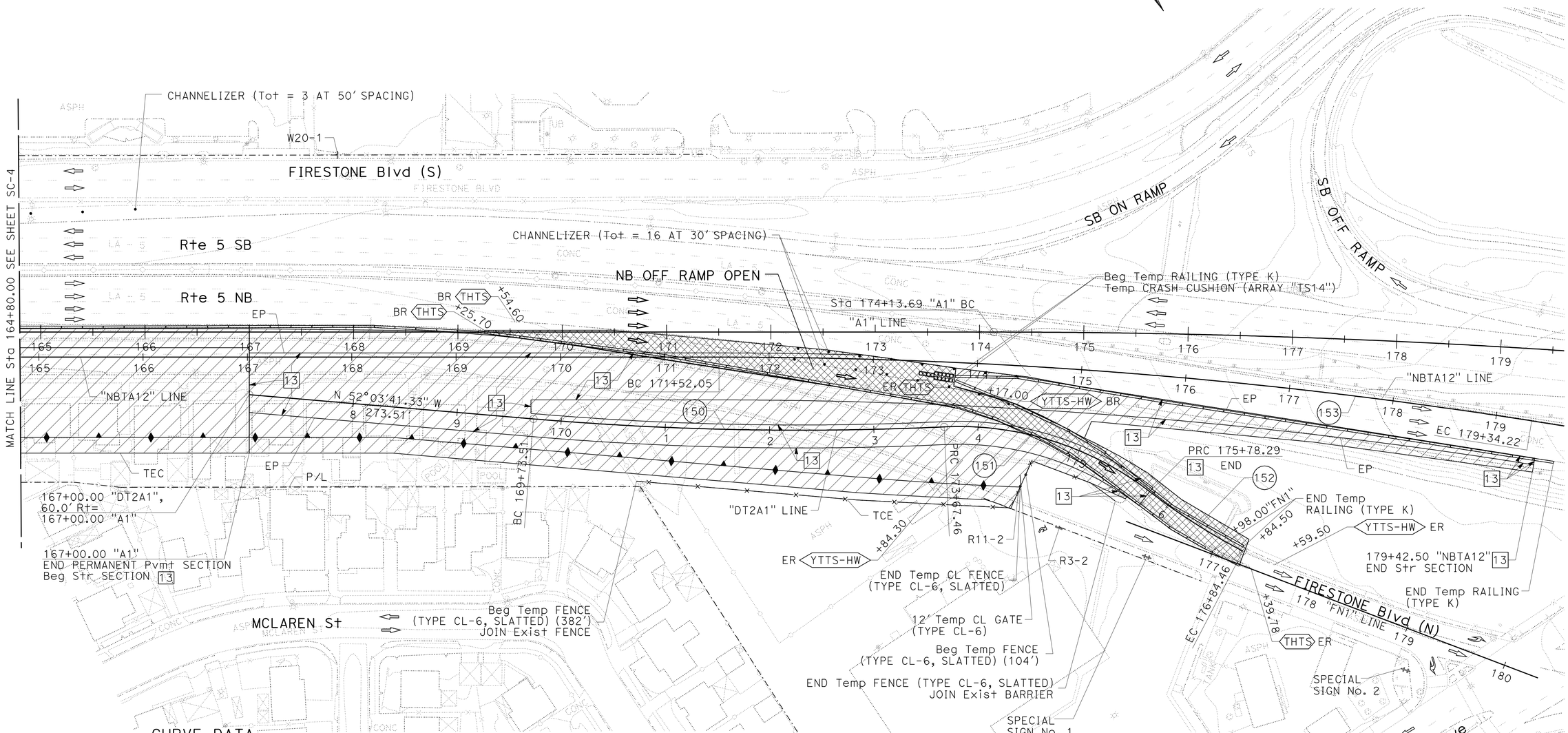


### CURVE DATA

| No. ⊕ | R | Δ | T | L |
|---|---|---|---|---|
| 150 | 3000.01' | 7°31'26" | 197.26' | 393.95' |
| 151 | 300.00' | 40°15'57" | 109.98' | 210.83' |
| 152 | 600.00' | 10°8'19" | 53.22' | 106.17' |
| 153 | 5000.00' | 8°57'47" | 391.89' | 782.17' |

1 **REVISED PER ADDENDUM No. 1 DATED JULY 13, 2012**

*APPROVED FOR STAGE CONSTRUCTION AND TRAFFIC HANDLING WORK ONLY*

# STAGE CONSTRUCTION AND TRAFFIC HANDLING PLAN

**(STAGE 1 - PHASE 1)**

SCALE: 1" = 50'

**SC-5**

REVISED BY | DATE REVISED
WILL CARPIO | NGIM NANCY PE
CALCULATED-DESIGNED BY | CHECKED BY
FUNCTIONAL SUPERVISOR | NGIM NANCY PE

STATE OF CALIFORNIA - DEPARTMENT OF TRANSPORTATION
Caltrans OFFICE OF DESIGN A

721593ma005.add

LAST REVISION 00-00-00 | DATE PLOTTED => 12-JUL-2012 | TIME PLOTTED => 14:11

| Dist | COUNTY | ROUTE | POST MILES TOTAL PROJECT | SHEET No. | TOTAL SHEETS |
|---|---|---|---|---|---|
| 07 | LA | 5 | 2.4/4.0 | 374 | 1288 |

REGISTERED CIVIL ENGINEER 12-19-11 DATE

3-26-12
PLANS APPROVAL DATE

REGISTERED PROFESSIONAL ENGINEER NGIM NANCY PE No. 58161 Exp. 6-30-2012 CIVIL STATE OF CALIFORNIA

*THE STATE OF CALIFORNIA OR ITS OFFICERS OR AGENTS SHALL NOT BE RESPONSIBLE FOR THE ACCURACY OR COMPLETENESS OF SCANNED COPIES OF THIS PLAN SHEET.*

1

| SHEET No. | DIRECTION | ALIGNMENT | LOCATION | TEMPORARY FENCE (TYPE CL-6) | TEMPORARY RAILING (TYPE K) | 12' TEMPORARY CHAIN LINK GATE (TYPE CL-6) | TEMPORARY CRASH CUSHION MODULES | PLACE HOT MIX ASPHALT DIKE (TYPE A) | HOT MIX ASPHALT | CLASS 2 AGGREGATE BASE | CLASS 4 AGGREGATE SUBBASE | TYPE II BARRICADE | TYPE III BARRICADE | CHANNELIZER (SURFACE MOUNTED) | TRAFFIC CONES | 38' TEMPORARY ROLLING CHAIN LINK GATE | PORTABLE CHANGEABLE MESSAGE SIGN (N) | 30' TEMPORART CHAIN LINK GATE (TYPE CL-6) | TEMPORARY FENCE (TYPE CL-6, SLATTED) |
|---|---|---|---|---|---|---|---|---|---|---|---|---|---|---|---|---|---|---|---|
| | | | | LF | LF | EA | EA | LF | TON | CY | CY | EA | EA | EA | EA | EA | EA | EA | LF |
| **STAGE 1 PHASE 1** | | | | | | | | | | | | | | | | | | | |
| SC-3 | | "A1" | 148+10.00 TO 155+50.00 | | | | | | 1930 | 1590 | 1748 | | | | | | | | |
| SC-4 | | "A1" | 155+50.00 TO 164+80.00 | | 906 | | 14 | | 392 | 322 | 355 | | | 8 | | | | | |
| | | "SHOE2" | 03+00.00 TO 16+00.00 | 438 | 200 | | 11 | | | | | 2 | 1 | 12 | | | | | |
| | | "NFRS1" | 20+00.00 TO 30+00.00 | 168 | | | 11 | | | | | 5 | 7 | 10 | | | | | |
| | | "SFRS1" | 155+94.85 TO 165+24.85 | | 420 | | 11 | | 24 | | | 2 | | 11 | | | | | |
| SC-5 | | "A1" | 164+80.00 TO 179+50.00 | | 2014 | 1 | 14 | | 2650 | 2180 | 2400 | 2 | | 19 | | | | | 486 |
| SC-6 | | "SHOE2" | 16+00.00 TO 24+00.00 | | 340 | | 22 | | | | | | | 14 | | | | | |
| **STAGE 1 PHASE 3** | | | | | | | | | | | | | | | | | | | |
| SC-11 | | "A1" | 129+00.00 TO 142+50.00 | | 545 | | | | | | | | | | | | | | |
| SC-12 | | "SFRS1" | 152+00.00 TO 155+50.00 | 354 | | | | | | | | | | | | | | | |
| | | "A1" | 142+50.00 TO 155+50.00 | | 3177 | | | | 158 | 130 | 143 | | | | | | | | |
| SC-13 | | "A1" | 155+50.00 TO 164+80.00 | | 3170 | | | | | | | | | | | | | | |
| | | "SHOE2" | 03+00.00 TO 16+00.00 | | 440 | | 11 | | | | | | | 4 | | 1 | | | |
| | | "SFRS1" | 157+00.00 TO 165+25.00 | 558 | 80 | | 11 | | 300 | 247 | 271 | 1 | | 14 | | | | | |
| | | "NFRS1" | 20+50.00 TO 29+00.00 | 387 | 200 | | 22 | | | | | | | 17 | | | | | |
| SC-14 | | "A1" | 164+50.00 TO 178+50.00 | | 5958 | | 14 | | 1507 | 1240 | 1365 | | | 12 | | | | | |
| SC-15 | | "A1" | 178+50.00 TO 186+50.00 | | 2372 | | 28 | | 23 | 19 | 21 | | | 22 | | | | | |
| | | "ROC1" | 13+30.00 TO 23+00.00 | | 1298 | | 33 | | 15 | 13 | 14 | 4 | | 24 | | | | | |
| SC-16 | | "FN2" | 17+00.00 TO 18+00.00 | | | | | | 142 | 117 | 129 | | | | | | | | |
| | | "A1" | 186+50.00 TO 199+50.00 | | 1793 | | | | | | | | | | | | | | |
| | | "ROC1" | 13+30.00 TO "FN2" 24+50.00 | 180 | 1438 | | | | | | | 2 | | 2 | | | | | |
| SC-17 | | "A1" | 199+50.00 TO 214+00.00 | 1323 | 2205 | | 28 | | 4 | | | 5 | 1 | 32 | | | | | |
| SC-18 | | "FN2" | 24+50.00 TO 39+80.00 | | 134 | | 11 | 105 | 10 | 8 | 9 | | 3 | | | | | | |
| | | | SUB-TOTAL | 3408 | 26690 | 1 | 241 | 105 | 7155 | 5866 | 6455 | 23 | 12 | 201 | | 1 | | | 486 |

(N) NOT A SEPARATE PAY ITEM, FOR INFORMATION ONLY.

1 **REVISED PER ADDENDUM No. 1 DATED JULY 13, 2012**

# STAGE CONSTRUCTION AND TRAFFIC HANDLING QUANTITIES

## SCQ-1

REVISED BY | DATE REVISED
JANE YU | NGIM NANCY PE
CALCULATED-DESIGNED BY | CHECKED BY
FUNCTIONAL SUPERVISOR | NGIM NANCY PE

STATE OF CALIFORNIA - DEPARTMENT OF TRANSPORTATION
Caltrans® OFFICE OF DESIGN A

721593mc001.add

LAST REVISION 00-00-00 | DATE PLOTTED => 12-JUL-2012 | TIME PLOTTED => 14:11

| Dist | COUNTY | ROUTE | POST MILES TOTAL PROJECT | SHEET No. | TOTAL SHEETS |
|---|---|---|---|---|---|
| 07 | LA | 5 | 2.4/4.0 | 375 | 1288 |

REGISTERED CIVIL ENGINEER DATE 12-19-11

3-26-12
PLANS APPROVAL DATE

REGISTERED PROFESSIONAL ENGINEER NGIM NANCY PE No. 58161 Exp. 6-30-2012 CIVIL STATE OF CALIFORNIA

*THE STATE OF CALIFORNIA OR ITS OFFICERS OR AGENTS SHALL NOT BE RESPONSIBLE FOR THE ACCURACY OR COMPLETENESS OF SCANNED COPIES OF THIS PLAN SHEET.*

1

| SHEET No. | DIRECTION | ALIGNMENT | LOCATION | TEMPORARY FENCE (TYPE CL-6) | TEMPORARY RAILING (TYPE K) | 12' TEMPORARY CHAIN LINK GATE (TYPE CL-6) | TEMPORARY CRASH CUSHION MODULES | PLACE HOT MIX ASPHALT DIKE (TYPE A) | HOT MIX ASPHALT | CLASS 2 AGGREGATE BASE | CLASS 4 AGGREGATE SUBBASE | TYPE II BARRICADE | TYPE III BARRICADE | CHANNELIZER (SURFACE MOUNTED) | TRAFFIC CONES | 38' TEMPORARY CL ROLLING GATE | PORTABLE CHANGEABLE MESSAGE SIGN (N) | 30' TEMOPRARY CHAIN LINK GATE (TYPE CL-6) | TEMPORARY FENCE (TYPE CL-6, SLATTED) |
|---|---|---|---|---|---|---|---|---|---|---|---|---|---|---|---|---|---|---|---|
| | | | | LF | LF | EA | EA | LF | TON | CY | CY | EA | EA | EA | EA | EA | EA | EA | LF |
| **STAGE 1 PHASE 4** | | | | | | | | | | | | | | | | | | | |
| SC-20 | | "A1" | 204+50.00 TO 215+00.00 | 109 | | | | | | | | 2 | | | | | | | |
| SC-21 | | "ROC1" | 05+00.00 TO "FN2" 25+50.00 | | 200 | | | | | | | 3 | 4 | | 20 | | | | |
| SC-22 | | "FN2" | 25+50.00 TO 39+00.00 | | | | | | | | | 3 | 6 | | | | | | |
| SC-23 | | "FN2" | 39+00.00 TO 47+00.00 | | | | | | | | | 2 | | | | | 2 | | |
| **STAGE 2** | | | | | | | | | | | | | | | | | | | |
| SC-27 | | "A1" | 143+00.00 TO 155+50.00 | | 1848 | | 14 | | | | | | | 14 | | | | | |
| | | "SFRS1" | 147+00.00 TO 155+95.00 | | 840 | | 11 | | | | | | | 10 | | | | | |
| SC-28 | | "A1" | 155+50.00 TO 164+80.00 | | 1091 | | | | | | | | | | | | | | |
| | | "SFRS1" | 155+95.00 TO 165+25.00 | | 929 | | | | | | | | | | | | | | |
| SC-29 | | "A1" | 164+80.00 TO 178+50.00 | | 2742 | | | | | | | | | | | | | | |
| | | "SFRS1" | 165+25.00 TO 178+75.00 | | 1251 | | 2 | | | | | | | | | | | | |
| SC-30 | | "A1" | 178+50.00 TO 186+50.00 | | 1051 | | 14 | | | | | | | 5 | | | | | |
| | | "SFRS1" | 178+75.00 TO 179+00.00 | | | | 9 | | | | | | | 5 | | | | | |
| | | "ROC1" | 13+30.00 TO 23+00.00 | 42 | 635 | | | | | | | 2 | | 10 | | | | | |
| SC-31 | | "A1" | 186+50.00 TO 190+00.00 | | 188 | | | | | | | | | | | | | | |
| | | "ROC1" | 13+30.00 TO "FN2" 20+00.00 | 133 | 5 | | 11 | | | | | 5 | | 27 | 36 | | | 1 | |
| | | "BL1" | 90+00.00 TO 98+00.00 | | 100 | | | | | | | 2 | | 53 | | | | | |
| **STAGE 3** | | | | | | | | | | | | | | | | | | | |
| SC-35 | | "A1" | 155+50.00 TO 164+80.00 | | 240 | | | | | | | | | 7 | | | | | |
| SC-36 | | "A1" | 164+80.00 TO 178+50.00 | | 1373 | | 14 | | | | | | | 4 | | | | | |
| SC-37 | | "A1" | 178+50.00 TO 186+50.00 | | 1310 | | | | | | | | | | | | | | |
| | | "ROC1" | 13+30.00 TO 22+50.00 | | | | 33 | | | | | | | 21 | | | | | |
| SC-38 | | "A1" | 186+50.00 TO 199+50.00 | | 2597 | | | | | | | | | 25 | | | | | |
| | | "ROC1" | 10+00.00 TO 13+30.00 | | | | | | | | | | | 4 | | | | | |
| SC-39 | | "A1" | 199+50.00 TO 212+00.00 | | 2338 | | | | | | | | | | | | | | |
| | | | SUB-TOTAL | 284 | 18738 | | 108 | | | | | 19 | 10 | 185 | 56 | | 2 | 1 | |

(N) NOT A SEPARATE PAY ITEM, FOR INFORMATION ONLY.

1 **REVISED PER ADDENDUM No. 1 DATED JULY 13, 2012**

# STAGE CONSTRUCTION AND TRAFFIC HANDLING QUANTITIES

## SCQ-2

REVISED BY | DATE REVISED
JANE YU | NGIM NANCY PE
CALCULATED-DESIGNED BY | CHECKED BY
FUNCTIONAL SUPERVISOR: NGIM NANCY PE

STATE OF CALIFORNIA - DEPARTMENT OF TRANSPORTATION
Caltrans® OFFICE OF DESIGN A

721593mc002.add

LAST REVISION 00-00-00 | DATE PLOTTED => 12-JUL-2012 | TIME PLOTTED => 14:11

| Dist | COUNTY | ROUTE | POST MILES TOTAL PROJECT | SHEET No. | TOTAL SHEETS |
|---|---|---|---|---|---|
| 07 | LA | 5 | 2.4/4.0 | 376 | 1288 |

REGISTERED CIVIL ENGINEER DATE 12-19-11

3-26-12
PLANS APPROVAL DATE

REGISTERED PROFESSIONAL ENGINEER NGIM NANCY PE No. 58161 Exp. 6-30-2012 CIVIL STATE OF CALIFORNIA

*THE STATE OF CALIFORNIA OR ITS OFFICERS OR AGENTS SHALL NOT BE RESPONSIBLE FOR THE ACCURACY OR COMPLETENESS OF SCANNED COPIES OF THIS PLAN SHEET.*

1

| SHEET No. | DIRECTION | ALIGNMENT | LOCATION | TEMPORARY FENCE (TYPE CL-6) | TEMPORARY RAILING (TYPE K) | 12' TEMPORARY CHAIN LINK GATE (TYPE CL-6) | TEMPORARY CRASH CUSHION MODULES | PLACE HOT MIX ASPHALT DIKE (TYPE A) | HOT MIX ASPHALT | CLASS 2 AGGREGATE BASE | CLASS 4 AGGREGATE SUBBASE * | TYPE II BARRICADE | TYPE III BARRICADE | CHANNELIZER (SURFACE MOUNTED) | TRAFFIC CONES | 38' TEMPORARY CL ROLLING GATE | PORTABLE CHANGEABLE MESSAGE SIGN (N) | 30' TEMPORARY CHAIN LINK GATE (TYPE CL-6) | TEMPORARY FENCE (TYPE CL-6, SLATTED) |
|---|---|---|---|---|---|---|---|---|---|---|---|---|---|---|---|---|---|---|---|
| | | | | LF | LF | EA | EA | LF | TON | CY | CY | EA | EA | EA | EA | EA | EA | EA | LF |
| **STAGE 4 PHASE 1** | | | | | | | | | | | | | | | | | | | |
| SC-43 | | "A1" | 143+00.00 TO 155+50.00 | | | | | | | | | 2 | | 5 | | | | | |
| SC-44 | | "A1" | 155+50.00 TO 164+80.00 | | 1218 | | 28 | | | | | | | 17 | | | | | |
| SC-45 | | "A1" | 164+80.00 TO 178+50.00 | | 1242 | | | | | | | 1 | | 22 | 28 | | | | |
| SC-46 | | "FN1" | 181+00.00 TO 187+10.79 | | 539 | | | | | | | 1 | | | | | | | |
| | | "ROC1" | 10+00.00 TO 23+00.00 | 526 | 180 | | | | | | | 3 | | 46 | | | | | |
| SC-47 | | "FN1" | 187+10.79 TO "BL1" 107+50.00 | 38 | 1161 | 1 | 11 | | | | | 1 | 1 | 8 | | | | | |
| | | "BL1" | 104+00.00 TO 105+00.00 | | | | | | 19 | 15 | 17 | | | | | | | | |
| **STAGE 4 PHASE 2** | | | | | | | | | | | | | | | | | | | |
| SC-49 | | "FN1" | 181+00.00 TO 187+10.79 | | 340 | | | | | | | | | | | | | | |
| | | "ROC1" | 10+00.00 TO 23+00.00 | | 240 | | 11 | | | | | 2 | | 12 | 20 | | | | |
| | | SUB-TOTAL FROM SCQ-1 SHEET | | 3408 | 26690 | 1 | 241 | 105 | 7155 | 5866 | 6455 | 23 | 12 | 201 | | 1 | 2 | | 486 |
| | | SUB-TOTAL FROM SCQ-2 SHEET | | 284 | 18738 | | 108 | | | | | 19 | 10 | 185 | 56 | | 2 | 1 | |
| | | SUB-TOTAL FROM SCQ-3 SHEET | | 564 | 4920 | 1 | 50 | | 19 | 15 | 17 | 10 | 1 | 110 | 48 | | | | |
| | | GRAND TOTAL | | 4256 | 50348 | 2 | 399 | 105 | 7174 | 5881 | 6472 | 52 | 23 | 496 | 104 | 1 | 2 | 1 | 486 |

(N) NOT A SEPARATE PAY ITEM, FOR INFORMATION ONLY.
* SEE SUMMARY OF QUANTITY SHEET FOR TOTAL.

1 **REVISED PER ADDENDUM No. 1 DATED JULY 13, 2012**

# STAGE CONSTRUCTION AND TRAFFIC HANDLING QUANTITIES

## SCQ-3

REVISED BY | DATE REVISED
JANE YU | NGIM NANCY PE
CALCULATED-DESIGNED BY | CHECKED BY
FUNCTIONAL SUPERVISOR | NGIM NANCY PE
STATE OF CALIFORNIA - DEPARTMENT OF TRANSPORTATION
Caltrans® OFFICE OF DESIGN A
721593mc003.add

| Dist | COUNTY | ROUTE | POST MILES TOTAL PROJECT | SHEET No. | TOTAL SHEETS |
|---|---|---|---|---|---|
| 07 | LA | 5 | 2.4/4.0 | 473 | 1288 |

REGISTERED CIVIL ENGINEER 12-19-11 DATE

3-26-12
PLANS APPROVAL DATE

REGISTERED PROFESSIONAL ENGINEER NGIM NANCY PE No. 58161 Exp. 6-30-2012 CIVIL STATE OF CALIFORNIA

THE STATE OF CALIFORNIA OR ITS OFFICERS OR AGENTS SHALL NOT BE RESPONSIBLE FOR THE ACCURACY OR COMPLETENESS OF SCANNED COPIES OF THIS PLAN SHEET.

1

# ROADWAY QUANTITIES

| SHEET No. | DIRECTION | ALIGNMENT | LOCATION | ROADWAY EXCAVATION: ROADWAY EXCAVATION | ROADWAY EXCAVATION: REMOVE SURCHARGE | IMPORTED BORROW | ROADWAY EXCAVATION (CONTAMINATED SOIL) | PLACE HOT MIX ASPHALT DIKE (TYPE E) | PLACE HOT MIX ASPHALT DIKE (TYPE F) | ROADWAY EXCAVATION (TYPE Y-2) (ADL) | METAL BEAM GUARD RAILING | ALTERNATIVE FLARED TERMINAL SYSTEM | ALTERNATIVE IN-LINE TERMINAL SYSTEM | CONCRETE BARRIER (TYPE 60G) | CONCRETE BARRIER (TYPE 60GE) | CONCRETE BARRIER (TYPE 60E (Mod)) | CONCRETE BARRIER (TYPE 736B Mod) | CHAIN LINK RAILING (TYPE 6 Mod) | INDIVIDUAL SLAB REPLACEMENT (RAPID STRENGTH CONCRETE) | MINOR CONCRETE (CURB, GUTTER, SIDEWALK AND DRIVEWAY) | MINOR CONCRETE (CURB RAMP) | MINOR CONCRETE (RETAINING CURB) | MINOR CONCRETE (TEXTURED PAVING) | CLASS 2 AGGREGATE BASE | CLASS 3 AGGREGATE BASE | CLASS 4 AGGREGATE SUBBASE | JOINTED PLAIN CONCRETE PAVEMENT | METAL HANDRAILING | LEAN CONCRETE BASE | HOT MIX ASPHALT | PLACE HOT MIX ASPHALT (MISCELLANEOUS AREA) | COLD PLANE ASPHALT CONCRETE PAVEMENT | ROCK BLANKET | SEAL PAVEMENT JOINT | CRASH CUSHION (ADIEM) | CRASH CUSHION (REACT 9CBB) | TACK COAT | END CAP (TYPE TC) (N) | TRANSITION RAILING (TYPE WB) | CHAIN LINK FENCE (TYPE CL-6) | 12' CHAIN LINK GATE (TYPE CL-6) | JOINTED PLAIN CONCRETE PAVEMENT (RAPID SETTING CONCRETE) | LEAN CONCRETE BASE (RAPID SETTING CONCRETE) | SEAL ISOLATION JOINT | 4' CHAIN LINK GATE (TYPE CL-6) | CHAIN LINK FENCE (TYPE CL-6, SLATTED) |
|---|---|---|---|---|---|---|---|---|---|---|---|---|---|---|---|---|---|---|---|---|---|---|---|---|---|---|---|---|---|---|---|---|---|---|---|---|---|---|---|---|---|---|---|---|---|---|---|
| | | | | CY | CY | CY | CY | LF | LF | CY | LF | EA | EA | LF | LF | LF | LF | LF | CY | CY | CY | CY | SQFT | CY | CY | CY | CY | CY | TON | SQYD | SQYD | SQYD | LF | EA | EA | TON | EA | EA | LF | EA | CY | CY | LF | EA | LF |
| L-1 | SB | "A1" | 136+00.00 to 149+50.00 | 1461 | | | | | | | | | | | | | 450 | 450 | | | | | | | 580 | | 642 | | 411 | | | | | 875 | | | | | | | | 215 | 102 | | | |
| | | "SFRS1" | 145+00.15 to 149+98.52 | | | | | | | | | | | | | | | | | 14 | | | | | | | | | | | 218 | | | | | | | | | 40 | | | | | | |
| | NB | "A1" | 136+18.90 to 149+50.00 | | | | | | | | | | | 1331 | | | | | | | | | | | 66 | | 98 | | 47 | | | | | | | | | | 20 | | | | 195 | | |
| L-2 C-34 | SB | "A1" | 149+50.00 to 155+00.00 | 6799 | | | | | | 1079 | | | | | | | 547 | 547 | | | | | | | 1704 | | 2433 | | 1205 | | | | | 2750 | | | | | | | 79 | 38 | | | |
| | | "SFRS1" | 149+98.52 to 155+44.85 | | | | | | | | | | | | | | | | | 18 | | | | | 12 | | | | 7 | 13 | 273 | | | | | | | | | | | | | | | |
| | NB | "A1" | 149+50.00 to 155+00.00 | 55 | | | | | | | | | | 550 | | | | | | | | | | | 185 | | 278 | | 132 | | | | | 2550 | | | | | | | | | | 550 | | |
| L-3 C-35 | SB | "A1" | 155+00.00 to 163+50.00 | 9950 | | | | | | 1246 | | | | | | 358 | 462 | 850 | | | | | | | 2637 | | 3897 | | 1867 | | | | | 4250 | | | | | | | | | | | | |
| | | "SFRS1" | 155+44.85 to 163+95.85 | | | | | | | | | | | | | | | | | 26 | | | | | 56 | | | | 30 | 60 | 425 | | | | | | | | | | | | | | | |
| | NB | "A1" | 155+00.00 to 163+50.00 | 3430 | | | | | | 42 | | | | 711 | 139 | | | | | | | | | | 1615 | | 2405 | | 1149 | | | | | 4250 | | | | | | | | | | 249 | | |
| | | "SHOE1" | 93+37.26 to 102+50.00 | 188 | | | | | | | | | | | | | | | | 168 | | | 156 | | 689 | | | 384 | 323 | 654 | | | 254 | | | | | | | | | | | | |
| | | "SHOE2" | 04+49.00 to 07+90.00 | | | | | | | | | | | | | | | | 21 | 25 | | | | | | | | | | 293 | | 869 | | | | | 0.4 | | | | | | | | |
| | | "NFRS1" | 21+74.15 to 27+68.94 | 7623 | | | | | | | | | | | | | | | | 148 | 7 | | | 29 | 922 | 33 | | | 500 | 1182 | | | | | | | | | 234 | | | | | | |
| L-4 C-36 C-41 | SB | "A1" | 163+50.00 to 176+50.00 | 5730 | | | | 119 | | 592 | | | | | | | 719 | 719 | | | | | | | 3675 | | 5461 | | 2610 | 4 | | | 216 | 6500 | | | | | | | 2 | | | | |
| | | "RC2" | 170+75.39 to 176+50.00 | 16 | | | | 116 | | 46 | | | | | | | | | | | | | | | 615 | | 559 | | 403 | 225 | | | | | | | | | | | | | | | |
| | | "SFRS1" | 163+95.85 to 177+01.57 | | | | | | | | | | | | | | | | | 36 | | | | | 56 | | | | 29 | 60 | 514 | | 215 | | | | | | | | | | | | |
| | NB | "A1" | 163+50.00 to 176+50.00 | 1621 | | | | | | | | | | 1300 | | | | | | | | | | | 3561 | | 5276 | | 2536 | | | | 837 | 6500 | 1 | | | | | | | | | | |
| | | "RC3" | 172+50.64 to 176+50.00 | | | | 45 | 399 | | | | | | | | | | | | 27 | 1 | | | | 859 | | | | 452 | 914 | | | | | | | | | | | | | | | |
| | | "NFRS1" | 27+83.44 to 28+85.00 | 347 | | | | | | | | | | | | | | | | 23 | | | | | 161 | | | | 88 | 209 | | | | | | | | | 107 | 1 | | | | | |
| L-5 C-14 C-37 C-42 | SB | "A1" | 176+50.00 to 188+50.00 | | | 63800 | | 100 | | | | | | | | | | | | | | | | | 2239 | | 3332 | | 1592 | 3 | | | | 6000 | | | | | | | | | | | | |
| | | "RC2" | 176+50.00 to 185+50.00 | 432 | | 19600 | | 700 | 227 | 21 | 127 | 1 | 1 | | | | 248 | | | 6 | | | | | 1980 | | | | 999 | 2203 | | | 183 | | | | | 1 | 1 | 192 | | | | | |
| | | "RC1" | 185+50.00 to 188+50.00 | 92 | | 1250 | 135 | 114 | | | | | | | | | | | | | | | | | 486 | | 324 | | 303 | 269 | | | 200 | | | | | | | | | | | | |
| | | "SFRS1" | 177+01.57 to 177+62.00 | | | | | | | | | | | | | | | | | 2 | | | | | | | | | | | | | | | | | | | | | | | | | | |
| | NB | "A1" | 176+50.00 to 188+50.00 | | | 16000 | | | | 52 | | | | 852 | | | | | | | | | | | 2188 | | 3258 | | 1556 | | | | | 6000 | | | | | | | | | | | | |
| | | "RC3" | 176+50.00 to 180+97.22 | 4632 | | | | | | 425 | | | | | | | | | | | | | | | 795 | | 331 | | 471 | 601 | | | 481 | | | | | | | 197 | | | | | | |
| | | "RC4" | 182+17.08 to 188+50.00 | 409 | | | | 116 | 75 | | 24 | 1 | 1 | | | | 30 | | | 6 | | | | | 1356 | | | | 670 | 1518 | | | 933 | | | | | 1 | 1 | 268 | | | | | |
| | | "ROC1" | 12+00.00 to 22+04.97 | 12403 | | | | | | | | | | | | | | | 9 | 283 | 28 | 21 | 8936 | 29 | 2059 | 33 | | | 1034 | 4445 | | 5928 | 8303 | | | | | | | | 2 | | | | | |
| | | "FN1" | 183+00.00 to 189+00.00 | | | | | | | | | | | | | | | | | | | | 1467 | | | | | | | | | | | | | | 2.7 | | | | | | | | |
| | | | SUB-TOTAL | 55188 | | 100650 | 180 | 1664 | 302 | 3503 | 151 | 2 | 2 | 4744 | 139 | 358 | 2456 | 2566 | 30 | 782 | 36 | 21 | 10559 | 58 | 28496 | 66 | 28294 | 384 | 18414 | 12653 | 1430 | 6797 | 4242 | 39675 | 1 | | 3.1 | 2 | 2 | 1058 | 5 | 294 | 140 | 994 | | | |

(N) NOT A separate PAY ITEM, FOR INFORMATION ONLY

1 REVISED PER ADDENDUM No. 1 DATED JULY 13, 2012

## SUMMARY OF QUANTITIES

Q-3

STATE OF CALIFORNIA - DEPARTMENT OF TRANSPORTATION
Caltrans OFFICE OF DESIGN A

FUNCTIONAL SUPERVISOR: NGIM NANCY PE
CALCULATED-DESIGNED BY: JANE YU
CHECKED BY: NGIM NANCY PE
REVISED BY
DATE REVISED

721593pa003.add

LAST REVISION 00-00-00
DATE PLOTTED => 12-JUL-2012
TIME PLOTTED => 14:11

| Dist | COUNTY | ROUTE | POST MILES TOTAL PROJECT | SHEET No. | TOTAL SHEETS |
|---|---|---|---|---|---|
| 07 | LA | 5 | 2.4/4.0 | 474 | 1288 |

REGISTERED CIVIL ENGINEER 12-19-11 DATE

3-26-12
PLANS APPROVAL DATE

REGISTERED PROFESSIONAL ENGINEER NGIM NANCY PE No. 58161 Exp. 6-30-2012 CIVIL STATE OF CALIFORNIA

*THE STATE OF CALIFORNIA OR ITS OFFICERS OR AGENTS SHALL NOT BE RESPONSIBLE FOR THE ACCURACY OR COMPLETENESS OF SCANNED COPIES OF THIS PLAN SHEET.*

1

# ROADWAY QUANTITIES

| SHEET No. | DIRECTION | ALIGNMENT | LOCATION | ROADWAY EXCAVATION: ROADWAY EXCAVATION | ROADWAY EXCAVATION: REMOVE SURCHARGE | IMPORTED BORROW | ROADWAY EXCAVATION (CONTAMINATED SOIL) | PLACE HOT MIX ASPHALT DIKE (TYPE E) | PLACE HOT MIX ASPHALT DIKE (TYPE F) | ROADWAY EXCAVATION (TYPE Y-2) (ADL) | METAL BEAM GUARD RAILING | ALTERNATIVE FLARED TERMINAL SYSTEM | ALTERNATIVE IN-LINE TERMINAL SYSTEM | CONCRETE BARRIER (TYPE 60G) | CONCRETE BARRIER (TYPE 60GE) | CONCRETE BARRIER (TYPE 60E Mod) | CONCRETE BARRIER (TYPE 736B Mod) | CHAIN LINK RAILING (TYPE 6 Mod) | INDIVIDUAL SLAB REPLACEMENT (RAPID STRENGTH CONCRETE) | MINOR CONCRETE (CURB, GUTTER, SIDEWALK AND DRIVEWAY) | MINOR CONCRETE (CURB RAMP) | MINOR CONCRETE (RETAINING CURB) | MINOR CONCRETE (TEXTURED PAVING) | CLASS 2 AGGREGATE BASE | CLASS 3 AGGREGATE BASE | CLASS 4 AGGREGATE SUBBASE | JOINTED PLAIN CONCRETE PAVEMENT | METAL HANDRAILING | LEAN CONCRETE BASE | HOT MIX ASPHALT | PLACE HOT MIX ASPHALT (MISCELLANEOUS AREA) | COLD PLANE ASPHALT CONCRETE PAVEMENT | ROCK BLANKET | SEAL PAVEMENT JOINT | CRASH CUSHION (ADIEM) | CRASH CUSHION (REACT 9CBB) | TACK COAT | END CAP (TYPE TC) (N) | TRANSITION RAILING (TYPE WB) | CHAIN LINK FENCE (TYPE CL-6) | 12' CHAIN LINK GATE (TYPE CL-6) | JOINTED PLAIN CONCRETE PAVEMENT (RAPID SETTING CONCRETE) | LEAN CONCRETE BASE (RAPID SETTING CONCRETE) | SEAL ISOLATION JOINT | CHAIN LINK FENCE (TYPE CL-6) | CHAIN LINK FENCE (TYPE CL-6, SLATTED) |
|---|---|---|---|---|---|---|---|---|---|---|---|---|---|---|---|---|---|---|---|---|---|---|---|---|---|---|---|---|---|---|---|---|---|---|---|---|---|---|---|---|---|---|---|---|---|---|
| | | | | CY | CY | CY | LF | LF | LF | CY | LF | EA | EA | LF | LF | LF | LF | LF | CY | CY | CY | CY | SQFT | CY | CY | CY | CY | CY | TON | SQYD | SQYD | SQYD | LF | EA | EA | TON | EA | EA | LF | EA | CY | CY | LF | EA | LF |
| L-6 C-23 | SB | "A1" | 188+50.00 TO 198+50.00 | 2067 | | 17740 | | | | 585 | | | | | | | | | | | | | | | 2059 | | 3047 | | 1466 | | | | 5000 | | | | | | 20 | | | | | | |
| | | "RC1" | 188+50.00 TO 196+50.27 | 15 | | 4488 | | 261 | | | | | | | | | 291 | | | | | | | | 952 | | | | 513 | 1038 | | | 555 | | | 1 | | | | | | | | | |
| | | "FN2" | 17+24.33 TO 19+50.00 | 4546 | | | | | | 916 | | | | | | | | | 29 | 92 | | | 540 | | 1170 | | | | 633 | 1495 | | | | | | | | | | | | | | | 227 |
| | NB | "A1" | 188+50.00 TO 198+50.00 | 2610 | | 2680 | | | | 149 | | | | 600 | 139 | | | | | | | | | | 2288 | | 3355 | | 1630 | | | | | 5000 | | | | | | | | | | | |
| | | "RC4" | 188+50.00 TO 190+25.31 | | | 2133 | | 176 | | 121 | | | | | | | | | | | | | | | 285 | | | | 153 | 311 | | | 245 | | | | | | | | | | | | |
| | | "FN1" | 190+91.60 TO 196+11.92 | 1630 | | | | | | | | | | | | | | | 13 | 148 | | | | | 993 | | | | 524 | 1238 | | | | | | | | | | | | | | | |
| | | "BL1" | 95+50.00 TO 105+25.41 | 26993 | | | 44 | | | 2784 | | | | | | | | | | 249 | 5 | | 5307 | | 2282 | | | | 1236 | 3193 | | 808 | 1133 | | | | 0.32 | | | | | | | | |
| L-7 C-24 C-25 | SB | "A1" | 198+50.00 TO 211+11.87 | 1803 | | | | | | 977 | | | | | | | | | | | | | | | 3303 | | 4909 | | 2351 | | | | | 6250 | | | | | 97 | | | | | 1 | |
| | NB | "A1" | 198+50.00 TO 211+00.00 | 7364 | | | | | | 557 | | | | 1150 | 101 | | | | | 13 | | | | | 3260 | | 4844 | | 2314 | | | | | 6250 | | | | | 11 | | | | | 2 | |
| | | "ARA1" | 00+00.00 TO 01+30.00 | | | | | | | | | | | | | | | | | 17 | | | | | 26 | | | | 11 | 93 | | 202 | | | | | 0.09 | | | | | | | | |
| | | "BEL1" | 01+00.00 TO 02+20.00 | | | | | | | | | | | | | | | | 20 | 17 | | | | | 99 | | | | 42 | 160 | | 183 | | | | | 0.08 | | | | | | | | |
| | | "SIL1" | 02+00.00 TO 03+00.00 | | | | | | | | | | | | | | | | 10 | 40 | | | | | 69 | | | | 17 | 124 | | 264 | | | | | 0.12 | | | | | | | | |
| L-8 | | "SHOE1" | 102+50.00 TO 107+45.00 | 455 | | | | | | | | | | | | | | | | 145 | | | 2452 | | 689 | | | 136 | 333 | 1218 | | 1614 | | | | | 0.74 | | 46 | | | | | | |
| L-9 C-13 | | "ROC1" | 08+60.00 TO 12+00.00 | 746 | | | 146 | | | | | | | | | | | | 24 | 58 | 3 | 3 | 517 | | 406 | | | | 208 | 843 | | 969 | | | | | 0.44 | | | | | | | | |
| | | "BL1" | 91+60.00 TO 95+50.00 | 3974 | | | | | | | | | | | | | | | | 98 | 2 | | 867 | | 1043 | | | | 573 | 1354 | | | | | | | | | | | | | | | |
| L-10 | | "FN2" | 19+50.00 TO 29+23.21 | 3643 | | | | | | | | | | | | | | | | 176 | 1 | | 819 | | 877 | | | | 478 | 1806 | | 2004 | | | | | 0.92 | | | | | | | | 472 |
| | | | SHOEMAKER Ave OC | | 2728 | | | | | | | | | | | | | | | | | | | | | | | | | | | | | | | | | | | | | | | | |
| | | | ROSECRANS Ave UC | | 15833 | | | | | | | | | | | | | | | | | | | | | | | | | | | | | | | | | | | | | | | | |
| | | | BLOOMFIELD Ave UC | | 10753 | | | | | | | | | | | | | | | | | | | | | | | | | | | | | | | | | | | | | | | | |
| | | | SUB-Tot FROM Sht SCQ-3 | | | | | | | | | | | | | | | | | | | | | 5881 | | 6472 | | | | 7174 | | | | | | | | | | | | | | 994 | |
| | | | SUB-TOTAL | 55846 | 29314 | 27041 | 190 | 437 | | 6089 | | | | 1750 | 240 | | 291 | | 96 | 1053 | 11 | 3 | 10502 | 0 | 19801 | 0 | 16155 | 136 | 12482 | 12873 | | 6044 | 1933 | 22500 | | 1 | 3.1 | | | 174 | | | | 3 | 699 |
| | | | SUB-TOTAL FROM Sht Q-3 | 55188 | | 100650 | 180 | 1664 | 302 | 3503 | 151 | 2 | 2 | 4744 | 139 | 358 | 2456 | 2566 | 30 | 782 | 36 | 21 | 10559 | 58 | 28496 | 66 | 28294 | 384 | 18414 | 12653 | 1430 | 6797 | 4242 | 39675 | 1 | 0 | 2.76 | 2 | 2 | 1058 | 5 | 294 | 140 | | | |
| | | | GRAND TOTAL | 140348 | | 127691 | 370 | 2101 | 302 | 9592 | 151 | 2 | 2 | 6494 | 379 | 358 | 2747 | 2566 | 126 | 1835 | 47 | 24 | 21061 | 5939 | 48297 | 6538 | 44449 | 520 | 30896 | 32700 | 1430 | 12841 | 6175 | 62175 | 1 | 1 | 5.86 | 2 | 2 | 1232 | 5 | 294 | 140 | 994 | 3 | 699 |

(N) NOT A SEPARATE PAY ITEM, FOR INFORMATION ONLY

1 REVISED PER ADDENDUM No. 1 DATED JULY 13, 2012

## SUMMARY OF QUANTITIES

Q-4

CALCULATED-DESIGNED BY JANE YU
CHECKED BY NGIM NANCY PE
FUNCTIONAL SUPERVISOR NGIM NANCY PE
REVISED BY
DATE REVISED

STATE OF CALIFORNIA - DEPARTMENT OF TRANSPORTATION
Caltrans® OFFICE OF DESIGN A

721593pa004.add

LAST REVISION 00-00-00 DATE PLOTTED => 12-JUL-2012 TIME PLOTTED => 14:11

| DIST | COUNTY | ROUTE | POST MILES TOTAL PROJECT | SHEET No. | TOTAL SHEETS |
|---|---|---|---|---|---|
| 07 | LA | 5 | 2.4/4.0 | 498 | 1288 |

REGISTERED CIVIL ENGINEER 12-13-11 DATE

3-26-11
PLANS APPROVAL DATE

REGISTERED PROFESSIONAL ENGINEER Kevin Harper No. 42221 Exp. 3-31-12 CIVIL STATE OF CALIFORNIA

*The State of California or its officers or agents shall not be responsible for the accuracy or completeness of electronic copies of this plan sheet.*

1

NOTE:
1. All Masonry Block shall be precision units, unless otherwise noted.

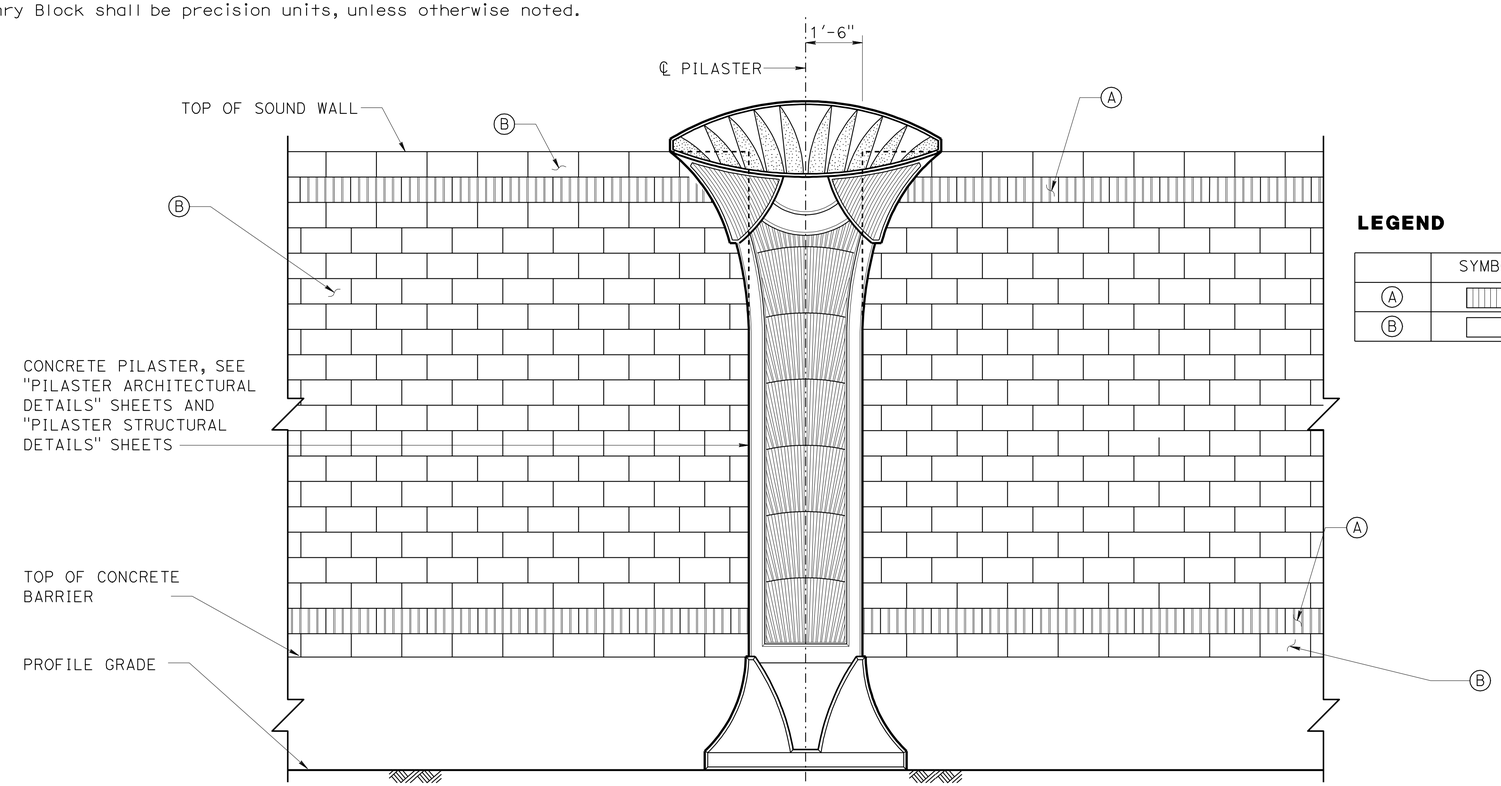


## PART SOUND WALL ELEVATION - FREEWAY SIDE

½" = 1'-0"

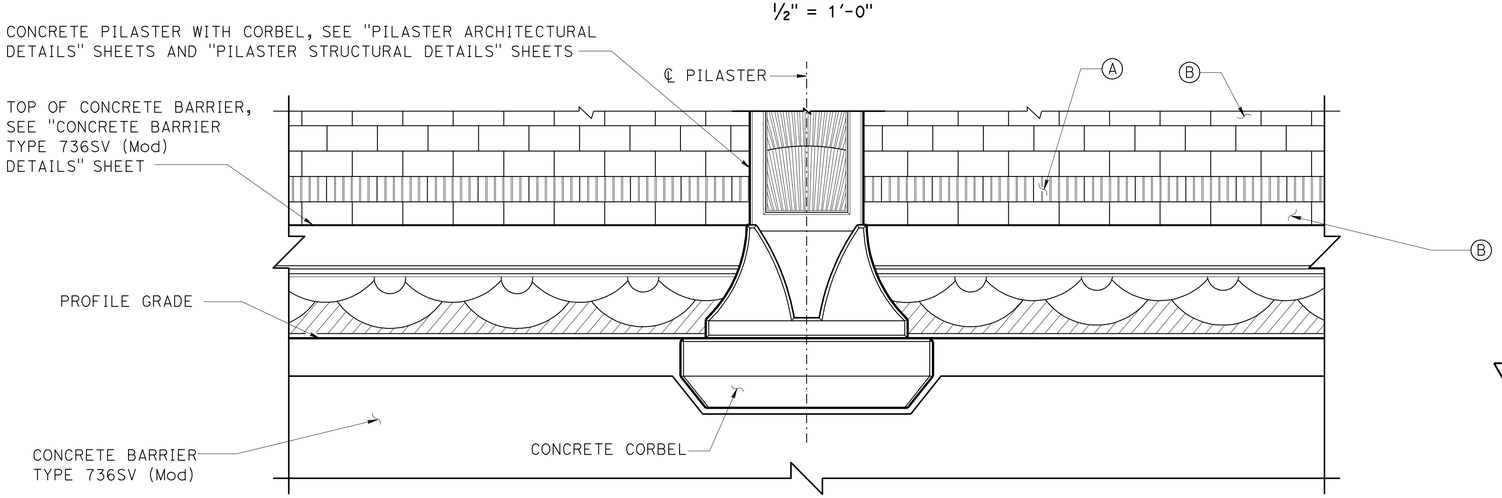


## PART SOUND WALL ELEVATION - BACK SIDE

½" = 1'-0"

### LEGEND

| | SYMBOL | NOMINAL SIZE | TEXTURE | COLOR |
|---|---|---|---|---|
| A | | 8" x 8" x 16" | PRECISION 5 SCORE | TAN (FEDERAL COLOR #22648) |
| B | | 8" x 8" x 16" | PRECISION | TAN (FEDERAL COLOR #22648) |

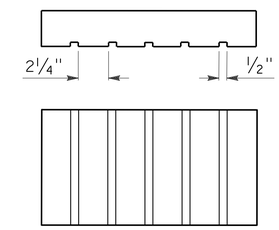


PRECISION 5 SCORE PLAIN

1 **REVISED PER ADDENDUM No. 1 DATED JULY 13, 2012**

**SW-23**

| | | | |
|---|---|---|---|
| DESIGN | BY Isaac Tasabia | CHECKED Javier Chavez | |
| DETAILS | BY Jin Zhou / Jie Tang | CHECKED Daniel Sessions | |
| QUANTITIES | BY | CHECKED | |

STATE OF CALIFORNIA DEPARTMENT OF TRANSPORTATION

DIVISION OF ENGINEERING SERVICES STRUCTURE DESIGN DESIGN BRANCH 1

BRIDGE NO.

POST MILE

SOUND WALL NO. 160, 204 & 205

SOUND WALL ARCHITECTURAL DETAILS

STRUCTURES DESIGN DETAIL SHEET (ENGLISH) (REV. 09-01-10)

ORIGINAL SCALE IN INCHES FOR REDUCED PLANS 0 1 2 3

UNIT: 3576
PROJECT NUMBER & PHASE: 07000018331 CONTRACT NO.: 07-215934

DISREGARD PRINTS BEARING EARLIER REVISION DATES

REVISION DATES 12/10/10 12/12/11 12/14/11 SHEET OF

FILE => 721593rd002.dgn

USERNAME => s124496 DATE PLOTTED => 12-JUL-2012 TIME PLOTTED => 14:11

FOR ACCURATE RIGHT OF WAY DATA, CONTACT
RIGHT OF WAY ENGINEERING AT THE DISTRICT OFFICE.

## GENERAL NOTES: (SHEETS E-1 TO E-43)

1. FOR INSTALLATION OF CONDUIT, PULL BOXES, FOUNDATIONS AND RELATED ELECTROLIER EQUIPMENT IN SOUNDWALL BARRIER AND BRIDGE CONCRETE BARRIER, SEE SOUNDWALL AND STRUCTURE PLANS DETAIL SHEETS.
2. ALL FREEWAY LIGHTING SHALL USE LED LUMINAIRE.
3. PEDESTRAIN SIGNAL INDICATOR SHALL BE "COUNTDOWN" TYPE.

1

## ABBREVIATIONS: (SHEETS E-1 TO E-53)

| | |
|---|---|
| 6 PR#19 | 6 PAIR #19 CABLE |
| COAX | COAXIAL |
| CTID | CALTRANS IDENTIFICATION |
| CTNET | CALTRAN ADVANCED TRAFFIC SIGNAL MANAGEMENT NETWORK SYSTEM |
| DC | DIRECT CURRENT |
| DLC (#12) | TWO #12 STRANDED TINNED COPPER SHIELDED TWISTED PAIR CONDUCTORS |
| GA | GREEN ARROW |
| GPRS | GENERAL PACKET RADIO SERVICE |
| GPS | GLOBAL POSITIONING SYSTEM |
| ID | IDENTIFICATION |
| IP | INTERNET PROTOCOL |
| J-BOX | JUNCTION BOX |
| LARTMC | LOS ANGELES REGIONAL TMC |
| MVDS CABLE | 12 PAIR #20 MVDS CONTROL CABLE |
| APS | ACCESSIBLE PEDESTRIAN SIGNAL SYSTEM |
| 21TS | TYPE 15TS MODIFIED STANDARD |
| MVDS | MICROWAVE VEHICLE DETECTION SYSYTEM |
| MTA | MVDS TERMINATION ASSEMBLY |
| (N) | NEW |
| OLA | OVERLAP A |
| PDA | POWER DISTRIBUTION ASSEMBLY |
| PR | PAIR |
| RA | RED ARROW |
| RX | RECEIVE |
| SCE | SOUTHERN CALIFORNIA EDISON |
| TB | TERMINAL BLOCK |
| TX | TRANSMIT |
| VAC | VOLTS ALTERNATING CURRENT |
| VDC | VOLTS DIRECT CURRENT |
| VIVDS | VIDEO IMAGE VEHICLE DETECTION SYSTEM |
| VPN | VIRTUAL PRIVATE NETWORK |
| YA | YELLOW ARROW |

1

| Dist | COUNTY | ROUTE | POST MILES TOTAL PROJECT | SHEET No. | TOTAL SHEETS |
|---|---|---|---|---|---|
| 07 | LA | 5 | 2.4/4.0 | 519 | 1288 |

REGISTERED ELECTRICAL ENGINEER — 11/2/11 DATE

3-26-12
PLANS APPROVAL DATE

REGISTERED PROFESSIONAL ENGINEER — CECILIO BURCIAGA — No. E015302 — Exp. 03-31-13 — ELECTRICAL — STATE OF CALIFORNIA

*THE STATE OF CALIFORNIA OR ITS OFFICERS OR AGENTS SHALL NOT BE RESPONSIBLE FOR THE ACCURACY OR COMPLETENESS OF SCANNED COPIES OF THIS PLAN SHEET.*

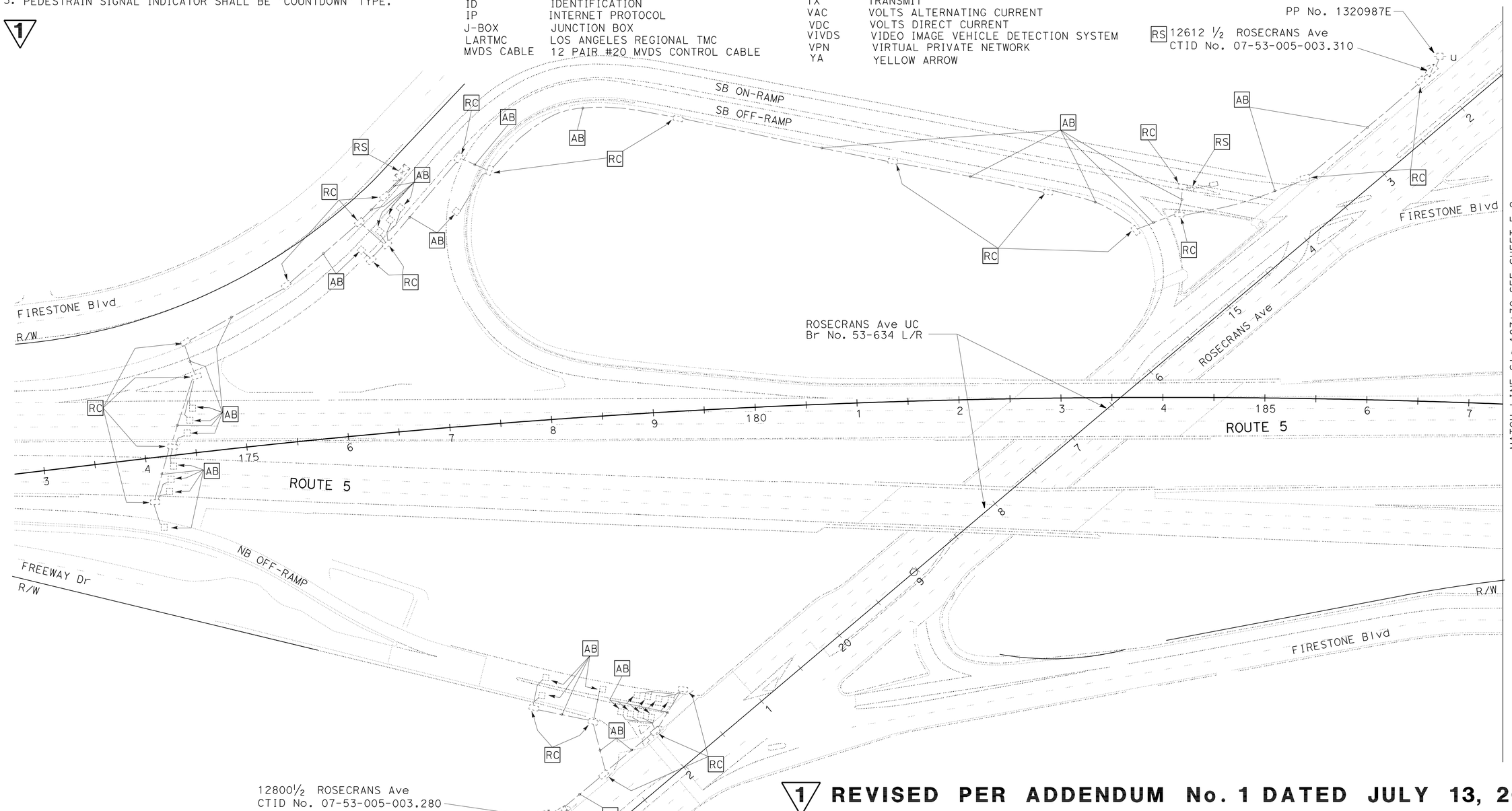


1 REVISED PER ADDENDUM No. 1 DATED JULY 13, 2012

# RAMP METERING SYSTEM
## (REMOVE)

SCALE: 1" = 50'

E-1

*APPROVED FOR ELECTRICAL WORK ONLY*

STATE OF CALIFORNIA - DEPARTMENT OF TRANSPORTATION
Caltrans® TRAFFIC DESIGN

FUNCTIONAL SUPERVISOR: YI TSAU
CALCULATED-DESIGNED BY: LUKE SUN
CHECKED BY: CECILIO BURCIAGA
REVISED BY / DATE REVISED

LAST REVISION 00-00-00 | DATE PLOTTED => 12-JUL-2012 | TIME PLOTTED => 14:11

| Dist | COUNTY | ROUTE | POST MILES TOTAL PROJECT | SHEET No. | TOTAL SHEETS |
|---|---|---|---|---|---|
| 07 | LA | 5 | 2.4/4.0 | 537 | 1288 |

REGISTERED ELECTRICAL ENGINEER 11/2/11 DATE

3-26-12
PLANS APPROVAL DATE

REGISTERED PROFESSIONAL ENGINEER CECILIO BURCIAGA No. E015302 Exp. 03-31-13 ELECTRICAL STATE OF CALIFORNIA

*THE STATE OF CALIFORNIA OR ITS OFFICERS OR AGENTS SHALL NOT BE RESPONSIBLE FOR THE ACCURACY OR COMPLETENESS OF SCANNED COPIES OF THIS PLAN SHEET.*

FOR ACCURATE RIGHT OF WAY DATA, CONTACT
RIGHT OF WAY ENGINEERING AT THE DISTRICT OFFICE.

## PROJECT NOTES: (THIS SHEET ONLY)

1. 2"C, 6 PR#19 SIC, 1#8G.
2. FOR REFERENCE ONLY, SEE SHEET E-41 FOR INSTALLATION DETAILS.
3. FOR REFERENCE ONLY, SEE SHEET E-43 FOR INSTALLATION DETAILS.

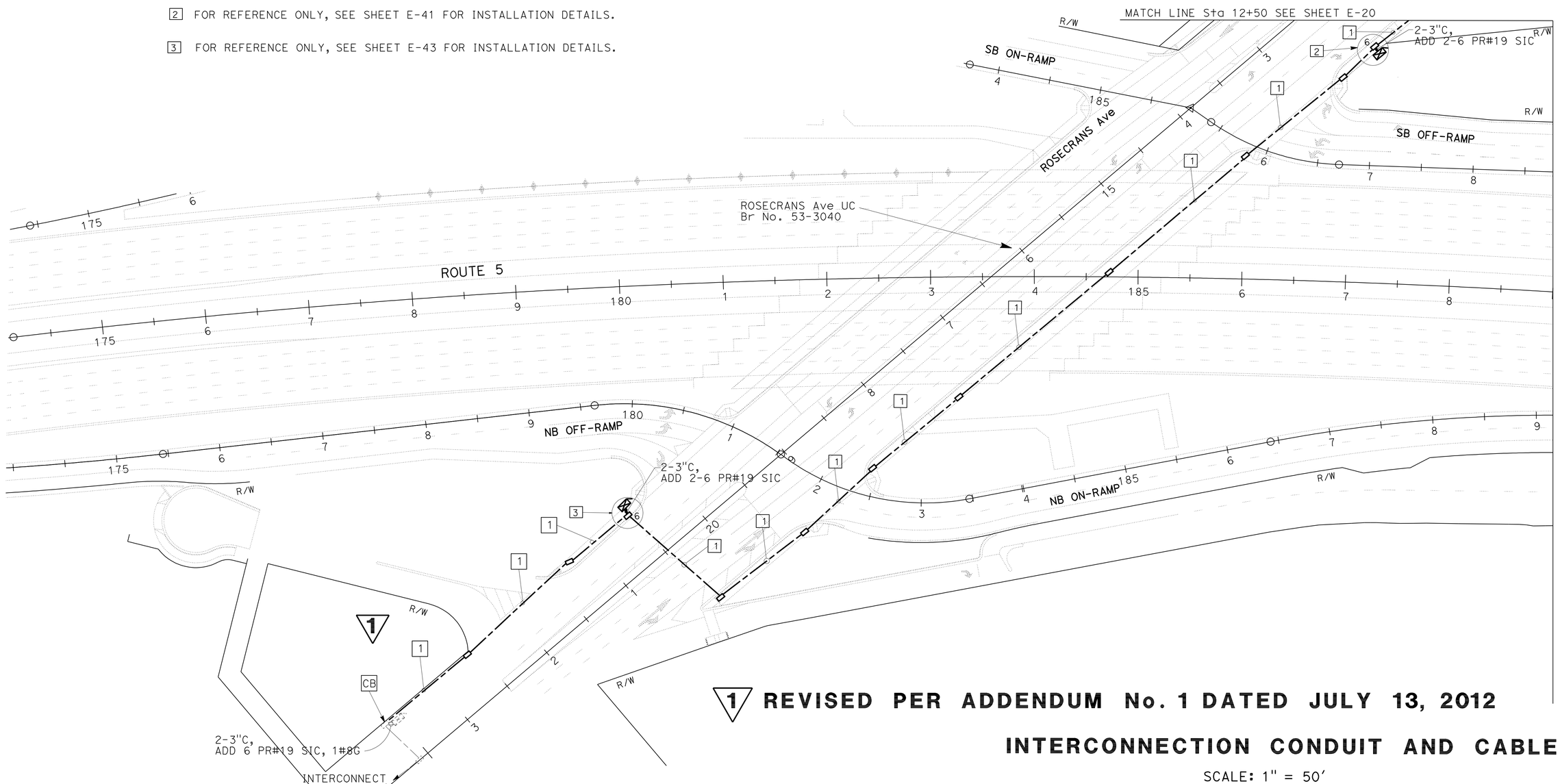


**1 REVISED PER ADDENDUM No. 1 DATED JULY 13, 2012**

## INTERCONNECTION CONDUIT AND CABLE

SCALE: 1" = 50'

*APPROVED FOR ELECTRICAL WORK ONLY*

**E-19**

STATE OF CALIFORNIA - DEPARTMENT OF TRANSPORTATION
Caltrans® **TRAFFIC DESIGN**

FUNCTIONAL SUPERVISOR: YI TSAU
CALCULATED-DESIGNED BY: LUKE SUN
CHECKED BY: CECILIO BURCIAGA
REVISED BY / DATE REVISED

LAST REVISION 00-00-00
DATE PLOTTED => 12-JUL-2012
TIME PLOTTED => 14:11

| Dist | COUNTY | ROUTE | POST MILES TOTAL PROJECT | SHEET No. | TOTAL SHEETS |
|---|---|---|---|---|---|
| 07 | LA | 5 | 2.4/4.0 | 548 | 1288 |

REGISTERED ELECTRICAL ENGINEER 11/2/11 DATE

3-26-12
PLANS APPROVAL DATE

REGISTERED PROFESSIONAL ENGINEER CECILIO BURCIAGA No. E015302 Exp. 03-31-13 ELECTRICAL STATE OF CALIFORNIA

*THE STATE OF CALIFORNIA OR ITS OFFICERS OR AGENTS SHALL NOT BE RESPONSIBLE FOR THE ACCURACY OR COMPLETENESS OF SCANNED COPIES OF THIS PLAN SHEET.*

FOR ACCURATE RIGHT OF WAY DATA, CONTACT
RIGHT OF WAY ENGINEERING AT THE DISTRICT OFFICE.

## PROJECT NOTES: (THIS SHEET ONLY)

1. PP No. 1231451E. INSTALL TYPE H RISER.
2. 3"C, MT (SCE WILL INSTALL CONDUCTORS).
3. 120/240 V METERED TYPE III-BF SERVICE EQUIPMENT ENCLOSURE WITH:

| |
|---|
| 100 A, 240 V, 2P, CB - MAIN |
| 50 A, 120 V, 1P, CB - SIGNAL |
| 30 A, 120 V, 1P, CB - SIGNAL LIGHTING (UNMETERED) |
| 15 A, 120 V, 1P, CB - IISNS |
| 15 A, 120 V, 1P, CB - PEU |

ADDRESS: 13816 ½ BLOOMFIELD Ave, NORWALK

4. ECONOLITE ASC/3 NEMA TS2 CONTROLLER ASSEMBLY, SPREAD SPECTRUM RADIO SYSTEM AND ASSOCIATED EQUIPMENT, VIDEO DETECTION CONTROLLER AND EQUIPMENT IN CABINET. BBS BATTERIES AND EXTERNAL CABINET. BBS COMPONENTS ARE STATE-FURNISHED. (FOR INSTALLATION OF TRAFFIC SIGNAL INTERCONNECT AND WIRELESS DATA SERVICE EQUIPMENT DETAILS SEE SHEET E-53)

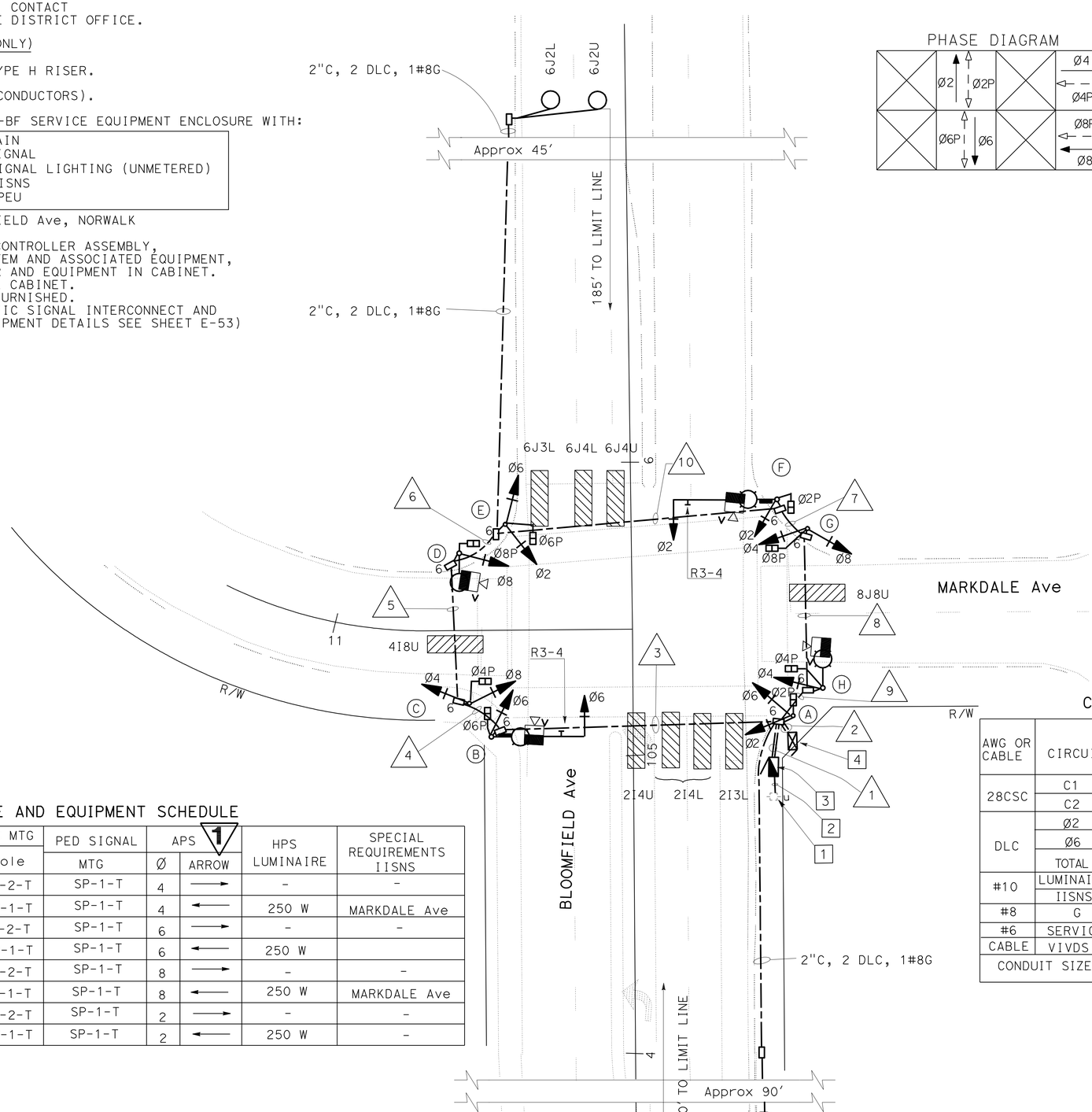


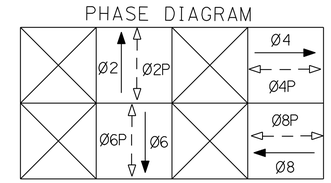


## POLE AND EQUIPMENT SCHEDULE

| No. | STANDARD Type | SMA | LMA | VEH SIG MTG Mast Arm | Pole | PED SIGNAL MTG | APS Ø | APS ARROW | HPS LUMINAIRE | SPECIAL REQUIREMENTS IISNS |
|---|---|---|---|---|---|---|---|---|---|---|
| A | 1-A | — | — | — | TV-2-T | SP-1-T | 4 | → | - | - |
| B | 24-3-100 | 35' | 12' | MAS | SV-1-T | SP-1-T | 4 | ← | 250 W | MARKDALE Ave |
| C | 1-A | — | — | — | TV-2-T | SP-1-T | 6 | → | - | - |
| D | 15TS | — | 12' | — | SV-1-T | SP-1-T | 6 | ← | 250 W | |
| E | 1-A | — | — | — | TV-2-T | SP-1-T | 8 | → | - | - |
| F | 19-3-100 | 30' | 12' | MAS | SV-1-T | SP-1-T | 8 | ← | 250 W | MARKDALE Ave |
| G | 1-A | — | — | — | TV-2-T | SP-1-T | 2 | → | - | - |
| H | 15TS | — | 12' | — | SV-1-T | SP-1-T | 2 | ← | 250 W | - |

## CONDUIT AND CONDUCTOR SCHEDULE

| AWG OR CABLE | CIRCUIT | CONDUIT RUN NUMBER AND SIZE 1 | 2 | 3 | 4 | 5 | 6 | 7 | 8 | 9 | 10 |
|---|---|---|---|---|---|---|---|---|---|---|---|
| 28CSC | C1 | - | 2 | 1 | 1 | 1 | 1 | 1 | 1 | 1 | - |
| | C2 | - | 2 | 1 | 1 | 1 | 1 | 1 | 1 | 1 | - |
| DLC | Ø2 | - | 2 | - | - | - | - | - | - | - | - |
| | Ø6 | - | 2 | 2 | 2 | 2 | 2 | - | - | - | - |
| | TOTAL | - | 4 | 2 | 2 | 2 | 2 | - | - | - | - |
| #10 | LUMINAIRE | 2 | - | 2 | 2 | 2 | - | 2 | 2 | 2 | - |
| | IISNS | 2 | - | 2 | - | - | - | 2 | 2 | 2 | - |
| #8 | G | 1 | 1 | 1 | 1 | 1 | 1 | 1 | 1 | 1 | 1 |
| #6 | SERVICE | 2 | 2 | - | - | - | - | - | - | - | - |
| CABLE | VIVDS | - | 4 | 2 | 1 | 1 | - | 1 | 1 | 2 | - |
| CONDUIT SIZE | | 2-3" | 2-3" | 3" | 3" | 3" | 3" | 3" | 3" | 3" | 3" |

**1 REVISED PER ADDENDUM No. 1 DATED JULY 13, 2012**

# SIGNAL AND LIGHTING (CITY STREET LOCATION 1)

## (BLOOMFIELD Ave AND MARKDALE Ave)

SCALE: 1" = 20'

**E-30**

*APPROVED FOR ELECTRICAL WORK ONLY*

STATE OF CALIFORNIA - DEPARTMENT OF TRANSPORTATION
Caltrans TRAFFIC DESIGN
FUNCTIONAL SUPERVISOR: YI TSAU
CALCULATED-DESIGNED BY: LUKE SUN
CHECKED BY: CECILIO BURCIAGA
REVISED BY / DATE REVISED

LAST REVISION 00-00-00 DATE PLOTTED => 12-JUL-2012 TIME PLOTTED => 14:12

FOR ACCURATE RIGHT OF WAY DATA, CONTACT
RIGHT OF WAY ENGINEERING AT THE DISTRICT OFFICE.

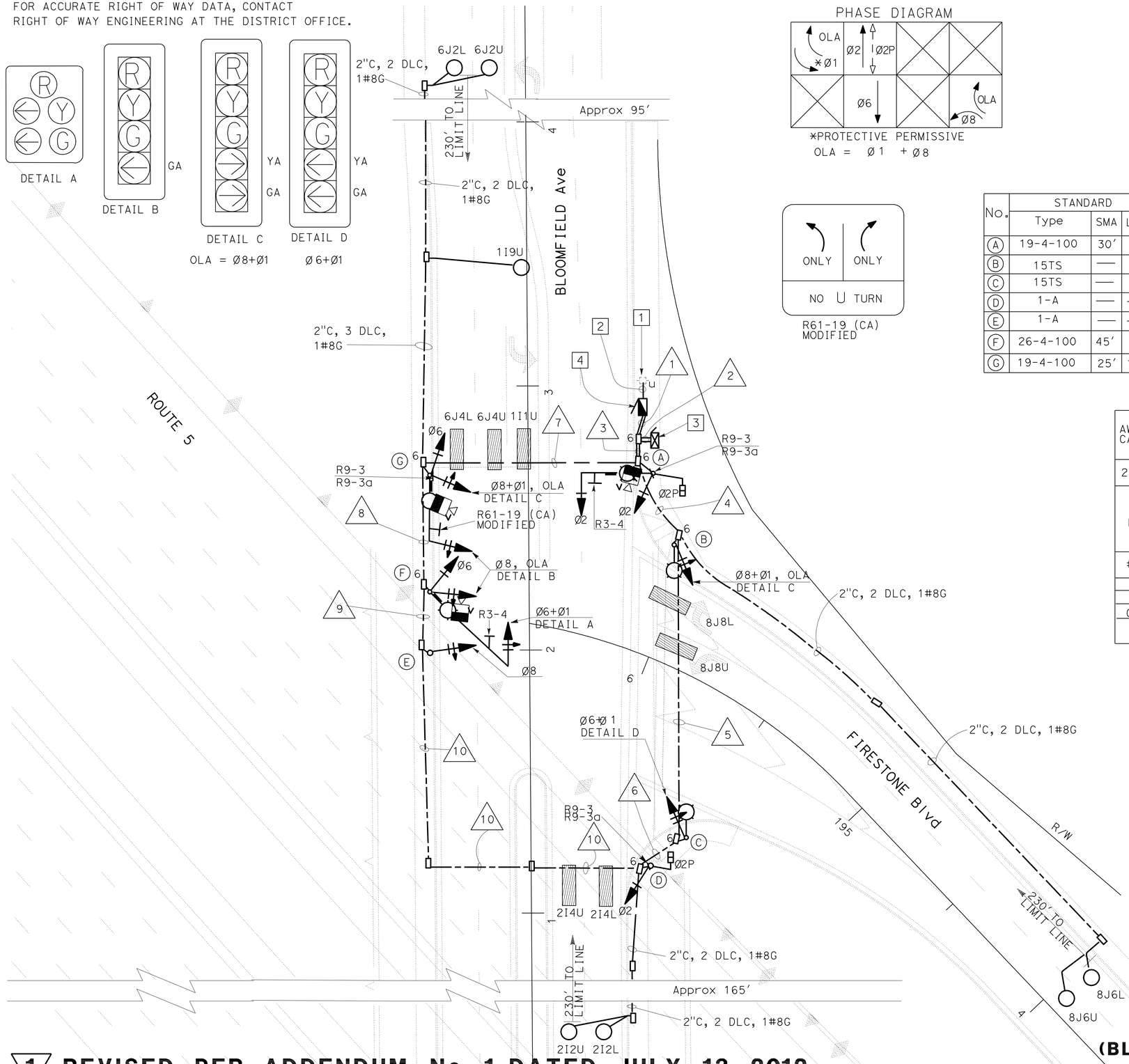


PHASE DIAGRAM




*PROTECTIVE PERMISSIVE
OLA = Ø1 + Ø8




R61-19 (CA)
MODIFIED

| Dist | COUNTY | ROUTE | POST MILES TOTAL PROJECT | SHEET No. | TOTAL SHEETS |
|---|---|---|---|---|---|
| 07 | LA | 5 | 2.4/4.0 | 549 | 1288 |

REGISTERED ELECTRICAL ENGINEER 11/2/11 DATE

3-26-12
PLANS APPROVAL DATE

REGISTERED PROFESSIONAL ENGINEER CECILIO BURCIAGA No. E015302 Exp. 03-31-13 ELECTRICAL STATE OF CALIFORNIA

*THE STATE OF CALIFORNIA OR ITS OFFICERS OR AGENTS SHALL NOT BE RESPONSIBLE FOR THE ACCURACY OR COMPLETENESS OF SCANNED COPIES OF THIS PLAN SHEET.*

## POLE AND EQUIPMENT SCHEDULE

| No. | STANDARD Type | SMA | LMA | VEH SIG MTG Mast Arm | Pole | PED SIGNAL MTG | APS Ø | ARROW | HPS LUMINAIRE | SPECIAL REQUIREMENTS IISNS |
|---|---|---|---|---|---|---|---|---|---|---|
| A | 19-4-100 | 30' | 12' | MAS | SV-1-T | SP-1-T | — | — | 250 W | FIRESTONE Blvd |
| B | 15TS | — | — | — | SV-1-T | — | 2 | → | 250 W | — |
| C | 15TS | — | 12' | — | SV-1-T | — | — | — | 250 W | — |
| D | 1-A | — | — | — | TV-1-T | SP-1-T | 2 | ← | — | — |
| E | 1-A | — | — | — | TV-1-T | — | — | — | — | — |
| F | 26-4-100 | 45' | 12' | MAS | SV-2-TA | — | — | — | 250 W | FIRESTONE Blvd |
| G | 19-4-100 | 25' | 12' | MAS | SV-2-TA | — | — | — | 250 W | BLOOMFIELD Ave |

## CONDUIT AND CONDUCTOR SCHEDULE

| AWG OR CABLE | CIRCUIT | CONDUIT RUN NUMBER AND SIZE 1 | 2 | 3 | 4 | 5 | 6 | 7 | 8 | 9 | 10 |
|---|---|---|---|---|---|---|---|---|---|---|---|
| 28CSC | C1 | - | 2 | 1 | 1 | 1 | 1 | 1 | 1 | 1 | - |
| | C2 | - | 2 | 1 | 1 | 1 | 1 | 1 | 1 | 1 | - |
| DLC | Ø1 | - | 1 | 1 | - | - | - | 1 | - | - | - |
| | Ø2 | - | 2 | 2 | 2 | 2 | 2 | - | - | - | - |
| | Ø6 | - | 2 | 2 | - | - | - | 2 | - | - | - |
| | Ø8 | - | 2 | 2 | 2 | - | - | - | - | - | - |
| | TOTAL | - | 7 | 7 | 4 | 2 | 2 | 3 | - | - | - |
| #10 | LUMINAIRE | 2 | - | 2 | 2 | 2 | - | 2 | 2 | - | - |
| | IISNS | 2 | - | 2 | - | - | - | 2 | 2 | - | - |
| #8 | G | 1 | 1 | 1 | 1 | 1 | 1 | 1 | 1 | 1 | 1 |
| #6 | SERVICE | 2 | 2 | - | - | - | - | - | - | - | - |
| CABLE | VIVDS | - | 3 | 3 | - | - | - | 2 | 1 | - | - |
| CONDUIT SIZE | | 2-3" | 2-3" | 2-3" | 3" | 3" | 3" | 3" | 3" | 3" | 3" |

## PROJECT NOTES: (THIS SHEET ONLY)

1. PP No. 1131452E. INSTALL TYPE H RISER.
2. 3"C, MT. SCE WILL INSTALL CONDUCTORS.
3. ECONOLITE ASC/3 NEMA TS2 CONTROLLER ASSEMBLY, SPREAD SPECTRUM RADIO SYSTEM AND ASSOCIATED EQUIPMENT, VIDEO DETECTION CONTROLLER AND EQUIPMENT IN CABINET. BBS BATTERIES AND EXTERNAL CABINET. BBS COMPONENTS ARE STATE-FURNISHED. (FOR INSTALLATION OF TRAFFIC SIGNAL INTERCONNECT AND WIRELESS DATA SERVICE EQUIPMENT DETAILS SEE SHEET E-53)
4. 120/240 V METERED TYPE III-BF SERVICE EQUIPMENT ENCLOSURE WITH:

   100 A, 240 V, 2P, CB - MAIN
   50 A, 120 V, 1P, CB - SIGNAL
   30 A, 120 V, 1P, CB - SIGNAL LIGHTING (UNMETERED)
   15 A, 120 V, 1P, CB - IISNS
   15 A, 120 V, 1P, CB - PEU

ADDRESS: 13828 1/2 BLOOMFIELD Ave, NORWALK

# SIGNAL AND LIGHTING (CITY STREET LOCATION 2)

## (BLOOMFIELD Ave AND NORTH FIRESTONE Blvd)

SCALE: 1" = 20'

**1 REVISED PER ADDENDUM No. 1 DATED JULY 13, 2012**

*APPROVED FOR ELECTRICAL WORK ONLY*

E-31

STATE OF CALIFORNIA - DEPARTMENT OF TRANSPORTATION
Caltrans® TRAFFIC DESIGN
FUNCTIONAL SUPERVISOR: YI TSAU
CALCULATED-DESIGNED BY: LUKE SUN
CHECKED BY: CECILIO BURCIAGA
REVISED BY / DATE REVISED

LAST REVISION 00-00-00
DATE PLOTTED => 12-JUL-2012
TIME PLOTTED => 14:12

FOR ACCURATE RIGHT OF WAY DATA, CONTACT
RIGHT OF WAY ENGINEERING AT THE DISTRICT OFFICE.

| Dist | COUNTY | ROUTE | POST MILES TOTAL PROJECT | SHEET No. | TOTAL SHEETS |
|---|---|---|---|---|---|
| 07 | LA | 5 | 2.4/4.0 | 550 | 1288 |

REGISTERED ELECTRICAL ENGINEER — DATE 11/2/11

3-26-12
PLANS APPROVAL DATE

REGISTERED PROFESSIONAL ENGINEER — CECILIO BURCIAGA — No. E015302 — Exp. 03-31-13 — ELECTRICAL — STATE OF CALIFORNIA

*THE STATE OF CALIFORNIA OR ITS OFFICERS OR AGENTS SHALL NOT BE RESPONSIBLE FOR THE ACCURACY OR COMPLETENESS OF SCANNED COPIES OF THIS PLAN SHEET.*

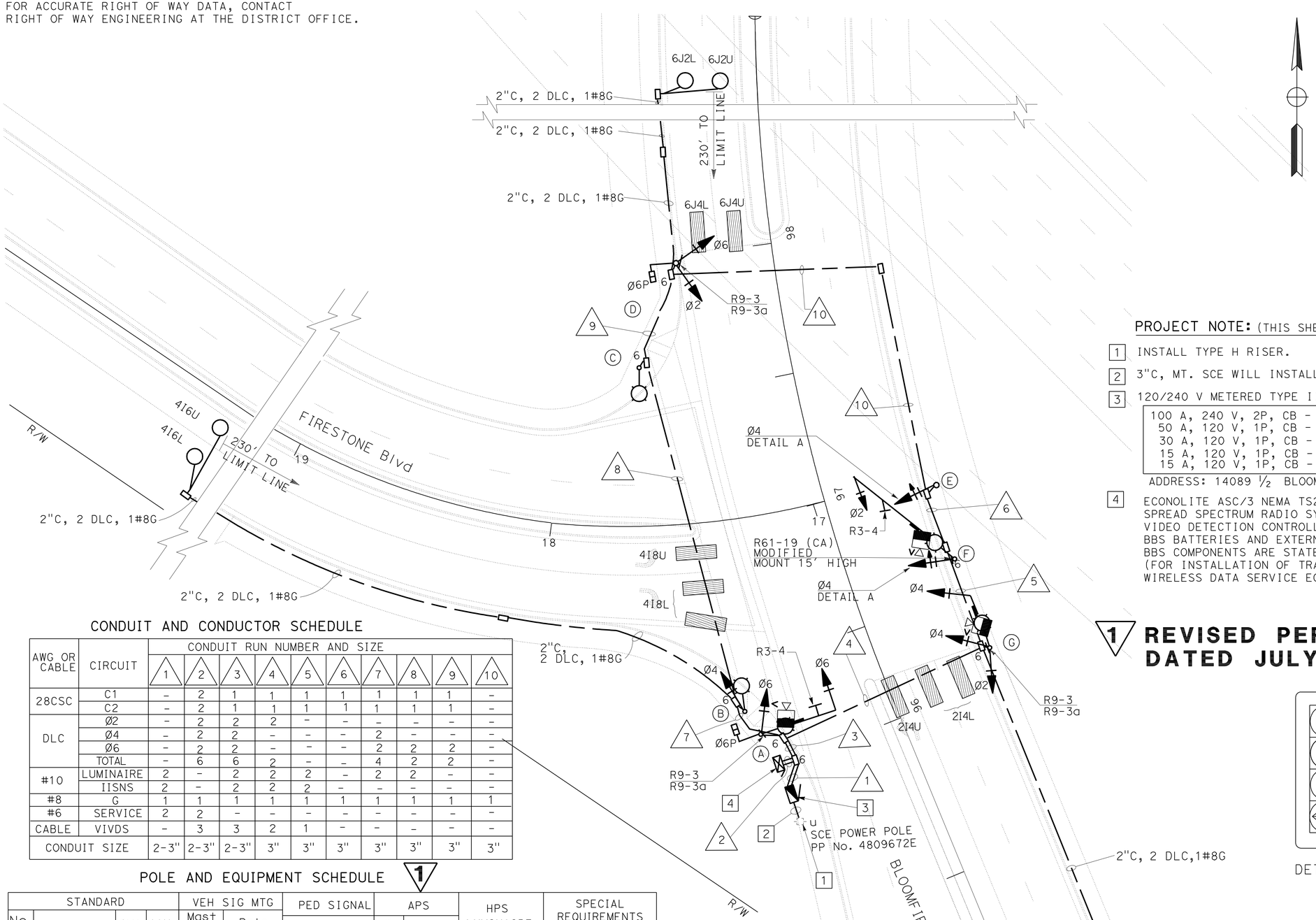


## PHASE DIAGRAM

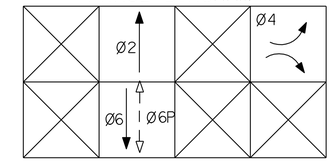


## PROJECT NOTE: (THIS SHEET ONLY)

1. INSTALL TYPE H RISER.
2. 3"C, MT. SCE WILL INSTALL CONDUCTORS.
3. 120/240 V METERED TYPE III-BF SERVICE EQUIPMENT ENCLOSURE WITH:

| |
|---|
| 100 A, 240 V, 2P, CB - MAIN |
| 50 A, 120 V, 1P, CB - SIGNAL |
| 30 A, 120 V, 1P, CB - SIGNAL LIGHTING (UNMETERED) |
| 15 A, 120 V, 1P, CB - IISNS |
| 15 A, 120 V, 1P, CB - PEU |

ADDRESS: 14089 ½ BLOOM FIELD Ave, NORWALK

4. ECONOLITE ASC/3 NEMA TS2 CONTROLLER ASSEMBLY, SPREAD SPECTRUM RADIO SYSTEM AND ASSOCIATED EQUIPMENT, VIDEO DETECTION CONTROLLER AND EQUIPMENT IN CABINET. BBS BATTERIES AND EXTERNAL CABINET. BBS COMPONENTS ARE STATE-FURNISHED. (FOR INSTALLATION OF TRAFFIC SIGNAL INTERCONNECT AND WIRELESS DATA SERVICE EQUIPMENT DETAILS SEE SHEET E-53)

**1 REVISED PER ADDENDUM No. 1 DATED JULY 13, 2012**

## CONDUIT AND CONDUCTOR SCHEDULE

| AWG OR CABLE | CIRCUIT | CONDUIT RUN NUMBER AND SIZE 1 | 2 | 3 | 4 | 5 | 6 | 7 | 8 | 9 | 10 |
|---|---|---|---|---|---|---|---|---|---|---|---|
| 28CSC | C1 | - | 2 | 1 | 1 | 1 | 1 | 1 | 1 | 1 | - |
| | C2 | - | 2 | 1 | 1 | 1 | 1 | 1 | 1 | 1 | - |
| DLC | Ø2 | - | 2 | 2 | 2 | - | - | - | - | - | - |
| | Ø4 | - | 2 | 2 | - | - | - | 2 | - | - | - |
| | Ø6 | - | 2 | 2 | - | - | - | 2 | 2 | 2 | - |
| | TOTAL | - | 6 | 6 | 2 | - | - | 4 | 2 | 2 | - |
| #10 | LUMINAIRE | 2 | - | 2 | 2 | 2 | - | 2 | 2 | - | - |
| | IISNS | 2 | - | 2 | 2 | 2 | - | - | - | - | - |
| #8 | G | 1 | 1 | 1 | 1 | 1 | 1 | 1 | 1 | 1 | 1 |
| #6 | SERVICE | 2 | 2 | - | - | - | - | - | - | - | - |
| CABLE | VIVDS | - | 3 | 3 | 2 | 1 | - | - | - | - | - |
| CONDUIT SIZE | | 2-3" | 2-3" | 2-3" | 3" | 3" | 3" | 3" | 3" | 3" | 3" |

## POLE AND EQUIPMENT SCHEDULE 1

| STANDARD No. | Type | SMA | LMA | VEH SIG MTG Mast Arm | Pole | PED SIGNAL MTG | APS Ø | ARROW | HPS LUMINAIRE | SPECIAL REQUIREMENTS IISNS |
|---|---|---|---|---|---|---|---|---|---|---|
| A | 19-4-100 | 30' | 12' | MAS | SV-1-T | SP-1-T | - | — | 250 W | FIRESTONE Blvd |
| B | 15TS | — | — | — | SV-1-T | — | 6 | → | 250 W | — |
| C | 15TS | — | 12' | — | — | — | 6 | ← | 250 W | — |
| D | 1-A | — | — | — | TV-2-T | SP-1-T | - | — | — | — |
| E | 1-A | — | — | — | TV-1-T | — | - | — | — | — |
| F | 26-4-100 | 45' | 12' | MAS | SV-1-T | — | - | — | 250 W | FIRESTONE Blvd |
| G | 19-4-100 | 20' | 12' | MAS | SV-2-TA | — | - | — | 250 W | BLOOMFIELD Ave |

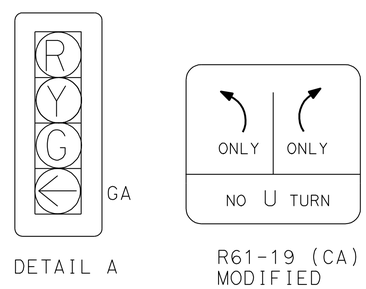


DETAIL A — R61-19 (CA) MODIFIED

NO SCALE

# SIGNAL AND LIGHTING (CITY STREET LOCATION 3)
## (BLOOMFIELD Ave AND SOUTH FIRESTONE Blvd)

SCALE: 1" = 20'

E-32

*APPROVED FOR ELECTRICAL WORK ONLY*

STATE OF CALIFORNIA - DEPARTMENT OF TRANSPORTATION — Caltrans — TRAFFIC DESIGN

FUNCTIONAL SUPERVISOR: YI TSAU

CALCULATED-DESIGNED BY: LUKE SUN — CHECKED BY: CECILIO BURCIAGA — REVISED BY — DATE REVISED

LAST REVISION — DATE PLOTTED => 12-JUL-2012 — TIME PLOTTED => 14:12 — 00-00-00

| Dist | COUNTY | ROUTE | POST MILES TOTAL PROJECT | SHEET No. | TOTAL SHEETS |
|---|---|---|---|---|---|
| 07 | LA | 5 | 2.4/4.0 | 551 | 1288 |

REGISTERED ELECTRICAL ENGINEER 11/2/11 DATE

3-26-12
PLANS APPROVAL DATE

REGISTERED PROFESSIONAL ENGINEER CECILIO BURCIAGA No. E015302 Exp. 03-31-13 ELECTRICAL STATE OF CALIFORNIA

*THE STATE OF CALIFORNIA OR ITS OFFICERS OR AGENTS SHALL NOT BE RESPONSIBLE FOR THE ACCURACY OR COMPLETENESS OF SCANNED COPIES OF THIS PLAN SHEET.*

FOR ACCURATE RIGHT OF WAY DATA, CONTACT RIGHT OF WAY ENGINEERING AT THE DISTRICT OFFICE.

## PROJECT NOTES: (THIS SHEET ONLY)

1. PP No. 529955E. INSTALL TYPE H RISER.
2. 120/240 V METERED TYPE III-BF SERVICE EQUIPMENT ENCLOSURE WITH:

| |
|---|
| 100 A, 240 V, 2P, CB - MAIN |
| 50 A, 120 V, 1P, CB - SIGNAL |
| 30 A, 120 V, 1P, CB - SIGNAL LIGHTING (UNMETERED) |
| 15 A, 120 V, 1P, CB - IISNS |
| 15 A, 120 V, 1P, CB - PEU |

CTID No. 07-53-005-003.481
ADDRESS: 12547 1/2 ROSECRANS Ave, NORWALK

3. 3"C, MT (SCE WILL INSTALL CONDUCTORS).
4. STATE-FURNISHED MODEL 2070 CONTROLLER ASSEMBLY. INSTALL MODEL 2070-6B MODEM, VIDEO DETECTION CONTROLLER AND EQUIPMENT ASSEMBLY IN CABINET. INSTALL BBS BATTERIES AND EXTERNAL CABINET. BBS COMPONENTS ARE STATE-FURNISHED.
5. COVER SIGNAL HEAD.
6. RS SIGNAL POLE AND SIGNAL EQUIPMENT.
7. 2"C, 6 PR#19, 1#8G.
8. PULL BOX NEXT TO RR CONTROLLER CABINET, (TO OPEN CABINET, CONTACT UNION PACIFIC RAILROAD COMPANY AT (909) 685-2288)
9. 2"C, 2-6 PR#19, 1#8G.

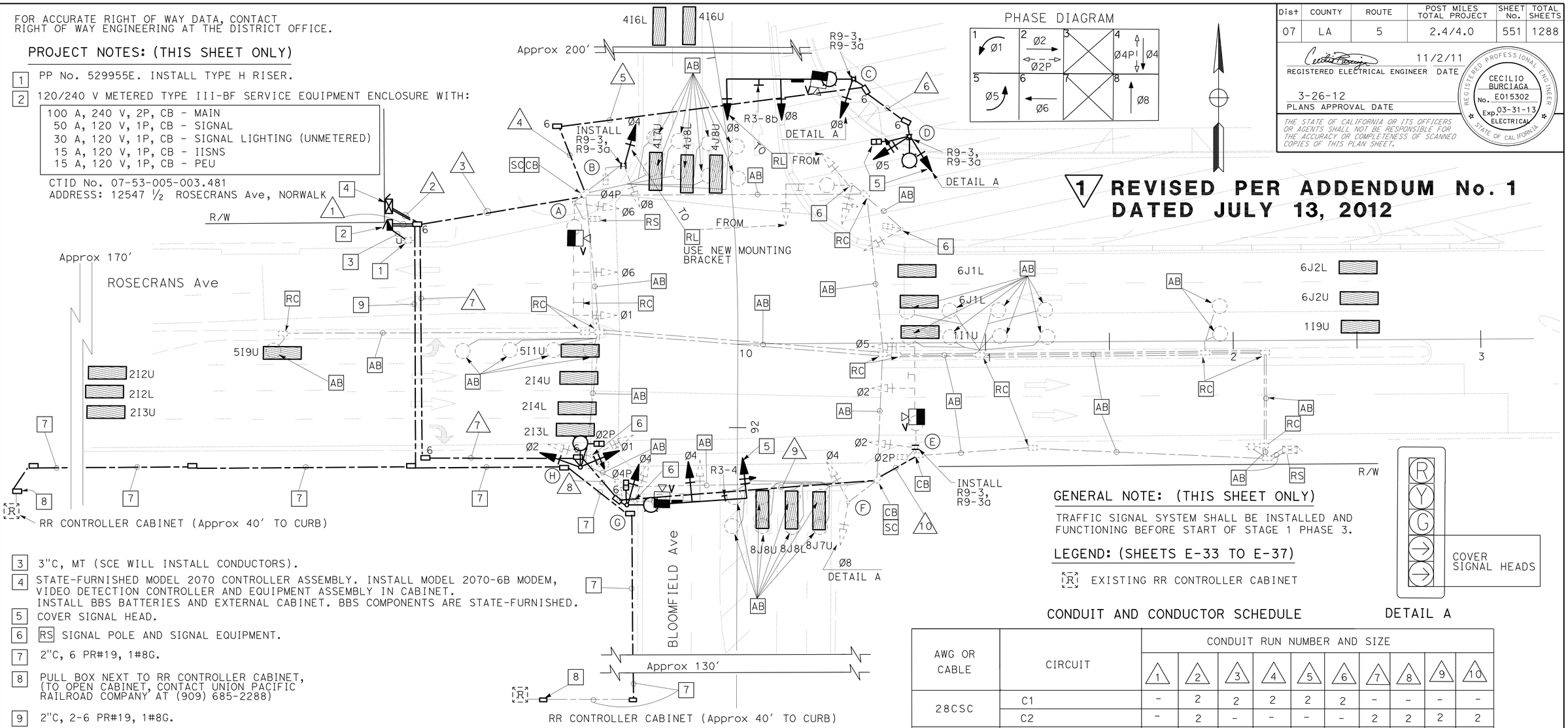


1 REVISED PER ADDENDUM No. 1 DATED JULY 13, 2012

## GENERAL NOTE: (THIS SHEET ONLY)

TRAFFIC SIGNAL SYSTEM SHALL BE INSTALLED AND FUNCTIONING BEFORE START OF STAGE 1 PHASE 3.

## LEGEND: (SHEETS E-33 TO E-37)

(R) EXISTING RR CONTROLLER CABINET




DETAIL A

## CONDUIT AND CONDUCTOR SCHEDULE

| AWG OR CABLE | CIRCUIT | CONDUIT RUN NUMBER AND SIZE | | | | | | | | | |
|---|---|---|---|---|---|---|---|---|---|---|---|
| | | 1 | 2 | 3 | 4 | 5 | 6 | 7 | 8 | 9 | 10 |
| 28CSC | C1 | - | 2 | 2 | 2 | 2 | 2 | - | - | - | - |
| | C2 | - | 2 | - | - | - | - | 2 | 2 | 2 | 2 |
| #10 | IISNS | 2 | - | 2 | 2 | 2 | - | 2 | 2 | - | - |
| #10 | LUMINAIRES | 2 | - | 2 | 2 | 2 | 2 | 2 | 2 | 2 | 2 |
| #8 | G | 1 | 1 | 1 | 1 | 1 | 1 | 1 | 1 | 1 | 1 |
| CABLE | VIVDS CABLE | - | 4 | 2 | 1 | 1 | - | 2 | 2 | 1 | 1 |
| #6 | SIGNAL SERVICE | 2 | 2 | - | - | - | - | - | - | - | - |
| 6 PR#19 | RR PRE-EMPTION CABLE | - | 2 | - | - | - | - | - | - | - | - |
| - | CONDUIT SIZE | 2-3" ** | 2-3" ** | 3" | 3" | 3" ** | 3" ** | 3" | 3" | 3" | 3" |

** BURY CONDUIT 36" BELOW FINAL GRADE

## EXISTING POLE AND EQUIPMENT SCHEDULE

| STANDARD | | | | veh sig mtg | | ped SIGNAL | ppb | | hps LUMINAIRE | SPECIAL REQUIREMENTS |
|---|---|---|---|---|---|---|---|---|---|---|
| No. | Type | SMA | LMA | Mast Arm | Pole | mtg | Ø | ARROW | | |
| A | 26-4-70 | 45' | 15' | 2-mas | SV-1-T | - | 4 | ← | 400 W | BLOOMFIELD Ave (sns) |
| B | 1-A | - | - | - | TV-2-T (N) | SP-1-T | - | - | - | - |
| C | 29-5-100 (N) | 50' (N) | 12' (N) | 2-MAS (N) | SV-1-T (N) | - | (*) - | (*) → (N) | 250 W (N) | ROSECRANS Ave (N)(IISNS) |
| D | 15TS (N) | - | - | - | SV-2-T (N) | SP-1-T (N) | - | - | 250 W (N) | - |
| E | 26-4-70 | 40' | 15' | 2-mas | SV-1-T | SP-1-T | - | - | 400 W | BLOOMFIELD Ave (sns) |
| F | 1-A | - | - | - | TV-2-T | - | 2 | ← | - | - |
| G | 29-5-100 (N) | 50' (N) | 12' (N) | 2-MAS(N) | SV-1-T (N) | SP-1-T (N) | (*) 2 (N) | (*) → (N) | 250 W (N) | ROSECRANS Ave (N)(IISNS) |
| H | 15TS (N) | - | - | - | SV-2-T (N) | SP-1-T (N) | (*) 4 (N) | (*) → (N) | 250 W (N) | - |

1 (*) APS

1 1

*APPROVED FOR ELECTRICAL WORK ONLY*

# MODIFY SIGNAL AND LIGHTING (CITY STREET LOCATION 4)
## (BLOOMFIELD Ave AND ROSECRANS Ave)
## (STAGE 1 PHASE 3)

SCALE: 1" = 20'

**E-33**

STATE OF CALIFORNIA - DEPARTMENT OF TRANSPORTATION
Caltrans® TRAFFIC DESIGN

FUNCTIONAL SUPERVISOR: YI TSAU
CALCULATED-DESIGNED BY: LUKE SUN
CHECKED BY: CECILIO BURCIAGA
REVISED BY / DATE REVISED

LAST REVISION 00-00-00 | DATE PLOTTED => 12-JUL-2012 | TIME PLOTTED => 14:12

| Dist | COUNTY | ROUTE | POST MILES TOTAL PROJECT | SHEET No. | TOTAL SHEETS |
|---|---|---|---|---|---|
| 07 | LA | 5 | 2.4/4.0 | 552 | 1288 |

REGISTERED ELECTRICAL ENGINEER 11/2/11 DATE

3-26-12
PLANS APPROVAL DATE

REGISTERED PROFESSIONAL ENGINEER CECILIO BURCIAGA No. E015302 Exp. 03-31-13 ELECTRICAL STATE OF CALIFORNIA

*THE STATE OF CALIFORNIA OR ITS OFFICERS OR AGENTS SHALL NOT BE RESPONSIBLE FOR THE ACCURACY OR COMPLETENESS OF SCANNED COPIES OF THIS PLAN SHEET.*

FOR ACCURATE RIGHT OF WAY DATA, CONTACT RIGHT OF WAY ENGINEERING AT THE DISTRICT OFFICE.

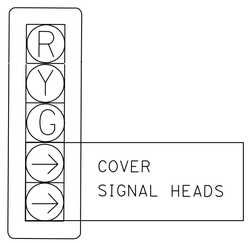


DETAIL A




DETAIL B




PHASE DIAGRAM



R3-8b MODIFIED

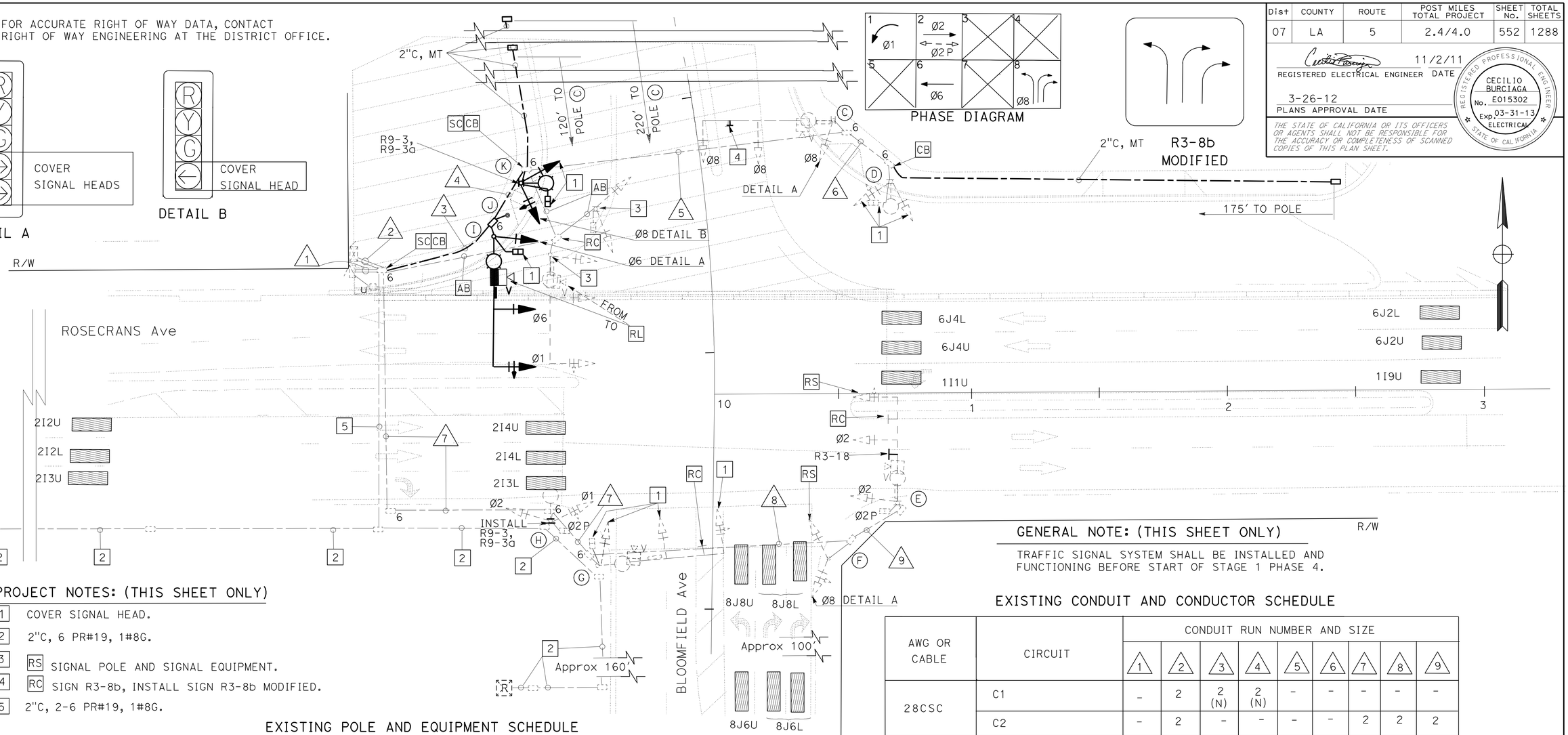


## PROJECT NOTES: (THIS SHEET ONLY)

1. COVER SIGNAL HEAD.
2. 2"C, 6 PR#19, 1#8G.
3. RS SIGNAL POLE AND SIGNAL EQUIPMENT.
4. RC SIGN R3-8b, INSTALL SIGN R3-8b MODIFIED.
5. 2"C, 2-6 PR#19, 1#8G.

## GENERAL NOTE: (THIS SHEET ONLY)

TRAFFIC SIGNAL SYSTEM SHALL BE INSTALLED AND FUNCTIONING BEFORE START OF STAGE 1 PHASE 4.

## EXISTING POLE AND EQUIPMENT SCHEDULE

| STANDARD | | | | veh sig mtg | | ped SIGNAL | ppb | | hps LUMINAIRE | SPECIAL REQUIREMENTS |
|---|---|---|---|---|---|---|---|---|---|---|
| No. | Type | sma | lma | Mast Arm | Pole | mtg | Ø | ARROW | | |
| Ⓘ | 29-5-100 (N) | 50' (N) | 12' (N) | 2-MAS(N) | SV-1-T (N) | SP-1-T (N) | — | — | 250 W (N) | BLOOMFIELD Ave (N)(IISNS) |
| Ⓙ | PPB (N) | — | — | — | — | — | 1 (*) | → (N) (*) | — | — |
| Ⓚ | 15TS (N) | — | — | — | SV-2-T (N) | SP-1-T (N) | 1 (*) | ← (N) (*) | 250 W | — |
| Ⓒ | 29-5-100 | 50' | 12' | 2-mas | SV-1-T | — | 1 (*) | ← (*) | 250 W | ROSECRANS Ave (iisns) |
| Ⓓ | 15TS | — | — | — | SV-2-T | SP-1-T | — | — | 250 W | — |
| Ⓔ | 26-4-70 | 40' | 15' | mas | SV-1-T | SP-1-T | — | — | 400 W | BLOOMFIELD Ave (sns) |
| Ⓕ | 1-A | — | — | — | TV-2-T | — | 2 | ← | — | — |
| Ⓖ | 29-5-100 | 50' | 12' | 2-mas | SV-1-T | SP-1-T | 1 2 (*) | → (*) | 250 W | ROSECRANS Ave (iisns) |
| Ⓗ | 15TS | — | — | — | SV-2-T | SP-1-T | 1 (*) | → (*) | 250 W | — |

1 (*) APS

## EXISTING CONDUIT AND CONDUCTOR SCHEDULE

| AWG OR CABLE | CIRCUIT | CONDUIT RUN NUMBER AND SIZE | | | | | | | | |
|---|---|---|---|---|---|---|---|---|---|---|
| | | 1 | 2 | 3 | 4 | 5 | 6 | 7 | 8 | 9 |
| 28CSC | C1 | – | 2 | 2 (N) | 2 (N) | – | – | – | – | – |
| | C2 | – | 2 | – | – | – | – | 2 | 2 | 2 |
| #10 | IISNS | 2 | – | 2 (N) | 2 (N) | 2 | – | 2 | – | – |
| #10 | LUMINAIRES | 2 | – | 2 (N) | 2 (N) | 2 | 2 | 2 | 2 | 2 |
| #6 | SIGNAL SERVICE | 2 | 2 | – | – | – | – | – | – | – |
| CABLE | VIVDS CABLE | – | 4 | 2 (N) | 1 (N) | 1 (N) | – | 2 | 1 | 1 |
| 6 PR#19 | RR PRE-EMPTION CABLE | – | 2 | – | – | – | – | – | – | – |
| #8 | G | 1 | 1 | 1 (N) | 1 (N) | 1 | 1 | 1 | 1 | 1 |
| | CONDUIT SIZE | 2-3" ** | 2-3" ** | 4"(N) | 4" (N) | 3" ** | 3" ** | 3" | 3" | 3" |

** BURIED CONDUIT 36" BELOW FINAL GRADE

1 **REVISED PER ADDENDUM No. 1 DATED JULY 13, 2012**

*APPROVED FOR ELECTRICAL WORK ONLY*

# MODIFY SIGNAL AND LIGHTING (CITY STREET LOCATION 4)
## (BLOOMFIELD Ave AND ROSECRANS Ave) (STAGE 1 PHASE 4)

SCALE: 1" = 20'

**E-34**

STATE OF CALIFORNIA - DEPARTMENT OF TRANSPORTATION
Caltrans TRAFFIC DESIGN

FUNCTIONAL SUPERVISOR: YI TSAU
CALCULATED-DESIGNED BY: LUKE SUN
CHECKED BY: CECILIO BURCIAGA
REVISED BY / DATE REVISED

LAST REVISION 00-00-00 | DATE PLOTTED => 12-JUL-2012 | TIME PLOTTED => 14:12

| Dist | COUNTY | ROUTE | POST MILES TOTAL PROJECT | SHEET No. | TOTAL SHEETS |
|---|---|---|---|---|---|
| 07 | LA | 5 | 2.4/4.0 | 553 | 1288 |

REGISTERED ELECTRICAL ENGINEER 11/2/11 DATE

3-26-12
PLANS APPROVAL DATE

REGISTERED PROFESSIONAL ENGINEER CECILIO BURCIAGA No. E015302 Exp. 03-31-13 ELECTRICAL STATE OF CALIFORNIA

*THE STATE OF CALIFORNIA OR ITS OFFICERS OR AGENTS SHALL NOT BE RESPONSIBLE FOR THE ACCURACY OR COMPLETENESS OF SCANNED COPIES OF THIS PLAN SHEET.*

FOR ACCURATE RIGHT OF WAY DATA, CONTACT RIGHT OF WAY ENGINEERING AT THE DISTRICT OFFICE.

## GENERAL NOTE: (THIS SHEET ONLY)

TRAFFIC SIGNAL SYSTEM SHALL BE INSTALLED AND FUNCTIONING BEFORE STAGE 2.

## PROJECT NOTES: (FOR THIS SHEET ONLY)

1. RS SIGNAL POLE AND SIGNAL EQUIPMENT.
2. 2"C, 6 PR#19, 1#8G.
3. COVER SIGNAL HEAD.
4. 2"C, 2-6 PR#19, 1#8G.

**1 REVISED PER ADDENDUM No. 1 DATED JULY 13, 2012**

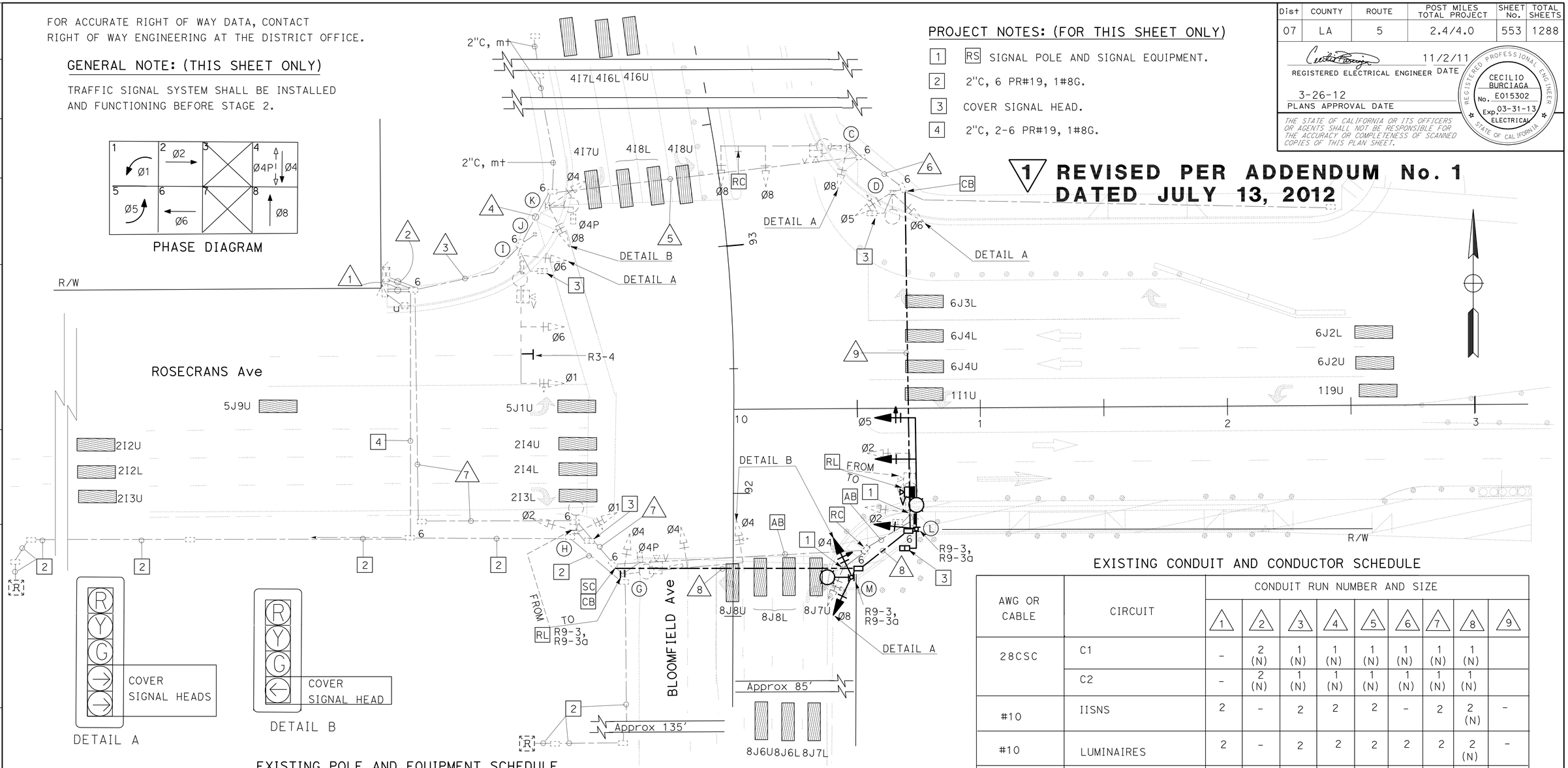


## EXISTING POLE AND EQUIPMENT SCHEDULE

| STANDARD | | | | veh sig mtg | | ped SIGNAL | APS 1 | | hps | SPECIAL |
|---|---|---|---|---|---|---|---|---|---|---|
| No. | Type | sma | lma | Mast Arm | Pole | mtg | Ø | ARROW | LUMINAIRE | REQUIREMENTS |
| I | 29-5-100 | 50' | 12' | 2-mas | SV-1-T | SP-1-T | - | - | 250 W | BLOOMFIELD Ave (iisns) |
| J | PPB | - | - | - | - | - | 4 | → | - | - |
| K | 15TS | - | - | - | SV-2-T | SP-1-T | 6 | → | 250 W | - |
| C | 29-5-100 | 50' | 12' | 2-mas | SV-1-T | - | 6 | ← | 250 W | ROSECRANS Ave (iisns) |
| D | 15TS | - | - | - | SV-2-T | SP-1-T | - | - | 250 W | - |
| L | 26-4-100 (N) | 45'(N) | 12' (N) | 2-MAS(N) | SV-1-T (N) | SP-1-T (N) | - | - | 250 W (N) | BLOOMFIELD Ave (N)(IISNS) |
| M | 15TS (N) | - | - | - | SV-2-T (N) | - | 2 (N) | ←(N) | 250 W (N) | - |
| G | 29-5-100 | 50' | 12' | 2-mas | SV-1-T | SP-1-T | 2 | → | 250 W | ROSECRANS Ave (iisns) |
| H | 15TS | - | - | - | SV-2-T | SP-1-T | 4 | ← | 250 W | - |

## EXISTING CONDUIT AND CONDUCTOR SCHEDULE

| AWG OR CABLE | CIRCUIT | CONDUIT RUN NUMBER AND SIZE | | | | | | | | |
|---|---|---|---|---|---|---|---|---|---|---|
| | | 1 | 2 | 3 | 4 | 5 | 6 | 7 | 8 | 9 |
| 28CSC | C1 | - | 2 (N) | 1 (N) | 1 (N) | 1 (N) | 1 (N) | 1 (N) | 1 (N) | |
| | C2 | - | 2 (N) | 1 (N) | 1 (N) | 1 (N) | 1 (N) | 1 (N) | 1 (N) | |
| #10 | IISNS | 2 | - | 2 | 2 | 2 | - | 2 | 2 (N) | - |
| #10 | LUMINAIRES | 2 | - | 2 | 2 | 2 | 2 | 2 | 2 (N) | - |
| CABLE | VIVDS CABLE | - | 4 | 2 | 1 | 1 | - | 2 | 1 (N) | - |
| #8 | G | 1 | 1 | 1 | 1 | 1 | 1 | 1 | 1 (N) | 1 (N) |
| 6 PR#19 | RR PRE-EMPTION CABLE | - | 2 | - | - | - | - | - | - | - |
| #6 | SIGNAL SERVICE | 2 | 2 | - | - | - | - | - | - | - |
| - | CONDUIT SIZE | 2-3" ** | 2-3" ** | 4" | 4" | 3" ** | 3" ** | 3" | 3" (N) | 3" (N) |

** BURIED CONDUIT 36" BELOW FINAL GRADE

# MODIFY SIGNAL AND LIGHTING (CITY STREET LOCATION 4)
## (BLOOMFIELD Ave AND ROSECRANS Ave)
## (STAGE 2)

SCALE: 1" = 20'

**E-35**

*APPROVED FOR ELECTRICAL WORK ONLY*

STATE OF CALIFORNIA - DEPARTMENT OF TRANSPORTATION
Caltrans® TRAFFIC DESIGN

FUNCTIONAL SUPERVISOR: YI TSAU
CALCULATED-DESIGNED BY: CECILIO BURCIAGA
CHECKED BY: LUKE SUN
REVISED BY / DATE REVISED

LAST REVISION 00-00-00 DATE PLOTTED => 12-JUL-2012 TIME PLOTTED => 14:12

FOR ACCURATE RIGHT OF WAY DATA, CONTACT
RIGHT OF WAY ENGINEERING AT THE DISTRICT OFFICE.

## PROJECT NOTES: (THIS SHEET ONLY)

1. RC R9-3a, R9-3.
2. NOT USED.
3. RC SIGN R3-4, INSTALL SIGN R73-6(CA).
4. 2"C, 6 PR#19, 1#8G.
5. 2"C, 2-6 PR#19, 1#8G.

| Dist | COUNTY | ROUTE | POST MILES TOTAL PROJECT | SHEET No. | TOTAL SHEETS |
|---|---|---|---|---|---|
| 07 | LA | 5 | 2.4/4.0 | 554 | 1288 |

REGISTERED ELECTRICAL ENGINEER 11/2/11 DATE

3-26-12
PLANS APPROVAL DATE

REGISTERED PROFESSIONAL ENGINEER CECILIO BURCIAGA No. E015302 Exp. 03-31-13 ELECTRICAL STATE OF CALIFORNIA

*THE STATE OF CALIFORNIA OR ITS OFFICERS OR AGENTS SHALL NOT BE RESPONSIBLE FOR THE ACCURACY OR COMPLETENESS OF SCANNED COPIES OF THIS PLAN SHEET.*

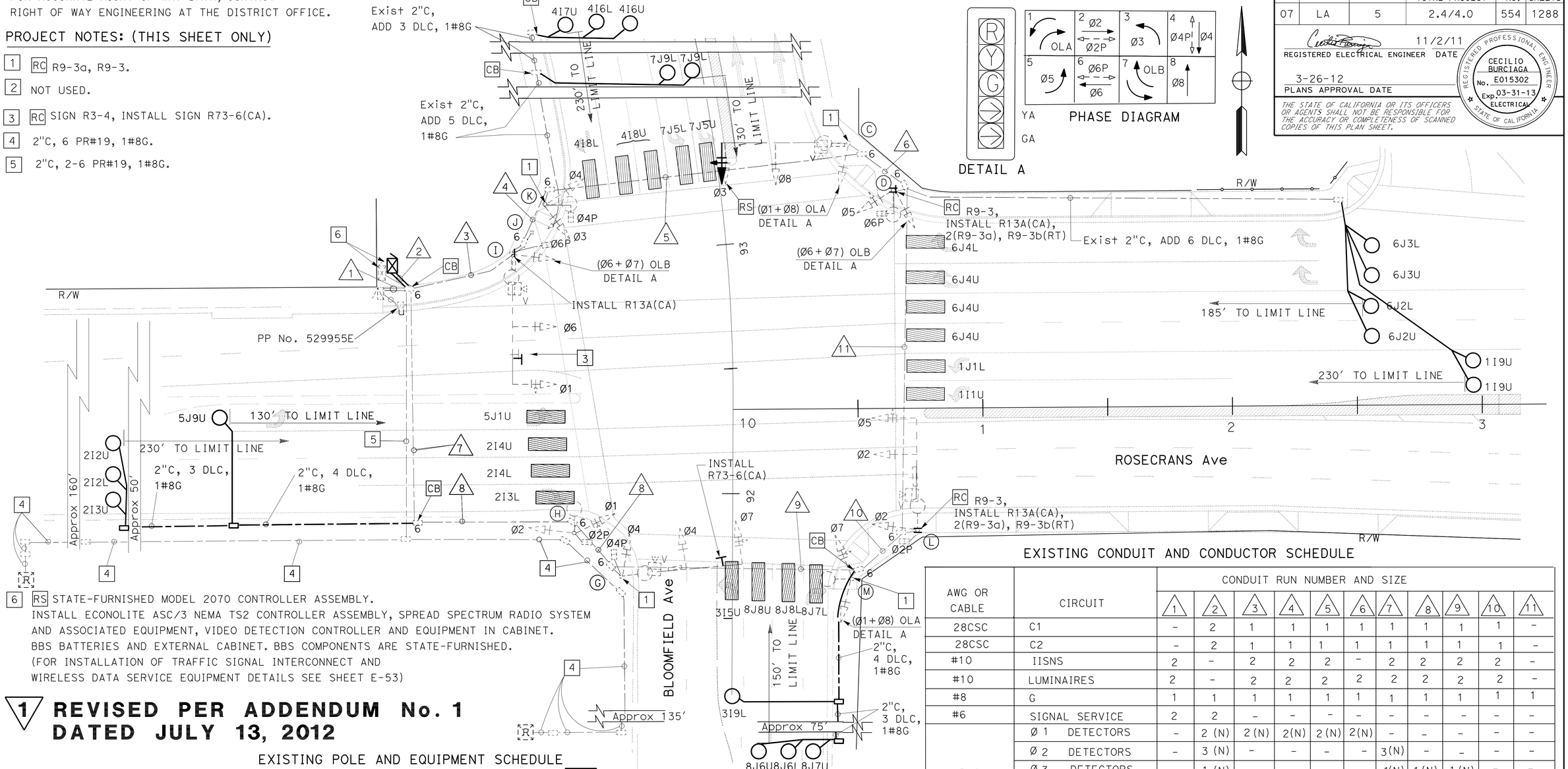


6 RS STATE-FURNISHED MODEL 2070 CONTROLLER ASSEMBLY.
INSTALL ECONOLITE ASC/3 NEMA TS2 CONTROLLER ASSEMBLY, SPREAD SPECTRUM RADIO SYSTEM AND ASSOCIATED EQUIPMENT, VIDEO DETECTION CONTROLLER AND EQUIPMENT IN CABINET. BBS BATTERIES AND EXTERNAL CABINET. BBS COMPONENTS ARE STATE-FURNISHED. (FOR INSTALLATION OF TRAFFIC SIGNAL INTERCONNECT AND WIRELESS DATA SERVICE EQUIPMENT DETAILS SEE SHEET E-53)

## 1 REVISED PER ADDENDUM No. 1 DATED JULY 13, 2012

### EXISTING POLE AND EQUIPMENT SCHEDULE

| STANDARD | | | | veh sig mtg | | ped SIGNAL | APS 1 | | hps | SPECIAL |
|---|---|---|---|---|---|---|---|---|---|---|
| No. | Type | sma | lma | Mast Arm | Pole | mtg | Ø | ARROW | LUMINAIRE | REQUIREMENTS iisns |
| I | 29-5-100 | 50' | 12' | 2-mas | SV-1-T | SP-1-T | - | - | 250 W | BLOOMFIELD Ave |
| J | PPB | - | - | - | - | - | 4 | → | - | - |
| K | 15TS | - | - | - | SV-2-T | SP-1-T | 6 | → | 250 W | - |
| C | 29-5-100 | 50' | 12' | 2-mas | SV-1-T | - | 6 | ← | 250 W | ROSECRANS Ave |
| D | 15TS | - | - | - | SV-2-T | SP-1-T | - | - | 250 W | - |
| L | 26-4-100 | 45' | 12' | 2-mas | SV-1-T | SP-1-T | - | - | 250 W | BLOOMFIELD Ave |
| M | 15TS | - | - | - | SV-2-T | - | 2 | ← | 250 W | - |
| G | 29-5-100 | 50' | 12' | 2-mas | SV-1-T | SP-1-T | 2 | → | 250 W | ROSECRANS Ave |
| H | 15TS | - | - | - | SV-2-T | SP-1-T | 4 | ← | 250 W | - |

*APPROVED FOR ELECTRICAL WORK ONLY*

### EXISTING CONDUIT AND CONDUCTOR SCHEDULE

| AWG OR CABLE | CIRCUIT | CONDUIT RUN NUMBER AND SIZE | | | | | | | | | | |
|---|---|---|---|---|---|---|---|---|---|---|---|---|
| | | 1 | 2 | 3 | 4 | 5 | 6 | 7 | 8 | 9 | 10 | 11 |
| 28CSC | C1 | - | 2 | 1 | 1 | 1 | 1 | 1 | 1 | 1 | 1 | - |
| 28CSC | C2 | - | 2 | 1 | 1 | 1 | 1 | 1 | 1 | 1 | 1 | - |
| #10 | IISNS | 2 | - | 2 | 2 | 2 | - | 2 | 2 | 2 | 2 | - |
| #10 | LUMINAIRES | 2 | - | 2 | 2 | 2 | 2 | 2 | 2 | 2 | 2 | - |
| #8 | G | 1 | 1 | 1 | 1 | 1 | 1 | 1 | 1 | 1 | 1 | 1 |
| #6 | SIGNAL SERVICE | 2 | 2 | - | - | - | - | - | - | - | - | - |
| DLC | Ø 1 DETECTORS | - | 2 (N) | 2 (N) | 2(N) | 2 (N) | 2(N) | - | - | - | - | - |
| | Ø 2 DETECTORS | - | 3 (N) | - | - | - | - | 3(N) | - | - | - | - |
| | Ø 3 DETECTORS | - | 1 (N) | - | - | - | - | 1(N) | 1 (N) | 1 (N) | - | - |
| | Ø 4 DETECTORS | - | 3 (N) | 3 (N) | 3 (N) | - | - | - | - | - | - | - |
| | Ø 5 DETECTORS | - | 1 (N) | - | - | - | - | 1 (N) | - | - | - | - |
| | Ø 6 DETECTORS | - | 4 (N) | 4 (N) | 4 (N) | 4 (N) | 4 (N) | - | - | - | - | - |
| | Ø 7 DETECTORS | - | 2 (N) | 2 (N) | 2 (N) | - | - | - | - | - | - | - |
| | Ø 8 DETECTORS | - | 3 (N) | - | - | - | - | 3 (N) | 3 (N) | 3 (N) | - | - |
| | TOTAL | - | 19(N) | 11 (N) | 11(N) | 6 (N) | 6 (N) | 8 (N) | 4 (N) | 4 (N) | - | - |
| 6 PR#19 | RR PRE-EMPTION | - | 2 | - | - | - | - | - | - | - | - | - |
| CABLE | VIVDS | - | 4 | 2 | 1 | 1 | - | 2 | 2 | 1 | 1 | - |
| CONDUIT SIZE | | 2-3" ** | 2-3" (N) | 4" | 4" | 3" ** | 3" ** | 3" | 3" | 3" | 3" | 3" |

** BURIED CONDUIT 36" BELOW FINAL GRADE

# MODIFY SIGNAL AND LIGHTING (CITY STREET LOCATION 4) (BLOOMFIELD Ave AND ROSECRANS Ave) (STAGE 4 PHASE 2)

SCALE: 1" = 20'

E-36

REVISED BY | DATE REVISED
LUKE SUN | CECILIO BURCIAGA
CALCULATED-DESIGNED BY | CHECKED BY
FUNCTIONAL SUPERVISOR | YI TSAU
STATE OF CALIFORNIA - DEPARTMENT OF TRANSPORTATION
Caltrans TRAFFIC DESIGN

LAST REVISION 00-00-00 | DATE PLOTTED => 12-JUL-2012 | TIME PLOTTED => 14:12

| Dist | COUNTY | ROUTE | POST MILES TOTAL PROJECT | SHEET No. | TOTAL SHEETS |
|---|---|---|---|---|---|
| 07 | LA | 5 | 2.4/4.0 | 555 | 1288 |

REGISTERED ELECTRICAL ENGINEER 11/2/11 DATE

3-26-12
PLANS APPROVAL DATE

REGISTERED PROFESSIONAL ENGINEER CECILIO BURCIAGA No. E015302 Exp. 03-31-13 ELECTRICAL STATE OF CALIFORNIA

*THE STATE OF CALIFORNIA OR ITS OFFICERS OR AGENTS SHALL NOT BE RESPONSIBLE FOR THE ACCURACY OR COMPLETENESS OF SCANNED COPIES OF THIS PLAN SHEET.*

FOR ACCURATE RIGHT OF WAY DATA, CONTACT RIGHT OF WAY ENGINEERING AT THE DISTRICT OFFICE.

## PROJECT NOTES: (THIS SHEET ONLY)

1. PP No. 529955E. INSTALL TYPE H RISER.
2. 120/240 V METERED TYPE III-BF SERVICE EQUIPMENT ENCLOSURE WITH:

| | | | |
|---|---|---|---|
| 100 A, | 240 V, | 2P, | CB - MAIN |
| 50 A, | 120 V, | 1P, | CB - SIGNAL |
| 30 A, | 120 V, | 1P, | CB - SIGNAL LIGHTING (UNMETERED) |
| 15 A, | 120 V, | 1P, | CB - IISNS |
| 15 A, | 120 V, | 1P, | CB - PEU |

CTID No. 07-53-005-003.481

3. ADDRESS: 12547 ½ ROSECRANS Ave, NORWALK
3"C, MT. SCE WILL INSTALL CONDUCTORS.
4. 2"C, 6 PR#19, 1#8G.
5. PULL BOX NEXT TO RR CONTOLLER CABINET. (TO OPEN CABINET, CONTACT UNION PACIFIC RAILROAD COMPANY AT (909) 685-2288)

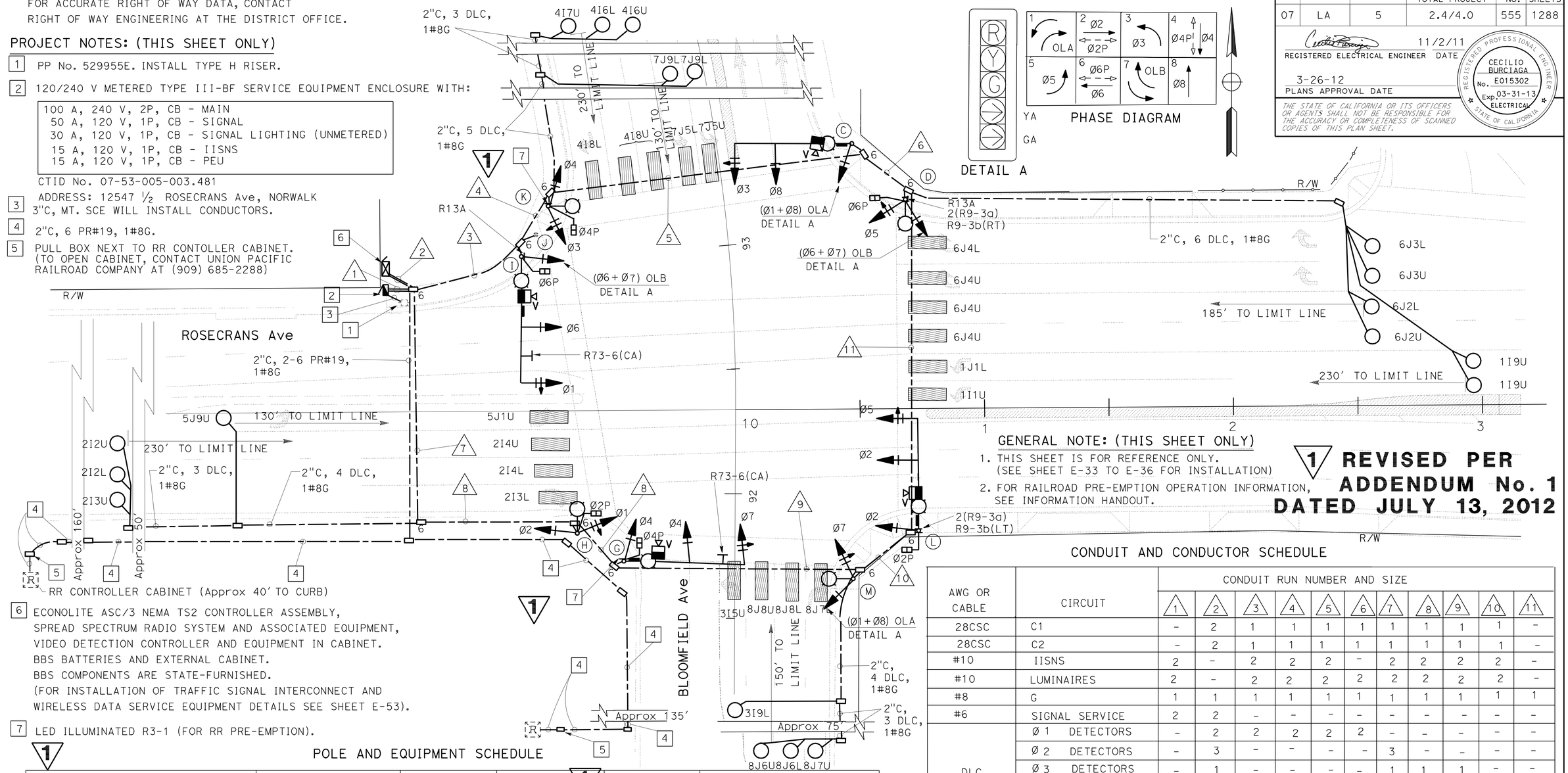


6. ECONOLITE ASC/3 NEMA TS2 CONTROLLER ASSEMBLY, SPREAD SPECTRUM RADIO SYSTEM AND ASSOCIATED EQUIPMENT, VIDEO DETECTION CONTROLLER AND EQUIPMENT IN CABINET. BBS BATTERIES AND EXTERNAL CABINET. BBS COMPONENTS ARE STATE-FURNISHED. (FOR INSTALLATION OF TRAFFIC SIGNAL INTERCONNECT AND WIRELESS DATA SERVICE EQUIPMENT DETAILS SEE SHEET E-53).
7. LED ILLUMINATED R3-1 (FOR RR PRE-EMPTION).

## GENERAL NOTE: (THIS SHEET ONLY)

1. THIS SHEET IS FOR REFERENCE ONLY. (SEE SHEET E-33 TO E-36 FOR INSTALLATION)
2. FOR RAILROAD PRE-EMPTION OPERATION INFORMATION, SEE INFORMATION HANDOUT.

**1 REVISED PER ADDENDUM No. 1 DATED JULY 13, 2012**

## POLE AND EQUIPMENT SCHEDULE

| STANDARD | | | | VEH SIG MTG | | PED SIGNAL | APS | | HPS | SPECIAL |
|---|---|---|---|---|---|---|---|---|---|---|
| No. | Type | SMA | LMA | Mast Arm | Pole | MTG | Ø | ARROW | LUMINAIRE | REQUIREMENTS IISNS |
| I | 29-5-100 | 50' | 12' | 2-MAS | SV-1-T | SP-1-T | - | - | 250 W | BLOOMFIELD Ave |
| J | PPB | - | - | - | - | - | 4 | → | - | - |
| K | 15TS | - | - | - | SV-2-T | SP-1-T | 6 | → | 250 W | - |
| C | 26-4-100 | 45' | 12' | 2-MAS | SV-1-T | - | 6 | ← | 250 W | ROSECRANS Ave |
| D | 15TS | - | - | - | SV-2-T | SP-1-T | - | - | 250 W | - |
| L | 26-4-100 | 45' | 12' | 2-MAS | SV-1-T | SP-1-T | - | - | 250 W | BLOOMFIELD Ave |
| M | 15TS | - | - | - | SV-2-T | - | 2 | ← | 250 W | - |
| G | 29-5-100 | 50' | 12' | 2-MAS | SV-1-T | SP-1-T | 2 | → | 250 W | ROSECRANS Ave |
| H | 15TS | - | - | - | SV-2-T | SP-1-T | 4 | → | 250 W | - |

*APPROVED FOR ELECTRICAL WORK ONLY*

## CONDUIT AND CONDUCTOR SCHEDULE

| AWG OR CABLE | CIRCUIT | CONDUIT RUN NUMBER AND SIZE | | | | | | | | | | |
|---|---|---|---|---|---|---|---|---|---|---|---|---|
| | | 1 | 2 | 3 | 4 | 5 | 6 | 7 | 8 | 9 | 10 | 11 |
| 28CSC | C1 | - | 2 | 1 | 1 | 1 | 1 | 1 | 1 | 1 | 1 | - |
| 28CSC | C2 | - | 2 | 1 | 1 | 1 | 1 | 1 | 1 | 1 | 1 | - |
| #10 | IISNS | 2 | - | 2 | 2 | 2 | - | 2 | 2 | 2 | 2 | - |
| #10 | LUMINAIRES | 2 | - | 2 | 2 | 2 | 2 | 2 | 2 | 2 | 2 | - |
| #8 | G | 1 | 1 | 1 | 1 | 1 | 1 | 1 | 1 | 1 | 1 | 1 |
| #6 | SIGNAL SERVICE | 2 | 2 | - | - | - | - | - | - | - | - | - |
| DLC | Ø 1 DETECTORS | - | 2 | 2 | 2 | 2 | 2 | - | - | - | - | - |
| | Ø 2 DETECTORS | - | 3 | - | - | - | - | 3 | - | - | - | - |
| | Ø 3 DETECTORS | - | 1 | - | - | - | - | 1 | 1 | 1 | - | - |
| | Ø 4 DETECTORS | - | 3 | 3 | 3 | - | - | - | - | - | - | - |
| | Ø 5 DETECTORS | - | 1 | - | - | - | - | 1 | - | - | - | - |
| | Ø 6 DETECTORS | - | 4 | 4 | 4 | 4 | 4 | - | - | - | - | - |
| | Ø 7 DETECTORS | - | 2 | 2 | 2 | - | - | - | - | - | - | - |
| | Ø 8 DETECTORS | - | 3 | - | - | - | - | 3 | 3 | 3 | - | - |
| | TOTAL | - | 19 | 11 | 11 | 6 | 6 | 8 | 4 | 4 | - | - |
| 6 PR#19 | RR PRE-EMPTION | - | 2 | - | - | - | - | - | - | - | - | - |
| CABLE | VIVDS | - | 4 | 2 | 1 | 1 | - | 2 | 2 | 1 | 1 | - |
| CONDUIT SIZE | | 2-3" ** | 2-3" | 4" | 4" | 3" ** | 3" ** | 3" | 3" | 3" | 3" | 3" |

** BURIED CONDUIT 36" BELOW FINAL GRADE

# MODIFY SIGNAL AND LIGHTING (CITY STREET LOCATION 4) (BLOOMFIELD Ave AND ROSECRANS Ave) (FINAL)

SCALE: 1" = 20'

**E-37**

STATE OF CALIFORNIA - DEPARTMENT OF TRANSPORTATION
Caltrans® TRAFFIC DESIGN
FUNCTIONAL SUPERVISOR: YI TSAU
CALCULATED-DESIGNED BY: LUKE SUN
CHECKED BY: CECILIO BURCIAGA
REVISED BY / DATE REVISED

LAST REVISION 00-00-00 | DATE PLOTTED => 13-JUL-2012 | TIME PLOTTED => 0:56

| Dist | COUNTY | ROUTE | POST MILES TOTAL PROJECT | SHEET No. | TOTAL SHEETS |
|---|---|---|---|---|---|
| 07 | LA | 5 | 2.4/4.0 | 556 | 1288 |

REGISTERED ELECTRICAL ENGINEER 11/2/11 DATE

3-26-12
PLANS APPROVAL DATE

REGISTERED PROFESSIONAL ENGINEER CECILIO BURCIAGA No. E015302 Exp. 03-31-13 ELECTRICAL STATE OF CALIFORNIA

*THE STATE OF CALIFORNIA OR ITS OFFICERS OR AGENTS SHALL NOT BE RESPONSIBLE FOR THE ACCURACY OR COMPLETENESS OF SCANNED COPIES OF THIS PLAN SHEET.*

# 1 REVISED PER ADDENDUM No. 1 DATED JULY 13, 2012

FOR ACCURATE RIGHT OF WAY DATA, CONTACT RIGHT OF WAY ENGINEERING AT THE DISTRICT OFFICE.

GENERAL NOTE: (THIS SHEET ONLY)

TRAFFIC SIGNAL SYSTEM SHALL BE INSTALLED AND FUNCTIONING BEFORE START OF STAGE 1 PHASE 3.

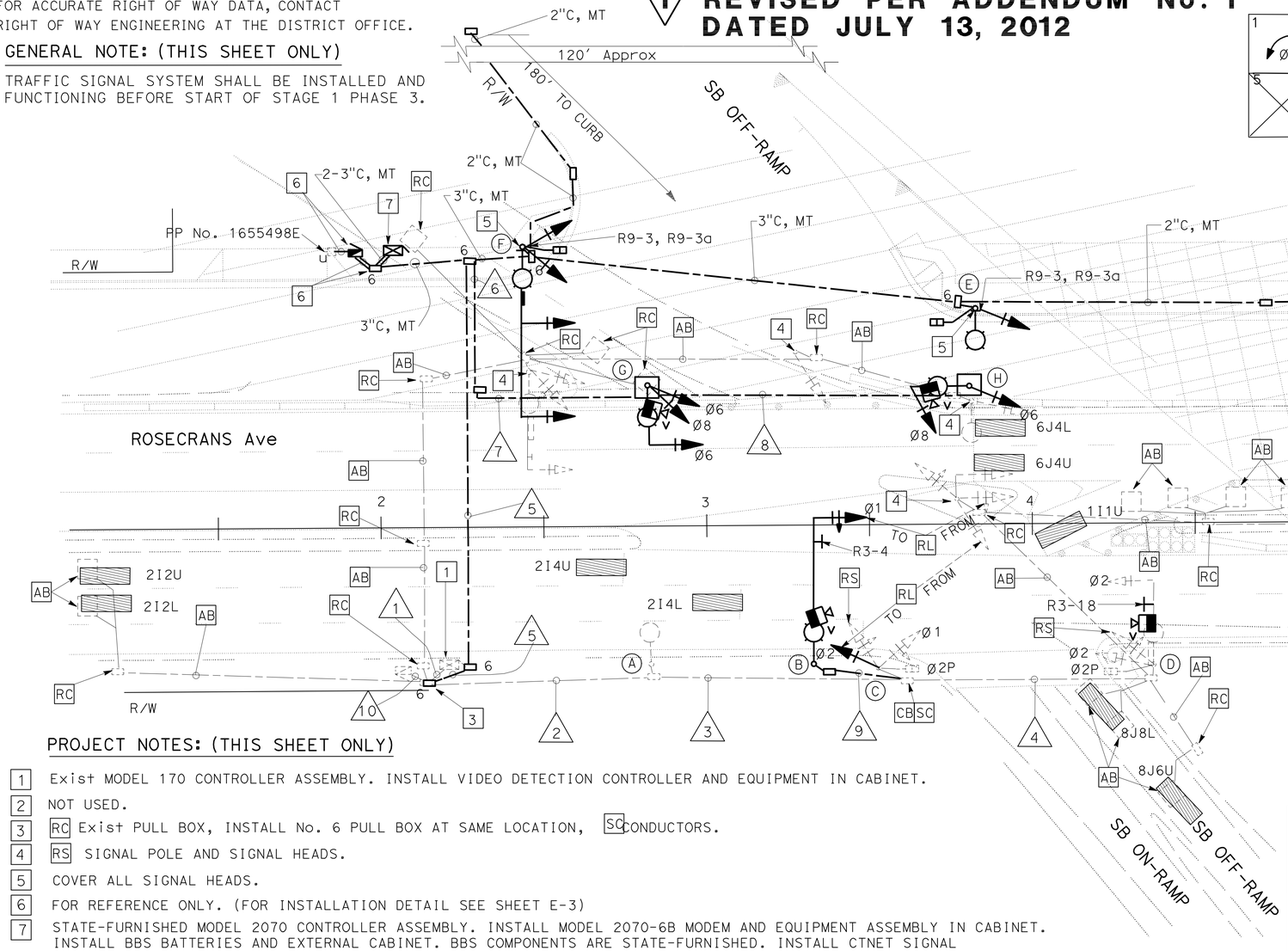


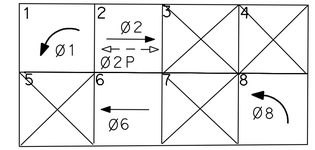


PHASE DIAGRAM

## PROJECT NOTES: (THIS SHEET ONLY)

1. Exist MODEL 170 CONTROLLER ASSEMBLY. INSTALL VIDEO DETECTION CONTROLLER AND EQUIPMENT IN CABINET.
2. NOT USED.
3. RC Exist PULL BOX, INSTALL No. 6 PULL BOX AT SAME LOCATION, SC CONDUCTORS.
4. RS SIGNAL POLE AND SIGNAL HEADS.
5. COVER ALL SIGNAL HEADS.
6. FOR REFERENCE ONLY. (FOR INSTALLATION DETAIL SEE SHEET E-3)
7. STATE-FURNISHED MODEL 2070 CONTROLLER ASSEMBLY. INSTALL MODEL 2070-6B MODEM AND EQUIPMENT ASSEMBLY IN CABINET. INSTALL BBS BATTERIES AND EXTERNAL CABINET. BBS COMPONENTS ARE STATE-FURNISHED. INSTALL CTNET SIGNAL INTERCONNECT EQUIPMENT AND CTNET WIRELESS DATA SERVICE EQUIPMENT ASSEMBLY IN CABINET.

## EXISTING POLE AND EQUIPMENT SCHEDULE

| STANDARD | | | | veh sig mtg | | ped SIGNAL | ppb | | LED LUMINAIRE | sns | SPECAIL REQUIREMENT |
|---|---|---|---|---|---|---|---|---|---|---|---|
| No. | Type | sma | lma | Mast arm | Pole | mtg | Ø | ARROW | | | |
| A | 30 | – | 12' | – | – | – | – | – | 400 W hps | – | – |
| B | 26A-3-100 (N) | 45' (N) | 12' (N) | MAS (R) | – | – | – | – | 235 W (N) | – | – |
| C | 1-A | – | – | – | SV-2-T (R) | SP-1-T | 6 | → | – | – | – |
| D | 19A-2-70 | 25' | 12' | mas | SV-1-T | SP-1-T | 6 | ← | 400 W hps | 5 SOUTH ⇨ | – |
| E | 21TS (N) | – | 12' (N) | – | SV-1-T (N) | SP-1-T (N) | – (**) | ← (N)(**) | 235 W (N) | – | – |
| F | 29A-5-100 (N) | 55' (N) | 12' (N) | 2-MAS (N) | SV-2-TA (N) | SP-1-T (N) | – (**) | → (N)(**) | 235 W (N) | – | ⇦ 5 SOUTH (N)(IISNS) |
| G | 19-1-100 (*) | 15' (N) | 12' (N) | MAS (N) | SV-2-T (N) | – | – | – | 235 W (N) | – | – |
| H | 19-1-100 (*) | 15' (N) | 12' (N) | MAS (N) | SV-1-TA (N) | – | – | – | 235 W (N) | – | – |

1 (*) INSTALL NEW POLE ON PLATE WITH CONCRETE BLOCK. (FOR INSTALLATION DETAILS, SEE SHEET SES-10)
(R) RELOCATED
(**) APS

## EXISTING CONDUIT AND CONDUCTOR SCHEDULE

| AWG OR CABLE | CIRCUIT | CONDUIT RUN NUMBER AND SIZE | | | | | | | | | |
|---|---|---|---|---|---|---|---|---|---|---|---|
| | | 1 | 2 | 3 | 4 | 5 | 6 | 7 | 8 | 9 | 10 |
| #14 | | 24 | 18 | 18 | 7 | – | – | – | – | – | – |
| 12CSC | | 1(N) | – | – | – | 1(N) | 1(N) | 1(N) | 1(N) | – | – |
| #10 | IISNS | – | – | – | – | – | – | – | – | – | – |
| #10 | LUMINAIRES | – | 2 | 2 | 2 | 2 | 2 | 2 | 2 | 2 | 2 |
| #6 | SIGNAL SERVICE | 2 | – | – | – | – | – | – | – | – | 2 |
| CABLE | VIVDS CABLE | 4(N) | 2(N) | 2(N) | 1(N) | 2(N) | 2(N) | 2(N) | 1(N) | 1(N) | – |
| #8 | G | 1 | 1 | 1 | 1 | 1(N) | 1(N) | 1(N) | 1(N) | 1(N) | 1(N) |
| | CONDUIT SIZE | 2-3" | 3" | 3" | 3" | 3" **(N) | 2" **(N) | 2" *(N) | 2" *(N) | 2" (N) | 2" |

* CONDUIT AT GROUND LEVEL AGAINST K-RAIL.
** CONDUIT SHALL BE BURIED 36" BELOW FINAL GRADE.

*APPROVED FOR ELECTRICAL WORK ONLY*

# MODIFY SIGNAL AND LIGHTING (LOCATION 1)
## (ROUTE 5 SB ON/OFF-RAMP AT ROSECRANS Ave)
## (STAGE 1 PHASE 3)

SCALE: 1" = 20'

E-38

REVISED BY | DATE REVISED
LUKE SUN | CECILIO BURCIAGA
CALCULATED-DESIGNED BY | CHECKED BY
FUNCTIONAL SUPERVISOR: YI TSAU

STATE OF CALIFORNIA - DEPARTMENT OF TRANSPORTATION
Caltrans TRAFFIC DESIGN

LAST REVISION 00-00-00 | DATE PLOTTED => 12-JUL-2012 | TIME PLOTTED => 14:13

| Dist | COUNTY | ROUTE | POST MILES TOTAL PROJECT | SHEET No. | TOTAL SHEETS |
|---|---|---|---|---|---|
| 07 | LA | 5 | 2.4/4.0 | 557 | 1288 |

REGISTERED ELECTRICAL ENGINEER 11/2/11 DATE

3-26-12
PLANS APPROVAL DATE

REGISTERED PROFESSIONAL ENGINEER CECILIO BURCIAGA No. E015302 Exp. 03-31-13 ELECTRICAL STATE OF CALIFORNIA

*THE STATE OF CALIFORNIA OR ITS OFFICERS OR AGENTS SHALL NOT BE RESPONSIBLE FOR THE ACCURACY OR COMPLETENESS OF SCANNED COPIES OF THIS PLAN SHEET.*

FOR ACCURATE RIGHT OF WAY DATA, CONTACT RIGHT OF WAY ENGINEERING AT THE DISTRICT OFFICE.

## GENERAL NOTE: (THIS SHEET ONLY)

COVER ALL SIGNAL HEADS AFTER INSTALLATION IS COMPLETED. TRAFFIC SIGNAL NOT ACTIVE AT THIS STAGE UNTIL STAGE 4, PHASE 3, OR AS DIRECTED BY THE ENGINEER.

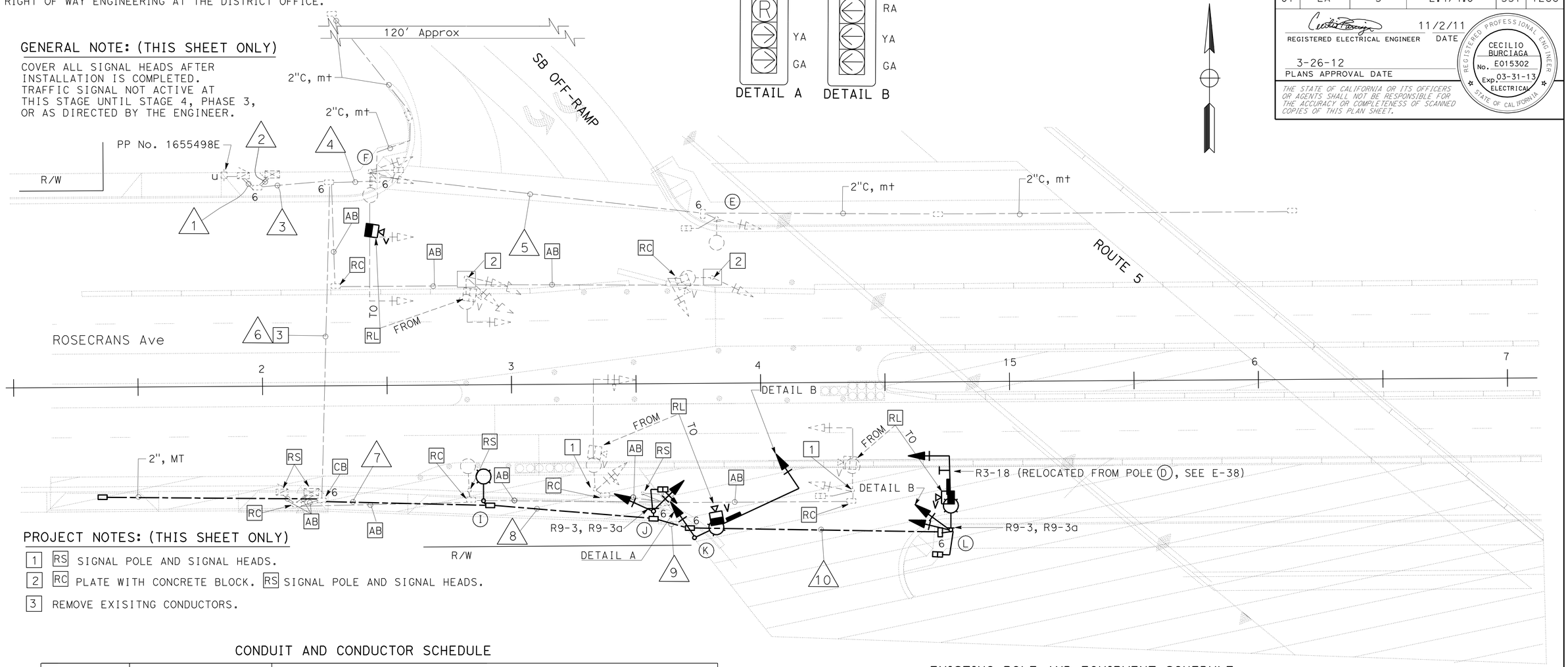


## PROJECT NOTES: (THIS SHEET ONLY)

1. RS SIGNAL POLE AND SIGNAL HEADS.
2. RC PLATE WITH CONCRETE BLOCK. RS SIGNAL POLE AND SIGNAL HEADS.
3. REMOVE EXISITNG CONDUCTORS.

## CONDUIT AND CONDUCTOR SCHEDULE

| AWG OR CABLE | CIRCUIT | CONDUIT RUN NUMBER AND SIZE | | | | | | | | | |
|---|---|---|---|---|---|---|---|---|---|---|---|
| | | 1 | 2 | 3 | 4 | 5 | 6 | 7 | 8 | 9 | 10 |
| 28CSC | C1 | - | 2 | 2 | 1 | 1 | 1 | 1 | 1 | 1 | 1 |
| 28CSC | C2 | - | 2 | 2 | 1 | 1 | 1 | 1 | 1 | 1 | 1 |
| #10 | IISNS | 2 | - | 2 | 2 | - | 2 | 2 | 2 | 2 | 2 |
| #10 | LUMINAIRES | 2 | - | 2 | 2 | 2 | 2 | 2 | 2 | 2 | 2 |
| #6 | SIGNAL SERVICE | 2 | 2 | - | - | - | - | - | - | - | - |
| CABLE | VIVDS CABLE | - | 3 | 3 | 1 | - | 2 | 2 | 2 | 2 | 1 |
| #8 | G | 1 | 1 | 1 | 1 | 1 | 1 | 1 | 1 | 1 | 1 |
| DLC | Ø 1 DETECTORS | - | - | - | - | - | - | - | - | - | - |
| | Ø 2 DETECTORS | - | - | - | - | - | - | - | - | - | - |
| | Ø 4 DETECTORS | - | - | - | - | - | - | - | - | - | - |
| | Ø 6 DETECTORS | - | - | - | - | - | - | - | - | - | - |
| | TOTAL | - | - | - | - | - | - | - | - | - | - |
| | CONDUIT SIZE | 2-3" | 2-3" | 3" | 3" | 3" | 3" | 3" (N) | 3" (N) | 3" (N) | 3" (N) |

## EXISTING POLE AND EQUIPMENT SCHEDULE

| STANDARD | | | | veh sig mtg | | ped SIGNAL | APS 1 | | LED | IISNS |
|---|---|---|---|---|---|---|---|---|---|---|
| No. | Type | sma | lma | Mast Arm | Pole | mtg | Ø | ARROW | LUMINAIRE | |
| E | 21TS | - | 12' | - | SV-1-T | SP-1-T | - | ← | 235 W | - |
| F | 29A-5-100 | 55' | 12' | 2-MAS | SV-2-TA | SP-1-T | - | → | 235 W | ⇦ 5 SOUTH |
| I | 21 (N) | - | 12' | - | - | - | - | - | 235 W | - |
| J | 1-A (N) | - | - | - | TV-2-T(N) | SP-1-T (N) | - | - | - | - |
| K | 26A-3-100(N) | 45'(N) | 12'(N) | MAS (N) | SV-1-T(N) | - | - | → (N) | 235 W (N) | ROSECRANS Ave (N) |
| L | 19A-3-100(N) | 30'(N) | 12'(N) | MAS (N) | SV-2-TA(N) | SP-1-T (N) | - | ← (N) | 235 W (N) | ⇨ 5 SOUTH (N) |

**1 REVISED PER ADDENDUM No. 1 DATED JULY 13, 2012**

# MODIFY SIGNAL AND LIGHTING (LOCATION 1)
## (ROUTE 5 SB ON/OFF-RAMP AT ROSECRANS Ave)
## (STAGE 2)

SCALE: 1" = 20'

**E-39**

*APPROVED FOR ELECTRICAL WORK ONLY*

STATE OF CALIFORNIA - DEPARTMENT OF TRANSPORTATION
Caltrans® TRAFFIC DESIGN

FUNCTIONAL SUPERVISOR: YI TSAU
CALCULATED-DESIGNED BY: CECILIO BURCIAGA
CHECKED BY: LUKE SUN
REVISED BY / DATE REVISED

LAST REVISION 00-00-00 | DATE PLOTTED => 12-JUL-2012 | TIME PLOTTED => 14:13

| Dist | COUNTY | ROUTE | POST MILES TOTAL PROJECT | SHEET No. | TOTAL SHEETS |
|---|---|---|---|---|---|
| 07 | LA | 5 | 2.4/4.0 | 558 | 1288 |

REGISTERED ELECTRICAL ENGINEER 11/2/11 DATE

3-26-12
PLANS APPROVAL DATE

REGISTERED PROFESSIONAL ENGINEER CECILIO BURCIAGA No. E015302 Exp. 03-31-13 ELECTRICAL STATE OF CALIFORNIA

*THE STATE OF CALIFORNIA OR ITS OFFICERS OR AGENTS SHALL NOT BE RESPONSIBLE FOR THE ACCURACY OR COMPLETENESS OF SCANNED COPIES OF THIS PLAN SHEET.*

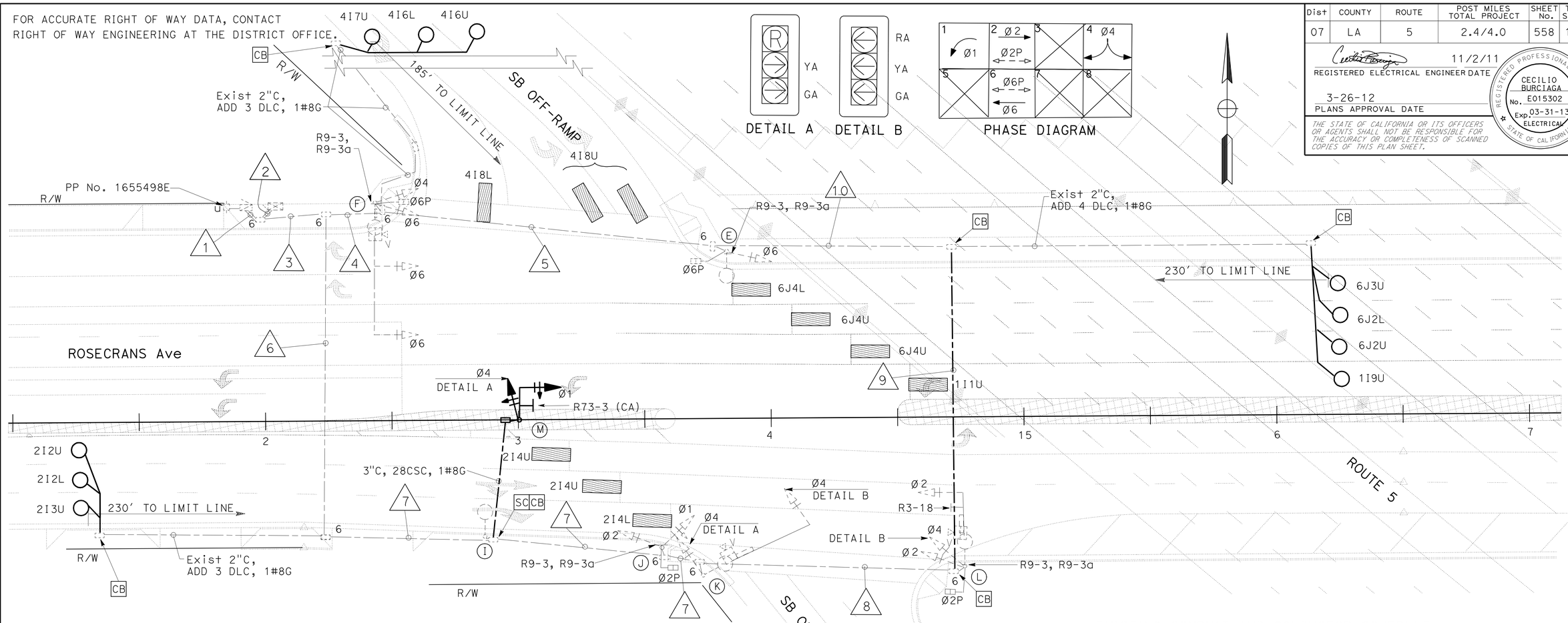


## EXISTING POLE AND EQUIPMENT SCHEDULE

| STANDARD | | | | veh sig mtg | | ped SIGNAL | APS 1 | | LED | iisns |
|---|---|---|---|---|---|---|---|---|---|---|
| No. | Type | sma | lma | Mast Arm | Pole | mtg | Ø | ARROW | LUMINAIRE | |
| E | 21TS | - | 12' | - | SV-1-T | SP-1-T | 6 | ← | 235 W | - |
| F | 29A-5-100 | 55' | 12' | 2-MAS | SV-2-TA | SP-1-T | 6 | → | 235 W | ⇦ 5 SOUTH |
| I | 21 | - | 12' | - | - | - | - | - | 235 W | - |
| J | 1-A | - | - | - | TV-2-T | SP-1-T | - | - | - | - |
| K | 26A-3-100 | 45' | 12' | MAS | SV-1-T | - | 2 | → | 235 W | ROSECRANS Ave |
| L | 19A-3-100 | 30' | 12' | MAS | SV-2-TA | SP-1-T | 2 | ← | 235 W | ⇨ 5 SOUTH |
| M | 33 (N) | 12'(N) | - | MAS (N) | SV-1-T (N) | - | - | - | - | - |

## EXISTING CONDUIT AND CONDUCTOR SCHEDULE

| AWG OR CABLE | CIRCUIT | CONDUIT RUN NUMBER AND SIZE | | | | | | | | | |
|---|---|---|---|---|---|---|---|---|---|---|---|
| | | 1 | 2 | 3 | 4 | 5 | 6 | 7 | 8 | 9 | 10 |
| 28CSC | C1 | - | 2 | 2 | 1 | 1 | 1 | 1 | 1 | - | - |
| 28CSC | C2 | - | 2 | 2 | 1 | 1 | 1 | 1 | 1 | - | - |
| #10 | IISNS | 2 | - | 2 | 2 | - | 2 | 2 | 2 | - | - |
| #10 | LUMINAIRES | 2 | - | 2 | 2 | 2 | 2 | 2 | 2 | - | - |
| #6 | SIGNAL SERVICE | 2 | 2 | - | - | - | - | - | - | - | - |
| CABLE | VIVDS CABLE | - | 3 | 3 | 1 | - | 2 | 2 | 1 | - | - |
| #8 | G | 1 | 1 | 1 | 1 | 1 | 1 | 1 | 1 | 1(N) | 1 (N) |
| DLC | Ø 1 DETECTORS | - | 1 (N) | 1 (N) | 1 (N) | 1 (N) | - | - | - | - | 1 (N) |
| | Ø 2 DETECTORS | - | 3 (N) | 3 (N) | - | - | 3 (N) | - | - | - | - |
| | Ø 4 DETECTORS | - | 3 (N) | 3 (N) | 3 (N) | - | - | - | - | - | - |
| | Ø 6 DETECTORS | - | 3 (N) | 3 (N) | 3 (N) | 3 (N) | - | - | - | - | 3 (N) |
| | TOTAL | - | 10 (N) | 10(N) | 7 (N) | 4 (N) | 3 (N) | - | - | - | 4 (N) |
| | CONDUIT SIZE | 2-3" | 2-3" | 3" | 3" | 3" | 3" | 3" | 3" | 3" (N) | 2" |

1 REVISED PER ADDENDUM No. 1 DATED JULY 13, 2012

# MODIFY SIGNAL AND LIGHTING (LOCATION 1)
## (ROUTE 5 SB ON/OFF-RAMP AT ROSECRANS Ave)
## (STAGE 4 PHASE 3)

SCALE: 1" = 20'

E-40

*APPROVED FOR ELECTRICAL WORK ONLY*

REVISED BY | DATE REVISED
LUKE SUN | CECILIO BURCIAGA
CALCULATED-DESIGNED BY | CHECKED BY
FUNCTIONAL SUPERVISOR
Yi TSAU

STATE OF CALIFORNIA - DEPARTMENT OF TRANSPORTATION
Caltrans TRAFFIC DESIGN

LAST REVISION 00-00-00 | DATE PLOTTED => 12-JUL-2012 | TIME PLOTTED => 14:13

| Dist | COUNTY | ROUTE | POST MILES TOTAL PROJECT | SHEET No. | TOTAL SHEETS |
|---|---|---|---|---|---|
| 07 | LA | 5 | 2.4/4.0 | 559 | 1288 |

REGISTERED ELECTRICAL ENGINEER 11/2/11 DATE

3-26-12
PLANS APPROVAL DATE

REGISTERED PROFESSIONAL ENGINEER CECILIO BURCIAGA No. E015302 Exp. 03-31-13 ELECTRICAL STATE OF CALIFORNIA

*THE STATE OF CALIFORNIA OR ITS OFFICERS OR AGENTS SHALL NOT BE RESPONSIBLE FOR THE ACCURACY OR COMPLETENESS OF SCANNED COPIES OF THIS PLAN SHEET.*

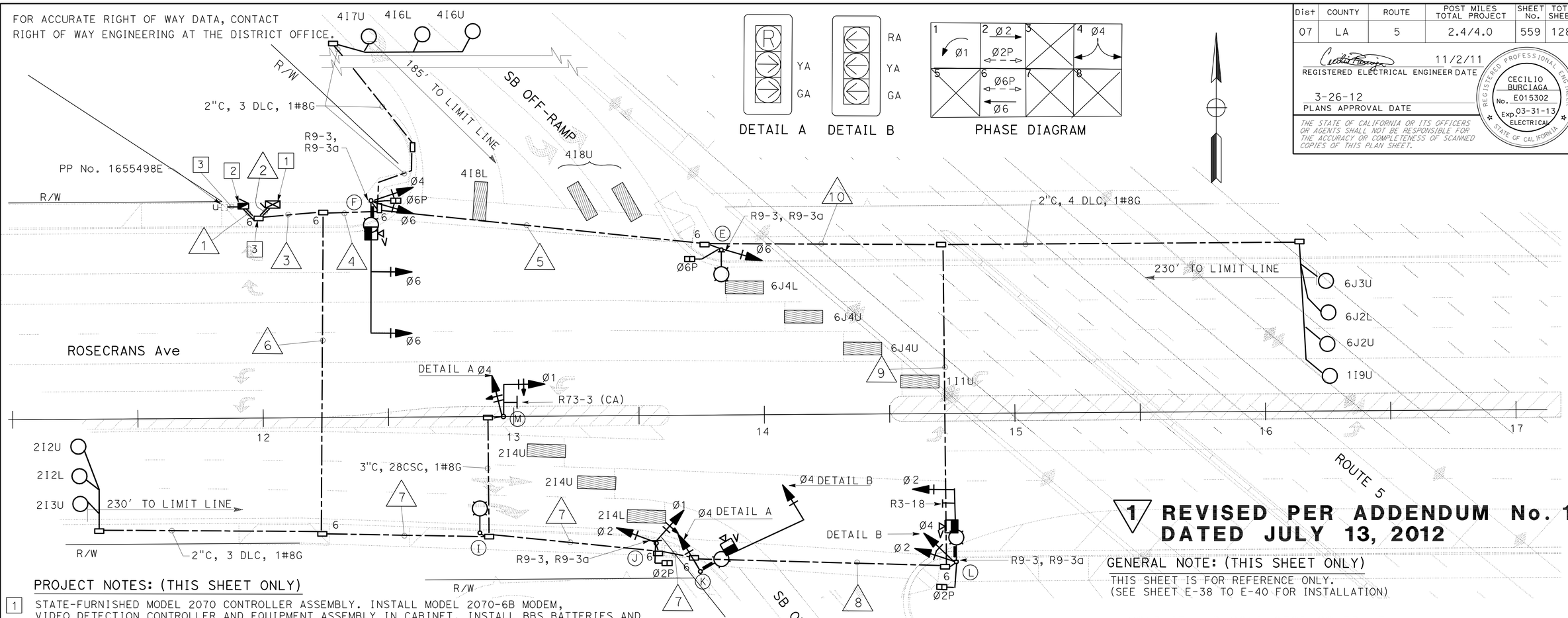


**1 REVISED PER ADDENDUM No. 1 DATED JULY 13, 2012**

GENERAL NOTE: (THIS SHEET ONLY)

THIS SHEET IS FOR REFERENCE ONLY.
(SEE SHEET E-38 TO E-40 FOR INSTALLATION)

## PROJECT NOTES: (THIS SHEET ONLY)

1 STATE-FURNISHED MODEL 2070 CONTROLLER ASSEMBLY. INSTALL MODEL 2070-6B MODEM, VIDEO DETECTION CONTROLLER AND EQUIPMENT ASSEMBLY IN CABINET. INSTALL BBS BATTERIES AND EXTERNAL CABINET. BBS COMPONENTS ARE STATE-FURNISHED. INSTALL CTNET SIGNAL INTERCONNECT EQUIPMENT AND CTNET WIRELESS DATA SERVICE EQUIPMENT ASSEMBLY IN CABINET.
(FOR INSTALLATION OF TRAFFIC SIGNAL INTERCONNECT AND WIRELESS DATA SERVICE EQUIPMENT DETAILS SEE SHEET E-52)

2 120/240 V METERED TYPE III-CF SERVICE EQUIPMENT ENCLOSURE WITH:
(FOR REFERENCE ONLY, SEE SHEET E-3 FOR INSTALLATION)

| METER 1: CIRCUIT BREAKERS | METER 2: CIRCUIT BREAKER |
|---|---|
| 1-100 A, 240 V, 2P, CB - MAIN | 1-100 A, 240 V, 2P, CB - MAIN |
| 2- 30 A, 240 V, 2P, CB - FREEWAY LIGHTING AND SIGN ILLUMINATION | 1- 50 A, 120 V, 1P, CB - SIGNAL |
| 1- 30 A, 120 V, 1P, CB - RAMP METERING | 1- 30 A, 120 V, 1P, CB - SIGNAL LIGHTING (UNMETERED) |
| 1- 15 A, 120 V, 1P, CB - PEU | 1- 15 A, 120 V, 1P, CB - IISNS |
| 1- 30 A, 120 V, 1P, CB - CCTV | 1- 15 A, 120 V, 1P, CB - PEU |
| 3- 20 A, 120 V, 1P, CB - IRRIGATION | |

1 CTID No. 07-53-005R-003.471
ADDRESS: 12601 ¼ ROSECRANS Ave, NORWALK

1 CTID No. 07-53-005R-003.473
ADDRESS: 12601 ¾ ROSECRANS Ave, NORWALK

3 FOR REFERENCE ONLY. (SEE SHEET E-3 FOR INSTALLATION)

## POLE AND EQUIPMENT SCHEDULE

| STANDARD | | | | VEH SIG MTG | | PED SIGNAL | APS 1 | | LED LUMINAIRE | SPECIAL REQUIREMENTS IISNS |
|---|---|---|---|---|---|---|---|---|---|---|
| No. | Type | SMA | LMA | Mast Arm | Pole | MTG | Ø | ARROW | | |
| E | 21TS | - | 12' | - | SV-1-T | SP-1-T | 6 | ← | 235 W | - |
| F | 29A-5-100 | 55' | 12' | 2-MAS | SV-2-TA | SP-1-T | 6 | → | 235 W | ⇦ 5 SOUTH |
| I | 21 | - | 12' | - | - | - | - | - | 235 W | - |
| J | 1-A | - | - | - | TV-2-T | SP-1-T | - | - | - | - |
| K | 26A-3-100 | 45' | 12' | MAS | SV-1-T | - | 2 | → | 235 W | ROSECRANS Ave |
| L | 19A-3-100 | 30' | 12' | MAS | SV-2-TA | SP-1-T | 2 | ← | 235 W | ⇨ 5 SOUTH |
| M | 33 | 12' | - | MAS | SV-1-T | - | - | - | - | - |

## CONDUIT AND CONDUCTOR SCHEDULE

| AWG OR CABLE | CIRCUIT | CONDUIT RUN NUMBER AND SIZE | | | | | | | | | |
|---|---|---|---|---|---|---|---|---|---|---|---|
| | | 1 | 2 | 3 | 4 | 5 | 6 | 7 | 8 | 9 | 10 |
| 28CSC | C1 | - | 2 | 2 | 1 | 1 | 1 | 1 | 1 | - | - |
| 28CSC | C2 | - | 2 | 2 | 1 | 1 | 1 | 1 | 1 | - | - |
| #10 | IISNS | 2 | - | 2 | 2 | - | 2 | 2 | 2 | - | - |
| #10 | LUMINAIRES | 2 | - | 2 | 2 | 2 | 2 | 2 | 2 | - | - |
| #6 | SIGNAL SERVICE | 2 | 2 | - | - | - | - | - | - | - | - |
| CABLE | VIVDS CABLE | - | 3 | 3 | 1 | - | 2 | 2 | 1 | - | - |
| #8 | G | 1 | 1 | 1 | 1 | 1 | 1 | 1 | 1 | 1 | 1 |
| DLC | Ø 1 DETECTORS | - | 1 | 1 | 1 | 1 | - | - | - | - | 1 |
| | Ø 2 DETECTORS | - | 3 | 3 | - | - | 3 | - | - | - | - |
| | Ø 4 DETECTORS | - | 3 | 3 | 3 | - | - | - | - | - | - |
| | Ø 6 DETECTORS | - | 3 | 3 | 3 | 3 | - | - | - | - | 3 |
| | TOTAL | - | 10 | 10 | 7 | 4 | 3 | - | - | - | 4 |
| | CONDUIT SIZE | 2-3" | 2-3" | 3" | 3" | 3" | 3" | 3" | 3" | 3" | 2" |

# MODIFY SIGNAL AND LIGHTING (LOCATION 1)
## (ROUTE 5 SB ON/OFF-RAMP AT ROSECRANS Ave)
## (FINAL)

*APPROVED FOR ELECTRICAL WORK ONLY*

SCALE: 1" = 20'

**E-41**

STATE OF CALIFORNIA - DEPARTMENT OF TRANSPORTATION
Caltrans® TRAFFIC DESIGN

FUNCTIONAL SUPERVISOR: YI TSAU
CALCULATED-DESIGNED BY: LUKE SUN
CHECKED BY: CECILIO BURCIAGA
REVISED BY / DATE REVISED

LAST REVISION 00-00-00 | DATE PLOTTED => 12-JUL-2012 | TIME PLOTTED => 14:13

| Dist | COUNTY | ROUTE | POST MILES TOTAL PROJECT | SHEET No. | TOTAL SHEETS |
|---|---|---|---|---|---|
| 07 | LA | 5 | 2.4/4.0 | 560 | 1288 |

REGISTERED ELECTRICAL ENGINEER 11/2/11 DATE

3-26-12
PLANS APPROVAL DATE

REGISTERED PROFESSIONAL ENGINEER CECILIO BURCIAGA No. E015302 Exp. 03-31-13 ELECTRICAL STATE OF CALIFORNIA

*THE STATE OF CALIFORNIA OR ITS OFFICERS OR AGENTS SHALL NOT BE RESPONSIBLE FOR THE ACCURACY OR COMPLETENESS OF SCANNED COPIES OF THIS PLAN SHEET.*

FOR ACCURATE RIGHT OF WAY DATA, CONTACT
RIGHT OF WAY ENGINEERING AT THE DISTRICT OFFICE.

## GENERAL NOTES: (THIS SHEET ONLY)

1. RC EXISTING TRAFFIC SIGNAL AND LIGHTING SYSTEM, UNLESS OTHERWISE NOTED.
2. AB CONDUITS AND INDUCTIVE LOOP DETECTORS, UNLESS OTHERWISE NOTED.
3. RS MODEL 170 CONTROLLER ASSEMLY, SIGNAL POLES AND SIGNAL HEADS, CONTROLLER CABINET TO REMAIN FOR INTERCONNECT USE.

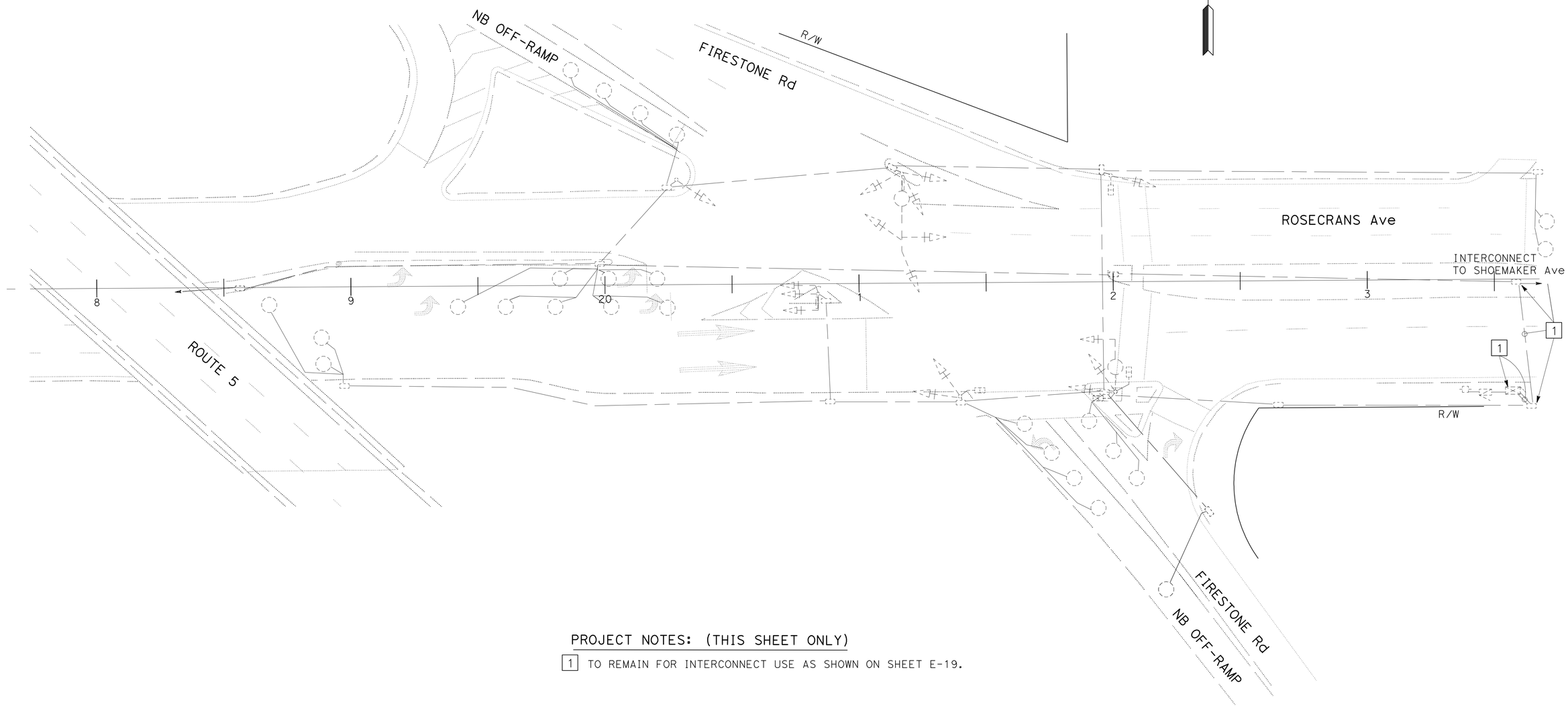


## PROJECT NOTES: (THIS SHEET ONLY)

1 TO REMAIN FOR INTERCONNECT USE AS SHOWN ON SHEET E-19.

1 REVISED PER ADDENDUM No. 1 DATED JULY 13, 2012

# SIGNAL AND LIGHTING (LOCATION 2)
## (REMOVE)
## (ROUTE 5 NB ON/OFF-RAMP AT ROSECRANS Ave)

SCALE: 1" = 20'

*APPROVED FOR ELECTRICAL WORK ONLY*

E-42

STATE OF CALIFORNIA - DEPARTMENT OF TRANSPORTATION
Caltrans TRAFFIC DESIGN

FUNCTIONAL SUPERVISOR: YI TSAU
CALCULATED-DESIGNED BY: LUKE SUN
CHECKED BY: CECILIO BURCIAGA
REVISED BY
DATE REVISED

LAST REVISION 00-00-00
DATE PLOTTED => 12-JUL-2012
TIME PLOTTED => 14:13

BORDER LAST REVISED 7/2/2010
USERNAME => s124496
DGN FILE => 721593ua042.dgn
RELATIVE BORDER SCALE IS IN INCHES 0 1 2 3
UNIT 1880
PROJECT NUMBER & PHASE 07000018331

| Dist | COUNTY | ROUTE | POST MILES TOTAL PROJECT | SHEET No. | TOTAL SHEETS |
|---|---|---|---|---|---|
| 07 | LA | 5 | 2.4/4.0 | 561 | 1288 |

REGISTERED ELECTRICAL ENGINEER 11/2/11 DATE

3-26-12
PLANS APPROVAL DATE

REGISTERED PROFESSIONAL ENGINEER CECILIO BURCIAGA No. E015302 Exp. 03-31-13 ELECTRICAL STATE OF CALIFORNIA

*THE STATE OF CALIFORNIA OR ITS OFFICERS OR AGENTS SHALL NOT BE RESPONSIBLE FOR THE ACCURACY OR COMPLETENESS OF SCANNED COPIES OF THIS PLAN SHEET.*

FOR ACCURATE RIGHT OF WAY DATA, CONTACT RIGHT OF WAY ENGINEERING AT THE DISTRICT OFFICE.

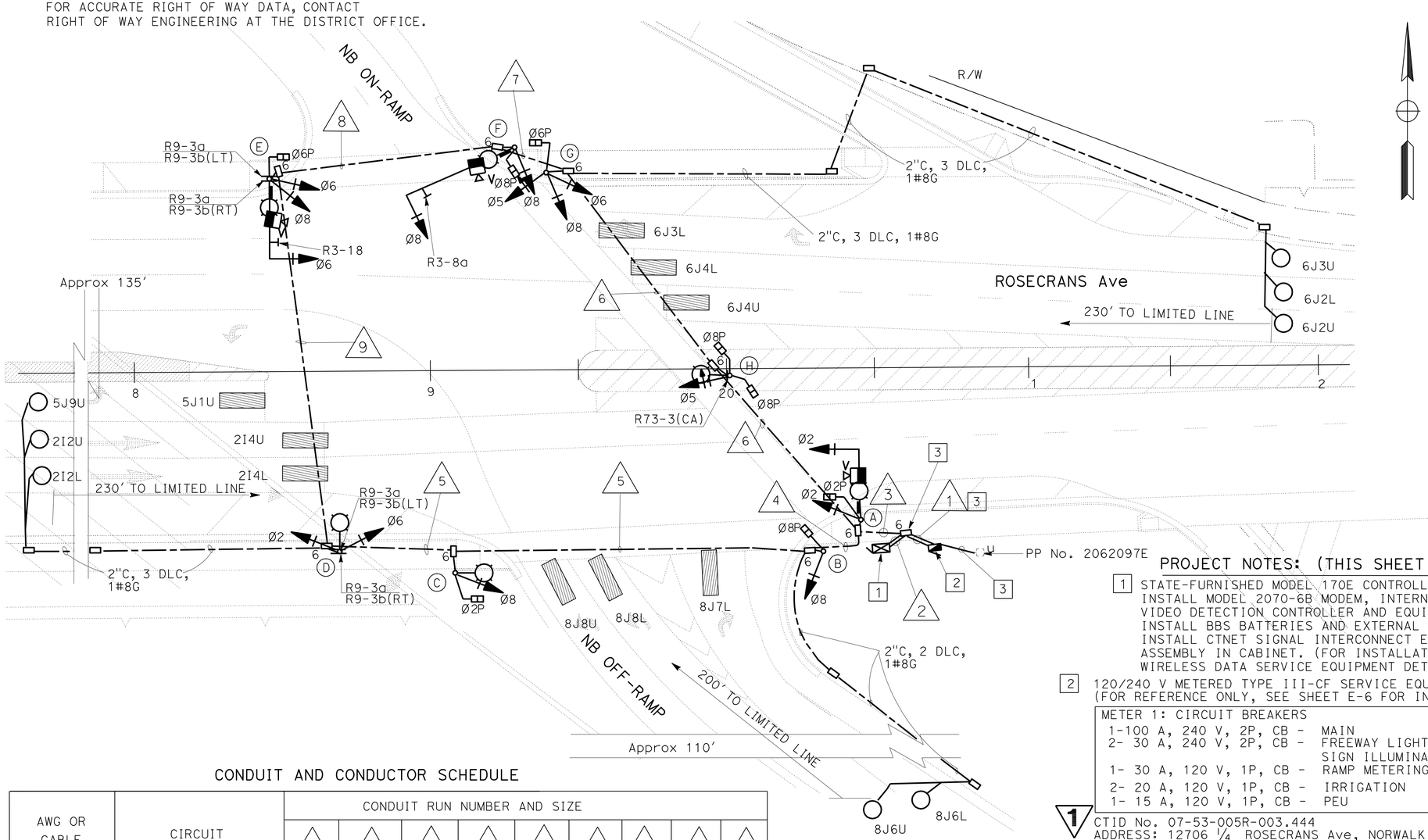


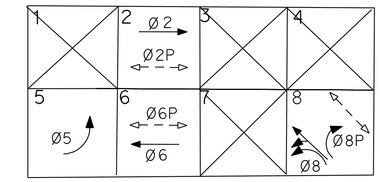


PHASE DIAGRAM

## PROJECT NOTES: (THIS SHEET ONLY)

1. STATE-FURNISHED MODEL 170E CONTROLLER AND MODEL 2070 CONTROLLER ASSEMBLY. INSTALL MODEL 2070-6B MODEM, INTERNAL MODEL 496 MODEM, VIDEO DETECTION CONTROLLER AND EQUIPMENT ASSEMBLY IN CABINET. INSTALL BBS BATTERIES AND EXTERNAL CABINET. BBS COMPONENTS ARE STATE-FURNISHED. INSTALL CTNET SIGNAL INTERCONNECT EQUIPMENT AND CTNET WIRELESS DATA SERVICE EQUIPMENT ASSEMBLY IN CABINET. (FOR INSTALLATION OF TRAFFIC SIGNAL INTERCONNECT AND WIRELESS DATA SERVICE EQUIPMENT DETAILS SEE SHEET E-52)
2. 120/240 V METERED TYPE III-CF SERVICE EQUIPMENT ENCLOSURE WITH: (FOR REFERENCE ONLY, SEE SHEET E-6 FOR INSTALLATION)

| METER 1: CIRCUIT BREAKERS | METER 2: CIRCUIT BREAKER |
|---|---|
| 1-100 A, 240 V, 2P, CB - MAIN | 1-100 A, 240 V, 2P, CB - MAIN |
| 2- 30 A, 240 V, 2P, CB - FREEWAY LIGHTING AND SIGN ILLUMINATION | 1- 50 A, 120 V, 1P, CB - SIGNAL |
| 1- 30 A, 120 V, 1P, CB - RAMP METERING | 1- 30 A, 120 V, 1P, CB - SIGNAL LIGHTING (UNMETERED) |
| 2- 20 A, 120 V, 1P, CB - IRRIGATION | 1- 15 A, 120 V, 1P, CB - IISNS |
| 1- 15 A, 120 V, 1P, CB - PEU | 1- 15 A, 120 V, 1P, CB - PEU |

1 CTID No. 07-53-005R-003.444
ADDRESS: 12706 1/4 ROSECRANS Ave, NORWALK

1 CTID No. 07-53-005R-003.446
ADDRESS: 12706 3/4 ROSECRANS Ave, NORWALK

3. FOR REFERENCE ONLY. (SEE SHEET E-6 FOR INSTALLATION)

## CONDUIT AND CONDUCTOR SCHEDULE

| AWG OR CABLE | CIRCUIT | CONDUIT RUN NUMBER AND SIZE | | | | | | | | |
|---|---|---|---|---|---|---|---|---|---|---|
| | | 1 | 2 | 3 | 4 | 5 | 6 | 7 | 8 | 9 |
| 28CSC | C1 | - | 2 | 2 | 1 | 1 | 1 | 1 | 1 | - |
| 28CSC | C2 | - | 2 | 2 | 1 | 1 | 1 | 1 | 1 | - |
| #10 | IISNS | 2 | - | 2 | - | - | 2 | 2 | 2 | - |
| #10 | LUMINAIRES | 2 | - | 2 | 2 | 2 | 2 | 2 | 2 | - |
| #6 | SIGNAL SERVICE | 2 | 2 | - | - | - | - | - | - | - |
| CABLE | VIVDS CABLE | - | 3 | 3 | - | - | 2 | 2 | 1 | - |
| #8 | G | 1 | 1 | 1 | 1 | 1 | 1 | 1 | 1 | 1 |
| DLC | Ø 2 DETECTORS | - | 2 | 2 | 2 | 2 | - | - | - | - |
| | Ø 5 DETECTORS | - | 1 | 1 | 1 | 1 | - | - | - | - |
| | Ø 6 DETECTORS | - | 3 | 3 | - | - | 3 | - | - | - |
| | Ø 8 DETECTORS | - | 2 | 2 | 2 | - | - | - | - | - |
| | TOTAL | - | 8 | 8 | 5 | 3 | 3 | - | - | - |
| | CONDUIT SIZE | 2-3" | 2-3" | 3" | 3" | 3" | 3" | 3" | 3" | 3" |

## POLE AND EQUIPMENT SCHEDULE

| STANDARD | | | | VEH SIG MTG | | PED SIGNAL | APS 1 | | LED | IISNS |
|---|---|---|---|---|---|---|---|---|---|---|
| No. | Type | SMA | LMA | Mast Arm | Pole | MTG | Ø | ARROW | LUMINAIRE | |
| A | 19A-3-100 | 25' | 12' | MAS | SV-1-T | SP-1-T | 2 | ← | 235 W | ⇦ 5 NORTH |
| B | 1-A | - | - | - | TV-1-T | SP-1-T | 8 | ← | - | - |
| C | 21TS | - | 12' | - | SV-1-T | SP-1-T | 2 | → | 235 W | - |
| D | 21TS | - | 12' | - | SV-2-TA | - | - | - | 235 W | - |
| E | 19A-3-100 | 25' | 12' | MAS | SV-2-TA | SP-1-T | 6 | → | 235 W | ⇨ 5 NORTH |
| F | 26A-3-100 | 40' | 12' | MAS | SV-1-T | SP-1-T | 6 | ← | 235 W | ROSECRANS Ave |
| G | 1-A | - | - | - | TV-3-T | SP-1-T | 8 | → | - | - |
| H | 21TS | - | 12' | - | SV-1-T | SP-2-T | 8 | ⇄ | 235 W | - |

1 REVISED PER ADDENDUM No. 1 DATED JULY 13, 2012

*APPROVED FOR ELECTRICAL WORK ONLY*

# SIGNAL AND LIGHTING (LOCATION 2)
## (ROUTE 5 NB ON/OFF-RAMP AT ROSECRANS Ave)

SCALE: 1" = 20'

E-43

REVISED BY | DATE REVISED | LUKE SUN | CECILIO BURCIAGA | CALCULATED-DESIGNED BY | CHECKED BY | FUNCTIONAL SUPERVISOR | YI TSAU

STATE OF CALIFORNIA - DEPARTMENT OF TRANSPORTATION
Caltrans TRAFFIC DESIGN

LAST REVISION 00-00-00 | DATE PLOTTED => 12-JUL-2012 | TIME PLOTTED => 14:13

# 1 REVISED PER ADDENDUM No. 1 DATED JULY 13, 2012

| DIST | COUNTY | ROUTE | POST MILES TOTAL PROJECT | SHEET No | TOTAL SHEETS |
|---|---|---|---|---|---|
| 07 | LA | 5 | 2.4/4.0 | 688 | 1288 |

REGISTERED CIVIL ENGINEER 12-12-11 DATE

3-26-12
PLANS APPROVAL DATE

REGISTERED PROFESSIONAL ENGINEER PAUL A. PETERSON No. C66764 Exp. 09-30-12 CIVIL STATE OF CALIFORNIA

*The State of California or its officers or agents shall not be responsible for the accuracy or completeness of electronic copies of this plan sheet.*

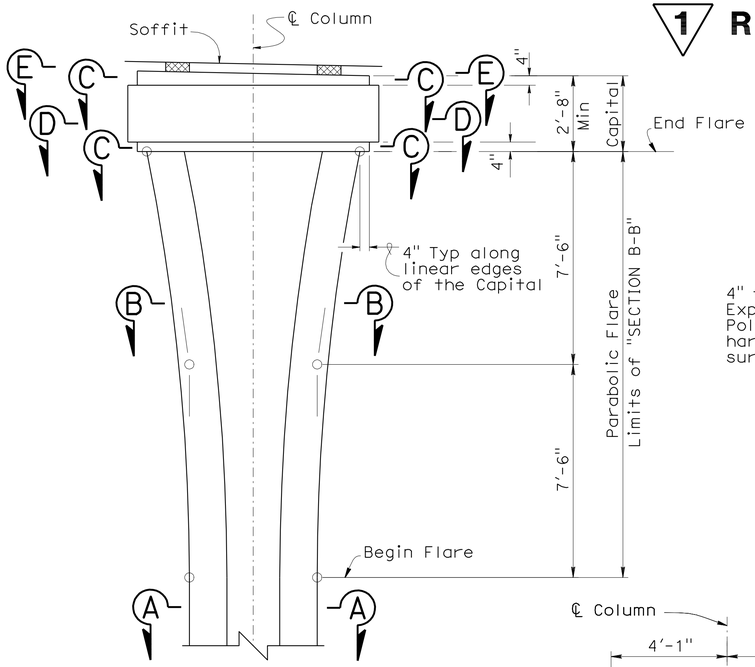


## COLUMN FLARE GEOMETRY
3/8" = 1'

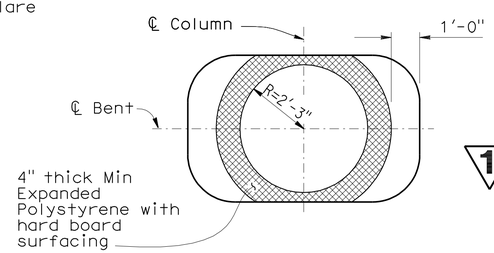


## SECTION E-E
3/8" = 1'

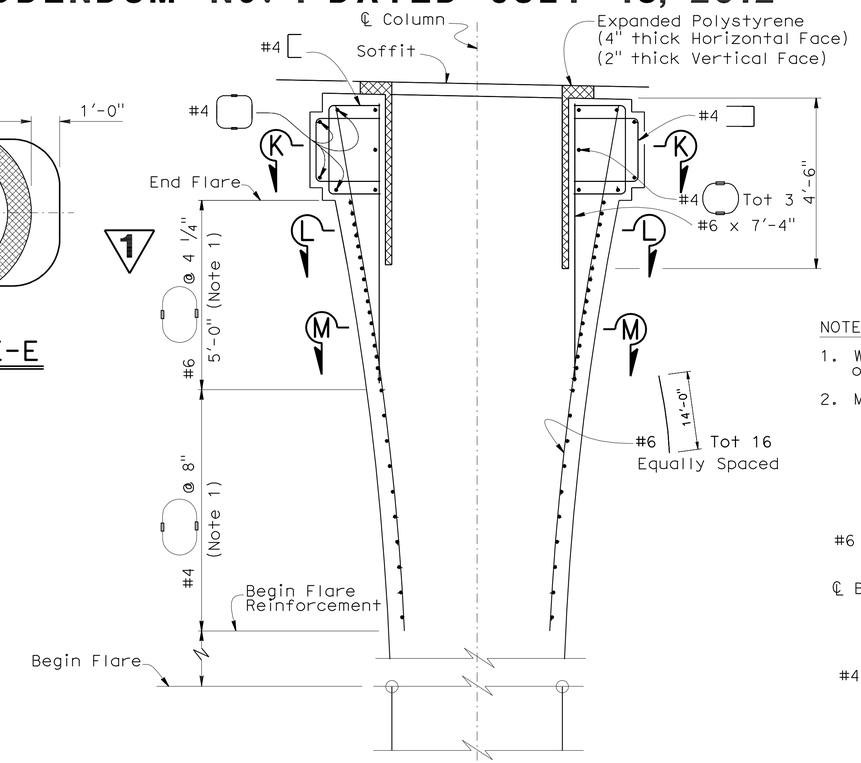


## COLUMN FLARE DETAIL
1/2" = 1'

NOTES:

1. Welded or Mechanical Splices required on tranverse flare reinforcement stagger coupling
2. Main Column reinforcement not shown for clarity

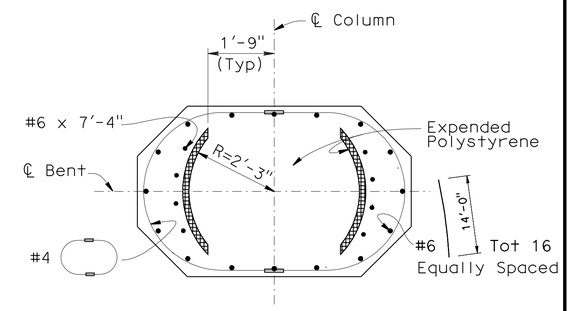


## SECTION L-L
1/2" = 1'

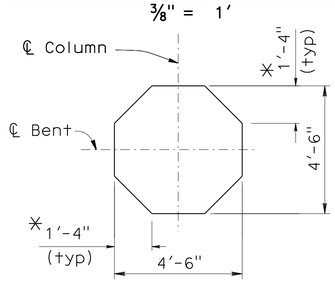


## SECTION A-A
3/8" = 1'

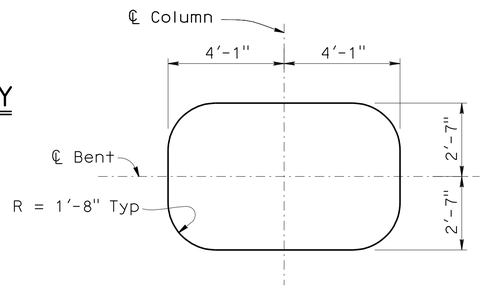


## SECTION C-C
3/8" = 1'

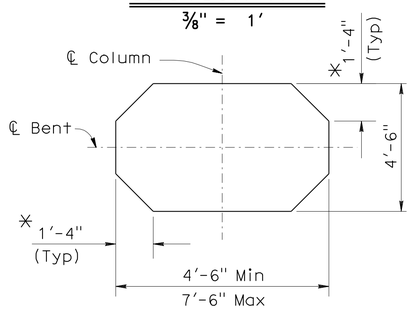


## SECTION B-B
3/8" = 1'

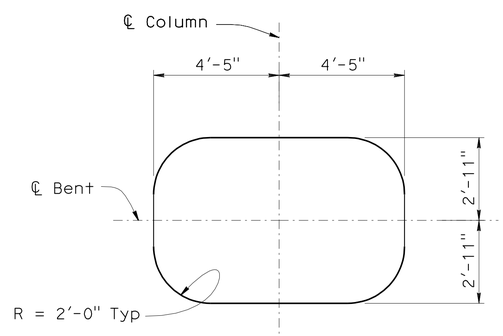


## SECTION D-D
3/8" = 1'

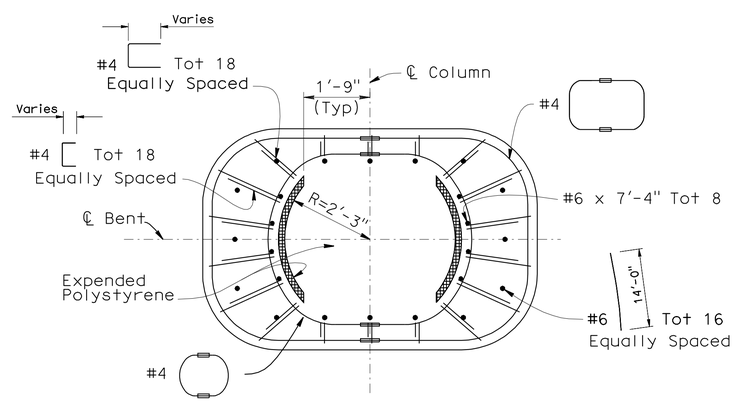


## SECTION K-K
1/2" = 1'

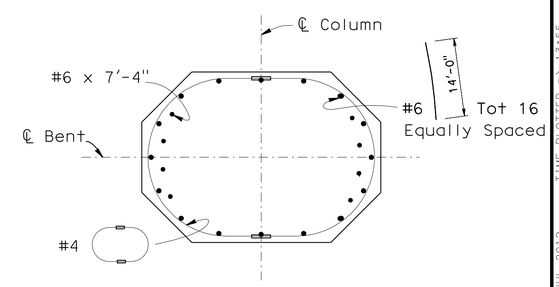


## SECTION M-M
1/2" = 1'

* Constant corner dimensions along Column flare

NOTE:
THE CONTRACTOR SHALL VERIFY ALL CONTROLLING FIELD DIMENSIONS BEFORE ORDERING OR FABRICATING ANY MATERIAL.

| | BY | CHECKED |
|---|---|---|
| DESIGN | Paul Peterson | John Peterson |
| DETAILS | PAP/T. Nguyen | John Peterson |
| QUANTITIES | John Peterson | Paul Peterson |

STATE OF CALIFORNIA
DEPARTMENT OF TRANSPORTATION

DIVISION OF ENGINEERING SERVICES
STRUCTURE DESIGN
DESIGN BRANCH 14

BRIDGE NO. 53-3039
POST MILE 3.04

# SHOEMAKER AVE OC (REPLACE)
## COLUMN FLARE DETAILS AT BENT 4

STRUCTURES DESIGN DETAIL SHEET (ENGLISH) (REV. 10/25/05)

ORIGINAL SCALE IN INCHES FOR REDUCED PLANS 0 1 2 3

CU 07
EA 215931

DISREGARD PRINTS BEARING EARLIER REVISION DATES
REVISION DATES 11-30-08 6-30-10 11-30-11

SHEET 13 OF 38

FILE => 53-3039-k-cdet@bent4.add

USERNAME => s124196 DATE PLOTTED => 12-JUL-2012 TIME PLOTTED => 13:55

| DIST | COUNTY | ROUTE | POST MILES TOTAL PROJECT | SHEET No | TOTAL SHEETS |
|---|---|---|---|---|---|
| 07 | LA | 5 | 2.4/4.0 | 703 | 1288 |

REGISTERED CIVIL ENGINEER — DATE 12-12-11

3-26-12
PLANS APPROVAL DATE

REGISTERED PROFESSIONAL ENGINEER — PAUL A. PETERSON — No. C66764 — Exp. 09-30-12 — CIVIL — STATE OF CALIFORNIA

*The State of California or its officers or agents shall not be responsible for the accuracy or completeness of electronic copies of this plan sheet.*

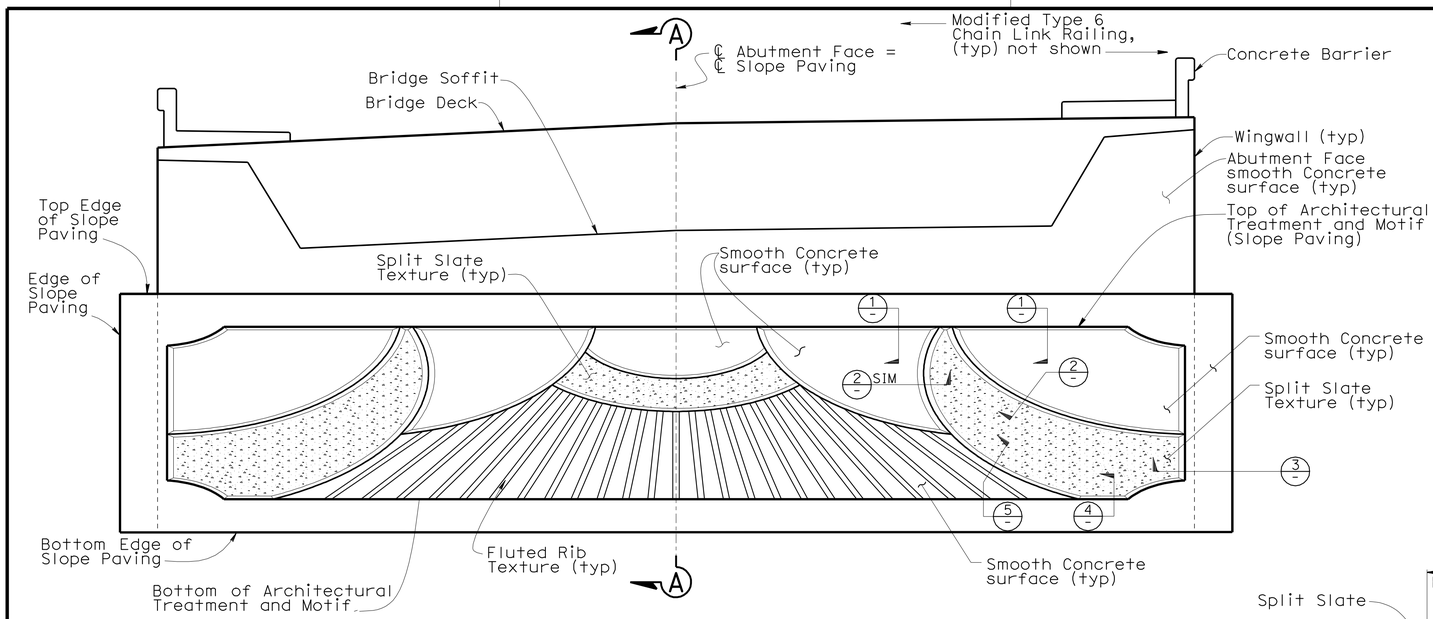


## DEVELOPED ELEVATION AT ABUTMENT 1

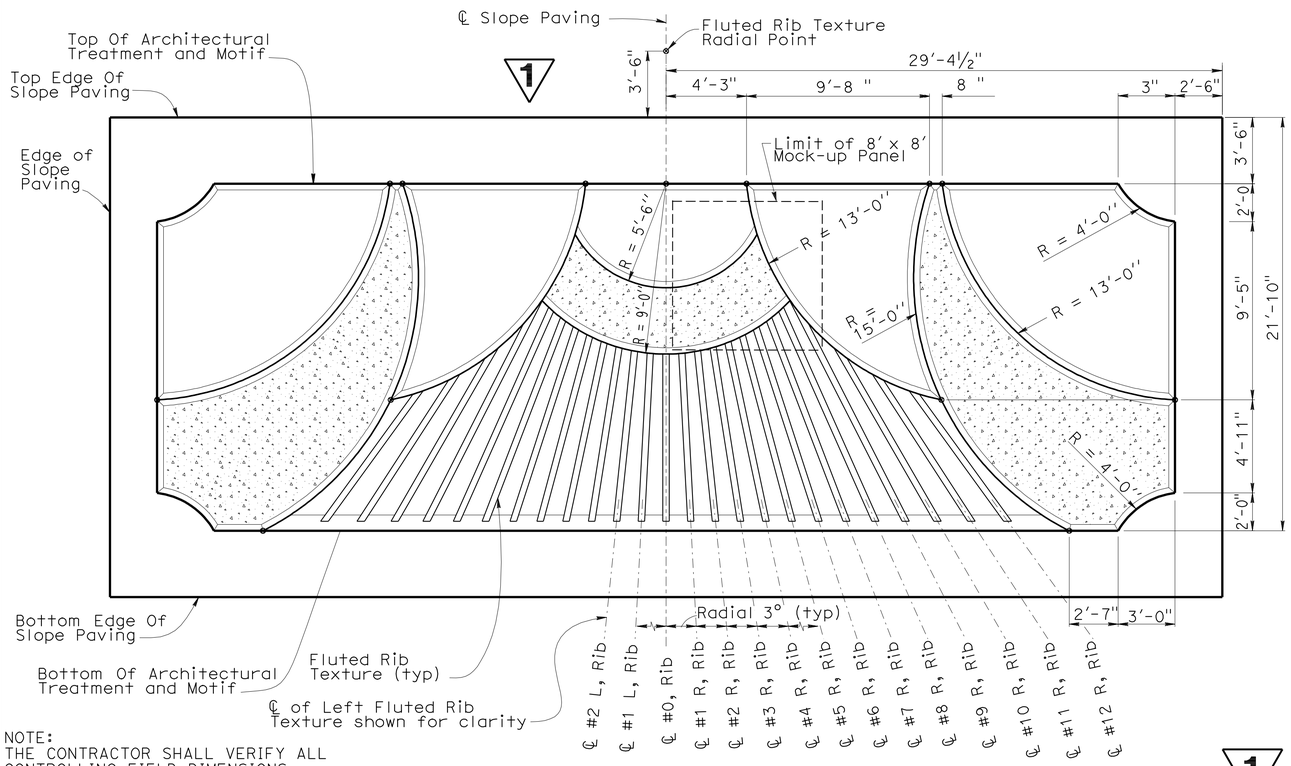


NOTE:
THE CONTRACTOR SHALL VERIFY ALL CONTROLLING FIELD DIMENSIONS BEFORE ORDERING OR FABRICATING ANY MATERIAL.

## ARCHITECTURAL MOTIF AT SLOPE PAVING

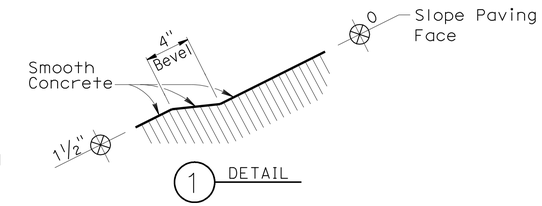


1 DETAIL

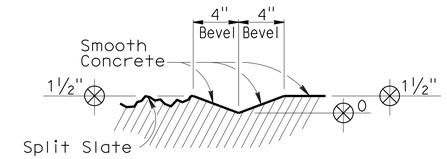


2 DETAIL

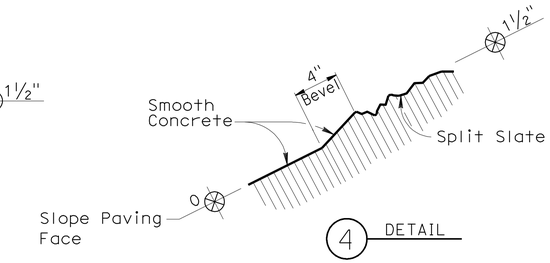


4 DETAIL

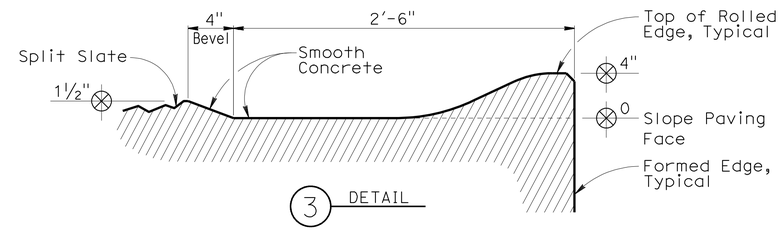


3 DETAIL

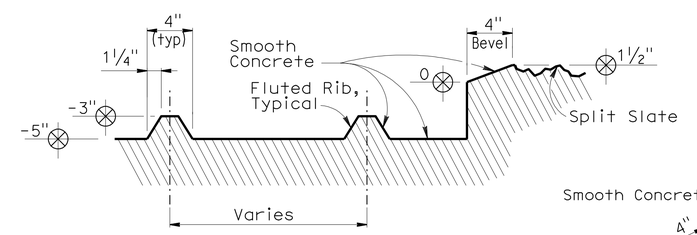


5 DETAIL

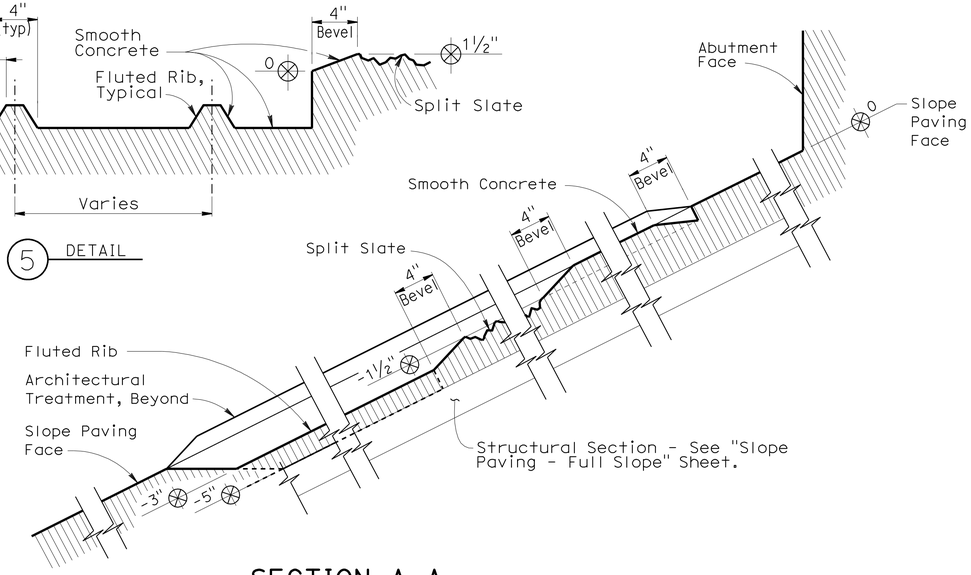


## SECTION A-A

**1 REVISED PER ADDENDUM No. 1 DATED JULY 13, 2012**

NO SCALE

| | BY | CHECKED |
|---|---|---|
| DESIGN | H. Javier Chavez | Isacc Tasabia |
| DETAILS | Jaime Ramirez | H. Javier Chavez |
| QUANTITIES | John Peterson | Paul Peterson |

STATE OF CALIFORNIA
DEPARTMENT OF TRANSPORTATION

DIVISION OF ENGINEERING SERVICES
STRUCTURE DESIGN
DESIGN BRANCH 14

BRIDGE NO. 53-3039
POST MILE 3.04

**SHOEMAKER AVE OC (REPLACE)**
**SLOPE PAVING MOTIF DETAILS**

STRUCTURES DESIGN DETAIL SHEET (ENGLISH) (REV. 10/25/05)

ORIGINAL SCALE IN INCHES FOR REDUCED PLANS 0 1 2 3

CU 07
EA 215931

DISREGARD PRINTS BEARING EARLIER REVISION DATES

REVISION DATES: 8-28-09, 8-11-09, 4-30-10, 6-3-10, 3-15-11, 05-13-11, 11-30-11

SHEET 28 OF 38

FILE => 53-3039-u-ssloppmotifdd.add

USERNAME => s124936 DATE PLOTTED => 12-JUL-2012 TIME PLOTTED => 13:55

| DIST | COUNTY | ROUTE | POST MILES TOTAL PROJECT | SHEET No | TOTAL SHEETS |
|---|---|---|---|---|---|
| 07 | LA | 5 | 2.4/4.0 | 795 | 1288 |

Andrew Rittenhouse 12-12-11
REGISTERED CIVIL ENGINEER DATE

3-26-12
PLANS APPROVAL DATE

REGISTERED PROFESSIONAL ENGINEER Andrew P. Rittenhouse No. 61006 Exp. 12-31-12 CIVIL STATE OF CALIFORNIA

*The State of California or its officers or agents shall not be responsible for the accuracy or completeness of electronic copies of this plan sheet.*

1 REVISED PER ADDENDUM No. 1 DATED JULY 13, 2012

Legend:

- Indicates Bridge Removal
- Indicates Closure Pour
- Denotes location of minimum vertical clearance
- Indicates Deck Drain

Notes:

1. Paint "Bloomfield Ave UC"
2. Paint "Bridge No 53-3041"
3. Structure Approach Type N (30S)
4. Temporary Railing (Type K), see "Road Plans"

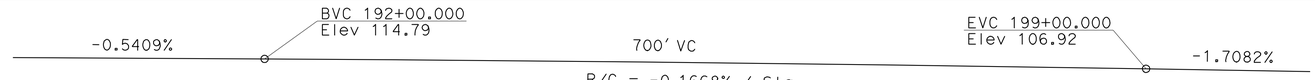


## PROFILE GRADE

No Scale

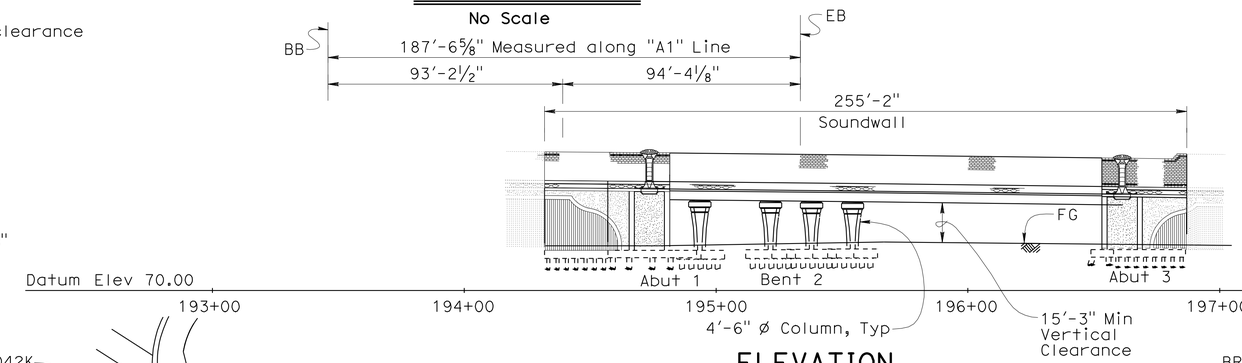


## ELEVATION

1" = 30'

Curve (A)
R = 8357.25'
Δ = 17°36'01"
T = 1293.800'
L = 2567.220'

Curve (B)
R = 700.000'
Δ = 21°59'05"
T = 135.971'
L = 268.597'

Curve (C)
R = 3280.00'
Δ = 2°55'09"
T = 83.575'
L = 167.115'

Curve (D)
R = 4890.602'
Δ = 3°30'51"
T = 150.038'
L = 299.982'

Curve (E)
R = 2376.844'
Δ = 12°23'26"
T = 258.012'
L = 514.012'

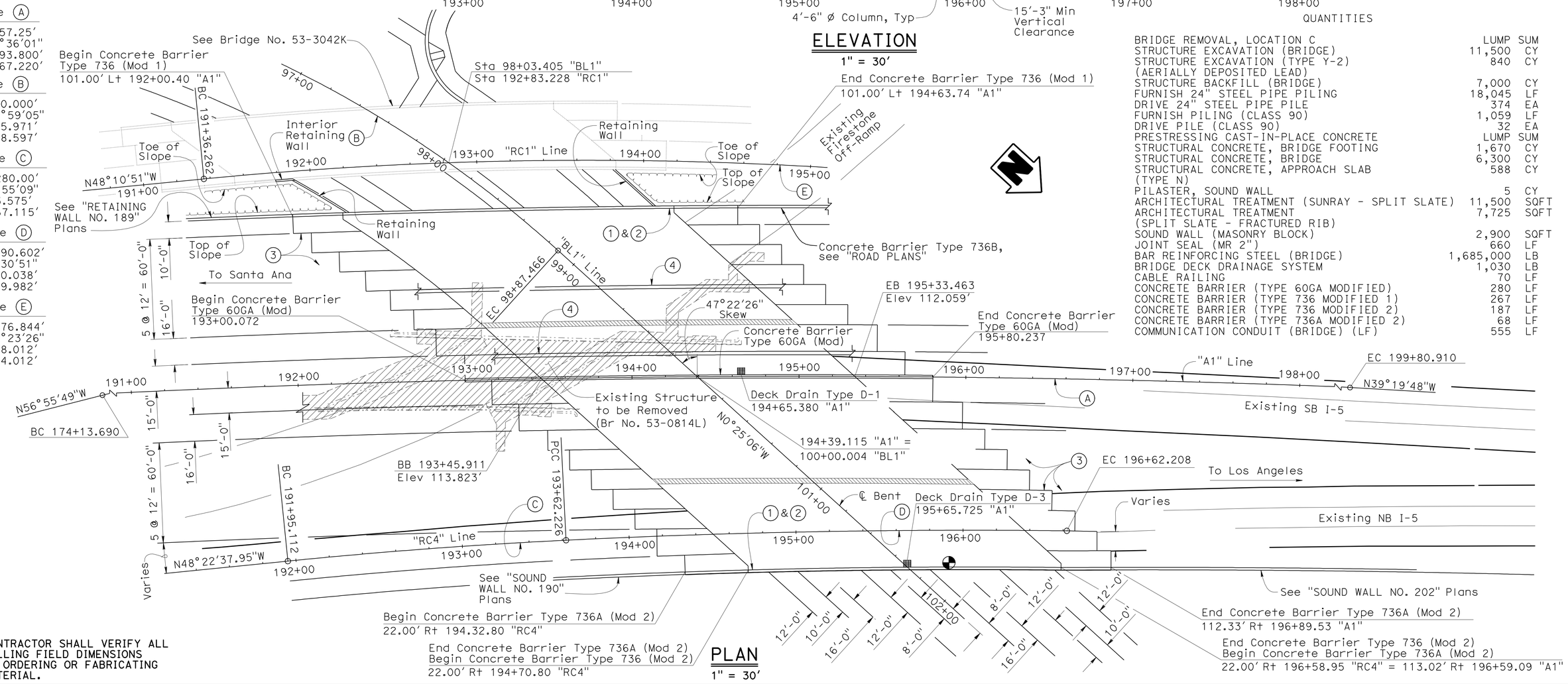


## PLAN

1" = 30'

QUANTITIES

| | | |
|---|---|---|
| BRIDGE REMOVAL, LOCATION C | LUMP | SUM |
| STRUCTURE EXCAVATION (BRIDGE) | 11,500 | CY |
| STRUCTURE EXCAVATION (TYPE Y-2) (AERIALLY DEPOSITED LEAD) | 840 | CY |
| STRUCTURE BACKFILL (BRIDGE) | 7,000 | CY |
| FURNISH 24" STEEL PIPE PILING | 18,045 | LF |
| DRIVE 24" STEEL PIPE PILE | 374 | EA |
| FURNISH PILING (CLASS 90) | 1,059 | LF |
| DRIVE PILE (CLASS 90) | 32 | EA |
| PRESTRESSING CAST-IN-PLACE CONCRETE | LUMP | SUM |
| STRUCTURAL CONCRETE, BRIDGE FOOTING | 1,670 | CY |
| STRUCTURAL CONCRETE, BRIDGE | 6,300 | CY |
| STRUCTURAL CONCRETE, APPROACH SLAB (TYPE N) | 588 | CY |
| PILASTER, SOUND WALL | 5 | CY |
| ARCHITECTURAL TREATMENT (SUNRAY - SPLIT SLATE) | 11,500 | SQFT |
| ARCHITECTURAL TREATMENT (SPLIT SLATE - FRACTURED RIB) | 7,725 | SQFT |
| SOUND WALL (MASONRY BLOCK) | 2,900 | SQFT |
| JOINT SEAL (MR 2") | 660 | LF |
| BAR REINFORCING STEEL (BRIDGE) | 1,685,000 | LB |
| BRIDGE DECK DRAINAGE SYSTEM | 1,030 | LB |
| CABLE RAILING | 70 | LF |
| CONCRETE BARRIER (TYPE 60GA MODIFIED) | 280 | LF |
| CONCRETE BARRIER (TYPE 736 MODIFIED 1) | 267 | LF |
| CONCRETE BARRIER (TYPE 736 MODIFIED 2) | 187 | LF |
| CONCRETE BARRIER (TYPE 736A MODIFIED 2) | 68 | LF |
| COMMUNICATION CONDUIT (BRIDGE) (LF) | 555 | LF |

NOTE:
THE CONTRACTOR SHALL VERIFY ALL CONTROLLING FIELD DIMENSIONS BEFORE ORDERING OR FABRICATING ANY MATERIAL.

Traci Menard
DESIGN ENGINEER

| | BY | CHECKED |
|---|---|---|
| DESIGN | Fred Feng | Sara Yip |
| DETAILS | Herman Mauroschadt | Sara Yip |
| QUANTITIES | Gabriel Galo | Ruslan Novik |

LOAD & RESISTANCE FACTOR DESIGN — LIVE LOADING: HL93 W/"LOW-BOY"; PERMIT DESIGN VEHICLE
LAYOUT: F. Feng — CHECKED: S. Yip
SPECIFICATIONS: T. Nedwick — PLANS AND SPECS COMPARED: T. Nedwick

ORIGINAL SCALE IN INCHES FOR REDUCED PLANS 0 1 2 3

STATE OF CALIFORNIA
DEPARTMENT OF TRANSPORTATION

DIVISION OF ENGINEERING SERVICES
STRUCTURE DESIGN
DESIGN BRANCH 15

CU 07
EA 215931

BRIDGE NO. 53-3041
POST MILE 3.66

# BLOOMFIELD AVENUE UC
# GENERAL PLAN NO. 1

DISREGARD PRINTS BEARING EARLIER REVISION DATES
REVISION DATES: 10-11-11 12-7-11 12-19-11 1-4-12 2-1-12 3-10-12 5-30-11 7-1-11 3-5-11
SHEET 1 OF 80

STRUCTURES DESIGN GENERAL PLAN SHEET (ENGLISH) (REV.07-24-06)

FILE => 53-3041-a-gp01.add

USERNAME => s124496 DATE PLOTTED => 12-JUL-2012 TIME PLOTTED => 13:55

| DIST | COUNTY | ROUTE | POST MILES TOTAL PROJECT | SHEET No | TOTAL SHEETS |
|---|---|---|---|---|---|
| 07 | LA | 5 | 2.4/4.0 | 796 | 1288 |

1

Andrew Rittenhouse 12-12-11
REGISTERED CIVIL ENGINEER DATE

3-26-12
PLANS APPROVAL DATE

REGISTERED PROFESSIONAL ENGINEER
Andrew P. Rittenhouse
No. 61006
Exp. 12-31-12
CIVIL
STATE OF CALIFORNIA

*The State of California or its officers or agents shall not be responsible for the accuracy or completeness of electronic copies of this plan sheet.*

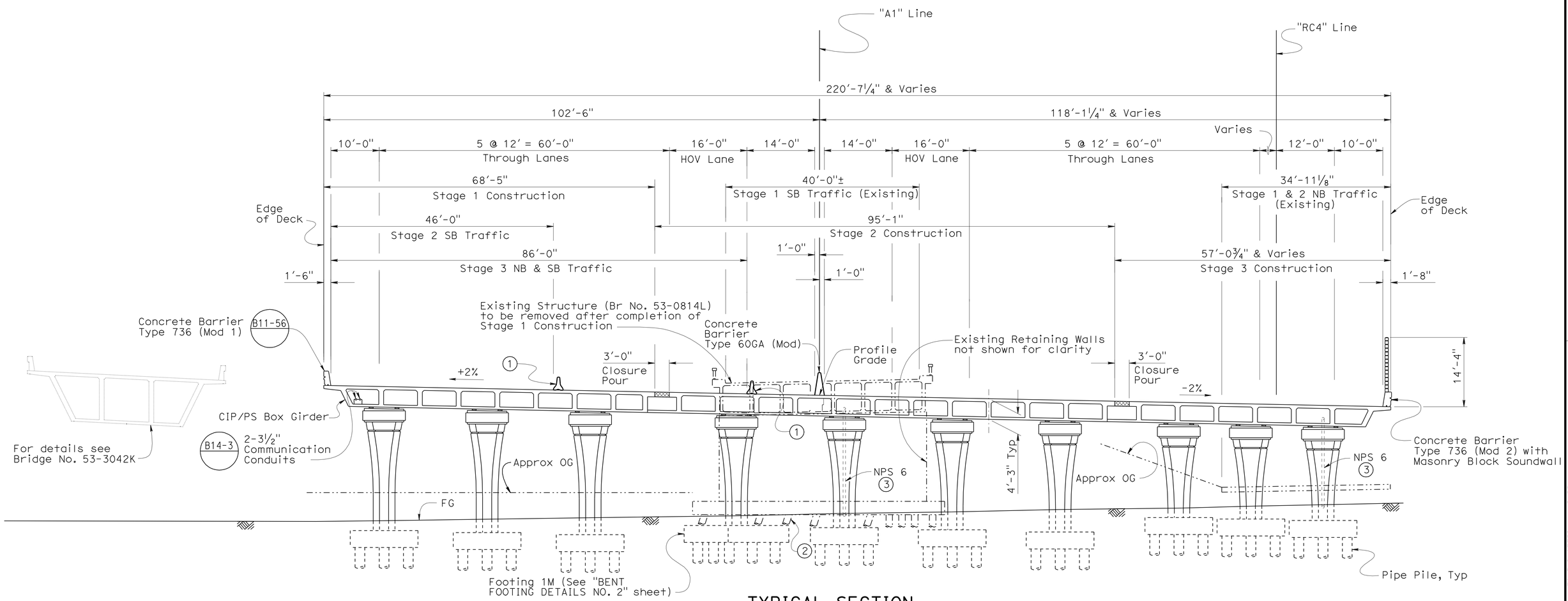


## TYPICAL SECTION

1" = 10'

Notes:

1. Temporary Railing (Type K), see "Road Plans"
2. Not all Existing piles shown for clarity
3. For Drainage details see "DECK DRAIN DETAILS" sheet

Legend:

—·—· Indicates Existing Structure

Indicates Closure Pour

NOTE:
THE CONTRACTOR SHALL VERIFY ALL CONTROLLING FIELD DIMENSIONS BEFORE ORDERING OR FABRICATING ANY MATERIAL.

1 **REVISED PER ADDENDUM No. 1 DATED JULY 13, 2012**

| | | | | |
|---|---|---|---|---|
| Traci Menard<br>DESIGN ENGINEER | DESIGN | BY Fred Feng | CHECKED Sara Yip | LOAD & RESISTANCE FACTOR DESIGN — LIVE LOADING: HL93 W/"LOW-BOY"; PERMIT DESIGN VEHICLE |
| | DETAILS | BY Herman Mauroschadt | CHECKED Sara Yip | LAYOUT — BY F. Feng — CHECKED S. Yip |
| | QUANTITIES | BY Gabriel Galo | CHECKED Ruslan Novik | SPECIFICATIONS — BY T. Nedwick — PLANS AND SPECS COMPARED T. Nedwick |

ORIGINAL SCALE IN INCHES FOR REDUCED PLANS 0 1 2 3

STATE OF CALIFORNIA
DEPARTMENT OF TRANSPORTATION

DIVISION OF ENGINEERING SERVICES
STRUCTURE DESIGN
DESIGN BRANCH 15

CU 07
EA 215931

BRIDGE NO. 53-3041
POST MILE 3.66

# BLOOMFIELD AVENUE UC
## GENERAL PLAN NO. 2

DISREGARD PRINTS BEARING EARLIER REVISION DATES

REVISION DATES: 4-15-11 5-5-11 7-14-11 10-14-11 12-1-11 12-12-11 1-5-12 3-15-12 1-4-13

SHEET 2 OF 80

STRUCTURES DESIGN GENERAL PLAN SHEET (ENGLISH) (REV.07-24-06)

FILE => 53-3041-a-gp02.add

USERNAME => s124196 DATE PLOTTED => 12-JUL-2012 TIME PLOTTED => 13:55

| DIST | COUNTY | ROUTE | POST MILES TOTAL PROJECT | SHEET No | TOTAL SHEETS |
|---|---|---|---|---|---|
| 07 | LA | 5 | 2.4/4.0 | 814 | 1288 |

Andrew Rittenhouse 12-12-11
REGISTERED CIVIL ENGINEER DATE

3-26-12
PLANS APPROVAL DATE

REGISTERED PROFESSIONAL ENGINEER Andrew P. Rittenhouse No. 61006 Exp. 12-31-12 CIVIL STATE OF CALIFORNIA

*The State of California or its officers or agents shall not be responsible for the accuracy or completeness of electronic copies of this plan sheet.*

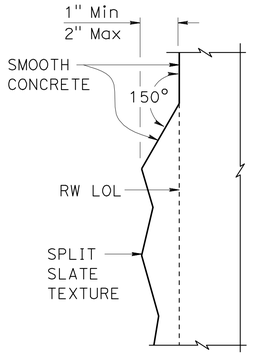


## DETAIL A
3" = 1'-0"

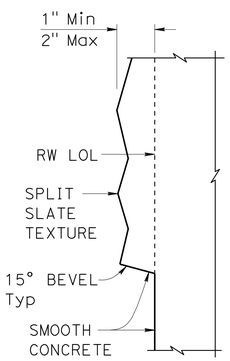


## DETAIL B
3" = 1'-0"

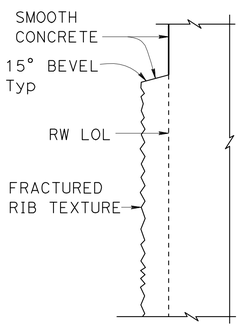


## DETAIL C
3" = 1'-0"

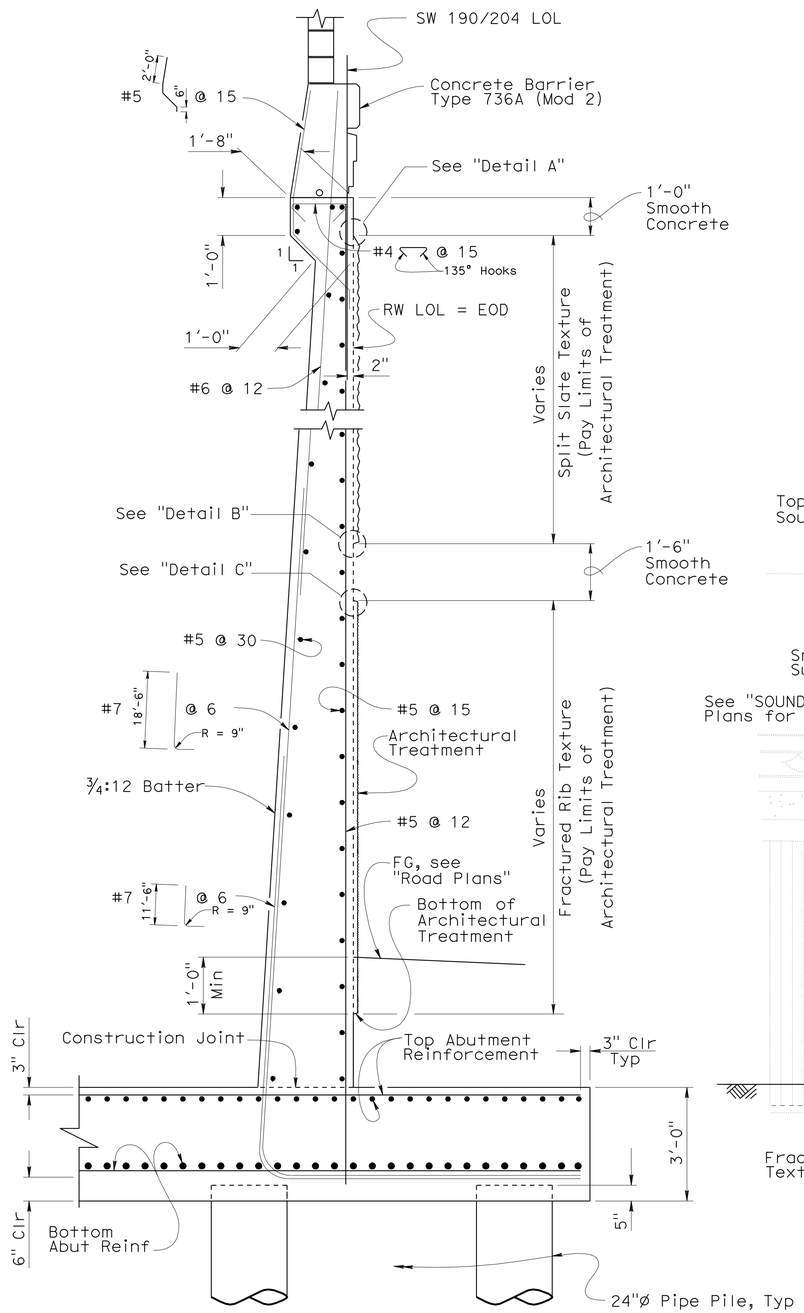


## SECTION A-A
1/2" = 1'-0"

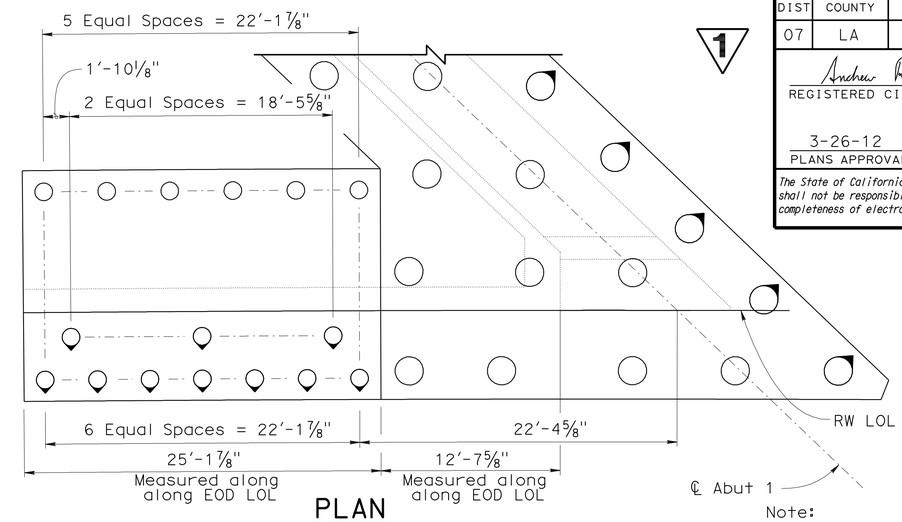


## PLAN

Note:

For Retaining Wall Type 1SWBP details see "RETAINING WALL TYPE 1SWBP - DETAILS NO. 1" and "RETAINING WALL TYPE 1SWBP - DETAILS NO. 2" sheets.

Legend:

- Indicates 3:1 Battered Pile
- Indicates Vertical Pile

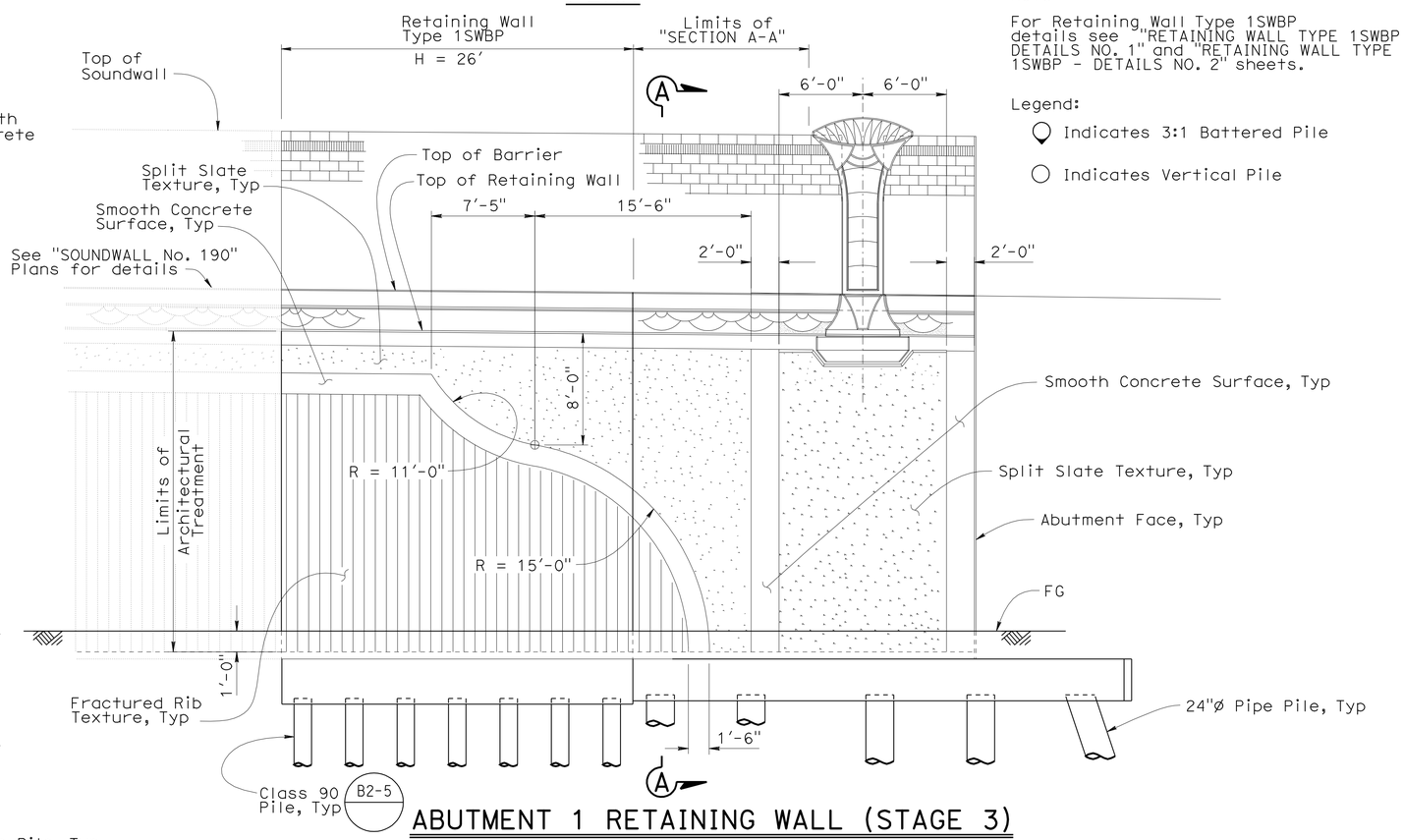


## ABUTMENT 1 RETAINING WALL (STAGE 3)
3/16" = 1'-0"

**1 REVISED PER ADDENDUM No. 1 DATED JULY 13, 2012**

| | | | |
|---|---|---|---|
| DESIGN | BY Andrew Rittenhouse | CHECKED Sara Yip | |
| DETAILS | BY Herman Mauroschadt | CHECKED Sara Yip | |
| QUANTITIES | BY Gabriel Galo | CHECKED Ruslan Novik | |

STATE OF CALIFORNIA
DEPARTMENT OF TRANSPORTATION

DIVISION OF ENGINEERING SERVICES
STRUCTURE DESIGN
DESIGN BRANCH 15

BRIDGE NO. 53-3041
POST MILE 3.66

BLOOMFIELD AVENUE UC
RETAINING WALL DETAILS NO. 1

STRUCTURES DESIGN DETAIL SHEET (ENGLISH) (REV. 10/25/05)

ORIGINAL SCALE IN INCHES FOR REDUCED PLANS 0 1 2 3

CU 07
EA 215931

DISREGARD PRINTS BEARING EARLIER REVISION DATES

REVISION DATES: 3-26-12 4-27-12 3-10-12 5-25-11 7-15-11 7-29-11 10-25-11 10-28-11 12-6-11

SHEET 20 OF 80

FILE => 53-3041-j-ww01.add

USERNAME => s124436 DATE PLOTTED => 12-JUL-2012 TIME PLOTTED => 13:55

| DIST | COUNTY | ROUTE | POST MILES TOTAL PROJECT | SHEET No | TOTAL SHEETS |
|---|---|---|---|---|---|
| 07 | LA | 5 | 2.4/4.0 | 815 | 1288 |

Andrew Rittenhouse 12-12-11
REGISTERED CIVIL ENGINEER DATE

3-26-12
PLANS APPROVAL DATE

REGISTERED PROFESSIONAL ENGINEER
Andrew P. Rittenhouse
No. 61006
Exp. 12-31-12
CIVIL
STATE OF CALIFORNIA

*The State of California or its officers or agents shall not be responsible for the accuracy or completeness of electronic copies of this plan sheet.*

1

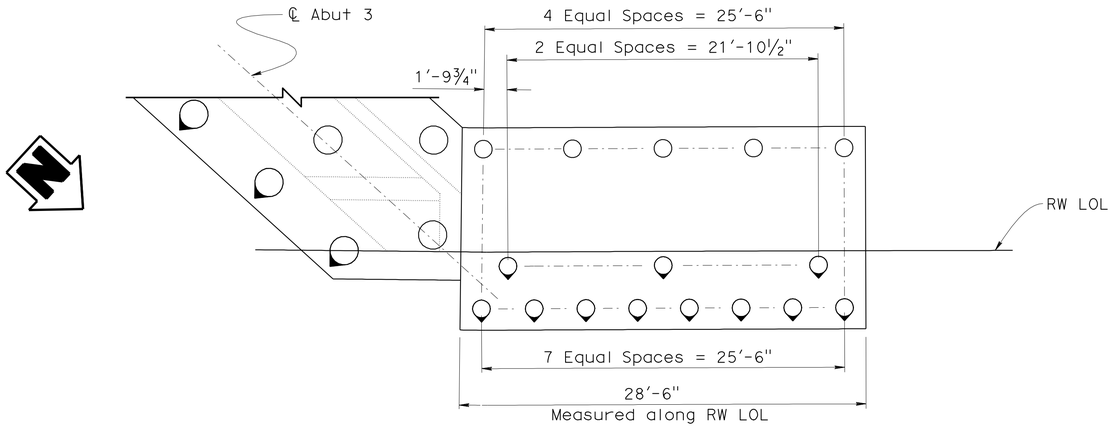


## PLAN

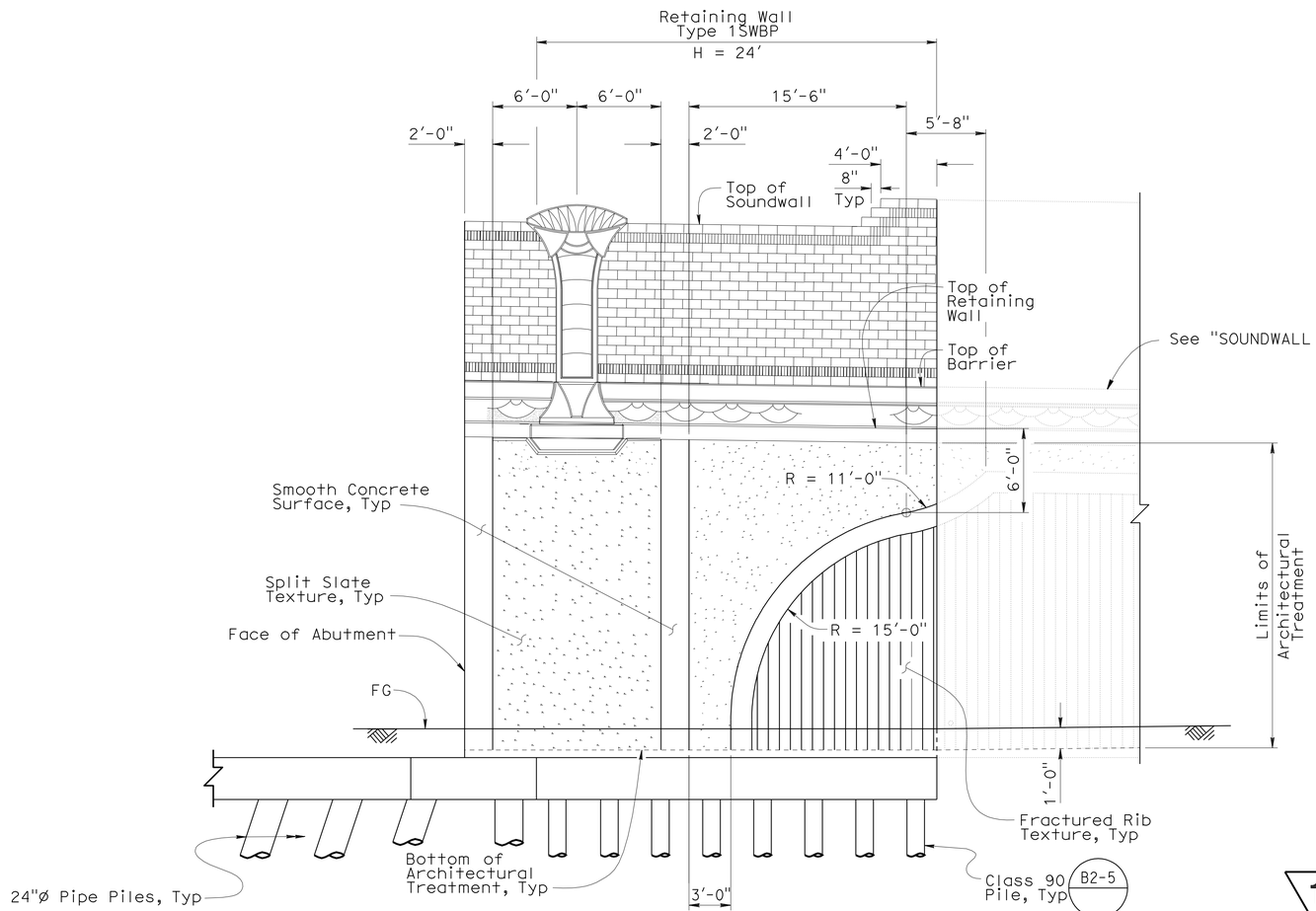


## ABUTMENT 3 RETAINING WALL (STAGE 3)

3/16" = 1'-0"

Notes:

1. For Retaining Wall Type 1SWBP details see "RETAINING WALL TYPE 1SWBP - DETAILS NO. 1" and "RETAINING WALL TYPE 1SWBP - DETAILS NO. 2" sheets.
2. For Architectural details see "RETAINING WALL DETAILS NO. 1" sheet.

Legend:

Indicates 3:1 Battered Pile

Indicates Vertical Pile

1 **REVISED PER ADDENDUM No. 1 DATED JULY 13, 2012**

| | BY | CHECKED |
|---|---|---|
| DESIGN | Andrew Rittenhouse | Sara Yip |
| DETAILS | Herman Mauroschadt | Sara Yip |
| QUANTITIES | Gabriel Galo | Ruslan Novik |

STATE OF CALIFORNIA
DEPARTMENT OF TRANSPORTATION

DIVISION OF ENGINEERING SERVICES
STRUCTURE DESIGN
DESIGN BRANCH 15

BRIDGE NO. 53-3041
POST MILE 3.66

BLOOMFIELD AVENUE UC
RETAINING WALL DETAILS NO. 2

STRUCTURES DESIGN DETAIL SHEET (ENGLISH) (REV. 10/25/05)

ORIGINAL SCALE IN INCHES FOR REDUCED PLANS 0 1 2 3

CU 07
EA 215931

DISREGARD PRINTS BEARING EARLIER REVISION DATES

REVISION DATES: 9-13-10 1-27-11 4-29-11 5-5-11 7-14-11 10-26-11 10-28-11 12-9-11 1-5-12

SHEET 21 OF 80

FILE => 53-3041-j-ww02.add

USERNAME => s124496 DATE PLOTTED => 12-JUL-2012 TIME PLOTTED => 13:55

| DIST | COUNTY | ROUTE | POST MILES TOTAL PROJECT | SHEET No | TOTAL SHEETS |
|---|---|---|---|---|---|
| 07 | LA | 5 | 2.4/4.0 | 825 | 1288 |

1

Andrew Rittenhouse 12-12-11
REGISTERED CIVIL ENGINEER DATE

3-26-12
PLANS APPROVAL DATE

REGISTERED PROFESSIONAL ENGINEER
Andrew P. Rittenhouse
No. 61006
Exp. 12-31-12
CIVIL
STATE OF CALIFORNIA

*The State of California or its officers or agents shall not be responsible for the accuracy or completeness of electronic copies of this plan sheet.*

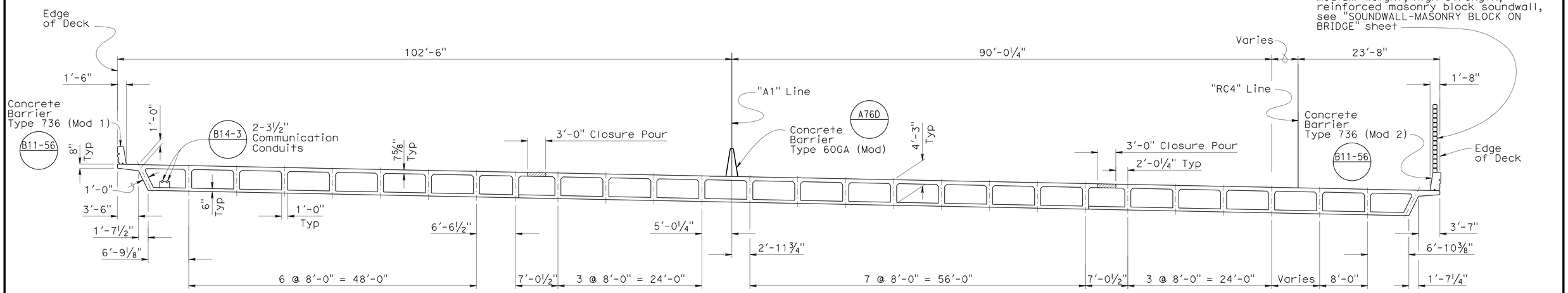


## TYPICAL SECTION

⅛" = 1'

Notes:

1. For additional Top and Bottom slab reinforcement, see "Girder Reinforcement" sheets.
2. Bundle addional #5 transverse bar to every top transverse bar in the overhang for a distance of 5 feet after BB and before EB.

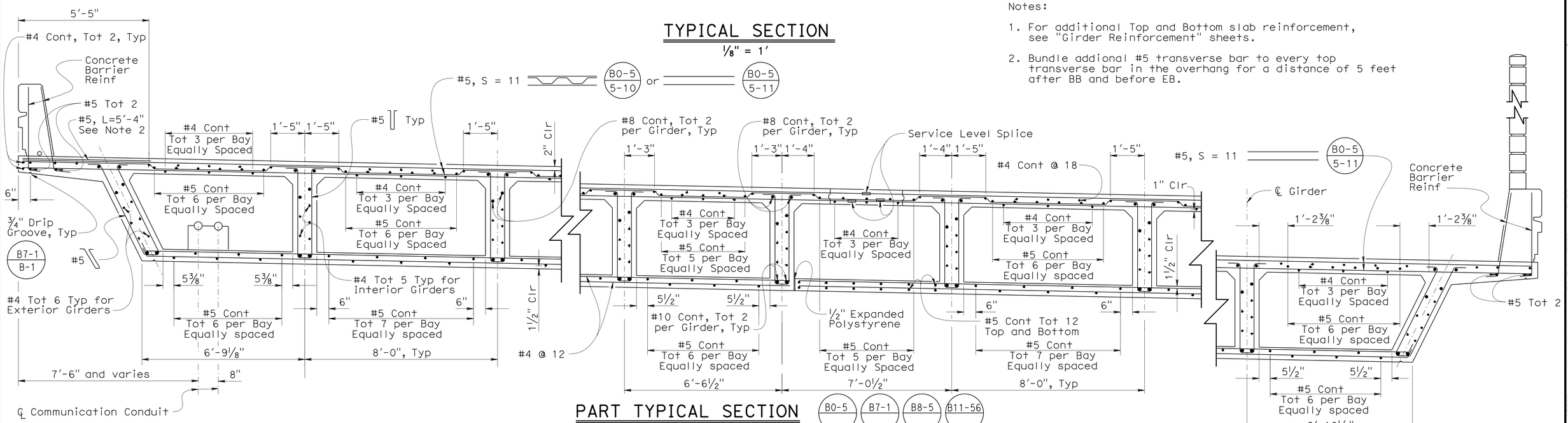


## PART TYPICAL SECTION

½" = 1'

1 **REVISED PER ADDENDUM No. 1 DATED JULY 13, 2012**

| | | | |
|---|---|---|---|
| DESIGN | BY Fred Feng | CHECKED Sara Yip | |
| DETAILS | BY Herman Mauroschadt | CHECKED Sara Yip | |
| QUANTITIES | BY Gabriel Galo | CHECKED Ruslan Novik | |

STATE OF CALIFORNIA
DEPARTMENT OF TRANSPORTATION

DIVISION OF ENGINEERING SERVICES
STRUCTURE DESIGN
DESIGN BRANCH 15

BRIDGE NO. 53-3041
POST MILE 3.66

# BLOOMFIELD AVENUE UC
# TYPICAL SECTION

STRUCTURES DESIGN DETAIL SHEET (ENGLISH) (REV. 10/25/05)

ORIGINAL SCALE IN INCHES FOR REDUCED PLANS 0 1 2 3

CU 07
EA 215931

DISREGARD PRINTS BEARING EARLIER REVISION DATES

REVISION DATES: 1-5-12 | 1-15-10 | 8-26-11 | 9-1-11 | 9-5-11 | 9-9-11 | 9-12-11 | 10-12-11 | 12-9-11

SHEET 31 OF 80

FILE => 53-3041-m-ts01.add

USERNAME => s124496 DATE PLOTTED => 12-JUL-2012 TIME PLOTTED => 13:55

| DIST | COUNTY | ROUTE | POST MILES TOTAL PROJECT | SHEET No | TOTAL SHEETS |
|---|---|---|---|---|---|
| 07 | LA | 5 | 2.4/4.0 | 856 | 1288 |

Andrew Rittenhouse 12-12-11
REGISTERED CIVIL ENGINEER DATE

3-26-12
PLANS APPROVAL DATE

REGISTERED PROFESSIONAL ENGINEER Andrew P. Rittenhouse No. 61006 Exp. 12-31-12 CIVIL STATE OF CALIFORNIA

*The State of California or its officers or agents shall not be responsible for the accuracy or completeness of electronic copies of this plan sheet.*

1

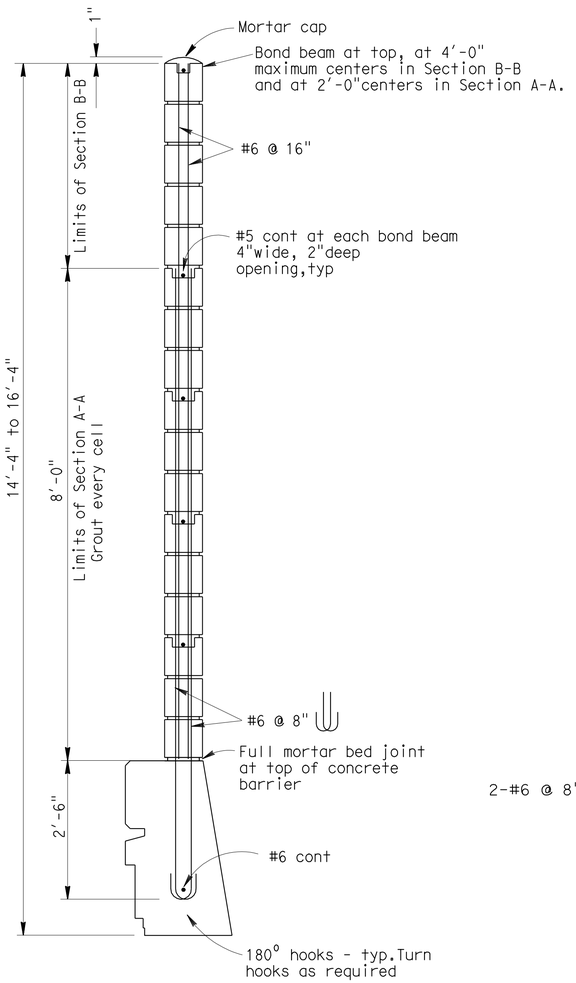


## SOUND WALL SECTION
No Scale

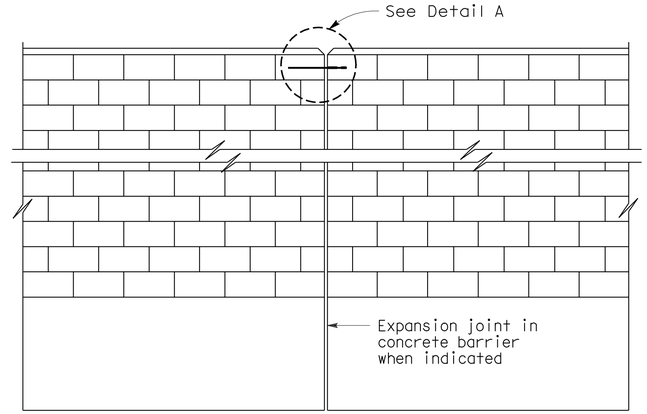


## ALIGNMENT KEY DETAIL
No Scale

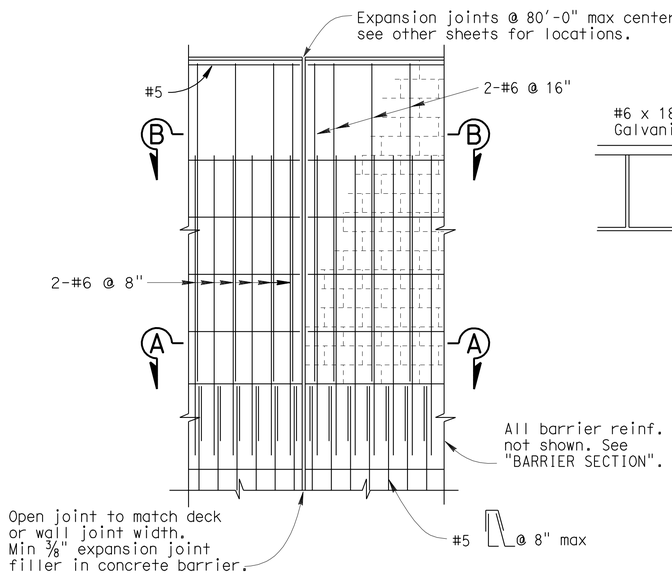


## DECK AND WALL JOINT ELEVATION
No Scale

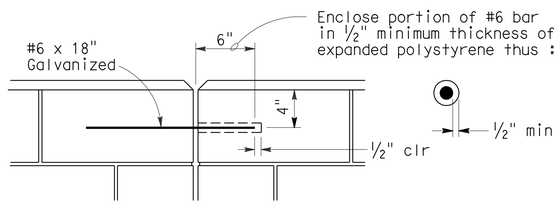


## DETAIL A
No Scale

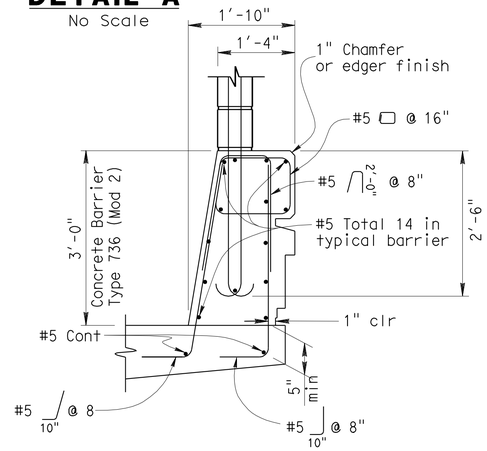


## BARRIER SECTION
No Scale

NOTE:
For dimensions and reinforcement not shown, see Standard Plan B11-56 and "BARRIER ARCHITECTURAL DETAILS" sheet.

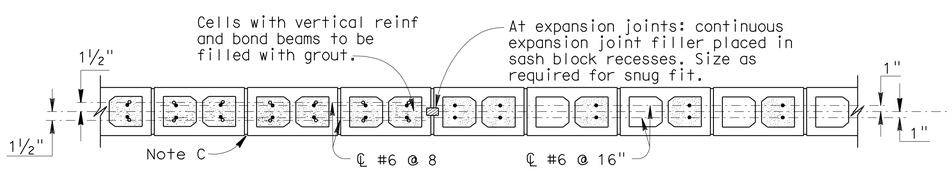


## SECTION A-A
No Scale

## SECTION B-B
No Scale

## GENERAL NOTES

Note A: For type of block, type of block bond and joint finish, see "Road Plans".

Note B: When blocks are laid in stacked bond, ladder type, galvanized joint reinforcement shall be provided. A minimum of 2 - 12 gauge wires continuous at 4'-0" maximum to be used. Locate reinforcement in joints that are at the approximate midpoint between bond beams.

Note C: Horizontal joints shall be tooled concave or may be weathered. Vertical joints shall be tooled concave or may be raked.

Note D: All masonry to be high strength unless otherwise noted.

Note E: Class 2 concrete to be used for barrier.

Note F: Expansion joints in concrete barrier and masonry block to match deck joints and at ends of wing walls.

Note G: Expansion joints in Sound Wall (Masonry Block) shall be at each support, center of span, and at ends of each wingwall.

Note H: For dimensions and reinforcement not shown see "Typical Section" sheet.

## DESIGN NOTES

**DESIGN**
Uniform Building Code,1997 Edition and the Bridge Design Specifications.

**DESIGN WIND LOAD**
37 psf

**DESIGN SEISMIC LOAD**
2.0 Dead load

**REINFORCED CONCRETE**
f'c = 3.6 ksi
fy = 60 ksi

**CONCRETE MASONRY HIGH STRENGTH**
f'm = 2500 psi
fy = 60 ksi

**LOAD FACTORS AND LOAD COMBINATIONS**

Load Factor Design ( LFD )

Group A: βD +1.7 E + 1.7 SC
Group B: βD +1.7 E + 1.3 W
Group C: βD +1.3 E + 1.0 EQE
Group D: βD +1.3 E + 1.0 EQD
Group E: βD +1.1 E + 0.85 ( EQE + EQD )

Where : β = 0.9 or 1.2, whichever controls in design
D = Dead load
E = Lateral earth pressure
SC = Live load surcharge
W = Wind load
EQD = Seismic dead load
EQE = Seismic earth load

**STRENGTH REDUCTION FACTORS, Ø**

Reinforced Concrete :
For flexure ..... Ø = 0.90
For shear ..... Ø = 0.85

Concrete masonry:
For flexure ..... Ø = 0.80
For shear ..... Ø = 0.60

Note 1:
Barrier, Deck and Concrete Masonry are designed by the Strength Design Method.

1 **REVISED PER ADDENDUM No. 1 DATED JULY 13, 2012**

| | | | |
|---|---|---|---|
| DESIGN | BY A. Rittenhouse | CHECKED Traci Menard | |
| DETAILS | BY H. Mauroschadt | CHECKED Traci Menard | |
| QUANTITIES | BY Gabriel Galo | CHECKED Traci Menard | |

STATE OF CALIFORNIA
DEPARTMENT OF TRANSPORTATION

DIVISION OF ENGINEERING SERVICES
STRUCTURE DESIGN
DESIGN BRANCH 15

BRIDGE NO. 53-3041
POST MILE 3.66

BLOOMFIELD AVENUE UC
SOUNDWALL - MASONRY BLOCK ON BRIDGE

STRUCTURES DESIGN DETAIL SHEET (ENGLISH) (REV. 10/25/05)

ORIGINAL SCALE IN INCHES FOR REDUCED PLANS 0 1 2 3

CU 07
EA 215931

DISREGARD PRINTS BEARING EARLIER REVISION DATES

REVISION DATES: 5-18-11 7-14-11 10-26-11 12-8-11 1-5-12

SHEET 62 OF 80

FILE => 53-3041-v-swb.add

USERNAME => s124496 DATE PLOTTED => 12-JUL-2012 TIME PLOTTED => 13:56

| DIST | COUNTY | ROUTE | POST MILES TOTAL PROJECT | SHEET No | TOTAL SHEETS |
|---|---|---|---|---|---|
| 07 | LA | 5 | 2.4/4.0 | 859 | 1288 |

LICENSED ARCHITECT — DATE 1/31/12

LICENSED ARCHITECT H. Javier Chavez 14073 03-31-13 Renewal Date STATE OF CALIFORNIA

3-26-12
PLANS APPROVAL DATE

The State of California or its officers or agents shall not be responsible for the accuracy or completeness of electronic copies of this plan sheet.

1

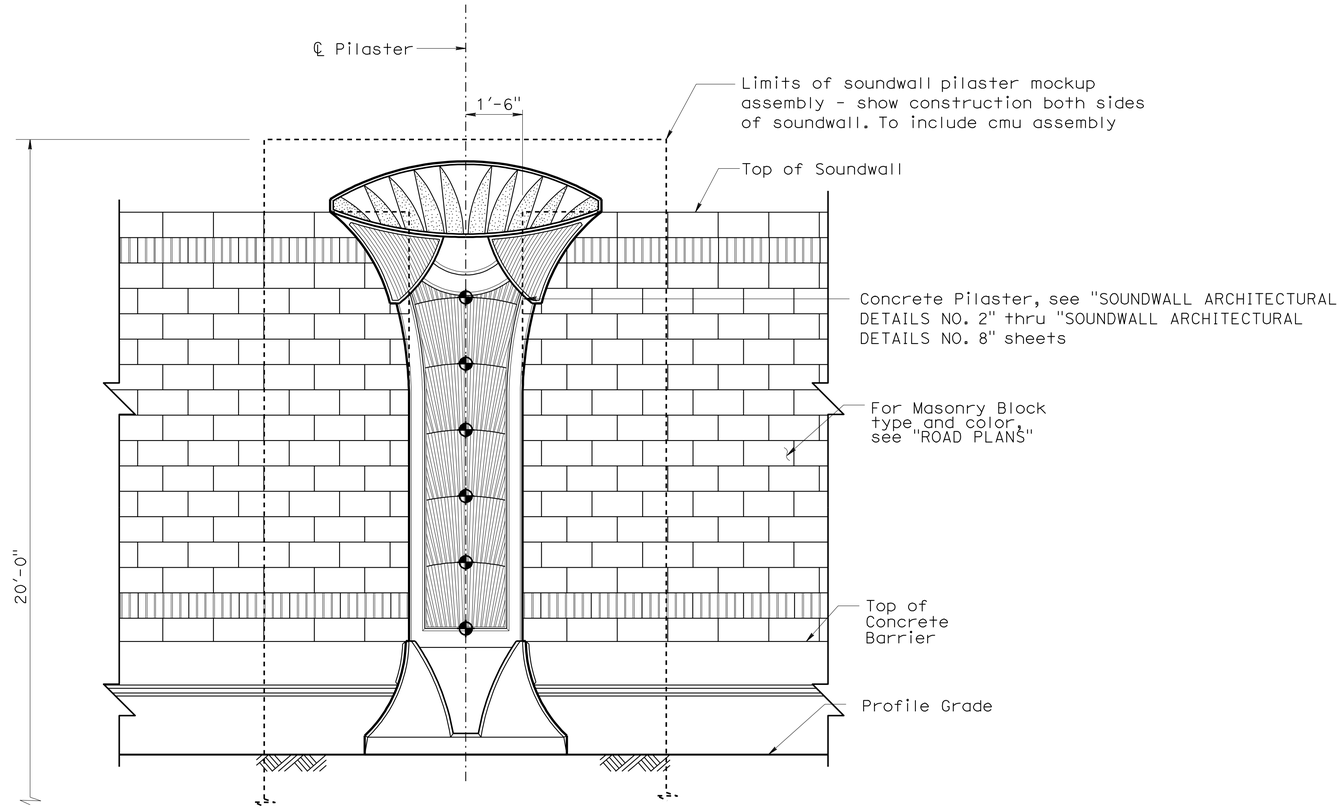


PART SOUNDWALL ELEVATION - FREEWAY SIDE

½" = 1'-0"

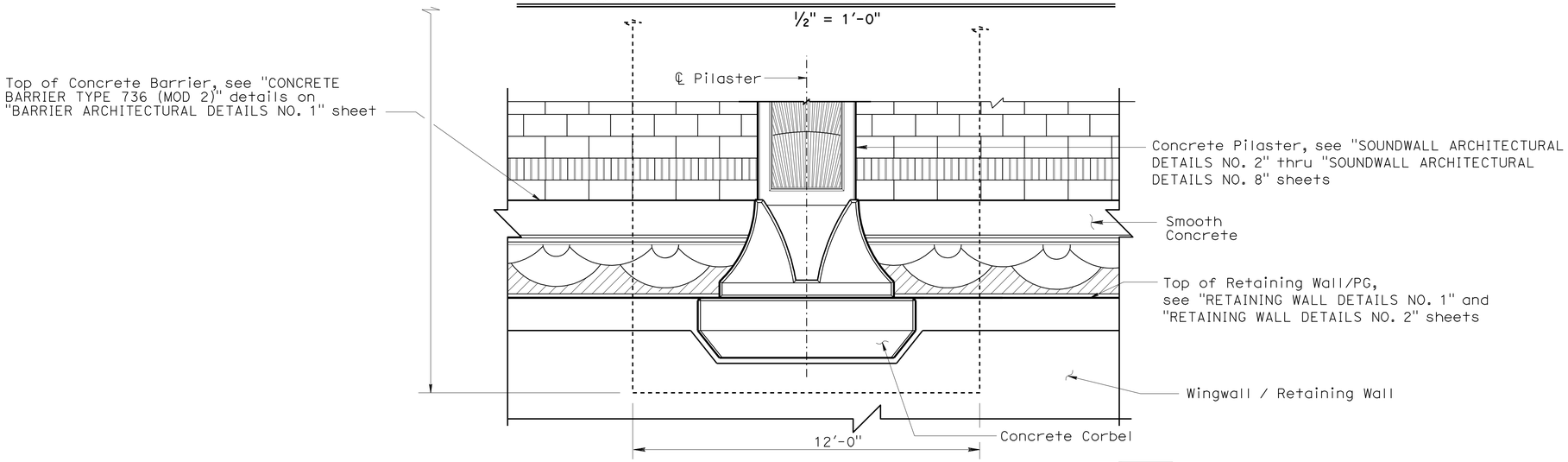


PART SOUNDWALL ELEVATION - BACK SIDE

½" = 1'-0"

1 **REVISED PER ADDENDUM No. 1 DATED JULY 13, 2012**

| | BY | CHECKED |
|---|---|---|
| DESIGN | Isaac Tasabia | Javier Chavez |
| DETAILS | Herman Mauroschadt | Javier Chavez |
| QUANTITIES | Suzan Moradi | Gabriel Galo |

STATE OF CALIFORNIA DEPARTMENT OF TRANSPORTATION

DIVISION OF ENGINEERING SERVICES
BRIDGE ARCHITECTURE AND AESTHETICS

BRIDGE NO. 53-3041
POST MILE 3.66

BLOOMFIELD AVENUE UC
SOUNDWALL ARCHITECTURAL DETAILS NO. 1

STRUCTURES DESIGN DETAIL SHEET (ENGLISH) (REV. 10/25/05)

ORIGINAL SCALE IN INCHES FOR REDUCED PLANS 0 1 2 3

CU 07
EA 215931

DISREGARD PRINTS BEARING EARLIER REVISION DATES 1-23-12

REVISION DATES

SHEET 65 OF 80

FILE => 53-3041-x-swadet01.add

USERNAME => s124496 DATE PLOTTED => 12-JUL-2012 TIME PLOTTED => 13:56

| DIST | COUNTY | ROUTE | POST MILES TOTAL PROJECT | SHEET No | TOTAL SHEETS |
|---|---|---|---|---|---|
| 07 | LA | 5 | 2.4/4.0 | 860 | 1288 |

LICENSED ARCHITECT — DATE 1/31/12

3-26-12
PLANS APPROVAL DATE

LICENSED ARCHITECT H. Javier Chavez 14073 03-31-13 Renewal Date STATE OF CALIFORNIA

The State of California or its officers or agents shall not be responsible for the accuracy or completeness of electronic copies of this plan sheet.

1

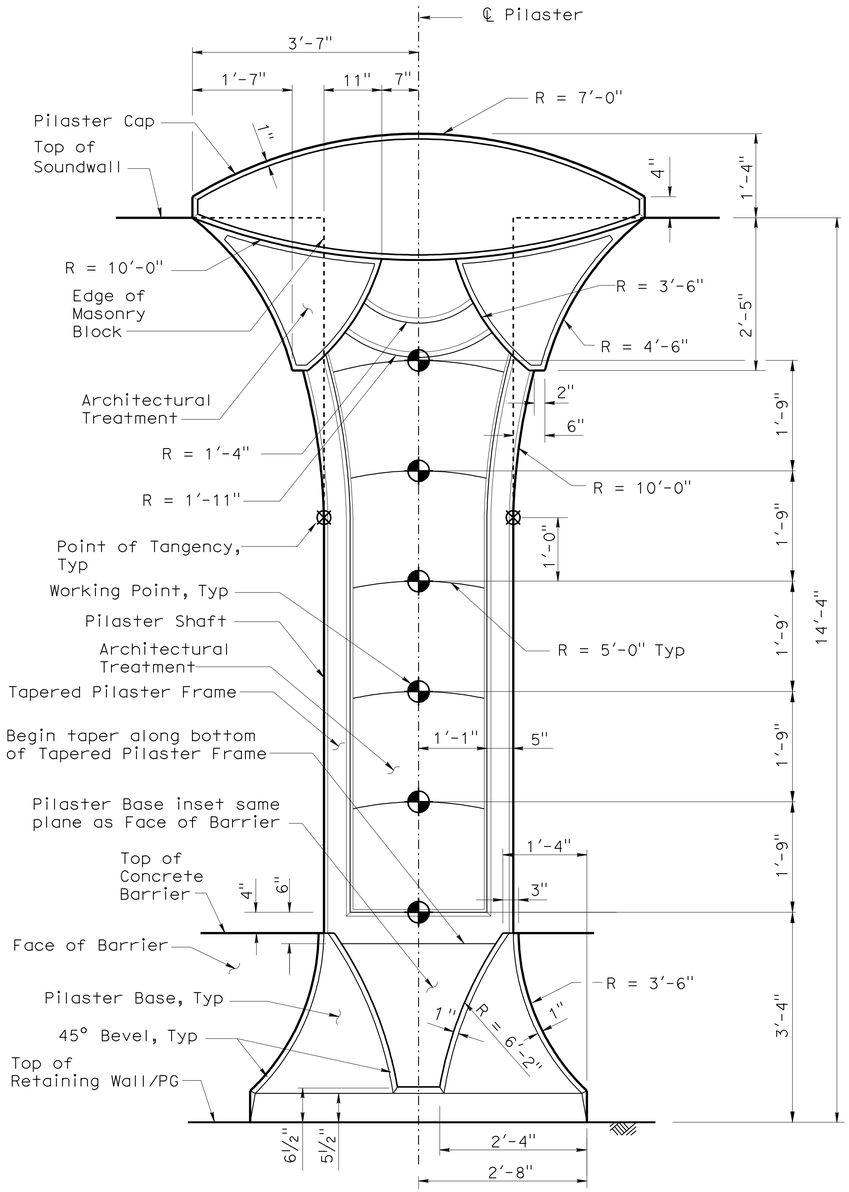


PILASTER ELEVATION - FREEWAY SIDE

NO SCALE

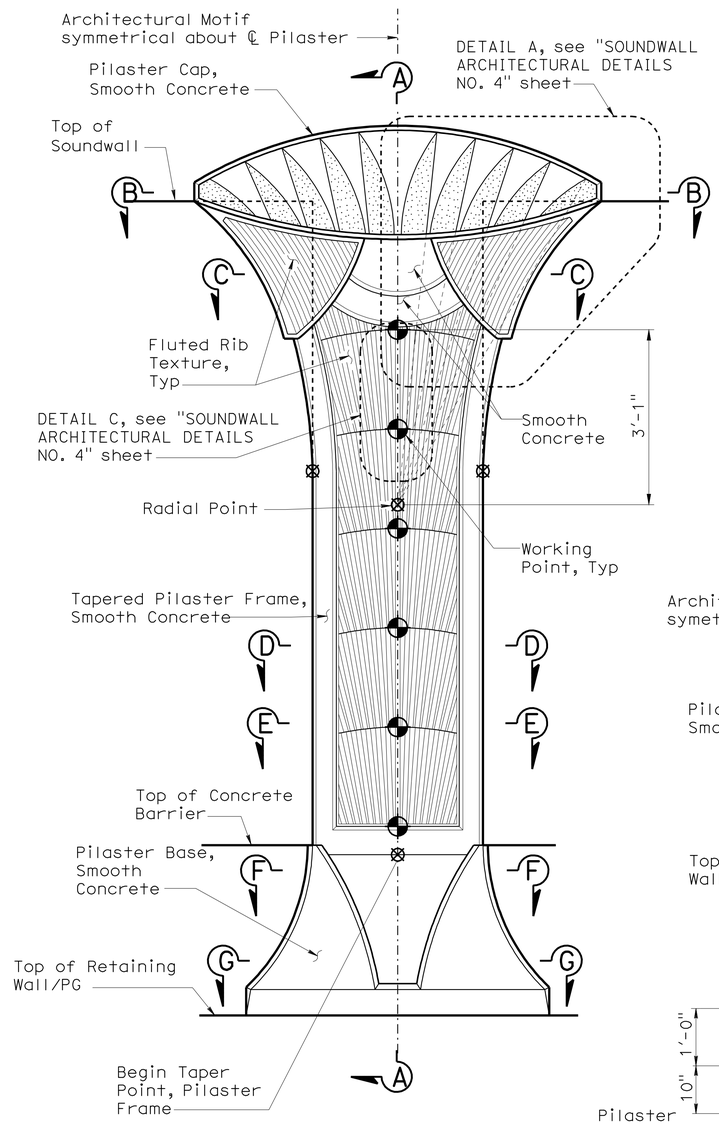


Note: For additional details not shown, see "PILASTER ELEVATION - FREEWAY SIDE"

FREEWAY SIDE

Notes:

1. For SECTION A-A", "SECTION B-B", "SECTION C-C", "SECTION D-D", "SECTION E-E", "SECTION F-F", SECTION G-G" and "SECTION H-H" see "SOUNDWALL ARCHITECTURAL DETAILS NO. 3" sheet.
2. All dimensions symmetrical about ℄ Pilaster.
3. Beveled edges are 45° unless otherwise noted.
4. All vertical dimension are measured along the ℄ Pilaster (Pilaster shall be vertical).

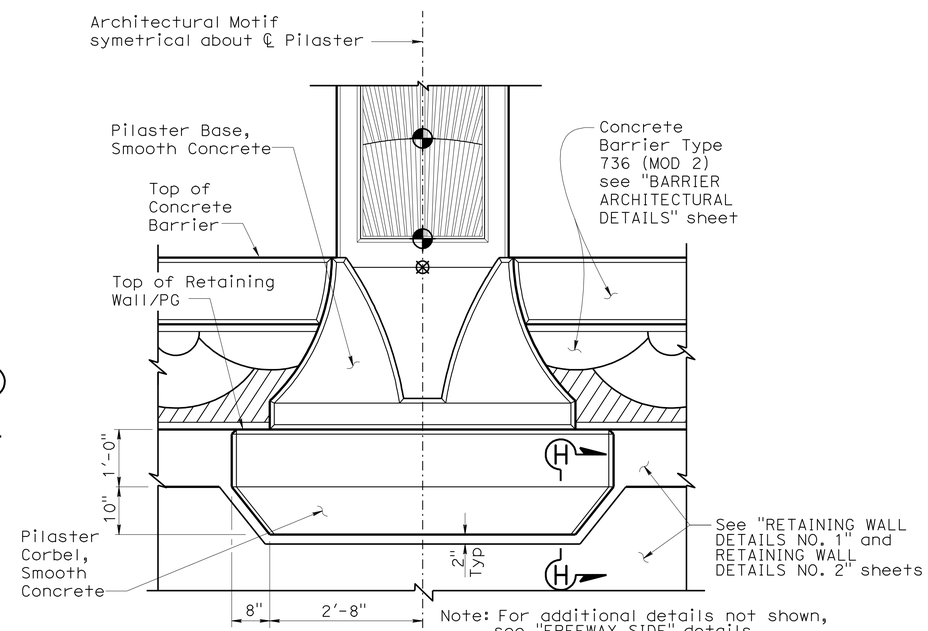


Note: For additional details not shown, see "FREEWAY SIDE" details.

BACK SIDE

PILASTER ARCHITECTURAL MOTIF

¾" = 1'-0"

1 REVISED PER ADDENDUM No. 1 DATED JULY 13, 2012

| | BY | CHECKED |
|---|---|---|
| DESIGN | Isaac Tasabia | Javier Chavez |
| DETAILS | Herman Mauroschadt | Javier Chavez |
| QUANTITIES | Suzan Moradi | Gabriel Galo |

STATE OF CALIFORNIA
DEPARTMENT OF TRANSPORTATION

DIVISION OF ENGINEERING SERVICES
BRIDGE ARCHITECTURE AND AESTHETICS

BRIDGE NO. 53-3041
POST MILE 3.66

BLOOMFIELD AVENUE UC
SOUNDWALL ARCHITECTURAL DETAILS NO. 2

STRUCTURES DESIGN DETAIL SHEET (ENGLISH) (REV. 10/25/05)

ORIGINAL SCALE IN INCHES FOR REDUCED PLANS 0 1 2 3

CU 07
EA 215931

DISREGARD PRINTS BEARING EARLIER REVISION DATES 1-23-12

REVISION DATES

SHEET 66 OF 80

FILE => 53-3041-x-swadet02.dds

USERNAME => s124436 DATE PLOTTED => 12-JUL-2012 TIME PLOTTED => 13:56

| DIST | COUNTY | ROUTE | POST MILES TOTAL PROJECT | SHEET No | TOTAL SHEETS |
|---|---|---|---|---|---|
| 07 | LA | 5 | 2.4/4.0 | 861 | 1288 |

LICENSED ARCHITECT — DATE 1/31/12

3-26-12
PLANS APPROVAL DATE

LICENSED ARCHITECT H. Javier Chavez 14073 03-31-13 Renewal Date STATE OF CALIFORNIA

The State of California or its officers or agents shall not be responsible for the accuracy or completeness of electronic copies of this plan sheet.

1

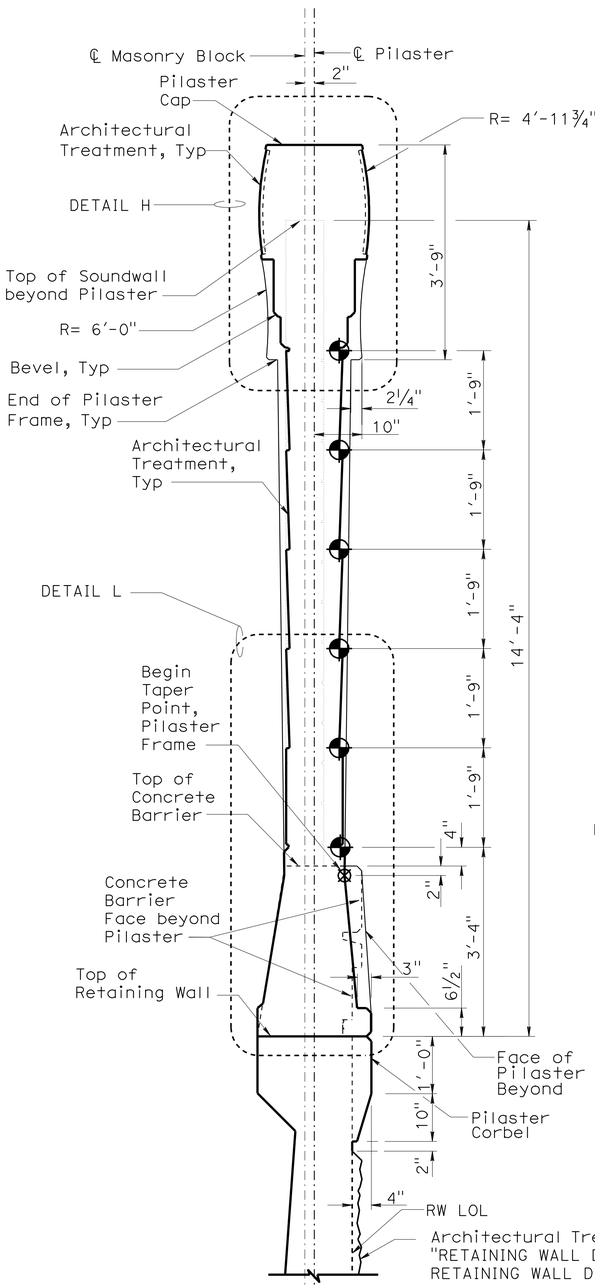


SECTION A-A
¾" = 1'-0"

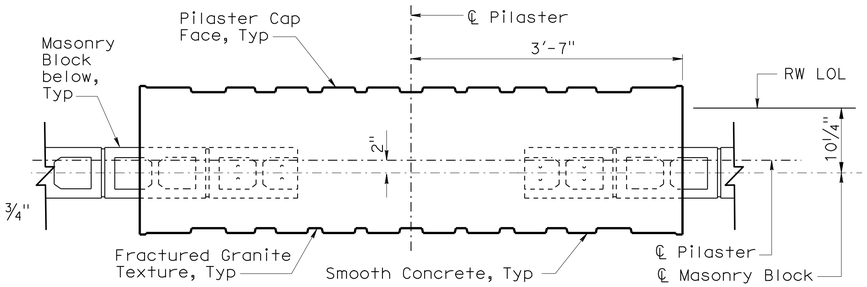


SECTION B-B
1" = 1'-0"

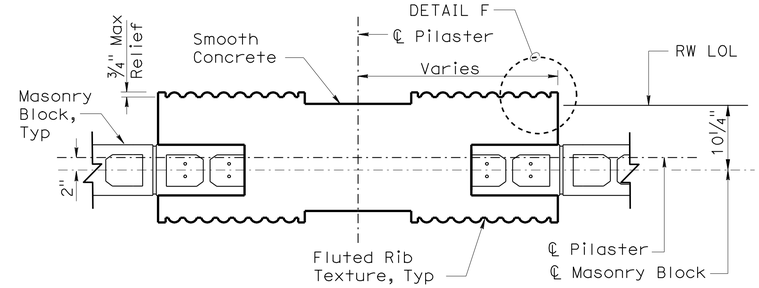


SECTION C-C
1" = 1'-0"

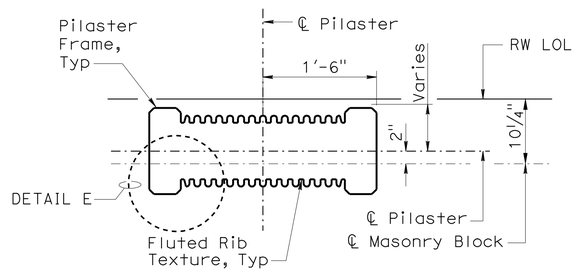


SECTION D-D
1" = 1'-0"

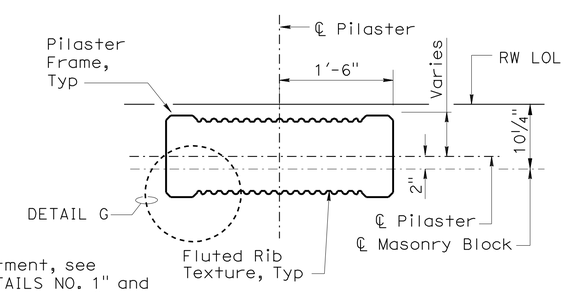


SECTION E-E
1" = 1'-0"

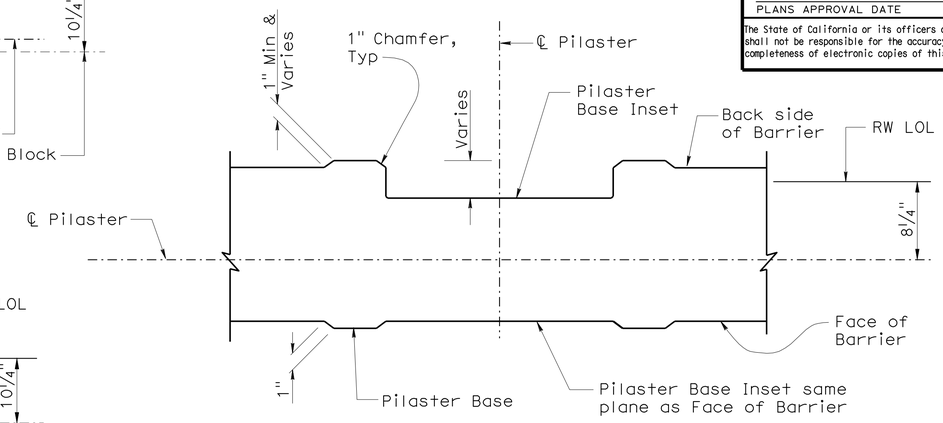


SECTION F-F
1½" = 1'-0"

Notes:

1. All dimensions symmetrical about ℄ Pilaster.
2. All vertical dimension are measured along the ℄ Pilaster (Pilaster shall be vertical).
3. For "DETAIL E", "DETAIL F" and "DETAIL G" see "SOUNDWALL ARCHITECTURAL DETAILS NO. 4" sheet.
4. For "DETAIL H" and "DETAIL L" see "SOUNDWALL ARCHITECTURAL DETAILS NO. 5" sheet.

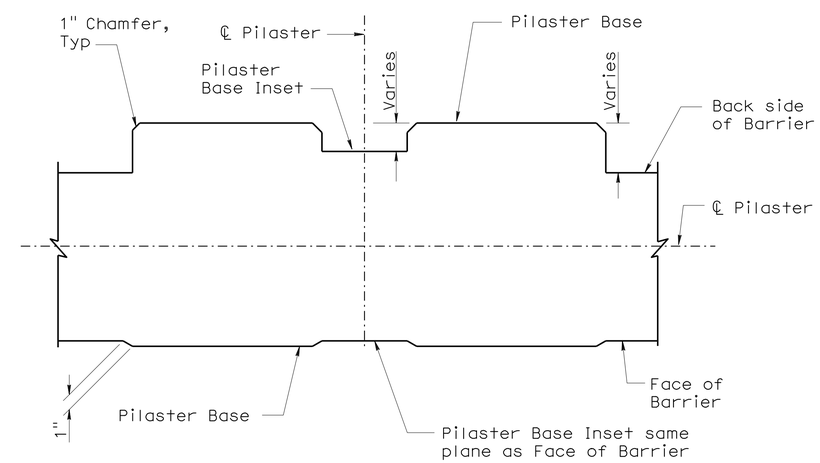


SECTION G-G
1½" = 1'-0"

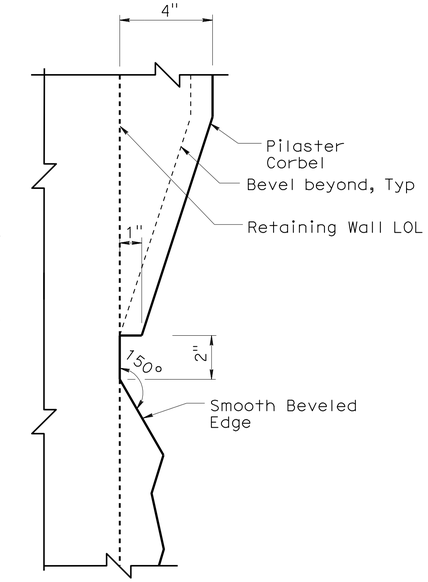


SECTION H-H
NO SCALE

1 REVISED PER ADDENDUM No. 1 DATED JULY 13, 2012

| | BY | CHECKED |
|---|---|---|
| DESIGN | Isaac Tasabia | Javier Chavez |
| DETAILS | Herman Mauroschadt | Javier Chavez |
| QUANTITIES | Suzan Moradi | Gabriel Galo |

STATE OF CALIFORNIA
DEPARTMENT OF TRANSPORTATION

DIVISION OF ENGINEERING SERVICES
BRIDGE ARCHITECTURE AND AESTHETICS

BRIDGE NO. 53-3041
POST MILE 3.66

BLOOMFIELD AVENUE UC
SOUNDWALL ARCHITECTURAL DETAILS NO. 3

STRUCTURES DESIGN DETAIL SHEET (ENGLISH) (REV. 10/25/05)

ORIGINAL SCALE IN INCHES FOR REDUCED PLANS 0 1 2 3

CU 07
EA 215931

DISREGARD PRINTS BEARING EARLIER REVISION DATES 1-23-12

REVISION DATES

SHEET 67 OF 80

FILE => 53-3041-x-swadet03.add

USERNAME => s124496 DATE PLOTTED => 12-JUL-2012 TIME PLOTTED => 13:56

| DIST | COUNTY | ROUTE | POST MILES TOTAL PROJECT | SHEET No | TOTAL SHEETS |
|---|---|---|---|---|---|
| 07 | LA | 5 | 2.4/4.0 | 862 | 1288 |

LICENSED ARCHITECT — 1/31/12 DATE

3-26-12
PLANS APPROVAL DATE

LICENSED ARCHITECT H. Javier Chavez 14073 03-31-13 Renewal Date STATE OF CALIFORNIA

The State of California or its officers or agents shall not be responsible for the accuracy or completeness of electronic copies of this plan sheet.

1

Notes:

1. All notes and dimensions symetrical about ℄ Pilaster.
2. Beveled edges are 45° unless otherwise noted.
3. For Retaining Wall split slate texture, see "RETAINING WALL ARCHITECTURAL DETAILS" sheet.
4. For Type 736SV (MOD) Barrier fractured granite texture, see "CONCRETE BARRIER TYPE 736A (MOD 2) DETAILS" sheet if applicable.

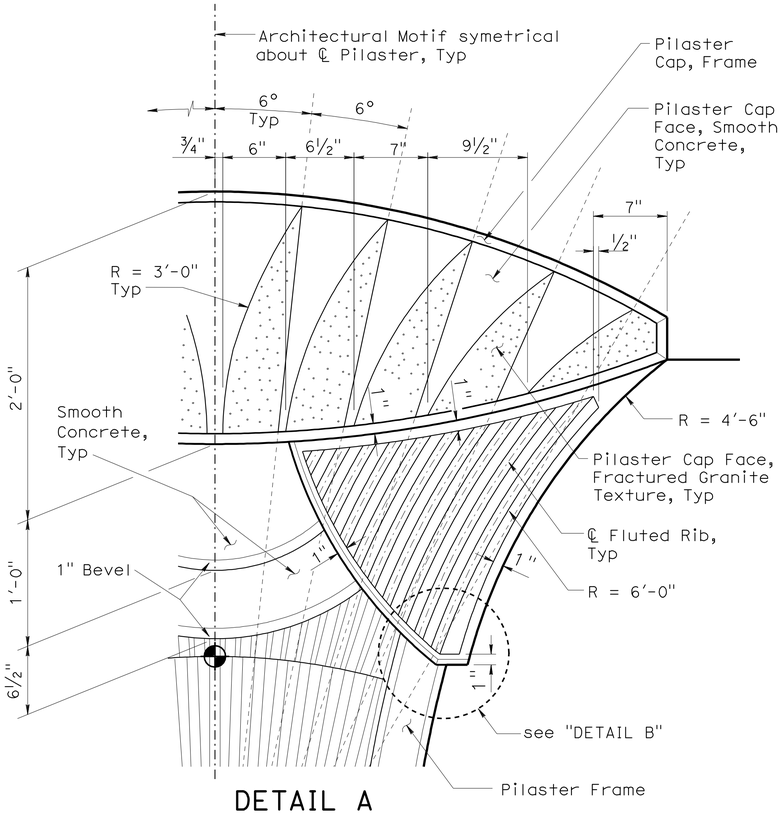


DETAIL A
NO SCALE

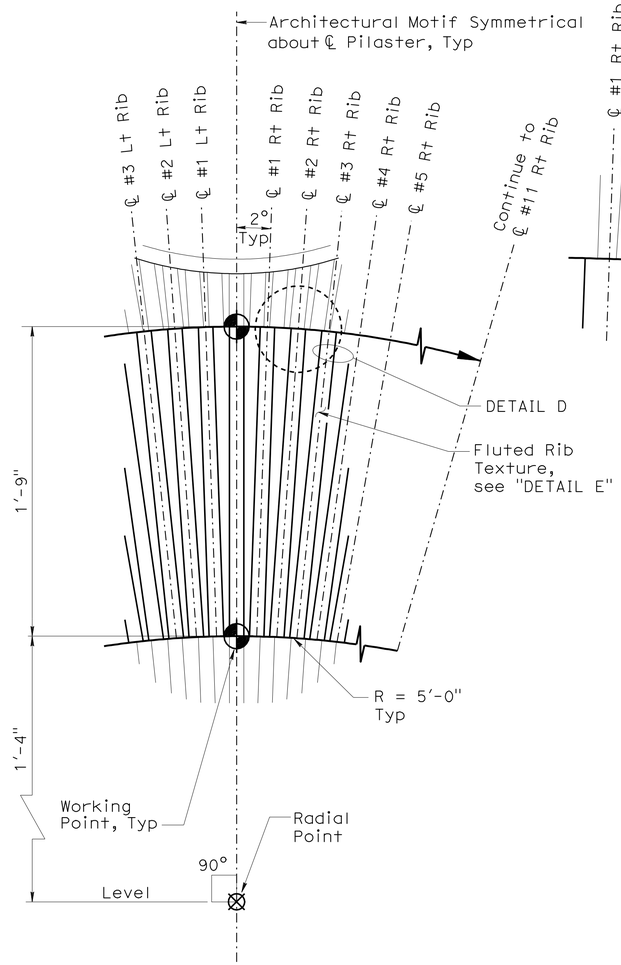


DETAIL C
NO SCALE

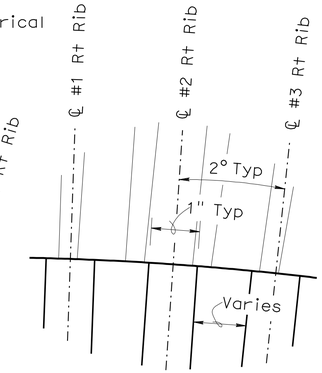


DETAIL D
NO SCALE

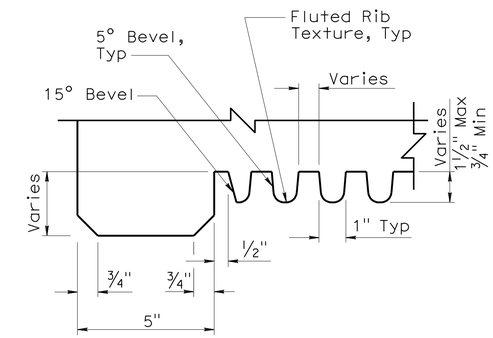


DETAIL E
NO SCALE

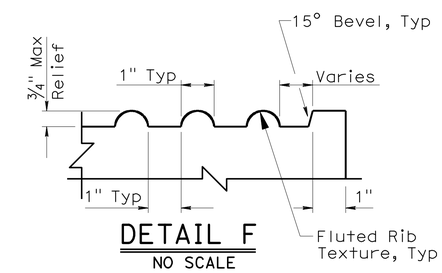


DETAIL F
NO SCALE

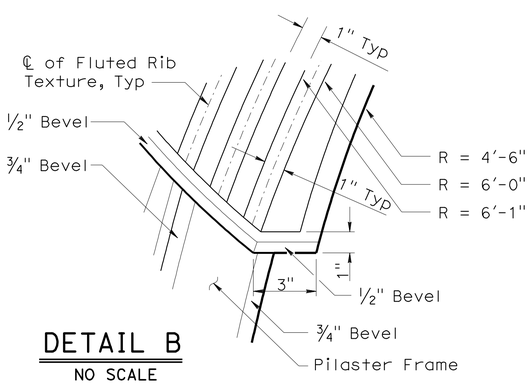


DETAIL B
NO SCALE

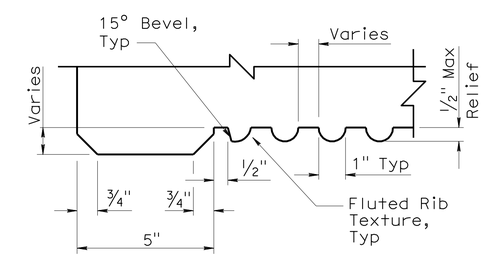


DETAIL G
NO SCALE

1 REVISED PER ADDENDUM No. 1 DATED JULY 13, 2012

| | BY | CHECKED |
|---|---|---|
| DESIGN | Isaac Tasabia | Javier Chavez |
| DETAILS | Herman Mauroschadt | Javier Chavez |
| QUANTITIES | Suzan Moradi | Gabriel Galo |

STATE OF CALIFORNIA
DEPARTMENT OF TRANSPORTATION

DIVISION OF ENGINEERING SERVICES
BRIDGE ARCHITECTURE AND AESTHETICS

BRIDGE NO. 53-3041
POST MILE 3.66

# BLOOMFIELD AVENUE UC
## SOUNDWALL ARCHITECTURAL DETAILS NO. 4

STRUCTURES DESIGN DETAIL SHEET (ENGLISH) (REV. 10/25/05)

ORIGINAL SCALE IN INCHES FOR REDUCED PLANS 0 1 2 3

CU 07
EA 215931

DISREGARD PRINTS BEARING EARLIER REVISION DATES → 1-23-12

REVISION DATES

SHEET 68 OF 80

FILE => 53-3041-x-swadet04.dd

USERNAME => s124496 DATE PLOTTED => 12-JUL-2012 TIME PLOTTED => 13:56

| DIST | COUNTY | ROUTE | POST MILES TOTAL PROJECT | SHEET No | TOTAL SHEETS |
|---|---|---|---|---|---|
| 07 | LA | 5 | 2.4/4.0 | 863 | 1288 |

LICENSED ARCHITECT — DATE 1/31/12

3-26-12
PLANS APPROVAL DATE

LICENSED ARCHITECT H. Javier Chavez 14073 03-31-13 Renewal Date STATE OF CALIFORNIA

The State of California or its officers or agents shall not be responsible for the accuracy or completeness of electronic copies of this plan sheet.

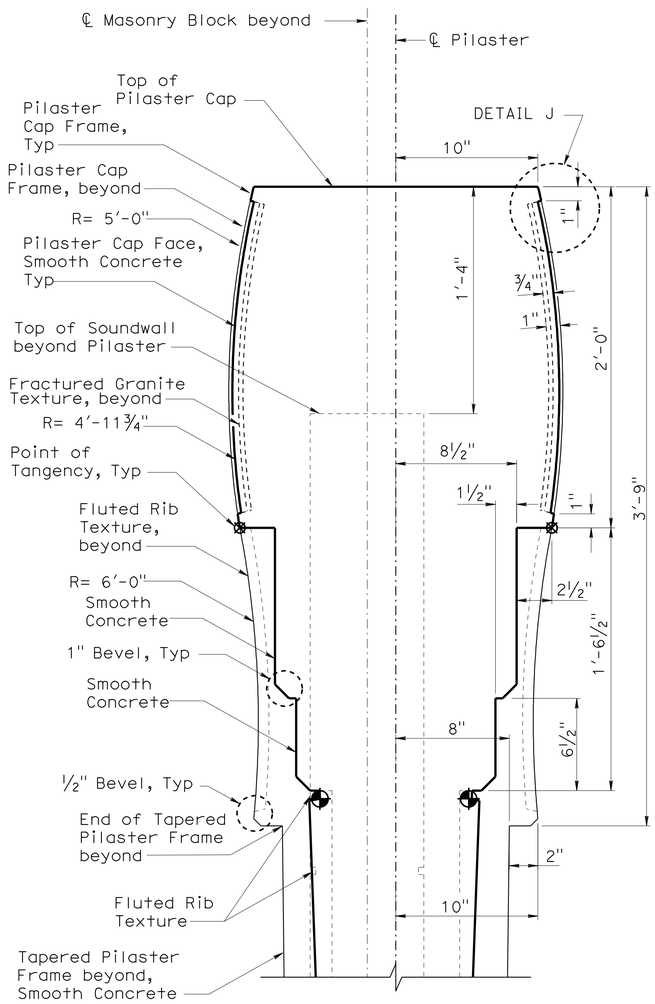


DETAIL H
NO SCALE

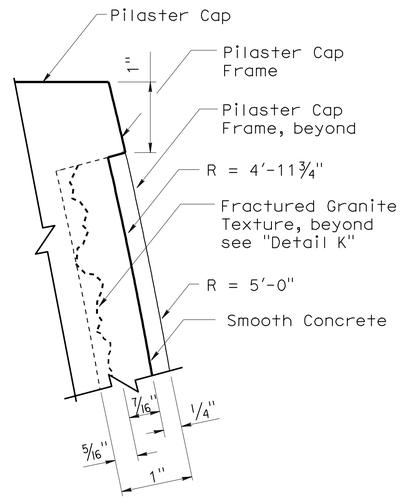


DETAIL J
NO SCALE

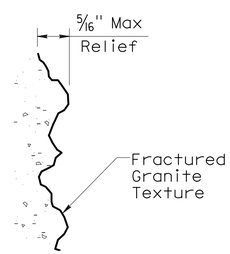


DETAIL K
NO SCALE

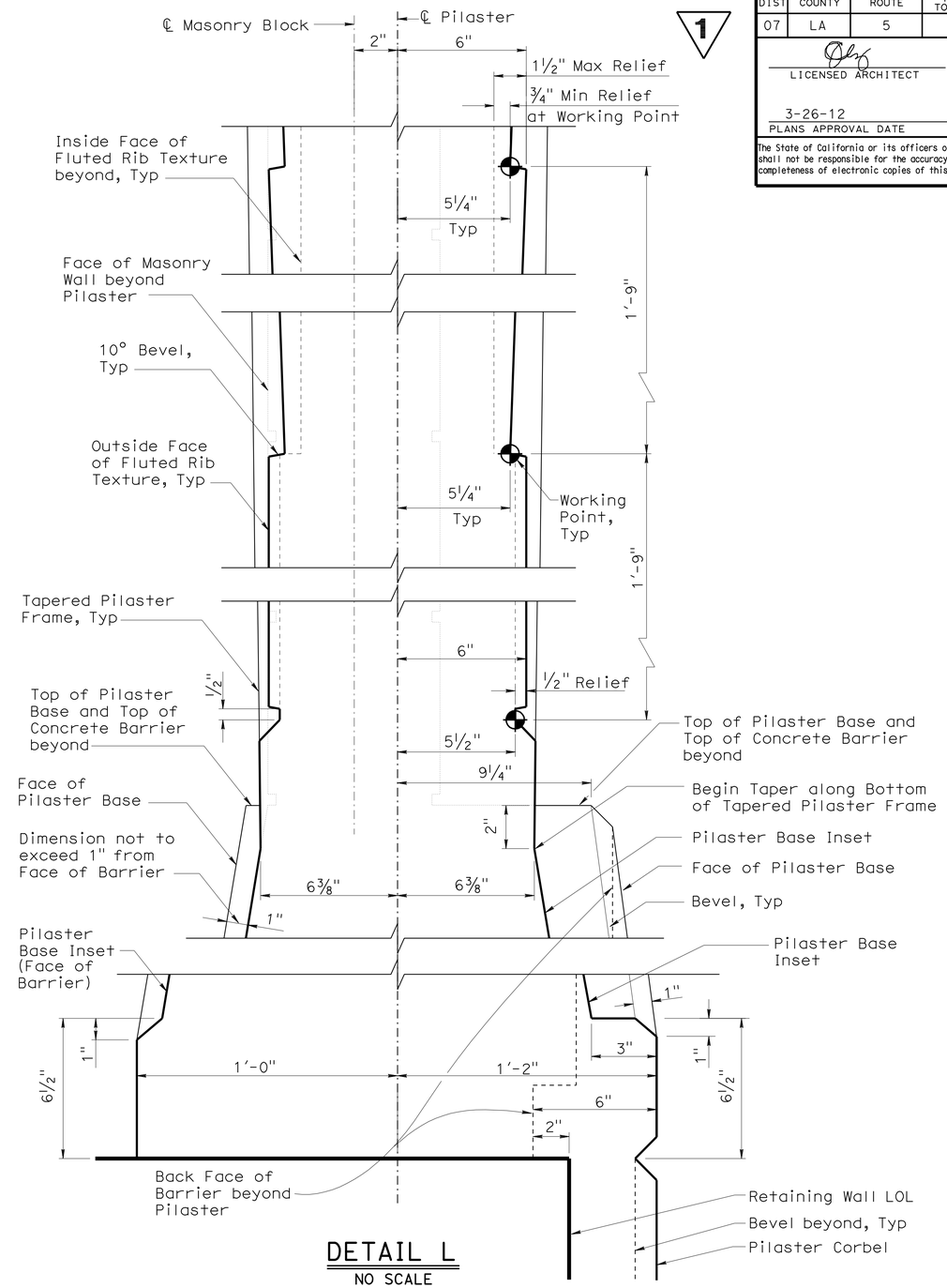


DETAIL L
NO SCALE

1 REVISED PER ADDENDUM No. 1 DATED JULY 13, 2012

| | | | |
|---|---|---|---|
| DESIGN | BY Isaac Tasabia | CHECKED Javier Chavez | |
| DETAILS | BY Herman Mauroschadt | CHECKED Javier Chavez | |
| QUANTITIES | BY Suzan Moradi | CHECKED Gabriel Galo | |

STATE OF CALIFORNIA
DEPARTMENT OF TRANSPORTATION

DIVISION OF ENGINEERING SERVICES
BRIDGE ARCHITECTURE AND AESTHETICS

BRIDGE NO. 53-3041
POST MILE 3.66

BLOOMFIELD AVENUE UC
SOUNDWALL ARCHITECTURAL DETAILS NO. 5

STRUCTURES DESIGN DETAIL SHEET (ENGLISH) (REV. 10/25/05)

ORIGINAL SCALE IN INCHES FOR REDUCED PLANS 0 1 2 3

CU 07
EA 215931

DISREGARD PRINTS BEARING EARLIER REVISION DATES 1-23-12

REVISION DATES

SHEET 69 OF 80

FILE => 53-3041-x-swadet05.add

USERNAME => s124496 DATE PLOTTED => 12-JUL-2012 TIME PLOTTED => 13:56

| DIST | COUNTY | ROUTE | POST MILES TOTAL PROJECT | SHEET No | TOTAL SHEETS |
|---|---|---|---|---|---|
| 07 | LA | 5 | 2.4/4.0 | 864 | 1288 |

Andrew Rittenhouse 12-12-11
REGISTERED CIVIL ENGINEER DATE

3-26-12
PLANS APPROVAL DATE

*The State of California or its officers or agents shall not be responsible for the accuracy or completeness of electronic copies of this plan sheet.*

REGISTERED PROFESSIONAL ENGINEER
Andrew P. Rittenhouse
No. 61006
Exp. 12-31-12
CIVIL
STATE OF CALIFORNIA

1

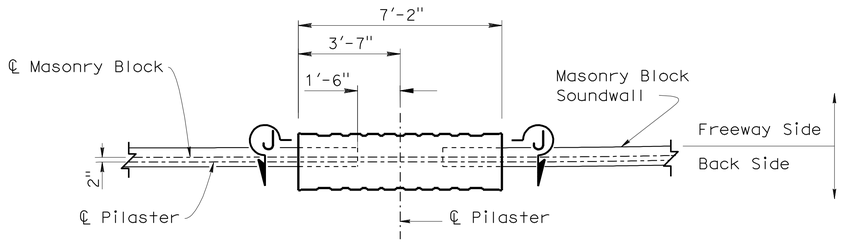


(Concrete Barrier not shown)

## PART SOUND WALL PLAN

3/8" = 1'-0"

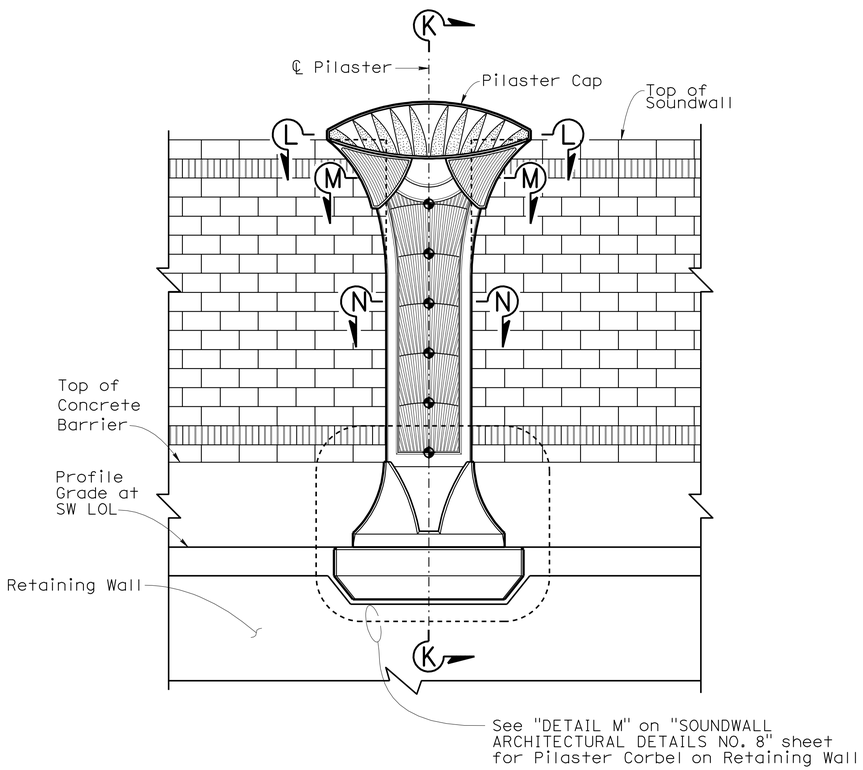


## PART SOUNDWALL ELEVATION

3/8" = 1'-0"

Note:
For "SECTION K-K", "SECTION L-L", "SECTION M-M" and "SECTION N-N", see "SOUNDWALL ARCHITECTURAL DETAILS NO. 7" sheet.

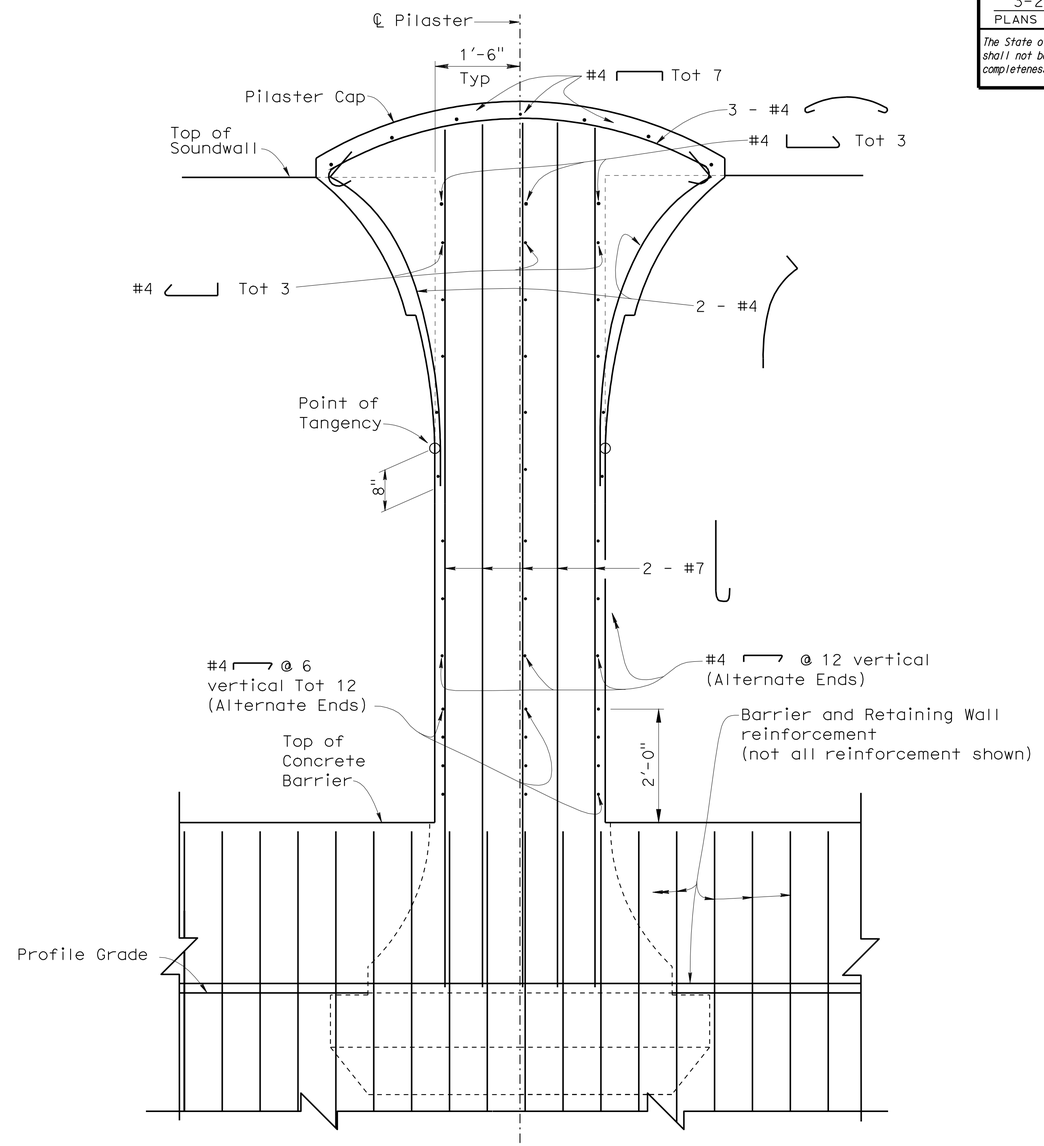


Note: Pilaster Corbel Reinf not shown.

## SECTION J-J

3/4" = 1'-0"

1 **REVISED PER ADDENDUM No. 1 DATED JULY 13, 2012**

| | BY | CHECKED |
|---|---|---|
| DESIGN | Isaac Tasabia | Javier Chavez |
| DETAILS | Herman Mauroschadt | Javier Chavez |
| QUANTITIES | Suzan Moradi | Gabriel Galo |

STATE OF CALIFORNIA
DEPARTMENT OF TRANSPORTATION

DIVISION OF ENGINEERING SERVICES
STRUCTURE DESIGN
DESIGN BRANCH 15

BRIDGE NO. 53-3041
POST MILE 3.66

BLOOMFIELD AVENUE UC
SOUNDWALL ARCHITECTURAL DETAILS NO. 6

STRUCTURES DESIGN DETAIL SHEET (ENGLISH) (REV. 10/25/05)

ORIGINAL SCALE IN INCHES FOR REDUCED PLANS 0 1 2 3

CU 07
EA 215931

DISREGARD PRINTS BEARING EARLIER REVISION DATES 2-2-12

REVISION DATES

SHEET 70 OF 80

FILE => 53-3041-x-swadet06.add

USERNAME => s124496 DATE PLOTTED => 12-JUL-2012 TIME PLOTTED => 13:56

| DIST | COUNTY | ROUTE | POST MILES TOTAL PROJECT | SHEET No | TOTAL SHEETS |
|---|---|---|---|---|---|
| 07 | LA | 5 | 2.4/4.0 | 865 | 1288 |

Andrew Rittenhouse 12-12-11
REGISTERED CIVIL ENGINEER DATE

3-26-12
PLANS APPROVAL DATE

REGISTERED PROFESSIONAL ENGINEER Andrew P. Rittenhouse No. 61006 Exp. 12-31-12 CIVIL STATE OF CALIFORNIA

*The State of California or its officers or agents shall not be responsible for the accuracy or completeness of electronic copies of this plan sheet.*

1

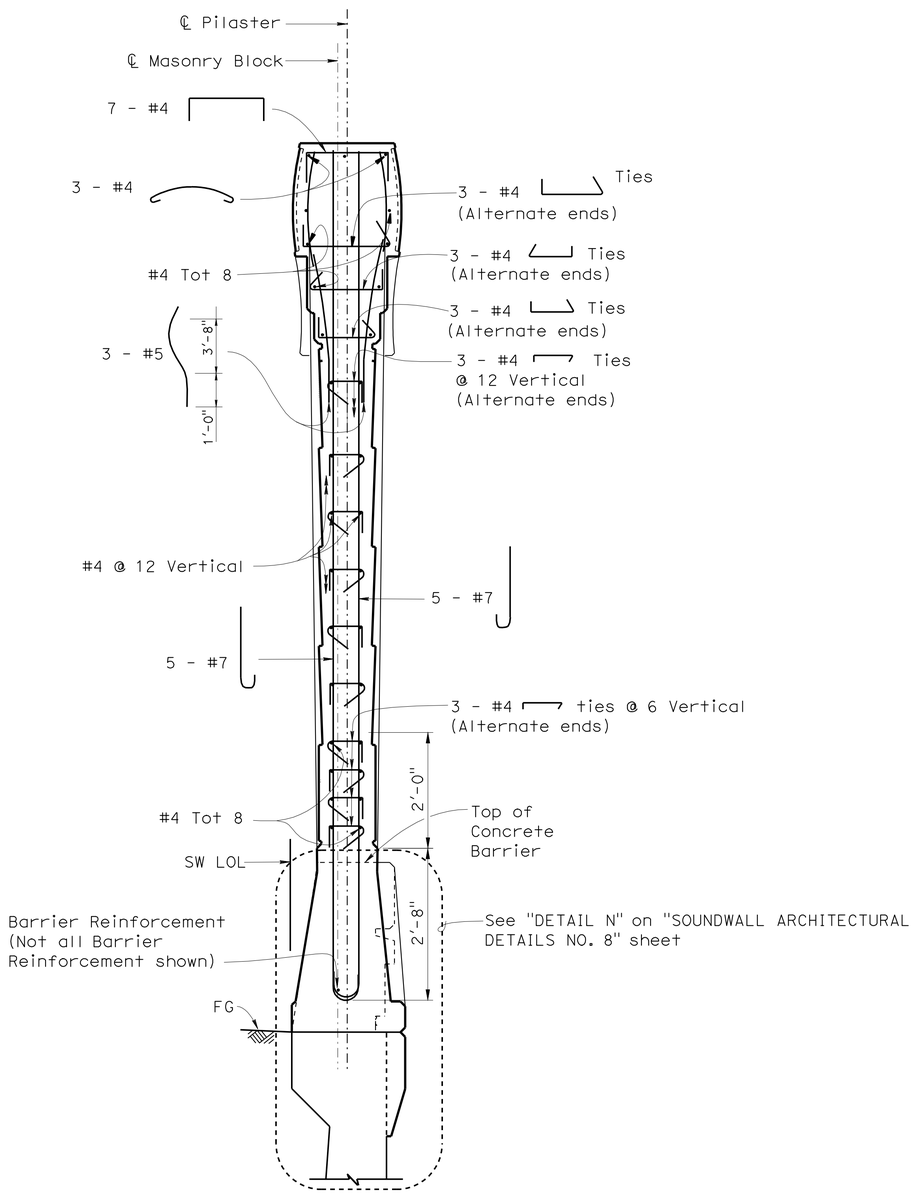


SECTION K-K
¾" = 1'-0"

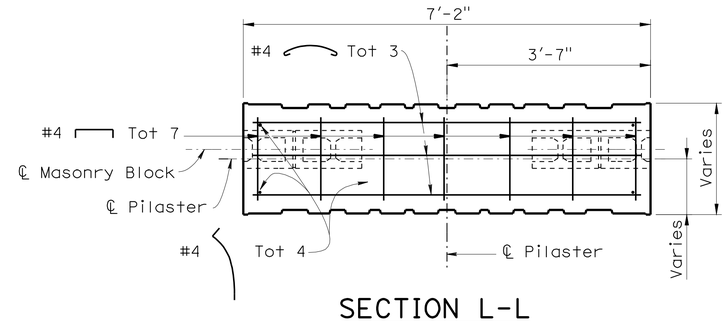


SECTION L-L
¾" = 1'-0"

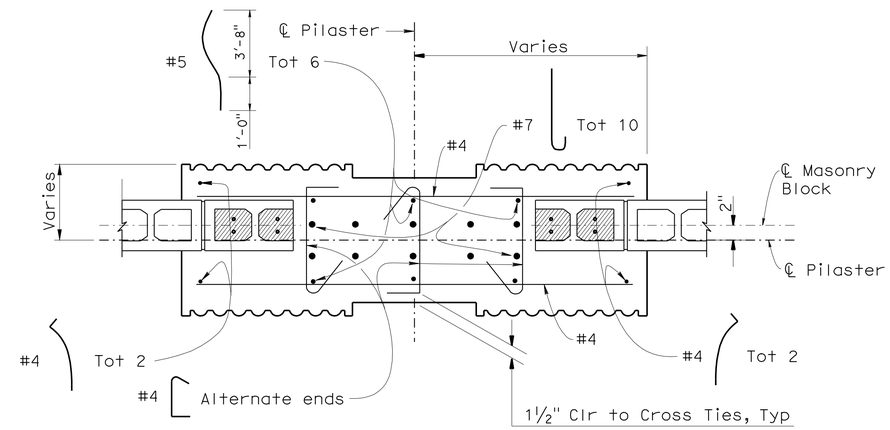


SECTION M-M
1" = 1'-0"

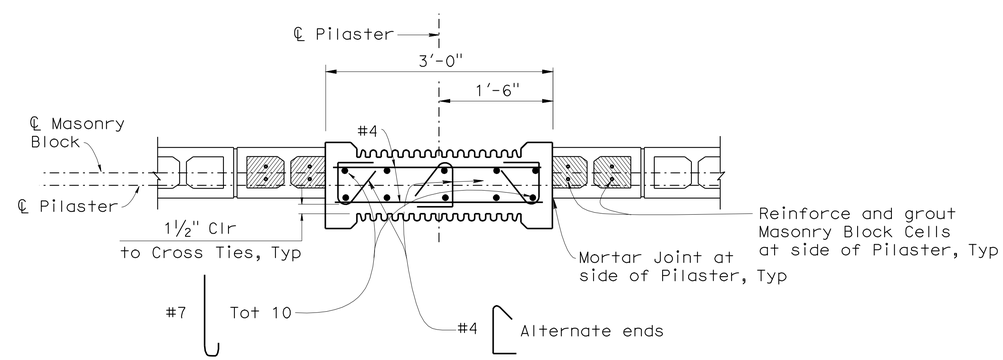


SECTION N-N
1" = 1'-0"

1 **REVISED PER ADDENDUM No. 1 DATED JULY 13, 2012**

| | BY | CHECKED |
|---|---|---|
| DESIGN | Isaac Tasabia | Javier Chavez |
| DETAILS | Herman Mauroschadt | Javier Chavez |
| QUANTITIES | Suzan Moradi | Gabriel Galo |

STATE OF CALIFORNIA DEPARTMENT OF TRANSPORTATION

DIVISION OF ENGINEERING SERVICES STRUCTURE DESIGN
DESIGN BRANCH 15

BRIDGE NO. 53-3041
POST MILE 3.66

BLOOMFIELD AVENUE UC
SOUNDWALL ARCHITECTURAL DETAILS NO. 7

STRUCTURES DESIGN DETAIL SHEET (ENGLISH) (REV. 10/25/05)

ORIGINAL SCALE IN INCHES FOR REDUCED PLANS 0 1 2 3

CU 07
EA 215931

DISREGARD PRINTS BEARING EARLIER REVISION DATES 2-2-12

REVISION DATES

SHEET 71 OF 80

FILE => 53-3041-x-swadet07.add

USERNAME => s124436 DATE PLOTTED => 12-JUL-2012 TIME PLOTTED => 13:57

| DIST | COUNTY | ROUTE | POST MILES TOTAL PROJECT | SHEET No | TOTAL SHEETS |
|---|---|---|---|---|---|
| 07 | LA | 5 | 2.4/4.0 | 876 | 1288 |

Andrew Rittenhouse 12-12-11
REGISTERED CIVIL ENGINEER DATE

3-26-12
PLANS APPROVAL DATE

REGISTERED PROFESSIONAL ENGINEER
Andrew P. Rittenhouse
No. 61006
Exp. 12-31-12
CIVIL
STATE OF CALIFORNIA

*The State of California or its officers or agents shall not be responsible for the accuracy or completeness of electronic copies of this plan sheet.*

# INDEX TO PLANS


| SHEET NO. | TITLE |
|---|---|
| 1 | GENERAL PLAN |
| 2 | INDEX TO PLANS |
| 3 | DECK CONTOURS |
| 4 | FOUNDATION PLAN |
| 5 | ABUTMENT 1 LAYOUT |
| 6 | ABUTMENT 2 LAYOUT |
| 7 | ABUTMENT DETAILS NO. 1 |
| 8 | ABUTMENT DETAILS NO. 2 |
| 9 | ABUTMENT DETAILS NO. 3 |
| 10 | ABUTMENT DETAILS NO. 4 |
| 11 | ABUTMENT DETAILS NO. 5 |
| 12 | ABUTMENT DETAILS NO. 6 |
| 13 | ABUTMENT DETAILS NO. 7 |
| 14 | TYPICAL SECTION |
| 15 | GIRDER LAYOUT |
| 16 | GIRDER DETAILS |
| 17 | GIRDER REINFORCEMENT |
| 18 | CONCRETE BARRIER TYPE 736 (MOD 1) |
| 19 | PTFE/SPHERICAL EXPANSION BEARING DETAILS No. 1 |
| 20 | PTFE/SPHERICAL EXPANSION BEARING DETAILS No. 2 |
| 21 | JOINT SEAL ASSEMBLY (MAXIMUM MOVEMENT RATING = 4") |
| 22 | STRUCTURE APPROACH TYPE N(30S) |
| 23 | STRUCTURE APPROACH DRAINAGE DETAILS |
| 24 | LOG OF TEST BORINGS SHEET 1 OF 5 |
| 25 | LOG OF TEST BORINGS SHEET 2 OF 5 |
| 26 | LOG OF TEST BORINGS SHEET 3 OF 5 |
| 27 | LOG OF TEST BORINGS SHEET 4 OF 5 |
| 28 | LOG OF TEST BORINGS SHEET 5 OF 5 |


# STANDARD PLANS DATED MAY 2006

| | |
|---|---|
| A10A | ACRONYMS AND ABBREVIATIONS (SHEET 1 OF 2) |
| A10B | ACRONYMS AND ABBREVIATIONS (SHEET 2 OF 2) |
| A62B | LIMITS OF PAYMENT FOR EXCAVATION AND BACKFILL BRIDGE SURCHARGE AND WALL |
| A62C | LIMITS OF PAYMENT FOR EXCAVATION AND BACKFILL BRIDGE |
| B0-1 | BRIDGE DETAILS |
| B0-3 | BRIDGE DETAILS |
| B0-5 | BRIDGE DETAILS |
| B0-13 | BRIDGE DETAILS |
| 1 B2-5 | PILE DETAILS - CLASS 90 AND CLASS 140 |
| B3-2 | RETAINING WALL TYPE 1 H=32' THROUGH 36' |
| B7-1 | BOX GIRDER DETAILS |
| B7-10 | UTILITY OPENING BOX GIRDER |
| B8-5 | CAST-IN-PLACE PRESTRESSED GIRDER DETAILS |
| B11-56 | CONCRETE BARRIER TYPE 736 |
| B14-4 | WATER SUPPLY LINE (BRIDGE) (PIPE SIZES LESS THAN 4") |
| B14-5 | WATER SUPPLY LINE (DETAILS) (PIPE SIZES LESS THAN 4") |

STANDARD PLAN SHEET NO.

DETAIL NO.

# GENERAL NOTES
## LOAD AND RESISTANCE FACTOR DESIGN

**DESIGN:**

AASHTO LRFD BRIDGE DESIGN PECIFICATIONS, 4TH edition and California Amendments, dated December 2008

**SEISMIC DESIGN:**

CALTRANS SEISMIC DESIGN CRITERIA (SDC), Version 1.6 dated November 2010

**DEAD LOAD:**

Includes 35 psf for future wearing surface.

**LIVE LOADING:**

HL93 and permit design load.

**SEISMIC LOADING:**

Soil Profile: $V_{S30}$ = 951 ft/sec
Moment Magnitude: $M_{MAX}$ =7.3
Peak Ground Acceleration: 0.62 g

**CONCRETE:**

fy = 60 ksi
f'c = 3.6 ksi, unless otherwise shown
n = 8, unless otherwise shown

**PRESTRESSED CONCRETE**

**See "Prestressing Notes" on "GIRDER LAYOUT" sheet**

# PILE DATA TABLE

| LOCATION | PILE TYPE | NOMINAL RESISTANCE(kips) | | DESIGN TIP ELEVATIONS (ft) | SPECIFIED TIP ELEVATIONS (ft) | NOMINAL DRIVING RESISTANCE (kips) |
|---|---|---|---|---|---|---|
| | | Compression | Tension | | | |
| Abut 1 | 24"ø Pipe Pile | 360 | 0 | 40.3 (a)<br>60.7 (c)<br>58.2 (d) | 40.3 | 360 |
| Abut 1 Lt WW | Class 90 | 180 | 0 | 48.0 (a) | 48.0 | 180 |
| Abut 2 | 24"ø Pipe Pile | 360 | 0 | 43.5 (a)<br>59.6 (c)<br>59.1 (d) | 43.5 | 360 |
| Abut 2 Lt WW | Class 90 | 180 | 0 | 48.0 (a) | 48.0 | 180 |

Note: Design tip elevations are controlled by: (a) Compression, (b) Tension, (c) Settlement, (d) Lateral Load, respectively.

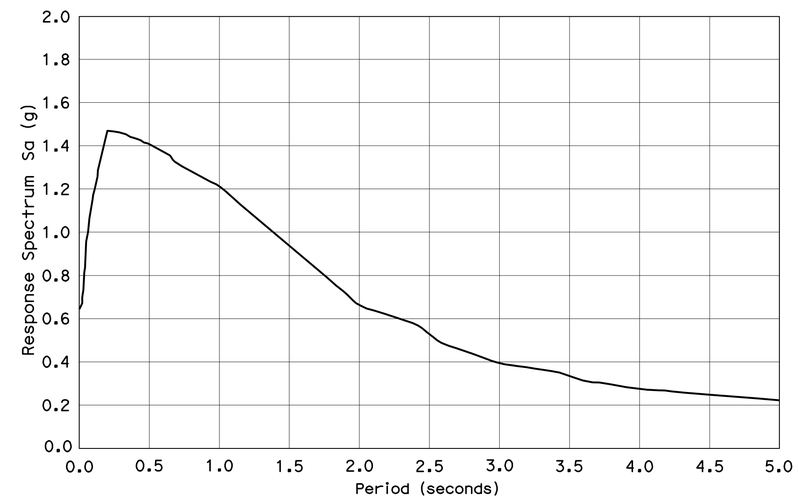


## SITE SPECIFIC ACCELERATION RESPONSE SPECTRA

Note:

ARS Curve for information only. Not used in design.

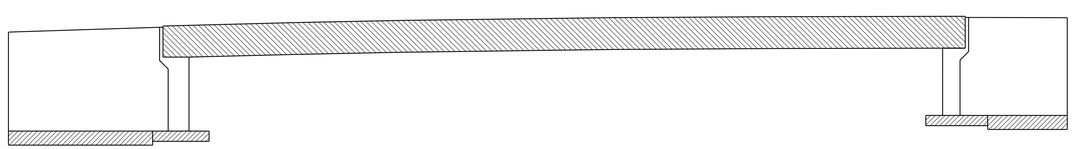

Legend:

Structural Concrete, Bridge

Structural Concrete, Bridge Footing

Structural Concrete, Bridge (6 ksi at 28 days, n = 6.4)

1 **REVISED PER ADDENDUM No. 1 DATED JULY 13, 2012**

## CONCRETE STRENGTH AND TYPE LIMITS

No Scale

| | BY | CHECKED |
|---|---|---|
| DESIGN | Ruslan Novik | Suzan Moradi / Traci Menard |
| DETAILS | Herman Mauroschadt | Suzan Moradi |
| QUANTITIES | Sara Yip | Oleg Kreydich |

STATE OF CALIFORNIA
DEPARTMENT OF TRANSPORTATION

DIVISION OF ENGINEERING SERVICES
STRUCTURE DESIGN
DESIGN BRANCH 15

BRIDGE NO. 53-3042K
POST MILE 3.66

SOUTHBOUND ROSECRANS AVENUE OFF-RAMP
INDEX TO PLANS

STRUCTURES DESIGN DETAIL SHEET (ENGLISH) (REV. 10/25/05)

ORIGINAL SCALE IN INCHES FOR REDUCED PLANS 0 1 2 3

CU 07
EA 215931

DISREGARD PRINTS BEARING EARLIER REVISION DATES

REVISION DATES: 10-20-11, 11-28-11, 3-1-11, 12-5-11, 12-28-11, 2-2-12, 5-18-11, 6-17-11, 7-14-11

SHEET 2 OF 28

FILE => 53-3042k-b-itp.add

USERNAME => s124436 DATE PLOTTED => 12-JUL-2012 TIME PLOTTED => 13:57

| DIST. | COUNTY | ROUTE | POST MILES TOTAL PROJECT | SHEET NO. | TOTAL SHEETS |
|---|---|---|---|---|---|
| 07 | LA | 5 | 2.4/4.0 | 893 | 1288 |

1

Andrew Rittenhouse 12-12-11
REGISTERED ENGINEER - CIVIL

3-26-12
PLANS APPROVAL DATE

REGISTERED PROFESSIONAL ENGINEER Andrew P. Rittenhouse No. 61006 Exp. 12-31-12 CIVIL STATE OF CALIFORNIA

The State of California or its officers or agents shall not be responsible for the accuracy or completeness of electronic copies of this plan sheet.

## 2 EXPANSION BEARING TABLE

| BEARING LOCATION (See Note 7) | MAXIMUM VERTICAL LOAD (kips) | MINIMUM DEAD LOAD (kips) | DESIGN ROTATION (Radians) | CONCAVE PLATE | | | | | | CONVEX PLATE | | MASONRY PLATE | | | SOLE PLATE | | | ASSEMBLY HEIGHT |
|---|---|---|---|---|---|---|---|---|---|---|---|---|---|---|---|---|---|---|
| | | | | WIDTH & LENGTH | FLAT PTFE AREA | DIAMETER | SPHERICAL RADIUS | MINIMUM THICKNESS | MAXIMUM THICKNESS | DIAMETER | MAXIMUM THICKNESS | WIDTH | LENGTH | THICKNESS | WIDTH | LENGTH | THICKNESS | |
| | | | | $L_{cp}$ (in) | $A_{PTFE}$ (in) | $D_m$ (in) | $R_{act}$ (in) | $T_{min}$ (in) | $T_{max}$ (in) | $C_m$ (in) | $H_{act}$ (in) | $W_{mp}$ (in) | $L_{mp}$ (in) | $T_{mp}$ (in) | $W_{sp}$ (in) | $L_{sp}$ (in) | $T_{sp}$ (in) | $A_h$ (in) |
| X | 935 | 513 | 2.00 | 18.25 | 225.00 | 17.00 | 36.00 | 0.75 | 2.00 | 19.50 | 2.10 | 27.00 | 27.00 | 2.25 | 23.00 | 30.00 | 2.50 | 7.60 |

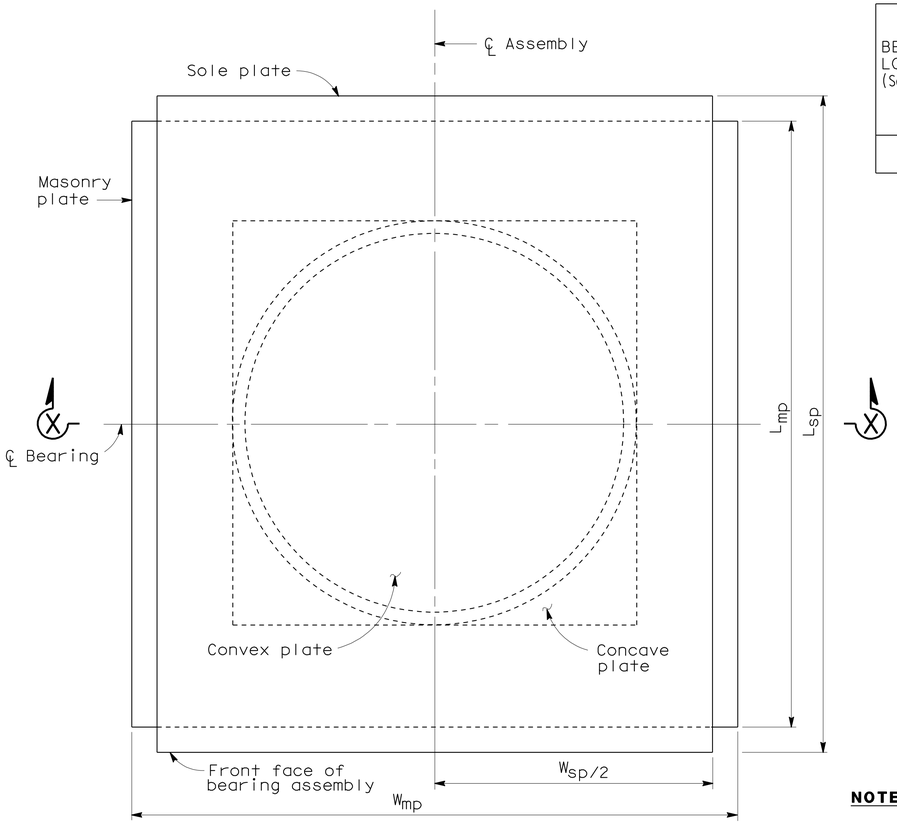


PLAN
No Scale

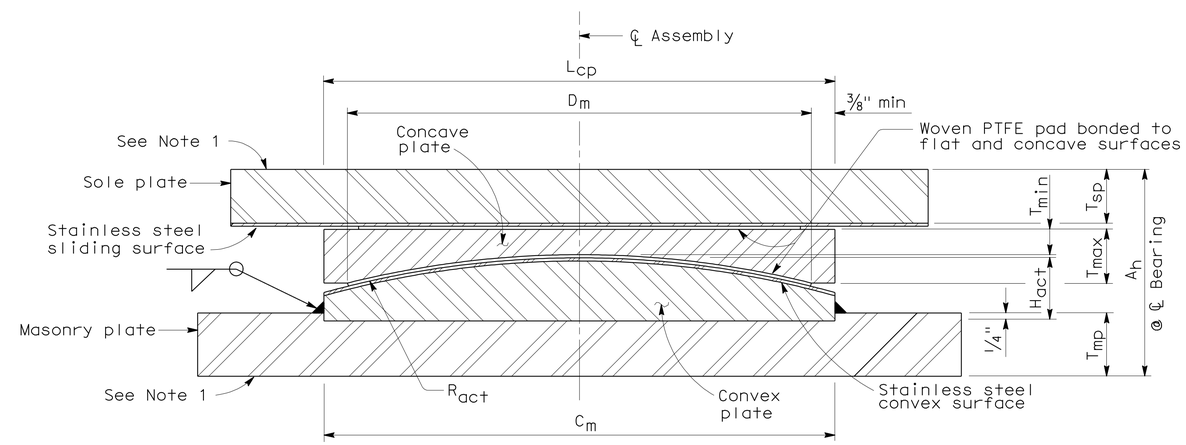


SECTION X-X
No Scale

**NOTES:** 1

1. Anchorage method not shown, for Anchorage Details see "PTFE/SPHERICAL EXPANSION BEARING DETAILS No. 2" sheet.
2. All units in inches unless otherwise noted.
3. All dimensions shown are steel only unless otherwise noted.
4. $H_{act}$ includes stainless steel.
5. $A_h$ includes PTFE, substratum and stainless steel, (Varies).
6. $R_{act}$ is to sliding surface.
7. For Bearing Locations see "ABUTMENT 1 LAYOUT" & "ABUTMENT 2 LAYOUT" sheets.

1 **REVISED PER ADDENDUM No. 1 DATED JULY 13, 2012**

3

STANDARD DRAWING

FILE NO. xs9-010e

APPROVED BY T DELIS
RESPONSIBLE TECHNICAL SPECIALIST
APPROVAL DATE 6-12-08

RELEASED BY ROBERTO LACALLE
RESPONSIBLE OFFICE CHIEF
RELEASE DATE 6-12-08

1 Modified Notes
2 Modified Table
3 Modified Title

STATE OF CALIFORNIA
DEPARTMENT OF TRANSPORTATION

DIVISION OF ENGINEERING SERVICES

BRIDGE NO. 53-3042K
POST MILE 3.66

SOUTHBOUND ROSECRANS AVENUE OFF-RAMP
PTFE/SPHERICAL EXPANSION BEARING DETAILS NO. 1

DS OSD 2147A (ENGLISH STANDARD DRAWING "XS" BORDER REV. 01/11/08)

ORIGINAL SCALE IN INCHES FOR REDUCED PLANS 0 1 2 3

CU 07
EA 215931

DISREGARD PRINTS BEARING EARLIER REVISION DATES

REVISION DATES (PRELIMINARY STAGE ONLY) 6-1-11 5-1-11 7-15-11 10-5-11 12-2-11 1-5-12 2-2-12

SHEET 19 OF 28

USERNAME => s124496

53-3042k-q1-xs9-010e.

DATE PLOTTED => 12-JUL-2012 TIME PLOTTED => 13:57

| DIST. | COUNTY | ROUTE | POST MILES TOTAL PROJECT | SHEET NO. | TOTAL SHEETS |
|---|---|---|---|---|---|
| 07 | LA | 5 | 2.4/4.0 | 895 | 1288 |

Andrew Rittenhouse 12-12-11
REGISTERED ENGINEER - CIVIL

3-26-12
PLANS APPROVAL DATE

REGISTERED PROFESSIONAL ENGINEER Andrew P. Rittenhouse No. 61006 Exp. 12-31-12 CIVIL STATE OF CALIFORNIA

The State of California or its officers or agents shall not be responsible for the accuracy or completeness of electronic copies of this plan sheet.

1

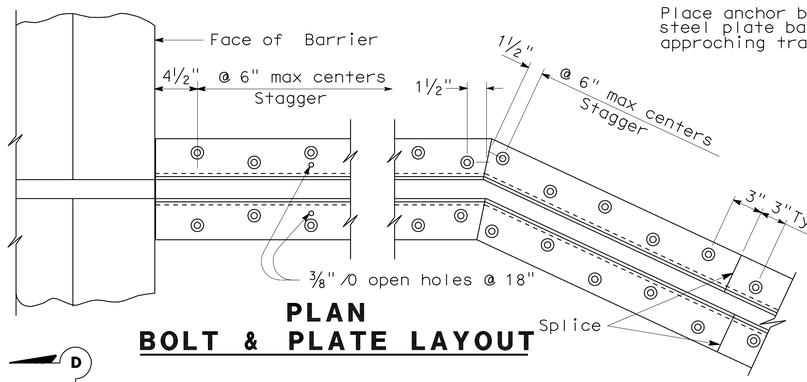


## PLAN
## BOLT & PLATE LAYOUT

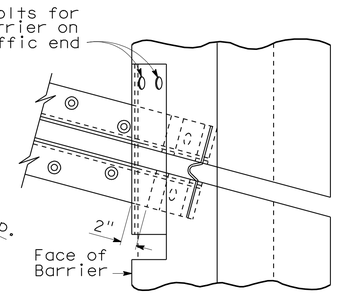


## SKEW ≤ 20°

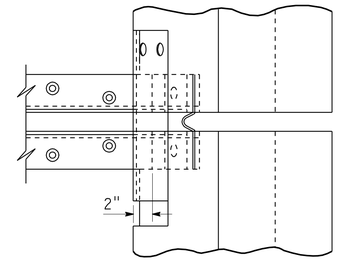


## SKEW > 20°

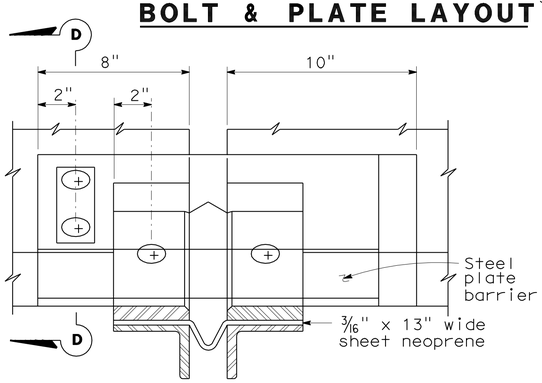


## VIEW B-B

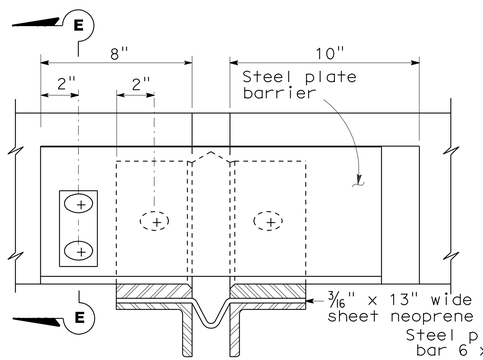


## VIEW C-C

1 REVISED PER ADDENDUM No. 1
DATED JULY 13, 2012

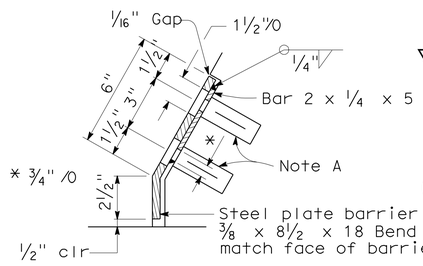


## SECTION D-D

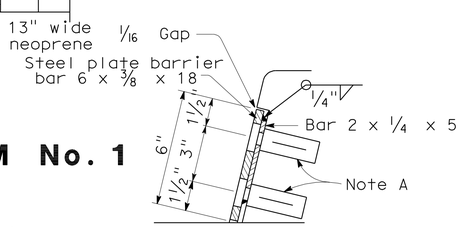


## SECTION E-E

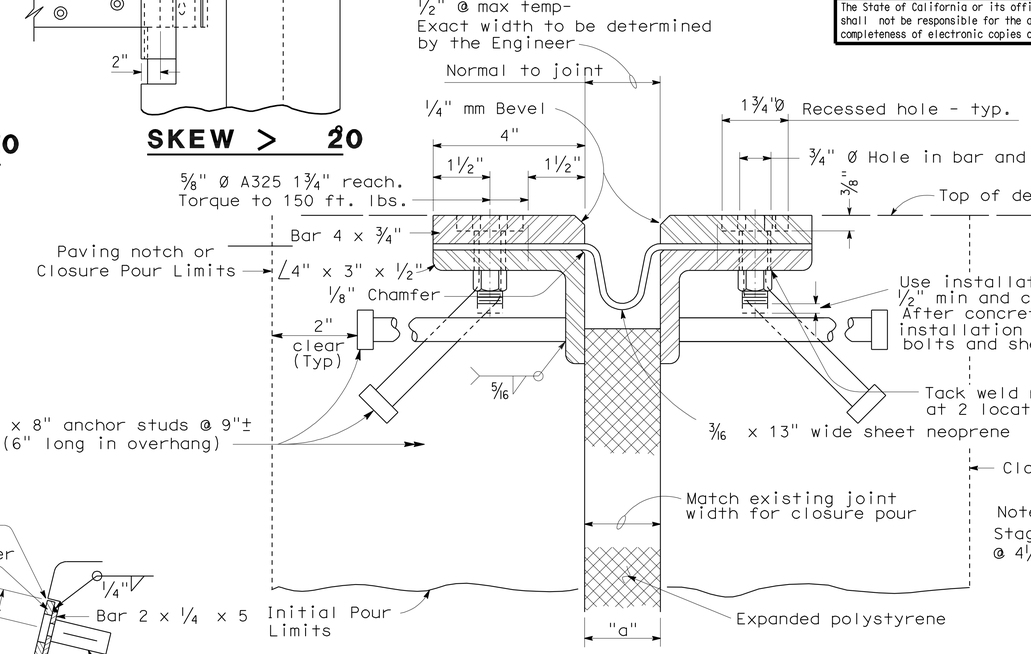


## SECTION A-A

Note :
Stagger anchor studs @ 4½"± on centers thus:

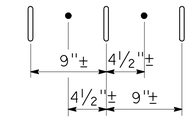


| Joint Information | | | "a" Dimensions | | |
|---|---|---|---|---|---|
| Location | Movement Rating ( MR ) | Skew | Winter | Spring & Fall | Summer |
| Abut1 & Abut 2 | 2.5" * | up to 51.71° | 1¼" | 1" | ⅝" |

1 * Movement Rating is based on the measurement along "RC1" Line.

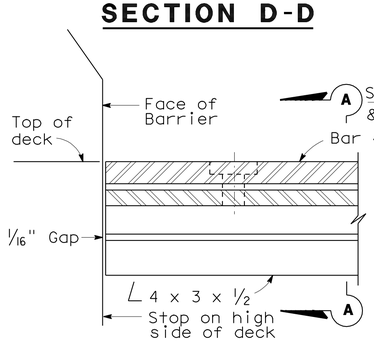


## HIGH SIDE BARRIER DETAIL

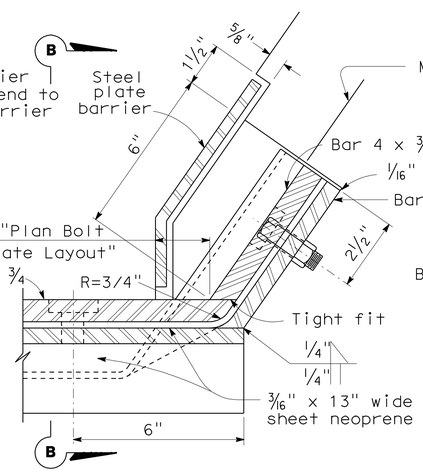


## LOW SIDE BARRIER DETAIL
( See Note B )

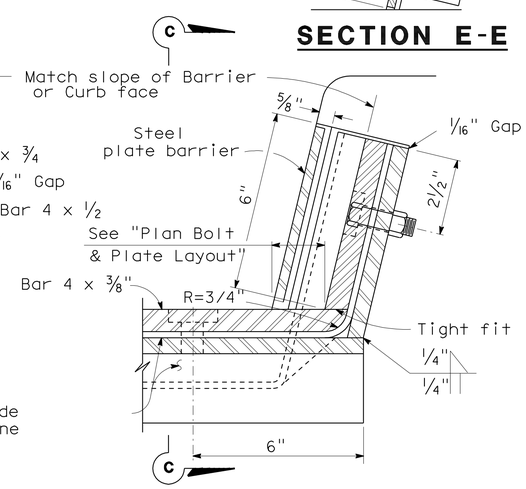


## SIDEWALK DETAIL
( See Note B )

**NOTES:**

Full penetration butt welds may be substituted for fillet welds on all anchor studs.

Alternate types of anchor studs may be permitted subject to the approval by the Engineer.

Joint seal assembly to be used in conjunction with closure pour. (See other sheets for limits). Closure pour shall not be placed until final deck surface is within the tolerances specified.

Use joint at crown of roadway, at any change in traverse slope in deck and at changes in horizontal direction. Place other joints at or near lanes. All metal parts to be painted or galvanized after fabrication.

Sheet neoprene shall be fabricated in one continuous piece or joints shall be vulcanized. Neoprene shall be fabricated to bend around corners. 1" holes in neoprene sheets shall be drilled or punched so that the neoprene is not distorted at the time of installation.

**NOTE A**

Insert assembly or expansion anchorage for ⅝" x 1¾" A325 bolt.

**NOTE B**

Use the sidewalk Detail at all sidewalk joints. Use the Barrier Detail at both sides if the roadway is crowned or if the difference in elevation between the ends of the seal is 0.5' or less.

NO SCALE

## SPECIAL DETAILS

REVISED STANDARD DRAWING

FILE NO. xs8-010e

APPROVED BY T. DELIS
RESPONSIBLE TECHNICAL SPECIALIST
APPROVAL DATE 5-8-08

RELEASED BY ROBERTO LACALLE
RESPONSIBLE OFFICE CHIEF
RELEASE DATE 5-8-08

1 Modified Note

STATE OF CALIFORNIA
DEPARTMENT OF TRANSPORTATION

DIVISION OF ENGINEERING SERVICES

BRIDGE NO. 53-3042K
POST MILE 3.66

SOUTHBOUND ROSECRANS AVENUE OFF-RAMP
JOINT SEAL ASSEMBLY
(MAXIMUM MOVEMENT RATING = 4")

DS OSD 2147A (ENGLISH STANDARD DRAWING "XS" BORDER REV. 01/11/08)

ORIGINAL SCALE IN INCHES FOR REDUCED PLANS 0 1 2 3

CU 07
EA 215931

DISREGARD PRINTS BEARING EARLIER REVISION DATES

REVISION DATES (PRELIMINARY STAGE ONLY) 3-8-11 5-11-11 7-14-11 2-23-12 2-2-12

SHEET 21 OF 28

USERNAME => s124496

53-3042k-q3-xs8-010e.dgn

DATE PLOTTED => 12-JUL-2012 TIME PLOTTED => 13:57

| DIST | COUNTY | ROUTE | POST MILES TOTAL PROJECT | SHEET No | TOTAL SHEETS |
|---|---|---|---|---|---|
| 07 | LA | 5 | 2.4/4.0 | 988 | 1288 |

Andrew Rittenhouse 12-12-11
REGISTERED CIVIL ENGINEER DATE

3-26-12
PLANS APPROVAL DATE

REGISTERED PROFESSIONAL ENGINEER Andrew P. Rittenhouse No. 61006 Exp. 12-31-12 CIVIL STATE OF CALIFORNIA

*The State of California or its officers or agents shall not be responsible for the accuracy or completeness of electronic copies of this plan sheet.*

1

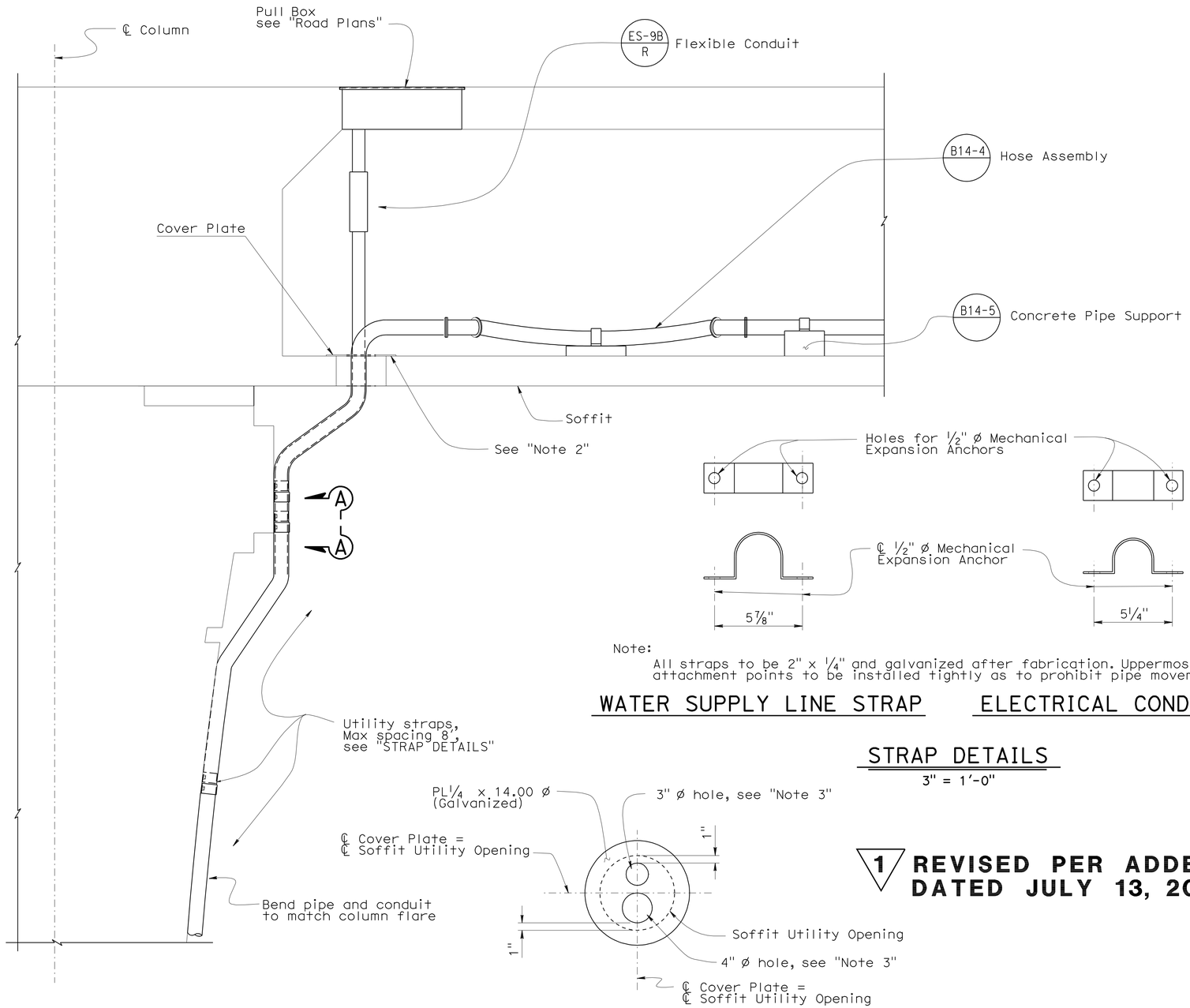


ELEVATION
NO SCALE

COVER PLATE DETAIL
1 1/2" = 1'-0"

Note:
All straps to be 2" x 1/4" and galvanized after fabrication. Uppermost attachment points to be installed tightly as to prohibit pipe movement.

WATER SUPPLY LINE STRAP ELECTRICAL CONDUIT STRAP

STRAP DETAILS
3" = 1'-0"

1 **REVISED PER ADDENDUM No. 1 DATED JULY 13, 2012**

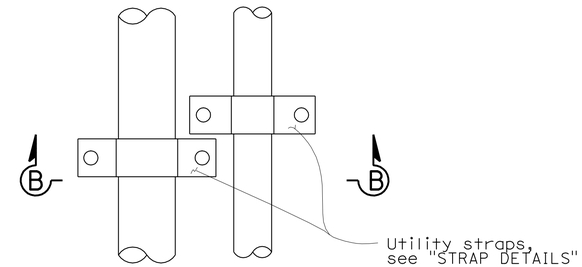


VIEW A-A
3" = 1'-0"

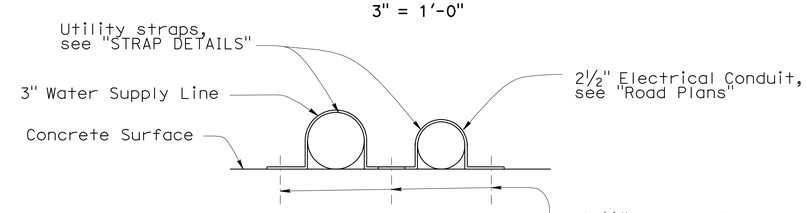


SECTION B-B
3" = 1'-0"

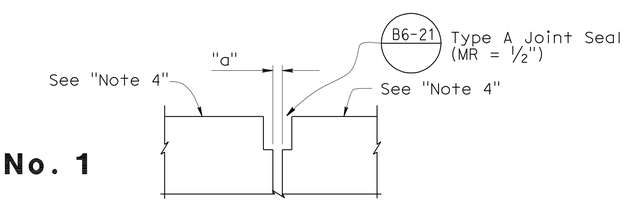


EXP JT DETAIL (MR = 1/2")
1 " = 1'-0"

Notes:

1. Bent 7 shown, Bent 9 similar.
2. Smooth concrete surface 2" beyond cover plate diameter.
3. Holes may be field drilled. If holes are field drilled, apply Zinc primer to protect against corrosion, then paint grey.
4. Slope of Ramp not shown.

MAIN RAMP - UTILITIES DETAIL (BENTS 7 & 9)

| | BY | CHECKED |
|---|---|---|
| DESIGN | H. Setberg | Laith Bahia |
| DETAILS | S. Cholda | Laith Bahia |
| QUANTITIES | T. Trefz/H. Setberg | H. Setberg/R. Novik |

STATE OF CALIFORNIA
DEPARTMENT OF TRANSPORTATION

DIVISION OF ENGINEERING SERVICES
STRUCTURE DESIGN
DESIGN BRANCH 15

BRIDGE NO. 53-3043
POST MILE 3.97

SILVERBOW AVENUE PEDESTRIAN OC
MISCELLANEOUS DETAILS

STRUCTURES DESIGN DETAIL SHEET (ENGLISH) (REV. 10/25/05)

ORIGINAL SCALE IN INCHES FOR REDUCED PLANS 0 1 2 3

CU 07
EA 215931

DISREGARD PRINTS BEARING EARLIER REVISION DATES

REVISION DATES: 5-28-10 10-28-11 11-28-11 01-06-12 01-20-12 01-24-12 01-25-12 06-25-11 07-14-11 08-16-11

SHEET 86 OF 101

FILE => 53-3043r-p-misc1.add

USERNAME => s124496 DATE PLOTTED => 12-JUL-2012 TIME PLOTTED => 13:57

| DIST | COUNTY | ROUTE | POST MILES TOTAL PROJECT | SHEET No | TOTAL SHEETS |
|---|---|---|---|---|---|
| 07 | LA | 5 | 2.4/4.0 | 1004 | 1288 |

Traci Menard 12-12-11
REGISTERED CIVIL ENGINEER DATE

3-26-12
PLANS APPROVAL DATE

REGISTERED PROFESSIONAL ENGINEER Traci Menard No. 54207 Exp. 12/31/13 CIVIL STATE OF CALIFORNIA

*The State of California or its officers or agents shall not be responsible for the accuracy or completeness of electronic copies of this plan sheet.*

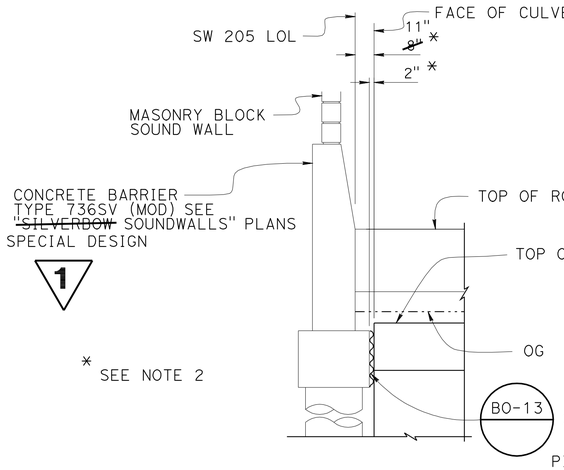


## SECTION B-B

3/8" = 1'-0"

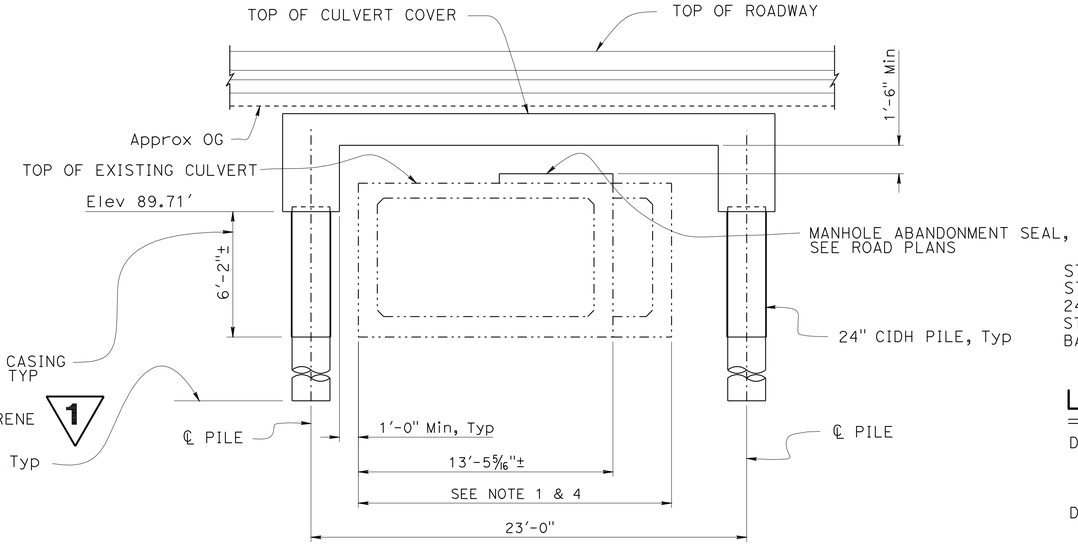


## SECTION A-A

1/4" = 1'-0"

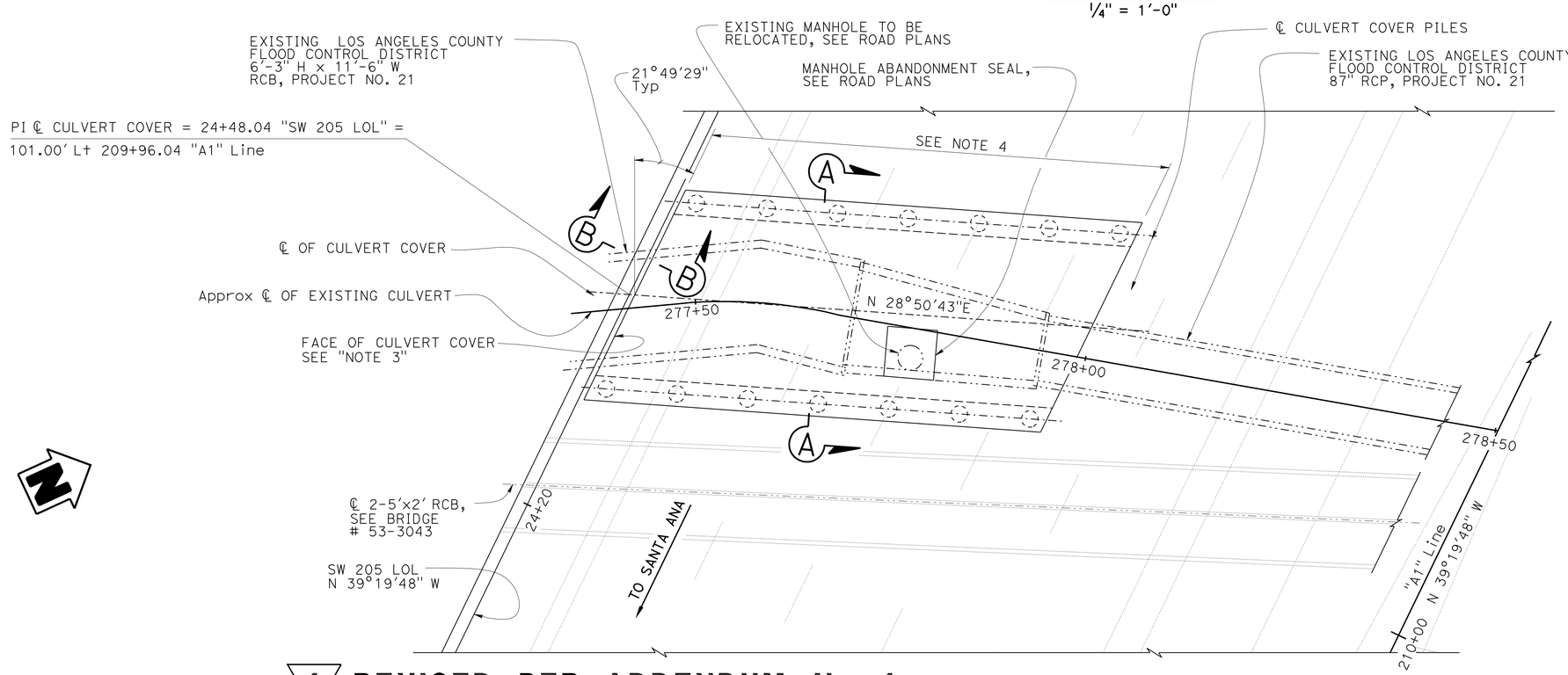


NOTE:
THE CONTRACTOR SHALL VERIFY ALL CONTROLLING FIELD DIMENSIONS BEFORE ORDERING OR FABRICATING ANY MATERIAL.

1 **REVISED PER ADDENDUM No. 1 DATED JULY 13, 2012**

PLAN

1/8" = 1'-0"

1 6. Backfill shall be done simultaneously at each side of culvert cover and after placement of top of culvert cover.

QUANTITIES

| | | |
|---|---|---|
| STRUCTURE EXCAVATION | 322 | CY |
| STRUCTURE BACKFILL | 191 | CY |
| 24" CAST-IN-DRILLED-HOLE CONCRETE PILING | 508 | LF |
| STRUCTURAL CONCRETE | 131 | CY |
| BAR REINFORCING STEEL | 37,290 | LB |

## GENERAL NOTES
## LOAD AND RESISTANCE FACTOR DESIGN

DESIGN: AASHTO LRFD BRIDGE DESIGN SPECIFICATIONS 4th Edition and California Amendments, dated December 2008

DEAD LOAD: Includes 35 psf for future overlay

LIVE LOADING: HL93 with "Low-Boy" and Permit Design Vehicle

REINFORCED CONCRETE: $f_y$ = 60 ksi
$f'_c$ = 4 ksi

## INDEX TO PLANS


| SHEET NO. | TITLE |
|---|---|
| 1. | GENERAL PLAN |
| 2. | FOUNDATION PLAN |
| 3. | COVER DETAILS NO. 1 |
| 4. | COVER DETAILS NO. 2 |
| 5. | COVER DETAILS NO. 3 |
| 6. | LOG OF TEST BORINGS 1 OF 5 |
| 7. | LOG OF TEST BORINGS 2 OF 5 |
| 8. | LOG OF TEST BORINGS 3 OF 5 |
| 9. | LOG OF TEST BORINGS 4 OF 5 |
| 10. | LOG OF TEST BORINGS 5 OF 5 |


## STANDARD PLANS DATED MAY 2006

| | |
|---|---|
| A10A | ACRONYMS AND ABBREVIATIONS (SHEET 1 OF 2) |
| A10B | ACRONYMS AND ABBREVIATIONS (SHEET 2 OF 2) |
| BO-13 | BRIDGE DETAILS |
| B2-3 | 16" AND 24" CAST-IN-DRILLED-HOLE CONCRETE PILE |

STANDARD PLAN SHEET No.
DETAIL No.

Legend:
—·—·— Indicates Existing Structure

Notes:
1. Approximate Limits of Existing Culvert.
2. Measured perpendicular to Face of Culvert Cover.
3. Face of Culvert Cover parallel to SW 205 LOL.
4. Limits of Existing Channel not to be maintained by the Los Angeles County Department of Public Works/Los Angeles County Flood Control District.
5. The Contractor shall be extra cautious working in the vicinity of existing storm drain. For the purpose of soil compaction, the Contractor shall use hand held equipments when working adjacent to or over the existing storm drain in order to not cause any structural damage

Traci Menard
DESIGN ENGINEER

| | BY | CHECKED | | | |
|---|---|---|---|---|---|
| DESIGN | Traci Menard | John Lane | LOAD & RESISTANCE FACTOR DESIGN | LIVE LOADING: HL-93 W/"LOW-BOY"; PERMIT DESIGN VEHICLE | |
| DETAILS | Stan Cholda | John Lane | LAYOUT | Traci Menard | John Lane |
| QUANTITIES | Traci Menard | Suzan Moradi | SPECIFICATIONS | Theresa Nedwick | PLANS AND SPECS COMPARED John Lane |

ORIGINAL SCALE IN INCHES FOR REDUCED PLANS 0 1 2 3

STATE OF CALIFORNIA
DEPARTMENT OF TRANSPORTATION

DIVISION OF ENGINEERING SERVICES
STRUCTURE DESIGN
DESIGN BRANCH 15

CU 07
EA 215931

BRIDGE NO. 53-3075M
POST MILE 3.98

# SILVERBOW CULVERT COVER
# GENERAL PLAN

DISREGARD PRINTS BEARING EARLIER REVISION DATES

REVISION DATES: 09-19-11 01-13-12 01-13-12 02-01-12 11-15-11 02-28-12 03-01-12 12-01-11 12-02-11 12-20-11

SHEET 1 OF 10

STRUCTURES DESIGN GENERAL PLAN SHEET (ENGLISH) (REV.07-24-06)

FILE => 53-3075m-a-gp.dgn

USERNAME => s124496 DATE PLOTTED => 12-JUL-2012 TIME PLOTTED => 15:59

| DIST | COUNTY | ROUTE | POST MILES TOTAL PROJECT | SHEET No | TOTAL SHEETS |
|---|---|---|---|---|---|
| 07 | LA | 5 | 2.4/4.0 | 1007 | 1288 |

Traci Menard 12-12-11
REGISTERED CIVIL ENGINEER DATE

3-26-12
PLANS APPROVAL DATE

REGISTERED PROFESSIONAL ENGINEER Traci Menard No. 54207 Exp. 12/31/13 CIVIL STATE OF CALIFORNIA

*The State of California or its officers or agents shall not be responsible for the accuracy or completeness of electronic copies of this plan sheet.*

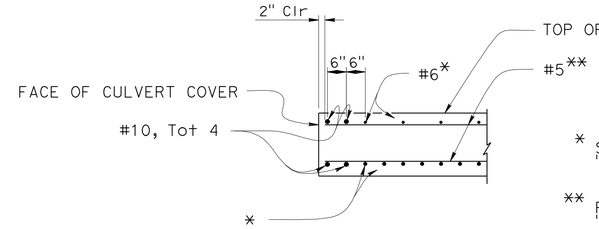


* See "MAIN REINFORCEMENT-TOP" and "MAIN REINFORCEMENT-BOTOM".

** For details see "PART TYPICAL SECTION" on "COVER DETAILS NO. 3" sheet.

## FACE OF SLAB DETAIL (TYP)

½" = 1'-0"

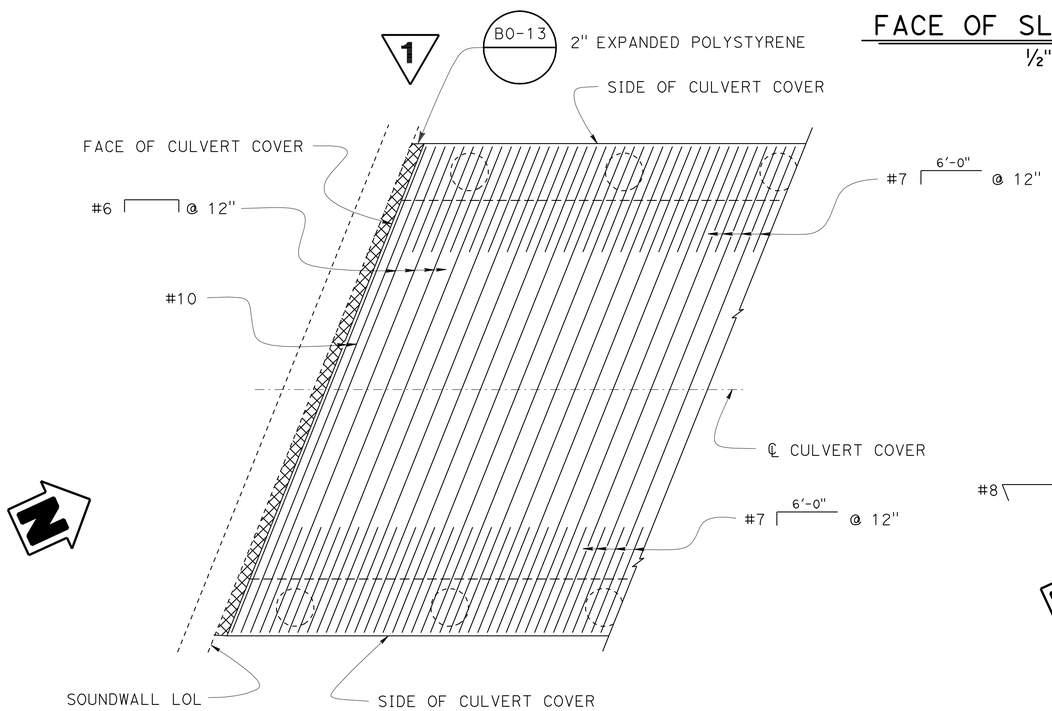


## MAIN REINFORCEMENT-TOP

¼" = 1'-0"

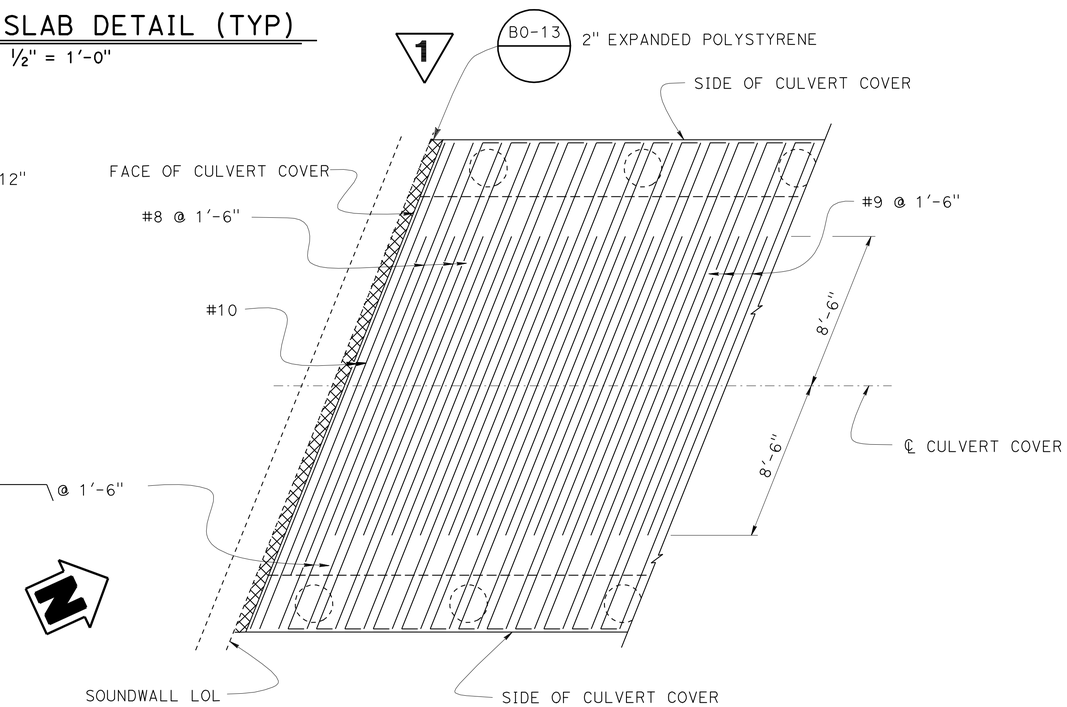


## MAIN REINFORCEMENT-BOTTOM

¼" = 1'-0"

**1 REVISED PER ADDENDUM No. 1 DATED JULY 13, 2012**

| | | | |
|---|---|---|---|
| DESIGN | BY Traci Menard | CHECKED John Lane | |
| DETAILS | BY Stan Cholda | CHECKED John Lane | |
| QUANTITIES | BY Traci Menard | CHECKED Suzan Moradi | |

STATE OF CALIFORNIA
DEPARTMENT OF TRANSPORTATION

DIVISION OF ENGINEERING SERVICES
STRUCTURE DESIGN
DESIGN BRANCH 15

BRIDGE NO. 53-3075M
POST MILE 3.98

# SILVERBOW CULVERT COVER
## COVER DETAILS NO. 2

STRUCTURES DESIGN DETAIL SHEET (ENGLISH) (REV. 10/25/05)

ORIGINAL SCALE IN INCHES FOR REDUCED PLANS 0 1 2 3

CU 07
EA 215931

DISREGARD PRINTS BEARING EARLIER REVISION DATES → 09-19-11 11-03-11 11-09-11 11-10-11 11-22-11 12-27-11 01-15-12

SHEET 4 OF 10

FILE => 53-3075m-g-det02.add

USERNAME => s124496 DATE PLOTTED => 12-JUL-2012 TIME PLOTTED => 13:57

| DIST | COUNTY | ROUTE | POST MILES TOTAL PROJECT | SHEET No. | TOTAL SHEETS |
|---|---|---|---|---|---|
| 07 | LA | 5 | 2.4/4.0 | 1026 | 1288 |

Traci Menard 2/29/2012
REGISTERED CIVIL ENGINEER DATE

3-26-12
PLANS APPROVAL DATE

REGISTERED PROFESSIONAL ENGINEER Traci Menard No. 54207 Exp. 12/31/13 CIVIL STATE OF CALIFORNIA

*The State of California or its officers or agents shall not be responsible for the accuracy or completeness of electronic copies of this plan sheet.*

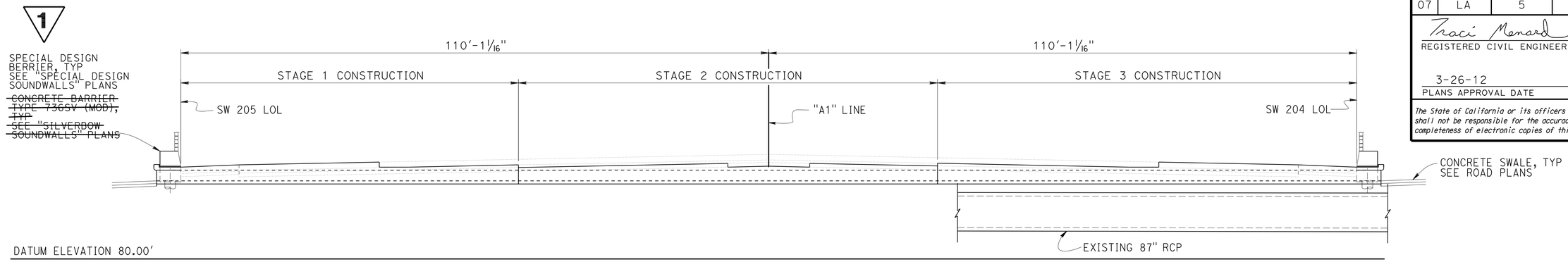


NOTE:
EXISTING 6-CELL - 6' x 2' RCB (TO BE REMOVED) NOT SHOWN FOR CLARITY

## ELEVATION
1" = 10'-0"

QUANTITIES

| | | |
|---|---|---|
| STRUCTURAL CONCRETE, BOX CULVERT | 182 | CY |
| BAR REINFORCING STEEL (BOX CULVERT) | 47,890 | LB |

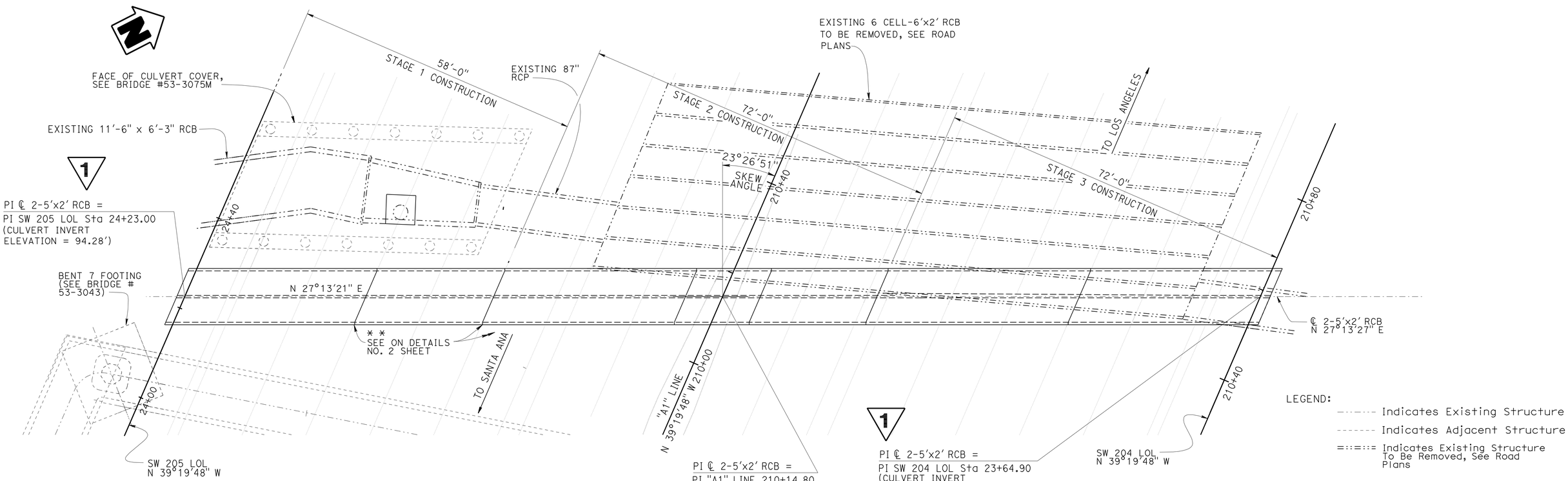


LEGEND:
- Indicates Existing Structure
- Indicates Adjacent Structure
- Indicates Existing Structure To Be Removed, See Road Plans

NOTE:
THE CONTRACTOR SHALL VERIFY ALL CONTROLLING FIELD DIMENSIONS BEFORE ORDERING OR FABRICATING ANY MATERIAL.

## PLAN
1" = 10'-0"

**1 REVISED PER ADDENDUM No. 1 DATED JULY 13, 2012**

Traci Menard
DESIGN ENGINEER

| | BY | CHECKED |
|---|---|---|
| DESIGN | Traci Menard | S. Moradi/F. Feng |
| DETAILS | Stan Cholda/T. Cotton | S. Moradi/F. Feng |
| QUANTITIES | Fred Feng | S. Moradi |

LOAD FACTOR DESIGN — LIVE LOADING: HS20-44 TRUCK
LAYOUT — BY Traci Menard — CHECKED S. Moradi/F. Feng
SPECIFICATIONS — BY Theresa Nedwick — PLANS AND SPECS COMPARED Traci Menard

ORIGINAL SCALE IN INCHES FOR REDUCED PLANS 0 1 2 3

STATE OF CALIFORNIA
DEPARTMENT OF TRANSPORTATION

DIVISION OF ENGINEERING SERVICES
STRUCTURE DESIGN
DESIGN BRANCH 15

BRIDGE NO. n/a
POST MILE 3.97

# DOUBLE BOX CULVERT
# GENERAL PLAN NO. 1

UNIT: 3604
PROJECT NUMBER & PHASE: 0700001833
CONTRACT NO.: 07-215931

DISREGARD PRINTS BEARING EARLIER REVISION DATES
REVISION DATES: 03-07-12 01-31-12 03-01-12
SHEET 1 OF 5

USERNAME => s124196 DATE PLOTTED => 12-JUL-2012 TIME PLOTTED => 13:57

| DIST | COUNTY | ROUTE | POST MILES TOTAL PROJECT | SHEET No. | TOTAL SHEETS |
|---|---|---|---|---|---|
| 07 | LA | 5 | 2.4/4.0 | 1028 | 1288 |

Traci Menard 2/29/2012
REGISTERED CIVIL ENGINEER DATE

3-26-12
PLANS APPROVAL DATE

REGISTERED PROFESSIONAL ENGINEER
Traci Menard
No. 54207
Exp. 12/31/13
CIVIL
STATE OF CALIFORNIA

*The State of California or its officers or agents shall not be responsible for the accuracy or completeness of electronic copies of this plan sheet.*

1

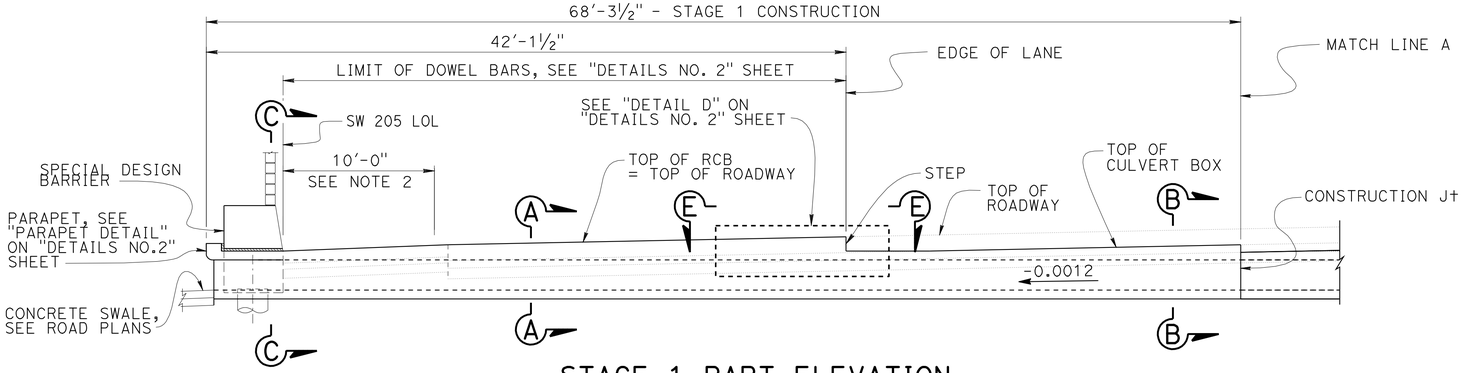


## STAGE 1 PART ELEVATION

1" = 5'-0"

NOTES:

1. For roadway section details, see Roadway Plans.
2. Transition from "SECTION C-C" to "SECTION A-A".
3. For "SECTION A-A", "SECTION B-B" and "SECTION C-C", see "Details No. 1" sheet.
4. For "View E-E" See "Details No. 2" sheet.

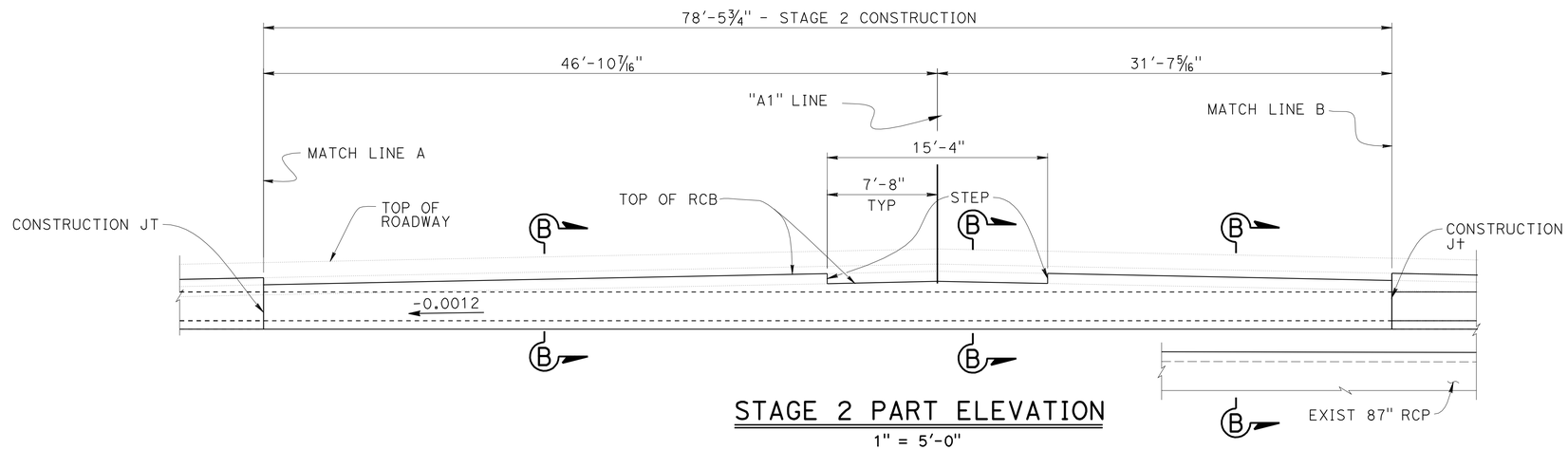


## STAGE 2 PART ELEVATION

1" = 5'-0"

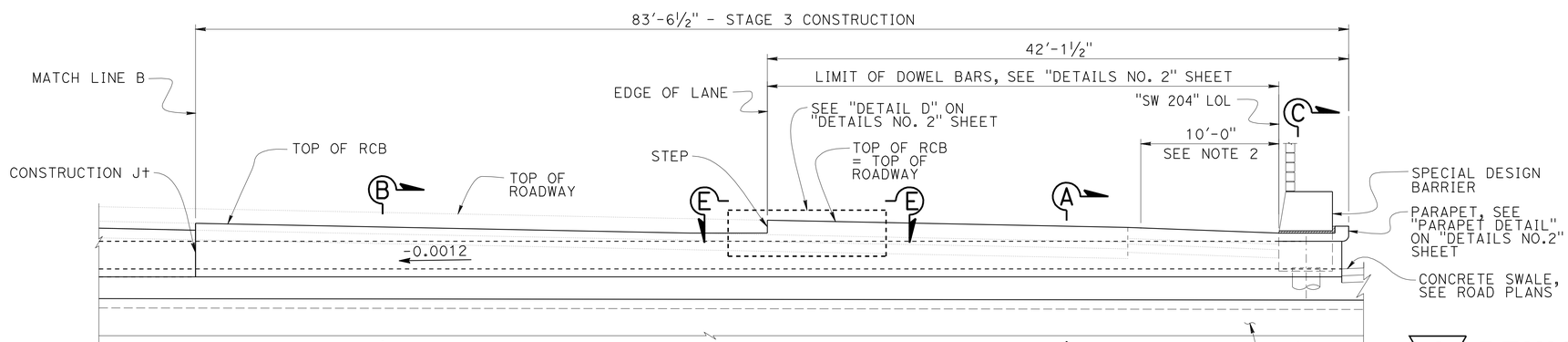


## STAGE 3 PART ELEVATION

1" = 5'-0"

NOTE:
THE CONTRACTOR SHALL VERIFY ALL CONTROLLING FIELD DIMENSIONS BEFORE ORDERING OR FABRICATING ANY MATERIAL.

1 **REVISED PER ADDENDUM No. 1 DATED JULY 13, 2012**

| | BY | CHECKED |
|---|---|---|
| DESIGN | Traci Menard | S. Moradi/F. Feng |
| DETAILS | S. Cholda/M. Lane/T. Cotton | S. Moradi/F. Feng |
| QUANTITIES | Fred Feng | S. Moradi |

STATE OF CALIFORNIA
DEPARTMENT OF TRANSPORTATION

DIVISION OF ENGINEERING SERVICES
STRUCTURE DESIGN
DESIGN BRANCH 15

BRIDGE NO. n/a
POST MILE 3.97

# DOUBLE BOX CULVERT
# CULVERT LAYOUT

STRUCTURES DESIGN DETAIL SHEET (ENGLISH) (REV. 09-01-10)

ORIGINAL SCALE IN INCHES FOR REDUCED PLANS 0 1 2 3

UNIT: 3604
PROJECT NUMBER & PHASE: 0700001833
CONTRACT NO.: 07-215931

DISREGARD PRINTS BEARING EARLIER REVISION DATES

REVISION DATES: 02-06-12 02-29-12 03-05-12

SHEET 3 OF 5

FILE => drainage-f-culvert _layout01.dgn

USERNAME => s124496 DATE PLOTTED => 12-JUL-2012 TIME PLOTTED => 15:57

| DIST | COUNTY | ROUTE | POST MILES TOTAL PROJECT | SHEET No. | TOTAL SHEETS |
|---|---|---|---|---|---|
| 07 | LA | 5 | 2.4/4.0 | 1030 | 1288 |

Traci Menard 2/29/2012
REGISTERED CIVIL ENGINEER DATE

3-26-12
PLANS APPROVAL DATE

REGISTERED PROFESSIONAL ENGINEER Traci Menard No. 54207 Exp. 12/31/13 CIVIL STATE OF CALIFORNIA

*The State of California or its officers or agents shall not be responsible for the accuracy or completeness of electronic copies of this plan sheet.*

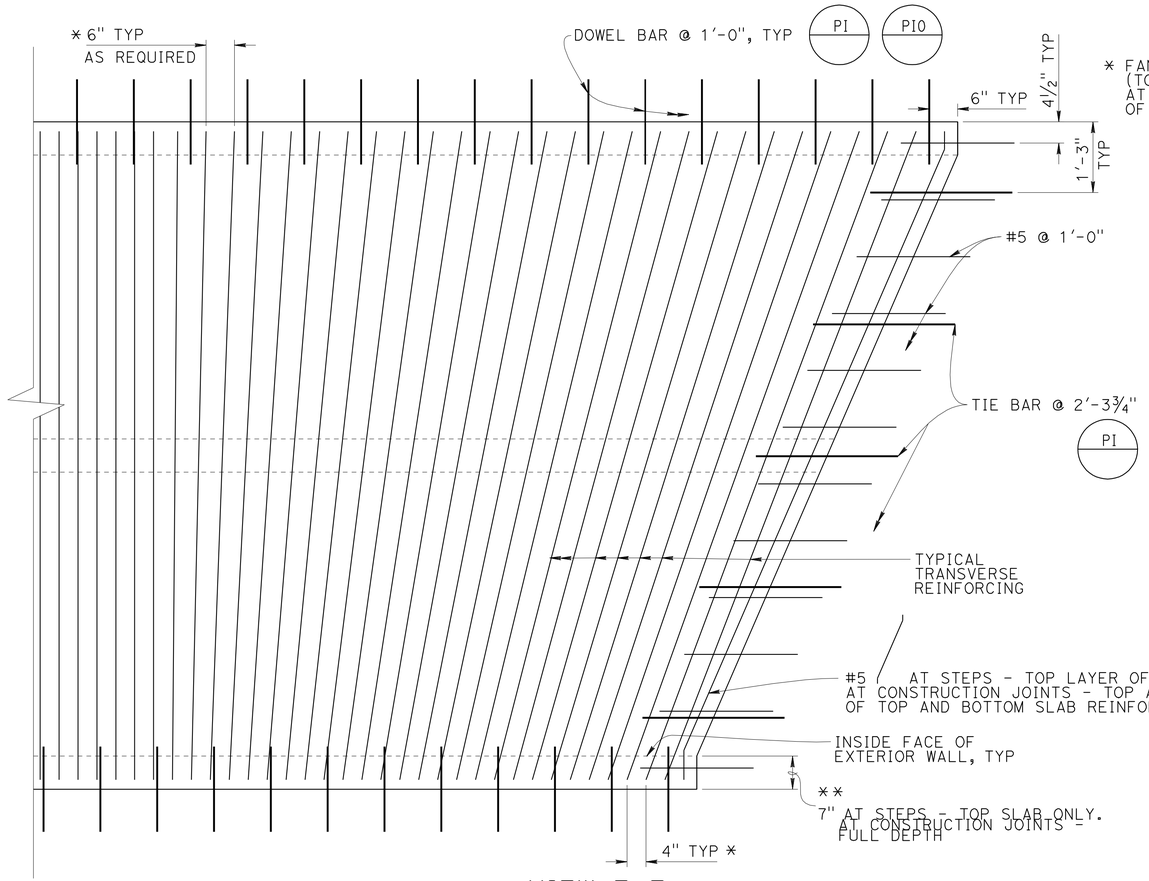


* FAN TRANSVERSE REINFORCING AS SHOWN AT STEPS (TOP LAYER OF TOP SLAB REINFORCING ONLY) AND AT CONSTRUCTION JOINTS (TOP AND BOTTOM LAYERS OF TOP AND BOTTOM SLAB REINFORCING).

## VIEW E-E
3/4" = 1'-0"

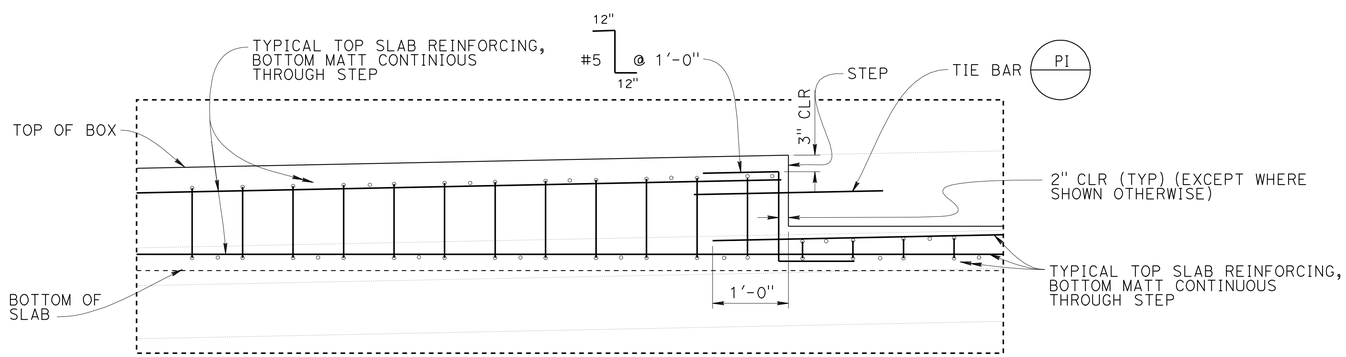


NOTE;
VIEW D-D FOR STAGE 1 CONSTRUCTION SHOWN, VIEW D-D FOR STAGE 3 CONSTRUCTION SIMILAR.

## DETAIL D
1" = 1'-0"

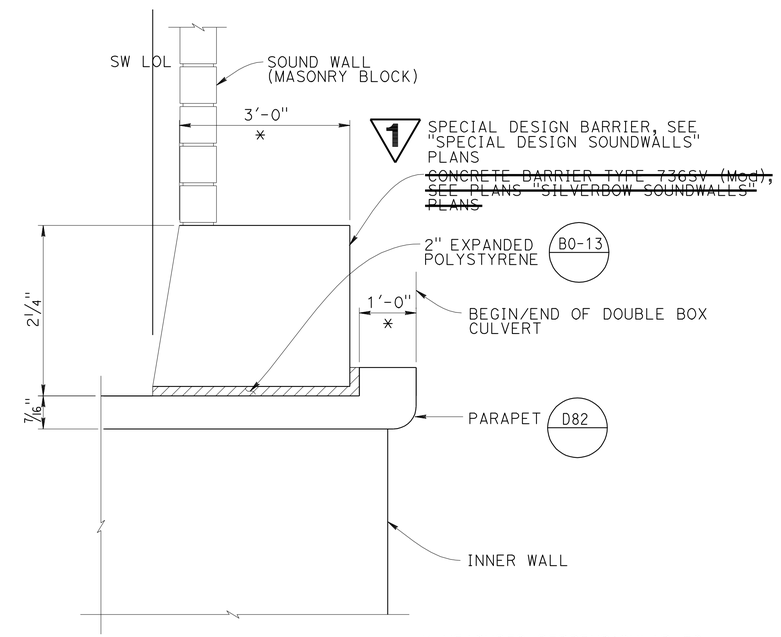


* MEASURED PERPENDICULAR TO SW LINE

## PARAPET DETAIL
3/4" = 1'-0"

1 **REVISED PER ADDENDUM No. 1 DATED JULY 13, 2012**

| | BY | CHECKED |
|---|---|---|
| DESIGN | Traci Menard | S. Moradi/F. Feng |
| DETAILS | T. Cotton | S. Moradi/F. Feng |
| QUANTITIES | Fred Feng | S. Moradi |

STATE OF CALIFORNIA
DEPARTMENT OF TRANSPORTATION

DIVISION OF ENGINEERING SERVICES
STRUCTURE DESIGN
DESIGN BRANCH 15

BRIDGE NO. n/a
POST MILE 3.97

# DOUBLE BOX CULVERT
# DETAILS NO. 2

STRUCTURES DESIGN DETAIL SHEET (ENGLISH) (REV. 09-01-10)

ORIGINAL SCALE IN INCHES FOR REDUCED PLANS 0 1 2 3

UNIT: 3604
PROJECT NUMBER & PHASE: 0700001833
CONTRACT NO.: 07-215931

DISREGARD PRINTS BEARING EARLIER REVISION DATES → 02-29-12

REVISION DATES | SHEET 5 | OF 5

FILE => drainage-h-details02.add

USERNAME => s124936 DATE PLOTTED => 12-JUL-2012 TIME PLOTTED => 13:57

| DIST | COUNTY | ROUTE | POST MILES TOTAL PROJECT | SHEET No. | TOTAL SHEETS |
|---|---|---|---|---|---|
| 07 | LA | 5 | 2.4/4.0 | 1079 | 1288 |

REGISTERED CIVIL ENGINEER — DATE

3-26-12
PLANS APPROVAL DATE

REGISTERED PROFESSIONAL ENGINEER — Kevin Harper — No. 42221 — Exp. 3-31-12 — CIVIL — STATE OF CALIFORNIA

*The State of California or its officers or agents shall not be responsible for the accuracy or completeness of electronic copies of this plan sheet.*

1

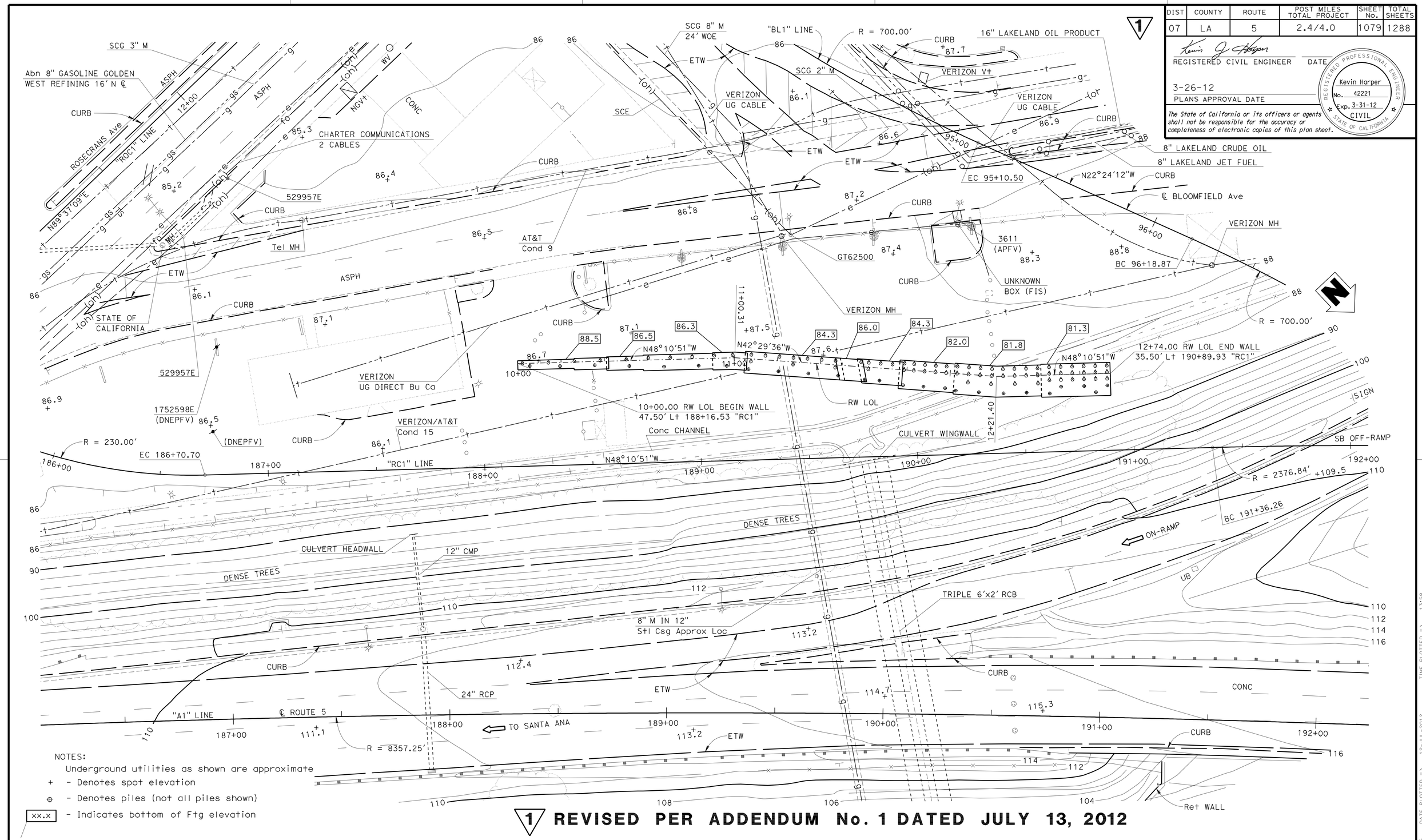


NOTES:

Underground utilities as shown are approximate

+ - Denotes spot elevation

⊕ - Denotes piles (not all piles shown)

xx.x - Indicates bottom of Ftg elevation

1 **REVISED PER ADDENDUM No. 1 DATED JULY 13, 2012**

| SCALE 1" = 20' | | | |
|---|---|---|---|
| DESIGN | BY Greg Thornton | CHECKED Christa Siegenthaler | |
| DETAILS | BY R. da Cruz F. / S. Jiang | CHECKED Christa Siegenthaler | |
| QUANTITIES | BY R. da Cruz F. / E. Watson | CHECKED Christa Siegenthaler | |

STATE OF CALIFORNIA
DEPARTMENT OF TRANSPORTATION

DIVISION OF ENGINEERING SERVICES
STRUCTURE DESIGN
DESIGN BRANCH 1

BRIDGE NO. X
POST MILE 3.6

# RETAINING WALL NO. 191
# FOUNDATION PLAN

STRUCTURES DESIGN DETAIL SHEET (ENGLISH) (REV. 09-01-10)

ORIGINAL SCALE IN INCHES FOR REDUCED PLANS 0 1 2 3

UNIT: 3576
PROJECT NUMBER & PHASE: 07000018331
CONTRACT NO.: 07-215934

DISREGARD PRINTS BEARING EARLIER REVISION DATES

REVISION DATES: 10/19/11 11/16/11 11/30/11 12/05/11

SHEET 4 OF 11

FILE => rw191-e-fp01.dgn

USERNAME => s124496 DATE PLOTTED => 12-JUL-2012 TIME PLOTTED => 13:58

| DIST | COUNTY | ROUTE | POST MILES TOTAL PROJECT | SHEET No. | TOTAL SHEETS |
|---|---|---|---|---|---|
| 07 | LA | 5 | 2.4/4.0 | 1169 | 1288 |

REGISTERED CIVIL ENGINEER 12-8-11 DATE

3-26-12
PLANS APPROVAL DATE

REGISTERED PROFESSIONAL ENGINEER Kevin Harper No. 42221 Exp. 3-31-12 CIVIL STATE OF CALIFORNIA

*The State of California or its officers or agents shall not be responsible for the accuracy or completeness of electronic copies of this plan sheet.*

Notes:

1. For Design Notes, see "RETAINING WALL TYPE 1SWBP - DETAIL NO. 1" sheet, Standard Plan B15-7: "SOUND WALL MASONRY BLOCK ON TYPE 736S/SV BARRIER DETAILS (2)" and "SOUND WALL - MASONRY BLOCK WITH BARRIER ON RETAINING WALL DETAILS NO. 2" sheet.
2. All piles are not shown in "DEVELOPED ELEVATION".

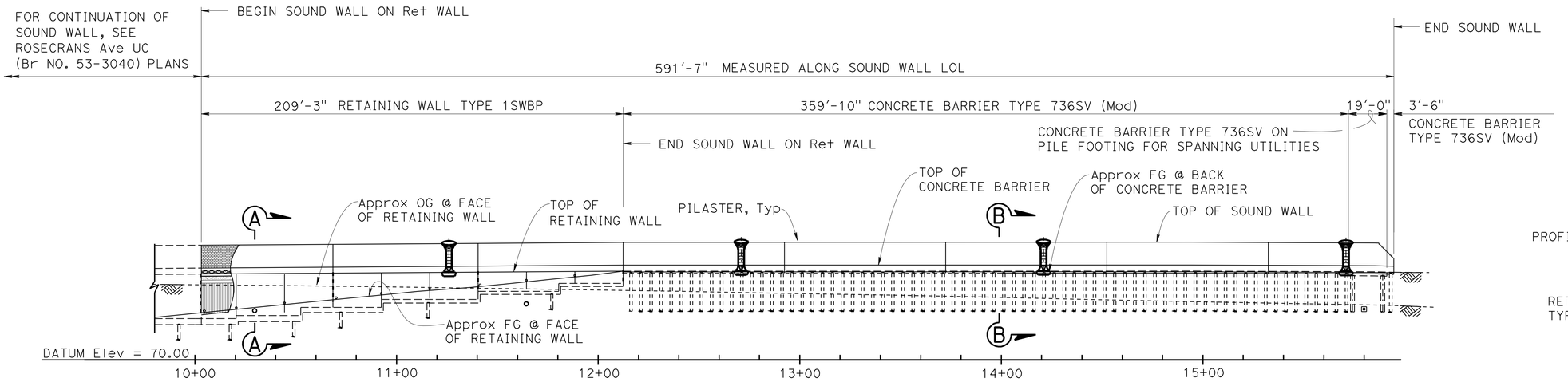


## DEVELOPED ELEVATION

1" = 30'

QUANTITIES

| | | |
|---|---|---|
| STRUCTURE EXCAVATION (RETAINING WALL) | 795 | CY |
| STRUCTURE BACKFILL (RETAINING WALL) | 720 | CY |
| PERVIOUS BACKFILL MATERIAL (RETAINING WALL) | 55 | CY |
| 16" CAST-IN-DRILLED-HOLE CONCRETE PILING (SOUND WALL) | 1,186 | LF |
| 24" CAST-IN-DRILLED-HOLE CONCRETE PILING ~~(SOUND WALL)~~ | 46 | LF |
| FURNISH PILING (CLASS 90) | 2,004 | LF |
| DRIVE PILE (CLASS 90) | 52 | EA |
| STRUCTURAL CONCRETE, RETAINING WALL | 334 | CY |
| PILASTER, SOUND WALL | 8 | CY |
| ARCHITECTURAL TREATMENT (SPLIT SLATE - FRACTURED RIB) | 1,500 | SQFT |
| SOUND WALL (MASONRY BLOCK) | 6,530 | SQFT |
| BAR REINFORCING STEEL (RETAINING WALL) | 40,700 | LB |
| CONCRETE BARRIER (TYPE 736A MODIFIED 2) | 210 | LF |
| CONCRETE BARRIER (TYPE 736SV MODIFIED) | 383 | LF |

CURVE DATA

| SW LOL | "A1" LINE |
|---|---|
| R = 8256.21 | R = 8357.25 |
| D = 4°6'20" | D = 17°36'01" |
| T = 295.92 | T = 1293.80 |
| L = 591.59 | L = 2567.22 |

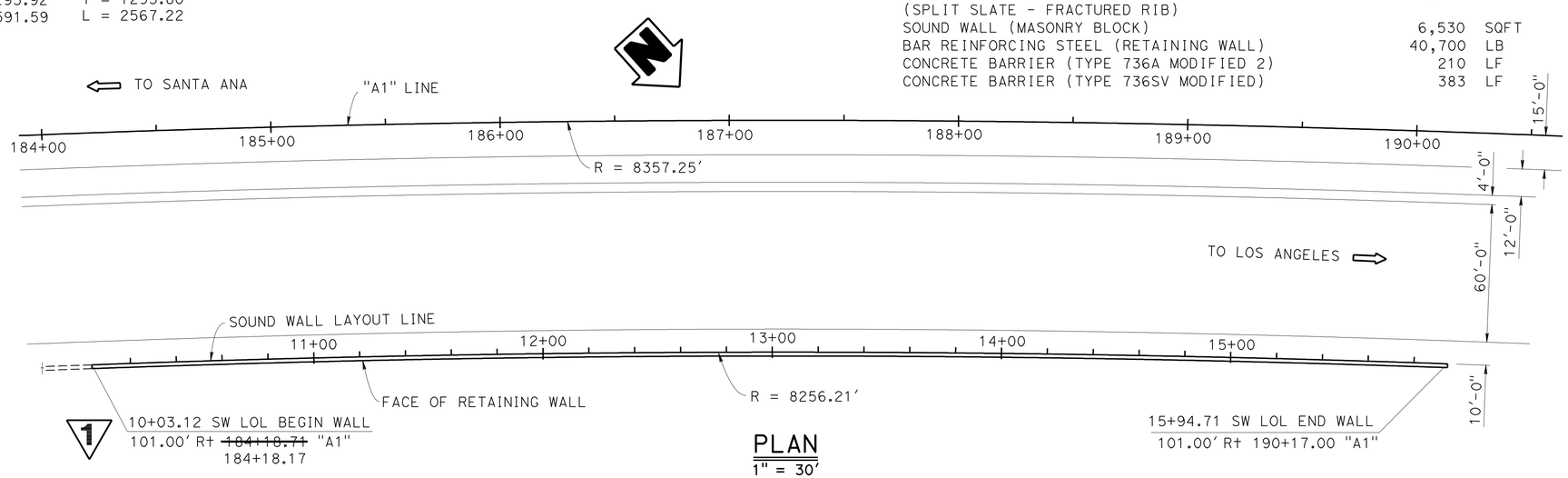


## PLAN

1" = 30'

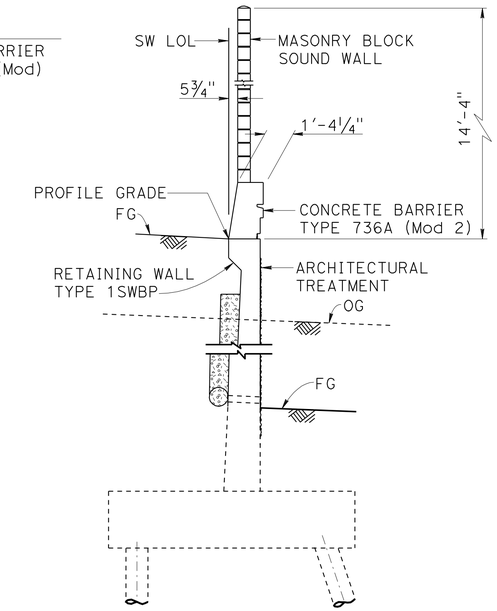


## TYPICAL SECTION A-A

¼" = 1'-0"

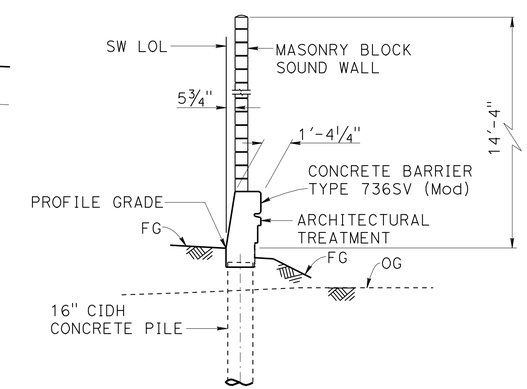


## TYPICAL SECTION B-B

¼" = 1'-0"

1 **REVISED PER ADDENDUM No. 1 DATED JULY 13, 2012**

| | | | | |
|---|---|---|---|---|
| DESIGN | BY Greg Thornton | CHECKED Vadim Shostak | LOAD FACTOR DESIGN | |
| DETAILS | BY Jin Zhou | CHECKED Vadim Shostak | LAYOUT: BY Greg Thornton | CHECKED Vadim Shostak |
| QUANTITIES | BY Bruce Hagy | CHECKED Eric Watson | SPECIFICATIONS: BY Theresa Nedwick | PLANS AND SPECS COMPARED Theresa Nedwick |

Jeff Sims
DESIGN ENGINEER

ORIGINAL SCALE IN INCHES FOR REDUCED PLANS 0 1 2 3

STATE OF CALIFORNIA
DEPARTMENT OF TRANSPORTATION

DIVISION OF ENGINEERING SERVICES
STRUCTURE DESIGN
DESIGN BRANCH 1

BRIDGE NO. X
POST MILE 3.49

# SOUND WALL NO. 186
# GENERAL PLAN

UNIT: 3576
PROJECT NUMBER & PHASE: 07000018331
CONTRACT NO. 07-215934

DISREGARD PRINTS BEARING EARLIER REVISION DATES

REVISION DATES 12/20/10 08/12/11 11/10/11

SHEET 1 OF 25

USERNAME => s124496 DATE PLOTTED => 12-JUL-2012 TIME PLOTTED => 13:58

STRUCTURES DESIGN GENERAL PLAN SHEET (ENGLISH) (REV.09-01-10)

FILE => sw186-a-gp.dgn

| DIST | COUNTY | ROUTE | POST MILES TOTAL PROJECT | SHEET No. | TOTAL SHEETS |
|---|---|---|---|---|---|
| 07 | LA | 5 | 2.4/4.0 | 1257 | 1288 |

REGISTERED CIVIL ENGINEER 12-08-11 DATE

3-26-12
PLANS APPROVAL DATE

REGISTERED PROFESSIONAL ENGINEER Kevin Harper No. 42221 Exp. 3-31-12 CIVIL STATE OF CALIFORNIA

*The State of California or its officers or agents shall not be responsible for the accuracy or completeness of electronic copies of this plan sheet.*

1

NOTES:

1. For Design Notes, see "RETAINING WALL TYPE 1SWBP - DETAIL NO. 1", "RETAINING WALL TYPE 5SWBP - DETAIL NO. 1" and "SOUND WALL - MASONRY BLOCK WITH BARRIER ON RETAINING WALL DETAILS NO. 2" sheets.
2. All piles are not shown in "DEVELOPED MIRRORED ELEVATION".

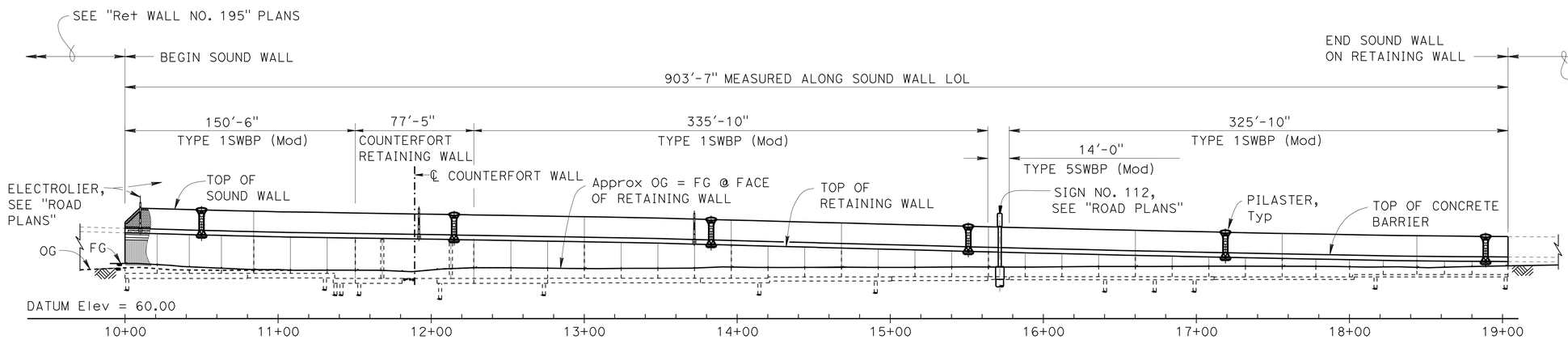


## DEVELOPED MIRRORED ELEVATION

1" = 40'

## QUANTITIES

| | | |
|---|---|---|
| STRUCTURE EXCAVATION (RETAINING WALL) | 3550 ~~3,700~~ | CY |
| STRUCTURE EXCAVATION (TYPE Y-2) (AERIALLY DEPOSITED LEAD) | 417 | CY |
| STRUCTURE BACKFILL (RETAINING WALL) | 5,800 | CY |
| PERVIOUS BACKFILL MATERIAL (RETAINING WALL) | 356 | CY |
| 24" CAST-IN-DRILLED-HOLE CONCRETE PILING | 13,575 ~~13,915~~ | LF |
| STRUCTURAL CONCRETE, RETAINING WALL | 2,200 ~~2,145~~ | CY |
| PILASTER, SOUND WALL | 14 | CY |
| ARCHITECTURAL TREATMENT (SPLIT SLATE - FRACTURED RIB) | 10,400 | SQFT |
| SOUND WALL (MASONRY BLOCK) | 11,700 | SQFT |
| BAR REINFORCING STEEL (RETAINING WALL) | ~~626,000 LB~~ 648,000 | LB |
| CONCRETE BARRIER (TYPE 736A MODIFIED 2) | 904 | LF |

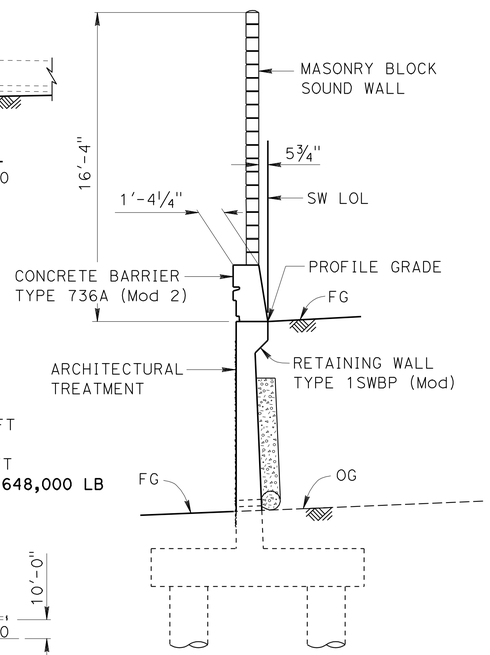


## TYPICAL SECTION

¼" = 1'-0"

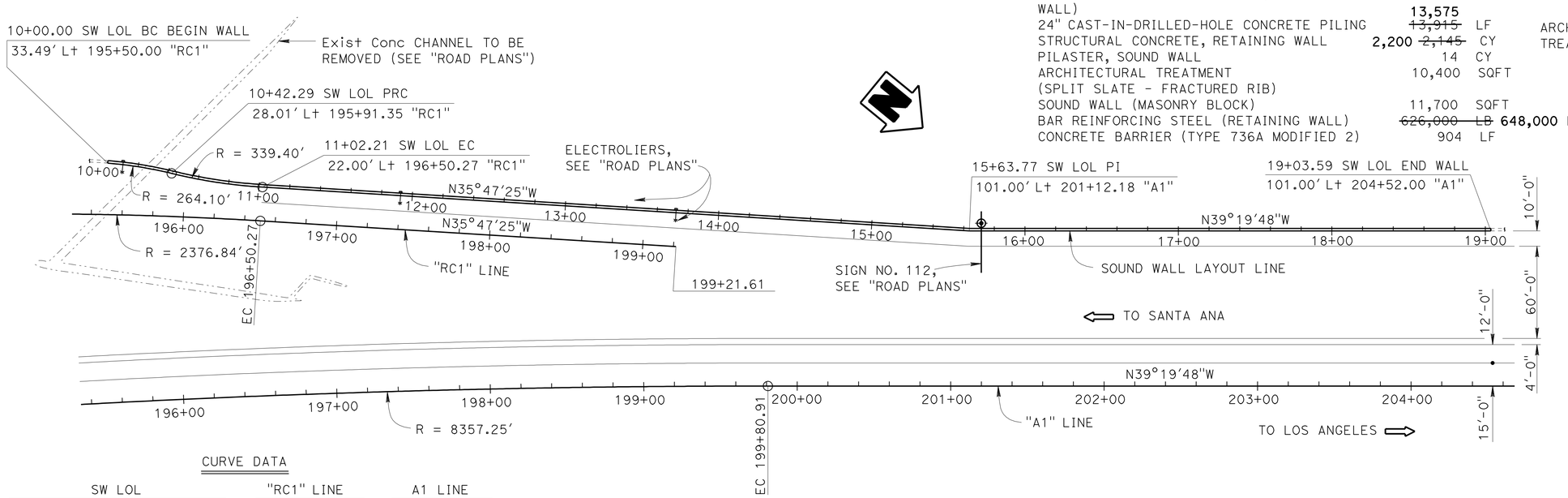


CURVE DATA

| SW LOL | | "RC1" LINE | A1 LINE |
|---|---|---|---|
| R = 264.10 | R = 339.40 | R = 2376.84 | R = 8357.25 |
| Δ = 9°10'25" | Δ = 10°06'57" | Δ = 12°23'27" | Δ = 17°36'01" |
| T = 21.19 | T = 30.04 | T = 258.01 | T = 1293.80 |
| L = 42.28 | L = 59.92 | L = 514.01 | L = 2567.22 |

## PLAN

1" = 40'

1 **REVISED PER ADDENDUM No. 1 DATED JULY 13, 2012**

Jeff Sims
DESIGN ENGINEER

| | BY | CHECKED | | | |
|---|---|---|---|---|---|
| DESIGN | V.Shostak / E.Watson | Daniel Sessions | LOAD FACTOR DESIGN | | |
| DETAILS | Jie Tang | Daniel Sessions | LAYOUT | Vadim Shostak | Daniel Sessions |
| QUANTITIES | Bruce Hagy | Eric Watson | SPECIFICATIONS | Theresa Nedwick | Theresa Nedwick |

ORIGINAL SCALE IN INCHES FOR REDUCED PLANS 0 1 2 3

STATE OF CALIFORNIA
DEPARTMENT OF TRANSPORTATION

DIVISION OF ENGINEERING SERVICES
STRUCTURE DESIGN
DESIGN BRANCH 1

BRIDGE NO.
POST MILE 3.64

# SOUND WALL NO. 203
# GENERAL PLAN

UNIT: 3576
PROJECT NUMBER & PHASE: 07000018331
CONTRACT NO.: 07-215934

DISREGARD PRINTS BEARING EARLIER REVISION DATES
REVISION DATES 12-09-10 11/29/11 11-09-11
SHEET 1 OF 32

USERNAME => s124196 DATE PLOTTED => 12-JUL-2012 TIME PLOTTED => 13:58

STRUCTURES DESIGN GENERAL PLAN SHEET (ENGLISH) (REV.09-01-10)

FILE => sw203-a-gp.add

| DIST | COUNTY | ROUTE | POST MILES TOTAL PROJECT | SHEET No. | TOTAL SHEETS |
|---|---|---|---|---|---|
| 07 | LA | 5 | 2.4/4.0 | 1258 | 1288 |

REGISTERED CIVIL ENGINEER — DATE: 12-08-11

3-26-12
PLANS APPROVAL DATE

REGISTERED PROFESSIONAL ENGINEER — Kevin Harper — No. 42221 — Exp. 3-31-12 — CIVIL — STATE OF CALIFORNIA

*The State of California or its officers or agents shall not be responsible for the accuracy or completeness of electronic copies of this plan sheet.*

1

## INDEX TO PLANS


| SHEET NO. | TITLE |
|---|---|
| 1. | GENERAL PLAN |
| 2. | INDEX TO PLANS |
| 3. | STRUCTURE PLAN NO. 1 |
| 3A. | COUNTERFORT RETAINING WALL DETAIL No. 1 |
| 3B. | COUNTERFORT RETAINING WALL DETAIL No. 2 |
| 3C. | COUNTERFORT RETAINING WALL DETAIL No. 3 |
| 4. | STRUCTURE PLAN NO. 2 |
| 5. | STRUCTURE PLAN NO. 3 |
| 6. | STRUCTURE PLAN NO. 4 |
| 7. | FOUNDATION PLAN NO. 1 |
| 8. | FOUNDATION PLAN NO. 2 |
| 9. | RETAINING WALL ARCHITECTURAL TREATMENT NO. 1 |
| 10. | RETAINING WALL ARCHITECTURAL TREATMENT NO. 2 |
| 11. | RETAINING WALL ARCHITECTURAL DETAILS |
| 12. | CONCRETE BARRIER TYPE 736A (Mod 2) DETAILS |
| 13. | SOUND WALL ARCHITECTURAL DETAILS |
| 14. | PILASTER ARCHITECTURAL DETAILS NO. 1 |
| 15. | PILASTER ARCHITECTURAL DETAILS NO. 2 |
| 16. | PILASTER ARCHITECTURAL DETAILS NO. 3 |
| 17. | PILASTER ARCHITECTURAL DETAILS NO. 4 |
| 18. | PILASTER STRUCTURAL DETAILS NO. 1 |
| 19. | PILASTER STRUCTURAL DETAILS NO. 2 |
| 20. | PILASTER STRUCTURAL DETAILS NO. 3 |
| 21. | ELECTROLIER PEDESTAL DETAILS |
| 22. | RETAINING WALL TYPE 1SWBP - DETAIL NO. 1 |
| 23. | RETAINING WALL TYPE 1SWBP - DETAIL NO. 2 |
| 24. | RETAINING WALL TYPE 5SWBP - DETAIL NO. 1 |
| 25. | RETAINING WALL TYPE 5SWBP - DETAIL NO. 2 |
| 26. | SOUND WALL - MASONRY BLOCK WITH BARRIER ON RETAINING WALL DETAILS NO. 1 |
| 27. | SOUND WALL - MASONRY BLOCK WITH BARRIER ON RETAINING WALL DETAILS NO. 2 |
| 28. | LOG OF TEST BORINGS 1 OF 5 |
| 29. | LOG OF TEST BORINGS 2 OF 5 |
| 30. | LOG OF TEST BORINGS 3 OF 5 |
| 31. | LOG OF TEST BORINGS 4 OF 5 |
| 32. | LOG OF TEST BORINGS 5 OF 5 |


## STANDARD PLANS DATED MAY 2006

| | |
|---|---|
| A10A | ACRONYMS AND ABBREVIATIONS (SHEET 1 OF 2) |
| A10B | ACRONYMS AND ABBREVIATIONS (SHEET 2 OF 2) |
| A10C | SYMBOLS (SHEET 1 OF 2) |
| A10D | SYMBOLS (SHEET 2 OF 2) |
| A62B | LIMITS OF PAYMENT FOR EXCAVATION AND BACKFILL BRIDGE SURCHARGE AND WALL |
| B0-1 | BRIDGE DETAILS |
| B0-3 | BRIDGE DETAILS |
| B2-3 | 16" AND 24" CAST-IN-DRILLED-HOLE CONCRETE PILE |
| B3-8 | RETAINING WALL DETAILS No. 1 |
| B3-9 | RETAINING WALL DETAILS No. 2 |
| B11-56 | CONCRETE BARRIER TYPE 736 |
| B15-9 | SOUND WALL MASONRY BLOCK MISCELLANEOUS DETAILS |
| ES-6B | ELECTRICAL SYSTEMS (LIGHTING STANDARD TYPES 15 AND 21 BARRIER RAIL MOUNTED DETAILS) |

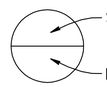


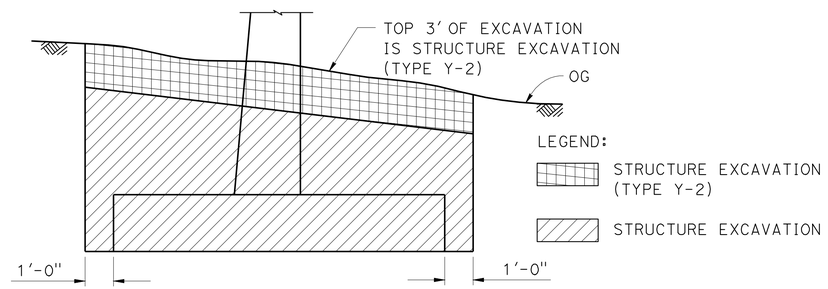


SW LOL 10+00 TO 12+00

## LIMITS OF PAYMENT FOR STRUCTURE EXCAVATION (TYPE Y-2) (AERIALLY DEPOSITED LEAD)

NO SCALE

## PILE DATA

| LOCATION | PILE TYPE | NOMINAL RESISTANCE (KIP) | | SPECIFIED TIP ELEVATION |
|---|---|---|---|---|
| | | COMPRESSION | TENSION | |
| Ret WALL TYPE 1SWBP(Mod) SW LOL 10+00.00 to 11+36.00 | 24" Ø CIDH | 180 | 0 | 52.3 |
| Ret WALL TYPE 1SWBP(Mod) SW LOL 11+36.00 to 11+50.50 | 24" Ø CIDH | 180 | 0 | 49.0 |
| COUNTERFORT RETAINING WALL SW LOL 11+50.50 to 12+27.92 | 24" Ø CIDH | 180 | 0 | 49.0 |
| Ret WALL TYPE 1SWBP(Mod) SW LOL 12+27.92 to 14+21.13 | 24" Ø CIDH | 180 | 0 | 50.5 |
| Ret WALL TYPE 1SWBP (Mod) SW LOL 14+21.13 to 15+63.75 | 24" Ø CIDH | 180 | 0 | 50.5 |
| Ret WALL TYPE 1SWBP(Mod) SW LOL 15+63.75 to 18+31.58 | 24" Ø CIDH | 180 | 0 | 51.3 |
| Ret WALL TYPE 1SWBP(Mod) SW LOL 18+31.58 to 19+03.59 | 24" Ø CIDH | 180 | 0 | 53.2 |

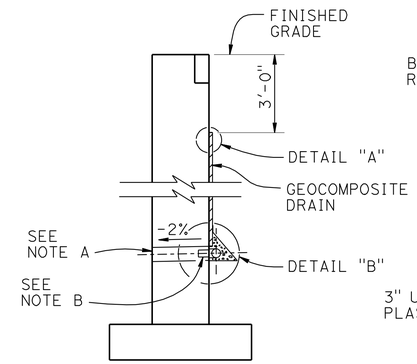


WALL SECTION

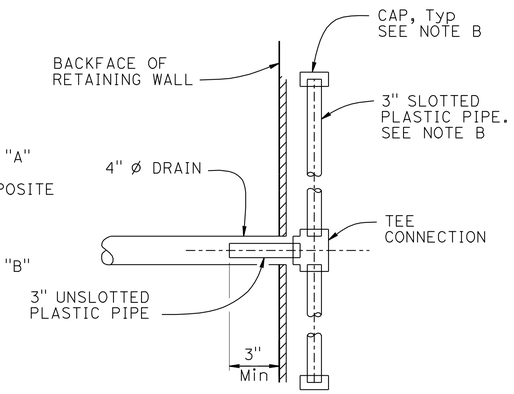


SECTION A-A

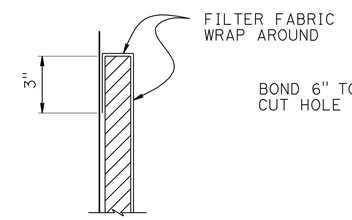


DETAIL "A"

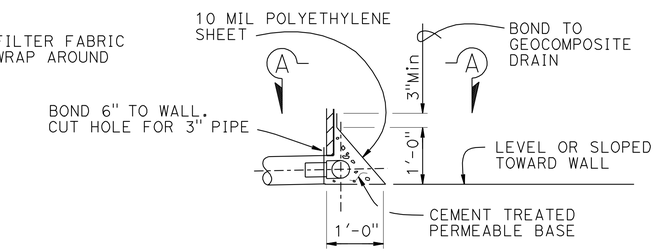


DETAIL "B"

## WEEP HOLE AND GEOCOMPOSITE DRAIN

ALTERNATIVE TO BRIDGE DETAIL BO-3 / 3-1

NOTES:

A. 4" Ø drains at 25' max center to center. For walls adjacent to sidewalks or curbs, provide 4" cast iron or asbestos cement pipe under the sidewalk to discharge through curb face. Exposed wall drains shall be located 3"± above finished grade.

B. Geocomposite drain, cement treated permeable base, and 3"Ø slotted plastic pipe continuous behind retaining wall Cap ends of pipe. Provide "Tee" connection at each 4" Ø drain.

1 **REVISED PER ADDENDUM No. 1 DATED JULY 13, 2012**

| | BY | CHECKED |
|---|---|---|
| DESIGN | V. Shostak / E. Watson | Daniel Sessions |
| DETAILS | Jie Tang | Daniel Sessions |
| QUANTITIES | Bruce Hagy | Eric Watson |

STATE OF CALIFORNIA DEPARTMENT OF TRANSPORTATION

DIVISION OF ENGINEERING SERVICES STRUCTURE DESIGN — DESIGN BRANCH 1

BRIDGE NO. X — POST MILE 3.64

SOUND WALL NO. 203

INDEX TO PLANS

STRUCTURES DESIGN DETAIL SHEET (ENGLISH) (REV. 09-01-10)

ORIGINAL SCALE IN INCHES FOR REDUCED PLANS 0 1 2 3

UNIT: 3576
PROJECT NUMBER & PHASE: 0700001833-1 CONTRACT NO.: 07-215934

DISREGARD PRINTS BEARING EARLIER REVISION DATES — REVISION DATES 12/12/10 12/04/11 06/11/12 — SHEET 2 OF 32

FILE => sw203-a-ltp.add

USERNAME => s124496 DATE PLOTTED => 12-JUL-2012 TIME PLOTTED => 13:58

| DIST | COUNTY | ROUTE | POST MILES TOTAL PROJECT | SHEET No. | TOTAL SHEETS |
|---|---|---|---|---|---|
| 07 | LA | 5 | 2.4/4.0 | 1259 | 1288 |

REGISTERED CIVIL ENGINEER 12-08-11 DATE

3-26-12
PLANS APPROVAL DATE

REGISTERED PROFESSIONAL ENGINEER Kevin Harper No. 42221 Exp. 3-31-12 CIVIL STATE OF CALIFORNIA

*The State of California or its officers or agents shall not be responsible for the accuracy or completeness of electronic copies of this plan sheet.*

1

NOTES:

1. For barrier details, see "CONCRETE BARRIER TYPE 736A (Mod 2) DETAILS" sheet.
2. For sound wall details, see "SOUND WALL - MASONRY BLOCK WITH BARRIER ON RETAINING WALL DETAILS NO. 1 and NO. 2" sheets.
3. For retaining wall details, see "RETAINING WALL TYPE 1SWBP - DETAIL NO. 1 and NO. 2" and "RETAINING WALL TYPE 5SWBP - DETAILS NO. 1 and NO. 2" sheets.
4. Ret Wall No. 195 details, see "RETAINING WALL NO. 195" plans.
5. Retaining wall expansion joints, weakened planes, and weep holes shall be placed per B0-3/3-3.
6. Not all piles shown in "DEVELOPED MIRRORED ELEVATION".
7. All longitudinal dimensions are measured along the SW LOL.
8. Contractor shall locate all utilities prior to footing excavation and driving piles.
9. Adjust pile locations and spacings where necessary to avoid utilities as approved by the Engineer.

LEGEND:

⊕ - Indicates vertical 24" Ø CIDH Pile

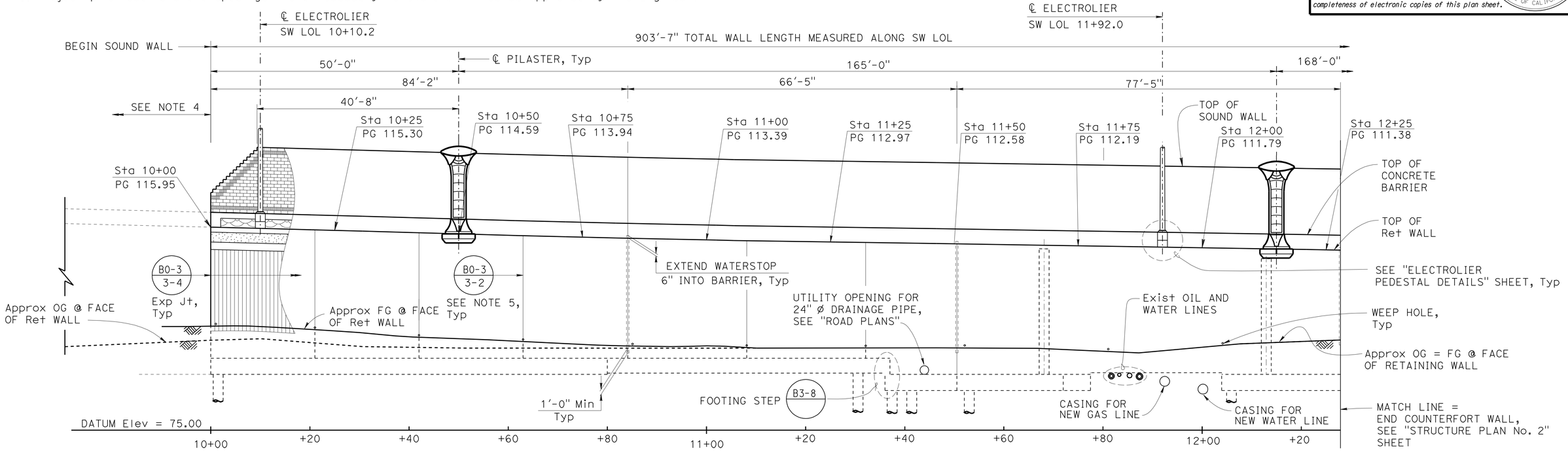


## DEVELOPED MIRRORED ELEVATION

1" = 10'

1 **REVISED PER ADDENDUM No. 1 DATED JULY 13, 2012**

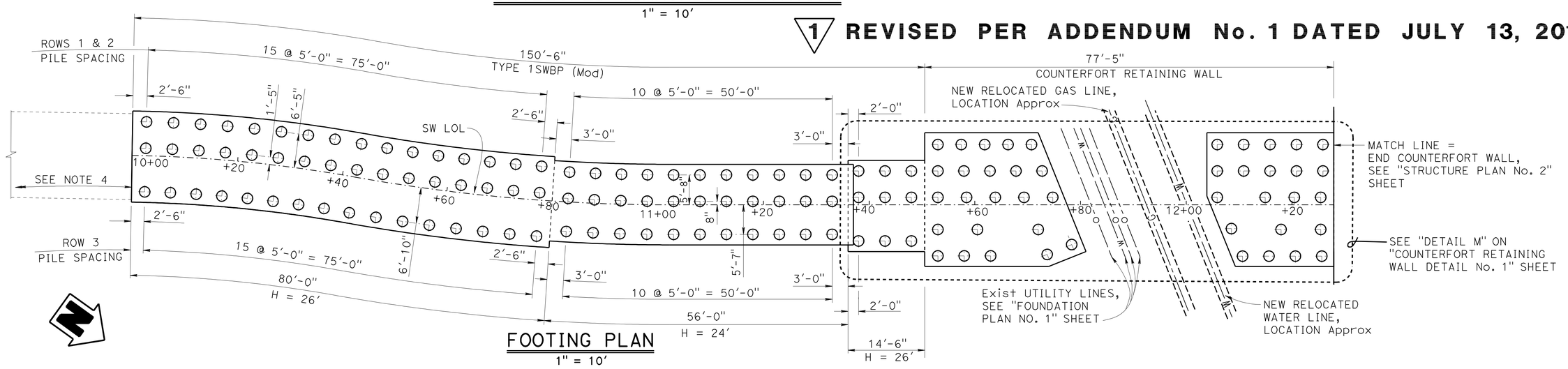


## FOOTING PLAN

1" = 10'

| | | | |
|---|---|---|---|
| DESIGN | BY V.Shostak / E.Watson | CHECKED Daniel Sessions | |
| DETAILS | BY J. Tang/G. Dickerson | CHECKED Daniel Sessions | |
| QUANTITIES | BY Bruce Hagy | CHECKED Eric Watson | |

STATE OF CALIFORNIA
DEPARTMENT OF TRANSPORTATION

DIVISION OF ENGINEERING SERVICES
STRUCTURE DESIGN
DESIGN BRANCH 1

BRIDGE NO. X
POST MILE 3.64

# SOUND WALL NO. 203
# STRUCTURE PLAN NO. 1

STRUCTURES DESIGN DETAIL SHEET (ENGLISH) (REV. 09-01-10)

ORIGINAL SCALE IN INCHES FOR REDUCED PLANS 0 1 2 3

UNIT: 3576
PROJECT NUMBER & PHASE: 07000018331
CONTRACT NO.: 07-215934

DISREGARD PRINTS BEARING EARLIER REVISION DATES

REVISION DATES 12/12/10 06/08/12 11/29/11

SHEET 3 OF 32

FILE => sw203-c-sp01.dgn

USERNAME => s124496 DATE PLOTTED => 12-JUL-2012 TIME PLOTTED => 13:58

| DIST | COUNTY | ROUTE | POST MILES TOTAL PROJECT | SHEET No. | TOTAL SHEETS |
|---|---|---|---|---|---|
| 07 | LA | 5 | 2.4/4.0 | 1260 | 1288 |

REGISTERED CIVIL ENGINEER 12-08-11 DATE

3-26-12
PLANS APPROVAL DATE

REGISTERED PROFESSIONAL ENGINEER Kevin Harper No. 42221 Exp. 3-31-12 CIVIL STATE OF CALIFORNIA

*The State of California or its officers or agents shall not be responsible for the accuracy or completeness of electronic copies of this plan sheet.*

1

For "NOTES", see "STRUCTURE PLAN NO. 1" sheet.

1 **REVISED PER ADDENDUM No. 1 DATED JULY 13, 2012**

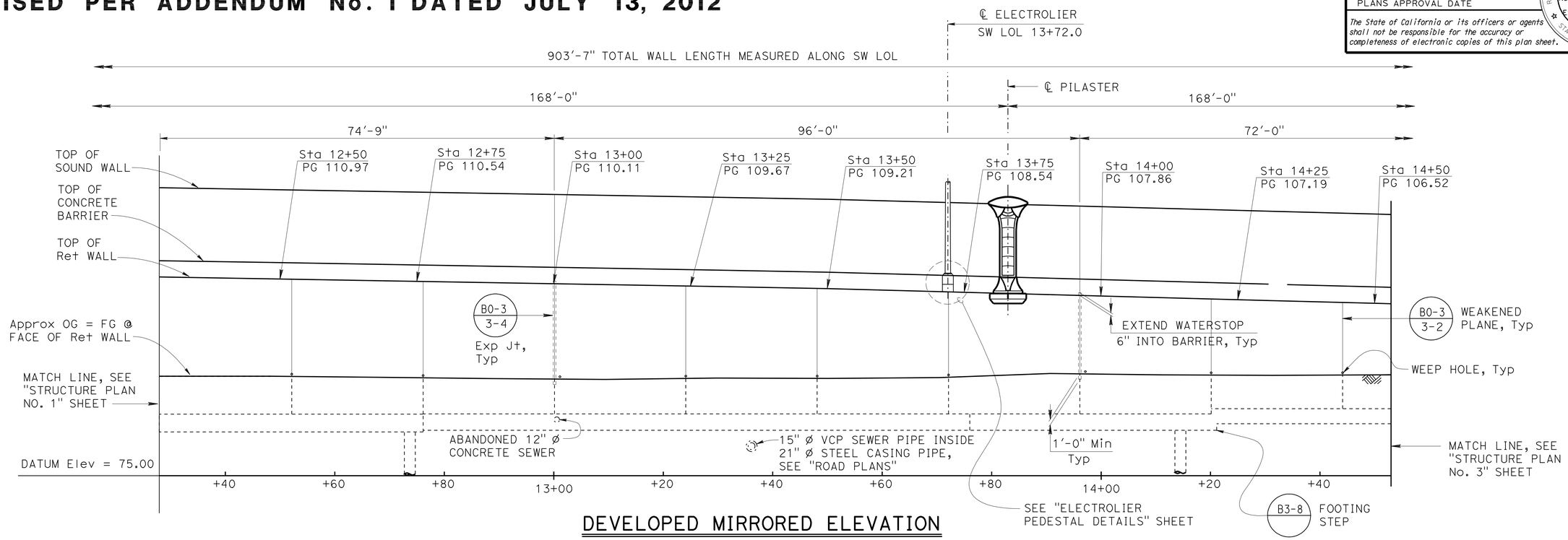


## DEVELOPED MIRRORED ELEVATION

1" = 10'

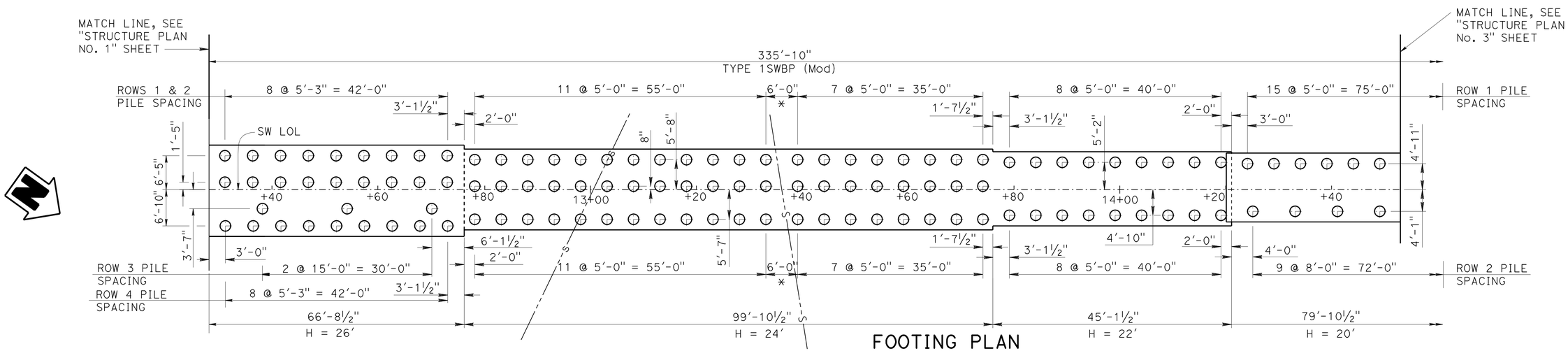


## FOOTING PLAN

1" = 10'

* SEE NOTE 9 ON "STRUCTURE PLAN NO.1" SHEET

| | | | |
|---|---|---|---|
| DESIGN | BY V.Shostak / E.Watson | CHECKED Daniel Sessions | |
| DETAILS | BY J.Tang / G.Dickerson | CHECKED Daniel Sessions | |
| QUANTITIES | BY Bruce Hagy | CHECKED Eric Watson | |

STATE OF CALIFORNIA DEPARTMENT OF TRANSPORTATION

DIVISION OF ENGINEERING SERVICES STRUCTURE DESIGN DESIGN BRANCH 1

BRIDGE NO.

POST MILE 3.64

# SOUND WALL NO. 203

# STRUCTURE PLAN NO. 2

STRUCTURES DESIGN DETAIL SHEET (ENGLISH) (REV. 09-01-10)

ORIGINAL SCALE IN INCHES FOR REDUCED PLANS 0 1 2 3

UNIT: 3576
PROJECT NUMBER & PHASE: 07000018331 CONTRACT NO.: 07-215934

DISREGARD PRINTS BEARING EARLIER REVISION DATES

REVISION DATES 12/14/10 11-8-11 04/03/12 SHEET 4 OF 32

FILE => sw203-c-sp02.add

USERNAME => s124496 DATE PLOTTED => 12-JUL-2012 TIME PLOTTED => 13:58

| DIST | COUNTY | ROUTE | POST MILES TOTAL PROJECT | SHEET No. | TOTAL SHEETS |
|---|---|---|---|---|---|
| 07 | LA | 5 | 2.4/4.0 | 1263 | 1288 |

REGISTERED CIVIL ENGINEER 12-08-11 DATE

3-26-12
PLANS APPROVAL DATE

REGISTERED PROFESSIONAL ENGINEER Kevin Harper No. 42221 Exp. 3-31-12 CIVIL STATE OF CALIFORNIA

*The State of California or its officers or agents shall not be responsible for the accuracy or completeness of electronic copies of this plan sheet.*

NOTES:

Underground utilities as shown are approximate

+ - Denotes spot elevation

⊕ - Denotes piles (not all piles shown)

XX.X - Indicates bottom of Ftg elevation

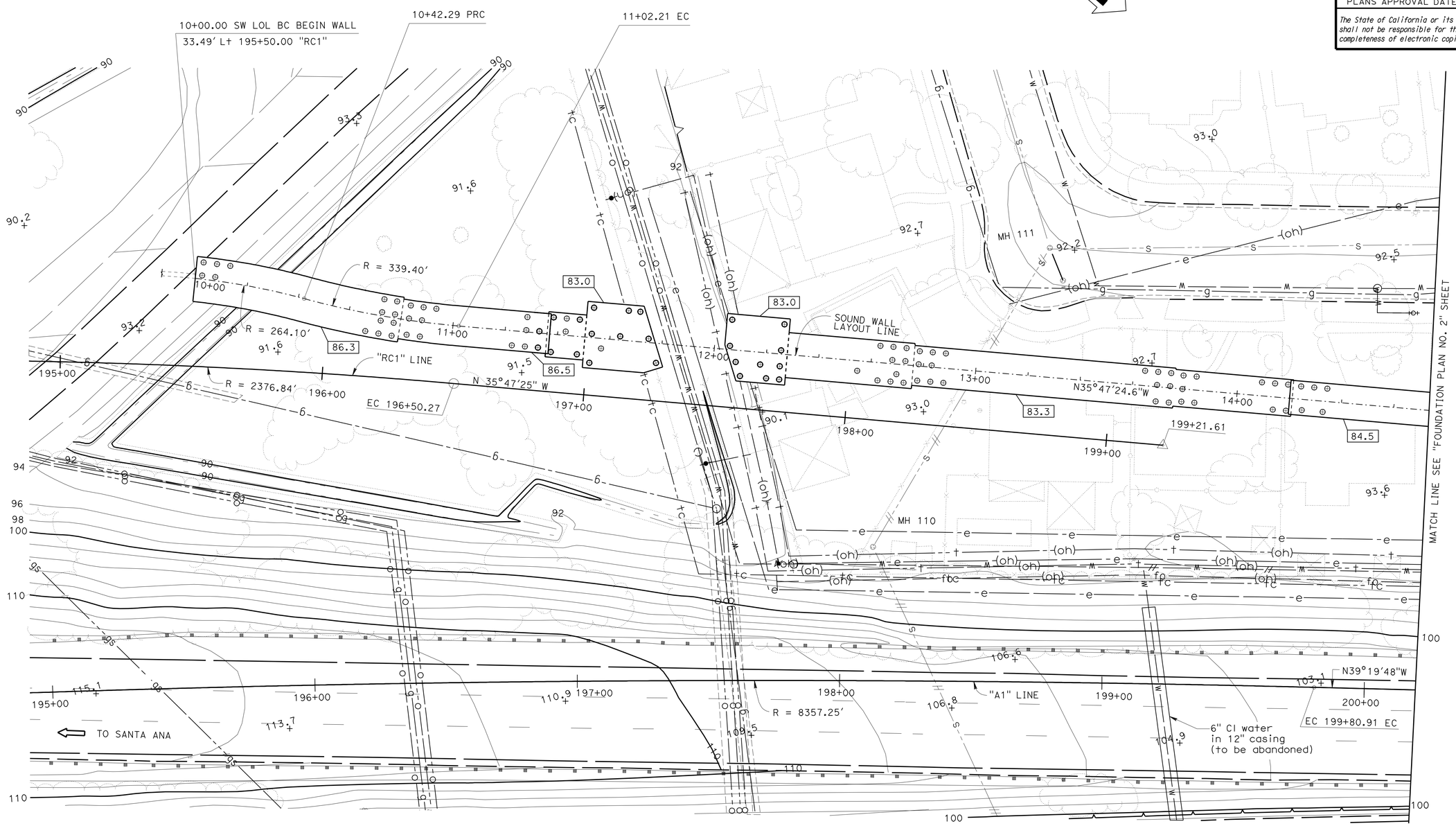


1 **REVISED PER ADDENDUM No. 1 DATED JULY 13, 2012**

| SCALE 1" = 20' | | | | | | |
|---|---|---|---|---|---|---|
| | DESIGN | BY V.Shostak / E.Watson | CHECKED Daniel Sessions | STATE OF CALIFORNIA DEPARTMENT OF TRANSPORTATION | DIVISION OF ENGINEERING SERVICES STRUCTURE DESIGN DESIGN BRANCH 1 | BRIDGE NO. |
| | DETAILS | BY Jie Tang | CHECKED Daniel Sessions | | | POST MILE 3.64 |
| | QUANTITIES | BY Bruce Hagy | CHECKED Eric Watson | | | |

SOUND WALL NO. 203

FOUNDATION PLAN NO. 1

STRUCTURES DESIGN DETAIL SHEET (ENGLISH) (REV. 09-01-10)

ORIGINAL SCALE IN INCHES FOR REDUCED PLANS 0 1 2 3

UNIT: 3576
PROJECT NUMBER & PHASE: 0700001833-1
CONTRACT NO.: 07-215934

DISREGARD PRINTS BEARING EARLIER REVISION DATES

REVISION DATES 07/02/11 06/11/12 11-14-11

SHEET 7 OF 32

FILE => sw203-e-0fp101.dgn

USERNAME => s124496 DATE PLOTTED => 12-JUL-2012 TIME PLOTTED => 13:58

| DIST | COUNTY | ROUTE | POST MILES TOTAL PROJECT | SHEET No. | TOTAL SHEETS |
|---|---|---|---|---|---|
| 07 | LA | 5 | 2.4/4.0 | 1269 | 1288 |

REGISTERED CIVIL ENGINEER 12-08-11 DATE

3-26-12
PLANS APPROVAL DATE

REGISTERED PROFESSIONAL ENGINEER Kevin Harper No. 42221 Exp. 3-31-12 CIVIL STATE OF CALIFORNIA

*The State of California or its officers or agents shall not be responsible for the accuracy or completeness of electronic copies of this plan sheet.*

NOTES:
1. All Masonry Block shall be Precision units, unless otherwise noted.

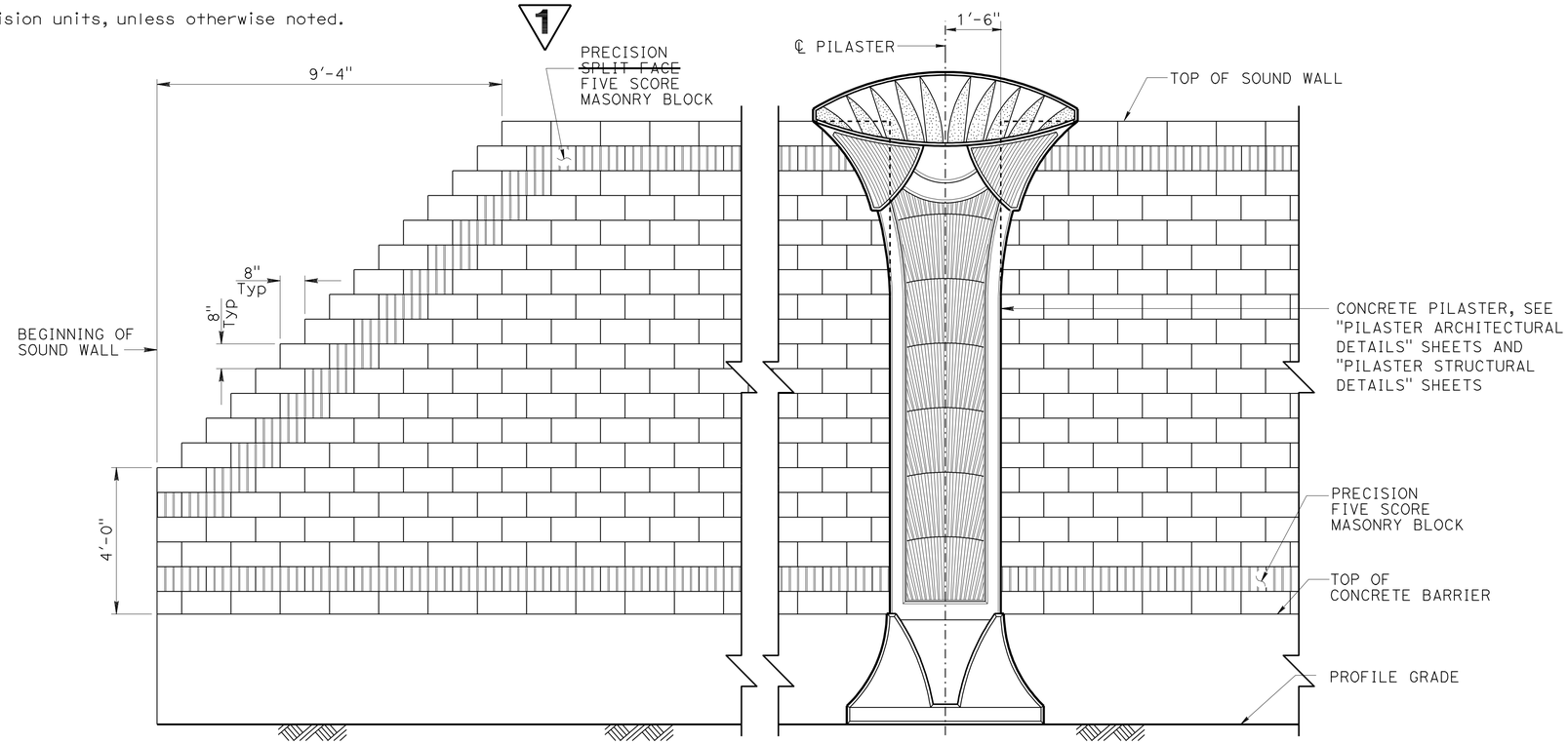


## PART SOUND WALL ELEVATION - FREEWAY SIDE

½" = 1'-0"

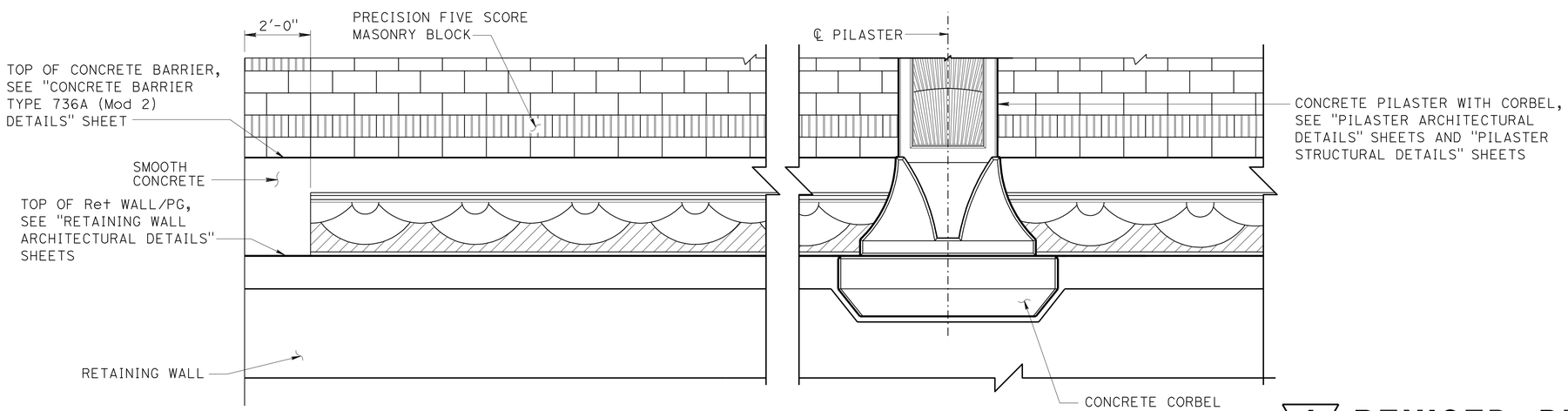


## PART SOUND WALL ELEVATION - BACK SIDE

½" = 1'-0"

1 **REVISED PER ADDENDUM No. 1 DATED JULY 13, 2012**

| | | | |
|---|---|---|---|
| DESIGN | BY Isaac Tasabia | CHECKED Javier Chavez | |
| DETAILS | BY J.Zhou / G.Dickerson | CHECKED Daniel Sessions | |
| QUANTITIES | BY April Pearson | CHECKED Kyoung Lee | |

STATE OF CALIFORNIA
DEPARTMENT OF TRANSPORTATION

DIVISION OF ENGINEERING SERVICES
STRUCTURE DESIGN
DESIGN BRANCH 1

BRIDGE NO. X
POST MILE 3.64

SOUND WALL NO. 203
SOUND WALL ARCHITECTURAL DETAILS

STRUCTURES DESIGN DETAIL SHEET (ENGLISH) (REV. 09-01-10)

ORIGINAL SCALE IN INCHES FOR REDUCED PLANS 0 1 2 3

UNIT: 3576
PROJECT NUMBER & PHASE: 07000018331
CONTRACT NO.: 07-215934

DISREGARD PRINTS BEARING EARLIER REVISION DATES

REVISION DATES 12/10/10 12/07/11 11/29/11

SHEET 13 OF 32

FILE => sw203-f-sou01.dwg

USERNAME => s124496 DATE PLOTTED => 12-JUL-2012 TIME PLOTTED => 13:58

| DIST | COUNTY | ROUTE | POST MILES TOTAL PROJECT | SHEET No. | TOTAL SHEETS |
|---|---|---|---|---|---|
| 07 | LA | 5 | 2.4/4.0 | 1288A | 1288 |

REGISTERED CIVIL ENGINEER 12-08-11 DATE

3-26-12
PLANS APPROVAL DATE

REGISTERED PROFESSIONAL ENGINEER Kevin Harper No. 42221 Exp. 3-31-14 CIVIL STATE OF CALIFORNIA

*The State of California or its officers or agents shall not be responsible for the accuracy or completeness of electronic copies of this plan sheet.*

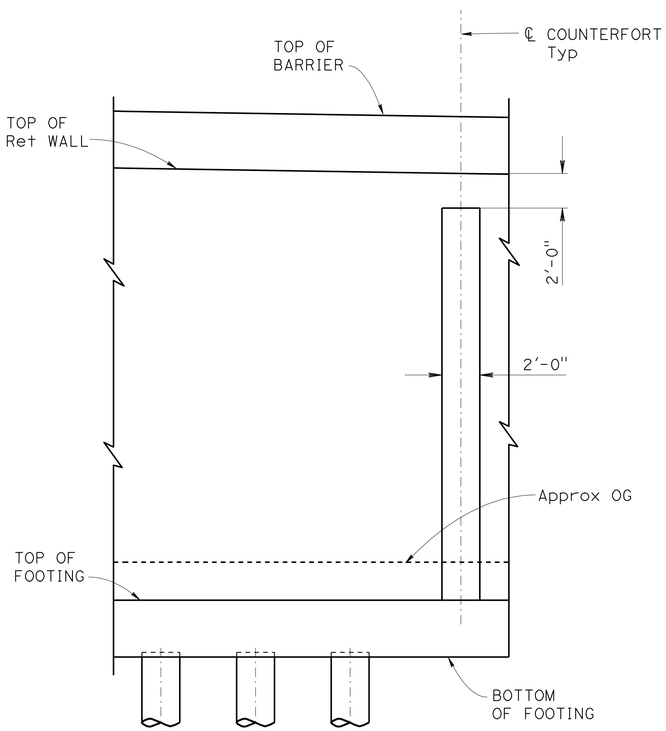


VIEW A-A
1/4" = 1'-0"

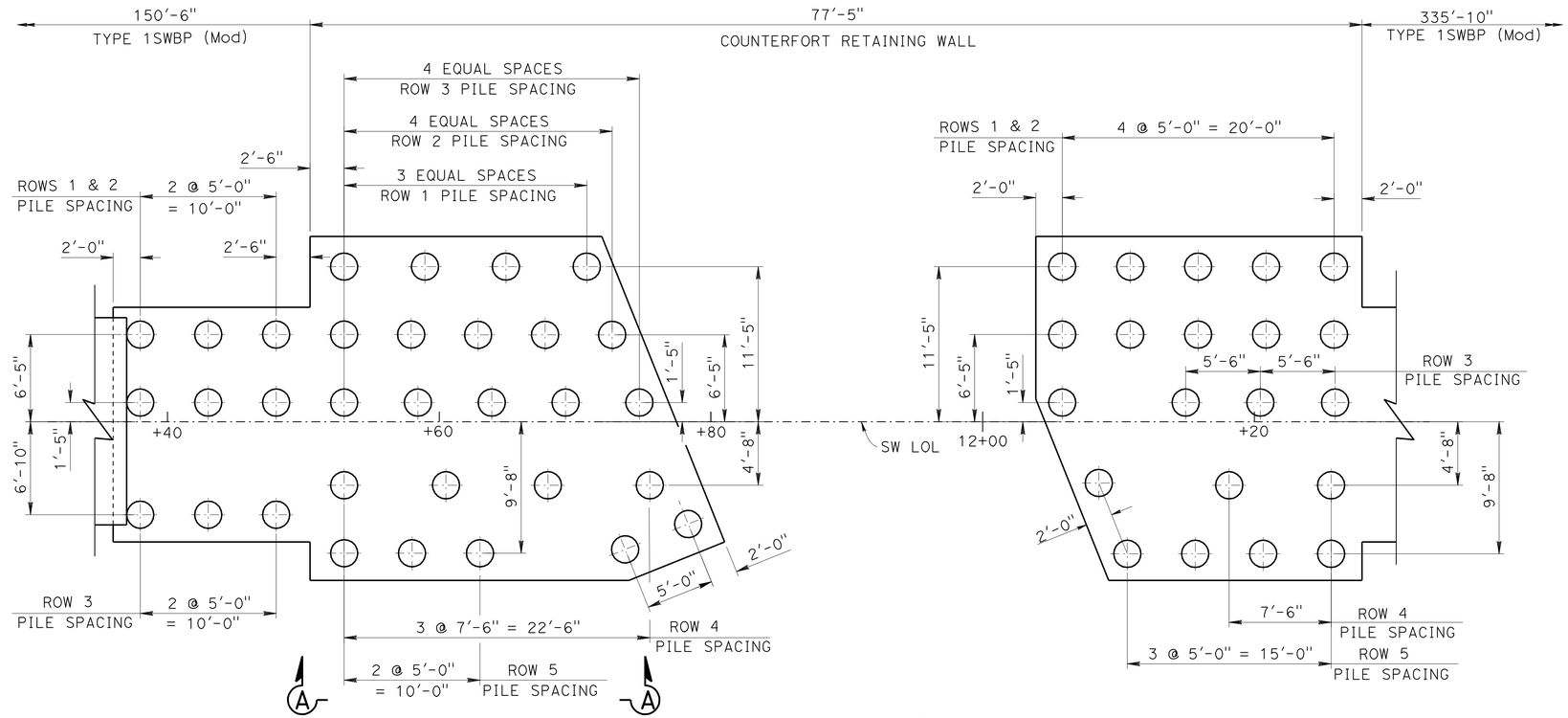


DETAIL M
3/16" = 1'-0"

NOTE:

1. For location of "DETAIL M", see "STRUCTURE PLAN No. 1" sheet.

1 ADDED PER ADDENDUM No. 1 DATED JULY 13, 2012

| | | | |
|---|---|---|---|
| DESIGN | BY Eric Watson | CHECKED Vadim Shostak | |
| DETAILS | BY Jin Zhou | CHECKED Vadim Shostak | |
| QUANTITIES | BY Vadim Shostak | CHECKED Eric Watson | |

STATE OF CALIFORNIA
DEPARTMENT OF TRANSPORTATION

DIVISION OF ENGINEERING SERVICES
STRUCTURE DESIGN
DESIGN BRANCH 1

BRIDGE NO.
POST MILE 3.64

SOUND WALL NO. 203
COUNTERFORT RETAINING WALL DETAIL NO. 1

STRUCTURES DESIGN DETAIL SHEET (ENGLISH) (REV. 09-01-10)

ORIGINAL SCALE IN INCHES FOR REDUCED PLANS 0 1 2 3

UNIT: 3576
PROJECT NUMBER & PHASE: 07000018331
CONTRACT NO.: 07-215934

DISREGARD PRINTS BEARING EARLIER REVISION DATES

REVISION DATES 04/04/12 06/11/12

SHEET 3A OF 32

FILE => sw203-z-cfdt01.add

USERNAME => s124496 DATE PLOTTED => 12-JUL-2012 TIME PLOTTED => 13:59

| DIST | COUNTY | ROUTE | POST MILES TOTAL PROJECT | SHEET No. | TOTAL SHEETS |
|---|---|---|---|---|---|
| 07 | LA | 5 | 2.4/4.0 | 1288B | 1288 |

REGISTERED CIVIL ENGINEER 12-08-11 DATE

3-26-12
PLANS APPROVAL DATE

REGISTERED PROFESSIONAL ENGINEER Kevin Harper No. 42221 Exp. 3-31-14 CIVIL STATE OF CALIFORNIA

*The State of California or its officers or agents shall not be responsible for the accuracy or completeness of electronic copies of this plan sheet.*

1

NOTE: For "SECTION A-A" and "SECTION B-B", see "COUNTERFORT RETAINING WALL No. 3" sheet.

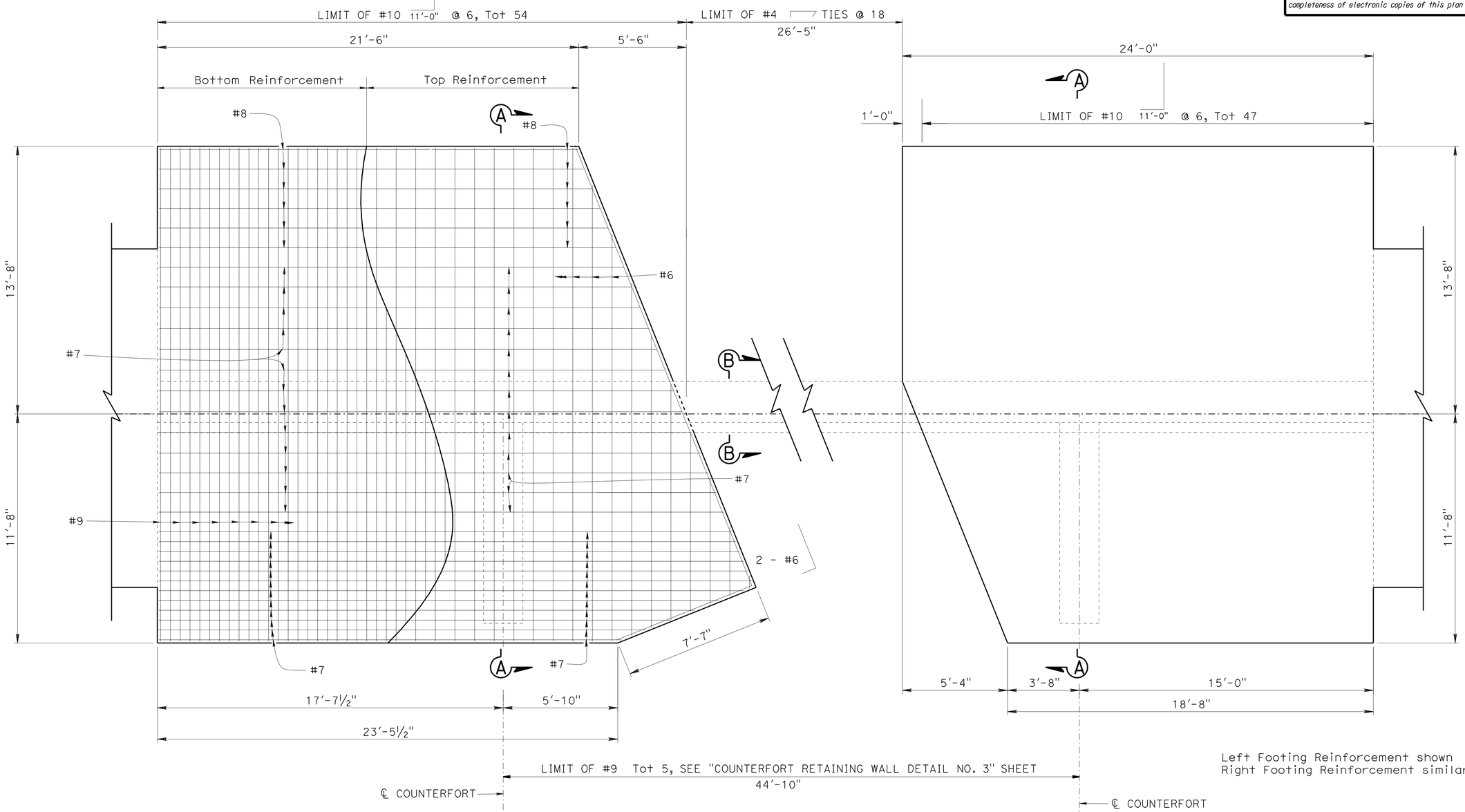


Left Footing Reinforcement shown
Right Footing Reinforcement similar

1 **ADDED PER ADDENDUM No. 1 DATED JULY 13, 2012**

## COUNTERFORT DETAILS

3/8" = 1'-0"

| | | | |
|---|---|---|---|
| DESIGN | BY Eric Watson | CHECKED Vadim Shostak | |
| DETAILS | BY Jin Zhou | CHECKED Vadim Shostak | |
| QUANTITIES | BY Vadim Shostak | CHECKED Eric Watson | |

STATE OF CALIFORNIA DEPARTMENT OF TRANSPORTATION

DIVISION OF ENGINEERING SERVICES STRUCTURE DESIGN DESIGN BRANCH 1

BRIDGE NO.

POST MILE 3.64

SOUND WALL NO. 203

COUNTERFORT RETAINING WALL DETAIL NO. 2

STRUCTURES DESIGN DETAIL SHEET (ENGLISH) (REV. 09-01-10)

ORIGINAL SCALE IN INCHES FOR REDUCED PLANS 0 1 2 3

UNIT: 3576
PROJECT NUMBER & PHASE: 07000018331
CONTRACT NO.: 07-215931

DISREGARD PRINTS BEARING EARLIER REVISION DATES 04/06/12 06/11/12

SHEET 3B OF 32

FILE => sw203-z-cfdt02.dgn

USERNAME => s124496 DATE PLOTTED => 12-JUL-2012 TIME PLOTTED => 13:59

| DIST | COUNTY | ROUTE | POST MILES TOTAL PROJECT | SHEET No. | TOTAL SHEETS |
|---|---|---|---|---|---|
| 07 | LA | 5 | 2.4/4.0 | 1288C | 1288 |

REGISTERED CIVIL ENGINEER 12-08-11 DATE

3-26-12
PLANS APPROVAL DATE

REGISTERED PROFESSIONAL ENGINEER Kevin Harper No. 42221 Exp. 3-31-14 CIVIL STATE OF CALIFORNIA

*The State of California or its officers or agents shall not be responsible for the accuracy or completeness of electronic copies of this plan sheet.*

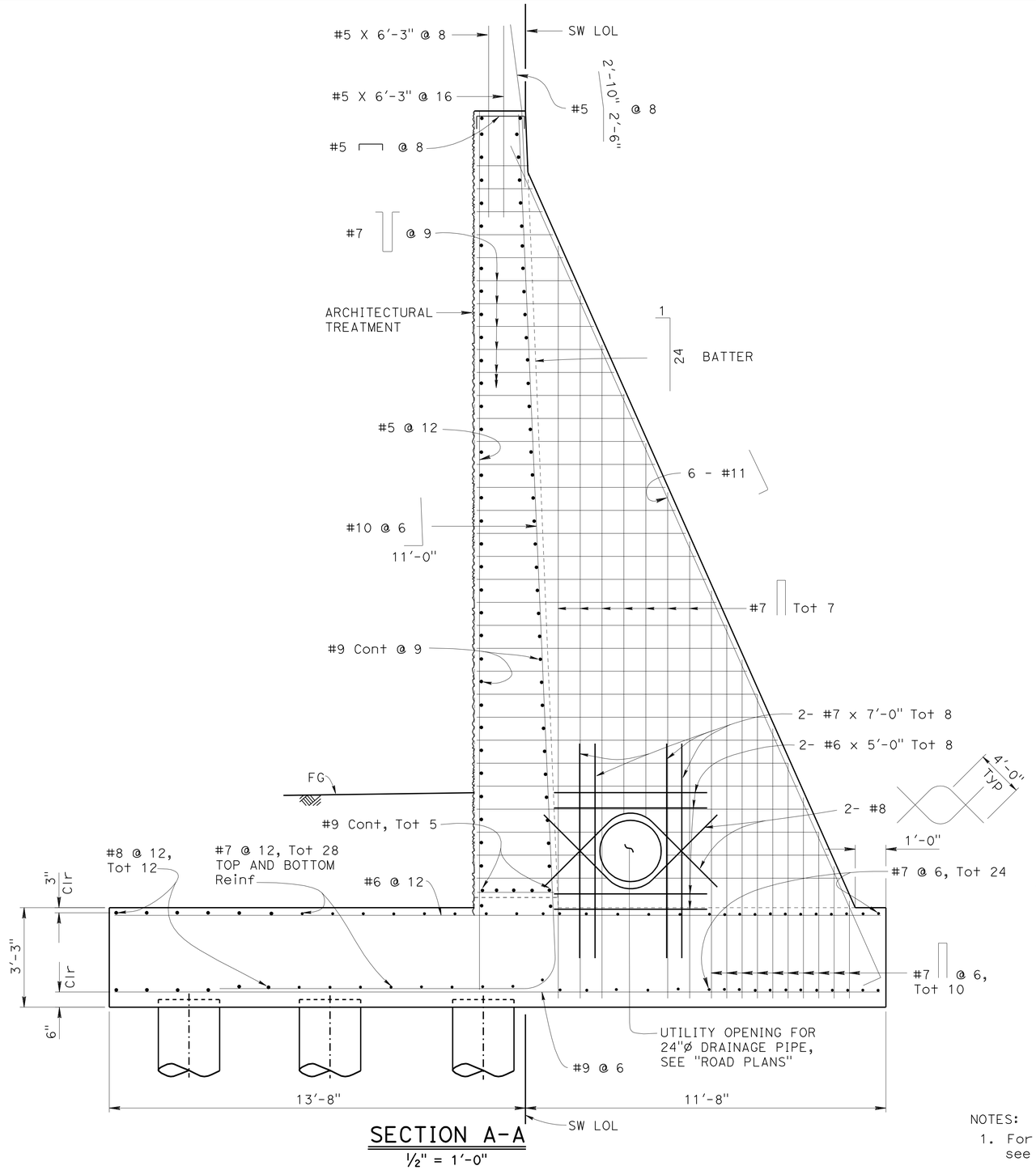


## SECTION A-A

½" = 1'-0"

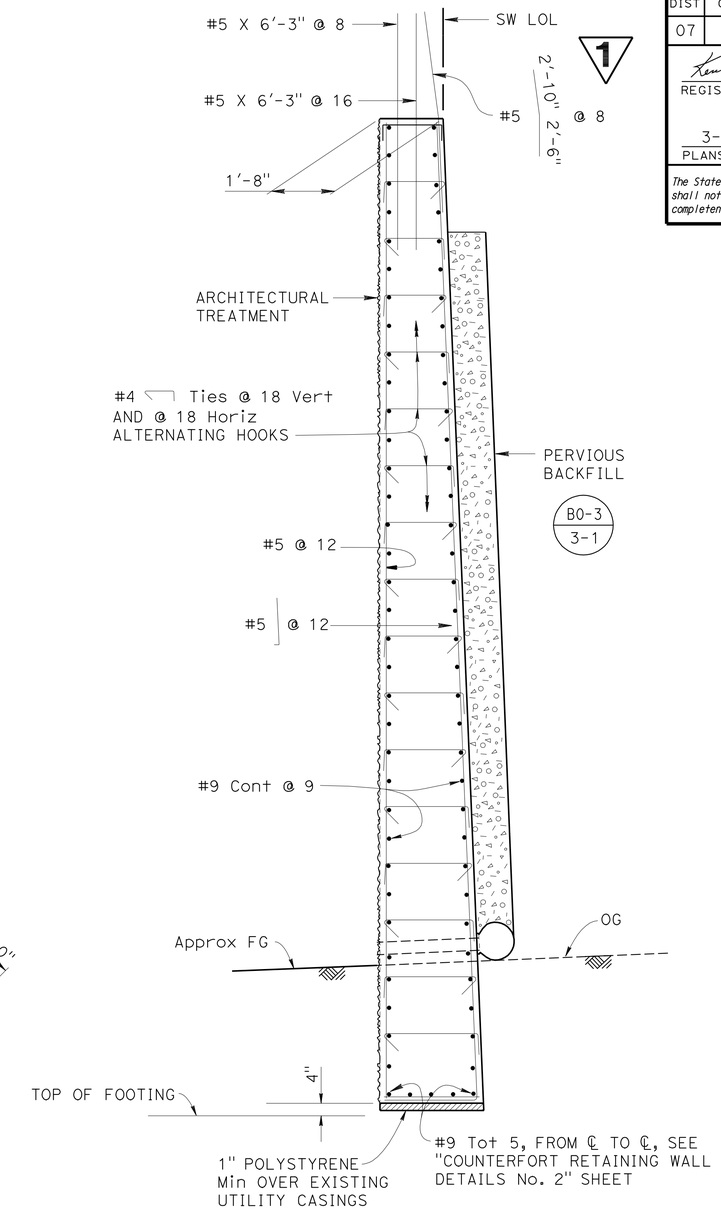


## SECTION B-B

½" = 1'-0"

**1 ADDED PER ADDENDUM No. 1 DATED JULY 13, 2012**

NOTES:

1. For "SECTION A-A" and "SECTION B-B" locations, see "COUNTERFORT RETAINING WALL No. 2" sheet.

| | BY | CHECKED |
|---|---|---|
| DESIGN | Eric Watson | Vadim Shostak |
| DETAILS | Jin Zhou | Vadim Shostak |
| QUANTITIES | Vadim Shostak | Eric Watson |

STATE OF CALIFORNIA
DEPARTMENT OF TRANSPORTATION

DIVISION OF ENGINEERING SERVICES
STRUCTURE DESIGN
DESIGN BRANCH 1

BRIDGE NO.
POST MILE 3.64

# SOUND WALL NO. 203
## COUNTERFORT RETAINING WALL DETAIL NO. 3

STRUCTURES DESIGN DETAIL SHEET (ENGLISH) (REV. 09-01-10)

ORIGINAL SCALE IN INCHES FOR REDUCED PLANS 0 1 2 3

UNIT: 3576
PROJECT NUMBER & PHASE: 07000018331
CONTRACT NO.: 07-215934

DISREGARD PRINTS BEARING EARLIER REVISION DATES

REVISION DATES 04/04/12 06/11/12

SHEET 3C OF 32

FILE => sw203-z-cfdt03.dgn

USERNAME => s124496 DATE PLOTTED => 12-JUL-2012 TIME PLOTTED => 13:59

| DIST | COUNTY | ROUTE | POST MILES TOTAL PROJECT | SHEET No. | TOTAL SHEETS |
|---|---|---|---|---|---|
| 07 | LA | 5 | 2.4/4.0 | 1288D | 1288 |

Traci Menard 7-6-12
REGISTERED CIVIL ENGINEER DATE

3-26-12
PLANS APPROVAL DATE

REGISTERED PROFESSIONAL ENGINEER
TRACI MENARD
No. 54207
Exp. 12-31-2013
CIVIL
STATE OF CALIFORNIA

*The State of California or its officers or agents shall not be responsible for the accuracy or completeness of electronic copies of this plan sheet.*

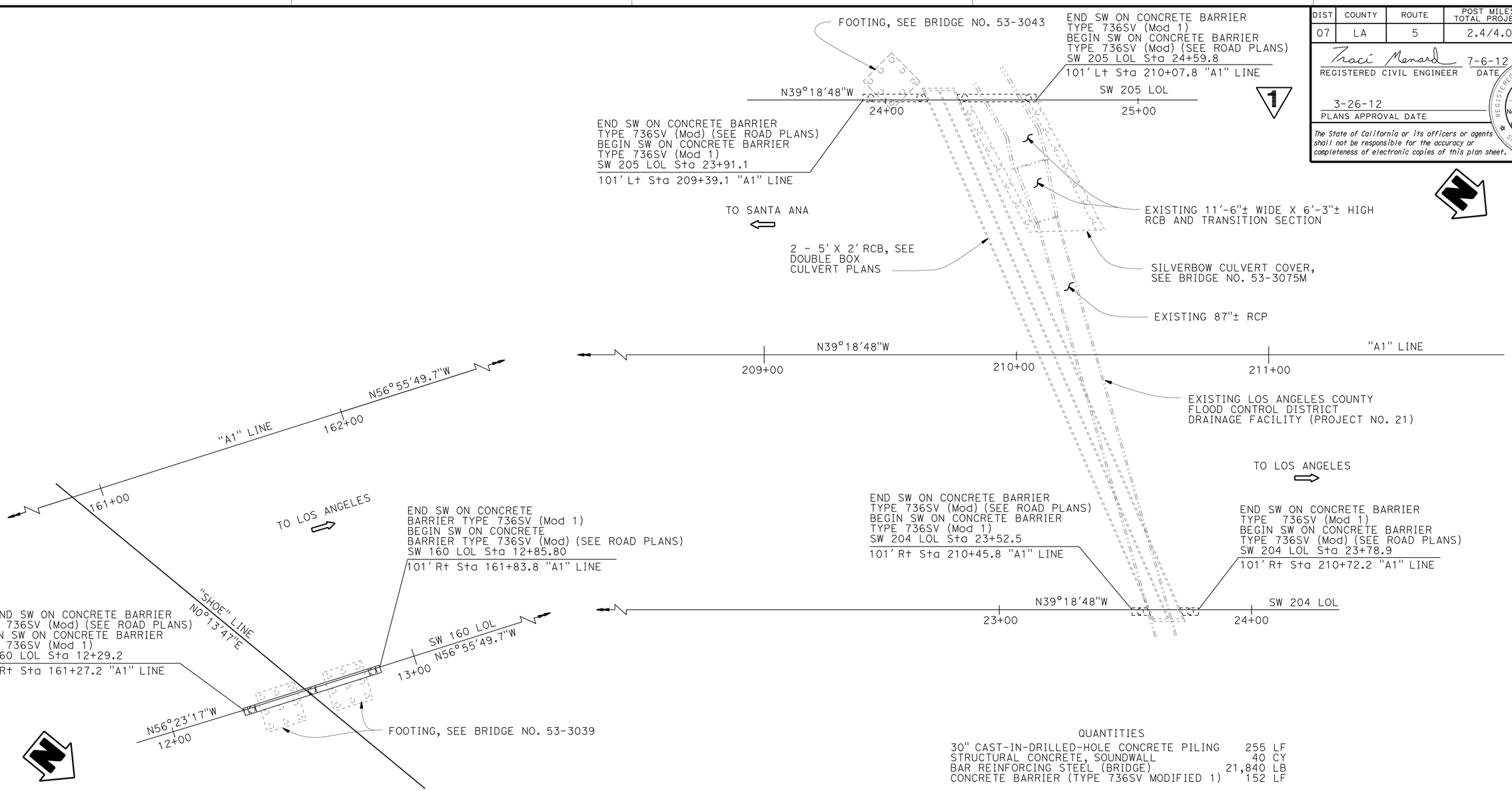


QUANTITIES

| | |
|---|---|
| 30" CAST-IN-DRILLED-HOLE CONCRETE PILING | 255 LF |
| STRUCTURAL CONCRETE, SOUNDWALL | 40 CY |
| BAR REINFORCING STEEL (BRIDGE) | 21,840 LB |
| CONCRETE BARRIER (TYPE 736SV MODIFIED 1) | 152 LF |

Denotes existing structure

## PLAN

1" = 20'

NOTE:
THE CONTRACTOR SHALL VERIFY ALL CONTROLLING FIELD DIMENSIONS BEFORE ORDERING OR FABRICATING ANY MATERIAL.

**1 ADDED PER ADDENDUM No. 1 DATED JULY 13, 2012**

Traci Menard
DESIGN ENGINEER

| | BY | CHECKED | | BY | CHECKED |
|---|---|---|---|---|---|
| DESIGN | John Lane | Fred Feng | LOAD & RESISTANCE FACTOR DESIGN | | |
| DETAILS | Marvin Lane | Fred Feng | LAYOUT | John Lane | Fred Feng |
| QUANTITIES | Nikki Tiongco | Suzan Moradi | SPECIFICATIONS | Theresa Nedwick | PLANS AND SPECS COMPARED John Lane |

STATE OF CALIFORNIA
DEPARTMENT OF TRANSPORTATION

DIVISION OF ENGINEERING SERVICES
STRUCTURE DESIGN
DESIGN BRANCH 15

BRIDGE NO. NA
POST MILE 3.05/3.98

# SPECIAL DESIGN FOR SOUND WALLS
# PROJECT PLAN

ORIGINAL SCALE IN INCHES FOR REDUCED PLANS 0 1 2 3

UNIT: 07
PROJECT NUMBER & PHASE: 0700001833
CONTRACT NO.: 07-215931

DISREGARD PRINTS BEARING EARLIER REVISION DATES

REVISION DATES: ~~7-3-12~~ ~~7-5-12~~ ~~7-9-12~~ 7-10-12

SHEET 1 OF 10

USERNAME => s124496 DATE PLOTTED => 12-JUL-2012 TIME PLOTTED => 13:59

STRUCTURES DESIGN GENERAL PLAN SHEET (ENGLISH) (REV.09-01-10)

FILE => 07-215931-a-app.add

| DIST | COUNTY | ROUTE | POST MILES TOTAL PROJECT | SHEET No. | TOTAL SHEETS |
|---|---|---|---|---|---|
| 07 | LA | 5 | 2.4/4.0 | 1288E | 1288 |

Traci Menard 7-6-12
REGISTERED CIVIL ENGINEER DATE

3-26-12
PLANS APPROVAL DATE

REGISTERED PROFESSIONAL ENGINEER TRACI MENARD No. 54207 Exp. 12-31-2013 CIVIL STATE OF CALIFORNIA

*The State of California or its officers or agents shall not be responsible for the accuracy or completeness of electronic copies of this plan sheet.*

1

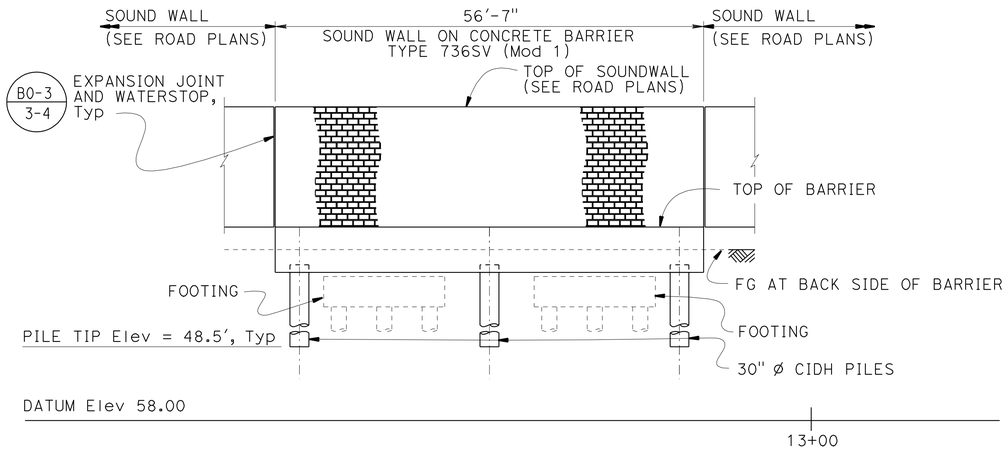


## ELEVATION - SW 160

1" = 10'

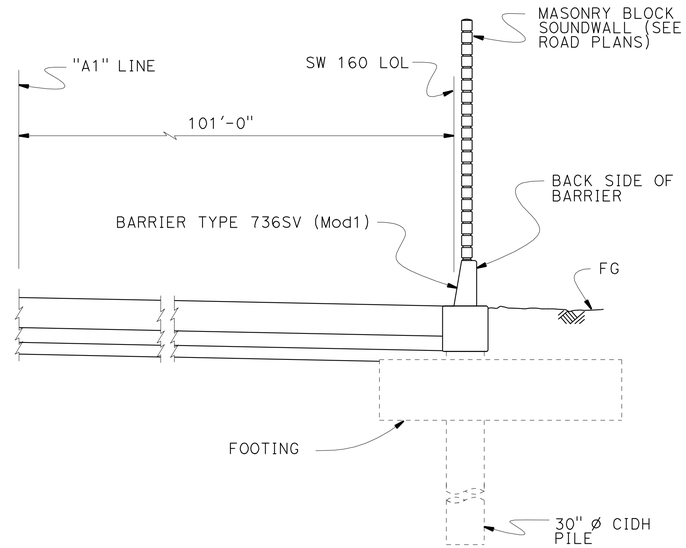


## TYPICAL SECTION SW 160

1" = 5'-0"

Sta 12+29.2 TO Sta 12+85.8

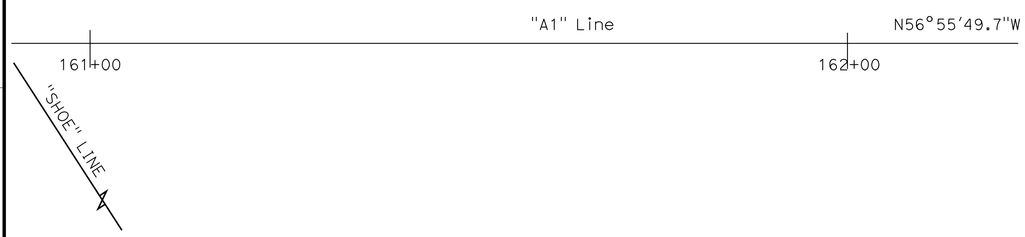


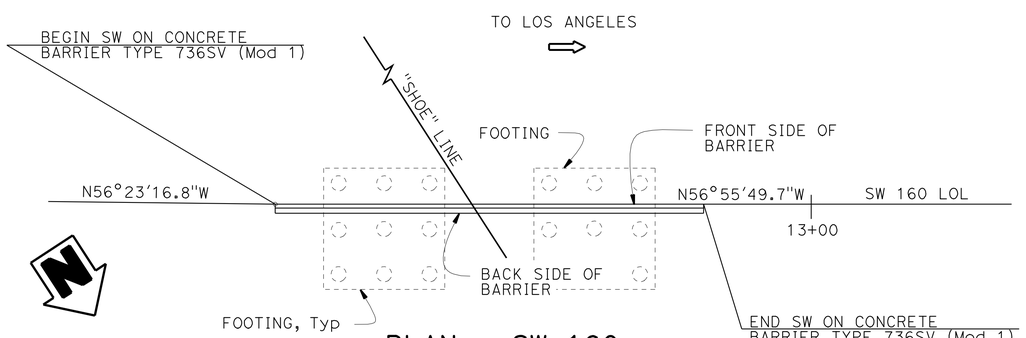


## PLAN - SW 160

1" = 10'

## INDEX TO PLANS


1. PROJECT PLAN
2. GENERAL PLAN NO. 1
3. GENERAL PLAN NO. 2
4. GENERAL PLAN NO. 3
5. FOUNDATION PLAN NO. 1
6. FOUNDATION PLAN NO. 2
7. SOUND WALL 160 & 204 LAYOUT
8. SOUND WALL 205 LAYOUT
9. SOUND WALL DETAILS NO. 1
10. SOUND WALL DETAILS NO. 2


## STANDARD PLANS DATED MAY 2006

| | |
|---|---|
| A10A | ACRONYMS AND ABBREVIATIONS (SHEET 1 OF 2) |
| A10B | ACRONYMS AND ABBREVIATIONS (SHEET 2 OF 2) |
| A10C | SYMBOLS (SHEET 1 OF 2) |
| A10D | SYMBOLS (SHEET 2 OF 2) |
| B0-3 | BRIDGE DETAILS |
| B0-13 | BRIDGE DETAILS |
| RSP B15-6 | SOUND WALL MASONRY BLOCK ON TYPE 736S/SV BARRIER DETAILS (1) |

STANDARD PLAN SHEET No.

DETAIL No.

NOTE:
THE CONTRACTOR SHALL VERIFY ALL CONTROLLING FIELD DIMENSIONS BEFORE ORDERING OR FABRICATING ANY MATERIAL.

1 **ADDED PER ADDENDUM No. 1 DATED JULY 13, 2012**

Traci Menard
DESIGN ENGINEER

| | BY | CHECKED | | BY | CHECKED |
|---|---|---|---|---|---|
| DESIGN | John Lane | Fred Feng | LOAD & RESISTANCE FACTOR DESIGN | | |
| DETAILS | Marvin Lane | Fred Feng | LAYOUT | John Lane | Fred Feng |
| QUANTITIES | Nikki Tiongco | Suzan Moradi | SPECIFICATIONS | Theresa Nedwick | PLANS AND SPECS COMPARED John Lane |

ORIGINAL SCALE IN INCHES FOR REDUCED PLANS 0 1 2 3

STATE OF CALIFORNIA
DEPARTMENT OF TRANSPORTATION

DIVISION OF ENGINEERING SERVICES
STRUCTURE DESIGN
DESIGN BRANCH 15

BRIDGE NO. NA
POST MILE 3.05/3.98

# SPECIAL DESIGN FOR SOUND WALLS
# GENERAL PLAN NO. 1

UNIT: 07
PROJECT NUMBER & PHASE: 0700001833
CONTRACT NO.: 07-215931

DISREGARD PRINTS BEARING EARLIER REVISION DATES

REVISION DATES: 7-10-12 7-5-12 7-6-12 7-9-12

SHEET 2 OF 10

FILE => 07-215931-a-gp01.add

USERNAME => s124496 DATE PLOTTED => 12-JUL-2012 TIME PLOTTED => 13:59

STRUCTURES DESIGN GENERAL PLAN SHEET (ENGLISH) (REV.09-01-10)

| DIST | COUNTY | ROUTE | POST MILES TOTAL PROJECT | SHEET No. | TOTAL SHEETS |
|---|---|---|---|---|---|
| 07 | LA | 5 | 2.4/4.0 | 1288F | 1288 |

Traci Menard 7-6-12
REGISTERED CIVIL ENGINEER DATE

3-26-12
PLANS APPROVAL DATE

REGISTERED PROFESSIONAL ENGINEER TRACI MENARD No. 54207 Exp. 12-31-2013 CIVIL STATE OF CALIFORNIA

*The State of California or its officers or agents shall not be responsible for the accuracy or completeness of electronic copies of this plan sheet.*

1

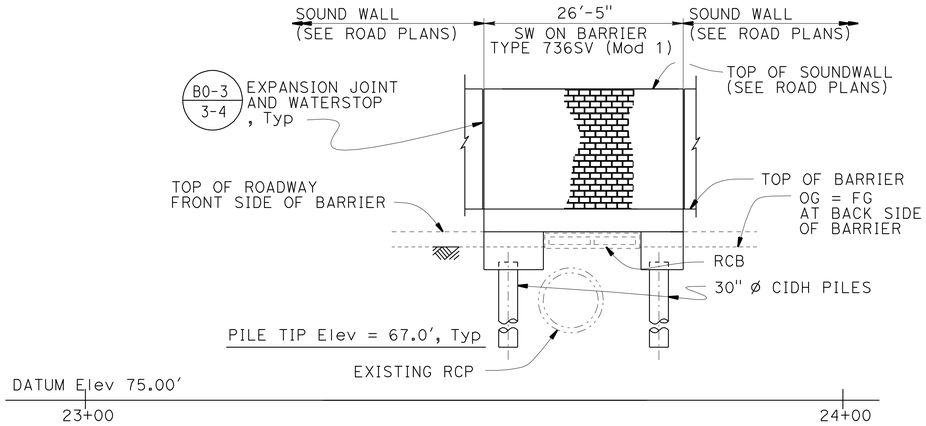


## VIEW A-A
1" = 10'

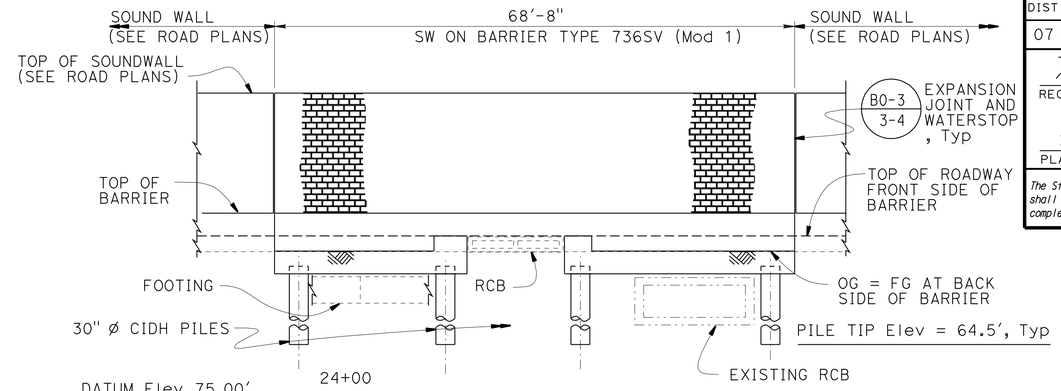


## VIEW B-B
1" = 10'

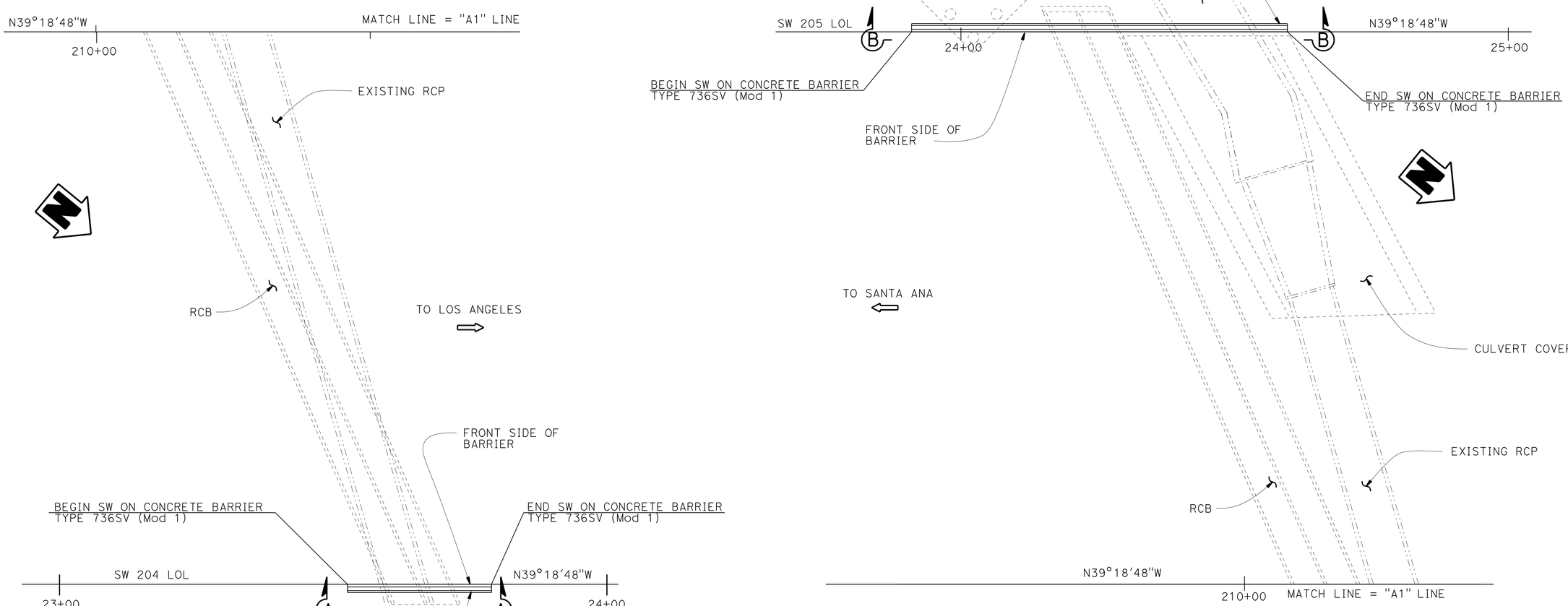


## PLAN
1" = 10'

NOTE:
THE CONTRACTOR SHALL VERIFY ALL CONTROLLING FIELD DIMENSIONS BEFORE ORDERING OR FABRICATING ANY MATERIAL.

1 **ADDED PER ADDENDUM No. 1 DATED JULY 13, 2012**

| | | | | | |
|---|---|---|---|---|---|
| Traci Menard DESIGN ENGINEER | DESIGN | BY John Lane | CHECKED Fred Feng | LOAD & RESISTANCE FACTOR DESIGN | |
| | DETAILS | BY Marvin Lane | CHECKED Fred Feng | LAYOUT: BY John Lane | CHECKED Fred Feng |
| | QUANTITIES | BY Nikki Tiongco | CHECKED Suzan Moradi | SPECIFICATIONS: BY Theresa Nedwick | PLANS AND SPECS COMPARED John Lane |

ORIGINAL SCALE IN INCHES FOR REDUCED PLANS 0 1 2 3

STATE OF CALIFORNIA
DEPARTMENT OF TRANSPORTATION

DIVISION OF ENGINEERING SERVICES
STRUCTURE DESIGN
DESIGN BRANCH 15

BRIDGE NO. NA
POST MILE 3.05/3.98

# SPECIAL DESIGN FOR SOUND WALLS
# GENERAL PLAN NO. 2

UNIT: 07
PROJECT NUMBER & PHASE: 0700001833
CONTRACT NO.: 07-215931

DISREGARD PRINTS BEARING EARLIER REVISION DATES

REVISION DATES: 7-3-12 7-6-12 7-9-12 6-18-12

SHEET 3 OF 10

FILE => 07-215931-a-gp02.dwg

USERNAME => s124496 DATE PLOTTED => 12-JUL-2012 TIME PLOTTED => 13:59

| DIST | COUNTY | ROUTE | POST MILES TOTAL PROJECT | SHEET No. | TOTAL SHEETS |
|---|---|---|---|---|---|
| 07 | LA | 05 | 2.4/4.0 | 1288G | 1288 |

Traci Menard 7-6-12
REGISTERED CIVIL ENGINEER DATE

3-26-12
PLANS APPROVAL DATE

REGISTERED PROFESSIONAL ENGINEER
TRACI MENARD
No. 54207
Exp. 12-31-2013
CIVIL
STATE OF CALIFORNIA

*The State of California or its officers or agents shall not be responsible for the accuracy or completeness of electronic copies of this plan sheet.*

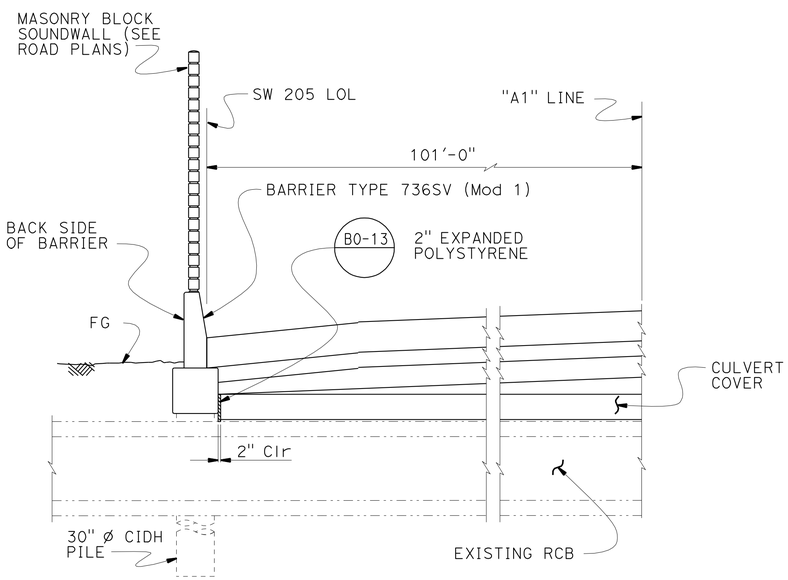


NOTE:
Section at existing RCB shown. Section at footing similar.

## TYPICAL SECTION SW 205

1" = 5'-0"

Sta 23+91.1 TO Sta 24+16.4 AND
Sta 24+31.9 TO Sta 24+59.8

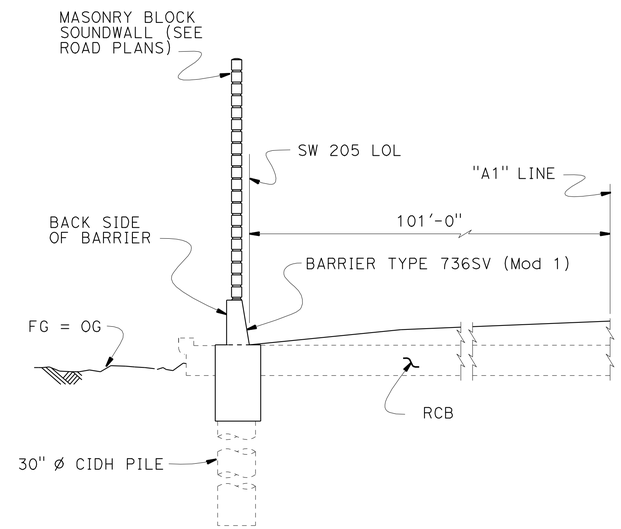


## TYPICAL SECTION SW 205

1" = 5'-0"

Sta 24+12.50 TO Sta 24+33.00

1

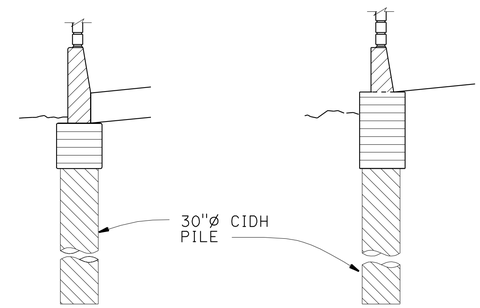


## CONCRETE TYPE LIMITS

NO SCALE

LEGEND

- Indicates Concrete Barrier Type 736SV (Mod 1)
- Indicates Structural Concrete, Soundwall
- Indicates CIDH Pile Concrete

## GENERAL NOTES

DESIGN:
Load and Resistance Factor Design
(AASHTO LRFD Bridge Design Specifications
4th Edition with California Ammendments)

SOIL PARAMETERS:
For determination of design lateral earth load
$\gamma$ = 120 cf
$\phi$ = 31°

REINFORCED CONCRETE
fy = 60 ksi
f'c = 3.6 ksi

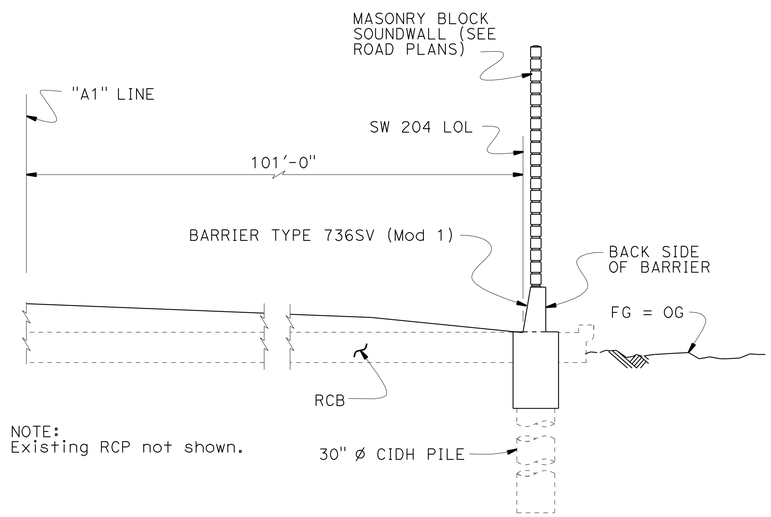


NOTE:
Existing RCP not shown.

## TYPICAL SECTION SW 204

1" = 5'-0"

Sta 23+52.60 TO Sta 23+78.90

## PILE DATA TABLE

| LOCATION | PILE TYPE | NOMINAL RESISTANCE | | DESIGN TIP ELEVATION (ft) | | | SPECIFIED TIP ELEVATION (SEE NOTE 2) |
|---|---|---|---|---|---|---|---|
| | | COMPRESSION (kips) | TENSION (kips) | (a) | (b) | (c) | |
| SW 160 | 30" Ø Cast-In-Drilled-Hole | 210 | 0 | 48.5 | 66.0 | 59.0 | 48.5 |
| SW 204 | 30" Ø Cast-In-Drilled-Hole | 140 | 0 | 67.0 | 77.5 | 78.7 | 67.0 |
| SW 205 | 30" Ø Cast-In-Drilled-Hole | 200 | 0 | 64.5 | 77.0 | 78.5 | 64.5 |

NOTES:
1. Design tip elevations are controlled by: (a) Compression, (b) Settlement, (c) Lateral Load.
2. The specified tip elevation shall not be raised above the design tip elevations for lateral and tolerable settlement.

NOTE:
THE CONTRACTOR SHALL VERIFY ALL CONTROLLING FIELD DIMENSIONS BEFORE ORDERING OR FABRICATING ANY MATERIAL.

1 **ADDED PER ADDENDUM No. 1 DATED JULY 13, 2012**

| | | | | | |
|---|---|---|---|---|---|
| Traci Menard DESIGN ENGINEER | DESIGN | BY John Lane | CHECKED Fred Feng | LOAD & RESISTANCE FACTOR DESIGN | |
| | DETAILS | BY Marvin Lane | CHECKED Fred Feng | LAYOUT BY John Lane | CHECKED Fred Feng |
| | QUANTITIES | BY Nikki Tiongco | CHECKED Suzan Moradi | SPECIFICATIONS BY Theresa Nedwick | PLANS AND SPECS COMPARED John Lane |

ORIGINAL SCALE IN INCHES FOR REDUCED PLANS 0 1 2 3

STATE OF CALIFORNIA
DEPARTMENT OF TRANSPORTATION

DIVISION OF ENGINEERING SERVICES
STRUCTURE DESIGN
DESIGN BRANCH 15

BRIDGE NO. NA
POST MILE 3.05/3.98

# SPECIAL DESIGN FOR SOUND WALLS
# GENERAL PLAN NO. 3

UNIT: 07
PROJECT NUMBER & PHASE: 0700001833
CONTRACT NO.: 07-215931

DISREGARD PRINTS BEARING EARLIER REVISION DATES

REVISION DATES: 7-6-12 7-9-12 7-10-12 6-18-12

SHEET 4 OF 10

USERNAME => s124436 DATE PLOTTED => 12-JUL-2012 TIME PLOTTED => 13:59

| DIST | COUNTY | ROUTE | POST MILES TOTAL PROJECT | SHEET No | TOTAL SHEETS |
|---|---|---|---|---|---|
| 07 | LA | 05 | 2.4/4.0 | 1288H | 1288 |

Traci Menard 7-6-12
REGISTERED CIVIL ENGINEER DATE

3-26-12
PLANS APPROVAL DATE

REGISTERED PROFESSIONAL ENGINEER TRACI MENARD No. 54207 Exp. 12-31-2013 CIVIL STATE OF CALIFORNIA

*The State of California or its officers or agents shall not be responsible for the accuracy or completeness of electronic copies of this plan sheet.*

# 1 ADDED PER ADDENDUM No. 1 DATED JULY 13, 2012

① Sta 98+33.00, "SHOE1" LINE, ℄ SHOEMAKER AVE =
Sta 160+43.54, "SFRS1" LINE, FIRESTONE BLVD (SOUTH)

② Sta 100+00.00, "SHOE1" LINE, ℄ SHOEMAKER AVE =
Sta 160+88.25, "A1" LINE , PROP. ℄ ROUTE 5

③ Sta 100+25.68, "SHOE1" LINE, ℄ SHOEMAKER AVE =
Sta 161+50.50, "NFRS1" LINE, FIRESTONE BLVD (NORTH)

BRIDGE LOCATION (Exist Br.No 53-1015)

Ⓐ 203.14 Ft Lt "A1" Line, Prop. ℄ Route 5, Sta 159+73.75, Elev= 98.85±
Ⓑ 89.84 Ft Rt "A1" Line, Prop. ℄ Route 5, Sta 161+62.91, Elev= 100.64±
Ⓒ 203.05 Ft Lt "A1" Line, Prop. ℄ Route 5, Sta 159+40.67, Elev= 98.14±
Ⓓ 89.94 Ft Rt "A1" Line, Prop. ℄ Route 5, Sta 161+29.77, Elev= 101.16±

SURVEY CONTROL

SUHV-22

FND 2" Brass Disc
103.56 Ft Rt Prop. ℄ Route 5
Sta 161+34.27
N 1 785 671.59
E 6 544 765.77
Elev= 101.29

SUHV-208

FND ET BK & TIN
156.59 Ft Lt Prop. ℄ Route 5
Sta 160+45.77
N 1 785 405.29
E 6 544 697.98
Elev= 80.97

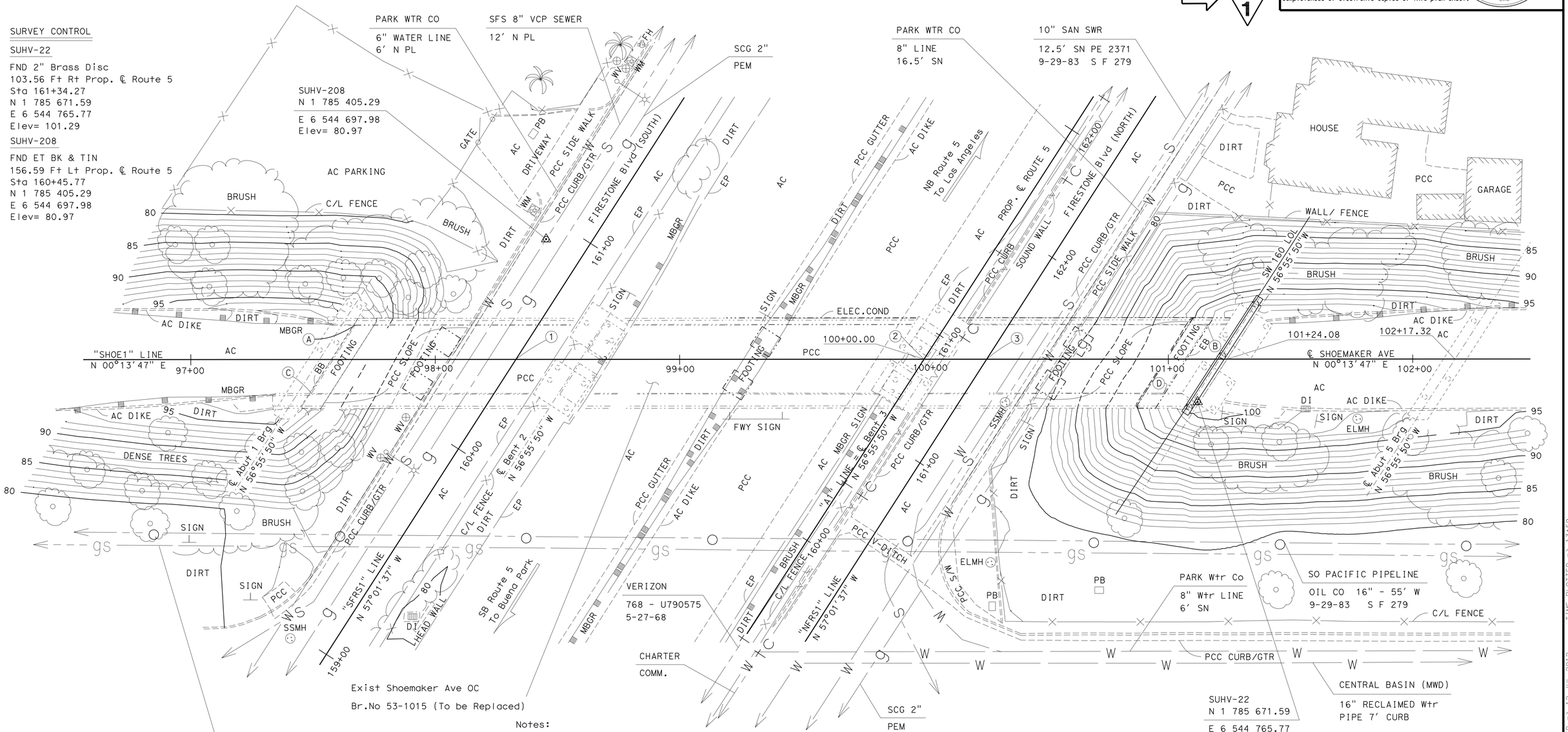


Notes:

1. For bottom of footing elevations see "Sound Wall 160 & 204 Layout" sheet.

—··—··— Denotes existing structure

Denotes piles

NOTES:

UNDERGROUND UTILITIES AS SHOWN ARE APPROXIMATE

NOTE:
THE CONTRACTOR SHALL VERIFY ALL CONTROLLING FIELD DIMENSIONS BEFORE ORDERING OR FABRICATING ANY MATERIAL.

## PLAN - SOUND WALL 160

## SPECIAL DESIGN FOR SOUND WALLS

## FOUNDATION PLAN NO. 1

PRELIMINARY INVESTIGATION SECTION

| SCALE | VERT.DATUM NAVD88 | PHOTOGRAMMETRY AS OF: X | | | |
|---|---|---|---|---|---|
| 1"=20' | HORZ.DATUM NAD83 (1991.35) | SURVEYED | BY DISTRICT 07 | CHECKED | BY T.PHUNG 01/2010 |
| ALIGNMENT TIES | DIST.TRAVERSE SHEETS | DRAFTED | BY V.PHAM 01/2010 | CHECKED | BY S.ALIVIO 01/2010 |

| | BY | CHECKED |
|---|---|---|
| DESIGN | John Lane | Fred Feng |
| DETAILS | Marvin Lane | Fred Feng |
| QUANTITIES | Nikki Tiongco | Suzan Moradi |

STATE OF CALIFORNIA
DEPARTMENT OF TRANSPORTATION

DIVISION OF ENGINEERING SERVICES
STRUCTURE DESIGN
DESIGN BRANCH 15

BRIDGE NO. NA
POST MILE 3.05/3.98

STRUCTURES FOUNDATION PLAN SHEET (ENGLISH) (REV. 10/25/05)

ORIGINAL SCALE IN INCHES FOR REDUCED PLANS 0 1 2 3

CU 07
EA 215931

DISREGARD PRINTS BEARING EARLIER REVISION DATES

REVISION DATES: 7-3-12 7-5-12 7-6-12 7-9-12

SHEET 5 OF 10

FILE => 07-215931-c-fp01.add

USERNAME => s124396 DATE PLOTTED => 12-JUL-2012 TIME PLOTTED => 13:59

| DIST | COUNTY | ROUTE | POST MILES TOTAL PROJECT | SHEET No | TOTAL SHEETS |
|---|---|---|---|---|---|
| 07 | LA | 05 | 2.4/4.0 | 1288 | 1288 |

Traci Menard 7-6-12
REGISTERED CIVIL ENGINEER DATE

3-26-12
PLANS APPROVAL DATE

REGISTERED PROFESSIONAL ENGINEER TRACI MENARD No. 54207 Exp. 12-31-2013 CIVIL STATE OF CALIFORNIA

*The State of California or its officers or agents shall not be responsible for the accuracy or completeness of electronic copies of this plan sheet.*

Notes:
1. Undeground Utilities as shown are approximate.
2. For bottom of footing elevations see "Sound Wall 160 & 204 Layout" and "Sound Wall 205 Layout" sheets.

Denotes existing structure

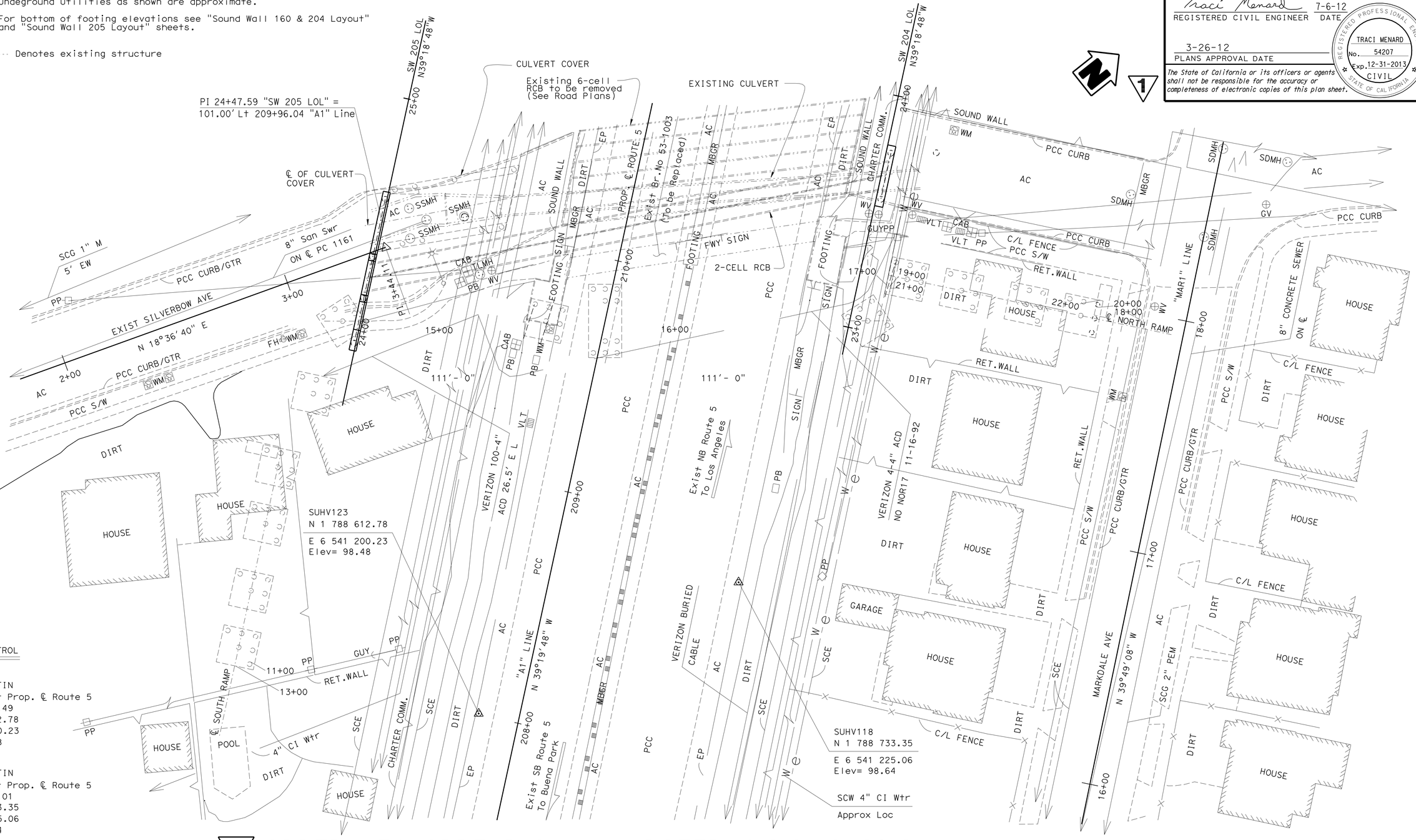


SURVEY CONTROL

SUHV-123

FND SPK & TIN
17.09 Ft Lt Prop. ℄ Route 5
Sta 208+00.49
N 1 788 612.78
E 6 541 200.23
Elev= 98.48

SUHV-118

FND SPK & TIN
78.53 Ft Rt Prop. ℄ Route 5
Sta 208+78.01
N 1 788 733.35
E 6 541 225.06
Elev= 98.64

**1 ADDED PER ADDENDUM No. 1 DATED JULY 13, 2012**

| PRELIMINARY INVESTIGATION SECTION | | | | | |
|---|---|---|---|---|---|
| SCALE | VERT.DATUM NAVD88 | PHOTOGRAMMETRY AS OF: X | | | |
| 1"=20' | HORZ.DATUM NAD83 (1986) | SURVEYED | BY DISTRICT 07 | CHECKED | BY T.PHUNG 02/2010 |
| ALIGNMENT TIES DIST.TRAVERSE SHEETS | | DRAFTED | BY V.PHAM 02/2010 | CHECKED | BY S.ALIVIO 02/2010 |

| | BY | CHECKED |
|---|---|---|
| DESIGN | John Lane | Fred Feng |
| DETAILS | Marvin Lane | Fred Feng |
| QUANTITIES | Nikki Tiongco | Suzan Moradi |

STATE OF CALIFORNIA
DEPARTMENT OF TRANSPORTATION

DIVISION OF ENGINEERING SERVICES
STRUCTURE DESIGN
DESIGN BRANCH 15

BRIDGE NO. NA
POST MILE 3.05/3.98

# PLAN - SOUND WALL 204 & 205
# SPECIAL DESIGN FOR SOUND WALLS
# FOUNDATION PLAN NO. 2

STRUCTURES FOUNDATION PLAN SHEET (ENGLISH) (REV. 10/25/05)

ORIGINAL SCALE IN INCHES FOR REDUCED PLANS 0 1 2 3

CU 07
EA 215931

DISREGARD PRINTS BEARING EARLIER REVISION DATES

REVISION DATES: 03/15/12 03/20/12 5-14-12 5-16-12 6-15-12 6-20-12 7-9-12

SHEET 6 OF 10

FILE => 07-215931-c-fp02.add

USERNAME => s124396 DATE PLOTTED => 12-JUL-2012 TIME PLOTTED => 13:59

| DIST | COUNTY | ROUTE | POST MILES TOTAL PROJECT | SHEET No. | TOTAL SHEETS |
|---|---|---|---|---|---|
| 07 | LA | 05 | 2.4/4.0 | 1288J | 1288 |

Traci Menard 7-6-12
REGISTERED CIVIL ENGINEER DATE

3-26-12
PLANS APPROVAL DATE

REGISTERED PROFESSIONAL ENGINEER
TRACI MENARD
No. 54207
Exp. 12-31-2013
CIVIL
STATE OF CALIFORNIA

*The State of California or its officers or agents shall not be responsible for the accuracy or completeness of electronic copies of this plan sheet.*

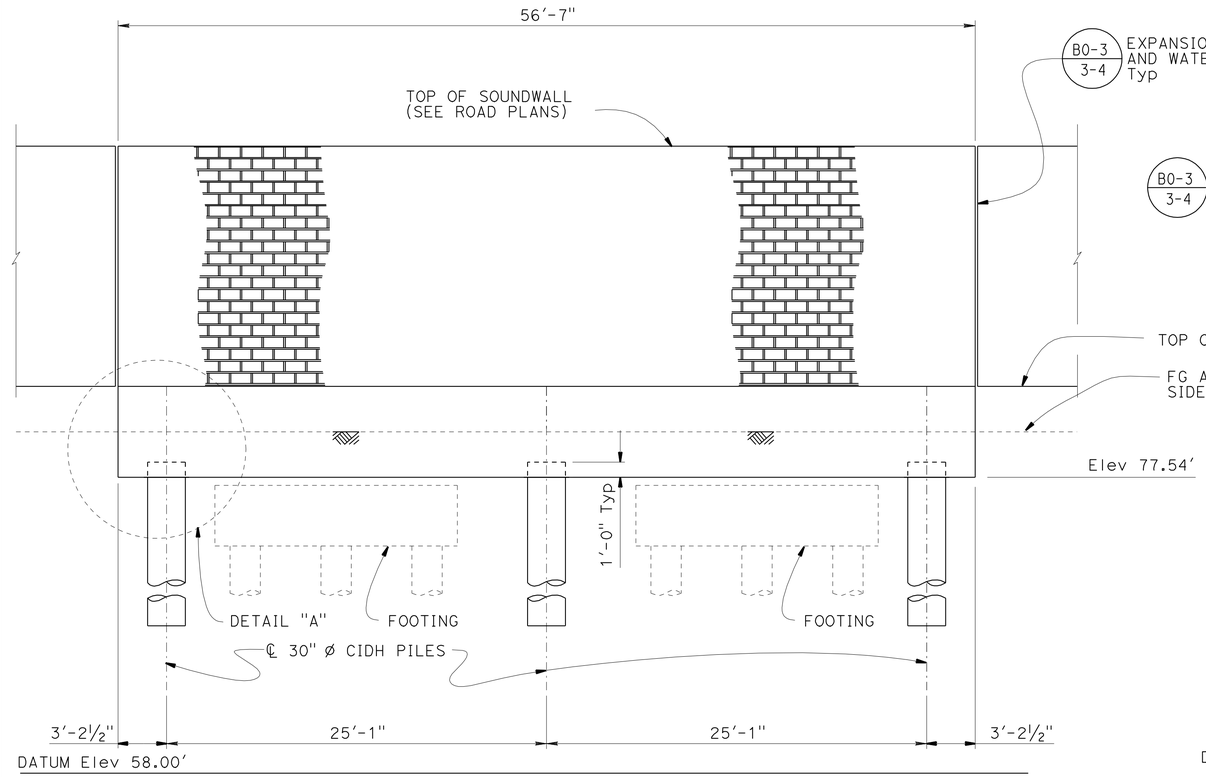


## ELEVATION - SW 160

1" = 5'

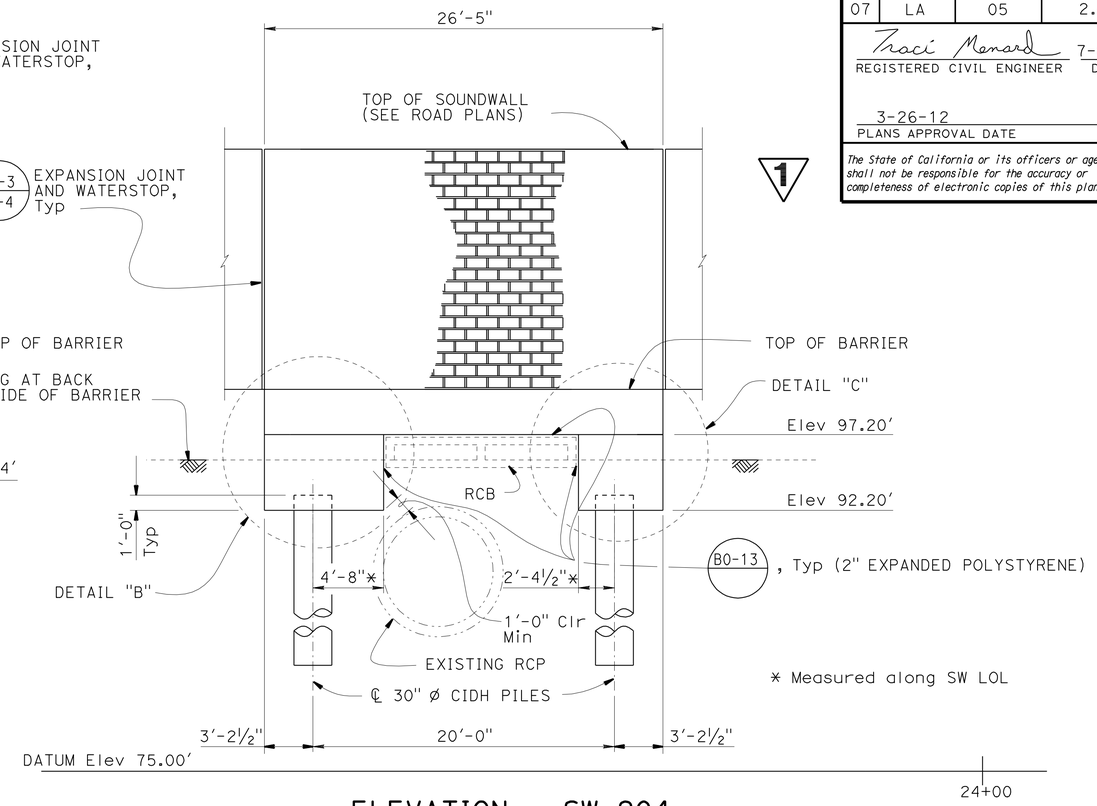


## ELEVATION - SW 204

1" = 5'

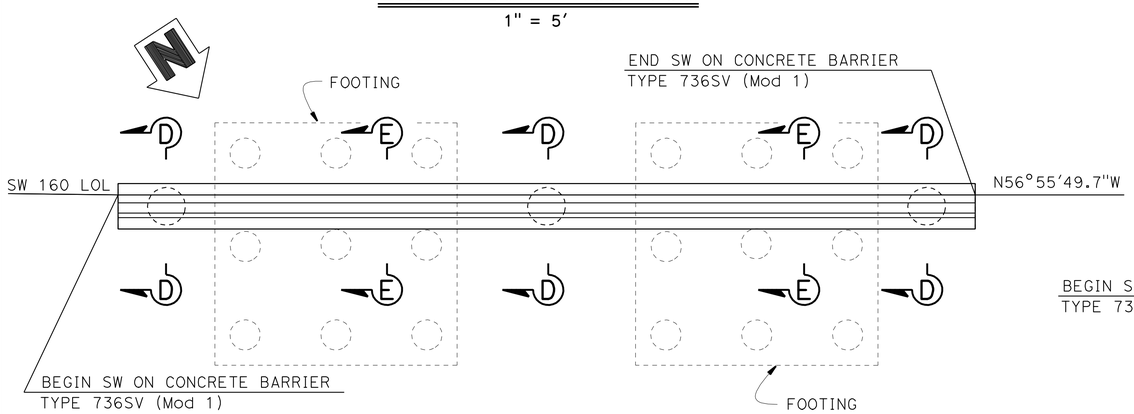


## PLAN - SW 160

1" = 5'

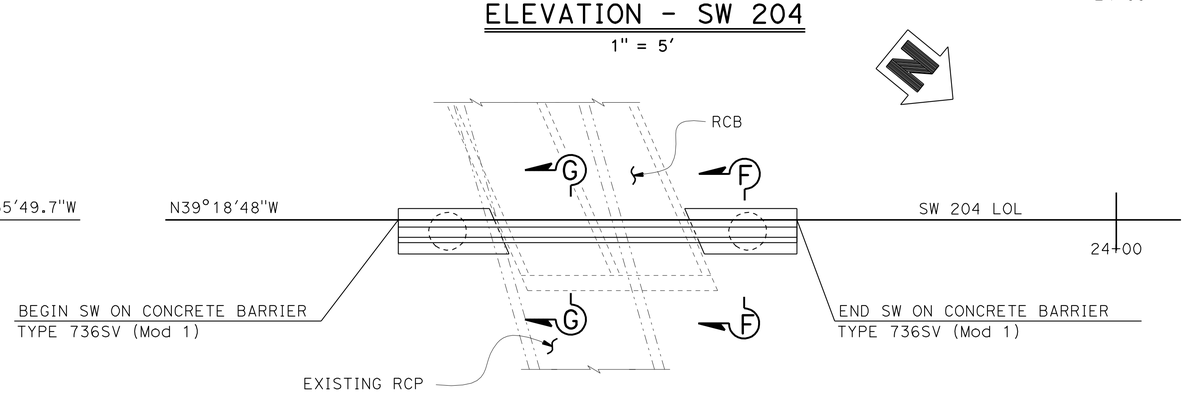


## PLAN - SW 204

1" = 5'

NOTE:
THE CONTRACTOR SHALL VERIFY ALL CONTROLLING FIELD DIMENSIONS BEFORE ORDERING OR FABRICATING ANY MATERIAL.

1 **ADDED PER ADDENDUM No. 1 DATED JULY 13, 2012**

NOTES:
1. For "SECTION D-D", "SECTION E-E, "SECTION F-F" and "SECTION G-G" see "SOUNDWALL DETAILS NO. 1" sheet.
2. For "DETAIL A", "Detail B" and "DETAIL C" see "SOUND WALL DETAILS NO. 2" sheet.

| | BY | CHECKED |
|---|---|---|
| DESIGN | John Lane | Fred Feng |
| DETAILS | Marvin Lane | Fred Feng |
| QUANTITIES | Nikki Tiongco | Suzan Moradi |

STATE OF CALIFORNIA
DEPARTMENT OF TRANSPORTATION

DIVISION OF ENGINEERING SERVICES
STRUCTURE DESIGN
DESIGN BRANCH 15

BRIDGE NO. NA
POST MILE 3.05/3.98

# SPECIAL DESIGN FOR SOUND WALLS
# SOUND WALL 160 & 204 LAYOUT

STRUCTURES DESIGN DETAIL SHEET (ENGLISH) (REV. 09-01-10)

ORIGINAL SCALE IN INCHES FOR REDUCED PLANS 0 1 2 3

UNIT: 07
PROJECT NUMBER & PHASE: 0700001833
CONTRACT NO.: 07-215931

DISREGARD PRINTS BEARING EARLIER REVISION DATES

REVISION DATES: 7-6-12 7-9-12 7-10-12 7-5-12

SHEET 7 OF 10

FILE => 07-215931-e-swlo01.dgn

USERNAME => s124496 DATE PLOTTED => 12-JUL-2012 TIME PLOTTED => 13:59

| DIST | COUNTY | ROUTE | POST MILES TOTAL PROJECT | SHEET No. | TOTAL SHEETS |
|---|---|---|---|---|---|
| 07 | LA | 05 | 2.4/4.0 | 1288K | 1288 |

Traci Menard 7-6-12
REGISTERED CIVIL ENGINEER DATE

3-26-12
PLANS APPROVAL DATE

REGISTERED PROFESSIONAL ENGINEER
TRACI MENARD
No. 54207
Exp. 12-31-2013
CIVIL
STATE OF CALIFORNIA

*The State of California or its officers or agents shall not be responsible for the accuracy or completeness of electronic copies of this plan sheet.*

1

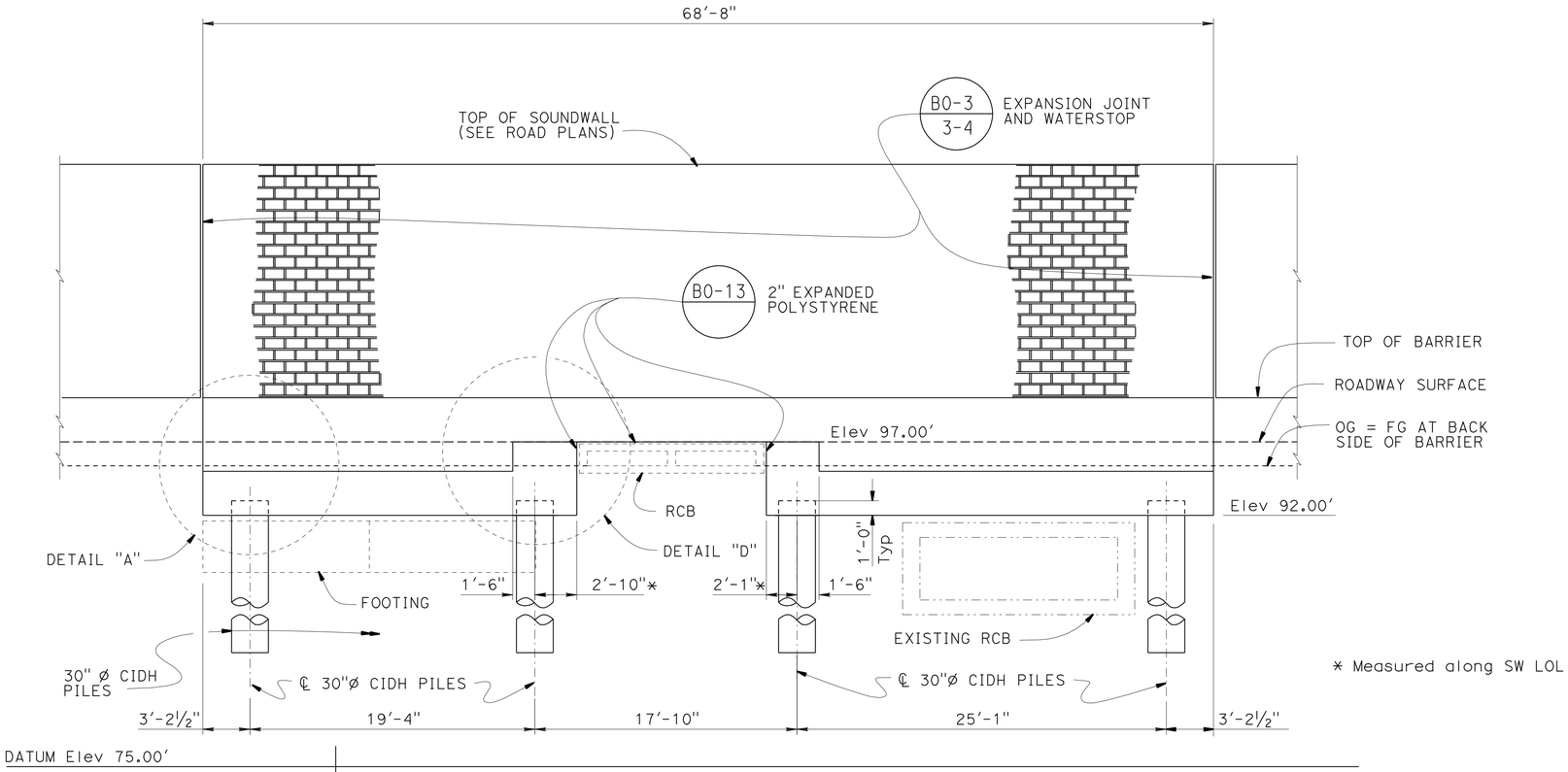


* Measured along SW LOL

## ELEVATION - SW 205

1" = 5'

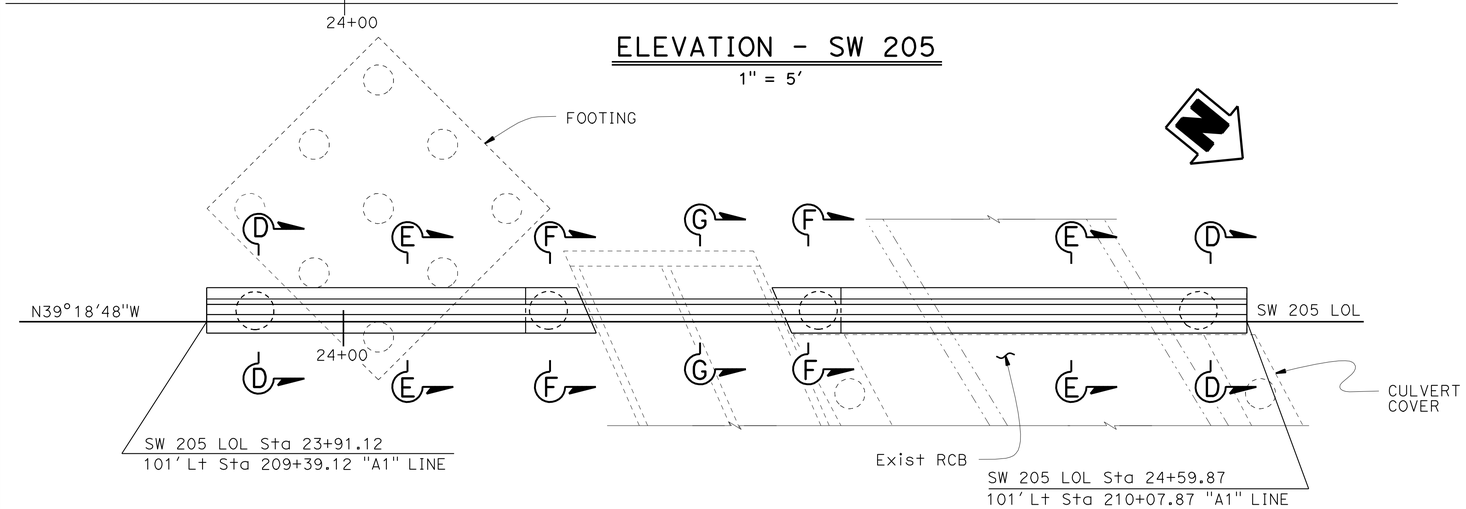


## PLAN - SW 205

1" = 5'

NOTE:
THE CONTRACTOR SHALL VERIFY ALL CONTROLLING FIELD DIMENSIONS BEFORE ORDERING OR FABRICATING ANY MATERIAL.

NOTES:
1. For "SECTION D-D", "SECTION E-E", "SECTION F-F" and "SECTION G-G" see "SOUNDWALL DETAILS NO. 1" sheet.
2. For "DETAIL A" and "DETAIL D" see "SOUNDWALL DETAILS NO. 2" sheet.

1 **ADDED PER ADDENDUM No. 1 DATED JULY 13, 2012**

| | BY | CHECKED |
|---|---|---|
| DESIGN | John Lane | Fred Feng |
| DETAILS | Marvin Lane | Fred Feng |
| QUANTITIES | Nikki Tiongco | Suzan Moradi |

STATE OF CALIFORNIA
DEPARTMENT OF TRANSPORTATION

DIVISION OF ENGINEERING SERVICES
STRUCTURE DESIGN
DESIGN BRANCH 15

BRIDGE NO. NA
POST MILE 3.05/3.98

# SPECIAL DESIGN FOR SOUND WALLS
# SOUND WALL 205 LAYOUT

STRUCTURES DESIGN DETAIL SHEET (ENGLISH) (REV. 09-01-10)

ORIGINAL SCALE IN INCHES FOR REDUCED PLANS 0 1 2 3

UNIT: 07
PROJECT NUMBER & PHASE: 0700001833
CONTRACT NO.: X

DISREGARD PRINTS BEARING EARLIER REVISION DATES

REVISION DATES: 7-9-12 7-10-12 7-11-12 7-12-12

SHEET 8 OF 10

FILE => 07-215931-e-sw1o02.dgn

USERNAME => s124496 DATE PLOTTED => 12-JUL-2012 TIME PLOTTED => 14:00

| DIST | COUNTY | ROUTE | POST MILES TOTAL PROJECT | SHEET No. | TOTAL SHEETS |
|---|---|---|---|---|---|
| 07 | LA | 05 | 2.4/4.0 | 1288L | 1288 |

Traci Menard 7-6-12
REGISTERED CIVIL ENGINEER DATE

3-26-12
PLANS APPROVAL DATE

REGISTERED PROFESSIONAL ENGINEER
TRACI MENARD
No. 54207
Exp. 12-31-2013
CIVIL
STATE OF CALIFORNIA

*The State of California or its officers or agents shall not be responsible for the accuracy or completeness of electronic copies of this plan sheet.*

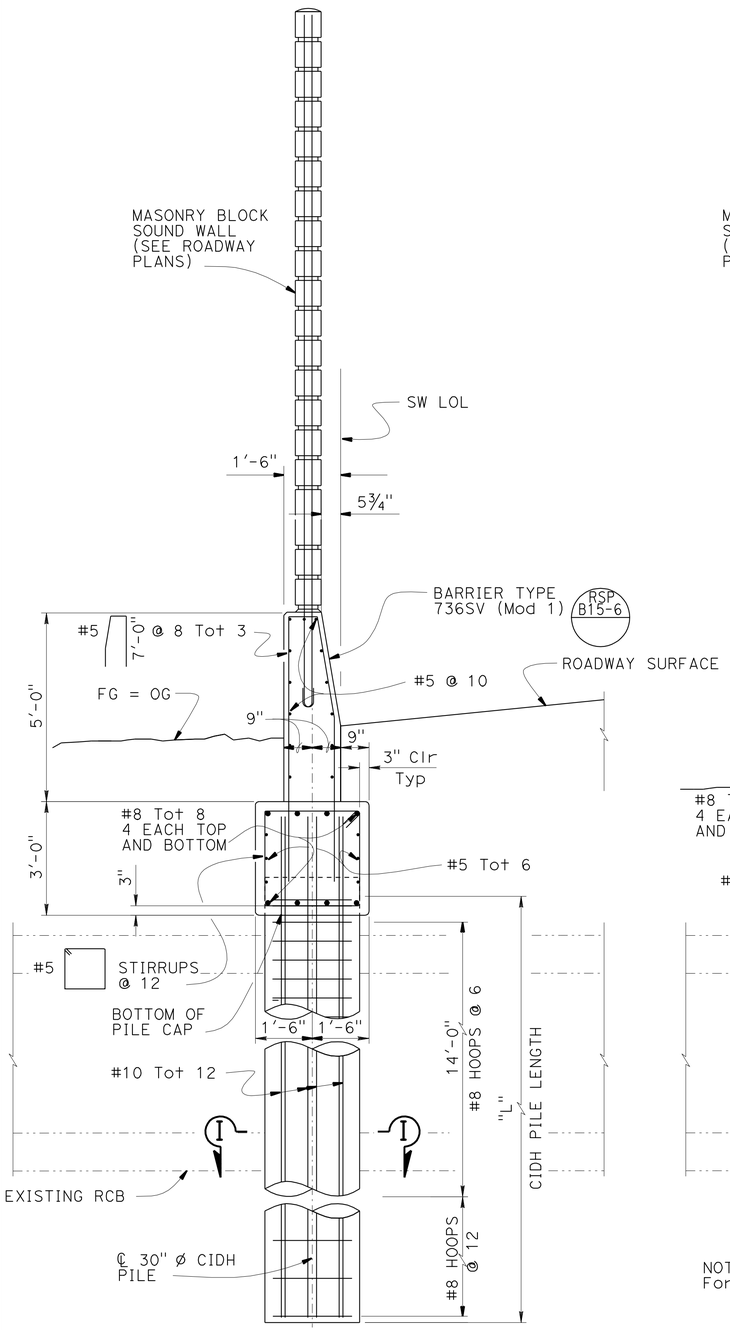


## SECTION D-D
½" = 1'-0"

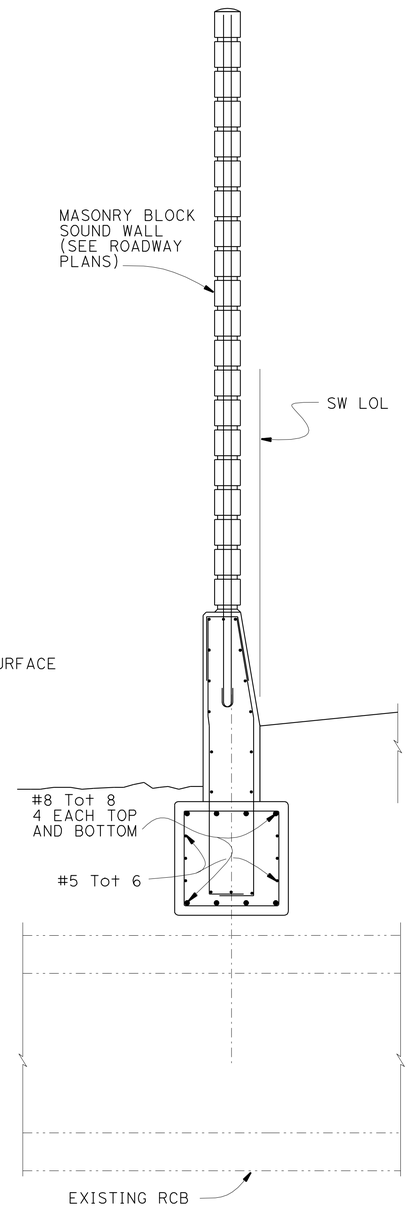


NOTE:
For details not shown see "SECTION D-D"

## SECTION E-E
½" = 1'-0"

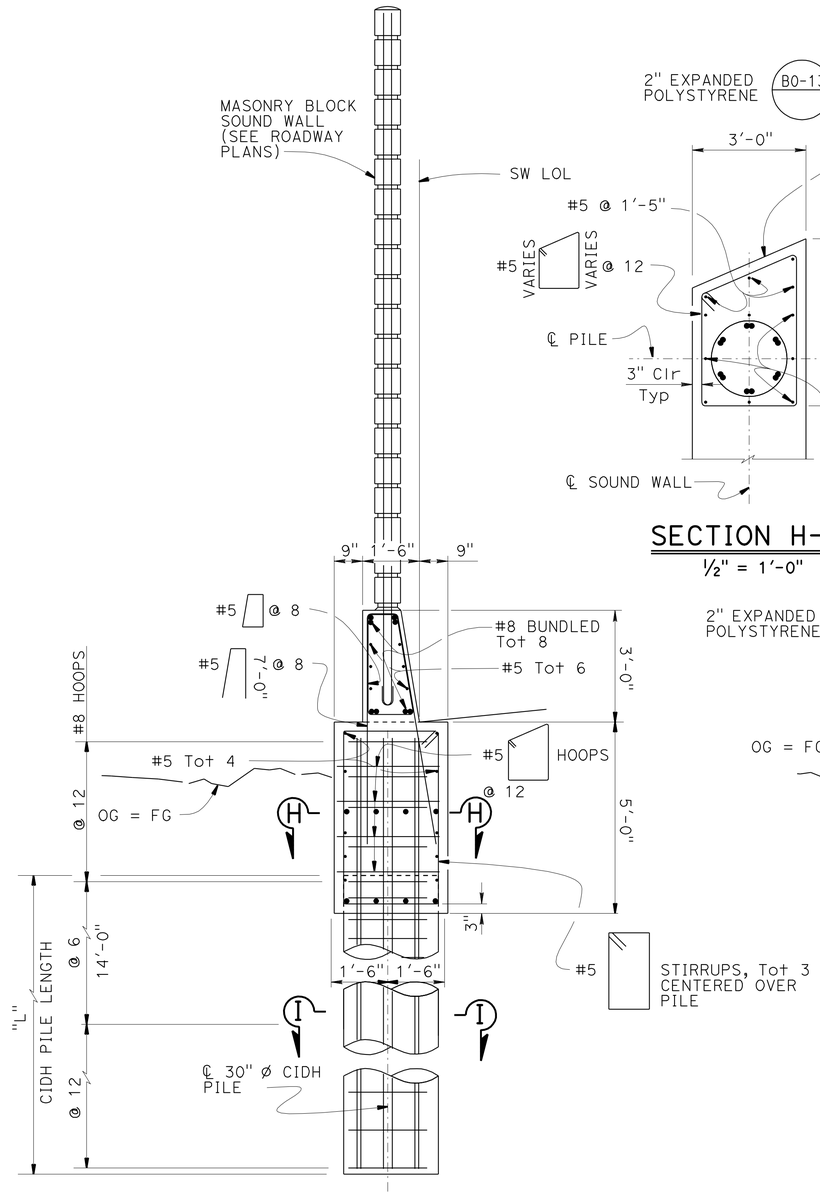


NOTE:
For details not shown see "SECTION D-D"

## SECTION F-F
½" = 1'-0"

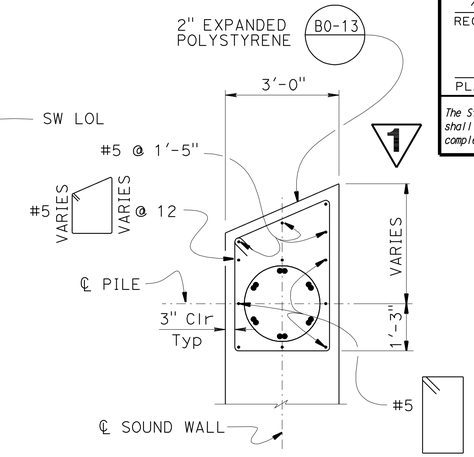


## SECTION H-H
½" = 1'-0"

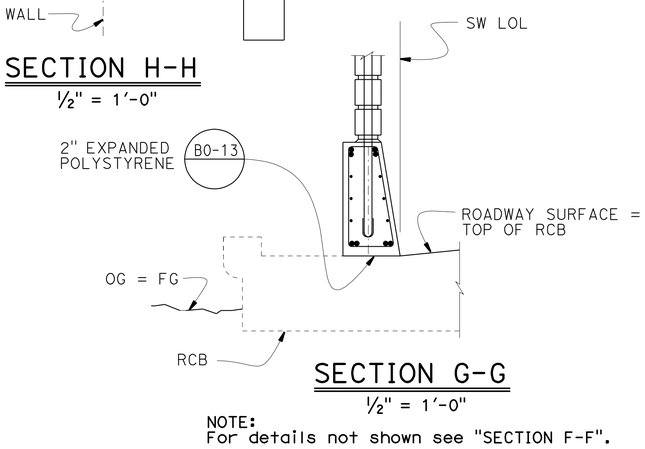


## SECTION G-G
½" = 1'-0"

NOTE:
For details not shown see "SECTION F-F".

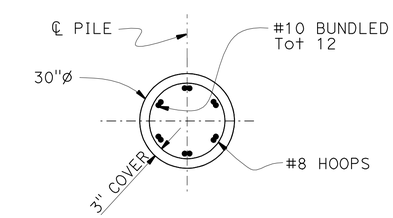


## SECTION I-I
½" = 1'-0"

NOTE:
THE CONTRACTOR SHALL VERIFY ALL CONTROLLING FIELD DIMENSIONS BEFORE ORDERING OR FABRICATING ANY MATERIAL.

1 ADDED PER ADDENDUM No. 1 DATED JULY 13, 2012

| | BY | CHECKED |
|---|---|---|
| DESIGN | John Lane | Fred Feng |
| DETAILS | Marvin Lane | Fred Feng |
| QUANTITIES | Nikki Tiangco | Suzan Moradi |

STATE OF CALIFORNIA
DEPARTMENT OF TRANSPORTATION

DIVISION OF ENGINEERING SERVICES
STRUCTURE DESIGN
DESIGN BRANCH 15

BRIDGE NO. NA
POST MILE 3.05/3.98

# SPECIAL DESIGN FOR SOUND WALLS
# SOUND WALL DETAILS NO. 1

STRUCTURES DESIGN DETAIL SHEET (ENGLISH) (REV. 09-01-10)

ORIGINAL SCALE IN INCHES FOR REDUCED PLANS 0 1 2 3

UNIT: 07
PROJECT NUMBER & PHASE: 0700001833
CONTRACT NO.: 07-215931

DISREGARD PRINTS BEARING EARLIER REVISION DATES

REVISION DATES: 7-6-12 7-9-12 7-10-12 7-13-12

SHEET 9 OF 10

FILE => 07-215931-g-swdets01.dgn

USERNAME => s124496 DATE PLOTTED => 12-JUL-2012 TIME PLOTTED => 14:00

| DIST | COUNTY | ROUTE | POST MILES TOTAL PROJECT | SHEET No. | TOTAL SHEETS |
|---|---|---|---|---|---|
| 07 | LA | 05 | 2.4/4.0 | 1288M | 1288 |

Traci Menard 7-6-12
REGISTERED CIVIL ENGINEER DATE

3-26-12
PLANS APPROVAL DATE

REGISTERED PROFESSIONAL ENGINEER
TRACI MENARD
No. 54207
Exp. 12-31-2013
CIVIL
STATE OF CALIFORNIA

*The State of California or its officers or agents shall not be responsible for the accuracy or completeness of electronic copies of this plan sheet.*

1

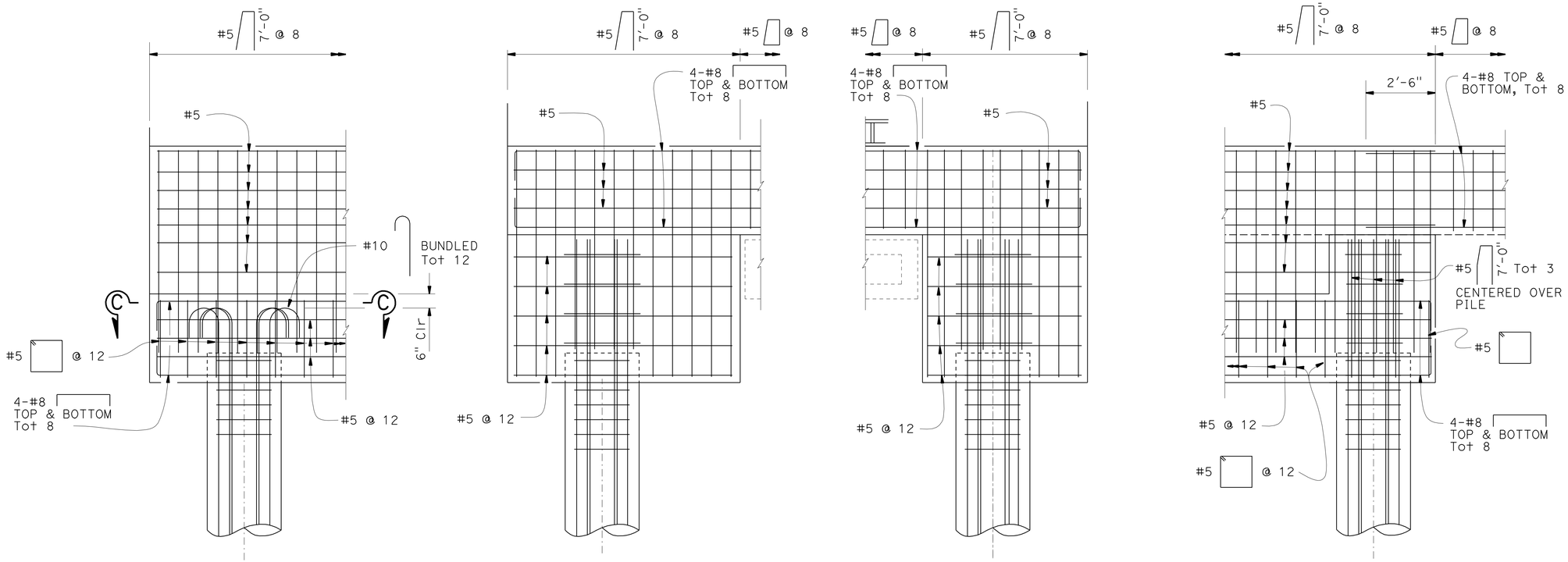


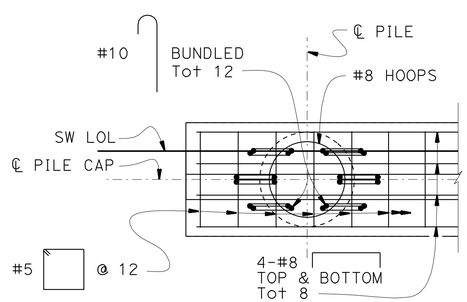


SECTION C-C
½" = 1'-0"

NOTE:
THE CONTRACTOR SHALL VERIFY ALL CONTROLLING FIELD DIMENSIONS BEFORE ORDERING OR FABRICATING ANY MATERIAL.

1 **ADDED PER ADDENDUM No. 1 DATED JULY 13, 2012**

| | BY | CHECKED |
|---|---|---|
| DESIGN | John Lane | Fred Feng |
| DETAILS | Marvin Lane | Fred Feng |
| QUANTITIES | Nikki Tiongco | Suzan Moradi |

STATE OF CALIFORNIA
DEPARTMENT OF TRANSPORTATION

DIVISION OF ENGINEERING SERVICES
STRUCTURE DESIGN
DESIGN BRANCH 15

BRIDGE NO. NA
POST MILE 3.05/3.98

# SPECIAL DESIGN FOR SOUND WALLS
# SOUND WALL DETAILS NO. 2

STRUCTURES DESIGN DETAIL SHEET (ENGLISH) (REV. 09-01-10)

ORIGINAL SCALE IN INCHES FOR REDUCED PLANS 0 1 2 3

UNIT: 07
PROJECT NUMBER & PHASE: 0700001833
CONTRACT NO.: 07-215931

DISREGARD PRINTS BEARING EARLIER REVISION DATES

REVISION DATES: ~~06-29-12~~ ~~7-6-12~~ 7-9-12

SHEET 10 OF 10

FILE => 07-215931-g-swdets02.add

USERNAME => s124496 DATE PLOTTED => 12-JUL-2012 TIME PLOTTED => 14:00