Dist	COUNTY	ROUTE	POST MILES TOTAL PROJECT	SHEET No.	TOTAL SHEETS
07	LA	10	33.2/37.2	201	1475

REGISTERED CIVIL ENGINEER 4-17-12 DATE

6-10-13
PLANS APPROVAL DATE

REGISTERED PROFESSIONAL ENGINEER SA K. THAI No. 71390 Exp 12/31/13 CIVIL STATE OF CALIFORNIA

THE STATE OF CALIFORNIA OR ITS OFFICERS OR AGENTS SHALL NOT BE RESPONSIBLE FOR THE ACCURACY OR COMPLETENESS OF SCANNED COPIES OF THIS PLAN SHEET.

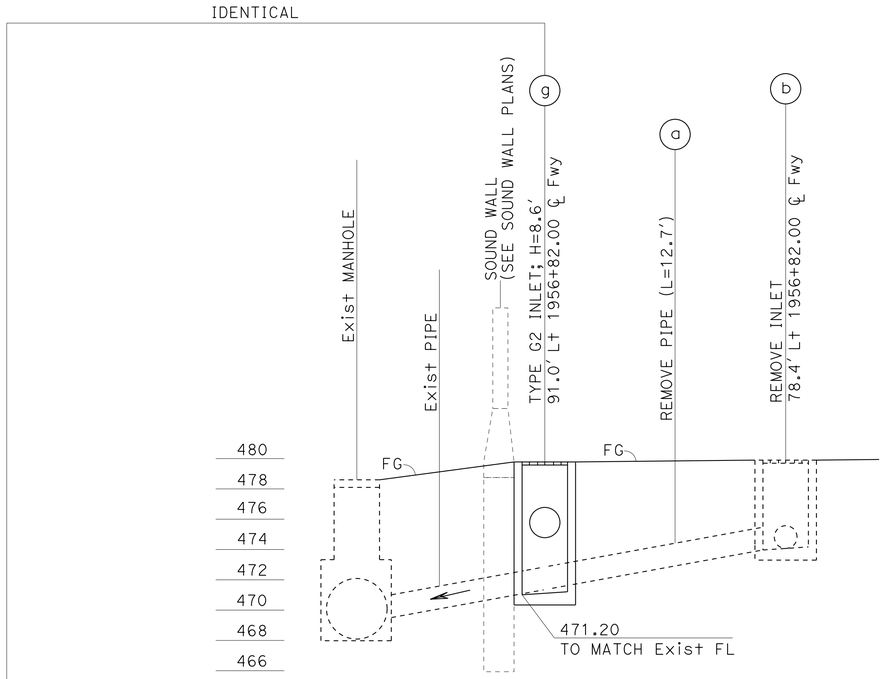

DRAINAGE SYSTEM 80

SCALE: 1":5′ Horz
1":5′ Vert

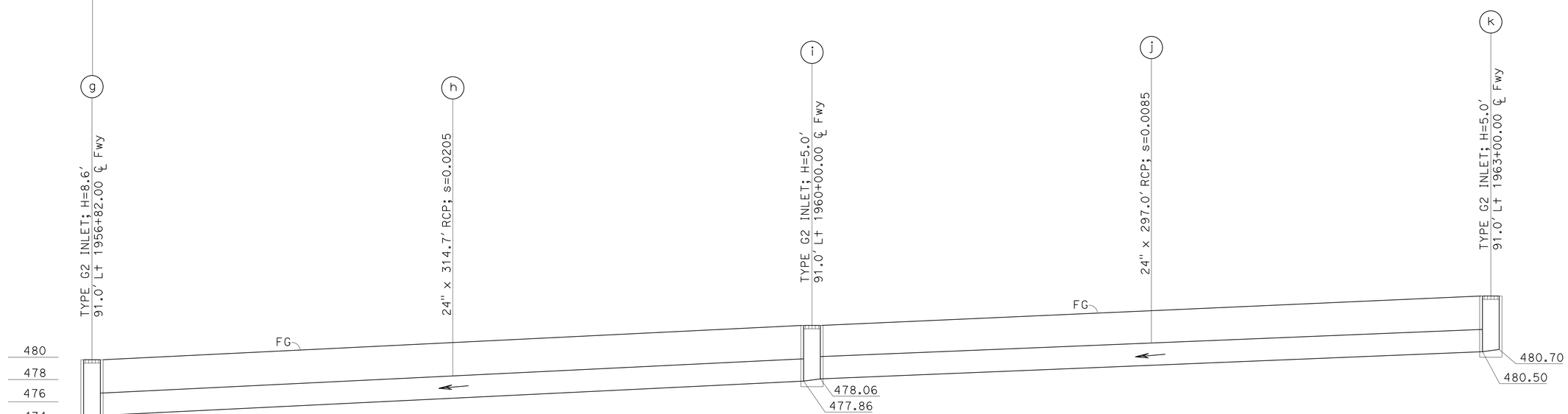

DRAINAGE SYSTEM 80

SCALE: 1":10′ Horz
1":5′ Vert

DRAINAGE PROFILES

SCALE AS SHOWN

DP-28

STATE OF CALIFORNIA - DEPARTMENT OF TRANSPORTATION
Caltrans
HYDRAULICS

FUNCTIONAL SUPERVISOR: DAVE BHALLA
CALCULATED-DESIGNED BY: S. THAI
CHECKED BY: D. BHALLA
REVISED BY
DATE REVISED

LAST REVISION 06-09-12
DATE PLOTTED => 12-JUN-2013
TIME PLOTTED => 14:15

Dist	COUNTY	ROUTE	POST MILES TOTAL PROJECT	SHEET No.	TOTAL SHEETS
07	LA	10	33.2/37.2	202	1475

REGISTERED CIVIL ENGINEER 4-17-12 DATE

6-10-13
PLANS APPROVAL DATE

REGISTERED PROFESSIONAL ENGINEER DAVE BHALLA No. 34350 Exp. 9/30/13 CIVIL STATE OF CALIFORNIA

THE STATE OF CALIFORNIA OR ITS OFFICERS OR AGENTS SHALL NOT BE RESPONSIBLE FOR THE ACCURACY OR COMPLETENESS OF SCANNED COPIES OF THIS PLAN SHEET.

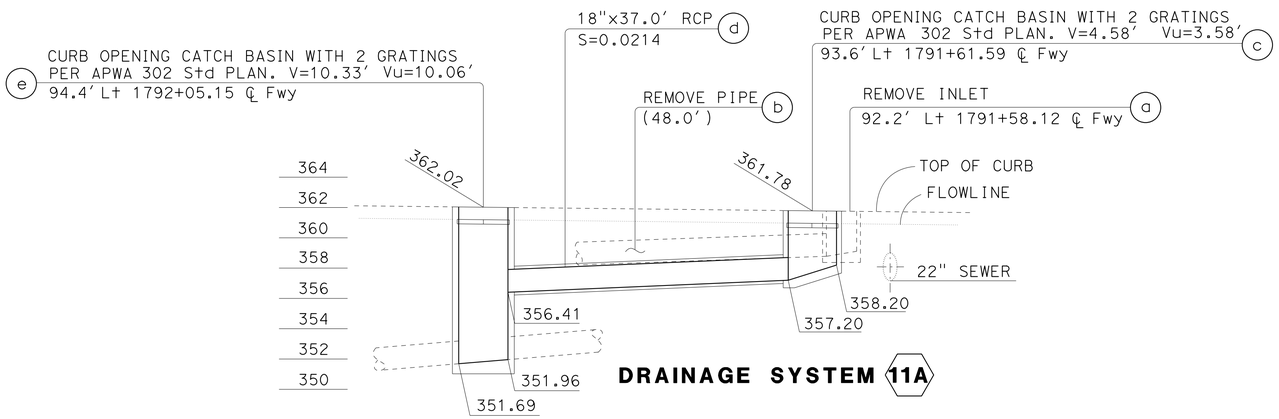

DRAINAGE SYSTEM 11A

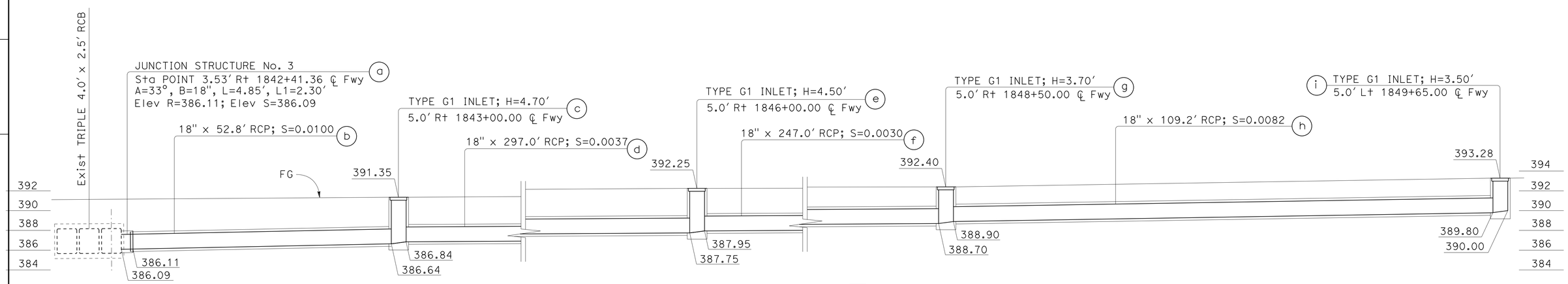

DRAINAGE SYSTEM 35A

DRAINAGE PROFILES

SCALE: Horiz 1" = 10′
Vert 1" = 5′

DP-29

STATE OF CALIFORNIA - DEPARTMENT OF TRANSPORTATION
Caltrans
HYDRAULICS

FUNCTIONAL SUPERVISOR: DAVE BHALLA
CALCULATED-DESIGNED BY: C. P. NGUYEN
CHECKED BY: D. BHALLA
REVISED BY
DATE REVISED

LAST REVISION 08-17-11
DATE PLOTTED => 12-JUN-2013
TIME PLOTTED => 14:15

Dist	COUNTY	ROUTE	POST MILES TOTAL PROJECT	SHEET No.	TOTAL SHEETS
07	LA	10	33.2/37.2	203	1475

REGISTERED CIVIL ENGINEER 4-17-12 DATE

6-10-13
PLANS APPROVAL DATE

REGISTERED PROFESSIONAL ENGINEER DAVE BHALLA No. 34350 Exp. 9/30/13 CIVIL STATE OF CALIFORNIA

THE STATE OF CALIFORNIA OR ITS OFFICERS OR AGENTS SHALL NOT BE RESPONSIBLE FOR THE ACCURACY OR COMPLETENESS OF SCANNED COPIES OF THIS PLAN SHEET.

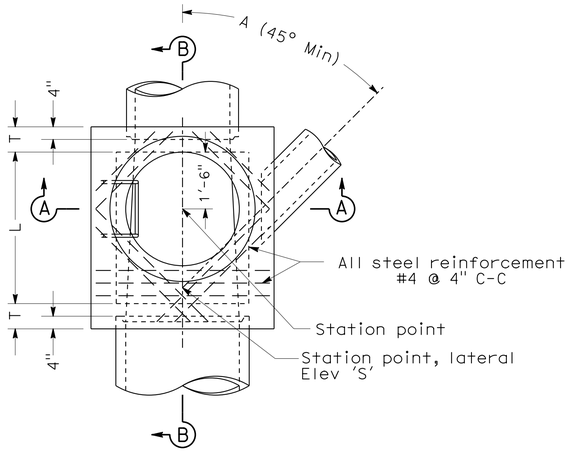

PLAN
(Shaft not shown)

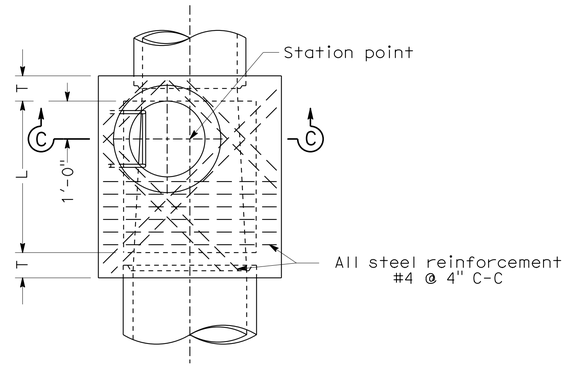

PLAN
DETAIL N
(Shaft not shown)

NOTES:

1. Height 'H' (in Sec A-A and Sec B-B) shall be not less than 4'-8", but may be increased provided that the value of 'M' shall be not less than the minimum specified and that the reducer shall be used. For 'H' (in Sec C-C) see Note 4.
2. Length 'L' shall be 4' unless otherwise shown on drainage plan.
3. Shaft shall be constructed as per Sec C-C and Detail N when depth 'M' from street grade to top of box is less than 2'-10 1/2" for paved streets or 3'-6" for unpaved streets.
4. Depth 'P' may be reduced to an absolute limit of 6" when larger values of 'P' would reduce 'H' (in Sec C-C) to 3'-6" or less.
5. 'T' shall be 8" for values of 'H' up to and including 8'. 'T' shall be 10" for values of 'H' over 8'.
6. Lowest step shall be not more than 16" above the ledge at the side of manhole floor.
7. Body of manhole shall be poured in one continuous operation, except that the Contractor shall have the option of placing at the spring line a construction joint with a longitudinal keyway.
8. Reinforcing steel shall be 1 1/2" clear from face of concrete.
9. Floor of manhole shall be steel-troweled to spring line.
10. Rings, reducer, and pipe for access shaft shall be seated in 1:2 cement mortar and neatly pointed or wiped inside shaft.
11. Manhole frame and cover per Standard Plan B7-11 detail 'U45'.
12. Step detail per Standard Plans D74C and D75.

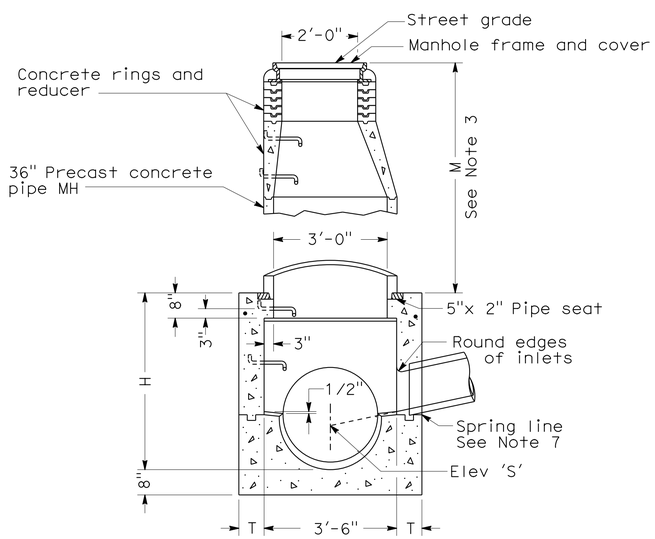

SECTION A-A

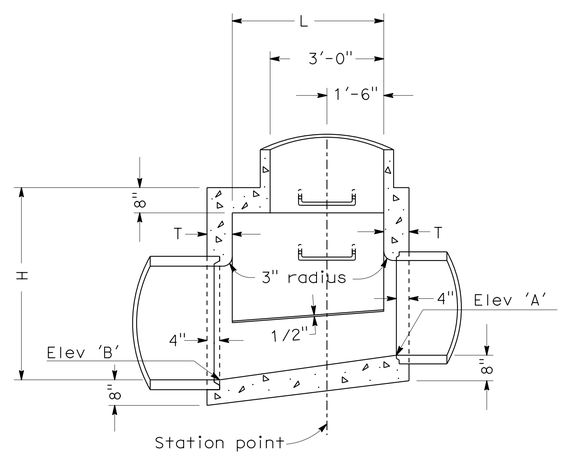

SECTION B-B

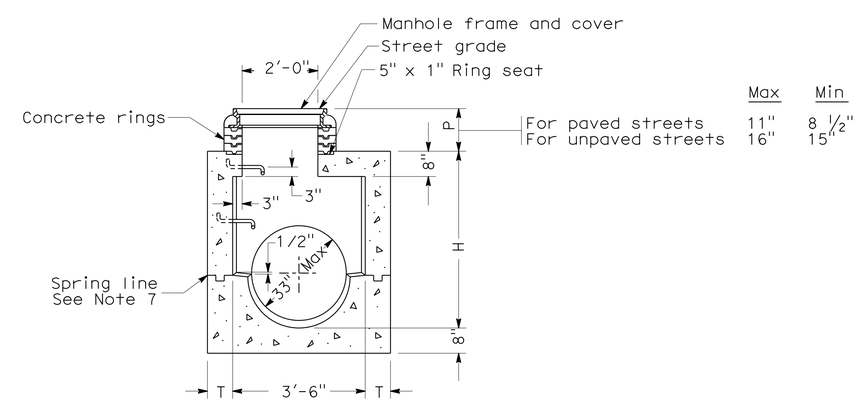

SECTION C-C

MANHOLE No. 1 (MH No. 1)

DRAINAGE DETAILS

NO SCALE

DD-1

STATE OF CALIFORNIA - DEPARTMENT OF TRANSPORTATION
Caltrans
HYDRAULICS
FUNCTIONAL SUPERVISOR: DAVE BHALLA
CALCULATED-DESIGNED BY: S. THAI
CHECKED BY: D. BHALLA
REVISED BY
DATE REVISED

LAST REVISION 06-09-12
DATE PLOTTED => 12-JUN-2013
TIME PLOTTED => 14:15

Dist	COUNTY	ROUTE	POST MILES TOTAL PROJECT	SHEET No.	TOTAL SHEETS
07	LA	10	33.2/37.2	204	1475

REGISTERED CIVIL ENGINEER 4-17-12 DATE

6-10-13
PLANS APPROVAL DATE

REGISTERED PROFESSIONAL ENGINEER DAVE BHALLA No. 34350 Exp. 9/30/13 CIVIL STATE OF CALIFORNIA

THE STATE OF CALIFORNIA OR ITS OFFICERS OR AGENTS SHALL NOT BE RESPONSIBLE FOR THE ACCURACY OR COMPLETENESS OF SCANNED COPIES OF THIS PLAN SHEET.

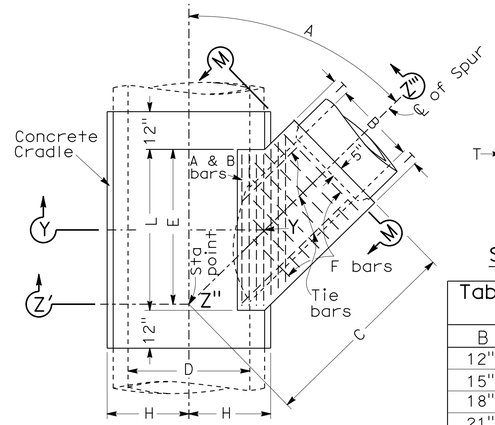

PLAN

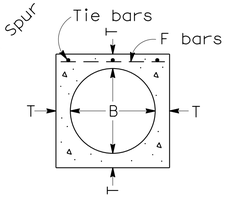

SECTION M-M

Table of Values For T	
B	T
12"	4"
15"	4 1/4"
18"	4 1/2"
21"	5"
24"	5 1/4"
27"	5 1/2"
30"	6"
33"	6 1/4"
36"	6 1/2"
39"	7"

Minimum depth of top and bottom slabs shall be $\frac{D}{12}$ + 2"

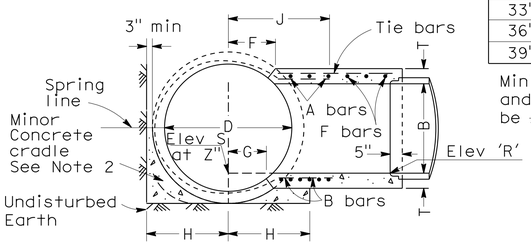

SECTION Z'-Z"-Z" '
Projected on Y-Y-Z"

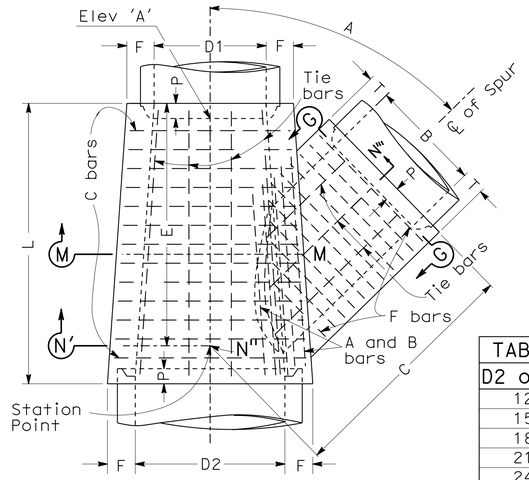

PLAN

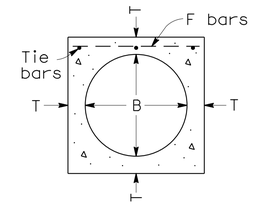

SECTION G-G

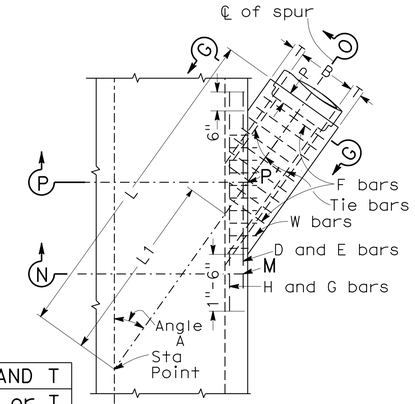

PLAN

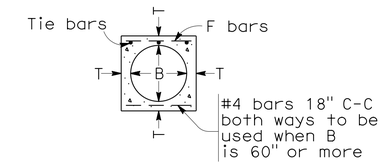

SECTION G-G

TABLE OF VALUES FOR F AND T			
D2 or B	F or T	D2 or B	F or T
12"	4"	63"	10"
15"	4 1/4"	66"	10 1/4"
18"	4 1/2"	69"	10 3/4"
21"	5"	72"	11"
24"	5 1/4"	78"	11 3/4"
27"	5 1/2"	84"	12 1/2"
30"	6"	90"	13 1/4"
33"	6 1/4"	96"	14"
36"	6 1/2"	102"	15 1/2"
39"	7"	108"	16"
42"	7 1/2"	114"	16 1/2"
45"	7 3/4"	120"	17"
48"	8"	126"	17"
54"	8 1/2"	132"	17 1/2"
51"	9"	138"	17 1/2"
57"	9 1/4"	144"	18"
60"	9 1/2"		

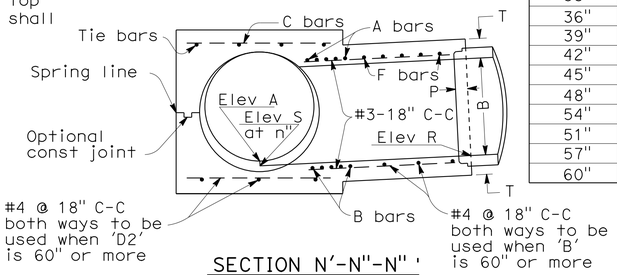

SECTION N'-N"-N" '
Projected on M-M-N"

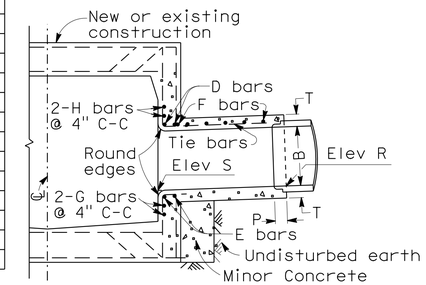

SECTION N-M-P'-O
Projected on P-P'-O

TABLE OF VALUES FOR T			
B	T	B	T
12"	4"	63"	10"
15"	4 1/4"	66"	10 1/4"
18"	4 1/2"	69"	10 3/4"
21"	5"	72"	11"
24"	5 1/4"	78"	11 3/4"
27"	5 1/2"	84"	12 1/2"
30"	6"	90"	13 1/4"
33"	6 1/4"	96"	14"
36"	6 1/2"	102"	15 1/2"
39"	7"	108"	16"
42"	7 1/2"	114"	16 1/2"
45"	7 3/4"	120"	17"
48"	8"	126"	17"
51"	8 1/2"	132"	17 1/2"
54"	9"	138"	17 1/2"
57"	9 1/4"	144"	18"
60"	9 1/2"		

NOTES:

1. VALUES for 'A', 'B', 'C', 'D', 'E', 'F', 'G', 'L', Elev 'R' and Elev 'S' shown on Drainage Plans.
2. PIPE shall be cradled in concrete extending longitudinally to 1' beyond limits of 'L'. H=1/2 outside diameter of pipe plus 3" as a minimum. Cradle may be omitted on side opposite lateral inlet when constructed in connection with existing pipe storm drain.
3. A and B BARS shall be carried to a point not less than J distance from center line. J= D + 6.
4. RECTANGULAR OPENING in main line pipe shall be cut within limits of 'F', 'G', and 'L' normal to pipe surface without damaging steel.
5. TRANSVERSE REINFORCEMENT in pipe shall be cut in center of opening and bent to uniform distance from top and bottom of junction structure.
6. OPTIONAL CONSTRUCTION: When Junction Structure #1 is specified on Drainage Plan, the Contractor shall have the option of constructing Junction Structure #2, in which case construction data will be furnished by the Engineer.
7. REINFORCING STEEL shall be 1½" clear from face of concrete unless otherwise shown.
8. STEEL SCHEDULE: A and B bars - #5 @ 3" C-C
   F bars - #4 @ 6" C-C
   Tie bars - #3 @ 18" C-C
9. MONOLITHIC ARCH: When Junction Structure #1 is specified with reinforced monolithic arch storm drain, value 'D' shall refer to the clear span of arch. Reinforcing steel shall be cut and bent into junction structure the same as for pipe. Concrete cradle under reinforced monolithic arch is not required.
10. FLOOR of structure shall be steel-troweled to spring line.
11. ELEVATION 'S' applies at center of main line on prolongation of invert spur.

JUNCTION STRUCTURE No. 1 (JS 1)

NOTES:

1. VALUES for 'A', 'B', 'C', 'D1', 'D2', 'E', 'L', Elev 'A', Elev 'B', Elev 'R' and Elev 'S' are shown on Drainage Plans.
2. EMBEDMENT 'P' shall be 5" for pipe diameters 12" to 96" and 8" for pipe diameters 102" to 144".
3. FLOOR of structure shall be steel troweled to spring line.
4. REINFORCEMENT STEEL shall be 1½" clear from face of concrete unless otherwise shown. A and B bars need not be longer than the outside diagonal width of the lateral spur.
5. STEEL SCHEDULE:

Dia B or D2	A or B bars	C or F bars
12" to 39"	#5 @ 3"	#4 @ 6"
42" to 84"	#6 @ 3"	#5 @ 6"
90" to 144"	#7 @ 3"	#6 @ 6"
Tie bars - #3 @ 18" C-C		

6. ELEVATION 'S' applies at center of main line on prolongation of invert of spur.
7. JUNCTION STRUCTURE shall be poured in one continuous operation, except that the Contractor shall have the option of placing at the spring line a construction joint with a longitudinal keyway.
8. LATERALS - Where laterals enter both sides of structure, they shall be designated on the Drainage Plan as a right or left, facing in the direction of stationing.

JUNCTION STRUCTURE No. 2 (JS 2)

NOTES:

1. VALUES for 'A', 'B', 'L', 'L1', 'Elev R' and 'Elev S' are shown on Drainage Plan.
2. STATIONS specified in Drainage Plan apply at intersection of centerlines of main line and lateral.
3. EMBEDMENT 'P' shall be 5" for pipe diameters 12" to 96" and 8" for pipe diameters 102" to 144".
4. REINFORCING STEEL shall be 1½" clear from face of concrete unless otherwise shown. W BARS are of size and spacing specified for wall steel on Drainage Plan, and shall be cut in center of opening and bent into top and bottom of junction structure. OMIT H BARS when soffit of spur is 1' or less below soffit of main line, and omit G bars when invert of spur is 1' or less above floor of main line.
5. STEEL SCHEDULE:

Dia B	D,E,H,G Bars	F Bars
12" to 39"	#5	#4 @ 6" C-C
42" to 84"	#6	#5 @ 6" C-C
90" to 144"	#7	#6 @ 6" C-C
Tie bars - #3 @ 18" C-C		

6. JUNCTION STRUCTURE shall be poured monolithic with main line storm drain or manhole.
7. FLOOR of structure shall be steel-troweled.

JUNCTION STRUCTURE No. 3 (JS 3)

DRAINAGE DETAILS

NO SCALE

DD-2

STATE OF CALIFORNIA - DEPARTMENT OF TRANSPORTATION
Caltrans HYDRAULICS
FUNCTIONAL SUPERVISOR DAVE BHALLA
CALCULATED-DESIGNED BY S. THAI
CHECKED BY D. BHALLA
REVISED BY
DATE REVISED

LAST REVISION 06-09-12
DATE PLOTTED => 12-JUN-2013
TIME PLOTTED => 14:15

Dist	COUNTY	ROUTE	POST MILES TOTAL PROJECT	SHEET No.	TOTAL SHEETS
07	LA	10	33.2/37.2	205	1475

REGISTERED CIVIL ENGINEER 4-17-12 DATE

6-10-13
PLANS APPROVAL DATE

REGISTERED PROFESSIONAL ENGINEER DAVE BHALLA No. 34350 Exp. 9/30/13 CIVIL STATE OF CALIFORNIA

THE STATE OF CALIFORNIA OR ITS OFFICERS OR AGENTS SHALL NOT BE RESPONSIBLE FOR THE ACCURACY OR COMPLETENESS OF SCANNED COPIES OF THIS PLAN SHEET.

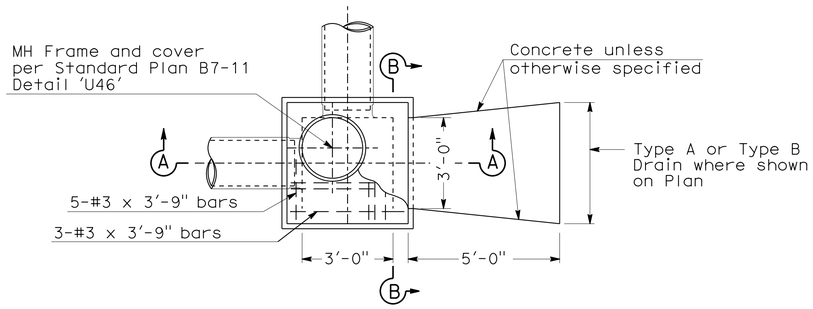

PLAN

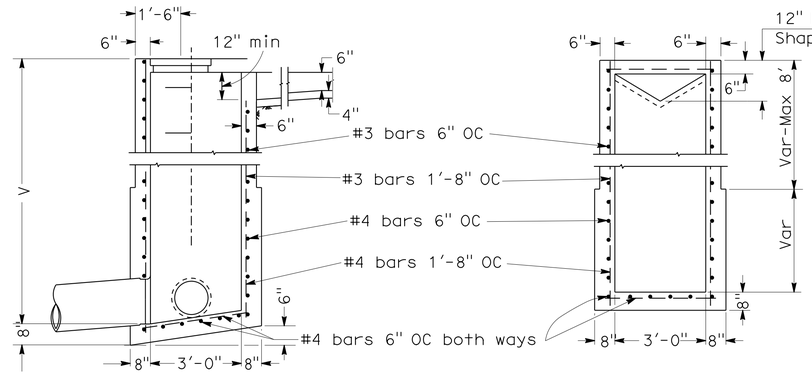

SECTION A-A

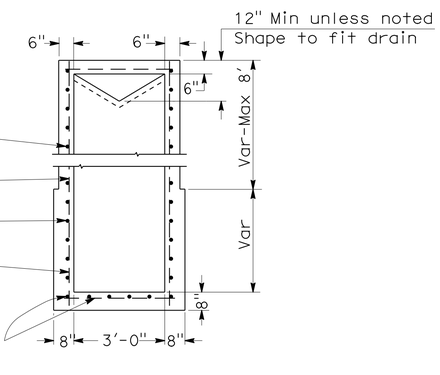

SECTION B-B

JUNCTION CHAMBER No. 3-C (JC 3-C)

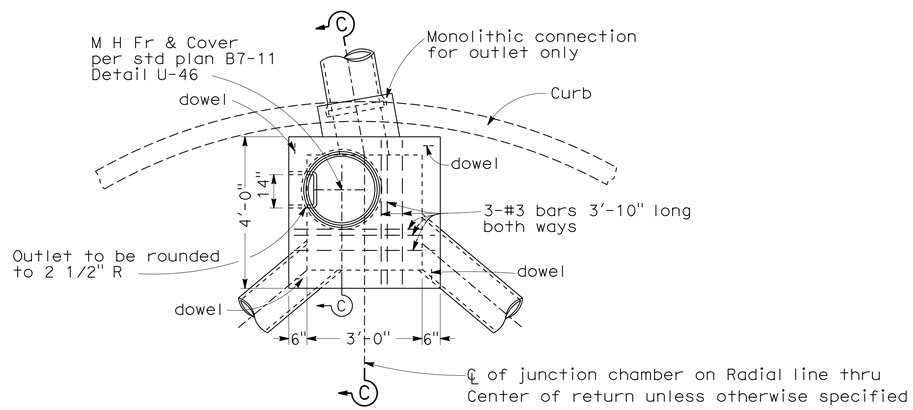

PLAN

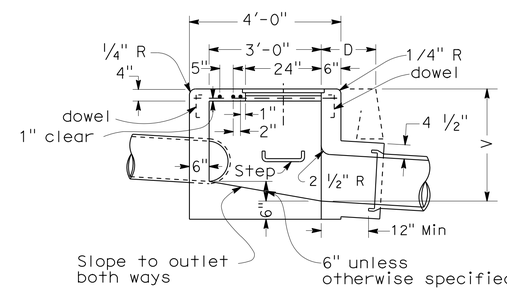

SECTION C-C

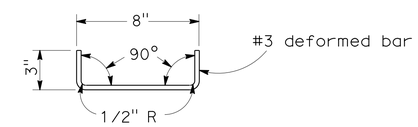

DETAIL OF DOWEL

One at each corner to be used when top is poured separate

JUNCTION CHAMBER No. 3 (JC 3)

NOTES:

1. CONNECTION pipes may be placed in any position around the walls provided they point in the proper direction and the position is otherwise consistent with the Drainage Plan.
2. DIMENSIONS: D=18" unless otherwise specified.
   V=3'-6" unless otherwise specified.
3. EXPOSED SURFACE of the Junction Chamber shall conform in slope, grade, color, finish and scoring to existing sidewalk adjacent to the Junction Chamber. Where no sidewalk exists, the top shall be finished to conform to standard sidewalk slope and finish, and scoring lines shall conform as nearly as possible to 20" squares.
4. FLOOR of chamber shall be given a steel-troweled finish and shall slope from all directions to outlet.
5. MANHOLE shall be placed in corner nearest outlet.
6. OUTLET pipe shall be connected to Junction Chamber with Monolithic Connection.
7. REINFORCING steel not required in walls when V=6' or less.
8. STEPS: None required where V=3'-6" or less.
   Install one step 16"± above floor when V is more than 3'-6" and less than 5'-0".
   Where V is more than 5'-0" steps shall be evenly spaced at 12"± intervals from 16"± above floor to within 12"± of the top of the box.

DRAINAGE DETAILS

NO SCALE

DD-3

STATE OF CALIFORNIA - DEPARTMENT OF TRANSPORTATION
Caltrans
HYDRAULICS

FUNCTIONAL SUPERVISOR: DAVE BHALLA
CALCULATED-DESIGNED BY: S. THAI
CHECKED BY: D. BHALLA
REVISED BY
DATE REVISED

LAST REVISION 06-09-12
DATE PLOTTED => 12-JUN-2013
TIME PLOTTED => 16:30

Dist	COUNTY	ROUTE	POST MILES TOTAL PROJECT	SHEET No.	TOTAL SHEETS
07	LA	10	33.2/37.2	206	1475

REGISTERED CIVIL ENGINEER 4-17-12 DATE

6-10-13
PLANS APPROVAL DATE

REGISTERED PROFESSIONAL ENGINEER DAVE BHALLA No. 34350 Exp. 9/30/13 CIVIL STATE OF CALIFORNIA

THE STATE OF CALIFORNIA OR ITS OFFICERS OR AGENTS SHALL NOT BE RESPONSIBLE FOR THE ACCURACY OR COMPLETENESS OF SCANNED COPIES OF THIS PLAN SHEET.

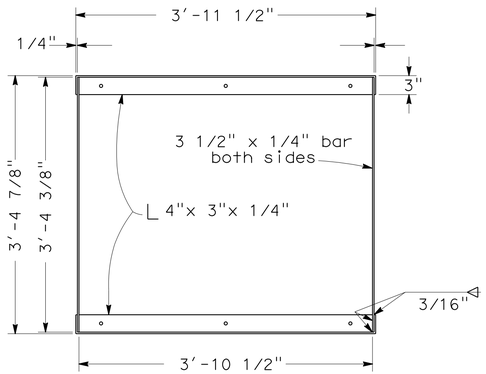

GRATE FRAME DETAIL

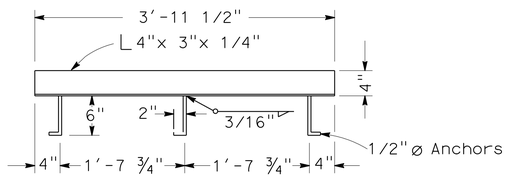

ANCHOR PLACEMENT DETAIL

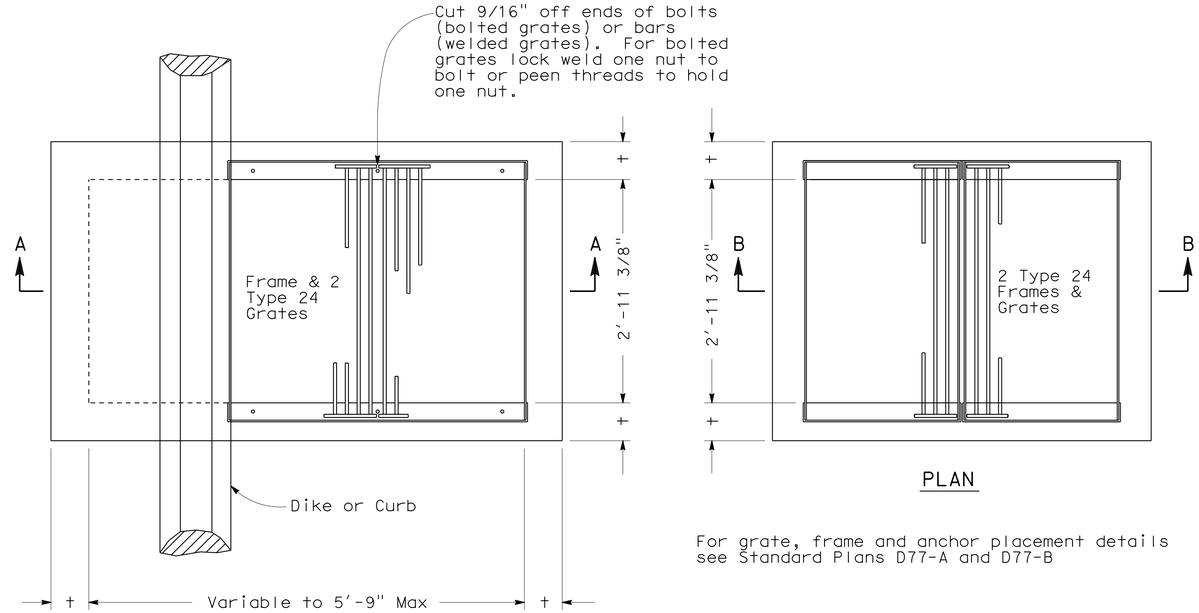

PLAN

For grate, frame and anchor placement details see Standard Plans D77-A and D77-B

PLAN

NOTES:

1. 'H' is the difference in elevation between the outlet pipe flow line and the flow line of the grates.
2. Steps - None required when 'H' is 3'-6" or less. Install one step 16"± above floor when 'H' is more than 3'-6" and less than 5'-0". Where 'H' is more than 5'-0" steps shall be evenly spaced @ 12"± intervals from 16"± above floor to within 12"± of the top of the box. Place steps in wall without pipe openings. See Standard Plan D74C for step detail.
3. Pipe(s) can be placed in any wall.
4. Reinforcing steel not required in walls when H=6' or less.
5. Reinforcing steel in walls shall be #4 bars @ 18"± centers placed 1 1/2" clear to inside of box.

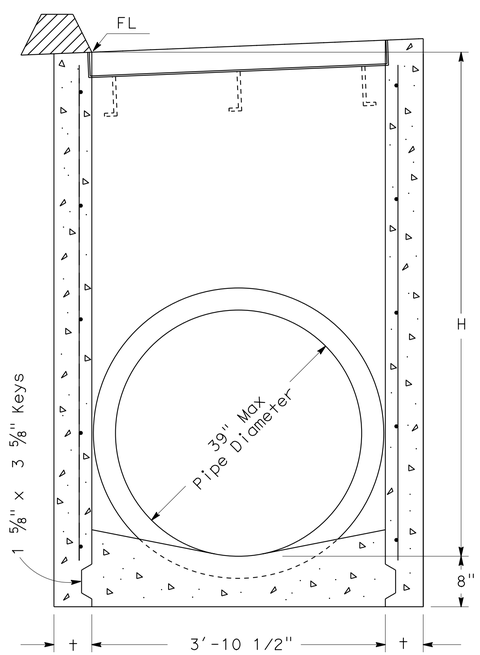

SECTION A-A
(For pipe diameters 39" or less)

GD-1

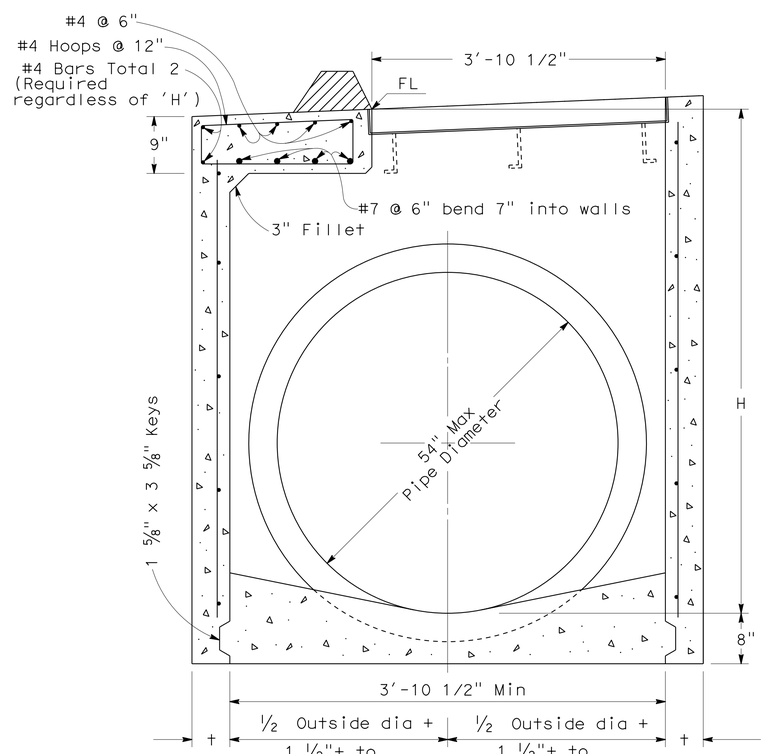

SECTION A-A

GD-2

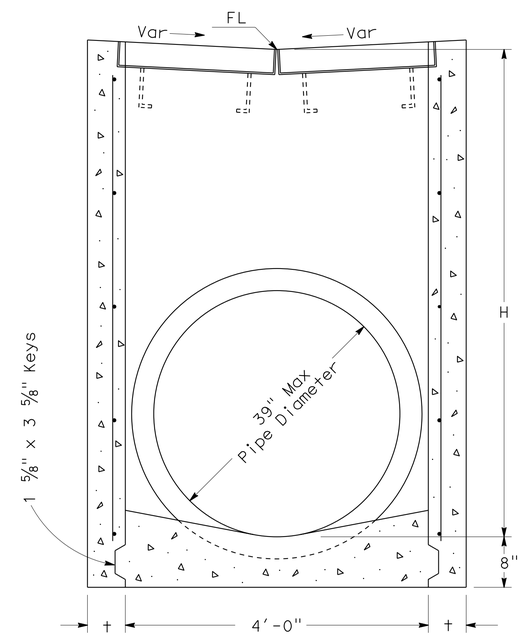

SECTION B-B
(For pipe diameters 39" or less)

GD-3

MISCELLANEOUS IRON & STEEL

Inlet Type	Grate Type	Weight
GD-1 & GD-2	24 - 12	580
	24 - 10C	379
	24 - 10S	433
	24 - 12X	453
	24 - 13	351
GD-3	24 - 12	652

H	t
8'-0" or less	6"
8'1" to 20'- 0"	8"

DRAINAGE DETAILS

NO SCALE

DD-4

STATE OF CALIFORNIA - DEPARTMENT OF TRANSPORTATION
Caltrans
HYDRAULICS
FUNCTIONAL SUPERVISOR: DAVE BHALLA
CALCULATED-DESIGNED BY: S. THAI
CHECKED BY: D. BHALLA
REVISED BY
DATE REVISED

LAST REVISION 06-09-12
DATE PLOTTED => 12-JUN-2013
TIME PLOTTED => 16:30

Dist	COUNTY	ROUTE	POST MILES TOTAL PROJECT	SHEET No.	TOTAL SHEETS
07	LA	10	33.2/37.2	207	1475

REGISTERED CIVIL ENGINEER 4-17-12 DATE

6-10-13
PLANS APPROVAL DATE

REGISTERED PROFESSIONAL ENGINEER DAVE BHALLA No. 34350 Exp. 9/30/13 CIVIL STATE OF CALIFORNIA

THE STATE OF CALIFORNIA OR ITS OFFICERS OR AGENTS SHALL NOT BE RESPONSIBLE FOR THE ACCURACY OR COMPLETENESS OF SCANNED COPIES OF THIS PLAN SHEET.

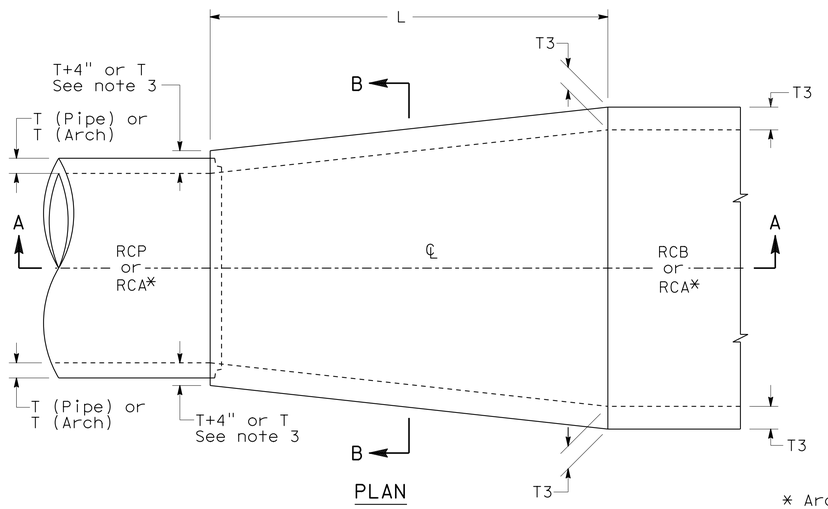

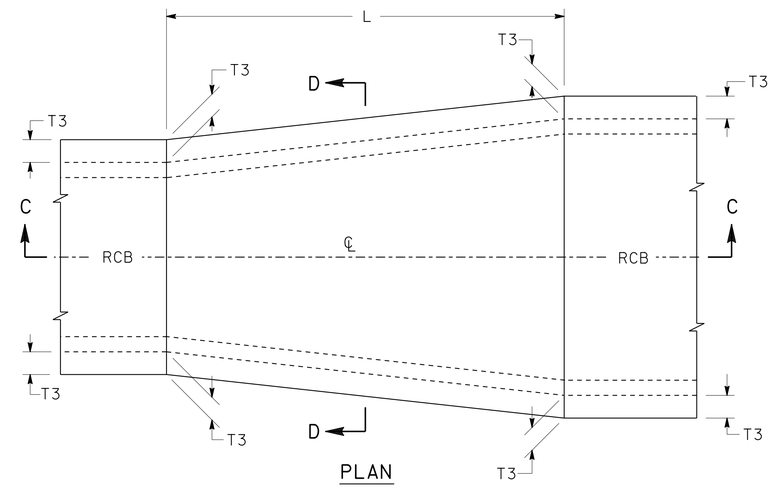

* Arch may have horseshoe-shaped, circular, elliptical or similar cross-section.

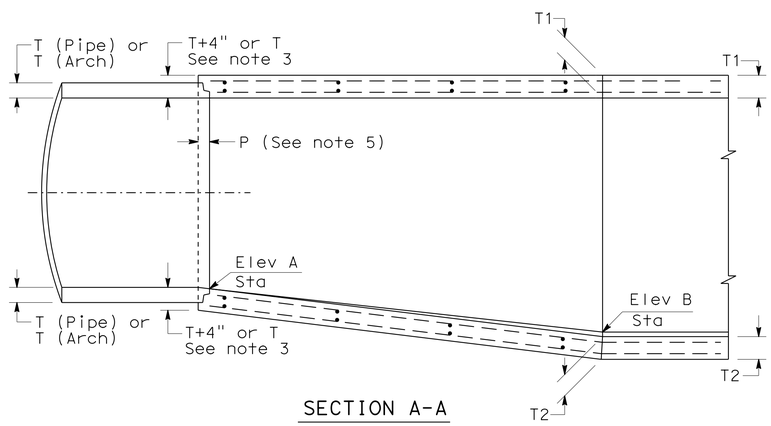

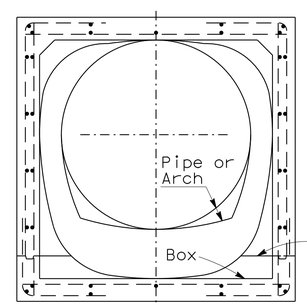

Optional const joint:
Box or arch to pipe - Use const joint of box or arch.
Box to arch - Use const joint of box.

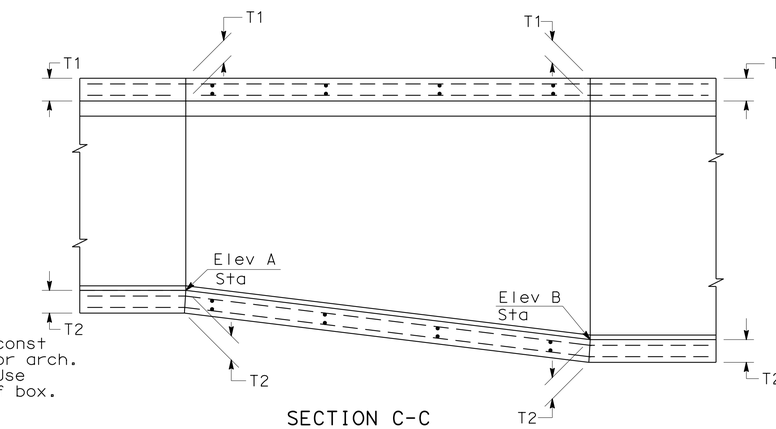

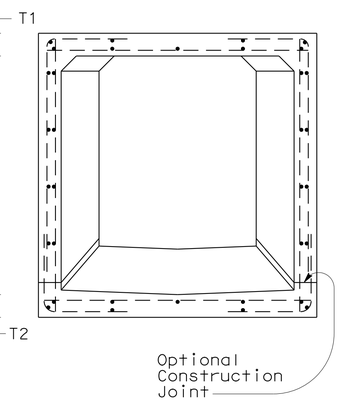

TRANSITION STRUCTURE No. 1

TRANSITION STRUCTURE No. 2

NOTES:

1. Values of 'L', Elev 'A', Elev 'B', shall be as shown on the drainage plans.
2. Reinforcing steel bar sizes, spacing, pattern and cover over the steel shall be as follows:
   Box to pipe and box to arch - that of the box section.
   Arch to pipe - that of the arch section.
   Arch to arch - that of the arch section having the thicker walls.
   Box to box - that of the box section providing the greater steel area for each type of bar.
   The bar lengths shall vary uniformly throughout the transition.
3. The concrete thickness shall be as follows:
   Box to pipe and arch to pipe - that of arch or box section unless the wall thickness of the pipe plus 4 inches is greater, in which case the concrete thickness shall vary uniformly from that of the arch or box section to that of the pipe wall plus 4 inches.
   Box to arch and arch to arch - that of the adjoining box or arch section at each end of the transition and shall vary uniformly between the two ends.
   Box to box - that of the adjoining box section at each end of the transition and shall vary uniformly between the two ends.
4. The interior surface shall be smooth and vary uniformly between the two adjoining sections.
5. At pipe juncture, embedment 'P' shall be 5 inches for pipe sizes of 96 inches or less, and 8 inches for pipe sizes over 96 inches.
6. Keyed construction joints of the same dimensions as those of the box or arch section may be carried through the transition structure at the contractor's option. See Section B-B or D-D.
7. The transition structure shall be constructed in accordance with the general structural notes applying to box or arch culverts shown on the Standard Plans.
8. Dowels are required when joining to existing structures. #4 @ 12" to extend 2'- 0" into existing structures.

DRAINAGE DETAILS

NO SCALE

DD-5

STATE OF CALIFORNIA - DEPARTMENT OF TRANSPORTATION
Caltrans
HYDRAULICS

FUNCTIONAL SUPERVISOR: DAVE BHALLA
CALCULATED-DESIGNED BY: S. THAI
CHECKED BY: D. BHALLA
REVISED BY
DATE REVISED

LAST REVISION 06-09-12
DATE PLOTTED => 12-JUN-2013
TIME PLOTTED => 16:30

Dist	COUNTY	ROUTE	POST MILES TOTAL PROJECT	SHEET No.	TOTAL SHEETS
07	LA	10	33.2/37.2	208	1475

REGISTERED CIVIL ENGINEER 4-17-12 DATE

6-10-13
PLANS APPROVAL DATE

REGISTERED PROFESSIONAL ENGINEER DAVE BHALLA No. 34350 Exp. 9/30/13 CIVIL STATE OF CALIFORNIA

THE STATE OF CALIFORNIA OR ITS OFFICERS OR AGENTS SHALL NOT BE RESPONSIBLE FOR THE ACCURACY OR COMPLETENESS OF SCANNED COPIES OF THIS PLAN SHEET.

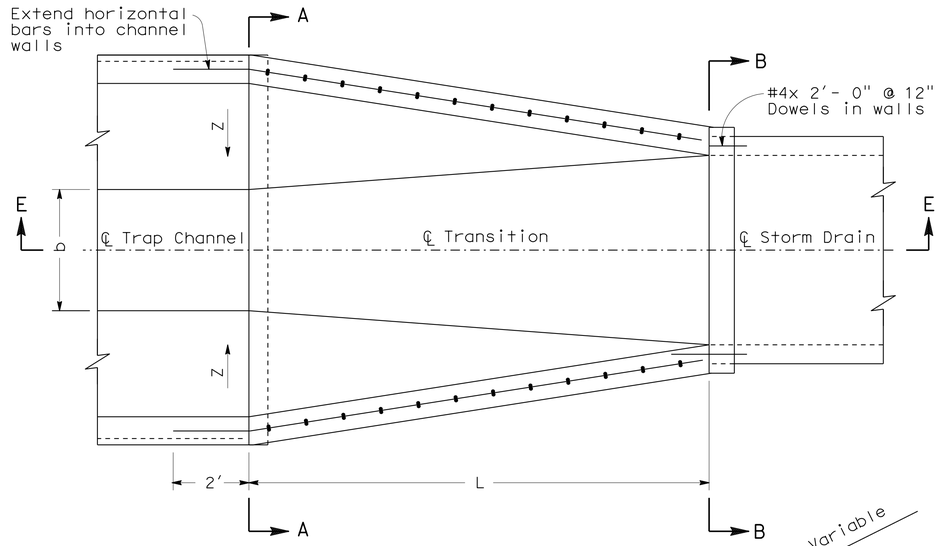

PLAN

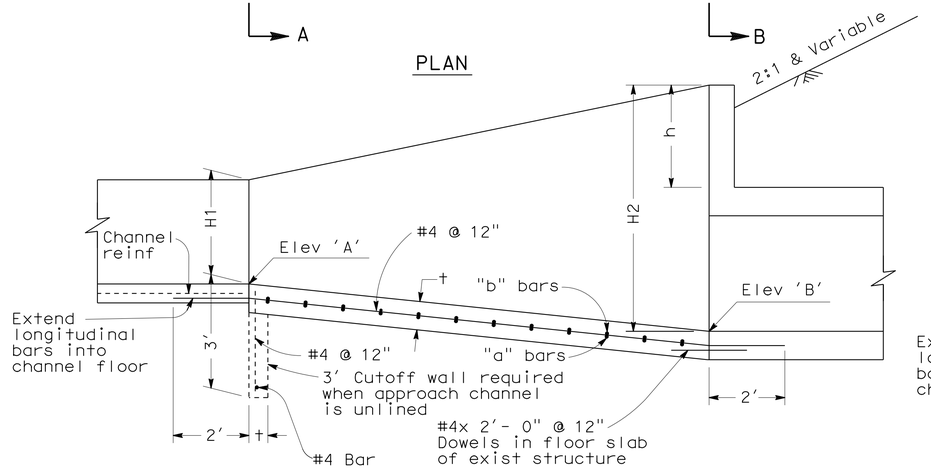

SECTION E-E

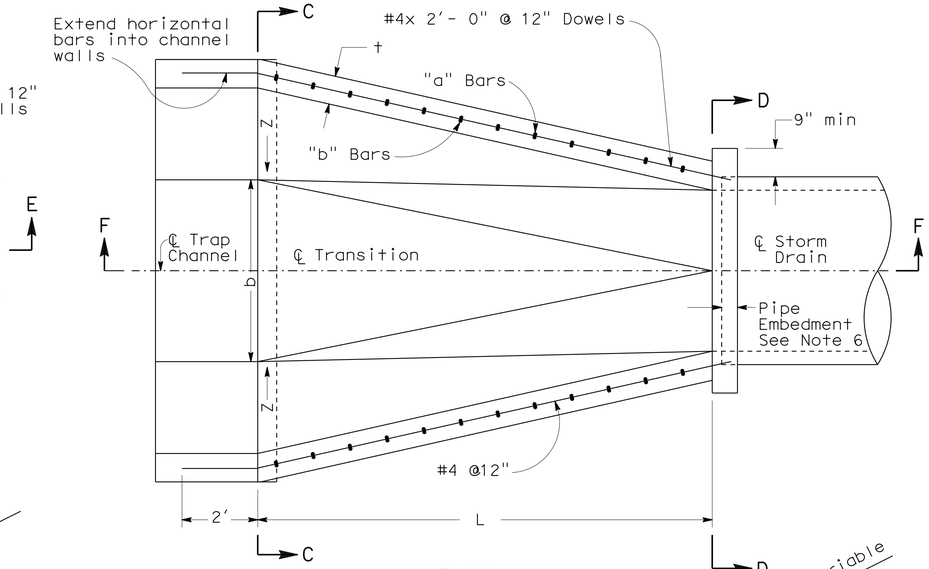

PLAN

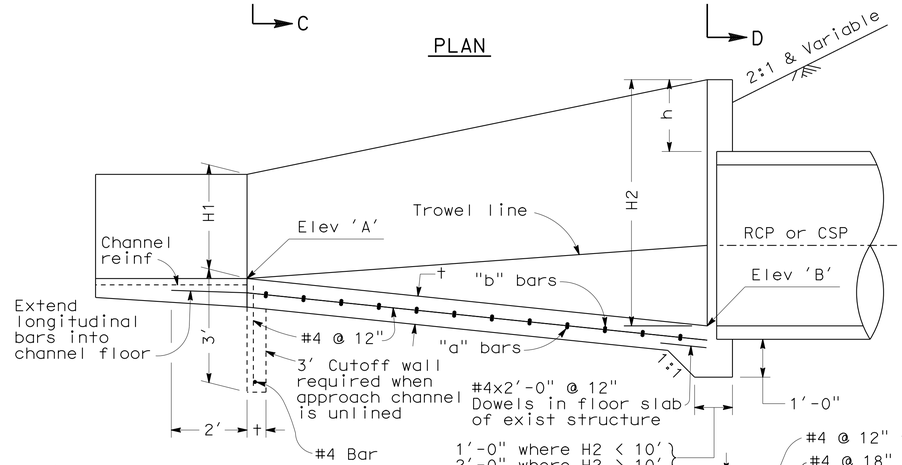

SECTION F-F

TABLE 1

* DESIGN "H"	†	REINFORCEMENT
0' - 4'	6"	#4 @ 12" both ways centered in slab
4' - 6'	6"	"a" bars #5 @ 24" "b" bars #5 @ 24"
6' - 8'	6"	"a" bars #5 @ 12" "b" bars #5 @ 12"
Greater than 8'	10"	"a" bars #6 @ 6" "b" bars #5 @ 12"

* Design "H" varies throughout length of transition. Use larger "H" on short transitions (L=15' or less). For longer transitions, vary reinforcement as indicated above.

NOTES

1. Provide a construction joint between the transition and the storm drain.
2. Extend the longitudinal reinforcing steel of the transition 2' into the trapezoidal channel.
3. In lieu of placing the dowels between the transition and the rectangular storm drain, the longitudinal reinforcing steel of the transition structure may be extended 2' into the storm drain.
4. 'H', 'H2', 'h', 'L', 'b', Elev 'A' and Elev 'B', and 'Z' shall be shown on the plans.
5. This structural detail may be applied to transitions with curved bottoms and curved side walls.
6. Pipe embedment shall be 5" for 96" or less and 8" for over 96".

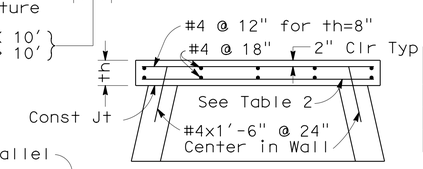

SECTION H-H

TABLE 2

S or D	th	REINFORCEMENT h=6" to 4'	REINFORCEMENT h=5' to 8'
1'-6" to 5'-6"	6"	#4 @ 12"	#4 @ 12"
6' to 10'	6"	#4 @ 8"	#6 @ 9"
12'	8"	#5 @ 9"	#6 @ 6"

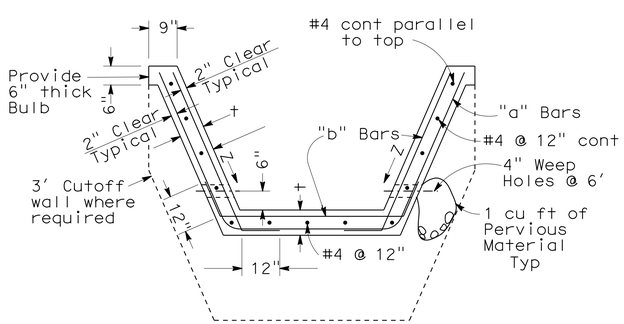

SECTION A-A

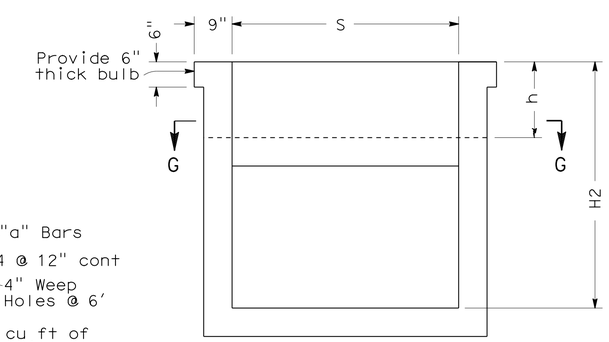

SECTION B-B

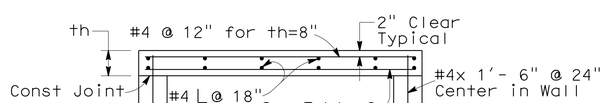

SECTION G-G

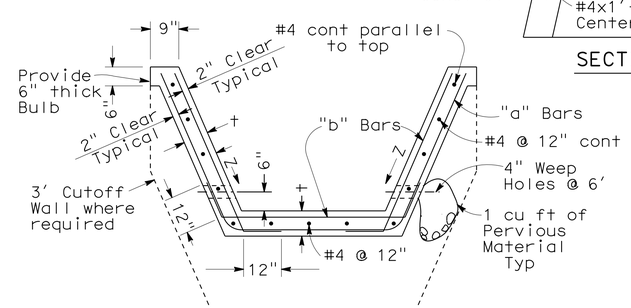

SECTION C-C

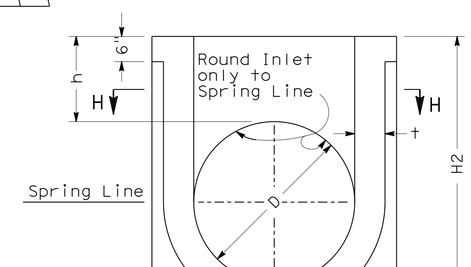

SECTION D-D

TRANSITION STRUCTURE No. 3 (TS No. 3)

TRANSITION STRUCTURE No. 4 (TS No. 4)

DRAINAGE DETAILS

NO SCALE

DD-6

STATE OF CALIFORNIA - DEPARTMENT OF TRANSPORTATION
Caltrans® HYDRAULICS

FUNCTIONAL SUPERVISOR: DAVE BHALLA
CALCULATED-DESIGNED BY: D. BHALLA
CHECKED BY: S. THAI
REVISED BY / DATE REVISED

LAST REVISION 06-09-12
DATE PLOTTED => 12-JUN-2013
TIME PLOTTED => 16:30

INLET TYPE	GRATE TYPE	No. OF GRATES	WEIGHT
OG-1	24-9	1	250

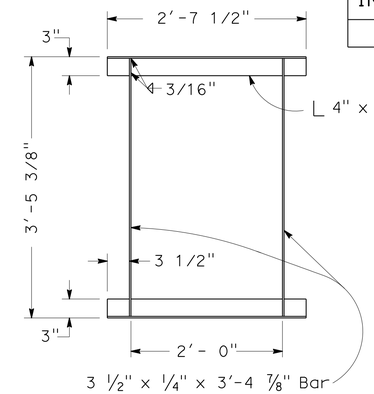

PLAN

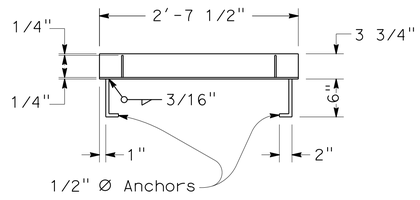

CROSS SECTION

FRAME DETAIL

General Notes: See Standard Plan D77A

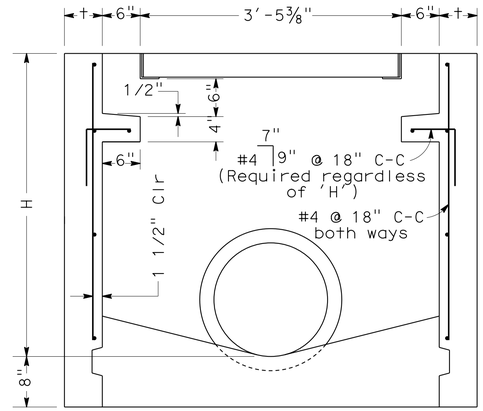

SECTION D-D

General Notes: See Standard Plan D73

TYPE OG-1 INLET

H	t
8'-0" or less	6"
8'-1" to 20'-0"	8"

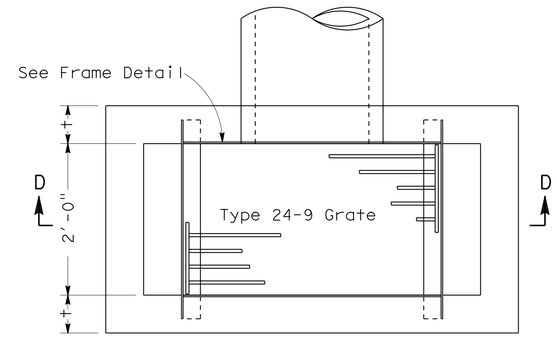

PLAN

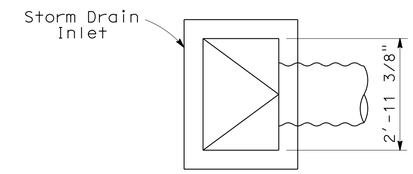

SECTION C-C

No Scale

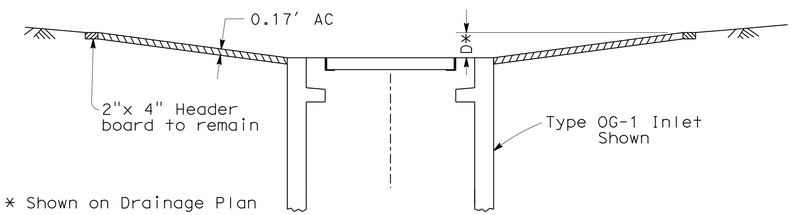

SECTION A-A

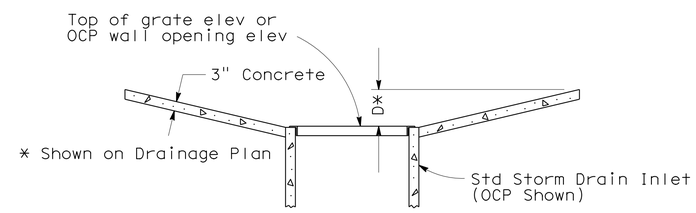

SECTION B-B

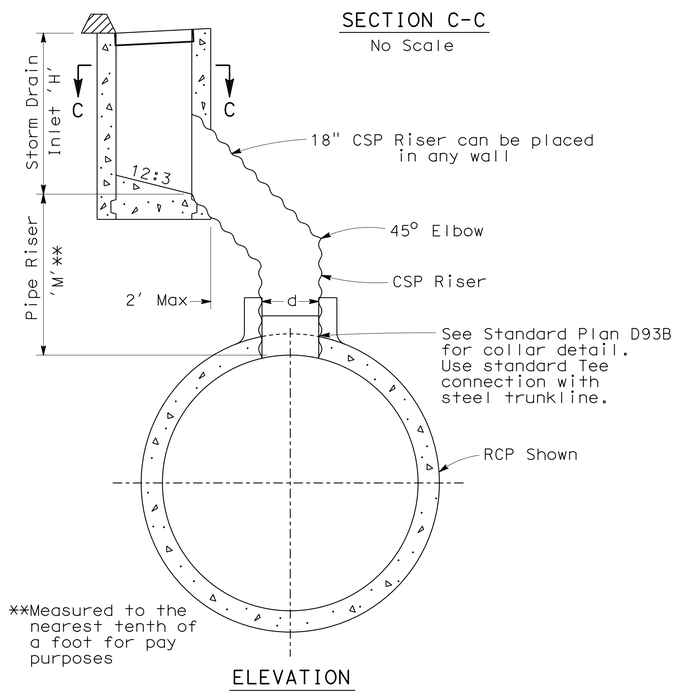

ELEVATION

STORM DRAIN RISER CONNECTION

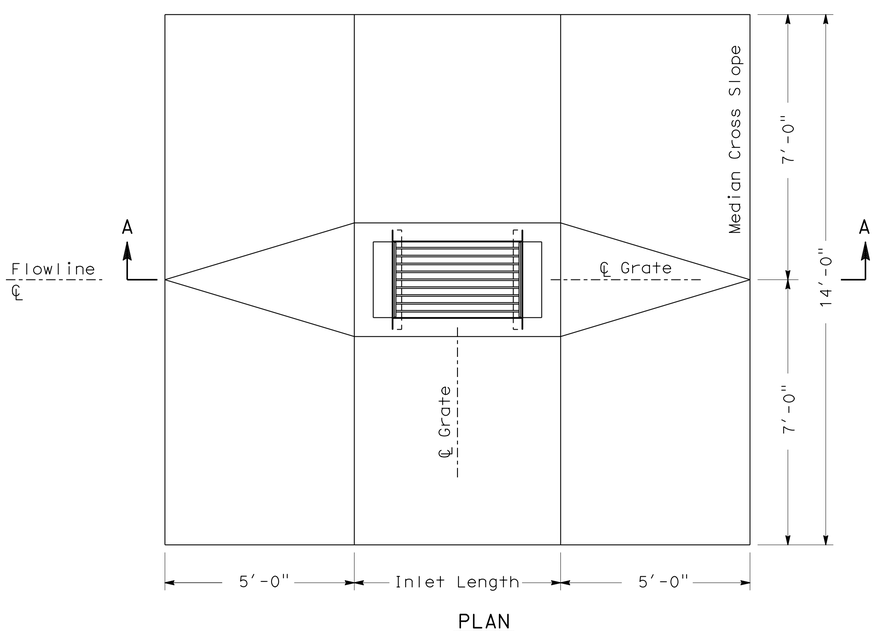

PLAN

MEDIAN INLET APRON DETAIL

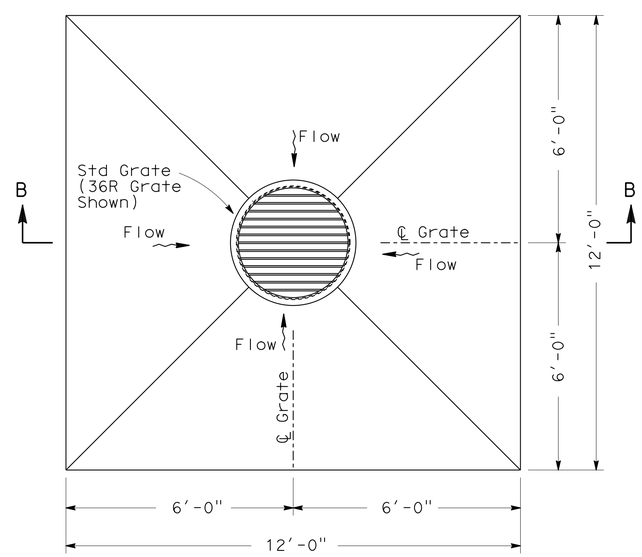

PLAN

DEPRESSED APRON DETAIL

DRAINAGE DETAILS

NO SCALE

DD-7

Dist	COUNTY	ROUTE	POST MILES TOTAL PROJECT	SHEET No.	TOTAL SHEETS
07	LA	10	33.2/37.2	209	1475

REGISTERED CIVIL ENGINEER 4-17-12 DATE

6-10-13
PLANS APPROVAL DATE

REGISTERED PROFESSIONAL ENGINEER DAVE BHALLA No. 34350 Exp. 9/30/13 CIVIL STATE OF CALIFORNIA

THE STATE OF CALIFORNIA OR ITS OFFICERS OR AGENTS SHALL NOT BE RESPONSIBLE FOR THE ACCURACY OR COMPLETENESS OF SCANNED COPIES OF THIS PLAN SHEET.

REVISED BY | DATE REVISED
S. THAI | D. BHALLA
CALCULATED-DESIGNED BY | CHECKED BY
FUNCTIONAL SUPERVISOR
DAVE BHALLA

STATE OF CALIFORNIA - DEPARTMENT OF TRANSPORTATION
HYDRAULICS
Caltrans

LAST REVISION 06-09-12 | DATE PLOTTED => 12-JUN-2013 | TIME PLOTTED => 16:30

Dist	COUNTY	ROUTE	POST MILES TOTAL PROJECT	SHEET No.	TOTAL SHEETS
07	LA	10	33.2/37.2	210	1475

REGISTERED CIVIL ENGINEER 4-17-12 DATE

6-10-13
PLANS APPROVAL DATE

REGISTERED PROFESSIONAL ENGINEER DAVE BHALLA No. 34350 Exp. 9/30/13 CIVIL STATE OF CALIFORNIA

THE STATE OF CALIFORNIA OR ITS OFFICERS OR AGENTS SHALL NOT BE RESPONSIBLE FOR THE ACCURACY OR COMPLETENESS OF SCANNED COPIES OF THIS PLAN SHEET.

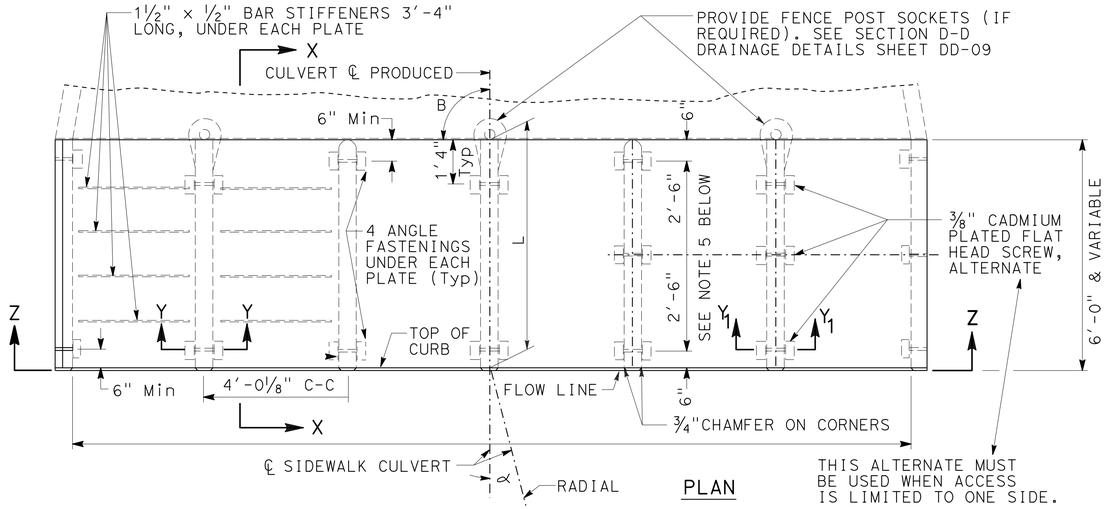

PLAN

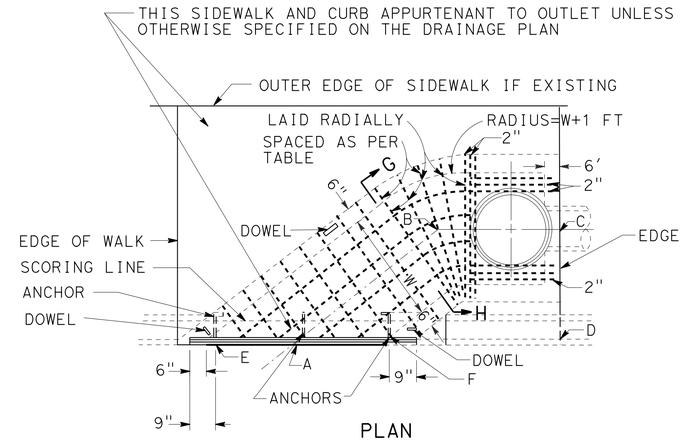

PLAN

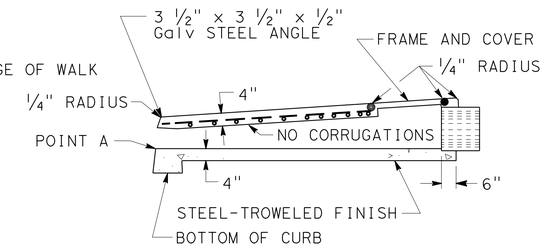

SECTION A-B-C

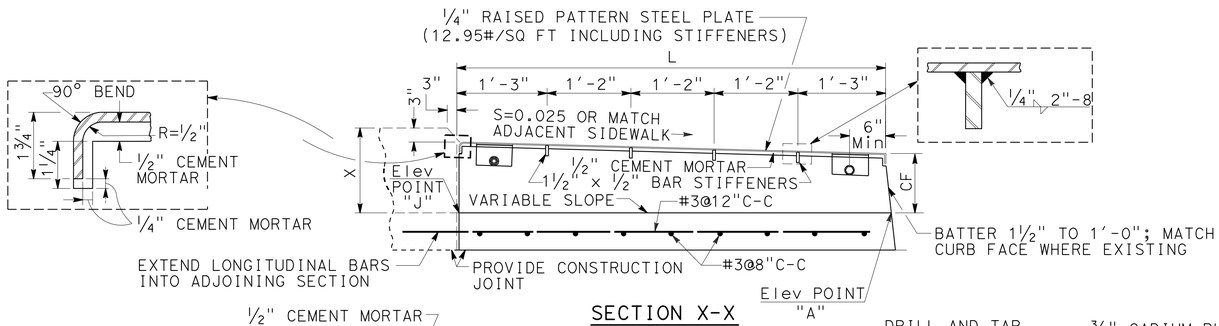

SECTION X-X

DOWEL DETAIL

TO BE USED WHEN TOP IS POURED SEPARATE, ONE AT EACH CORNER

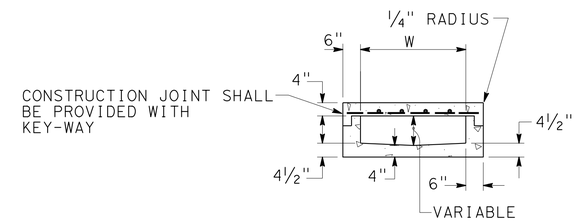

SECTION G-H

STEEL LIST SHOWING LENGTH AND SPACING OF REINFORCING BARS					
W	#3 BARS		3½" x 3½" x ½" Galv ANGLE	DOWELS	ANCHORS
	SPACING	LENGTH		SEE DETAIL	SEE DETAIL
2'-0"	6"	2'-10"	4'-9"	3	3
2'-6"	6"	3'-4"	5'-7"	3	3
3'-0"	5"	3'-10"	6'-5"	3	3
3'-6"	5"	4'-4"	7'-3"	3	3
4'-0"	4"	4'-10"	8'-1"	3	3
LONGITUDINAL BARS SHALL BE #3 BARS AND SHALL BE NOT MORE THAN 12 INCHES APART					

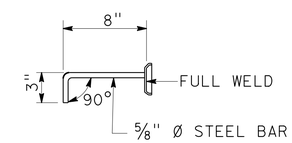

ANCHOR DETAIL

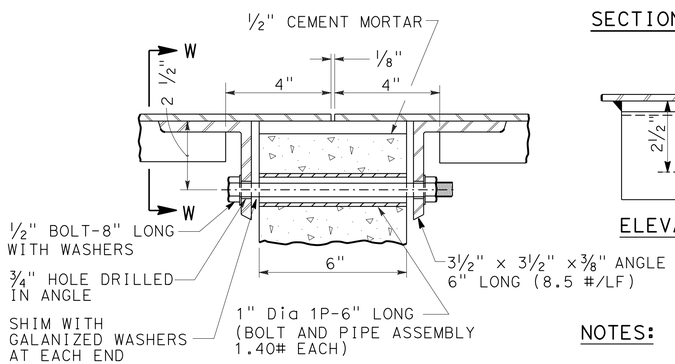

SECTION Y-Y

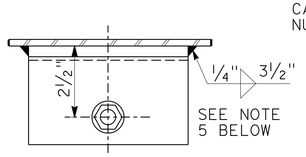

ELEVATION W-W

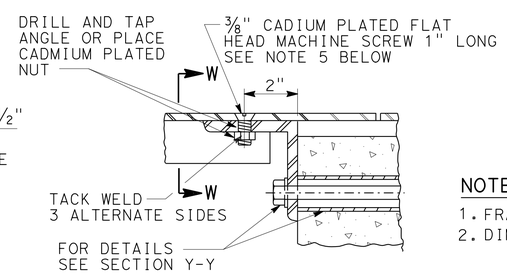

SECTION Y_1-Y_1 (PARTIAL)

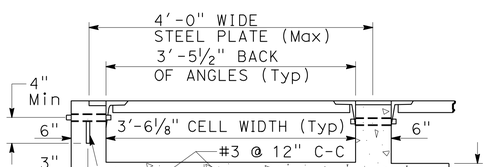

SECTION Z-Z (PARTIAL)

NOTES:

1. CELL WIDTH SHALL BE 5⅞" LESS THAN THE WIDTH OF THE STEEL PLATE.
2. BACK OF ANGLES, WHEN WELDED TO THE PLATE, SHALL BE PLACED 3¼" FROM THE EDGES OF THE PLATE.
3. ALL STEEL WORK SHALL BE HOT-DIP GALVANIZED.
4. BAR STIFFENER SPACING SHALL NOT EXCEED 15" C-C.
5. ALTERNATE ⅜" CADMIUM PLATED FLAT-HEAD SCREWS MAY BE USED INSTEAD OF THE ¼" FILLET WELD BUT SHALL BE SPACED 30" C-C.
6. ½" Ø ANCHOR BOLTS MAY BE USED IN OUTSIDE WALLS OF CULVERT IN PLACE OF 1" Dia IP AND BOLT.
7. SEE PLAN OF SIDEWALK CULVERT FOR CURB OPENINGS TO BE CONSTRUCTED ALONG A CURVE. SEE DRAINAGE DETAILS SHEET DD-09.
8. ANGLES ∝=0° & B=90° UNLESS OTHERWISE SPECIFIED.

NOTES:

1. FRAME AND COVER: SEE Std PLAN B7-11, DETAIL U46.
2. DIMENSIONS:
   AB=5/3 OF CD
   BC=3'-6" UNLESS OTHERWISE SPECIFIED
   CD=3' UNLESS OTHERWISE SPECIFIED
   EF=5/3 OF W
   W =2' UNLESS OTHERWISE SPECIFIED
3. FLOOR OF OUTLET SHALL BE GIVEN A STEEL-TROWELED FINISH AND CONSTRUCTED ON A STRAIGHT GRADE FROM END OF PIPE TO GUTTER FLOW LINE AT POINT A. THE V SECTION SPECIFIED FOR INVERT SHALL EXTEND FROM PIPE OUTLET TO A POINT 3' FROM THE GUTTER, FROM WHICH POINT THE INVERT SHALL BE WARPED TO JOIN THE GUTTER FLOW LINE AT THE OUTLET.
4. FORMS: CORRUGATED METAL FORMS SHALL NOT BE USED FOR SUPPORTING THE TOP SLAB.
5. REINFORCING STEEL SHALL BE 1" FROM THE BOTTOM OF THE TOP SLAB.
6. SURFACE OF ALL EXPOSED CONCRETE SHALL CONFORM IN SLOPE, GRADE, COLOR, FINISH, AND SCORING TO EXISTING OR PROPOSED CURB AND WALK ADJACENT TO THE OUTLET.
7. CONCRETE: WHERE OUTLET IS TO BE CONSTRUCTED WITHIN THE LIMITS OF OR CONTIGUOUS TO A PROPOSED SIDEWALK, THE TOP SLAB OF THE OUTLET SHALL BE POURED MONOLITHIC WITH THE SIDEWALK USING THE SAME CLASS OF CONCRETE AS IN THE STRUCTURE.

SIDEWALK CULVERT WITH STEEL PLATE COVER

DRAINAGE DETAILS

NO SCALE

DD-8

STATE OF CALIFORNIA - DEPARTMENT OF TRANSPORTATION
Caltrans® HYDRAULICS
FUNCTIONAL SUPERVISOR: DAVE BHALLA
CALCULATED-DESIGNED BY: S. THAI
CHECKED BY: D. BHALLA
REVISED BY / DATE REVISED

LAST REVISION 06-09-12 | DATE PLOTTED => 12-JUN-2013 | TIME PLOTTED => 16:30

Dist	COUNTY	ROUTE	POST MILES TOTAL PROJECT	SHEET No.	TOTAL SHEETS
07	LA	10	33.2/37.2	211	1475

REGISTERED CIVIL ENGINEER 4-17-12 DATE

6-10-13
PLANS APPROVAL DATE

REGISTERED PROFESSIONAL ENGINEER DAVE BHALLA No. 34350 Exp. 9/30/13 CIVIL STATE OF CALIFORNIA

THE STATE OF CALIFORNIA OR ITS OFFICERS OR AGENTS SHALL NOT BE RESPONSIBLE FOR THE ACCURACY OR COMPLETENESS OF SCANNED COPIES OF THIS PLAN SHEET.

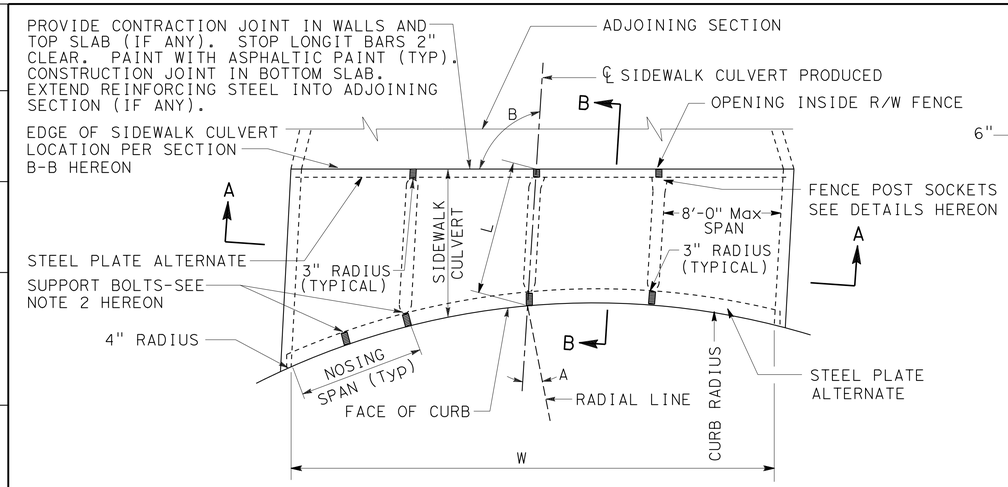

NOTES:

1. CONSTRUCT CULVERT OPENINGS WITH Max 7'-0" CHORDS
2. SUPPORT BOLTS
   A. SUPPORT BOLTS SHALL BE INSTALLED AT THE NOSE OF EACH DIVIDER WALL.
   B. WHEN NOSING SPAN EXCEEDS 7'-0" INTERMEDIATE SUPPORT BOLT(S) SHALL BE INSTALLED, EQUALLY SPACED AT 7'-0" OC Max SPACING.
   C. SPACING NOTES HEREON SUPERSEDE THOSE SHOWN ON STANDARD PLAN.
   D. SUPPORT BOLTS ARE NOT REQUIRED AT THE DIVIDER WALL NOSE WHEN THE OPENING IS INSIDE THE R/W FENCE.
3. UNLESS OTHERWISE SPECIFIED ON OTHER SHEETS, A=0° @ B=90°.
4. ALL DETAILS ARE APPLICABLE FOR CURB OPENINGS ON A STRAIGHT LINE.
5. CULVERT SHALL BE CONSTRUCTED AS ONE SPAN UNLESS ADDITIONAL CELLS ARE SPECIFIED ON DRAINAGE PLANS.

PLAN
SIDEWALK CULVERT

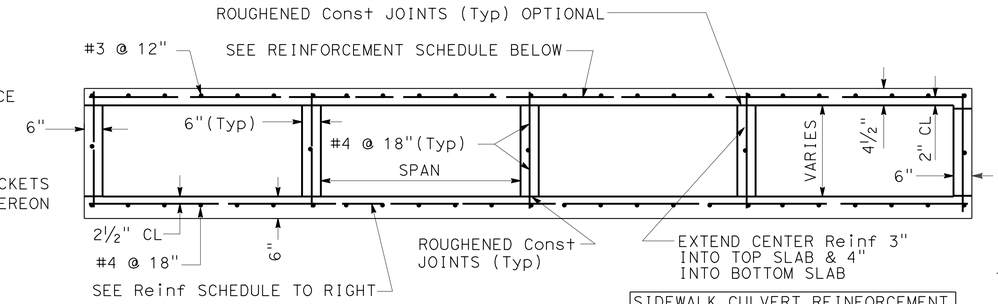

SECTION A-A

SIDEWALK CULVERT REINFORCEMENT			
SPAN	BARS	SPAN	BARS
3'-0"	#3 @ 12"	6'-0"	#3 @ 6"
4'-0"	#3 @ 10"	7'-0"	#4 @ 8"
5'-0"	#3 @ 8"	8'-0"	#4 @ 6"

FOR SPAN DIMENSIONS DIFFERING FROM THOSE SHOWN, USE DESIGN DATA FOR THE NEXT LARGER SPAN

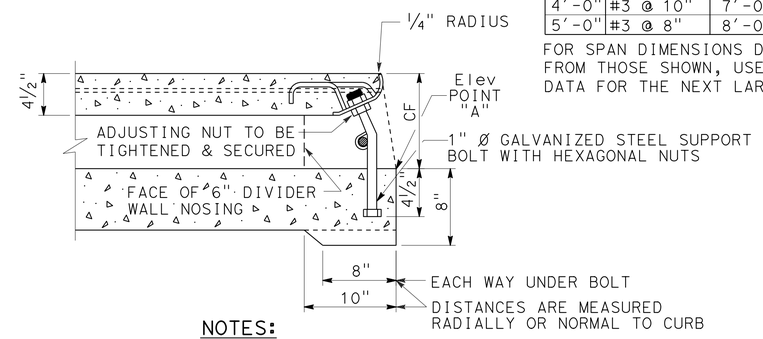

NOTES:

1. WHEN REQUIRED BY LENGTH OF OPENING OR CONSTRUCTION OF A CIRCULAR CURB OPENING STEEL ANGLE MAY BE DELIVERED IN SECTIONS AND BUTT WELDED IN PLACE.
2. REINFORCE STEEL PLATE AS PER INLET DETAIL HEREON.

OUTLET DETAIL

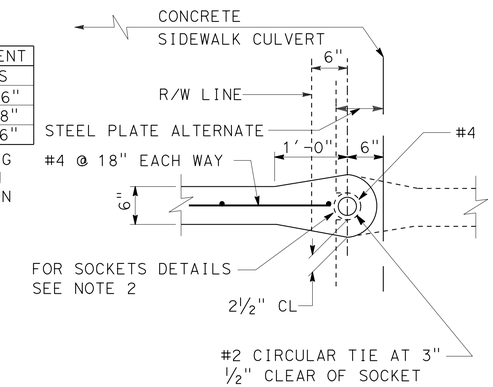

SECTION D-D

POST SOCKET DETAIL

NOTES:

1. WHERE DIVIDER WALL CONTINUES IN AN ADJOINING STRUCTURE, THE 1'-0" TAPER SHOWN SHALL BE REPEATED AS PER DASHED LINES.
2. FENCE POST SOCKETS UNLESS OTHERWISE SPECIFIED SHALL BE FORMED OF LIGHTWEIGHT METAL INSERTS 18" LONG. THESE INSERTS SHALL BE SHEET METAL TUBES WITH AN 1 D ¾" GREATER THAN THE OD OF THE FENCE POST USED. POSTS ARE TO BE MORTARED INTO THE INSERTS USING ONE PART CEMENT AND TWO PARTS SAND.

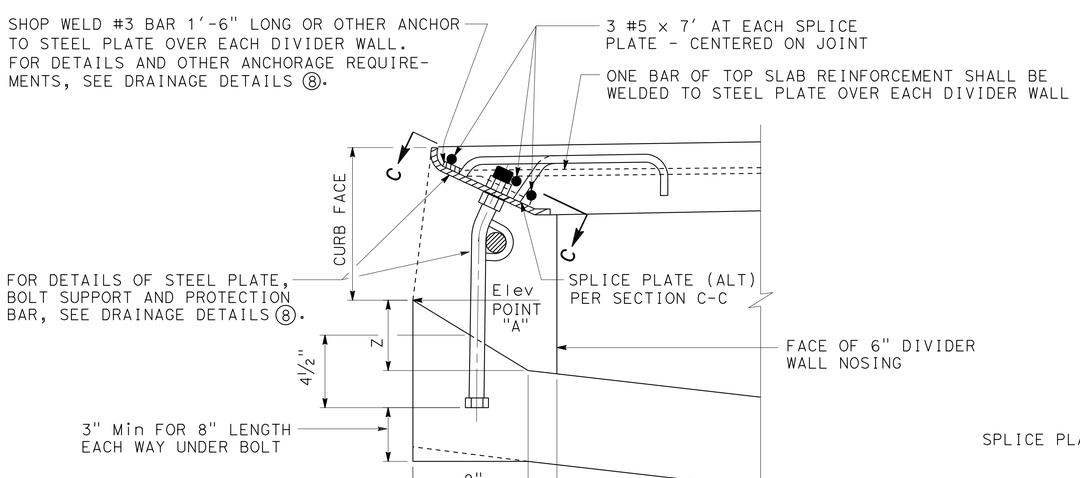

INLET DETAIL

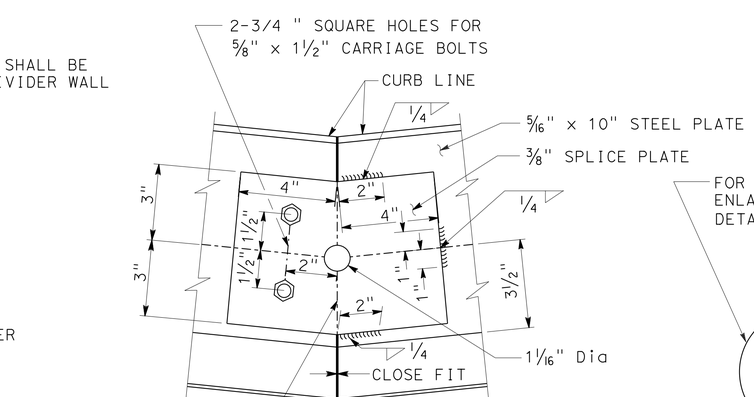

SECTION C-C
SPLICE PLATE ALTERNATE
SIDEWALK CULVERT

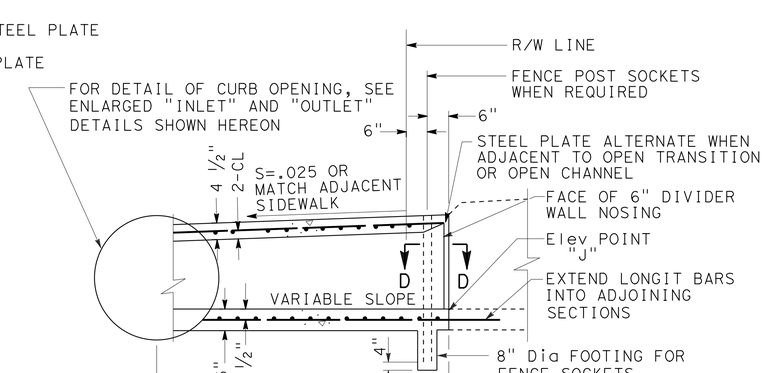

SECTION B-B

NOTES:

1. SEE NOTE ON OUTLET DETAIL.
2. THE BOTTOM SLAB OF THE SIDEWALK CULVERT SHALL BE CONSTRUCTED ON A UNIFORM GRADE UNLESS OTHERWISE SPECIFIED ON THE PLAN SHEETS.
3. Z=4 ½" UNLESS OTHERWISE SPECIFIED ON THE PLAN SHEET.
4. SHOP WELD ONE EXTRA #3 BAR 1'-6" LONG OR OTHER ANCHOR (ALT) EACH SIDE OF SPLICE PLATE AND WITHIN 6" THEREOF.
5. A. SHOP WELD SPLICE PLATE TO LONGER SPAN SEGMENT.
   B. ALTERNATE SPLICE PLATE MAY BE BOLTED TO EACH SIDE.
6. SPLICE PLATE ALTERNATE SHALL BE USED ONLY WHERE THE SPLICE IS LOCATED OVER SUPPORT BOLTS.

DRAINAGE DETAILS

NO SCALE

DD-9

REVISED BY | DATE REVISED
S. THAI | D. BHALLA
CALCULATED-DESIGNED BY | CHECKED BY
FUNCTIONAL SUPERVISOR | DAVE BHALLA

STATE OF CALIFORNIA - DEPARTMENT OF TRANSPORTATION
Caltrans
HYDRAULICS

LAST REVISION 06-09-12 | DATE PLOTTED => 12-JUN-2013 | TIME PLOTTED => 16:30

Dist	COUNTY	ROUTE	POST MILES TOTAL PROJECT	SHEET No.	TOTAL SHEETS
07	LA	10	33.2/37.2	212	1475

REGISTERED CIVIL ENGINEER 4-17-12 DATE

6-10-13
PLANS APPROVAL DATE

REGISTERED PROFESSIONAL ENGINEER DAVE BHALLA No. 34350 Exp. 9/30/13 CIVIL STATE OF CALIFORNIA

THE STATE OF CALIFORNIA OR ITS OFFICERS OR AGENTS SHALL NOT BE RESPONSIBLE FOR THE ACCURACY OR COMPLETENESS OF SCANNED COPIES OF THIS PLAN SHEET.

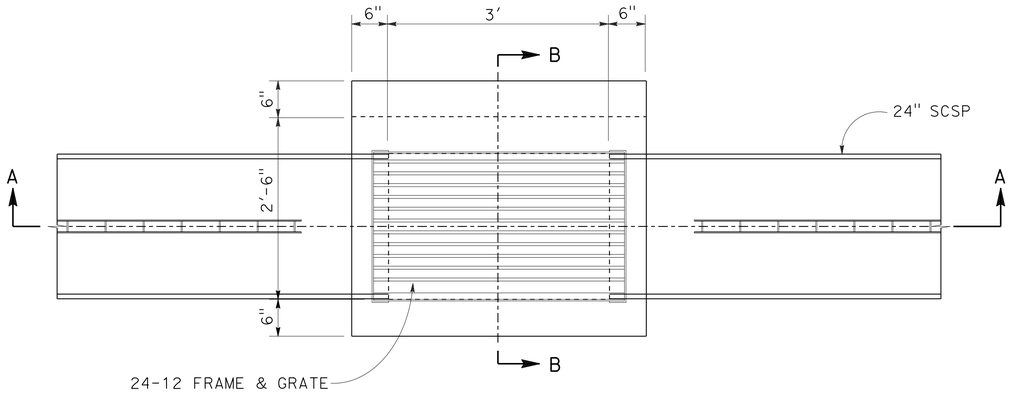

PLAN

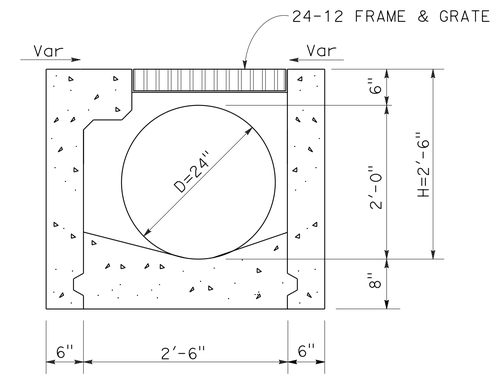

SECTION B-B

NOTES:

1. FOR INFORMATION AND DETAILS NOT SHOWN SEE Std PLANS D73, RSP D77A, D98A AND D98B.
2. LENGTH OF CSP IS INCLUDED IN THE LENGTH OF SCSP INVOLVED SHOWN ON THE SUMMARY OF DRAINAGE QUANTITIES.

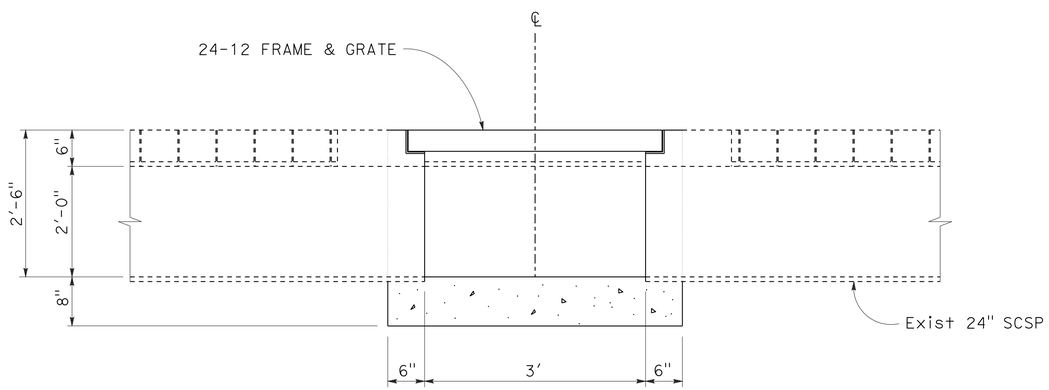

INTERMEDIATE CLEANOUT
CASE 1
SECTION A-A

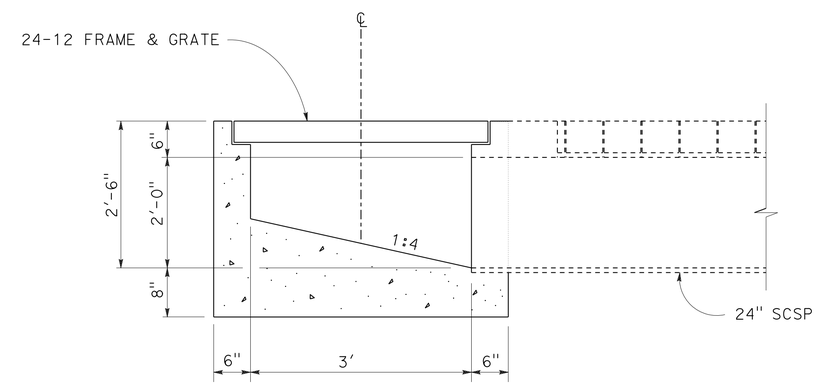

BEGINNING CLEANOUT
CASE 2
SECTION A-A

CL INLET

DRAINAGE DETAILS

NO SCALE

DD-10

STATE OF CALIFORNIA - DEPARTMENT OF TRANSPORTATION
Caltrans® HYDRAULICS

FUNCTIONAL SUPERVISOR: DAVE BHALLA
CALCULATED-DESIGNED BY: S. THAI
CHECKED BY: D. BHALLA
REVISED BY
DATE REVISED

LAST REVISION 06-09-12
DATE PLOTTED => 12-JUN-2013
TIME PLOTTED => 16:30

Dist	COUNTY	ROUTE	POST MILES TOTAL PROJECT	SHEET No.	TOTAL SHEETS
07	LA	10	33.2/37.2	213	1475

REGISTERED CIVIL ENGINEER 4-17-12 DATE

6-10-13
PLANS APPROVAL DATE

REGISTERED PROFESSIONAL ENGINEER DAVE BHALLA No. 34350 Exp. 9/30/13 CIVIL STATE OF CALIFORNIA

THE STATE OF CALIFORNIA OR ITS OFFICERS OR AGENTS SHALL NOT BE RESPONSIBLE FOR THE ACCURACY OR COMPLETENESS OF SCANNED COPIES OF THIS PLAN SHEET.

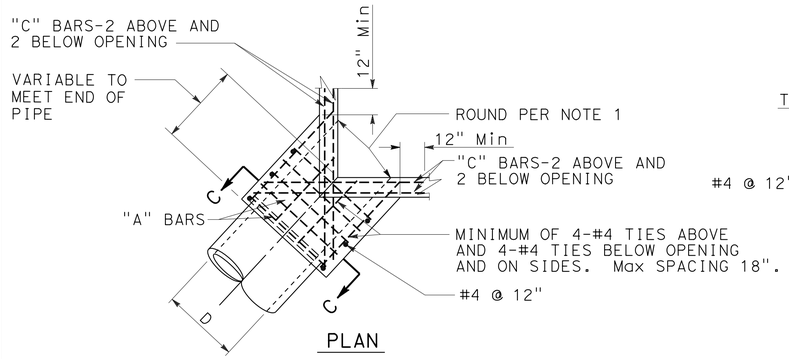

PLAN
CORNER CONNECTION

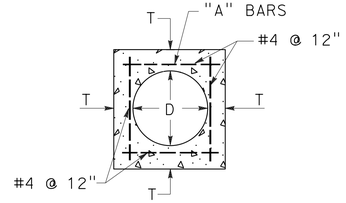

SECTION C-C

D	T	"A"	"B"-"C"
12"	4-½"	#4 @ 6"	#5
15"	4-½"		
18"	5"		
21"	5-½"		
24"	6"		
27"	6-½"		
30"	7"		
33"	7"		
36"	7-½"		
39"	8"		
42"	8"		
45"	8"	#5 @ 6"	#6
48"	8"		
51"	8"		
54"	8"		
57"	10"		
60"	10"		

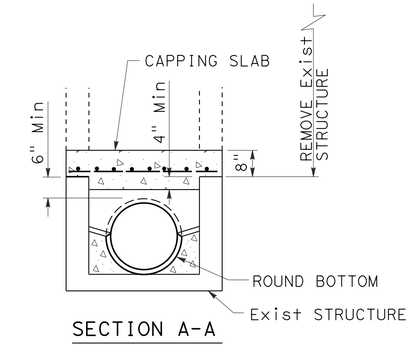

SECTION A-A

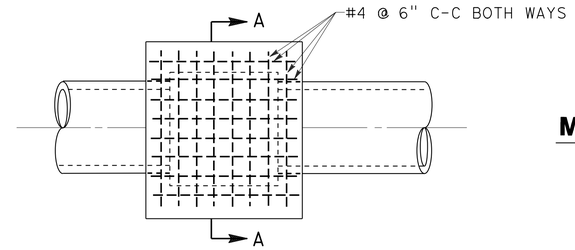

PLAN
CAP INLET DETAIL

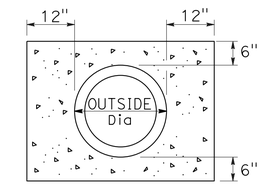

MINOR Conc (BACKFILL)
NO SCALE

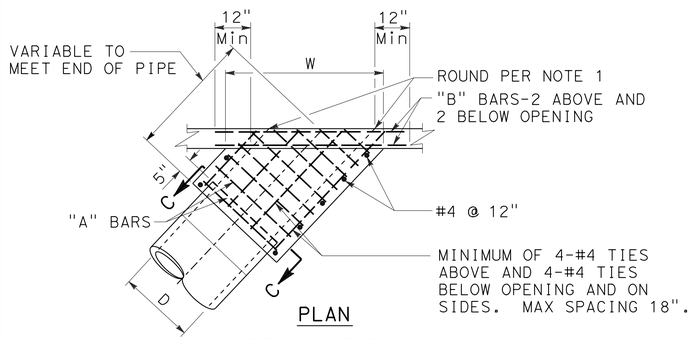

PLAN
SIDE CONNECTION

NOTES:

1. ROUND EDGE OF OUTLET TO 3" RADIUS.
2. REINFORCEMENT SHALL BE 1½" CLEAR FROM THE FACE OF CONCRETE.
3. IN CONNECTING TO AN EXISTING STRUCTURE BREAK OUT PORTIONS OF THE EXISTING STRUCTURE SIX INCHES OUTSIDE ITS INTERSECTION WITH THE NEW CONNECTION. BEND ENDS OF #4 BARS OVER CONNECTION OPENING AS REQUIRED.

MONOLITHIC CONNECTION
FOR PIPES 12" TO 72" INCLUSIVE

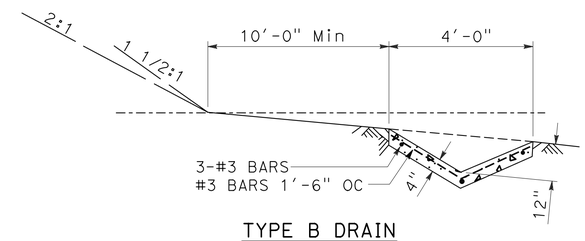

TYPE B DRAIN

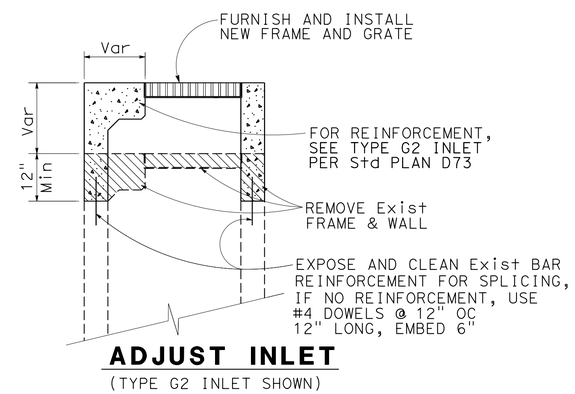

ADJUST INLET
(TYPE G2 INLET SHOWN)

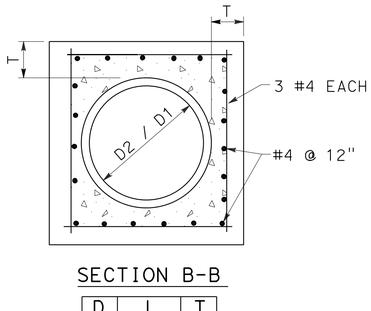

SECTION B-B

D	L	T
12"	1.0'	4"
18"	1.0'	5"
24"	1.0'	6"
36"	1.5'	8"
48"	1.5'	10"
54"	1.5'	10"
60"	1.75'	11"
66"	1.75'	11"
72"	2.0'	12"

NOTES:

1. WHERE PIPES OF DIFFERENT DIAMETERS ARE JOINED WITH A CONCRETE COLLAR, 'L' AND 'T' SHALL BE THOSE OF THE LARGER PIPE. D=D1 OR D2, WHICHEVER IS GREATER.
2. FOR PIPE SIZE NOT LISTED USE NEXT SIZE LARGER.
3. OMIT REINFORCING ON PIPES 24" AND LESS IN DIAMETER AND ON ALL PIPES WHERE ANGLE A IS LESS THAN 10°.
4. JOIN PIPES AT INVERTS.
5. REINFORCEMENT SHALL BE PLACED 1 ½" CLEAR FROM OUTSIDE DIAMETER OF PIPE.

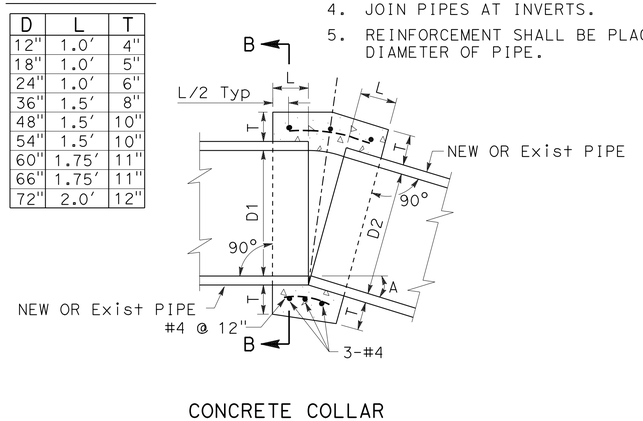

CONCRETE COLLAR

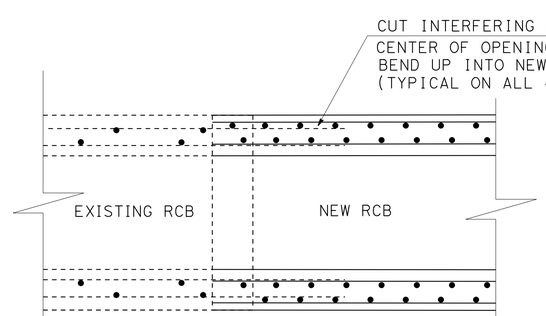

RCB TO EXISTING RCB JUNCTION
NO SCALE

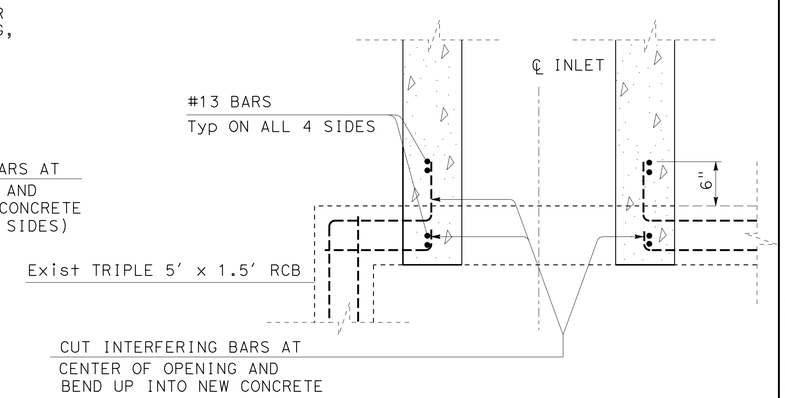

INLET INTO RCB DETAILS
NO SCALE

DRAINAGE DETAILS
NO SCALE

DD-11

REVISED BY | DATE REVISED
S. THAI | D. BHALLA
CALCULATED-DESIGNED BY | CHECKED BY
FUNCTIONAL SUPERVISOR: DAVE BHALLA

STATE OF CALIFORNIA - DEPARTMENT OF TRANSPORTATION
Caltrans
HYDRAULICS

LAST REVISION 06-09-12 | DATE PLOTTED => 12-JUN-2013 | TIME PLOTTED => 16:30

Dist	COUNTY	ROUTE	POST MILES TOTAL PROJECT	SHEET No.	TOTAL SHEETS
07	LA	10	33.2/37.2	214	1475

REGISTERED CIVIL ENGINEER 4-17-12 DATE

6-10-13
PLANS APPROVAL DATE

REGISTERED PROFESSIONAL ENGINEER DAVE BHALLA No. 34350 Exp. 9/30/13 CIVIL STATE OF CALIFORNIA

THE STATE OF CALIFORNIA OR ITS OFFICERS OR AGENTS SHALL NOT BE RESPONSIBLE FOR THE ACCURACY OR COMPLETENESS OF SCANNED COPIES OF THIS PLAN SHEET.

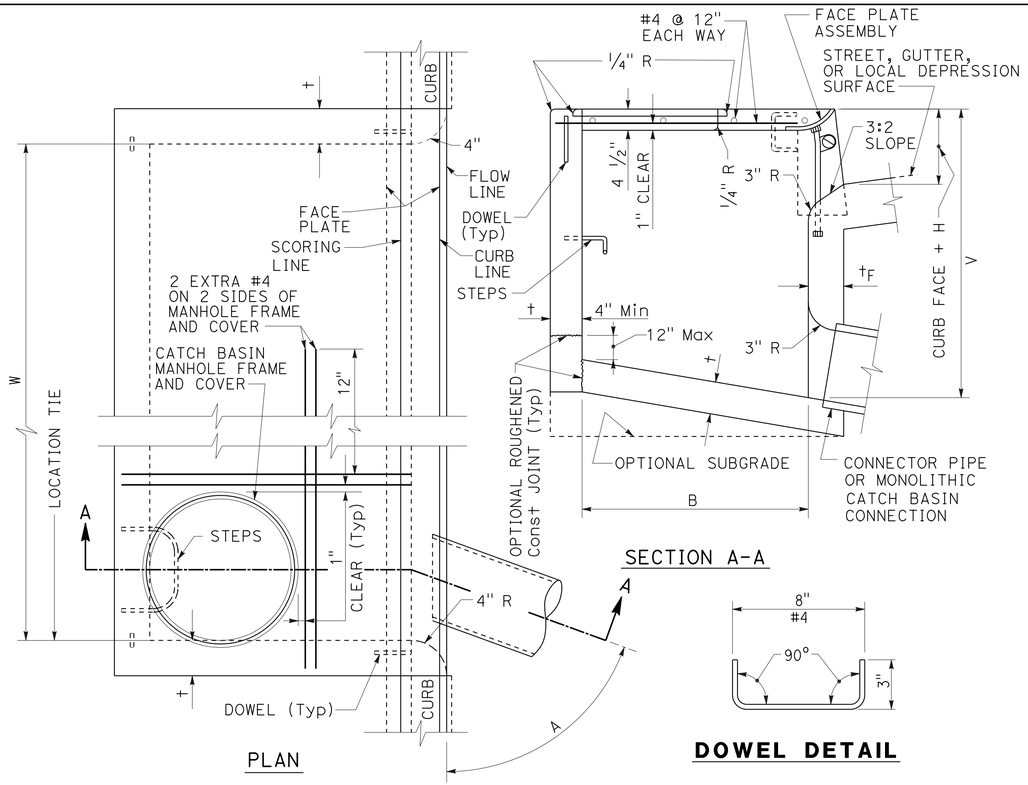

STRUCTURAL DATA

WALL AND SLAB DIMENSIONS AND REINFORCEMENT REQUIREMENTS

Max W	Max V	t	t_F	REINFORCEMENT REQUIRED IN: FRONT WALL	REAR WALL	BOTTOM SLAB	END WALL
3.5′	8′	6"	6"	NO	REINFORCEMENT		REQUIRED
3.5′	12′	8"	8"				
7′	6′	6"	6"				
7′	12′	8"	8"				
14′	4′	6"	6"	REINFORCEMENT			
↕	8′	6"	8"				
14′	12′	8"	10"				
21′ AND 28′	4′	6"	6"			REQUIRED	
	6′	6"	8"				
	8′	8"	8"				
	10′	8"	10"				
	12′	8"	10"				

FOR W > 28′, V > 12′ OR B > 4′ SEE PLANS

AMERICAN PUBLIC WORKS ASSOCIATION-SOUTHERN CALIFORNIA CHAPTER

PROMULGATED BY THE APWA-AGC JOINT COOPERATIVE COMMITTEE 1984 REV.1996

CURB OPENING CATCH BASIN

USE WITH STANDARD SPECIFICATIONS FOR PUBLIC WORKS CONSTRUCTION

STANDARD PLAN **300-2** SHEET 1 OF 2

NOTES:

1. WHERE THE BASIN IS TO BE CONSTRUCTED WITHIN THE LIMITS OF EXISTING OR PROPOSED SIDEWALK OR IS CONTIGUOUS TO SUCH SIDEWALK, THE TOP SLAB OF THE BASIN MAY BE POURED EITHER MONOLITHIC WITH THE SIDEWALK OR SEPARATELY, USING THE SAME CLASS OF CONCRETE AS IN THE BASIN. WHEN POURED MONOLITHICALLY, THE SIDEWALK SHALL BE PROVIDED WITH A WEAKENED PLANE OR A 1" DEEP SAWCUT CONTINUOUSLY AROUND THE EXTERNAL PERIMETER OF THE CATCH BASIN WALLS, INCLUDING ACROSS THE FULL WIDTH OF THE SIDEWALK. SURFACE OF ALL EXPOSED CONCRETE SHALL CONFORM IN SLOPE, GRADE, COLOR, FINISH, AND SCORING TO EXISTING OR PROPOSED CURB AND WALK ADJACENT TO THE BASIN.
2. ALL CURVED CONCRETE SURFACES SHALL BE FORMED BY CURVED FORMS, AND SHALL NOT BE SHAPED BY PLASTERING.
3. FLOOR OF BASIN SHALL BE GIVEN A STEEL TROWEL FINISH AND SHALL HAVE A LONGITUDINAL AND LATERAL SLOPE OF 1:12 MINIMUM AND 1:3 MAXIMUM, EXCEPT WHERE THE GUTTER GRADE EXCEEDS 8%, IN WHICH CASE THE LONGITUDINAL SLOPE OF THE FLOOR SHALL BE THE SAME AS THE GUTTER GRADE. SLOPE FLOOR FROM ALL DIRECTIONS TO THE OUTLET.
4. DIMENSIONS:
   - B = 3′-2"
   - V = THE DIFFERENCE IN ELEVATION BETWEEN THE TOP OF THE CURB AND THE INVERT OF THE CATCH BASIN AT THE OUTLET = 4.5′.
   - V_U = THE DIFFERENCE IN ELEVATION BETWEEN THE TOP OF THE CURB AND THE INVERT AT THE UPSTREAM END OF THE BASIN, AND SHALL BE DETERMINED BY THE REQUIREMENTS OF NOTE 3, BUT SHALL NOT BE LESS THAN CURB FACE PLUS 12".
   - V_I = THE DIFFERENCE IN ELEVATION BETWEEN THE TOP OF THE CURB AND THE INVERT OF THE INLET, NOTED ON THE PLANS.
   - H = NOTED ON THE PLANS.
   - W = NOTED ON THE PLANS.
   - A = THE ANGLE, IN DEGREES, INTERCEPTED BY THE CENTERLINE OF THE CONNECTOR PIPE AND THE CATCH BASIN WALL TO WHICH THE CONNECTOR PIPE IS ATTACHED.
5. PLACE CONNECTOR PIPES AS INDICATED ON THE PLANS. UNLESS OTHERWISE SPECIFIED, THE CONNECTOR PIPE SHALL BE LOCATED AT THE DOWNSTREAM END OF THE BASIN. WHERE THE CONNECTOR PIPE IS SHOWN AT A CORNER, THE CENTERLINE OF THE PIPE SHALL INTERSECT THE INSIDE CORNER OF THE BASIN. THE PIPE MAY BE CUT AND TRIMMED AT A SKEW NECESSARY TO INSURE MINIMUM 3" PIPE EMBEDMENT, ALL AROUND, WITHIN THE CATCH BASIN WALL, AND 3" RADIUS OF ROUNDING OF STRUCTURE CONCRETE, ALL AROUND, ADJACENT TO PIPE ENDS. A MONOLITHIC CATCH BASIN CONNECTION SHALL BE USED TO JOIN THE CONNECTOR PIPE TO THE CATCH BASIN WHENEVER ANGLE "A" IS LESS THAN 70° OR GREATER THAN 110°, OR WHENEVER THE CONNECTOR PIPE IS LOCATED IN A CORNER. THE OPTIONAL USE OF A MONOLITHIC CATCH BASIN CONNECTION IN ANY CASE IS PERMITTED. MONOLITHIC CATCH BASIN CONNECTIONS MAY BE CONSTRUCTED TO AVOID CUTTING STANDARD LENGTHS OF PIPE.
6. STEPS SHALL BE LOCATED AS SHOWN. IF THE CONNECTOR PIPE INTERFERES WITH THE STEPS, THEY SHALL BE LOCATED AT THE CENTERLINE OF THE DOWNSTREAM END WALL. STEPS SHALL BE SPACED 12" APART. THE TOP STEP SHALL BE 7" BELOW THE TOP OF THE MANHOLE AND PROJECT 2 1/2". ALL OTHER STEPS SHALL PROJECT 5".
7. DOWELS ARE REQUIRED AT EACH CORNER AND AT 7′ ON CENTER (MAXIMUM) ALONG THE BACKWALL.
8. THE FOLLOWING DETAILS ARE INCORPORATED HEREIN:
   - 308 MONOLITHIC CATCH BASIN CONNECTION
   - 309 CATCH BASIN REINFORCEMENT
   - 310 CATCH BASIN FACE PLATE ASSEMBLY AND PROTECTION BAR
   - 312 CATCH BASIN MANHOLE FRAME AND COVER
   - 635 STEEL STEP
   - 636 POLYPROPYLENE PLASTIC STEP

AMERICAN PUBLIC WORKS ASSOCIATION-SOUTHERN CALIFORNIA CHAPTER

CURB OPENING CATCH BASIN

STANDARD PLAN **300-2** SHEET 2 OF 2

DRAINAGE DETAILS

NO SCALE

DD-12

STATE OF CALIFORNIA - DEPARTMENT OF TRANSPORTATION
Caltrans HYDRAULICS

FUNCTIONAL SUPERVISOR: DAVE BHALLA
CALCULATED-DESIGNED BY: S. THAI
CHECKED BY: D. BHALLA
REVISED BY
DATE REVISED

LAST REVISION 06-09-12 | DATE PLOTTED => 12-JUN-2013 | TIME PLOTTED => 16:30

Dist	COUNTY	ROUTE	POST MILES TOTAL PROJECT	SHEET No.	TOTAL SHEETS
07	LA	10	33.2/37.2	215	1475

REGISTERED CIVIL ENGINEER 4-17-12 DATE

6-10-13
PLANS APPROVAL DATE

REGISTERED PROFESSIONAL ENGINEER DAVE BHALLA No. 34350 Exp. 9/30/13 CIVIL STATE OF CALIFORNIA

THE STATE OF CALIFORNIA OR ITS OFFICERS OR AGENTS SHALL NOT BE RESPONSIBLE FOR THE ACCURACY OR COMPLETENESS OF SCANNED COPIES OF THIS PLAN SHEET.

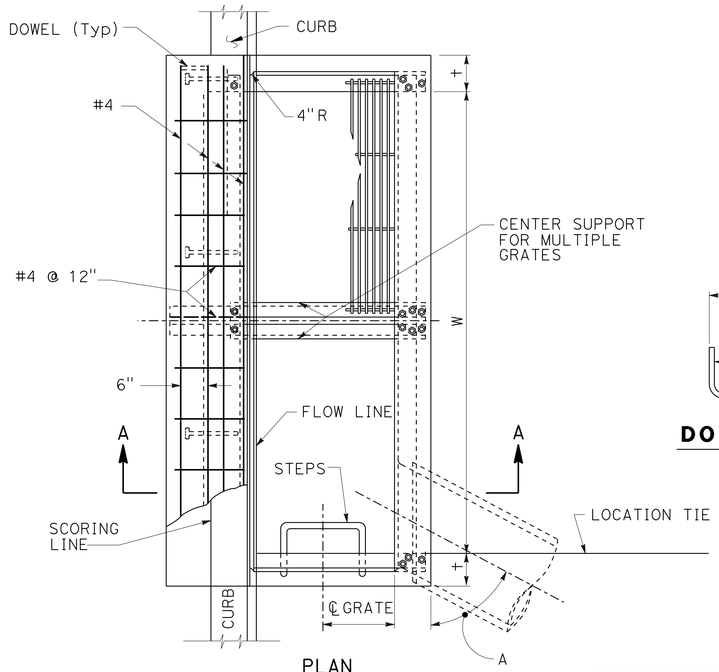

PLAN

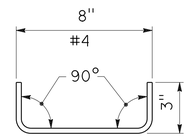

DOWEL DETAIL

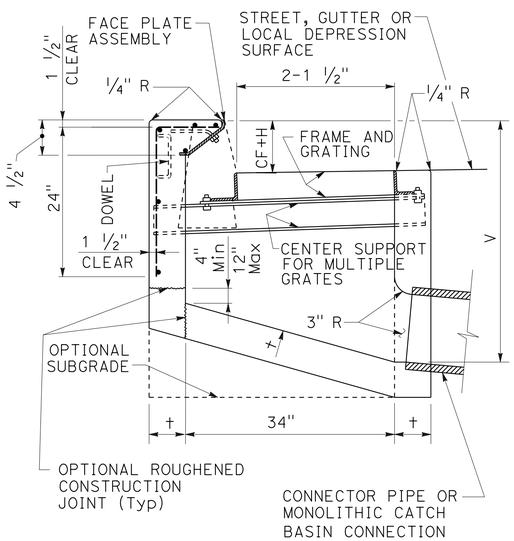

SECTION A-A

STRUCTURAL DATA

WALL AND SLAB DIMENSIONS AND REINFORCEMENT REQUIREMENTS

No. OF GRATES	MAXIMUM V	†	REINFORCEMENT FOR WALLS AND SLABS
1-2	4′	6"	NOT REQUIRED
1-2	8′	8"	
1-2	10′	10"	
1-2	12′	10"	REQUIRED
3-4	4′	6"	NOT REQUIRED
3-4	7′	8"	
3-4	8′	8"	REQUIRED
3-4	12′	10"	
5-6	4′	6"	NOT REQUIRED
5-6	6′	8"	
5-6	8′	8"	REQUIRED
5-6	12′	10"	
> 6	4′	6"	
> 6	8′	8"	
> 6	12′	10"	

NOTES:

1. WHERE THE BASIN IS TO BE CONSTRUCTED WITHIN THE LIMITS OF EXISTING OR PROPOSED SIDEWALK OR IS CONTIGUOUS TO SUCH SIDEWALK, THE TOP SLAB OF THE BASIN MAY BE POURED EITHER MONOLITHIC WITH THE SIDEWALK OR SEPARATELY, USING THE SAME CLASS OF CONCRETE AS IN THE BASIN. WHEN POURED MONOLITHICALLY, THE SIDEWALK SHALL BE PROVIDED WITH A WEAKENED PLANE OR A 1" DEEP SAWCUT CONTINUOUSLY AROUND THE EXTERNAL PERIMETER OF THE CATCH BASIN WALLS, INCLUDING ACROSS THE FULL WIDTH OF THE SIDEWALK. SURFACE OF ALL EXPOSED CONCRETE SHALL CONFORM IN SLOPE, GRADE, COLOR, FINISH, AND SCORING TO EXISTING OR PROPOSED CURB AND WALK ADJACENT TO THE BASIN.
2. ALL CURVED CONCRETE SURFACES SHALL BE FORMED BY CURVED FORMS, AND SHALL NOT BE SHAPED BY PLASTERING.
3. ONE GRATING IS REQUIRED UNLESS OTHERWISE SHOWN ON THE PROJECT PLAN.
4. FLOOR OF BASIN SHALL BE GIVEN A STEEL TROWEL FINISH AND SHALL HAVE A LONGITUDINAL AND LATERAL SLOPE OF 1:12 MINIMUM AND 1:3 MAXIMUM, EXCEPT WHERE THE GUTTER GRADE EXCEEDS 8%, IN WHICH CASE THE LONGITUDINAL SLOPE OF THE FLOOR SHALL BE THE SAME AS THE GUTTER GRADE. SLOPE FLOOR FROM ALL DIRECTIONS TO THE OUTLET.
5. DIMENSIONS:
   - V = THE DIFFERENCE IN ELEVATION BETWEEN THE TOP OF THE CURB AND THE INVERT OF THE CATCH BASIN AT THE OUTLET = 4.5′.
   - V_U = THE DIFFERENCE IN ELEVATION BETWEEN THE TOP OF THE CURB AND THE INVERT AT THE UPSTREAM END OF THE BASIN, AND SHALL BE DETERMINED BY THE REQUIREMENTS OF NOTE 4, BUT SHALL NOT BE LESS THAN CURB FACE PLUS 12".
   - V_1 = THE DIFFERENCE IN ELEVATION BETWEEN THE TOP OF THE CURB AND THE INVERT OF THE INLET, NOTED ON THE PLANS.
   - H = NOTED ON THE PROJECT PLANS.
   - W = 2′-11⅜" FOR ONE GRATING; ADD 3′-5 ⅜" FOR EACH ADDITIONAL GRATING.
   - A = THE ANGLE, IN DEGREES, INTERCEPTED BY THE CENTERLINE OF THE CONNECTOR PIPE AND THE CATCH BASIN WALL TO WHICH THE CONNECTOR PIPE IS ATTACHED.
6. PLACE CONNECTOR PIPES AS INDICATED ON THE PLANS. UNLESS OTHERWISE SPECIFIED, THE CONNECTOR PIPE SHALL BE LOCATED AT THE DOWNSTREAM END OF THE BASIN. WHERE THE CONNECTOR PIPE IS SHOWN AT A CORNER, THE CENTERLINE OF THE PIPE SHALL INTERSECT THE INSIDE CORNER OF THE BASIN. THE PIPE MAY BE CUT AND TRIMMED AT A SKEW NECESSARY TO INSURE MINIMUM 3" PIPE EMBEDMENT, ALL AROUND, WITHIN THE CATCH BASIN WALL, AND 3" RADIUS OF ROUNDING OF STRUCTURE CONCRETE, ALL AROUND, ADJACENT TO PIPE ENDS, A MONOLITHIC CATCH BASIN CONNECTION SHALL BE USED TO JOIN THE CONNECTOR PIPE TO THE CATCH BASIN WHENEVER ANGLE"A" IS LESS THAN 70° OR GREATER THAN 110°, OR WHENEVER THE CONNECTOR PIPE IS LOCATED IN A CORNER. THE OPTIONAL USE OF A MONOLITHIC CATCH BASIN CONNECTION IN ANY CASE IS PERMITTED. MONOLITHIC CATCH BASIN CONNECTIONS MAY BE CONSTRUCTED TO AVOID CUTTING STANDARD LENGTHS OF PIPE.
7. STEPS SHALL BE LOCATED AS SHOWN. IF THE CONNECTOR PIPE INTERFERES WITH THE STEPS, THEY SHALL BE LOCATED ON THE FRONT WALL AT THE CENTERLINE OF THE DOWNSTREAM GRATING. STEPS SHALL BE SPACED 12" APART. THE TOP STEP SHALL BE 7" BELOW THE TOP OF THE GRATING AND PROJECT 2 ½". ALL OTHER STEPS SHALL PROJECT 5".
8. DOWELS ARE REQUIRED AT EACH CORNER AND AT 7′ ON CENTER (MAXIMUM) ALONG THE BACKWALL.
9. THE FOLLOWING DETAILS ARE INCORPORATED HEREIN:
   - 308 MONOLITHIC CATCH BASIN CONNECTION
   - 309 CATCH BASIN REINFORCEMENT
   - 310 CATCH BASIN FACE PLATE ASSEMBLY AND PROTECTION BAR
   - 311 FRAME AND GRATING FOR CATCH BASINS
   - 635 STEEL STEP
   - 636 POLYPROPYLENE PLASTIC STEP

AMERICAN PUBLIC WORKS ASSOCIATION-SOUTHERN CALIFORNIA CHAPTER

PROMULGATED BY THE APWA-AGC JOINT COOPERATIVE COMMITTEE 1984 REV.1996

CURB OPENING CATCH BASIN WITH GRATING(S)

USE WITH STANDARD SPECIFICATIONS FOR PUBLIC WORKS CONSTRUCTION

STANDARD PLAN **302-2** SHEET 1 OF 2

AMERICAN PUBLIC WORKS ASSOCIATION-SOUTHERN CALIFORNIA CHAPTER

CURB OPENING CATCH BASIN WITH GRATING(S)

STANDARD PLAN **302-2** SHEET 2 OF 2

DRAINAGE DETAILS

NO SCALE

DD-13

STATE OF CALIFORNIA - DEPARTMENT OF TRANSPORTATION
Caltrans HYDRAULICS

FUNCTIONAL SUPERVISOR: DAVE BHALLA
CALCULATED-DESIGNED BY: S. THAI
CHECKED BY: D. BHALLA
REVISED BY
DATE REVISED

LAST REVISION 06-09-12 | DATE PLOTTED => 12-JUN-2013 | TIME PLOTTED => 16:30

Dist	COUNTY	ROUTE	POST MILES TOTAL PROJECT	SHEET No.	TOTAL SHEETS
07	LA	10	33.2/37.2	216	1475

REGISTERED CIVIL ENGINEER 4-17-12 DATE

6-10-13
PLANS APPROVAL DATE

REGISTERED PROFESSIONAL ENGINEER DAVE BHALLA No. 34350 Exp. 9/30/13 CIVIL STATE OF CALIFORNIA

THE STATE OF CALIFORNIA OR ITS OFFICERS OR AGENTS SHALL NOT BE RESPONSIBLE FOR THE ACCURACY OR COMPLETENESS OF SCANNED COPIES OF THIS PLAN SHEET.

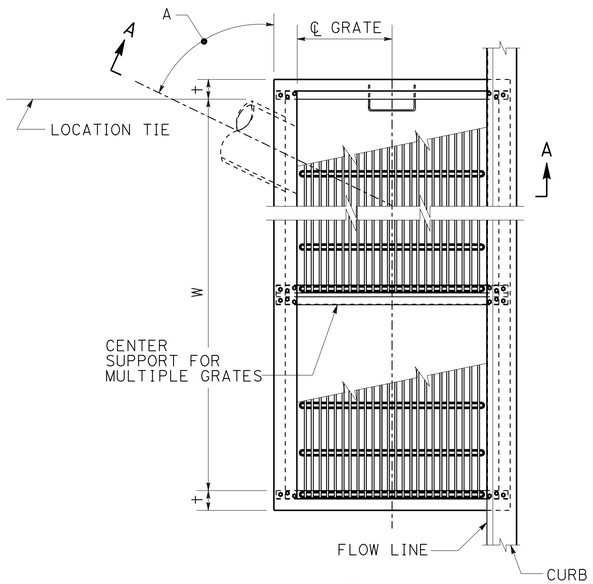

PLAN

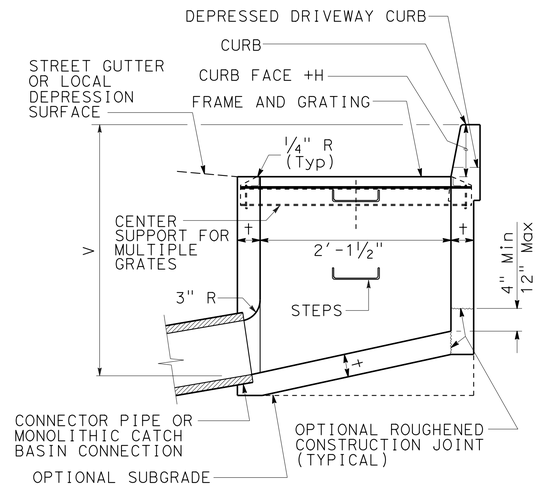

SECTION A-A

STRUCTURAL DATA

WALL AND SLAB DIMENSIONS AND REINFORCEMENT REQUIREMENTS

No. OF GRATES	MAXIMUM V	t	REINFORCEMENT FOR WALLS AND SLABS
1-2	4′	6"	NOT REQUIRED
1-2	8′	8"	
1-2	10′	10"	
1-2	12′	10"	REQUIRED
3-4	4′	6"	NOT REQUIRED
3-4	7′	8"	
3-4	8′	8"	REQUIRED
3-4	12′	10"	
5-6	4′	6"	NOT REQUIRED
5-6	6′	8"	
5-6	8′	8"	REQUIRED
5-6	12′	8"	
> 6	4′	6"	
> 6	8′	8"	
> 6	12′	10"	

AMERICAN PUBLIC WORKS ASSOCIATION-SOUTHERN CALIFORNIA CHAPTER

PROMULGATED BY THE APWA-AGC JOINT COOPERATIVE COMMITTEE 1984 REV.1996

CURBSIDE GRATING CATCH BASIN

USE WITH STANDARD SPECIFICATIONS FOR PUBLIC WORKS CONSTRUCTION

STANDARD PLAN **303-2** SHEET 1 OF 2

NOTES:

1. SURFACE OF ALL EXPOSED CONCRETE SHALL CONFORM IN SLOPE GRADE, COLOR, FINISH, AND SCORING TO THE EXISTING OR PROPOSED CURB ADJACENT TO THE BASIN.
2. ALL CURVED CONCRETE SURFACES SHALL BE FORMED BY CURVED FORMS, AND SHALL NOT BE SHAPED BY PLASTERING.
3. FLOOR OF BASIN SHALL BE GIVEN A STEEL TROWEL FINISH AND SHALL HAVE A LONGITUDINAL AND LATERAL SLOPE OF 1:12 MINIMUM AND 1:3 MAXIMUM, EXCEPT WHERE THE GUTTER GRADE EXCEEDS 8%, IN WHICH CASE THE LONGITUDINAL SLOPE OF THE FLOOR SHALL BE THE SAME AS THE GUTTER GRADE. SLOPE FLOOR FROM ALL DIRECTIONS TO THE OUTLET.
4. DIMENSIONS:
   - V = THE DIFFERENCE IN ELEVATION BETWEEN THE TOP OF THE CURB AND THE INVERT OF THE CATCH BASIN AT THE OUTLET = 4.5′.
   - V_1 = THE DIFFERENCE IN ELEVATION BETWEEN THE TOP OF THE CURB AND THE INVERT AT THE INLET, NOTED ON THE PROJECT PLANS.
   - V_U = THE DIFFERENCE IN ELEVATION BETWEEN THE TOP OF THE CURB AND THE INVERT AT THE UPSTREAM END OF THE BASIN, AND SHALL BE DETERMINED BY THE REQUIREMENTS OF NOTE 4, BUT SHALL NOT BE LESS THAN CURB FACE PLUS 12".
   - H = NOTED ON THE PROJECT PLANS.
   - W = 7′ UNLESS OTHERWISE NOTED ON THE PROJECT PLANS.
   - A = THE ANGLE, IN DEGREES, INTERCEPTED BY THE CENTERLINE OF THE CONNECTOR PIPE AND THE CATCH BASIN WALL TO WHICH THE CONNECTOR PIPE IS ATTACHED.
5. PLACE CONNECTOR PIPES AS INDICATED ON THE PROJECT PLANS. UNLESS OTHERWISE SPECIFIED, THE CONNECTOR PIPE SHALL BE LOCATED AT THE DOWNSTREAM END OF THE BASIN. WHERE THE CONNECTOR PIPE IS SHOWN AT A CORNER, THE CENTERLINE OF THE PIPE SHALL INTERSECT THE INSIDE CORNER OF THE BASIN. THE PIPE MAY BE CUT AND TRIMMED AT A SKEW NECESSARY TO INSURE MINIMUM 3" PIPE EMBEDMENT, ALL AROUND, WITHIN THE CATCH BASIN WALL, AND 3" RADIUS OF ROUNDING OF STRUCTURE CONCRETE ALL AROUND, ADJACENT TO PIPE ENDS. A MONOLITHIC CATCH BASIN CONNECTION SHALL BE USED TO JOIN THE CONNECTOR PIPE TO THE CATCH BASIN WHENEVER ANGLE "A" IS LESS THAN 70 DEGREES OR GREATER THAN 110 DEGREES, OR WHENEVER THE CONNECTOR PIPE IS LOCATED IN A CORNER. THE OPTIONAL USE OF A MONOLITHIC CATCH BASIN CONNECTION IN ANY CASE IS PERMITTED. MONOLITHIC CATCH BASIN CONNECTIONS MAY BE CONSTRUCTED TO AVOID CUTTING STANDARD LENGTHS OF PIPE.
6. STEPS SHALL BE LOCATED AS SHOWN. IF THE CONNECTOR PIPE INTERFERES WITH THE STEPS, THEY SHALL BE LOCATED ON THE FRONT WALL AT THE CENTERLINE OF THE DOWNSTREAM GRATING. STEPS SHALL BE SPACED 12" APART. THE TOP STEP SHALL BE 7" BELOW THE TOP TO THE GRATING AND PROJECT 2-1/2". ALL OTHER STEPS SHALL PROJECT 5".
7. DOWELS ARE REQUIRED AT EACH CORNER AND AT 7′ ON CENTER (MAXIMUM) ALONG THE BACKWALL.
8. THE FOLLOWING STANDARD PLANS ARE INCORPORATED HEREIN:
   - 308 MONOLITHIC CATCH BASIN CONNECTION
   - 309 CATCH BASIN REINFORCEMENT
   - 310 CATCH BASIN FACE PLATE ASSEMBLY AND PROTECTION BAR
   - 311 FRAME AND GRATING FOR CATCH BASINS
   - 635 STEEL STEP
   - 636 POLYPROPYLENE PLASTIC STEP
9. DIMENSIONS SHOWN ON THIS PLAN FOR METRIC AND ENGLISH UNITS ARE NOT EXACT EQUAL VALUES. IF METRIC VALUES ARE USED ALL VALUES USED FOR CONSTRUCTION SHALL BE METRIC VALUES EXCEPT REINFORCING BARS SIZES IN ENGLISH UNITS MAY BE SUBSTITUDED FOR METRIC BAR SIZES. IF ENGLISH UNITS ARE USED ALL VALUES USED FOR CONSTRUCTION SHALL BE ENGLISH UNITS.

AMERICAN PUBLIC WORKS ASSOCIATION-SOUTHERN CALIFORNIA CHAPTER

CURBSIDE GRATING CATCH BASIN

STANDARD PLAN **303-2** SHEET 2 OF 2

DRAINAGE DETAILS

NO SCALE

DD-14

STATE OF CALIFORNIA - DEPARTMENT OF TRANSPORTATION
Caltrans® HYDRAULICS
FUNCTIONAL SUPERVISOR: DAVE BHALLA
CALCULATED-DESIGNED BY: S. THAI
CHECKED BY: D. BHALLA
REVISED BY
DATE REVISED

LAST REVISION 06-09-12 | DATE PLOTTED => 12-JUN-2013 | TIME PLOTTED => 16:30

Dist	COUNTY	ROUTE	POST MILES TOTAL PROJECT	SHEET No.	TOTAL SHEETS
07	LA	10	33.2/37.2	217	1475

REGISTERED CIVIL ENGINEER 4-17-12 DATE

6-10-13
PLANS APPROVAL DATE

REGISTERED PROFESSIONAL ENGINEER DAVE BHALLA No. 34350 Exp. 9/30/13 CIVIL STATE OF CALIFORNIA

THE STATE OF CALIFORNIA OR ITS OFFICERS OR AGENTS SHALL NOT BE RESPONSIBLE FOR THE ACCURACY OR COMPLETENESS OF SCANNED COPIES OF THIS PLAN SHEET.

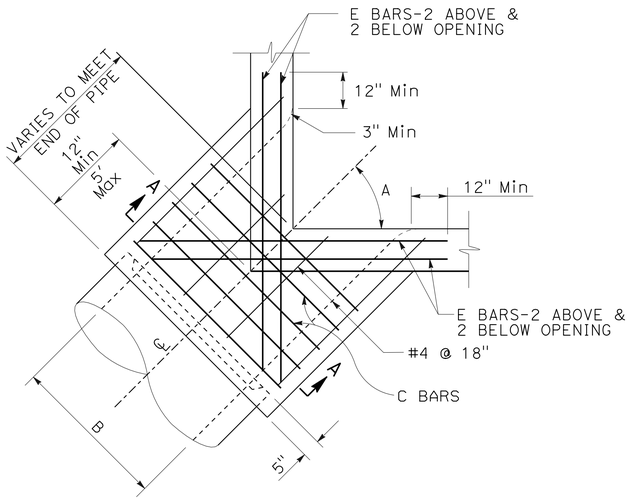

PLAN
CORNER CONNECTION

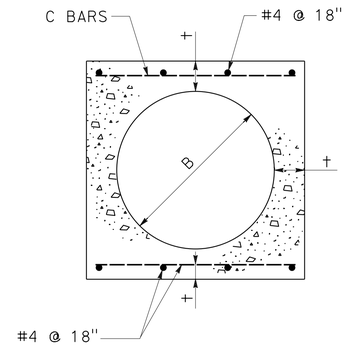

SECTION A-A

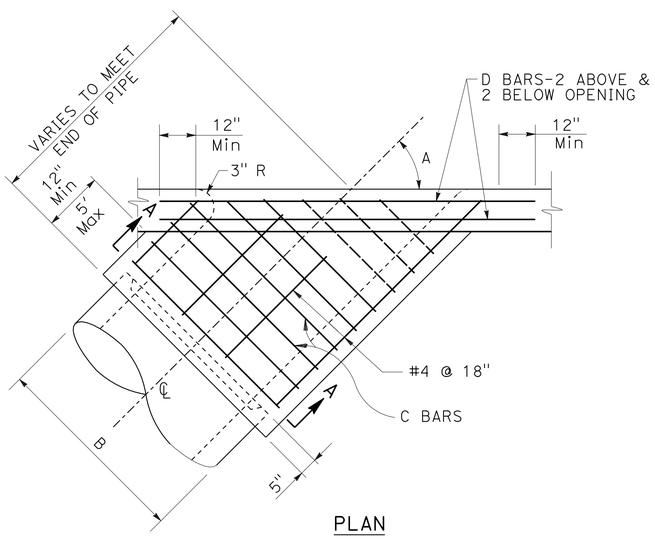

PLAN
SIDE CONNECTION

STRUCTURAL DATA

B	t	C BARS	D & E BARS	B	t	C BARS	D & E BARS
12"	4"	#4 @ 6"	#5	42"	7 ½"	#5 @ 6"	#6
15"	4 ¼"			45"	7 ¾"		
18"	4 ½"			48"	8"		
21"	5"			51"	8 ½"		
24"	5 ¼"			54"	9"		
27"	5 ½"			57"	9 ¼"		
30"	6"			60"	9 ½"		
33"	6 ¼"			63"	10"		
36"	6 ½"			66"	10 ¼"		
39"	7"			69"	10 ¾"		
				72"	11"		

FOR B GREATER THAN 72" SEE PLANS

NOTES:

1. REINFORCING STEEL SHALL BE 1 ½" CLEAR FROM FACE OF CONCRETE UNLESS OTHERWISE SHOWN.
2. REINFORCING STEEL FOR INSIDE FACE OF CATCH BASIN SHALL BE CUT AT CENTER OF OPENING AND BENT INTO WALLS OF MONOLITHIC CATCH BASIN CONNECTION. REINFORCING STEEL FOR OUTSIDE FACE OF CATCH BASIN SHALL BE CUT 2" CLEAR OF OPENING.
3. CONNECTION SHALL BE PLACED MONOLITHIC WITH CATCH BASIN. THE ROUNDED EDGE OF OUTLET SHALL BE CONSTRUCTED BY PLACING CONCRETE WITH THE SAME CLASS OF CONCRETE AS THE CATCH BASIN AGAINST A CURVED FORM WITH A RADIUS OF 3".
4. CONNECTIONS SHALL BE CONSTRUCTED WHEN:
   - (A) PIPES INLET OR OUTLET THROUGH CORNER OF CATCH BASIN
   - (B) ANGLE A FOR PIPES THROUGH 30" IN DIAMETER IS LESS THAN 70° OR GREATER THAN 110°.

AMERICAN PUBLIC WORKS ASSOCIATION-SOUTHERN CALIFORNIA CHAPTER

PROMULGATED BY THE APWA-AGC JOINT COOPERATIVE COMMITTEE 1984 REV.1996

MONOLITHIC CATCH BASIN CONNECTION

USE WITH STANDARD SPECIFICATIONS FOR PUBLIC WORKS CONSTRUCTION

STANDARD PLAN **308-1** SHEET 1 OF 2

AMERICAN PUBLIC WORKS ASSOCIATION - SOUTHERN CALIFORNIA CHAPTER

MONOLITHIC CATCH BASIN CONNECTION

STANDARD PLAN **308-1** SHEET 2 OF 2

DRAINAGE DETAILS
NO SCALE
DD-15

STATE OF CALIFORNIA - DEPARTMENT OF TRANSPORTATION
Caltrans HYDRAULICS
FUNCTIONAL SUPERVISOR: DAVE BHALLA
CALCULATED-DESIGNED BY: S. THAI
CHECKED BY: D. BHALLA
REVISED BY / DATE REVISED

LAST REVISION 06-09-12 DATE PLOTTED => 12-JUN-2013 TIME PLOTTED => 16:30

Dist	COUNTY	ROUTE	POST MILES TOTAL PROJECT	SHEET No.	TOTAL SHEETS
07	LA	10	33.2/37.2	218	1475

REGISTERED CIVIL ENGINEER 4-17-12 DATE

6-10-13
PLANS APPROVAL DATE

REGISTERED PROFESSIONAL ENGINEER DAVE BHALLA No. 34350 Exp. 9/30/13 CIVIL STATE OF CALIFORNIA

THE STATE OF CALIFORNIA OR ITS OFFICERS OR AGENTS SHALL NOT BE RESPONSIBLE FOR THE ACCURACY OR COMPLETENESS OF SCANNED COPIES OF THIS PLAN SHEET.

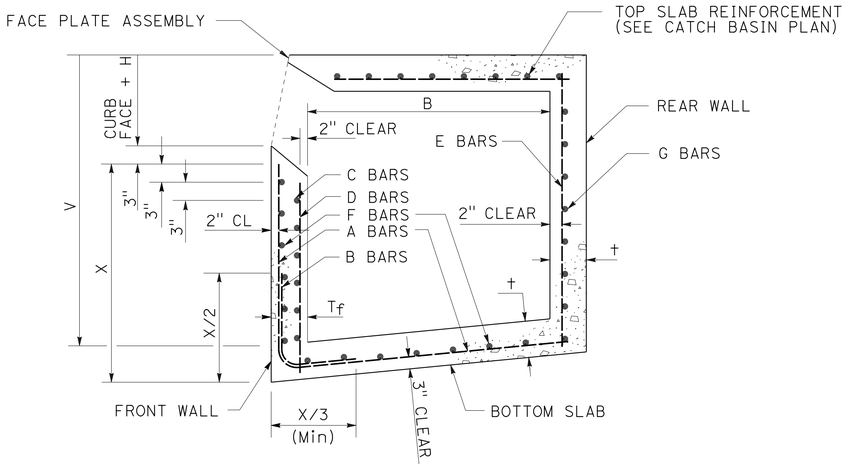

TYPICAL REINFORCEMENT DETAILS

MAX. W	MAX. V	†	†f	A & B BARS	C BARS	D BARS	E BARS	F BARS	G BARS
3.5′	8′	6"	6"	—	—	—	—	—	—
3.5′	12′	8"	8"	—	—	—	—	—	—
7′	6′	6"	6"	—	—	—	—	—	—
7′	12′	8"	8"	—	—	—	—	—	—
14′	4′	6"	6"	—	#4 @ 12"	#4 @ 18"	—	—	—
14′	8′	6"	8"	—	#4 @ 12"	#4 @ 18"	—	—	—
14′	12′	8"	10"	—	#4 @ 6"	#4 @ 18"	—	—	—
28′	4′	6"	6"	#4 @ 24"	—	—	—	#4 @ 18"	—
28′	5′	6"	8"	#4 @ 24"	—	—	—	#4 @ 18"	—
28′	6′	6"	8"	#4 @ 18"	—	—	—	#4 @ 18"	—
28′	7′	8"	8"	#4 @ 17"	—	—	—	#4 @ 18"	—
28′	8′	8"	8"	#4 @ 13"	—	—	—	#4 @ 18"	—
28′	9′	8"	10"	#4 @ 15"	—	—	—	#4 @ 18"	—
28′	10′	8"	10"	#4 @ 12"	—	—	—	#4 @ 18"	—
28′	11′	8"	10"	#5 @ 15"	—	—	#4 @ 10"	#4 @ 18"	#4 @ 18"
28′	12′	8"	10"	#4 @ 18"	—	—	#4 @ 10"	#4 @ 18"	#4 @ 18"
FOR W > 28 OR B > 4′ SEE PLANS									

AMERICAN PUBLIC WORKS ASSOCIATION-SOUTHERN CALIFORNIA CHAPTER

PROMULGATED BY THE APWA-AGC JOINT COOPERATIVE COMMITTEE 1984 REV.1996

CURB OPENING CATCH BASIN REINFORCEMENT

USE WITH STANDARD SPECIFICATIONS FOR PUBLIC WORKS CONSTRUCTION

STANDARD PLAN **309-1** SHEET 1 OF 2

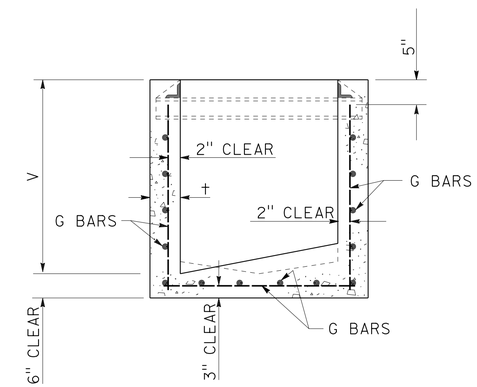

TYPICAL REINFORCEMENT DETAILS

V MAX	†	SIDE AND END WALL STEEL G BARS
4′	6"	#4 @ 10"
8′	8"	#4 @ 6"
12′	10"	#5 @ 6"
FOR V > 12′ SEE PLANS		

GRATING CATCH BASIN REINFORCEMENT

NOTE:

UNLESS OTHERWISE SPECIFIED, REINFORCEMENT FOR CURB OPENINGS AND GRATING CATCH BASINS SHALL TERMINATE 2" FROM FACE OF CONCRETE.

AMERICAN PUBLIC WORKS ASSOCIATION - SOUTHERN CALIFORNIA CHAPTER

CURB OPENING CATCH BASIN REINFORCEMENT

STANDARD PLAN **309-1** SHEET 2 OF 2

DRAINAGE DETAILS

NO SCALE

DD-16

STATE OF CALIFORNIA - DEPARTMENT OF TRANSPORTATION
Caltrans HYDRAULICS
FUNCTIONAL SUPERVISOR: DAVE BHALLA
CALCULATED-DESIGNED BY: S. THAI
CHECKED BY: D. BHALLA
REVISED BY
DATE REVISED

LAST REVISION 06-09-12 | DATE PLOTTED => 12-JUN-2013 | TIME PLOTTED => 16:30

Dist	COUNTY	ROUTE	POST MILES TOTAL PROJECT	SHEET No.	TOTAL SHEETS
07	LA	10	33.2/37.2	219	1475

REGISTERED CIVIL ENGINEER 4-17-12 DATE

6-10-13
PLANS APPROVAL DATE

REGISTERED PROFESSIONAL ENGINEER DAVE BHALLA No. 34350 Exp. 9/30/13 CIVIL STATE OF CALIFORNIA

THE STATE OF CALIFORNIA OR ITS OFFICERS OR AGENTS SHALL NOT BE RESPONSIBLE FOR THE ACCURACY OR COMPLETENESS OF SCANNED COPIES OF THIS PLAN SHEET.

SUPPORT BOLT AND FACE PLATE 4 1/2" TOP SLAB

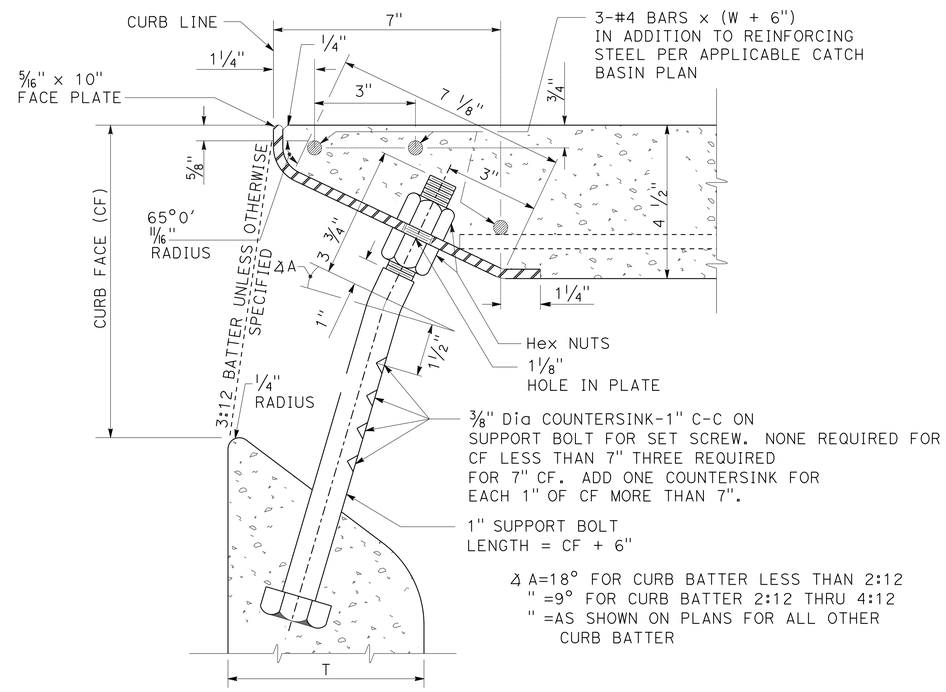

SECTION

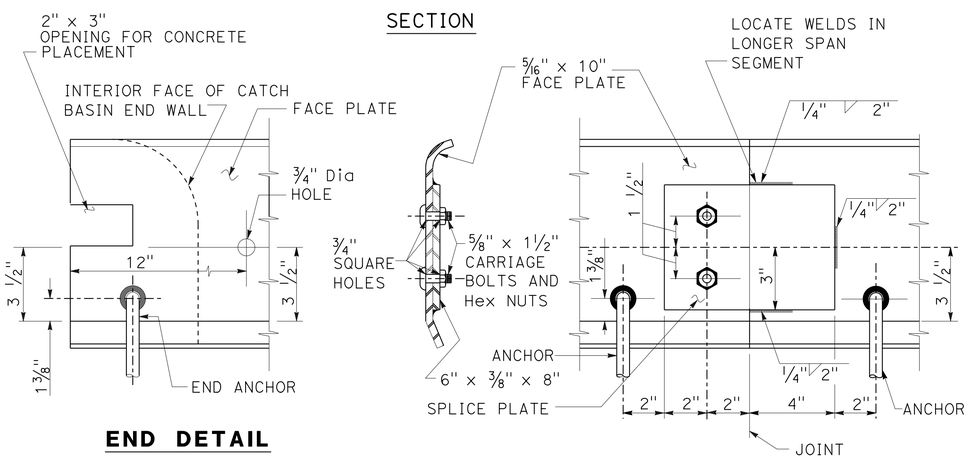

END DETAIL

SPLICE DETAIL

AMERICAN PUBLIC WORKS ASSOCIATION-SOUTHERN CALIFORNIA CHAPTER

PROMULGATED BY THE APWA-AGC JOINT COOPERATIVE COMMITTEE 1984 REV.1996

CATCH BASIN FACE PLATE ASSEMBLY AND PROTECTION BAR

USE WITH STANDARD SPECIFICATIONS FOR PUBLIC WORKS CONSTRUCTION

STANDARD PLAN **310-1**

SHEET 1 OF 6

SUPPORT BOLT AND FACE PLATE (6)" TOP SLAB

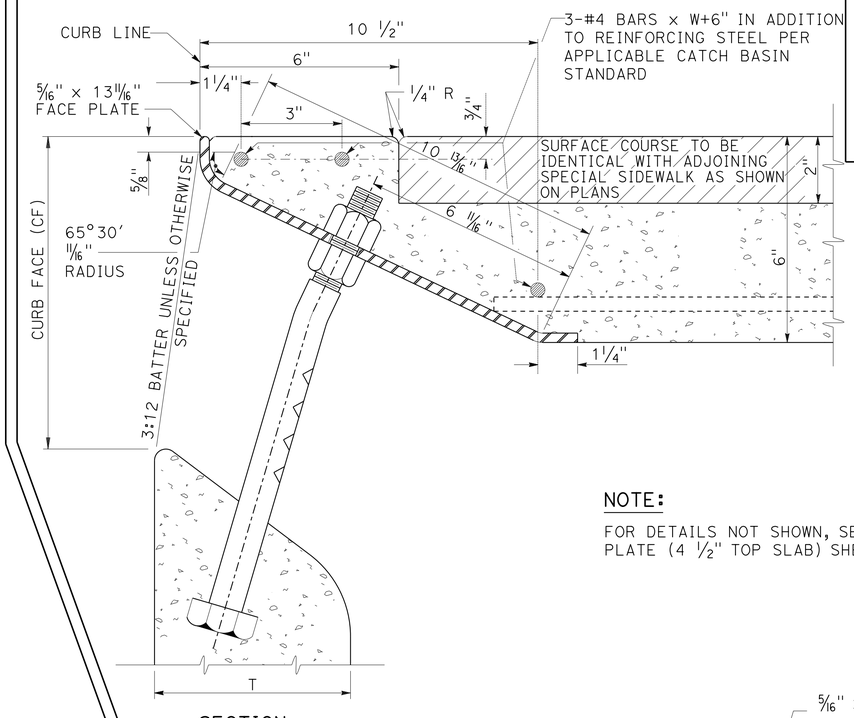

SECTION

NOTE:

FOR DETAILS NOT SHOWN, SEE FACE PLATE (4 ½" TOP SLAB) SHEET 1

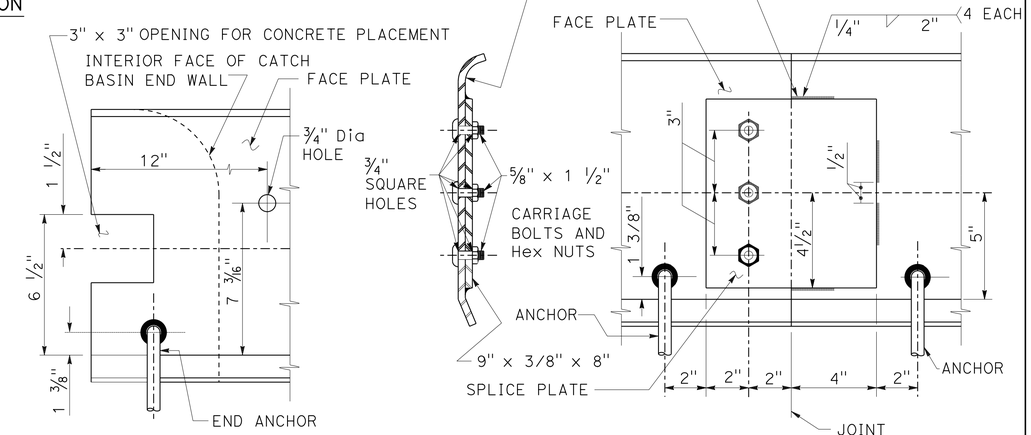

END DETAIL

SPLICE DETIAL

AMERICAN PUBLIC WORKS ASSOCIATION - SOUTHERN CALIFORNIA CHAPTER

CATCH BASIN FACE PLATE ASSEMBLY AND PROTECTION BAR

STANDARD PLAN **310-1**

SHEET 2 OF 6

DRAINAGE DETAILS

NO SCALE

DD-17

STATE OF CALIFORNIA - DEPARTMENT OF TRANSPORTATION
Caltrans HYDRAULICS

FUNCTIONAL SUPERVISOR: DAVE BHALLA
CALCULATED-DESIGNED BY: S. THAI
CHECKED BY: D. BHALLA
REVISED BY
DATE REVISED

LAST REVISION 06-09-12
DATE PLOTTED => 12-JUN-2013
TIME PLOTTED => 16:30

Dist	COUNTY	ROUTE	POST MILES TOTAL PROJECT	SHEET No.	TOTAL SHEETS
07	LA	10	33.2/37.2	220	1475

REGISTERED CIVIL ENGINEER 4-17-12 DATE

6-10-13
PLANS APPROVAL DATE

REGISTERED PROFESSIONAL ENGINEER DAVE BHALLA No. 34350 Exp. 9/30/13 CIVIL STATE OF CALIFORNIA

THE STATE OF CALIFORNIA OR ITS OFFICERS OR AGENTS SHALL NOT BE RESPONSIBLE FOR THE ACCURACY OR COMPLETENESS OF SCANNED COPIES OF THIS PLAN SHEET.

FACE PLATE ANCHORS

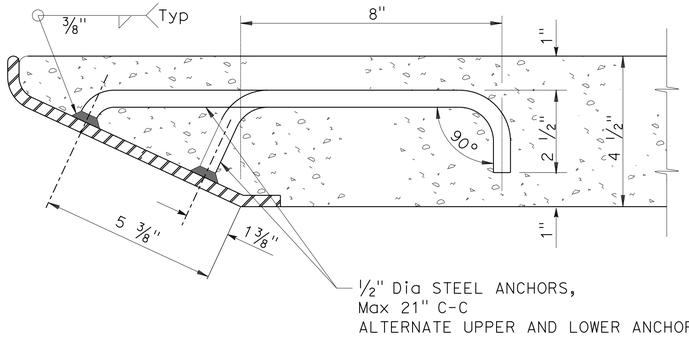

HOOK ANCHOR - 4 1/2 TOP SLAB

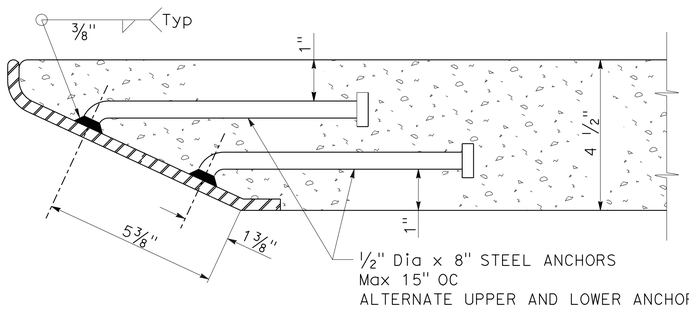

ROUND HEAD ANCHOR - 4 1/2 TOP SLAB

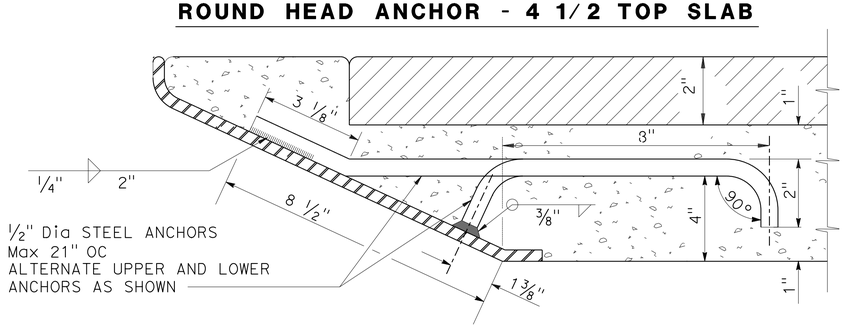

HOOK ANCHOR - 6" TOP SLAB

PROTECTION BAR AND SUPPOST BOLT(S) WITH ADJUSTABLE STIRRUP (S) - (TYPE A)

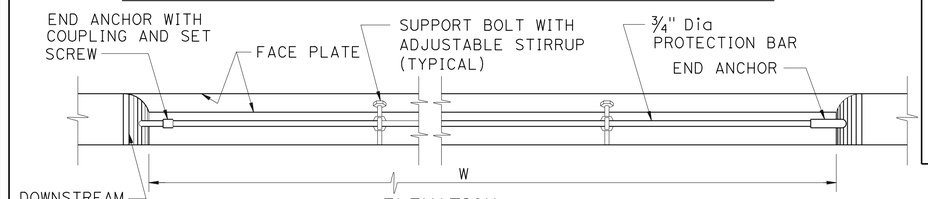

ELEVATION

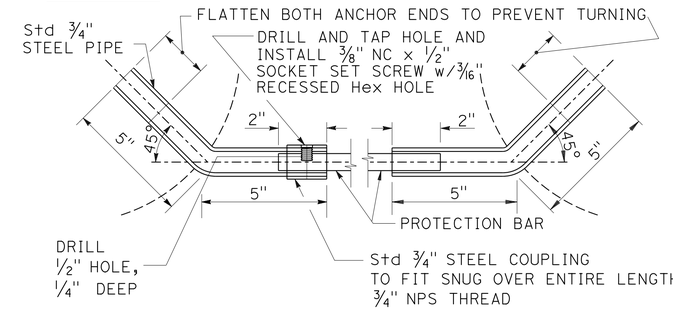

END ANCHOR DETAIL

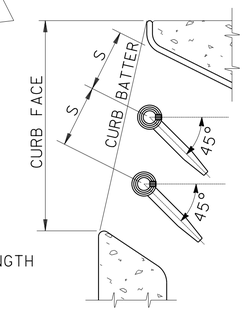

DOUBLE PROTECTION BAR DETAIL

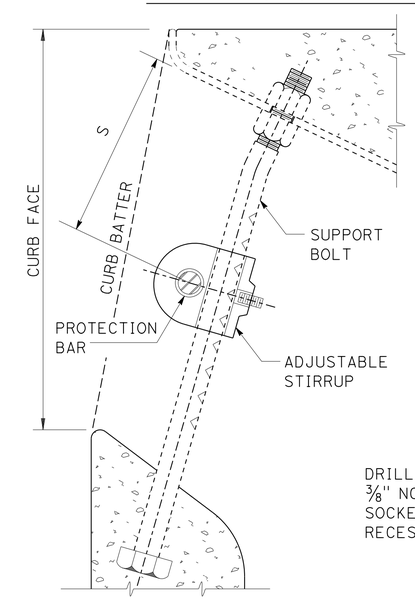

PROTECTION BAR & STIRRUP LOCATION

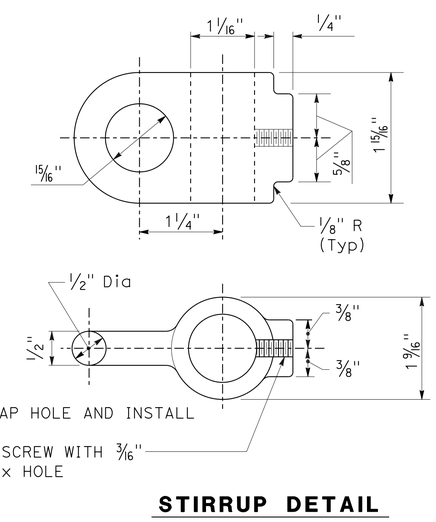

STIRRUP DETAIL

AMERICAN PUBLIC WORKS ASSOCIATION - SOUTHERN CALIFORNIA CHAPTER

PROMULGATED BY THE APWA-AGC JOINT COOPERATIVE COMMITTEE 1984 REV.1996	CATCH BASIN FACE PLATE ASSEMBLY AND PROTECTION BAR	STANDARD PLAN 310-1
	USE WITH STANDARD SPECIFICATIONS FOR PUBLIC WORKS CONSTRUCTION	SHEET 3 OF 6

AMERICAN PUBLIC WORKS ASSOCIATION - SOUTHERN CALIFORNIA CHAPTER

CATCH BASIN FACE PLATE ASSEMBLY AND PROTECTION BAR	STANDARD PLAN 310-1
	SHEET 4 OF 6

DRAINAGE DETAILS

NO SCALE

DD-18

STATE OF CALIFORNIA - DEPARTMENT OF TRANSPORTATION
Caltrans
HYDRAULICS

FUNCTIONAL SUPERVISOR: DAVE BHALLA
CALCULATED-DESIGNED BY: S. THAI
CHECKED BY: D. BHALLA
REVISED BY
DATE REVISED

LAST REVISION 06-09-12
DATE PLOTTED => 12-JUN-2013
TIME PLOTTED => 16:30

Dist	COUNTY	ROUTE	POST MILES TOTAL PROJECT	SHEET No.	TOTAL SHEETS
07	LA	10	33.2/37.2	221	1475

REGISTERED CIVIL ENGINEER 4-17-12 DATE

6-10-13
PLANS APPROVAL DATE

REGISTERED PROFESSIONAL ENGINEER DAVE BHALLA No. 34350 Exp. 9/30/13 CIVIL STATE OF CALIFORNIA

THE STATE OF CALIFORNIA OR ITS OFFICERS OR AGENTS SHALL NOT BE RESPONSIBLE FOR THE ACCURACY OR COMPLETENESS OF SCANNED COPIES OF THIS PLAN SHEET.

PROTECTION BAR AND SUPPORT BOLT(S) WITH FIXED STIRRUP(S) - (TYPE B)

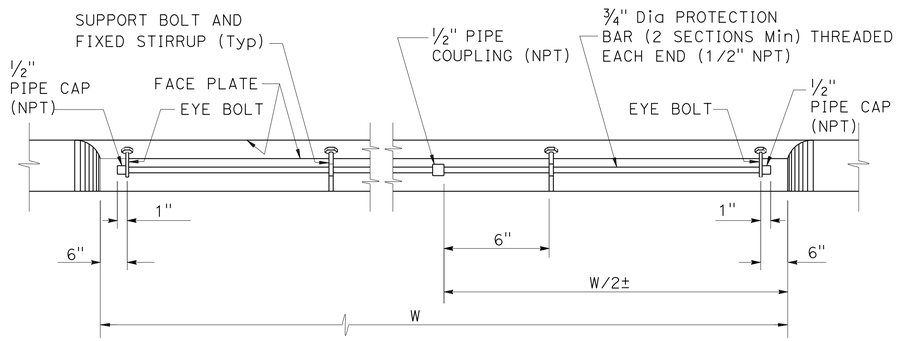

ELEVATION

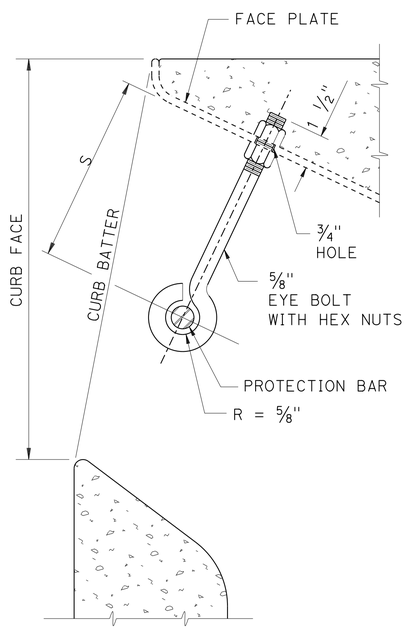

EYE BOLT DETAIL

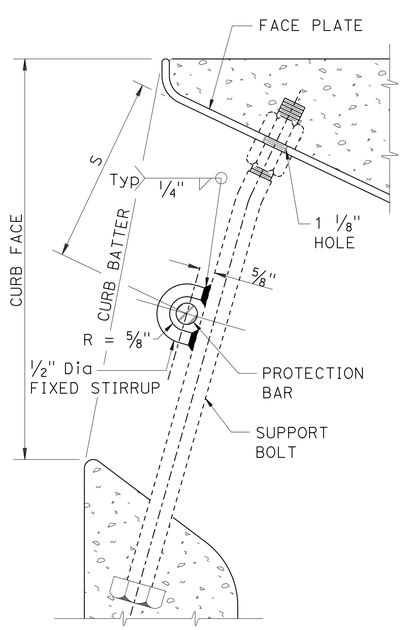

STIRRUP DETAIL

NOTES:

GENERAL

1. ALL PARTS SHALL BE STEEL, SET SCREWS SHALL BE STAINLESS STEEL OR BRASS.
2. EXCLUDING SET SCREWS, ALL EXPOSED METAL PARTS SHALL BE GALVANIZED AFTER FABRICATION.
3. CURB FACE SHALL BE AS NOTED ON THE PLANS.
4. CURB BATTER SHALL BE 3:12 UNLESS OTHERWISE SPECIFIED.

FACE PLATE

5. FACE PLATE LENGTHS SHALL BE CATCH BASIN W PLUS 12" EXCEPT AS MODIFIED AS "A" CURB OPENING CATCH BASIN AT DRIVEWAY".
6. WHEN THE LENGTH OF THE FACE PLATE IS BETWEEN 22' & 43',TWO SECTIONS MAY BE USED. WHEN THE LENGTH EXCEEDS 43', THREE SECTIONS MAY BE USED. SECTIONS SHALL BE SPLICED ACCORDING TO THE APPLICABLE SPLICE DETAIL. SPLICE SHALL BE PLACED 1' FROM A SUPPORT BOLT.
7. WHERE CATCH BASINS ARE TO BE CONSTRUCTED ON CURVES, THE MAXIMUM CHORD LENGTH FOR THE FACE PLATE SHALL BE SUCH THAT THE MAXIMUM PERPENDICULAR DISTANCE TO THE TRUE CURVE SHALL NOT EXCEED 1". WHERE MORE THAN ONE CHORD IS REQUIRED, CHORD LENGTHS SHALL BE EQUAL. CHORD SECTIONS SHALL BE SPLICED ACCORDING TO THE APPLICABLE SPLICE DETAIL (MODIFIED TO FIT THE CHORD DEFLECTION) AND A SUPPORT BOLT SHALL BE PLACED 1' FROM THE SPLICE.
8. ROUND HEAD ANCHORS FOR THE FACE PLATE SHALL BE NELSON H-4F SHEAR CONNECTOR, KSN WELDING SYSTEMS DIVISION SHEAR CONNECTOR OR EQUAL.

SUPPORT BOLT

9. SUPPORT BOLTS ARE REQUIRED WHEN THE LENGTH OF THE CATCH BASIN OPENING IS 7' OR GREATER, AND SHALL BE EVENLY SPACED ACROSS THE OPENING. SPACING SHALL NOT BE LESS THAN 3'-6" ON CENTER NOR GREATER THAN 5' ON CENTER.

STIRRUP

10. FOR TYPE A, MATERIAL SHALL BE CAST STEEL.

PROTECTION BAR

11. TYPE A SHALL BE USED UNLESS OTHERWISE SPECIFIED.
12. FOR TYPE A, THE BAR SHALL BE CUT TO FIT IN THE FIELD. WHEN "W" IS OVER 21', THE PROTECTION BAR SHALL CONSIST OF 2 OR MORE SECTIONS. A SPECIAL CONNECTOR BETWEEN THE PROTECTION BAR PIECES SHALL CONSIST OF A 5" LENGTH OF STANDARD 3/4" PIPE WITH STANDARD COUPLINGS FULLY THREADED ONTO EACH END DRILLED AND TAPPED FOR A SOCKET SET SCREW AS DETAILED FOR THE DOWNSTREAM END ANCHOR.
13. FOR TYPE B, THE BAR SHALL BE TWO PIECES. TWO EYE BOLTS AND A WELDED STIRRUP ON EACH SUPPORT BOLT ARE REQUIRED.
14. NUMBER OF PROTECTION BARS AND LOCATIONS ARE AS FOLLOWS:

CURB BATTER	MAXIMUM CURB FACE, INCHES												
	6"	7"	8"	9"	10"	11"	12"	13"	14"	15"	16"	17"	18"
0:12	0	0	3.5"	3.5"	4.5"	4.5"	4.5"	5.5"	3.5"	3.5"	4.5"	4.5"	4.5"
1:12	0	0	3.5"	3.5"	4.5"	4.5"	4.5"	5.5"	3.5"	3.5"	4.5"	4.5"	5.5"
2:12	0	0	3.5"	3.5"	4.5"	4.5"	5.5"	3.5"	3.5"	4.5"	4.5"	5.5"	5.5"
3:12	0	0	3.5"	3.5"	4.5"	4.5"	5.5"	3.5"	4.5"	4.5"	5.5"	5.5"	4.5"
4:12	0	3.5"	3.5"	4.5"	4.5"	5.5"	3.5"	3.5"	4.5"	4.5"	5.5"	4.5"	4.5"
	0	1					2*					3*	
	NUMBER OF PROTECTION BARS												

S DIMENSION

FOR OTHER CURB FACE OR BATTER SEE PLANS
* TYPE A PROTECTION BAR ONLY

AMERICAN PUBLIC WORKS ASSOCIATION - SOUTHERN CALIFORNIA CHAPTER

CATCH BASIN FACE PLATE ASSEMBLY AND PROTECTION BAR

STANDARD PLAN **310-1**

SHEET 6 OF 6

DRAINAGE DETAILS

NO SCALE

DD-19

AMERICAN PUBLIC WORKS ASSOCIATION-SOUTHERN CALIFORNIA CHAPTER

PROMULGATED BY THE APWA-AGC JOINT COOPERATIVE COMMITTEE 1984 REV.1996

CATCH BASIN FACE PLATE ASSEMBLY AND PROTECTION BAR

USE WITH STANDARD SPECIFICATIONS FOR PUBLIC WORKS CONSTRUCTION

STANDARD PLAN **310-1**

SHEET 5 OF 6

STATE OF CALIFORNIA - DEPARTMENT OF TRANSPORTATION
Caltrans
HYDRAULICS
FUNCTIONAL SUPERVISOR: DAVE BHALLA
CALCULATED-DESIGNED BY: S. THAI
CHECKED BY: D. BHALLA
REVISED BY
DATE REVISED

LAST REVISION 06-09-12
DATE PLOTTED => 12-JUN-2013
TIME PLOTTED => 16:30

Dist	COUNTY	ROUTE	POST MILES TOTAL PROJECT	SHEET No.	TOTAL SHEETS
07	LA	10	33.2/37.2	222	1475

REGISTERED CIVIL ENGINEER 4-17-12 DATE

6-10-13
PLANS APPROVAL DATE

REGISTERED PROFESSIONAL ENGINEER DAVE BHALLA No. 34350 Exp. 9/30/13 CIVIL STATE OF CALIFORNIA

THE STATE OF CALIFORNIA OR ITS OFFICERS OR AGENTS SHALL NOT BE RESPONSIBLE FOR THE ACCURACY OR COMPLETENESS OF SCANNED COPIES OF THIS PLAN SHEET.

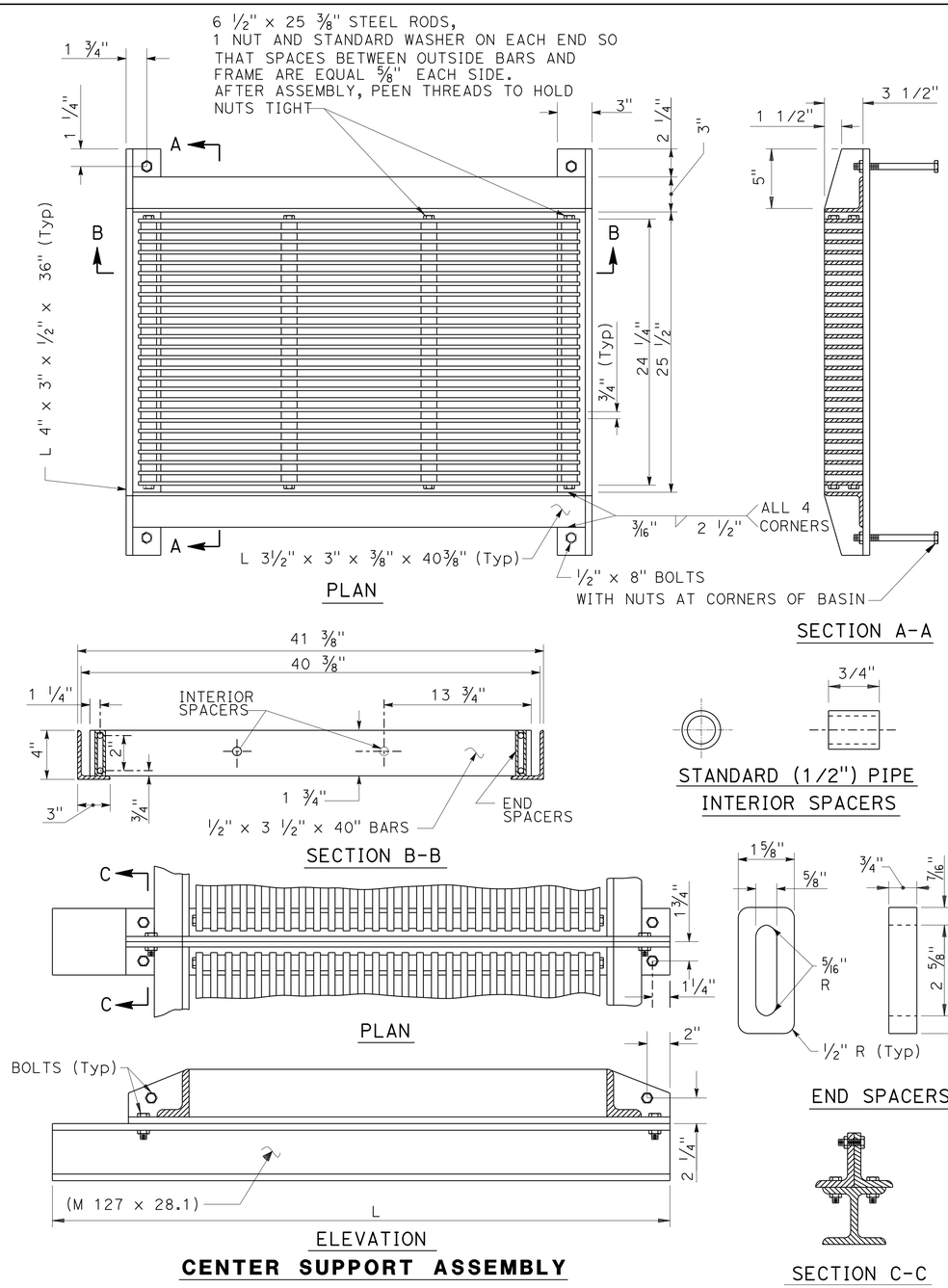

AMERICAN PUBLIC WORKS ASSOCIATION-SOUTHERN CALIFORNIA CHAPTER

PROMULGATED BY THE APWA-AGC JOINT COOPERATIVE COMMITTEE 1984 REV.1996

FRAME AND GRATING FOR CATCH BASINS

USE WITH STANDARD SPECIFICATIONS FOR PUBLIC WORKS CONSTRUCTION

STANDARD PLAN **311-2**

SHEET 1 OF 2

NOTES:

1. ALL PARTS SHALL BE STEEL, EXCEPT THAT END SPACERS MAY BE CAST IRON.
2. ALL PARTS SHALL BE GALVANIZED AFTER FABRICATION, EXCEPT THAT GRATINGS SHALL BE ASSEMBLED AFTER COMPONENT PARTS ARE GALVANIZED.
3. ALL DIMENSIONS ARE FINISHED DIMENSIONS AND INCLUDE GALVANIZING.
4. ALL BOLT HOLES SHALL BE 5/8" DIAMETER.
5. ALL THREADS SHALL BE NATIONAL COARSE SERIES (NC).
6. CENTER SUPPORT ASSEMBLY REQUIRED WHEN TWO OR MORE GRATINGS ARE SPECIFIED ON PLANS.

   L = 64" FOR CURB OPENING CATCH BASIN WITH GRATING(S) AND DEBRIS SKIMMER (301).

   L = 44" FOR CURB OPENING CATCH BASIN WITH GRATING(S) (320).

   L = 36" FOR CURBSIDE GRATING CATCH BASIN (303).

   L = 36" FOR GRATING CATCH BASIN-ALLEY (LONGITUDINAL) (304).

AMERICAN PUBLIC WORKS ASSOCIATION - SOUTHERN CALIFORNIA CHAPTER

FRAME AND GRATING FOR CATCH BASINS

STANDARD PLAN **311-2**

SHEET 2 OF 2

DRAINAGE DETAILS

NO SCALE

DD-20

STATE OF CALIFORNIA - DEPARTMENT OF TRANSPORTATION
Caltrans
HYDRAULICS

FUNCTIONAL SUPERVISOR: DAVE BHALLA
CALCULATED-DESIGNED BY: S. THAI
CHECKED BY: D. BHALLA
REVISED BY
DATE REVISED

LAST REVISION 06-09-12
DATE PLOTTED => 12-JUN-2013
TIME PLOTTED => 16:30

Dist	COUNTY	ROUTE	POST MILES TOTAL PROJECT	SHEET No.	TOTAL SHEETS
07	LA	10	33.2/37.2	223	1475

REGISTERED CIVIL ENGINEER 4-17-12 DATE

6-10-13
PLANS APPROVAL DATE

REGISTERED PROFESSIONAL ENGINEER DAVE BHALLA No. 34350 Exp. 9/30/13 CIVIL STATE OF CALIFORNIA

THE STATE OF CALIFORNIA OR ITS OFFICERS OR AGENTS SHALL NOT BE RESPONSIBLE FOR THE ACCURACY OR COMPLETENESS OF SCANNED COPIES OF THIS PLAN SHEET.

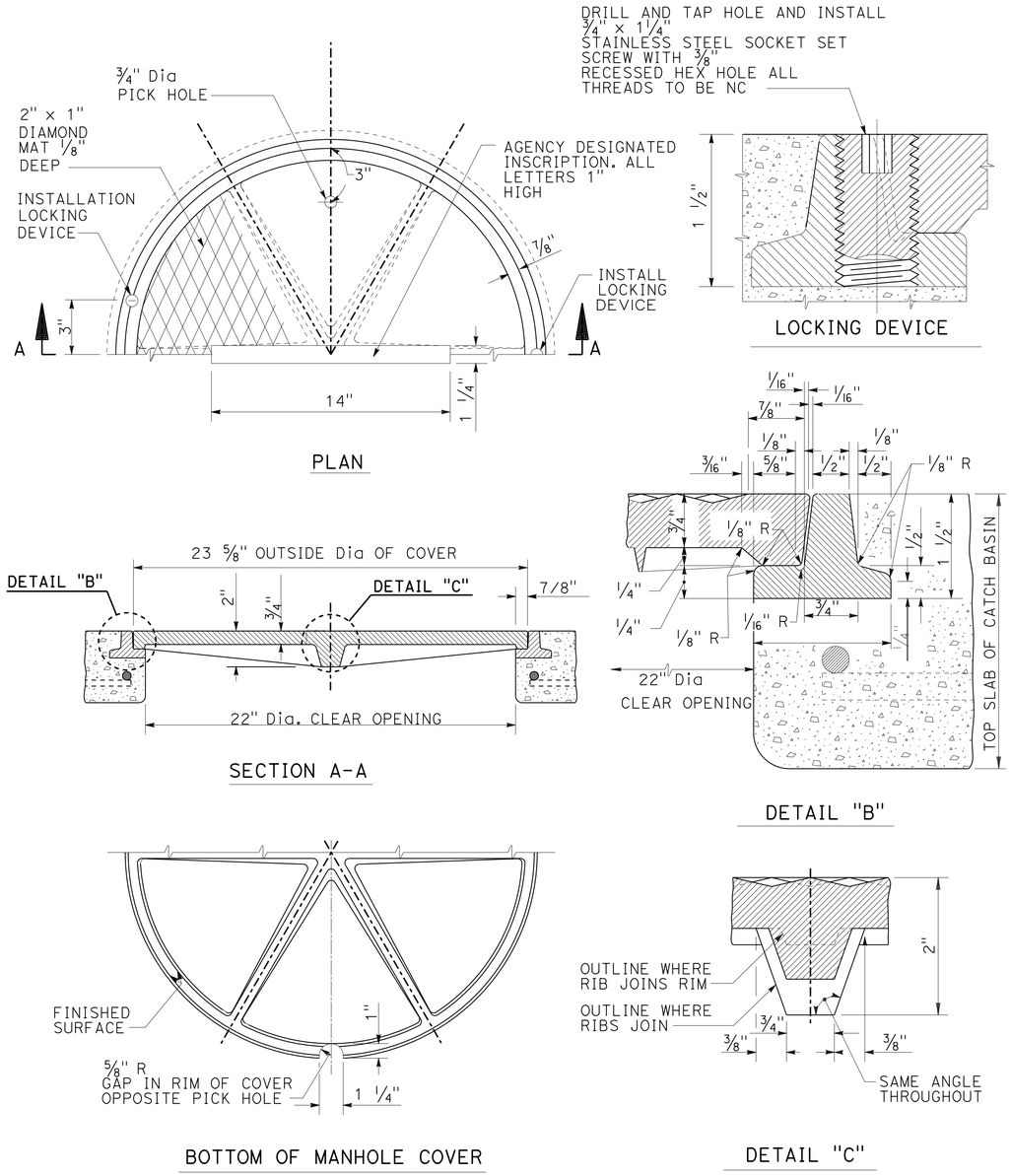

NOTES

1. THE CAST IRON USED SHALL CONFORM TO ASTM A48M CLASS 35B.
2. THE FRAME AND COVER SHALL BE COATED WITH ASPHALTUM OR BITUMINOUS PAINT AFTER TESTING AND INSPECTION.
3. FOUNDRY IDENTIFYING MARK, HEAT AND DATE SHALL BE CAST ON THE BOTTOM OF THE COVER AND ON THE INSIDE OF THE FRAME.
4. IMPORTED COVERS AND FRAMES SHALL HAVE THE COUNTRY OF ORIGIN MARKING IN COMPLIANCE WITH FEDERAL REGULATIONS.
5. WEIGHT OF FRAME SHALL BE 30 POUNDS (15 kg). WEIGHT OF COVER SHALL BE 85 POUNDS (40 kg). ACTUAL WEIGHTS SHALL BE WITHIN A RANGE OF 95% TO 110%.
6. THE MANHOLE FRAME AND COVER SHALL BE INSPECTED BY THE ENGINEER PRIOR TO SHIPMENT TO THE WORK SITE. ACCEPTANCE WILL BE INDICATED BY THE AGENCY'S MARK.
7. THE PROOF-LOAD FOR TEST METHOD B OF SSPWC 206-3.2 IS 28,600 POUNDS (127 kN).
8. AGENCY INSCRIPTION SHALL BE AS SPECIFIED ON THE PLANS OR SPECIAL PROVISIONS.

AMERICAN PUBLIC WORKS ASSOCIATION - SOUTHERN CALIFORNIA CHAPTER

PROMULGATED BY THE APWA-AGC JOINT COOPERATIVE COMMITTEE 1984 REV.1996

CATCH BASIN MANHOLE FRAME AND COVER

USE WITH STANDARD SPECIFICATIONS FOR PUBLIC WORKS CONSTRUCTION

STANDARD PLAN **312-2**

SHEET 1 OF 2

AMERICAN PUBLIC WORKS ASSOCIATION - SOUTHERN CALIFORNIA CHAPTER

CATCH BASIN MANHOLE FRAME AND COVER

STANDARD PLAN **312-2**

SHEET 2 OF 2

DRAINAGE DETAILS

NO SCALE

DD-21

STATE OF CALIFORNIA - DEPARTMENT OF TRANSPORTATION
Caltrans HYDRAULICS

FUNCTIONAL SUPERVISOR: DAVE BHALLA
CALCULATED-DESIGNED BY: S. THAI
CHECKED BY: D. BHALLA
REVISED BY
DATE REVISED

LAST REVISION 06-09-12
DATE PLOTTED => 12-JUN-2013
TIME PLOTTED => 16:31

Dist	COUNTY	ROUTE	POST MILES TOTAL PROJECT	SHEET No.	TOTAL SHEETS
07	LA	10	33.2/37.2	224	1475

REGISTERED CIVIL ENGINEER 4-17-12 DATE

6-10-13
PLANS APPROVAL DATE

REGISTERED PROFESSIONAL ENGINEER DAVE BHALLA No. 34350 Exp. 9/30/13 CIVIL STATE OF CALIFORNIA

THE STATE OF CALIFORNIA OR ITS OFFICERS OR AGENTS SHALL NOT BE RESPONSIBLE FOR THE ACCURACY OR COMPLETENESS OF SCANNED COPIES OF THIS PLAN SHEET.

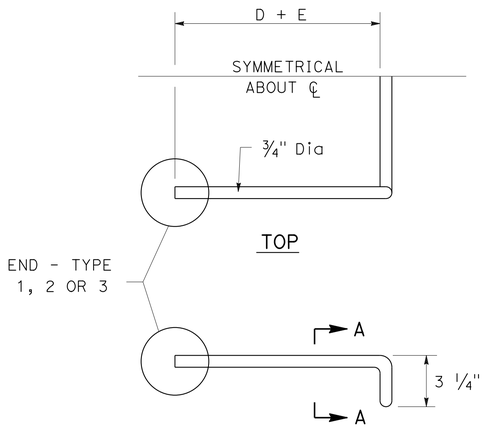

SIDE

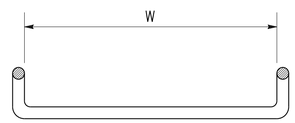

SECTION A-A

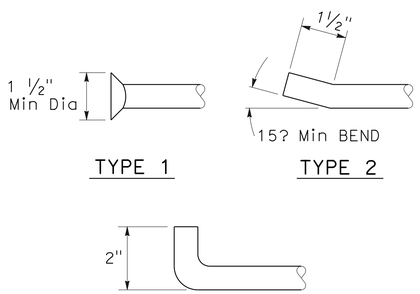

TYPE 1 TYPE 2

TYPE 3

END DETAILS-SIDE VIEW

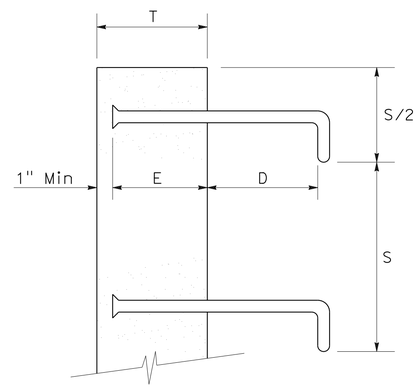

INSTALLATION DETAIL

UNLESS OTHERWISE NOTED:

D = 7"
E = 6" OR T - 1", WHICHEVER IS LESS
MINIMUM E IS 3"
S = 12" Max, EVENLY SPACED
W = 16" Min

FOR MANHOLES AND UNDERGROUND VAULTS:
S = 16" Max, EVENLY SPACED
W = 14" Min

AMERICAN PUBLIC WORKS ASSOCIATION-SOUTHERN CALIFORNIA CHAPTER

PROMULGATED BY THE APWA-AGC JOINT COOPERATIVE COMMITTEE 1984 REV.1996

STEEL STEP

USE WITH STANDARD SPECIFICATIONS FOR PUBLIC WORKS CONSTRUCTION

STANDARD PLAN **635-2**

SHEET 1 OF 2

NOTES:

1. STEPS SHALL BE STEEL CONFORMING TO ASTM A307 AND SHALL BE GALVANIZED AFTER FABRICATION. UNLESS OTHERWISE NOTED, STEPS MAY ALSO BE POLYPROPYLENE STEPS, STEEL REINFORCED, CONFORMING TO SPPWC 636.
2. IF STAINLESS STEEL STEPS ARE REQUIRED, THE MATERIAL SHALL CONFORM TO ASTM A276, 300 SERIES.
3. STEP ENDS MAY BE TYPE 1, 2 OR 3, AS SHOWN.
4. BOTTOM STEP SHALL BE A MAXIMUM OF 2' ABOVE FLOOR OR SHELF.
5. STEPS WITH TYPE 1 OR 2 ENDS MAY BE CAST IN PLACE, OR PLACED IN THE CENTER OF 1 ½" Min Dia DRILLED OR FORMED HOLES AND SET WITH HIGH STRENGTH NON-SHRINK GROUT, 6000 PSI MINIMUM STEPS WITH TYPE 3 ENDS SHALL BE CAST-IN-PLACE.

AMERICAN PUBLIC WORKS ASSOCIATION - SOUTHERN CALIFORNIA CHAPTER

STEEL STEP

STANDARD PLAN **635-2**

SHEET 2 OF 2

DRAINAGE DETAILS

NO SCALE

DD-22

STATE OF CALIFORNIA - DEPARTMENT OF TRANSPORTATION
Caltrans HYDRAULICS

FUNCTIONAL SUPERVISOR: DAVE BHALLA

CALCULATED-DESIGNED BY: S. THAI
CHECKED BY: D. BHALLA

REVISED BY
DATE REVISED

LAST REVISION 06-09-12
DATE PLOTTED => 12-JUN-2013
TIME PLOTTED => 16:31

Dist	COUNTY	ROUTE	POST MILES TOTAL PROJECT	SHEET No.	TOTAL SHEETS
07	LA	10	33.2/37.2	225	1475

REGISTERED CIVIL ENGINEER 4-17-12 DATE

6-10-13
PLANS APPROVAL DATE

REGISTERED PROFESSIONAL ENGINEER DAVE BHALLA No. 34350 Exp. 9/30/13 CIVIL STATE OF CALIFORNIA

THE STATE OF CALIFORNIA OR ITS OFFICERS OR AGENTS SHALL NOT BE RESPONSIBLE FOR THE ACCURACY OR COMPLETENESS OF SCANNED COPIES OF THIS PLAN SHEET.

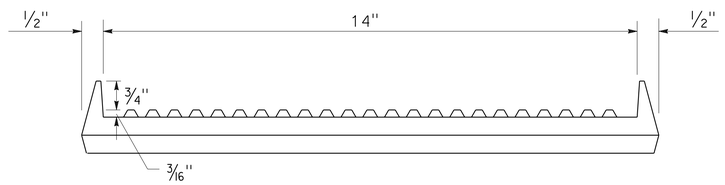

FRONT

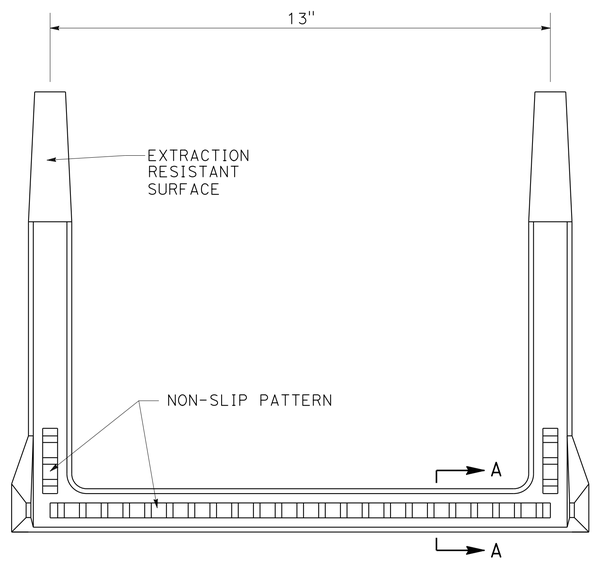

TOP

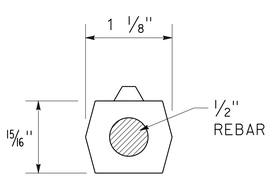

SECTION A-A

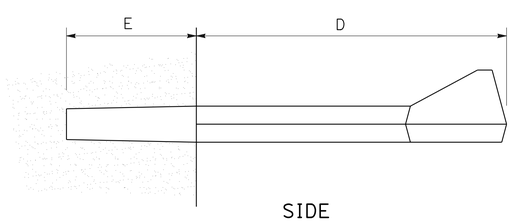

SIDE

NOTES:

1. STEPS SHALL BE STEEL-REINFORCED COPOLYMER POLYPROPYLENE PLASTIC CONFORMING TO:

   (A) ASTM D478 AND C497, EXCEPT THAT THE MINIMUM HORIZONTAL PULLOUT LOAD SHALL BE 1,500 LBS.
   (B) ASTM A615 GRADE 60 DEFORMED REINFORCING STEEL BAR.
   (C) CALIFORNIA CODE OF REGULATIONS TITLE 8, GENERAL INDUSTRY SAFETY ORDERS.

2. STEPS SHALL BE CAPABLE OF WITHSTANDING AN IMPACT LOAD OF 70 FEET-LBS AT 20?F WITHOUT CRACKING OR FRACTURING.

3. THE MINIMUM TOTAL CROSS-SECTIONAL AREA OF THE EXPOSED PORTION OF THE STEP, INCLUDING THE DEFORMED STEEL BAR AND EXCLUDING THE NON-SLIP TREAD SURFACE, SHALL BE 1.0 SQUARE INCH.

4. THE ENTIRE POLYPROPYLENE PLASTIC MATERIAL SURROUNDING THE REINFORCING STEEL BAR SHALL BE CAST MONOLITHICALLY. MINIMUM COVER SHALL BE 3/16".

5. A CERTIFICATION OF COMPLIANCE WITH THE REQUIREMENTS OF NOTES 1 THROUGH 4 PREPARED BY AN INDEPENDENT CERTIFIED LABORATORY SHALL BE SUBMITTED TO THE ENGINEER CONCURRENTLY WITH A REQUEST FOR APPROVAL.

6. E = 3 3/8". FOR VAULTS AND MANHOLES, D = 5 1/2" FOR OTHER INSTALLATIONS, D = 7 1/2". THESE DIMENSIONS MAY BE PLUS OR MINUS 1/4").

7. STEPS SHALL BE EVENLY SPACED. MAXIMUM VERTICAL SPACING OF STEPS SHALL BE 16", WITH THE BOTTOM STEP A MAXIMUM OF 2' ABOVE FLOOR OR SHELF.

8. IF TAPERED STEPS ARE INSTALLED INTO STRAIGHT DRILLED OR FORMED HOLES, APPROVED NON-SHRINK GROUT SHALL BE INJECTED INTO THE HOLE PRIOR TO INSTALLATION. HOLES SHALL BE STRAIGHT AND PARALLEL. EXCEPT AS OTHERWISE NOTED, STEPS SHALL BE INSTALLED IN ACCORDANCE WITH MANUFACTURER'S RECOMMENDED PROCEDURES.

9. A DROP STEP WITH A MINIMUM DROP OF 3/4" MAY BE USED. THE DROP STEP SHALL MEET ALL OTHER CRITERIA OF THIS PLAN.

AMERICAN PUBLIC WORKS ASSOCIATION - SOUTHERN CALIFORNIA CHAPTER

POLYPROPYLENE PLASTIC STEP

STANDARD PLAN **636-1**

SHEET 2 OF 2

AMERICAN PUBLIC WORKS ASSOCIATION-SOUTHERN CALIFORNIA CHAPTER

PROMULGATED BY THE APWA-AGC JOINT COOPERATIVE COMMITTEE 1984 REV.1996

POLYPROPYLENE PLASTIC STEP

USE WITH STANDARD SPECIFICATIONS FOR PUBLIC WORKS CONSTRUCTION

STANDARD PLAN **636-1**

SHEET 1 OF 2

DRAINAGE DETAILS

NO SCALE

DD-23

STATE OF CALIFORNIA - DEPARTMENT OF TRANSPORTATION
Caltrans
HYDRAULICS

FUNCTIONAL SUPERVISOR: DAVE BHALLA
CALCULATED-DESIGNED BY: S. THAI
CHECKED BY: D. BHALLA
REVISED BY
DATE REVISED

LAST REVISION 06-09-12
DATE PLOTTED => 12-JUN-2013
TIME PLOTTED => 16:31

Dist	COUNTY	ROUTE	POST MILES TOTAL PROJECT	SHEET No.	TOTAL SHEETS
07	LA	10	33.2/37.2	226	1475

Timothy B. Sobelman 6-3-09
REGISTERED CIVIL ENGINEER DATE

6-10-13
PLANS APPROVAL DATE

REGISTERED PROFESSIONAL ENGINEER TIMOTHY B. SOBELMAN No. 59249 Exp. 6-30-13 CIVIL STATE OF CALIFORNIA

THE STATE OF CALIFORNIA OR ITS OFFICERS OR AGENTS SHALL NOT BE RESPONSIBLE FOR THE ACCURACY OR COMPLETENESS OF SCANNED COPIES OF THIS PLAN SHEET.

GENERAL NOTES

Designation:
Partial Austin Vault Sand Filters (AVSFs) are open air reinforced concrete vaults utilizing both sedimentation and sand filtration basins. Type designation is based on length configuration, water quality volume to be drained in a 24 hour period, and average depth of water.

Standard configurations are noted for the following design water quality volumes (WQV): 5,000, 10,000, and 15,000 cubic feet. Length configurations are either short (S) or long (L). The average water depth can be either 3 ft, 4.5 ft, or 6 ft as designed in Design Water Quality Volumes (WQV) table.

Special Reinforcement Coverage:
AVSF Standard Details are not to be used in a corrosive environment or where there is a severe abrasive flow condition or in freeze-thaw locations.

Special Design:
Required for the following conditions: ground water conditions above bottom of AVSF, surcharge loads exceeding HS20 truck load, design bearing pressures or sizes greater than those on this plan, inlet velocities which exceed 8.0 ft/sec at gabion wall, and settlement due to liquefaction.

DESIGN WATER QUALITY VOLUMES (WQV)

AVSF Type*	WQV (ft^3)	W(ft)	Ls(ft)	Lf(ft)	Hw(ft)
S-3500-3	3,500	21	14	38	3
L-3500-3	3,500	15	18	53	3
S-3500-4.5	4,380	21	14	38	4.5
L-3500-4.5	4,380	15	18	53	4.5
S-3500-6	5,260	21	14	38	6
L-3500-6	5,260	15	18	53	6
S-5000-3	5,000	27	15	42	3
L-5000-3	5,000	18	21	63	3
S-5000-4.5	6,250	27	15	42	4.5
L-5000-4.5	6,250	18	21	63	4.5
S-5000-6	7,500	27	15	42	6
L-5000-6	7,500	18	21	63	6
S-10000-3	10,000	36	21	63	3
L-10000-3	10,000	24	30	94	3
S-10000-4.5	12,500	36	21	63	4.5
L-10000-4.5	12,500	24	30	94	4.5
S-10000-6	15,000	36	21	63	6
L-10000-6	15,000	24	30	94	6
S-15000-3	15,000	45	25	76	3
L-15000-3	15,000	30	37	115	3
S-15000-4.5	18,750	45	25	76	4.5
L-15000-4.5	18,750	30	37	115	4.5
S-15000-6	22,500	45	25	76	6
L-15000-6	22,500	30	37	115	6

* AVSF Type = Length configuration (S or L) - water quality volume (CF) - design water depth (Hw elevation)

DESIGN NOTES

Specifications:
Design:
Bridge Design Specification April 2000 (LFD)
(1996 AASHTO) with interims and revisions by Caltrans

Wall & Footing (LFD): 1.5 D + 1.5 E + 1.5 W + 1.5 SC
Where D = Dead Load
E = Earth Load
W = Water Load
SC = Surcharge

Capacity reduction factor is included.

Earth Load:
125 lb/ft^3 vertical,

Water Load:
62.4 lb/ft^3 horizontal/vertical,

Earth pressure for 2:1 unlimited slope determined from Rankine's formula with ø = 33°42′ (Case II).

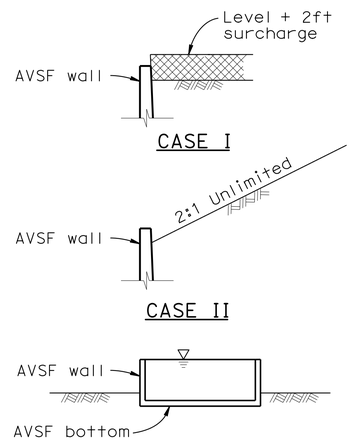

DETAIL OF DESIGN LOADING CASES

CASE I Level + 2ft surcharge, AVSF empty
CASE II 2:1 Unlimited slope, AVSF empty
CASE III AVSF full of water, no soil pressure

Unit Stresses:
f'_c = 4,000 psi
f_y = 60,000 psi

INDEX TO PLAN

SHEET No.	TITLE
1	GENERAL NOTES
2	LAYOUT No. 1
3	LAYOUT No. 2
4	WALL DETAILS
5	DETAILS No. 1
6	DETAILS No. 2
7	DETAILS No. 3
8	DETAILS No. 4
9	MISCELLANEOUS DETAILS No. 1

CONSTRUCTION NOTES

Expansion joints:
Inverts and sidewalls - Place ½" expansion joint filler and waterstop where indicated. see "Details No. 2" sheet for specific wall & invert details.

Construction Joints:
Shall be placed where indicated on plans.

Backfill:
See Standard Specifications, except the difference in backfill shall not exceed 8′-0" between side walls and inlet and outlet walls.

Earthwork:
Limits of payment for excavation and backfill.

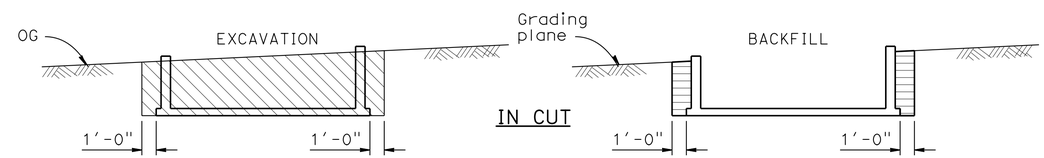

LEGEND:
Structure excavation (AVSF)
Structure backfill (AVSF)
Original ground, OG

NOTES:
1. Slope or shore excavation sides as necessary.
2. Dimensions shown are minimum.
3. 95% compaction 1′-0" below floor slabs.

STANDARD PLANS DATED JULY 2006

B0-3	BRIDGE DETAILS
B3-9	RETAINING WALL DETAILS No. 2
RSP B6-21	JOINT SEALS (MAXIMUM MOVEMENT RATING = 2")
RSP B11-47	CABLE RAILING
D100A	GABION BASKET DETAILS No. 1
D100B	GABION BASKET DETAILS No. 2

STANDARD PLAN SHEET No.
DETAIL No.

AUSTIN VAULT SAND FILTER GENERAL NOTES

DRAINAGE DETAILS
NO SCALE **DD-24**

REVISED BY | DATE REVISED
D. WANG | L. HE
CALCULATED-DESIGNED BY | CHECKED BY
FUNCTIONAL SUPERVISOR: TIMOTHY B. SOBELMAN
STATE OF CALIFORNIA - DEPARTMENT OF TRANSPORTATION
Caltrans
HYDRAULICS

LAST REVISION 06-09-12 | DATE PLOTTED => 12-JUN-2013 | TIME PLOTTED => 16:31

Dist	COUNTY	ROUTE	POST MILES TOTAL PROJECT	SHEET No.	TOTAL SHEETS
07	LA	10	33.2/37.2	227	1475

Timothy B Sobelman 6-3-09
REGISTERED CIVIL ENGINEER DATE

6-10-13
PLANS APPROVAL DATE

REGISTERED PROFESSIONAL ENGINEER TIMOTHY B. SOBELMAN No. 59249 Exp. 6-30-13 CIVIL STATE OF CALIFORNIA

THE STATE OF CALIFORNIA OR ITS OFFICERS OR AGENTS SHALL NOT BE RESPONSIBLE FOR THE ACCURACY OR COMPLETENESS OF SCANNED COPIES OF THIS PLAN SHEET.

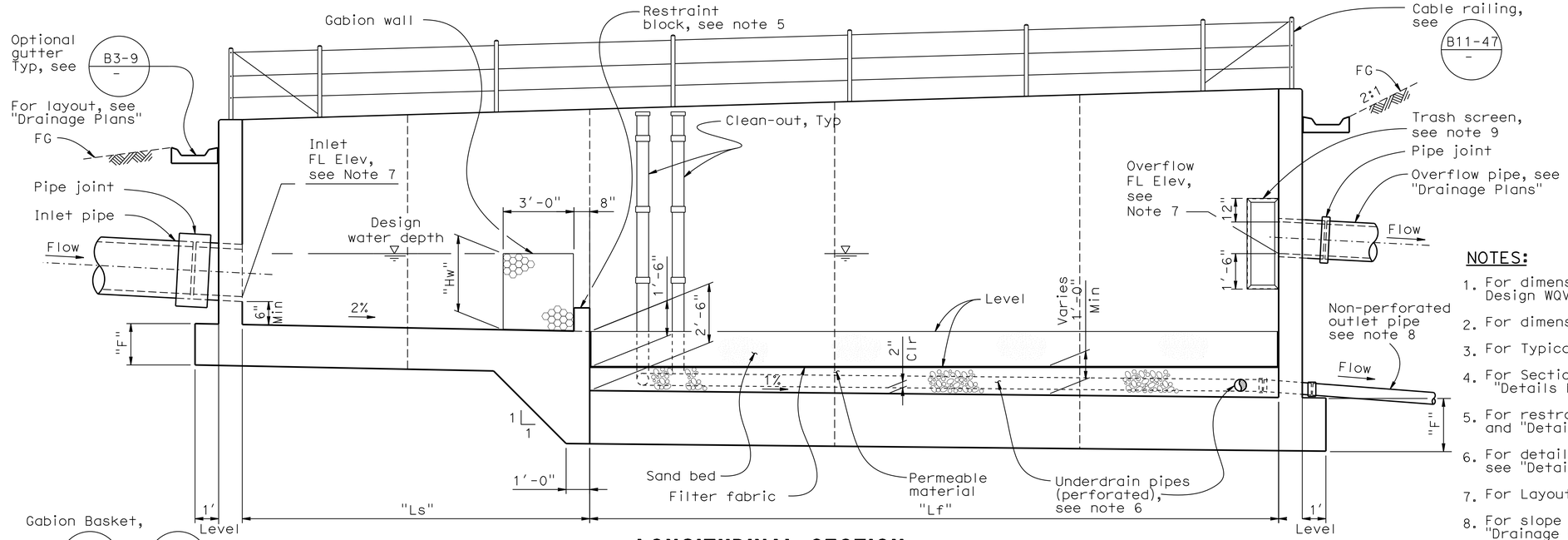

LONGITUDINAL SECTION

No Scale

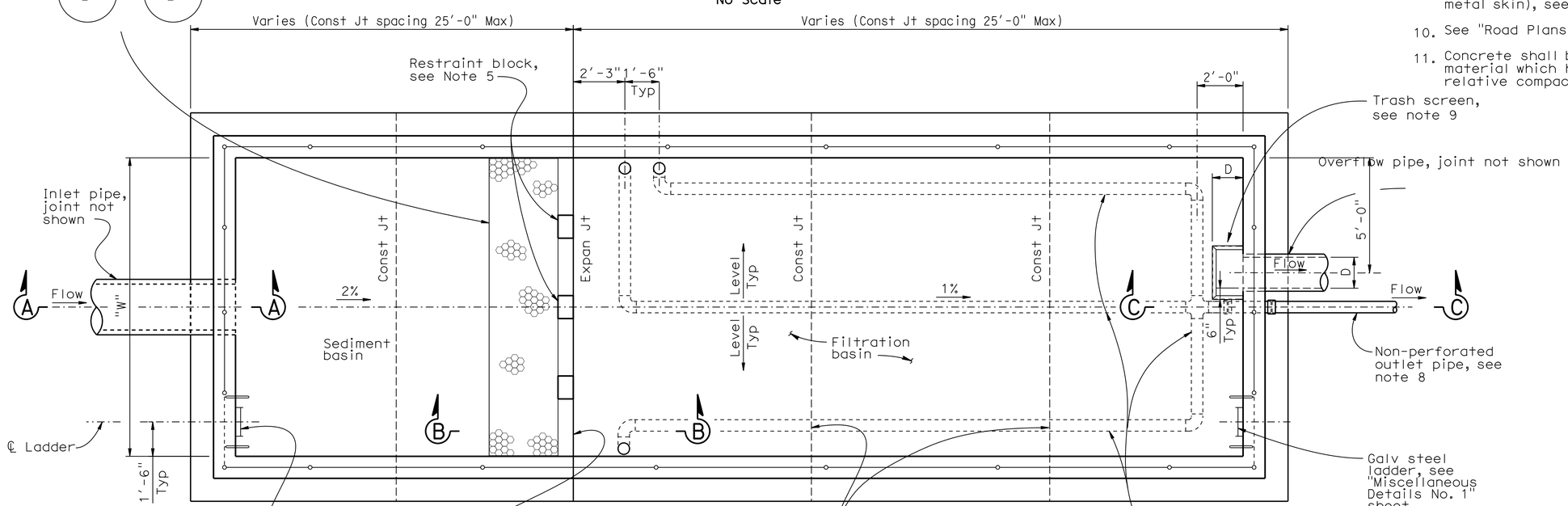

PLAN

No Scale

Note: Gutter not shown for clarity.

NOTES:

1. For dimensions "W", "Ls", "Lf" and "Hw", see Design WQV table on "General Notes" sheet.
2. For dimensions "C" and "F", see "Wall Details" sheet.
3. For Typical Section, see "Wall Details" sheet.
4. For Section A - A, B - B and C - C, see "Details No. 1" sheet.
5. For restraint block details, see "Details No. 1" and "Details No. 2" sheets.
6. For details of underdrain (sand filter), see "Details No. 4" sheet.
7. For Layout and FL elevation, see "Drainage Plans".
8. For slope of non-perforated outlet pipe, see "Drainage Plans".
9. For trash screen details (frame and perforated metal skin), see "Details No 3" sheet.
10. See "Road Plans" for top of wall elevations.
11. Concrete shall be placed on base or native material which has been compacted to 95% relative compaction.

AUSTIN VAULT SAND FILTER LAYOUT No. 1

DRAINAGE DETAILS

NO SCALE **DD-25**

REVISED BY | DATE REVISED
D. WANG | L. HE
CALCULATED-DESIGNED BY | CHECKED BY
FUNCTIONAL SUPERVISOR: TIMOTHY B. SOBELMAN
STATE OF CALIFORNIA - DEPARTMENT OF TRANSPORTATION
Caltrans
HYDRAULICS

LAST REVISION 06-09-12 | DATE PLOTTED => 12-JUN-2013 | TIME PLOTTED => 17:06

Dist	COUNTY	ROUTE	POST MILES TOTAL PROJECT	SHEET No.	TOTAL SHEETS
07	LA	10	33.2/37.2	228	1475

Timothy G Sobelman 10-23-08
REGISTERED CIVIL ENGINEER DATE

6-10-13
PLANS APPROVAL DATE

REGISTERED PROFESSIONAL ENGINEER
TIMOTHY B. SOBELMAN
No. 59249
Exp. 6-30-13
CIVIL
STATE OF CALIFORNIA

THE STATE OF CALIFORNIA OR ITS OFFICERS OR AGENTS SHALL NOT BE RESPONSIBLE FOR THE ACCURACY OR COMPLETENESS OF SCANNED COPIES OF THIS PLAN SHEET.

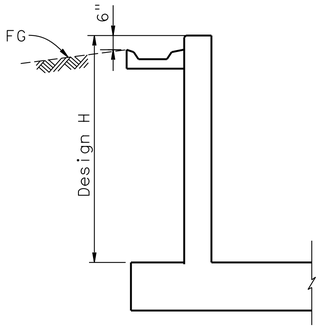

TYPICAL WALL SECTION
(INLET, OUTLET, AND SIDEWALL)
No scale

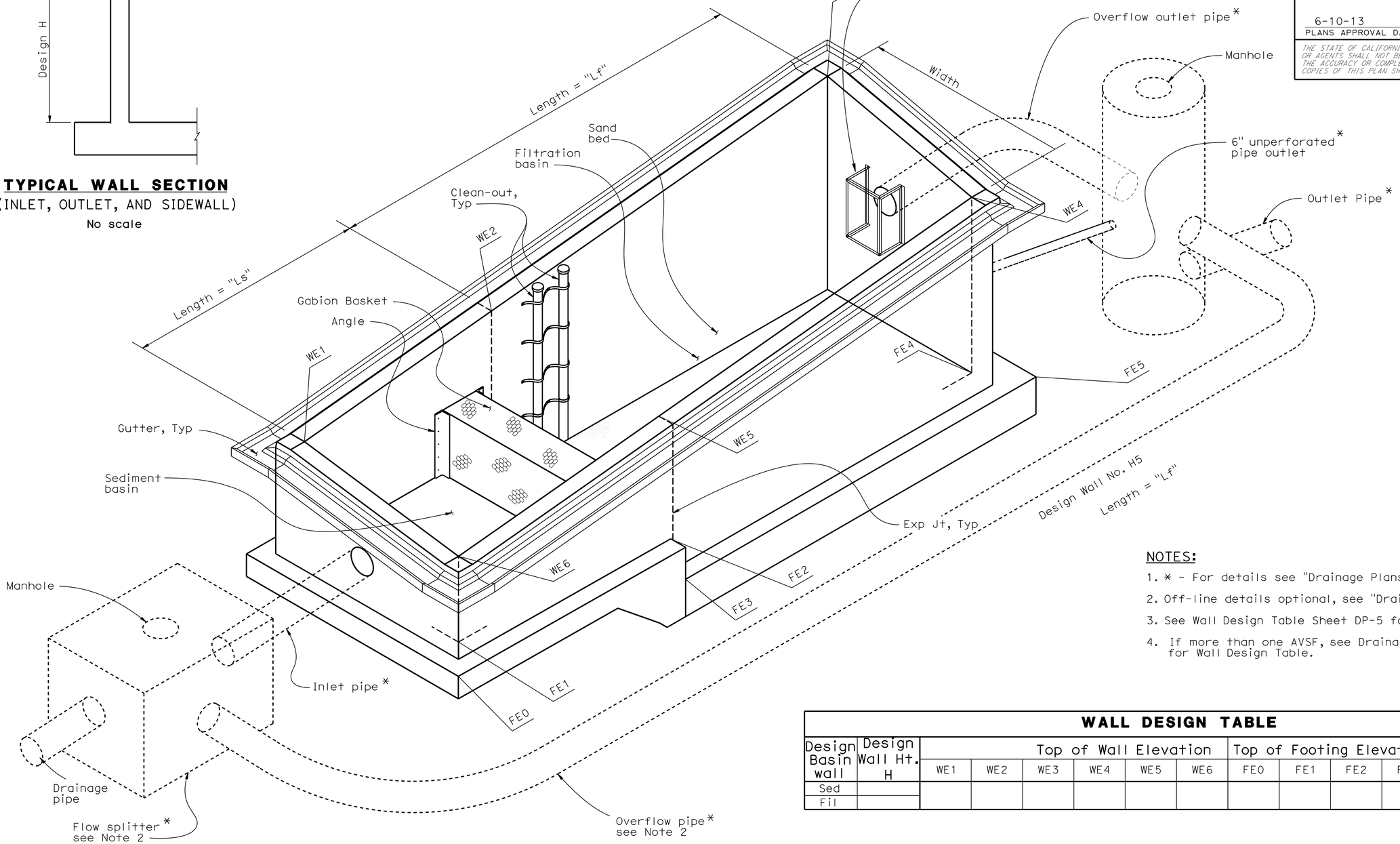

ISOMETRIC VIEW - AUSTIN VAULT SAND FILTER DRAINAGE SYSTEM
No Scale
NOTE: Steel ladders and cable railings not shown for clarity.

NOTES:
1. * - For details see "Drainage Plans".
2. Off-line details optional, see "Drainage Plans".
3. See Wall Design Table Sheet DP-5 for Height.
4. If more than one AVSF, see Drainage/Layout Plans for Wall Design Table.

WALL DESIGN TABLE

Design Basin wall	Design Wall Ht. H	Top of Wall Elevation						Top of Footing Elevation					
		WE1	WE2	WE3	WE4	WE5	WE6	FE0	FE1	FE2	FE3	FE4	FE5
Sed													
Fil													

AUSTIN VAULT SAND FILTER
LAYOUT No. 2
DRAINAGE DETAILS
NO SCALE **DD-26**

REVISED BY	DATE REVISED

CALCULATED-DESIGNED BY	CHECKED BY
D. WANG	L. HE

FUNCTIONAL SUPERVISOR: TIMOTHY B. SOBELMAN

STATE OF CALIFORNIA - DEPARTMENT OF TRANSPORTATION
Caltrans
HYDRAULICS

LAST REVISION 06-09-12 | DATE PLOTTED => 12-JUN-2013 | TIME PLOTTED => 17:06

Dist	COUNTY	ROUTE	POST MILES TOTAL PROJECT	SHEET No.	TOTAL SHEETS
07	LA	10	33.2/37.2	229	1475

Timothy B Sobelman 6-3-09
REGISTERED CIVIL ENGINEER DATE

6-10-13
PLANS APPROVAL DATE

REGISTERED PROFESSIONAL ENGINEER TIMOTHY B. SOBELMAN No. 59249 Exp. 6-30-13 CIVIL STATE OF CALIFORNIA

THE STATE OF CALIFORNIA OR ITS OFFICERS OR AGENTS SHALL NOT BE RESPONSIBLE FOR THE ACCURACY OR COMPLETENESS OF SCANNED COPIES OF THIS PLAN SHEET.

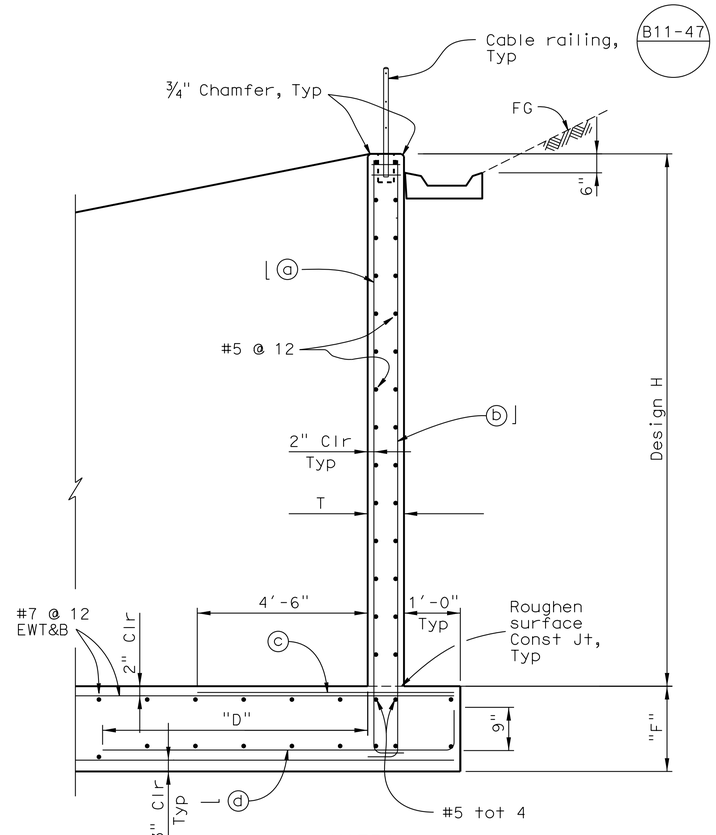

TYPICAL SECTION
No Scale

NOTES:

"D" = 8'-0" when "W" ≤ 30'-0"

"D" = 12'-0" when "W" > 30'-0"

NOTES:

1. For width dimension "W", see "General Notes" sheet.
2. For footing details not shown, see "Footing Details" sheet.
3. The contractor shall have the option of matching the Sedimentation Basin wall thickness with the Filtration Basin wall thickness. This shall be at no
4. additional cost to the State.

   Reinforcement notation "EWT&B" is acronym for "Each Way Top & Bottom".
5. Width "W" is the inside width between walls, see "Layout No. 1" sheet and the Design WQV table on "General Notes" sheet.
6. For additional corner reinforcement not indicated see "Typical Corner Detail" on "Details No. 1" sheet.

TABLE OF REINFORCING STEEL DIMENSIONS AND DATA FOR WALL

Design H	6'	8'	10'	12'	14'	16'
T	12"	12"	12"	12"	14"	14"
F	1'-3"	1'-3"	1'-3"	1'-6"	1'-9"	1'-9"
⌋ ⓐ bars # @ "	6 @ 12	6 @ 12	6 @ 8	7 @ 8	8 @ 8	9 @ 6
⌊ ⓑ bars # @ "	6 @ 12	6 @ 12	6 @ 8	7 @ 8	8 @ 8	8 @ 6
ⓒ bars # @ "	6 @ 12	6 @ 12	6 @ 8	6 @ 8	7 @ 8	7 @ 6
— ⓓ bars # @ "	6 @ 12	6 @ 12	6 @ 8	6 @ 8	7 @ 8	7 @ 6

AUSTIN VAULT SAND FILTER WALL DETAILS

DRAINAGE DETAILS
NO SCALE **DD-27**

STATE OF CALIFORNIA - DEPARTMENT OF TRANSPORTATION
Caltrans® **HYDRAULICS**

FUNCTIONAL SUPERVISOR: TIMOTHY B. SOBELMAN
CALCULATED-DESIGNED BY: D. WANG
CHECKED BY: L. HE
REVISED BY
DATE REVISED

LAST REVISION 06-09-12
DATE PLOTTED => 12-JUN-2013
TIME PLOTTED => 17:06

Dist	COUNTY	ROUTE	POST MILES TOTAL PROJECT	SHEET No.	TOTAL SHEETS
07	LA	10	33.2/37.2	230	1475

Timothy B. Sobelman 6-3-09
REGISTERED CIVIL ENGINEER DATE

6-10-13
PLANS APPROVAL DATE

REGISTERED PROFESSIONAL ENGINEER TIMOTHY B. SOBELMAN No. 59249 Exp. 6-30-13 CIVIL STATE OF CALIFORNIA

THE STATE OF CALIFORNIA OR ITS OFFICERS OR AGENTS SHALL NOT BE RESPONSIBLE FOR THE ACCURACY OR COMPLETENESS OF SCANNED COPIES OF THIS PLAN SHEET.

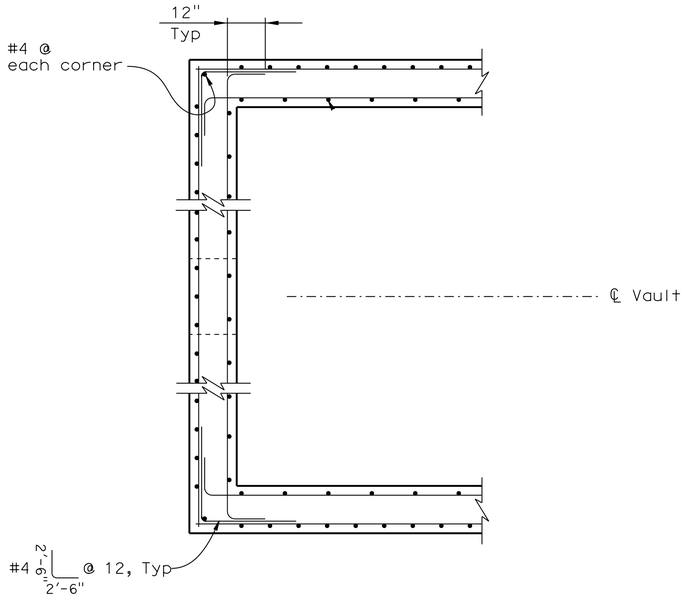

TYPICAL CORNER DETAIL

No Scale

NOTE: Inlet wall shown, outlet wall similar.

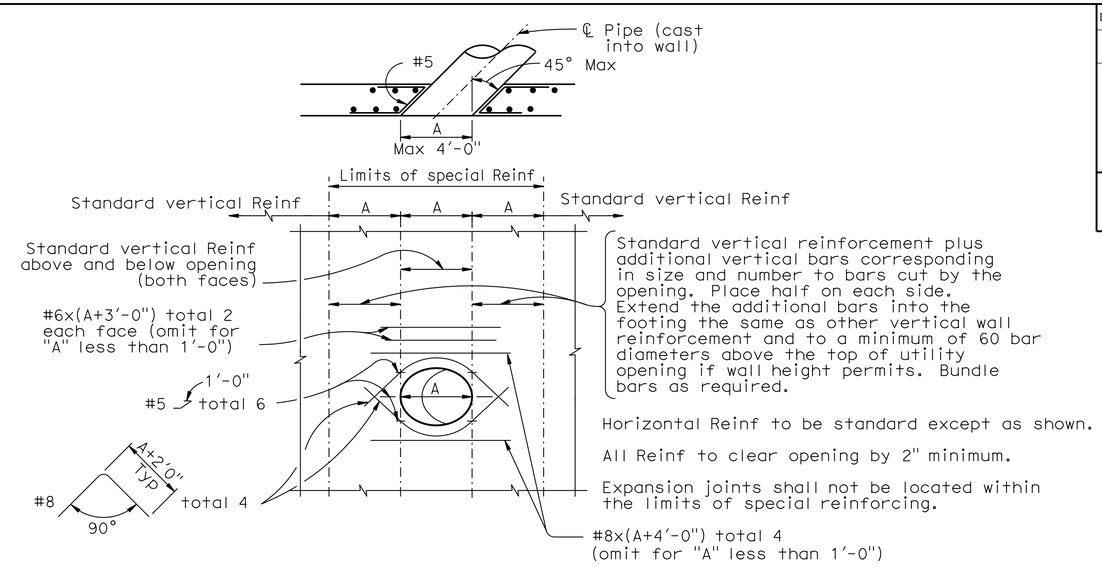

WALL OPENING DETAIL

NOTE: The rebar lengths shown are maximum and shall be adjusted due to the limitations of space.

No Scale

To be used at inlet, outlet and overflow pipe locations

NOTES:

1. For section locations, see "Layout No. 1 " sheet.
2. For wall and footing reinforcement details, see Typical Section on "Wall Details" sheet.

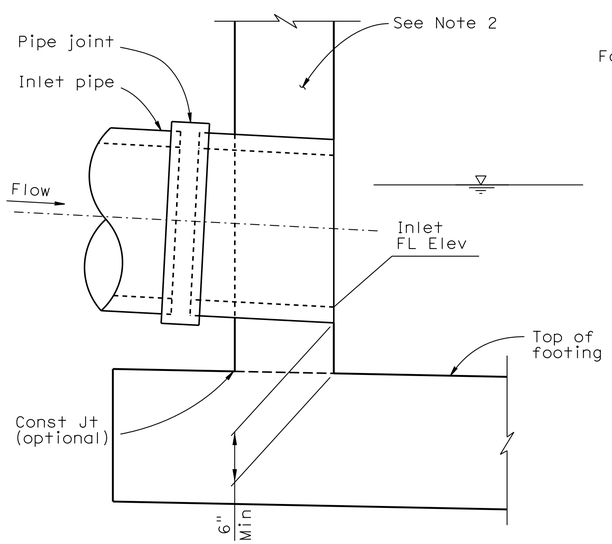

SECTION A - A

No Scale

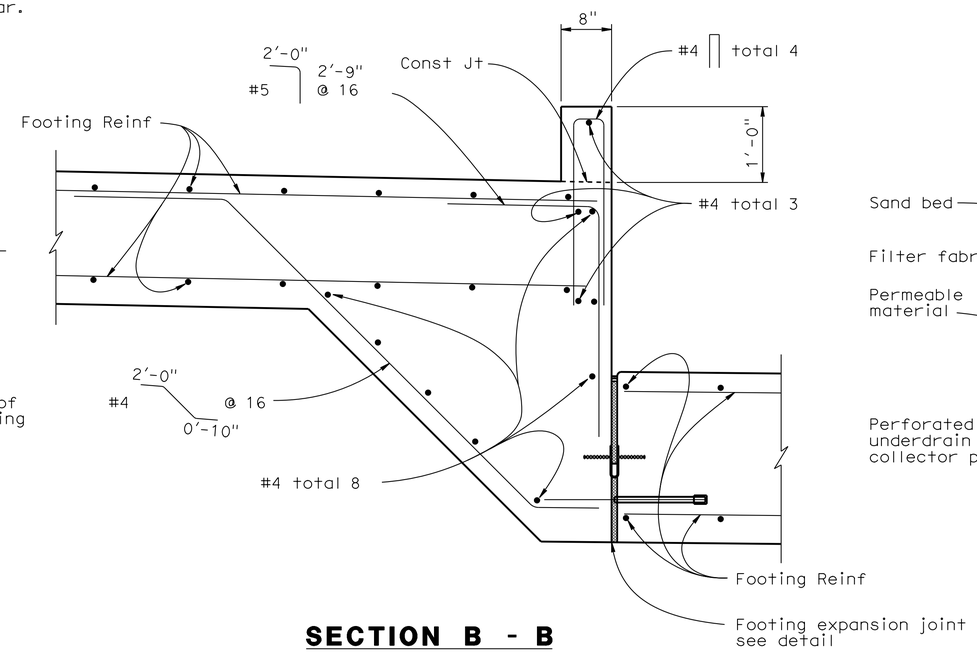

SECTION B - B

No Scale

(Gabion wall and other details not shown for clarity)

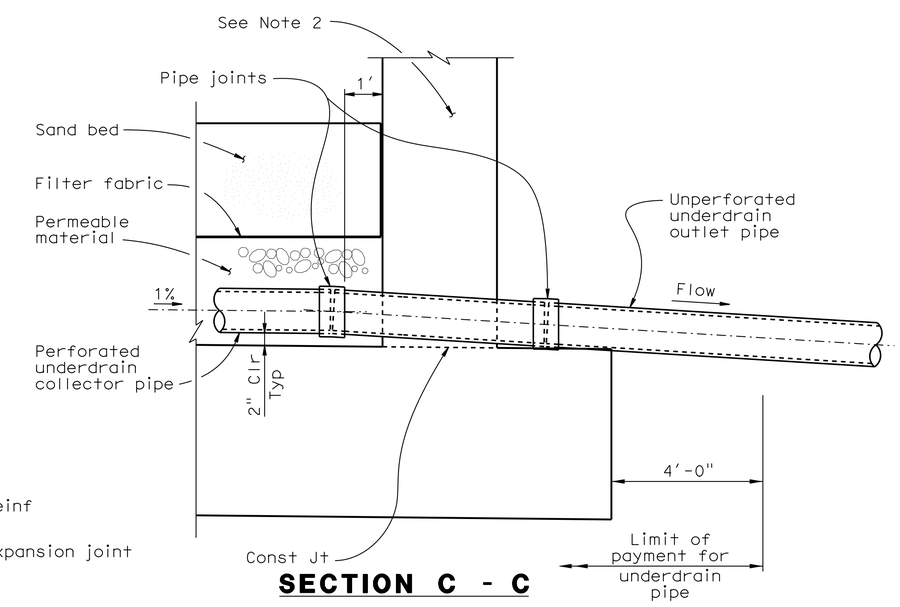

SECTION C - C

No Scale

AUSTIN VAULT SAND FILTER DETAILS No. 1

DRAINAGE DETAILS

NO SCALE

DD-28

STATE OF CALIFORNIA - DEPARTMENT OF TRANSPORTATION
Caltrans®
HYDRAULICS

FUNCTIONAL SUPERVISOR: TIMOTHY B. SOBELMAN
CALCULATED-DESIGNED BY: D. WANG
CHECKED BY: L. HE
REVISED BY
DATE REVISED

LAST REVISION 06-09-12
DATE PLOTTED => 12-JUN-2013
TIME PLOTTED => 16:31

Dist	COUNTY	ROUTE	POST MILES TOTAL PROJECT	SHEET No.	TOTAL SHEETS
07	LA	10	33.2/37.2	231	1475

Timothy B Sobelman 6-3-09
REGISTERED CIVIL ENGINEER DATE

6-10-13
PLANS APPROVAL DATE

REGISTERED PROFESSIONAL ENGINEER TIMOTHY B. SOBELMAN No. 59249 Exp. 6-30-13 CIVIL STATE OF CALIFORNIA

THE STATE OF CALIFORNIA OR ITS OFFICERS OR AGENTS SHALL NOT BE RESPONSIBLE FOR THE ACCURACY OR COMPLETENESS OF SCANNED COPIES OF THIS PLAN SHEET.

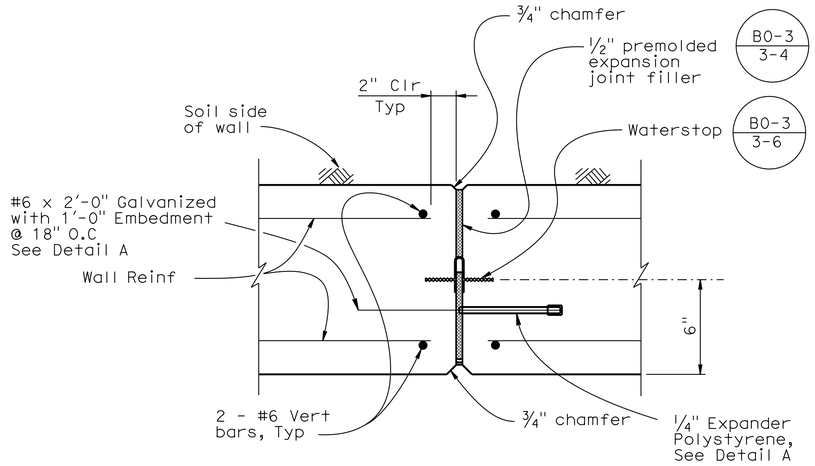

WALL EXPANSION JOINT DETAIL - PLAN SECTION

No Scale

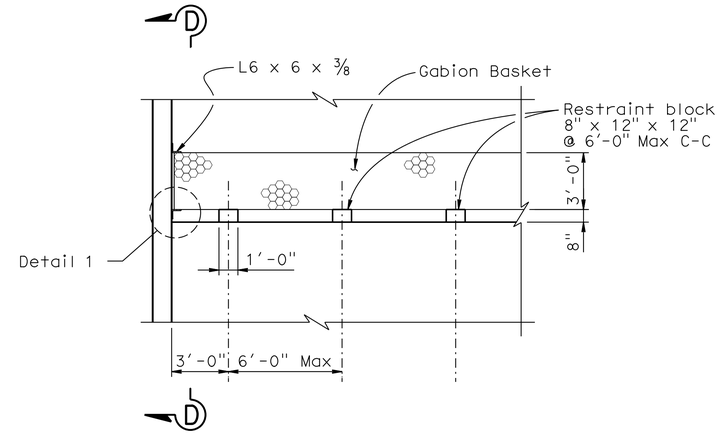

RESTRAINT BLOCK DETAIL

No Scale

Notes:

1. Stagger splices unless noted otherwise.

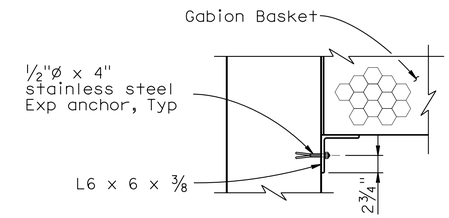

DETAIL 1

No Scale

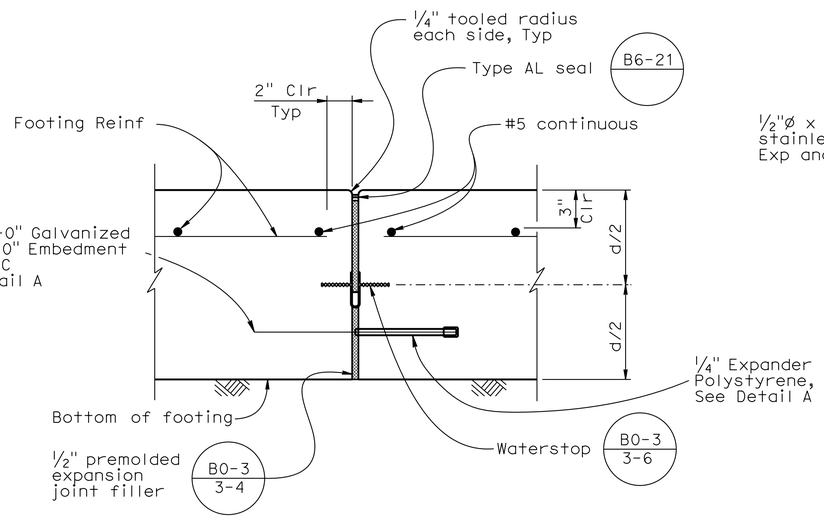

FOOTING EXPANSION JOINT DETAIL

No Scale

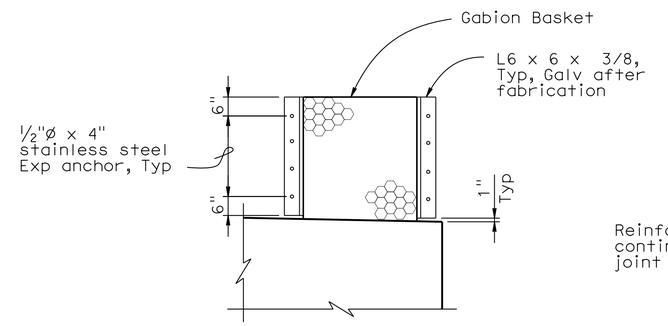

SECTION D - D

No Scale

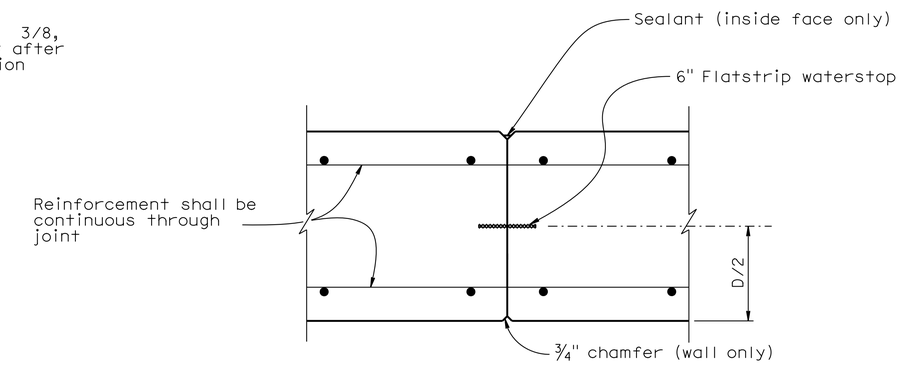

WALL CONSTRUCTION JOINT DETAIL

No Scale

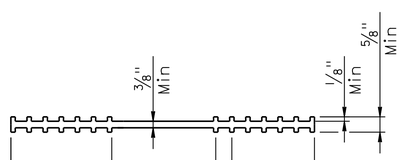

6" FLATSTRIP WATER STOP DETAIL

No Scale

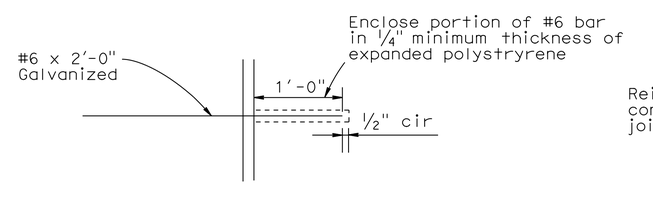

DETAIL A

No Scale

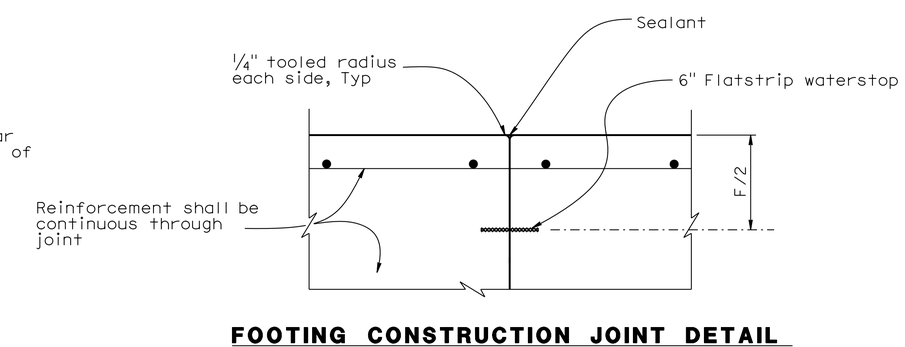

FOOTING CONSTRUCTION JOINT DETAIL

No Scale

AUSTIN VAULT SAND FILTER DETAILS No. 2

DRAINAGE DETAILS

NO SCALE **DD-29**

STATE OF CALIFORNIA - DEPARTMENT OF TRANSPORTATION
Caltrans HYDRAULICS

FUNCTIONAL SUPERVISOR: TIMOTHY B. SOBELMAN
CALCULATED-DESIGNED BY: D. WANG
CHECKED BY: L. HE
REVISED BY
DATE REVISED

LAST REVISION 06-09-12
DATE PLOTTED => 12-JUN-2013
TIME PLOTTED => 17:06

Dist	COUNTY	ROUTE	POST MILES TOTAL PROJECT	SHEET No.	TOTAL SHEETS
07	LA	10	33.2/37.2	232	1475

Timothy G Sobelman 6-3-09
REGISTERED CIVIL ENGINEER DATE

6-10-13
PLANS APPROVAL DATE

REGISTERED PROFESSIONAL ENGINEER TIMOTHY B. SOBELMAN No. 59249 Exp. 6-30-09 CIVIL STATE OF CALIFORNIA

THE STATE OF CALIFORNIA OR ITS OFFICERS OR AGENTS SHALL NOT BE RESPONSIBLE FOR THE ACCURACY OR COMPLETENESS OF SCANNED COPIES OF THIS PLAN SHEET.

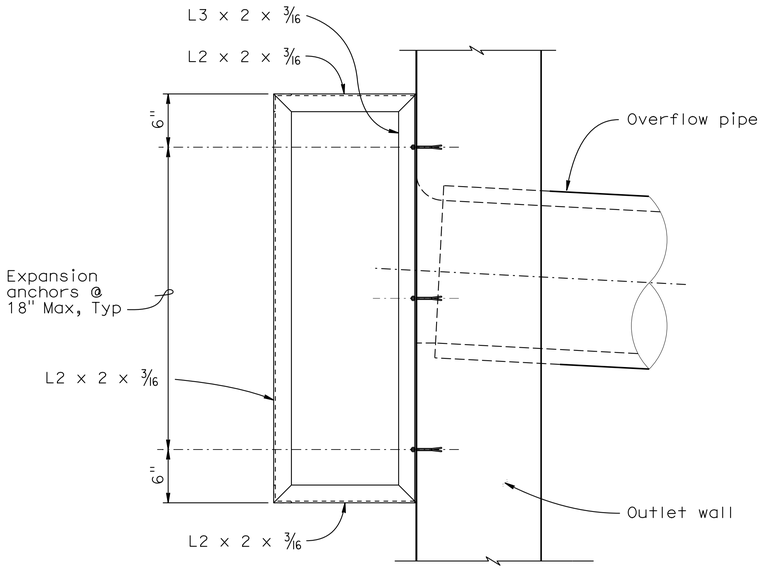

TRASH SCREEN - SIDE ELEVATION
No scale

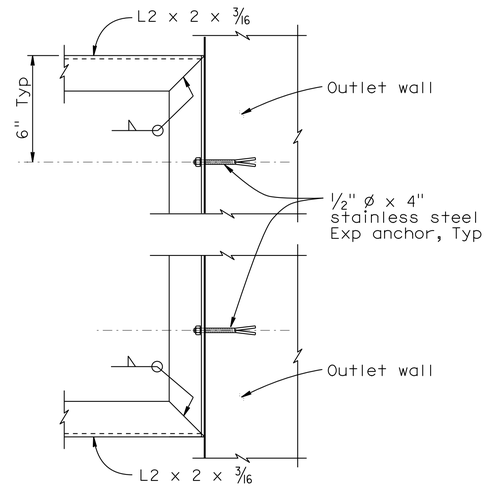

SECTION F - F
No Scale

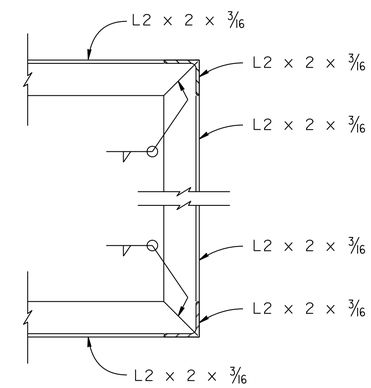

SECTION E - E
No Scale

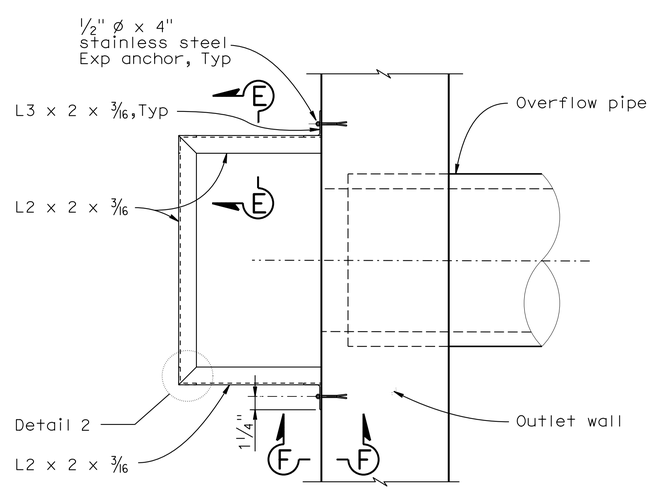

TRASH SCREEN - PLAN
No Scale

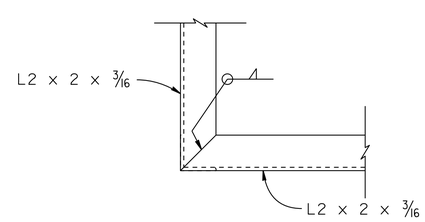

DETAIL 2
No Scale

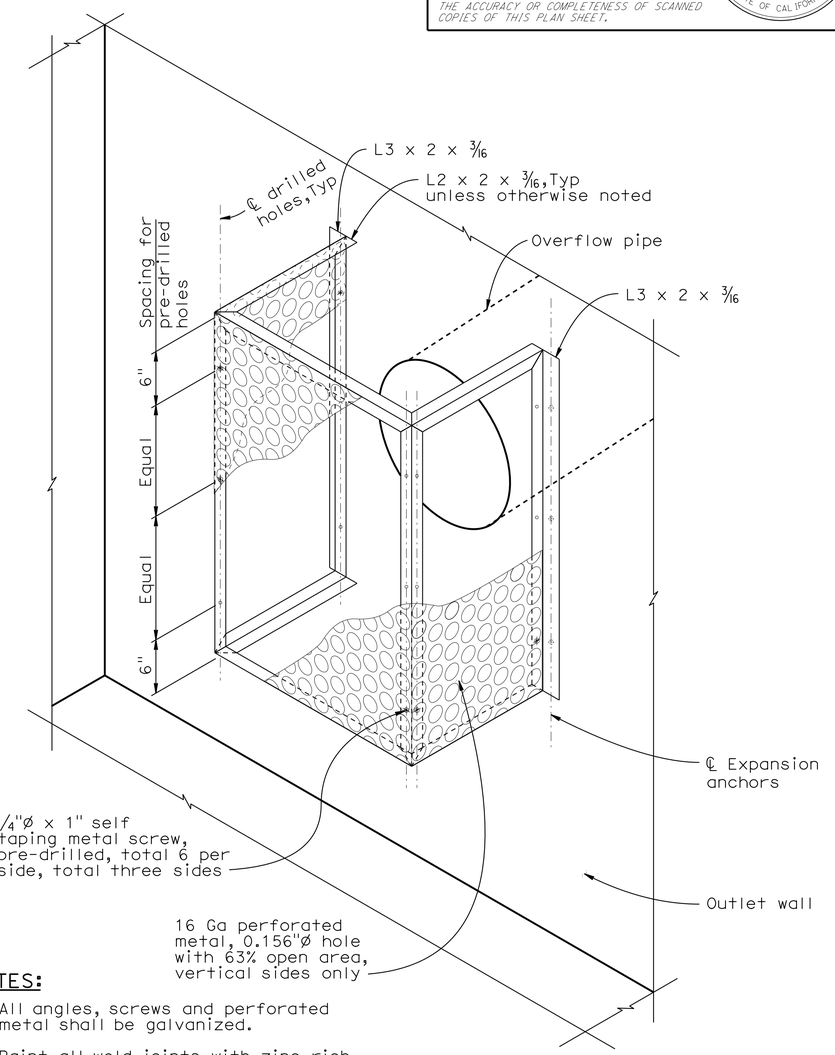

NOTES:

1. All angles, screws and perforated metal shall be galvanized.
2. Paint all weld joints with zinc rich paint or galvanize after welding.

ISOMETRIC VIEW - TRASH SCREEN
No scale

NOTE: Metal hole ø exaggerated for emphasis.

AUSTIN VAULT SAND FILTER DETAILS No. 3

DRAINAGE DETAILS
NO SCALE **DD-30**

STATE OF CALIFORNIA - DEPARTMENT OF TRANSPORTATION
Caltrans® HYDRAULICS
FUNCTIONAL SUPERVISOR: TIMOTHY B. SOBELMAN
CALCULATED-DESIGNED BY: D. WANG
CHECKED BY: L. HE
REVISED BY / DATE REVISED

17:06 12-JUN-2013 s119571 S:\projects\71170ul\71170uic030.dgn

LAST REVISION 06-09-12 | DATE PLOTTED => 12-JUN-2013 | TIME PLOTTED => 17:06

Dist	COUNTY	ROUTE	POST MILES TOTAL PROJECT	SHEET No.	TOTAL SHEETS
07	LA	10	33.2/37.2	233	1475

REGISTERED CIVIL ENGINEER 6-3-09 DATE

6-10-13
PLANS APPROVAL DATE

REGISTERED PROFESSIONAL ENGINEER TIMOTHY B. SOBELMAN No. 59249 Exp. 6-30-13 CIVIL STATE OF CALIFORNIA

THE STATE OF CALIFORNIA OR ITS OFFICERS OR AGENTS SHALL NOT BE RESPONSIBLE FOR THE ACCURACY OR COMPLETENESS OF SCANNED COPIES OF THIS PLAN SHEET.

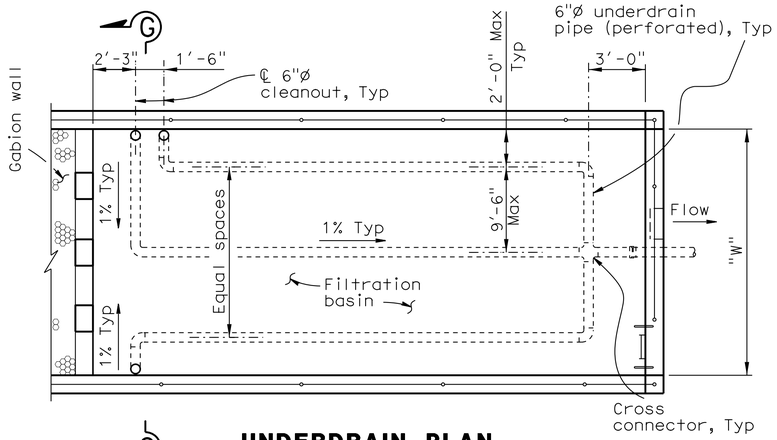

UNDERDRAIN PLAN (FILTRATION BASIN)

"W" = 15' - 21'
No Scale
AVSF Type = (S or L 3500)

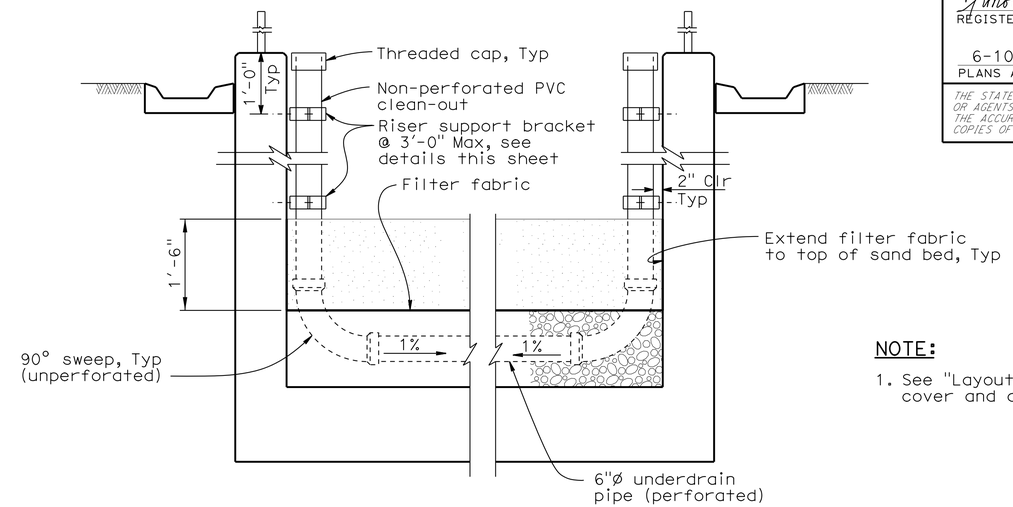

SECTION G - G

No Scale

NOTE:

1. See "Layout No. 1" sheet for Typical cover and depth of sand bed.

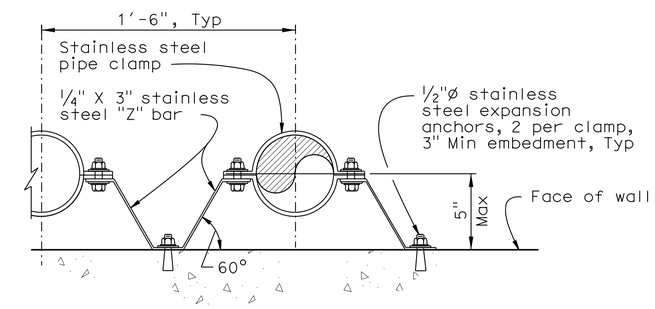

RISER SUPPORT BRACKET DETAIL

No Scale

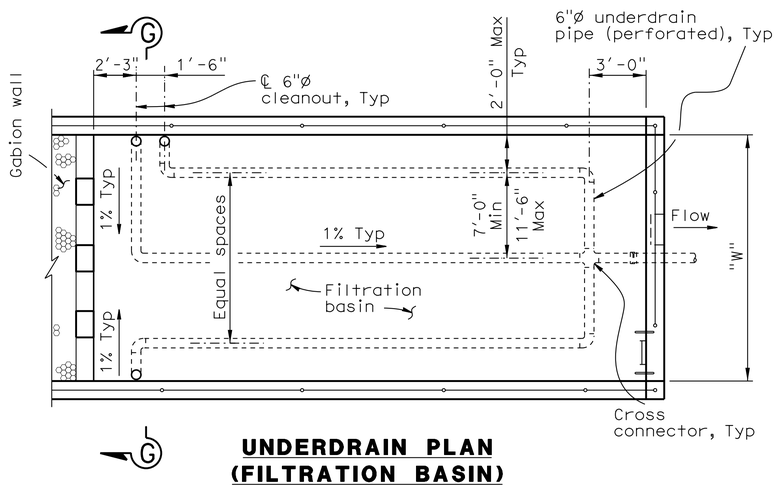

UNDERDRAIN PLAN (FILTRATION BASIN)

"W" = 18' - 24' - 27'
No Scale
AVSF Type = (S or L 5000) L 10000)

No Scale

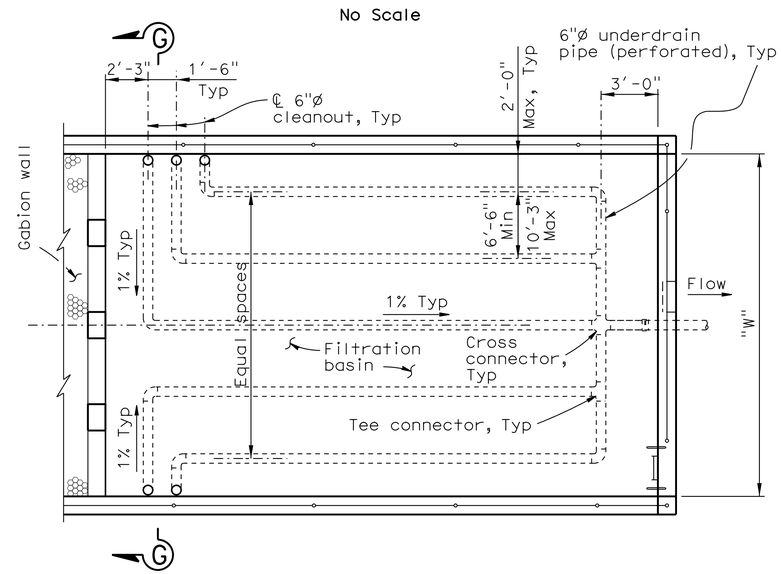

UNDERDRAIN PLAN (FILTRATION BASIN)

"W" = 30' - 36' - 45'
No Scale
AVSF Type = (S 10000, S or L 15000)

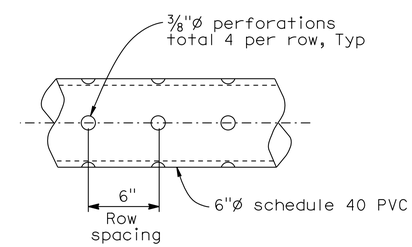

PERFORATED UNDERDRAIN PIPE

No Scale

AUSTIN VAULT SAND FILTER DETAILS No. 4

DRAINAGE DETAILS

NO SCALE

DD-31

STATE OF CALIFORNIA - DEPARTMENT OF TRANSPORTATION
Caltrans® HYDRAULICS

FUNCTIONAL SUPERVISOR: TIMOTHY B. SOBELMAN
CALCULATED-DESIGNED BY: D. WANG
CHECKED BY: L. HE
REVISED BY
DATE REVISED

LAST REVISION 06-09-12
DATE PLOTTED => 12-JUN-2013
TIME PLOTTED => 17:06

Dist	COUNTY	ROUTE	POST MILES TOTAL PROJECT	SHEET No.	TOTAL SHEETS
07	LA	10	33.2/37.2	234	1475

Timothy B. Sobelman 6-3-09
REGISTERED CIVIL ENGINEER DATE

6-10-13
PLANS APPROVAL DATE

REGISTERED PROFESSIONAL ENGINEER TIMOTHY B. SOBELMAN No. 59249 Exp. 6-30-13 CIVIL STATE OF CALIFORNIA

THE STATE OF CALIFORNIA OR ITS OFFICERS OR AGENTS SHALL NOT BE RESPONSIBLE FOR THE ACCURACY OR COMPLETENESS OF SCANNED COPIES OF THIS PLAN SHEET.

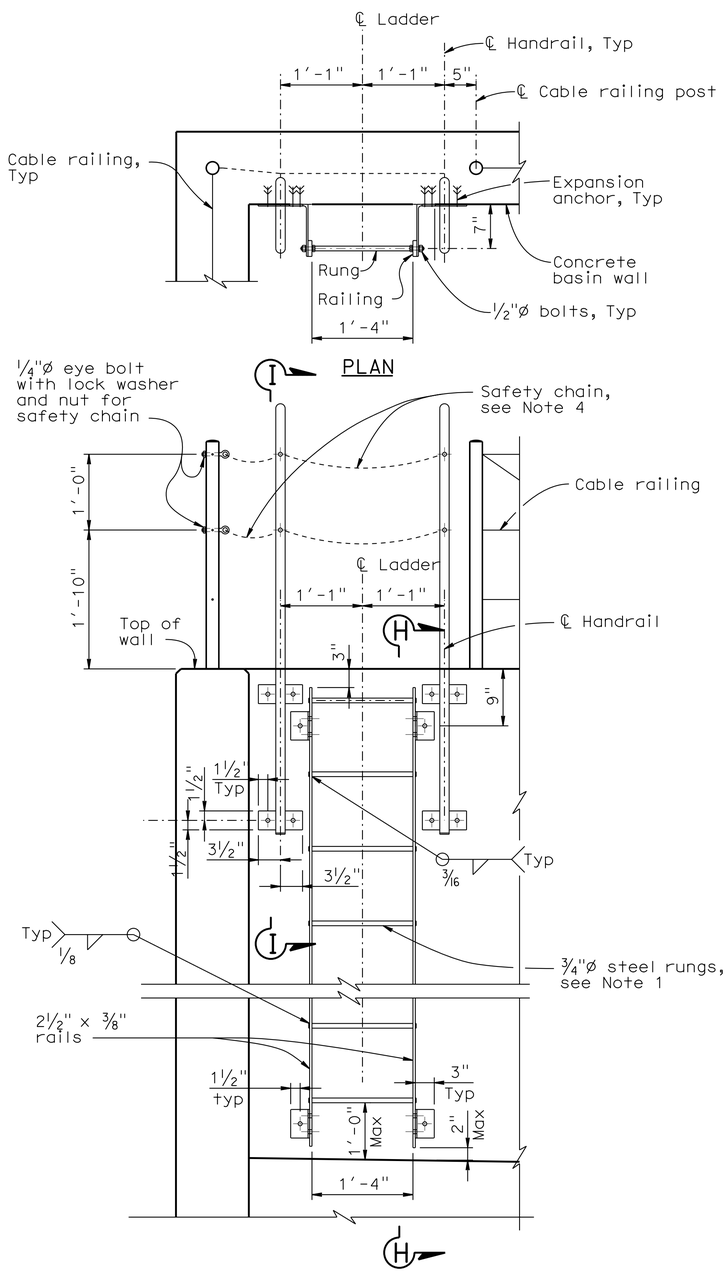

ELEVATION

LADDER

No Scale

NOTE: Cable railing not shown for clarity.

NOTES:

1. The distance between rungs shall not exceed 1′-0" and shall be uniform throughout the length of wall.
2. Hardware shall be galvanized after fabrication.
3. Grind exposed corners to 3/16" radius.
4. Safety chain shall be ¼" galvanized steel coil chain, approximately 12 links per foot. Length shall be minimum which allows lock-up of safety railing. Minimum of two safety chains per safety railing. Material shall be grade 43 high test chain ASTM A413.

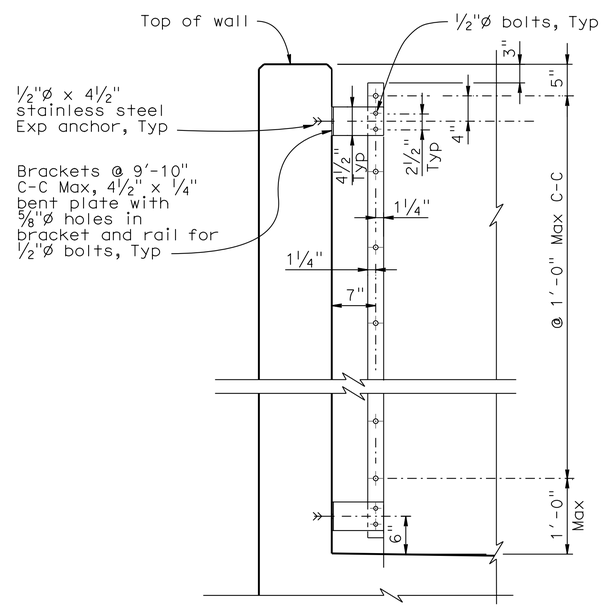

SECTION H - H

No Scale

NOTE: Handrail and cable railing not shown for clarity.

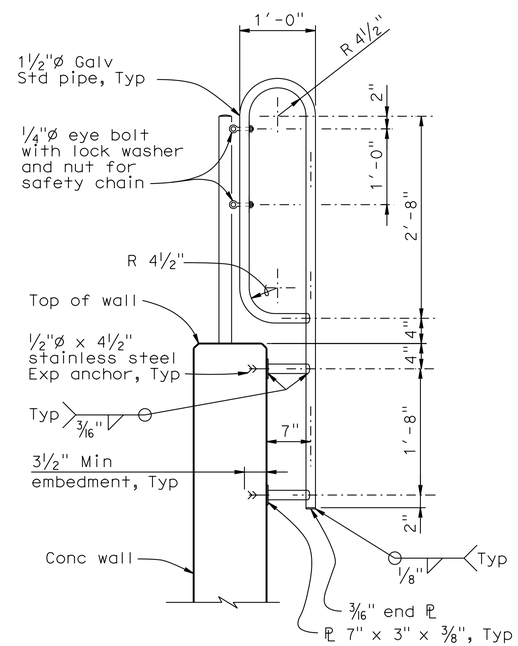

SECTION I - I

No Scale

AUSTIN VAULT SAND FILTER MISCELLANEOUS DETAILS No. 1

DRAINAGE DETAILS

NO SCALE **DD-32**

STATE OF CALIFORNIA - DEPARTMENT OF TRANSPORTATION
Caltrans® HYDRAULICS
FUNCTIONAL SUPERVISOR: TIMOTHY B. SOBELMAN
CALCULATED-DESIGNED BY: D. WANG
CHECKED BY: L. HE
REVISED BY
DATE REVISED

LAST REVISION 06-09-12
DATE PLOTTED => 12-JUN-2013
TIME PLOTTED => 17:06

Dist	COUNTY	ROUTE	POST MILES TOTAL PROJECT	SHEET No.	TOTAL SHEETS
07	LA	10	33.2/37.2	235	1475

REGISTERED CIVIL ENGINEER 4-17-12 DATE

6-10-13
PLANS APPROVAL DATE

REGISTERED PROFESSIONAL ENGINEER DAVE BHALLA No. 34350 Exp. 9/30/13 CIVIL STATE OF CALIFORNIA

THE STATE OF CALIFORNIA OR ITS OFFICERS OR AGENTS SHALL NOT BE RESPONSIBLE FOR THE ACCURACY OR COMPLETENESS OF SCANNED COPIES OF THIS PLAN SHEET.

NOTES: PIPE JOINTS ARE STANDARD OR AS NOTED ON PLANS

(N) NOT A SEPARATE PAY ITEM, FOR INFORMATION ONLY.

DRAINAGE QUANTITIES

DRAINAGE SHEET No.	DRAINAGE SYSTEM No. (⬡)	DRAINAGE UNIT (◯)	HEIGHT OF INLET H OR V	MINOR CONCRETE (MINOR STRUCTURE)	MINOR CONCRETE (Conc DRAIN)	MISCELLANEOUS IRON AND STEEL	STRUCTURAL CONCRETE, BOX CULVERT	MINOR CONCRETE (BACKFILL)	REMOVE CONCRETE	REMOVE ASPHALT CONCRETE PAVEMENT	ABANDON PIPELINE	SAND BACKFILL	ABANDON INLET	DITCH EXCAVATION	REMOVE INLET	CAP INLET	ADJUST INLET	24" SLOTTED CORRUGATED STEEL PIPE (0.079" THICK)	18" CORRUGATED STEEL PIPE (0.079" THICK)	BAR REINFORCING STEEL (BOX CULVERT)	REMOVE PIPE	8" PLASTIC PIPE	18" REINFORCED CONCRETE PIPE	24" REINFORCED CONCRETE PIPE	30" REINFORCED CONCRETE PIPE	(N) FRAME AND GRATING FOR CATCH BASINS (APWA 311-2)	(N) TYPE 24-12 FRAME AND GRATE	(N) STEEL PLATE CLOSURE	ROCK SLOPE PROTECTION (FACING, METHOD B)	ROCK SLOPE PROTECTION FABRIC (CLASS 8)	(N) MAXIMUM COVER	(N) PLACE HOT MIX ASPHALT (MISCELLANEOUS AREA)	HOT MIX ASPHALT (TYPE A)	AUSTIN VAULT: MINOR CONCRETE (GUTTER)	AUSTIN VAULT: STRUCTURAL CONCRETE	AUSTIN VAULT: STRUCTURE EXCAVATION	AUSTIN VAULT: STRUCTURE BACKFILL	AUSTIN VAULT: SAND BED	AUSTIN VAULT: BAR REINFORCING STEEL	AUSTIN VAULT: GABION	AUSTIN VAULT: CABLE RAILING	AUSTIN VAULT: FILTER FABRIC	AUSTIN VAULT: PERMEABLE MATERIAL	AUSTIN VAULT: MISCELLANEOUS METAL	AUSTIN VAULT: 6" PLASTIC PIPE UNDERDRAIN	AUSTIN VAULT: 6" PERFORATED PLASTIC PIPE UNDERDRAIN	DESCRIPTION	STATION
			F+	CY	CY	LB	CY	CY	CY	CY	LF	CY	EA	CY	EA	EA	EA	LF	LF	LB	LF	LF	LF	LF	LF	EA	EA	EA	CY	SQYD	F+	SQYD	TON	CY	CY	CY	CY	CY	LB	CY	LF	SQYD	CY	LB	LF	LF		
D-1	1	a							9.7																																						REMOVE Conc PARAPET REMOVE Conc CHANNEL	80.85′ R+ 1759+25.26 - 89.38′ R+ 1759+16.23 ℄ Fwy
		b					9.9													1460.0																											DOUBLE RCB (4′ x 4′ x 15.7′)	
		c															2																														ADJUST INLET (2 EACH)	25.4′ R+ 6+56.00 ℄ PUENTE Ave 25.4′ L+ 6+56.00 ℄ PUENTE Ave
		d															1																														ADJUST INLET	25.4′ L+ 8+85.00 ℄ PUENTE Ave
		e															1																														ADJUST INLET	25.4′ R+ 8+85.00 ℄ PUENTE Ave
		f															1																														ADJUST INLET	27.4′ L+ 11+85.00 ℄ PUENTE Ave
		g															1																														ADJUST INLET	27.4′ R+ 11+85.00 ℄ PUENTE Ave
	1A	a																			16.0																										REMOVE PIPE	
		b																						6.0						3.0																	24" RCP	
		c	5.3	2.53		652																					2																				TYPE GT3 INLET	22.0′ R+ 61+60.00 ⅊ RAMP "P4"
	2	a							19.7																																						REMOVE Conc PARAPET REMOVE Conc CHANNEL	82.95′ L+ 1761+09.78 - 120.96′ L+ 1761+62.18 ℄ Fwy
		b					26.3													3878.1																											DOUBLE RCB (4′ x 4′ x 41.7′)	107.27′ L+ 1761+43.70 ℄ Fwy
		c		6.8																																										TRANSITION STRUCTURE No. 3	120.96′ L+ 1761+62.18 ℄ Fwy
	3	a	3.3	1.02		326																					1																				TYPE G1 INLET	36.72′ R+ 65+87.40 ⅊ RAMP "P4"
		b																				14.3								3.3																	18" RCP	
		c		0.91																																											STRAIGHT HEADWALL	50.02′ R+ 65+93.22 ⅊ RAMP "P4"
		d												0.8																																	BIOFILTRATION SWALE (V-DITCH)	
		e		0.91																																											STRAIGHT HEADWALL	66.91′ R+ 66+46.91 ⅊ RAMP "P4"
		f																				14.0								4.0																	18" RCP	
		g	2.37	0.95		326																					1																				TYPE G1 INLET	68.20′ R+ 66+70.00 ⅊ RAMP "P4"
		h						10.0																50.8						3.5																	18" RCP WITH REINFORCED Conc BACKFILL	
SHEET TOTAL			13.12			1304	36.2	10.0	29.4					0.8			6			5338.1	16.0		28.3	56.8			4																					

DRAINAGE QUANTITIES
DQ-1

STATE OF CALIFORNIA - DEPARTMENT OF TRANSPORTATION
Caltrans® HYDRAULICS

FUNCTIONAL SUPERVISOR: DAVE BHALLA
CALCULATED-DESIGNED BY: C. P. NGUYEN
CHECKED BY: D. BHALLA
REVISED BY
DATE REVISED

LAST REVISION DATE PLOTTED => 12-JUN-2013
06-09-12 TIME PLOTTED => 16:31

NOTES: PIPE JOINTS ARE STANDARD OR AS NOTED ON PLANS

(N) NOT A SEPARATE PAY ITEM, FOR INFORMATION ONLY.

Dist	COUNTY	ROUTE	POST MILES TOTAL PROJECT	SHEET No.	TOTAL SHEETS
07	LA	10	33.2/37.2	236	1475

REGISTERED CIVIL ENGINEER 4-17-12 DATE

6-10-13
PLANS APPROVAL DATE

REGISTERED PROFESSIONAL ENGINEER DAVE BHALLA No. 34350 Exp. 9/30/13 CIVIL STATE OF CALIFORNIA

THE STATE OF CALIFORNIA OR ITS OFFICERS OR AGENTS SHALL NOT BE RESPONSIBLE FOR THE ACCURACY OR COMPLETENESS OF SCANNED COPIES OF THIS PLAN SHEET.

DRAINAGE QUANTITIES

DRAINAGE SHEET No.	DRAINAGE SYSTEM No. ⬡	DRAINAGE UNIT ◯	HEIGHT OF INLET H OR V (F†)	MINOR CONCRETE (MINOR STRUCTURE) (CY)	MINOR CONCRETE (Conc DRAIN) (CY)	MISCELLANEOUS IRON AND STEEL (LB)	STRUCTURAL CONCRETE, BOX CULVERT (CY)	MINOR CONCRETE (BACKFILL) (CY)	REMOVE CONCRETE (CY)	REMOVE ASPHALT CONCRETE PAVEMENT (CY)	ABANDON PIPELINE (LF)	SAND BACKFILL (CY)	ABANDON INLET (EA)	DITCH EXCAVATION (CY)	REMOVE INLET (EA)	CAP INLET (EA)	ADJUST INLET (EA)	24" SLOTTED CORRUGATED STEEL PIPE (0.079" THICK) (LF)	18" CORRUGATED STEEL PIPE (0.079" THICK) (LF)	BAR REINFORCING STEEL (BOX CULVERT) (LB)	REMOVE PIPE (LF)	8" PLASTIC PIPE (LF)	18" REINFORCED CONCRETE PIPE (LF)	24" REINFORCED CONCRETE PIPE (LF)	30" REINFORCED CONCRETE PIPE (LF)	(N) FRAME AND GRATING FOR CATCH BASINS (APWA 311-2) (EA)	(N) TYPE 24-12 FRAME AND GRATE (EA)	(N) STEEL PLATE CLOSURE (EA)	ROCK SLOPE PROTECTION (FACING, METHOD B) (CY)	ROCK SLOPE PROTECTION FABRIC (CLASS 8) (SQYD)	(N) MAXIMUM COVER (F†)	PLACE HOT MIX ASPHALT (MISCELLANEOUS AREA) (SQYD)	HOT MIX ASPHALT (TYPE A) (TON)	AUSTIN VAULT: MINOR CONCRETE (GUTTER) (CY)	STRUCTURAL CONCRETE (CY)	STRUCTURE EXCAVATION (CY)	STRUCTURE BACKFILL (CY)	SAND BED (CY)	BAR REINFORCING STEEL (LB)	GABION (CY)	CABLE RAILING (LF)	FILTER FABRIC (SQYD)	PERMEABLE MATERIAL (CY)	MISCELLANEOUS METAL (LB)	6" PLASTIC PIPE UNDERDRAIN (LF)	6" PERFORATED PLASTIC PIPE UNDERDRAIN (LF)	DESCRIPTION	STATION
D-1	4	a														1																																	CAP INLET	10.4′ L† 66+90.00 ℄ RAMP "P4"
		b																					16.0									4.2																	18" RCP	
		c	4.2	1.21	1.22	326																					1																					TYPE G1 INLET W/APRON	14.2′ L† 66+81.27 ℄ RAMP "P4"
D-1	5	a																						10.0								5.0																	24" RCP	
		b		1.20																																													STRAIGHT HEADWALL	91.73′ R† 66+18.24 ℄ RAMP "P6"
		c												44.2																																			BIOFILTRATION SWALE (TRAPEZOIDAL) L=156.6′	91.73′ R† 66+18.24 - 52.84′ R† 69+08.63 ℄ RAMP "P6"
		d		1.20																																													STRAIGHT HEADWALL	52.84′ R† 69+08.63 ℄ RAMP "P6"
		e																						33.0								4.0																	24" RCP	
		f	3.5	1.50		478																					2																					GD-1 INLET	35.35′ R† 69+38.00 ℄ RAMP "P6"
D-1	6	a											1																																			ABANDON INLET	26.9′ L† 68+23.00 ℄ RAMP "P2"
		b									45.0	3.0																																				ABANDON PIPELINE	
		c											1																																			ABANDON INLET	73.8′ L† 1767+98.32 ℄ Fwy
		d									124.0	8.1																																				ABANDON PIPELINE	
		e											1																																			ABANDON INLET	64.2′ L† 1766+74.80 ℄ Fwy
		f									90.0	5.9																																				ABANDON PIPELINE	
		g															1																															ADJUST INLET	27.7′ L† 65+94.00 ℄ RAMP "P3"
		h	5.6	2.7		652																					2																					TYPE GT3 INLET	22.0′ L† 64+04.25 ℄ RAMP "P3"
		i																					149.5									3.0																	18" RCP	
		j	2.9	1.85		326																					1																					TYPE G2 INLET	79.0′ L† 1767+40.00 ℄ Fwy
SHEET TOTAL				9.66	1.22	1782					259.0	17.0	3	44.2		1	1						165.5	43.0			6																						

DRAINAGE QUANTITIES
DQ-2

STATE OF CALIFORNIA - DEPARTMENT OF TRANSPORTATION
Caltrans HYDRAULICS

FUNCTIONAL SUPERVISOR: DAVE BHALLA
CALCULATED-DESIGNED BY: C. P. NGUYEN
CHECKED BY: D. BHALLA
REVISED BY
DATE REVISED

LAST REVISION DATE PLOTTED => 12-JUN-2013
06-09-12 TIME PLOTTED => 16:31

NOTES: PIPE JOINTS ARE STANDARD OR AS NOTED ON PLANS

(N) NOT A SEPARATE PAY ITEM, FOR INFORMATION ONLY.

Dist	COUNTY	ROUTE	POST MILES TOTAL PROJECT	SHEET No.	TOTAL SHEETS
07	LA	10	33.2/37.2	237	1475

REGISTERED CIVIL ENGINEER 4-17-12 DATE

6-10-13
PLANS APPROVAL DATE

REGISTERED PROFESSIONAL ENGINEER DAVE BHALLA No. 34350 Exp. 9/30/13 CIVIL STATE OF CALIFORNIA

THE STATE OF CALIFORNIA OR ITS OFFICERS OR AGENTS SHALL NOT BE RESPONSIBLE FOR THE ACCURACY OR COMPLETENESS OF SCANNED COPIES OF THIS PLAN SHEET.

DRAINAGE QUANTITIES

DRAINAGE SHEET No.	DRAINAGE SYSTEM No.	DRAINAGE UNIT	HEIGHT OF INLET H OR V	MINOR CONCRETE (MINOR STRUCTURE)	MINOR CONCRETE (Conc DRAIN)	MISCELLANEOUS IRON AND STEEL	STRUCTURAL CONCRETE, BOX CULVERT	MINOR CONCRETE (BACKFILL)	REMOVE CONCRETE	REMOVE ASPHALT CONCRETE PAVEMENT	ABANDON PIPELINE	SAND BACKFILL	ABANDON INLET	DITCH EXCAVATION	REMOVE INLET	CAP INLET	ADJUST INLET	24" SLOTTED CORRUGATED STEEL PIPE (0.079" THICK)	18" CORRUGATED STEEL PIPE (0.079" THICK)	BAR REINFORCING STEEL (BOX CULVERT)	REMOVE PIPE	8" PLASTIC PIPE	18" REINFORCED CONCRETE PIPE	24" REINFORCED CONCRETE PIPE	30" REINFORCED CONCRETE PIPE	(N) FRAME AND GRATING FOR CATCH BASINS (APWA 311-2)	(N) TYPE 24-12 FRAME AND GRATE	(N) STEEL PLATE CLOSURE	ROCK SLOPE PROTECTION (FACING, METHOD B)	ROCK SLOPE PROTECTION FABRIC (CLASS 8)	(N) MAXIMUM COVER	PLACE HOT MIX ASPHALT (MISCELLANEOUS AREA)	HOT MIX ASPHALT (TYPE A)	AUSTIN VAULT: MINOR CONCRETE (GUTTER)	AUSTIN VAULT: STRUCTURAL CONCRETE	AUSTIN VAULT: STRUCTURE EXCAVATION	AUSTIN VAULT: STRUCTURE BACKFILL	AUSTIN VAULT: SAND BED	AUSTIN VAULT: BAR REINFORCING STEEL	AUSTIN VAULT: GABION	AUSTIN VAULT: CABLE RAILING	AUSTIN VAULT: FILTER FABRIC	AUSTIN VAULT: PERMEABLE MATERIAL	AUSTIN VAULT: MISCELLANEOUS METAL	AUSTIN VAULT: 6" PLASTIC PIPE UNDERDRAIN	AUSTIN VAULT: 6" PERFORATED PLASTIC PIPE UNDERDRAIN	DESCRIPTION	STATION
			F+	CY	CY	LB	CY	CY	CY	CY	LF	CY	EA	CY	EA	EA	EA	LF	LF	LB	LF	LF	LF	LF	LF	EA	EA	EA	CY	SQYD	F+	SQYD	TON	CY	CY	CY	CY	CY	LB	CY	LF	SQYD	CY	LB	LF	LF		
D-1	6	k																					100.0								4.0																18" RCP	
		L	3.9	1.54		326																					1																				TYPE G2 INLET	79.0' L+ 1768+42.77 ℄ Fwy
		m																					26.0								4.4																18" RCP	
		n	5.1	1.85		326																					1																				TYPE G2 INLET	21.0' L+ 67+46.28 ⅊ RAMP "P2"
		o																					151.2								4.4																18" RCP	
		p	6.1	2.10		326																					1																				TYPE G2 INLET	21.0' L+ 69+00.00 ⅊ RAMP "P2"
		q					13.6													4152							1																				2.0' X 1.0' X 86.5' RCB	
		r	1.74	0.95		326																																								TYPE G1 INLET	47.98 L+ 69+40.00 ⅊ RAMP "P1"
D-2	7	a	3.61	1.52		580																					2																				GD-1 INLET	91.0' R+ 1774+81.90 ℄ Fwy
		b							0.4																																						REMOVE Exist SIDEWALK CULVERT	91.0' R+ 1774+81.90 ℄ Fwy
		c		0.4		174																						1																				SIDEWALK CULVERT WITH STEEL PLATE; L=3.0'	94.0' R+ 1774+81.90 ℄ Fwy
D-2	8	a	3.67	1.48		326																					1																				TYPE G2 INLET	91.0' R+ 1777+81.55 ℄ Fwy
		b							0.4																																						REMOVE Exist SIDEWALK CULVERT	91.0' R+ 1777+81.55 ℄ Fwy
		c		0.4		174																						1																				SIDEWALK CULVERT WITH STEEL PLATE; L=3.0'	94.0' R+ 1777+81.55 ℄ Fwy
D-2	9	a	3.73	1.50		326																					1																				TYPE G2 INLET	91.0' R+ 1781+37.27 ℄ Fwy
		b							0.4																																						REMOVE Exist SIDEWALK CULVERT	91.0' R+ 1781+37.27 ℄ Fwy
		c		0.4		174																						1																				SIDEWALK CULVERT WITH STEEL PLATE; L=3.0'	94.0' R+ 1781+37.27 ℄ Fwy
SHEET TOTAL			12.14			3058	13.6		1.2											4152			277.2				8	3																				

DRAINAGE QUANTITIES
DQ-3

STATE OF CALIFORNIA - DEPARTMENT OF TRANSPORTATION
Caltrans®
HYDRAULICS

FUNCTIONAL SUPERVISOR: DAVE BHALLA
CALCULATED-DESIGNED BY: C. P. NGUYEN
CHECKED BY: D. BHALLA
REVISED BY
DATE REVISED

LAST REVISION DATE PLOTTED => 17-JUN-2013
TIME PLOTTED => 13:02

NOTES: PIPE JOINTS ARE STANDARD OR AS NOTED ON PLANS

(N) NOT A SEPARATE PAY ITEM, FOR INFORMATION ONLY.

Dist	COUNTY	ROUTE	POST MILES TOTAL PROJECT	SHEET No.	TOTAL SHEETS
07	LA	10	33.2/37.2	238	1475

REGISTERED CIVIL ENGINEER 4-17-12 DATE

6-10-13
PLANS APPROVAL DATE

REGISTERED PROFESSIONAL ENGINEER DAVE BHALLA No. 34350 Exp. 9/30/13 CIVIL STATE OF CALIFORNIA

THE STATE OF CALIFORNIA OR ITS OFFICERS OR AGENTS SHALL NOT BE RESPONSIBLE FOR THE ACCURACY OR COMPLETENESS OF SCANNED COPIES OF THIS PLAN SHEET.

DRAINAGE QUANTITIES

DRAINAGE SHEET No.	DRAINAGE SYSTEM No.	DRAINAGE UNIT	HEIGHT OF INLET H OR V	MINOR CONCRETE (MINOR STRUCTURE)	MINOR CONCRETE (Conc DRAIN)	MISCELLANEOUS IRON AND STEEL	STRUCTURAL CONCRETE, BOX CULVERT	MINOR CONCRETE (BACKFILL)	REMOVE CONCRETE	REMOVE ASPHALT CONCRETE PAVEMENT	ABANDON PIPELINE	SAND BACKFILL	ABANDON INLET	DITCH EXCAVATION	REMOVE INLET	CAP INLET	ADJUST INLET	24" SLOTTED CORRUGATED STEEL PIPE (0.079" THICK)	18" CORRUGATED STEEL PIPE (0.079" THICK)	BAR REINFORCING STEEL (BOX CULVERT)	REMOVE PIPE	8" PLASTIC PIPE	18" REINFORCED CONCRETE PIPE	24" REINFORCED CONCRETE PIPE	30" REINFORCED CONCRETE PIPE	(N) FRAME AND GRATING FOR CATCH BASINS (APWA 311-2)	(N) TYPE 24-12 FRAME AND GRATE	(N) STEEL PLATE CLOSURE	ROCK SLOPE PROTECTION (FACING, METHOD B)	ROCK SLOPE PROTECTION FABRIC (CLASS 8)	(N) MAXIMUM COVER	PLACE HOT MIX ASPHALT (MISCELLANEOUS AREA)	HOT MIX ASPHALT (TYPE A)	AUSTIN VAULT MINOR CONCRETE (GUTTER)	AUSTIN VAULT STRUCTURAL CONCRETE	AUSTIN VAULT STRUCTURE EXCAVATION	AUSTIN VAULT STRUCTURE BACKFILL	AUSTIN VAULT SAND BED	AUSTIN VAULT BAR REINFORCING STEEL	AUSTIN VAULT GABION	AUSTIN VAULT CABLE RAILING	AUSTIN VAULT FILTER FABRIC	AUSTIN VAULT PERMEABLE MATERIAL	AUSTIN VAULT MISCELLANEOUS METAL	AUSTIN VAULT 6" PLASTIC PIPE UNDERDRAIN	AUSTIN VAULT 6" PERFORATED PLASTIC PIPE UNDERDRAIN	DESCRIPTION	STATION
			F+	CY	CY	LB	CY	CY	CY	CY	LF	CY	EA	CY	EA	EA	EA	LF	LF	LB	LF	LF	LF	LF	LF	EA	EA	EA	CY	SQYD	F+	SQYD	TON	CY	CY	CY	CY	CY	LB	CY	LF	SQYD	CY	LB	LF	LF		
D-2	10	a									20.0	2.3																																			ABANDON PIPELINE (SLOTTED PIPE)	
		b											1																																		ABANDON INLET	77.0' L+ 1779+80.80 ℄ Fwy
		c									12.8	1.5																																			ABANDON PIPELINE	
		d	6.4	2.34		580																					2																				GD-1 INLET	91.0' L+ 1779+80.80 ℄ Fwy
D-2	11	a																					317.3								6.4																24" RCP	
		b	5.6	2.10		580																					2																				GD-1 INLET	91.0' L+ 1783+00.00 ℄ Fwy
		c																					297.0								5.6																24" RCP	
D-3		d	5.4	2.05		580																					2																				GD-1 INLET	91.0' L+ 1786+00.00 ℄ Fwy
		e																					297.0								5.4																24" RCP	
		f	5.2	1.99		580																					2																				GD-1 INLET	91.0' L+ 1789+00.00 ℄ Fwy
		g																					230.0								5.2																24" RCP	
		h	5.0	1.93		580																					2																				GD-1 INLET	91.0' L+ 1791+33.22 ℄ Fwy
		i																					264.0								5.0																24" RCP	
		j	4.8	1.87		580																					2																				GD-1 INLET	91.0' L+ 1795+00.00 ℄ Fwy
		k	5.0	1.93		580													4.4								2																				GD-1 INLET 18" RSP RISER	91.0' L+ 1792+33.27 ℄ Fwy
D-4	12	a	1.7	1.35		580																					2																				GD-1 INLET 18" RSP RISER	91.0' L+ 1805+10.00 ℄ Fwy
		b							0.4																																						REMOVE INTERFERING CONCRETE	
		c									7.4	0.9																																			ABANDON PIPELINE	
		d											1																																		ABANDON INLET	77.2' L+ 1805+10.00 ℄ Fwy
SHEET TOTAL				15.56		4640			0.4		40.2	4.7	2						4.4				1405.3				16																					

DRAINAGE QUANTITIES
DQ-4

STATE OF CALIFORNIA - DEPARTMENT OF TRANSPORTATION
Caltrans
HYDRAULICS

FUNCTIONAL SUPERVISOR: DAVE BHALLA
CALCULATED-DESIGNED BY: D. BHALLA
CHECKED BY: C. P. NGUYEN
REVISED BY
DATE REVISED

LAST REVISION DATE PLOTTED => 17-JUN-2013
TIME PLOTTED => 13:02

NOTES: PIPE JOINTS ARE STANDARD OR AS NOTED ON PLANS

(N) NOT A SEPARATE PAY ITEM, FOR INFORMATION ONLY.

Dist	COUNTY	ROUTE	POST MILES TOTAL PROJECT	SHEET No.	TOTAL SHEETS
07	LA	10	33.2/37.2	239	1475

REGISTERED CIVIL ENGINEER 4-17-12 DATE

6-10-13
PLANS APPROVAL DATE

REGISTERED PROFESSIONAL ENGINEER DAVE BHALLA No. 34350 Exp. 9/30/13 CIVIL STATE OF CALIFORNIA

THE STATE OF CALIFORNIA OR ITS OFFICERS OR AGENTS SHALL NOT BE RESPONSIBLE FOR THE ACCURACY OR COMPLETENESS OF SCANNED COPIES OF THIS PLAN SHEET.

DRAINAGE QUANTITIES

DRAINAGE SHEET No.	DRAINAGE SYSTEM No. (⬡)	DRAINAGE UNIT (◯)	HEIGHT OF INLET H OR V	MINOR CONCRETE (MINOR STRUCTURE)	MINOR CONCRETE (Conc DRAIN)	MISCELLANEOUS IRON AND STEEL	STRUCTURAL CONCRETE, BOX CULVERT	MINOR CONCRETE (BACKFILL)	REMOVE CONCRETE	REMOVE ASPHALT CONCRETE PAVEMENT	ABANDON PIPELINE	SAND BACKFILL	ABANDON INLET	DITCH EXCAVATION	REMOVE INLET	CAP INLET	ADJUST INLET	24" SLOTTED CORRUGATED STEEL PIPE (0.079" THICK)	18" CORRUGATED STEEL PIPE (0.079" THICK)	BAR REINFORCING STEEL (BOX CULVERT)	REMOVE PIPE	8" PLASTIC PIPE	18" REINFORCED CONCRETE PIPE	24" REINFORCED CONCRETE PIPE	30" REINFORCED CONCRETE PIPE	(N) FRAME AND GRATING FOR CATCH BASINS (APWA 311-2)	(N) TYPE 24-12 FRAME AND GRATE	(N) STEEL PLATE CLOSURE	ROCK SLOPE PROTECTION (FACING, METHOD B)	ROCK SLOPE PROTECTION FABRIC (CLASS 8)	(N) MAXIMUM COVER	PLACE HOT MIX ASPHALT (MISCELLANEOUS AREA)	HOT MIX ASPHALT (TYPE A)	AUSTIN VAULT: MINOR CONCRETE (GUTTER)	STRUCTURAL CONCRETE	STRUCTURE EXCAVATION	STRUCTURE BACKFILL	SAND BED	BAR REINFORCING STEEL	GABION	CABLE RAILING	FILTER FABRIC	PERMEABLE MATERIAL	MISCELLANEOUS METAL	6" PLASTIC PIPE UNDERDRAIN	6" PERFORATED PLASTIC PIPE UNDERDRAIN	DESCRIPTION	STATION
			F+	CY	CY	LB	CY	CY	CY	CY	LF	CY	EA	CY	EA	EA	EA	LF	LF	LB	LF	LF	LF	LF	LF	EA	EA	EA	CY	SQYD	F+	SQYD	TON	CY	CY	CY	CY	CY	LB	CY	LF	SQYD	CY	LB	LF	LF		
D-4	13	a	1.92	0.95		326																				1																					TYPE G1 INLET	5+00.00 ℄ RAMP "W3"
		b						26.6														134.5																								18" RCP WITH MINOR CONCRETE (BACKFILL)	
		c	2.44	0.95		326																				1																					TYPE G1 INLET	9.5 R+ 6+45.97 ℄ RAMP "W3"
		d																				16.1									3.4																18" RCP	
		e		0.3																																										JUNCTION STRUCTURE No. 3	12.3′ R+ 6+47.72 ℄ RAMP "W3"
		f		0.3																																										JUNCTION STRUCTURE No. 3	2.38′ L+ 6+60.30 ℄ RAMP "W3"
		g																				7.5									3.1																18" RCP	
		h	3.1	0.97		326																				1																					TYPE G1 INLET	4.0′ L+ 6+75.50 ℄ RAMP "W3"
D-4	14	a					15.8													966																											13.0′ × 2.0′ × 13.8′ RCB	35.3′ R+ 6+09.05 - 26.4′ R+ 6+17.00 ℄ RAMP "W3"
		b					12.8													2583																											8.0′ × 2.0′ × 21.0′ RCB	26.4′ R+ 6+17.00 - 18.0′ R+ 6+36.146 ℄ RAMP "W3"
		c					9.1													1470																											6.0′ × 2.0′ × 21.0′ RCB	11.25′ R+ 6+46.40 - 0.75′ L+ 6+57.13 ℄ RAMP "W3"
		d					172.4													34907																											8.0′ × 2.0′ × 283.8′ RCB	18.0′ R+ 6+36.146 - 27.1′ R+ 9+18.60 ℄ RAMP "W3"
D-4	15	a								2.1																																					REMOVE INTERFERING AC	31.6′ R+ 10+15.00 - 31.3′ R+ 10+32.00 ℄ RAMP "W3"
		b																														15.9	2.5															CONSTRUCT AC CHANNEL	31.6′ R+ 10+15.00 - 31.3′ R+ 10+32.00 ℄ RAMP "W3"
SHEET TOTAL				3.47		978	210.1	26.6		2.1										39926			158.1				3					15.9	2.5														

DRAINAGE QUANTITIES
DQ-5

STATE OF CALIFORNIA - DEPARTMENT OF TRANSPORTATION
Caltrans
HYDRAULICS

FUNCTIONAL SUPERVISOR: DAVE BHALLA
CALCULATED-DESIGNED BY: C. P. NGUYEN
CHECKED BY: D. BHALLA
REVISED BY
DATE REVISED

LAST REVISION DATE PLOTTED => 12-JUN-2013
TIME PLOTTED => 16:31

NOTES: PIPE JOINTS ARE STANDARD OR AS NOTED ON PLANS

(N) NOT A SEPARATE PAY ITEM, FOR INFORMATION ONLY.

Dist	COUNTY	ROUTE	POST MILES TOTAL PROJECT	SHEET No.	TOTAL SHEETS
07	LA	10	33.2/37.2	240	1475

REGISTERED CIVIL ENGINEER 4-17-12 DATE

6-10-13
PLANS APPROVAL DATE

REGISTERED PROFESSIONAL ENGINEER DAVE BHALLA No. 34350 Exp. 9/30/13 CIVIL STATE OF CALIFORNIA

THE STATE OF CALIFORNIA OR ITS OFFICERS OR AGENTS SHALL NOT BE RESPONSIBLE FOR THE ACCURACY OR COMPLETENESS OF SCANNED COPIES OF THIS PLAN SHEET.

DRAINAGE QUANTITIES

DRAINAGE SHEET No.	DRAINAGE SYSTEM No. ⬡	DRAINAGE UNIT ◯	HEIGHT OF INLET H OR V	MINOR CONCRETE (MINOR STRUCTURE)	MINOR CONCRETE (Conc DRAIN)	MISCELLANEOUS IRON AND STEEL	STRUCTURAL CONCRETE, BOX CULVERT	MINOR CONCRETE (BACKFILL)	REMOVE CONCRETE	REMOVE ASPHALT CONCRETE PAVEMENT	ABANDON PIPELINE	SAND BACKFILL	ABANDON INLET	DITCH EXCAVATION	REMOVE INLET	CAP INLET	ADJUST INLET	24" SLOTTED CORRUGATED STEEL PIPE (0.079" THICK)	18" CORRUGATED STEEL PIPE (0.079" THICK)	BAR REINFORCING STEEL (BOX CULVERT)	REMOVE PIPE	8" PLASTIC PIPE	18" REINFORCED CONCRETE PIPE	24" REINFORCED CONCRETE PIPE	30" REINFORCED CONCRETE PIPE	(N) FRAME AND GRATING FOR CATCH BASINS (APWA 311-2)	(N) TYPE 24-12 FRAME AND GRATE	(N) STEEL PLATE CLOSURE	ROCK SLOPE PROTECTION (FACING, METHOD B)	ROCK SLOPE PROTECTION FABRIC (CLASS 8)	(N) MAXIMUM COVER	PLACE HOT MIX ASPHALT (MISCELLANEOUS AREA)	HOT MIX ASPHALT (TYPE A)	AUSTIN VAULT: MINOR CONCRETE (GUTTER)	STRUCTURAL CONCRETE	STRUCTURE EXCAVATION	STRUCTURE BACKFILL	SAND BED	BAR REINFORCING STEEL	GABION	CABLE RAILING	FILTER FABRIC	PERMEABLE MATERIAL	MISCELLANEOUS METAL	6" PLASTIC PIPE UNDERDRAIN	6" PERFORATED PLASTIC PIPE UNDERDRAIN	DESCRIPTION	STATION
			F†	CY	CY	LB	CY	CY	CY	CY	LF	CY	EA	CY	EA	EA	EA	LF	LF	LB	LF	LF	LF	LF	LF	EA	EA	EA	CY	SQYD	F†	SQYD	TON	CY	CY	CY	CY	CY	LB	CY	LF	SQYD	CY	LB	LF	LF		
D-4	16	a														3																															CAP INLET	65.0′ L† 1809+42.58 ℄ Fwy 65.0′ L† 1809+82.54 ℄ Fwy 65.0′ L† 1810+42.68 ℄ Fwy
		b									105.3	6.9																																			ABANDON PIPELINE	
		c	2.0	1.35		580																					2																				GD-1 INLET	79.0′ R† 1810+42.742 ℄ Fwy
		d						11.3														56.7								2.2																	18" RCP WITH MINOR CONCRETE (BACKFILL)	
		e	2.2	1.35		580																					2																				GD-1 INLET	78.5′ R† 1809+83.00 ℄ Fwy
		f						7.9														39.9								2.2																	18" RCP WITH MINOR CONCRETE (BACKFILL)	
		g	2.2	1.35		580																					2																				GD-1 INLET	78.9′ R† 1809+41.733 ℄ Fwy
		h														1																															CAP INLET	5.0′ R† 9+42.00 ⅊ RAMP "W3"
		i	5.82	2.02		326																					1																				TYPE G2 INLET	20.0′ R† 9+41.33 ⅊ RAMP "W3"
D-4	17	a	3.0	1.35		580																					2																				GD-1 INLET	79.0′ R† 1811+84.00 ℄ Fwy
		b						2.2														11.0								3.5																	18" RCP WITH MINOR CONCRETE (BACKFILL)	
		c														1																															CAP INLET	63.7′ R† 1811+84.00 ℄ Fwy
D-4	18	a														1																															CAP INLET	75.0′ L† 1808+07.43 ℄ Fwy
		b						3.2														16.0								2.8																	18" RCP WITH MINOR CONCRETE (BACKFILL)	
		c	2.5	1.35		580																					2																				GD-1 INLET	91.0′ L† 1808+20.00 ℄ Fwy
		d														1																															CAP INLET	78.0′ L† 1809+32.00 ℄ Fwy
		e						2.4														12.0								2.8																	18" RCP WITH MINOR CONCRETE (BACKFILL)	
		f	2.5	1.35		580																					2																				GD-1 INLET	92.0′ R† 1809+40.00 ℄ Fwy
SHEET TOTAL				10.12		3806		27.0			105.3	6.9				7						135.6					13																				

DRAINAGE QUANTITIES
DQ-6

STATE OF CALIFORNIA - DEPARTMENT OF TRANSPORTATION
Caltrans® HYDRAULICS

FUNCTIONAL SUPERVISOR: DAVE BHALLA
CALCULATED-DESIGNED BY: C. P. NGUYEN
CHECKED BY: D. BHALLA
REVISED BY
DATE REVISED

LAST REVISION DATE PLOTTED => 12-JUN-2013
TIME PLOTTED => 16:31
06-09-12

NOTES: PIPE JOINTS ARE STANDARD OR AS NOTED ON PLANS

(N) NOT A SEPARATE PAY ITEM, FOR INFORMATION ONLY.

Dist	COUNTY	ROUTE	POST MILES TOTAL PROJECT	SHEET No.	TOTAL SHEETS
07	LA	10	33.2/37.2	241	1475

REGISTERED CIVIL ENGINEER 4-17-12 DATE

6-10-13
PLANS APPROVAL DATE

REGISTERED PROFESSIONAL ENGINEER DAVE BHALLA No. 34350 Exp. 9/30/13 CIVIL STATE OF CALIFORNIA

THE STATE OF CALIFORNIA OR ITS OFFICERS OR AGENTS SHALL NOT BE RESPONSIBLE FOR THE ACCURACY OR COMPLETENESS OF SCANNED COPIES OF THIS PLAN SHEET.

DRAINAGE QUANTITIES

DRAINAGE SHEET No.	DRAINAGE SYSTEM No.	DRAINAGE UNIT	HEIGHT OF INLET H OR V	MINOR CONCRETE (MINOR STRUCTURE)	MINOR CONCRETE (Conc DRAIN)	MISCELLANEOUS IRON AND STEEL	STRUCTURAL CONCRETE, BOX CULVERT	MINOR CONCRETE (BACKFILL)	REMOVE CONCRETE	REMOVE ASPHALT CONCRETE PAVEMENT	ABANDON PIPELINE	SAND BACKFILL	ABANDON INLET	DITCH EXCAVATION	REMOVE INLET	CAP INLET	ADJUST INLET	24" SLOTTED CORRUGATED STEEL PIPE (0.079" THICK)	18" CORRUGATED STEEL PIPE (0.079" THICK)	BAR REINFORCING STEEL (BOX CULVERT)	REMOVE PIPE	8" PLASTIC PIPE	18" REINFORCED CONCRETE PIPE	24" REINFORCED CONCRETE PIPE	30" REINFORCED CONCRETE PIPE	(N) FRAME AND GRATING FOR CATCH BASINS (APWA 311-2)	(N) TYPE 24-12 FRAME AND GRATE	(N) STEEL PLATE CLOSURE	ROCK SLOPE PROTECTION (FACING, METHOD B)	ROCK SLOPE PROTECTION FABRIC (CLASS 8)	(N) MAXIMUM COVER	PLACE HOT MIX ASPHALT (MISCELLANEOUS AREA)	HOT MIX ASPHALT (TYPE A)	AUSTIN VAULT: MINOR CONCRETE (GUTTER)	AUSTIN VAULT: STRUCTURAL CONCRETE	AUSTIN VAULT: STRUCTURE EXCAVATION	AUSTIN VAULT: STRUCTURE BACKFILL	AUSTIN VAULT: SAND BED	AUSTIN VAULT: BAR REINFORCING STEEL	AUSTIN VAULT: GABION	AUSTIN VAULT: CABLE RAILING	AUSTIN VAULT: FILTER FABRIC	AUSTIN VAULT: PERMEABLE MATERIAL	AUSTIN VAULT: MISCELLANEOUS METAL	AUSTIN VAULT: 6" PLASTIC PIPE UNDERDRAIN	AUSTIN VAULT: 6" PERFORATED PLASTIC PIPE UNDERDRAIN	DESCRIPTION	STATION
			F†	CY	CY	LB	CY	CY	CY	CY	LF	CY	EA	CY	EA	EA	EA	LF	LF	LB	LF	LF	LF	LF	LF	EA	EA	EA	CY	SQYD	F†	SQYD	TON	CY	CY	CY	CY	CY	LB	CY	LF	SQYD	CY	LB	LF	LF		
D-4	19	a														1																															CAP INLET	65.0' L† 1813+40.00 ℄ Fwy
		b									16.0	1.1																																			ABANDON PIPELINE	
D-5		c														1																															CAP INLET	65.0' L† 1813+60.00 ℄ Fwy
		d									47.0	3.1																																			ABANDON PIPELINE	
		e														1																															CAP INLET	65.0' L† 1814+07.00 ℄ Fwy
		f																					11.3								3.6																	18" RCP	
		g	3.7	1.49		326																					1																				TYPE G1 INLET	78.8' L† 1814+13.71 ℄ Fwy
		h														1																															CAP INLET	65.0' L† 1814+82.00 ℄ Fwy
		i																					13.2								4.0																	18" RCP	
		j	3.9	2.05		652																					2																				TYPE GT1 INLET	79.0' L† 1814+73.20 ℄ Fwy
		k														1																															CAP INLET	65.0' L† 1815+82.00 ℄ Fwy
		L																					13.2								3.8																	18" RCP	
		m	3.7	1.98		652																					2																				TYPE GT1 INLET	79.0' L† 1815+74.00 ℄ Fwy
		n														1																															CAP INLET	65.0' L† 1816+86.00 ℄ Fwy
		o	6.4	2.91		652																					2																				TYPE GT3 INLET	79.0' L† 1816+96.00 ℄ Fwy
SHEET TOTAL			8.43			2282					63.0	4.2				6							37.7				7																					

DRAINAGE QUANTITIES
DQ-7

STATE OF CALIFORNIA - DEPARTMENT OF TRANSPORTATION
Caltrans
HYDRAULICS

FUNCTIONAL SUPERVISOR: DAVE BHALLA
CALCULATED-DESIGNED BY: D. BHALLA
CHECKED BY: C. P. NGUYEN
REVISED BY
DATE REVISED

LAST REVISION DATE PLOTTED => 12-JUN-2013
TIME PLOTTED => 16:31

Dist	COUNTY	ROUTE	POST MILES TOTAL PROJECT	SHEET No.	TOTAL SHEETS
07	LA	10	33.2/37.2	242	1475

REGISTERED CIVIL ENGINEER 4-17-12 DATE

6-10-13
PLANS APPROVAL DATE

REGISTERED PROFESSIONAL ENGINEER DAVE BHALLA No. 34350 Exp. 9/30/13 CIVIL STATE OF CALIFORNIA

THE STATE OF CALIFORNIA OR ITS OFFICERS OR AGENTS SHALL NOT BE RESPONSIBLE FOR THE ACCURACY OR COMPLETENESS OF SCANNED COPIES OF THIS PLAN SHEET.

NOTES: PIPE JOINTS ARE STANDARD OR AS NOTED ON PLANS

(N) NOT A SEPARATE PAY ITEM, FOR INFORMATION ONLY.

DRAINAGE QUANTITIES

DRAINAGE SHEET No.	DRAINAGE SYSTEM No.	DRAINAGE UNIT	HEIGHT OF INLET H OR V	MINOR CONCRETE (MINOR STRUCTURE)	MINOR CONCRETE (Conc DRAIN)	MISCELLANEOUS IRON AND STEEL	STRUCTURAL CONCRETE, BOX CULVERT	MINOR CONCRETE (BACKFILL)	REMOVE CONCRETE	REMOVE ASPHALT CONCRETE PAVEMENT	ABANDON PIPELINE	SAND BACKFILL	ABANDON INLET	DITCH EXCAVATION	REMOVE INLET	CAP INLET	ADJUST INLET	24" SLOTTED CORRUGATED STEEL PIPE (0.079" THICK)	18" CORRUGATED STEEL PIPE (0.079" THICK)	BAR REINFORCING STEEL (BOX CULVERT)	REMOVE PIPE	8" PLASTIC PIPE	18" REINFORCED CONCRETE PIPE	24" REINFORCED CONCRETE PIPE	30" REINFORCED CONCRETE PIPE	(N) FRAME AND GRATING FOR CATCH BASINS (APWA 311-2)	(N) TYPE 24-12 FRAME AND GRATE	(N) STEEL PLATE CLOSURE	ROCK SLOPE PROTECTION (FACING, METHOD B)	ROCK SLOPE PROTECTION FABRIC (CLASS 8)	(N) MAXIMUM COVER	PLACE HOT MIX ASPHALT (MISCELLANEOUS AREA)	HOT MIX ASPHALT (TYPE A)	AUSTIN VAULT: MINOR CONCRETE (GUTTER)	AUSTIN VAULT: STRUCTURAL CONCRETE	AUSTIN VAULT: STRUCTURE EXCAVATION	AUSTIN VAULT: STRUCTURE BACKFILL	AUSTIN VAULT: SAND BED	AUSTIN VAULT: BAR REINFORCING STEEL	AUSTIN VAULT: GABION	AUSTIN VAULT: CABLE RAILING	AUSTIN VAULT: FILTER FABRIC	AUSTIN VAULT: PERMEABLE MATERIAL	AUSTIN VAULT: MISCELLANEOUS METAL	AUSTIN VAULT: 6" PLASTIC PIPE UNDERDRAIN	AUSTIN VAULT: 6" PERFORATED PLASTIC PIPE UNDERDRAIN	DESCRIPTION	STATION
			F+	CY	CY	LB	CY	CY	CY	CY	LF	CY	EA	CY	EA	EA	EA	LF	LF	LB	LF	LF	LF	LF	LF	EA	EA	EA	CY	SQYD	F+	SQYD	TON	CY	CY	CY	CY	CY	LB	CY	LF	SQYD	CY	LB	LF	LF		
D-5	20	a														1																															CAP INLET	65.7′ R+ 1813+84.00 ℄ Fwy
		b																					10.8								5.0																18" RCP	
		c	3.8	1.51		326																					1																				TYPE G1 INLET	79.0′ R+ 1813+84.00 ℄ Fwy
D-5	21	a	3.4	1.47		580																					2																				GD-1 INLET	25.8′ R+ 15+80.00 ⅊ RAMP "W7"
		b																					14.2								3.8																18" RCP	
		c														1																															CAP INLET	110.4′ R+ 1815+78.00 ℄ Fwy
		d	6.2	2.13		326																					1																				TYPE G1 INLET	79.0′ R+ 1815+82.00 ℄ Fwy
		e														1																															CAP INLET	65.7′ R+ 1815+85.00 ℄ Fwy
		f														1																															CAP INLET	65.7′ R+ 1816+82.30 ℄ Fwy
		g																					13.0								4.6																18" RCP	
		h	3.9	1.15		326																					1																				TYPE G1 INLET	79.0′ R+ 1816+90.00 ℄ Fwy
D-5	22	a														1																															CAP INLET	15.0′ L+ 18+20.39 ⅊ RAMP "W2"
		b									38.0	2.5																																			ABANDON PIPELINE	
		c														1																															CAP INLET	19.0′ L+ 17+82.44 ⅊ RAMP "W2"
		d	3.9	1.62		580																					2																				GD-1 INLET	23.9′ L+ 17+50.00 ⅊ RAMP "W2"
		e														1																															CAP INLET	31.4′ L+ 17+19.00 ⅊ RAMP "W2"
		f	4.0	1.64		580																					2																				GD-1 INLET	19.8′ L+ 17+93.40 ⅊ RAMP "W2"
		g																						18.7																							24" RCP	
		h		1.2																																											STRAIGHT HEADWALL	28.4′ L+ 17+77.77 ⅊ RAMP "W2"
		i												30.6																																	BIOFILTRATION SWALE (TRAPEZOIDAL)	28.4′ L+ 17+77.77 - 83.4′ L+ 16+21.30 ⅊ RAMP "W2"
		j	4.0	1.2	1.8	326													3.8								1																				TYPE G1 INLET WITH DEPRESSED INLET APRON	82.0′ L+ 16+00.00 ⅊ RAMP "W2"
SHEET TOTAL				11.92	1.8	3044					38.0	2.5		30.6		7			3.8				38.0	18.7			10																					

DRAINAGE QUANTITIES
DQ-8

STATE OF CALIFORNIA - DEPARTMENT OF TRANSPORTATION
Caltrans HYDRAULICS

FUNCTIONAL SUPERVISOR: DAVE BHALLA
CALCULATED-DESIGNED BY: C. P. NGUYEN
CHECKED BY: D. BHALLA
REVISED BY
DATE REVISED

LAST REVISION DATE PLOTTED => 12-JUN-2013
06-09-12 TIME PLOTTED => 16:31

NOTES: PIPE JOINTS ARE STANDARD OR AS NOTED ON PLANS

(N) NOT A SEPARATE PAY ITEM, FOR INFORMATION ONLY.

Dist	COUNTY	ROUTE	POST MILES TOTAL PROJECT	SHEET No.	TOTAL SHEETS
07	LA	10	33.2/37.2	243	1475

REGISTERED CIVIL ENGINEER 4-17-12 DATE

6-10-13
PLANS APPROVAL DATE

REGISTERED PROFESSIONAL ENGINEER DAVE BHALLA No. 34350 Exp. 9/30/13 CIVIL STATE OF CALIFORNIA

THE STATE OF CALIFORNIA OR ITS OFFICERS OR AGENTS SHALL NOT BE RESPONSIBLE FOR THE ACCURACY OR COMPLETENESS OF SCANNED COPIES OF THIS PLAN SHEET.

DRAINAGE QUANTITIES

DRAINAGE SHEET No.	DRAINAGE SYSTEM No.	DRAINAGE UNIT	HEIGHT OF INLET H OR V	MINOR CONCRETE (MINOR STRUCTURE)	MINOR CONCRETE (Conc DRAIN)	MISCELLANEOUS IRON AND STEEL	STRUCTURAL CONCRETE, BOX CULVERT	MINOR CONCRETE (BACKFILL)	REMOVE CONCRETE	REMOVE ASPHALT CONCRETE PAVEMENT	ABANDON PIPELINE	SAND BACKFILL	ABANDON INLET	DITCH EXCAVATION	REMOVE INLET	CAP INLET	ADJUST INLET	24" SLOTTED CORRUGATED STEEL PIPE (0.079" THICK)	18" CORRUGATED STEEL PIPE (0.079" THICK)	BAR REINFORCING STEEL (BOX CULVERT)	REMOVE PIPE	8" PLASTIC PIPE	18" REINFORCED CONCRETE PIPE	24" REINFORCED CONCRETE PIPE	30" REINFORCED CONCRETE PIPE	(N) FRAME AND GRATING FOR CATCH BASINS (APWA 311-2)	(N) TYPE 24-12 FRAME AND GRATE	(N) STEEL PLATE CLOSURE	ROCK SLOPE PROTECTION (FACING, METHOD B)	ROCK SLOPE PROTECTION FABRIC (CLASS 8)	(N) MAXIMUM COVER	PLACE HOT MIX ASPHALT (MISCELLANEOUS AREA)	HOT MIX ASPHALT (TYPE A)	AUSTIN VAULT: MINOR CONCRETE (GUTTER)	AUSTIN VAULT: STRUCTURAL CONCRETE	AUSTIN VAULT: STRUCTURE EXCAVATION	AUSTIN VAULT: STRUCTURE BACKFILL	AUSTIN VAULT: SAND BED	AUSTIN VAULT: BAR REINFORCING STEEL	AUSTIN VAULT: GABION	AUSTIN VAULT: CABLE RAILING	AUSTIN VAULT: FILTER FABRIC	AUSTIN VAULT: PERMEABLE MATERIAL	AUSTIN VAULT: MISCELLANEOUS METAL	AUSTIN VAULT: 6" PLASTIC PIPE UNDERDRAIN	AUSTIN VAULT: 6" PERFORATED PLASTIC PIPE UNDERDRAIN	DESCRIPTION	STATION
			F+	CY	CY	LB	CY	CY	CY	CY	LF	CY	EA	CY	EA	EA	EA	LF	LF	LB	LF	LF	LF	LF	LF	EA	EA	EA	CY	SQYD	F+	SQYD	TON	CY	CY	CY	CY	CY	LB	CY	LF	SQYD	CY	LB	LF	LF		
D-5	23	a														1																															CAP INLET	2.3' R+ 20+09.13 ℄ RAMP "W1"
		b									18.0	1.2																																			ABANDON PIPELINE	
		c														1																															CAP INLET	4.0' R+ 19+88.34 ℄ RAMP "W1"
		d									42.5	2.8																																			ABANDON PIPELINE	
		e														1																															CAP INLET	14.3' L+ 19+40.30 ℄ RAMP "W1"
		f	6.1	3.37		652																					2																				TYPE GT4 INLET	22.4' L+ 19+47.54 ℄ RAMP "W1"
		g																					29.7								6.1																24" RCP	
		h	5.7	2.13		580																					2																				GD-1 INLET	20.7' L+ 19+87.20 ℄ RAMP "W1"
		i																					22.8								5.7																24" RCP	
		j	5.6	2.10		580																					2																				GD-1 INLET	20.0' L+ 20+15.68 ℄ RAMP "W1"
D-5	24	a	3.5	1.06		326																					1																				TYPE G1 INLET	30.0' R+ 19+07.20 ℄ RAMP "W3"
		b																	4.6																												18" CSP RISER	
D-5	25	a													1																																REMOVE INLET	5.4' L+ 22+50.87 ℄ RAMP "W3"
		b																			22.0																										REMOVE PIPE	
		c															1																														ADJUST INLET	4.0' L+ 22+75.71 ℄ RAMP "W3"
		d	3.9	1.54		326																					1																				TYPE G2 INLET	5.4' L+ 22+45.00 ℄ RAMP "W3"
		e																				27.2									4.2																18" RCP	
SHEET TOTAL			10.2			2464					60.5	4.0			1	3	1		4.6		22.0		27.2	52.5			8																					

STATE OF CALIFORNIA - DEPARTMENT OF TRANSPORTATION
Caltrans
HYDRAULICS

FUNCTIONAL SUPERVISOR: DAVE BHALLA
CALCULATED-DESIGNED BY: D. BHALLA
CHECKED BY: C. P. NGUYEN
REVISED BY
DATE REVISED

DRAINAGE QUANTITIES
DQ-9

LAST REVISION DATE PLOTTED => 12-JUN-2013
TIME PLOTTED => 16:31

NOTES: PIPE JOINTS ARE STANDARD OR AS NOTED ON PLANS

(N) NOT A SEPARATE PAY ITEM, FOR INFORMATION ONLY.

Dist	COUNTY	ROUTE	POST MILES TOTAL PROJECT	SHEET No.	TOTAL SHEETS
07	LA	10	33.2/37.2	244	1475

REGISTERED CIVIL ENGINEER 4-17-12 DATE

6-10-13
PLANS APPROVAL DATE

REGISTERED PROFESSIONAL ENGINEER DAVE BHALLA No. 34350 Exp. 9/30/13 CIVIL STATE OF CALIFORNIA

THE STATE OF CALIFORNIA OR ITS OFFICERS OR AGENTS SHALL NOT BE RESPONSIBLE FOR THE ACCURACY OR COMPLETENESS OF SCANNED COPIES OF THIS PLAN SHEET.

DRAINAGE QUANTITIES

DRAINAGE SHEET No.	DRAINAGE SYSTEM No.	DRAINAGE UNIT	HEIGHT OF INLET H OR V	MINOR CONCRETE (MINOR STRUCTURE)	MINOR CONCRETE (Conc DRAIN)	MISCELLANEOUS IRON AND STEEL	STRUCTURAL CONCRETE, BOX CULVERT	MINOR CONCRETE (BACKFILL)	REMOVE CONCRETE	REMOVE ASPHALT CONCRETE PAVEMENT	ABANDON PIPELINE	SAND BACKFILL	ABANDON INLET	DITCH EXCAVATION	REMOVE INLET	CAP INLET	ADJUST INLET	24" SLOTTED CORRUGATED STEEL PIPE (0.079" THICK)	18" CORRUGATED STEEL PIPE (0.079" THICK)	BAR REINFORCING STEEL (BOX CULVERT)	REMOVE PIPE	8" PLASTIC PIPE	18" REINFORCED CONCRETE PIPE	24" REINFORCED CONCRETE PIPE	30" REINFORCED CONCRETE PIPE	(N) FRAME AND GRATING FOR CATCH BASINS (APWA 311-2)	(N) TYPE 24-12 FRAME AND GRATE	(N) STEEL PLATE CLOSURE	ROCK SLOPE PROTECTION (FACING, METHOD B)	ROCK SLOPE PROTECTION FABRIC (CLASS 8)	(N) MAXIMUM COVER	PLACE HOT MIX ASPHALT (MISCELLANEOUS AREA)	HOT MIX ASPHALT (TYPE A)	AUSTIN VAULT MINOR CONCRETE (GUTTER)	AUSTIN VAULT STRUCTURAL CONCRETE	AUSTIN VAULT STRUCTURE EXCAVATION	AUSTIN VAULT STRUCTURE BACKFILL	AUSTIN VAULT SAND BED	AUSTIN VAULT BAR REINFORCING STEEL	AUSTIN VAULT GABION	AUSTIN VAULT CABLE RAILING	AUSTIN VAULT FILTER FABRIC	AUSTIN VAULT PERMEABLE MATERIAL	AUSTIN VAULT MISCELLANEOUS METAL	6" PLASTIC PIPE UNDERDRAIN	6" PERFORATED PLASTIC PIPE UNDERDRAIN	DESCRIPTION	STATION
			F†	CY	CY	LB	CY	CY	CY	CY	LF	CY	EA	CY	EA	EA	EA	LF	LF	LB	LF	LF	LF	LF	LF	EA	EA	EA	CY	SQYD	F†	SQYD	TON	CY	CY	CY	CY	CY	LB	CY	LF	SQYD	CY	LB	LF	LF		
D-5	26	a	3.8	1.13		326																				1																					TYPE G1 INLET	38.0′ R† 14+58.78 ℄ RAMP "W1"
		b																				28.4								4.0																	18" RCP	
		c	4.0	2.1		652																				2																					TYPE GT3 INLET	38.0′ R† 14+25.92 ℄ RAMP "W1"
		d																			128.5																										REMOVE PIPE	
		e																				34.0								6.0																	18" RCP	
		f																																2.8	135	610	194	44	31519	11	143	109	35	115	27.0	135.0	AUSTIN VAULT SAND FILTER S-3500-4.5	Beg GUTTER 57.02′ R† 13+95.31 END GUTTER 120.01′ R† 13+90.00
		g																																										39.9		6" PLASTIC PIPE	
		h																				42.0								5.9																	18" RCP	
D-5	27	a													1																																REMOVE INLET	5.0′ L† 18+75.00 S℄SB PACIFIC Ave
		b													1																																REMOVE INLET	2.6′ L† 18+63.80 S℄SB PACIFIC Ave
		c									33.0	2.2																																		ABANDON PIPE	
		d													1																																REMOVE INLET	41.0′ R† 18+50.51 ℄ NB PACIFIC Ave
		e	5.0	1.54		560																			1																						CURB OPENING CATCH BASIN WITH GRATING	41.0′ R† 18+50.40 ℄ NB PACIFIC Ave
		f																					58.0							6.1																	24" RCP	
SHEET TOTAL				4.77		1538					33.0	2.2			3						128.5	104.4	58.0		1	3								2.8	135	610	194	44	31519	11	143	109	35	115	66.9	135.0		

DRAINAGE QUANTITIES
DQ-10

STATE OF CALIFORNIA - DEPARTMENT OF TRANSPORTATION
Caltrans® HYDRAULICS

FUNCTIONAL SUPERVISOR: DAVE BHALLA
CALCULATED-DESIGNED BY: D. BHALLA
CHECKED BY: C. P. NGUYEN
REVISED BY
DATE REVISED

LAST REVISION 06-09-12
DATE PLOTTED => 12-JUN-2013
TIME PLOTTED => 16:31

NOTES: PIPE JOINTS ARE STANDARD OR AS NOTED ON PLANS

(N) NOT A SEPARATE PAY ITEM, FOR INFORMATION ONLY.

Dist	COUNTY	ROUTE	POST MILES TOTAL PROJECT	SHEET No.	TOTAL SHEETS
07	LA	10	33.2/37.2	245	1475

REGISTERED CIVIL ENGINEER 4-17-12 DATE

6-10-13
PLANS APPROVAL DATE

REGISTERED PROFESSIONAL ENGINEER DAVE BHALLA No. 34350 Exp. 9/30/13 CIVIL STATE OF CALIFORNIA

THE STATE OF CALIFORNIA OR ITS OFFICERS OR AGENTS SHALL NOT BE RESPONSIBLE FOR THE ACCURACY OR COMPLETENESS OF SCANNED COPIES OF THIS PLAN SHEET.

DRAINAGE QUANTITIES

DRAINAGE SHEET No.	DRAINAGE SYSTEM No.	DRAINAGE UNIT	HEIGHT OF INLET H OR V	MINOR CONCRETE (MINOR STRUCTURE)	MINOR CONCRETE (Conc DRAIN)	MISCELLANEOUS IRON AND STEEL	STRUCTURAL CONCRETE, BOX CULVERT	MINOR CONCRETE (BACKFILL)	REMOVE CONCRETE	REMOVE ASPHALT CONCRETE PAVEMENT	ABANDON PIPELINE	SAND BACKFILL	ABANDON INLET	DITCH EXCAVATION	REMOVE INLET	CAP INLET	ADJUST INLET	24" SLOTTED CORRUGATED STEEL PIPE (0.079" THICK)	18" CORRUGATED STEEL PIPE (0.079" THICK)	BAR REINFORCING STEEL (BOX CULVERT)	REMOVE PIPE	8" PLASTIC PIPE	18" REINFORCED CONCRETE PIPE	24" REINFORCED CONCRETE PIPE	30" REINFORCED CONCRETE PIPE	(N) FRAME AND GRATING FOR CATCH BASINS (APWA 311-2)	(N) TYPE 24-12 FRAME AND GRATE	(N) STEEL PLATE CLOSURE	ROCK SLOPE PROTECTION (FACING, METHOD B)	ROCK SLOPE PROTECTION FABRIC (CLASS 8)	(N) MAXIMUM COVER	PLACE HOT MIX ASPHALT (MISCELLANEOUS AREA)	HOT MIX ASPHALT (TYPE A)	AUSTIN VAULT: MINOR CONCRETE (GUTTER)	STRUCTURAL CONCRETE	STRUCTURE EXCAVATION	STRUCTURE BACKFILL	SAND BED	BAR REINFORCING STEEL	GABION	CABLE RAILING	FILTER FABRIC	PERMEABLE MATERIAL	MISCELLANEOUS METAL	6" PLASTIC PIPE UNDERDRAIN	6" PERFORATED PLASTIC PIPE UNDERDRAIN	DESCRIPTION	STATION
			F†	CY	CY	LB	CY	CY	CY	CY	LF	CY	EA	CY	EA	EA	EA	LF	LF	LB	LF	LF	LF	LF	LF	EA	EA	EA	CY	SQYD	F†	SQYD	TON	CY	CY	CY	CY	CY	LB	CY	LF	SQYD	CY	LB	LF	LF		
D-5	28	a														1																														CAP INLET	80.0′ R† 1822+57.64 ℄ Fwy
		b																					10.0								3.0																18" RCP	
		c	3.0	1.35		580																					2																				GD-1 INLET	20.0′ R† 22+58.25 ⅊ RAMP "W1"
		d														1																															CAP INLET	78.0′ R† 1823+42.84 ℄ Fwy
		e																					11.2								4.0																18" RCP	
		f	3.7	1.55		580																					2																				GD-1 INLET	20.0′ R† 23+47.00 ⅊ RAMP "W1"
		g														1																															CAP INLET	77.0′ R† 1823+82.31 ℄ Fwy
		h																					12.2								3.0																18" RCP	
		i	3.0	1.35		580																					2																				GD-1 INLET	20.0′ R† 23+91.68 ⅊ RAMP "W1"
		j																					287								3.0																18" RCP	
		k	3.1	1.37		580																					2																				GD-1 INLET	91.0′ R† 1826+80.00 ℄ Fwy
D-5	29	a															1																														ADJUST INLET	42.0′ L† 22+00.00 ⅊ SB PACIFIC Ave
		b															1																														ADJUST INLET	42.0′ R† 22+00.00 ⅊ NB PACIFIC Ave
		c															1																														ADJUST INLET	42.0′ R† 20+86.00 ⅊ NB PACIFIC Ave
		d															1																														ADJUST INLET	42.0′ L† 20+24.00 ⅊ NB PACIFIC Ave
D-5	30	a																		944.0																											REMOVE SLOTTED CORRUGATED STEEL PIPE	1823+50.00 ℄ Fwy - 1832+94.00 ℄ Fwy (WESTBOUND)
		b																95.0										1																			24" SLOTTED CORRUGATED STEEL PIPE	
		c	2.5	0.85		326																					1																				CL INLET, CASE 1	1.0′ L† 1824+50.00 ℄ Fwy
		d																97.0										1																			24" SLOTTED CORRUGATED STEEL PIPE	
		e	2.5	0.85		326																					1																				CL INLET, CASE 1	1.0′ L† 1825+50.00 ℄ Fwy
SHEET TOTAL			7.32			2972										3	4	192.0			944.0		320.4				10	2																			

DRAINAGE QUANTITIES
DQ-11

STATE OF CALIFORNIA - DEPARTMENT OF TRANSPORTATION
Caltrans®
HYDRAULICS

FUNCTIONAL SUPERVISOR: DAVE BHALLA
CALCULATED-DESIGNED BY: D. BHALLA
CHECKED BY: C. P. NGUYEN
REVISED BY
DATE REVISED

LAST REVISION DATE PLOTTED => 12-JUN-2013
TIME PLOTTED => 16:31
06-09-12

NOTES: PIPE JOINTS ARE STANDARD OR AS NOTED ON PLANS

(N) NOT A SEPARATE PAY ITEM, FOR INFORMATION ONLY.

Dist	COUNTY	ROUTE	POST MILES TOTAL PROJECT	SHEET No.	TOTAL SHEETS
07	LA	10	33.2/37.2	246	1475

REGISTERED CIVIL ENGINEER 4-17-12 DATE

6-10-13
PLANS APPROVAL DATE

REGISTERED PROFESSIONAL ENGINEER DAVE BHALLA No. 34350 Exp. 9/30/13 CIVIL STATE OF CALIFORNIA

THE STATE OF CALIFORNIA OR ITS OFFICERS OR AGENTS SHALL NOT BE RESPONSIBLE FOR THE ACCURACY OR COMPLETENESS OF SCANNED COPIES OF THIS PLAN SHEET.

DRAINAGE QUANTITIES

DRAINAGE SHEET No.	DRAINAGE SYSTEM No.	DRAINAGE UNIT	HEIGHT OF INLET H OR V	MINOR CONCRETE (MINOR STRUCTURE)	MINOR CONCRETE (Conc DRAIN)	MISCELLANEOUS IRON AND STEEL	STRUCTURAL CONCRETE, BOX CULVERT	MINOR CONCRETE (BACKFILL)	REMOVE CONCRETE	REMOVE ASPHALT CONCRETE PAVEMENT	ABANDON PIPELINE	SAND BACKFILL	ABANDON INLET	DITCH EXCAVATION	REMOVE INLET	CAP INLET	ADJUST INLET	24" SLOTTED CORRUGATED STEEL PIPE (0.079" THICK)	18" CORRUGATED STEEL PIPE (0.079" THICK)	BAR REINFORCING STEEL (BOX CULVERT)	REMOVE PIPE	8" PLASTIC PIPE	18" REINFORCED CONCRETE PIPE	24" REINFORCED CONCRETE PIPE	30" REINFORCED CONCRETE PIPE	(N) FRAME AND GRATING FOR CATCH BASINS (APWA 311-2)	(N) TYPE 24-12 FRAME AND GRATE	(N) STEEL PLATE CLOSURE	ROCK SLOPE PROTECTION (FACING, METHOD B)	ROCK SLOPE PROTECTION FABRIC (CLASS 8)	(N) MAXIMUM COVER	(N) PLACE HOT MIX ASPHALT (MISCELLANEOUS AREA)	HOT MIX ASPHALT (TYPE A)	AUSTIN VAULT MINOR CONCRETE (GUTTER)	AUSTIN VAULT STRUCTURAL CONCRETE	AUSTIN VAULT STRUCTURE EXCAVATION	AUSTIN VAULT STRUCTURE BACKFILL	AUSTIN VAULT SAND BED	AUSTIN VAULT BAR REINFORCING STEEL	AUSTIN VAULT GABION	AUSTIN VAULT CABLE RAILING	AUSTIN VAULT FILTER FABRIC	AUSTIN VAULT PERMEABLE MATERIAL	AUSTIN VAULT MISCELLANEOUS METAL	AUSTIN VAULT 6" PLASTIC PIPE UNDERDRAIN	AUSTIN VAULT 6" PERFORATED PLASTIC PIPE UNDERDRAIN	DESCRIPTION	STATION
			F+	CY	CY	LB	CY	CY	CY	CY	LF	CY	EA	CY	EA	EA	EA	LF	LF	LB	LF	LF	LF	LF	LF	EA	EA	EA	CY	SQYD	F+	SQYD	TON	CY	CY	CY	CY	CY	LB	CY	LF	SQYD	CY	LB	LF	LF		
D-5	30	f																97.0																													24" SLOTTED CORRUGATED STEEL PIPE	
		g	2.5	0.85		326																					1																				CL INLET, CASE 1	1.0' L+ 1826+50.00 ℄ Fwy
D-6		h																97.0																													24" SLOTTED CORRUGATED STEEL PIPE	
		i	2.5	0.85		326																					1																				CL INLET, CASE 1	1.0' L+ 1827+50.00 ℄ Fwy
		j																97.0																													24" SLOTTED CORRUGATED STEEL PIPE	
		k	2.5	0.85		326																					1																				CL INLET, CASE 1	1.0' L+ 1828+50.00 ℄ Fwy
		L																97.0																													24" SLOTTED CORRUGATED STEEL PIPE	
		m	2.5	0.85		326																					1																				CL INLET, CASE 1	1.0' L+ 1829+50.00 ℄ Fwy
		n																97.0																													24" SLOTTED CORRUGATED STEEL PIPE	
		o	2.5	0.85		326																					1																				CL INLET, CASE 1	1.0' L+ 1830+50.00 ℄ Fwy
		p																97.0																													24" SLOTTED CORRUGATED STEEL PIPE	
		q	2.5	0.85		326																					1																				CL INLET, CASE 1	1.0' L+ 1831+50.00 ℄ Fwy
		r																97.0																													24" SLOTTED CORRUGATED STEEL PIPE	
		s	2.5	0.85		326																					1																				CL INLET, CASE 1	1.0' L+ 1832+50.00 ℄ Fwy
		t																97.0																													24" SLOTTED CORRUGATED STEEL PIPE	
		u	2.5	0.85		326																					1																				CL INLET, CASE 2	1.0' L+ 1833+50.00 ℄ Fwy
D-5	31	a	4.2	1.62		326													8.0								1																				TYPE G2 INLET	88.4' L+ 1823+63.00 ℄ Fwy
		b																						236.0							5.8																24" RCP	
		c	5.8	2.02		326																					1																				TYPE G2 INLET	88.4' L+ 1826+00.00 ℄ Fwy
SHEET TOTAL			10.44			3260												776.0	8.0					236.0			10																					

DRAINAGE QUANTITIES
DQ-12

STATE OF CALIFORNIA - DEPARTMENT OF TRANSPORTATION
Caltrans®
HYDRAULICS

FUNCTIONAL SUPERVISOR: DAVE BHALLA
CALCULATED-DESIGNED BY: C. P. NGUYEN
CHECKED BY: D. BHALLA
REVISED BY
DATE REVISED

LAST REVISION DATE PLOTTED => 12-JUN-2013
06-09-12 TIME PLOTTED => 16:31

NOTES: PIPE JOINTS ARE STANDARD OR AS NOTED ON PLANS

(N) NOT A SEPARATE PAY ITEM, FOR INFORMATION ONLY.

Dist	COUNTY	ROUTE	POST MILES TOTAL PROJECT	SHEET No.	TOTAL SHEETS
07	LA	10	33.2/37.2	247	1475

REGISTERED CIVIL ENGINEER 4-17-12 DATE

6-10-13
PLANS APPROVAL DATE

REGISTERED PROFESSIONAL ENGINEER DAVE BHALLA No. 34350 Exp. 9/30/13 CIVIL STATE OF CALIFORNIA

THE STATE OF CALIFORNIA OR ITS OFFICERS OR AGENTS SHALL NOT BE RESPONSIBLE FOR THE ACCURACY OR COMPLETENESS OF SCANNED COPIES OF THIS PLAN SHEET.

DRAINAGE QUANTITIES

DRAINAGE SHEET No.	DRAINAGE SYSTEM No.	DRAINAGE UNIT	HEIGHT OF INLET H OR V	MINOR CONCRETE (MINOR STRUCTURE)	MINOR CONCRETE (Conc DRAIN)	MISCELLANEOUS IRON AND STEEL	STRUCTURAL, CONCRETE BOX CULVERT	MINOR CONCRETE (BACKFILL)	REMOVE CONCRETE	REMOVE ASPHALT CONCRETE PAVEMENT	ABANDON PIPELINE	SAND BACKFILL	ABANDON INLET	DITCH EXCAVATION	REMOVE INLET	CAP INLET	ADJUST INLET	24" SLOTTED CORRUGATED STEEL PIPE (0.079" THICK)	18" CORRUGATED STEEL PIPE (0.079" THICK)	BAR REINFORCING STEEL (BOX CULVERT)	REMOVE PIPE	8" PLASTIC PIPE	18" REINFORCED CONCRETE PIPE	24" REINFORCED CONCRETE PIPE	30" REINFORCED CONCRETE PIPE	(N) FRAME AND GRATING FOR CATCH BASINS (APWA 311-2)	(N) TYPE 24-12 FRAME AND GRATE	(N) STEEL PLATE CLOSURE	ROCK SLOPE PROTECTION (FACING, METHOD B)	ROCK SLOPE PROTECTION FABRIC (CLASS 8)	(N) MAXIMUM COVER	(N) PLACE HOT MIX ASPHALT (MISCELLANEOUS AREA)	HOT MIX ASPHALT (TYPE A)	AUSTIN VAULT: MINOR CONCRETE (GUTTER)	AUSTIN VAULT: STRUCTURAL CONCRETE	AUSTIN VAULT: STRUCTURE EXCAVATION	AUSTIN VAULT: STRUCTURE BACKFILL	AUSTIN VAULT: SAND BED	AUSTIN VAULT: BAR REINFORCING STEEL	AUSTIN VAULT: GABION	AUSTIN VAULT: CABLE RAILING	AUSTIN VAULT: FILTER FABRIC	AUSTIN VAULT: PERMEABLE MATERIAL	AUSTIN VAULT: MISCELLANEOUS METAL	AUSTIN VAULT: 6" PLASTIC PIPE UNDERDRAIN	AUSTIN VAULT: 6" PERFORATED PLASTIC PIPE UNDERDRAIN	DESCRIPTION	STATION
			F+	CY	CY	LB	CY	CY	CY	CY	LF	CY	EA	CY	EA	EA	EA	LF	LF	LB	LF	LF	LF	LF	LF	EA	EA	EA	CY	SQYD	F+	SQYD	TON	CY	CY	CY	CY	CY	LB	CY	LF	SQYD	CY	LB	LF	LF		
D-6	31	d																						302.4							6.2																24" RCP	
		e	6.2	2.13		326																					1																			TYPE G2 INLET	91.0' L+ 1829+00.00 ℄ Fwy
		f																						301.4							5.8																24" RCP	
		g	5.8	2.02		326																					1																			TYPE G2 INLET	91.0' L+ 1832+00.00 ℄ Fwy
		h																						297.0							5.8																24" RCP	
		i	3.8	1.51		326																					1																			TYPE G2 INLET	91.0' L+ 1835+00.00 ℄ Fwy
D-6	32	a											1																																	ABANDON INLET	83.0' R+ 1833+28.85 ℄ Fwy
D-7	33	a														3																														CAP INLET	76.0' R+ 1841+57.50 ℄ Fwy 76.0' R+ 1841+81.40 ℄ Fwy 76.0' R+ 1842+45.50 ℄ Fwy
		b									60.0	3.9																																		ABANDON PIPELINE	76.2' R+ 1841+83.75 - 76.5' R+ 1842+44.00 ℄ Fwy
		c																						9.8							3.6																24" RCP	
		d	3.5	1.5		580																					2																			GD-1 INLET	91.0' R+ 1841+62.30 ℄ Fwy
		e																						10.0							3.4																24" RCP	
		f	3.34	1.45		580																					2																			GD-1 INLET	91.0' R+ 1841+87.60 ℄ Fwy
		g																						60.3							3.4																24" RCP	
		h	2.7	1.35		580																					2																			GD-1 INLET	91.0' R+ 1842+51.30 ℄ Fwy
D-7	34	a																						305.9							3.2																24" RCP	
		b	3.2	1.41		580																					2																			GD-1 INLET	91.0' R+ 1845+60.00 ℄ Fwy
		c																						297.0							3.2																24" RCP	
		d	3.2	1.41		580																					2																			GD-1 INLET	91.0' R+ 1848+60.00 ℄ Fwy
SHEET TOTAL				12.78		3878					60.0	3.9	1			3								1583.8			13																				

DRAINAGE QUANTITIES
DQ-13

STATE OF CALIFORNIA - DEPARTMENT OF TRANSPORTATION
Caltrans® HYDRAULICS

FUNCTIONAL SUPERVISOR: DAVE BHALLA
CALCULATED-DESIGNED BY: D. BHALLA — C. P. NGUYEN
CHECKED BY
REVISED BY
DATE REVISED

LAST REVISION DATE PLOTTED => 12-JUN-2013
06-09-12 TIME PLOTTED => 16:31

NOTES: PIPE JOINTS ARE STANDARD OR AS NOTED ON PLANS

(N) NOT A SEPARATE PAY ITEM, FOR INFORMATION ONLY.

Dist	COUNTY	ROUTE	POST MILES TOTAL PROJECT	SHEET No.	TOTAL SHEETS
07	LA	10	33.2/37.2	248	1475

REGISTERED CIVIL ENGINEER 4-17-12 DATE

6-10-13
PLANS APPROVAL DATE

REGISTERED PROFESSIONAL ENGINEER DAVE BHALLA No. 34350 Exp. 9/30/13 CIVIL STATE OF CALIFORNIA

THE STATE OF CALIFORNIA OR ITS OFFICERS OR AGENTS SHALL NOT BE RESPONSIBLE FOR THE ACCURACY OR COMPLETENESS OF SCANNED COPIES OF THIS PLAN SHEET.

DRAINAGE QUANTITIES

DRAINAGE SHEET No.	DRAINAGE SYSTEM No.	DRAINAGE UNIT	HEIGHT OF INLET H OR V	MINOR CONCRETE (MINOR STRUCTURE)	MINOR CONCRETE (Conc DRAIN)	MISCELLANEOUS IRON AND STEEL	STRUCTURAL CONCRETE, BOX CULVERT	MINOR CONCRETE (BACKFILL)	REMOVE CONCRETE	REMOVE ASPHALT CONCRETE PAVEMENT	ABANDON PIPELINE	SAND BACKFILL	ABANDON INLET	DITCH EXCAVATION	REMOVE INLET	CAP INLET	ADJUST INLET	24" SLOTTED CORRUGATED STEEL PIPE (0.079" THICK)	18" CORRUGATED STEEL PIPE (0.079" THICK)	BAR REINFORCING STEEL (BOX CULVERT)	REMOVE PIPE	8" PLASTIC PIPE	18" REINFORCED CONCRETE PIPE	24" REINFORCED CONCRETE PIPE	30" REINFORCED CONCRETE PIPE	(N) FRAME AND GRATING FOR CATCH BASINS (APWA 311-2)	(N) TYPE 24-12 FRAME AND GRATE	(N) STEEL PLATE CLOSURE	ROCK SLOPE PROTECTION (FACING, METHOD B)	ROCK SLOPE PROTECTION FABRIC (CLASS 8)	(N) MAXIMUM COVER	(N) PLACE HOT MIX ASPHALT (MISCELLANEOUS AREA)	HOT MIX ASPHALT (TYPE A)	AUSTIN VAULT: MINOR CONCRETE (GUTTER)	AUSTIN VAULT: STRUCTURAL CONCRETE	AUSTIN VAULT: STRUCTURE EXCAVATION	AUSTIN VAULT: STRUCTURE BACKFILL	AUSTIN VAULT: SAND BED	AUSTIN VAULT: BAR REINFORCING STEEL	AUSTIN VAULT: GABION	AUSTIN VAULT: CABLE RAILING	AUSTIN VAULT: FILTER FABRIC	AUSTIN VAULT: PERMEABLE MATERIAL	AUSTIN VAULT: MISCELLANEOUS METAL	6" PLASTIC PIPE UNDERDRAIN	6" PERFORATED PLASTIC PIPE UNDERDRAIN	DESCRIPTION	STATION
			F+	CY	CY	LB	CY	CY	CY	CY	LF	CY	EA	CY	EA	EA	EA	LF	LF	LB	LF	LF	LF	LF	LF	EA	EA	EA	CY	SQYD	F+	SQYD	TON	CY	CY	CY	CY	CY	LB	CY	LF	SQYD	CY	LB	LF	LF		
D-7	34	e																						297.0							3.2																24" RCP	
		f	3.2	1.41		580																					2																				GD-1 INLET	91.0' R+ 1851+60.00 ℄ Fwy
D-7	35	a												26.3																																	BIOFILTRATION SWALE (TRAPEZOIDAL) L=236.0'	116.1' L+ 1843+83.69 - 97.0' L+ 1846+18.48 ℄ Fwy
D-7	36	a		1.18																																											JUNCTION STRUCTURE No. 3	80.5' L+ 1850+81.30 ℄ Fwy
		b																						57.8							4.9																	24" RCP	
		c	4.64	1.83		580																					2																				GD-1 INLET	91.0' L+ 1851+40.00 ℄ Fwy
		d																						357.0							4.7																	24" RCP	
D-8		e	4.2	1.7		326																					1																				TYPE G2 INLET	90.1' L+ 1854+40.00 ℄ Fwy
		f																						297.0							4.2																	24" RCP	
		g	4.2	1.7		326																					1																				TYPE G2 INLET	92.2' L+ 1857+40.00 ℄ Fwy
		h																						297.0							4.8																	24" RCP	
		i	4.8	1.87		326																					1																				TYPE G2 INLET	97.8' L+ 1860+40.00 ℄ Fwy
		j																						297.0							4.8																	24" RCP	
		k	4.7	1.74		326																					1																				TYPE G2 INLET	104.4' L+ 1863+40.00 ℄ Fwy
SHEET TOTAL				11.43		2464								26.3										1602.8			8																					

DRAINAGE QUANTITIES
DQ-14

STATE OF CALIFORNIA - DEPARTMENT OF TRANSPORTATION
Caltrans®
HYDRAULICS

FUNCTIONAL SUPERVISOR: DAVE BHALLA
CALCULATED-DESIGNED BY: D. BHALLA
CHECKED BY: C. P. NGUYEN
REVISED BY
DATE REVISED

LAST REVISION DATE PLOTTED => 12-JUN-2013
TIME PLOTTED => 16:31

NOTES: PIPE JOINTS ARE STANDARD OR AS NOTED ON PLANS

(N) NOT A SEPARATE PAY ITEM, FOR INFORMATION ONLY.

Dist	COUNTY	ROUTE	POST MILES TOTAL PROJECT	SHEET No.	TOTAL SHEETS
07	LA	10	33.2/37.2	249	1475

REGISTERED CIVIL ENGINEER 4-17-12 DATE

6-10-13
PLANS APPROVAL DATE

REGISTERED PROFESSIONAL ENGINEER SA K. THAI No. 71390 Exp. 12/31/13 CIVIL STATE OF CALIFORNIA

THE STATE OF CALIFORNIA OR ITS OFFICERS OR AGENTS SHALL NOT BE RESPONSIBLE FOR THE ACCURACY OR COMPLETENESS OF SCANNED COPIES OF THIS PLAN SHEET.

DRAINAGE QUANTITIES

DRAINAGE SHEET No.	DRAINAGE SYSTEM No.	DRAINAGE UNIT	HEIGHT OF INLET H OR V	MINOR CONCRETE (MINOR STRUCTURE)	MINOR CONCRETE (Conc DRAIN)	MISCELLANEOUS IRON AND STEEL	STRUCTURAL CONCRETE, BOX CULVERT	MINOR CONCRETE (BACKFILL)	REMOVE CONCRETE	REMOVE ASPHALT CONCRETE PAVEMENT	ABANDON PIPELINE	SAND BACKFILL	ABANDON INLET	DITCH EXCAVATION	REMOVE INLET	CAP INLET	ADJUST INLET	24" SLOTTED CORRUGATED STEEL PIPE (0.079" THICK)	18" CORRUGATED STEEL PIPE (0.079" THICK)	BAR REINFORCING STEEL (BOX CULVERT)	REMOVE PIPE	8" PLASTIC PIPE	18" REINFORCED CONCRETE PIPE	24" REINFORCED CONCRETE PIPE	30" REINFORCED CONCRETE PIPE	(N) FRAME AND GRATING FOR CATCH BASINS (APWA 311-2)	(N) TYPE 24-12 FRAME AND GRATE	(N) STEEL PLATE CLOSURE	ROCK SLOPE PROTECTION (FACING; METHOD B)	ROCK SLOPE PROTECTION FABRIC (CLASS 8)	(N) MAXIMUM COVER	(N) PLACE ASPHALT CONCRETE (MISCELLANEOUS AREA)	HOT MIX ASPHALT (TYPE A)	AUSTIN VAULT: MINOR CONCRETE (GUTTER)	AUSTIN VAULT: STRUCTURAL CONCRETE	AUSTIN VAULT: STRUCTURE EXCAVATION	AUSTIN VAULT: STRUCTURE BACKFILL	AUSTIN VAULT: SAND BED	AUSTIN VAULT: BAR REINFORCING STEEL	AUSTIN VAULT: GABION	AUSTIN VAULT: CABLE RAILING	AUSTIN VAULT: FILTER FABRIC	AUSTIN VAULT: PERMEABLE MATERIAL	AUSTIN VAULT: MISCELLANEOUS METAL	AUSTIN VAULT: 6" PLASTIC PIPE UNDERDRAIN	AUSTIN VAULT: 6" PERFORATED PLASTIC PIPE UNDERDRAIN	DESCRIPTION	STATION
			F+	CY	CY	LB	CY	CY	CY	CY	LF	CY	EA	CY	EA	EA	EA	LF	LF	LB	LF	LF	LF	LF	LF	EA	EA	EA	CY	SQYD	F+	SQYD	TON	CY	CY	CY	CY	CY	LB	CY	LF	SQYD	CY	LB	LF	LF		
D-8	37	a													1																																REMOVE INLET	78.0′ R+ 1853+01.5 ℄ Fwy
		b							0.4																																						REMOVE SIDEWALK CULVERT	
		c	1.0	0.77		580																					2																				GD-1 INLET	91.0′ R+ 1853+01.5 ℄ Fwy
		d		0.66																																										SIDEWALK CULVERT	
D-8	38	a													1																																REMOVE INLET	89.0′ R+ 1856+71.6 ℄ Fwy
		b							0.4																																						REMOVE SIDEWALK CULVERT	
		c	1.0	0.77		580																					2																				GD-1 INLET	91.0′ R+ 1856+71.6 ℄ Fwy
		d		0.66																																										SIDEWALK CULVERT	
D-8	39	a													1																																REMOVE INLET	65.3′ R+ 1860+32.8 ℄ Fwy
		b							8.2																																						REMOVE RCB (L=45.9′)	
		c													1																																REMOVE INLET	113.6′ R+ 1860+32.8 ℄ Fwy
		d							0.92																																						REMOVE RCB (L=5.5′)	
		e	1.5	0.92		580																					2																				GD-1 INLET	32.0′ R+ 60+38.0 ⅊ RAMP "V1"
		f					0.69													96																										3′ x 8" x 2.5′ RCB	
		g					43.58													7632																										3′ x 8" x 159.0′ RCB	
		h	2.9	1.32		580																					2																				GD-1 INLET	32.0′ R+ 62+00.0 ⅊ RAMP "V1"
		i					12.22													2141																										3′ x 8" x 44.6′ RCB	
		j	2.6	1.23		580																					2																				GD-1 INLET	79.0′ R+ 1862+00.0 ℄ Fwy
SHEET TOTAL				6.33		2900	56.49		9.92						4					9869							10																					

STATE OF CALIFORNIA - DEPARTMENT OF TRANSPORTATION

Caltrans®

HYDRAULICS

FUNCTIONAL SUPERVISOR: DAVE BHALLA

CALCULATED-DESIGNED BY: S. THAI

CHECKED BY: D. BHALLA

REVISED BY

DATE REVISED

DRAINAGE QUANTITIES

DQ-15

LAST REVISION DATE PLOTTED => 12-JUN-2013
TIME PLOTTED => 16:31

NOTES: PIPE JOINTS ARE STANDARD OR AS NOTED ON PLANS

(N) NOT A SEPARATE PAY ITEM, FOR INFORMATION ONLY.

Dist	COUNTY	ROUTE	POST MILES TOTAL PROJECT	SHEET No.	TOTAL SHEETS
07	LA	10	33.2/37.2	250	1475

REGISTERED CIVIL ENGINEER 4-17-12 DATE

6-10-13
PLANS APPROVAL DATE

REGISTERED PROFESSIONAL ENGINEER SA K. THAI No. 71390 Exp. 12/31/13 CIVIL STATE OF CALIFORNIA

THE STATE OF CALIFORNIA OR ITS OFFICERS OR AGENTS SHALL NOT BE RESPONSIBLE FOR THE ACCURACY OR COMPLETENESS OF SCANNED COPIES OF THIS PLAN SHEET.

DRAINAGE QUANTITIES

DRAINAGE SHEET No.	DRAINAGE SYSTEM No.	DRAINAGE UNIT	HEIGHT OF INLET H OR V	MINOR CONCRETE (MINOR STRUCTURE)	MINOR CONCRETE (Conc DRAIN)	MISCELLANEOUS IRON AND STEEL	STRUCTURAL CONCRETE, BOX CULVERT	MINOR CONCRETE (BACKFILL)	REMOVE CONCRETE	REMOVE ASPHALT CONCRETE PAVEMENT	ABANDON PIPELINE	SAND BACKFILL	ABANDON INLET	DITCH EXCAVATION	REMOVE INLET	CAP INLET	ADJUST INLET	24" SLOTTED CORRUGATED STEEL PIPE (0.079" THICK)	18" CORRUGATED STEEL PIPE (0.079" THICK)	BAR REINFORCING STEEL (BOX CULVERT)	REMOVE PIPE	8" PLASTIC PIPE	18" REINFORCED CONCRETE PIPE	24" REINFORCED CONCRETE PIPE	30" REINFORCED CONCRETE PIPE	(N) FRAME AND GRATING FOR CATCH BASINS (APWA 311-2)	(N) TYPE 24-12 FRAME AND GRATE	(N) STEEL PLATE CLOSURE	ROCK SLOPE PROTECTION (FACING; METHOD B)	ROCK SLOPE PROTECTION FABRIC (CLASS 8)	(N) MAXIMUM COVER	(N) PLACE HOT MIX ASPHALT (MISCELLANEOUS AREA)	HOT MIX ASPHALT (TYPE A)	AUSTIN VAULT: MINOR CONCRETE (GUTTER)	AUSTIN VAULT: STRUCTURAL CONCRETE	AUSTIN VAULT: STRUCTURE EXCAVATION	AUSTIN VAULT: STRUCTURE BACKFILL	AUSTIN VAULT: SAND BED	AUSTIN VAULT: BAR REINFORCING STEEL	AUSTIN VAULT: GABION	AUSTIN VAULT: CABLE RAILING	AUSTIN VAULT: FILTER FABRIC	AUSTIN VAULT: PERMEABLE MATERIAL	AUSTIN VAULT: MISCELLANEOUS METAL	AUSTIN VAULT: 6" PLASTIC PIPE UNDERDRAIN	AUSTIN VAULT: 6" PERFORATED PLASTIC PIPE UNDERDRAIN	DESCRIPTION	STATION
			F+	CY	CY	LB	CY	CY	CY	CY	LF	CY	EA	CY	EA	EA	EA	LF	LF	LB	LF	LF	LF	LF	LF	EA	EA	EA	CY	SQYD	F+	SQYD	TON	CY	CY	CY	CY	CY	LB	CY	LF	SQYD	CY	LB	LF	LF		
D-8	39	k					1.92													336																											3' x 8" x 7.0' RCB	
		L	2.6	1.23		580																					2																			GD-1 INLET	79.0' R+ 1862+10.0 ℄ Fwy
		m													1																															REMOVE INLET	66.1' R+ 1862+80.7 ℄ Fwy
		n							7.8																																					REMOVE RCB (L=43.4')	
		o													1																															REMOVE INLET	113.4' R+ 1862+85.1 ℄ Fwy
		p							0.4																																					REMOVE SIDEWALK CULVERT	114.0' R+ 1862+85.1 ℄ Fwy
		q					32.1													5616																											3' x 8" x 117.0' RCB	
		r	2.9	1.32		580																					2																			GD-1 INLET	32.0' R+ 63+20.0 ₤ RAMP "V1"
		s					30.15													5280																											3' x 8" x 110.0' RCB	
		t	3.7	1.55		580																					2																			GD-1 INLET	32.0' R+ 64+40.0 ₤ RAMP "V1"
		u					9.73													1704																											3' x 8" x 35.5' RCB	
		v	4.0	1.57		326																					1																			TYPE G2 INLET	16.0' R+ 64+48.5 ₤ RAMP "V8"
D-8	40	a											1																																	ABANDON INLET	77.5' L+ 1865+08.3 ℄ Fwy
		b									168.1	11.0																																		ABANDON PIPELINE	
D-9		c											1																																	ABANDON INLET	83.8' L+ 1866+83.0 ℄ Fwy
		d																			55.5																										REMOVE PIPE	
		e	5.6	1.52		326																					1																			TYPE G1 INLET	20.0' L+ 67+31.5 ₤ RAMP "V7"
		f																					5.5								5															18" RCP	
		g	5.9	2.36		580																					2																			GD-2 INLET	20.0' L+ 67+40.0 ₤ RAMP "V7"
SHEET TOTAL			9.55			2972	73.9		8.2		168.1	11.0	2		2					12936	55.5		5.5				10																				

DRAINAGE QUANTITIES
DQ-16

STATE OF CALIFORNIA - DEPARTMENT OF TRANSPORTATION
Caltrans®
HYDRAULICS

FUNCTIONAL SUPERVISOR: DAVE BHALLA
CALCULATED-DESIGNED BY: S. THAI
CHECKED BY: D. BHALLA
REVISED BY
DATE REVISED

LAST REVISION DATE PLOTTED => 12-JUN-2013
TIME PLOTTED => 16:31
06-09-12

NOTES: PIPE JOINTS ARE STANDARD OR AS NOTED ON PLANS

(N) NOT A SEPARATE PAY ITEM, FOR INFORMATION ONLY.

Dist	COUNTY	ROUTE	POST MILES TOTAL PROJECT	SHEET No.	TOTAL SHEETS
07	LA	10	33.2/37.2	251	1475

REGISTERED CIVIL ENGINEER 4-17-12 DATE

6-10-13
PLANS APPROVAL DATE

REGISTERED PROFESSIONAL ENGINEER SA K. THAI No. 71390 Exp. 12/31/13 CIVIL STATE OF CALIFORNIA

THE STATE OF CALIFORNIA OR ITS OFFICERS OR AGENTS SHALL NOT BE RESPONSIBLE FOR THE ACCURACY OR COMPLETENESS OF SCANNED COPIES OF THIS PLAN SHEET.

DRAINAGE QUANTITIES

DRAINAGE SHEET No.	DRAINAGE SYSTEM No.	DRAINAGE UNIT	HEIGHT OF INLET H OR V	MINOR CONCRETE (MINOR STRUCTURE)	MINOR CONCRETE (Conc DRAIN)	MISCELLANEOUS IRON AND STEEL	STRUCTURAL CONCRETE, BOX CULVERT	MINOR CONCRETE (BACKFILL)	REMOVE CONCRETE	REMOVE ASPHALT CONCRETE PAVEMENT	ABANDON PIPELINE	SAND BACKFILL	ABANDON INLET	DITCH EXCAVATION	REMOVE INLET	CAP INLET	ADJUST INLET	24" SLOTTED CORRUGATED STEEL PIPE (0.079" THICK)	18" CORRUGATED STEEL PIPE (0.079" THICK)	BAR REINFORCING STEEL (BOX CULVERT)	REMOVE PIPE	8" PLASTIC PIPE	18" REINFORCED CONCRETE PIPE	24" REINFORCED CONCRETE PIPE	30" REINFORCED CONCRETE PIPE	(N) FRAME AND GRATING FOR CATCH BASINS (APWA 311-2)	(N) TYPE 24-12 FRAME AND GRATE	(N) STEEL PLATE CLOSURE	ROCK SLOPE PROTECTION (FACING; METHOD B)	ROCK SLOPE PROTECTION FABRIC (CLASS 8)	(N) MAXIMUM COVER	(N) PLACE HOT MIX ASPHALT (MISCELLANEOUS AREA)	HOT MIX ASPHALT (TYPE A)	AUSTIN VAULT MINOR CONCRETE (GUTTER)	AUSTIN VAULT STRUCTURAL CONCRETE	AUSTIN VAULT STRUCTURE EXCAVATION	AUSTIN VAULT STRUCTURE BACKFILL	AUSTIN VAULT SAND BED	AUSTIN VAULT BAR REINFORCING STEEL	AUSTIN VAULT GABION	AUSTIN VAULT CABLE RAILING	AUSTIN VAULT FILTER FABRIC	AUSTIN VAULT PERMEABLE MATERIAL	AUSTIN VAULT MISCELLANEOUS METAL	AUSTIN VAULT 6" PLASTIC PIPE UNDERDRAIN	AUSTIN VAULT 6" PERFORATED PLASTIC PIPE UNDERDRAIN	DESCRIPTION	STATION
			F†	CY	CY	LB	CY	CY	CY	CY	LF	CY	EA	CY	EA	EA	EA	LF	LF	LB	LF	LF	LF	LF	LF	EA	EA	EA	CY	SQYD	F†	SQYD	TON	CY	CY	CY	CY	CY	LB	CY	LF	SQYD	CY	LB	LF	LF		
D-9	41	a													1																																REMOVE INLET	66.0′ R† 1865+82.0 ℄ Fwy
		b																			195.8																										REMOVE PIPE	
		c													1																																REMOVE INLET	66.0′ R† 1867+81.8 ℄ Fwy
		d																			13.2																										REMOVE PIPE	
		e	4.6	1.30		326																					1																				TYPE G2 INLET	79.0′ R† 1867+84.5 ℄ Fwy
		f														1																															CAP INLET	25.5′ R† 67+89.3 ⅊ RAMP "V2"
		g																					79.6								3																18" RCP	
		h	4.8	1.35		326																					1																				TYPE G1 INLET	16.0′ R† 67+10.0 ⅊ RAMP "V8"
		i																					181.3								5																18" RCP	
		j						16.4																																						MINOR Conc (BACKFILL)	
		k	2.3	1.15		580																					2																				GD-1 INLET	79.0′ R† 1866+00.0 ℄ Fwy
D-9	42	a	3.6	1.08		326																					1																				TYPE G1 INLET	36.0′ L† 70+17.0 ⅊ RAMP "V4"
		b																					5.0								3																18" RCP	
		c	3.8	1.13		326																					1																				TYPE G1 INLET	36.0′ L† 70+25.0 ⅊ RAMP "V4"
		d																					5.0								3																18" RCP	
		e	3.9	1.15		326																					1																				TYPE G1 INLET	36.0′ L† 70+33.0 ⅊ RAMP "V4"
		f																					4.5								3																18" RCP	
		g													1																																REMOVE INLET	33.3′ L† 70+31.0 ⅊ RAMP "V4"
SHEET TOTAL				7.16		2210		16.4							3	1					209.0		275.4				7																					

STATE OF CALIFORNIA - DEPARTMENT OF TRANSPORTATION

Caltrans®

HYDRAULICS

FUNCTIONAL SUPERVISOR: DAVE BHALLA

CALCULATED-DESIGNED BY: S. THAI

CHECKED BY: D. BHALLA

REVISED BY

DATE REVISED

DRAINAGE QUANTITIES

DQ-17

LAST REVISION DATE PLOTTED => 12-JUN-2013
TIME PLOTTED => 16:31

06-09-12

NOTES: PIPE JOINTS ARE STANDARD OR AS NOTED ON PLANS

(N) NOT A SEPARATE PAY ITEM, FOR INFORMATION ONLY.

Dist	COUNTY	ROUTE	POST MILES TOTAL PROJECT	SHEET No.	TOTAL SHEETS
07	LA	10	33.2/37.2	252	1475

REGISTERED CIVIL ENGINEER 4-17-12 DATE

6-10-13
PLANS APPROVAL DATE

REGISTERED PROFESSIONAL ENGINEER SA K. THAI No. 71390 Exp. 12/31/13 CIVIL STATE OF CALIFORNIA

THE STATE OF CALIFORNIA OR ITS OFFICERS OR AGENTS SHALL NOT BE RESPONSIBLE FOR THE ACCURACY OR COMPLETENESS OF SCANNED COPIES OF THIS PLAN SHEET.

DRAINAGE QUANTITIES

DRAINAGE SHEET No.	DRAINAGE SYSTEM No.	DRAINAGE UNIT	HEIGHT OF INLET H OR V	MINOR CONCRETE (MINOR STRUCTURE)	MINOR CONCRETE (Conc DRAIN)	MISCELLANEOUS IRON AND STEEL	STRUCTURAL CONCRETE, BOX CULVERT	MINOR CONCRETE (BACKFILL)	REMOVE CONCRETE	REMOVE ASPHALT CONCRETE PAVEMENT	ABANDON PIPELINE	SAND BACKFILL	ABANDON INLET	DITCH EXCAVATION	REMOVE INLET	CAP INLET	ADJUST INLET	24" SLOTTED CORRUGATED STEEL PIPE (0.079" THICK)	18" CORRUGATED STEEL PIPE (0.079" THICK)	BAR REINFORCING STEEL (BOX CULVERT)	REMOVE PIPE	8" PLASTIC PIPE	18" REINFORCED CONCRETE PIPE	24" REINFORCED CONCRETE PIPE	30" REINFORCED CONCRETE PIPE	(N) FRAME AND GRATING FOR CATCH BASINS (APWA 311-2)	(N) TYPE 24-12 FRAME AND GRATE	(N) STEEL PLATE CLOSURE	ROCK SLOPE PROTECTION (FACING; METHOD B)	ROCK SLOPE PROTECTION FABRIC (CLASS 8)	(N) MAXIMUM COVER	(N) PLACE HOT MIX ASPHALT (MISCELLANEOUS AREA)	HOT MIX ASPHALT (TYPE A)	AUSTIN VAULT: MINOR CONCRETE (GUTTER)	AUSTIN VAULT: STRUCTURAL CONCRETE	AUSTIN VAULT: STRUCTURE EXCAVATION	AUSTIN VAULT: STRUCTURE BACKFILL	AUSTIN VAULT: SAND BED	AUSTIN VAULT: BAR REINFORCING STEEL	AUSTIN VAULT: GABION	AUSTIN VAULT: CABLE RAILING	AUSTIN VAULT: FILTER FABRIC	AUSTIN VAULT: PERMEABLE MATERIAL	AUSTIN VAULT: MISCELLANEOUS METAL	AUSTIN VAULT: 6" PLASTIC PIPE UNDERDRAIN	AUSTIN VAULT: 6" PERFORATED PLASTIC PIPE UNDERDRAIN	DESCRIPTION	STATION
			F+	CY	CY	LB	CY	CY	CY	CY	LF	CY	EA	CY	EA	EA	EA	LF	LF	LB	LF	LF	LF	LF	LF	EA	EA	EA	CY	SQYD	F+	SQYD	TON	CY	CY	CY	CY	CY	LB	CY	LF	SQYD	CY	LB	LF	LF		
D-9	43	a	4.5	1.28		326																					1																				TYPE G1 INLET	20.0' L+ 71+97.0 ℄ RAMP "V7"
		b																					202.6								3																18" RCP	
		c																											8.9	25.3																	ROCK SLOPE PROTECTION (FACING, METHOD B)	
		d												37.2																																BIOFILTRATION SWALE (V-DITCH)	152.2' L+ 75+77.0 ℄ RAMP "V5" - 32.0' L+ 70+83.0 ℄ RAMP "V5"
		e			1.7												1																														ADJUST INLET WITH Conc APRON	159.2' L+ 75+79.0 ℄ RAMP "V5"
		f																			3.0																										REMOVE PIPE	
		g	4.4	2.11		203																																									CURBSIDE GRATING CATCH BASIN	58.5' R+ 12+53.0 ℄ VINCENT Ave
		h																					72.5								4																18" RCP	
		i	5.0	2.33		203																																									CURBSIDE GRATING CATCH BASIN	58.6' R+ 13+30.0 ℄ VINCENT Ave
		j																					110.1								4																18" RCP	
		k	5.2	1.50		326																					1																				TYPE G1 INLET	4.0' R+ 69+31.7 ℄ RAMP "V6"
		L																					181.0								4																18" RCP	
		m	5.7	1.54		326																					1																				TYPE G1 INLET	4.0' R+ 71+40.0 ℄ RAMP "V6"
		n																					67.6								4																18" RCP	
		o	5.4	1.48		326																					1																				TYPE G1 INLET	34.0' L+ 72+00.0 ℄ RAMP "V6"
D-9	44	a																											8.9	25.3																	ROCK SLOPE PROTECTION (FACING, METHOD B)	
		b												15.9																																BIOFILTRATION SWALE (V-DITCH)	43.6' R+ 64+02.5 ℄ RAMP "V2" - 58.9' R+ 66+10.0 ℄ RAMP "V2"
		c		2.12																																										TRANSITION STRUCTURE No. 4	
		d																					20.3								4																18" RCP	
		e		0.81																																										JUNCTION STRUCTURE No. 1	
SHEET TOTAL				13.17	1.7	1710								53.1			1				3.0		654.1				4		17.8	50.6																		

DRAINAGE QUANTITIES
DQ-18

STATE OF CALIFORNIA - DEPARTMENT OF TRANSPORTATION
Caltrans
HYDRAULICS

FUNCTIONAL SUPERVISOR: DAVE BHALLA
CALCULATED-DESIGNED BY: S. THAI
CHECKED BY: D. BHALLA
REVISED BY
DATE REVISED

LAST REVISION DATE PLOTTED => 12-JUN-2013
06-09-12 TIME PLOTTED => 16:31

NOTES: PIPE JOINTS ARE STANDARD OR AS NOTED ON PLANS

(N) NOT A SEPARATE PAY ITEM, FOR INFORMATION ONLY.

Dist	COUNTY	ROUTE	POST MILES TOTAL PROJECT	SHEET No.	TOTAL SHEETS
07	LA	10	33.2/37.2	253	1475

REGISTERED CIVIL ENGINEER 4-17-12 DATE

6-10-13
PLANS APPROVAL DATE

REGISTERED PROFESSIONAL ENGINEER SA K. THAI No. 71390 Exp. 12/31/13 CIVIL STATE OF CALIFORNIA

THE STATE OF CALIFORNIA OR ITS OFFICERS OR AGENTS SHALL NOT BE RESPONSIBLE FOR THE ACCURACY OR COMPLETENESS OF SCANNED COPIES OF THIS PLAN SHEET.

DRAINAGE QUANTITIES

DRAINAGE SHEET No.	DRAINAGE SYSTEM No.	DRAINAGE UNIT	HEIGHT OF INLET H OR V	MINOR CONCRETE (MINOR STRUCTURE)	MINOR CONCRETE (Conc DRAIN)	MISCELLANEOUS IRON AND STEEL	STRUCTURAL CONCRETE, BOX CULVERT	MINOR CONCRETE (BACKFILL)	REMOVE CONCRETE	REMOVE ASPHALT CONCRETE PAVEMENT	ABANDON PIPELINE	SAND BACKFILL	ABANDON INLET	DITCH EXCAVATION	REMOVE INLET	CAP INLET	ADJUST INLET	24" SLOTTED CORRUGATED STEEL PIPE (0.079" THICK)	18" CORRUGATED STEEL PIPE (0.079" THICK)	BAR REINFORCING STEEL (BOX CULVERT)	REMOVE PIPE	8" PLASTIC PIPE	18" REINFORCED CONCRETE PIPE	24" REINFORCED CONCRETE PIPE	30" REINFORCED CONCRETE PIPE	(N) FRAME AND GRATING FOR CATCH BASINS (APWA 311-2)	(N) TYPE 24-12 FRAME AND GRATE	(N) STEEL PLATE CLOSURE	ROCK SLOPE PROTECTION (FACING, METHOD B)	ROCK SLOPE PROTECTION FABRIC (CLASS 8)	(N) MAXIMUM COVER	(N) PLACE HOT MIX ASPHALT (MISCELLANEOUS AREA)	HOT MIX ASPHALT (TYPE A)	AUSTIN VAULT: MINOR CONCRETE (GUTTER)	AUSTIN VAULT: STRUCTURAL CONCRETE	AUSTIN VAULT: STRUCTURE EXCAVATION	AUSTIN VAULT: STRUCTURE BACKFILL	AUSTIN VAULT: SAND BED	AUSTIN VAULT: BAR REINFORCING STEEL	AUSTIN VAULT: GABION	AUSTIN VAULT: CABLE RAILING	AUSTIN VAULT: FILTER FABRIC	AUSTIN VAULT: PERMEABLE MATERIAL	AUSTIN VAULT: MISCELLANEOUS METAL	AUSTIN VAULT: 6" PLASTIC PIPE UNDERDRAIN	AUSTIN VAULT: 6" PERFORATED PLASTIC PIPE UNDERDRAIN	DESCRIPTION	STATION
			F+	CY	CY	LB	CY	CY	CY	CY	LF	CY	EA	CY	EA	EA	EA	LF	LF	LB	LF	LF	LF	LF	LF	EA	EA	EA	CY	SQYD	F+	SQYD	TON	CY	CY	CY	CY	CY	LB	CY	LF	SQYD	CY	LB	LF	LF		
D-9	45	a	4.4	3.52		243																																									CURB OPENING CATCH BASIN	59.0' L+ 6+40.5 ℄ VINCENT Ave
		b					27.27													4776																											2' x 1' x 99.5' RCB	
		c														1																															CAP INLET	52.1' L+ 7+50.2 ℄ VINCENT Ave
		d		0.81																																											JUNCTION STRUCTURE No. 1	
		e																					8.6								3																	18" RCP	
		f	2.5	0.84		326																					1																					TYPE G1 INLET	4.0' L+ 68+65.0 ℄ RAMP "V1"
D-9	46	a													1																																REMOVE INLET	101.5' R+ 63+29.8 ℄ RAMP "V2"
		b																			3.8																										REMOVE PIPE	
		c	4.1	1.16		203																				1																					CURBSIDE GRATING CATCH BASIN	58.0' L+ 8+49.4 ℄ VINCENT Ave
		d	4.7	1.30		203																				1																					CURBSIDE GRATING CATCH BASIN	59.8' R+ 8+52.0 ℄ VINCENT Ave
		e																			13.5																										REMOVE PIPE	
		f													1																																REMOVE INLET	210.1' R+ 1869+82.5 ℄ Fwy
D-9	47	a																											36.7	78.1																		ROCK SLOPE PROTECTION (FACING, METHOD B)	
		b												22.9																																	BIOFILTRATION SWALE (V-DITCH)	43.2' R+ 69+57.0 ℄ RAMP "V3" 43.2' R+ 70+60.0 ℄ RAMP "V3"
		c	2.3	1.17	1.7	652																					2																				GD-3 INLET WITH Conc APRON	43.2' R+ 69+50.0 ℄ RAMP "V3"
		d					20.61													3610																											3' x 8" x 75.2' RCB	
		e													1																																REMOVE INLET	52.2' R+ 7+49.8 ℄ VINCENT Ave
		f	3.7	3.12		243																																									CURB OPENING CATCH BASIN	55.0' R+ 7+49.8 ℄ VINCENT Ave
		g																					2.8								2																	18" RCP	
SHEET TOTAL				11.92	1.7	1870	47.88							22.9	3	1				8386	17.3		11.4			2	3		36.7	78.1																		

DRAINAGE QUANTITIES
DQ-19

STATE OF CALIFORNIA - DEPARTMENT OF TRANSPORTATION
Caltrans®
HYDRAULICS

CALCULATED-DESIGNED BY S. THAI
CHECKED BY D. BHALLA
FUNCTIONAL SUPERVISOR DAVE BHALLA
REVISED BY
DATE REVISED

LAST REVISION DATE PLOTTED => 12-JUN-2013
06-13-12 TIME PLOTTED => 16:31

NOTES: PIPE JOINTS ARE STANDARD OR AS NOTED ON PLANS

(N) NOT A SEPARATE PAY ITEM, FOR INFORMATION ONLY.

Dist	COUNTY	ROUTE	POST MILES TOTAL PROJECT	SHEET No.	TOTAL SHEETS
07	LA	10	33.2/37.2	254	1475

REGISTERED CIVIL ENGINEER 4-17-12 DATE

6-10-13
PLANS APPROVAL DATE

REGISTERED PROFESSIONAL ENGINEER SA K. THAI No. 71390 Exp. 12/31/13 CIVIL STATE OF CALIFORNIA

THE STATE OF CALIFORNIA OR ITS OFFICERS OR AGENTS SHALL NOT BE RESPONSIBLE FOR THE ACCURACY OR COMPLETENESS OF SCANNED COPIES OF THIS PLAN SHEET.

DRAINAGE QUANTITIES

DRAINAGE SHEET No.	DRAINAGE SYSTEM No.	DRAINAGE UNIT	HEIGHT OF INLET H OR V	MINOR CONCRETE (MINOR STRUCTURE)	MINOR CONCRETE (Conc DRAIN)	MISCELLANEOUS IRON AND STEEL	STRUCTURAL CONCRETE, BOX CULVERT	MINOR CONCRETE (BACKFILL)	REMOVE CONCRETE	REMOVE ASPHALT CONCRETE PAVEMENT	ABANDON PIPELINE	SAND BACKFILL	ABANDON INLET	DITCH EXCAVATION	REMOVE INLET	CAP INLET	ADJUST INLET	24" SLOTTED CORRUGATED STEEL PIPE (0.079" THICK)	18" CORRUGATED STEEL PIPE (0.079" THICK)	BAR REINFORCING STEEL (BOX CULVERT)	REMOVE PIPE	8" PLASTIC PIPE	18" REINFORCED CONCRETE PIPE	24" REINFORCED CONCRETE PIPE	30" REINFORCED CONCRETE PIPE	(N) FRAME AND GRATING FOR CATCH BASINS (APWA 311-2)	(N) TYPE 24-12 FRAME AND GRATE	(N) STEEL PLATE CLOSURE	ROCK SLOPE PROTECTION (FACING; METHOD B)	ROCK SLOPE PROTECTION FABRIC (CLASS 8)	(N) MAXIMUM COVER	PLACE HOT MIX ASPHALT (MISCELLANEOUS AREA)	HOT MIX ASPHALT (TYPE A)	AUSTIN VAULT: MINOR CONCRETE (GUTTER)	AUSTIN VAULT: STRUCTURAL CONCRETE	AUSTIN VAULT: STRUCTURE EXCAVATION	AUSTIN VAULT: STRUCTURE BACKFILL	AUSTIN VAULT: SAND BED	AUSTIN VAULT: BAR REINFORCING STEEL	AUSTIN VAULT: GABION	AUSTIN VAULT: CABLE RAILING	AUSTIN VAULT: FILTER FABRIC	AUSTIN VAULT: PERMEABLE MATERIAL	AUSTIN VAULT: MISCELLANEOUS METAL	AUSTIN VAULT: 6" PLASTIC PIPE UNDERDRAIN	AUSTIN VAULT: 6" PERFORATED PLASTIC PIPE UNDERDRAIN	DESCRIPTION	STATION
			F+	CY	CY	LB	CY	CY	CY	CY	LF	CY	EA	CY	EA	EA	EA	LF	LF	LB	LF	LF	LF	LF	LF	EA	EA	EA	CY	SQYD	F+	SQYD	TON	CY	CY	CY	CY	CY	LB	CY	LF	SQYD	CY	LB	LF	LF		
D-9	48	a											1																																		ABANDON INLET	64.8′ L+ 1870+19.0 ℄ Fwy
		b									170.6	19.9																																			ABANDON PIPELINE	
		c														1																															CAP INLET	64.8′ L+ 1871+94.6 ℄ Fwy
		d									6.8	0.45																																			ABANDON PIPELINE	
		e											1																																		ABANDON INLET	64.8′ L+ 1872+38.0 ℄ Fwy
		f					2.52													442																											3′ x 1′ x 9.2′ RCB	
		g	2.8	1.29		580																					2																				GD-1 INLET	79.0′ L+ 1871+94.2 ℄ Fwy
		h						2.13															32.6								2																18" RCP WITH MINOR Conc (BACKFILL)	
		i	2.3	1.15		580																					2																				GD-1 INLET	79.0′ L+ 1871+94.2 ℄ Fwy
		j																			32.5																										REMOVE PIPE	
		k													1																																REMOVE INLET	103.0′ L+ 1871+58.5 ℄ Fwy
SHEET TOTAL			2.44		1160	2.52	2.13			177.4	20.35	2		1	1				442	32.5		32.6				4																					

DRAINAGE QUANTITIES
DQ-20

STATE OF CALIFORNIA - DEPARTMENT OF TRANSPORTATION
Caltrans
HYDRAULICS

FUNCTIONAL SUPERVISOR: DAVE BHALLA
CALCULATED-DESIGNED BY: S. THAI
CHECKED BY: D. BHALLA
REVISED BY
DATE REVISED

LAST REVISION DATE PLOTTED => 12-JUN-2013
TIME PLOTTED => 16:31
06-09-12

NOTES: PIPE JOINTS ARE STANDARD OR AS NOTED ON PLANS

(N) NOT A SEPARATE PAY ITEM, FOR INFORMATION ONLY.

Dist	COUNTY	ROUTE	POST MILES TOTAL PROJECT	SHEET No.	TOTAL SHEETS
07	LA	10	33.2/37.2	255	1475

REGISTERED CIVIL ENGINEER 4-17-12 DATE

6-10-13
PLANS APPROVAL DATE

REGISTERED PROFESSIONAL ENGINEER SA K. THAI No. 71390 Exp. 12/31/13 CIVIL STATE OF CALIFORNIA

THE STATE OF CALIFORNIA OR ITS OFFICERS OR AGENTS SHALL NOT BE RESPONSIBLE FOR THE ACCURACY OR COMPLETENESS OF SCANNED COPIES OF THIS PLAN SHEET.

DRAINAGE QUANTITIES

DRAINAGE SHEET No.	DRAINAGE SYSTEM No.	DRAINAGE UNIT	HEIGHT OF INLET H OR V	MINOR CONCRETE (MINOR STRUCTURE)	MINOR CONCRETE (Conc DRAIN)	MISCELLANEOUS IRON AND STEEL	STRUCTURAL CONCRETE, BOX CULVERT	MINOR CONCRETE (BACKFILL)	REMOVE CONCRETE	REMOVE ASPHALT CONCRETE PAVEMENT	ABANDON PIPELINE	SAND BACKFILL	ABANDON INLET	DITCH EXCAVATION	REMOVE INLET	CAP INLET	ADJUST INLET	24" SLOTTED CORRUGATED STEEL PIPE (0.079" THICK)	18" CORRUGATED STEEL PIPE (0.079" THICK)	BAR REINFORCING STEEL (BOX CULVERT)	REMOVE PIPE	8" PLASTIC PIPE	18" REINFORCED CONCRETE PIPE	24" REINFORCED CONCRETE PIPE	30" REINFORCED CONCRETE PIPE	(N) FRAME AND GRATING FOR CATCH BASINS (APWA 311-2)	(N) TYPE 24-12 FRAME AND GRATE	(N) STEEL PLATE CLOSURE	ROCK SLOPE PROTECTION (FACING; METHOD B)	ROCK SLOPE PROTECTION FABRIC (CLASS 8)	(N) MAXIMUM COVER	PLACE HOT MIX ASPHALT (MISCELLANEOUS AREA)	HOT MIX ASPHALT (TYPE A)	AUSTIN VAULT: MINOR CONCRETE (GUTTER)	AUSTIN VAULT: STRUCTURAL CONCRETE	AUSTIN VAULT: STRUCTURE EXCAVATION	AUSTIN VAULT: STRUCTURE BACKFILL	AUSTIN VAULT: SAND BED	AUSTIN VAULT: BAR REINFORCING STEEL	AUSTIN VAULT: GABION	AUSTIN VAULT: CABLE RAILING	AUSTIN VAULT: FILTER FABRIC	AUSTIN VAULT: PERMEABLE MATERIAL	AUSTIN VAULT: MISCELLANEOUS METAL	AUSTIN VAULT: 6" PLASTIC PIPE UNDERDRAIN	AUSTIN VAULT: 6" PERFORATED PLASTIC PIPE UNDERDRAIN	DESCRIPTION	STATION
			F+	CY	CY	LB	CY	CY	CY	CY	LF	CY	EA	CY	EA	EA	EA	LF	LF	LB	LF	LF	LF	LF	LF	EA	EA	EA	CY	SQYD	F+	SQYD	TON	CY	CY	CY	CY	CY	LB	CY	LF	SQYD	CY	LB	LF	LF		
D-9	49	a															1																													ADJUST INLET	23.0′ R+ 74+32.0 ℄ RAMP "V3"
		b																							267.5						4																30" RCP	
		c	6.3	2.31		580																					2																				GD-1 INLET	20.0′ R+ 71+62.0 ℄ RAMP "V2"
		d																			3.9																										REMOVE PIPE	
		e	6.1	2.25		580																					2																				GD-1 INLET	79.0′ R+ 1871+76.3 ℄ Fwy
		f														1																															CAP INLET	66.0′ R+ 1871+82.0 ℄ Fwy
		g														1																															CAP INLET	67.0′ R+ 1874+32.4 ℄ Fwy
		h	5.6	2.10		580																					2																				GD-1 INLET	79.0′ R+ 1874+32.4 ℄ Fwy
		i																			48.5																										REMOVE PIPE	
		j																					71.2								5																18" RCP	
		k	6.0	2.08		326																					1																				TYPE G2 INLET	4.0′ L+ 74+90.0 ℄ RAMP "V2"
		L																107.0																												24" SCSP	
		m	2.5	0.85		326																					1																				CL INLET CASE 2	4.0′ L+ 76+00.0 ℄ RAMP "V2"
D-9	50	a					3.15													552																										3′ x 1′ x 11.5′ RCB	
		b	3.5	1.50		580																					2																				GD-1 INLET	36.3′ L+ 70+30.0 ℄ RAMP "V6"
SHEET TOTAL				11.09		2972	3.15									2	1	107.0		552	52.4		71.2		267.5		10																					

DRAINAGE QUANTITIES
DQ-21

STATE OF CALIFORNIA - DEPARTMENT OF TRANSPORTATION
Caltrans HYDRAULICS

FUNCTIONAL SUPERVISOR: DAVE BHALLA
CALCULATED-DESIGNED BY: S. THAI
CHECKED BY: D. BHALLA
REVISED BY
DATE REVISED

LAST REVISION DATE PLOTTED => 12-JUN-2013
TIME PLOTTED => 16:31

NOTES: PIPE JOINTS ARE STANDARD OR AS NOTED ON PLANS

(N) NOT A SEPARATE PAY ITEM, FOR INFORMATION ONLY.

Dist	COUNTY	ROUTE	POST MILES TOTAL PROJECT	SHEET No.	TOTAL SHEETS
07	LA	10	33.2/37.2	256	1475

REGISTERED CIVIL ENGINEER 4-17-12 DATE

6-10-13
PLANS APPROVAL DATE

REGISTERED PROFESSIONAL ENGINEER SA K. THAI No. 71390 Exp. 12/31/13 CIVIL STATE OF CALIFORNIA

THE STATE OF CALIFORNIA OR ITS OFFICERS OR AGENTS SHALL NOT BE RESPONSIBLE FOR THE ACCURACY OR COMPLETENESS OF SCANNED COPIES OF THIS PLAN SHEET.

DRAINAGE QUANTITIES

DRAINAGE SHEET No.	DRAINAGE SYSTEM No.	DRAINAGE UNIT	HEIGHT OF INLET H OR V	MINOR CONCRETE (MINOR STRUCTURE)	MINOR CONCRETE (Conc DRAIN)	MISCELLANEOUS IRON AND STEEL	STRUCTURAL CONCRETE, BOX CULVERT	MINOR CONCRETE (BACKFILL)	REMOVE CONCRETE	REMOVE ASPHALT CONCRETE PAVEMENT	ABANDON PIPELINE	SAND BACKFILL	ABANDON INLET	DITCH EXCAVATION	REMOVE INLET	CAP INLET	ADJUST INLET	24" SLOTTED CORRUGATED STEEL PIPE (0.079" THICK)	18" CORRUGATED STEEL PIPE (0.079" THICK)	BAR REINFORCING STEEL (BOX CULVERT)	REMOVE PIPE	8" PLASTIC PIPE	18" REINFORCED CONCRETE PIPE	24" REINFORCED CONCRETE PIPE	30" REINFORCED CONCRETE PIPE	(N) FRAME AND GRATING FOR CATCH BASINS (APWA 311-2)	(N) TYPE 24-12 FRAME AND GRATE	(N) STEEL PLATE CLOSURE	ROCK SLOPE PROTECTION (FACING; METHOD B)	ROCK SLOPE PROTECTION FABRIC (CLASS 8)	(N) MAXIMUM COVER	(N) PLACE HOT MIX ASPHALT (MISCELLANEOUS AREA)	HOT MIX ASPHALT (TYPE A)	AUSTIN VAULT: MINOR CONCRETE (GUTTER)	AUSTIN VAULT: STRUCTURAL CONCRETE	AUSTIN VAULT: STRUCTURE EXCAVATION	AUSTIN VAULT: STRUCTURE BACKFILL	AUSTIN VAULT: SAND BED	AUSTIN VAULT: BAR REINFORCING STEEL	AUSTIN VAULT: GABION	AUSTIN VAULT: CABLE RAILING	AUSTIN VAULT: FILTER FABRIC	AUSTIN VAULT: PERMEABLE MATERIAL	AUSTIN VAULT: MISCELLANEOUS METAL	AUSTIN VAULT: 6" PLASTIC PIPE UNDERDRAIN	AUSTIN VAULT: 6" PERFORATED PLASTIC PIPE UNDERDRAIN	DESCRIPTION	STATION
			F+	CY	CY	LB	CY	CY	CY	CY	LF	CY	EA	CY	EA	EA	EA	LF	LF	LB	LF	LF	LF	LF	LF	EA	EA	EA	CY	SQYD	F+	SQYD	TON	CY	CY	CY	CY	CY	LB	CY	LF	SQYD	CY	LB	LF	LF		
D-9	51	a					79.96													8400																											3' x 1.5' x 175.0' RCB	
		b	4.3	2.68		652																					2																				TYPE GT4 INLET	34.9' L+ 73+80.0 ℄ RAMP "V6"
		c																					349.0								3																24" RCP	
		d	4.5	1.69		326																					1																				TYPE G2 INLET	22.0' L+ 77+50.0 ℄ RAMP "V6"
		e																					347.8								3																24" RCP	
D-10		f	4.5	1.69		326																					1																				TYPE G2 INLET	90.4' L+ 1881+00.0 ℄ Fwy
		g																					337.0								3																24" RCP	
		h	4.8	1.77		326																					1																				TYPE G2 INLET	90.4' L+ 1884+60.0 ℄ Fwy
		i																					31.2								3																24" RCP	
		j	4.3	1.64		580																					2																				GD-1 INLET	90.4' L+ 1884+70.0 ℄ Fwy
		k																				8.5																									8" PLASTIC PIPE	
		L																					287.0								3																24" RCP	
		m	4.5	1.28		326																					1																				TYPE G2 INLET	90.4' L+ 1887+60.0 ℄ Fwy
		n																				8.5																									8" PLASTIC PIPE	
D-9	52	a	4.3	1.73		580																					2																				GD-1 INLET	28.0' R+ 78+70.0 ℄ RAMP "V2"
		b																						7.0							3																18" RCP	
		c	4.6	1.81		580																					2																				GD-1 INLET	28.1' R+ 78+60.0 ℄ RAMP "V2"
		d																						20.5							3																18" RCP	
		e		0.55																																											JUNCTION STRUCTURE No. 1	
		f													1																																REMOVE INLET	66.4' R+ 1877+81.6 ℄ Fwy
SHEET TOTAL				14.84		3696	79.96								1					8400		17.0	27.5	1352.0			12																					

DRAINAGE QUANTITIES
DQ-22

STATE OF CALIFORNIA - DEPARTMENT OF TRANSPORTATION
Caltrans®
HYDRAULICS

FUNCTIONAL SUPERVISOR: DAVE BHALLA
CALCULATED-DESIGNED BY: D. BHALLA
CHECKED BY: S. THAI
REVISED BY
DATE REVISED

LAST REVISION DATE PLOTTED => 12-JUN-2013
TIME PLOTTED => 16:31

NOTES: PIPE JOINTS ARE STANDARD OR AS NOTED ON PLANS

(N) NOT A SEPARATE PAY ITEM, FOR INFORMATION ONLY.

Dist	COUNTY	ROUTE	POST MILES TOTAL PROJECT	SHEET No.	TOTAL SHEETS
07	LA	10	33.2/37.2	257	1475

REGISTERED CIVIL ENGINEER 4-17-12 DATE

6-10-13
PLANS APPROVAL DATE

REGISTERED PROFESSIONAL ENGINEER SA K. THAI No. 71390 Exp. 12/31/13 CIVIL STATE OF CALIFORNIA

THE STATE OF CALIFORNIA OR ITS OFFICERS OR AGENTS SHALL NOT BE RESPONSIBLE FOR THE ACCURACY OR COMPLETENESS OF SCANNED COPIES OF THIS PLAN SHEET.

DRAINAGE QUANTITIES

DRAINAGE SHEET No.	DRAINAGE SYSTEM No.	DRAINAGE UNIT	HEIGHT OF INLET H OR V	MINOR CONCRETE (MINOR STRUCTURE)	MINOR CONCRETE (Conc DRAIN)	MISCELLANEOUS IRON AND STEEL	STRUCTURAL CONCRETE, BOX CULVERT	MINOR CONCRETE (BACKFILL)	REMOVE CONCRETE	REMOVE ASPHALT CONCRETE PAVEMENT	ABANDON PIPELINE	SAND BACKFILL	ABANDON INLET	DITCH EXCAVATION	REMOVE INLET	CAP INLET	ADJUST INLET	24" SLOTTED CORRUGATED STEEL PIPE (0.079" THICK)	18" CORRUGATED STEEL PIPE (0.079" THICK)	BAR REINFORCING STEEL (BOX CULVERT)	REMOVE PIPE	8" PLASTIC PIPE	18" REINFORCED CONCRETE PIPE	24" REINFORCED CONCRETE PIPE	30" REINFORCED CONCRETE PIPE	(N) FRAME AND GRATING FOR CATCH BASINS (APWA 311-2)	(N) TYPE 24-12 FRAME AND GRATE	(N) STEEL PLATE CLOSURE	ROCK SLOPE PROTECTION (FACING; METHOD B)	ROCK SLOPE PROTECTION FABRIC (CLASS 8)	(N) MAXIMUM COVER	PLACE HOT MIX ASPHALT (MISCELLANEOUS AREA)	HOT MIX ASPHALT (TYPE A)	AUSTIN VAULT: MINOR CONCRETE (GUTTER)	AUSTIN VAULT: STRUCTURAL CONCRETE	AUSTIN VAULT: STRUCTURE EXCAVATION	AUSTIN VAULT: STRUCTURE BACKFILL	AUSTIN VAULT: SAND BED	AUSTIN VAULT: BAR REINFORCING STEEL	AUSTIN VAULT: GABION	AUSTIN VAULT: CABLE RAILING	AUSTIN VAULT: FILTER FABRIC	AUSTIN VAULT: PERMEABLE MATERIAL	AUSTIN VAULT: MISCELLANEOUS METAL	AUSTIN VAULT: 6" PLASTIC PIPE UNDERDRAIN	AUSTIN VAULT: 6" PERFORATED PLASTIC PIPE UNDERDRAIN	DESCRIPTION	STATION
			F+	CY	CY	LB	CY	CY	CY	CY	LF	CY	EA	CY	EA	EA	EA	LF	LF	LB	LF	LF	LF	LF	LF	EA	EA	EA	CY	SQYD	F+	SQYD	TON	CY	CY	CY	CY	CY	LB	CY	LF	SQYD	CY	LB	LF	LF		
		g																			33.4																										REMOVE PIPE	28.0′ R+ 78+70.0 ℄ RAMP "V2"
		h													1																																REMOVE INLET	
		i	4.8	3.20		460																																									MANHOLE No. 1	28.0′ R+ 78+70.0 ℄ RAMP "V2"
D-10	53	a														1																															CAP INLET	5.2′ R+ 81+82.0 ℄ RAMP "V3"
		b						7.25															22.1								2																18" RCP WITH MINOR Conc (BACKFILL)	
		c	3.5	1.50		580																					2																				GD-1 INLET	21.5′ R+ 82+00.0 ℄ RAMP "V3"
D-10	54	a														1																															CAP INLET	69.50′ R+ 1885+32.5 ℄ Fwy
		b						8.27															25.2								2																18" RCP WITH MINOR Conc (BACKFILL)	
		c	3.5	1.50		580																					2																				GD-1 INLET	91.0′ R+ 1885+50.5 ℄ Fwy
D-10	55	a							14.1																																						REMOVE SIDEWALK CULVERT	
		b					15.37													3469																											DOUBLE 5′ x 2′ RCB L=19.6′	
		c				91																																									PROTECTION BAR AND SUPPORT BOLTS WITH FIXED STIRRUPS (TYPE B)	
		d	1.0	0.51		326																					1																				TYPE G1 INLET	91.0′ R+ 1889+58.0 ℄ Fwy
		e		3.17		7747																																									SIDEWALK CULVERT WITH STEEL PLATE COVER	
D-10	56	a							15.1																																						REMOVE RCB	
		b					24.98													4425																											TRANSITION STRUCTURE	
		c				73																																									PROTECTION BAR AND SUPPORT BOLTS WITH FIXED STIRRUPS (TYPE B)	
		d	1.0	0.77		580																					2																				GD-1 INLET	91.0′ R+ 1890+98.3 ℄ Fwy
D-11	57	a	1.2	0.83		580																					2																				GD-1 INLET	101.1′ L+ 1895+60.0 ℄ Fwy
		b					0.55													96																											3′ x 6" x 2.0′ RCB	
SHEET TOTAL				11.48		11017	40.90	15.52	29.2						1	2				7990	33.4		47.3				9																					

DRAINAGE QUANTITIES
DQ-23

STATE OF CALIFORNIA - DEPARTMENT OF TRANSPORTATION
Caltrans®
HYDRAULICS

FUNCTIONAL SUPERVISOR: DAVE BHALLA
CALCULATED-DESIGNED BY: S. THAI
CHECKED BY: D. BHALLA
REVISED BY
DATE REVISED

LAST REVISION DATE PLOTTED => 12-JUN-2013
TIME PLOTTED => 16:31

NOTES: PIPE JOINTS ARE STANDARD OR AS NOTED ON PLANS

(N) NOT A SEPARATE PAY ITEM, FOR INFORMATION ONLY.

Dist	COUNTY	ROUTE	POST MILES TOTAL PROJECT	SHEET No.	TOTAL SHEETS
07	LA	10	33.2/37.2	258	1475

REGISTERED CIVIL ENGINEER 4-17-12 DATE

6-10-13
PLANS APPROVAL DATE

REGISTERED PROFESSIONAL ENGINEER SA K. THAI No. 71390 Exp. 12/31/13 CIVIL STATE OF CALIFORNIA

THE STATE OF CALIFORNIA OR ITS OFFICERS OR AGENTS SHALL NOT BE RESPONSIBLE FOR THE ACCURACY OR COMPLETENESS OF SCANNED COPIES OF THIS PLAN SHEET.

DRAINAGE QUANTITIES

DRAINAGE SHEET No.	DRAINAGE SYSTEM No.	DRAINAGE UNIT	HEIGHT OF INLET H OR V	MINOR CONCRETE (MINOR STRUCTURE)	MINOR CONCRETE (Conc DRAIN)	MISCELLANEOUS IRON AND STEEL	STRUCTURAL CONCRETE, BOX CULVERT	MINOR CONCRETE (BACKFILL)	REMOVE CONCRETE	REMOVE ASPHALT CONCRETE PAVEMENT	ABANDON PIPELINE	SAND BACKFILL	ABANDON INLET	DITCH EXCAVATION	REMOVE INLET	CAP INLET	ADJUST INLET	24" SLOTTED CORRUGATED STEEL PIPE (0.079" THICK)	18" CORRUGATED STEEL PIPE (0.079" THICK)	BAR REINFORCING STEEL (BOX CULVERT)	REMOVE PIPE	8" PLASTIC PIPE	18" REINFORCED CONCRETE PIPE	24" REINFORCED CONCRETE PIPE	30" REINFORCED CONCRETE PIPE	(N) FRAME AND GRATING FOR CATCH BASINS (APWA 311-2)	(N) TYPE 24-12 FRAME AND GRATE	(N) STEEL PLATE CLOSURE	ROCK SLOPE PROTECTION (FACING; METHOD B)	ROCK SLOPE PROTECTION FABRIC (CLASS 8)	(N) MAXIMUM COVER	PLACE HOT MIX ASPHALT (MISCELLANEOUS AREA)	HOT MIX ASPHALT (TYPE A)	AUSTIN VAULT: MINOR CONCRETE (GUTTER)	AUSTIN VAULT: STRUCTURAL CONCRETE	AUSTIN VAULT: STRUCTURE EXCAVATION	AUSTIN VAULT: STRUCTURE BACKFILL	AUSTIN VAULT: SAND BED	AUSTIN VAULT: BAR REINFORCING STEEL	AUSTIN VAULT: GABION	AUSTIN VAULT: CABLE RAILING	AUSTIN VAULT: FILTER FABRIC	AUSTIN VAULT: PERMEABLE MATERIAL	AUSTIN VAULT: MISCELLANEOUS METAL	AUSTIN VAULT: 6" PLASTIC PIPE UNDERDRAIN	AUSTIN VAULT: 6" PERFORATED PLASTIC PIPE UNDERDRAIN	DESCRIPTION	STATION
			F+	CY	CY	LB	CY	CY	CY	CY	LF	CY	EA	CY	EA	EA	EA	LF	LF	LB	LF	LF	LF	LF	LF	EA	EA	EA	CY	SQYD	F+	SQYD	TON	CY	CY	CY	CY	CY	LB	CY	LF	SQYD	CY	LB	LF	LF		
D-11	58	a	4.3	1.73		580																					2																			GD-1 INLET	91.0' L+ 1901+20.00 ℄ Fwy
		b																				17.0									4															18" RCP	
		c	5.2	1.87		326																					1																			TYPE G2 INLET	91.0' L+ 1901+40.00 ℄ Fwy
		d																	2.3												8															18" CORRUGATED STEEL PIPE	
		e																						337.0							4															24" RCP	
		f	5.2	1.87		326																					1																			TYPE G2 INLET	102.0' L+ 1904+80.00 ℄ Fwy
		g																				9.5																								8" PLASTIC PIPE	
		h																						237.0							4															24" RCP	
		i	5.2	1.87		326																					1																			TYPE G2 INLET	102.0' L+ 1907+20.00 ℄ Fwy
		j																				9.5																								8" PLASTIC PIPE	
		k																						297.0							4															24" RCP	
D-12		L	5.2	1.87		326																					1																			TYPE G2 INLET	102.0' L+ 1910+20.00 ℄ Fwy
		m																				9.5																								8" PLASTIC PIPE	
		n																						297.0							4															24" RCP	
		o	5.2	1.87		326																					1																			TYPE G2 INLET	103.5' L+ 1913+20.00 ℄ Fwy
		p																				9.5																								8" PLASTIC PIPE	
		q																						297.0							4															24" RCP	
		r	5.2	1.87		326																					1																			TYPE G2 INLET	108.5' L+ 1916+20.00 ℄ Fwy
		s																				9.5																								8" PLASTIC PIPE	
		t																						297.0							4															24" RCP	
		u	5.2	1.87		326																					1																			TYPE G2 INLET	114.5' L+ 1919+20.00 ℄ Fwy
		v																				9.5																								8" PLASTIC PIPE	
SHEET TOTAL				14.82		2862													2.3			57.0	17.0	1762.0			9																				

DRAINAGE QUANTITIES
DQ-24

S. THAI — REVISED BY
D. BHALLA — DATE REVISED
CALCULATED-DESIGNED BY
CHECKED BY
FUNCTIONAL SUPERVISOR
DAVE BHALLA

STATE OF CALIFORNIA - DEPARTMENT OF TRANSPORTATION
Caltrans
HYDRAULICS

LAST REVISION DATE PLOTTED => 12-JUN-2013
TIME PLOTTED => 16:31

NOTES: PIPE JOINTS ARE STANDARD OR AS NOTED ON PLANS

(N) NOT A SEPARATE PAY ITEM, FOR INFORMATION ONLY.

Dist	COUNTY	ROUTE	POST MILES TOTAL PROJECT	SHEET No.	TOTAL SHEETS
07	LA	10	33.2/37.2	259	1475

REGISTERED CIVIL ENGINEER 4-17-12 DATE

6-10-13
PLANS APPROVAL DATE

REGISTERED PROFESSIONAL ENGINEER SA K. THAI No. 71390 Exp. 12/31/13 CIVIL STATE OF CALIFORNIA

THE STATE OF CALIFORNIA OR ITS OFFICERS OR AGENTS SHALL NOT BE RESPONSIBLE FOR THE ACCURACY OR COMPLETENESS OF SCANNED COPIES OF THIS PLAN SHEET.

DRAINAGE QUANTITIES

DRAINAGE SHEET No.	DRAINAGE SYSTEM No.	DRAINAGE UNIT	HEIGHT OF INLET H OR V	MINOR CONCRETE (MINOR STRUCTURE)	MINOR CONCRETE (Conc DRAIN)	MISCELLANEOUS IRON AND STEEL	STRUCTURAL CONCRETE, BOX CULVERT	MINOR CONCRETE (BACKFILL)	REMOVE CONCRETE	REMOVE ASPHALT CONCRETE PAVEMENT	ABANDON PIPELINE	SAND BACKFILL	ABANDON INLET	DITCH EXCAVATION	REMOVE INLET	CAP INLET	ADJUST INLET	24" SLOTTED CORRUGATED STEEL PIPE (0.079" THICK)	18" CORRUGATED STEEL PIPE (0.079" THICK)	BAR REINFORCING STEEL (BOX CULVERT)	REMOVE PIPE	8" PLASTIC PIPE	18" REINFORCED CONCRETE PIPE	24" REINFORCED CONCRETE PIPE	30" REINFORCED CONCRETE PIPE	(N) FRAME AND GRATING FOR CATCH BASINS (APWA 311-2)	(N) TYPE 24-12 FRAME AND GRATE	(N) STEEL PLATE CLOSURE	ROCK SLOPE PROTECTION (FACING; METHOD B)	ROCK SLOPE PROTECTION FABRIC (CLASS 8)	(N) MAXIMUM COVER	PLACE ASPHALT CONCRETE (MISCELLANEOUS AREA)	HOT MIX ASPHALT (TYPE A)	AUSTIN VAULT: MINOR CONCRETE (GUTTER)	AUSTIN VAULT: STRUCTURAL CONCRETE	AUSTIN VAULT: STRUCTURE EXCAVATION	AUSTIN VAULT: STRUCTURE BACKFILL	AUSTIN VAULT: SAND BED	AUSTIN VAULT: BAR REINFORCING STEEL	AUSTIN VAULT: GABION	AUSTIN VAULT: CABLE RAILING	AUSTIN VAULT: FILTER FABRIC	AUSTIN VAULT: PERMEABLE MATERIAL	AUSTIN VAULT: MISCELLANEOUS METAL	AUSTIN VAULT: 6" PLASTIC PIPE UNDERDRAIN	AUSTIN VAULT: 6" PERFORATED PLASTIC PIPE UNDERDRAIN	DESCRIPTION	STATION
			F+	CY	CY	LB	CY	CY	CY	CY	LF	CY	EA	CY	EA	EA	EA	LF	LF	LB	LF	LF	LF	LF	LF	EA	EA	EA	CY	SQYD	F+	SQYD	TON	CY	CY	CY	CY	CY	LB	CY	LF	SQYD	CY	LB	LF	LF		
D-11	59	a	3.7	1.55		580																					2																			GD-1 INLET	91.0' R+ 1901+20.00 ℄ Fwy
		b																					107.0								3															18" RCP	
		c																						9.5							3															24" RCP	
		d	4.4	1.76		580																					2																			GD-1 INLET	91.0' R+ 1902+30.00 ℄ Fwy
		e																						307.0							4															24" RCP	
		f	5.2	1.87		326																					1																			TYPE G2 INLET	91.0' R+ 1905+40.00 ℄ Fwy
		g																						297.0							4															24" RCP	
D-12		h	5.2	1.87		326																					1																			TYPE G2 INLET	91.0' R+ 1908+40.00 ℄ Fwy
		i																						297.0							4															24" RCP	
		j	5.2	1.87		326																					1																			TYPE G2 INLET	91.0' R+ 1911+40.00 ℄ Fwy
		k																						284.1							4															24" RCP	
		L	6.3	2.15		326																					1																			TYPE G2 INLET	91.0' R+ 1914+27.00 ℄ Fwy
		m																						28.4							4															24" RCP	
		n							11.2																																					REMOVE RCB	
		o													1																															REMOVE INLET	79.0' R+ 1914+80.0 ℄ Fwy
		p																			60.0																									REMOVE PIPE	
		q	5.7	2.13		580																					2																			GD-1 INLET	106.3' R+ 1914+53.50 ℄ Fwy
		r																						239.0							5															24" RCP	
		s	6.9	2.30		326																					1																			TYPE G2 INLET	34.0' R+ 17+00.00 ⅊ RAMP "A1"
		t																						228.3							6															24" RCP	
		u	7.4	2.46		326																					1																			TYPE G2 INLET	34.0' R+ 19+30.00 ⅊ RAMP "A1"
SHEET TOTAL			17.96			3696			11.2						1						60.0		107.0	1690.3			12																				

DRAINAGE QUANTITIES
DQ-25

STATE OF CALIFORNIA - DEPARTMENT OF TRANSPORTATION
Caltrans
HYDRAULICS

FUNCTIONAL SUPERVISOR: DAVE BHALLA
CALCULATED-DESIGNED BY: S. THAI
CHECKED BY: D. BHALLA
REVISED BY
DATE REVISED

LAST REVISION DATE PLOTTED => 12-JUN-2013
TIME PLOTTED => 16:31

NOTES: PIPE JOINTS ARE STANDARD OR AS NOTED ON PLANS

(N) NOT A SEPARATE PAY ITEM, FOR INFORMATION ONLY.

Dist	COUNTY	ROUTE	POST MILES TOTAL PROJECT	SHEET No.	TOTAL SHEETS
07	LA	10	33.2/37.2	260	1475

REGISTERED CIVIL ENGINEER 4-17-12 DATE

6-10-13
PLANS APPROVAL DATE

REGISTERED PROFESSIONAL ENGINEER SA K. THAI No. 71390 Exp. 12/31/13 CIVIL STATE OF CALIFORNIA

THE STATE OF CALIFORNIA OR ITS OFFICERS OR AGENTS SHALL NOT BE RESPONSIBLE FOR THE ACCURACY OR COMPLETENESS OF SCANNED COPIES OF THIS PLAN SHEET.

DRAINAGE QUANTITIES

DRAINAGE SHEET No.	DRAINAGE SYSTEM No.	DRAINAGE UNIT	HEIGHT OF INLET H OR V	MINOR CONCRETE (MINOR STRUCTURE)	MINOR CONCRETE (Conc DRAIN)	MISCELLANEOUS IRON AND STEEL	STRUCTURAL CONCRETE, BOX CULVERT	MINOR CONCRETE (BACKFILL)	REMOVE CONCRETE	REMOVE ASPHALT CONCRETE PAVEMENT	ABANDON PIPELINE	SAND BACKFILL	ABANDON INLET	DITCH EXCAVATION	REMOVE INLET	CAP INLET	ADJUST INLET	24" SLOTTED CORRUGATED STEEL PIPE (0.079" THICK)	18" CORRUGATED STEEL PIPE (0.079" THICK)	BAR REINFORCING STEEL (BOX CULVERT)	REMOVE PIPE	8" PLASTIC PIPE	18" REINFORCED CONCRETE PIPE	24" REINFORCED CONCRETE PIPE	30" REINFORCED CONCRETE PIPE	(N) FRAME AND GRATING FOR CATCH BASINS (APWA 311-2)	(N) TYPE 24-12 FRAME AND GRATE	(N) STEEL PLATE CLOSURE	ROCK SLOPE PROTECTION (FACING; METHOD B)	ROCK SLOPE PROTECTION FABRIC (CLASS 8)	(N) MAXIMUM COVER	PLACE HOT MIX ASPHALT (MISCELLANEOUS AREA)	HOT MIX ASPHALT (TYPE A)	AUSTIN VAULT: MINOR CONCRETE (GUTTER)	AUSTIN VAULT: STRUCTURAL CONCRETE	AUSTIN VAULT: STRUCTURE EXCAVATION	AUSTIN VAULT: STRUCTURE BACKFILL	AUSTIN VAULT: SAND BED	AUSTIN VAULT: BAR REINFORCING STEEL	AUSTIN VAULT: GABION	AUSTIN VAULT: CABLE RAILING	AUSTIN VAULT: FILTER FABRIC	AUSTIN VAULT: PERMEABLE MATERIAL	AUSTIN VAULT: MISCELLANEOUS METAL	AUSTIN VAULT: 6" PLASTIC PIPE UNDERDRAIN	AUSTIN VAULT: 6" PERFORATED PLASTIC PIPE UNDERDRAIN	DESCRIPTION	STATION
			F+	CY	CY	LB	CY	CY	CY	CY	LF	CY	EA	CY	EA	EA	EA	LF	LF	LB	LF	LF	LF	LF	LF	EA	EA	EA	CY	SQYD	F+	SQYD	TON	CY	CY	CY	CY	CY	LB	CY	LF	SQYD	CY	LB	LF	LF		
D-12	59	v																					45.2								4																18" RCP	
		w	5.2	1.87		326																					1																				TYPE G2 INLET	79.0′ R+ 1919+31.00 ℄ Fwy
		x																					6.0								4																18" RCP	
		y	4.8	1.87		580																					2																				GD-1 INLET	79.0′ R+ 1919+40.00 ℄ Fwy
D-13		z																						354.8							6																24" RCP	
		z1	5.2	1.43		326																					1																				TYPE G1 INLET	40.3′ R+ 23+10.00 ⅊ RAMP "A1"
		z2																					7.3								4																18" RCP	
		z3	4.8	1.35		326																					1																				TYPE G1 INLET	40.7′ R+ 23+20.00 ⅊ RAMP "A1"
		z4																					7.3								4																18" RCP	
		z5	4.7	1.32		326																					1																				TYPE G1 INLET	41.1′ R+ 23+30.00 ⅊ RAMP "A1"
		z6																					48.8								4																18" RCP	
		z7	6.5	2.20		326																					1																				TYPE G2 INLET	20.0′ R+ 22+82.5 ⅊ RAMP "A6"
D-12	60	a	3.5	1.06		326																					1																				TYPE G1 INLET	79.0′ R+ 1921+20.0 ℄ Fwy
		b																					16.8								4																18" RCP	
		c														1																																CAP INLET	66.0′ R+ 1921+31.7 ℄ Fwy
		d																			21.7																											REMOVE PIPE	
		e													1																																	REMOVE INLET	66.0′ R+ 1921+07.0 ℄ Fwy
		f																			21.7																											REMOVE PIPE	
		g													1																																	REMOVE INLET	66.0′ R+ 1920+82.0 ℄ Fwy
		h																			21.7																											REMOVE PIPE	
		i													1																																	REMOVE INLET	66.0′ R+ 1920+56.0 ℄ Fwy
SHEET TOTAL				11.10		2536									3	1					65.1		131.4	354.8			8																					

DRAINAGE QUANTITIES

DQ-26

STATE OF CALIFORNIA - DEPARTMENT OF TRANSPORTATION
Caltrans® HYDRAULICS

FUNCTIONAL SUPERVISOR: DAVE BHALLA
CALCULATED-DESIGNED BY: S. THAI
CHECKED BY: D. BHALLA
REVISED BY
DATE REVISED

LAST REVISION DATE PLOTTED => 12-JUN-2013
TIME PLOTTED => 16:31
06-09-12

NOTES: PIPE JOINTS ARE STANDARD OR AS NOTED ON PLANS

(N) NOT A SEPARATE PAY ITEM, FOR INFORMATION ONLY.

Dist	COUNTY	ROUTE	POST MILES TOTAL PROJECT	SHEET No.	TOTAL SHEETS
07	LA	10	33.2/37.2	261	1475

REGISTERED CIVIL ENGINEER 4-17-12 DATE

6-10-13
PLANS APPROVAL DATE

REGISTERED PROFESSIONAL ENGINEER SA K. THAI No. 71390 Exp. 12/31/13 CIVIL STATE OF CALIFORNIA

THE STATE OF CALIFORNIA OR ITS OFFICERS OR AGENTS SHALL NOT BE RESPONSIBLE FOR THE ACCURACY OR COMPLETENESS OF SCANNED COPIES OF THIS PLAN SHEET.

DRAINAGE QUANTITIES

DRAINAGE SHEET No.	DRAINAGE SYSTEM No.	DRAINAGE UNIT	HEIGHT OF INLET H OR V	MINOR CONCRETE (MINOR STRUCTURE)	MINOR CONCRETE (Conc DRAIN)	MISCELLANEOUS IRON AND STEEL	STRUCTURAL CONCRETE, BOX CULVERT	MINOR CONCRETE (BACKFILL)	REMOVE CONCRETE	REMOVE ASPHALT CONCRETE PAVEMENT	ABANDON PIPELINE	SAND BACKFILL	ABANDON INLET	DITCH EXCAVATION	REMOVE INLET	CAP INLET	ADJUST INLET	24" SLOTTED CORRUGATED STEEL PIPE (0.079" THICK)	18" CORRUGATED STEEL PIPE (0.079" THICK)	BAR REINFORCING STEEL (BOX CULVERT)	REMOVE PIPE	8" PLASTIC PIPE	18" REINFORCED CONCRETE PIPE	24" REINFORCED CONCRETE PIPE	30" REINFORCED CONCRETE PIPE	(N) FRAME AND GRATING FOR CATCH BASINS (APWA 311-2)	(N) TYPE 24-12 FRAME AND GRATE	(N) STEEL PLATE CLOSURE	ROCK SLOPE PROTECTION (FACING; METHOD B)	ROCK SLOPE PROTECTION FABRIC (CLASS 8)	(N) MAXIMUM COVER	PLACE HOT MIX ASPHALT (MISCELLANEOUS AREA)	HOT MIX ASPHALT (TYPE A)	AUSTIN VAULT: MINOR CONCRETE (GUTTER)	AUSTIN VAULT: STRUCTURAL CONCRETE	AUSTIN VAULT: STRUCTURE EXCAVATION	AUSTIN VAULT: STRUCTURE BACKFILL	AUSTIN VAULT: SAND BED	AUSTIN VAULT: BAR REINFORCING STEEL	AUSTIN VAULT: GABION	AUSTIN VAULT: CABLE RAILING	AUSTIN VAULT: FILTER FABRIC	AUSTIN VAULT: PERMEABLE MATERIAL	AUSTIN VAULT: MISCELLANEOUS METAL	AUSTIN VAULT: 6" PLASTIC PIPE UNDERDRAIN	AUSTIN VAULT: 6" PERFORATED PLASTIC PIPE UNDERDRAIN	DESCRIPTION	STATION
			F+	CY	CY	LB	CY	CY	CY	CY	LF	CY	EA	CY	EA	EA	EA	LF	LF	LB	LF	LF	LF	LF	LF	EA	EA	EA	CY	SQYD	F+	SQYD	TON	CY	CY	CY	CY	CY	LB	CY	LF	SQYD	CY	LB	LF	LF		
D-13	61	a											1																																		ABANDON INLET	99.0′ R+ 1923+72.0 ℄ Fwy
		b									31.5	2.1																																			ABANDON PIPELINE	
		c														1																															CAP INLET	66.0′ R+ 1923+72.0 ℄ Fwy
		d																					16.5								4																	18" RCP	
		e	5.0	1.39		326																					1																				TYPE G1 INLET	79.0′ R+ 1923+60.0 ℄ Fwy
D-13	62	a											1																																		ABANDON INLET	66.0′ L+ 1922+57.0 ℄ Fwy
		b									19.5	1.3																																			ABANDON PIPELINE	
		c											1																																		ABANDON INLET	66.0′ L+ 1922+80.0 ℄ Fwy
		d									19.5	1.3																																			ABANDON PIPELINE	
		e											1																																		ABANDON INLET	66.0′ L+ 1923+03.0 ℄ Fwy
		f									19.5	1.3																																			ABANDON PIPELINE	
		g											1																																		ABANDON INLET	66.0′ L+ 1923+26.0 ℄ Fwy
		h									199.0	13.0																																			ABANDON PIPELINE	
D-13	63	a							1.3																																						REMOVE Conc APRON	88.3′ L+ 26+80.7 ⅊ RAMP "A2"
		b													1																																REMOVE INLET	88.3′ L+ 26+80.7 ⅊ RAMP "A2"
		c																			79.0																										REMOVE PIPE	
		d													1																																REMOVE INLET	57.7′ L+ 12+92.3 ⅊ AZUSA Ave
		e																			35.0																										REMOVE PIPE	
		f	5.5	2.52		243																																									CURB OPENING CATCH BASIN	58.0′ L+ 12+55.0 ⅊ AZUSA Ave
SHEET TOTAL				3.91		569			1.3		289.0	19.0	5		2	1					114.0		16.5				1																					

DRAINAGE QUANTITIES
DQ-27

STATE OF CALIFORNIA - DEPARTMENT OF TRANSPORTATION
Caltrans
HYDRAULICS

FUNCTIONAL SUPERVISOR: DAVE BHALLA
CALCULATED-DESIGNED BY: S. THAI
CHECKED BY: D. BHALLA
REVISED BY
DATE REVISED

LAST REVISION DATE PLOTTED => 12-JUN-2013
TIME PLOTTED => 16:31
06-09-12

NOTES: PIPE JOINTS ARE STANDARD OR AS NOTED ON PLANS

(N) NOT A SEPARATE PAY ITEM, FOR INFORMATION ONLY.

Dist	COUNTY	ROUTE	POST MILES TOTAL PROJECT	SHEET No.	TOTAL SHEETS
07	LA	10	33.2/37.2	262	1475

REGISTERED CIVIL ENGINEER 4-17-12 DATE

6-10-13
PLANS APPROVAL DATE

REGISTERED PROFESSIONAL ENGINEER SA K. THAI No. 71390 Exp. 12/31/13 CIVIL STATE OF CALIFORNIA

THE STATE OF CALIFORNIA OR ITS OFFICERS OR AGENTS SHALL NOT BE RESPONSIBLE FOR THE ACCURACY OR COMPLETENESS OF SCANNED COPIES OF THIS PLAN SHEET.

DRAINAGE QUANTITIES

DRAINAGE SHEET No.	DRAINAGE SYSTEM No.	DRAINAGE UNIT	HEIGHT OF INLET H OR V	MINOR CONCRETE (MINOR STRUCTURE)	MINOR CONCRETE (Conc DRAIN)	MISCELLANEOUS IRON AND STEEL	STRUCTURAL CONCRETE, BOX CULVERT	MINOR CONCRETE (BACKFILL)	REMOVE CONCRETE	REMOVE ASPHALT CONCRETE PAVEMENT	ABANDON PIPELINE	SAND BACKFILL	ABANDON INLET	DITCH EXCAVATION	REMOVE INLET	CAP INLET	ADJUST INLET	24" SLOTTED CORRUGATED STEEL PIPE (0.079" THICK)	18" CORRUGATED STEEL PIPE (0.079" THICK)	BAR REINFORCING STEEL (BOX CULVERT)	REMOVE PIPE	8" PLASTIC PIPE	18" REINFORCED CONCRETE PIPE	24" REINFORCED CONCRETE PIPE	30" REINFORCED CONCRETE PIPE	(N) FRAME AND GRATING FOR CATCH BASINS (APWA 311-2)	(N) TYPE 24-12 FRAME AND GRATE	(N) STEEL PLATE CLOSURE	ROCK SLOPE PROTECTION (FACING; METHOD B)	ROCK SLOPE PROTECTION FABRIC (CLASS 8)	(N) MAXIMUM COVER	PLACE HOT MIX ASPHALT (MISCELLANEOUS AREA)	HOT MIX ASPHALT (TYPE A)	AUSTIN VAULT: MINOR CONCRETE (GUTTER)	STRUCTURAL CONCRETE	STRUCTURE EXCAVATION	STRUCTURE BACKFILL	SAND BED	BAR REINFORCING STEEL	GABION	CABLE RAILING	FILTER FABRIC	PERMEABLE MATERIAL	MISCELLANEOUS METAL	6" PLASTIC PIPE UNDERDRAIN	6" PERFORATED PLASTIC PIPE UNDERDRAIN	DESCRIPTION	STATION
			F+	CY	CY	LB	CY	CY	CY	CY	LF	CY	EA	CY	EA	EA	EA	LF	LF	LB	LF	LF	LF	LF	LF	EA	EA	EA	CY	SQYD	F+	SQYD	TON	CY	CY	CY	CY	CY	LB	CY	LF	SQFD	CY	LB	LF	LF		
D-13		g																					51.5								4																18" RCP	
		h	3.0	1.35		580																					2																				GD-1 INLET	58.1' L+ 25+75.0 ℄ RAMP "A2"
		i																					59.5								10																18" RCP	
		j	4.5	1.28		326																					1																				TYPE G1 INLET	37.0' L+ 26+44.0 ℄ RAMP "A2"
		k																					5.0								4																18" RCP	
		L	4.5	1.84		580																					2																				GD-1 INLET	37.0' L+ 26+52.0 ℄ RAMP "A2"
		m																					5.0								4																18" RCP	
		n	4.5	1.28		326																					1																				TYPE G1 INLET	37.0' L+ 26+60.0 ℄ RAMP "A2"
D-13	64	a	4.1	1.19		326																					1																				TYPE G1 INLET	22.5' L+ 24+91.0 ℄ RAMP "A3A2"
		b																					29.0								4																18" RCP	
		c	4.7	1.84		580																					2																				GD-1 INLET	22.5' L+ 25+23.0 ℄ RAMP "A3A2"
		d																	4.8																												18" CSP	
D-13	65	a													1																																REMOVE INLET	84.6' R+ 1925+94.3 ℄ Fwy
		b																			59.0																										REMOVE PIPE	
D-13	66	a	5.5	4.02		243																																								CURB OPENING CATCH BASIN	57.9' L+ 6+65.00 ℄ AZUSA Ave
		b																					104.0								5																18" RCP	
		c	6.0	2.08		326																					1																				TYPE G2 INLET	4.0' L+ 26+35.0 ℄ RAMP "A1"
		d																					102.1								5																18" RCP	
SHEET TOTAL			14.88			3287									1				4.8		59.0		356.1				10																					

DRAINAGE QUANTITIES

DQ-28

STATE OF CALIFORNIA - DEPARTMENT OF TRANSPORTATION
Caltrans
HYDRAULICS

FUNCTIONAL SUPERVISOR: DAVE BHALLA
CALCULATED-DESIGNED BY: S. THAI
CHECKED BY: D. BHALLA
REVISED BY
DATE REVISED

LAST REVISION DATE PLOTTED => 12-JUN-2013
TIME PLOTTED => 16:31
06-09-12

NOTES: PIPE JOINTS ARE STANDARD OR AS NOTED ON PLANS

(N) NOT A SEPARATE PAY ITEM, FOR INFORMATION ONLY.

Dist	COUNTY	ROUTE	POST MILES TOTAL PROJECT	SHEET No.	TOTAL SHEETS
07	LA	10	33.2/37.2	263	1475

REGISTERED CIVIL ENGINEER 4-17-12 DATE

6-10-13
PLANS APPROVAL DATE

REGISTERED PROFESSIONAL ENGINEER SA K. THAI No. 71390 Exp. 12/31/13 CIVIL STATE OF CALIFORNIA

THE STATE OF CALIFORNIA OR ITS OFFICERS OR AGENTS SHALL NOT BE RESPONSIBLE FOR THE ACCURACY OR COMPLETENESS OF SCANNED COPIES OF THIS PLAN SHEET.

DRAINAGE QUANTITIES

DRAINAGE SHEET No.	DRAINAGE SYSTEM No.	DRAINAGE UNIT	HEIGHT OF INLET H OR V	MINOR CONCRETE (MINOR STRUCTURE)	MINOR CONCRETE (Conc DRAIN)	MISCELLANEOUS IRON AND STEEL	STRUCTURAL CONCRETE, BOX CULVERT	MINOR CONCRETE (BACKFILL)	REMOVE CONCRETE	REMOVE ASPHALT CONCRETE PAVEMENT	ABANDON PIPELINE	SAND BACKFILL	ABANDON INLET	DITCH EXCAVATION	REMOVE INLET	CAP INLET	ADJUST INLET	24" SLOTTED CORRUGATED STEEL PIPE (0.079" THICK)	18" CORRUGATED STEEL PIPE (0.079" THICK)	BAR REINFORCING STEEL (BOX CULVERT)	REMOVE PIPE	8" PLASTIC PIPE	18" REINFORCED CONCRETE PIPE	24" REINFORCED CONCRETE PIPE	30" REINFORCED CONCRETE PIPE	(N) FRAME AND GRATING FOR CATCH BASINS (APWA 311-2)	(N) TYPE 24-12 FRAME AND GRATE	(N) STEEL PLATE CLOSURE	ROCK SLOPE PROTECTION (FACING; METHOD B)	ROCK SLOPE PROTECTION FABRIC (CLASS 8)	(N) MAXIMUM COVER	PLACE HOT MIX ASPHALT (MISCELLANEOUS AREA)	HOT MIX ASPHALT (TYPE A)	AUSTIN VAULT: MINOR CONCRETE (GUTTER)	AUSTIN VAULT: STRUCTURAL CONCRETE	AUSTIN VAULT: STRUCTURE EXCAVATION	AUSTIN VAULT: STRUCTURE BACKFILL	AUSTIN VAULT: SAND BED	AUSTIN VAULT: BAR REINFORCING STEEL	AUSTIN VAULT: GABION	AUSTIN VAULT: CABLE RAILING	AUSTIN VAULT: FILTER FABRIC	AUSTIN VAULT: PERMEABLE MATERIAL	AUSTIN VAULT: MISCELLANEOUS METAL	AUSTIN VAULT: 6" PLASTIC PIPE UNDERDRAIN	AUSTIN VAULT: 6" PERFORATED PLASTIC PIPE UNDERDRAIN	DESCRIPTION	STATION
			F+	CY	CY	LB	CY	CY	CY	CY	LF	CY	EA	CY	EA	EA	EA	LF	LF	LB	LF	LF	LF	LF	LF	EA	EA	EA	CY	SQYD	F+	SQYD	TON	CY	CY	CY	CY	CY	LB	CY	LF	SQYD	CY	LB	LF	LF		
D-13	66	e	3.4	1.41	1.70	326																					1																				TYPE G2 INLET WITH Conc APRON	72.5' L+ 8+60.30 ℄ AZUSA Ave
		f												45.9																																	BIOFILTRATION SWALE (V-DITCH)	48.1' R+ 22+18.0 ℄ RAMP "A5" 78.4' L+ 8+58.5 ℄ AZUSA Ave
		g																											10.4	29.3																	ROCK SLOPE PROTECTION (FACING, METHOD B)	
D-13	67	a															1																														ADJUST INLET	58.4' L+ 10+98.5 ℄ AZUSA Ave
		b															1																														ADJUST INLET	58.4' L+ 10+68.6 ℄ AZUSA Ave
		c															1																														ADJUST INLET	58.4' L+ 10+32.0 ℄ AZUSA Ave
		d															1																														ADJUST INLET	56.7' R+ 10+98.5 ℄ AZUSA Ave
		e															1																														ADJUST INLET	56.7' R+ 10+67.0 ℄ AZUSA Ave
		f															1																														ADJUST INLET	56.7' R+ 10+24.6 ℄ AZUSA Ave
		g															1																														ADJUST INLET	56.7' R+ 9+50.0 ℄ AZUSA Ave
D-13	68	a																											7.8	23.2																	ROCK SLOPE PROTECTION (FACING, METHOD B)	
		b												31.9																																	BIOFILTRATION SWALE (V-DITCH)	53.5' L+ 29+65.0 ℄ RAMP "A3A2" 77.3' R+ 12+53.5 ℄ AZUSA Ave
		c		2.12																																											TRANSITION STRUCTURE No. 4	
		d																					21.9								3																18" RCP	
		e														1																															CAP INLET	68.5' R+ 12+25.00 ℄ AZUSA Ave
		f																					5.6								4																18" RCP	
		g	6.0	3.07		243																																									CURB OPENING CATCH BASIN PER APWA 300-2	58.2' R+ 12+25.00 ℄ AZUSA Ave
D-13	69	a	6.0	3.07		243																																									CURB OPENING CATCH BASIN PER APWA 300-2	58.2' R+ 14+30.00 ℄ AZUSA Ave
		b																					30.9								3																18" RCP	
		c													1																																REMOVE INLET	58.2' R+ 14+35.00 ℄ AZUSA Ave
SHEET TOTAL			9.67	1.70	812									77.8	1	1	7						58.4				1		18.2	52.5																		

DRAINAGE QUANTITIES
DQ-29

STATE OF CALIFORNIA - DEPARTMENT OF TRANSPORTATION
Caltrans®
HYDRAULICS

S. THAI — D. BHALLA — DAVE BHALLA

REVISED BY | DATE REVISED | CALCULATED-DESIGNED BY | CHECKED BY | FUNCTIONAL SUPERVISOR

LAST REVISION DATE PLOTTED => 12-JUN-2013
06-09-12 TIME PLOTTED => 16:31

NOTES: PIPE JOINTS ARE STANDARD OR AS NOTED ON PLANS

(N) NOT A SEPARATE PAY ITEM, FOR INFORMATION ONLY.

Dist	COUNTY	ROUTE	POST MILES TOTAL PROJECT	SHEET No.	TOTAL SHEETS
07	LA	10	33.2/37.2	264	1475

REGISTERED CIVIL ENGINEER 4-17-12 DATE

6-10-13
PLANS APPROVAL DATE

REGISTERED PROFESSIONAL ENGINEER SA K. THAI No. 71390 Exp. 12/31/13 CIVIL STATE OF CALIFORNIA

THE STATE OF CALIFORNIA OR ITS OFFICERS OR AGENTS SHALL NOT BE RESPONSIBLE FOR THE ACCURACY OR COMPLETENESS OF SCANNED COPIES OF THIS PLAN SHEET.

DRAINAGE QUANTITIES

DRAINAGE SHEET No.	DRAINAGE SYSTEM No.	DRAINAGE UNIT	HEIGHT OF INLET H OR V	MINOR CONCRETE (MINOR STRUCTURE)	MINOR CONCRETE (Conc DRAIN)	MISCELLANEOUS IRON AND STEEL	STRUCTURAL CONCRETE, BOX CULVERT	MINOR CONCRETE (BACKFILL)	REMOVE CONCRETE	REMOVE ASPHALT CONCRETE PAVEMENT	ABANDON PIPELINE	SAND BACKFILL	ABANDON INLET	DITCH EXCAVATION	REMOVE INLET	CAP INLET	ADJUST INLET	24" SLOTTED CORRUGATED STEEL PIPE (0.079" THICK)	18" CORRUGATED STEEL PIPE (0.079" THICK)	BAR REINFORCING STEEL (BOX CULVERT)	REMOVE PIPE	8" PLASTIC PIPE	18" REINFORCED CONCRETE PIPE	24" REINFORCED CONCRETE PIPE	30" REINFORCED CONCRETE PIPE	(N) FRAME AND GRATING FOR CATCH BASINS (APWA 311-2)	(N) TYPE 24-12 FRAME AND GRATE	(N) STEEL PLATE CLOSURE	ROCK SLOPE PROTECTION (FACING; METHOD B)	ROCK SLOPE PROTECTION FABRIC (CLASS 8)	(N) MAXIMUM COVER	PLACE HOT MIX ASPHALT (MISCELLANEOUS AREA)	HOT MIX ASPHALT (TYPE A)	AUSTIN VAULT: MINOR CONCRETE (GUTTER)	AUSTIN VAULT: STRUCTURAL CONCRETE	AUSTIN VAULT: STRUCTURE EXCAVATION	AUSTIN VAULT: STRUCTURE BACKFILL	AUSTIN VAULT: SAND BED	AUSTIN VAULT: BAR REINFORCING STEEL	AUSTIN VAULT: GABION	AUSTIN VAULT: CABLE RAILING	AUSTIN VAULT: FILTER FABRIC	AUSTIN VAULT: PERMEABLE MATERIAL	AUSTIN VAULT: MISCELLANEOUS METAL	AUSTIN VAULT: 6" PLASTIC PIPE UNDERDRAIN	AUSTIN VAULT: 6" PERFORATED PLASTIC PIPE UNDERDRAIN	DESCRIPTION	STATION
			F†	CY	CY	LB	CY	CY	CY	CY	LF	CY	EA	CY	EA	EA	EA	LF	LF	LB	LF	LF	LF	LF	LF	EA	EA	EA	CY	SQYD	F†	SQYD	TON	CY	CY	CY	CY	CY	LB	CY	LF	SQYD	CY	LB	LF	LF		
D-13	69	d	5.9	4.00		460																																									MANHOLE No. 1	2.5' R† 26+92.50 ℄ RAMP "A3A1"
		e																				40.1									5																18" RCP	
		f	5.0	1.39		326																					1																				TYPE G1 INLET	4.0' R† 27+05.00 ℄ RAMP "A3A1"
		g																				153.5									5																18" RCP	
		h	6.0	2.08		326																					1																				TYPE G2 INLET	10.3' R† 29+00.00 ℄ RAMP "A3A1"
		i																				48.5									5																18" RCP	
		j	6.0	2.22		580																					2																				GD-1 INLET	24.7' L† 29+40.00 ℄ RAMP "A3A1"
D-13	70	a													1																																REMOVE INLET	66.3' L† 1928+76.5 ℄ Fwy
		b																			19.8																										REMOVE PIPE	
		c													1																																REMOVE INLET	66.3' L† 1929+00.0 ℄ Fwy
		d																			19.8																										REMOVE PIPE	
		e														1																															CAP INLET	66.3' L† 1929+23.3 ℄ Fwy
		f																				8.8									3																18" RCP	
		g	4.4	1.76		580																					2																				GD-1 INLET	79.0' L† 1929+20.0 ℄ Fwy
		h																				26.7									3																18" RCP	
		i					5.91																																								MINOR Conc (BACKFILL)	
		j	3.2	0.99		326																					1																				TYPE G1 INLET	20.0' L† 29+20.0 ℄ RAMP "A3A3"
		k																				17.0									3																18" RCP	
		L	4.1	1.19		326																					1																				TYPE G1 INLET	79.0' L† 1929+00.0 ℄ Fwy
		m																				15.5									3																18" RCP	
		n	3.7	1.10		326																					1																				TYPE G1 INLET	79.0' L† 1928+81.5 ℄ Fwy
SHEET TOTAL			14.73			3250		5.91							2	1					39.6		310.1				9																					

DRAINAGE QUANTITIES
DQ-30

STATE OF CALIFORNIA - DEPARTMENT OF TRANSPORTATION
Caltrans
HYDRAULICS

FUNCTIONAL SUPERVISOR: DAVE BHALLA
CALCULATED-DESIGNED BY: S. THAI
CHECKED BY: D. BHALLA
REVISED BY
DATE REVISED

LAST REVISION DATE PLOTTED => 12-JUN-2013
06-09-12 TIME PLOTTED => 16:31

NOTES: PIPE JOINTS ARE STANDARD OR AS NOTED ON PLANS

(N) NOT A SEPARATE PAY ITEM, FOR INFORMATION ONLY.

Dist	COUNTY	ROUTE	POST MILES TOTAL PROJECT	SHEET No.	TOTAL SHEETS
07	LA	10	33.2/37.2	265	1475

REGISTERED CIVIL ENGINEER 4-17-12 DATE

6-10-13
PLANS APPROVAL DATE

REGISTERED PROFESSIONAL ENGINEER SA K. THAI No. 71390 Exp 12/31/13 CIVIL STATE OF CALIFORNIA

THE STATE OF CALIFORNIA OR ITS OFFICERS OR AGENTS SHALL NOT BE RESPONSIBLE FOR THE ACCURACY OR COMPLETENESS OF SCANNED COPIES OF THIS PLAN SHEET.

DRAINAGE QUANTITIES

DRAINAGE SHEET No.	DRAINAGE SYSTEM No.	DRAINAGE UNIT	HEIGHT OF INLET H OR V	MINOR CONCRETE (MINOR STRUCTURE)	MINOR CONCRETE (Conc DRAIN)	MISCELLANEOUS IRON AND STEEL	STRUCTURAL CONCRETE, BOX CULVERT	MINOR CONCRETE (BACKFILL)	REMOVE CONCRETE	REMOVE ASPHALT CONCRETE PAVEMENT	ABANDON PIPELINE	SAND BACKFILL	ABANDON INLET	DITCH EXCAVATION	REMOVE INLET	CAP INLET	ADJUST INLET	24" SLOTTED CORRUGATED STEEL PIPE (0.079" THICK)	18" CORRUGATED STEEL PIPE (0.079" THICK)	BAR REINFORCING STEEL (BOX CULVERT)	REMOVE PIPE	8" PLASTIC PIPE	18" REINFORCED CONCRETE PIPE	24" REINFORCED CONCRETE PIPE	30" REINFORCED CONCRETE PIPE	(N) FRAME AND GRATING FOR CATCH BASINS (APWA 311-2)	(N) TYPE 24-12 FRAME AND GRATE	(N) STEEL PLATE CLOSURE	ROCK SLOPE PROTECTION (FACING; METHOD B)	ROCK SLOPE PROTECTION FABRIC (CLASS 8)	(N) MAXIMUM COVER	PLACE HOT MIX ASPHALT (MISCELLANEOUS AREA)	HOT MIX ASPHALT (TYPE A)	AUSTIN VAULT: MINOR CONCRETE (GUTTER)	AUSTIN VAULT: STRUCTURAL CONCRETE	AUSTIN VAULT: STRUCTURE EXCAVATION	AUSTIN VAULT: STRUCTURE BACKFILL	AUSTIN VAULT: SAND BED	AUSTIN VAULT: BAR REINFORCING STEEL	AUSTIN VAULT: GABION	AUSTIN VAULT: CABLE RAILING	AUSTIN VAULT: FILTER FABRIC	AUSTIN VAULT: PERMEABLE MATERIAL	AUSTIN VAULT: MISCELLANEOUS METAL	AUSTIN VAULT: 6" PLASTIC PIPE UNDERDRAIN	AUSTIN VAULT: 6" PERFORATED PLASTIC PIPE UNDERDRAIN	DESCRIPTION	STATION
			F†	CY	CY	LB	CY	CY	CY	CY	LF	CY	EA	CY	EA	EA	EA	LF	LF	LB	LF	LF	LF	LF	LF	EA	EA	EA	CY	SQYD	F†	SQYD	TON	CY	CY	CY	CY	CY	LB	CY	LF	SQYD	CY	LB	LF	LF		
D-13	71	a																			36.0																										REMOVE PIPE	
		b													1																																REMOVE INLET	79.0′ L† 1928+12.5 ℄ Fwy
		c			1.70																																										Conc APRON	111.0′ L† 1928+03.0 ℄ Fwy
		d												16.6																																	BIOFILTRATION SWALE (V-DITCH)	110.6′ R† 1928+08.9 ℄ Fwy - 101.6′ R† 1929+20.6 ℄ Fwy
D-13	72	a													1																																REMOVE INLET	84.8′ R† 7+09.5 ⅊ AZUSA Ave
		b																			44.2																										REMOVE PIPE	
		c													1																																REMOVE INLET	61.6′ R† 7+50.0 ⅊ AZUSA Ave
		d	6.6	5.35		243																																									CURB OPENING CATCH BASIN PER APWA 300-2	63.0′ R† 7+30.0 ⅊ AZUSA Ave
		e																					18.6								5																18" RCP	
		f																			4.0																										REMOVE INTERFERING PIPE	
		g	6.0	4.61		243																																									CURB OPENING CATCH BASIN PER APWA 300-2	59.0′ R† 8+15.0 ⅊ AZUSA Ave
		h																					33.5								5																18" RCP	
		i	4.5	1.79		580																					2																				GD-1 INLET	20.0′ R† 27+05.00 ⅊ RAMP "A4"
D-13	73	a		0.83																																											JUNCTION STRUCTURE No. 1	
		b																					59.0								2																18" RCP	
		c		2.03																																											TRANSITION STRUCTURE No. 4	25.0′ R† 29+94.5 ⅊ RAMP "A4" - 25.0′ R† 32+13.0 ⅊ RAMP "A4"
		d												47.6																																	BIOFILTRATION SWALE (TRAPEZOIDAL)	
		e																											14.8	37.3																		ROCK SLOPE PROTECTION (FACING, METHOD B)	
SHEET TOTAL			14.61	1.70	1066									64.2	3						84.2		111.1				2		14.8	37.3																		

DRAINAGE QUANTITIES
DQ-31

STATE OF CALIFORNIA - DEPARTMENT OF TRANSPORTATION
Caltrans® HYDRAULICS

FUNCTIONAL SUPERVISOR: DAVE BHALLA
CALCULATED-DESIGNED BY: S. THAI
CHECKED BY: D. BHALLA
REVISED BY
DATE REVISED

LAST REVISION DATE PLOTTED => 12-JUN-2013
TIME PLOTTED => 16:31
06-09-12

NOTES: PIPE JOINTS ARE STANDARD OR AS NOTED ON PLANS

(N) NOT A SEPARATE PAY ITEM, FOR INFORMATION ONLY.

Dist	COUNTY	ROUTE	POST MILES TOTAL PROJECT	SHEET No.	TOTAL SHEETS
07	LA	10	33.2/37.2	266	1475

REGISTERED CIVIL ENGINEER 4-17-12 DATE

6-10-13
PLANS APPROVAL DATE

REGISTERED PROFESSIONAL ENGINEER SA K. THAI No. 71390 Exp 12/31/13 CIVIL STATE OF CALIFORNIA

THE STATE OF CALIFORNIA OR ITS OFFICERS OR AGENTS SHALL NOT BE RESPONSIBLE FOR THE ACCURACY OR COMPLETENESS OF SCANNED COPIES OF THIS PLAN SHEET.

DRAINAGE QUANTITIES

DRAINAGE SHEET No.	DRAINAGE SYSTEM No.	DRAINAGE UNIT	HEIGHT OF INLET H OR V	MINOR CONCRETE (MINOR STRUCTURE)	MINOR CONCRETE (Conc DRAIN)	MISCELLANEOUS IRON AND STEEL	STRUCTURAL CONCRETE, BOX CULVERT	MINOR CONCRETE (BACKFILL)	REMOVE CONCRETE	REMOVE ASPHALT CONCRETE PAVEMENT	ABANDON PIPELINE	SAND BACKFILL	ABANDON INLET	DITCH EXCAVATION	REMOVE INLET	CAP INLET	ADJUST INLET	24" SLOTTED CORRUGATED STEEL PIPE (0.079" THICK)	18" CORRUGATED STEEL PIPE (0.079" THICK)	BAR REINFORCING STEEL (BOX CULVERT)	REMOVE PIPE	8" PLASTIC PIPE	18" REINFORCED CONCRETE PIPE	24" REINFORCED CONCRETE PIPE	30" REINFORCED CONCRETE PIPE	(N) FRAME AND GRATING FOR CATCH BASINS (APWA 311-2)	(N) TYPE 24-12 FRAME AND GRATE	(N) STEEL PLATE CLOSURE	ROCK SLOPE PROTECTION (FACING; METHOD B)	ROCK SLOPE PROTECTION FABRIC (CLASS 8)	(N) MAXIMUM COVER	PLACE HOT MIX ASPHALT (MISCELLANEOUS AREA)	HOT MIX ASPHALT (TYPE A)	AUSTIN VAULT: MINOR CONCRETE (GUTTER)	AUSTIN VAULT: STRUCTURAL CONCRETE	AUSTIN VAULT: STRUCTURE EXCAVATION	AUSTIN VAULT: STRUCTURE BACKFILL	AUSTIN VAULT: SAND BED	AUSTIN VAULT: BAR REINFORCING STEEL	AUSTIN VAULT: GABION	AUSTIN VAULT: CABLE RAILING	AUSTIN VAULT: FILTER FABRIC	AUSTIN VAULT: PERMEABLE MATERIAL	AUSTIN VAULT: MISCELLANEOUS METAL	AUSTIN VAULT: 6" PLASTIC PIPE UNDERDRAIN	AUSTIN VAULT: 6" PERFORATED PLASTIC PIPE UNDERDRAIN	DESCRIPTION	STATION
			F†	CY	CY	LB	CY	CY	CY	CY	LF	CY	EA	CY	EA	EA	EA	LF	LF	LB	LF	LF	LF	LF	LF	EA	EA	EA	CY	SQYD	F†	SQYD	TON	CY	CY	CY	CY	CY	LB	CY	LF	SQYD	CY	LB	LF	LF		
D-13	74	a													1																																REMOVE INLET	25.5' L+ 30+45.0 ℄ RAMP "A3A1"
		b																			30.0																										REMOVE PIPE	
		c																			3.9																										REMOVE PIPE	
		d	7.0	2.51		580																					2																				GD-1 INLET	23.7' L+ 30+10.0 ℄ RAMP "A3A1"
		e																						28.5							5																24" RCP	
		f	6.0	2.08		326																					1																				TYPE G2 INLET	24.6' L+ 30+45.0 ℄ RAMP "A3A1"
		g																					3.0								2																18" RCP	
		h	4.3	1.80		560																																								CURB OPENING CATCH BASIN WITH GRATING PER APWA 302-2	26.6' L+ 30+45.0 ℄ RAMP "A3A1"
		i																						331.1							4																24" RCP	
		j	5.5	1.95		326																					1																				TYPE G2 INLET	22.0' L+ 33+90.0 ℄ RAMP "A3A1"
		k																						7.0							4																24" RCP	
		L	5.2	1.99		580																					2																				GD-1 INLET	22.0' L+ 34+00.0 ℄ RAMP "A3A1"
		m																						7.0							4																24" RCP	
		n	4.9	1.79		326																					1																				TYPE G2 INLET	22.0' L+ 34+10.0 ℄ RAMP "A3A1"
SHEET TOTAL			12.12			2698									1						33.9		3.0	373.6			7																					

DRAINAGE QUANTITIES
DQ-32

STATE OF CALIFORNIA - DEPARTMENT OF TRANSPORTATION
Caltrans
HYDRAULICS

FUNCTIONAL SUPERVISOR: DAVE BHALLA
CALCULATED-DESIGNED BY: S. THAI
CHECKED BY: D. BHALLA
REVISED BY
DATE REVISED

LAST REVISION DATE PLOTTED => 12-JUN-2013
06-09-12 TIME PLOTTED => 16:31

NOTES: PIPE JOINTS ARE STANDARD OR AS NOTED ON PLANS

(N) NOT A SEPARATE PAY ITEM, FOR INFORMATION ONLY.

Dist	COUNTY	ROUTE	POST MILES TOTAL PROJECT	SHEET No.	TOTAL SHEETS
07	LA	10	33.2/37.2	267	1475

REGISTERED CIVIL ENGINEER 4-17-12 DATE

6-10-13
PLANS APPROVAL DATE

REGISTERED PROFESSIONAL ENGINEER SA K. THAI No. 71390 Exp. 12/31/13 CIVIL STATE OF CALIFORNIA

THE STATE OF CALIFORNIA OR ITS OFFICERS OR AGENTS SHALL NOT BE RESPONSIBLE FOR THE ACCURACY OR COMPLETENESS OF SCANNED COPIES OF THIS PLAN SHEET.

DRAINAGE QUANTITIES

DRAINAGE SHEET No.	DRAINAGE SYSTEM No.	DRAINAGE UNIT	HEIGHT OF INLET H OR V	MINOR CONCRETE (MINOR STRUCTURE)	MINOR CONCRETE (Conc DRAIN)	MISCELLANEOUS IRON AND STEEL	STRUCTURAL CONCRETE, BOX CULVERT	MINOR CONCRETE (BACKFILL)	REMOVE CONCRETE	REMOVE ASPHALT CONCRETE PAVEMENT	ABANDON PIPELINE	SAND BACKFILL	ABANDON INLET	DITCH EXCAVATION	REMOVE INLET	CAP INLET	ADJUST INLET	24" SLOTTED CORRUGATED STEEL PIPE (0.079" THICK)	18" CORRUGATED STEEL PIPE (0.079" THICK)	BAR REINFORCING STEEL (BOX CULVERT)	REMOVE PIPE	8" PLASTIC PIPE	18" REINFORCED CONCRETE PIPE	24" REINFORCED CONCRETE PIPE	30" REINFORCED CONCRETE PIPE	(N) FRAME AND GRATING FOR CATCH BASINS (APWA 311-2)	(N) TYPE 24-12 FRAME AND GRATE	(N) STEEL PLATE CLOSURE	ROCK SLOPE PROTECTION (FACING; METHOD B)	ROCK SLOPE PROTECTION FABRIC (CLASS 8)	(N) MAXIMUM COVER	PLACE HOT MIX ASPHALT (MISCELLANEOUS AREA)	HOT MIX ASPHALT (TYPE A)	AUSTIN VAULT MINOR CONCRETE (GUTTER)	AUSTIN VAULT STRUCTURAL CONCRETE	AUSTIN VAULT STRUCTURE EXCAVATION	AUSTIN VAULT STRUCTURE BACKFILL	AUSTIN VAULT SAND BED	AUSTIN VAULT BAR REINFORCING STEEL	AUSTIN VAULT GABION	AUSTIN VAULT CABLE RAILING	AUSTIN VAULT FILTER FABRIC	AUSTIN VAULT PERMEABLE MATERIAL	AUSTIN VAULT MISCELLANEOUS METAL	AUSTIN VAULT 6" PLASTIC PIPE UNDERDRAIN	AUSTIN VAULT 6" PERFORATED PLASTIC PIPE UNDERDRAIN	DESCRIPTION	STATION
			F†	CY	CY	LB	CY	CY	CY	CY	LF	CY	EA	CY	EA	EA	EA	LF	LF	LB	LF	LF	LF	LF	LF	EA	EA	EA	CY	SQYD	F†	SQYD	TON	CY	CY	CY	CY	CY	LB	CY	LF	SQYD	CY	LB	LF	LF		
D-14	75	a													1																																REMOVE INLET	7.5′ L+ 36+60.00 ℄ RAMP "A3A1"
		b																			30.0																										REMOVE PIPE	
		c																			12.2																										REMOVE PIPE	
		d	3.8	1.58		580																					2																				GD-1 INLET	19.5′ L+ 36+60.00 ℄ RAMP "A3A1"
		e																						295.5							3																24" RCP	
		f	4.5	1.69		326																					1																				TYPE G2 INLET	90.5′ L+ 1939+60.00 ℄ Fwy
		g																						297.0							3																24" RCP	
		h	4.5	1.69		326																																								TYPE G2 INLET	90.5′ L+ 1942+60.00 ℄ Fwy
		i																						297.0							3																24" RCP	
		j	4.5	1.79		580																					2																				GD-1 INLET	90.5′ L+ 1945+60.00 ℄ Fwy
D-14	76	a	3.0	1.35		580																					2																				GD-1 INLET	90.7′ R+ 37+50.00 ℄ RAMP "A4"
		b						2.3															7.0								2																18" RCP, MINOR Conc (BACKFILL)	
		c	3.0	0.95		326																					1																				TYPE G1 INLET	90.7′ R+ 37+60.00 ℄ RAMP "A4"
		d		0.69																																										SIDEWALK CULVERT	
D-14	77	a							0.4																																						REMOVE SIDEWALK CULVERT	
		b	3.0	1.35		580																					2																				GD-1 INLET	90.7′ R+ 1946+58.00 ℄ Fwy
		c		0.76		174																																								SIDEWALK CULVERT WITH STEEL PLATE COVER	
D-15	78	a																					12.9								2																18" RCP	
		b	3.7	1.55		580																					2																				GD-1 INLET	91.0′ L+ 1954+70.00 ℄ Fwy
		c																					8.5								3																18" RCP	
		d	3.7	1.10		326																					1																				TYPE G1 INLET	91.0′ L+ 1954+80.00 ℄ Fwy
SHEET TOTAL			14.50			4378		2.3	0.4						1						42.2		28.4	889.5			13																					

DRAINAGE QUANTITIES
DQ-33

STATE OF CALIFORNIA - DEPARTMENT OF TRANSPORTATION
Caltrans®
HYDRAULICS

FUNCTIONAL SUPERVISOR: DAVE BHALLA
CALCULATED-DESIGNED BY: S. THAI
CHECKED BY: D. BHALLA
REVISED BY
DATE REVISED

LAST REVISION DATE PLOTTED => 12-JUN-2013
06-09-12 TIME PLOTTED => 16:31

NOTES: PIPE JOINTS ARE STANDARD OR AS NOTED ON PLANS

(N) NOT A SEPARATE PAY ITEM, FOR INFORMATION ONLY.

Dist	COUNTY	ROUTE	POST MILES TOTAL PROJECT	SHEET No.	TOTAL SHEETS
07	LA	10	33.2/37.2	268	1475

REGISTERED CIVIL ENGINEER 4-17-12 DATE

6-10-13
PLANS APPROVAL DATE

REGISTERED PROFESSIONAL ENGINEER SA K. THAI No. 71390 Exp. 12/31/13 CIVIL STATE OF CALIFORNIA

THE STATE OF CALIFORNIA OR ITS OFFICERS OR AGENTS SHALL NOT BE RESPONSIBLE FOR THE ACCURACY OR COMPLETENESS OF SCANNED COPIES OF THIS PLAN SHEET.

DRAINAGE QUANTITIES

DRAINAGE SHEET No.	DRAINAGE SYSTEM No.	DRAINAGE UNIT	HEIGHT OF INLET H OR V	MINOR CONCRETE (MINOR STRUCTURE)	MINOR CONCRETE (Conc DRAIN)	MISCELLANEOUS IRON AND STEEL	STRUCTURAL CONCRETE, BOX CULVERT	MINOR CONCRETE (BACKFILL)	REMOVE CONCRETE	REMOVE ASPHALT CONCRETE PAVEMENT	ABANDON PIPELINE	SAND BACKFILL	ABANDON INLET	DITCH EXCAVATION	REMOVE INLET	CAP INLET	ADJUST INLET	24" SLOTTED CORRUGATED STEEL PIPE (0.079" THICK)	18" CORRUGATED STEEL PIPE (0.079" THICK)	BAR REINFORCING STEEL (BOX CULVERT)	REMOVE PIPE	8" PLASTIC PIPE	18" REINFORCED CONCRETE PIPE	24" REINFORCED CONCRETE PIPE	30" REINFORCED CONCRETE PIPE	(N) FRAME AND GRATING FOR CATCH BASINS (APWA 311-2)	(N) TYPE 24-12 FRAME AND GRATE	(N) STEEL PLATE CLOSURE	ROCK SLOPE PROTECTION (FACING; METHOD B)	ROCK SLOPE PROTECTION FABRIC (CLASS 8)	(N) MAXIMUM COVER	PLACE HOT MIX ASPHALT (MISCELLANEOUS AREA)	HOT MIX ASPHALT (TYPE A)	AUSTIN VAULT: MINOR CONCRETE (GUTTER)	AUSTIN VAULT: STRUCTURAL CONCRETE	AUSTIN VAULT: STRUCTURE EXCAVATION	AUSTIN VAULT: STRUCTURE BACKFILL	AUSTIN VAULT: SAND BED	AUSTIN VAULT: BAR REINFORCING STEEL	AUSTIN VAULT: GABION	AUSTIN VAULT: CABLE RAILING	AUSTIN VAULT: FILTER FABRIC	AUSTIN VAULT: PERMEABLE MATERIAL	AUSTIN VAULT: MISCELLANEOUS METAL	AUSTIN VAULT: 6" PLASTIC PIPE UNDERDRAIN	AUSTIN VAULT: 6" PERFORATED PLASTIC PIPE UNDERDRAIN	DESCRIPTION	STATION
			Ft	CY	CY	LB	CY	CY	CY	CY	LF	CY	EA	CY	EA	EA	EA	LF	LF	LB	LF	LF	LF	LF	LF	EA	EA	EA	CY	SQYD	Ft	SQYD	TON	CY	CY	CY	CY	CY	LB	CY	LF	SQYD	CY	LB	LF	LF		
D-15	79	a																					9.0								2																18" RCP	
		b	4.0	1.64		580																					2																				GD-1 INLET	91.0' Lt 1954+70.00 ℄ Fwy
		c																					8.5								3																18" RCP	
		d	3.8	1.13		326																					1																				TYPE G1 INLET	91.0' Lt 1954+80.00 ℄ Fwy
D-15	80	a																			12.7																										REMOVE PIPE	
		b													1																																REMOVE INLET	78.4' Lt 1956+82.00 ℄ Fwy
		c																			20.7																										REMOVE PIPE	
		d													1																																REMOVE INLET	78.4' Lt 1957+05.60 ℄ Fwy
		e																			48.4																										REMOVE PIPE	
		f													1																																REMOVE INLET	78.4' Lt 1957+56.80 ℄ Fwy
		g	8.6	5.86		326																					1																				TYPE G2 INLET	91.0' Lt 1956+82.00 ℄ Fwy
		h																						314.7							4																24" RCP	
		i	5.0	1.82		326																					1																				TYPE G2 INLET	91.0' Lt 1960+00.00 ℄ Fwy
		j																						297.0							4																24" RCP	
		k	5.0	1.82		326																					1																				TYPE G2 INLET	91.0' Lt 1963+00.00 ℄ Fwy
D-15	81	a							0.4																																						REMOVE SIDEWALK CULVERT	
		b		0.66																																											SIDEWALK CULVERT	
		c	4.8	1.87		580																					2																				GD-1 INLET	90.7' Rt 1960+80.00 ℄ Fwy
SHEET TOTAL			14.80			2464			0.4						3						81.8		17.5	611.7			8																					

DRAINAGE QUANTITIES
DQ-34

STATE OF CALIFORNIA - DEPARTMENT OF TRANSPORTATION
Caltrans® HYDRAULICS

FUNCTIONAL SUPERVISOR: DAVE BHALLA
CALCULATED-DESIGNED BY: S. THAI
CHECKED BY: D. BHALLA
REVISED BY
DATE REVISED

LAST REVISION 06-09-12 | DATE PLOTTED => 12-JUN-2013 | TIME PLOTTED => 16:31

NOTES: PIPE JOINTS ARE STANDARD OR AS NOTED ON PLANS

(N) NOT A SEPARATE PAY ITEM, FOR INFORMATION ONLY.

Dist	COUNTY	ROUTE	POST MILES TOTAL PROJECT	SHEET No.	TOTAL SHEETS
07	LA	10	33.2/37.2	269	1475

REGISTERED CIVIL ENGINEER 4-17-12 DATE

6-10-13
PLANS APPROVAL DATE

REGISTERED PROFESSIONAL ENGINEER DAVE BHALLA No. 34350 Exp. 9/30/13 CIVIL STATE OF CALIFORNIA

THE STATE OF CALIFORNIA OR ITS OFFICERS OR AGENTS SHALL NOT BE RESPONSIBLE FOR THE ACCURACY OR COMPLETENESS OF SCANNED COPIES OF THIS PLAN SHEET.

DRAINAGE QUANTITIES

DRAINAGE SHEET No.	DRAINAGE SYSTEM No.	DRAINAGE UNIT	HEIGHT OF INLET H OR V	MINOR CONCRETE (MINOR STRUCTURE)	MINOR CONCRETE (Conc DRAIN)	MISCELLANEOUS IRON AND STEEL	STRUCTURAL CONCRETE, BOX CULVERT	MINOR CONCRETE (BACKFILL)	REMOVE CONCRETE	REMOVE ASPHALT CONCRETE PAVEMENT	ABANDON PIPELINE	SAND BACKFILL	ABANDON INLET	DITCH EXCAVATION	REMOVE INLET	CAP INLET	ADJUST INLET	24" SLOTTED CORRUGATED STEEL PIPE (0.079" THICK)	18" CORRUGATED STEEL PIPE (0.079" THICK)	BAR REINFORCING STEEL (BOX CULVERT)	REMOVE PIPE	8" PLASTIC PIPE	18" REINFORCED CONCRETE PIPE	24" REINFORCED CONCRETE PIPE	30" REINFORCED CONCRETE PIPE	(N) FRAME AND GRATING FOR CATCH BASINS (APWA 311-2)	(N) TYPE 24-12 FRAME AND GRATE	(N) STEEL PLATE CLOSURE	ROCK SLOPE PROTECTION (FACING, METHOD B)	ROCK SLOPE PROTECTION FABRIC (CLASS 8)	(N) MAXIMUM COVER	PLACE HOT MIX ASPHALT (MISCELLANEOUS AREA)	HOT MIX ASPHALT (TYPE A)	AUSTIN VAULT: MINOR CONCRETE (GUTTER)	AUSTIN VAULT: STRUCTURAL CONCRETE	AUSTIN VAULT: STRUCTURE EXCAVATION	AUSTIN VAULT: STRUCTURE BACKFILL	AUSTIN VAULT: SAND BED	AUSTIN VAULT: BAR REINFORCING STEEL	AUSTIN VAULT: GABION	AUSTIN VAULT: CABLE RAILING	AUSTIN VAULT: FILTER FABRIC	AUSTIN VAULT: PERMEABLE MATERIAL	AUSTIN VAULT: MISCELLANEOUS METAL	AUSTIN VAULT: 6" PLASTIC PIPE UNDERDRAIN	AUSTIN VAULT: 6" PERFORATED PLASTIC PIPE UNDERDRAIN	DESCRIPTION	STATION
			FT	CY	CY	LB	CY	CY	CY	CY	LF	CY	EA	CY	EA	EA	EA	LF	LF	LB	LF	LF	LF	LF	LF	EA	EA	EA	CY	SQYD	FT	SQYD	TON	CY	CY	CY	CY	CY	LB	CY	LF	SQYD	CY	LB	LF	LF		
D-3	11A	a													1																																REMOVE INLET	92.2′ L+ 1791+58.12 ℄ Fwy
		b																			48.0																										REMOVE PIPE	
		c	4.58	2.11		1120																				2																					CURB OPENING CATCH BASIN WITH GRATING	93.6′ L+ 1791+61.59 ℄ Fwy
		d																					37.0								4.9																18" RCP	
		e	10.3	4.45		1120																				2																					CURB OPENING CATCH BASIN WITH GRATING	94.4′ L+ 1792+05.15 ℄ Fwy
D-7	35A	a		0.4																																											JUNCTION STRUCTURE No 3	3.53′ R+ 1842+41.36 ℄ Fwy
		b																					52.8								3.0																18" RCP	
		c	4.7	1.32		239																					1																				TYPE G1 INLET	5.00′ R+ 1843+00.00 ℄ Fwy
		d																					297.0								3.0																18" RCP	
		e	4.5	1.28		239																					1																				TYPE G1 INLET	5.00′ R+ 1846+00.00 ℄ Fwy
		f																					247.0								3.0																18" RCP	
		g	3.7	1.10		239																					1																				TYPE G1 INLET	5.00′ R+ 1848+50.00 ℄ Fwy
		h																					109.2								3.0																18" RCP	
		i	3.5	1.06		239																					1																				TYPE G1 INLET	5.00′ R+ 1849+65.00 ℄ Fwy
SHEET TOTAL				11.72		3196									1						48.0		743.0			4	4																					

DRAINAGE QUANTITIES
DQ-35

STATE OF CALIFORNIA - DEPARTMENT OF TRANSPORTATION
Caltrans® HYDRAULICS

FUNCTIONAL SUPERVISOR: DAVE BHALLA
CALCULATED-DESIGNED BY: D. BHALLA
CHECKED BY: C. P. NGUYEN
REVISED BY
DATE REVISED

LAST REVISION: 08-17-11
DATE PLOTTED => 12-JUN-2013
TIME PLOTTED => 16:31

DRAINAGE QUANTITIES

SHEET No.	HEIGHT OF INLET H OR V	MINOR CONCRETE (MINOR STRUCTURE) (***)	MINOR CONCRETE (Conc DRAIN)	MISCELLANEOUS IRON AND STEEL	STRUCTURAL CONCRETE, BOX CULVERT (*)	MINOR CONCRETE (BACKFILL)	REMOVE CONCRETE	REMOVE ASPHALT CONCRETE PAVEMENT	ABANDON PIPELINE	SAND BACKFILL	ABANDON INLET	DITCH EXCAVATION	REMOVE INLET	CAP INLET	ADJUST INLET	24" SLOTTED CORRUGATED STEEL PIPE (0.079" THICK)	18" CORRUGATED STEEL PIPE (0.079" THICK)	BAR REINFORCING STEEL (BOX CULVERT)	REMOVE PIPE	8" PLASTIC PIPE	18" REINFORCED CONCRETE PIPE	24" REINFORCED CONCRETE PIPE	30" REINFORCED CONCRETE PIPE	(N) FRAME AND GRATING FOR CATCH BASIN (APWA 302-2)	(N) TYPE 24-12 FRAME AND GRATE	(N) STEEL PLATE CLOSURE	ROCK SLOPE PROTECTION (FACING; METHOD B)	ROCK SLOPE PROTECTION FABRIC (CLASS 8)	(N) MAXIMUM COVER	PLACE HOT MIX ASPHALT (MISCELLANEOUS AREA)	HOT MIX ASPHALT (TYPE A) (**)	AUSTIN VAULT: MINOR CONCRETE (GUTTER)	AUSTIN VAULT: STRUCTURAL CONCRETE	AUSTIN VAULT: STRUCTURE EXCAVATION	AUSTIN VAULT: STRUCTURE BACKFILL	AUSTIN VAULT: SAND BED	AUSTIN VAULT: BAR REINFORCING STEEL	AUSTIN VAULT: GABION	AUSTIN VAULT: CABLE RAILING (*)	AUSTIN VAULT: FILTER FABRIC	AUSTIN VAULT: PERMEABLE MATERIAL	AUSTIN VAULT: MISCELLANEOUS METAL	AUSTIN VAULT: 6" PLASTIC PIPE UNDERDRAIN	AUSTIN VAULT: 6" PERFORATED PLASTIC PIPE UNDERDRAIN	SHEET No.
	FT	CY	CY	LB	CY	CY	CY	CY	LF	CY	EA	CY	EA	EA	EA	LF	LF	LB	LF	LF	LF	LF	LF	EA	EA	EA	CY	SQYD	F†	SQYD	TON	CY	CY	CY	CY	CY	LB	CY	LF	SQYD	CY	LB	LF	LF	
DQ-1		13.12		1304	36.2	10.0	29.4					0.8			6			5338.1	16.0		28.3	56.8			4																				DQ-1
DQ-2		9.66	1.22	1782					259.0	17.0	3	44.2		1	1						165.5	43.0			6																				DQ-2
DQ-3		12.14		3058	13.6		1.2											4152			277.2				8	3																			DQ-3
DQ-4		15.56		4640			0.4		40.2	4.7	2						4.4					1405.3			16																				DQ-4
DQ-5		3.47		978	210.1	26.6		2.10										39926			158.1				3					15.9	2.5														DQ-5
DQ-6		10.12		3806		27.0			105.3	6.9				7							135.6				13																				DQ-6
DQ-7		8.43		2282					63.0	4.2				6							37.7				7																				DQ-7
DQ-8		11.92	1.8	3044					38.0	2.5		30.6		7			3.8				38.0	18.7			10																				DQ-8
DQ-9		10.2		2464					60.5	4.0			1	3	1		4.6		22.0		27.2	52.5			8																				DQ-9
DQ-10		4.77		1538					33.0	2.2			3						128.5		104.4	58.0		1	3							2.8	135	610	194	44	31519	11	143	109	35	115	66.9	135.0	DQ-10
DQ-11		7.32		2972										3	4	192.0			944.0		320.4				10	2																			DQ-11
DQ-12		10.44		3260												776.0	8.0					236.0			10																				DQ-12
DQ-13		12.78		3878					60.0	3.9	1			3								1583.8			13																				DQ-13
DQ-14		11.43		2464								26.3										1602.8			8																				DQ-14
DQ-15		6.33		2900	56.49		9.92						4					9869							10																				DQ-15
DQ-16		9.55		2972	73.9		8.2		168.1	11.0	2		2					12936	55.5		5.5				10																				DQ-16
DQ-17		7.16		2210		16.4							3	1					209.0		275.4				7																				DQ-17
DQ-18		13.17	1.7	1710								53.1			1				3.0		654.1				4		17.8	50.6																	DQ-18
DQ-19		11.92	1.7	1870	47.88				177.4	20.35	2	22.9	3	1				8386	17.3		11.4			2	3		36.7	78.1																	DQ-19
DQ-20		2.44		1160	2.52	2.13							1	1				442	32.5		32.6				4																				DQ-20
DQ-21		11.09		2972	3.15									2	1	107.0		552	52.4		71.2		267.5		10																				DQ-21
DQ-22		14.84		3696	79.9								1					8400		17.0	27.5	1352.0			12																				DQ-22
DQ-23		11.48		11017	40.90	15.52	29.2						1	2				7990	33.4		47.3				9	1																			DQ-23
DQ-24		14.82		2862													2.3			57.0	17.0	1762.0			9																				DQ-24
DQ-25		17.96		3696			11.2						1						60.0		107.0	1690.3			12																				DQ-25
DQ-26		11.10		2536									3	1					65.1		131.4	354.8			8																				DQ-26
DQ-27		3.91		569			1.3		289.0	19.0	5		2	1					114.0		16.5				1																				DQ-27
DQ-28		14.88		3287									1				4.8		59.0		356.1				10																				DQ-28
DQ-29		9.67	1.70	812								77.8	1	1	7						58.4				1		18.2	52.5																	DQ-29
DQ-30		14.73		3250		5.91							2	1					39.6		310.1				9	1																			DQ-30
DQ-31		14.61	1.70	1066								64.2	3						84.2		111.1				2		14.8	37.3																	DQ-31
DQ-32		12.12		2698									1						33.9		3.0	373.6			7																				DQ-32
DQ-33		14.50		4378		2.3	0.4						1						42.2		28.4	889.5			13																				DQ-33
DQ-34		14.80		2464			0.4						3						81.8		17.5	611.7			8																				DQ-34
DQ-35		11.72		3196									1						48.0		743.0			4	4																				DQ-35
GRAND TOTAL		384.16	9.82	98791	564.6	105.9	91.6	2.10	1293.5	95.8	15	319.9	38	41	21	1075.0	27.9	97991	2141.4	74.0	4316.9	12090.8	267.5	7	272	5	87.5	218.5		15.9	2.5	2.8	135	610	194	44	31519	11	143	109	35	115	66.9	135.0	TOTAL

Dist	COUNTY	ROUTE	POST MILES TOTAL PROJECT	SHEET No.	TOTAL SHEETS
07	LA	10	33.2/37.2	270	1475

REGISTERED CIVIL ENGINEER 4-17-12 DATE

6-10-13
PLANS APPROVAL DATE

REGISTERED PROFESSIONAL ENGINEER SA K. THAI No. 71390 Exp. 12/31/13 CIVIL STATE OF CALIFORNIA

THE STATE OF CALIFORNIA OR ITS OFFICERS OR AGENTS SHALL NOT BE RESPONSIBLE FOR THE ACCURACY OR COMPLETENESS OF SCANNED COPIES OF THIS PLAN SHEET.

NOTES: PIPE JOINTS ARE STANDARD OR AS NOTED ON PLANS

(N) NOT A SEPARATE PAY ITEM, FOR INFORMATION ONLY.

(*) FOR ADDITIONAL QUANTITIES, SEE RETAINING WALL QUANTITIES SHEET

(**) FOR ADDITIONAL QUANTITIES, SEE SUMMARY OF QUANTITIES SHEET

(***) FOR ADDITIONAL QUANTITIES, SEE STRUCTURE PLANS

STATE OF CALIFORNIA - DEPARTMENT OF TRANSPORTATION
Caltrans
HYDRAULICS

FUNCTIONAL SUPERVISOR: DAVE BHALLA
CALCULATED-DESIGNED BY: S. THAI
CHECKED BY: D. BHALLA
REVISED BY
DATE REVISED

DRAINAGE QUANTITIES
DQ-36

LAST REVISION 06-13-12 | DATE PLOTTED => 12-JUN-2013 | TIME PLOTTED => 16:31

Dist	COUNTY	ROUTE	POST MILES TOTAL PROJECT	SHEET No.	TOTAL SHEETS
07	LA	10	33.2/37.2	271	1475

REGISTERED CIVIL ENGINEER 4-17-12 DATE

6-10-13
PLANS APPROVAL DATE

REGISTERED PROFESSIONAL ENGINEER MOHAMED GHANNOUM No. 72051 Exp. 06/30/14 CIVIL STATE OF CALIFORNIA

THE STATE OF CALIFORNIA OR ITS OFFICERS OR AGENTS SHALL NOT BE RESPONSIBLE FOR THE ACCURACY OR COMPLETENESS OF SCANNED COPIES OF THIS PLAN SHEET.

LEGEND:

SMH — SEWER MANHOLE

(#) — ITEM NUMBER

--s-- Exist SEWER PIPE

—s— PROPOSED SEWER PIPE

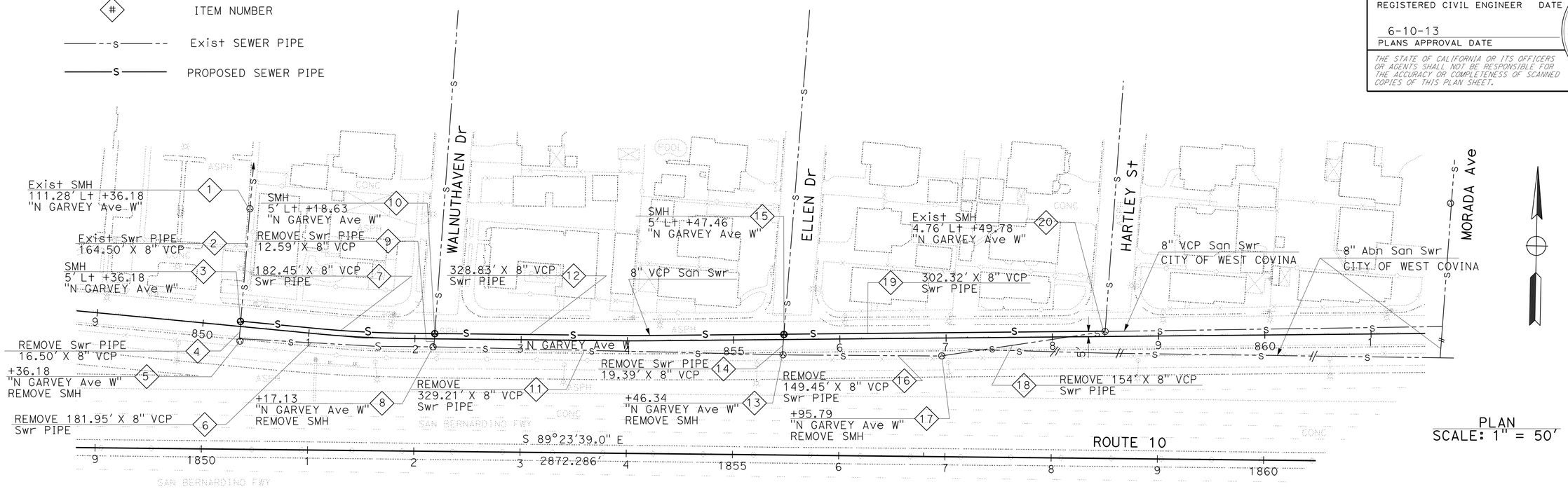

PLAN
SCALE: 1" = 50'

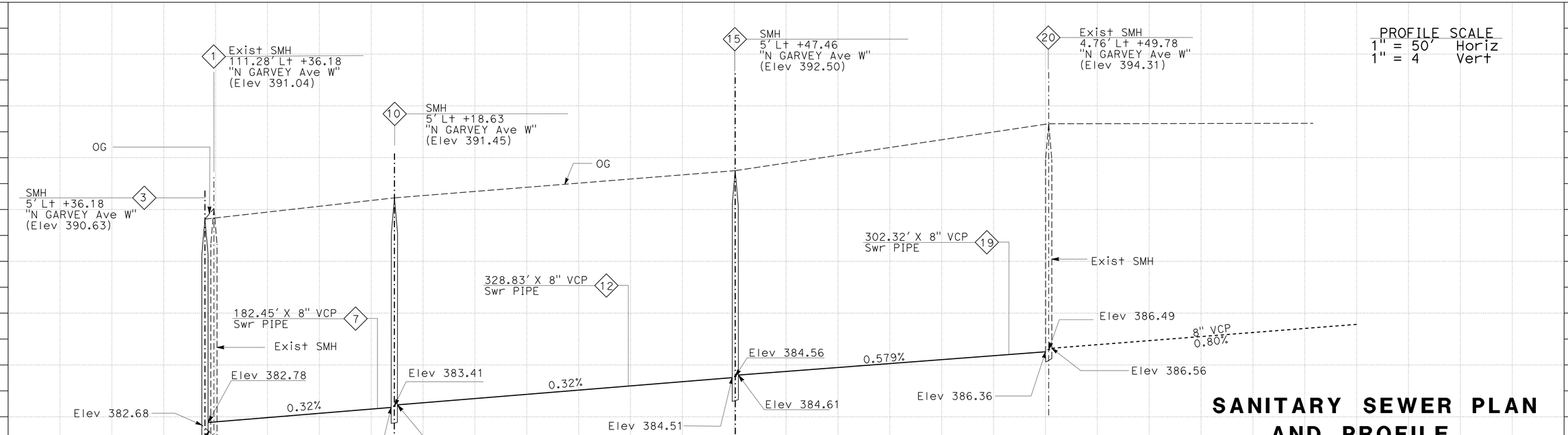

SANITARY SEWER PLAN AND PROFILE

SCALE AS SHOWN

APPROVED FOR SANITARY SEWER WORK ONLY

SS-1

REVISED BY | DATE REVISED
MOHAMED GHANNOUM | NADER GOBRAN
CALCULATED-DESIGNED BY | CHECKED BY
FUNCTIONAL SUPERVISOR: NADER GOBRAN

STATE OF CALIFORNIA - DEPARTMENT OF TRANSPORTATION
Caltrans® OFFICE OF DESIGN D

LAST REVISION 00-00-00 | DATE PLOTTED => 12-JUN-2013 | TIME PLOTTED => 15:39

Dist	COUNTY	ROUTE	POST MILES TOTAL PROJECT	SHEET No.	TOTAL SHEETS
07	LA	10	33.2/37.2	272	1475

4-17-12
REGISTERED CIVIL ENGINEER DATE

6-10-13
PLANS APPROVAL DATE

REGISTERED PROFESSIONAL ENGINEER MOHAMED GHANNOUM No. 72051 Exp. 06/30/14 CIVIL STATE OF CALIFORNIA

THE STATE OF CALIFORNIA OR ITS OFFICERS OR AGENTS SHALL NOT BE RESPONSIBLE FOR THE ACCURACY OR COMPLETENESS OF SCANNED COPIES OF THIS PLAN SHEET.

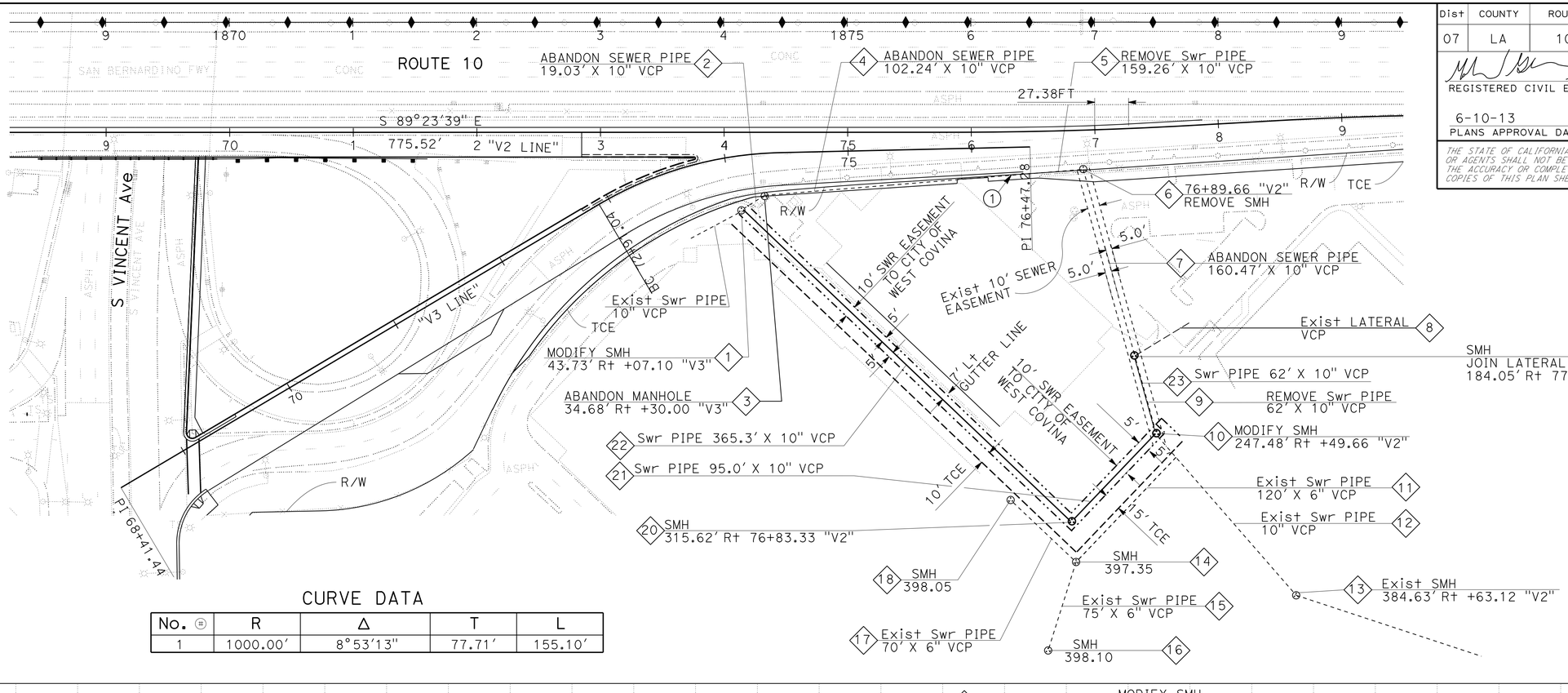

PLAN
SCALE: 1" = 50'

CURVE DATA

No. ⓗ	R	Δ	T	L
1	1000.00'	8°53'13"	77.71'	155.10'

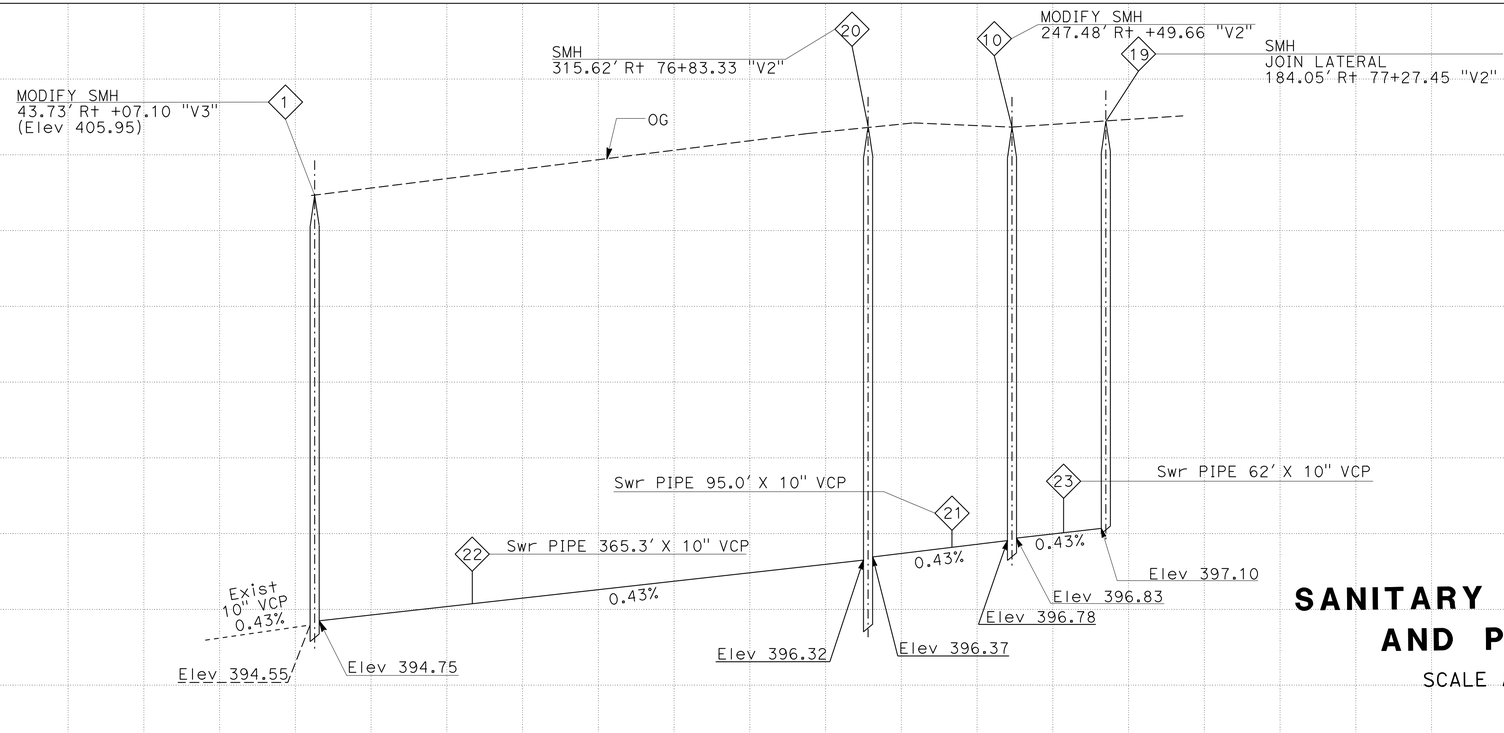

PROFILE SCALE
1" = 50' Horiz
1" = 4' Vert

SANITARY SEWER PLAN AND PROFILE

SCALE AS SHOWN

SS-2

APPROVED FOR SANITARY SEWER WORK ONLY

STATE OF CALIFORNIA - DEPARTMENT OF TRANSPORTATION
Caltrans OFFICE OF DESIGN D

FUNCTIONAL SUPERVISOR: NADER GOBRAN
CALCULATED-DESIGNED BY: MOHAMED GHANNOUM
CHECKED BY: NADER GOBRAN
REVISED BY / DATE REVISED

LAST REVISION 00-00-00 | DATE PLOTTED => 12-JUN-2013 | TIME PLOTTED => 15:39

Dist	COUNTY	ROUTE	POST MILES TOTAL PROJECT	SHEET No.	TOTAL SHEETS
07	LA	10	33.2/37.2	273	1475

REGISTERED CIVIL ENGINEER 4-17-12 DATE

6-10-13
PLANS APPROVAL DATE

REGISTERED PROFESSIONAL ENGINEER MOHAMED GHANNOUM No. 72051 Exp. 06/30/14 CIVIL STATE OF CALIFORNIA

THE STATE OF CALIFORNIA OR ITS OFFICERS OR AGENTS SHALL NOT BE RESPONSIBLE FOR THE ACCURACY OR COMPLETENESS OF SCANNED COPIES OF THIS PLAN SHEET.

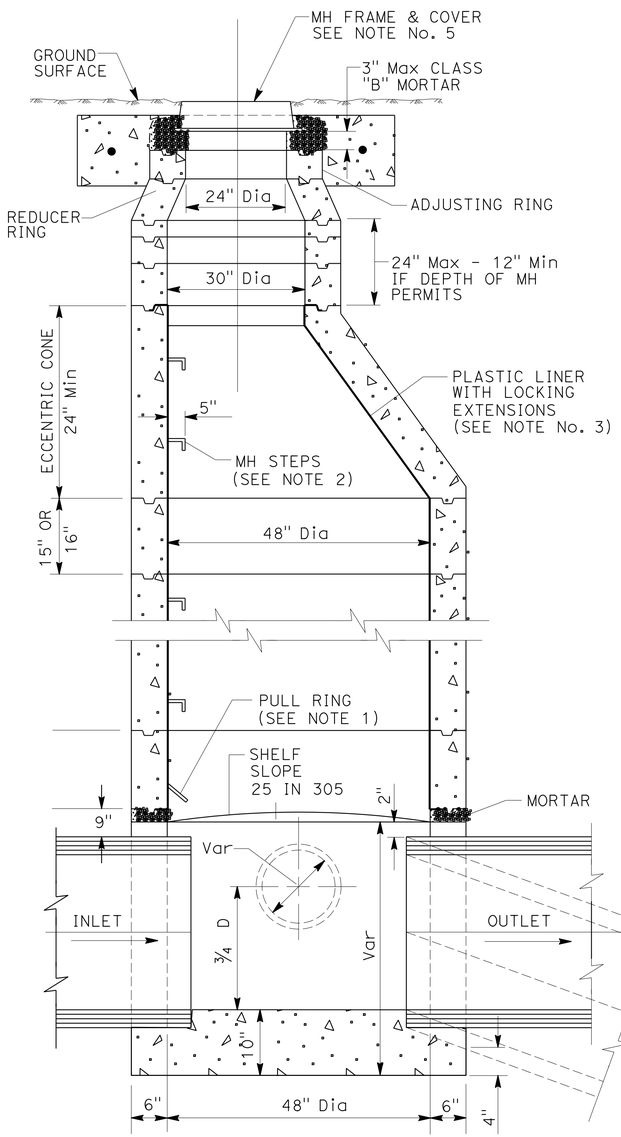

SECTION

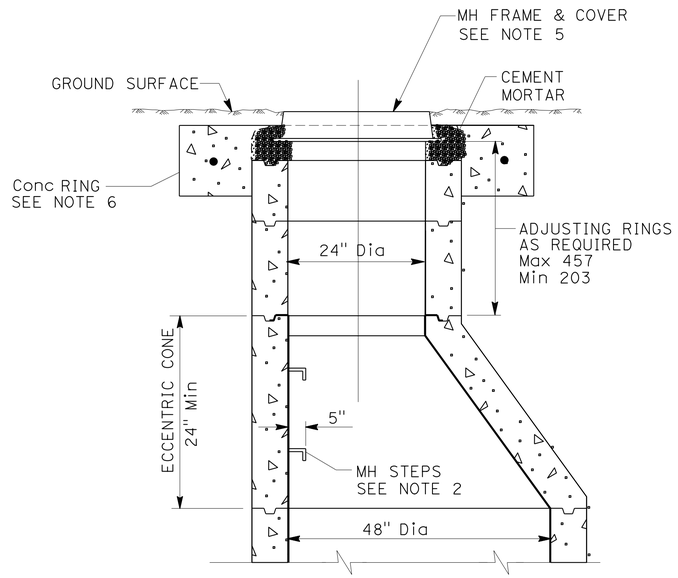

ALTERNATE SECTION MAY BE USED

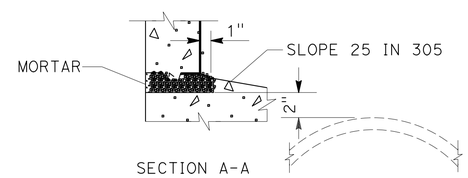

SECTION A-A

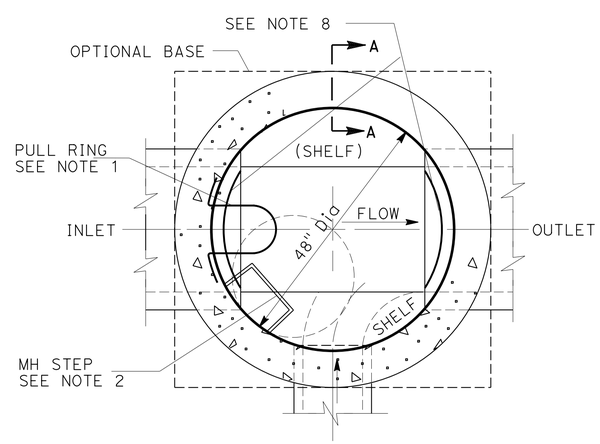

PLAN

MANHOLE TYPE "D" FOR 8" TO 30" PIPE

NOTES:

1. ALL MANHOLES SHALL BE PROVIDED WITH A STANDARD PULL RING IN ACCORDANCE WITH S-a-220. THE PULL RING SHALL BE LOCATED 5" ABOVE THE TOP OF PIPE ON THE UPSTREAM SIDE OF THE MANHOLE AND ALONG THE AXIS OF THE DOWNSTREAM OUTLET. WHERE THE MANHOLE IS TO BE USED AS A DOWNSTREAM SIPHON MANHOLE, IT SHALL BE PROVIDED WITH AN ADDITIONAL STANDARD PULL RING, BUT LOCATED 5" ABOVE THE TOP OF PIPE ON THE DOWNSTREAM SIDE OF THE MANHOLE AND ON THE CENTERLINE OF THE UPSTREAM SIPHON PIPE.

2. MANHOLE STEPS SHALL BE IN ACCORDANCE WITH S-a-209 AND SHALL BE UNIFORMLY SPACED NOT MORE THAN 16" APART. THE TOP STEP SHALL BE PLACED WITHIN 16" BELOW THE MANHOLE FRAME. THE BOTTOM MANHOLE STEP SHALL BE PLACED 16" ABOVE THE SHELF. IN MANHOLE SHAFTS 36" IN DIAMETER AND LARGER, THE MANHOLE STEP SHALL PROJECT 5". IN MANHOLE SHAFTS SMALLER THAN 36" IN DIAMETER, THE MANHOLE STEP SHALL PROJECT 4". THE MANHOLE STEPS SHALL BE PLACED SUCH THAT THEY ARE ADJACENT TO BUT NOT INTERFERING WITH ACESS TO THE PULL RING.

3. THE MANHOLE SHALL BE PROVIDED WITH PLASTIC LINER WITH LOCKING EXTENSIONS. PLASTIC LINER WITH LOCKING EXTENSIONS SHALL BE IN ACCORDANCE WITH THE SPECIAL PROVISION. THE LINER SHALL EXTEND FROM THE BOTTOM OF THE ADJUSTING RINGS TO THE TOP OF THE UNLESS THE ADJACENT PIPE IS LINED. IF ADJACENT PIPE IS LINED, THE LINER SHALL SHELF EXTEND TO A POINT IN THE CHANNEL MATCHING THE BOTTOM OF THE LINER IN THE LINER PIPE. LINER RETURNS SHALL BE PROVIDED WHERE THE LINER TERMINATES AT THE ADJUSTING RING AND THE JOINT BETWEEN THE LINER AND THE STAINLESS STEEL STEPS AND PULL RINGS SHALL BE THOROUGHLY SEALED WITH MASTIC SEAM MATERIALS AS MANUFACTURED BY LINABOND INC., TORRANCE, CALIFORNIA (818) 362-7373, OR EQUAL. APPLICATION OF SEALANT AND PREPARATION OF SURFACES SHALL BE IN STRICT CONFORMANCE WITH THE MANUFACTURER'S WRITTEN INSTRUCTIONS.

4. UNLESS OTHERWISE SPECIFIED ALL CONCRETE SHALL BE 660-B-4000 AND ALL REINFORCING BARS SHALL BE DEFORMED BARS CONFORMING TO ASTM-A706 GRADE 60.

5. IN PAVED AREAS SUBJECT TO TRAFFIC, A 24" TRAFFIC MANHOLE FRAME AND COVER IN ACCORDANCE WITH S-a-228 SHALL BE PROVIDED. IN ALL OTHER AREAS, A 24" LOCKING MANHOLE FRAME AND COVER IN ACCORDANCE WITH S-a-207 SHALL BE PROVIDED. IF A 30" MANHOLE FRAME AND COVER IS REQUIRED, A FRAME AND COVERIN ACCORDANCE WITH S-a-223 SHALL BE PROVIDED AND INSTALLED WHERE THE REDUCER RING IS SHOWN AND THE REDUCER RING, 24" ADJUSTING RINGS, AND 24" FRAME AND COVER SHALL BE OMITTED.

6. A 12" WIDE BY 12" HIGH CONCRETE RING SHALL BE PROVIDED AROUND THE MANHOLE FRAME. IN UNPAVED AREAS, THE CONCRETE RING SHALL BE PROVIDED WITH #3 REBAR, 30 DIAMETER LAP.

7. EXCEPT AS NOTED HEREON, THE PRECAST UNITS SHALL BE MANUFACTURED AND TESTED IN ACCORDANCE WITH ASTM C478. THE CURING OF THE PRECAST UNITS SHALL CONFORM TO SECTION 207-2.7 OF THE STANDARD SPECIFICATIONS. AS AN ALTERNATE, THE UNITS MAY BE CURED USING SATURATED STEAM FOR A MINIMUM OF 12 HOURS FOLLOWED BY 6 DAYS OF WATER CURING OR MEMBRANE CURING. IF THE UNITS ARE CURED BY THE ALTERNATE METHOD, THEY SHALL NOT BE SHIPPED PRIOR TO 8 DAYS AFTER CASTING NOR UNTIL THE CONCRETE HAS ATTAINED A MINIMUM STRENGTH OF 4,000 PSI. THE RISER SECTIONS MAY BE REINFORCED OR UNREINFORCED. REINFORCED SECTIONS, INCLUDING ECCENTRIC CONES, SHALL HAVE A MINIMUM WALL THICKNESS OF 5" AND UNREINFORCED SECTIONS, INCLUDING CONES, SHALL HAVE A MINIMUM WALL THICKNESS OF 6". JOINTS SHALL BE TONGUE AND GROOVE AND SHALL BE ASSEMBLED USING CLASS "B" MORTAR. THE MORTARED JOINTS SHALL BE FLUSHED AND TROWELED SMOOTH.

8. THE TOP PORTION OF THE PIPES WITHIN THE MANHOLE SHALL BE CUT OUT AS NECESSARY TO PROVIDE A CIRCULAR OPENING BETWEEN THE PIPE ENDS OF AT LEAST 42". THE CUT ENDS SHALL BE PLASTERED SMOOTH WITH CEMENT MORTAR FOR CONCRETE PIPE AND EPOXY FOR CLAY PIPE. THE CIRCULAR OPENING SHALL BE CUT PRIOR TO INSTALLATION OF THE RISER SECTIONS.

SANITARY SEWER DETAILS

NO SCALE

SSD-1

APPROVED FOR SANITARY SEWER WORK ONLY

REVISED BY	DATE REVISED

CALCULATED-DESIGNED BY	CHECKED BY
MOHAMED GHANNOUM	NADER GOBRAN

FUNCTIONAL SUPERVISOR: NADER GOBRAN

STATE OF CALIFORNIA - DEPARTMENT OF TRANSPORTATION
Caltrans® OFFICE OF DESIGN D

LAST REVISION 00-00-00 | DATE PLOTTED => 12-JUN-2013 | TIME PLOTTED => 15:39

Dist	COUNTY	ROUTE	POST MILES TOTAL PROJECT	SHEET No.	TOTAL SHEETS
07	LA	10	33.2/37.2	274	1475

REGISTERED CIVIL ENGINEER 4-17-12 DATE

6-10-13
PLANS APPROVAL DATE

REGISTERED PROFESSIONAL ENGINEER MOHAMED GHANNOUM No. 72051 Exp. 06/30/14 CIVIL STATE OF CALIFORNIA

THE STATE OF CALIFORNIA OR ITS OFFICERS OR AGENTS SHALL NOT BE RESPONSIBLE FOR THE ACCURACY OR COMPLETENESS OF SCANNED COPIES OF THIS PLAN SHEET.

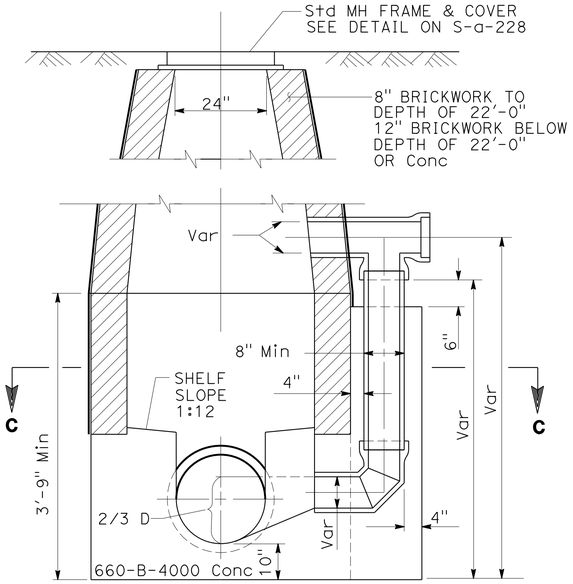

SECTION A-A

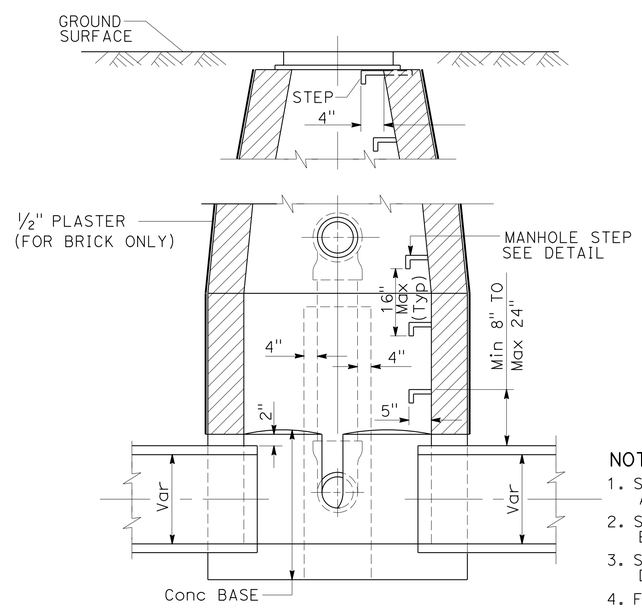

SECTION B-B

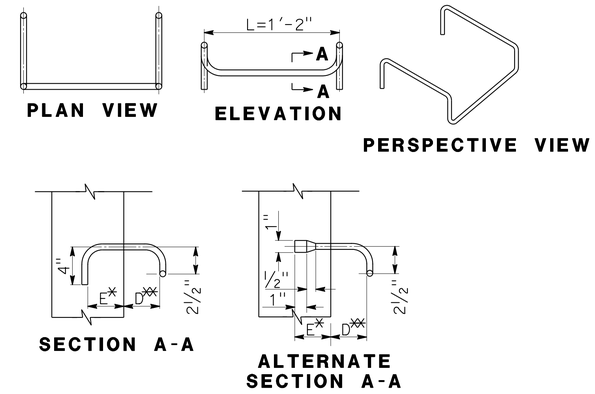

SECTION A-A **ALTERNATE SECTION A-A**

*SEE NOTES #3 & #4
**SEE MANHOLE PLANS

STEEL STEP FOR CONCRETE STRUCTURES

NOTES:

1. STEPS SHALL BE STEEL CONFORMING TO ASTM DESIGNATION A-307 AND SHALL BE GALVANIZED AFTER FABRICATION.
2. SEE PROJECT PLANS FOR SPECIAL REQUIREMENTS WHEN HEIGHT OF STRUCTURE EXCEEDS 20'.
3. STEPS MAY BE INSTALLED IN A CONCRETE WALL BY DRILLING A 1" DIAMETER HOLE AND DRY PACKING THE STEP IN PLACE WITH CLASS "C" MORTAR.
4. FOR APPROVED PRECAST CONCRETE MANHOLES THE STEP SHALL BE EMBEDDED THE FULL THICKNESS OF THE MANHOLE WALL AND ALL EXPOSED STEEL SHALL BE COVERED WITH 1" CLASS "C" MORTAR.
5. THE STEP SHALL NOT DEFLECT MORE THAN ½" UPON THE APPLICATION OF A 800 lb VERTICAL LOAD. THE STEP SHALL REBOUND TO ITS ORIGINAL CONFIGURATION UPON REMOVAL OF THE LOAD.
6. THE STEP SHALL RESIST A 400 lb HORIZONTAL LOAD APPLIED NORMAL TO DIMENSION "L" WITHOUT ANY CRACKING OR OTHER FAILURE OF THE CONCRETE OR ANY DISPLACEMENT OF THE EMBEDDED SEGMENT OF THE STEP. THE STEP SHALL REBOUND TO ITS ORIGINAL CONFIGURATION UPON REMOVAL OF THE LOAD.

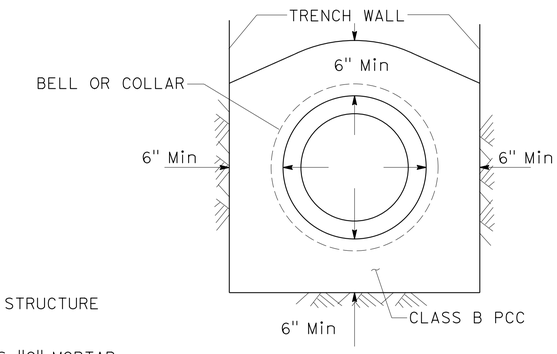

No. 1 CONCRETE ENCASEMENT

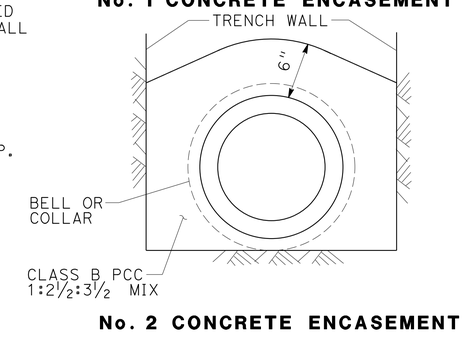

No. 2 CONCRETE ENCASEMENT

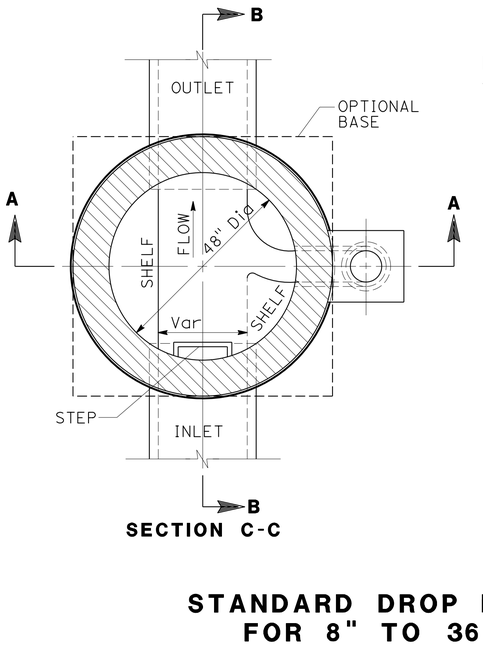

SECTION C-C

NOTES AND SPECIFICATIONS

1. IF CONCRETE WALLS ARE USED THE PRECAST CONCRETE UNITS SHALL BE MANUFACTURED AND TESTED IN ACCORDANCE WITH ASTM C478. THE CURING OF THE PRECAST UNITS SHALL CONFORM TO SSP.
2. PRECAST CONCRETE UNITS SHALL BE REINFORCED OR UNREINFORCED. REINFORCED SECTIONS SHALL BE REINFORCED IN ACCORDANCE WITH ASTM C478 AND SHALL HAVE A MINIMUM WALL THICKNESS OF 4".
3. PRECAST CONCRETE UNITS SHALL BE ASSEMBLED USING MORTAR CONFORMING WITH SSP. FOR LAYING BRICK OR PLASTERING, THE MORTAR SHALL CONFORM WITH SSP (CLASS D).
4. THE MANHOLE STEPS SHALL BE UNIFORMLY SPACED AT A MAXIMUM OF 16" WITH THE TOP STEP PLACED JUST UNDER THE MANHOLE FRAME. THE LOWEST STEP SHALL BE PLACED NOT LESS THAN 8" NOR MORE THAN 24" ABOVE THE SHELF. THE TOP STEP AND THOSE IN THE 24" DIAMETER SECTION SHALL PROJECT 4" INSIDE THE MANHOLE AND ALL OTHERS 5".

STANDARD DROP MANHOLE FOR 8" TO 36" PIPE

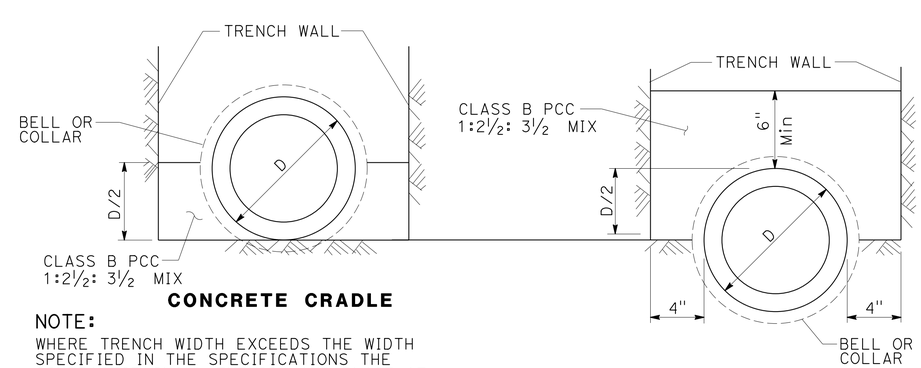

CONCRETE CRADLE

NOTE:

WHERE TRENCH WIDTH EXCEEDS THE WIDTH SPECIFIED IN THE SPECIFICATIONS THE CONTRACTOR SHALL FURNISH AND PLACE AT HIS OWN EXPENSE A CRADLE AS SHOWN ABOVE. EXPANSION MATERIAL, TARPAPER, PLASTICS, Etc.

No. 3 CONCRETE ENCASEMENT

CONCRETE CRADLE AND ENCASEMENT

APPROVED FOR SANITARY SEWER WORK ONLY

SANITARY SEWER DETAILS

NO SCALE

SSD-2

STATE OF CALIFORNIA - DEPARTMENT OF TRANSPORTATION
Caltrans® OFFICE OF DESIGN D

FUNCTIONAL SUPERVISOR: NADER GOBRAN
CALCULATED-DESIGNED BY: MOHAMED GHANNOUM
CHECKED BY: NADER GOBRAN
REVISED BY / DATE REVISED

LAST REVISION 00-00-00 | DATE PLOTTED => 12-JUN-2013 | TIME PLOTTED => 15:39

Dist	COUNTY	ROUTE	POST MILES TOTAL PROJECT	SHEET No.	TOTAL SHEETS
07	LA	10	33.2/37.2	275	1475

REGISTERED CIVIL ENGINEER 4-17-12 DATE

6-10-13
PLANS APPROVAL DATE

REGISTERED PROFESSIONAL ENGINEER MOHAMED GHANNOUM No. 72051 Exp. 06/30/14 CIVIL STATE OF CALIFORNIA

THE STATE OF CALIFORNIA OR ITS OFFICERS OR AGENTS SHALL NOT BE RESPONSIBLE FOR THE ACCURACY OR COMPLETENESS OF SCANNED COPIES OF THIS PLAN SHEET.

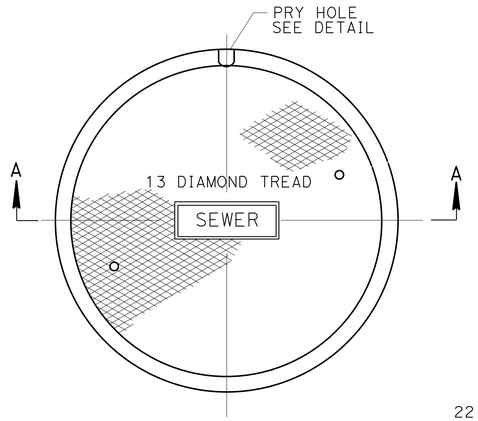

PLAN OF COVER
TOP VIEW

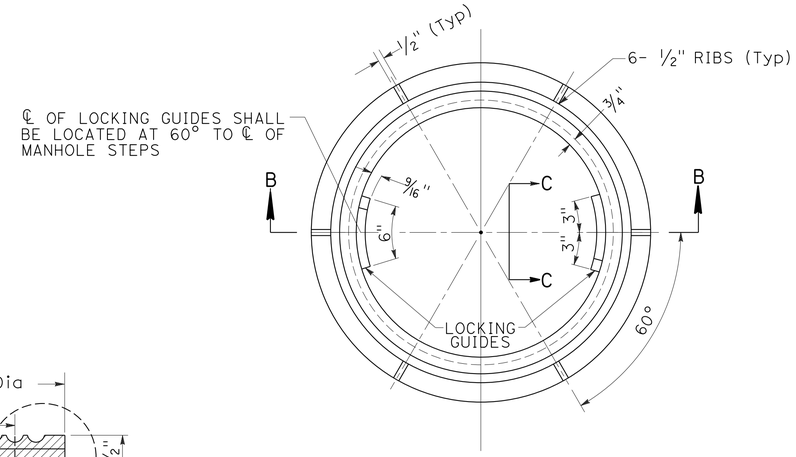

PLAN OF FRAME

NOTES:

1. MACHINE SEATS AND GRIND LUGS SMOOTH. PERIMETER OF COVER SHALL BE GROUND SMOOTH, DIAMETER TOLERANCE: 1.6.
2. MASS OF MANHOLE FRAME: 150 lb
   MASS OF MANHOLE COVER: 215 lb.
3. THE CAST IRON SHALL HAVE A TENSILE STRENGTH OF ALHAMBRA FOUNDRY No. A 1176.

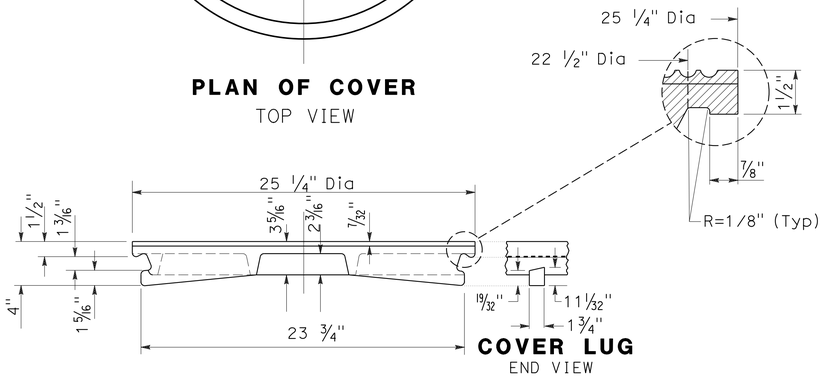

SECTION A-A

COVER LUG
END VIEW

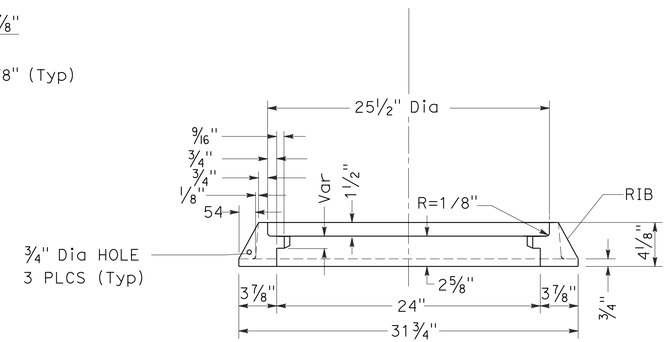

SECTION B-B

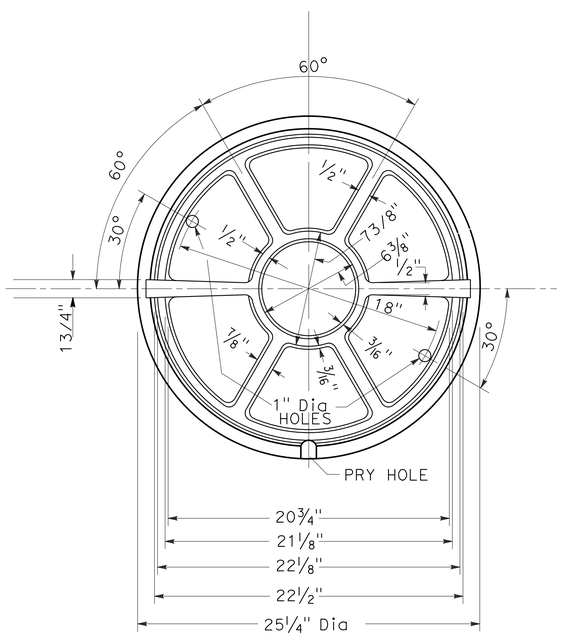

PLAN OF COVER
BOTTOM VIEW

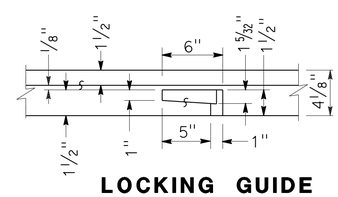

LOCKING GUIDE
SIDE VIEW C-C (Typ)

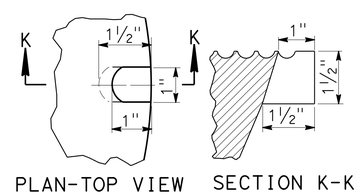

PLAN-TOP VIEW SECTION K-K

DETAIL OF PRY HOLE

APPROVED FOR SANITARY SEWER WORK ONLY

SANITARY SEWER DETAILS
MANHOLE FRAME AND COVER (LOCKING TYPE)

NO SCALE

SSD-3

STATE OF CALIFORNIA - DEPARTMENT OF TRANSPORTATION
Caltrans® OFFICE OF DESIGN D

FUNCTIONAL SUPERVISOR: NADER GOBRAN
CALCULATED-DESIGNED BY: MOHAMED GHANNOUM
CHECKED BY: NADER GOBRAN
REVISED BY
DATE REVISED

LAST REVISION 00-00-00
DATE PLOTTED => 12-JUN-2013
TIME PLOTTED => 15:39

Dist	COUNTY	ROUTE	POST MILES TOTAL PROJECT	SHEET No.	TOTAL SHEETS
07	LA	10	33.2/37.2	276	1475

REGISTERED CIVIL ENGINEER 4-17-12 DATE

6-10-13
PLANS APPROVAL DATE

REGISTERED PROFESSIONAL ENGINEER MOHAMED GHANNOUM No. 72051 Exp. 06/30/14 CIVIL STATE OF CALIFORNIA

THE STATE OF CALIFORNIA OR ITS OFFICERS OR AGENTS SHALL NOT BE RESPONSIBLE FOR THE ACCURACY OR COMPLETENESS OF SCANNED COPIES OF THIS PLAN SHEET.

SEWER

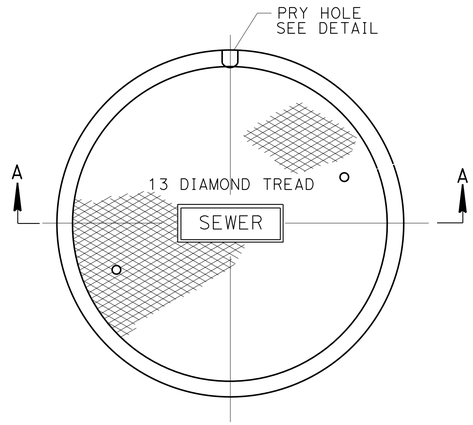

PLAN OF COVER
TOP VIEW

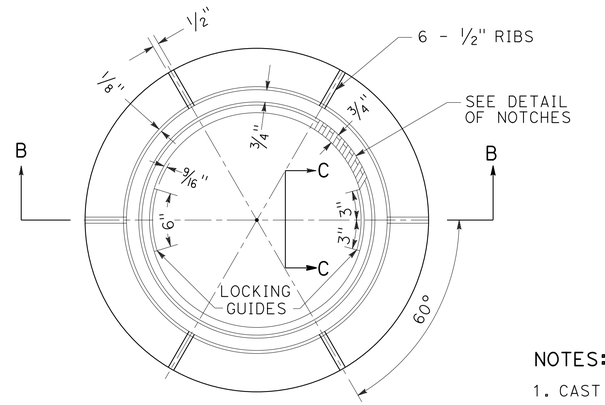

PLAN OF FRAME

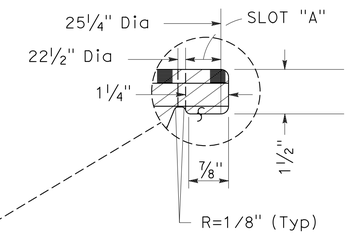

COVER LUG
END VIEW

NOTES:

1. CAST IRON SHALL CONFORM WITH ASTM A-48 CLASS 35B.
2. FRAME AND COVER SHALL BE COATED WITH ASPHALTUM OR BITUMINUS PAINT AFTER TESTING AND INSPECTION.
3. FRAME AND COVER SHALL BE TESTED FOR ACCURATE FIT PRIOR TO DELIVERY AND SHALL BE MARKED IN SETS.
4. ALL CASTINGS SHALL COMPLY WITH SECTION 206-3 OF THE STANDARD SPECIFICATIONS.

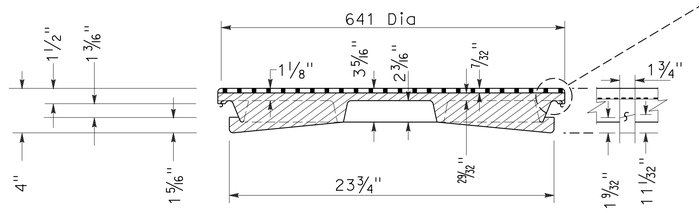

SECTION A-A

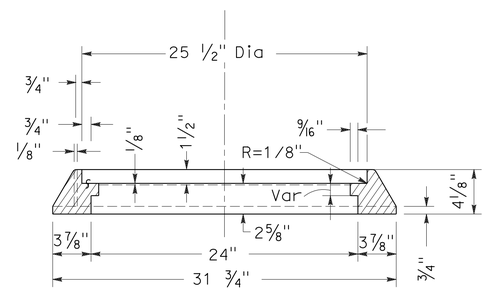

SECTION B-B

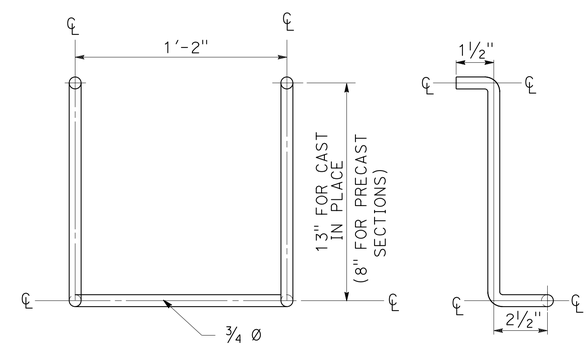

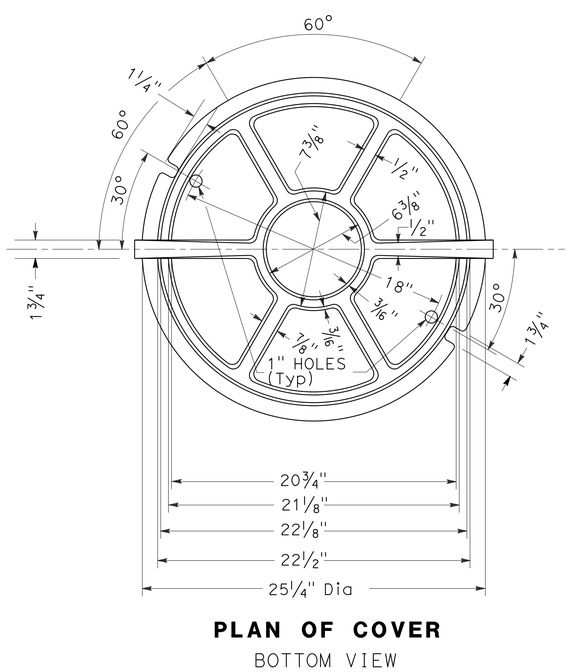

PLAN OF COVER
BOTTOM VIEW

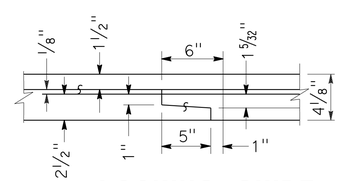

LOCKING GUIDE
SIDE VIEW C-C

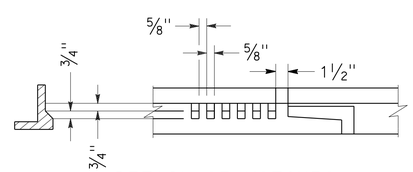

DETAIL OF NOTCHES

NOTES:

STEPS IN PLASTIC LINED MANHOLES AND STRUCTURES AND ANY STEPS IN 610 OR 762 RISERS SHALL BE MADE FROM STAINLESS STEEL CONFORMING TO ASTM A-276, TYPE 316.

FOR ALL OTHER STEPS THE CONTRACTOR MAY SUBSTITUTE ONE OF THE FOLLOWING REINFORCED COPOLYMER POLYPROPYLENE PLASTIC MANHOLE STEPS (OR APPROVED EQUAL).

MANUFACTURER	STEP I.D.
M.A. INDUSTRIES INC.	PS2-PFS
LANE INTERNATIONAL INC.	P13850
SOUTHWEST CONCRETE PRODUCTS	X038PS
H. BOWEN COMPANY INC.	BOWCO 93813

STEPS SHALL BE INSTALLED IN ACCORDANCE WITH THE APPROVED MANUFACTURER'S RECOMMENDED PROCEDURE. HOWEVER, IF TAPERED STEPS ARE INSTALLED INTO STRAIGHT DRILLED OR FORMED HOLES APPROVED NON-SHRINKING GROUT SHALL BE INJECTED INTO THE HOLE PRIOR TO INSTALLATION OF THE STEPS. FOR ALL DRILLED INSTALLATIONS, THE HOLE SHALL BE STRAIGHT, PARALLEL, AND TO THE MANUFACTURER'S RECOMMENDED DIMENSIONS.

STANDARD MANHOLE STEP

STANDARD 610 LOCKING MANHOLE FRAME AND COVER

APPROVED FOR SANITARY SEWER WORK ONLY

SANITARY SEWER DETAILS
NO SCALE

SSD-4

STATE OF CALIFORNIA - DEPARTMENT OF TRANSPORTATION
Caltrans® OFFICE OF DESIGN D

FUNCTIONAL SUPERVISOR: NADER GOBRAN
CALCULATED-DESIGNED BY: MOHAMED GHANNOUM
CHECKED BY: NADER GOBRAN
REVISED BY
DATE REVISED

LAST REVISION 00-00-00
DATE PLOTTED => 12-JUN-2013
TIME PLOTTED => 15:40

Dist	COUNTY	ROUTE	POST MILES TOTAL PROJECT	SHEET No.	TOTAL SHEETS
07	LA	10	33.2/37.2	277	1475

REGISTERED CIVIL ENGINEER 4-17-12 DATE

6-10-13
PLANS APPROVAL DATE

REGISTERED PROFESSIONAL ENGINEER MOHAMED GHANNOUM No. 72051 Exp. 06/30/14 CIVIL STATE OF CALIFORNIA

THE STATE OF CALIFORNIA OR ITS OFFICERS OR AGENTS SHALL NOT BE RESPONSIBLE FOR THE ACCURACY OR COMPLETENESS OF SCANNED COPIES OF THIS PLAN SHEET.

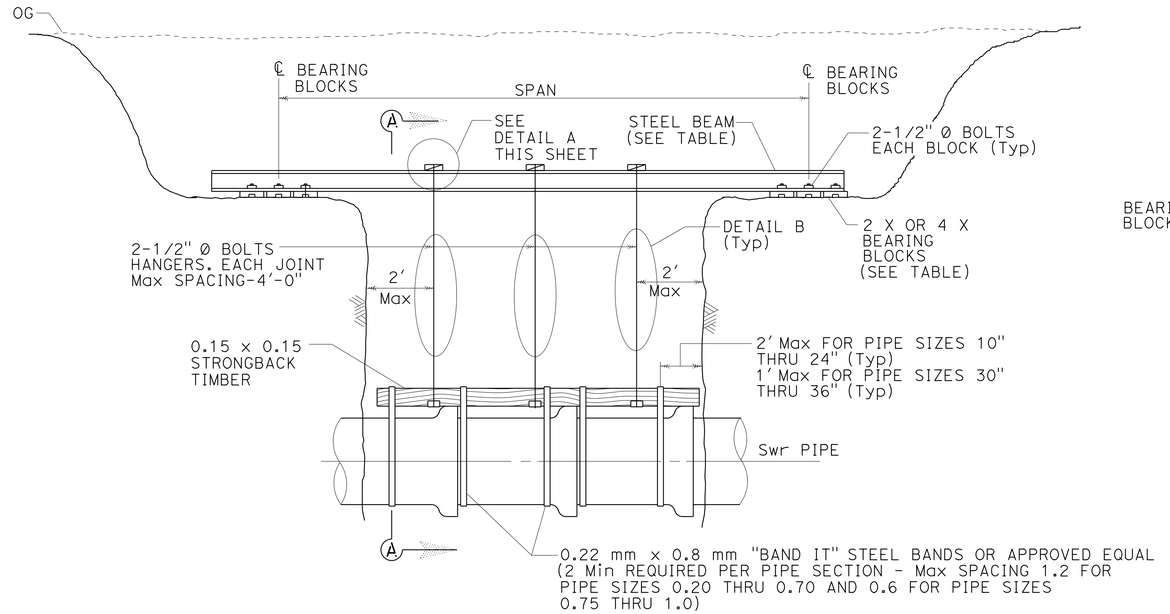

ELEVATION

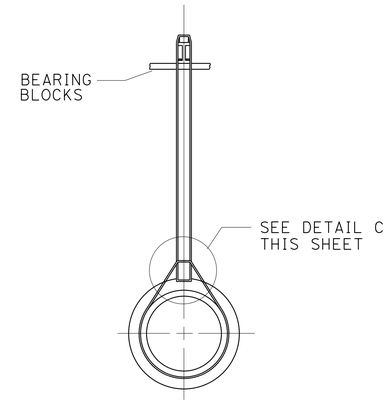

SECTION A-A

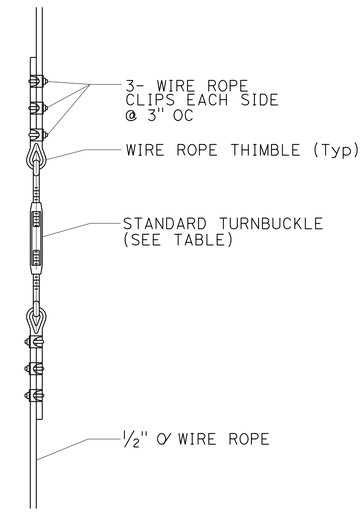

DETAIL B

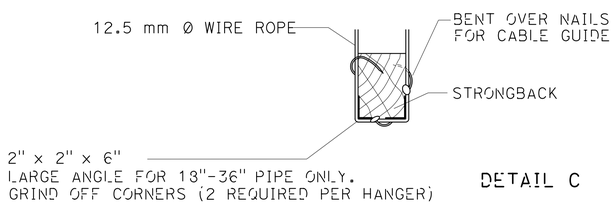

DETAIL C

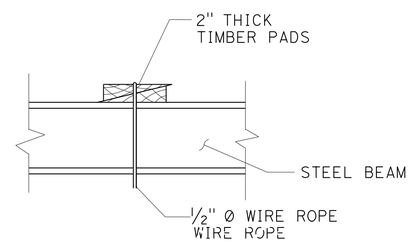

DETAIL A

TABLE OF MEMBER SIZES (PART I)

PIPE SIZE	STEEL BEAM SPAN 0' - 10'	11' - 15'	16' - 20'	21' - 30'	31' - 40'	WIRE ROPE	TURNBUCKLE
8" - 10"	w 6 x 9	w 6 x 9	w 6 x 9	w 8 x 18	w 10 x 22	3/8"	1/2"
12" - 15"	w 6 x 9	w 6 x 15	w 6 x 20	w 10 x 22	w 12 x 30	3/8"	1/2"
18" - 21"	w 6 x 9	w 8 x 18	w 8 x 24	w 10 x 33	w 12 x 53	3/8"	1/2"
24" - 27"	w 6 x 15	w 8 x 18	w 8 x 28	w 12 x 40	w 12 x 72	3/8"	1/2"
30"	w 6 x 15	w 8 x 18	w 8 x 31	w 12 x 53	2 - w 12 x 53	1/2"	5/8"

TABLE OF MEMBER SIZES (PART II)

PIPE SIZE	BEARING BLOCKS SPAN 0' - 10'	11' - 15'	16' - 20'	21' - 30'	31' - 40'
8" - 10"	1 - 2 X 12 X 2'	1 - 2 X 12 X 2'	2 - 2 X 12 X 2'	2 - 2 X 12 X 2'	2 - 2 X 12 X 2'
12" - 15"	1 - 2 X 12 X 2'	1 - 2 X 12 X 2'	2 - 2 X 12 X 2'	2 - 2 X 12 X 2'	2 - 2 X 12 X 3'
18" - 21"	1 - 2 X 12 X 2'	1 - 2 X 12 X 3'	2 - 2 X 12 X 3'	2 - 4 X 12 X 3'	2 - 4 X 12 X 4'
24" - 27"	1 - 2 X 12 X 3'	2 - 2 X 12 X 2'	2 - 2 X 12 X 3'	2 - 4 X 12 X 5'	2 - 4 X 12 X 4'
30"	1 - 2 X 12 X 3'	2 - 2 X 12 X 3'	2 - 4 X 12 X 4'	2 - 4 X 12 X 4'	2 - 4 X 12 X 5'

NOTES:

1. FORTY-EIGHT HOURS PRIOR TO COMMENCING CONSTRUCTION OF THE TEMPORARY SUPPORT, THE CONTRACTOR SHALL CONTACT THE DISTRICT SUPERINTENDENT OF MAINTENANCE AT (323) 774-7272.
2. APPROVAL SHALL BE OBTAINED FROM THE COUNTY SANITATION DISTRICT REPRESENTATIVE OF THE SPAN TO BE USED IN DETERMINING THE SIZE OF THE STEEL BEAM.
3. ALL WORK ON THE TEMPORARY SUPPORT SHALL BE DONE IN THE PRESENCE OF THE COUNTY SANITATION DISTRICT REPRESENTATIVE.
4. THE CONTRACTOR SHALL BE COMPLETELY RESPONSIBLE FOR THE ADEQUACY OF THE TEMPORARY SUPPORT AND FOR THE MANNER IN, WHICH IT IS INSTALLED.
5. FOR PIPES AND MEMBER SIZES NOT SHOWN IN THE TABLE, THE CONTRACT SHALL SUBMIT DETAILS OF THE PROPOSED SUPPORT AND CALCULATIONS PREPARED BY CIVIL / STRUCTURAL ENGINEER REGISTERED IN THE STATE OF CALIFORNIA TO THE COUNTY SANITATION DISTRICT REPRESENTATIVE FOR WRITTEN APPROVAL PRIOR TO COMMENCING CONSTRUCTION.
6. APPROVAL SHALL BE OBTAINED FROM THE COUNTY SANITATION DISTRICT REPRESENTATIVE PRIOR TO USING MEMBERS OR PARTS OF THE TEMPORARY SUPPORT DIFFERENT THAN DETAILED.
7. LARGER STEEL BEAMS WITH CORRESPONDINGLY LARGER SECTION MODULI MAY BE SUBSTITUTED.

TEMPORARY SEWER SUPPORT

APPROVED FOR SANITARY SEWER WORK ONLY

SANITARY SEWER DETAIL
NO SCALE
SSD-5

REVISED BY | DATE REVISED
MOHAMED GHANNOUM | NADER GOBRAN
CALCULATED-DESIGNED BY | CHECKED BY
FUNCTIONAL SUPERVISOR | NADER GOBRAN
STATE OF CALIFORNIA - DEPARTMENT OF TRANSPORTATION
Caltrans® OFFICE OF DESIGN D

LAST REVISION 00-00-00 | DATE PLOTTED => 12-JUN-2013 | TIME PLOTTED => 15:40

Dist	COUNTY	ROUTE	POST MILES TOTAL PROJECT	SHEET No.	TOTAL SHEETS
07	LA	10	33.2/37.2	278	1475

REGISTERED CIVIL ENGINEER 4-17-12 DATE

6-10-13
PLANS APPROVAL DATE

REGISTERED PROFESSIONAL ENGINEER MOHAMED GHANNOUM No. 72051 Exp. 6/30/14 CIVIL STATE OF CALIFORNIA

THE STATE OF CALIFORNIA OR ITS OFFICERS OR AGENTS SHALL NOT BE RESPONSIBLE FOR THE ACCURACY OR COMPLETENESS OF SCANNED COPIES OF THIS PLAN SHEET.

SEWER PLAN SHEET No.	ITEM No. ◇	8" VCP	10" VCP	REMOVE SEWER PIPE 8"	REMOVE SEWER PIPE 10"	SEWER MANHOLE	SEWER MANHOLE FRAME AND COVER	REMOVE SEWER MANHOLE	ABANDON SEWER PIPE	ABANDON MANHOLE	MODIFY MANHOLE	DESCRIPTION	LOCATION	ITEM No. ◇	SEWER PLAN SHEET No.
		LF	LF	LF	LF	EA	EA	EA	LF	EA	EA				
SS-1	1											Exist SEWER MANHOLE	N GARVEY Ave W	1	SS-1
	2											Exist SEWER PIPE 164.50′ X 8" VCP	N GARVEY Ave W	2	
	3					1	1					SEWER MANHOLE	5′ Lt 850+36.18 "N GARVEY Ave W"	3	
	4			16.50								REMOVE SEWER PIPE 16.50′ X 8" VCP	N GARVEY Ave W	4	
	5							1				REMOVE SEWER MANHOLE	Sta 850+36.18 "N GARVEY Ave W"	5	
	6			181.95								REMOVE SEWER PIPE 181.95′ X 8" VCP	N GARVEY Ave W	6	
	7	182.45										SEWER PIPE, 182.45′ X 8" VCP	N GARVEY Ave W	7	
	8							1				REMOVE SEWER MANHOLE	Sta 852+17.13 "N GARVEY Ave W"	8	
	9			12.59								REMOVE SEWER PIPE 12.59′ X 8" VCP	N GARVEY Ave W	9	
	10					1	1					SEWER MANHOLE	5′ Lt 852+18.63 "N GARVEY Ave W"	10	
	11			329.21								REMOVE SEWER PIPE 329.21′ X 8" VCP	N GARVEY Ave W	11	
	12	328.83										SEWER PIPE, 328.83′ X 8" VCP	N GARVEY Ave W	12	
	13							1				REMOVE SEWER MANHOLE	Sta 855+46.34 "N GARVEY Ave W"	13	
	14			19.39								REMOVE SEWER PIPE 19.39′ X 8" VCP	N GARVEY Ave W	14	
	15					1	1					SEWER MANHOLE	5′ Lt 855+47.46 "N GARVEY Ave W"	15	
	16			149.45								REMOVE SEWER PIPE 149.45′ X 8" VCP	N GARVEY Ave W	16	
	17							1				REMOVE SEWER MANHOLE	Sta 856+95.79 "N GARVEY Ave W"	17	
	18			154.0								REMOVE SEWER PIPE 154.0′ X 8" VCP	N GARVEY Ave W	18	
	19	302.32										SEWER PIPE, 302.32′ X 8" VCP	N GARVEY Ave W	19	
	20											Exist SEWER MANHOLE	Sta 858+49.78 "N GARVEY Ave W"	20	
SS-2	1										1	MODIFY SEWER MANHOLE	Sta 74+07.10 "V3"	1	SS-2
	2								19.03			ABANDON SEWER PIPE, 19.03′ X 10" VCP	EAST OF VINCENT Ave	2	
	3									1		ABANDON SEWER MANHOLE	Sta 74+30.00 "V3"	3	
	4								102.24			ABANDON SEWER PIPE, 102.24′ X 10" VCP	EAST OF VINCENT Ave	4	
	5				159.26							REMOVE SEWER PIPE 159.26′ X 10" VCP	EAST OF VINCENT Ave	5	
	6							1				REMOVE SEWER MANHOLE	Sta 76+89.66 "V2"	6	
	7								160.47			ABANDON SEWER PIPE, 160.47′ X 10" VCP	EAST OF VINCENT Ave	7	
	8				62.00							Exist LATERAL VCP	EAST OF VINCENT Ave	8	
	9											REMOVE SEWER PIPE, 62′ X 10" VCP	EAST OF VINCENT Ave	9	
	10										1	MODIFY SEWER MANHOLE	37.72′ R+76+91.47 "V2"	10	
	11											Exist SEWER PIPE, 120′ X 6" VCP	EAST OF VINCENT Ave	11	
	12											Exist SEWER PIPE, 10" VCP	EAST OF VINCENT Ave	12	
	13											Exist SEWER MANHOLE	384.63 R+ 78+63.12 "V2"	13	
	14											Exist SEWER MANHOLE	EAST OF VINCENT Ave	14	
SUBTOTAL		813.60		863.09	221.26	3	3	5	281.74	1	2				

SANITARY SEWER QUANTITIES

SSQ-1

STATE OF CALIFORNIA - DEPARTMENT OF TRANSPORTATION
Caltrans® OFFICE OF DESIGN D

FUNCTIONAL SUPERVISOR: NADER GOBRAN
CALCULATED-DESIGNED BY: MOHAMED GHANNOUM
CHECKED BY: NADER GOBRAN
REVISED BY
DATE REVISED

LAST REVISION 00-00-00
DATE PLOTTED => 17-JUN-2013
TIME PLOTTED => 13:02

Dist	COUNTY	ROUTE	POST MILES TOTAL PROJECT	SHEET No.	TOTAL SHEETS
07	LA	10	33.2/37.2	279	1475

REGISTERED CIVIL ENGINEER 4-17-12 DATE

6-10-13
PLANS APPROVAL DATE

REGISTERED PROFESSIONAL ENGINEER MOHAMED GHANNOUM No. 72051 Exp. 6/30/14 CIVIL STATE OF CALIFORNIA

THE STATE OF CALIFORNIA OR ITS OFFICERS OR AGENTS SHALL NOT BE RESPONSIBLE FOR THE ACCURACY OR COMPLETENESS OF SCANNED COPIES OF THIS PLAN SHEET.

SEWER PLAN SHEET No.	ITEM No. ◇	8" VCP	10" VCP	REMOVE SEWER PIPE 8"	REMOVE SEWER PIPE 10"	SEWER MANHOLE	SEWER MANHOLE FRAME AND COVER	REMOVE SEWER MANHOLE	ABANDON SEWER PIPE	ABANDON MANHOLE	MODIFY MANHOLE	DESCRIPTION	LOCATION	ITEM No. ◇	SEWER PLAN SHEET No.
		LF	LF	LF	LF	EA	EA	EA	LF	EA	EA				
SS-2	15											Exist SEWER PIPE, 75' X 6" VCP	EAST OF VINCENT Ave	15	SS-2
	16											Exist SEWER MANHOLE	EAST OF VINCENT Ave	16	
	17											Exist SEWER PIPE, 70' X 6" VCP	EAST OF VINCENT Ave	17	
	18											Exist SEWER MANHOLE	EAST OF VINCENT Ave	18	
	19					1						SEWER MANHOLE	184.05' Rt 77+27.45 "V2"	19	
	20					1						SEWER MANHOLE	315.62' Rt 76+83.33 "V2"	20	
	21		95.00									SEWER PIPE, 95.0' X 10" VCP	EAST OF VINCENT Ave	21	
	22		365.30									SEWER PIPE, 365.3' X 10" VCP	EAST OF VINCENT Ave	22	
	23		62.00									SEWER PIPE, 62.0' X 10" VCP	EAST OF VINCENT Ave	23	
SUB TOTAL			522.30	863.09	221.26	2									
TOTAL		813.60	522.30	1084.35		5	3	5	281.74	1	2				

SANITARY SEWER QUANTITIES
SSQ-2

STATE OF CALIFORNIA - DEPARTMENT OF TRANSPORTATION
Caltrans OFFICE OF DESIGN D

FUNCTIONAL SUPERVISOR: NADER GOBRAN
CALCULATED-DESIGNED BY: MOHAMED GHANNOUM
CHECKED BY: NADER GOBRAN
REVISED BY
DATE REVISED

LAST REVISION 00-00-00
DATE PLOTTED => 12-JUN-2013
TIME PLOTTED => 15:40

Dist	COUNTY	ROUTE	POST MILES TOTAL PROJECT	SHEET No.	TOTAL SHEETS
07	LA	10	33.2/37.2	280	1475

REGISTERED CIVIL ENGINEER 4-30-13 DATE

6-10-13
PLANS APPROVAL DATE

REGISTERED PROFESSIONAL ENGINEER TRUNG CHAU No. 61874 Exp. 9-30-13 CIVIL STATE OF CALIFORNIA

THE STATE OF CALIFORNIA OR ITS OFFICERS OR AGENTS SHALL NOT BE RESPONSIBLE FOR THE ACCURACY OR COMPLETENESS OF SCANNED COPIES OF THIS PLAN SHEET.

NOTES:

1. LOCATIONS OF UTILITY FACILITIES SHOWN ON THESE PLANS ARE APPROXIMATE AND SHALL BE VERIFIED BY THE CONTRACTOR PRIOR TO CONSTRUCTION.
2. FOR ACCURATE RIGHT OF WAY DATA, CONTACT RIGHT OF WAY ENGINEERING AT THE AT DISTRICT OFFICE.
3. UTILITY OWNERSHIP FOR THIS PROJECT OR AS SHOWN:

GAS	SOUTHERN CALIFORNIA GAS (SCG)
POWER	SOUTHERN CALIFORNIA EDISON (SCE) CITY OF WEST COVINA
WATER	SUBURBAN WATER SYSTEMS (SWS) VALLEY COUNTY WATER DISTRICT (VCWD) COVINA WATER DISTRICT SAN GABRIEL VALLEY WATER (SGVW)
TELEPHONE	VERIZON CHARTER COMMUNICATION TIME WARNER TELECOM
SEWER	LOS ANGELES COUNTY SANITATION DISTRICT (LACSD) CITY OF WEST COVINA

4. FOR DETAIL OF SEWER LINE, SEE SEWER PLANS.

ABBREVIATIONS:

SCE	SOUTHERN CALIFORNIA EDISON
SCG	SOUTHERN CALIFORNIA GAS
SWS	SUBURBAN WATER SYSTEMS
SGVW	SAN GABRIEL VALLEY WATER
BwPWD	BALDWIN PARK WATER DISTRICT
LACSD	LOS ANGELES COUNTY SANITATION DISTRICT
VCWD	VALLEY COUNTY WATER DISTRICT
M	MAIN
Du	DUCT
MH	MANHOLE
ACD	ASBESTOS CONDUIT DUCT
NRCP	NON REINFORCED CONCRETE PIPE
STL	STEEL
H	HIGH
TCE	TEMPORARY CONSTRUCTION EASEMENT
CO	COMPANY
ABS	PLASTIC CONDUIT

LEGEND:

POTHOLE

POTHOLING INFORMATION TABLE

⬡	UTILITY COMPANY	NORTHING	EASTING	GROUND ELEVATION	DEPTH
1	SCE MH	1848080.37	6573272.37	331.47	
1a	SCE 2-5" (12kv) Du	1848006.06	6573203.37	329.22	3.92
1b	SCE 2-5" (12kv) Du	1847798.39	6573019.71	330.25	4.00
2	12" M WATER LINE SGVW	1847792.44	6573074.86	329.63	3.83
3	12" UNDERGROUND SGVW	1848023.64	6573279.05	330.53	3.66
3a	6-4¼" ACD, VERIZON	1848186.28	6574077.36	356.16	8.06

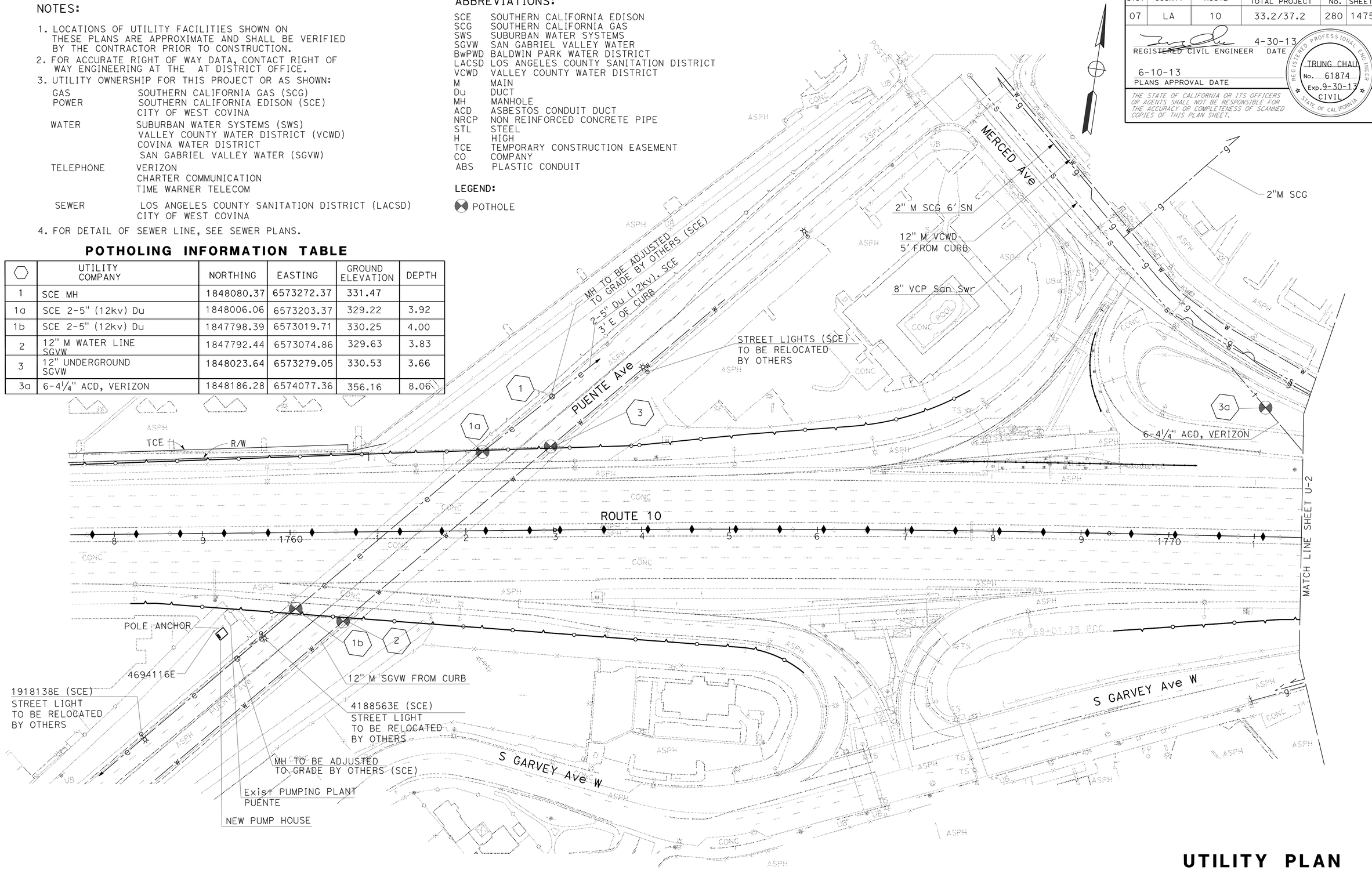

UTILITY PLAN

SCALE: 1" = 50'

U-1

APPROVED FOR UTILITY INFORMATION ONLY.

STATE OF CALIFORNIA - DEPARTMENT OF TRANSPORTATION
Caltrans OFFICE OF DESIGN A

FUNCTIONAL SUPERVISOR: CELINA AVILES
CALCULATED-DESIGNED BY: DON LUU
CHECKED BY: CUONG PHAM
REVISED BY: T. CHAU
DATE REVISED: 5/15/13

LAST REVISION 03-21-12
DATE PLOTTED => 12-JUN-2013
TIME PLOTTED => 15:40

Dist	COUNTY	ROUTE	POST MILES TOTAL PROJECT	SHEET No.	TOTAL SHEETS
07	LA	10	33.2/37.2	281	1475

REGISTERED CIVIL ENGINEER 4-30-13 DATE

6-10-13
PLANS APPROVAL DATE

REGISTERED PROFESSIONAL ENGINEER TRUNG CHAU No. 61874 Exp. 9-30-13 CIVIL STATE OF CALIFORNIA

THE STATE OF CALIFORNIA OR ITS OFFICERS OR AGENTS SHALL NOT BE RESPONSIBLE FOR THE ACCURACY OR COMPLETENESS OF SCANNED COPIES OF THIS PLAN SHEET.

NOTE:
FOR ACCURATE RIGHT OF WAY DATA, CONTACT RIGHT OF WAY ENGINEERING AT THE DISTRICT OFFICE.

POTHOLING INFORMATION TABLE

⬡	UTILITY COMPANY	NORTHING	EASTING	GROUND ELEVATION	DEPTH
4	6" M IN 10" CASING SWS	1847989.33	6574436.74	352.81	4.00
5	6" M IN 10" CASING SWS	1848175.59	6574405.14	355.16	4.33
5a	6-4¼" ACD, VERIZON	1847970.87	6574321.84	352.22	4.78

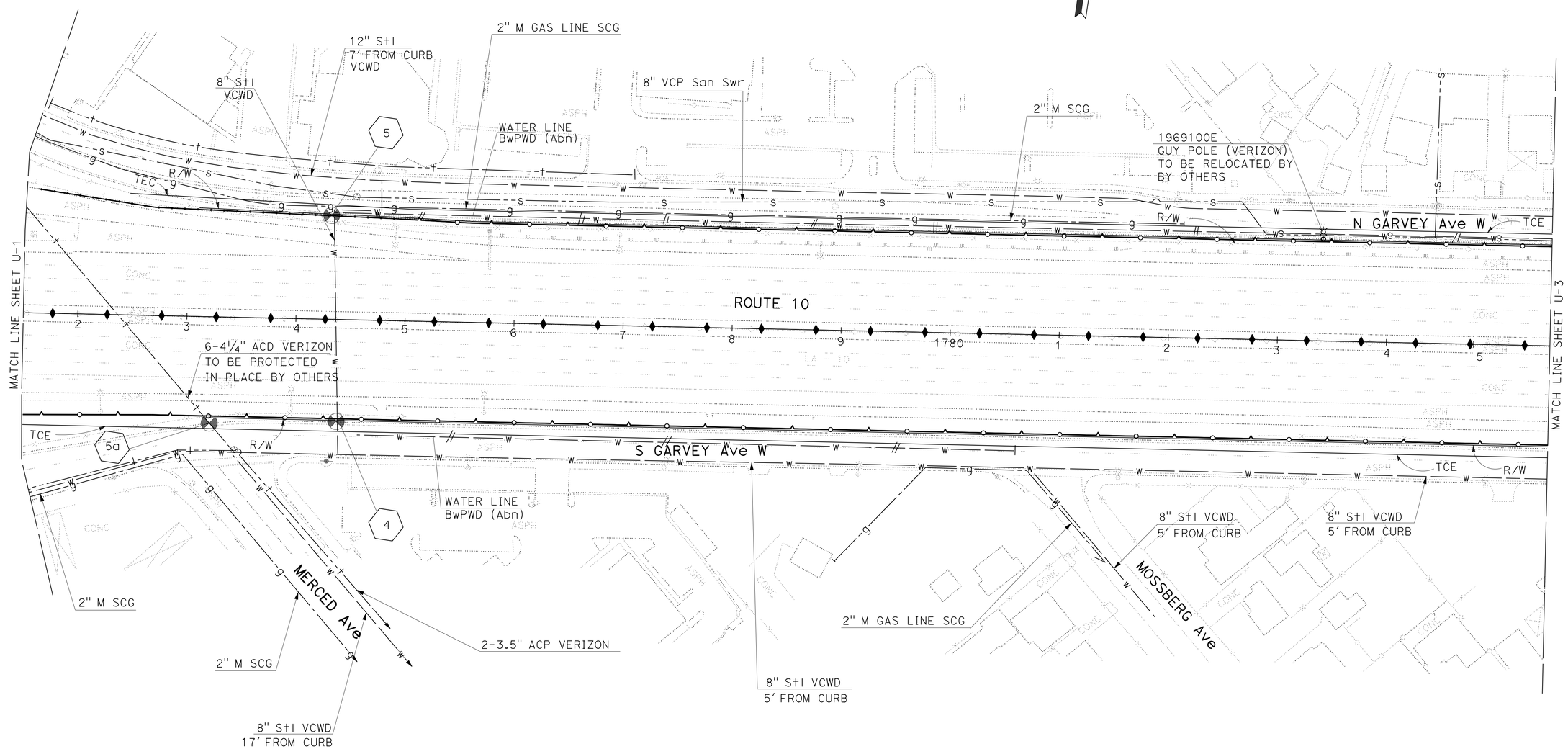

UTILITY PLAN

SCALE: 1" = 50'

U-2

APPROVED FOR UTILITY INFORMATION ONLY.

STATE OF CALIFORNIA - DEPARTMENT OF TRANSPORTATION
Caltrans® OFFICE OF DESIGN A

FUNCTIONAL SUPERVISOR: CELINA AVILES
CALCULATED-DESIGNED BY: DON LUU
CHECKED BY: CUONG PHAM
REVISED BY: T. CHAU
DATE REVISED: 5/15/13

LAST REVISION: 03-21-12
DATE PLOTTED => 12-JUN-2013
TIME PLOTTED => 15:40

Dist	COUNTY	ROUTE	POST MILES TOTAL PROJECT	SHEET No.	TOTAL SHEETS
07	LA	10	33.2/37.2	282	1475

REGISTERED CIVIL ENGINEER 4-30-13 DATE

6-10-13
PLANS APPROVAL DATE

REGISTERED PROFESSIONAL ENGINEER TRUNG CHAU No. 61874 Exp. 9-30-13 CIVIL STATE OF CALIFORNIA

THE STATE OF CALIFORNIA OR ITS OFFICERS OR AGENTS SHALL NOT BE RESPONSIBLE FOR THE ACCURACY OR COMPLETENESS OF SCANNED COPIES OF THIS PLAN SHEET.

POTHOLING INFORMATION TABLE

⬡	UTILITY COMPANY	NORTHING	EASTING	GROUND ELEVATION	DEPTH
6	MH LA SANITATION DISTRICT	1848415.10	6576134.01	361.25	2.00
7	22" NRCP W/ENCASE LACSD	1848176.38	6575924.33	359.33	2.66
8	16" STEEL IN 24" CASING SWS	1848187.21	6576472.30	360.74	4.66
8a	16" STEEL IN 24" CASING SWS	1848446.49	6576539.63	363.81	4.42
8b	MH CITY OF WEST COVINA SEWER	1848396.54	6576186.50	362.16	14.36 FL
8c	MH CITY OF WEST COVINA SEWER	1848187.35	6576000.87	359.64	13.55 FL

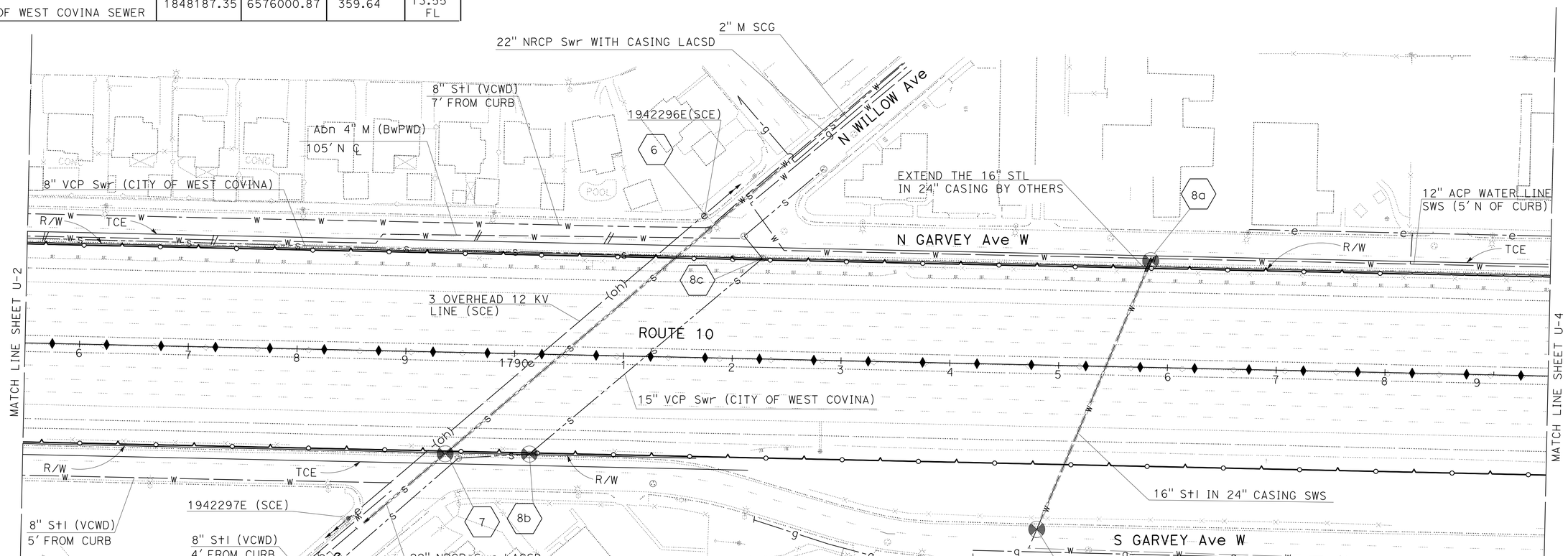

NOTE:
FOR ACCURATE RIGHT OF WAY DATA, CONTACT RIGHT OF WAY ENGINEERING AT THE DISTRICT OFFICE.

UTILITY PLAN

SCALE: 1" = 50'

U-3

APPROVED FOR UTILITY INFORMATION ONLY.

STATE OF CALIFORNIA - DEPARTMENT OF TRANSPORTATION
Caltrans OFFICE OF DESIGN A

FUNCTIONAL SUPERVISOR: CELINA AVILES
CALCULATED-DESIGNED BY: DON LUU
CHECKED BY: CUONG PHAM
REVISED BY: T. CHAU
DATE REVISED: 5/15/13

LAST REVISION 03-24-12
DATE PLOTTED => 12-JUN-2013
TIME PLOTTED => 15:40

Dist	COUNTY	ROUTE	POST MILES TOTAL PROJECT	SHEET No.	TOTAL SHEETS
07	LA	10	33.2/37.2	283	1475

REGISTERED CIVIL ENGINEER 4-30-13 DATE

6-10-13
PLANS APPROVAL DATE

REGISTERED PROFESSIONAL ENGINEER TRUNG CHAU No. 61874 Exp. 9-30-13 CIVIL STATE OF CALIFORNIA

THE STATE OF CALIFORNIA OR ITS OFFICERS OR AGENTS SHALL NOT BE RESPONSIBLE FOR THE ACCURACY OR COMPLETENESS OF SCANNED COPIES OF THIS PLAN SHEET.

NOTE:

FOR ACCURATE RIGHT OF WAY DATA, CONTACT RIGHT OF WAY ENGINEERING AT DISTRICT OFFICE.

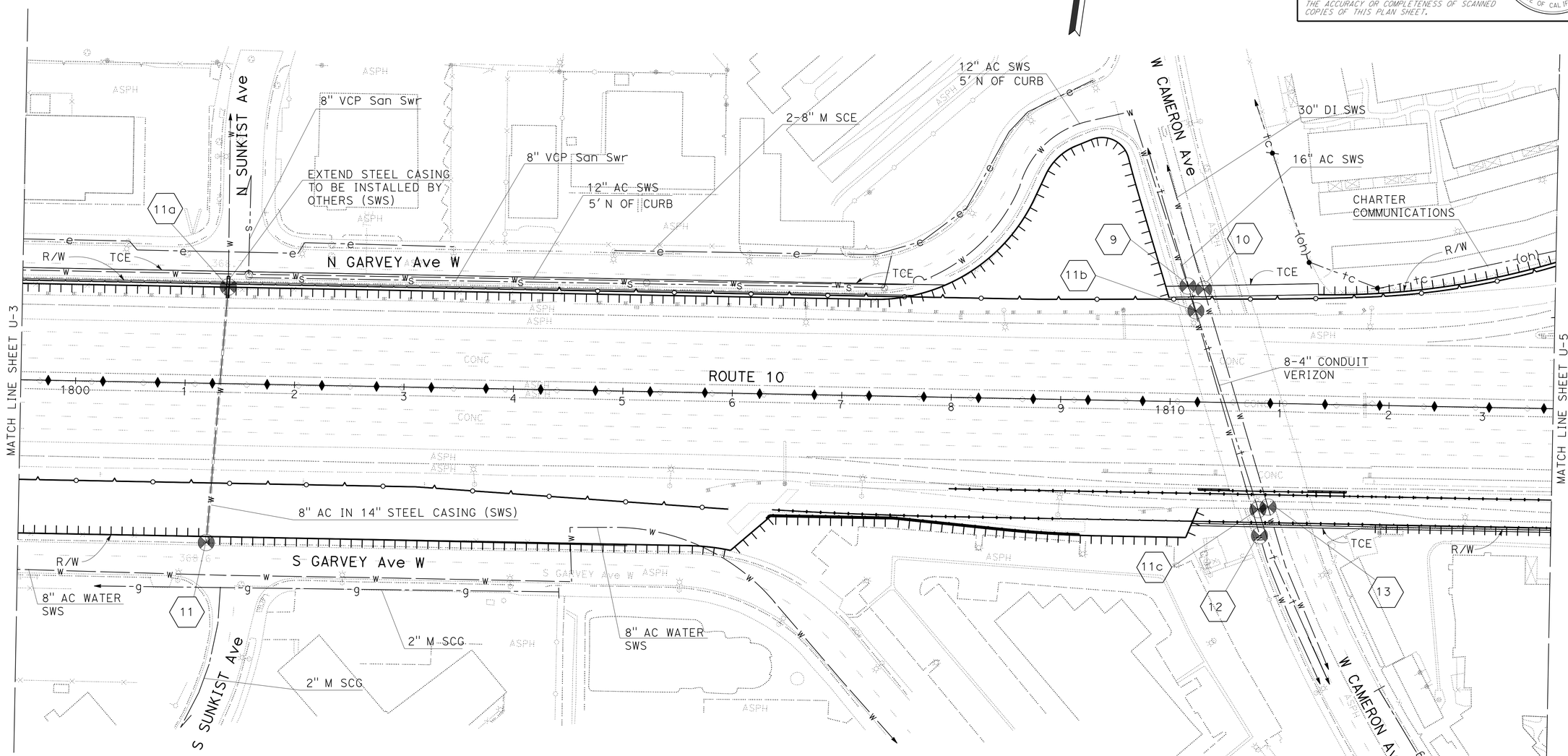

POTHOLING INFORMATION TABLE

⬡	UTILITY COMPANY	NORTHING	EASTING	GROUND ELEVATION	DEPTH
9	16" AC SWS	1848632.72	6577959.35	354.81	3.16
10	30" DI SWS	1848631.85	6577974.20	354.68	5.58
11	8" AC IN 14" CASING SWS	1848272.45	6577105.48	369.27	2.50
11a	8" AC IN 14" CASING SWS	1848506.34	6577092.00	368.72	3.50
11b	8-4" CONDUIT, VERIZON	1848611.53	6577969.82	354.72	4.53
11c	8-4" CONDUIT, VERIZON	1848439.97	6578051.97	359.12	5.30

POTHOLING INFORMATION TABLE

⬡	UTILITY COMPANY	NORTHING	EASTING	GROUND ELEVATION	DEPTH
12	16" AC SWS	1848436.53	6578047.76	359.36	2.58
13	30" DI SWS	1848443.64	6578060.76	358.69	3.50

APPROVED FOR UTILITY INFORMATION ONLY.

UTILITY PLAN

SCALE: 1" = 50'

U-4

STATE OF CALIFORNIA - DEPARTMENT OF TRANSPORTATION
Caltrans OFFICE OF DESIGN A

FUNCTIONAL SUPERVISOR: CELINA AVILES
CALCULATED-DESIGNED BY: DON LUU
CHECKED BY: CUONG PHAM
REVISED BY
DATE REVISED

LAST REVISION 03-24-12
DATE PLOTTED => 12-JUN-2013
TIME PLOTTED => 15:40

Dist	COUNTY	ROUTE	POST MILES TOTAL PROJECT	SHEET No.	TOTAL SHEETS
07	LA	10	33.2/37.2	284	1475

REGISTERED CIVIL ENGINEER 4-30-13 DATE

6-10-13
PLANS APPROVAL DATE

REGISTERED PROFESSIONAL ENGINEER TRUNG CHAU No. 61874 Exp. 9-30-13 CIVIL STATE OF CALIFORNIA

THE STATE OF CALIFORNIA OR ITS OFFICERS OR AGENTS SHALL NOT BE RESPONSIBLE FOR THE ACCURACY OR COMPLETENESS OF SCANNED COPIES OF THIS PLAN SHEET.

NOTES:

1. FOR ACCURATE RIGHT OF WAY DATA, CONTACT RIGHT OF WAY AT THE DISTRICT OFFICE.
2. STREET LIGHT TO BE RELOCATED DURING CONSTRUCTION (SEE ELECTRICAL PLANS FOR DETAIL). (*)

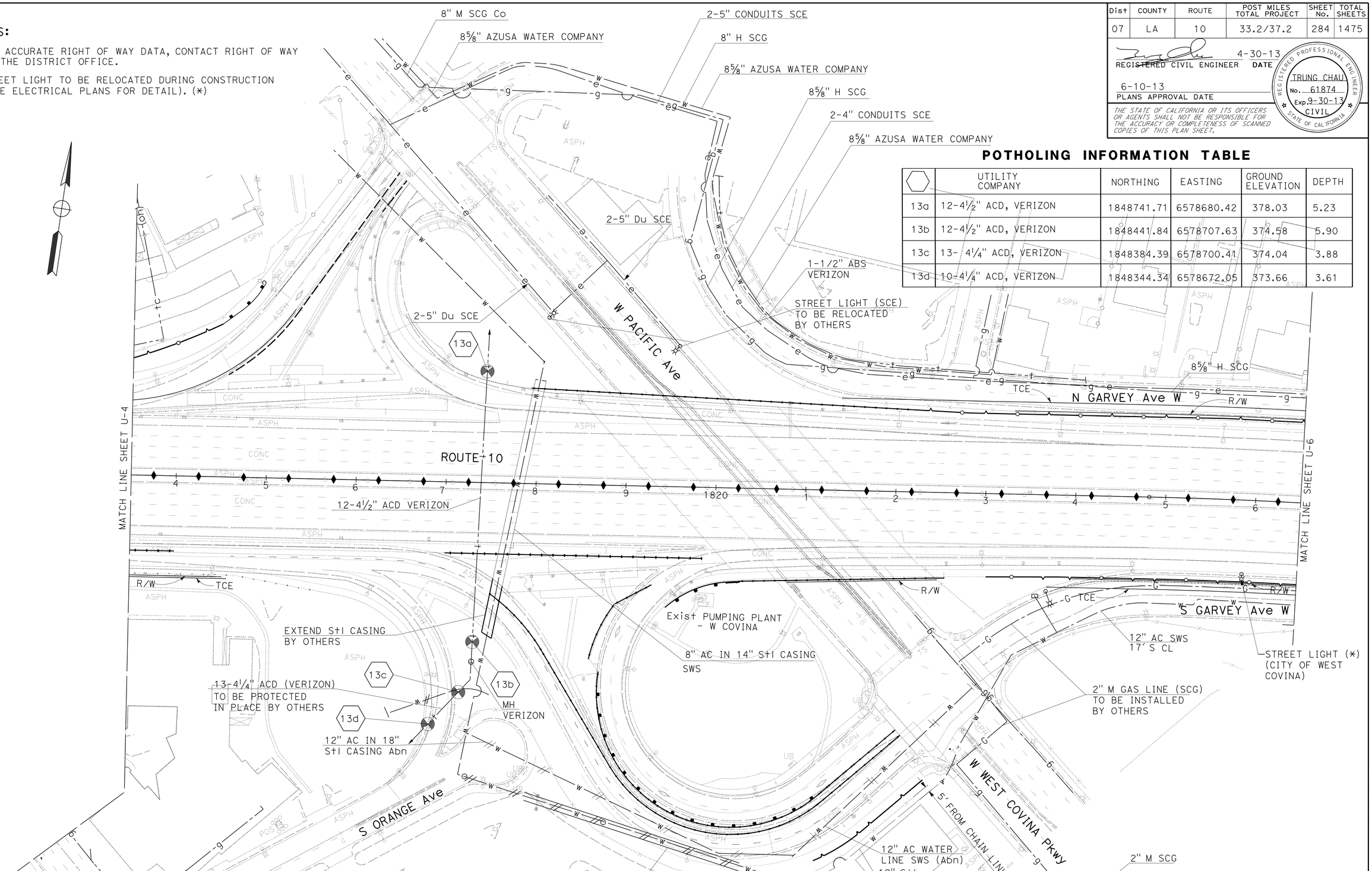

POTHOLING INFORMATION TABLE

	UTILITY COMPANY	NORTHING	EASTING	GROUND ELEVATION	DEPTH
13a	12-4½" ACD, VERIZON	1848741.71	6578680.42	378.03	5.23
13b	12-4½" ACD, VERIZON	1848441.84	6578707.63	374.58	5.90
13c	13- 4¼" ACD, VERIZON	1848384.39	6578700.41	374.04	3.88
13d	10-4¼" ACD, VERIZON	1848344.34	6578672.05	373.66	3.61

APPROVED FOR UTILITY INFORMATION ONLY.

UTILITY PLAN

SCALE: 1" = 50'

U-5

STATE OF CALIFORNIA - DEPARTMENT OF TRANSPORTATION
Caltrans OFFICE OF DESIGN A

FUNCTIONAL SUPERVISOR: CELINA AVILES
CALCULATED-DESIGNED BY: DON LUU
CHECKED BY: CUONG PHAM
REVISED BY: T. CHAU
DATE REVISED: 5/15/13

LAST REVISION 03-24-12
DATE PLOTTED => 12-JUN-2013
TIME PLOTTED => 15:40

Dist	COUNTY	ROUTE	POST MILES TOTAL PROJECT	SHEET No.	TOTAL SHEETS
07	LA	10	33.2/37.2	285	1475

REGISTERED CIVIL ENGINEER 4-30-13 DATE

6-10-13
PLANS APPROVAL DATE

REGISTERED PROFESSIONAL ENGINEER TRUNG CHAU No. 61874 Exp. 9-30-13 CIVIL STATE OF CALIFORNIA

THE STATE OF CALIFORNIA OR ITS OFFICERS OR AGENTS SHALL NOT BE RESPONSIBLE FOR THE ACCURACY OR COMPLETENESS OF SCANNED COPIES OF THIS PLAN SHEET.

NOTES:

1. FOR ACCURATE RIGHT OF WAY DATA, CONTACT RIGHT OF WAY ENGINEERING AT DISTRICT OFFICE.
2. STREETLIGHT TO BE RELOCATED DURING CONSTRUCTION (SEE ELECTRICAL PLANS FOR DETAIL). (*)

POTHOLING INFORMATION TABLE

	UTILITY COMPANY	NORTHING	EASTING	GROUND ELEVATION	DEPTH
14	8 5/8" H IN 12" CASING SOUTHERN CALIFORNIA GAS	1848836.42	6579782.78	383.41	4.58
15	8 5/8" H IN 12" CASING SOUTHERN CALIFORNIA GAS	1848656.27	6579781.34	380.79	3.08

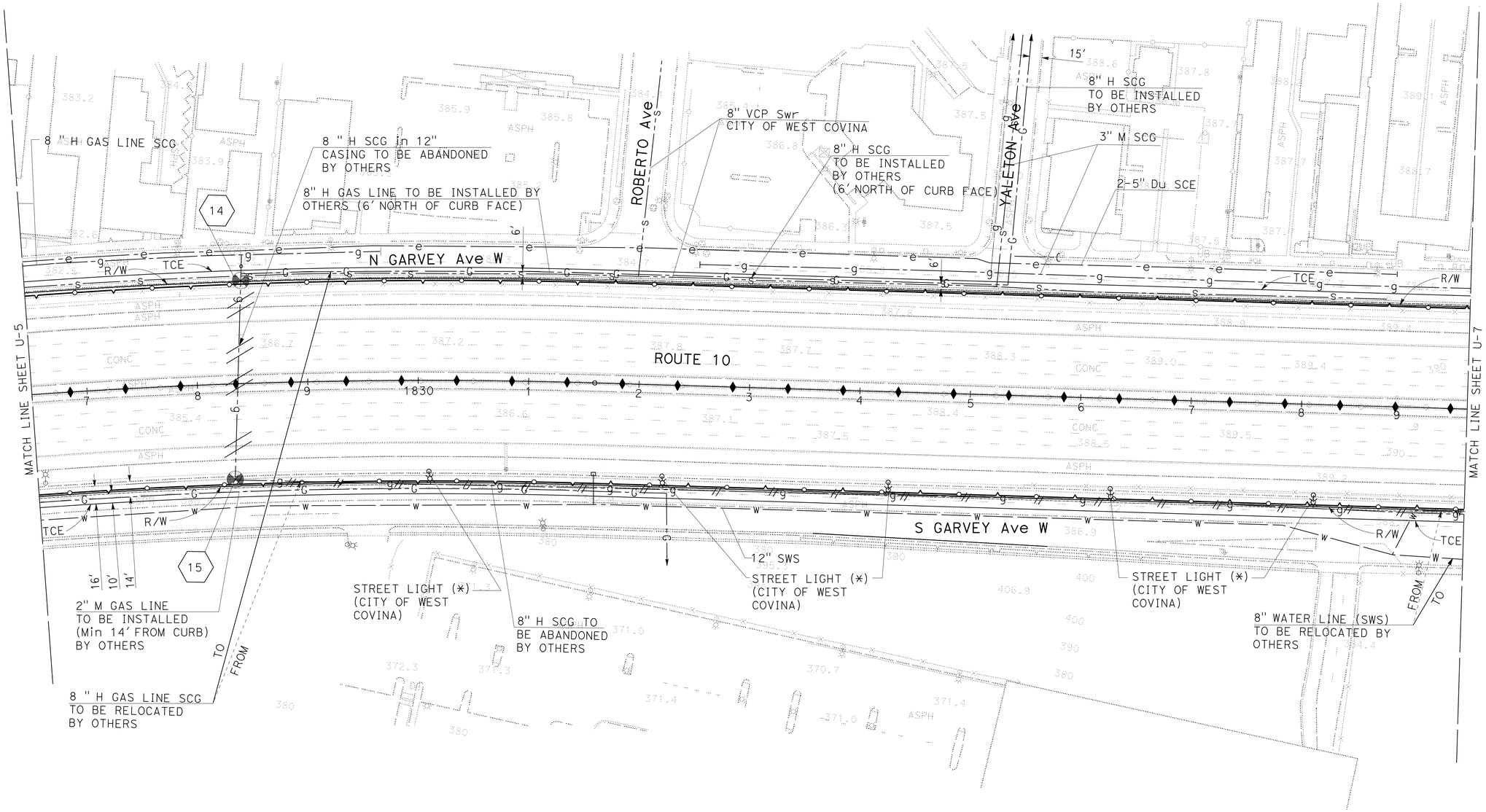

UTILITY PLAN

SCALE: 1" = 50'

U-6

APPROVED FOR UTILITY INFORMATION ONLY.

STATE OF CALIFORNIA - DEPARTMENT OF TRANSPORTATION
Caltrans OFFICE OF DESIGN A

FUNCTIONAL SUPERVISOR: CELINA AVILES
CALCULATED-DESIGNED BY: DON LUU
CHECKED BY: CUONG PHAM
REVISED BY: T. CHAU
DATE REVISED: 5/15/13

LAST REVISION 03-24-12
DATE PLOTTED => 12-JUN-2013
TIME PLOTTED => 15:40

NOTE:

FOR ACCURATE RIGHT OF WAY DATA, CONTACT RIGHT OF WAY ENGINEERING AT DISTRICT OFFICE.

	UTILITY COMPANY	NORTHING	EASTING	GROUND ELEVATION	DEPTH
18C	8" WATER LINE SWS	1848647.57	6581117.70	389.02	7.67
18D	8" WATER LINE SWS	1848647.69	6581093.72	389.01	7.92
18E	8" WATER LINE SWS	1848647.82	6581059.70	389.01	8.17
18f	3-4" (69kv) in 16" CASING SCE	1848898.57	6581252.11	390.82	8.53

POTHOLING INFORMATION TABLE

	UTILITY COMPANY	NORTHING	EASTING	GROUND ELEVATION	DEPTH
16	36" RCP LACSD	1848881.04	6581028.48	370.16	5.00
17	8" VCP CITY OF WEST COVINA SEWER	1848827.06	6582109.02	390.70	6.25
18	MH 30" RCP w/ENCASE LACSD	1848646.74	6581156.46	387.62	9.50
19	3-4" (69kv) in 16" CASING SCE	1848651.43	6581179.20	387.64	3.33
20	8⅝" H GAS LINE SCG	1848630.77	6581646.28	388.77	5.42
19a	3-4" (69kv) in 16" CASING SCE	1848826.56	6581232.17	390.8	6.75
18a	30" RCP SEWER LINE LACSD	1848837.67	6581171.17	391.2	10.3

Dist	COUNTY	ROUTE	POST MILES TOTAL PROJECT	SHEET No.	TOTAL SHEETS
07	LA	10	33.2/37.2	286	1475

4-30-13
REGISTERED CIVIL ENGINEER DATE

6-10-13
PLANS APPROVAL DATE

REGISTERED PROFESSIONAL ENGINEER TRUNG CHAU No. 61874 Exp. 9-30-13 CIVIL STATE OF CALIFORNIA

THE STATE OF CALIFORNIA OR ITS OFFICERS OR AGENTS SHALL NOT BE RESPONSIBLE FOR THE ACCURACY OR COMPLETENESS OF SCANNED COPIES OF THIS PLAN SHEET.

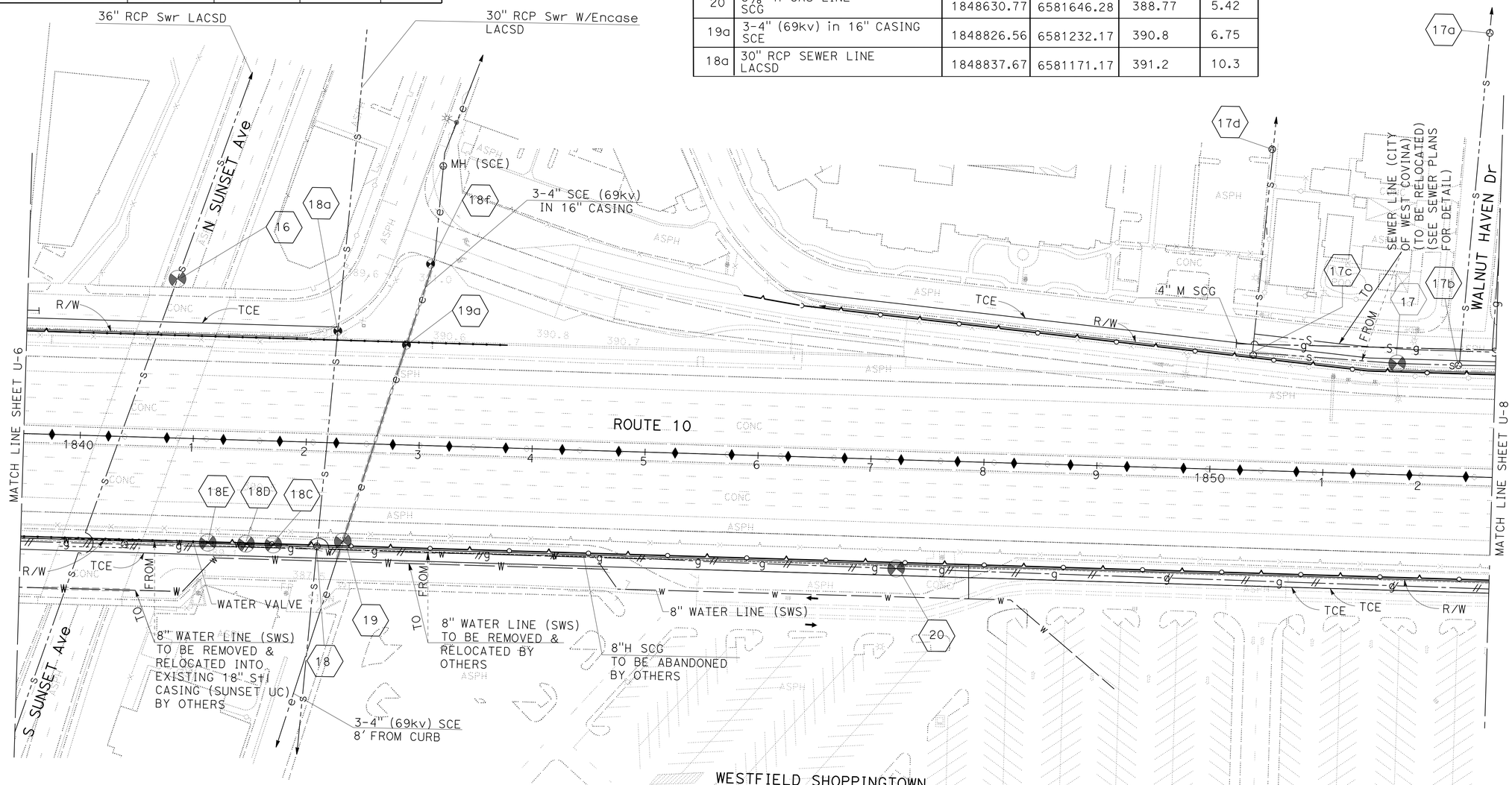

	UTILITY COMPANY	NORTHING	EASTING	GROUND ELEVATION	DEPTH
17a	SEWER MANHOLE (MH) CITY OF WEST COVINA	1849121.23	6582185.30	391.92	7.38
17b	SEWER MANHOLE (MH) CITY OF WEST COVINA	1848826.54	6582163.23	390.92	6.17
17c	SEWER MANHOLE (MH) CITY OF WEST COVINA	1848831.96	6581981.52	390.59	8.01
17d	SEWER MANHOLE (MH) CITY OF WEST COVINA	1849014.50	6581994.76	391.04	8.90

APPROVED FOR UTILITY INFORMATION ONLY.

UTILITY PLAN

SCALE: 1" = 50'

U-7

STATE OF CALIFORNIA - DEPARTMENT OF TRANSPORTATION
Caltrans® OFFICE OF DESIGN A

FUNCTIONAL SUPERVISOR: CELINA AVILES
CALCULATED-DESIGNED BY: DON LUU
CHECKED BY: CUONG PHAM
REVISED BY: E. CHAU
DATE REVISED: 5/15/13

LAST REVISION 03-24-12
DATE PLOTTED => 12-JUN-2013
TIME PLOTTED => 15:40

NOTE:
FOR ACCURATE RIGHT OF WAY DATA, CONTACT RIGHT OF WAY ENGINEERING AT DISTRICT OFFICE.

POTHOLING INFORMATION TABLE

⬡	UTILITY COMPANY	NORTHING	EASTING	GROUND ELEVATION	DEPTH
21	MH CITY OF WEST COVINA SEWER	1848819.06	6582492.65	392.60	8.00
22	8" H GAS LINE SCG	1848624.33	6582528.25	393.00	5.25
23	8" H GAS LINE SCG	1848591.03	6583283.96	399.65	7.16

Dist	COUNTY	ROUTE	POST MILES TOTAL PROJECT	SHEET No.	TOTAL SHEETS
07	LA	10	33.2/37.2	287	1475

REGISTERED CIVIL ENGINEER 3-02-12 DATE
6-10-13
PLANS APPROVAL DATE

REGISTERED PROFESSIONAL ENGINEER DON LUU No. C62286 Exp. 9-30-13 CIVIL STATE OF CALIFORNIA

THE STATE OF CALIFORNIA OR ITS OFFICERS OR AGENTS SHALL NOT BE RESPONSIBLE FOR THE ACCURACY OR COMPLETENESS OF SCANNED COPIES OF THIS PLAN SHEET.

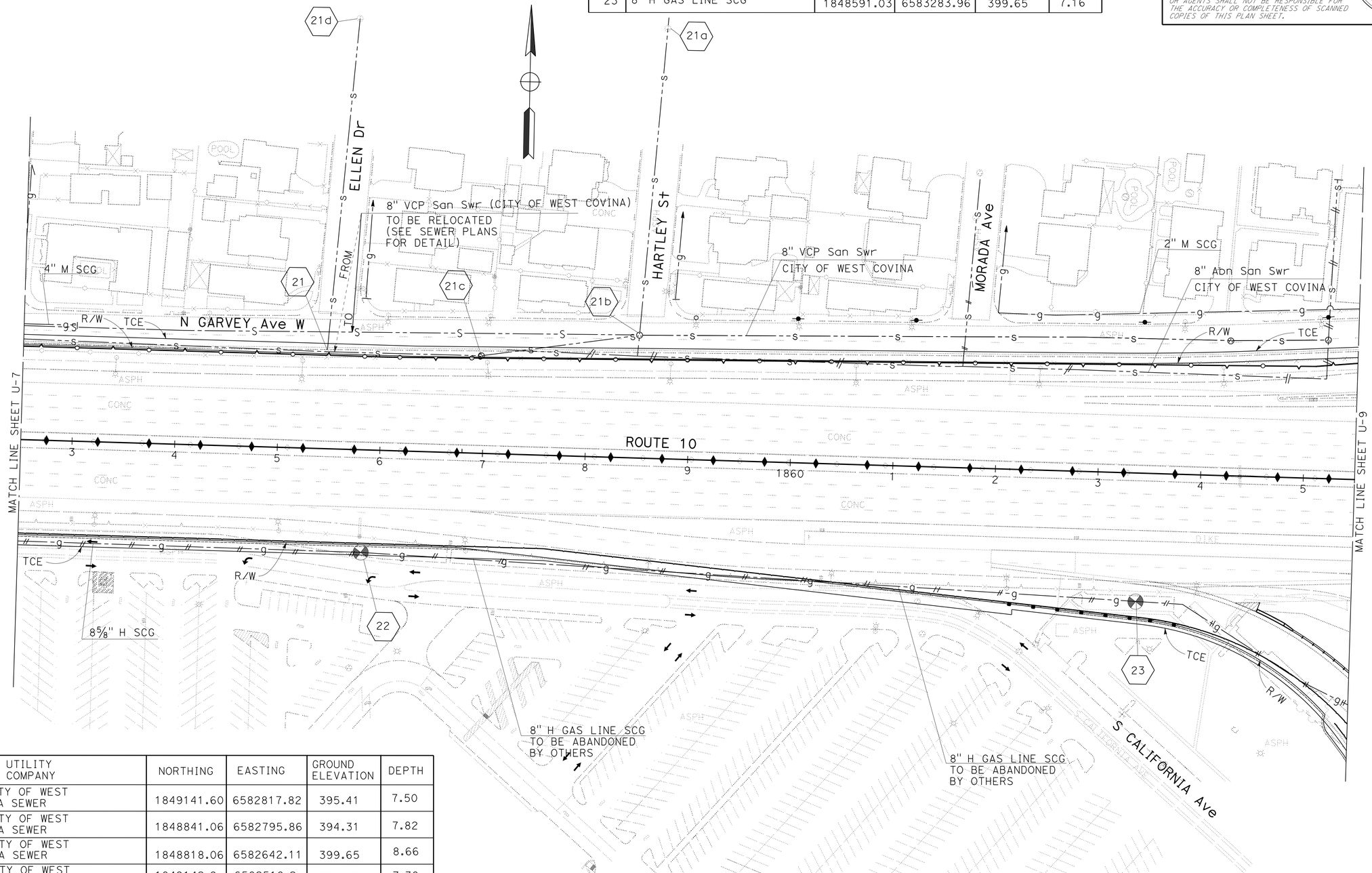

⬡	UTILITY COMPANY	NORTHING	EASTING	GROUND ELEVATION	DEPTH
21a	MH CITY OF WEST COVINA SEWER	1849141.60	6582817.82	395.41	7.50
21b	MH CITY OF WEST COVINA SEWER	1848841.06	6582795.86	394.31	7.82
21c	MH CITY OF WEST COVINA SEWER	1848818.06	6582642.11	399.65	8.66
21d	MH CITY OF WEST COVINA SEWER	1849142.9	6582518.2	399.25	7.38

APPROVED FOR UTILITY INFORMATION ONLY.

UTILITY PLAN

SCALE: 1" = 50'

U-8

STATE OF CALIFORNIA - DEPARTMENT OF TRANSPORTATION
Caltrans OFFICE OF DESIGN A

FUNCTIONAL SUPERVISOR: CELINA AVILES
CALCULATED-DESIGNED BY: DON LUU
CHECKED BY: CUONG PHAM
REVISED BY
DATE REVISED

LAST REVISION 03-24-12
DATE PLOTTED => 12-JUN-2013
TIME PLOTTED => 15:40

NOTE:
FOR ACCURATE RIGHT OF WAY DATA, CONTACT RIGHT OF WAY ENGINEERING AT DISTRICT OFFICE.

Dist	COUNTY	ROUTE	POST MILES TOTAL PROJECT	SHEET No.	TOTAL SHEETS
07	LA	10	33.2/37.2	288	1475

REGISTERED CIVIL ENGINEER 4-30-13 DATE

6-10-13
PLANS APPROVAL DATE

REGISTERED PROFESSIONAL ENGINEER TRUNG CHAU No. 61874 Exp. 9-30-13 CIVIL STATE OF CALIFORNIA

THE STATE OF CALIFORNIA OR ITS OFFICERS OR AGENTS SHALL NOT BE RESPONSIBLE FOR THE ACCURACY OR COMPLETENESS OF SCANNED COPIES OF THIS PLAN SHEET.

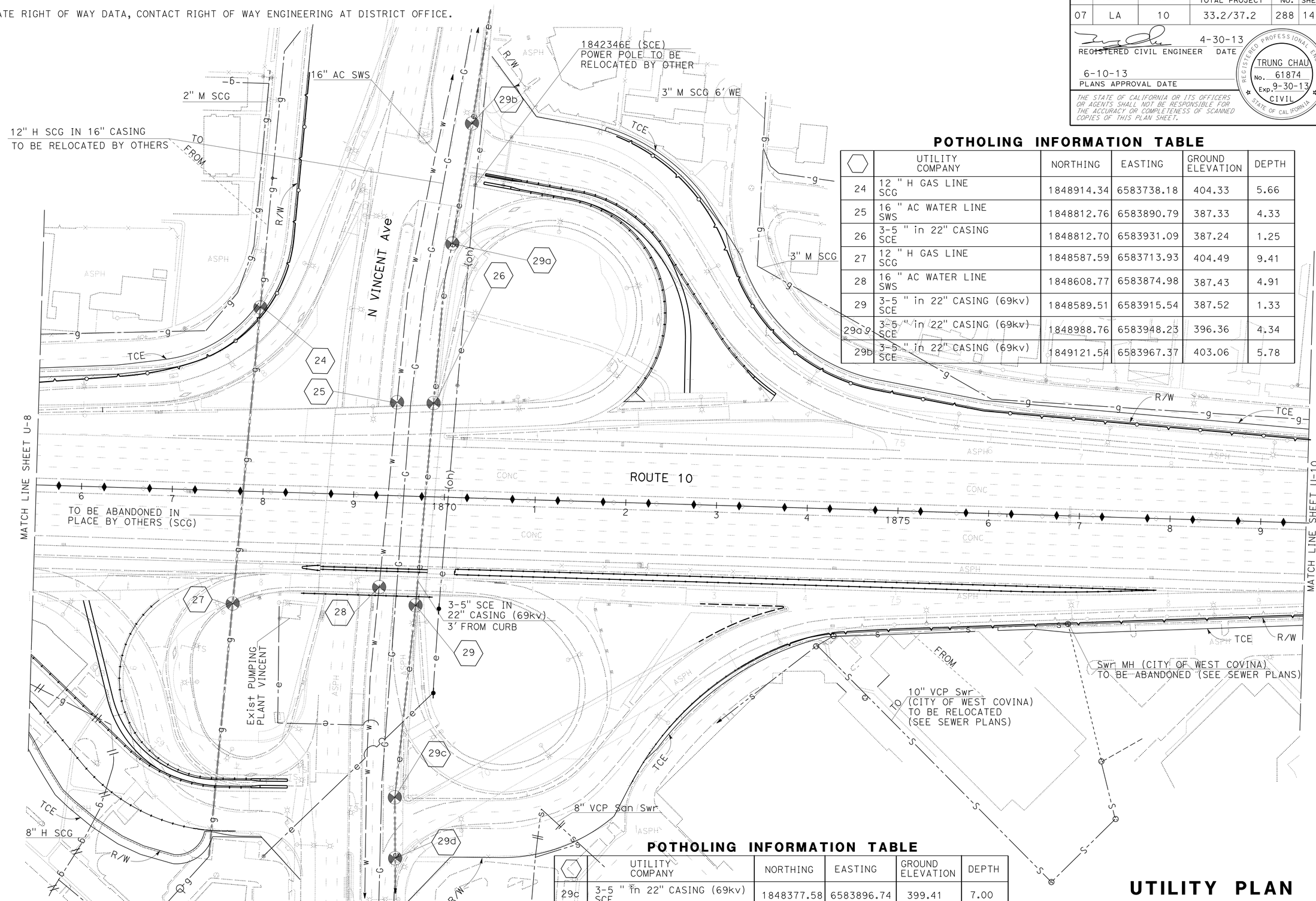

POTHOLING INFORMATION TABLE

⬡	UTILITY COMPANY	NORTHING	EASTING	GROUND ELEVATION	DEPTH
24	12 " H GAS LINE SCG	1848914.34	6583738.18	404.33	5.66
25	16 " AC WATER LINE SWS	1848812.76	6583890.79	387.33	4.33
26	3-5 " in 22" CASING SCE	1848812.70	6583931.09	387.24	1.25
27	12 " H GAS LINE SCG	1848587.59	6583713.93	404.49	9.41
28	16 " AC WATER LINE SWS	1848608.77	6583874.98	387.43	4.91
29	3-5 " in 22" CASING (69kv) SCE	1848589.51	6583915.54	387.52	1.33
29a	3-5 " in 22" CASING (69kv) SCE	1848988.76	6583948.23	396.36	4.34
29b	3-5 " in 22" CASING (69kv) SCE	1849121.54	6583967.37	403.06	5.78

POTHOLING INFORMATION TABLE

⬡	UTILITY COMPANY	NORTHING	EASTING	GROUND ELEVATION	DEPTH
29c	3-5 " in 22" CASING (69kv) SCE	1848377.58	6583896.74	399.41	7.00
29d	3-5 " in 22" CASING (69kv) SCE	1848310.42	6583898.38	400.62	8.05

APPROVED FOR UTILITY INFORMATION ONLY.

UTILITY PLAN

SCALE: 1" = 50'

U-9

STATE OF CALIFORNIA - DEPARTMENT OF TRANSPORTATION
Caltrans OFFICE OF DESIGN A

FUNCTIONAL SUPERVISOR: CELINA AVILES
CALCULATED-DESIGNED BY: DON LUU
CHECKED BY: CUONG PHAM
REVISED BY
DATE REVISED

LAST REVISION 03-24-12
DATE PLOTTED => 12-JUN-2013
TIME PLOTTED => 15:40

Dist	COUNTY	ROUTE	POST MILES TOTAL PROJECT	SHEET No.	TOTAL SHEETS
07	LA	10	33.2/37.2	289	1475

REGISTERED CIVIL ENGINEER 3-02-12 DATE

6-10-13
PLANS APPROVAL DATE

REGISTERED PROFESSIONAL ENGINEER
DON LUU
No. C62286
Exp. 9-30-13
CIVIL
STATE OF CALIFORNIA

THE STATE OF CALIFORNIA OR ITS OFFICERS OR AGENTS SHALL NOT BE RESPONSIBLE FOR THE ACCURACY OR COMPLETENESS OF SCANNED COPIES OF THIS PLAN SHEET.

NOTE:
FOR ACCURATE RIGHT OF WAY DATA, CONTACT RIGHT OF WAY ENGINEERING AT DISTRICT OFFICE.

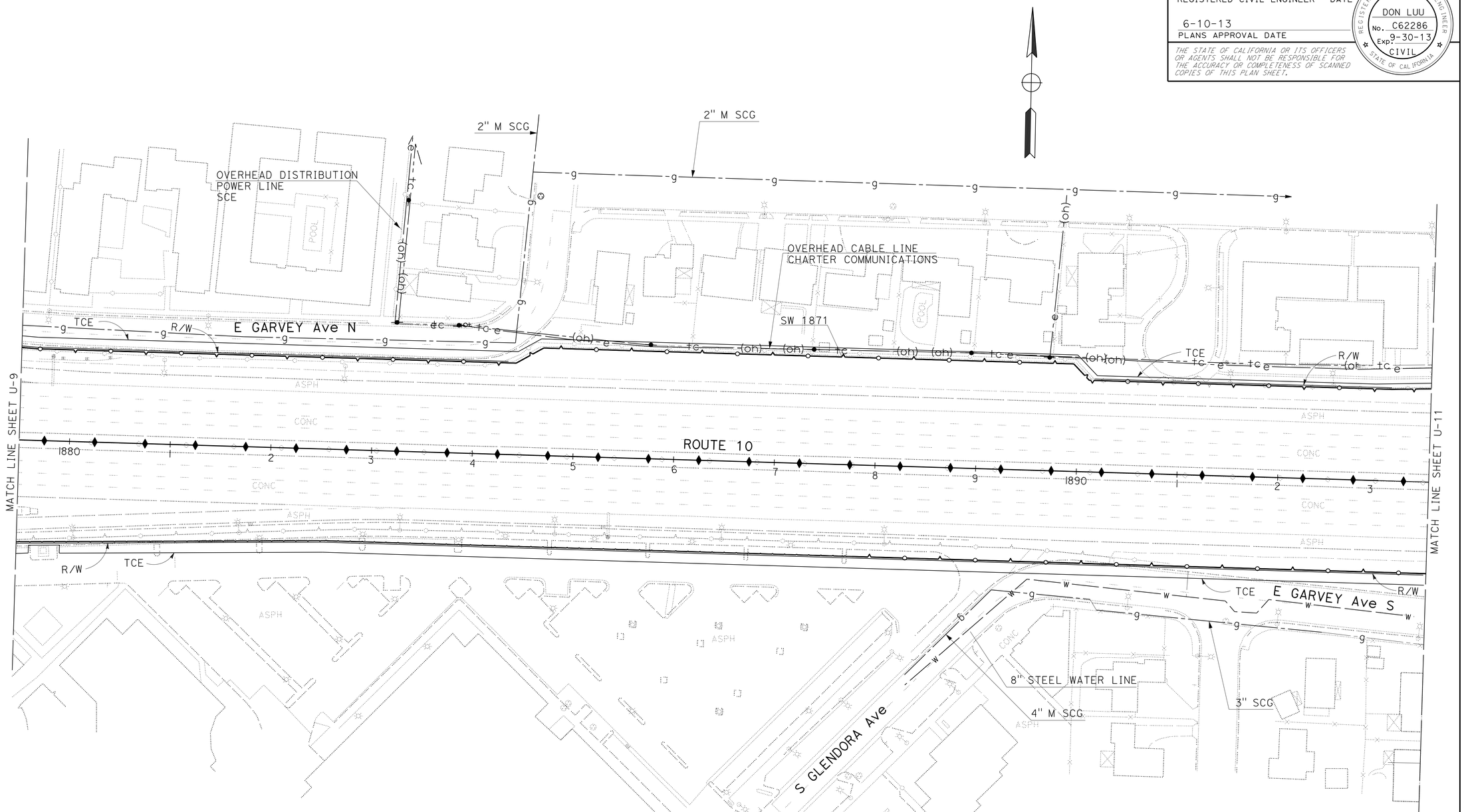

APPROVED FOR UTILITY INFORMATION ONLY.

UTILITY PLAN

SCALE: 1" = 50'

U-10

STATE OF CALIFORNIA - DEPARTMENT OF TRANSPORTATION
Caltrans® OFFICE OF DESIGN A

FUNCTIONAL SUPERVISOR: CELINA AVILES
CALCULATED-DESIGNED BY: DON LUU
CHECKED BY: CUONG PHAM
REVISED BY
DATE REVISED

LAST REVISION 03-24-12
DATE PLOTTED => 12-JUN-2013
TIME PLOTTED => 15:40

Dist	COUNTY	ROUTE	POST MILES TOTAL PROJECT	SHEET No.	TOTAL SHEETS
07	LA	10	33.2/37.2	290	1475

REGISTERED CIVIL ENGINEER 3-02-12 DATE

6-10-13
PLANS APPROVAL DATE

REGISTERED PROFESSIONAL ENGINEER DON LUU No. C62286 Exp. 9-30-13 CIVIL STATE OF CALIFORNIA

THE STATE OF CALIFORNIA OR ITS OFFICERS OR AGENTS SHALL NOT BE RESPONSIBLE FOR THE ACCURACY OR COMPLETENESS OF SCANNED COPIES OF THIS PLAN SHEET.

NOTE:
FOR ACCURATE RIGHT OF WAY DATA, CONTACT RIGHT OF WAY ENGINEERING AT DISTRICT OFFICE.

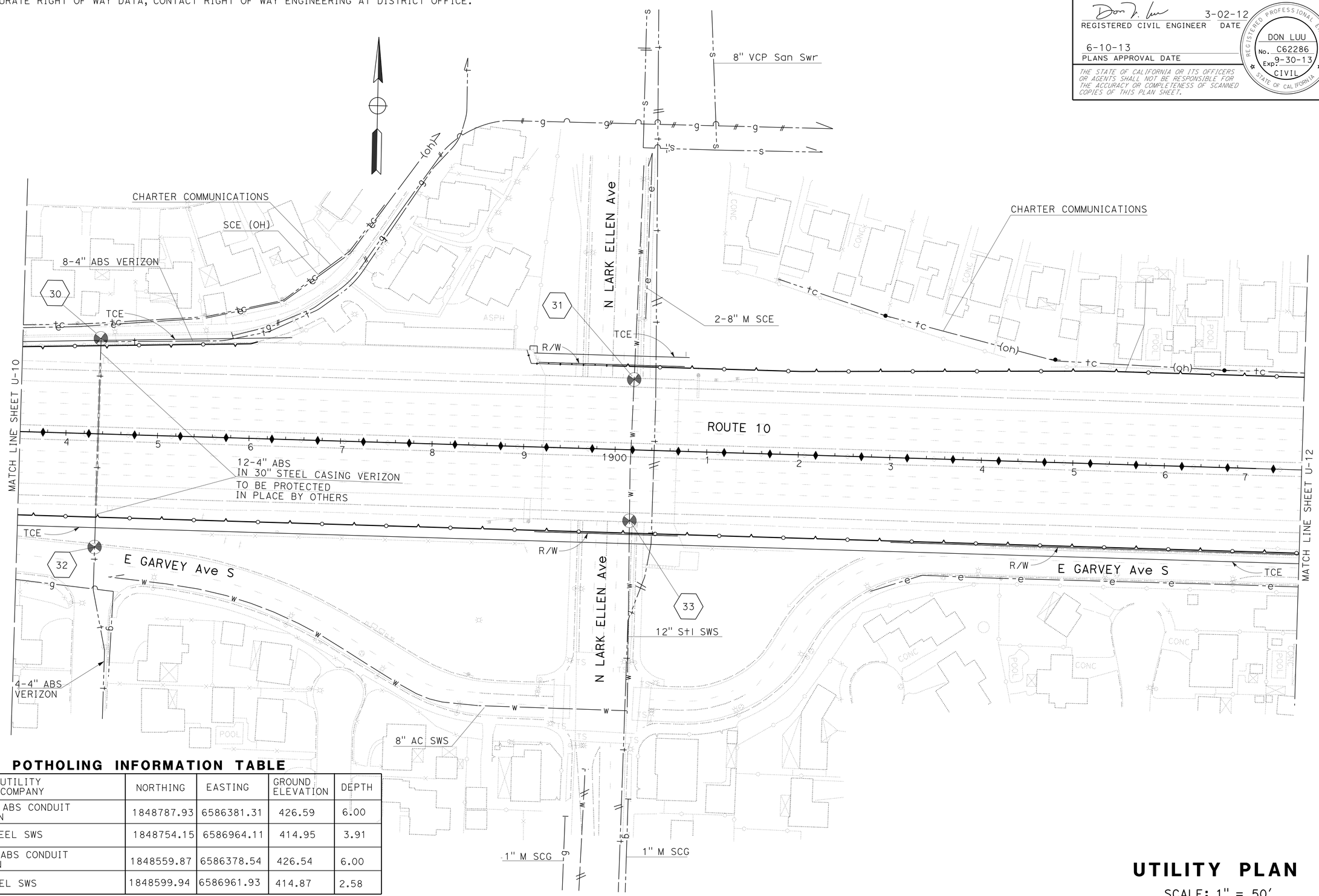

POTHOLING INFORMATION TABLE

⬡	UTILITY COMPANY	NORTHING	EASTING	GROUND ELEVATION	DEPTH
30	4 - 4" ABS CONDUIT VERIZON	1848787.93	6586381.31	426.59	6.00
31	12" STEEL SWS	1848754.15	6586964.11	414.95	3.91
32	4 - 4" ABS CONDUIT VERIZON	1848559.87	6586378.54	426.54	6.00
33	12" STEEL SWS	1848599.94	6586961.93	414.87	2.58

APPROVED FOR UTILITY INFORMATION ONLY.

UTILITY PLAN

SCALE: 1" = 50'

U-11

STATE OF CALIFORNIA - DEPARTMENT OF TRANSPORTATION
Caltrans® OFFICE OF DESIGN A

FUNCTIONAL SUPERVISOR: CELINA AVILES
CALCULATED-DESIGNED BY: DON LUU
CHECKED BY: CUONG PHAM
REVISED BY
DATE REVISED

LAST REVISION 03-24-12
DATE PLOTTED => 12-JUN-2013
TIME PLOTTED => 15:40

Dist	COUNTY	ROUTE	POST MILES TOTAL PROJECT	SHEET No.	TOTAL SHEETS
07	LA	10	33.2/37.2	291	1475

REGISTERED CIVIL ENGINEER DATE 3-02-12

6-10-13
PLANS APPROVAL DATE

REGISTERED PROFESSIONAL ENGINEER
DON LUU
No. C62286
Exp. 9-30-13
CIVIL
STATE OF CALIFORNIA

THE STATE OF CALIFORNIA OR ITS OFFICERS OR AGENTS SHALL NOT BE RESPONSIBLE FOR THE ACCURACY OR COMPLETENESS OF SCANNED COPIES OF THIS PLAN SHEET.

NOTE:
FOR ACCURATE RIGHT OF WAY DATA, CONTACT RIGHT OF WAY ENGINEERING AT DISTRICT OFFICE.

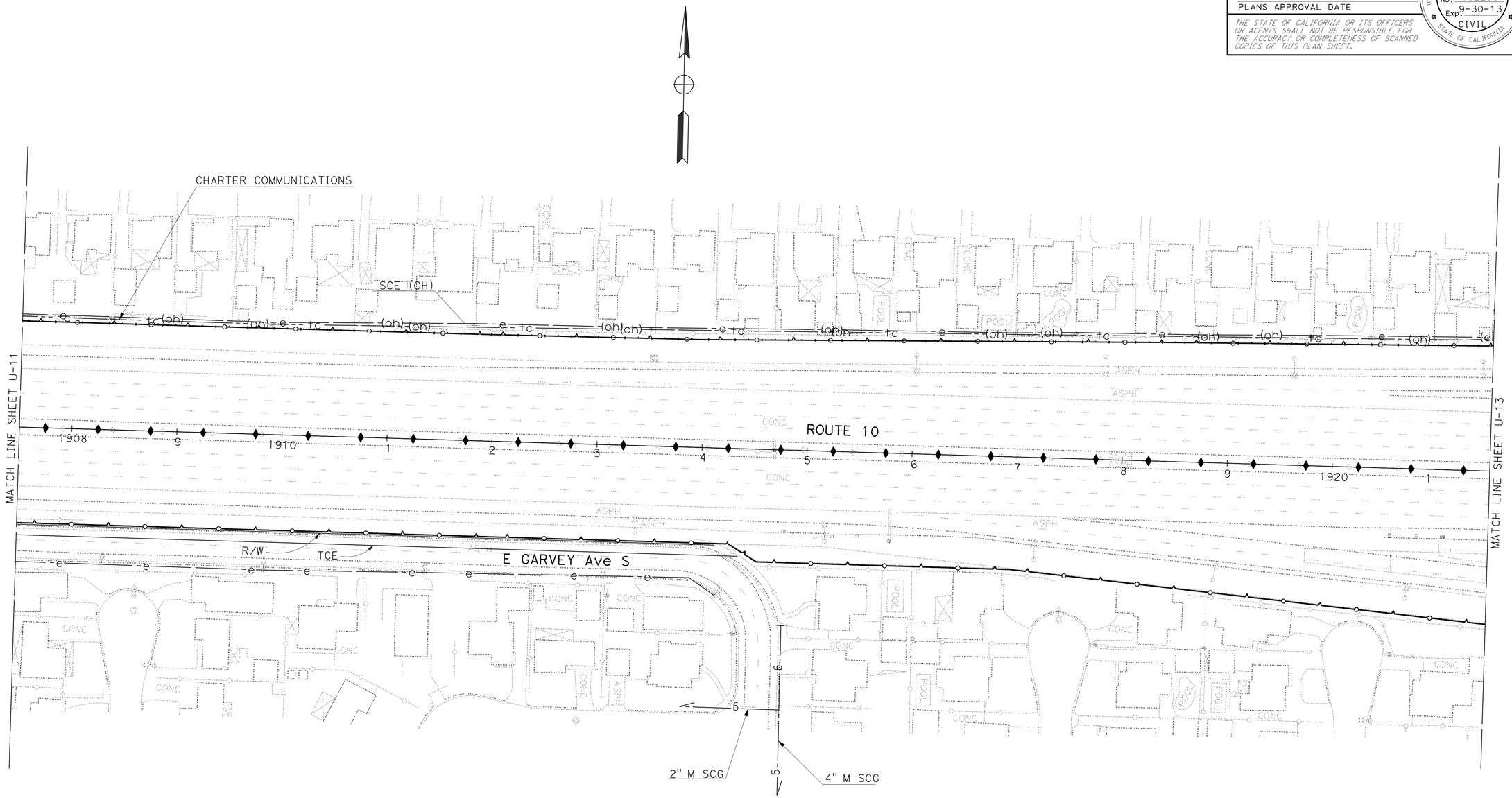

APPROVED FOR UTILITY INFORMATION ONLY.

UTILITY PLAN

SCALE: 1" = 50'

U-12

STATE OF CALIFORNIA - DEPARTMENT OF TRANSPORTATION
Caltrans OFFICE OF DESIGN A

FUNCTIONAL SUPERVISOR: CELINA AVILES
CALCULATED-DESIGNED BY: DON LUU
CHECKED BY: CUONG PHAM
REVISED BY
DATE REVISED

LAST REVISION 03-24-12
DATE PLOTTED => 12-JUN-2013
TIME PLOTTED => 14:51

BORDER LAST REVISED 7/2/2010
USERNAME => s135318
DGN FILE => 71170uka012.dgn
RELATIVE BORDER SCALE IS IN INCHES 0 1 2 3
UNIT 1843
PROJECT NUMBER & PHASE 07000000851

Dist	COUNTY	ROUTE	POST MILES TOTAL PROJECT	SHEET No.	TOTAL SHEETS
07	LA	10	33.2/37.2	292	1475

REGISTERED CIVIL ENGINEER 4-30-13 DATE

6-10-13
PLANS APPROVAL DATE

REGISTERED PROFESSIONAL ENGINEER TRUNG CHAU No. 61874 Exp. 9-30-13 CIVIL STATE OF CALIFORNIA

THE STATE OF CALIFORNIA OR ITS OFFICERS OR AGENTS SHALL NOT BE RESPONSIBLE FOR THE ACCURACY OR COMPLETENESS OF SCANNED COPIES OF THIS PLAN SHEET.

NOTE:
FOR ACCURATE RIGHT OF WAY DATA, CONTACT RIGHT OF WAY ENGINEERING AT DISTRICT OFFICE.

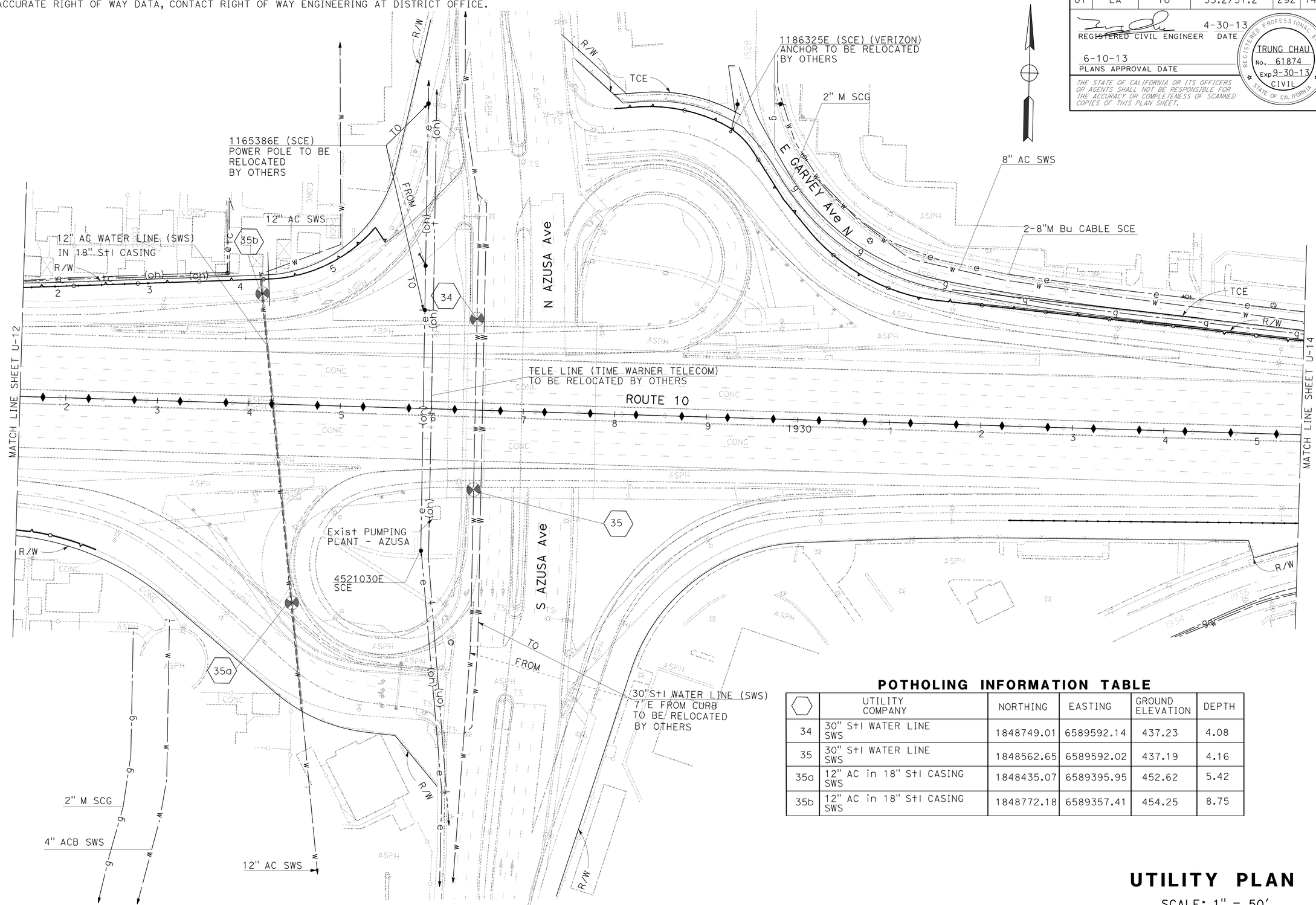

POTHOLING INFORMATION TABLE

⬡	UTILITY COMPANY	NORTHING	EASTING	GROUND ELEVATION	DEPTH
34	30" STI WATER LINE SWS	1848749.01	6589592.14	437.23	4.08
35	30" STI WATER LINE SWS	1848562.65	6589592.02	437.19	4.16
35a	12" AC in 18" STI CASING SWS	1848435.07	6589395.95	452.62	5.42
35b	12" AC in 18" STI CASING SWS	1848772.18	6589357.41	454.25	8.75

APPROVED FOR UTILITY INFORMATION ONLY.

UTILITY PLAN

SCALE: 1" = 50'

U-13

STATE OF CALIFORNIA - DEPARTMENT OF TRANSPORTATION
Caltrans® OFFICE OF DESIGN A

FUNCTIONAL SUPERVISOR: CELINA AVILES
CALCULATED-DESIGNED BY: DON LUU
CHECKED BY: CUONG PHAM
REVISED BY: T. CHAU
DATE REVISED: 5/15/13

LAST REVISION 03-22-12
DATE PLOTTED => 12-JUN-2013
TIME PLOTTED => 14:51

Dist	COUNTY	ROUTE	POST MILES TOTAL PROJECT	SHEET No.	TOTAL SHEETS
07	LA	10	33.2/37.2	293	1475

REGISTERED CIVIL ENGINEER 3-02-12 DATE

6-10-13
PLANS APPROVAL DATE

REGISTERED PROFESSIONAL ENGINEER DON LUU No. C62286 Exp 9-30-13 CIVIL STATE OF CALIFORNIA

THE STATE OF CALIFORNIA OR ITS OFFICERS OR AGENTS SHALL NOT BE RESPONSIBLE FOR THE ACCURACY OR COMPLETENESS OF SCANNED COPIES OF THIS PLAN SHEET.

NOTE:
FOR ACCURATE RIGHT OF WAY DATA, CONTACT RIGHT OF WAY ENGINEERING AT DISTRICT OFFICE.

POTHOLING INFORMATION TABLE

	UTILITY COMPANY	NORTHING	EASTING	GROUND ELEVATION	DEPTH
36	6" M in 8" CASING SOUTHERN CALIFORNIA GAS	1848734.25	6590721.52	462.50	3.66
37	6" M in 8" CASING SOUTHERN CALIFORNIA GAS	1848537.64	6590715.85	460.53	4.00

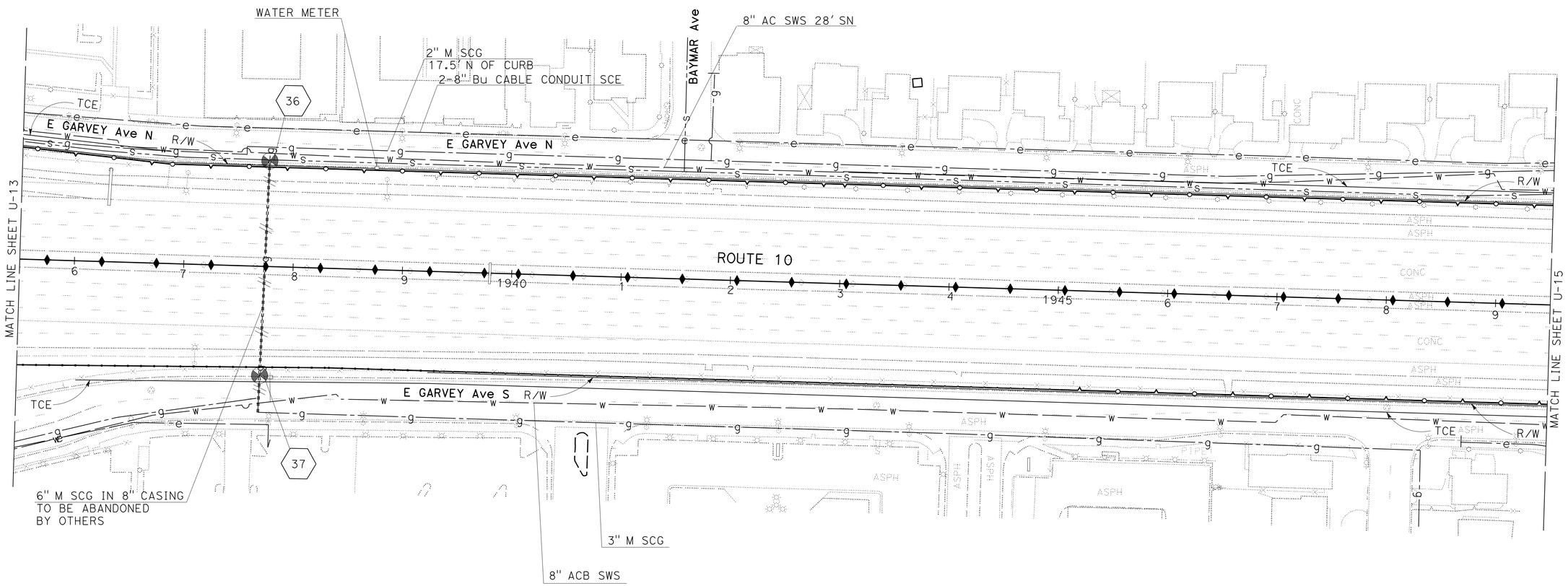

APPROVED FOR UTILITY INFORMATION ONLY.

UTILITY PLAN

SCALE: 1" = 50'

U-14

STATE OF CALIFORNIA - DEPARTMENT OF TRANSPORTATION
Caltrans OFFICE OF DESIGN A

FUNCTIONAL SUPERVISOR: CELINA AVILES
CALCULATED-DESIGNED BY: DON LUU
CHECKED BY: CUONG PHAM
REVISED BY
DATE REVISED

LAST REVISION 03-24-12
DATE PLOTTED => 12-JUN-2013
TIME PLOTTED => 14:51

Dist	COUNTY	ROUTE	POST MILES TOTAL PROJECT	SHEET No.	TOTAL SHEETS
07	LA	10	33.2/37.2	294	1475

REGISTERED CIVIL ENGINEER 3-02-12 DATE

6-10-13
PLANS APPROVAL DATE

REGISTERED PROFESSIONAL ENGINEER
DON LUU
No. C62286
Exp. 9-30-13
CIVIL
STATE OF CALIFORNIA

THE STATE OF CALIFORNIA OR ITS OFFICERS OR AGENTS SHALL NOT BE RESPONSIBLE FOR THE ACCURACY OR COMPLETENESS OF SCANNED COPIES OF THIS PLAN SHEET.

NOTE:
FOR COMPLETE RIGHT OF WAY DATA, CONTACT RIGHT OF WAY ENGINEERING AT DISTRICT OFFICE.

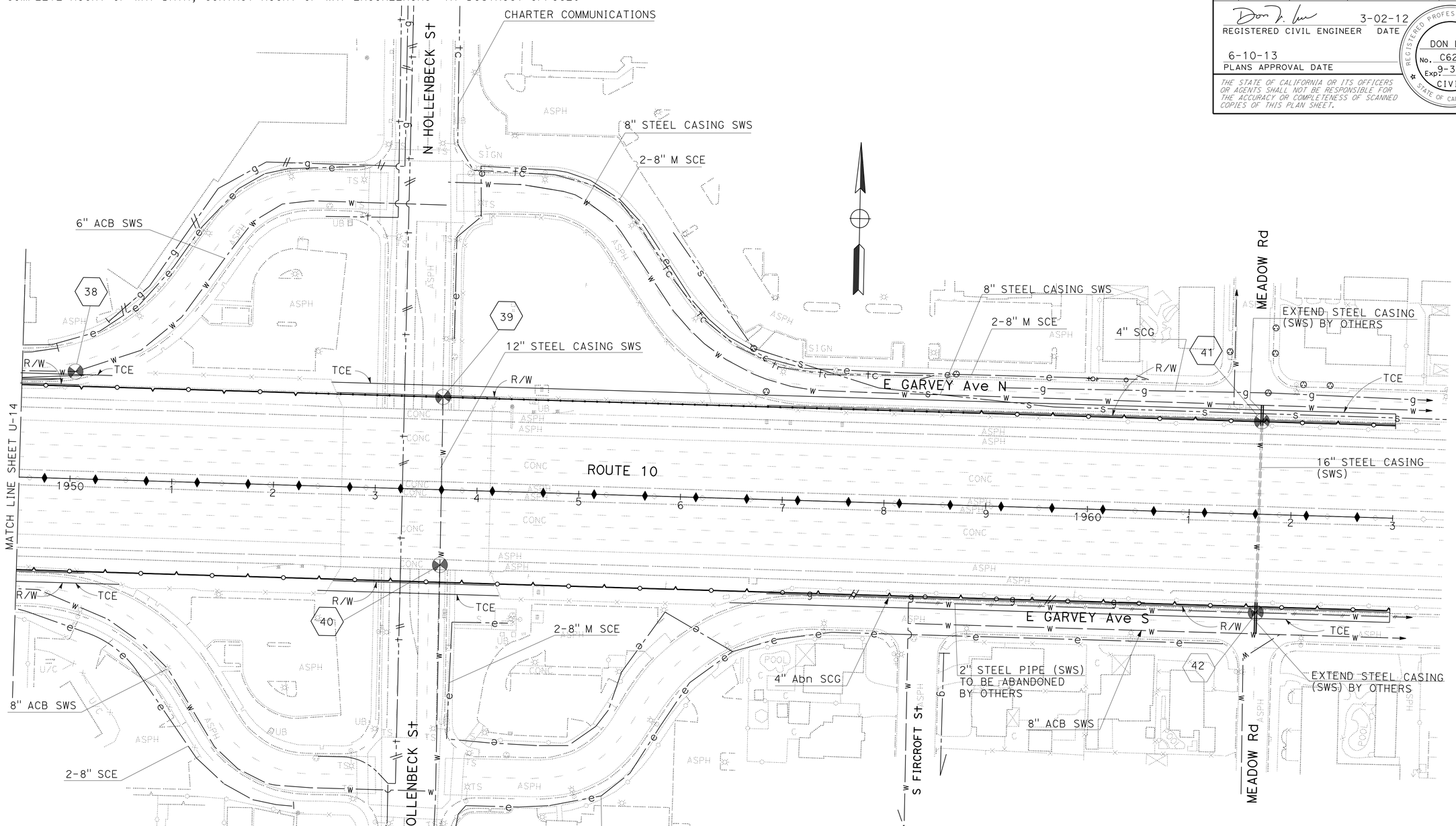

POTHOLING INFORMATION TABLE

⬡	UTILITY COMPANY	NORTHING	EASTING	GROUND ELEVATION	DEPTH
38	6" ACB SUBURBAN WATER SYSTEM	1848730.15	6591947.63	471.49	4.33
39	12" STEEL CASING SUBURBAN WATER SYSTEM	1848711.99	6592309.47	457.12	5.66
40	12" STEEL CASING SUBURBAN WATER SYSTEM	1848546.79	6592309.53	456.69	2.75
41	16" CL & L in 24" STEEL CASING SWS	1848703.74	6593114.21	483.83	6.17
42	16" CL & L in 24" STEEL CASING SWS	1848515.50	6593111.79	479.30	3.58

APPROVED FOR UTILITY INFORMATION ONLY.

UTILITY PLAN

SCALE: 1" = 50'

U-15

STATE OF CALIFORNIA - DEPARTMENT OF TRANSPORTATION
Caltrans® OFFICE OF DESIGN A

FUNCTIONAL SUPERVISOR: CELINA AVILES
CALCULATED-DESIGNED BY: DON LUU
CHECKED BY: CUONG PHAM
REVISED BY
DATE REVISED

LAST REVISION 03-24-12
DATE PLOTTED => 12-JUN-2013
TIME PLOTTED => 14:51

Dist	COUNTY	ROUTE	POST MILES TOTAL PROJECT	SHEET No.	TOTAL SHEETS
07	LA	10	33.2/37.2	295	1475

REGISTERED CIVIL ENGINEER 3-02-12 DATE

6-10-13
PLANS APPROVAL DATE

REGISTERED PROFESSIONAL ENGINEER
DON LUU
No. C62286
Exp. 9-30-13
CIVIL
STATE OF CALIFORNIA

THE STATE OF CALIFORNIA OR ITS OFFICERS OR AGENTS SHALL NOT BE RESPONSIBLE FOR THE ACCURACY OR COMPLETENESS OF SCANNED COPIES OF THIS PLAN SHEET.

NOTE:

FOR ACCURATE RIGHT OF WAY DATA, CONTACT RIGHT OF WAY ENGINEERING AT DISTRICT OFFICE.

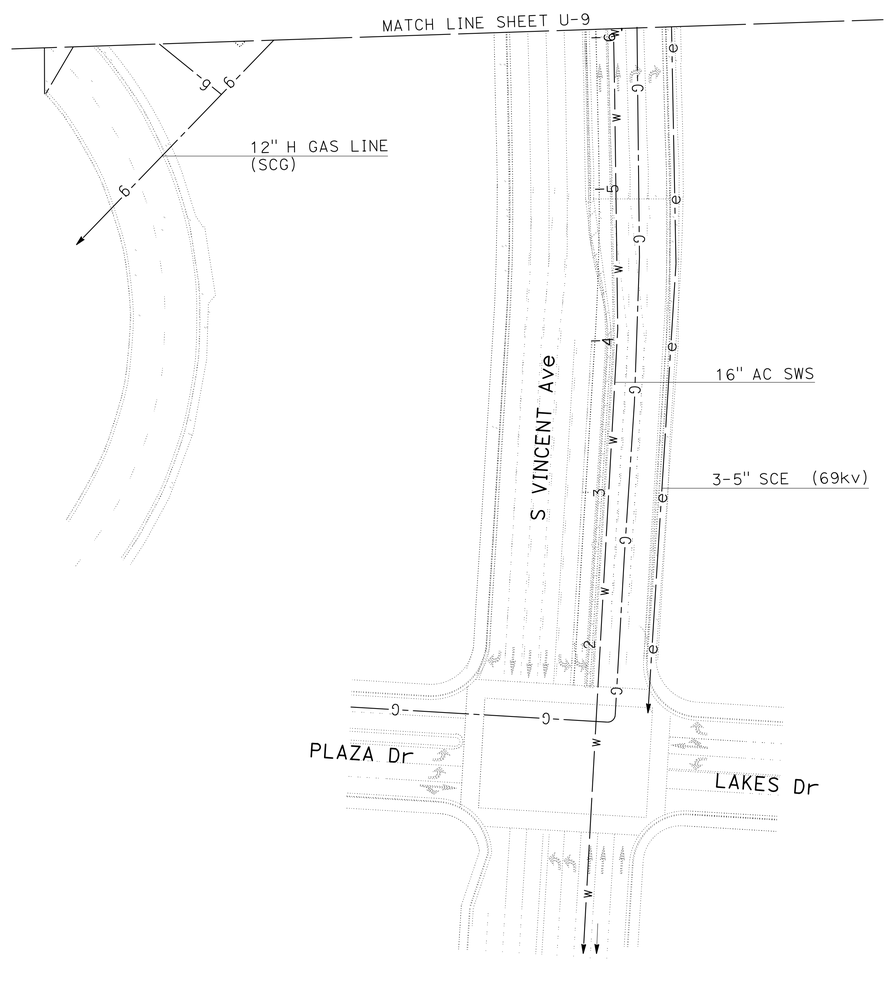

APPROVED FOR UTILITY INFORMATION ONLY.

UTILITY PLAN

SCALE: 1" = 50'

U-16

REVISED BY	DATE REVISED
DON LUU	CUONG PHAM

CALCULATED-DESIGNED BY	CHECKED BY

FUNCTIONAL SUPERVISOR: CELINA AVILES

STATE OF CALIFORNIA - DEPARTMENT OF TRANSPORTATION
Caltrans® OFFICE OF DESIGN A

LAST REVISION 03-24-12 | DATE PLOTTED => 12-JUN-2013 | TIME PLOTTED => 14:51

Dist	COUNTY	ROUTE	POST MILES TOTAL PROJECT	SHEET No.	TOTAL SHEETS
07	LA	10	33.2/37.2	296	1475

REGISTERED CIVIL ENGINEER 4-17-12 DATE

6-10-13
PLANS APPROVAL DATE

REGISTERED PROFESSIONAL ENGINEER MOHAMED GHANNOUM No. C72051 Exp. 6/30/14 CIVIL STATE OF CALIFORNIA

THE STATE OF CALIFORNIA OR ITS OFFICERS OR AGENTS SHALL NOT BE RESPONSIBLE FOR THE ACCURACY OR COMPLETENESS OF SCANNED COPIES OF THIS PLAN SHEET.

STATIONARY MOUNTED CONSTRUCTION AREA SIGNS

SIGN No. (X)	SIGN CODE FEDERAL	SIGN CODE CALIFORNIA	PANEL SIZE	SIGN MESSAGE	NUMBER OF POSTS AND SIZE	NUMBER OF SIGNS STAGE 1
A	W20-1		60" x 60"	ROAD (STREET) WORK	2 - 6" x 6"	1
B	W20-1		36" x 36"	ROAD (STREET) WORK	1 - 6" x 6"	13
C	G20-2		36" x 18"	END ROAD WORK	1 - 4" x 6"	11
D	G20-1		36" x 18"	ROAD WORK NEXT 4 MILES	1 - 6" x 6"	1
E	TYPE 2		132" x 84"	CONSTRUCTION PROJECT FUNDING IDENTIFICATION	2 - 6" x 8"	1
F		C40	72" x 36"	TRAFFIC FINES DOUBLED IN CONSTRUCTION ZONE	2 - 6" x 6"	1

NOTES:

1. SIGN LOCATIONS SHOWN ARE APPROXIMATE. EXACT LOCATIONS WILL BE DETERMINED BY THE ENGINEER.
2. SIGNS SHALL BE REMOVED WHEN NO LONGER NEEDED.
3. FOR ADDITIONAL CONSTRUCTION AREA SIGNS, SEE STAGE CONSTRUCTION AND TRAFFIC HANDLING PLANS.

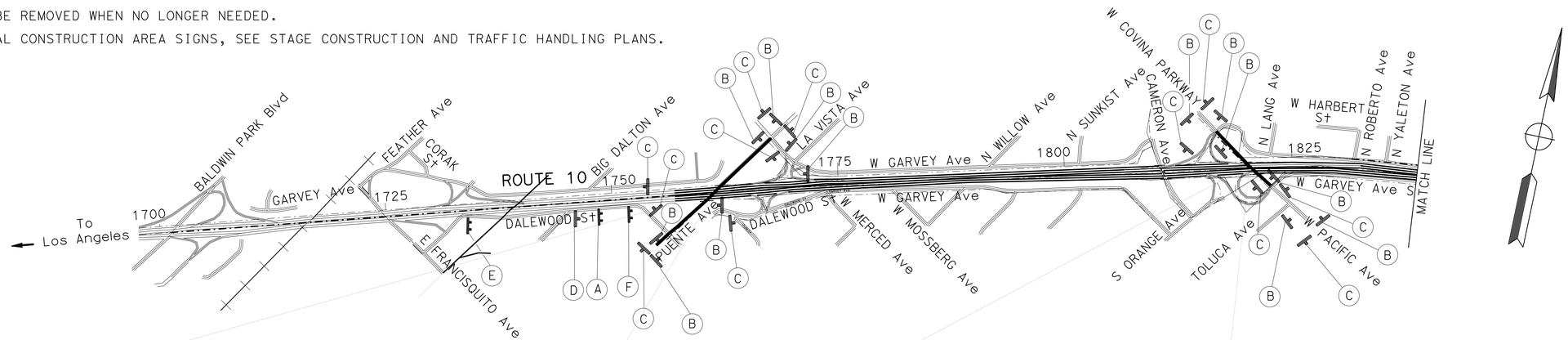

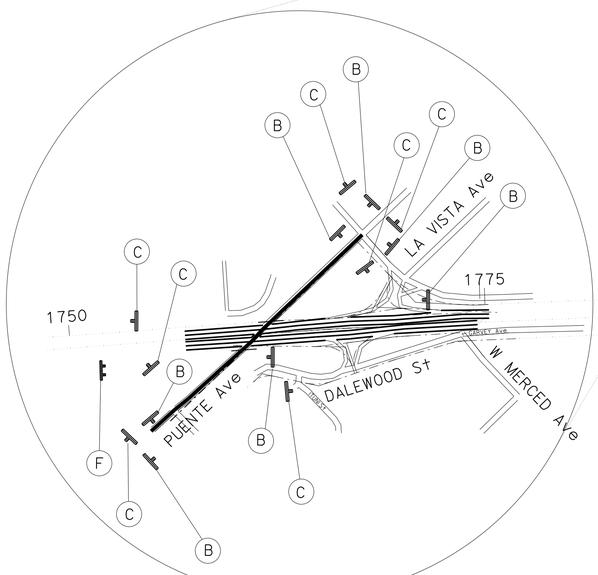

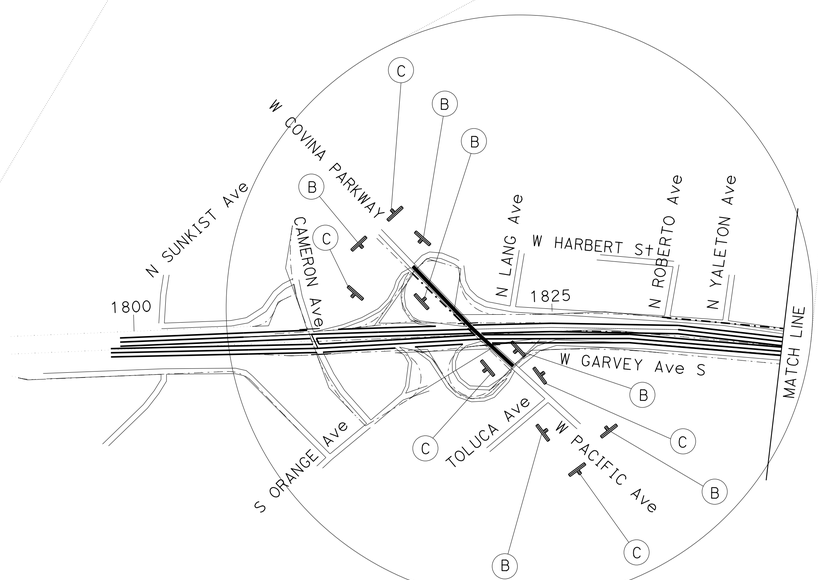

APPROVED FOR CONSTRUCTION AREA SIGN WORK ONLY

CONSTRUCTION AREA SIGNS
STAGE 1
NO SCALE

CS-1

STATE OF CALIFORNIA - DEPARTMENT OF TRANSPORTATION
Caltrans OFFICE OF DESIGN D

FUNCTIONAL SUPERVISOR: NADER GOBRAN
CALCULATED-DESIGNED BY: SUSHIL CHAUDHARI
CHECKED BY: MOHAMED GHANNOUM
REVISED BY
DATE REVISED

LAST REVISION 00-00-00
DATE PLOTTED => 12-JUN-2013
TIME PLOTTED => 14:51

Dist	COUNTY	ROUTE	POST MILES TOTAL PROJECT	SHEET No.	TOTAL SHEETS
07	LA	10	33.2/37.2	297	1475

REGISTERED CIVIL ENGINEER 4-17-12 DATE

6-10-13
PLANS APPROVAL DATE

REGISTERED PROFESSIONAL ENGINEER MOHAMED GHANNOUM No. C72051 Exp. 6/30/14 CIVIL STATE OF CALIFORNIA

THE STATE OF CALIFORNIA OR ITS OFFICERS OR AGENTS SHALL NOT BE RESPONSIBLE FOR THE ACCURACY OR COMPLETENESS OF SCANNED COPIES OF THIS PLAN SHEET.

STATIONARY MOUNTED CONSTRUCTION AREA SIGNS

SIGN No. (X)	SIGN CODE FEDERAL	SIGN CODE CALIFORNIA	PANEL SIZE	SIGN MESSAGE	NUMBER OF POSTS AND SIZE	NUMBER OF SIGNS STAGE 1
A	W20-1		60" x 60"	ROAD (STREET) WORK	2 - 6" x 6"	1
B	W20-1		36" x 36"	ROAD (STREET) WORK	1 - 6" x 6"	7
C	G20-2		36" x 18"	END ROAD WORK	1 - 4" x 6"	9
D	G20-1		36" x 18"	ROAD WORK NEXT 4 MILES	1 - 6" x 6"	1
E	TYPE 2		132" x 84"	CONSTRUCTION PROJECT FUNDING IDENTIFICATION	2 - 6" x 8"	1
F		C40	72" x 36"	TRAFFIC FINES DOUBLED IN CONSTRUCTION ZONE	2 - 6" x 6"	1

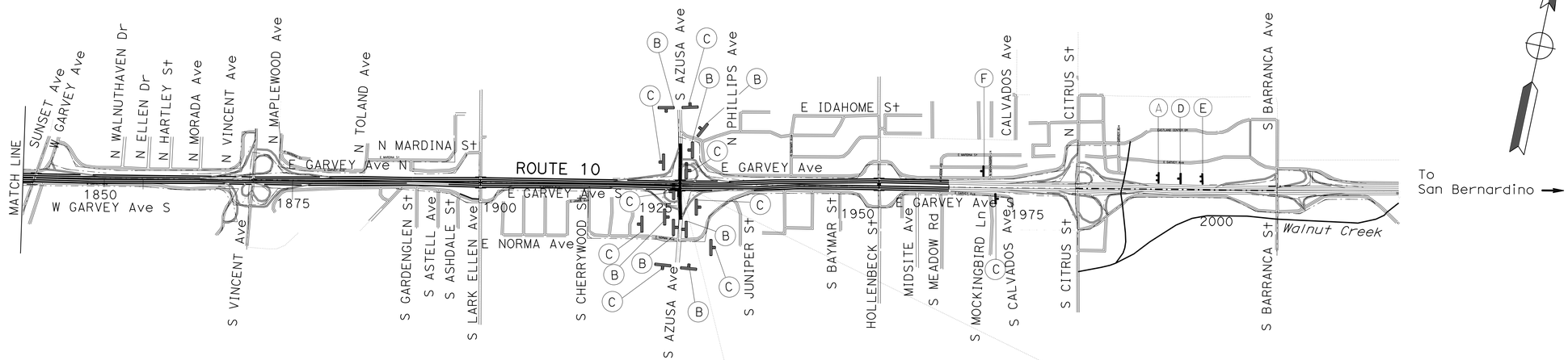

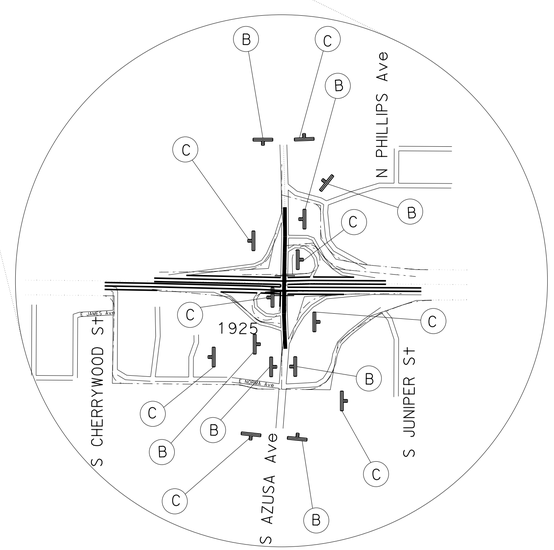

APPROVED FOR CONSTRUCTION AREA SIGN WORK ONLY

CONSTRUCTION AREA SIGNS
STAGE 1
NO SCALE

CS-2

STATE OF CALIFORNIA - DEPARTMENT OF TRANSPORTATION
Caltrans® OFFICE OF DESIGN D

FUNCTIONAL SUPERVISOR: NADER GOBRAN
CALCULATED-DESIGNED BY: SUSHIL CHAUDHARI
CHECKED BY: MOHAMED GHANNOUM
REVISED BY / DATE REVISED

LAST REVISION 00-00-00
DATE PLOTTED => 12-JUN-2013
TIME PLOTTED => 14:51

Dist	COUNTY	ROUTE	POST MILES TOTAL PROJECT	SHEET No.	TOTAL SHEETS
07	LA	10	33.2/37.2	298	1475

REGISTERED CIVIL ENGINEER 4-17-12 DATE

6-10-13
PLANS APPROVAL DATE

REGISTERED PROFESSIONAL ENGINEER MOHAMED GHANNOUM No. C72051 Exp. 6/30/14 CIVIL STATE OF CALIFORNIA

THE STATE OF CALIFORNIA OR ITS OFFICERS OR AGENTS SHALL NOT BE RESPONSIBLE FOR THE ACCURACY OR COMPLETENESS OF SCANNED COPIES OF THIS PLAN SHEET.

STATIONARY MOUNTED CONSTRUCTION AREA SIGNS

SIGN No. (X)	SIGN CODE FEDERAL	SIGN CODE CALIFORNIA	PANEL SIZE	SIGN MESSAGE	NUMBER OF POSTS AND SIZE	NUMBER OF SIGNS STAGE 2
A	W20-1		60" x 60"	ROAD (STREET) WORK	2 - 6" x 6"	1
B	W20-1		36" x 36"	ROAD (STREET) WORK	1 - 6" x 6"	40
C	G20-2		36" x 18"	END ROAD WORK	1 - 4" x 6"	10
D	G20-1		36" x 18"	ROAD WORK NEXT 4 MILES	1 - 6" x 6"	1
E	TYPE 2		132" x 84"	CONSTRUCTION PROJECT FUNDING IDENTIFICATION	2 - 6" x 8"	1
F		C40	72" x 36"	TRAFFIC FINES DOUBLED IN CONSTRUCTION ZONE	2 - 6" x 6"	1

✳ CONSTRUCTION AREA SIGN ON TYPE III BARRICADE

NOTES:

1. SIGN LOCATIONS SHOWN ARE APPROXIMATE. EXACT LOCATIONS WILL BE DETERMINED BY THE ENGINEER.
2. SIGNS SHALL BE REMOVED WHEN NO LONGER NEEDED.
3. FOR ADDITIONAL CONSTRUCTION AREA SIGNS, SEE STAGE CONSTRUCTION AND TRAFFIC HANDLING PLANS.

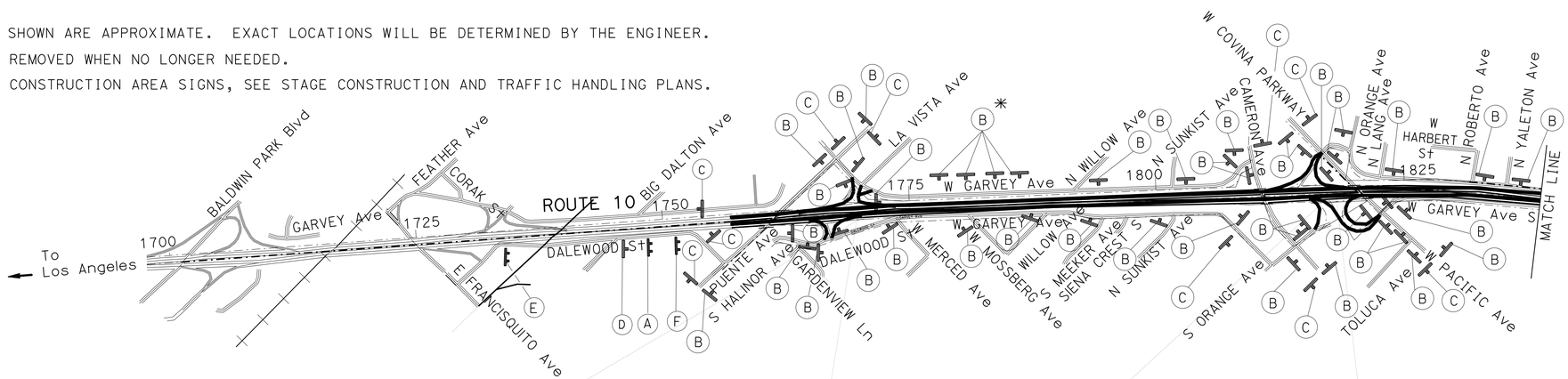

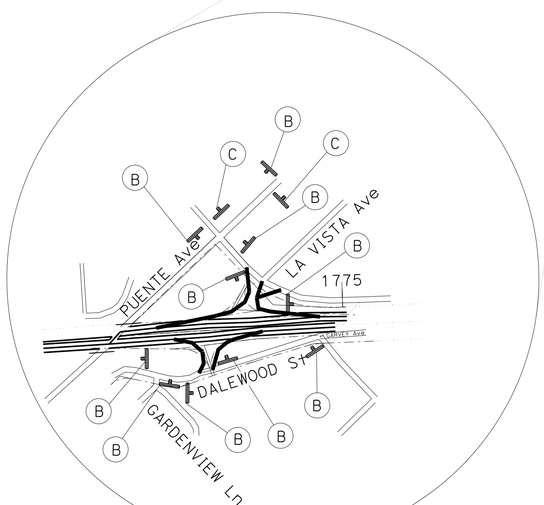

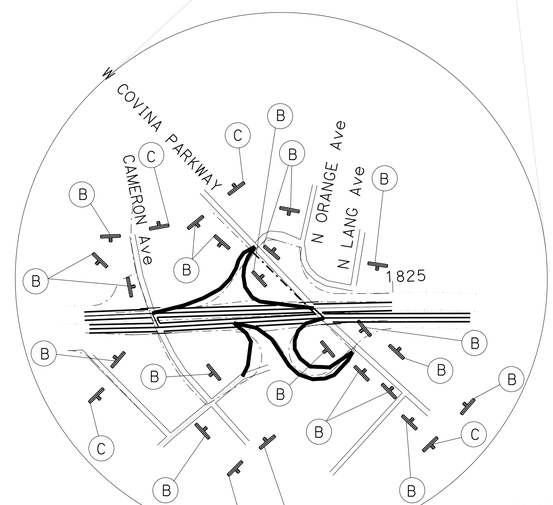

APPROVED FOR CONSTRUCTION AREA SIGN WORK ONLY

CONSTRUCTION AREA SIGNS
STAGE 2
NO SCALE

CS-3

STATE OF CALIFORNIA - DEPARTMENT OF TRANSPORTATION
Caltrans OFFICE OF DESIGN D

FUNCTIONAL SUPERVISOR: NADER GOBRAN
CALCULATED-DESIGNED BY: SUSHIL CHAUDHARI
CHECKED BY: MOHAMED GHANNOUM
REVISED BY
DATE REVISED

LAST REVISION 00-00-00
DATE PLOTTED => 12-JUN-2013
TIME PLOTTED => 14:51

Dist	COUNTY	ROUTE	POST MILES TOTAL PROJECT	SHEET No.	TOTAL SHEETS
07	LA	10	33.2/37.2	299	1475

REGISTERED CIVIL ENGINEER 4-17-12 DATE

6-10-13
PLANS APPROVAL DATE

REGISTERED PROFESSIONAL ENGINEER MOHAMED GHANNOUM No. C72051 Exp. 6/30/14 CIVIL STATE OF CALIFORNIA

THE STATE OF CALIFORNIA OR ITS OFFICERS OR AGENTS SHALL NOT BE RESPONSIBLE FOR THE ACCURACY OR COMPLETENESS OF SCANNED COPIES OF THIS PLAN SHEET.

STATIONARY MOUNTED CONSTRUCTION AREA SIGNS

SIGN No. (X)	SIGN CODE FEDERAL	SIGN CODE CALIFORNIA	PANEL SIZE	SIGN MESSAGE	NUMBER OF POSTS AND SIZE	NUMBER OF SIGNS STAGE 2
A	W20-1		60" x 60"	ROAD (STREET) WORK	2 - 6" x 6"	1
B	W20-1		36" x 36"	ROAD (STREET) WORK	1 - 6" x 6"	62
C	G20-2		36" x 18"	END ROAD WORK	1 - 4" x 6"	20
D	G20-1		36" x 18"	ROAD WORK NEXT 4 MILES	1 - 6" x 6"	1
E	TYPE 2		132" x 84"	CONSTRUCTION PROJECT FUNDING IDENTIFICATION	2 - 6" x 6"	1
F		C40	72" x 36"	TRAFFIC FINES DOUBLED IN CONSTRUCTION ZONE	2 - 6" x 6"	1

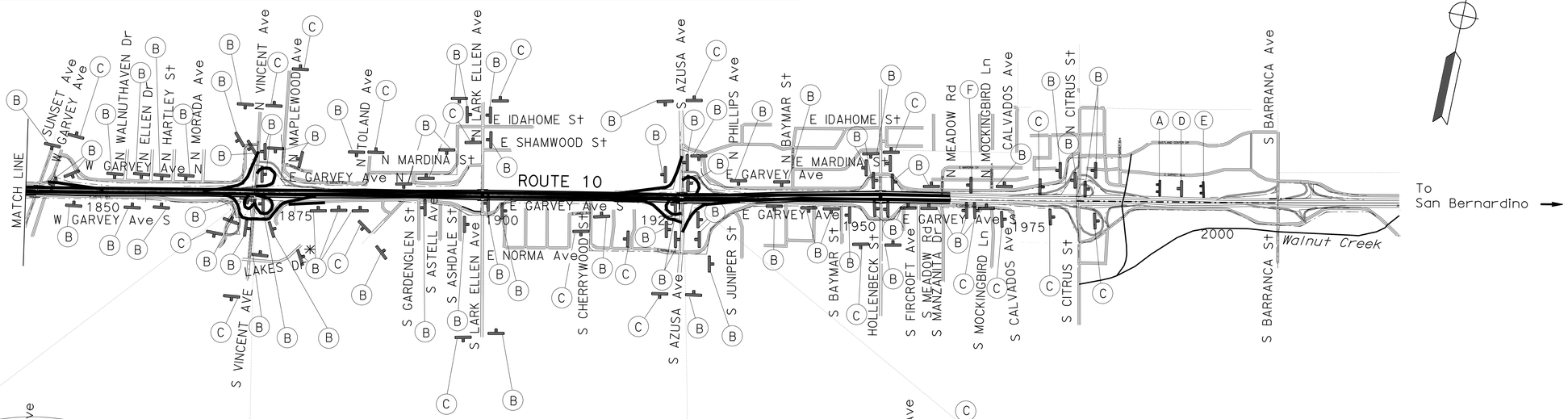

APPROVED FOR CONSTRUCTION AREA SIGN WORK ONLY

CONSTRUCTION AREA SIGNS
STAGE 2
NO SCALE

CS-4

STATE OF CALIFORNIA - DEPARTMENT OF TRANSPORTATION
Caltrans® OFFICE OF DESIGN D

FUNCTIONAL SUPERVISOR: NADER GOBRAN
CALCULATED-DESIGNED BY: SUSHIL CHAUDHARI
CHECKED BY: MOHAMED GHANNOUM
REVISED BY
DATE REVISED

LAST REVISION 00-00-00
DATE PLOTTED => 12-JUN-2013
TIME PLOTTED => 14:51

Dist	COUNTY	ROUTE	POST MILES TOTAL PROJECT	SHEET No.	TOTAL SHEETS
07	LA	10	33.2/37.2	300	1475

REGISTERED CIVIL ENGINEER 4-17-12 DATE

6-10-13
PLANS APPROVAL DATE

REGISTERED PROFESSIONAL ENGINEER MOHAMED GHANNOUM No. C72051 Exp. 6/30/14 CIVIL STATE OF CALIFORNIA

THE STATE OF CALIFORNIA OR ITS OFFICERS OR AGENTS SHALL NOT BE RESPONSIBLE FOR THE ACCURACY OR COMPLETENESS OF SCANNED COPIES OF THIS PLAN SHEET.

STATIONARY MOUNTED CONSTRUCTION AREA SIGNS

SIGN No. (X)	SIGN CODE FEDERAL	SIGN CODE CALIFORNIA	PANEL SIZE	SIGN MESSAGE	NUMBER OF POSTS AND SIZE	NUMBER OF SIGNS STAGE 3
A	W20-1		60" x 60"	ROAD (STREET) WORK	2- 6" x 6"	1
B	W20-1		36" x 36"	ROAD (STREET) WORK	1- 6" x 6"	4
C	G20-2		36" x 18"	END ROAD WORK	1- 4" x 6"	6
D	G20-1		36" x 18"	ROAD WORK NEXT 4 MILES	1- 6" x 6"	1
E	TYPE 2		132" x 84"	CONSTRUCTION PROJECT FUNDING IDENTIFICATION	2- 6" x 8"	1
F		C40	72" x 36"	TRAFFIC FINES DOUBLED IN CONSTRUCTION ZONE	2- 6" x 6"	1

NOTES:

1. SIGN LOCATIONS SHOWN ARE APPROXIMATE. EXACT LOCATIONS WILL BE DETERMINED BY THE ENGINEER.
2. SIGNS SHALL BE REMOVED WHEN NO LONGER NEEDED.
3. FOR ADDITIONAL CONSTRUCTION AREA SIGNS, SEE STAGE CONSTRUCTION AND TRAFFIC HANDLING PLANS.

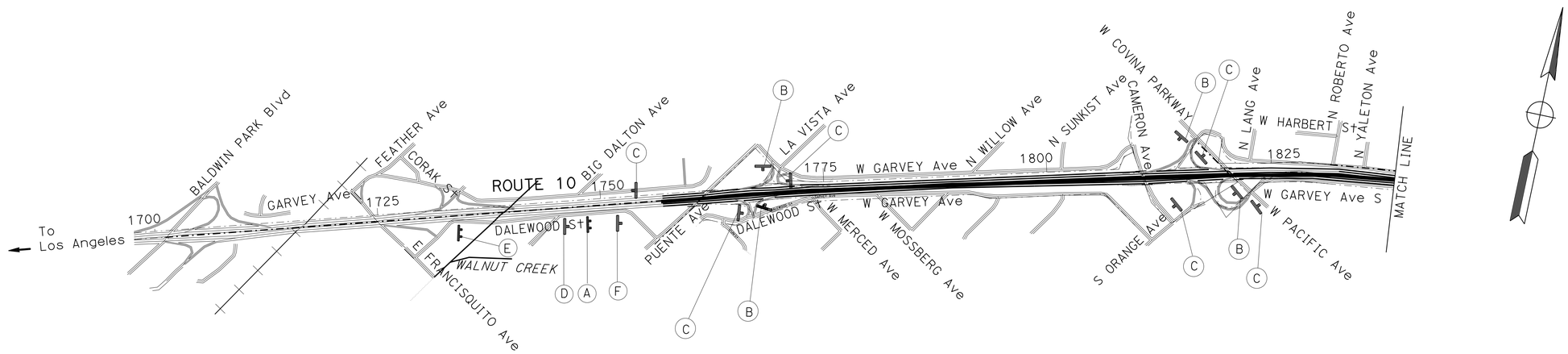

APPROVED FOR CONSTRUCTION AREA SIGN WORK ONLY

CONSTRUCTION AREA SIGNS
STAGE 3
NO SCALE

CS-5

STATE OF CALIFORNIA - DEPARTMENT OF TRANSPORTATION
Caltrans® OFFICE OF DESIGN D

FUNCTIONAL SUPERVISOR: NADER GOBRAN
CALCULATED-DESIGNED BY: SUSHIL CHAUDHARI
CHECKED BY: MOHAMED GHANNOUM
REVISED BY
DATE REVISED

LAST REVISION 00-00-00
DATE PLOTTED => 12-JUN-2013
TIME PLOTTED => 15:53