| Dist | COUNTY | ROUTE | POST MILES TOTAL PROJECT | SHEET No. | TOTAL SHEETS |
|---|---|---|---|---|---|
| 06 | Fre | 180 | R71.8/74.5 | 1 | 235 |

STATE OF CALIFORNIA
# DEPARTMENT OF TRANSPORTATION

# PROJECT PLANS FOR CONSTRUCTION ON
# STATE HIGHWAY

## IN FRESNO COUNTY
## ABOUT 6.3 MILES EAST OF FRESNO
## FROM 0.6 MILE WEST OF QUALITY AVENUE
## TO 0.2 MILE WEST OF SMITH AVENUE

TO BE SUPPLEMENTED BY STANDARD PLANS DATED 2010

INDEX OF PLANS


| SHEET No. | DESCRIPTION |
|---|---|
| 1 | TITLE AND LOCATION MAP |
| 2-7 | TYPICAL CROSS SECTIONS |
| 8 | KEY MAP AND LINE INDEX |
| 9-20 | LAYOUT |
| 21-43 | PROFILES AND SUPERELEVATION DIAGRAMS |
| 44-57 | CONSTRUCTION DETAILS |
| 58-70 | EROSION CONTROL PLAN, DETAILS AND QUANTITIES |
| 71-111 | DRAINAGE PLAN, PROFILES, DETAILS AND QUANTITIES |
| 112-120 | UTILITY PLAN, DETAILS AND QUANTITIES |
| 121 | CONSTRUCTION AREA SIGNS |
| 122-137 | STAGE CONSTRUCTION, DETAILS AND QUANTITIES |
| 138-150 | TRAFFIC HANDLING PLAN, DETAILS AND QUANTITIES |
| 151-165 | PAVEMENT DELINEATION PLAN, DETAILS AND QUANTITIES |
| 166-168 | SIGN PLAN, DETAILS AND QUANTITIES |
| 169-174 | SUMMARY OF QUANTITIES |
| 175-183 | ELECTRICAL PLANS |
| 184 | TRAFFIC CONTROL SYSTEM |
| 185-194 | REVISED STANDARD PLANS |

STRUCTURE PLANS

| | |
|---|---|
| 195-205 | FOWLER SWITCH CANAL Br No. 42-0439 |
| 206-226 | LONE TREE CANAL Br Nos. 42-0440 L/R, 42C-0661, PRIVATE |
| 227-235 | FOWLER SWITCH CANAL Br No. 42C-0660 |


THE STANDARD PLANS LIST APPLICABLE TO THIS CONTRACT IS INCLUDED IN THE NOTICE TO BIDDERS AND SPECIAL PROVISIONS BOOK.

LOCATION MAP

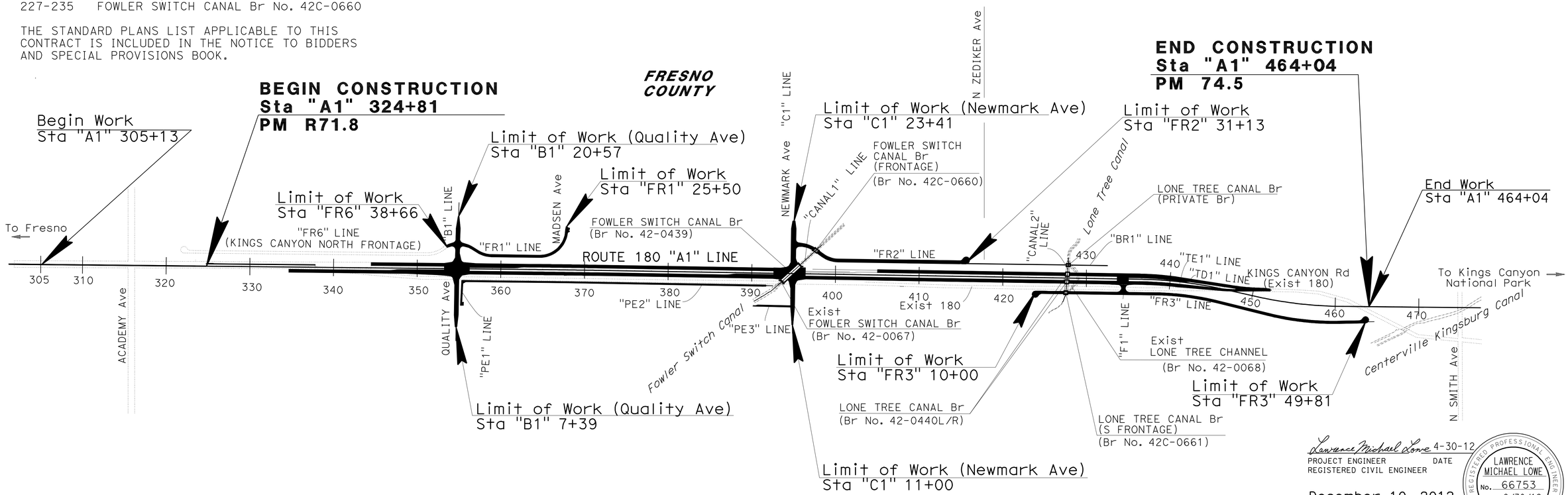


NO SCALE

Lawrence Michael Lowe 4-30-12
PROJECT ENGINEER DATE
REGISTERED CIVIL ENGINEER

December 10, 2012
PLANS APPROVAL DATE

REGISTERED PROFESSIONAL ENGINEER
LAWRENCE MICHAEL LOWE
No. 66753
Exp. 9/30/12
CIVIL
STATE OF CALIFORNIA

*THE STATE OF CALIFORNIA OR ITS OFFICERS OR AGENTS SHALL NOT BE RESPONSIBLE FOR THE ACCURACY OR COMPLETENESS OF SCANNED COPIES OF THIS PLAN SHEET.*

THE CONTRACTOR SHALL POSSESS THE CLASS (OR CLASSES) OF LICENSE AS SPECIFIED IN THE "NOTICE TO BIDDERS."

| | |
|---|---|
| CONTRACT No. | 06-342524 |
| PROJECT ID | 0600000381 |

PROJECT MANAGER: NEIL BRETZ
DESIGN ENGINEER: SANKU G. MOHAN

LAST REVISION 07-09-12
DATE PLOTTED => 13-DEC-2012
TIME PLOTTED => 06:33

| Dist | COUNTY | ROUTE | POST MILES TOTAL PROJECT | SHEET No. | TOTAL SHEETS |
|---|---|---|---|---|---|
| 06 | Fre | 180 | R71.8/74.5 | 2 | 235 |

Lawrence Michael Lowe 7-09-12
REGISTERED CIVIL ENGINEER DATE

12-10-12
PLANS APPROVAL DATE

REGISTERED PROFESSIONAL ENGINEER LAWRENCE MICHAEL LOWE No. 66753 Exp. 9/30/12 CIVIL STATE OF CALIFORNIA

*THE STATE OF CALIFORNIA OR ITS OFFICERS OR AGENTS SHALL NOT BE RESPONSIBLE FOR THE ACCURACY OR COMPLETENESS OF SCANNED COPIES OF THIS PLAN SHEET.*

## NOTES:

1. DIMENSIONS OF THE PAVEMENT STRUCTURES (STRUCTURAL SECTIONS) ARE SUBJECT TO TOLERANCES SPECIFIED IN THE STANDARD SPECIFICATIONS.
2. SUPERELEVATIONS ARE SHOWN ON THE SUPERELEVATION DIAGRAMS.
3. FOR LOCATION OF Shld BACKING REFER TO SHEET Q-2.

## ABBREVIATIONS:

OTB - OIL TREATED BASE
SH - Shld BACKING

## DESIGN DESIGNATION

| | | | |
|---|---|---|---|
| ADT (2019) | 17,800 | D | 63% |
| ADT (2039) | 43,000 | T | 2% |
| DHV | 4,150 | V | 70 mph |
| ESAL | 12,520,000 | $TI_{20}$ | 12 |

## STRUCTURAL SECTION:

A — 0.85′ JPCP
0.35′ LCB
0.60′ Cl 2 AB

C — 0.55′ HMA
0.75′ Cl 2 AB

D — 0.40′ HMA
0.45′ Cl 2 AB

E — 0.30′ HMA

F — 0.30′ Cl 2 AB

G — Exist 0.60′ AC

H — Exist 0.84′ JPCP
Exist 0.40′ LCB
Exist 0.60′ Cl 2 AB

I — Exist 0.45′ AC
Exist 0.55′ Cl 2 AB

B — Exist ROUTE 180 CORING DATA

| POST MILE | THICKNESS (FT) | |
|---|---|---|
| | AC | OTB |
| 72.34 | 0.30 | |
| 72.59 | 0.42 | 0.30 |
| 72.84 | 0.52 | 0.43 |
| 73.12 | 0.25 | 0.25 |
| 73.37 | 0.35 | |
| 73.62 | 0.30 | |
| 73.87 | 0.48 | |
| 74.10 | 0.45 | |
| 74.35 | 0.68 | |
| 75.20 | 0.85 | |

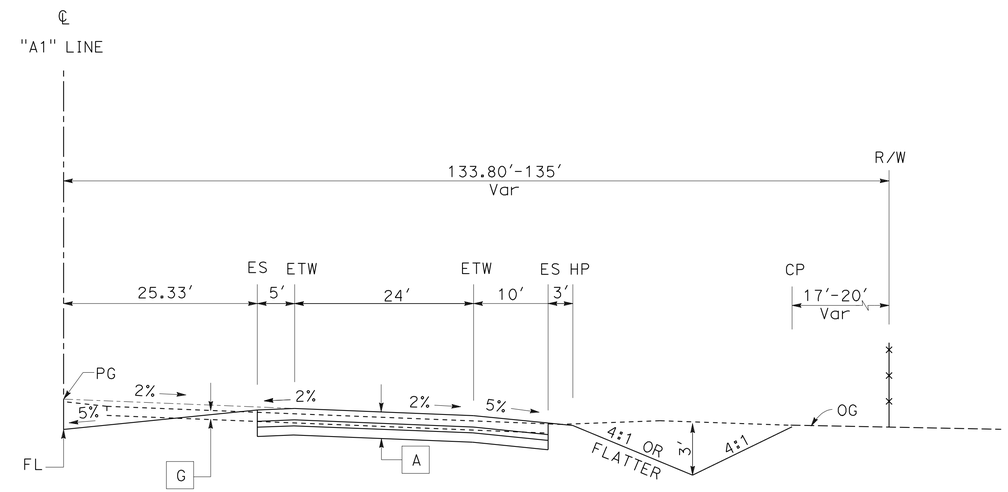


EASTBOUND

"A1" 335+14.50 TO "A1" 344+48.75

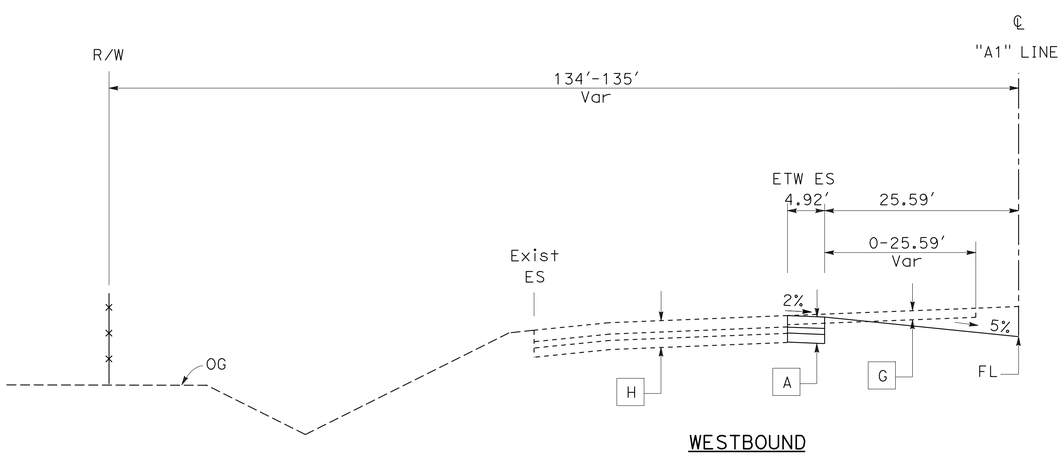


WESTBOUND

"A1" 324+81.33 TO "A1" 337+80.57

**"A1" LINE**
**ROUTE 180**

# TYPICAL CROSS SECTIONS
# X-1

NO SCALE

STATE OF CALIFORNIA - DEPARTMENT OF TRANSPORTATION
Caltrans®
DESIGN

FUNCTIONAL SUPERVISOR: SANKU G. MOHAN
CALCULATED-DESIGNED BY: JOO BAEK
CHECKED BY: HARJINDER SEKHON
REVISED BY: IA
DATE REVISED: 07/09/12

LAST REVISION 07-09-12 | DATE PLOTTED => 13-DEC-2012 | TIME PLOTTED => 06:34

| Dist | COUNTY | ROUTE | POST MILES TOTAL PROJECT | SHEET No. | TOTAL SHEETS |
|---|---|---|---|---|---|
| 06 | Fre | 180 | R71.8/74.5 | 3 | 235 |

Lawrence Michael Lowe 7-09-12
REGISTERED CIVIL ENGINEER DATE

12-10-12
PLANS APPROVAL DATE

REGISTERED PROFESSIONAL ENGINEER LAWRENCE MICHAEL LOWE No. 66753 Exp. 9/30/12 CIVIL STATE OF CALIFORNIA

*THE STATE OF CALIFORNIA OR ITS OFFICERS OR AGENTS SHALL NOT BE RESPONSIBLE FOR THE ACCURACY OR COMPLETENESS OF SCANNED COPIES OF THIS PLAN SHEET.*

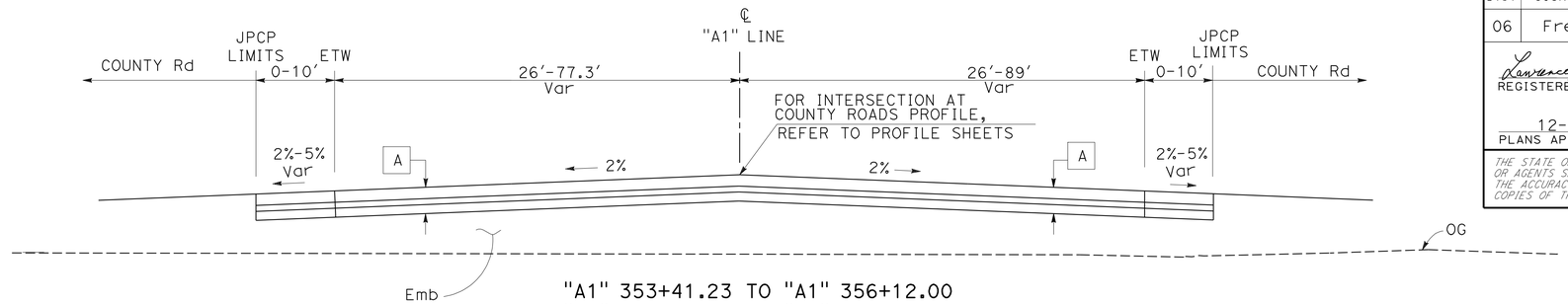


"A1" 353+41.23 TO "A1" 356+12.00
"A1" 393+56.74 TO "A1" 396+29.06

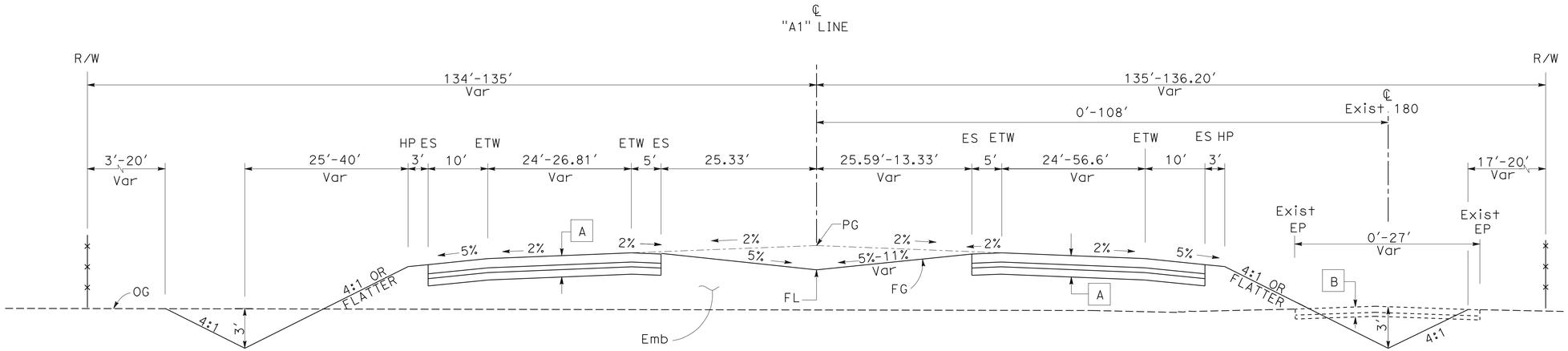


WESTBOUND

"A1" 344+98.75 TO "A1" 353+41.23

EASTBOUND

"A1" 344+48.75 TO "A1" 353+41.23

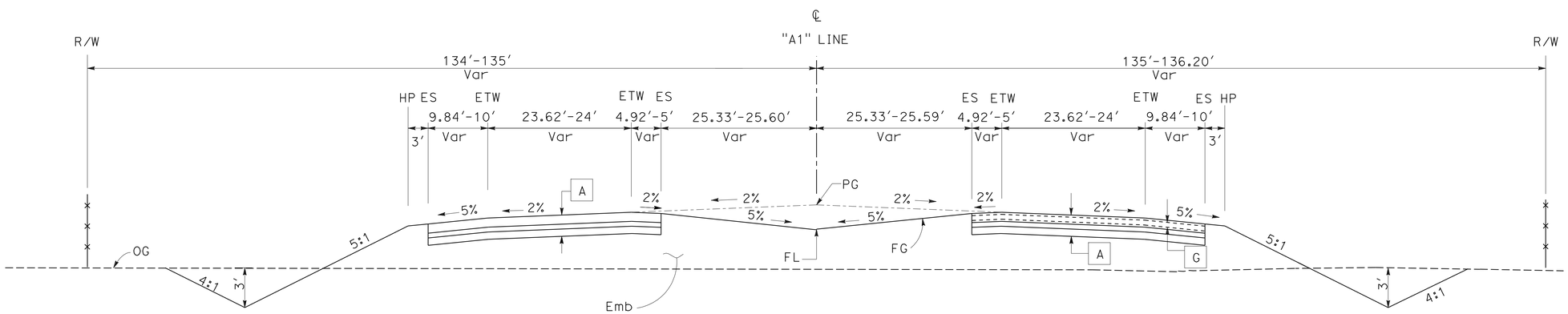


WESTBOUND

"A1" 344+48.75 TO "A1" 344+98.75

EASTBOUND

"A1" 334+64.50 TO "A1" 335+14.50

**"A1" LINE**
**ROUTE 180**

# TYPICAL CROSS SECTIONS
## X-2

NO SCALE

STATE OF CALIFORNIA - DEPARTMENT OF TRANSPORTATION
Caltrans®
DESIGN

FUNCTIONAL SUPERVISOR: SANKU G. MOHAN
CALCULATED-DESIGNED BY: JOO BAEK
CHECKED BY: HARJINDER SEKHON
REVISED BY: IA
DATE REVISED: 07/09/12

LAST REVISION 07-09-12
DATE PLOTTED => 13-DEC-2012
TIME PLOTTED => 06:34

| Dist | COUNTY | ROUTE | POST MILES TOTAL PROJECT | SHEET No. | TOTAL SHEETS |
|---|---|---|---|---|---|
| 06 | Fre | 180 | R71.8/74.5 | 4 | 235 |

Lawrence Michael Lowe 7-09-12
REGISTERED CIVIL ENGINEER DATE

12-10-12
PLANS APPROVAL DATE

REGISTERED PROFESSIONAL ENGINEER
LAWRENCE MICHAEL LOWE
No. 66753
Exp. 9/30/12
CIVIL
STATE OF CALIFORNIA

*THE STATE OF CALIFORNIA OR ITS OFFICERS OR AGENTS SHALL NOT BE RESPONSIBLE FOR THE ACCURACY OR COMPLETENESS OF SCANNED COPIES OF THIS PLAN SHEET.*

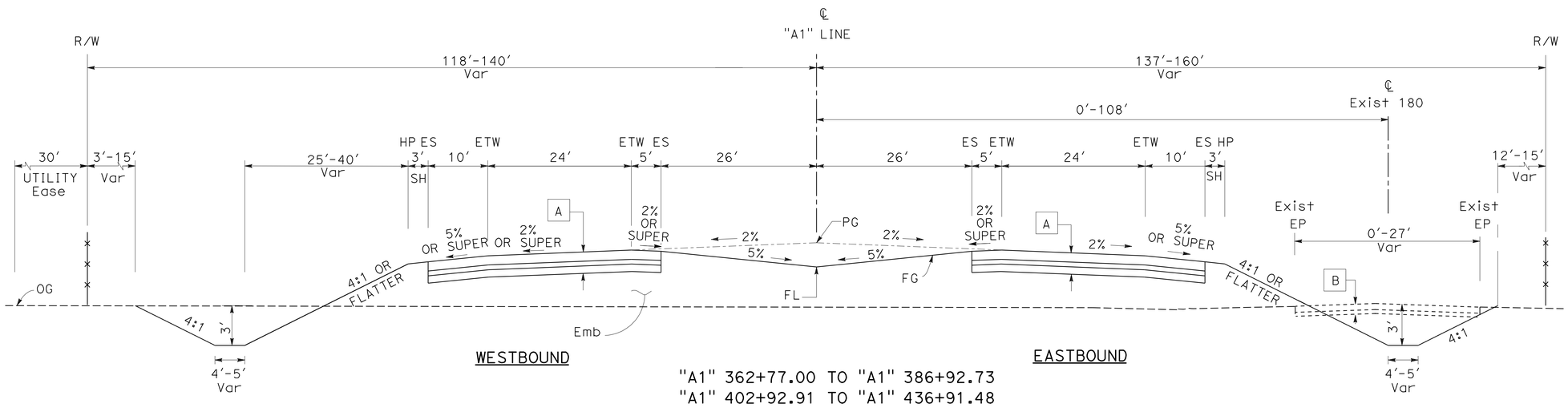


"A1" 362+77.00 TO "A1" 386+92.73
"A1" 402+92.91 TO "A1" 436+91.48

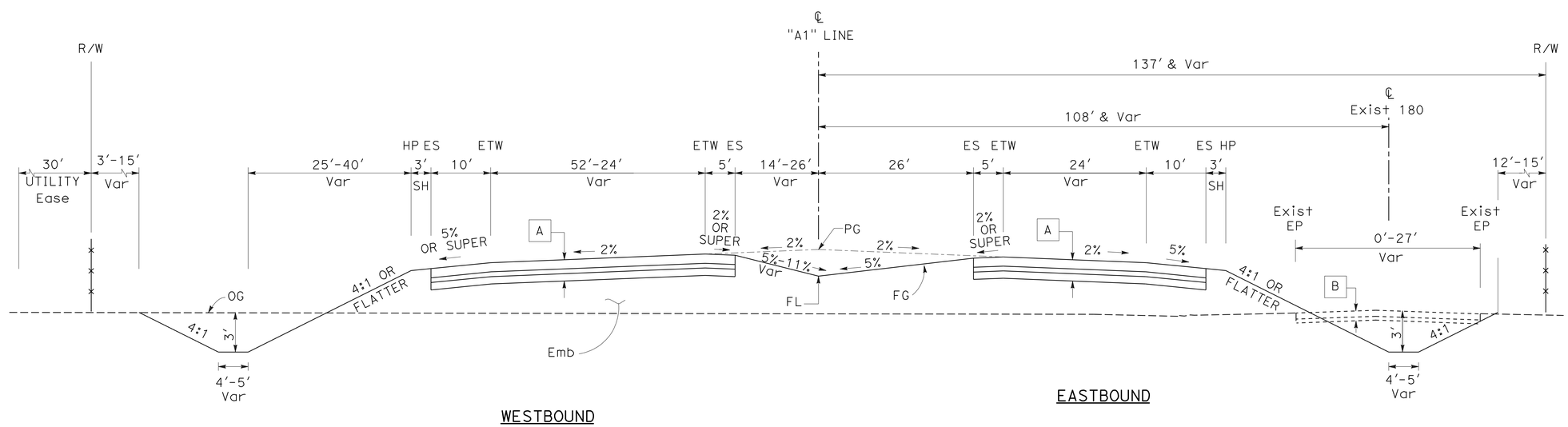


"A1" 356+12.00 TO "A1" 362+77.00
"A1" 396+29.06 TO "A1" 402+92.91

**"A1" LINE**
**ROUTE 180**

# TYPICAL CROSS SECTIONS

NO SCALE

**X-3**

| REVISED BY | DATE REVISED |
|---|---|
| IA | 07/09/12 |

JOO BAEK — HARJINDER SEKHON — CALCULATED-DESIGNED BY — CHECKED BY

FUNCTIONAL SUPERVISOR: SANKU G. MOHAN

STATE OF CALIFORNIA - DEPARTMENT OF TRANSPORTATION
Caltrans®
**DESIGN**

LAST REVISION 07-09-12 — DATE PLOTTED => 13-DEC-2012 — TIME PLOTTED => 06:34

| Dist | COUNTY | ROUTE | POST MILES TOTAL PROJECT | SHEET No. | TOTAL SHEETS |
|---|---|---|---|---|---|
| 06 | Fre | 180 | R71.8/74.5 | 5 | 235 |

Lawrence Michael Lowe 7-09-12
REGISTERED CIVIL ENGINEER DATE

12-10-12
PLANS APPROVAL DATE

REGISTERED PROFESSIONAL ENGINEER
LAWRENCE MICHAEL LOWE
No. 66753
Exp. 9/30/12
CIVIL
STATE OF CALIFORNIA

*THE STATE OF CALIFORNIA OR ITS OFFICERS OR AGENTS SHALL NOT BE RESPONSIBLE FOR THE ACCURACY OR COMPLETENESS OF SCANNED COPIES OF THIS PLAN SHEET.*

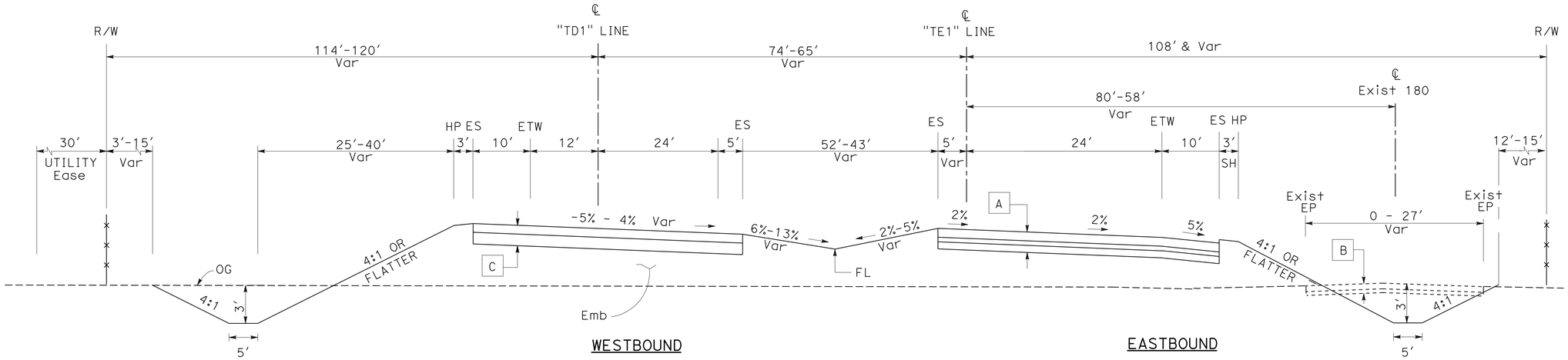


WESTBOUND

EASTBOUND

"TD1" 50+55.56 TO "TD1" 55+01.55

"A1" 436+91.48 TO "A1" 440+88.27

END TRANSITION

**"A1" LINE**
**ROUTE 180**

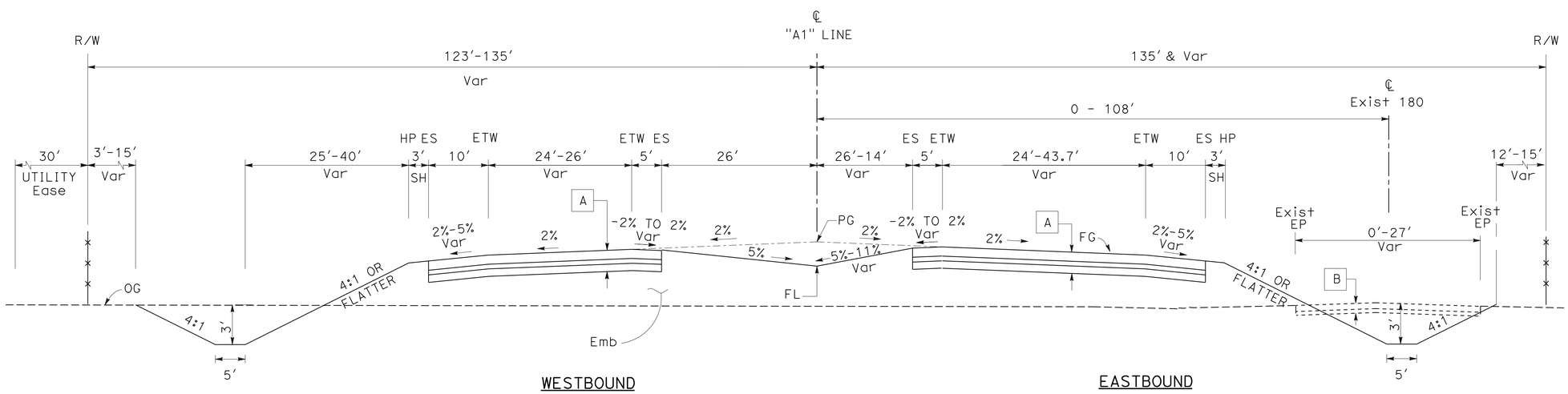


WESTBOUND

EASTBOUND

"A1" 386+92.73 TO "A1" 393+56.74

**"A1" LINE**
**ROUTE 180**

# TYPICAL CROSS SECTIONS

NO SCALE

**X-4**

| | |
|---|---|
| REVISED BY | IA |
| DATE REVISED | 07/09/12 |
| CALCULATED-DESIGNED BY | JOO BAEK |
| CHECKED BY | HARJINDER SEKHON |
| FUNCTIONAL SUPERVISOR | SANKU G. MOHAN |

STATE OF CALIFORNIA - DEPARTMENT OF TRANSPORTATION
Caltrans
DESIGN

LAST REVISION 07-11-12 | DATE PLOTTED => 13-DEC-2012 | TIME PLOTTED => 06:34

| Dist | COUNTY | ROUTE | POST MILES TOTAL PROJECT | SHEET No. | TOTAL SHEETS |
|---|---|---|---|---|---|
| 06 | Fre | 180 | R71.8/74.5 | 6 | 235 |

Lawrence Michael Lowe 7-09-12
REGISTERED CIVIL ENGINEER DATE

12-10-12
PLANS APPROVAL DATE

REGISTERED PROFESSIONAL ENGINEER
LAWRENCE MICHAEL LOWE
No. 66753
Exp. 9/30/12
CIVIL
STATE OF CALIFORNIA

*THE STATE OF CALIFORNIA OR ITS OFFICERS OR AGENTS SHALL NOT BE RESPONSIBLE FOR THE ACCURACY OR COMPLETENESS OF SCANNED COPIES OF THIS PLAN SHEET.*

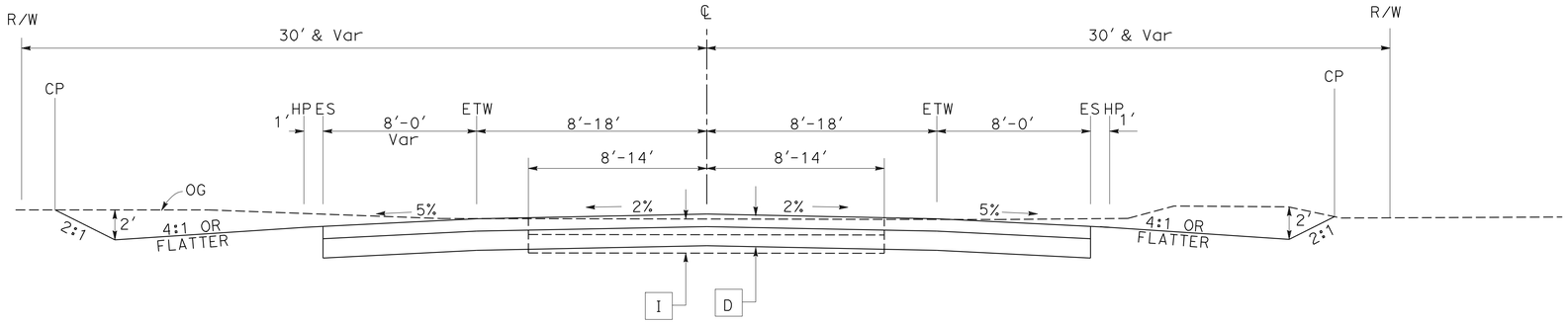


"C1" 11+00.00 TO "C1" 23+40.50

**"C1" LINE**

**NEWMARK Ave**

"B1" 7+39.31 TO "B1" 20+57.35

**"B1" LINE**

**QUALITY Ave**

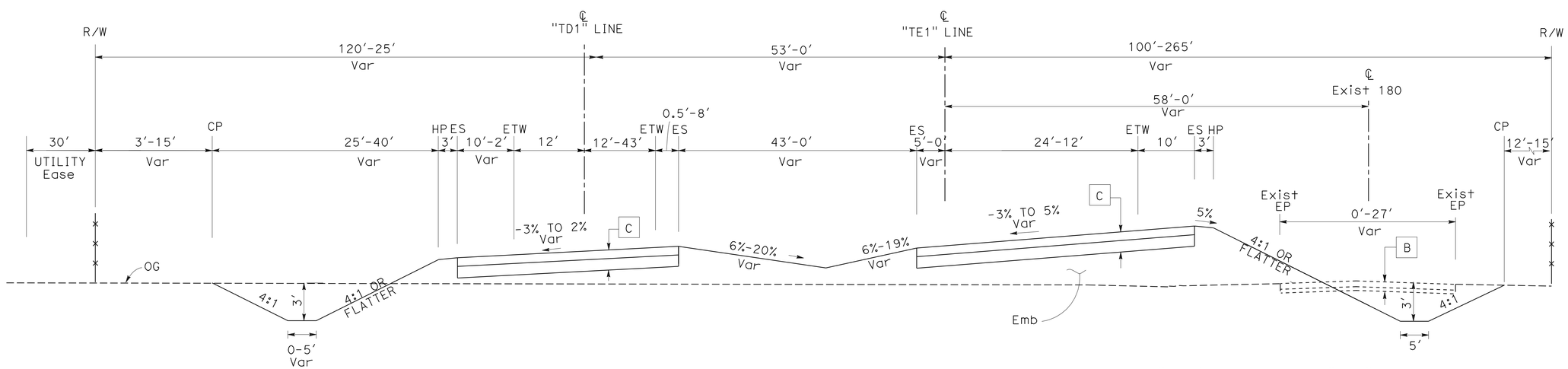


"TD1" 55+01.55 TO "TD1" 65+74.29

"TE1" 34+48.95 TO "TE1" 44+68.87

END TRANSITION

**"A1" LINE**

**ROUTE 180**

# TYPICAL CROSS SECTIONS

NO SCALE

**X-5**

| | |
|---|---|
| REVISED BY | IA |
| DATE REVISED | 07/09/12 |
| JOO BAEK | |
| HARJINDER SEKHON | |
| CALCULATED-DESIGNED BY | |
| CHECKED BY | |
| FUNCTIONAL SUPERVISOR | |
| SANKU G. MOHAN | |

STATE OF CALIFORNIA - DEPARTMENT OF TRANSPORTATION

Caltrans®

**DESIGN**

LAST REVISION 07-09-12 | DATE PLOTTED => 13-DEC-2012 | TIME PLOTTED => 06:34

| Dist | COUNTY | ROUTE | POST MILES TOTAL PROJECT | SHEET No. | TOTAL SHEETS |
|---|---|---|---|---|---|
| 06 | Fre | 180 | R71.8/74.5 | 7 | 235 |

Lawrence Michael Lowe 7-09-12
REGISTERED CIVIL ENGINEER DATE

12-10-12
PLANS APPROVAL DATE

REGISTERED PROFESSIONAL ENGINEER
LAWRENCE MICHAEL LOWE
No. 66753
Exp. 9/30/12
CIVIL
STATE OF CALIFORNIA

*THE STATE OF CALIFORNIA OR ITS OFFICERS OR AGENTS SHALL NOT BE RESPONSIBLE FOR THE ACCURACY OR COMPLETENESS OF SCANNED COPIES OF THIS PLAN SHEET.*

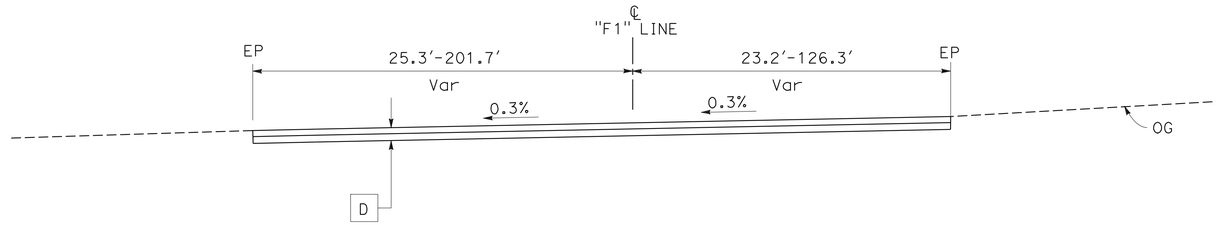


"F1" 10+16.00 TO "F1" 11+08.03
"F1" 11+47.03 TO "F1" 11+99.03

## "F1" LINE

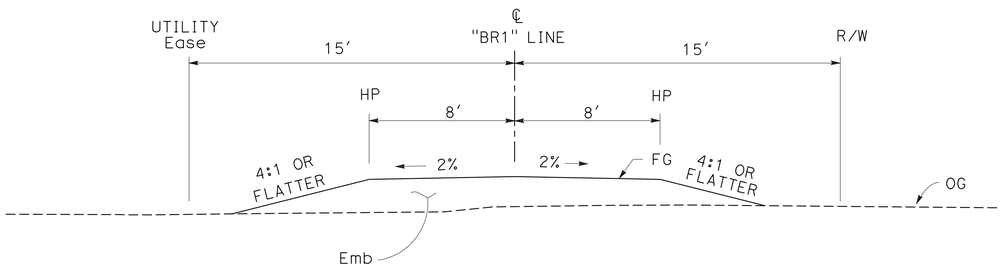


"BR1" 31+13.81 TO "BR1" 43+10.97
"BR1" 43+51.05 TO "BR1" 47+00.00

## "BR1" LINE

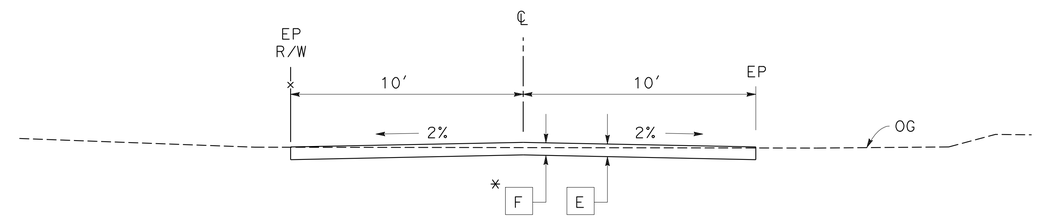


"PE1" 10+00.00 TO "PE1" 12+92.78
"PE2" 10+00.00 TO "PE2" 46+30.56
*"PE3" 5+23.44 TO "PE3" 9+73.86

## PRIVATE VEHICLE ACCESS EASEMENTS

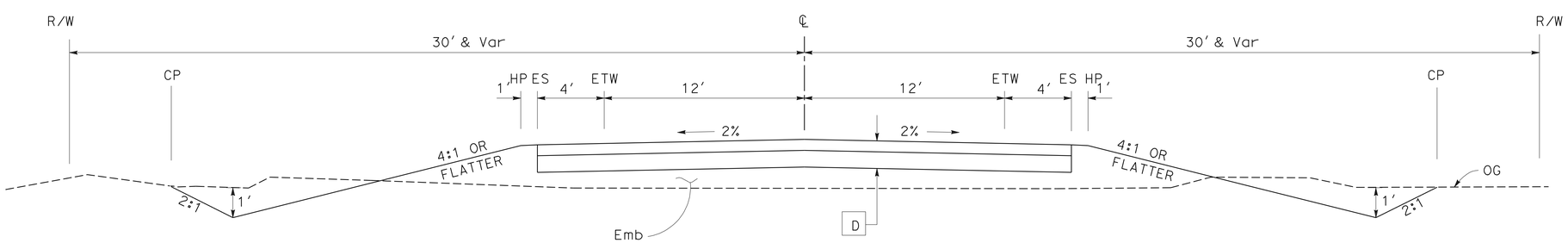


"FR1" 10+00.00 TO "FR1" 25+50.29
"FR2" 10+00.00 TO "FR2" 31+13.81
"FR3" 10+00.00 TO "FR3" 49+80.60
"FR6" 38+66.02 TO "FR6" 39+74.04

## FRONTAGE ROADS

# TYPICAL CROSS SECTIONS

NO SCALE

X-6

| | |
|---|---|
| IA | 07/09/12 |
| REVISED BY | DATE REVISED |
| JOO BAEK | HARJINDER SEKHON |
| CALCULATED-DESIGNED BY | CHECKED BY |
| FUNCTIONAL SUPERVISOR | SANKU G. MOHAN |

STATE OF CALIFORNIA - DEPARTMENT OF TRANSPORTATION
Caltrans
DESIGN

LAST REVISION 07-09-12
DATE PLOTTED => 13-DEC-2012
TIME PLOTTED => 06:34

| Dist | COUNTY | ROUTE | POST MILES TOTAL PROJECT | SHEET No. | TOTAL SHEETS |
|---|---|---|---|---|---|
| 06 | Fre | 180 | R71.8/74.5 | 8 | 235 |

Lawrence Michael Lowe 7-09-12
REGISTERED CIVIL ENGINEER DATE

12-10-12
PLANS APPROVAL DATE

REGISTERED PROFESSIONAL ENGINEER
LAWRENCE MICHAEL LOWE
No. 66753
Exp. 9/30/12
CIVIL
STATE OF CALIFORNIA

*THE STATE OF CALIFORNIA OR ITS OFFICERS OR AGENTS SHALL NOT BE RESPONSIBLE FOR THE ACCURACY OR COMPLETENESS OF SCANNED COPIES OF THIS PLAN SHEET.*

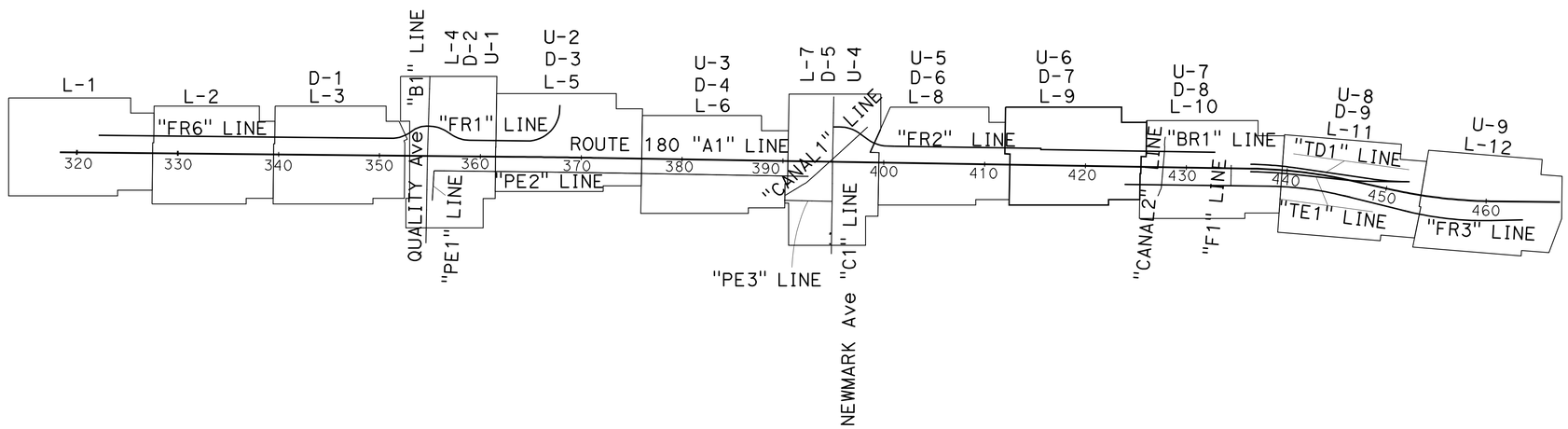


# KEY MAP AND LINE INDEX

NO SCALE

**K-1**

| | |
|---|---|
| REVISED BY | IA |
| DATE REVISED | 07/09/12 |
| CALCULATED-DESIGNED BY | JOO BAEK |
| CHECKED BY | SANKU G. MOHAN |
| FUNCTIONAL SUPERVISOR | SANKU G. MOHAN |

STATE OF CALIFORNIA - DEPARTMENT OF TRANSPORTATION
Caltrans
DESIGN

LAST REVISION 07-09-12 | DATE PLOTTED => 13-DEC-2012 | TIME PLOTTED => 06:34

| Dist | COUNTY | ROUTE | POST MILES TOTAL PROJECT | SHEET No. | TOTAL SHEETS |
|---|---|---|---|---|---|
| 06 | Fre | 180 | R71.8/74.5 | 9 | 235 |

Lawrence Michael Lowe 7-09-12
REGISTERED CIVIL ENGINEER DATE

12-10-12
PLANS APPROVAL DATE

REGISTERED PROFESSIONAL ENGINEER
LAWRENCE MICHAEL LOWE
No. 66753
Exp. 9/30/12
CIVIL
STATE OF CALIFORNIA

*THE STATE OF CALIFORNIA OR ITS OFFICERS OR AGENTS SHALL NOT BE RESPONSIBLE FOR THE ACCURACY OR COMPLETENESS OF SCANNED COPIES OF THIS PLAN SHEET.*

## NOTES:

1. FOR ACCURATE RIGHT OF WAY DATA, CONTACT RIGHT OF WAY ENGINEERING AT THE DISTRICT OFFICE.
2. THE SECTION CORNERS SHOULD BE TIED OUT PRIOR TO AND RECONSTRUCTED AFTER CONSTRUCTION.

## LEGEND:

- ALTERNATIVE CRASH CUSHION SYSTEM (ACCS)
- DESTROY WELL
- DIRT GRADING
- Exist CC (QUAD GUARD)
- PLACE HMA (Misc AREA)
- REMOVE Irr FACILITY
- REMOVE STAND PIPE
- REMOVE WATER VALVE

## ABBREVIATIONS:

| | |
|---|---|
| AFTS | ALTERNATIVE FLARED TERMINAL SYSTEM |
| Ang Pt | ANGLE POINT |
| ACCS 2 | ALTERNATIVE CRASH CUSHION SYSTEM (TEST LEVEL 2) |
| ACCS 3 | ALTERNATIVE CRASH CUSHION SYSTEM (TEST LEVEL 3) |
| CC | CRASH CUSHION |
| PVAE | PRIVATE VEHICLE ACCESS EASEMENT |
| SRS | SHOULDER RUMBLE STRIP |

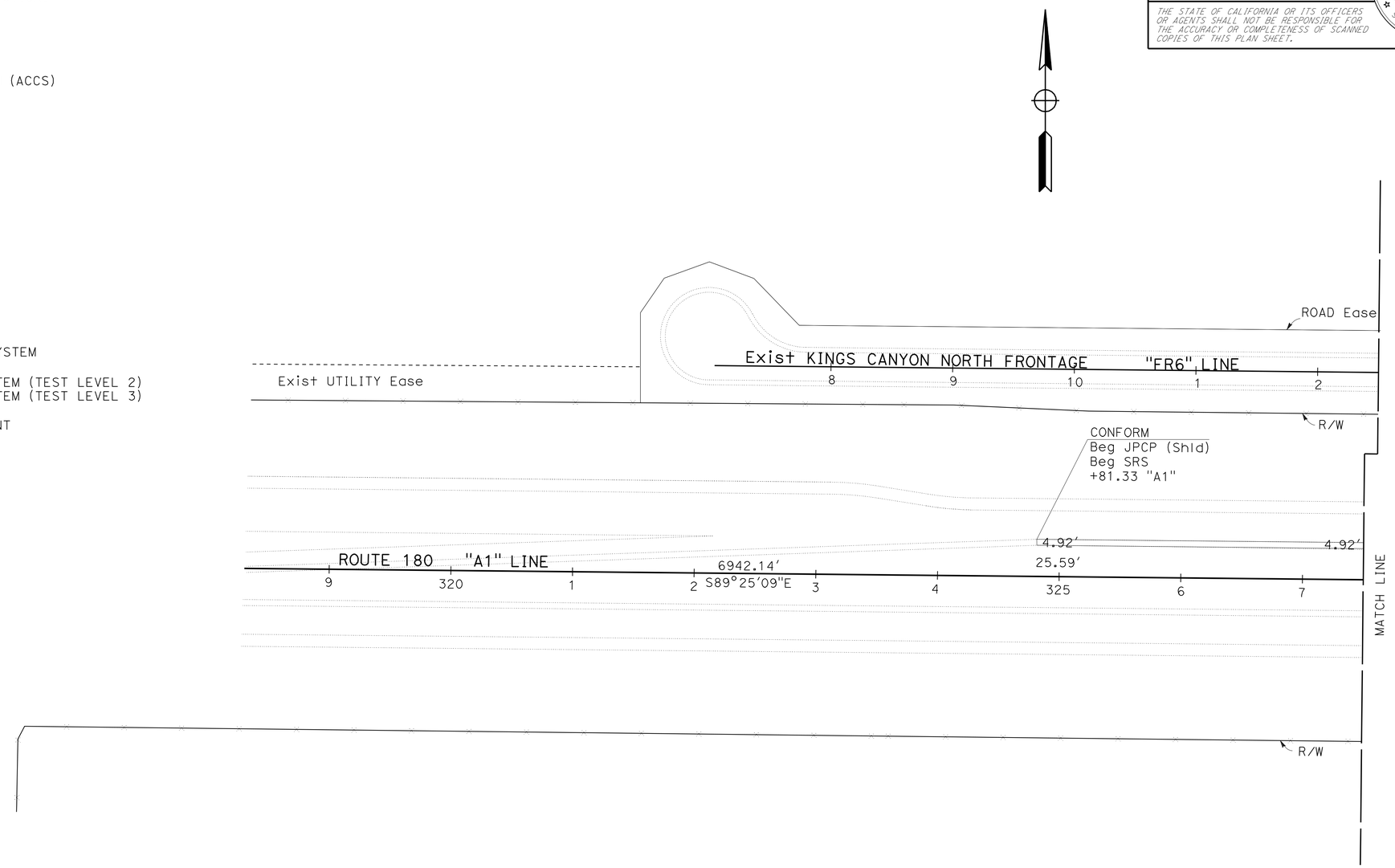


# LAYOUT L-1

SCALE: 1" = 50'

| REVISED BY | DATE REVISED |
|---|---|
| IA | 07/09/12 |

CALCULATED-DESIGNED BY: JOO BAEK
CHECKED BY: SANKU G. MOHAN
FUNCTIONAL SUPERVISOR: SANKU G. MOHAN

STATE OF CALIFORNIA - DEPARTMENT OF TRANSPORTATION
Caltrans
DESIGN

LAST REVISION 07-09-12
DATE PLOTTED => 13-DEC-2012
TIME PLOTTED => 06:34

| Dist | COUNTY | ROUTE | POST MILES TOTAL PROJECT | SHEET No. | TOTAL SHEETS |
|---|---|---|---|---|---|
| 06 | Fre | 180 | R71.8/74.5 | 10 | 235 |

Lawrence Michael Lowe 7-09-12
REGISTERED CIVIL ENGINEER DATE

12-10-12
PLANS APPROVAL DATE

REGISTERED PROFESSIONAL ENGINEER
LAWRENCE MICHAEL LOWE
No. 66753
Exp. 9/30/12
CIVIL
STATE OF CALIFORNIA

*THE STATE OF CALIFORNIA OR ITS OFFICERS OR AGENTS SHALL NOT BE RESPONSIBLE FOR THE ACCURACY OR COMPLETENESS OF SCANNED COPIES OF THIS PLAN SHEET.*

**NOTE:**

FOR ACCURATE RIGHT OF WAY DATA, CONTACT RIGHT OF WAY ENGINEERING AT THE DISTRICT OFFICE.

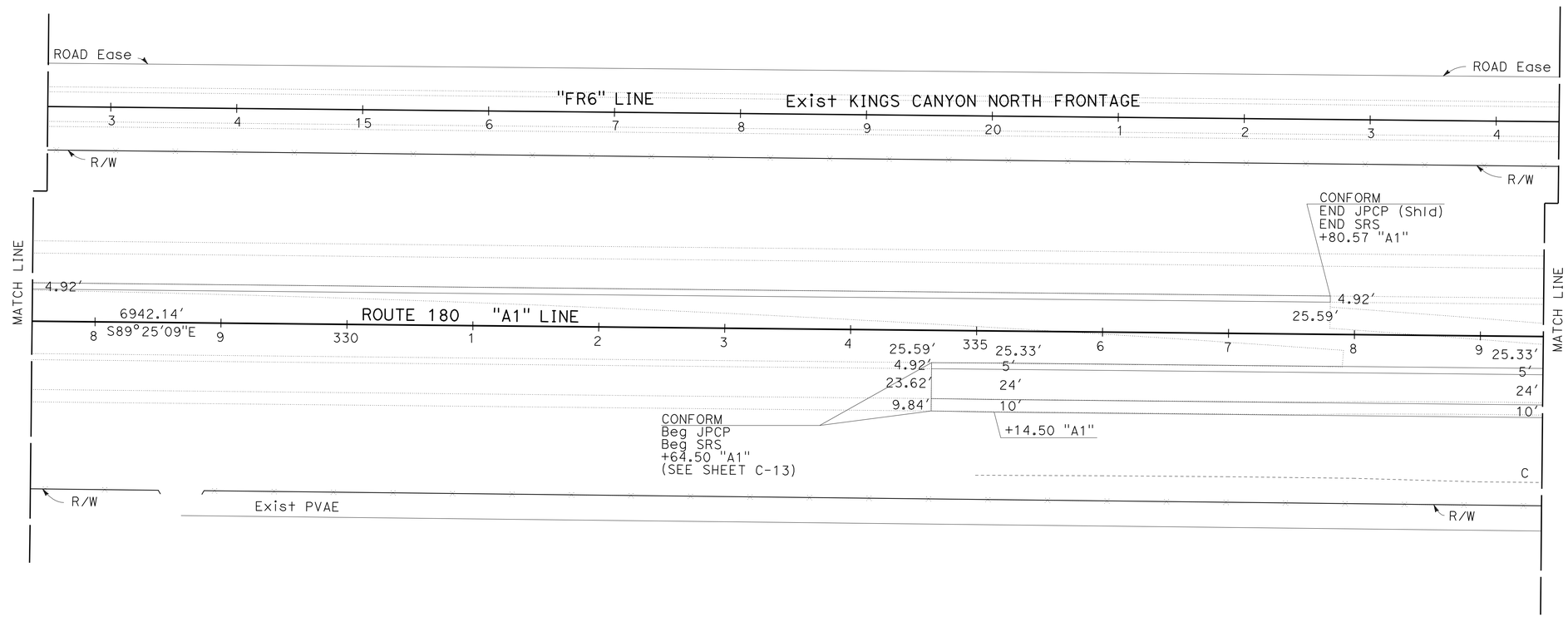


# LAYOUT L-2

SCALE: 1" = 50′

STATE OF CALIFORNIA - DEPARTMENT OF TRANSPORTATION
Caltrans
DESIGN

FUNCTIONAL SUPERVISOR: SANKU G. MOHAN
CALCULATED-DESIGNED BY: JOO BAEK
CHECKED BY: SANKU G. MOHAN
REVISED BY: IA
DATE REVISED: 07/09/12

LAST REVISION 07-09-12
DATE PLOTTED => 13-DEC-2012
TIME PLOTTED => 06:34

| Dist | COUNTY | ROUTE | POST MILES TOTAL PROJECT | SHEET No. | TOTAL SHEETS |
|---|---|---|---|---|---|
| 06 | Fre | 180 | R71.8/74.5 | 11 | 235 |

Lawrence Michael Lowe 7-09-12
REGISTERED CIVIL ENGINEER DATE

12-10-12
PLANS APPROVAL DATE

REGISTERED PROFESSIONAL ENGINEER
LAWRENCE MICHAEL LOWE
No. 66753
Exp. 9/30/12
CIVIL
STATE OF CALIFORNIA

*THE STATE OF CALIFORNIA OR ITS OFFICERS OR AGENTS SHALL NOT BE RESPONSIBLE FOR THE ACCURACY OR COMPLETENESS OF SCANNED COPIES OF THIS PLAN SHEET.*

**NOTE:**

FOR ACCURATE RIGHT OF WAY DATA, CONTACT RIGHT OF WAY ENGINEERING AT THE DISTRICT OFFICE.

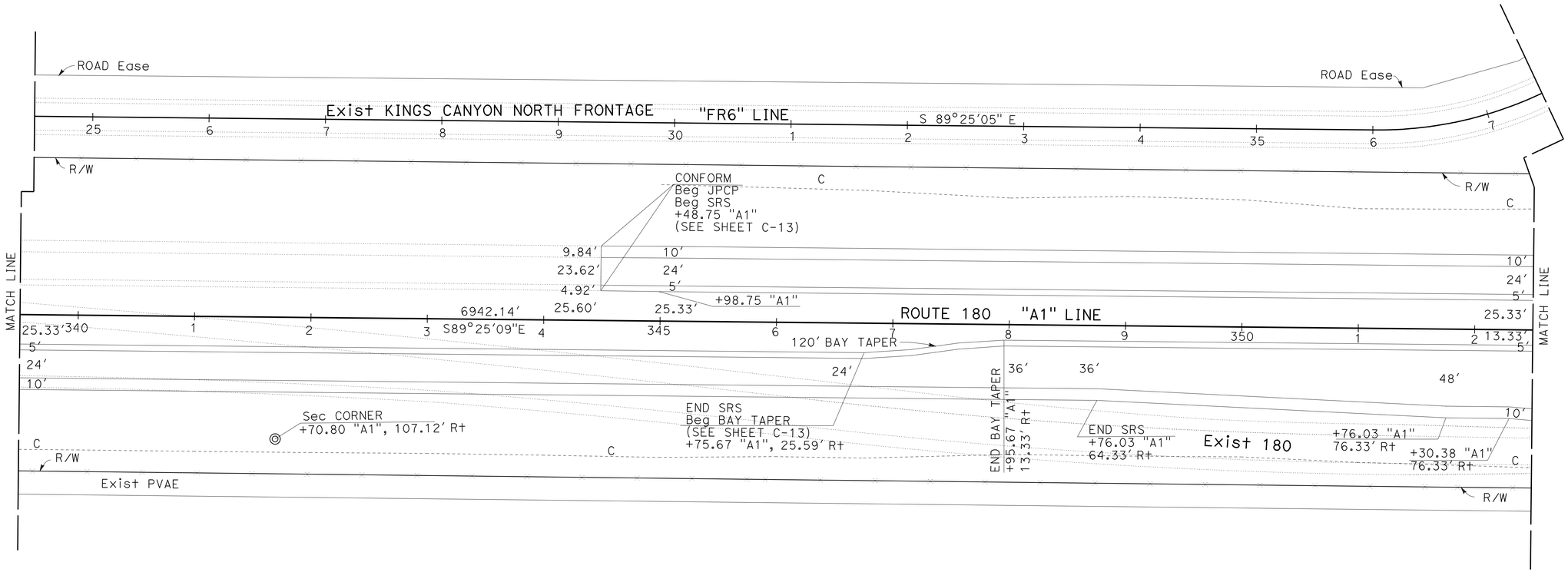


**LAYOUT**
**L-3**

SCALE: 1" = 50'

| | | | |
|---|---|---|---|
| 1A | 07/09/12 | REVISED BY | DATE REVISED |
| JOO BAEK | SANKU G. MOHAN | CALCULATED-DESIGNED BY | CHECKED BY |
| SANKU G. MOHAN | | FUNCTIONAL SUPERVISOR | |

STATE OF CALIFORNIA - DEPARTMENT OF TRANSPORTATION
Caltrans
DESIGN

LAST REVISION 07-09-12 | DATE PLOTTED => 13-DEC-2012 | TIME PLOTTED => 06:34

| Dist | COUNTY | ROUTE | POST MILES TOTAL PROJECT | SHEET No. | TOTAL SHEETS |
|---|---|---|---|---|---|
| 06 | Fre | 180 | R71.8/74.5 | 12 | 235 |

Lawrence Michael Lowe 7-09-12
REGISTERED CIVIL ENGINEER DATE

12-10-12
PLANS APPROVAL DATE

REGISTERED PROFESSIONAL ENGINEER LAWRENCE MICHAEL LOWE No. 66753 Exp. 9/30/12 CIVIL STATE OF CALIFORNIA

*THE STATE OF CALIFORNIA OR ITS OFFICERS OR AGENTS SHALL NOT BE RESPONSIBLE FOR THE ACCURACY OR COMPLETENESS OF SCANNED COPIES OF THIS PLAN SHEET.*

## NOTES:

1. FOR ACCURATE RIGHT OF WAY DATA, CONTACT RIGHT OF WAY ENGINEERING AT THE DISTRICT OFFICE.
2. EXACT LOCATIONS OF CL-6 GATE SHALL BE DETERMINED IN THE FIELD BY THE ENGINEER.

### CURVE DATA

| No. O | R | Δ | T | L | RP | LOCATION |
|---|---|---|---|---|---|---|
| 8 | 320.00′ | 31°42′21" | 90.87′ | 177.08′ | BC | ℄ "FR1" 10+02.28 |
| 9 | 320.00′ | 30°54′23" | 88.46′ | 172.61′ | BC | ℄ "FR1" 12+62.77 |
| 16 | 229.66′ | 38°27′28" | 80.11′ | 154.15′ | BC | ℄ "FR6" 38+25.01 |

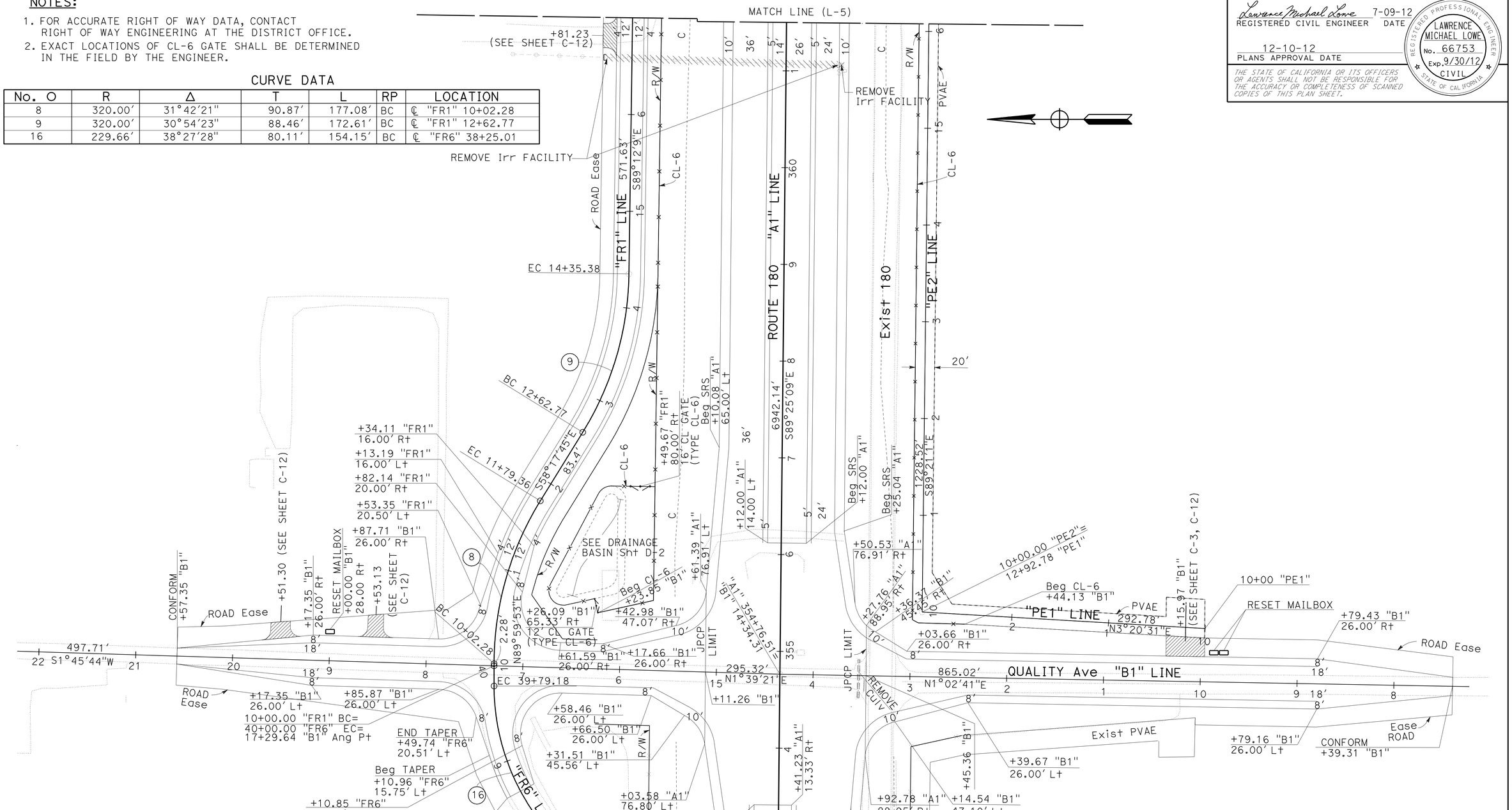


**LAYOUT L-4**

SCALE: 1" = 50′

| REVISED BY | DATE REVISED |
|---|---|
| IA | 07/09/12 |

JOO BAEK — CALCULATED-DESIGNED BY
SANKU G. MOHAN — CHECKED BY
SANKU G. MOHAN — FUNCTIONAL SUPERVISOR

STATE OF CALIFORNIA - DEPARTMENT OF TRANSPORTATION
Caltrans
DESIGN

LAST REVISION 07-09-12 | DATE PLOTTED => 13-DEC-2012 | TIME PLOTTED => 06:34

| Dist | COUNTY | ROUTE | POST MILES TOTAL PROJECT | SHEET No. | TOTAL SHEETS |
|---|---|---|---|---|---|
| 06 | Fre | 180 | R71.8/74.5 | 13 | 235 |

Lawrence Michael Lowe 7-09-12
REGISTERED CIVIL ENGINEER DATE

12-10-12
PLANS APPROVAL DATE

REGISTERED PROFESSIONAL ENGINEER
LAWRENCE MICHAEL LOWE
No. 66753
Exp. 9/30/12
CIVIL
STATE OF CALIFORNIA

*THE STATE OF CALIFORNIA OR ITS OFFICERS OR AGENTS SHALL NOT BE RESPONSIBLE FOR THE ACCURACY OR COMPLETENESS OF SCANNED COPIES OF THIS PLAN SHEET.*

**NOTE:**

FOR ACCURATE RIGHT OF WAY DATA, CONTACT RIGHT OF WAY ENGINEERING AT THE DISTRICT OFFICE.

CURVE DATA

| No. O | R | Δ | T | L | RP | LOCATION |
|---|---|---|---|---|---|---|
| 1 | 131233.33′ | 0°21′24" | 408.60′ | 817.19′ | BC | ℄"A1" 363+39.13 |
| 10 | 320.00′ | 88°16′24" | 310.50′ | 493.01′ | BC | ℄ "FR1" 20+07.01 |

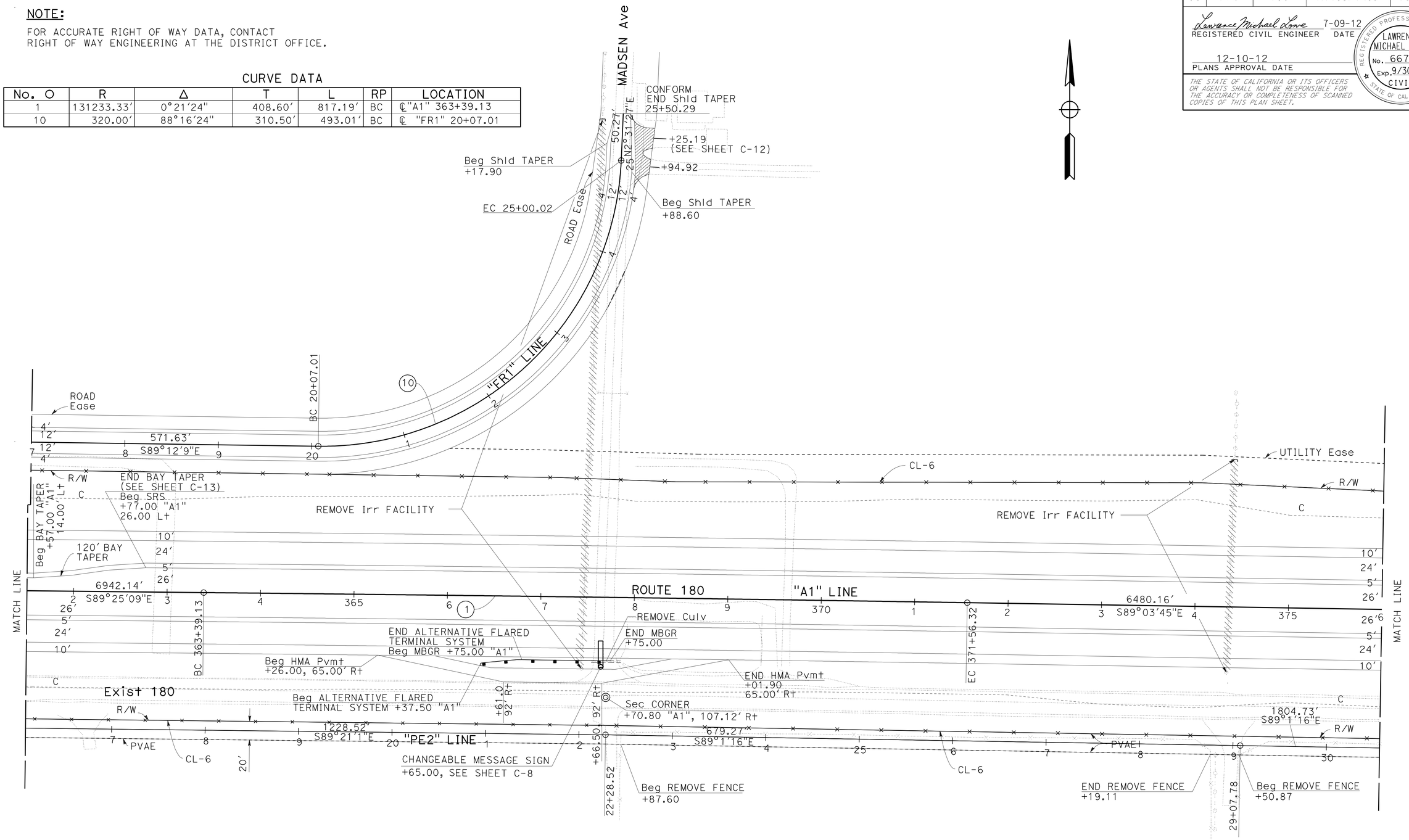


# LAYOUT L-5

SCALE: 1" = 50′

| | | | |
|---|---|---|---|
| 1A | 07/09/12 | JOO BAEK | SANKU G. MOHAN |
| REVISED BY | DATE REVISED | CALCULATED-DESIGNED BY | CHECKED BY |
| FUNCTIONAL SUPERVISOR | SANKU G. MOHAN | | |

STATE OF CALIFORNIA - DEPARTMENT OF TRANSPORTATION
Caltrans
DESIGN

LAST REVISION 07-09-12 | DATE PLOTTED => 13-DEC-2012 | TIME PLOTTED => 06:35

| Dist | COUNTY | ROUTE | POST MILES TOTAL PROJECT | SHEET No. | TOTAL SHEETS |
|---|---|---|---|---|---|
| 06 | Fre | 180 | R71.8/74.5 | 14 | 235 |

Lawrence Michael Lowe 7-09-12
REGISTERED CIVIL ENGINEER DATE

12-10-12
PLANS APPROVAL DATE

REGISTERED PROFESSIONAL ENGINEER
LAWRENCE MICHAEL LOWE
No. 66753
Exp. 9/30/12
CIVIL
STATE OF CALIFORNIA

*THE STATE OF CALIFORNIA OR ITS OFFICERS OR AGENTS SHALL NOT BE RESPONSIBLE FOR THE ACCURACY OR COMPLETENESS OF SCANNED COPIES OF THIS PLAN SHEET.*

**NOTE:**

FOR ACCURATE RIGHT OF WAY DATA, CONTACT RIGHT OF WAY ENGINEERING AT THE DISTRICT OFFICE.

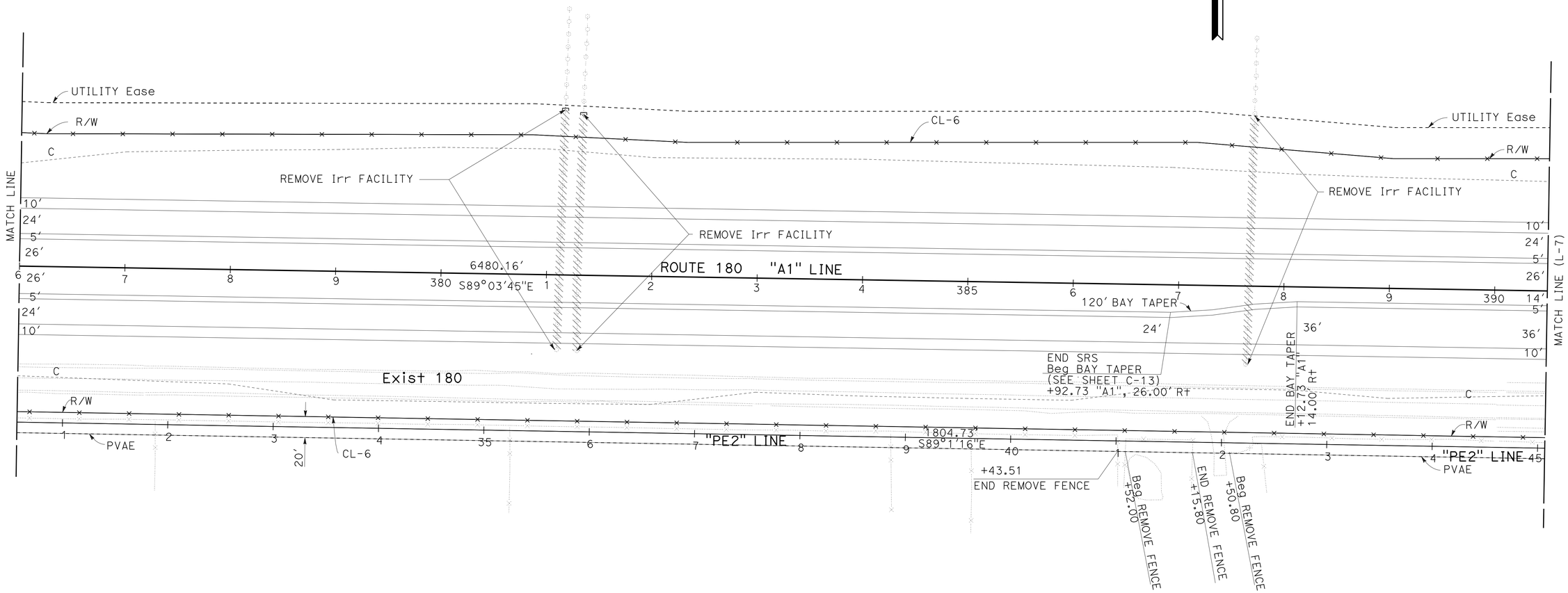


# LAYOUT L-6

SCALE: 1" = 50′

| REVISED BY | DATE REVISED |
|---|---|
| IA | 07/09/12 |

CALCULATED-DESIGNED BY: JOO BAEK
CHECKED BY: SANKU G. MOHAN
FUNCTIONAL SUPERVISOR: SANKU G. MOHAN

STATE OF CALIFORNIA - DEPARTMENT OF TRANSPORTATION
Caltrans
DESIGN

LAST REVISION 07-09-12
DATE PLOTTED => 13-DEC-2012
TIME PLOTTED => 06:35

| Dist | COUNTY | ROUTE | POST MILES TOTAL PROJECT | SHEET No. | TOTAL SHEETS |
|---|---|---|---|---|---|
| 06 | Fre | 180 | R71.8/74.5 | 15 | 235 |

Lawrence Michael Lowe 7-09-12
REGISTERED CIVIL ENGINEER DATE

12-10-12
PLANS APPROVAL DATE

REGISTERED PROFESSIONAL ENGINEER LAWRENCE MICHAEL LOWE No. 66753 Exp. 9/30/12 CIVIL STATE OF CALIFORNIA

*THE STATE OF CALIFORNIA OR ITS OFFICERS OR AGENTS SHALL NOT BE RESPONSIBLE FOR THE ACCURACY OR COMPLETENESS OF SCANNED COPIES OF THIS PLAN SHEET.*

## NOTES:

1. FOR ACCURATE RIGHT OF WAY DATA, CONTACT RIGHT OF WAY ENGINEERING AT THE DISTRICT OFFICE.
2. EXACT LOCATIONS OF CL-6 GATE SHALL BE DETERMINED IN THE FIELD BY THE ENGINEER.

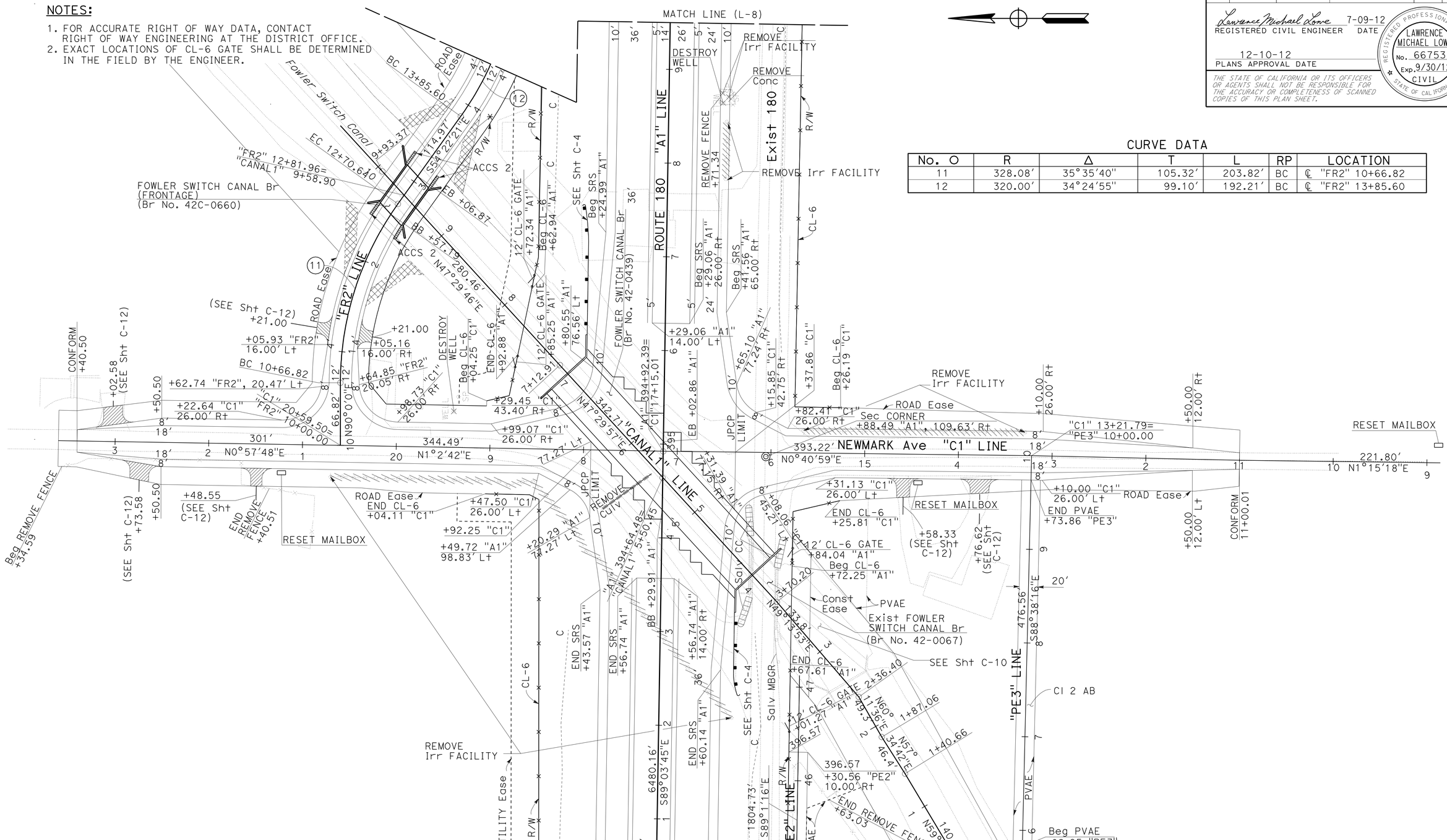


## CURVE DATA

| No. O | R | Δ | T | L | RP | LOCATION |
|---|---|---|---|---|---|---|
| 11 | 328.08′ | 35°35′40″ | 105.32′ | 203.82′ | BC | ℄ "FR2" 10+66.82 |
| 12 | 320.00′ | 34°24′55″ | 99.10′ | 192.21′ | BC | ℄ "FR2" 13+85.60 |

# LAYOUT L-7

SCALE: 1" = 50′

| | | | |
|---|---|---|---|
| REVISED BY | IA | CALCULATED-DESIGNED BY | JOO BAEK |
| DATE REVISED | 07/09/12 | CHECKED BY | SANKU G. MOHAN |
| FUNCTIONAL SUPERVISOR | SANKU G. MOHAN | | |

STATE OF CALIFORNIA - DEPARTMENT OF TRANSPORTATION
Caltrans
DESIGN

LAST REVISION 07-09-12 | DATE PLOTTED => 13-DEC-2012 | TIME PLOTTED => 06:35

| Dist | COUNTY | ROUTE | POST MILES TOTAL PROJECT | SHEET No. | TOTAL SHEETS |
|---|---|---|---|---|---|
| 06 | Fre | 180 | R71.8/74.5 | 16 | 235 |

Lawrence Michael Lowe 7-09-12
REGISTERED CIVIL ENGINEER DATE

12-10-12
PLANS APPROVAL DATE

REGISTERED PROFESSIONAL ENGINEER
LAWRENCE MICHAEL LOWE
No. 66753
Exp. 9/30/12
CIVIL
STATE OF CALIFORNIA

*THE STATE OF CALIFORNIA OR ITS OFFICERS OR AGENTS SHALL NOT BE RESPONSIBLE FOR THE ACCURACY OR COMPLETENESS OF SCANNED COPIES OF THIS PLAN SHEET.*

**NOTE:**

FOR ACCURATE RIGHT OF WAY DATA, CONTACT RIGHT OF WAY ENGINEERING AT THE DISTRICT OFFICE.

CURVE DATA

| No. O | R | Δ | T | L | RP | LOCATION |
|---|---|---|---|---|---|---|
| 12 | 320.00′ | 34°24′55″ | 99.10′ | 192.21′ | EC | ℄ "FR2" 15+17.82 |

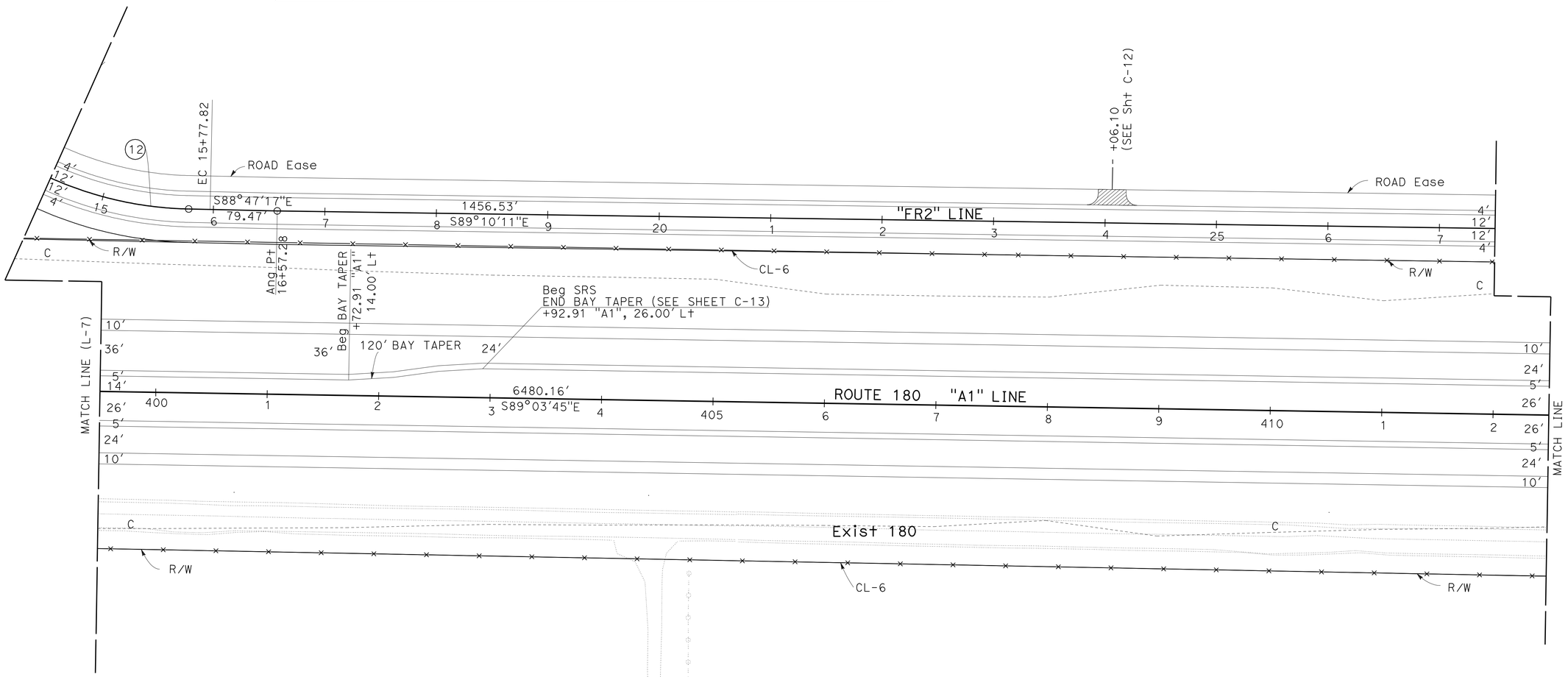


**LAYOUT**
**L-8**

SCALE: 1" = 50′

STATE OF CALIFORNIA - DEPARTMENT OF TRANSPORTATION
Caltrans®
**DESIGN**

FUNCTIONAL SUPERVISOR: SANKU G. MOHAN
CALCULATED-DESIGNED BY: JOO BAEK
CHECKED BY: SANKU G. MOHAN
REVISED BY: IA
DATE REVISED: 07/09/12

LAST REVISION 07-09-12
DATE PLOTTED => 13-DEC-2012
TIME PLOTTED => 06:35

| Dist | COUNTY | ROUTE | POST MILES TOTAL PROJECT | SHEET No. | TOTAL SHEETS |
|---|---|---|---|---|---|
| 06 | Fre | 180 | R71.8/74.5 | 17 | 235 |

Lawrence Michael Lowe 7-09-12
REGISTERED CIVIL ENGINEER DATE

12-10-12
PLANS APPROVAL DATE

REGISTERED PROFESSIONAL ENGINEER
LAWRENCE MICHAEL LOWE
No. 66753
Exp. 9/30/12
CIVIL
STATE OF CALIFORNIA

*THE STATE OF CALIFORNIA OR ITS OFFICERS OR AGENTS SHALL NOT BE RESPONSIBLE FOR THE ACCURACY OR COMPLETENESS OF SCANNED COPIES OF THIS PLAN SHEET.*

**NOTE:**

FOR ACCURATE RIGHT OF WAY DATA, CONTACT RIGHT OF WAY ENGINEERING AT THE DISTRICT OFFICE.

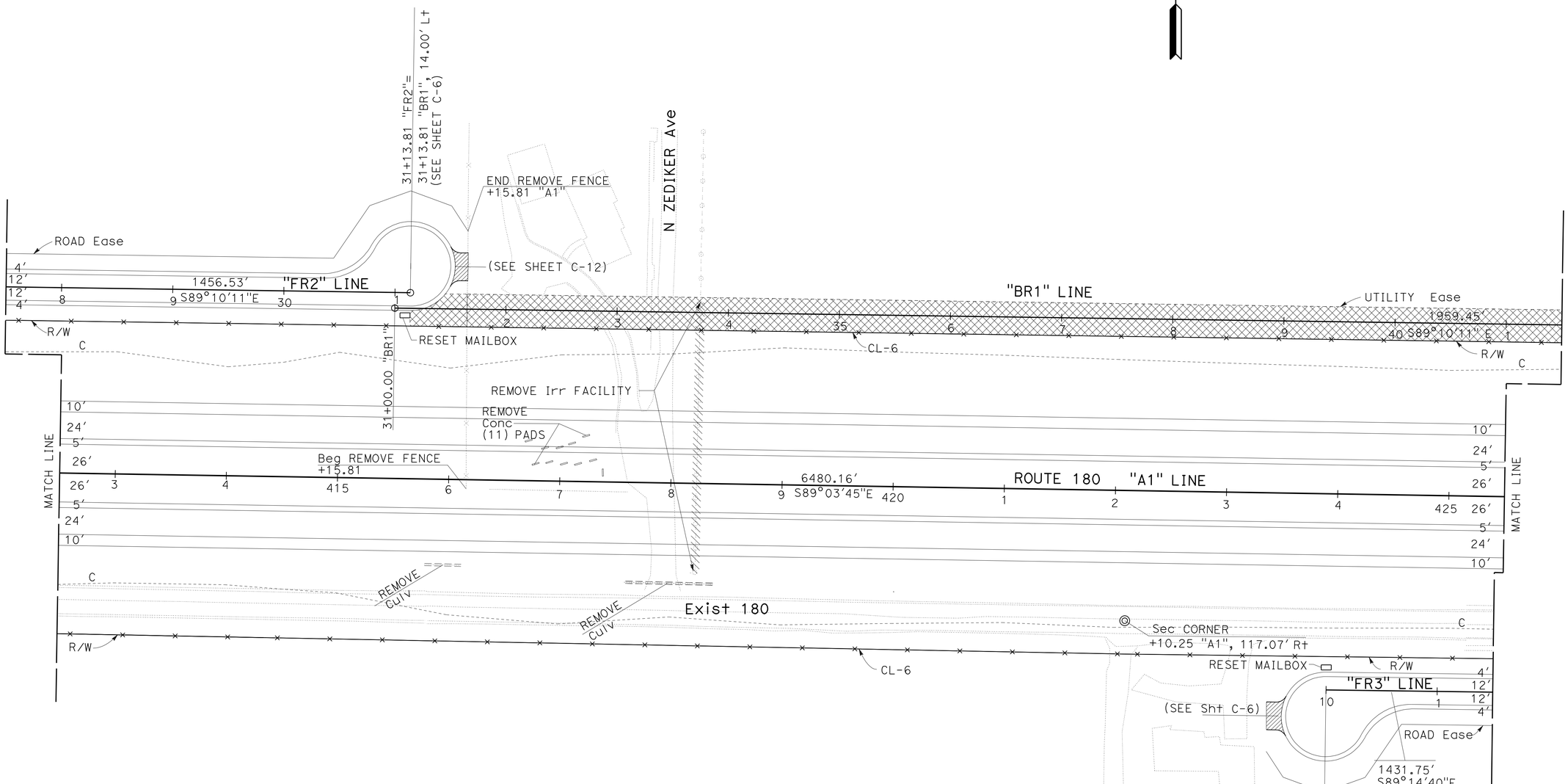


**LAYOUT**
**L-9**

SCALE: 1" = 50'

| REVISED BY | DATE REVISED |
|---|---|
| IA | 07/09/12 |

CALCULATED-DESIGNED BY: JOO BAEK
CHECKED BY: SANKU G. MOHAN
FUNCTIONAL SUPERVISOR: SANKU G. MOHAN

STATE OF CALIFORNIA - DEPARTMENT OF TRANSPORTATION
Caltrans
**DESIGN**

LAST REVISION 07-09-12 | DATE PLOTTED => 13-DEC-2012 | TIME PLOTTED => 06:35

| Dist | COUNTY | ROUTE | POST MILES TOTAL PROJECT | SHEET No. | TOTAL SHEETS |
|---|---|---|---|---|---|
| 06 | Fre | 180 | R71.8/74.5 | 18 | 235 |

Lawrence Michael Lowe 7-09-12
REGISTERED CIVIL ENGINEER DATE

12-10-12
PLANS APPROVAL DATE

REGISTERED PROFESSIONAL ENGINEER LAWRENCE MICHAEL LOWE No. 66753 Exp. 9/30/12 CIVIL STATE OF CALIFORNIA

*THE STATE OF CALIFORNIA OR ITS OFFICERS OR AGENTS SHALL NOT BE RESPONSIBLE FOR THE ACCURACY OR COMPLETENESS OF SCANNED COPIES OF THIS PLAN SHEET.*

**NOTE:**

FOR ACCURATE RIGHT OF WAY DATA, CONTACT RIGHT OF WAY ENGINEERING AT THE DISTRICT OFFICE.

CURVE DATA

| No. O | R | Δ | T | L | RP | LOCATION |
|---|---|---|---|---|---|---|
| 4 | 3512.00′ | 7°24′15" | 227.24′ | 453.84′ | BC | ℄ "TD1" 50+00.00 |
| 6 | 4890.25′ | 5°15′36" | 224.63′ | 448.95′ | BC | ℄ "TE1" 30+00.00 |
| 13 | 3280.82′ | 13°8′31" | 377.92′ | 752.53′ | BC | ℄ "FR3" 24+31.75 |

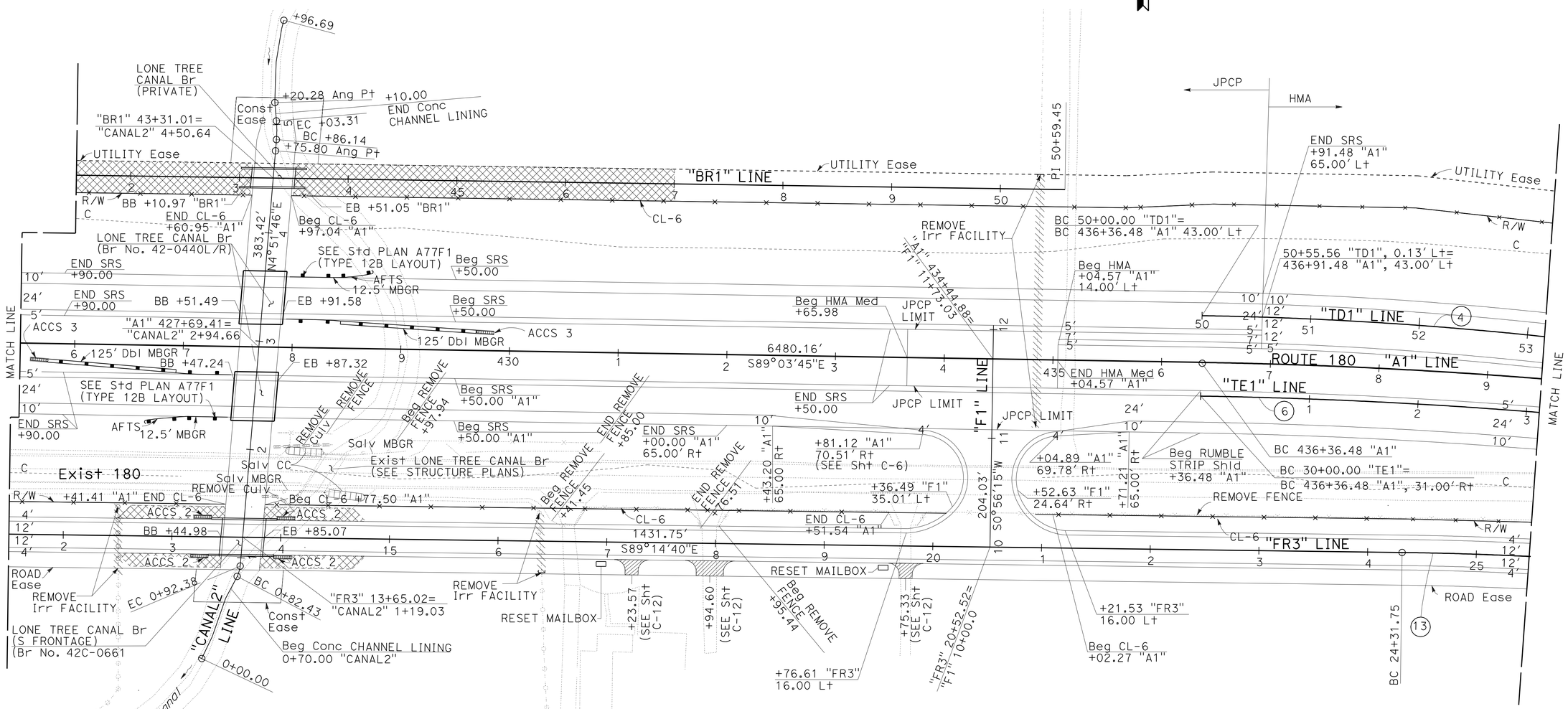


**LAYOUT**

SCALE: 1" = 50′ **L-10**

STATE OF CALIFORNIA - DEPARTMENT OF TRANSPORTATION
Caltrans® **DESIGN**

FUNCTIONAL SUPERVISOR: SANKU G. MOHAN
CALCULATED-DESIGNED BY: JOO BAEK
CHECKED BY: SANKU G. MOHAN
REVISED BY: IA
DATE REVISED: 07/09/12

LAST REVISION 07-09-12 | DATE PLOTTED => 13-DEC-2012 | TIME PLOTTED => 06:35

| Dist | COUNTY | ROUTE | POST MILES TOTAL PROJECT | SHEET No. | TOTAL SHEETS |
|---|---|---|---|---|---|
| 06 | Fre | 180 | R71.8/74.5 | 19 | 235 |

Lawrence Michael Lowe 7-09-12
REGISTERED CIVIL ENGINEER DATE

12-10-12
PLANS APPROVAL DATE

REGISTERED PROFESSIONAL ENGINEER LAWRENCE MICHAEL LOWE No. 66753 Exp. 9/30/12 CIVIL STATE OF CALIFORNIA

*THE STATE OF CALIFORNIA OR ITS OFFICERS OR AGENTS SHALL NOT BE RESPONSIBLE FOR THE ACCURACY OR COMPLETENESS OF SCANNED COPIES OF THIS PLAN SHEET.*

**NOTE:**

FOR ACCURATE RIGHT OF WAY DATA, CONTACT RIGHT OF WAY ENGINEERING AT THE DISTRICT OFFICE.

CURVE DATA

| No. O | R | Δ | T | L | RP | LOCATION |
|---|---|---|---|---|---|---|
| 2 | 4921.25′ | 11°39′21" | 502.30′ | 1001.14′ | EC | ℄ "A1" 446+37.62 |
| 3 | 4921.24′ | 12°0′46" | 517.80′ | 1031.81′ | BC | ℄ "A1" 450+45.16 |
| 4 | 3512.00′ | 7°24′15" | 227.24′ | 453.84′ | BC | ℄ "TD1" 50+00.00 |
| 5 | 2700.00′ | 7°40′28" | 181.10′ | 361.65′ | BC | ℄ "TD1" 62+02.51 |
| 6 | 4890.25′ | 5°15′36" | 224.63′ | 448.95′ | BC | ℄ "TE1" 34+48.95 |
| 7 | 2700.00′ | 5°31′49" | 130.40′ | 260.60′ | BC | ℄ "TE1" 39+29.44 |
| 13 | 3280.82′ | 13°8′31" | 377.92′ | 752.53′ | EC | ℄ "FR3" 31+84.27 |
| 14 | 3280.83′ | 15°0′59" | 432.41′ | 859.86′ | BC | ℄ "FR3" 38+05.47 |

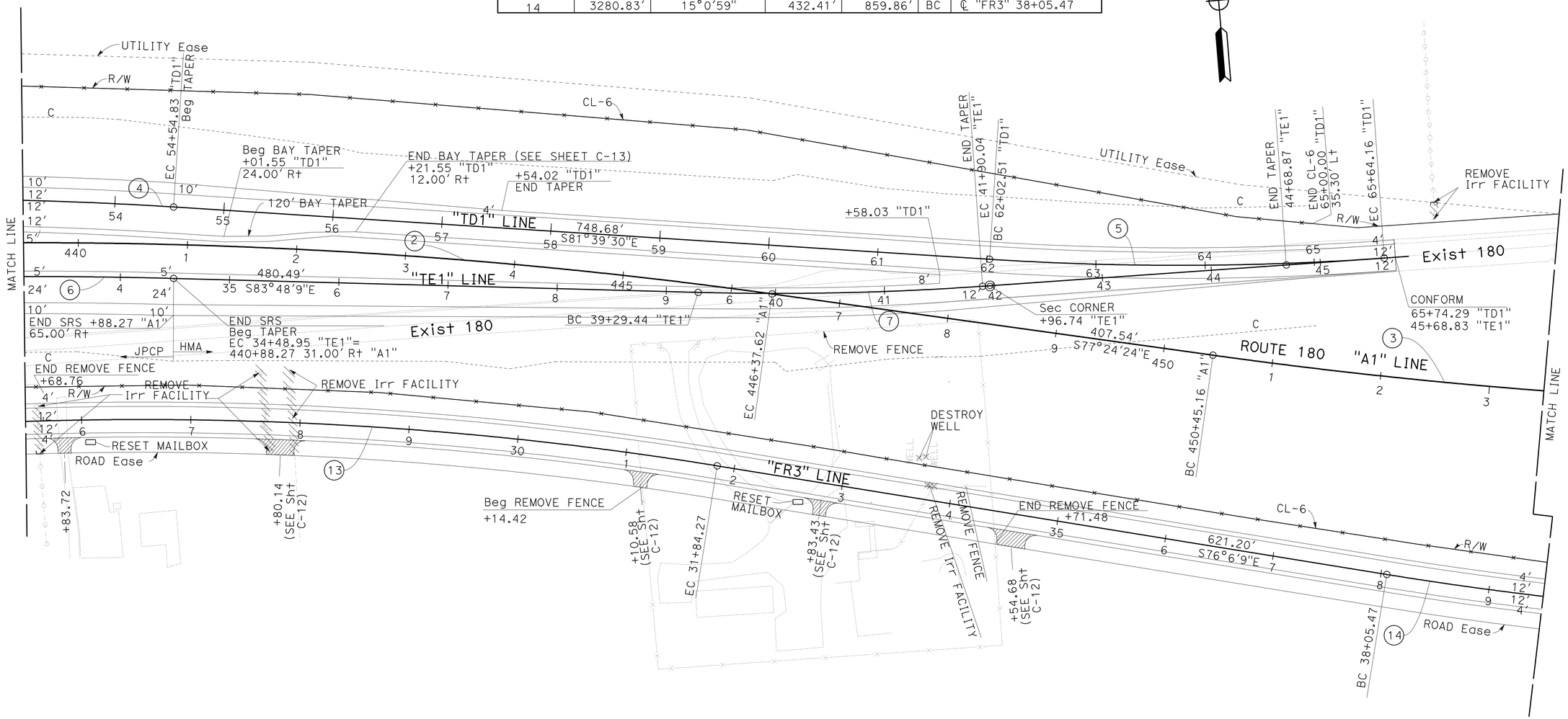


**LAYOUT**

SCALE: 1" = 50′

**L-11**

STATE OF CALIFORNIA - DEPARTMENT OF TRANSPORTATION

Caltrans

**DESIGN**

| CALCULATED-DESIGNED BY | JOO BAEK | REVISED BY | IA |
|---|---|---|---|
| CHECKED BY | SANKU G. MOHAN | DATE REVISED | 07/09/12 |
| FUNCTIONAL SUPERVISOR | SANKU G. MOHAN | | |

LAST REVISION 07-09-12 | DATE PLOTTED => 13-DEC-2012 | TIME PLOTTED => 06:35

| Dist | COUNTY | ROUTE | POST MILES TOTAL PROJECT | SHEET No. | TOTAL SHEETS |
|---|---|---|---|---|---|
| 06 | Fre | 180 | R71.8/74.5 | 20 | 235 |

Lawrence Michael Lowe 7-09-12
REGISTERED CIVIL ENGINEER DATE

12-10-12
PLANS APPROVAL DATE

REGISTERED PROFESSIONAL ENGINEER
LAWRENCE MICHAEL LOWE
No. 66753
Exp. 9/30/12
CIVIL
STATE OF CALIFORNIA

*THE STATE OF CALIFORNIA OR ITS OFFICERS OR AGENTS SHALL NOT BE RESPONSIBLE FOR THE ACCURACY OR COMPLETENESS OF SCANNED COPIES OF THIS PLAN SHEET.*

**NOTE:**

FOR ACCURATE RIGHT OF WAY DATA, CONTACT
RIGHT OF WAY ENGINEERING AT THE DISTRICT OFFICE.

CURVE DATA

| No. O | R | Δ | T | L | RP | LOCATION |
|---|---|---|---|---|---|---|
| 3 | 4921.24′ | 12°0′46" | 517.80′ | 1031.81′ | EC | ℄ "A1" 460+76.97 |
| 14 | 3280.83′ | 15°0′59" | 432.41′ | 859.86′ | EC | ℄ "FR3" 46+65.34 |

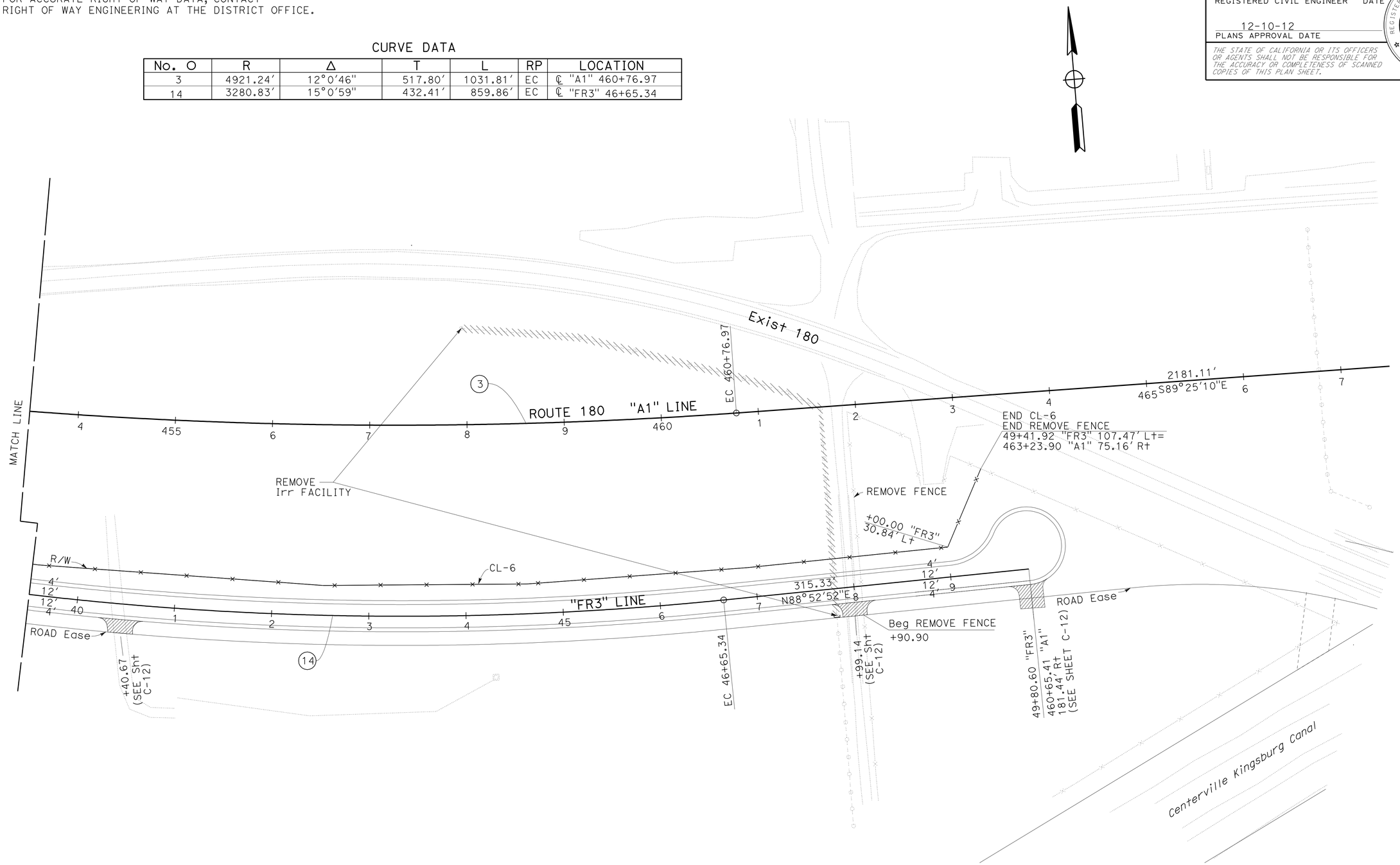


**LAYOUT**
**L-12**

SCALE: 1" = 50′

| REVISED BY | DATE REVISED |
|---|---|
| IA | 07/09/12 |

CALCULATED-DESIGNED BY: JOO BAEK
CHECKED BY: SANKU G. MOHAN
FUNCTIONAL SUPERVISOR: SANKU G. MOHAN

STATE OF CALIFORNIA - DEPARTMENT OF TRANSPORTATION
Caltrans
**DESIGN**

LAST REVISION 07-09-12 | DATE PLOTTED => 13-DEC-2012 | TIME PLOTTED => 06:35

| Dist | COUNTY | ROUTE | POST MILES TOTAL PROJECT | SHEET No. | TOTAL SHEETS |
|---|---|---|---|---|---|
| 06 | Fre | 180 | R71.8/74.5 | 21 | 235 |

Lawrence Michael Lowe 7-09-12
REGISTERED CIVIL ENGINEER DATE

12-10-12
PLANS APPROVAL DATE

REGISTERED PROFESSIONAL ENGINEER LAWRENCE MICHAEL LOWE No. 66753 Exp. 9/30/12 CIVIL STATE OF CALIFORNIA

*THE STATE OF CALIFORNIA OR ITS OFFICERS OR AGENTS SHALL NOT BE RESPONSIBLE FOR THE ACCURACY OR COMPLETENESS OF SCANNED COPIES OF THIS PLAN SHEET.*

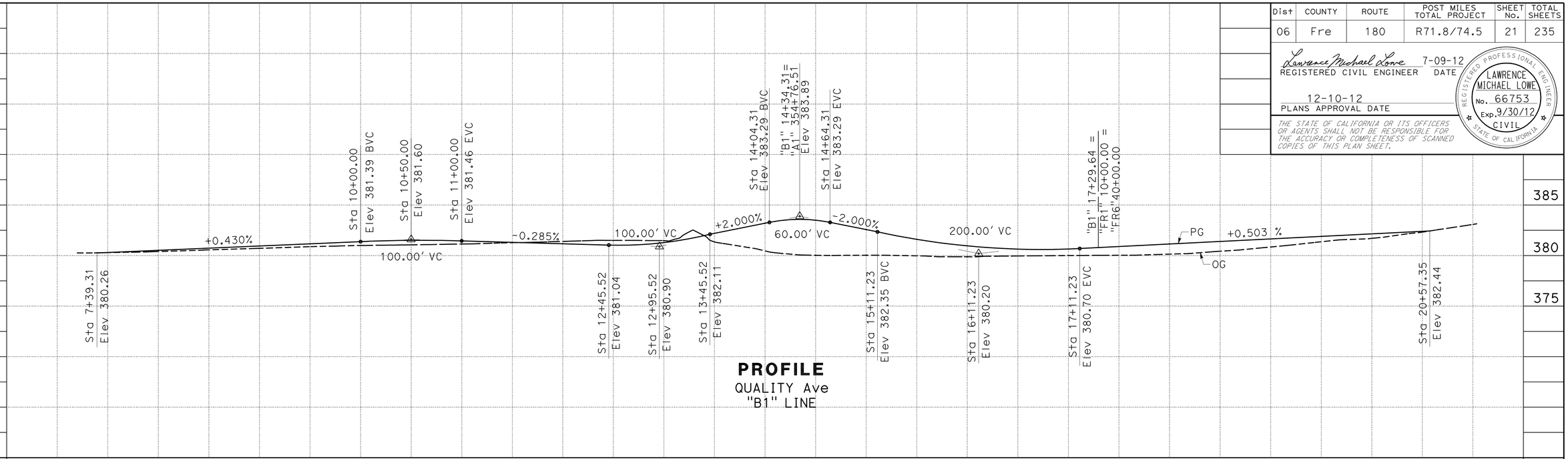


**PROFILE**
QUALITY Ave
"B1" LINE

| STATION | 7 | 8 | 9 | 10 | 1 | 2 | 3 | 4 | 15 | 6 | 7 | 8 | 9 | 20 | 1 | TOTAL |
|---|---|---|---|---|---|---|---|---|---|---|---|---|---|---|---|---|
| CY Exc | | | | | | | | 3,896 | | | | | | | | |
| CY Emb | | | | | | | | 50 | | | | | | | | |

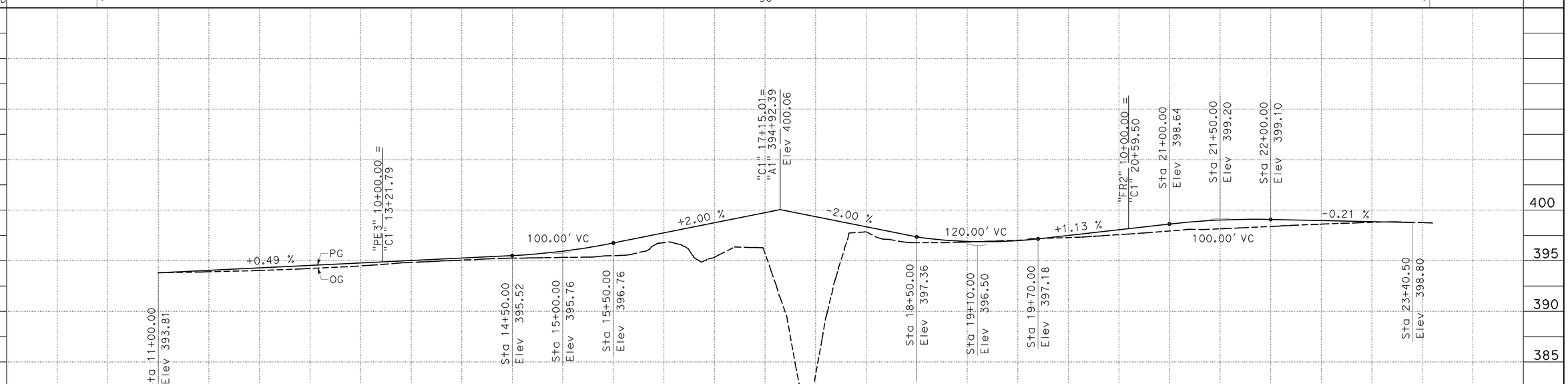


**PROFILE**
NEWMARK Ave
"C1" LINE

SCALE: Horiz 1" = 50'
Vert 1" = 5'

**PROFILE**
**P-1**

| STATION | 11 | 2 | 3 | 4 | 15 | 6 | 7 | 8 | 9 | 20 | 1 | 2 | 3 | TOTAL |
|---|---|---|---|---|---|---|---|---|---|---|---|---|---|---|
| CY Exc | | | | | | | 3802 | | | | | | | |
| CY Emb | | | | | | | 36 | | | | | | | |

| REVISED BY | DATE REVISED |
|---|---|
| IA | 07/09/12 |

| CALCULATED-DESIGNED BY | CHECKED BY |
|---|---|
| JOO BAEK | HARJINDER SEKHON |

FUNCTIONAL SUPERVISOR: SANKU G. MOHAN

STATE OF CALIFORNIA - DEPARTMENT OF TRANSPORTATION
Caltrans®
**DESIGN**

LAST REVISION 07-09-12 | DATE PLOTTED => 13-DEC-2012 | TIME PLOTTED => 06:35

| Dist | COUNTY | ROUTE | POST MILES TOTAL PROJECT | SHEET No. | TOTAL SHEETS |
|---|---|---|---|---|---|
| 06 | Fre | 180 | R71.8/74.5 | 22 | 235 |

REGISTERED CIVIL ENGINEER 7-09-12 DATE

12-10-12
PLANS APPROVAL DATE

REGISTERED PROFESSIONAL ENGINEER
HARJINDER SEKHON
No. 76396
Exp. 12-31-12
CIVIL
STATE OF CALIFORNIA

*THE STATE OF CALIFORNIA OR ITS OFFICERS OR AGENTS SHALL NOT BE RESPONSIBLE FOR THE ACCURACY OR COMPLETENESS OF SCANNED COPIES OF THIS PLAN SHEET.*

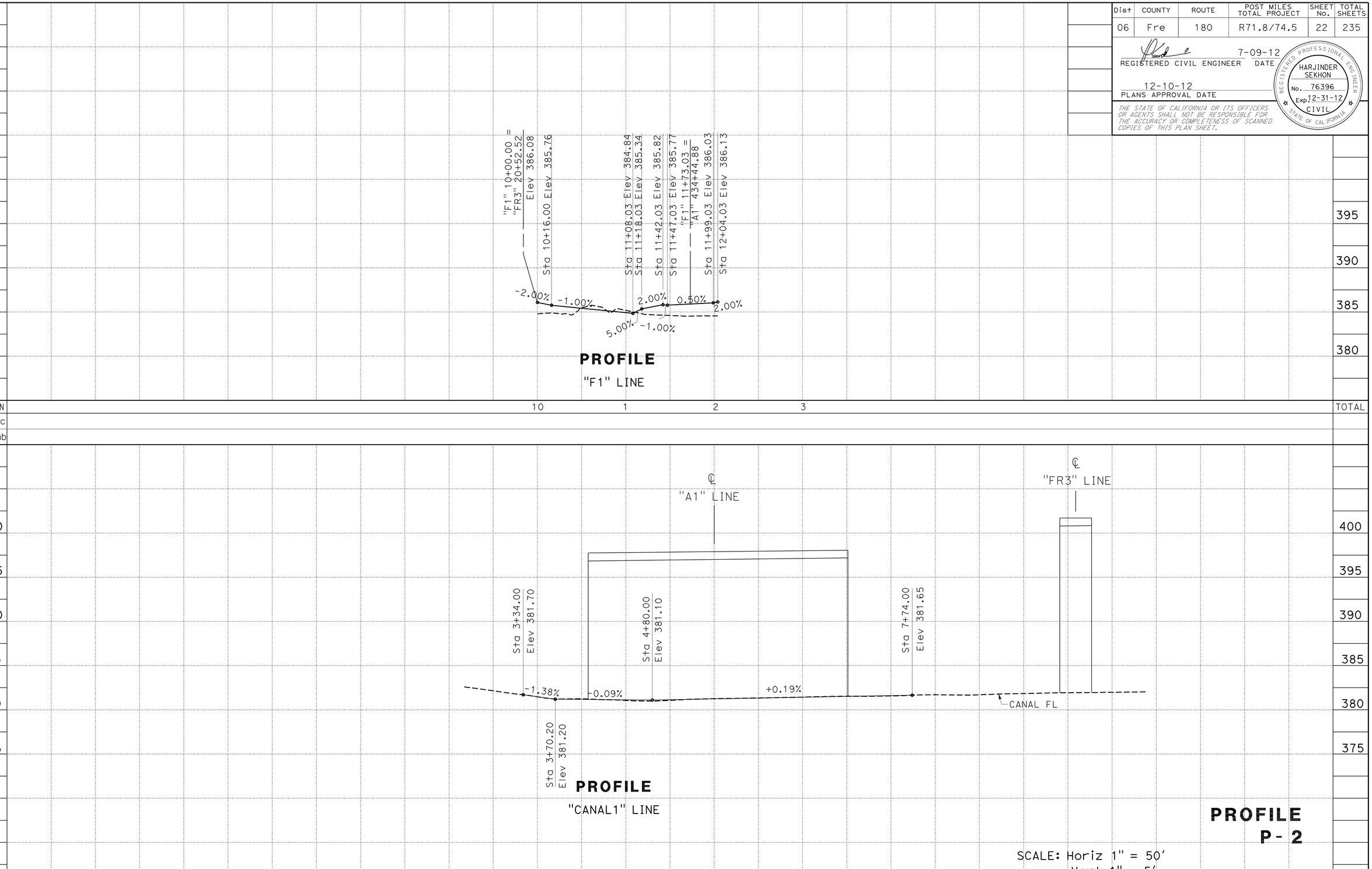


STATE OF CALIFORNIA - DEPARTMENT OF TRANSPORTATION
Caltrans
DESIGN

FUNCTIONAL SUPERVISOR: SANKU G. MOHAN
CALCULATED-DESIGNED BY: HARJINDER SEKHON
CHECKED BY:
REVISED BY: IA
DATE REVISED: 07/09/12
JOO BAEK

LAST REVISION 07-11-12
DATE PLOTTED => 13-DEC-2012
TIME PLOTTED => 06:35

| Dist | COUNTY | ROUTE | POST MILES TOTAL PROJECT | SHEET No. | TOTAL SHEETS |
|---|---|---|---|---|---|
| 06 | Fre | 180 | R71.8/74.5 | 23 | 235 |

REGISTERED CIVIL ENGINEER 7-09-12 DATE

12-10-12
PLANS APPROVAL DATE

REGISTERED PROFESSIONAL ENGINEER HARJINDER SEKHON No. 76396 Exp. 12-31-12 CIVIL STATE OF CALIFORNIA

*THE STATE OF CALIFORNIA OR ITS OFFICERS OR AGENTS SHALL NOT BE RESPONSIBLE FOR THE ACCURACY OR COMPLETENESS OF SCANNED COPIES OF THIS PLAN SHEET.*

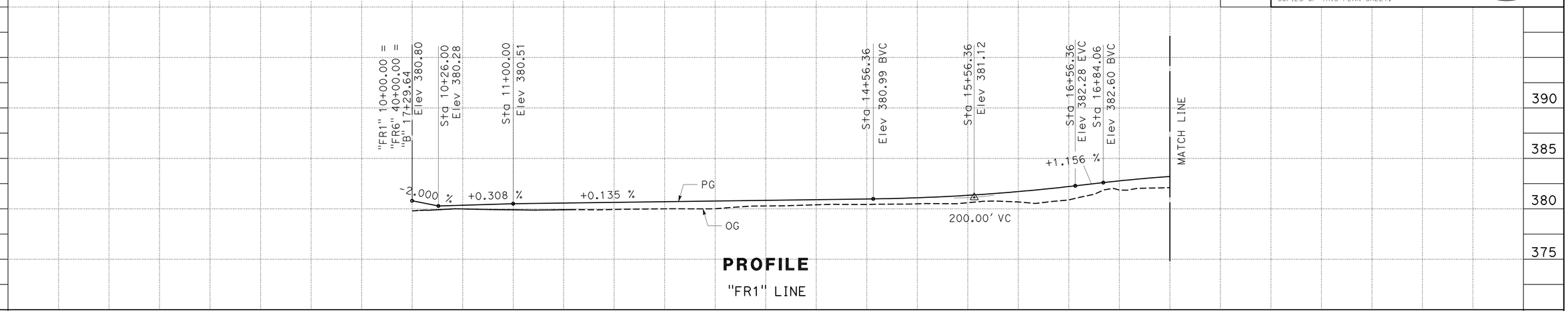


**PROFILE**

"FR1" LINE

| STATION | | 10+00 | 1 | 2 | 3 | 4 | 15+00 | 6 | 17+00 | TOTAL |
|---|---|---|---|---|---|---|---|---|---|---|
| CY | Exc | 786 | | | | | | | | |
| | Emb | 71 | | | | | | | | |

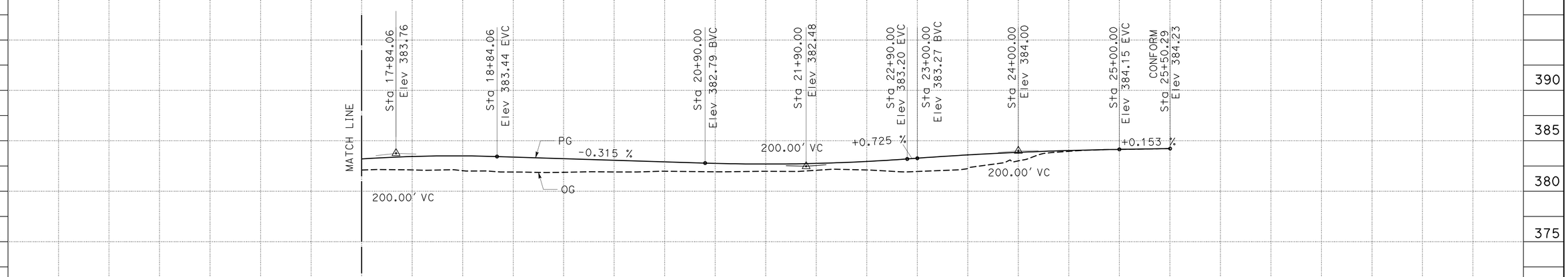


**PROFILE**

"FR1" LINE

| STATION | | 18+00 | 9 | 20+00 | 1 | 2 | 3 | 4 | 25+00 | TOTAL |
|---|---|---|---|---|---|---|---|---|---|---|
| CY | Exc | 441 | | | | | | | | |
| | Emb | 254 | | | | | | | | |

**PROFILE**
**P-3**

SCALE: Horiz 1" = 50'
Vert 1" = 5'

| REVISED BY | DATE REVISED |
|---|---|
| IA | 07/09/12 |

JOO BAEK — HARJINDER SEKHON — CALCULATED-DESIGNED BY — CHECKED BY

FUNCTIONAL SUPERVISOR: SANKU G. MOHAN

STATE OF CALIFORNIA - DEPARTMENT OF TRANSPORTATION — Caltrans — DESIGN

LAST REVISION 07-09-12 | DATE PLOTTED => 13-DEC-2012 | TIME PLOTTED => 06:35

| Dist | COUNTY | ROUTE | POST MILES TOTAL PROJECT | SHEET No. | TOTAL SHEETS |
|---|---|---|---|---|---|
| 06 | Fre | 180 | R71.8/74.5 | 24 | 235 |

REGISTERED CIVIL ENGINEER 7-09-12 DATE

12-10-12
PLANS APPROVAL DATE

REGISTERED PROFESSIONAL ENGINEER HARJINDER SEKHON No. 76396 Exp. 12-31-12 CIVIL STATE OF CALIFORNIA

*THE STATE OF CALIFORNIA OR ITS OFFICERS OR AGENTS SHALL NOT BE RESPONSIBLE FOR THE ACCURACY OR COMPLETENESS OF SCANNED COPIES OF THIS PLAN SHEET.*

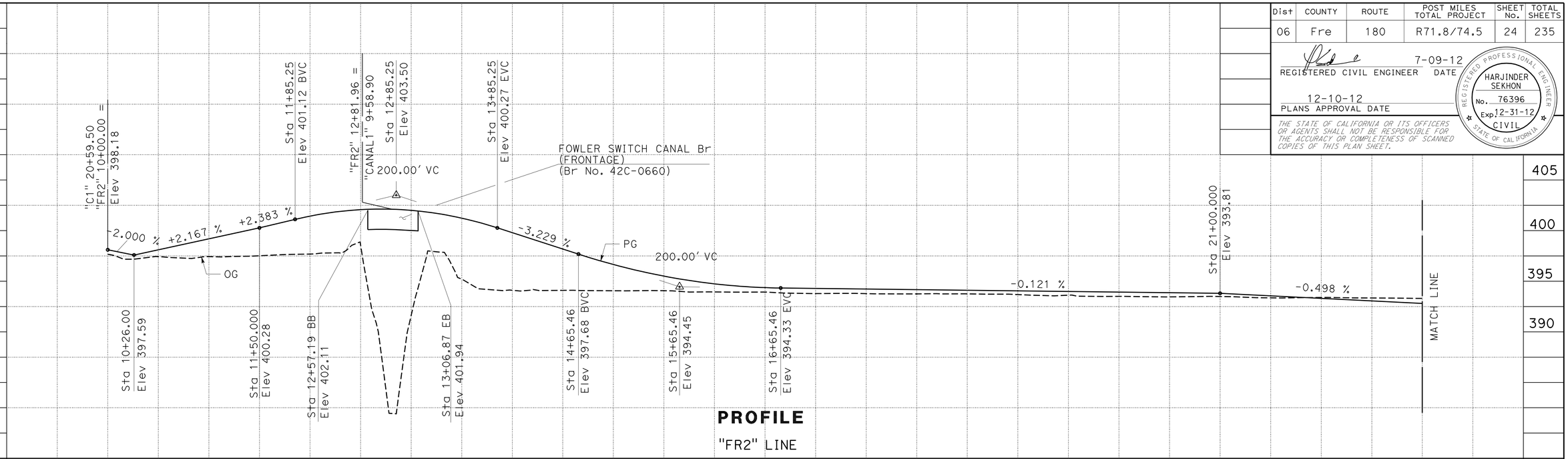


**PROFILE**

"FR2" LINE

| STATION | | 10+00 | 1 | 2 | 3 | 4 | 15+00 | 6 | 7 | 8 | 9 | 20+00 | 1 | 2 | 23+00 | TOTAL |
|---|---|---|---|---|---|---|---|---|---|---|---|---|---|---|---|---|
| CY | Exc | 939 | | | | | | | | | | | | | | |
| | Emb | 2,105 | | | | | | | | | | | | | | |

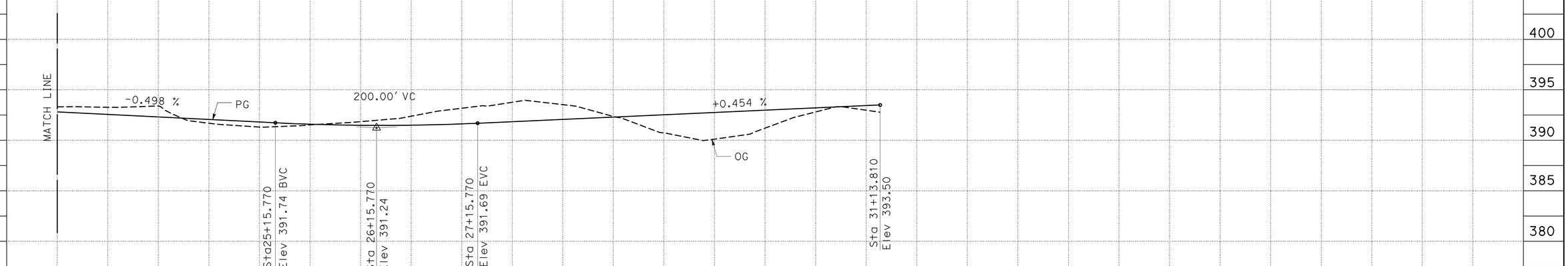


**PROFILE**

"FR2" LINE

**PROFILE**
**P-4**

SCALE: Horiz 1" = 50'
Vert 1" = 5'

| STATION | | 23+00 | 4 | 25+00 | 6 | 7 | 8 | 9 | 30+00 | 1 | 2 | 3 | 4 | 35+00 | 6 | 37+00 | TOTAL |
|---|---|---|---|---|---|---|---|---|---|---|---|---|---|---|---|---|---|
| CY | Exc | 1,917 | | | | | | | | | | | | | | | |
| | Emb | 263 | | | | | | | | | | | | | | | |

| REVISED BY | DATE REVISED |
|---|---|
| IA | 07/09/12 |

JOO BAEK — HARJINDER SEKHON — CALCULATED-DESIGNED BY — CHECKED BY

FUNCTIONAL SUPERVISOR: SANKU G. MOHAN

STATE OF CALIFORNIA - DEPARTMENT OF TRANSPORTATION — DESIGN — Caltrans

LAST REVISION 07-09-12 | DATE PLOTTED => 13-DEC-2012 | TIME PLOTTED => 06:35

| Dist | COUNTY | ROUTE | POST MILES TOTAL PROJECT | SHEET No. | TOTAL SHEETS |
|---|---|---|---|---|---|
| 06 | Fre | 180 | R71.8/74.5 | 25 | 235 |

REGISTERED CIVIL ENGINEER 7-09-12 DATE

12-10-12
PLANS APPROVAL DATE

REGISTERED PROFESSIONAL ENGINEER HARJINDER SEKHON No. 76396 Exp. 12-31-12 CIVIL STATE OF CALIFORNIA

*THE STATE OF CALIFORNIA OR ITS OFFICERS OR AGENTS SHALL NOT BE RESPONSIBLE FOR THE ACCURACY OR COMPLETENESS OF SCANNED COPIES OF THIS PLAN SHEET.*

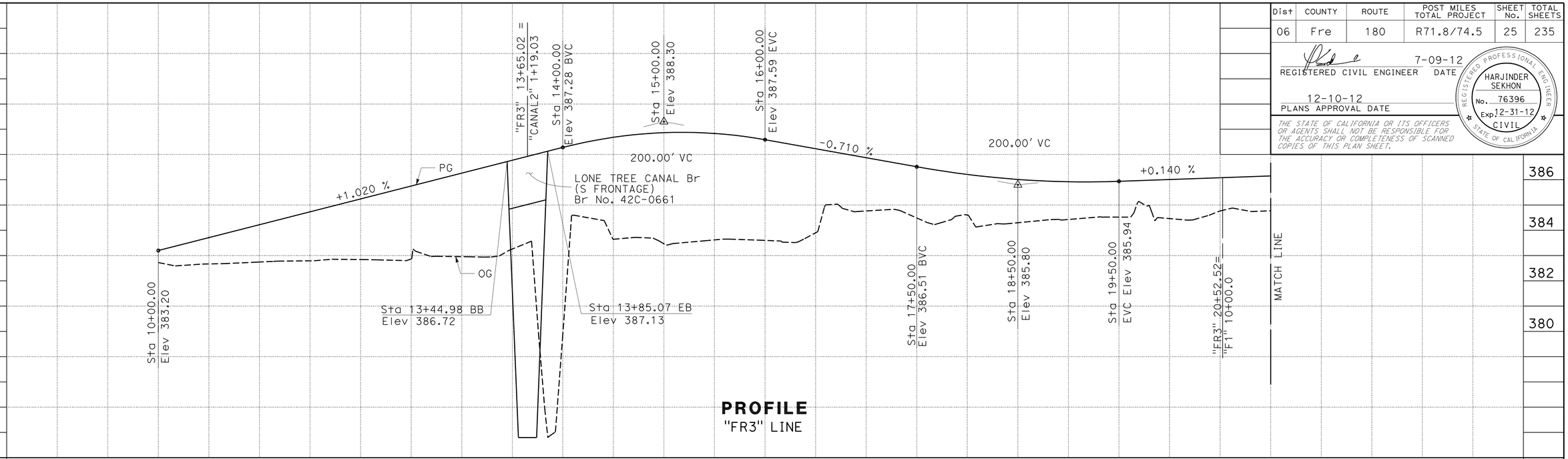


**PROFILE**
"FR3" LINE

| STATION | | 10+00 | 1 | 2 | 3 | 4 | 15+00 | 6 | 7 | 8 | 9 | 20+00 | 1 | TOTAL |
|---|---|---|---|---|---|---|---|---|---|---|---|---|---|---|
| CY | Exc | 271 | | | | | | | | | | | | |
| | Emb | 2,797 | | | | | | | | | | | | |

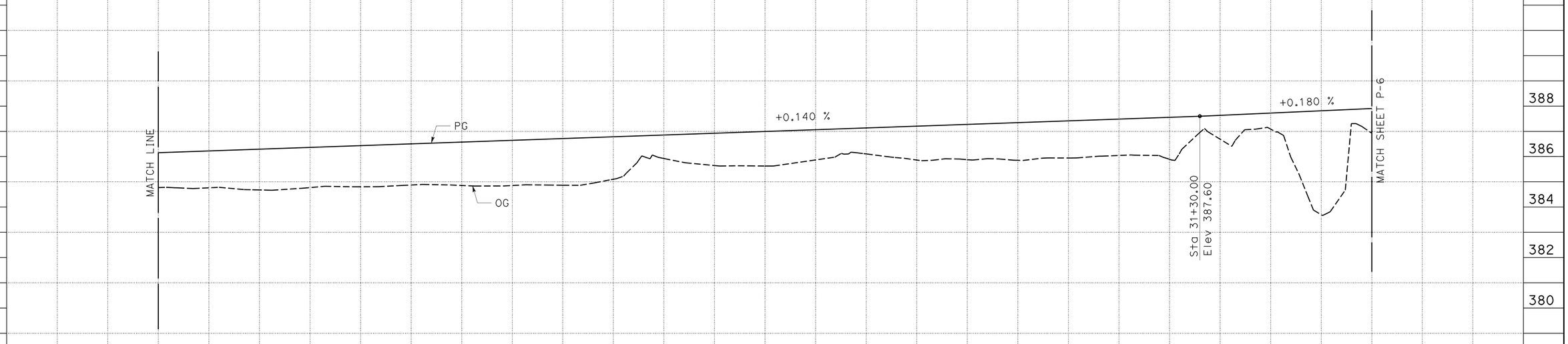


**PROFILE**
"FR3" LINE

**PROFILE**
**P - 5**

SCALE: Horiz 1" = 50'
Vert 1" = 2'

| STATION | | 21+00 | 2 | 3 | 4 | 25+00 | 6 | 7 | 8 | 9 | 30+00 | 1 | 2 | 3 | TOTAL |
|---|---|---|---|---|---|---|---|---|---|---|---|---|---|---|---|
| CY | Exc | 325 | | | | | | | | | | | | | |
| | Emb | 1,115 | | | | | | | | | | | | | |

| | | | |
|---|---|---|---|
| IA | 07/09/12 | REVISED BY | DATE REVISED |
| JOO BAEK | HARJINDER SEKHON | CALCULATED-DESIGNED BY | CHECKED BY |
| FUNCTIONAL SUPERVISOR | SANKU G. MOHAN | | |

STATE OF CALIFORNIA - DEPARTMENT OF TRANSPORTATION
Caltrans
DESIGN

LAST REVISION 07-09-12 | DATE PLOTTED => 13-DEC-2012 | TIME PLOTTED => 06:36

| Dist | COUNTY | ROUTE | POST MILES TOTAL PROJECT | SHEET No. | TOTAL SHEETS |
|---|---|---|---|---|---|
| 06 | Fre | 180 | R71.8/74.5 | 26 | 235 |

REGISTERED CIVIL ENGINEER 7-09-12 DATE

12-10-12
PLANS APPROVAL DATE

REGISTERED PROFESSIONAL ENGINEER
HARJINDER SEKHON
No. 76396
Exp. 12-31-12
CIVIL
STATE OF CALIFORNIA

*THE STATE OF CALIFORNIA OR ITS OFFICERS OR AGENTS SHALL NOT BE RESPONSIBLE FOR THE ACCURACY OR COMPLETENESS OF SCANNED COPIES OF THIS PLAN SHEET.*

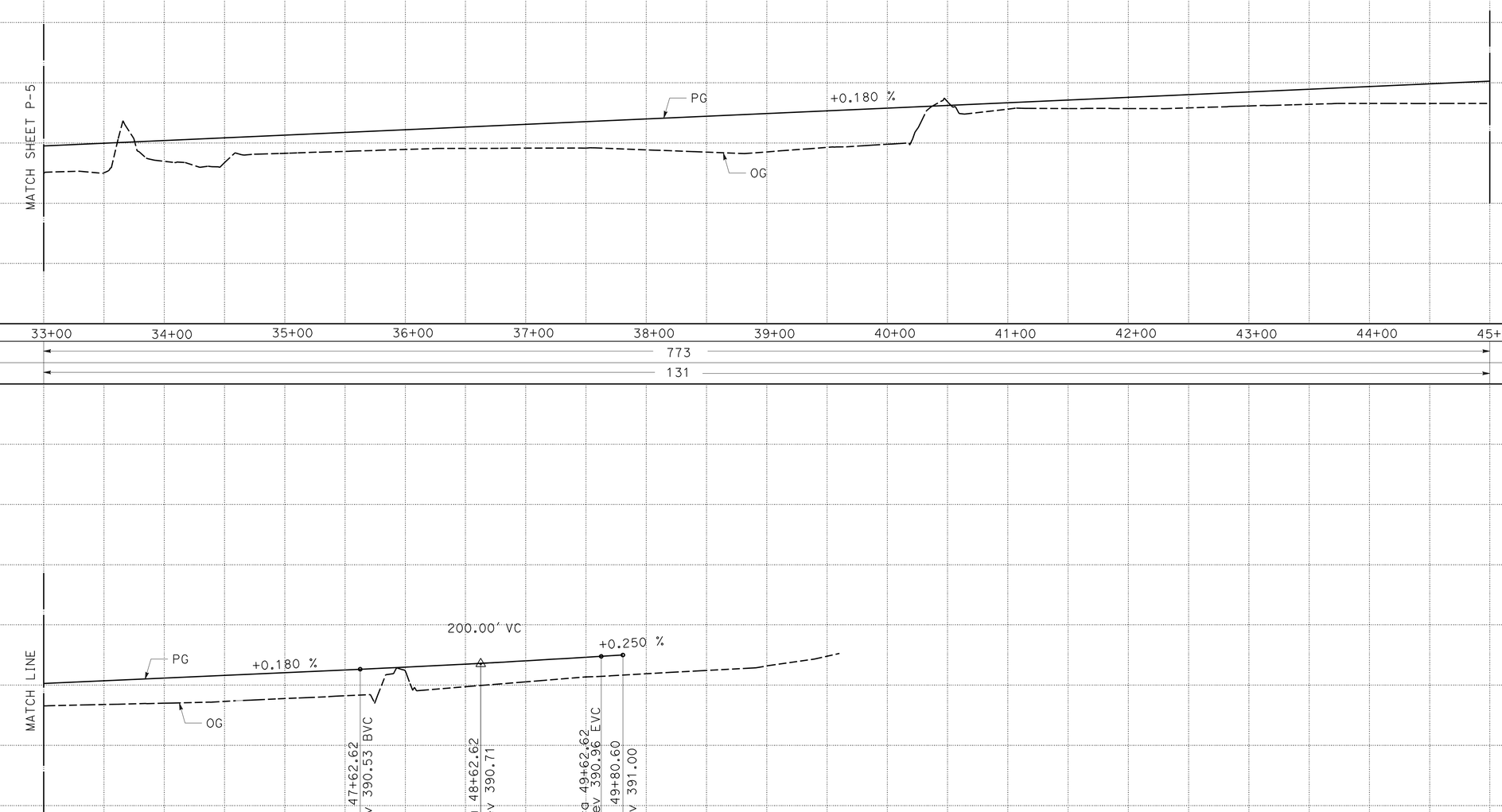


| STATION | | 33+00 | 34+00 | 35+00 | 36+00 | 37+00 | 38+00 | 39+00 | 40+00 | 41+00 | 42+00 | 43+00 | 44+00 | 45+00 | TOTAL |
|---|---|---|---|---|---|---|---|---|---|---|---|---|---|---|---|
| CY | Exc | 773 | | | | | | | | | | | | | |
| | Emb | 131 | | | | | | | | | | | | | |

| STATION | | 45+00 | 46+00 | 47+00 | 48+00 | 49+00 | 50+00 | 51+00 | 52+00 | 53+00 | 54+00 | 55+00 | TOTAL |
|---|---|---|---|---|---|---|---|---|---|---|---|---|---|
| CY | Exc | 259 | | | | | | | | | | | |
| | Emb | 37 | | | | | | | | | | | |

**PROFILE**
"FR3" LINE

SCALE: Horiz 1" = 50'
Vert 1" = 2'

**PROFILE**
**P-6**

STATE OF CALIFORNIA - DEPARTMENT OF TRANSPORTATION
Caltrans
**DESIGN**

FUNCTIONAL SUPERVISOR: SANKU G. MOHAN

CALCULATED-DESIGNED BY: HARJINDER SEKHON
CHECKED BY: JOO BAEK

REVISED BY: IA
DATE REVISED: 07/09/12

LAST REVISION DATE PLOTTED => 13-DEC-2012
07-09-12 TIME PLOTTED => 06:36

| Dist | COUNTY | ROUTE | POST MILES TOTAL PROJECT | SHEET No. | TOTAL SHEETS |
|---|---|---|---|---|---|
| 06 | Fre | 180 | R71.8/74.5 | 27 | 235 |

REGISTERED CIVIL ENGINEER 7-09-12 DATE

12-10-12
PLANS APPROVAL DATE

REGISTERED PROFESSIONAL ENGINEER
HARJINDER SEKHON
No. 76396
Exp. 12-31-12
CIVIL
STATE OF CALIFORNIA

*THE STATE OF CALIFORNIA OR ITS OFFICERS OR AGENTS SHALL NOT BE RESPONSIBLE FOR THE ACCURACY OR COMPLETENESS OF SCANNED COPIES OF THIS PLAN SHEET.*

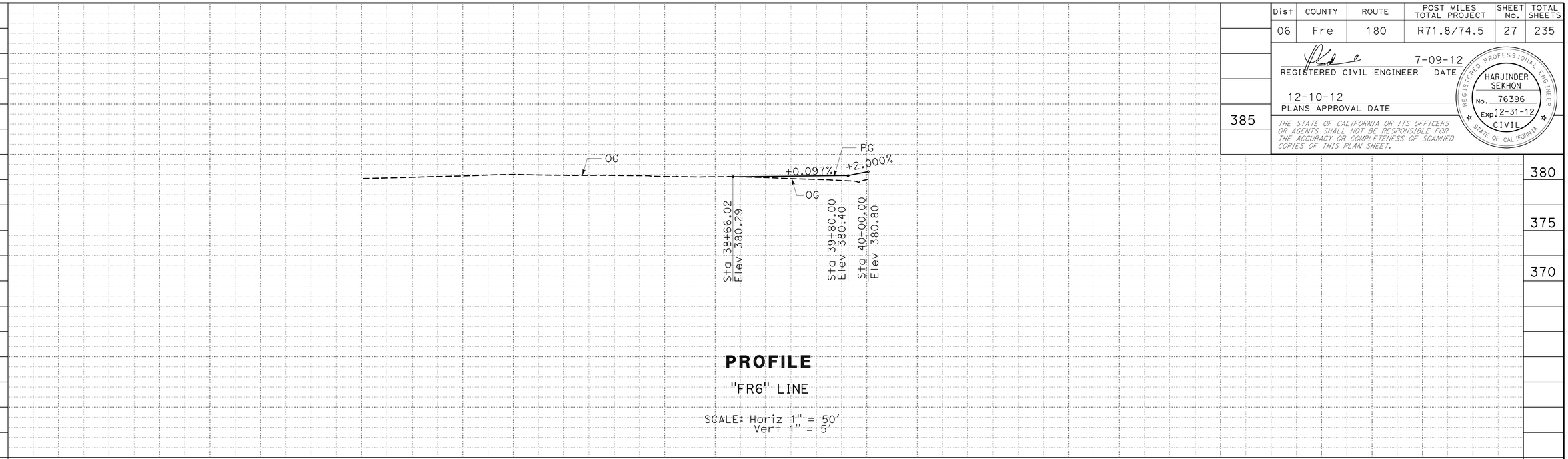


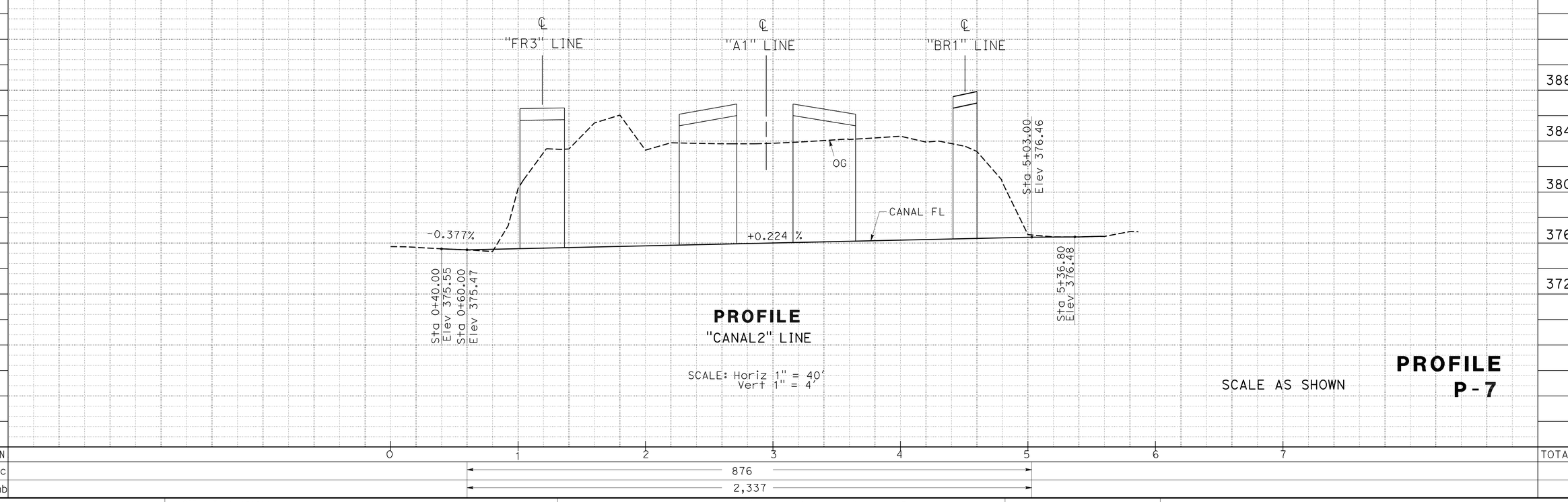


SCALE AS SHOWN

**PROFILE**
**P-7**

| | |
|---|---|
| REVISED BY | IA |
| DATE REVISED | 07/09/12 |
| CALCULATED-DESIGNED BY | HARJINDER SEKHON |
| CHECKED BY | SANKU G. MOHAN |
| FUNCTIONAL SUPERVISOR | SANKU G. MOHAN |

STATE OF CALIFORNIA - DEPARTMENT OF TRANSPORTATION
Caltrans
DESIGN

LAST REVISION 04-24-12
DATE PLOTTED => 13-DEC-2012
TIME PLOTTED => 06:36

| Dist | COUNTY | ROUTE | POST MILES TOTAL PROJECT | SHEET No. | TOTAL SHEETS |
|---|---|---|---|---|---|
| 06 | Fre | 180 | R71.8/74.5 | 28 | 235 |

REGISTERED CIVIL ENGINEER 7-09-12 DATE

12-10-12
PLANS APPROVAL DATE

REGISTERED PROFESSIONAL ENGINEER HARJINDER SEKHON No. 76396 Exp. 12-31-12 CIVIL STATE OF CALIFORNIA

*THE STATE OF CALIFORNIA OR ITS OFFICERS OR AGENTS SHALL NOT BE RESPONSIBLE FOR THE ACCURACY OR COMPLETENESS OF SCANNED COPIES OF THIS PLAN SHEET.*

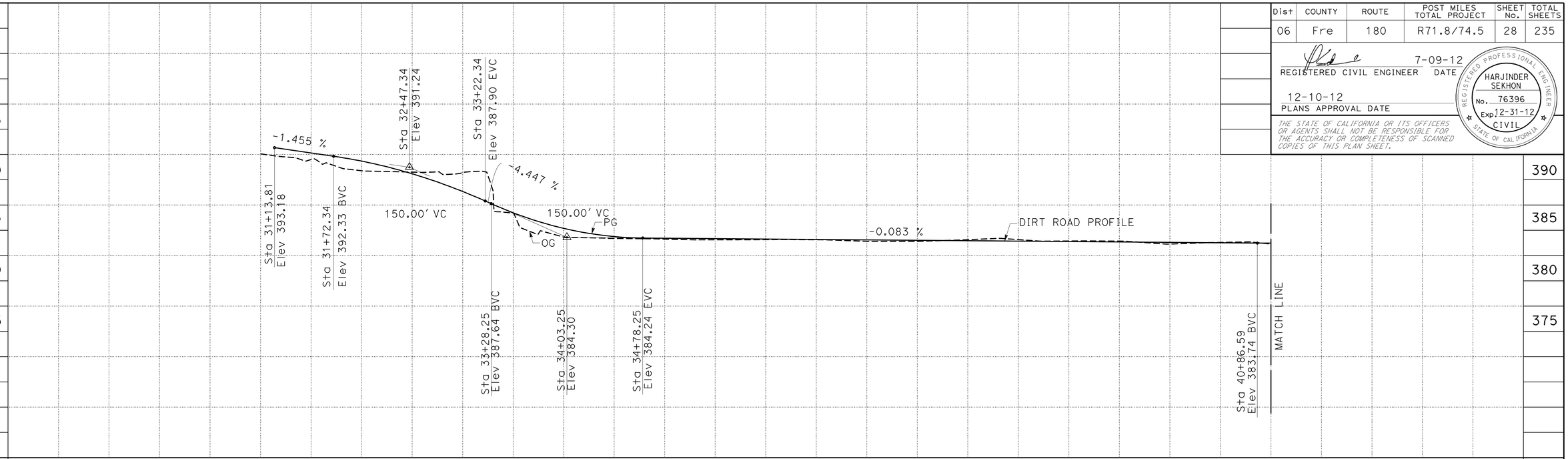


| STATION | | 30 | 1 | 2 | 3 | 4 | 35 | 6 | 7 | 8 | 9 | 40 | 1 | TOTAL |
|---|---|---|---|---|---|---|---|---|---|---|---|---|---|---|
| CY | Exc | | | | | | 72 | | | | | | | |
| | Emb | | | | | | 137 | | | | | | | |

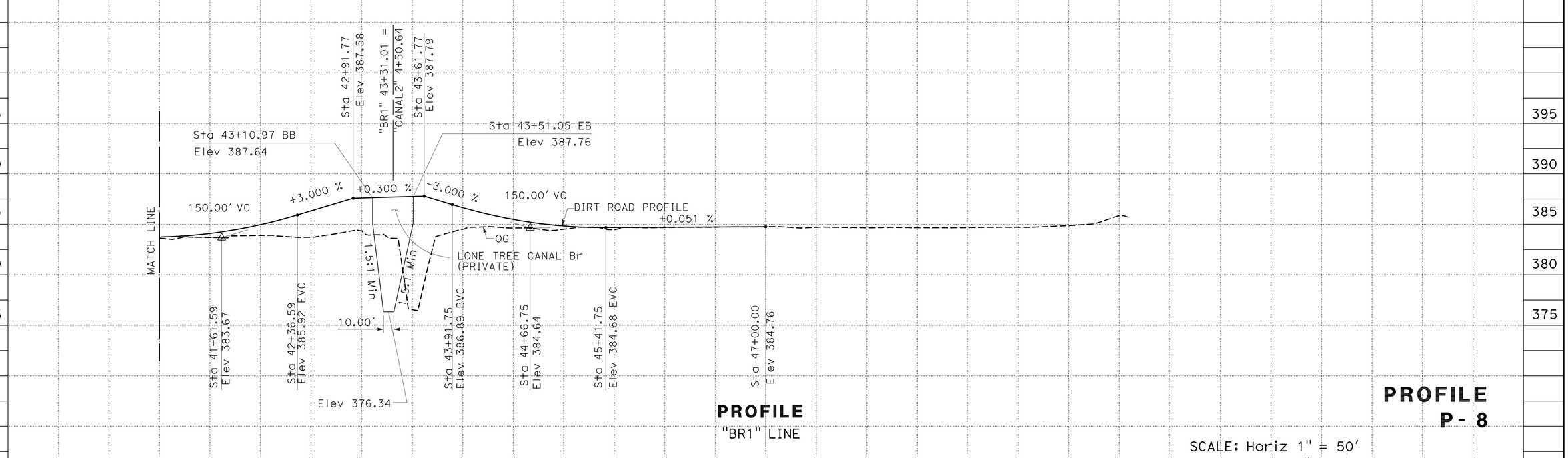


**PROFILE**
"BR1" LINE

**PROFILE**
**P- 8**

SCALE: Horiz 1" = 50'
Vert 1" = 5'

| STATION | | 41 | 2 | 3 | 4 | 45 | 6 | 7 | 8 | 9 | 50 | TOTAL |
|---|---|---|---|---|---|---|---|---|---|---|---|---|
| CY | Exc | | | | | | 671 | | | | | |
| | Emb | | | | | | 7 | | | | | |

| REVISED BY | DATE REVISED |
|---|---|
| IA | 07/09/12 |

HARJINDER SEKHON — CALCULATED-DESIGNED BY
SANKU G. MOHAN — CHECKED BY
SANKU G. MOHAN — FUNCTIONAL SUPERVISOR

STATE OF CALIFORNIA - DEPARTMENT OF TRANSPORTATION
Caltrans
DESIGN

LAST REVISION 07-09-12 | DATE PLOTTED => 13-DEC-2012 | TIME PLOTTED => 06:36

| Dist | COUNTY | ROUTE | POST MILES TOTAL PROJECT | SHEET No. | TOTAL SHEETS |
|---|---|---|---|---|---|
| 06 | Fre | 180 | R71.8/74.5 | 29 | 235 |

REGISTERED CIVIL ENGINEER 7-09-12 DATE

12-10-12
PLANS APPROVAL DATE

REGISTERED PROFESSIONAL ENGINEER
HARJINDER SEKHON
No. 76396
Exp. 12-31-12
CIVIL
STATE OF CALIFORNIA

*THE STATE OF CALIFORNIA OR ITS OFFICERS OR AGENTS SHALL NOT BE RESPONSIBLE FOR THE ACCURACY OR COMPLETENESS OF SCANNED COPIES OF THIS PLAN SHEET.*

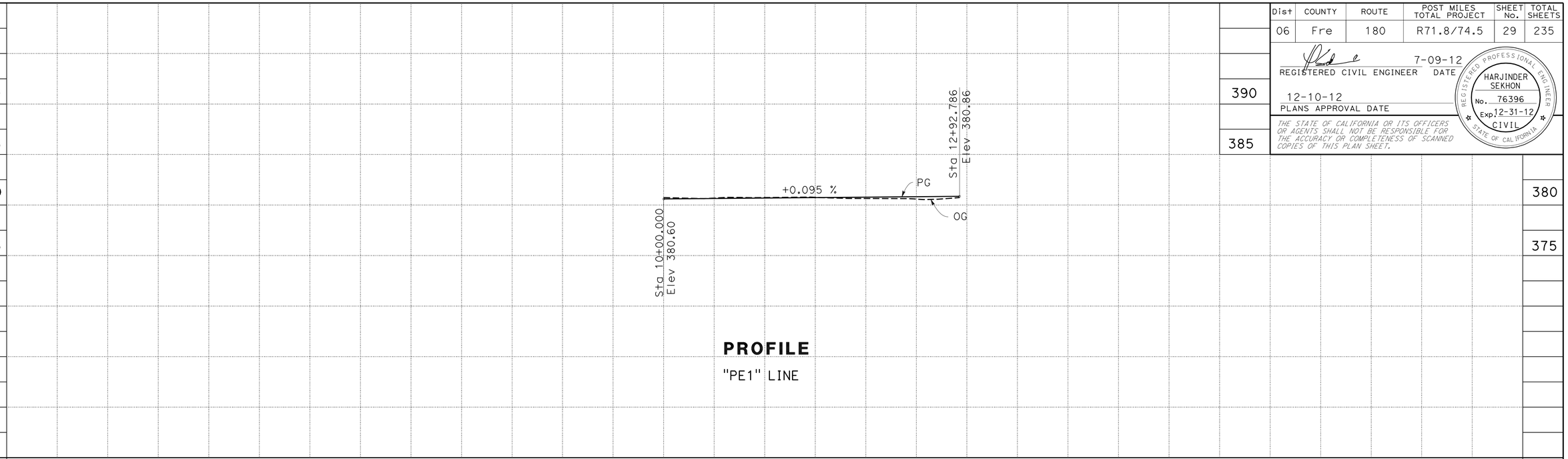


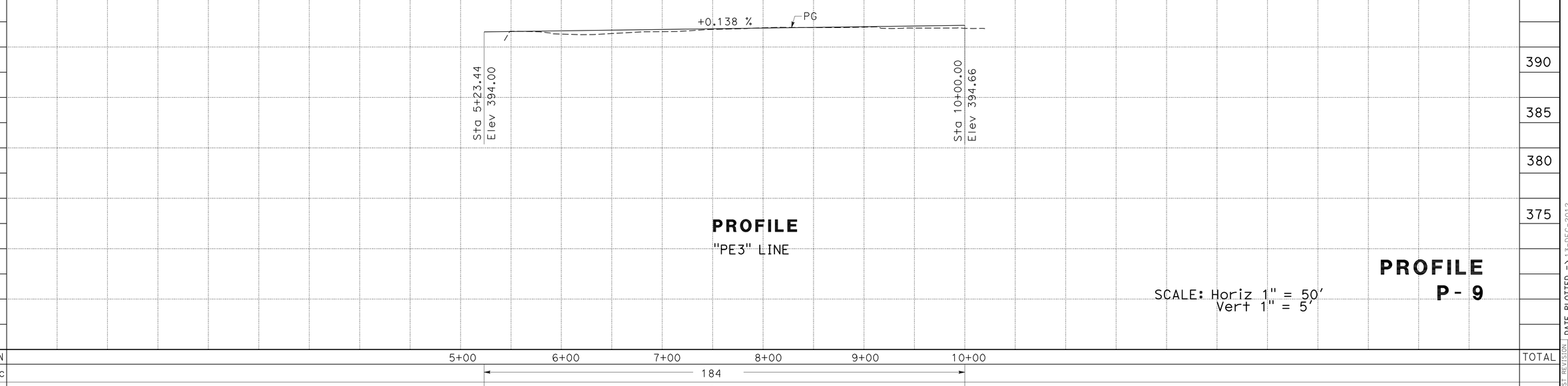


SCALE: Horiz 1" = 50'
Vert 1" = 5'

# PROFILE
# P - 9

| REVISED BY | DATE REVISED |
|---|---|
| IA | 07/09/12 |

HARJINDER SEKHON — CALCULATED-DESIGNED BY
SANKU G. MOHAN — CHECKED BY
SANKU G. MOHAN — FUNCTIONAL SUPERVISOR

STATE OF CALIFORNIA - DEPARTMENT OF TRANSPORTATION
Caltrans
DESIGN

LAST REVISION 07-09-12
DATE PLOTTED => 13-DEC-2012
TIME PLOTTED => 06:36

| Dist | COUNTY | ROUTE | POST MILES TOTAL PROJECT | SHEET No. | TOTAL SHEETS |
|---|---|---|---|---|---|
| 06 | Fre | 180 | R71.8/74.5 | 30 | 235 |

REGISTERED CIVIL ENGINEER 7-09-12 DATE

12-10-12
PLANS APPROVAL DATE

REGISTERED PROFESSIONAL ENGINEER HARJINDER SEKHON No. 76396 Exp. 12-31-12 CIVIL STATE OF CALIFORNIA

*THE STATE OF CALIFORNIA OR ITS OFFICERS OR AGENTS SHALL NOT BE RESPONSIBLE FOR THE ACCURACY OR COMPLETENESS OF SCANNED COPIES OF THIS PLAN SHEET.*

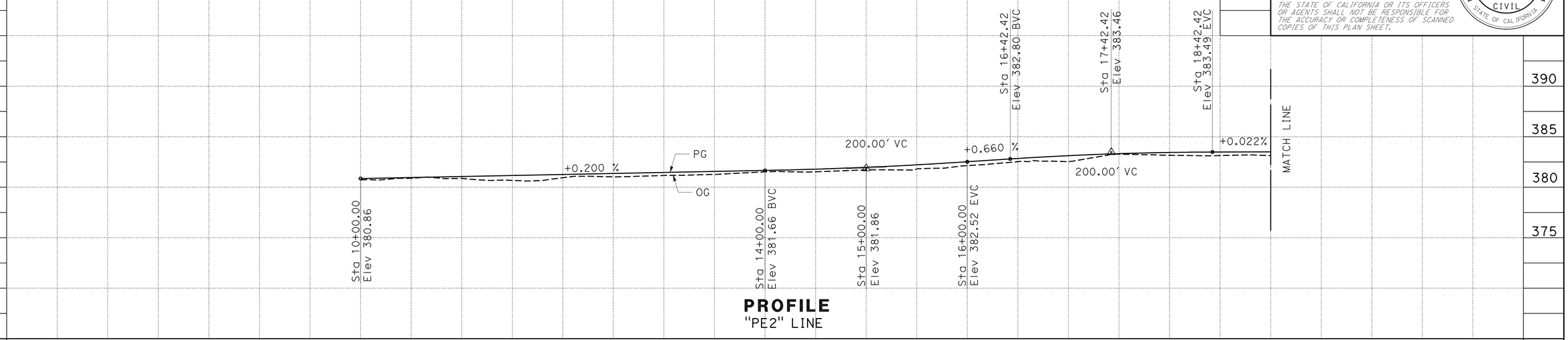


**PROFILE**
"PE2" LINE

| STATION | | 10+00 | 11+00 | 12+00 | 13+00 | 14+00 | 15+00 | 16+00 | 17+00 | 18+00 | 19+00 | TOTAL |
|---|---|---|---|---|---|---|---|---|---|---|---|---|
| CY | Exc | 72 | | | | | | | | | | |
| | Emb | 7 | | | | | | | | | | |

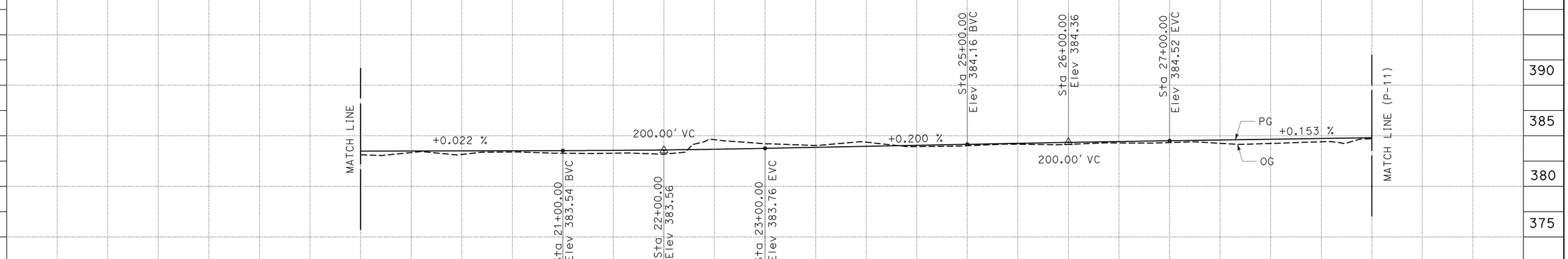


**PROFILE**
"PE2" LINE

**PROFILE**
**P-10**

SCALE: Horiz 1" = 50'
Vert 1" = 5'

| STATION | | 19+00 | 20+00 | 21+00 | 22+00 | 23+00 | 24+00 | 25+00 | 26+00 | 27+00 | 28+00 | 29+00 | 30+00 | TOTAL |
|---|---|---|---|---|---|---|---|---|---|---|---|---|---|---|
| CY | Exc | 242 | | | | | | | | | | | | |
| | Emb | 1 | | | | | | | | | | | | |

| REVISED BY | DATE REVISED |
|---|---|
| IA | 07/09/12 |

HARJINDER SEKHON — CALCULATED-DESIGNED BY
SANKU G. MOHAN — CHECKED BY
SANKU G. MOHAN — FUNCTIONAL SUPERVISOR

STATE OF CALIFORNIA - DEPARTMENT OF TRANSPORTATION
Caltrans
DESIGN

LAST REVISION 07-09-12 | DATE PLOTTED => 13-DEC-2012 | TIME PLOTTED => 06:36

| Dist | COUNTY | ROUTE | POST MILES TOTAL PROJECT | SHEET No. | TOTAL SHEETS |
|---|---|---|---|---|---|
| 06 | Fre | 180 | R71.8/74.5 | 31 | 235 |

REGISTERED CIVIL ENGINEER 7-09-12 DATE

12-10-12
PLANS APPROVAL DATE

REGISTERED PROFESSIONAL ENGINEER HARJINDER SEKHON No. 76396 Exp. 12-31-12 CIVIL STATE OF CALIFORNIA

*THE STATE OF CALIFORNIA OR ITS OFFICERS OR AGENTS SHALL NOT BE RESPONSIBLE FOR THE ACCURACY OR COMPLETENESS OF SCANNED COPIES OF THIS PLAN SHEET.*

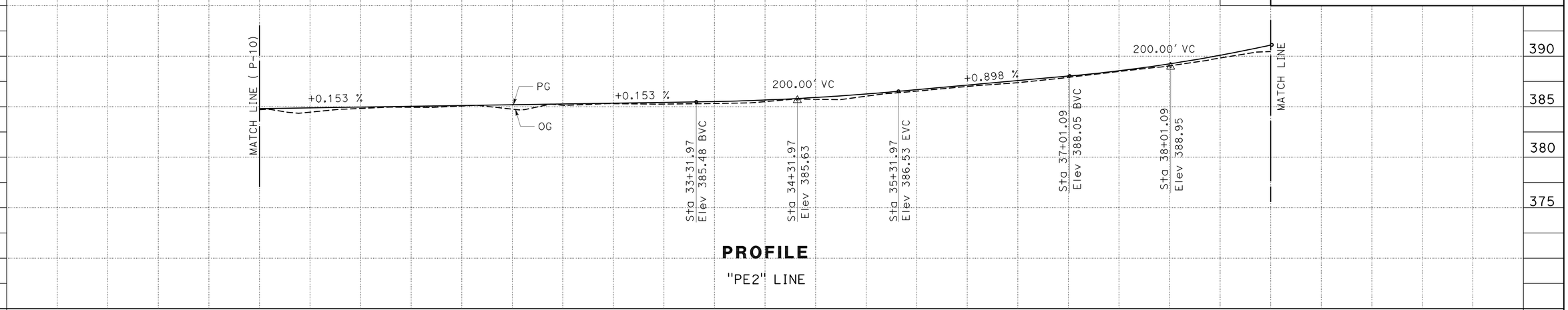


**PROFILE**

"PE2" LINE

| STATION | 29+00 | 30+00 | 31+00 | 32+00 | 33+00 | 34+00 | 35+00 | 36+00 | 37+00 | 38+00 | 39+00 | TOTAL |
|---|---|---|---|---|---|---|---|---|---|---|---|---|
| CY Exc | 154 | | | | | | | | | | | |
| CY Emb | 7 | | | | | | | | | | | |

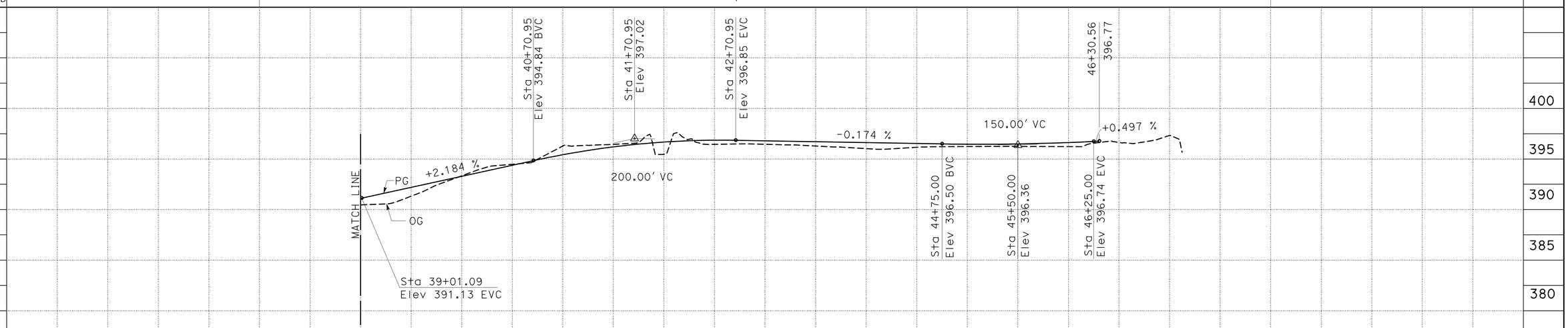


**PROFILE**

"PE2" LINE

SCALE: Horiz 1" = 50'
Vert 1" = 5'

**PROFILE**
**P - 11**

| STATION | 39+00 | 40+00 | 41+00 | 42+00 | 43+00 | 44+00 | 45+00 | 46+00 | 47+00 | TOTAL |
|---|---|---|---|---|---|---|---|---|---|---|
| CY Exc | 133 | | | | | | | | | |
| CY Emb | 86 | | | | | | | | | |

| | |
|---|---|
| REVISED BY | IA |
| DATE REVISED | 07/09/12 |
| HARJINDER SEKHON | |
| SANKU G. MOHAN | |
| CALCULATED-DESIGNED BY | |
| CHECKED BY | |
| FUNCTIONAL SUPERVISOR | SANKU G. MOHAN |

STATE OF CALIFORNIA - DEPARTMENT OF TRANSPORTATION
Caltrans
DESIGN

LAST REVISION DATE PLOTTED => 13-DEC-2012
07-09-12 TIME PLOTTED => 06:36

| Dist | COUNTY | ROUTE | POST MILES TOTAL PROJECT | SHEET No. | TOTAL SHEETS |
|---|---|---|---|---|---|
| 06 | Fre | 180 | R71.8/74.5 | 32 | 235 |

Lawrence Michael Lowe 7-09-12
REGISTERED CIVIL ENGINEER DATE

12-10-12
PLANS APPROVAL DATE

REGISTERED PROFESSIONAL ENGINEER
LAWRENCE MICHAEL LOWE
No. 66753
Exp. 9/30/12
CIVIL
STATE OF CALIFORNIA

*THE STATE OF CALIFORNIA OR ITS OFFICERS OR AGENTS SHALL NOT BE RESPONSIBLE FOR THE ACCURACY OR COMPLETENESS OF SCANNED COPIES OF THIS PLAN SHEET.*

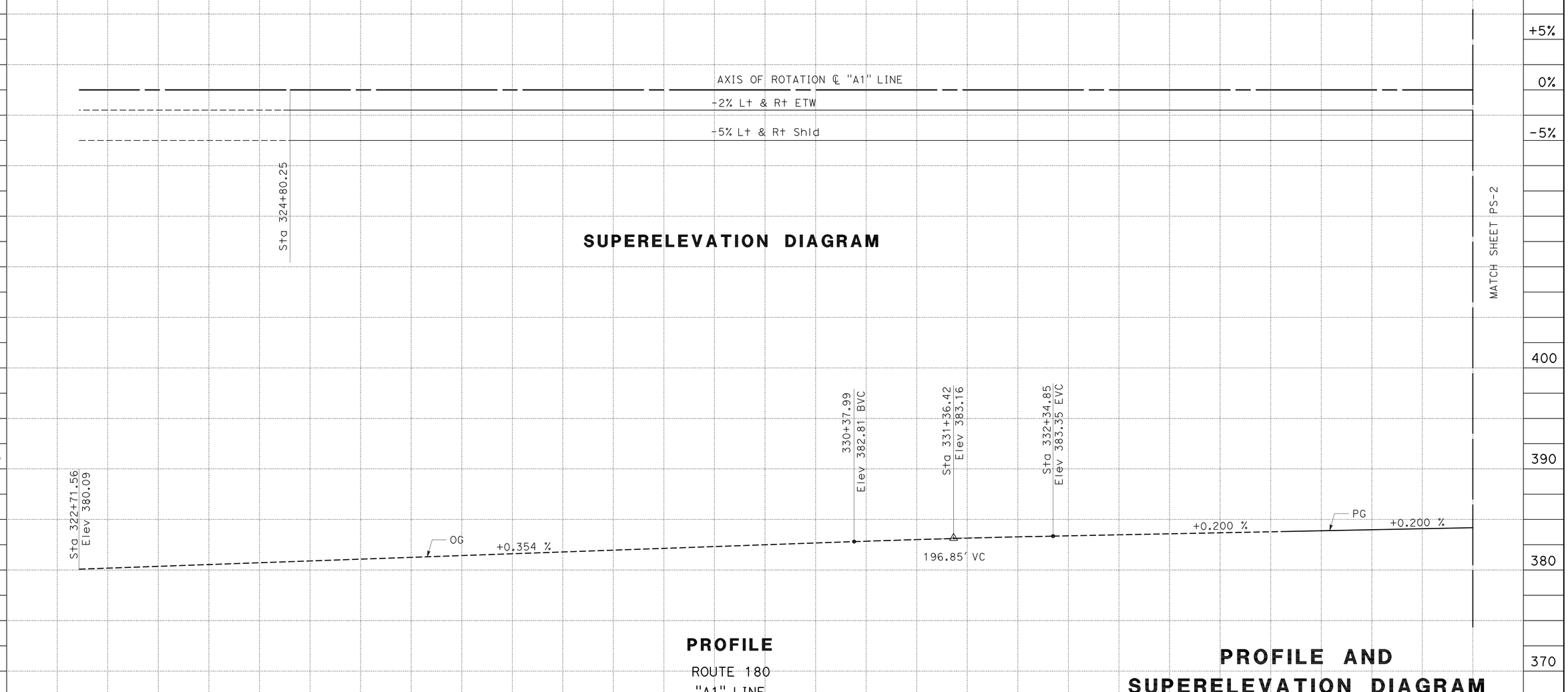


| STATION | 3 | 4 | 325+00 | 6 | 7 | 8 | 9 | 330+00 | 1 | 2 | 3 | 4 | 335+00 | 6 | TOTAL |
|---|---|---|---|---|---|---|---|---|---|---|---|---|---|---|---|
| CY Exc | 347 | | | | | | | | | | | | | | |
| CY Emb | 1,303 | | | | | | | | | | | | | | |

STATE OF CALIFORNIA - DEPARTMENT OF TRANSPORTATION
Caltrans
DESIGN

FUNCTIONAL SUPERVISOR: SANKU G. MOHAN
CALCULATED-DESIGNED BY: JOO BAEK
CHECKED BY: SANKU G. MOHAN
REVISED BY: IA
DATE REVISED: 04/24/12

LAST REVISION 07-09-12
DATE PLOTTED => 13-DEC-2012
TIME PLOTTED => 06:36

| Dist | COUNTY | ROUTE | POST MILES TOTAL PROJECT | SHEET No. | TOTAL SHEETS |
|---|---|---|---|---|---|
| 06 | Fre | 180 | R71.8/74.5 | 33 | 235 |

Lawrence Michael Lowe 7-09-12
REGISTERED CIVIL ENGINEER DATE

12-10-12
PLANS APPROVAL DATE

REGISTERED PROFESSIONAL ENGINEER
LAWRENCE MICHAEL LOWE
No. 66753
Exp. 9/30/12
CIVIL
STATE OF CALIFORNIA

*THE STATE OF CALIFORNIA OR ITS OFFICERS OR AGENTS SHALL NOT BE RESPONSIBLE FOR THE ACCURACY OR COMPLETENESS OF SCANNED COPIES OF THIS PLAN SHEET.*

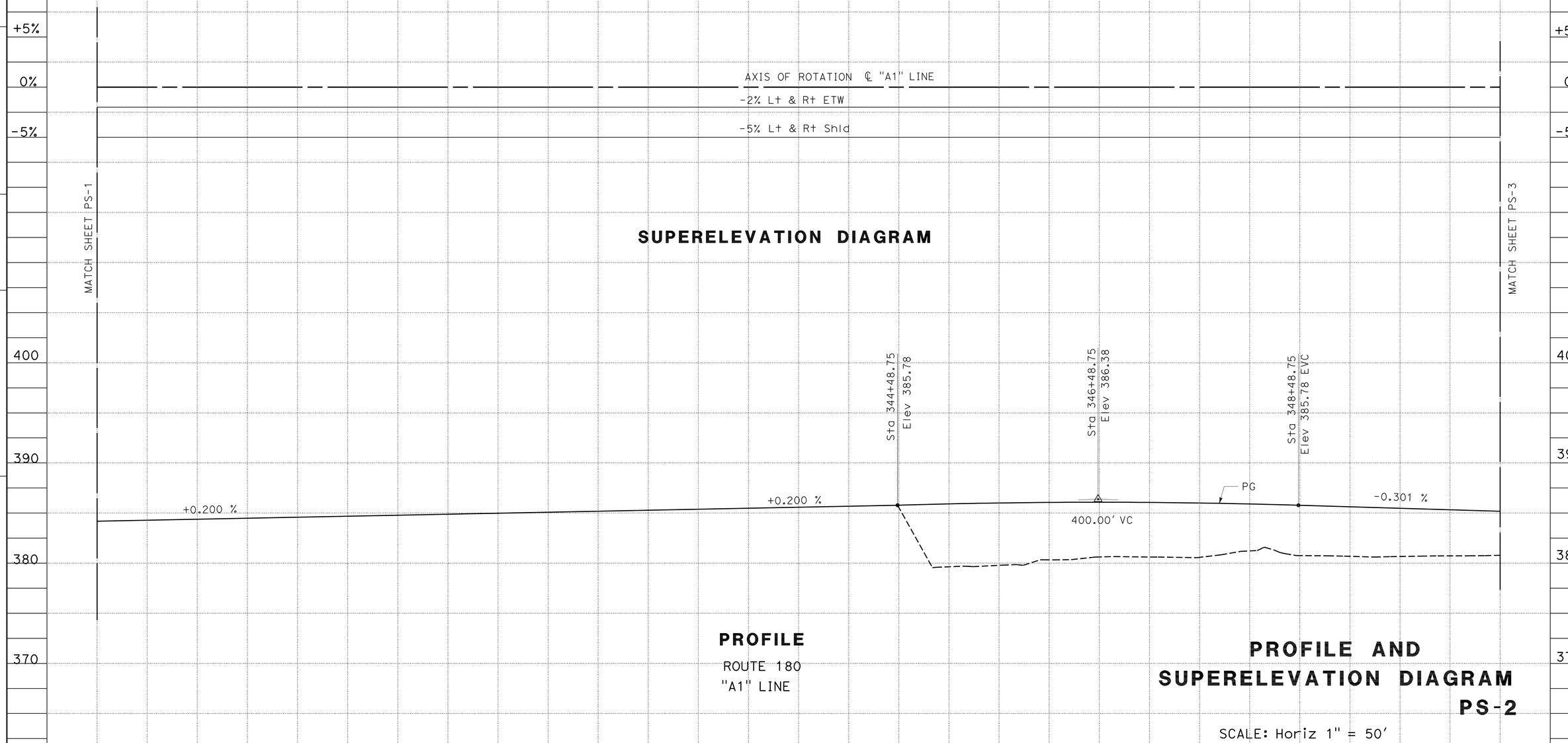


| REVISED BY | DATE REVISED |
|---|---|
| IA | 07/09/12 |

CALCULATED-DESIGNED BY: JOO BAEK
CHECKED BY: SANKU G. MOHAN
FUNCTIONAL SUPERVISOR: SANKU G. MOHAN

STATE OF CALIFORNIA - DEPARTMENT OF TRANSPORTATION
Caltrans
DESIGN

LAST REVISION 07-09-12
DATE PLOTTED => 13-DEC-2012
TIME PLOTTED => 06:36

| Dist | COUNTY | ROUTE | POST MILES TOTAL PROJECT | SHEET No. | TOTAL SHEETS |
|---|---|---|---|---|---|
| 06 | Fre | 180 | R71.8/74.5 | 34 | 235 |

Lawrence Michael Lowe 7-09-12
REGISTERED CIVIL ENGINEER DATE

12-10-12
PLANS APPROVAL DATE

REGISTERED PROFESSIONAL ENGINEER
LAWRENCE MICHAEL LOWE
No. 66753
Exp. 9/30/12
CIVIL
STATE OF CALIFORNIA

*THE STATE OF CALIFORNIA OR ITS OFFICERS OR AGENTS SHALL NOT BE RESPONSIBLE FOR THE ACCURACY OR COMPLETENESS OF SCANNED COPIES OF THIS PLAN SHEET.*

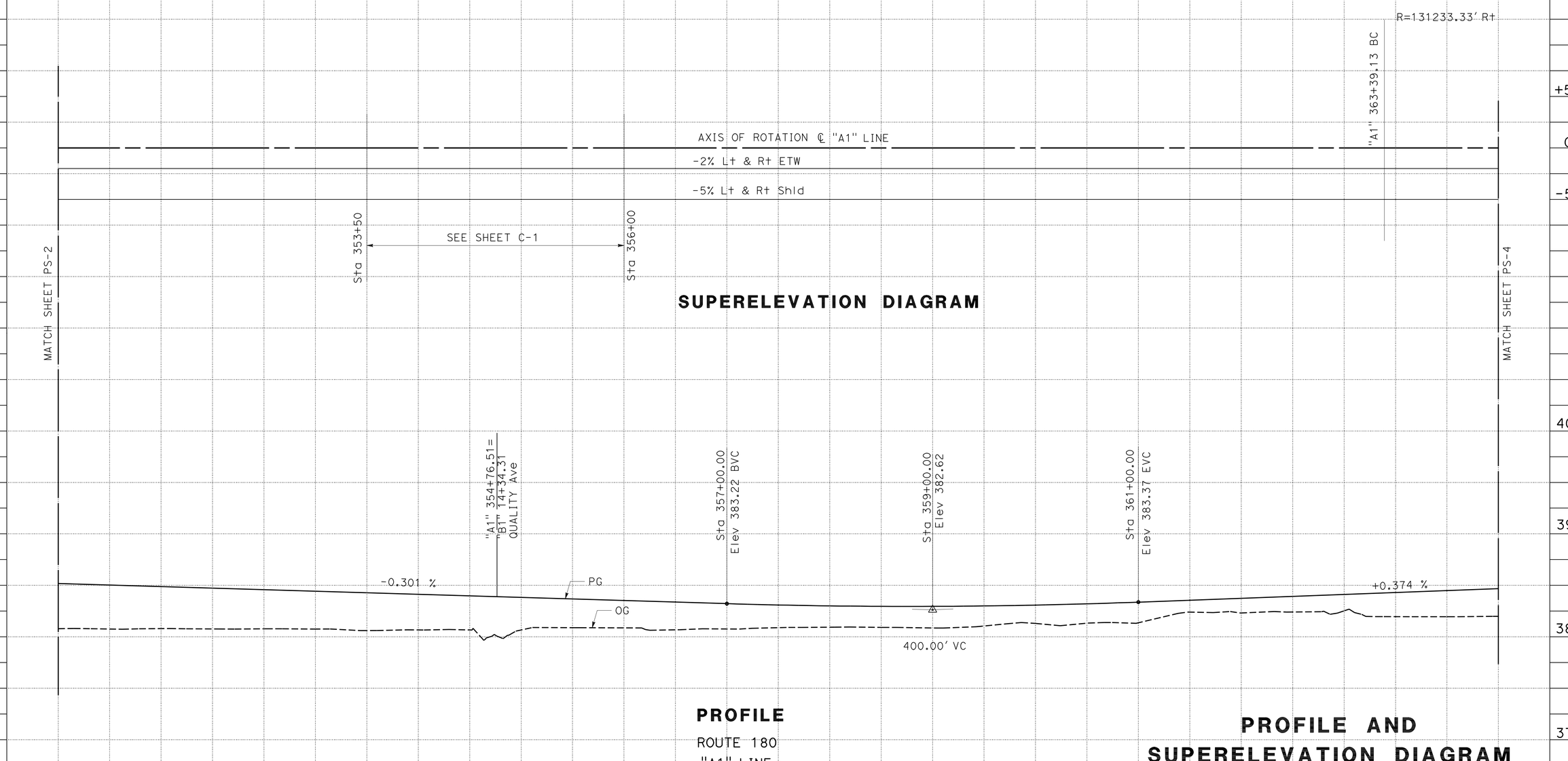


# PROFILE AND SUPERELEVATION DIAGRAM

## PS-3

SCALE: Horiz 1" = 50'
Vert 1" = 5'

| STATION | 1 | 2 | 3 | 4 | 355+00 | 6 | 7 | 8 | 9 | 360+00 | 1 | 2 | 3 | 4 | TOTAL |
|---|---|---|---|---|---|---|---|---|---|---|---|---|---|---|---|
| CY Exc | 7,244 | | | | | | | | | | | | | | |
| CY Emb | 4,452 | | | | | | | | | | | | | | |

| REVISED BY | DATE REVISED |
|---|---|
| IA | 07/09/12 |

CALCULATED-DESIGNED BY: JOO BAEK
CHECKED BY: SANKU G. MOHAN
FUNCTIONAL SUPERVISOR: SANKU G. MOHAN

STATE OF CALIFORNIA - DEPARTMENT OF TRANSPORTATION
Caltrans
DESIGN

LAST REVISION 07-09-12
DATE PLOTTED => 13-DEC-2012
TIME PLOTTED => 06:36

| Dist | COUNTY | ROUTE | POST MILES TOTAL PROJECT | SHEET No. | TOTAL SHEETS |
|---|---|---|---|---|---|
| 06 | Fre | 180 | R71.8/74.5 | 35 | 235 |

Lawrence Michael Lowe 7-09-12
REGISTERED CIVIL ENGINEER DATE

12-10-12
PLANS APPROVAL DATE

REGISTERED PROFESSIONAL ENGINEER
LAWRENCE MICHAEL LOWE
No. 66753
Exp. 9/30/12
CIVIL
STATE OF CALIFORNIA

*THE STATE OF CALIFORNIA OR ITS OFFICERS OR AGENTS SHALL NOT BE RESPONSIBLE FOR THE ACCURACY OR COMPLETENESS OF SCANNED COPIES OF THIS PLAN SHEET.*

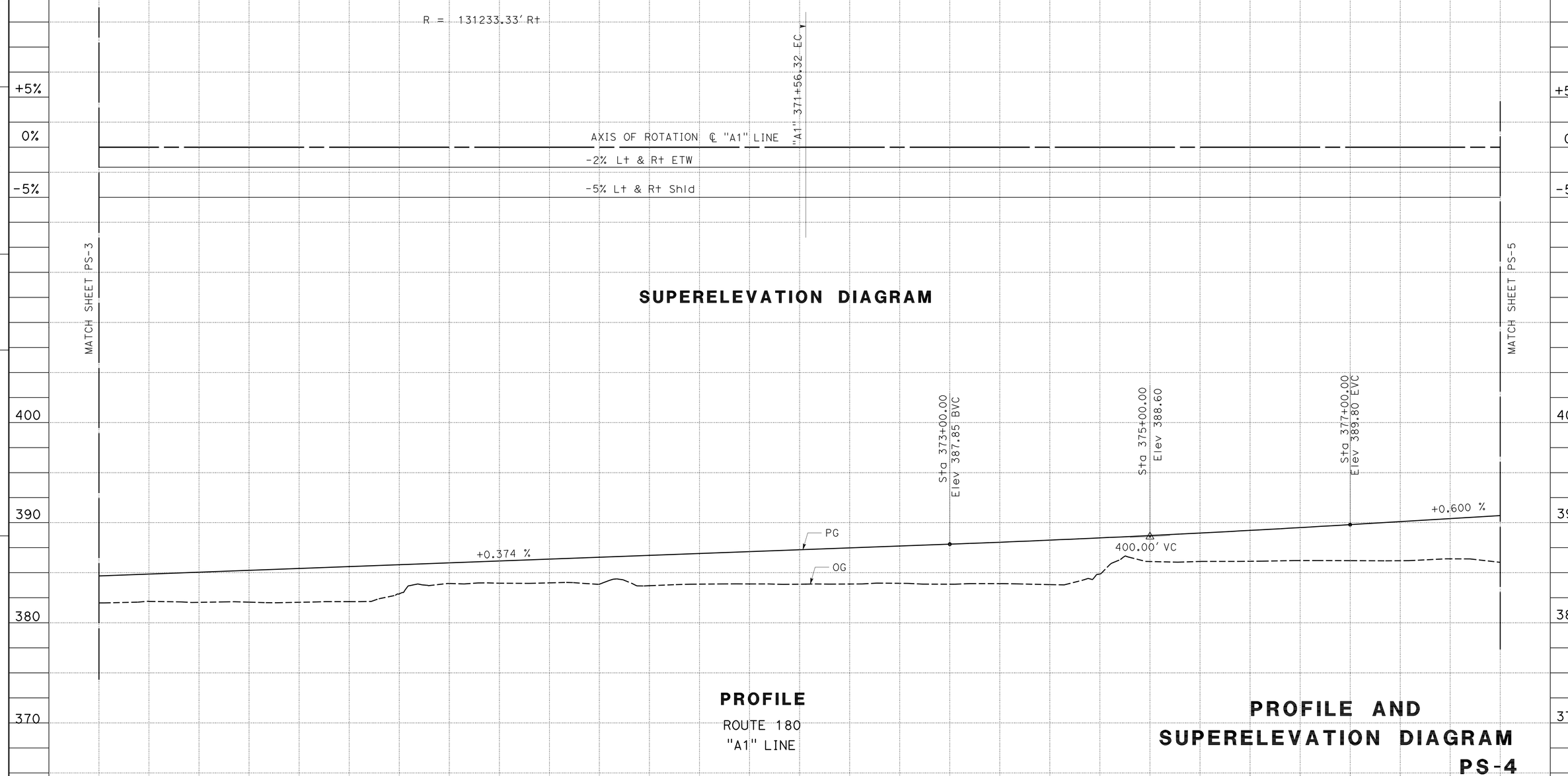


| STATION | | 365+00 | 6 | 7 | 8 | 9 | 370+00 | 1 | 2 | 3 | 4 | 375+00 | 6 | 7 | 8 | TOTAL |
|---|---|---|---|---|---|---|---|---|---|---|---|---|---|---|---|---|
| CY | Exc | 5,486 | | | | | | | | | | | | | | |
| | Emb | 8,026 | | | | | | | | | | | | | | |

| REVISED BY | DATE REVISED |
|---|---|
| IA | 04/24/12 |

| CALCULATED-DESIGNED BY | CHECKED BY |
|---|---|
| JOO BAEK | SANKU G. MOHAN |

FUNCTIONAL SUPERVISOR: SANKU G. MOHAN

STATE OF CALIFORNIA - DEPARTMENT OF TRANSPORTATION
Caltrans
DESIGN

LAST REVISION DATE PLOTTED => 13-DEC-2012
TIME PLOTTED => 06:36
07-09-12

| Dist | COUNTY | ROUTE | POST MILES TOTAL PROJECT | SHEET No. | TOTAL SHEETS |
|---|---|---|---|---|---|
| 06 | Fre | 180 | R71.8/74.5 | 36 | 235 |

Lawrence Michael Lowe 7-09-12
REGISTERED CIVIL ENGINEER DATE

12-10-12
PLANS APPROVAL DATE

REGISTERED PROFESSIONAL ENGINEER
LAWRENCE MICHAEL LOWE
No. 66753
Exp. 9/30/12
CIVIL
STATE OF CALIFORNIA

*THE STATE OF CALIFORNIA OR ITS OFFICERS OR AGENTS SHALL NOT BE RESPONSIBLE FOR THE ACCURACY OR COMPLETENESS OF SCANNED COPIES OF THIS PLAN SHEET.*

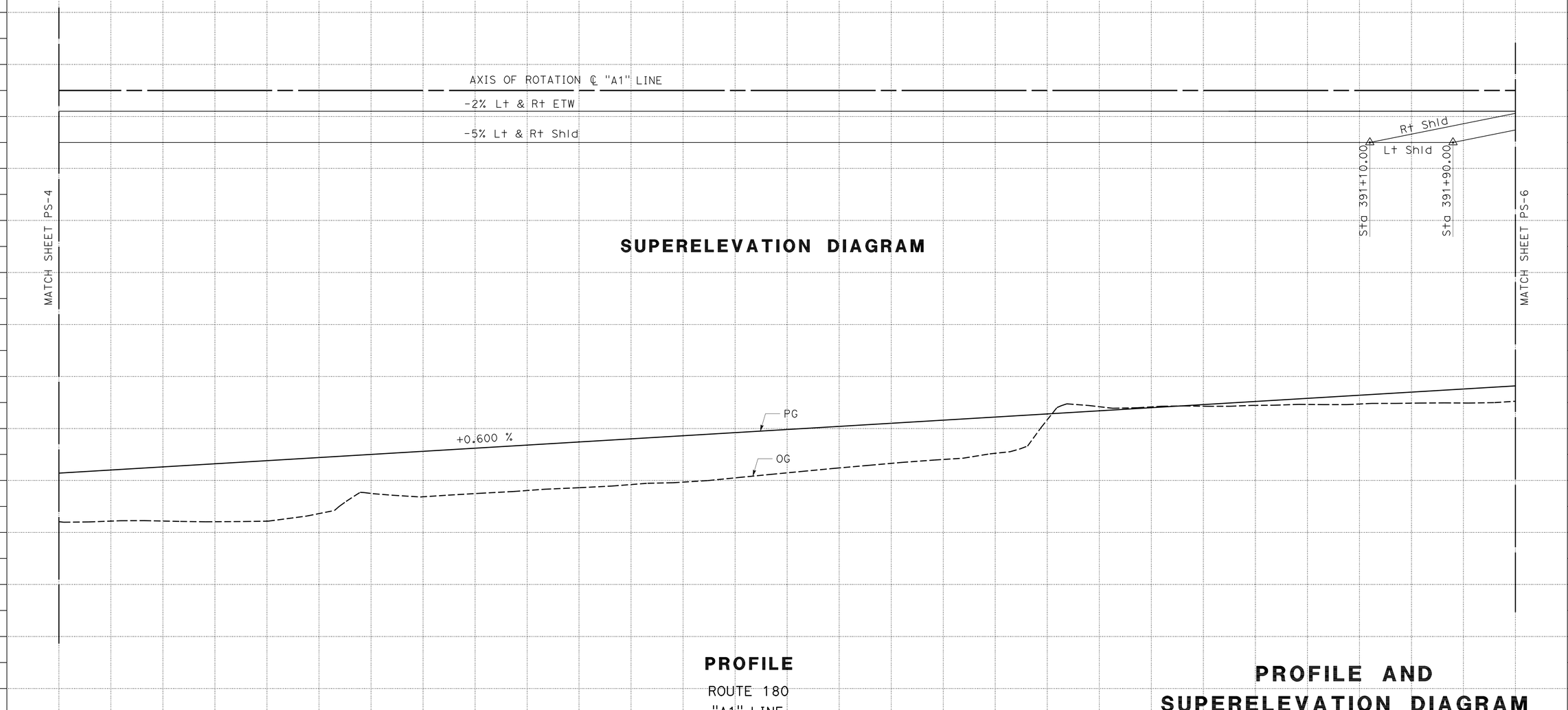


# PROFILE AND SUPERELEVATION DIAGRAM

## PS-5

SCALE: Horiz 1" = 50'
Vert 1" = 5'

| STATION | | 9 | 380+00 | 1 | 2 | 3 | 4 | 385+00 | 6 | 7 | 8 | 9 | 390+00 | 1 | 2 | TOTAL |
|---|---|---|---|---|---|---|---|---|---|---|---|---|---|---|---|---|
| CY | Exc | 11,003 | | | | | | | | | | | | | | |
| | Emb | 12,739 | | | | | | | | | | | | | | |

| | | | |
|---|---|---|---|
| REVISED BY | IA | CALCULATED-DESIGNED BY | JOO BAEK |
| DATE REVISED | 07/09/12 | CHECKED BY | SANKU G. MOHAN |
| FUNCTIONAL SUPERVISOR | SANKU G. MOHAN | | |

STATE OF CALIFORNIA - DEPARTMENT OF TRANSPORTATION
Caltrans
DESIGN

LAST REVISION 07-09-12
DATE PLOTTED => 13-DEC-2012
TIME PLOTTED => 06:36

| Dist | COUNTY | ROUTE | POST MILES TOTAL PROJECT | SHEET No. | TOTAL SHEETS |
|---|---|---|---|---|---|
| 06 | Fre | 180 | R71.8/74.5 | 37 | 235 |

Lawrence Michael Lowe 7-09-12
REGISTERED CIVIL ENGINEER DATE

12-10-12
PLANS APPROVAL DATE

REGISTERED PROFESSIONAL ENGINEER
LAWRENCE MICHAEL LOWE
No. 66753
Exp. 9/30/12
CIVIL
STATE OF CALIFORNIA

*THE STATE OF CALIFORNIA OR ITS OFFICERS OR AGENTS SHALL NOT BE RESPONSIBLE FOR THE ACCURACY OR COMPLETENESS OF SCANNED COPIES OF THIS PLAN SHEET.*

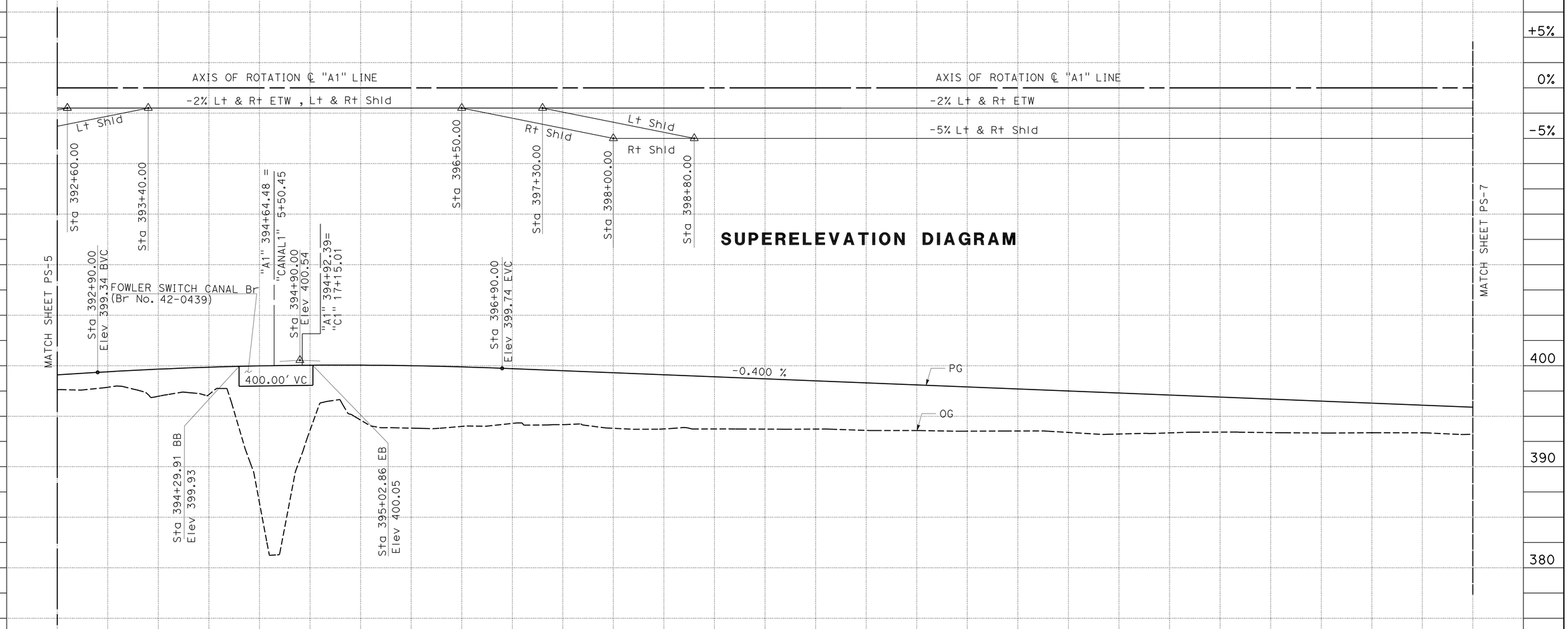


| | |
|---|---|
| REVISED BY | IA |
| DATE REVISED | 07/09/12 |
| CALCULATED-DESIGNED BY | JOO BAEK |
| CHECKED BY | SANKU G. MOHAN |
| FUNCTIONAL SUPERVISOR | SANKU G. MOHAN |

STATE OF CALIFORNIA - DEPARTMENT OF TRANSPORTATION
Caltrans
DESIGN

LAST REVISION 07-09-12
DATE PLOTTED => 13-DEC-2012
TIME PLOTTED => 06:36

| Dist | COUNTY | ROUTE | POST MILES TOTAL PROJECT | SHEET No. | TOTAL SHEETS |
|---|---|---|---|---|---|
| 06 | Fre | 180 | R71.8/74.5 | 38 | 235 |

Lawrence Michael Lowe 7-09-12
REGISTERED CIVIL ENGINEER DATE

12-10-12
PLANS APPROVAL DATE

REGISTERED PROFESSIONAL ENGINEER
LAWRENCE MICHAEL LOWE
No. 66753
Exp. 9/30/12
CIVIL
STATE OF CALIFORNIA

*THE STATE OF CALIFORNIA OR ITS OFFICERS OR AGENTS SHALL NOT BE RESPONSIBLE FOR THE ACCURACY OR COMPLETENESS OF SCANNED COPIES OF THIS PLAN SHEET.*

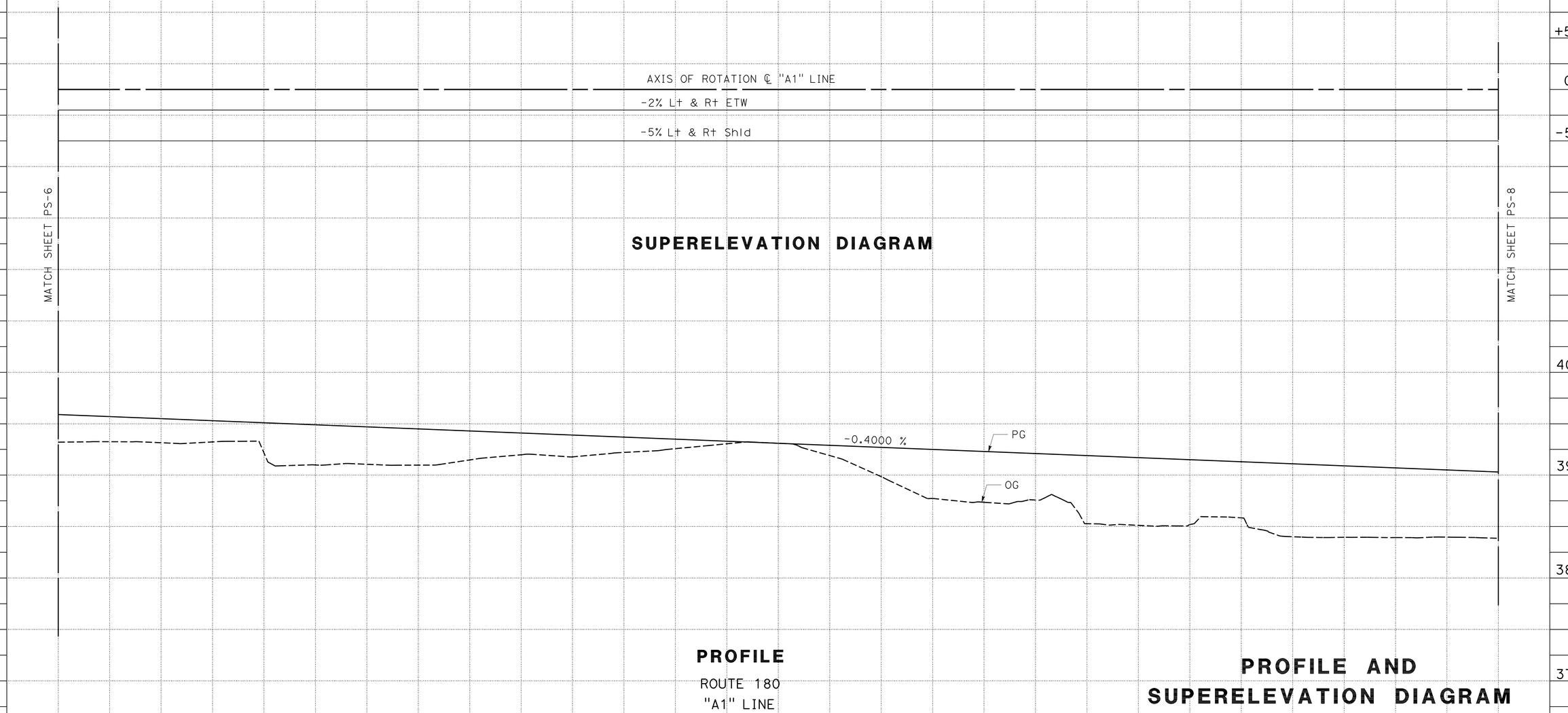


| STATION | 6 | 7 | 8 | 9 | 410+00 | 1 | 2 | 3 | 4 | 415+00 | 6 | 7 | 8 | 9 | 420+00 | TOTAL |
|---|---|---|---|---|---|---|---|---|---|---|---|---|---|---|---|---|
| CY Exc | | | | | | | | | 8,676 | | | | | | | |
| CY Emb | | | | | | | | | 12,676 | | | | | | | |

REVISED BY: IA — DATE REVISED: 07/09/12

CALCULATED-DESIGNED BY: JOO BAEK — CHECKED BY: SANKU G. MOHAN

FUNCTIONAL SUPERVISOR: SANKU G. MOHAN

STATE OF CALIFORNIA - DEPARTMENT OF TRANSPORTATION — Caltrans — DESIGN

LAST REVISION 07-09-12 — DATE PLOTTED => 13-DEC-2012 — TIME PLOTTED => 06:36

| Dist | COUNTY | ROUTE | POST MILES TOTAL PROJECT | SHEET No. | TOTAL SHEETS |
|---|---|---|---|---|---|
| 06 | Fre | 180 | R71.8/74.5 | 39 | 235 |

Lawrence Michael Lowe 7-09-12
REGISTERED CIVIL ENGINEER DATE

12-10-12
PLANS APPROVAL DATE

REGISTERED PROFESSIONAL ENGINEER
LAWRENCE MICHAEL LOWE
No. 66753
Exp. 9/30/12
CIVIL
STATE OF CALIFORNIA

*THE STATE OF CALIFORNIA OR ITS OFFICERS OR AGENTS SHALL NOT BE RESPONSIBLE FOR THE ACCURACY OR COMPLETENESS OF SCANNED COPIES OF THIS PLAN SHEET.*

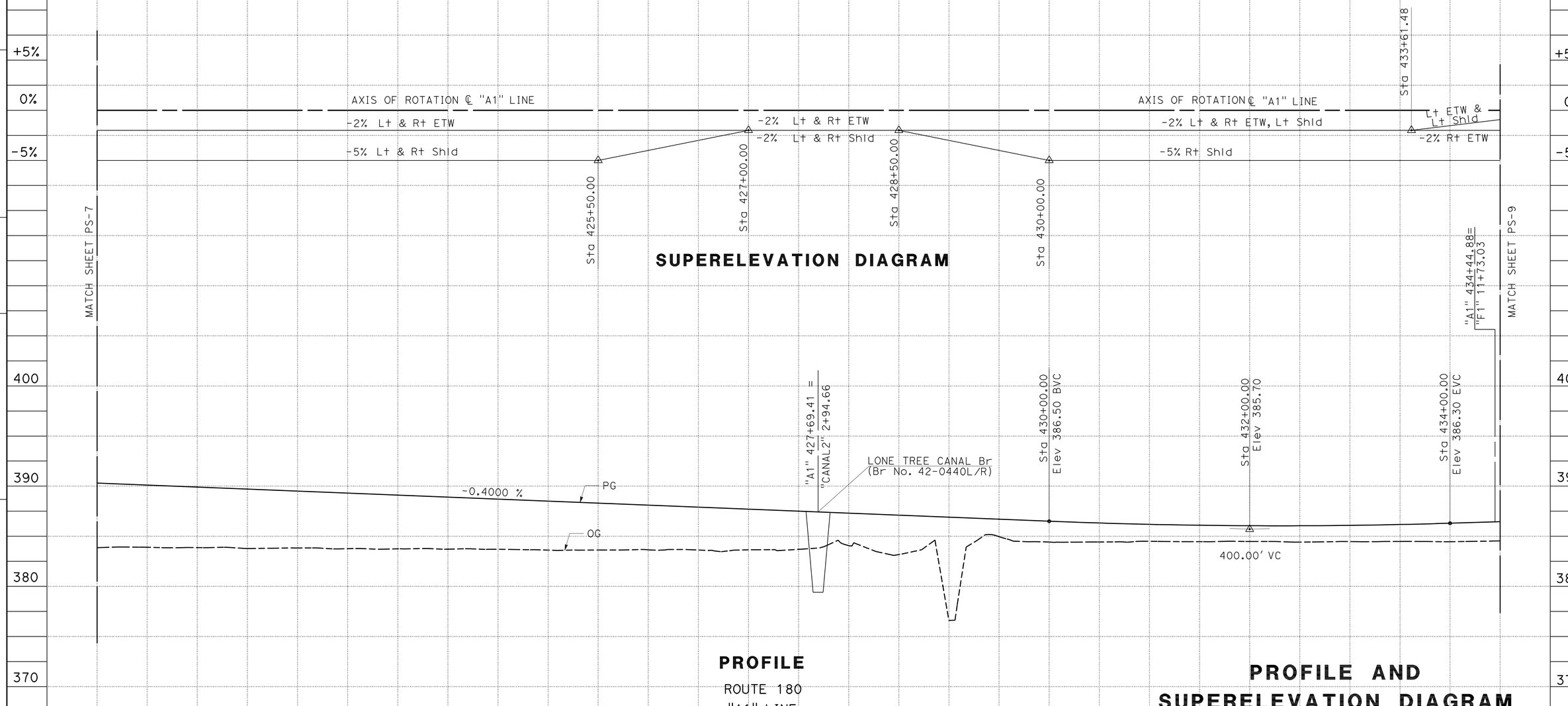


# PROFILE AND SUPERELEVATION DIAGRAM

## PS-8

SCALE: Horiz 1" = 50'
Vert 1" = 5'

| STATION | 1 | 2 | 3 | 4 | 425+00 | 6 | 7 | 8 | 9 | 430+00 | 1 | 2 | 3 | 4 | TOTAL |
|---|---|---|---|---|---|---|---|---|---|---|---|---|---|---|---|
| CY Exc | 8,363 | | | | | | | | | | | | | | |
| CY Emb | 17,639 | | | | | | | | | | | | | | |

STATE OF CALIFORNIA - DEPARTMENT OF TRANSPORTATION
Caltrans
DESIGN

FUNCTIONAL SUPERVISOR: SANKU G. MOHAN
CALCULATED-DESIGNED BY: JOO BAEK
CHECKED BY: SANKU G. MOHAN
REVISED BY: IA
DATE REVISED: 07/09/12

LAST REVISION 07-09-12
DATE PLOTTED => 13-DEC-2012
TIME PLOTTED => 06:36

| Dist | COUNTY | ROUTE | POST MILES TOTAL PROJECT | SHEET No. | TOTAL SHEETS |
|---|---|---|---|---|---|
| 06 | Fre | 180 | R71.8/74.5 | 40 | 235 |

Lawrence Michael Lowe 7-09-12
REGISTERED CIVIL ENGINEER DATE

12-10-12
PLANS APPROVAL DATE

REGISTERED PROFESSIONAL ENGINEER
LAWRENCE MICHAEL LOWE
No. 66753
Exp. 9/30/12
CIVIL
STATE OF CALIFORNIA

*THE STATE OF CALIFORNIA OR ITS OFFICERS OR AGENTS SHALL NOT BE RESPONSIBLE FOR THE ACCURACY OR COMPLETENESS OF SCANNED COPIES OF THIS PLAN SHEET.*

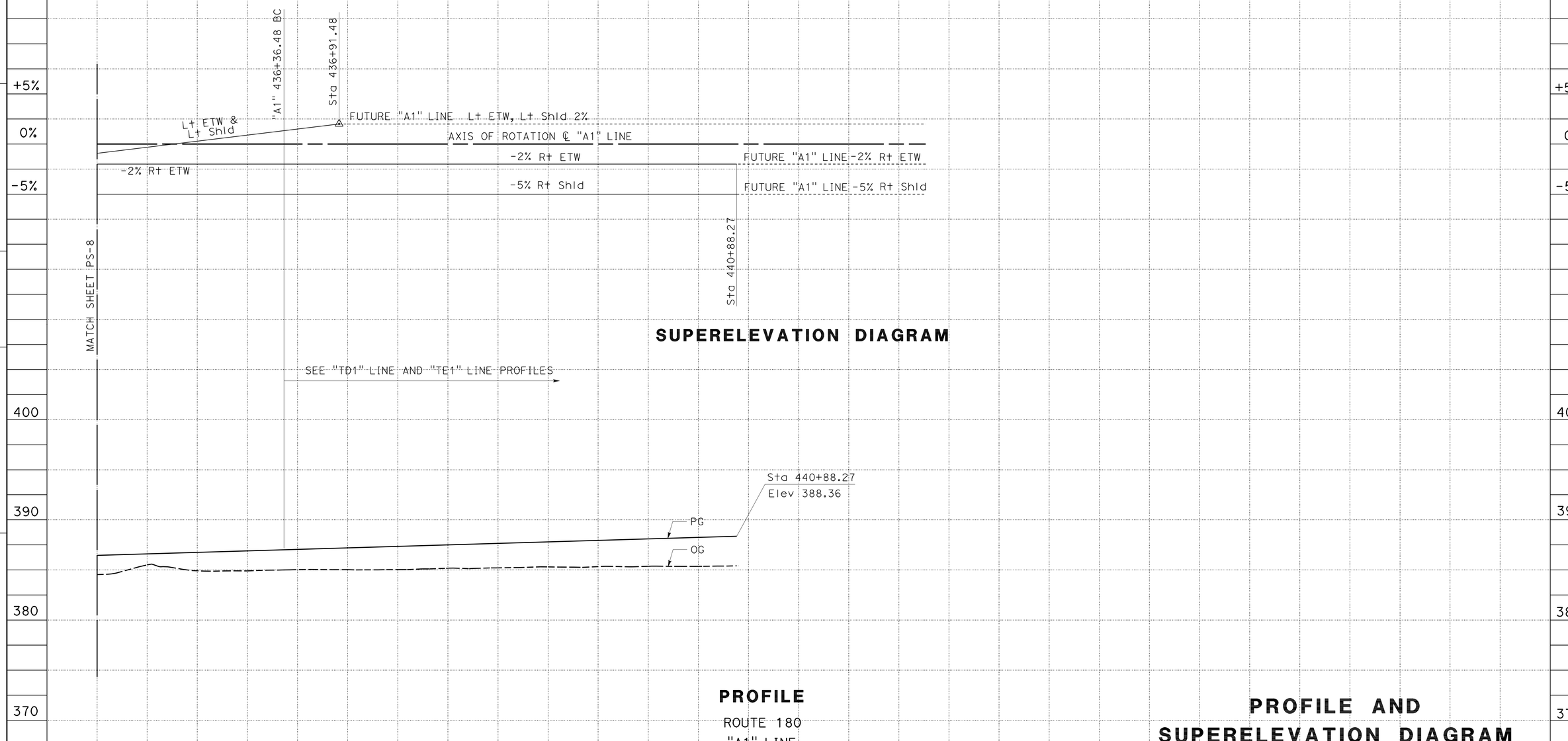


**SUPERELEVATION DIAGRAM**

**PROFILE**

ROUTE 180
"A1" LINE

# PROFILE AND SUPERELEVATION DIAGRAM

## PS-9

SCALE: Horiz 1" = 50'
Vert 1" = 5'

| STATION | 5 | 6 | 7 | 8 | 9 | 440+00 | 1 | 2 | 3 | 4 | 445+00 | 6 | 7 | 8 | TOTAL |
|---|---|---|---|---|---|---|---|---|---|---|---|---|---|---|---|
| CY Exc | 2,521 | | | | | | | | | | | | | | |
| CY Emb | 786 | | | | | | | | | | | | | | |

STATE OF CALIFORNIA - DEPARTMENT OF TRANSPORTATION
Caltrans
DESIGN

FUNCTIONAL SUPERVISOR: SANKU G. MOHAN
CALCULATED-DESIGNED BY: JOO BAEK
CHECKED BY: SANKU G. MOHAN
REVISED BY: IA
DATE REVISED: 04/24/12

LAST REVISION 07-09-12
DATE PLOTTED => 13-DEC-2012
TIME PLOTTED => 06:37

| Dist | COUNTY | ROUTE | POST MILES TOTAL PROJECT | SHEET No. | TOTAL SHEETS |
|---|---|---|---|---|---|
| 06 | Fre | 180 | R71.8/74.5 | 41 | 235 |

Lawrence Michael Lowe 7-09-12
REGISTERED CIVIL ENGINEER DATE

12-10-12
PLANS APPROVAL DATE

REGISTERED PROFESSIONAL ENGINEER
LAWRENCE MICHAEL LOWE
No. 66753
Exp. 9/30/12
CIVIL
STATE OF CALIFORNIA

*THE STATE OF CALIFORNIA OR ITS OFFICERS OR AGENTS SHALL NOT BE RESPONSIBLE FOR THE ACCURACY OR COMPLETENESS OF SCANNED COPIES OF THIS PLAN SHEET.*

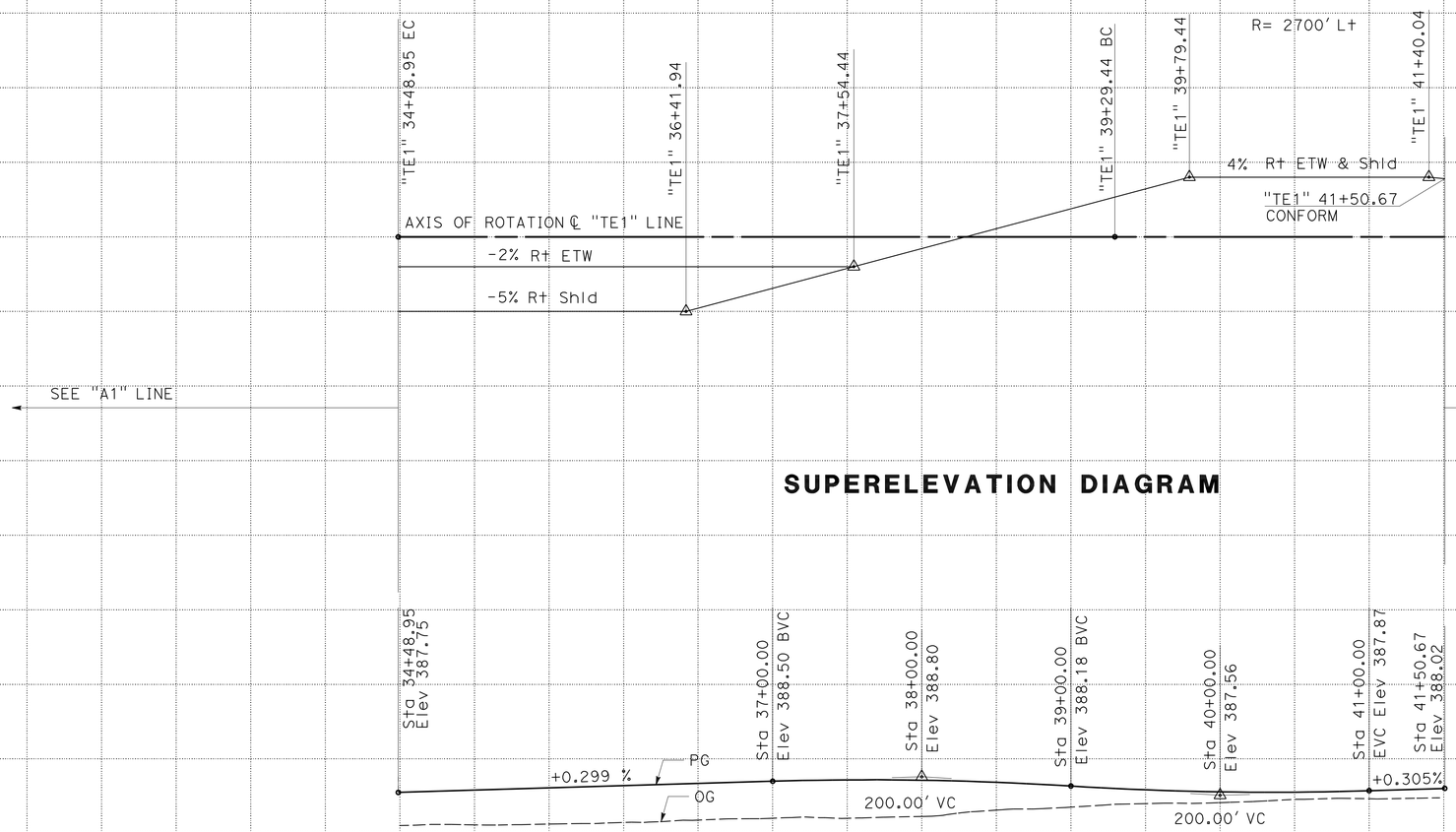


# PROFILE AND SUPERELEVATION DIAGRAM

**PS-10**

SCALE: Horiz 1" = 50'
Vert 1" = 5'

| STATION | | 34 | 35 | 6 | 7 | 8 | 9 | 40 | 1 | 2 | 3 | 4 | 45 | TOTAL |
|---|---|---|---|---|---|---|---|---|---|---|---|---|---|---|
| CY | Exc | | 1,800 | | | | | | | | | | | |
| | Emb | | 257 | | | | | | | | | | | |

STATE OF CALIFORNIA - DEPARTMENT OF TRANSPORTATION
Caltrans
DESIGN

FUNCTIONAL SUPERVISOR: SANKU G. MOHAN
CALCULATED-DESIGNED BY: JOO BAEK
CHECKED BY: SANKU G. MOHAN
REVISED BY: IA
DATE REVISED: 07/09/12

LAST REVISION 07-09-12
DATE PLOTTED => 13-DEC-2012
TIME PLOTTED => 06:37

| Dist | COUNTY | ROUTE | POST MILES TOTAL PROJECT | SHEET No. | TOTAL SHEETS |
|---|---|---|---|---|---|
| 06 | Fre | 180 | R71.8/74.5 | 42 | 235 |

Lawrence Michael Lowe 7-09-12
REGISTERED CIVIL ENGINEER DATE

12-10-12
PLANS APPROVAL DATE

REGISTERED PROFESSIONAL ENGINEER
LAWRENCE MICHAEL LOWE
No. 66753
Exp. 9/30/12
CIVIL
STATE OF CALIFORNIA

*THE STATE OF CALIFORNIA OR ITS OFFICERS OR AGENTS SHALL NOT BE RESPONSIBLE FOR THE ACCURACY OR COMPLETENESS OF SCANNED COPIES OF THIS PLAN SHEET.*

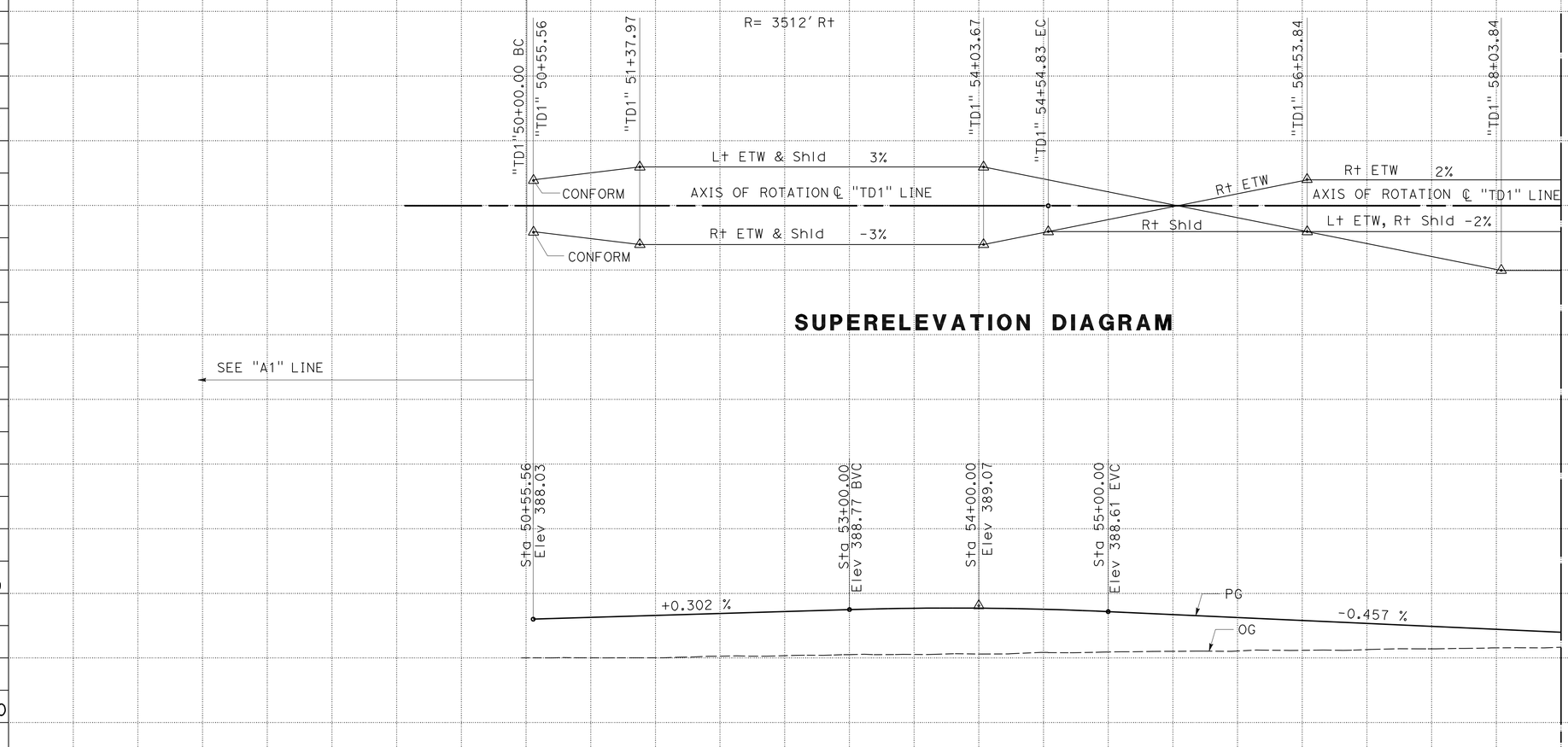


## SUPERELEVATION DIAGRAM




PROFILE
"TD1" LINE

# PROFILE AND SUPERELEVATION DIAGRAM

## PS-11

SCALE: Horiz 1" = 50'
Vert 1" = 5'

| STATION | | 50 | 1 | 2 | 3 | 4 | 55 | 6 | 7 | 8 | TOTAL |
|---|---|---|---|---|---|---|---|---|---|---|---|
| CY | Exc | | | | | 1,700 | | | | | |
| | Emb | | | | | 40 | | | | | |

STATE OF CALIFORNIA - DEPARTMENT OF TRANSPORTATION
Caltrans DESIGN

FUNCTIONAL SUPERVISOR: SANKU G. MOHAN
CALCULATED-DESIGNED BY: JOO BAEK
CHECKED BY: SANKU G. MOHAN
REVISED BY: IA
DATE REVISED: 04/24/12

LAST REVISION 07-09-12
DATE PLOTTED => 13-DEC-2012
TIME PLOTTED => 06:37

| Dist | COUNTY | ROUTE | POST MILES TOTAL PROJECT | SHEET No. | TOTAL SHEETS |
|---|---|---|---|---|---|
| 06 | Fre | 180 | R71.8/74.5 | 43 | 235 |

Lawrence Michael Lowe 7-09-12
REGISTERED CIVIL ENGINEER DATE

12-10-12
PLANS APPROVAL DATE

REGISTERED PROFESSIONAL ENGINEER
LAWRENCE MICHAEL LOWE
No. 66753
Exp. 9/30/12
CIVIL
STATE OF CALIFORNIA

*THE STATE OF CALIFORNIA OR ITS OFFICERS OR AGENTS SHALL NOT BE RESPONSIBLE FOR THE ACCURACY OR COMPLETENESS OF SCANNED COPIES OF THIS PLAN SHEET.*

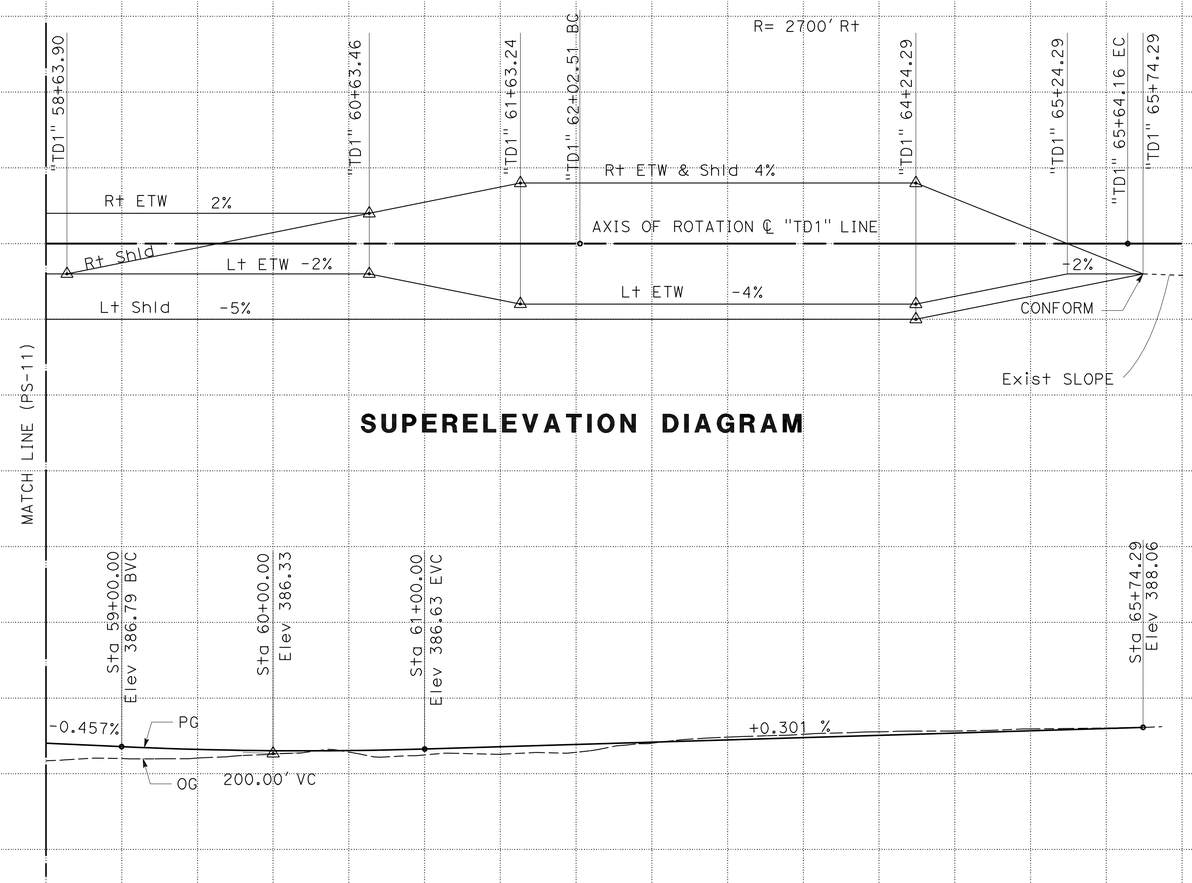


**SUPERELEVATION DIAGRAM**

**PROFILE**
"TD1" LINE

# PROFILE AND SUPERELEVATION DIAGRAM

**PS-12**

SCALE: Horiz 1" = 50'
Vert 1" = 5'

| STATION | | 9 | 60 | 1 | 2 | 3 | 4 | 65 | TOTAL |
|---|---|---|---|---|---|---|---|---|---|
| CY | Exc | 4180 | | | | | | | |
| | Emb | 176 | | | | | | | |

REVISED BY: IA — DATE REVISED: 07/09/12
CALCULATED-DESIGNED BY: JOO BAEK — CHECKED BY: SANKU G. MOHAN
FUNCTIONAL SUPERVISOR: SANKU G. MOHAN

STATE OF CALIFORNIA - DEPARTMENT OF TRANSPORTATION
Caltrans
DESIGN

LAST REVISION 07-09-12
DATE PLOTTED => 13-DEC-2012
TIME PLOTTED => 06:37

| Dist | COUNTY | ROUTE | POST MILES TOTAL PROJECT | SHEET No. | TOTAL SHEETS |
|---|---|---|---|---|---|
| 06 | Fre | 180 | R71.8/74.5 | 44 | 235 |

Lawrence Michael Lowe 7-09-12
REGISTERED CIVIL ENGINEER DATE

12-10-12
PLANS APPROVAL DATE

REGISTERED PROFESSIONAL ENGINEER LAWRENCE MICHAEL LOWE No. 66753 Exp. 9/30/12 CIVIL STATE OF CALIFORNIA

*THE STATE OF CALIFORNIA OR ITS OFFICERS OR AGENTS SHALL NOT BE RESPONSIBLE FOR THE ACCURACY OR COMPLETENESS OF SCANNED COPIES OF THIS PLAN SHEET.*

## CURVE DATA

| No. O | R | Δ | T | L |
|---|---|---|---|---|
| 1 | 40.16′ | 53°30′55″ | 20.25′ | 37.51′ |
| 2 | 40.00′ | 72°23′45″ | 29.27′ | 50.54′ |
| 3 | 40.00′ | 54°1′16″ | 20.39′ | 37.71′ |
| 4 | 40.16′ | 71°46′38″ | 29.06′ | 50.31′ |

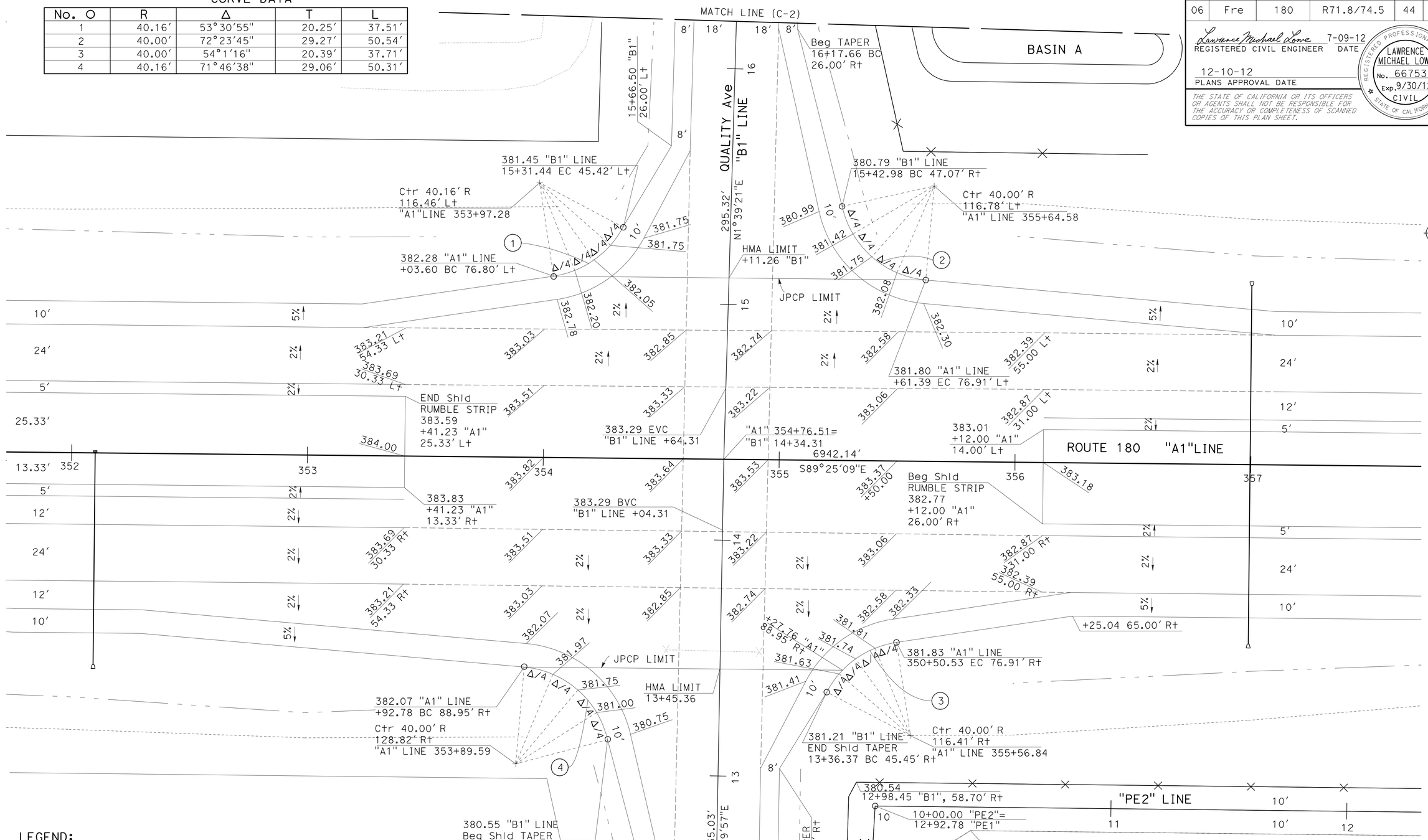


LEGEND:

PLACE HMA (Misc AREA)

EXISTING CRASH CUSHION

# CONSTRUCTION DETAILS

SCALE: 1" = 20′

C-1

| | | | |
|---|---|---|---|
| REVISED BY | IA | JOO BAEK | CALCULATED-DESIGNED BY |
| DATE REVISED | 07/09/12 | SANKU G. MOHAN | CHECKED BY |
| FUNCTIONAL SUPERVISOR | SANKU G. MOHAN | | |

STATE OF CALIFORNIA - DEPARTMENT OF TRANSPORTATION

DESIGN

Caltrans

LAST REVISION 07-09-12 | DATE PLOTTED => 13-DEC-2012 | TIME PLOTTED => 06:37

| Dist | COUNTY | ROUTE | POST MILES TOTAL PROJECT | SHEET No. | TOTAL SHEETS |
|---|---|---|---|---|---|
| 06 | Fre | 180 | R71.8/74.5 | 45 | 235 |

Lawrence Michael Lowe 7-09-12
REGISTERED CIVIL ENGINEER DATE

12-10-12
PLANS APPROVAL DATE

REGISTERED PROFESSIONAL ENGINEER
LAWRENCE MICHAEL LOWE
No. 66753
Exp. 9/30/12
CIVIL
STATE OF CALIFORNIA

*THE STATE OF CALIFORNIA OR ITS OFFICERS OR AGENTS SHALL NOT BE RESPONSIBLE FOR THE ACCURACY OR COMPLETENESS OF SCANNED COPIES OF THIS PLAN SHEET.*

CURVE DATA

| No. O | R | Δ | T | L |
|---|---|---|---|---|
| 1 | 42.00′ | 69°34′36" | 29.18′ | 51.00′ |
| 2 | 42.00′ | 73°12′10" | 31.19′ | 53.66′ |
| 3 | 42.00′ | 108°42′15" | 58.56′ | 79.68′ |
| 4 | 42.00′ | 102°38′27" | 52.46′ | 75.24′ |
| 5 | 241.47′ | 19°16′04" | 40.99′ | 81.20′ |
| 6 | 245.40′ | 17°49′49" | 38.49′ | 76.37′ |
| 7 | 217.85′ | 11°11′03" | 21.33′ | 42.52′ |
| 8 | 332.00′ | 21°31′56" | 63.13′ | 124.77′ |
| 9 | 336.00′ | 11°50′53" | 34.86′ | 69.48′ |

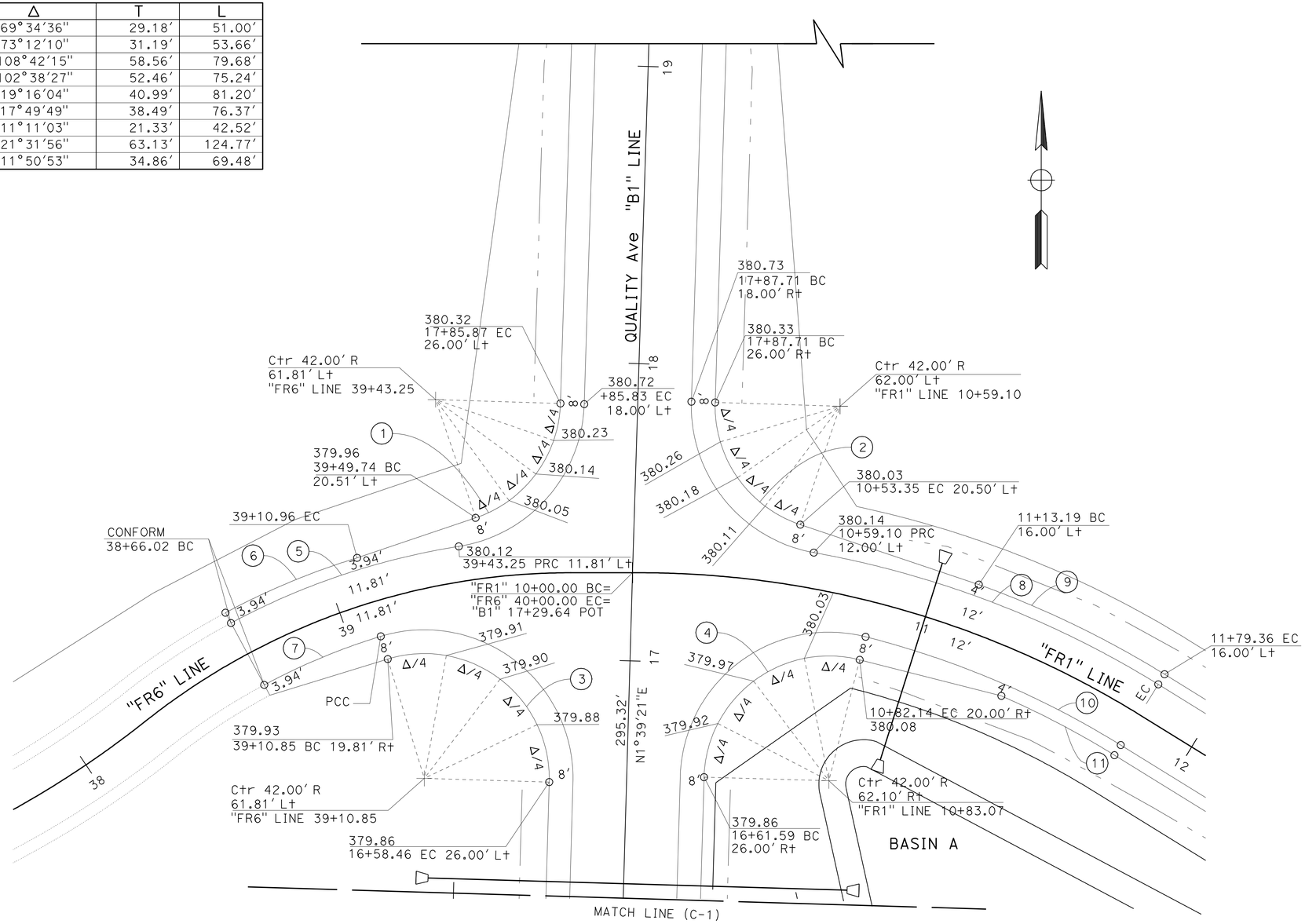


# CONSTRUCTION DETAILS

SCALE: 1" = 20′

C-2

STATE OF CALIFORNIA - DEPARTMENT OF TRANSPORTATION
Caltrans
DESIGN

FUNCTIONAL SUPERVISOR: SANKU G. MOHAN
CALCULATED-DESIGNED BY: JOO BAEK
CHECKED BY: HAARJINDER SEKHON
REVISED BY: IA
DATE REVISED: 02/06/12

LAST REVISION 07-09-12 | DATE PLOTTED => 13-DEC-2012 | TIME PLOTTED => 06:37

| Dist | COUNTY | ROUTE | POST MILES TOTAL PROJECT | SHEET No. | TOTAL SHEETS |
|---|---|---|---|---|---|
| 06 | Fre | 180 | R71.8/74.5 | 46 | 235 |

REGISTERED CIVIL ENGINEER 7-09-12 DATE

12-10-12
PLANS APPROVAL DATE

REGISTERED PROFESSIONAL ENGINEER
HARJINDER SEKHON
No. 76396
Exp. 12-31-12
CIVIL
STATE OF CALIFORNIA

*THE STATE OF CALIFORNIA OR ITS OFFICERS OR AGENTS SHALL NOT BE RESPONSIBLE FOR THE ACCURACY OR COMPLETENESS OF SCANNED COPIES OF THIS PLAN SHEET.*

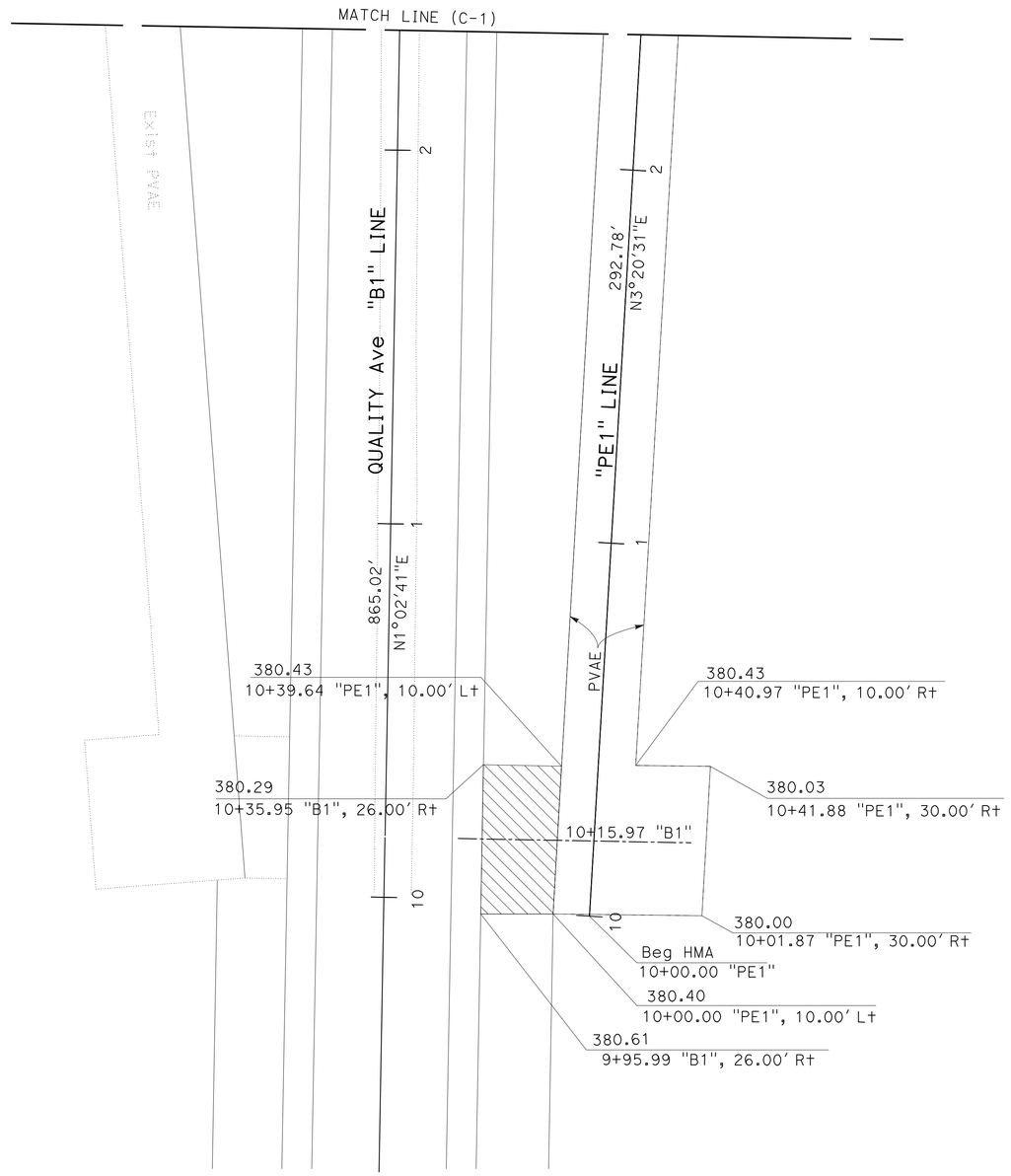


# CONSTRUCTION DETAILS

SCALE: 1" = 20'

C-3

| | | | |
|---|---|---|---|
| CALCULATED-DESIGNED BY | HARJINDER SEKHON | REVISED BY | IA |
| CHECKED BY | SANKU G. MOHAN | DATE REVISED | 02/06/12 |
| FUNCTIONAL SUPERVISOR | SANKU G. MOHAN | | |

STATE OF CALIFORNIA - DEPARTMENT OF TRANSPORTATION
Caltrans
DESIGN

LAST REVISION 07-09-12 | DATE PLOTTED => 13-DEC-2012 | TIME PLOTTED => 06:37

| Dist | COUNTY | ROUTE | POST MILES TOTAL PROJECT | SHEET No. | TOTAL SHEETS |
|---|---|---|---|---|---|
| 06 | Fre | 180 | R71.8/74.5 | 47 | 235 |

Lawrence Michael Lowe 7-09-12
REGISTERED CIVIL ENGINEER DATE

12-10-12
PLANS APPROVAL DATE

REGISTERED PROFESSIONAL ENGINEER LAWRENCE MICHAEL LOWE No. 66753 Exp. 9/30/12 CIVIL STATE OF CALIFORNIA

*THE STATE OF CALIFORNIA OR ITS OFFICERS OR AGENTS SHALL NOT BE RESPONSIBLE FOR THE ACCURACY OR COMPLETENESS OF SCANNED COPIES OF THIS PLAN SHEET.*

## CURVE DATA

| No. O | R | Δ | T | L |
|---|---|---|---|---|
| 1 | 40.00′ | 54°15′41" | 20.50′ | 37.88′ |
| 2 | 50.00′ | 54°15′41" | 25.62′ | 47.35′ |
| 3 | 40.00′ | 54°32′31" | 20.62′ | 38.08′ |
| 4 | 50.00′ | 54°32′31" | 25.77′ | 47.60′ |
| 5 | 40.00′ | 71°9′02" | 28.61′ | 49.67′ |
| 6 | 50.00′ | 71°9′02" | 35.76′ | 62.09′ |

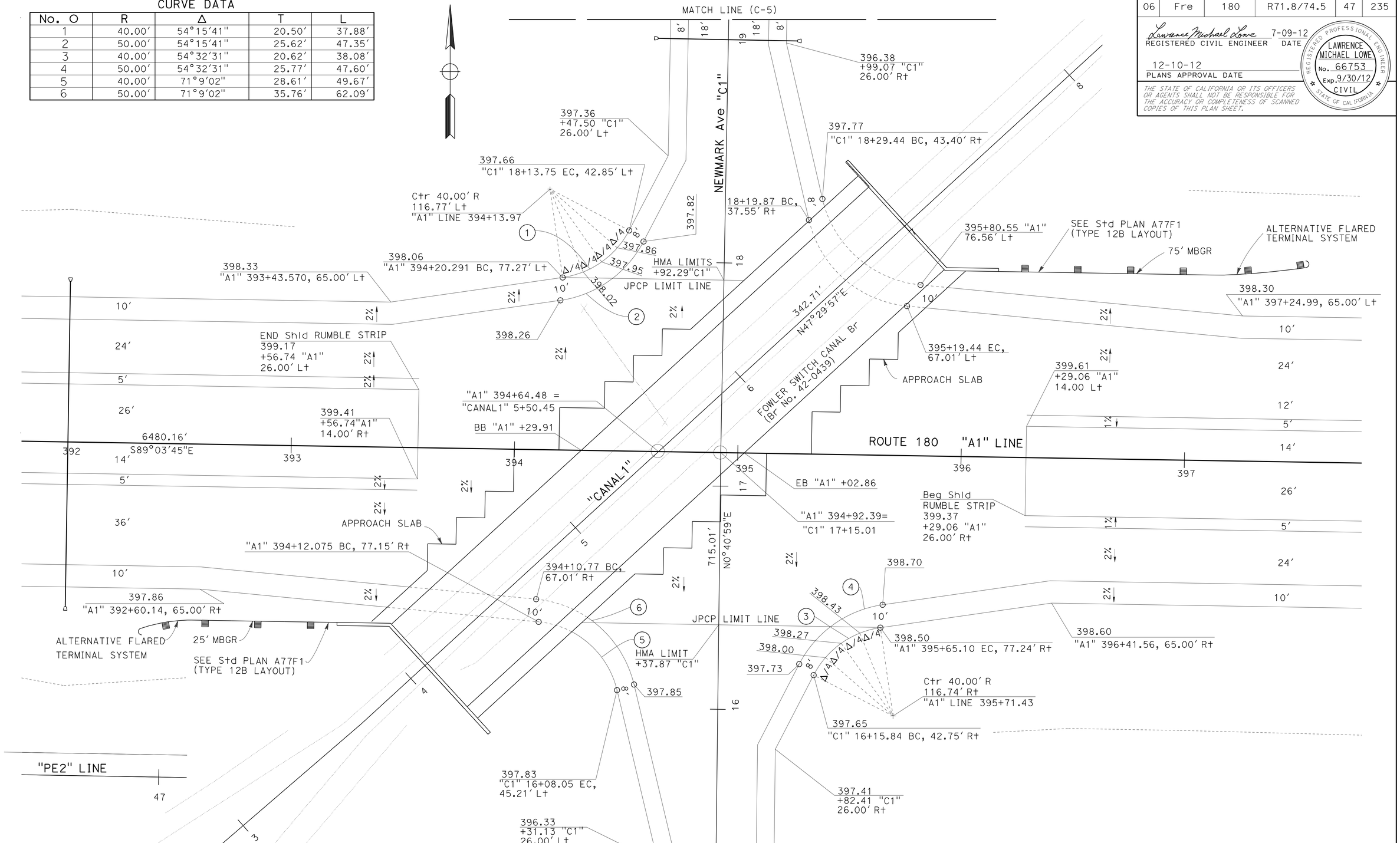


# CONSTRUCTION DETAILS

SCALE: 1" = 20′

C-4

STATE OF CALIFORNIA - DEPARTMENT OF TRANSPORTATION
Caltrans DESIGN

FUNCTIONAL SUPERVISOR: SANKU G. MOHAN
CALCULATED-DESIGNED BY: JOO BAEK
CHECKED BY: SANKU G. MOHAN
REVISED BY: IA
DATE REVISED: 07/09/12

LAST REVISION 07-09-12
DATE PLOTTED => 13-DEC-2012
TIME PLOTTED => 06:37

| Dist | COUNTY | ROUTE | POST MILES TOTAL PROJECT | SHEET No. | TOTAL SHEETS |
|---|---|---|---|---|---|
| 06 | Fre | 180 | R71.8/74.5 | 48 | 235 |

REGISTERED CIVIL ENGINEER 7-09-12 DATE

12-10-12
PLANS APPROVAL DATE

REGISTERED PROFESSIONAL ENGINEER HARJINDER SEKHON No. 76396 Exp. 12-31-12 CIVIL STATE OF CALIFORNIA

*THE STATE OF CALIFORNIA OR ITS OFFICERS OR AGENTS SHALL NOT BE RESPONSIBLE FOR THE ACCURACY OR COMPLETENESS OF SCANNED COPIES OF THIS PLAN SHEET.*

## CURVE DATA

| No. O | R | Δ | T | L |
|---|---|---|---|---|
| 1 | 42.00′ | 82°19′31" | 36.72′ | 60.35′ |
| 2 | 42.00′ | 86°11′07" | 39.29′ | 63.18′ |

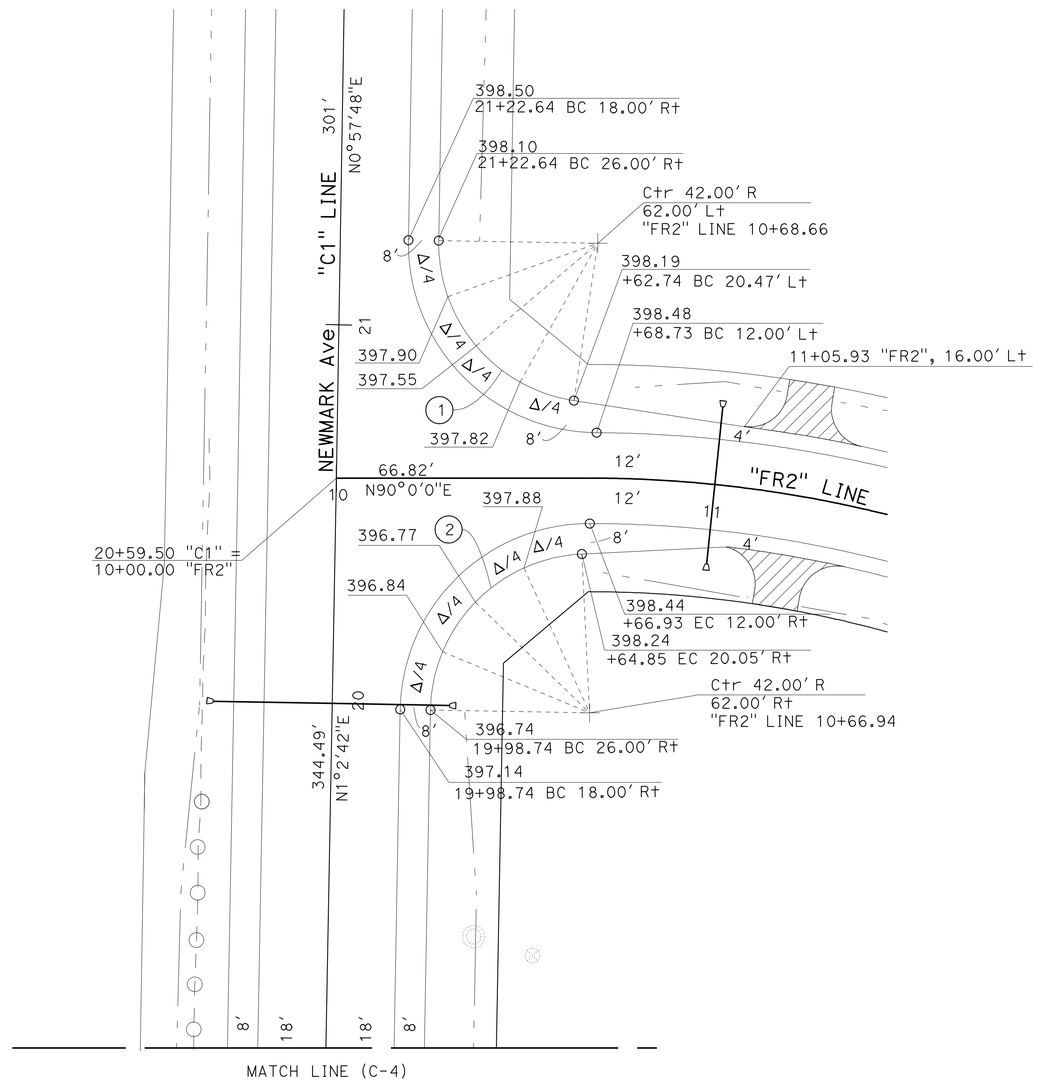


# CONSTRUCTION DETAILS

SCALE: 1" = 20′

C-5

STATE OF CALIFORNIA - DEPARTMENT OF TRANSPORTATION
Caltrans
DESIGN

FUNCTIONAL SUPERVISOR: SANKU G. MOHAN
CALCULATED-DESIGNED BY: JOO BAEK
CHECKED BY: SANKU G. MOHAN
REVISED BY: IA
DATE REVISED: 07/09/12

LAST REVISION 07-09-12
DATE PLOTTED => 13-DEC-2012
TIME PLOTTED => 06:37

| Dist | COUNTY | ROUTE | POST MILES TOTAL PROJECT | SHEET No. | TOTAL SHEETS |
|---|---|---|---|---|---|
| 06 | Fre | 180 | R71.8/74.5 | 49 | 235 |

REGISTERED CIVIL ENGINEER 7-09-12 DATE

12-10-12
PLANS APPROVAL DATE

REGISTERED PROFESSIONAL ENGINEER HARJINDER SEKHON No. 76396 Exp. 12-31-12 CIVIL STATE OF CALIFORNIA

*THE STATE OF CALIFORNIA OR ITS OFFICERS OR AGENTS SHALL NOT BE RESPONSIBLE FOR THE ACCURACY OR COMPLETENESS OF SCANNED COPIES OF THIS PLAN SHEET.*

## CURVE DATA

| No. O | R | Δ | T | L |
|---|---|---|---|---|
| 1 | 50.00′ | 62°10′57" | 30.15′ | 54.26′ |
| 2 | 40.00′ | 242°10′52" | 66.33′ | 169.07′ |
| 3 | 50.00′ | 62°10′56" | 30.15′ | 54.26′ |
| 4 | 40.00′ | 242°10′55" | 66.33′ | 169.07′ |
| 5 | 50.00′ | 62°10′55" | 30.15′ | 54.26′ |
| 6 | 40.00′ | 242°10′55" | 66.33′ | 169.07′ |

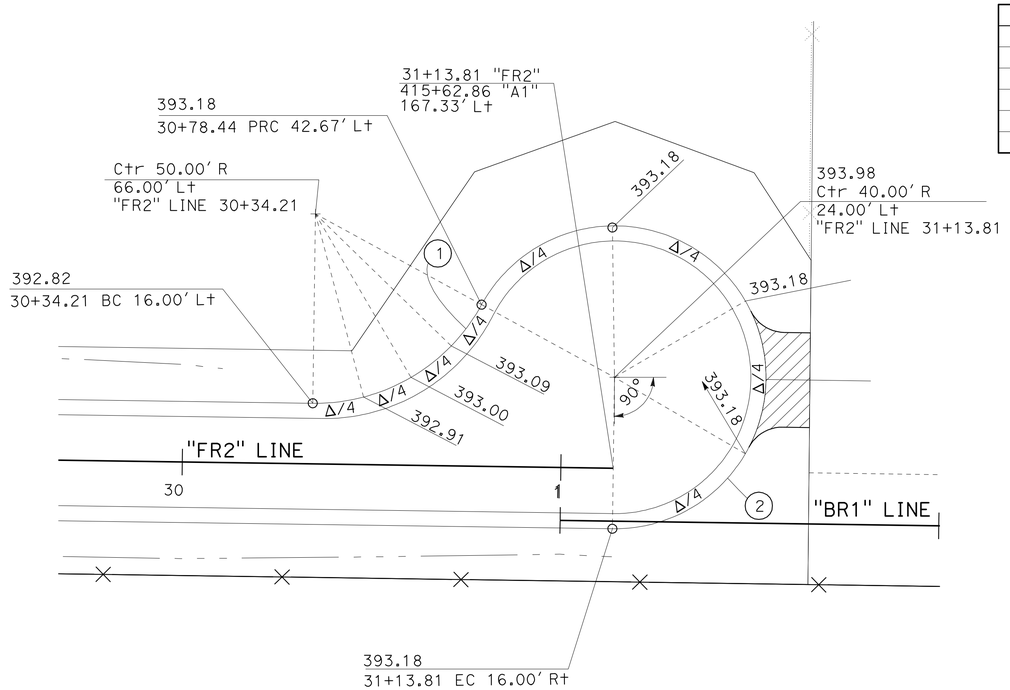


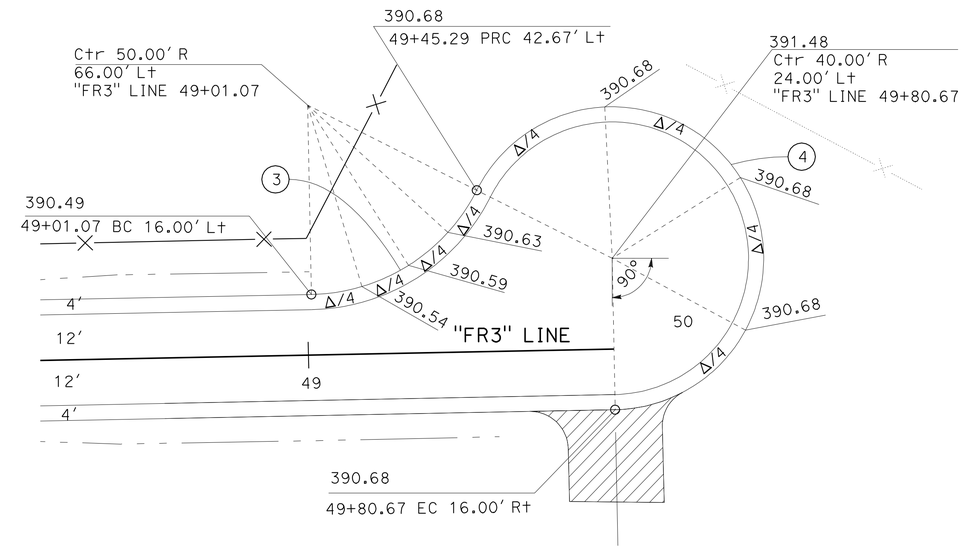


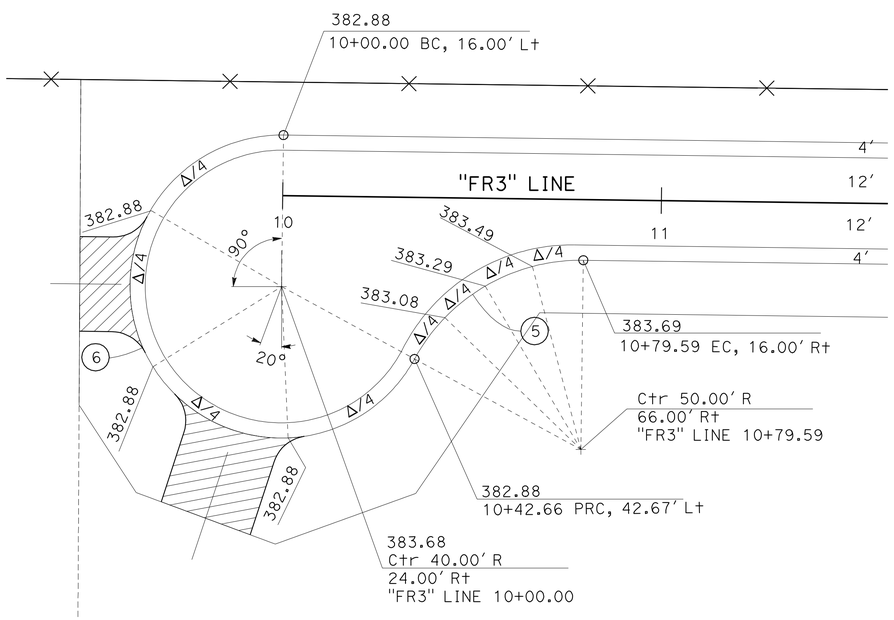


# CONSTRUCTION DETAILS

SCALE: 1" = 20′

C-6

STATE OF CALIFORNIA - DEPARTMENT OF TRANSPORTATION
Caltrans
DESIGN

FUNCTIONAL SUPERVISOR: SANKU G. MOHAN
CALCULATED-DESIGNED BY: HAARJINDER SEKHON
CHECKED BY: SANKU G. MOHAN
REVISED BY: IA
DATE REVISED: 07/09/12

LAST REVISION 07-09-12
DATE PLOTTED => 13-DEC-2012
TIME PLOTTED => 06:37

| Dist | COUNTY | ROUTE | POST MILES TOTAL PROJECT | SHEET No. | TOTAL SHEETS |
|---|---|---|---|---|---|
| 06 | Fre | 180 | R71.8/74.5 | 50 | 235 |

Lawrence Michael Lowe 7-09-12
REGISTERED CIVIL ENGINEER DATE

12-10-12
PLANS APPROVAL DATE

REGISTERED PROFESSIONAL ENGINEER LAWRENCE MICHAEL LOWE No. 66753 Exp. 9/30/12 CIVIL STATE OF CALIFORNIA

*THE STATE OF CALIFORNIA OR ITS OFFICERS OR AGENTS SHALL NOT BE RESPONSIBLE FOR THE ACCURACY OR COMPLETENESS OF SCANNED COPIES OF THIS PLAN SHEET.*

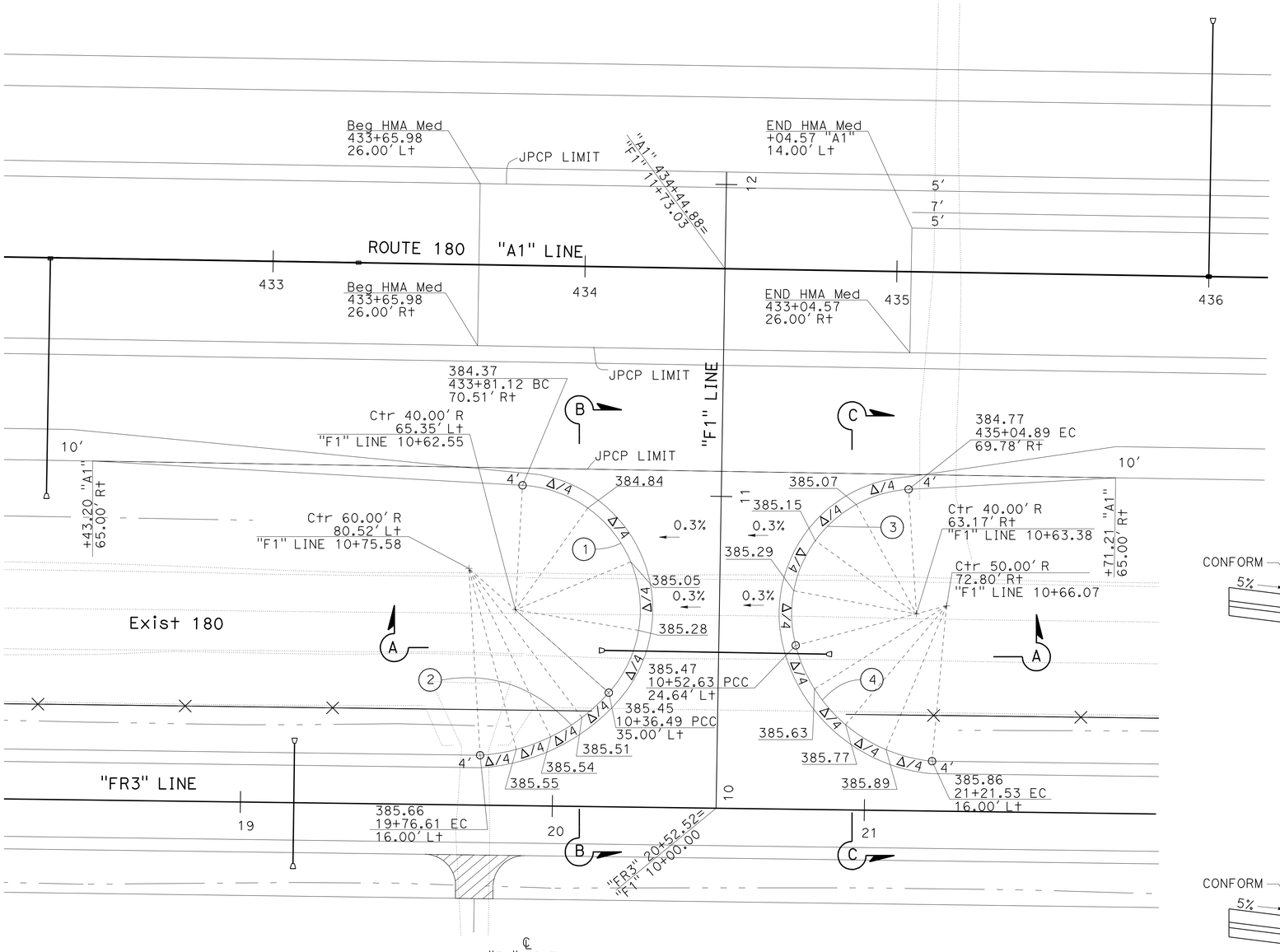


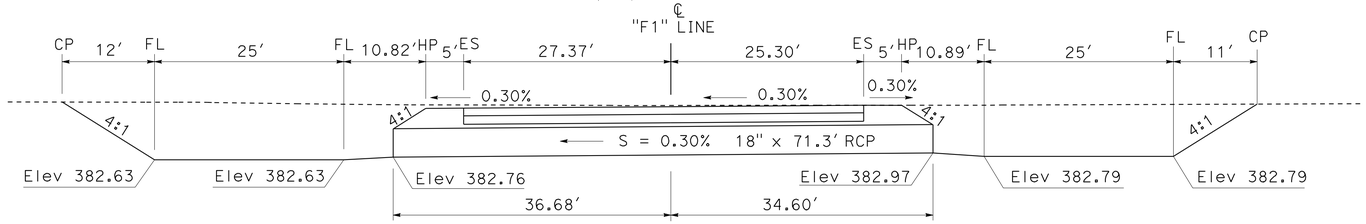


Sta 10+50 "F1" LINE
SECTION A-A

## CURVE DATA

| No. O | R | Δ | T | L |
|---|---|---|---|---|
| 1 | 40.00' | 128°22'17" | 82.69' | 89.62' |
| 2 | 60.00' | 44°58'17" | 24.84' | 47.09' |
| 3 | 40.00' | 101°4'16" | 48.59' | 70.56' |
| 4 | 50.00' | 70°0'00" | 35.01' | 61.09' |

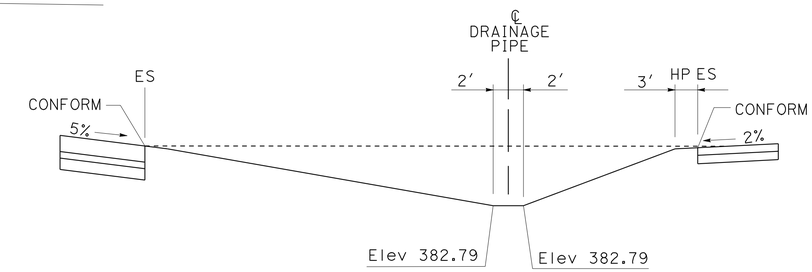


SECTION C-C

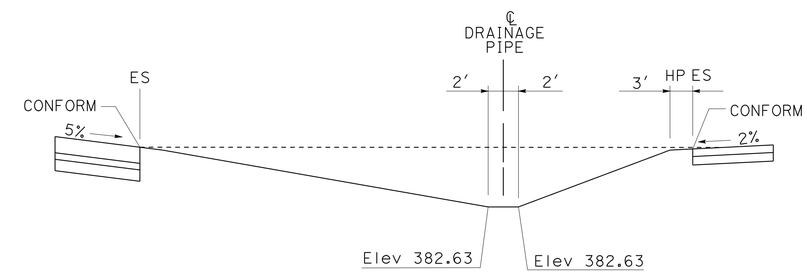


SECTION B-B

# CONSTRUCTION DETAILS

NO SCALE

C-7

STATE OF CALIFORNIA - DEPARTMENT OF TRANSPORTATION
Caltrans
DESIGN

FUNCTIONAL SUPERVISOR: SANKU G. MOHAN
CALCULATED-DESIGNED BY: JOO BAEK
CHECKED BY: SANKU G. MOHAN
REVISED BY: IA
DATE REVISED: 07/09/12

LAST REVISION DATE PLOTTED => 13-DEC-2012
07-09-12 TIME PLOTTED => 06:37

| Dist | COUNTY | ROUTE | POST MILES TOTAL PROJECT | SHEET No. | TOTAL SHEETS |
|---|---|---|---|---|---|
| 06 | Fre | 180 | R71.8/74.5 | 51 | 235 |

Lawrence Michael Lowe 7-09-12
REGISTERED CIVIL ENGINEER DATE

12-10-12
PLANS APPROVAL DATE

REGISTERED PROFESSIONAL ENGINEER
LAWRENCE MICHAEL LOWE
No. 66753
Exp. 9/30/12
CIVIL
STATE OF CALIFORNIA

*THE STATE OF CALIFORNIA OR ITS OFFICERS OR AGENTS SHALL NOT BE RESPONSIBLE FOR THE ACCURACY OR COMPLETENESS OF SCANNED COPIES OF THIS PLAN SHEET.*

**NOTE:** (THIS SHEET ONLY)

FOR CHANGEABLE MESSAGE SIGN DETAILS, REFER TO STANDARD PLANS 2010 (S101).

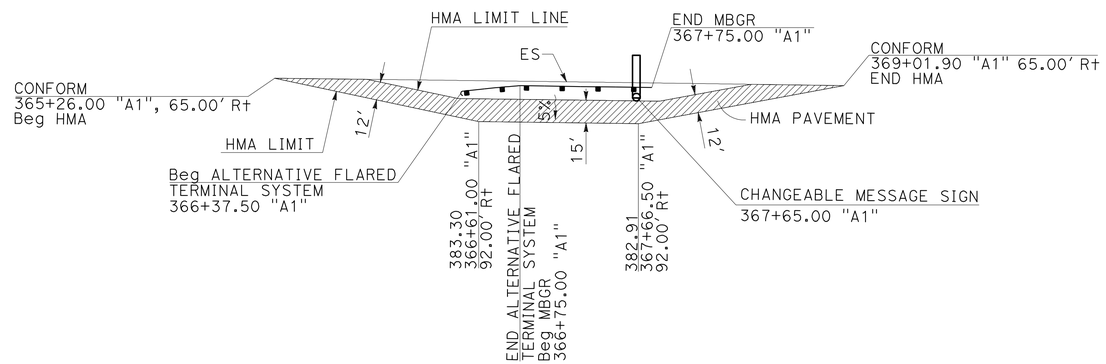


PLAN VIEW

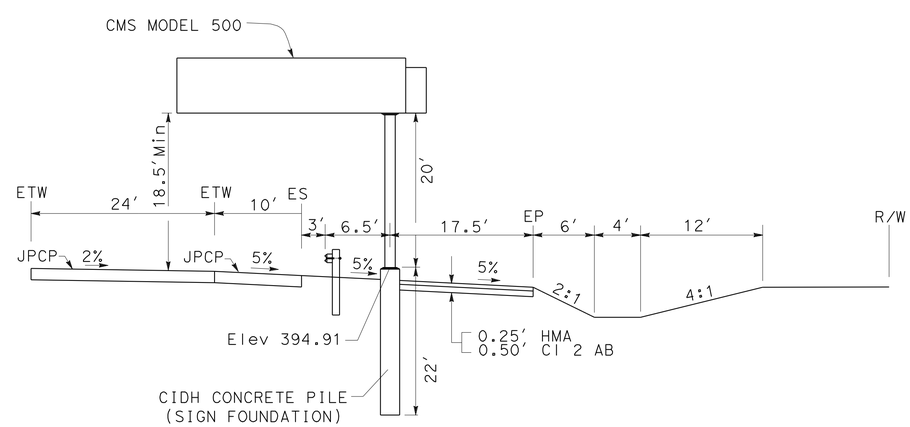


SIDE VIEW

# UNBALANCED BUTTERFLY CHANGEABLE MESSAGE SIGN

## CONSTRUCTION DETAILS

NO SCALE

C-8

| REVISED BY | DATE REVISED |
|---|---|
| IA | 07/09/12 |

CALCULATED-DESIGNED BY: JOO BAEK
CHECKED BY: SANKU G. MOHAN
FUNCTIONAL SUPERVISOR: SANKU G. MOHAN

STATE OF CALIFORNIA - DEPARTMENT OF TRANSPORTATION
Caltrans
DESIGN

LAST REVISION 07-09-12
DATE PLOTTED => 13-DEC-2012
TIME PLOTTED => 06:37

| Dist | COUNTY | ROUTE | POST MILES TOTAL PROJECT | SHEET No. | TOTAL SHEETS |
|---|---|---|---|---|---|
| 06 | Fre | 180 | R71.8/74.5 | 52 | 235 |

REGISTERED CIVIL ENGINEER 7-09-12 DATE

12-10-12
PLANS APPROVAL DATE

REGISTERED PROFESSIONAL ENGINEER HARJINDER SEKHON No. 76396 Exp. 12-31-12 CIVIL STATE OF CALIFORNIA

*THE STATE OF CALIFORNIA OR ITS OFFICERS OR AGENTS SHALL NOT BE RESPONSIBLE FOR THE ACCURACY OR COMPLETENESS OF SCANNED COPIES OF THIS PLAN SHEET.*

**NOTES:** (FOR SHEETS C-9, C-10 AND C-11 ONLY)

1. REFER TO PROFILE SHEETS P-3 FOR CANAL PROFILE INFORMATION
2. DIMENSIONS FOR OPEN CANAL TRANSITION TO BE DETERMINED IN THE FIELD

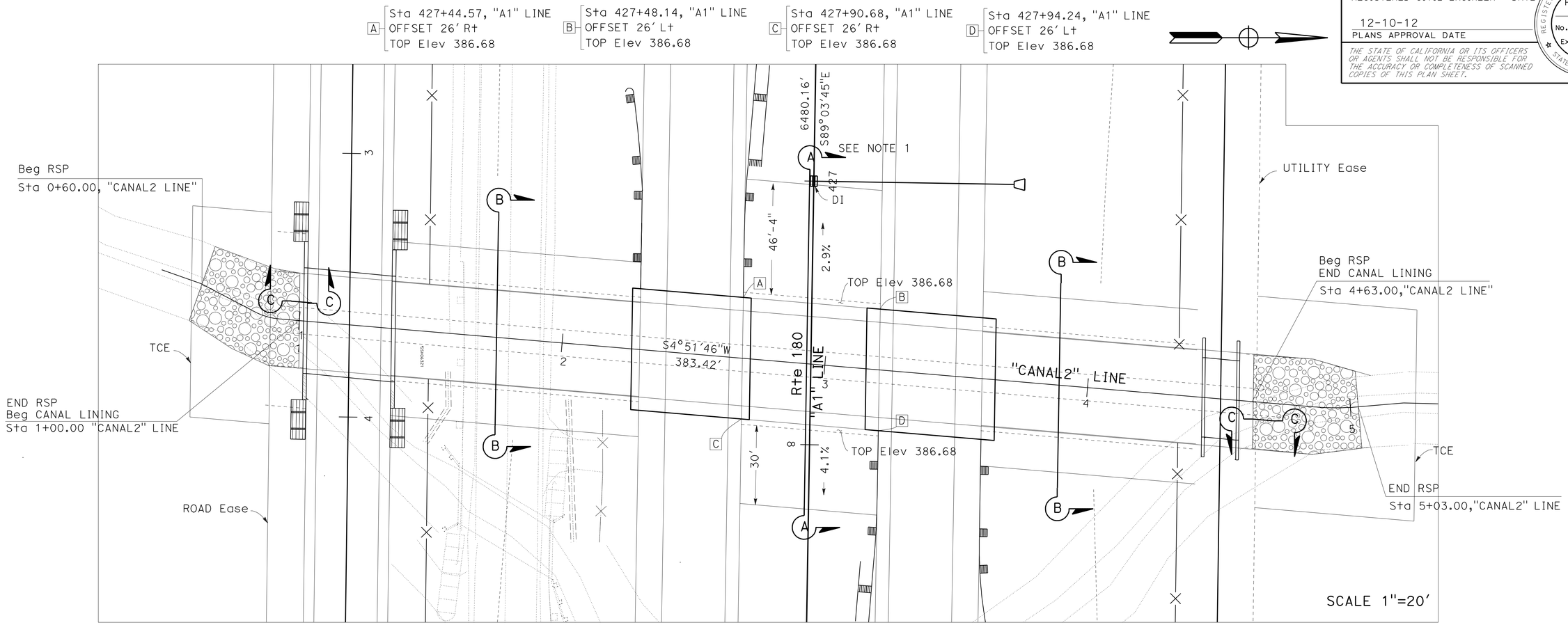


## LAYOUT

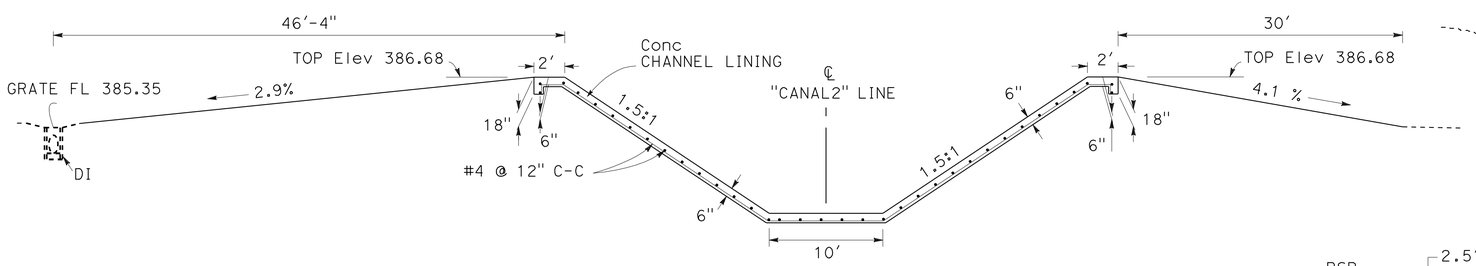


Sta 2+70.00 TO Sta 3+20.00
SECTION A-A

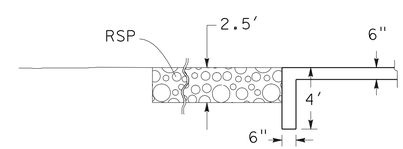


SECTION C-C

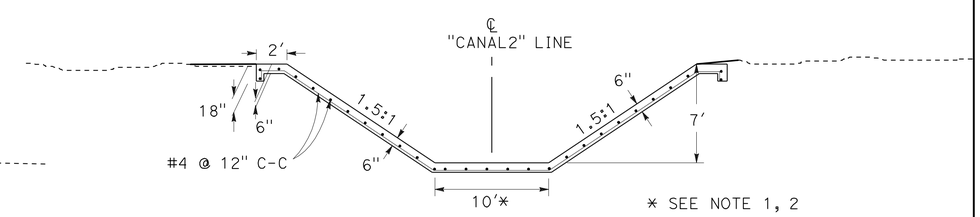


Sta 1+00.00 TO Sta 2+70.00
Sta 3+20.00 TO Sta 4+63.00
SECTION B-B

## CANAL REALIGNMENT & LINING
## LONE TREE CANAL

## CONSTRUCTION DETAILS
## C-9

NO SCALE

| REVISED BY | DATE REVISED |
|---|---|
| IA | 07/09/12 |

CALCULATED-DESIGNED BY: HARJINDER SEKHON
CHECKED BY: SANKU G. MOHAN
FUNCTIONAL SUPERVISOR: SANKU G. MOHAN

STATE OF CALIFORNIA - DEPARTMENT OF TRANSPORTATION
Caltrans
DESIGN

LAST REVISION 07-09-12 | DATE PLOTTED => 13-DEC-2012 | TIME PLOTTED => 06:38

| Dist | COUNTY | ROUTE | POST MILES TOTAL PROJECT | SHEET No. | TOTAL SHEETS |
|---|---|---|---|---|---|
| 06 | Fre | 180 | R71.8/74.5 | 53 | 235 |

REGISTERED CIVIL ENGINEER 7-09-12 DATE

12-10-12
PLANS APPROVAL DATE

REGISTERED PROFESSIONAL ENGINEER HARJINDER SEKHON No. 76396 Exp. 12-31-12 CIVIL STATE OF CALIFORNIA

*THE STATE OF CALIFORNIA OR ITS OFFICERS OR AGENTS SHALL NOT BE RESPONSIBLE FOR THE ACCURACY OR COMPLETENESS OF SCANNED COPIES OF THIS PLAN SHEET.*

**NOTE:** (THIS SHEET ONLY)

REFER TO CONSTRUCTION DETAILS SHEET C-14 FOR CANAL CROSS SECTION INFORMATION

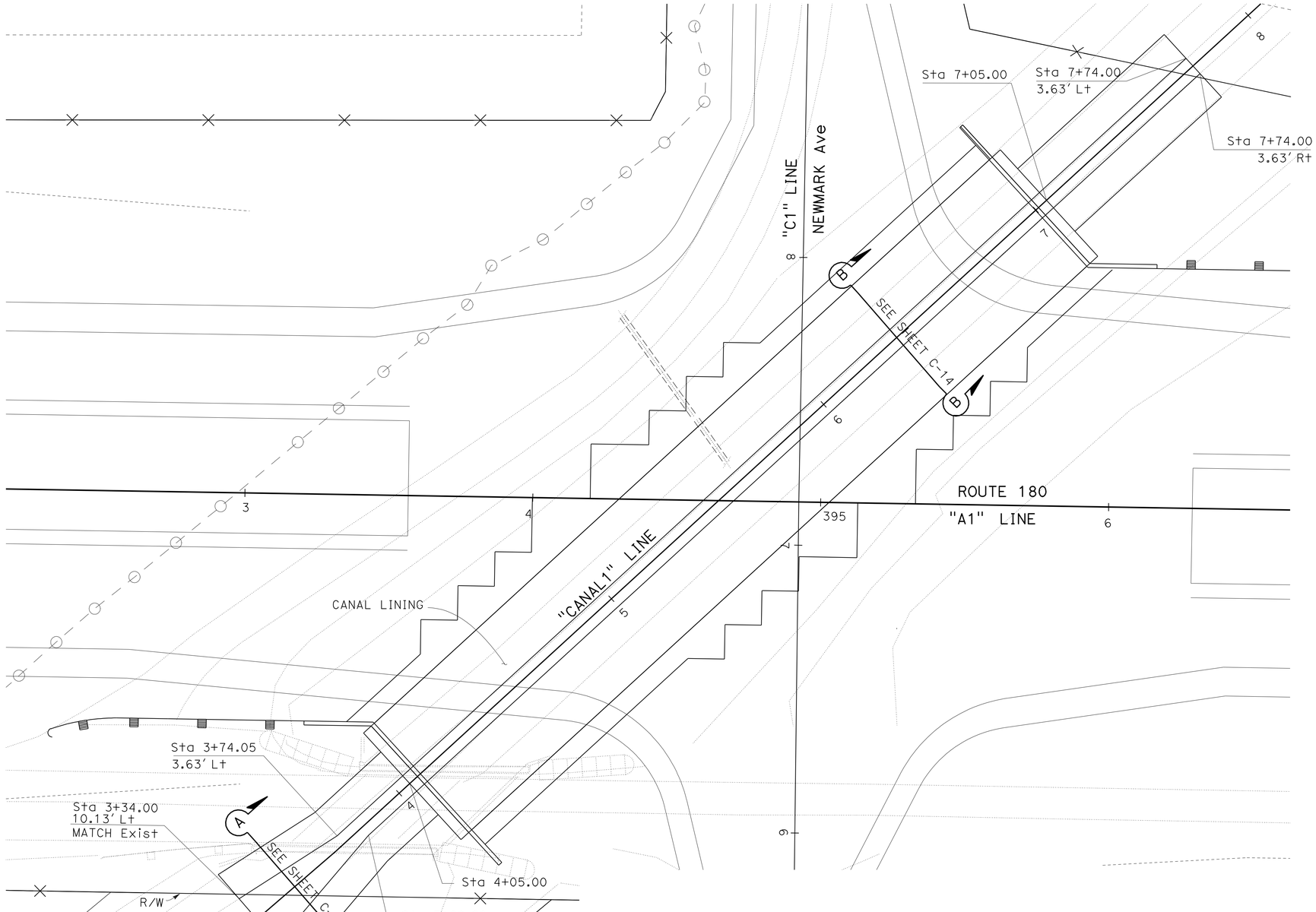


## CHANNEL LINING
## FOWLER SWITCH CANAL

# CONSTRUCTION DETAILS
# C-10

SCALE: 1" = 20'

STATE OF CALIFORNIA - DEPARTMENT OF TRANSPORTATION
Caltrans
DESIGN

FUNCTIONAL SUPERVISOR: SANKU G. MOHAN
CALCULATED-DESIGNED BY: JOO BAEK
CHECKED BY: SANKU G. MOHAN
REVISED BY: IA
DATE REVISED: 07/09/12

LAST REVISION DATE PLOTTED => 13-DEC-2012
TIME PLOTTED => 06:38
07-09-12

| Dist | COUNTY | ROUTE | POST MILES TOTAL PROJECT | SHEET No. | TOTAL SHEETS |
|---|---|---|---|---|---|
| 06 | Fre | 180 | R71.8/74.5 | 54 | 235 |

REGISTERED CIVIL ENGINEER 7-09-12 DATE

12-10-12
PLANS APPROVAL DATE

REGISTERED PROFESSIONAL ENGINEER HARJINDER SEKHON No. 76396 Exp. 12-31-12 CIVIL STATE OF CALIFORNIA

*THE STATE OF CALIFORNIA OR ITS OFFICERS OR AGENTS SHALL NOT BE RESPONSIBLE FOR THE ACCURACY OR COMPLETENESS OF SCANNED COPIES OF THIS PLAN SHEET.*

**LEGEND:** (THIS SHEET ONLY)

DIRT GRADING.

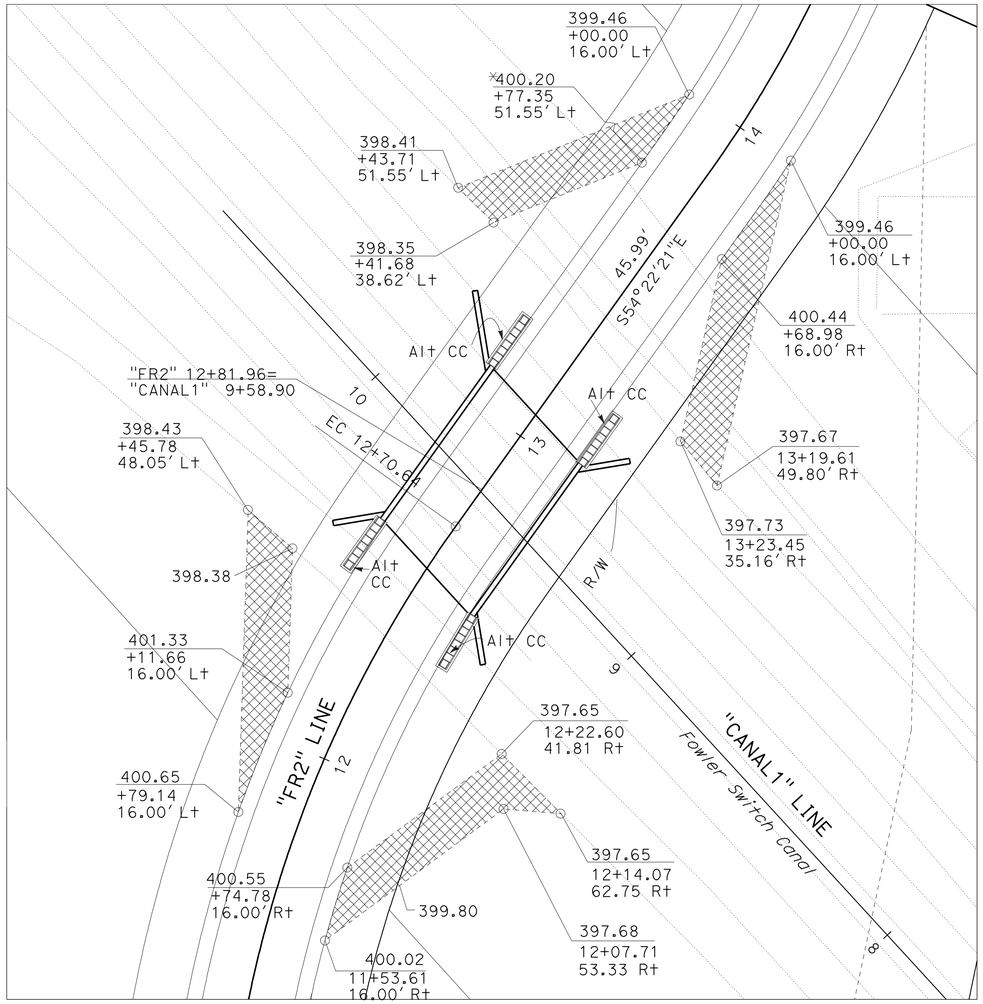


## FOWLER SWITCH CANAL Br (FRONTAGE)

Br No. 42C-0660

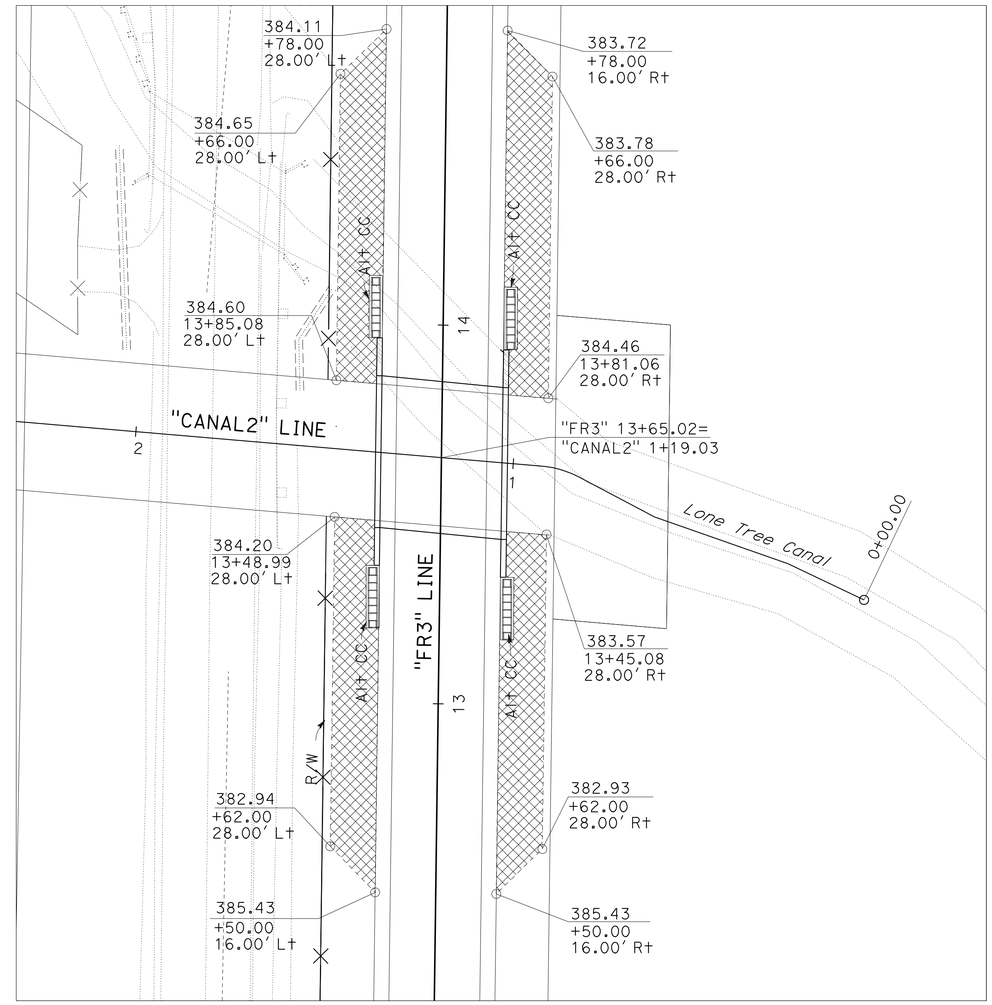


## LONE TREE CANAL Br (S FRONTAGE)

Br No. 42C-0661

## CANAL BANK ACCESS

DIRT GRADING DETAIL

## CONSTRUCTION DETAILS

SCALE: 1" = 20'

**C-11**

| REVISED BY | DATE REVISED |
|---|---|
| IA | 07/09/12 |

CALCULATED-DESIGNED BY: HARJINDER SEKHON
CHECKED BY: SANKU G. MOHAN
FUNCTIONAL SUPERVISOR: SANKU G. MOHAN

STATE OF CALIFORNIA - DEPARTMENT OF TRANSPORTATION
Caltrans
DESIGN

LAST REVISION 07-09-12 | DATE PLOTTED => 13-DEC-2012 | TIME PLOTTED => 06:38

| Dist | COUNTY | ROUTE | POST MILES TOTAL PROJECT | SHEET No. | TOTAL SHEETS |
|---|---|---|---|---|---|
| 06 | Fre | 180 | R71.8/74.5 | 55 | 235 |

REGISTERED CIVIL ENGINEER 7-09-12 DATE

12-10-12
PLANS APPROVAL DATE

REGISTERED PROFESSIONAL ENGINEER HARJINDER SEKHON No. 76396 Exp. 12-31-12 CIVIL STATE OF CALIFORNIA

*THE STATE OF CALIFORNIA OR ITS OFFICERS OR AGENTS SHALL NOT BE RESPONSIBLE FOR THE ACCURACY OR COMPLETENESS OF SCANNED COPIES OF THIS PLAN SHEET.*

NOTES:

SEE SHEET Q-5, TABLE 'PLACE HMA (Misc AREA)' FOR DRIVEWAY WIDTH, LENGTH AND AREA.

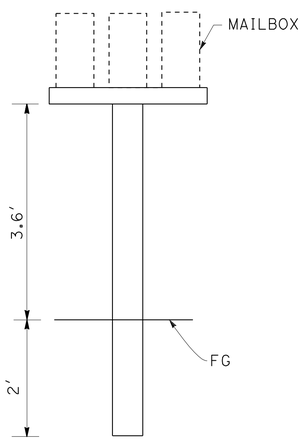


FRONT VIEW
(TRIPLE BOXES)

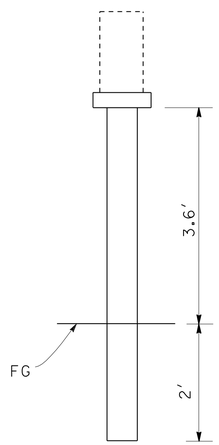


FRONT VIEW
(SINGLE BOX)

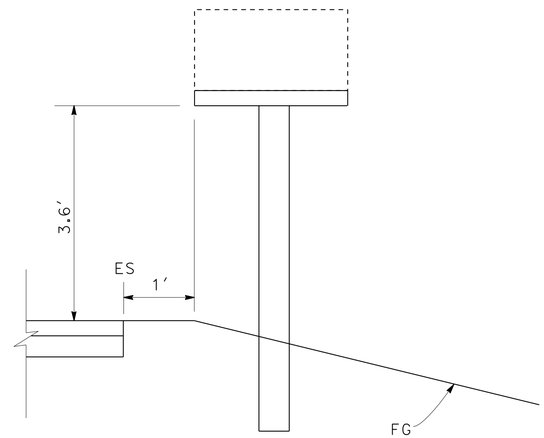


SIDE VIEW

## RESET MAILBOX

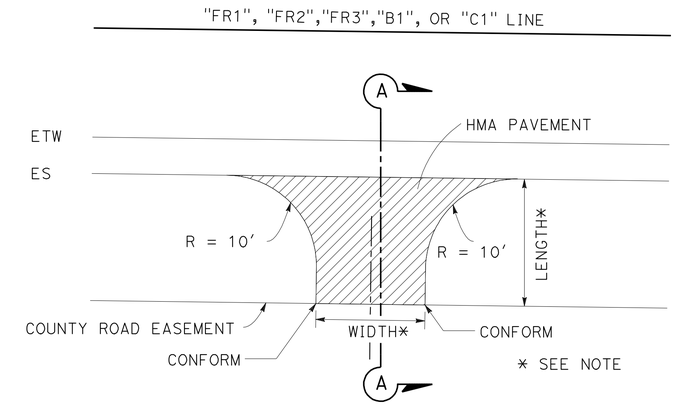


PLAN (Typ)

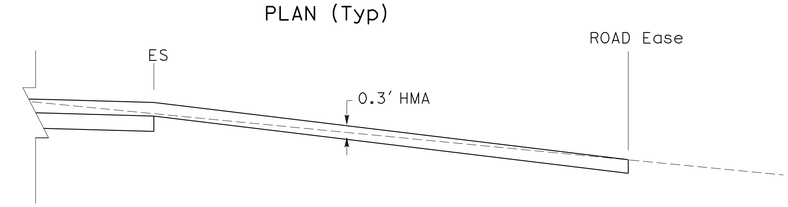


SECTION A-A (Typ)

## DRIVEWAY

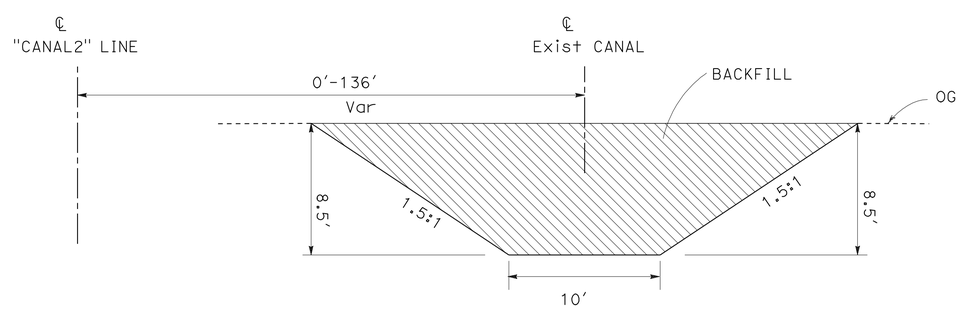


## Exist OPEN CHANNEL

LONE TREE CANAL
(TO BE BACKFILLED)

# CONSTRUCTION DETAILS
# C-12

NO SCALE

STATE OF CALIFORNIA - DEPARTMENT OF TRANSPORTATION
DESIGN
Caltrans

FUNCTIONAL SUPERVISOR: SANKU G. MOHAN
CALCULATED-DESIGNED BY: JOO BAEK
CHECKED BY: SANKU G. MOHAN
REVISED BY: IA
DATE REVISED: XX/XX/XX

LAST REVISION 07-09-12
DATE PLOTTED => 13-DEC-2012
TIME PLOTTED => 06:38

| Dist | COUNTY | ROUTE | POST MILES TOTAL PROJECT | SHEET No. | TOTAL SHEETS |
|---|---|---|---|---|---|
| 06 | Fre | 180 | R71.8/74.5 | 56 | 235 |

Lawrence Michael Lowe 7-09-12
REGISTERED CIVIL ENGINEER DATE

12-10-12
PLANS APPROVAL DATE

REGISTERED PROFESSIONAL ENGINEER LAWRENCE MICHAEL LOWE No. 66753 Exp. 9/30/12 CIVIL STATE OF CALIFORNIA

*THE STATE OF CALIFORNIA OR ITS OFFICERS OR AGENTS SHALL NOT BE RESPONSIBLE FOR THE ACCURACY OR COMPLETENESS OF SCANNED COPIES OF THIS PLAN SHEET.*

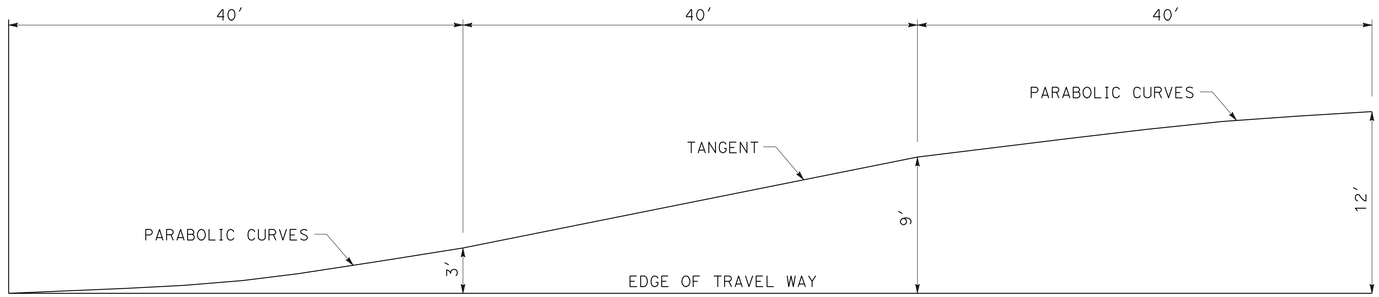


## BAY TAPER

Sta 346+75.67 - 347+95.67 "A1" LINE
Sta 361+57.00 - 362+77.00 "A1" LINE
Sta 386+92.73 - 388+12.73 "A1" LINE
Sta 401+72.91 - 402+92.91 "A1" LINE
Sta 55+01.55 - 56+21.55 "TD1" LINE

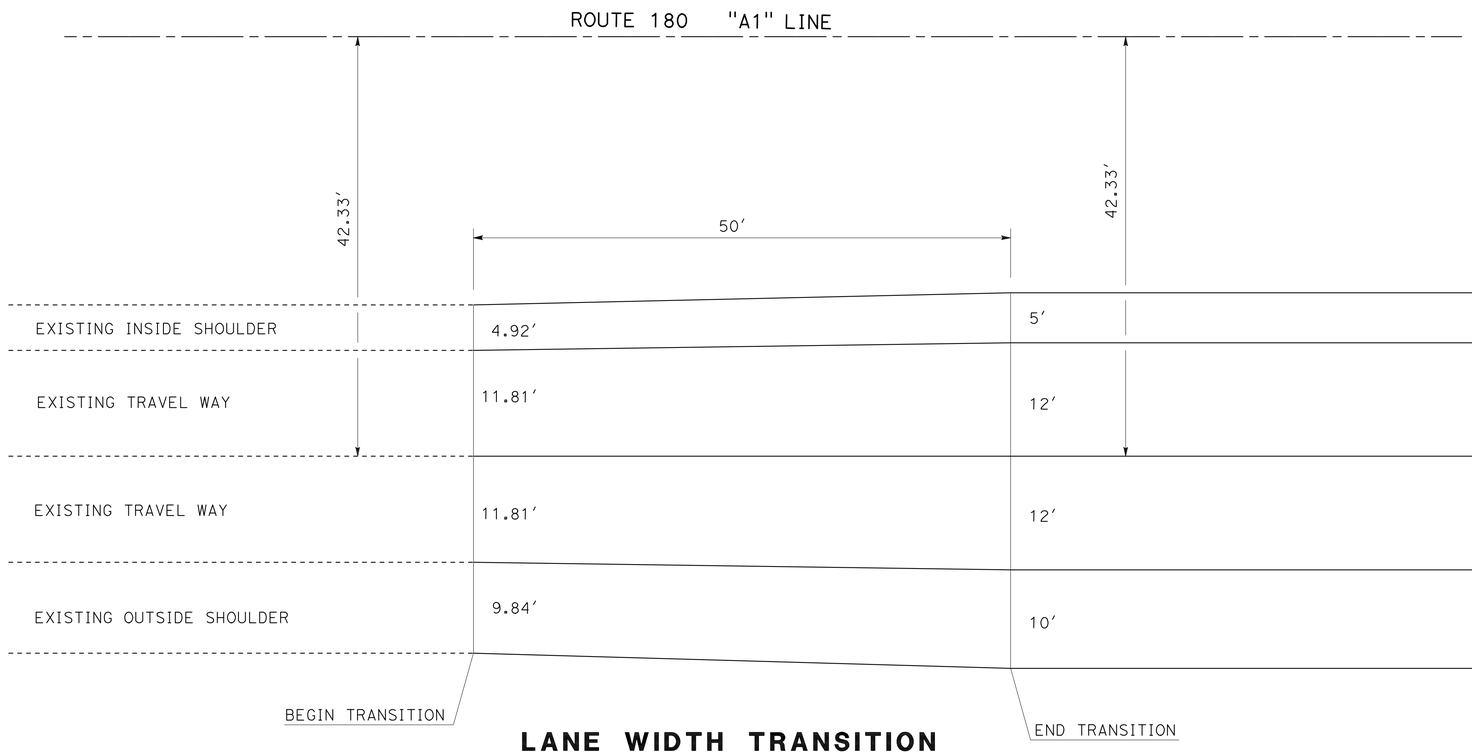


## LANE WIDTH TRANSITION

Sta 334+64.50 - 335+14.50 "A1" LINE EASTBOUND
Sta 344+48.75 - 344+98.75 "A1" LINE WESTBOUND

# CONSTRUCTION DETAILS

NO SCALE

C-13

STATE OF CALIFORNIA - DEPARTMENT OF TRANSPORTATION
Caltrans® DESIGN

FUNCTIONAL SUPERVISOR: SANKU G. MOHAN
CALCULATED-DESIGNED BY: JOO BAEK
CHECKED BY: SANKU G. MOHAN
REVISED BY: IA
DATE REVISED: 07/09/12

LAST REVISION 07-09-12
DATE PLOTTED => 13-DEC-2012
TIME PLOTTED => 06:38

| Dist | COUNTY | ROUTE | POST MILES TOTAL PROJECT | SHEET No. | TOTAL SHEETS |
|---|---|---|---|---|---|
| 06 | Fre | 180 | R71.8/74.5 | 57 | 235 |

REGISTERED CIVIL ENGINEER 7-09-12 DATE

12-10-12
PLANS APPROVAL DATE

REGISTERED PROFESSIONAL ENGINEER HARJINDER SEKHON No. 76396 Exp. 12-31-12 CIVIL STATE OF CALIFORNIA

*THE STATE OF CALIFORNIA OR ITS OFFICERS OR AGENTS SHALL NOT BE RESPONSIBLE FOR THE ACCURACY OR COMPLETENESS OF SCANNED COPIES OF THIS PLAN SHEET.*

## NOTES:

1. REFER TO PROFILE SHEET P-2 FOR CANAL PROFILE INFORMATION
2. DIMENSIONS FOR OPEN CANAL TRANSITION TO BE DETERMINED IN THE FIELD
3. REFER TO CONSTRUCTION DETAILS SHEET C-10 FOR CANAL LAYOUT INFORMATION

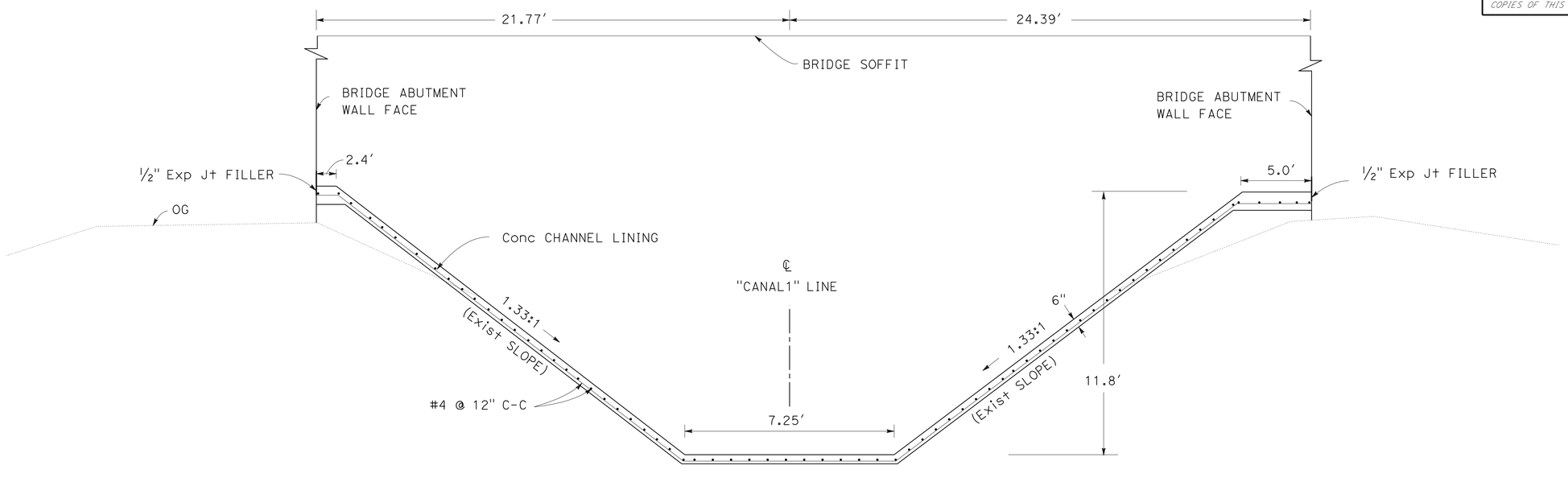


Sta 4+05.00 TO Sta 7+05.00
SECTION B-B

* SEE NOTE 1, 2

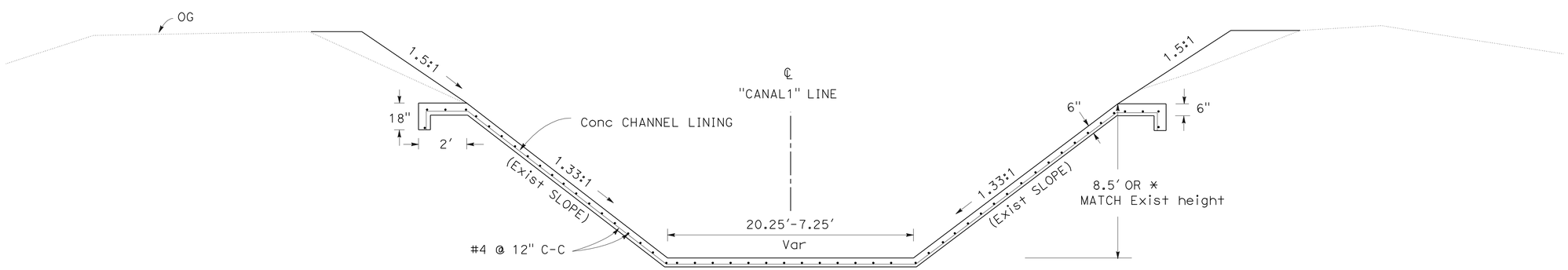


* SEE NOTE 1, 2

Sta 3+34.00 TO Sta 4+05.00
Sta 7+05.00 TO Sta 7+74.00

SECTION A-A

# CHANNEL LINING
# FOWLER SWITCH CANAL

# CONSTRUCTION DETAILS
# C-14

NO SCALE

STATE OF CALIFORNIA - DEPARTMENT OF TRANSPORTATION
Caltrans
DESIGN

FUNCTIONAL SUPERVISOR: SANKU G. MOHAN
CALCULATED-DESIGNED BY: HARJINDER SEKHON
CHECKED BY: SANKU G. MOHAN
REVISED BY: IA
DATE REVISED: 07/09/12

LAST REVISION 07-09-12
DATE PLOTTED => 13-DEC-2012
TIME PLOTTED => 06:38

| Dist | COUNTY | ROUTE | POST MILES TOTAL PROJECT | SHEET No. | TOTAL SHEETS |
|---|---|---|---|---|---|
| 06 | Fre | 180 | R71.8/74.5 | 58 | 235 |

Gloria Ramirez
LICENSED LANDSCAPE ARCHITECT

12-10-12
PLANS APPROVAL DATE

LICENSED LANDSCAPE ARCHITECT
GLORIA RAMIREZ No. 5363
Gloria Ramirez
Signature
04/30/12
Renewal Date
02/14/12
Date
STATE OF CALIFORNIA

*THE STATE OF CALIFORNIA OR ITS OFFICERS OR AGENTS SHALL NOT BE RESPONSIBLE FOR THE ACCURACY OR COMPLETENESS OF SCANNED COPIES OF THIS PLAN SHEET.*

## NOTE:

FOR ACCURATE RIGHT OF WAY DATA, CONTACT
RIGHT OF WAY ENGINEERING AT THE DISTRICT OFFICE.

## LEGEND:

EROSION CONTROL TYPE 1

EROSION CONTROL TYPE 2

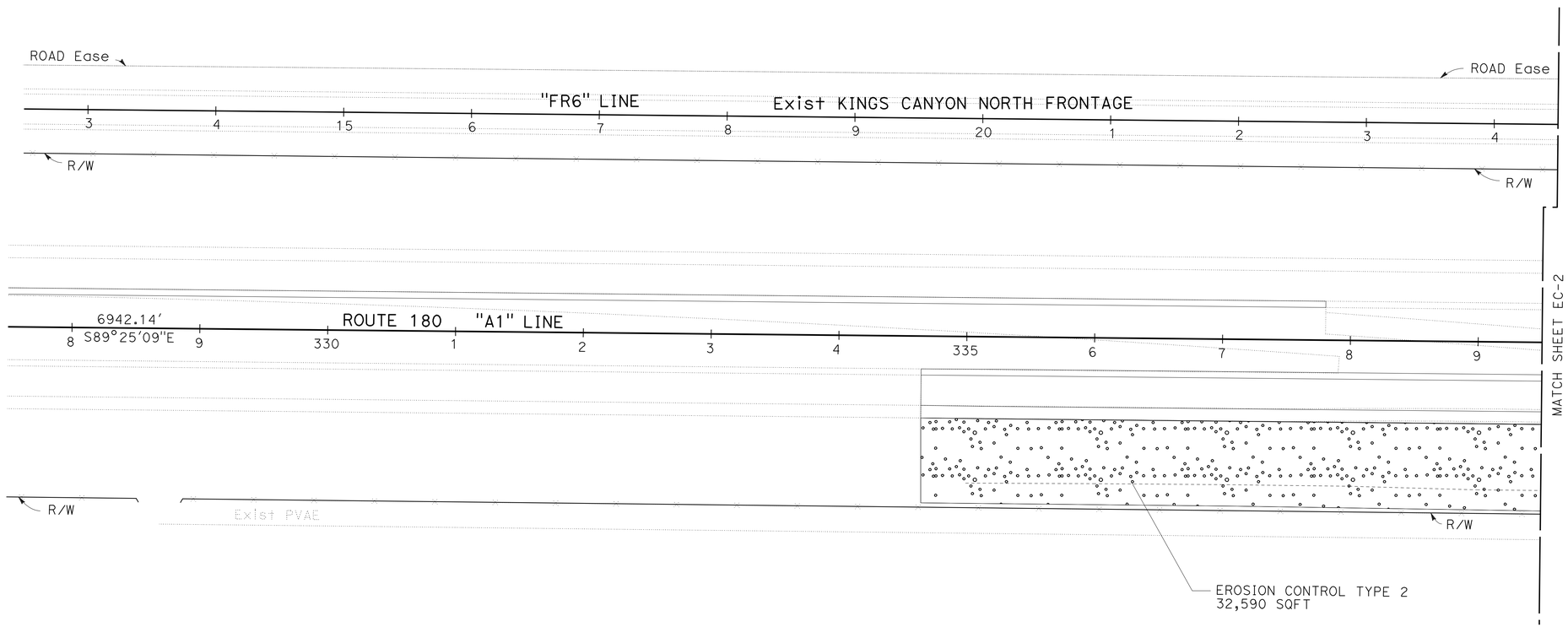


*APPROVED FOR EROSION CONTROL WORK ONLY*

# EROSION CONTROL PLAN

SCALE: 1" = 50'

**EC-1**

STATE OF CALIFORNIA - DEPARTMENT OF TRANSPORTATION
Caltrans® LANDSCAPE ARCHITECTURE

SENIOR LANDSCAPE ARCHITECT: BRAD COLE
CALCULATED-DESIGNED BY: GLORIA RAMIREZ
CHECKED BY: KEVIN GALLO
REVISED BY
DATE REVISED

LAST REVISION 07-09-12
DATE PLOTTED => 13-DEC-2012
TIME PLOTTED => 06:38

| Dist | COUNTY | ROUTE | POST MILES TOTAL PROJECT | SHEET No. | TOTAL SHEETS |
|---|---|---|---|---|---|
| 06 | Fre | 180 | R71.8/74.5 | 59 | 235 |

Gloria Ramirez
LICENSED LANDSCAPE ARCHITECT

12-10-12
PLANS APPROVAL DATE

LICENSED LANDSCAPE ARCHITECT
GLORIA RAMIREZ No. 5083
Gloria Ramirez
Signature
04/30/12
Renewal Date
02/14/12
Date
STATE OF CALIFORNIA

*THE STATE OF CALIFORNIA OR ITS OFFICERS OR AGENTS SHALL NOT BE RESPONSIBLE FOR THE ACCURACY OR COMPLETENESS OF SCANNED COPIES OF THIS PLAN SHEET.*

**NOTE:**

FOR ACCURATE RIGHT OF WAY DATA, CONTACT
RIGHT OF WAY ENGINEERING AT THE DISTRICT OFFICE.

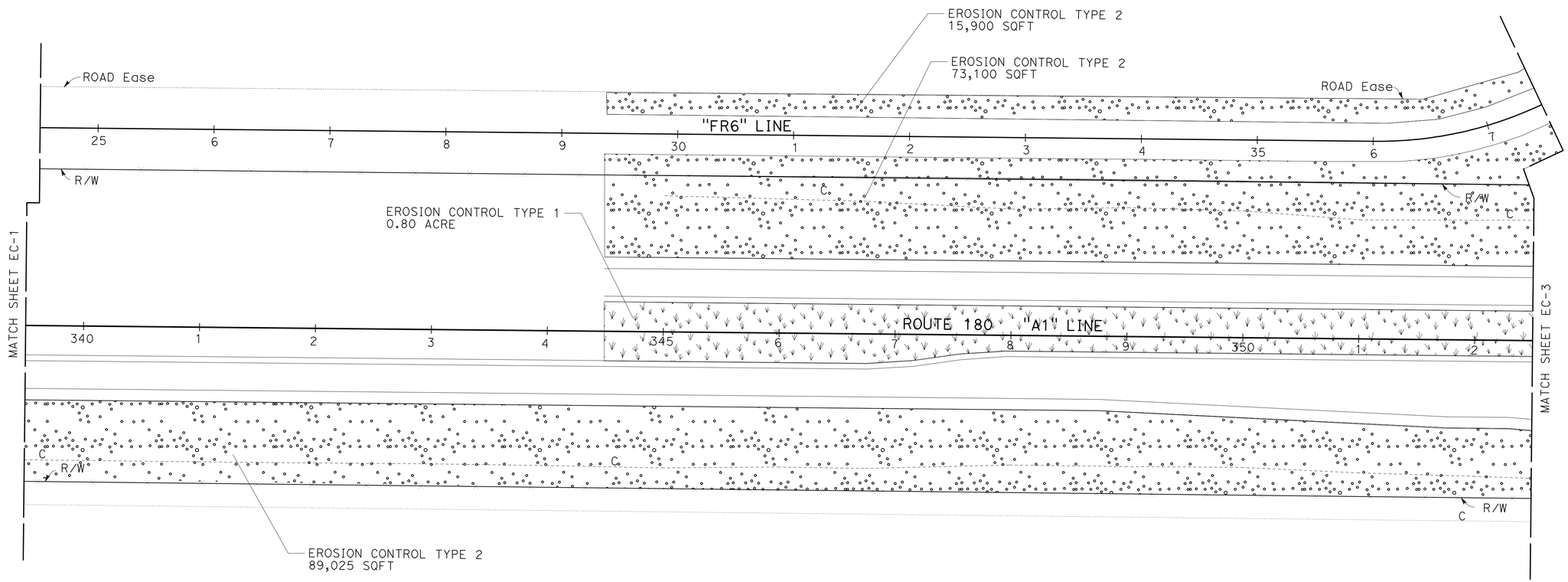


*APPROVED FOR EROSION CONTROL WORK ONLY*

# EROSION CONTROL PLAN

SCALE: 1" = 50'

**EC-2**

STATE OF CALIFORNIA - DEPARTMENT OF TRANSPORTATION
Caltrans® LANDSCAPE ARCHITECTURE

SENIOR LANDSCAPE ARCHITECT: BRAD COLE
CALCULATED-DESIGNED BY: GLORIA RAMIREZ
CHECKED BY: KEVIN GALLO
REVISED BY
DATE REVISED

LAST REVISION 07-09-12
DATE PLOTTED => 13-DEC-2012
TIME PLOTTED => 06:38

| Dist | COUNTY | ROUTE | POST MILES TOTAL PROJECT | SHEET No. | TOTAL SHEETS |
|---|---|---|---|---|---|
| 06 | Fre | 180 | R71.8/74.5 | 60 | 235 |

Gloria Ramirez
LICENSED LANDSCAPE ARCHITECT

12-10-12
PLANS APPROVAL DATE

LICENSED LANDSCAPE ARCHITECT GLORIA RAMIREZ No. 5283 Signature 04/30/12 Renewal Date 02/14/12 Date STATE OF CALIFORNIA

*THE STATE OF CALIFORNIA OR ITS OFFICERS OR AGENTS SHALL NOT BE RESPONSIBLE FOR THE ACCURACY OR COMPLETENESS OF SCANNED COPIES OF THIS PLAN SHEET.*

**NOTE:**

FOR ACCURATE RIGHT OF WAY DATA, CONTACT RIGHT OF WAY ENGINEERING AT THE DISTRICT OFFICE.

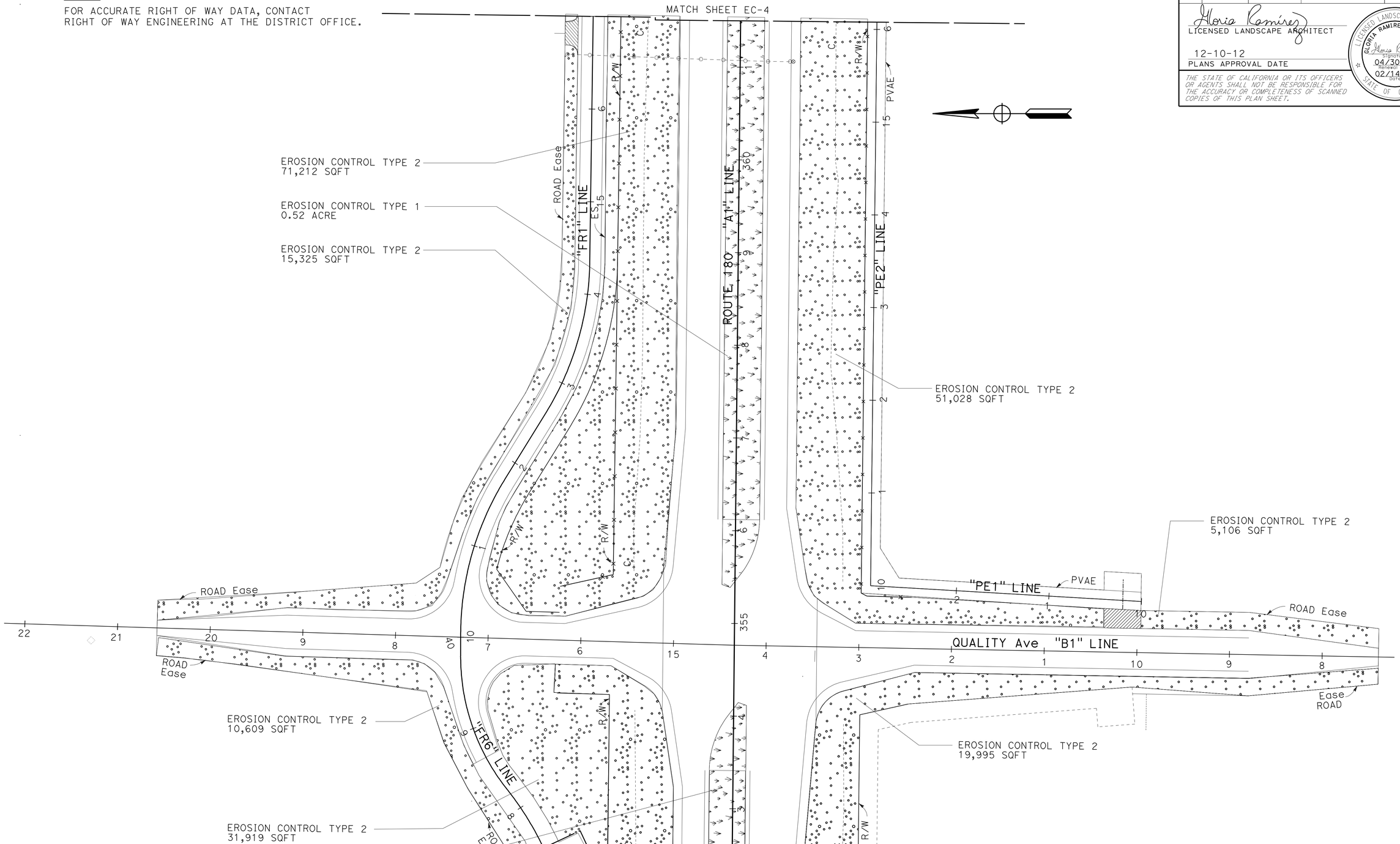


*APPROVED FOR EROSION CONTROL WORK ONLY*

# EROSION CONTROL PLAN EC-3

SCALE: 1" = 50'

STATE OF CALIFORNIA - DEPARTMENT OF TRANSPORTATION
Caltrans® LANDSCAPE ARCHITECTURE

SENIOR LANDSCAPE ARCHITECT: BRAD COLE
CALCULATED-DESIGNED BY: GLORIA RAMIREZ
CHECKED BY: KEVIN GALLO
REVISED BY
DATE REVISED

LAST REVISION 07-09-12
DATE PLOTTED => 13-DEC-2012
TIME PLOTTED => 06:38

| Dist | COUNTY | ROUTE | POST MILES TOTAL PROJECT | SHEET No. | TOTAL SHEETS |
|---|---|---|---|---|---|
| 06 | Fre | 180 | R71.8/74.5 | 61 | 235 |

Gloria Ramirez
LICENSED LANDSCAPE ARCHITECT

12-10-12
PLANS APPROVAL DATE

LICENSED LANDSCAPE ARCHITECT
GLORIA RAMIREZ No. 5983
Gloria Ramirez
Signature
04/30/12
Renewal Date
02/14/12
Date
STATE OF CALIFORNIA

*THE STATE OF CALIFORNIA OR ITS OFFICERS OR AGENTS SHALL NOT BE RESPONSIBLE FOR THE ACCURACY OR COMPLETENESS OF SCANNED COPIES OF THIS PLAN SHEET.*

**NOTE:**

FOR ACCURATE RIGHT OF WAY DATA, CONTACT
RIGHT OF WAY ENGINEERING AT THE DISTRICT OFFICE.

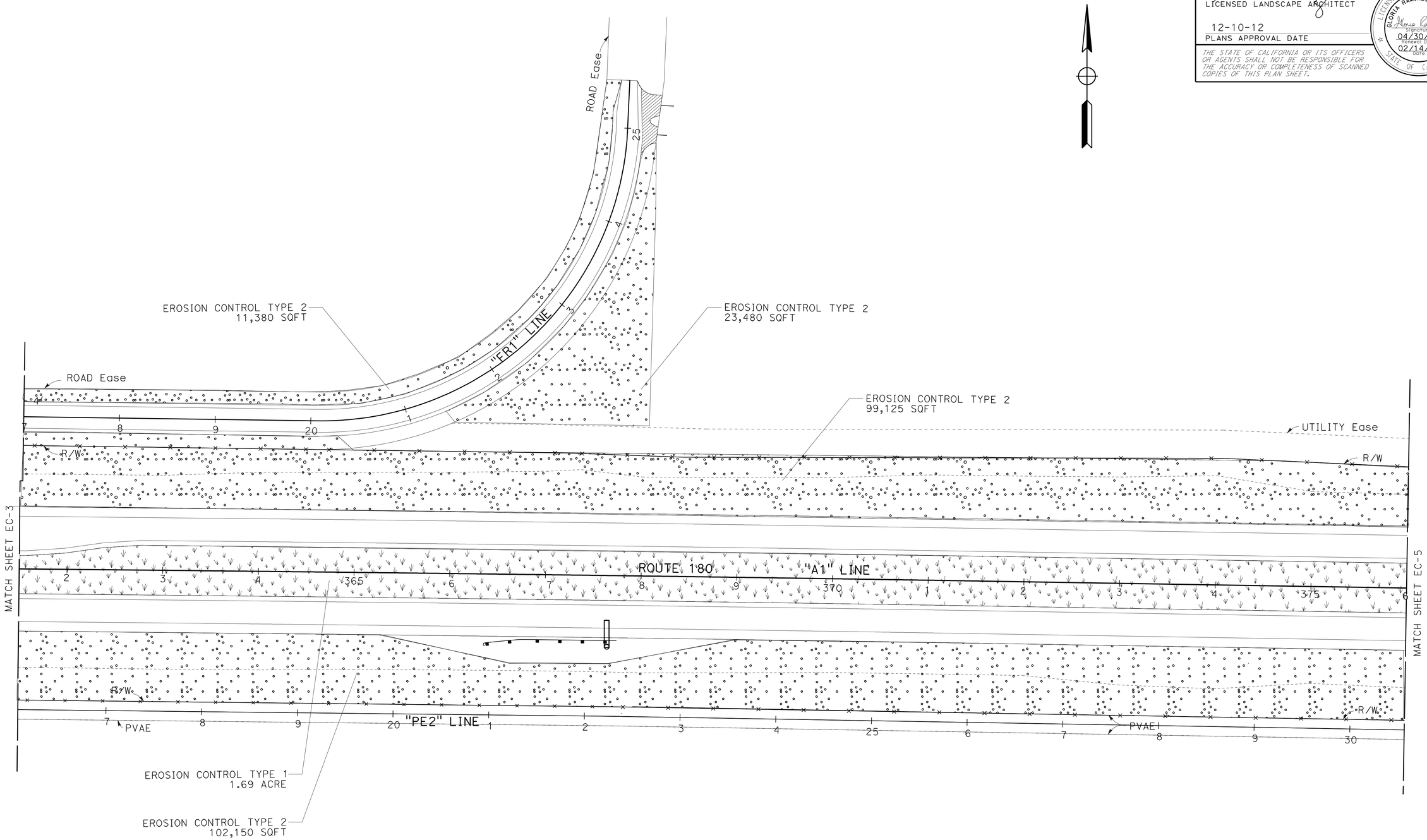


*APPROVED FOR EROSION CONTROL WORK ONLY*

# EROSION CONTROL PLAN

SCALE: 1" = 50'

**EC-4**

STATE OF CALIFORNIA - DEPARTMENT OF TRANSPORTATION
Caltrans® LANDSCAPE ARCHITECTURE

SENIOR LANDSCAPE ARCHITECT: BRAD COLE
CALCULATED-DESIGNED BY: GLORIA RAMIREZ
CHECKED BY: KEVIN GALLO
REVISED BY
DATE REVISED

LAST REVISION 07-09-12
DATE PLOTTED => 13-DEC-2012
TIME PLOTTED => 06:38

| Dist | COUNTY | ROUTE | POST MILES TOTAL PROJECT | SHEET No. | TOTAL SHEETS |
|---|---|---|---|---|---|
| 06 | Fre | 180 | R71.8/74.5 | 62 | 235 |

Gloria Ramirez
LICENSED LANDSCAPE ARCHITECT

12-10-12
PLANS APPROVAL DATE

LICENSED LANDSCAPE ARCHITECT
GLORIA RAMIREZ No. 5983
Gloria Ramirez
Signature
04/30/12
Renewal Date
02/14/12
Date
STATE OF CALIFORNIA

*THE STATE OF CALIFORNIA OR ITS OFFICERS OR AGENTS SHALL NOT BE RESPONSIBLE FOR THE ACCURACY OR COMPLETENESS OF SCANNED COPIES OF THIS PLAN SHEET.*

**NOTE:**

FOR ACCURATE RIGHT OF WAY DATA, CONTACT
RIGHT OF WAY ENGINEERING AT THE DISTRICT OFFICE.

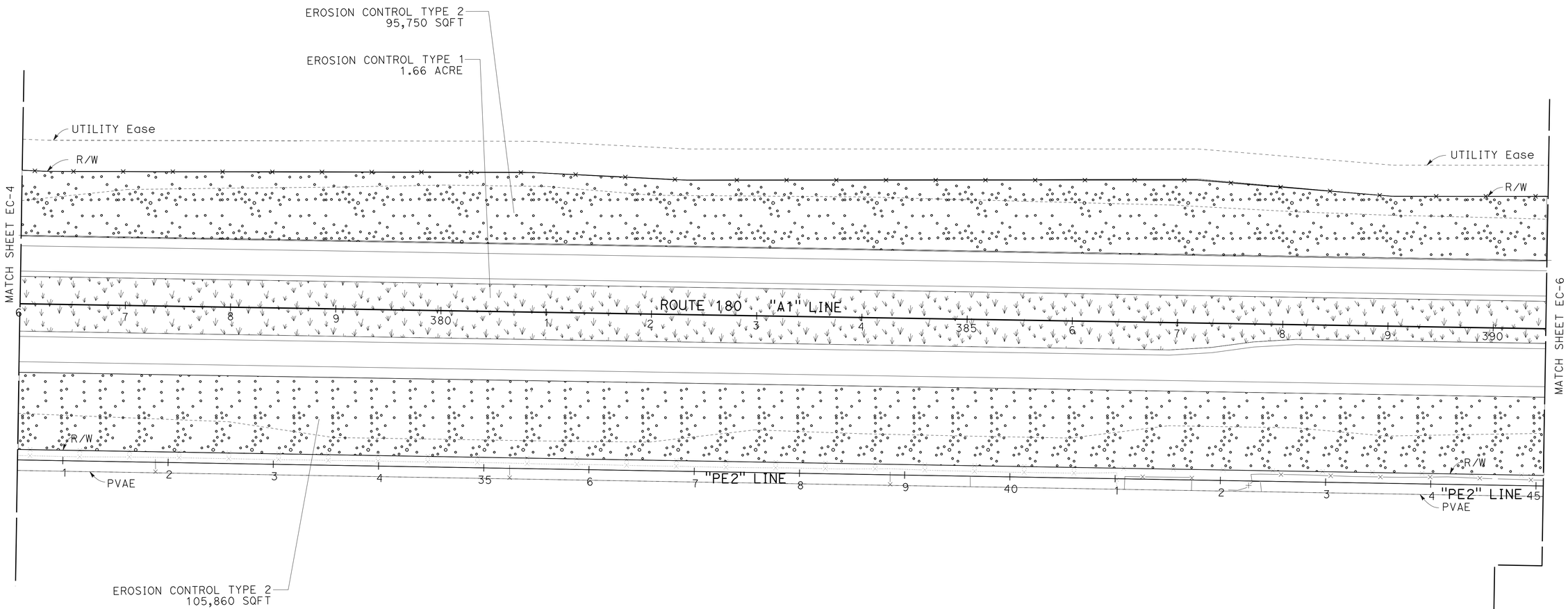


*APPROVED FOR EROSION CONTROL WORK ONLY*

# EROSION CONTROL PLAN

SCALE: 1" = 50'

**EC-5**

STATE OF CALIFORNIA - DEPARTMENT OF TRANSPORTATION
Caltrans® LANDSCAPE ARCHITECTURE

SENIOR LANDSCAPE ARCHITECT: BRAD COLE
CALCULATED-DESIGNED BY: KEVIN GALLO
CHECKED BY: GLORIA RAMIREZ
REVISED BY
DATE REVISED

LAST REVISION 07-09-12
DATE PLOTTED => 13-DEC-2012
TIME PLOTTED => 06:39

| Dist | COUNTY | ROUTE | POST MILES TOTAL PROJECT | SHEET No. | TOTAL SHEETS |
|---|---|---|---|---|---|
| 06 | Fre | 180 | R71.8/74.5 | 63 | 235 |

Gloria Ramirez
LICENSED LANDSCAPE ARCHITECT

12-10-12
PLANS APPROVAL DATE

LICENSED LANDSCAPE ARCHITECT
GLORIA RAMIREZ No. 5283
Gloria Ramirez
Signature
04/30/12
Renewal Date
02/14/12
Date
STATE OF CALIFORNIA

*THE STATE OF CALIFORNIA OR ITS OFFICERS OR AGENTS SHALL NOT BE RESPONSIBLE FOR THE ACCURACY OR COMPLETENESS OF SCANNED COPIES OF THIS PLAN SHEET.*

**NOTE:**

FOR ACCURATE RIGHT OF WAY DATA, CONTACT RIGHT OF WAY ENGINEERING AT THE DISTRICT OFFICE.

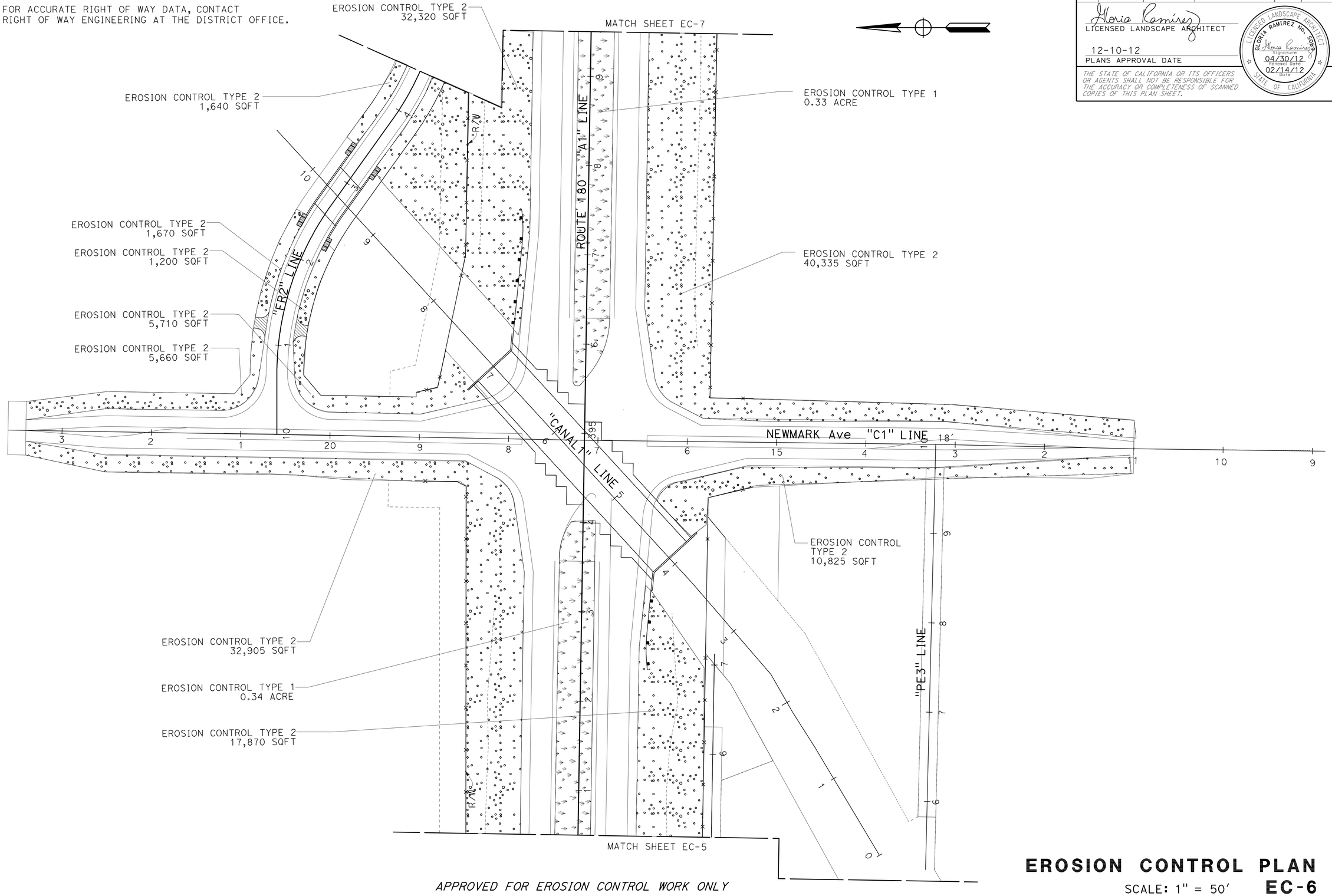


*APPROVED FOR EROSION CONTROL WORK ONLY*

# EROSION CONTROL PLAN

SCALE: 1" = 50'

**EC-6**

STATE OF CALIFORNIA - DEPARTMENT OF TRANSPORTATION
Caltrans® LANDSCAPE ARCHITECTURE

SENIOR LANDSCAPE ARCHITECT: BRAD COLE
CALCULATED-DESIGNED BY: GLORIA RAMIREZ
CHECKED BY: KEVIN GALLO
REVISED BY
DATE REVISED

LAST REVISION 07-09-12
DATE PLOTTED => 13-DEC-2012
TIME PLOTTED => 06:39

| Dist | COUNTY | ROUTE | POST MILES TOTAL PROJECT | SHEET No. | TOTAL SHEETS |
|---|---|---|---|---|---|
| 06 | Fre | 180 | R71.8/74.5 | 64 | 235 |

Gloria Ramirez
LICENSED LANDSCAPE ARCHITECT

12-10-12
PLANS APPROVAL DATE

LICENSED LANDSCAPE ARCHITECT
GLORIA RAMIREZ No. 5983
Signature
04/30/12
Renewal Date
02/14/12
Date
STATE OF CALIFORNIA

*THE STATE OF CALIFORNIA OR ITS OFFICERS OR AGENTS SHALL NOT BE RESPONSIBLE FOR THE ACCURACY OR COMPLETENESS OF SCANNED COPIES OF THIS PLAN SHEET.*

**NOTE:**

FOR ACCURATE RIGHT OF WAY DATA, CONTACT
RIGHT OF WAY ENGINEERING AT THE DISTRICT OFFICE.

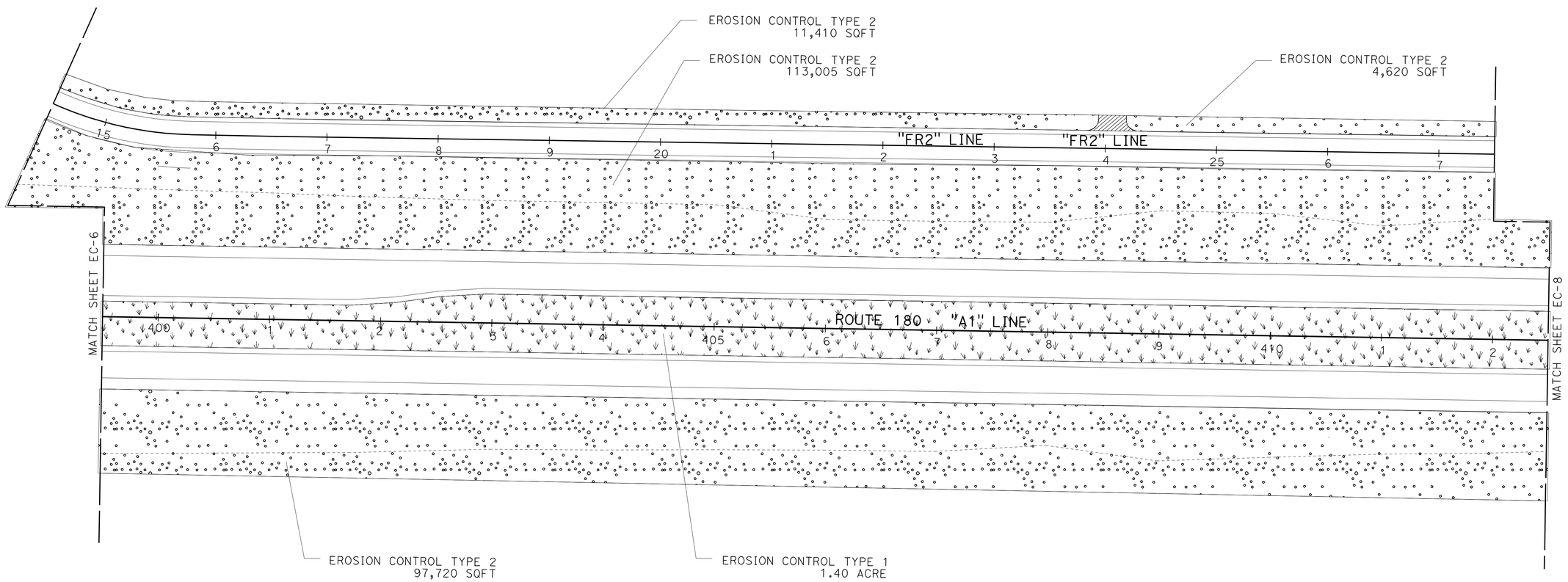


*APPROVED FOR EROSION CONTROL WORK ONLY*

# EROSION CONTROL PLAN

SCALE: 1" = 50'

**EC-7**

STATE OF CALIFORNIA - DEPARTMENT OF TRANSPORTATION
Caltrans® LANDSCAPE ARCHITECTURE

SENIOR LANDSCAPE ARCHITECT: BRAD COLE
CALCULATED-DESIGNED BY: GLORIA RAMIREZ
CHECKED BY: KEVIN GALLO
REVISED BY
DATE REVISED

LAST REVISION 07-09-12
DATE PLOTTED => 13-DEC-2012
TIME PLOTTED => 06:39

| Dist | COUNTY | ROUTE | POST MILES TOTAL PROJECT | SHEET No. | TOTAL SHEETS |
|---|---|---|---|---|---|
| 06 | Fre | 180 | R71.8/74.5 | 65 | 235 |

Gloria Ramirez
LICENSED LANDSCAPE ARCHITECT

12-10-12
PLANS APPROVAL DATE

LICENSED LANDSCAPE ARCHITECT
GLORIA RAMIREZ No. 5283
Gloria Ramirez
Signature
04/30/12
Renewal Date
02/14/12
Date
STATE OF CALIFORNIA

*THE STATE OF CALIFORNIA OR ITS OFFICERS OR AGENTS SHALL NOT BE RESPONSIBLE FOR THE ACCURACY OR COMPLETENESS OF SCANNED COPIES OF THIS PLAN SHEET.*

**NOTE:**

FOR ACCURATE RIGHT OF WAY DATA, CONTACT
RIGHT OF WAY ENGINEERING AT THE DISTRICT OFFICE.

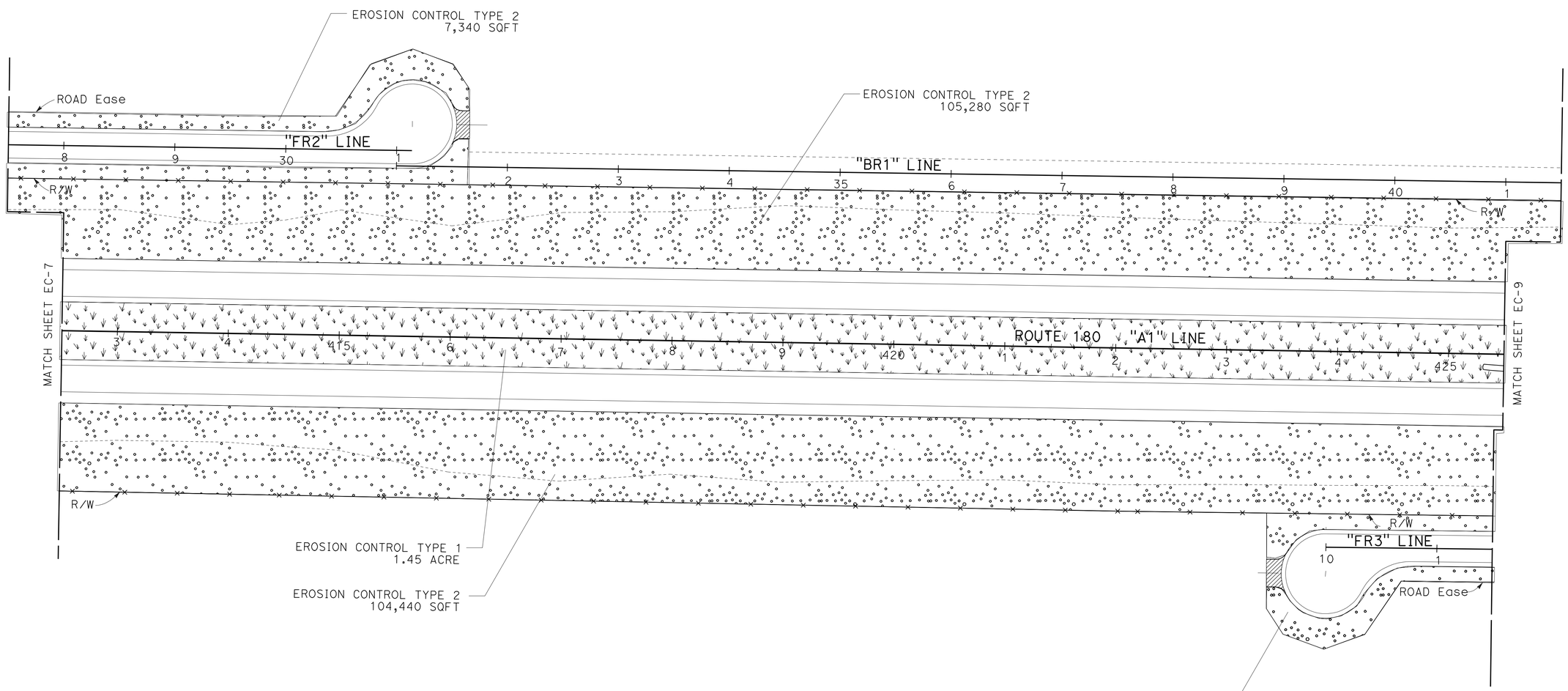


*APPROVED FOR EROSION CONTROL WORK ONLY*

# EROSION CONTROL PLAN

SCALE: 1" = 50'

**EC-8**

REVISED BY | DATE REVISED
GLORIA RAMIREZ | KEVIN GALLO
CALCULATED-DESIGNED BY | CHECKED BY
SENIOR LANDSCAPE ARCHITECT | BRAD COLE

STATE OF CALIFORNIA - DEPARTMENT OF TRANSPORTATION
Caltrans® LANDSCAPE ARCHITECTURE

LAST REVISION 07-09-12 | DATE PLOTTED => 13-DEC-2012 | TIME PLOTTED => 06:39

| Dist | COUNTY | ROUTE | POST MILES TOTAL PROJECT | SHEET No. | TOTAL SHEETS |
|---|---|---|---|---|---|
| 06 | Fre | 180 | R71.8/74.5 | 66 | 235 |

Gloria Ramirez
LICENSED LANDSCAPE ARCHITECT

12-10-12
PLANS APPROVAL DATE

LICENSED LANDSCAPE ARCHITECT
GLORIA RAMIREZ No. 5983
Gloria Ramirez
Signature
04/30/12
Renewal Date
02/14/12
Date
STATE OF CALIFORNIA

*THE STATE OF CALIFORNIA OR ITS OFFICERS OR AGENTS SHALL NOT BE RESPONSIBLE FOR THE ACCURACY OR COMPLETENESS OF SCANNED COPIES OF THIS PLAN SHEET.*

**NOTE:**

FOR ACCURATE RIGHT OF WAY DATA, CONTACT RIGHT OF WAY ENGINEERING AT THE DISTRICT OFFICE.

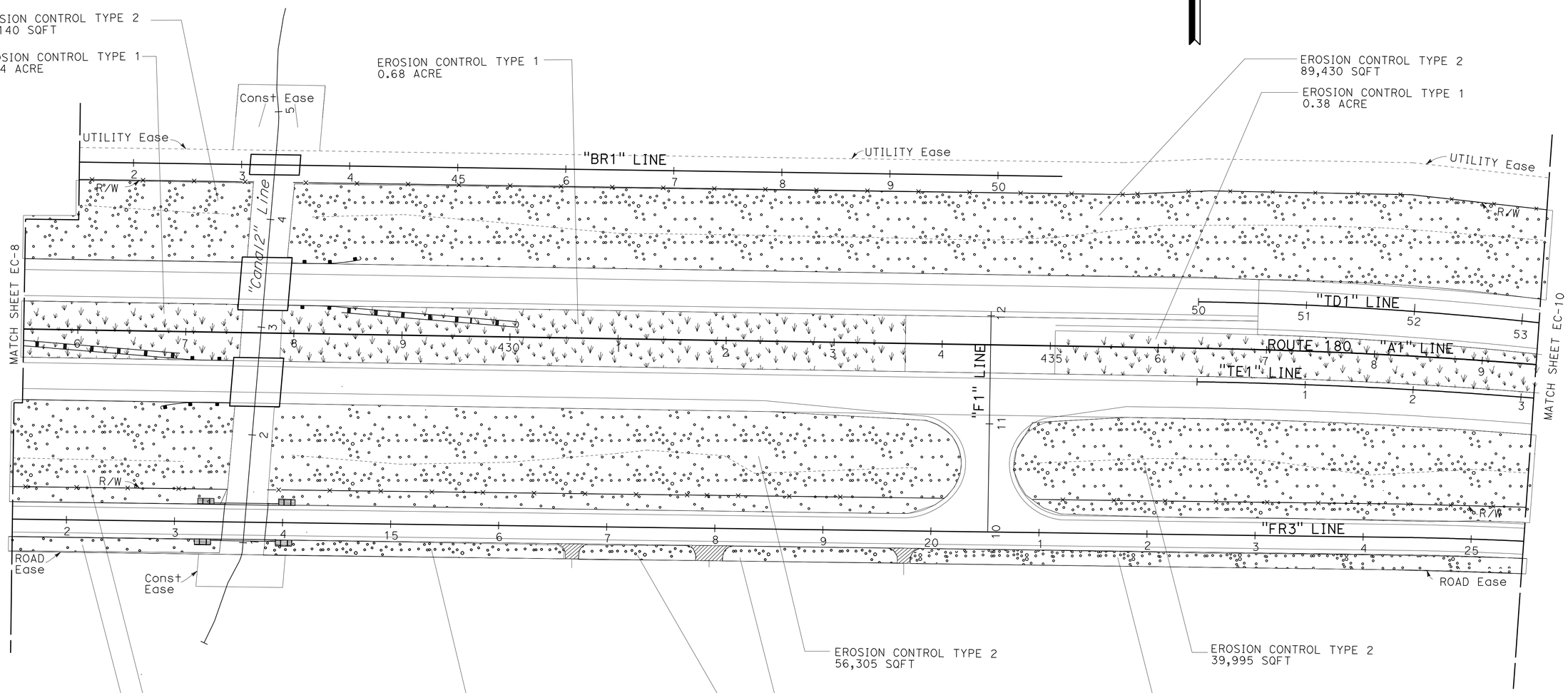


*APPROVED FOR EROSION CONTROL WORK ONLY*

# EROSION CONTROL PLAN

SCALE: 1" = 50'

**EC-9**

STATE OF CALIFORNIA - DEPARTMENT OF TRANSPORTATION
Caltrans® LANDSCAPE ARCHITECTURE

SENIOR LANDSCAPE ARCHITECT: BRAD COLE
CALCULATED-DESIGNED BY: GLORIA RAMIREZ
CHECKED BY: KEVIN GALLO
REVISED BY
DATE REVISED

LAST REVISION 07-09-12
DATE PLOTTED => 13-DEC-2012
TIME PLOTTED => 06:39

| Dist | COUNTY | ROUTE | POST MILES TOTAL PROJECT | SHEET No. | TOTAL SHEETS |
|---|---|---|---|---|---|
| 06 | Fre | 180 | R71.8/74.5 | 67 | 235 |

Gloria Ramirez
LICENSED LANDSCAPE ARCHITECT

12-10-12
PLANS APPROVAL DATE

LICENSED LANDSCAPE ARCHITECT
GLORIA RAMIREZ No. 5269
Gloria Ramirez
Signature
04/30/12
Renewal Date
02/14/12
Date
STATE OF CALIFORNIA

*THE STATE OF CALIFORNIA OR ITS OFFICERS OR AGENTS SHALL NOT BE RESPONSIBLE FOR THE ACCURACY OR COMPLETENESS OF SCANNED COPIES OF THIS PLAN SHEET.*

**NOTE:**

FOR ACCURATE RIGHT OF WAY DATA, CONTACT
RIGHT OF WAY ENGINEERING AT THE DISTRICT OFFICE.

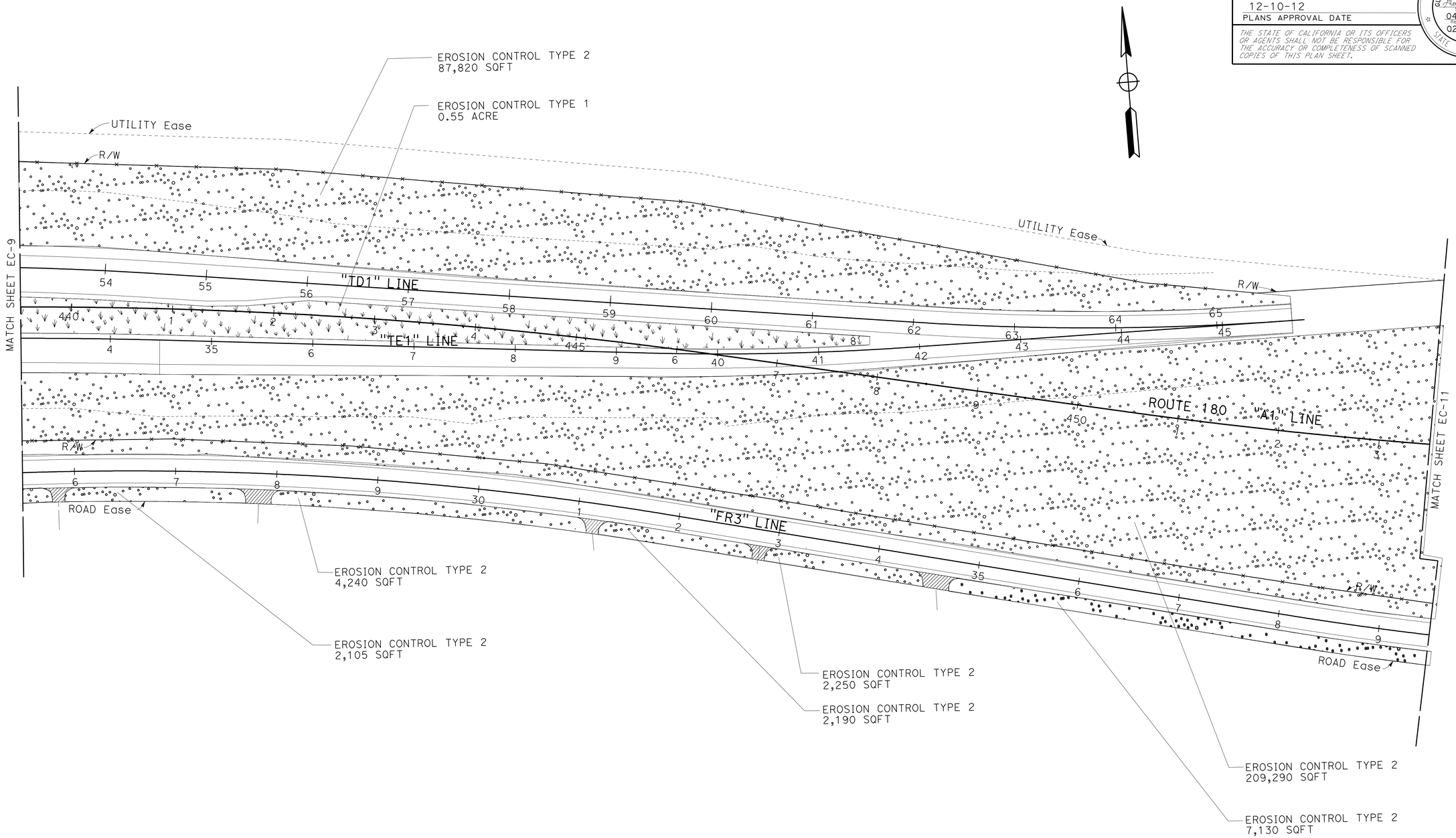


*APPROVED FOR EROSION CONTROL WORK ONLY*

# EROSION CONTROL PLAN EC-10

SCALE: 1" = 50'

STATE OF CALIFORNIA - DEPARTMENT OF TRANSPORTATION
Caltrans® LANDSCAPE ARCHITECTURE

SENIOR LANDSCAPE ARCHITECT: BRAD COLE
CALCULATED-DESIGNED BY: GLORIA RAMIREZ
CHECKED BY: KEVIN GALLO
REVISED BY
DATE REVISED

LAST REVISION 07-09-12
DATE PLOTTED => 13-DEC-2012
TIME PLOTTED => 06:39

| Dist | COUNTY | ROUTE | POST MILES TOTAL PROJECT | SHEET No. | TOTAL SHEETS |
|---|---|---|---|---|---|
| 06 | Fre | 180 | R71.8/74.5 | 68 | 235 |

Gloria Ramirez
LICENSED LANDSCAPE ARCHITECT

12-10-12
PLANS APPROVAL DATE

LICENSED LANDSCAPE ARCHITECT
GLORIA RAMIREZ No. 5083
Gloria Ramirez
Signature
04/30/12
Renewal Date
02/14/12
Date
STATE OF CALIFORNIA

*THE STATE OF CALIFORNIA OR ITS OFFICERS OR AGENTS SHALL NOT BE RESPONSIBLE FOR THE ACCURACY OR COMPLETENESS OF SCANNED COPIES OF THIS PLAN SHEET.*

**NOTE:**

FOR ACCURATE RIGHT OF WAY DATA, CONTACT
RIGHT OF WAY ENGINEERING AT THE DISTRICT OFFICE.

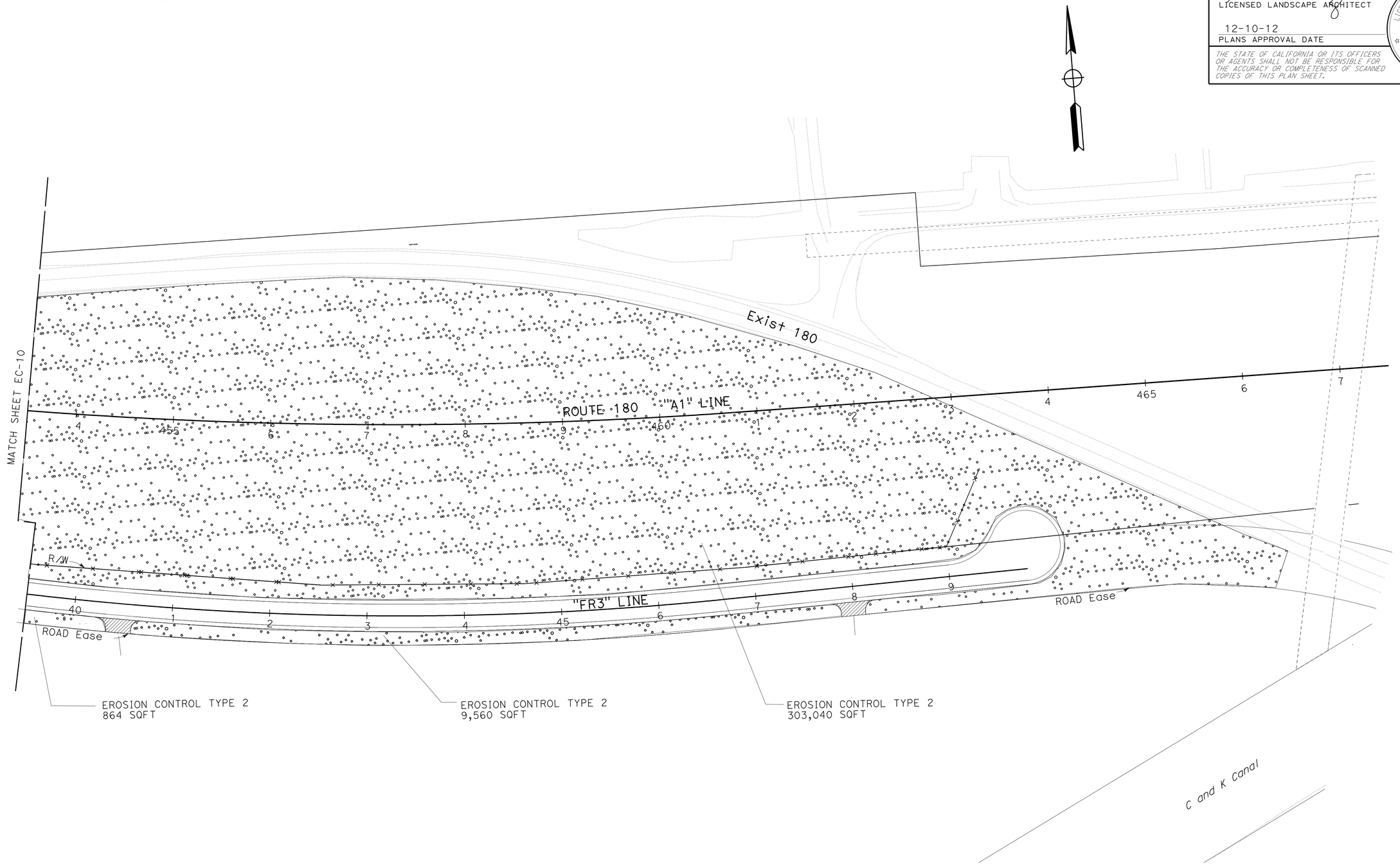


*APPROVED FOR EROSION CONTROL WORK ONLY*

# EROSION CONTROL PLAN EC-11

SCALE: 1" = 50'

STATE OF CALIFORNIA - DEPARTMENT OF TRANSPORTATION
Caltrans LANDSCAPE ARCHITECTURE

SENIOR LANDSCAPE ARCHITECT: BRAD COLE
CALCULATED-DESIGNED BY: GLORIA RAMIREZ
CHECKED BY: KEVIN GALLO
REVISED BY
DATE REVISED

LAST REVISION 07-09-12
DATE PLOTTED => 13-DEC-2012
TIME PLOTTED => 06:39

| Dist | COUNTY | ROUTE | POST MILES TOTAL PROJECT | SHEET No. | TOTAL SHEETS |
|---|---|---|---|---|---|
| 06 | Fre | 180 | R71.8/74.5 | 69 | 235 |

Gloria Ramirez
LICENSED LANDSCAPE ARCHITECT

12-10-12
PLANS APPROVAL DATE

LICENSED LANDSCAPE ARCHITECT
GLORIA RAMIREZ No. 5263
Gloria Ramirez
Signature
04/30/12
Renewal Date
02/14/12
Date
STATE OF CALIFORNIA

*THE STATE OF CALIFORNIA OR ITS OFFICERS OR AGENTS SHALL NOT BE RESPONSIBLE FOR THE ACCURACY OR COMPLETENESS OF SCANNED COPIES OF THIS PLAN SHEET.*

## SEED MIX

| SEED | BOTANICAL NAME (COMMON NAME) | PERCENT GERMINATION (MINIMUM) | POUNDS PURE LIVE SEED PER ACRE (SLOPE MEASUREMENT) |
|---|---|---|---|
| MIX 1 | ESCHSCHOLZIA CALIFORNICA (CALIFORNIA POPPY) | 70 | 1.00 |
| | FESTUCA IDAHOENSIS 'ROMERI' (BLUE BUNCH GRASS) | 80 | 4.00 |
| | LASTHENIA CALIFORNICA (CALIFORNIA GOLDFIELDS) | 45 | 0.25 |
| | LAYIA PLATYGLOSSA (TIDYTIPS) | 70 | 1.00 |
| | LOTUS PURSHIANUS (PURSHINGS LOTUS) | 85 | 2.00 |
| | LUPINUS BICOLOR (PIGMY-LEAVED LUPINE) | 70 | 2.50 |
| | NEMOPHILA MENZIESII (BABY BLUE EYES) | 90 | 2.00 |
| | POA SECUNDA SECUNDA (PINE BLUEGRASS) | 70 | 2.00 |
| | VULPIA MICROSTACHYS (SMALL FESCUE) | 90 | 2.00 |
| MIX 2 | ACHILLEA MILLEFOLIUM (WHITE YARROW) | 85 | 0.25 |
| | CLARKIA AMOENA (FAREWELL TO SPRING) | 85 | 0.25 |
| | ESCHSCHOLZIA CALIFORNICA (CALIFORNIA POPPY) | 85 | 1.00 |
| | FESTUCA IDAHOENSIS 'ROMERI' (BLUE BUNCH GRASS) | 80 | 4.00 |
| | LASTHENIA CALIFORNICA (CALIFORNIA GOLDFIELDS) | 80 | 0.25 |
| | LAYIA PLATYGLOSSA (TIDYTIPS) | 70 | 0.50 |
| | LEYMUS TRITICOIDES 'RIO' (RIO CREEPING WILDRYE) | 35 | 3.00 |
| | LOTUS PURSHIANUS (PURSHINGS LOTUS) | 85 | 1.00 |
| | LUPINUS NANUS (SKY LUPINE) | 85 | 2.00 |
| | MELICA CALIFORNICA (CALIFORNIA MELIC) | 30 | 1.00 |
| | NASELLA PULCHRA (PURPLE NEEDLEGRASS) | 30 | 6.00 |
| | PHACELIA CAMPANULARIA (CALIFORNIA BLUEBELLS) | 85 | 2.25 |
| | POA SECUNDA SECUNDA (PINE BLUEGRASS) | 80 | 2.00 |

## EROSION CONTROL TYPE 1

| SEQUENCE | ITEM | MATERIAL | | APPLICATION RATE |
|---|---|---|---|---|
| | | DESCRIPTION | TYPE | |
| STEP 1 | DRILL SEED | SEED | MIX 1 | 16.75 LB/ACRE |

## EROSION CONTROL TYPE 2

| SEQUENCE | ITEM | MATERIAL | | APPLICATION RATE |
|---|---|---|---|---|
| | | DESCRIPTION | TYPE | |
| STEP 1 | HYDROSEED | SEED | MIX 2 | 23.50 LB/ACRE |
| | | FIBER | CELLULOSE | 600 LB/ACRE |
| STEP 2 | STRAW | STRAW | RICE | 1.75 TON/ACRE |
| STEP 3 | HYDROMULCH | FIBER | CELLULOSE | 600 LB/ACRE |
| | | TACKIFIER | GUAR | 125 LB/ACRE |

## EROSION CONTROL QUANTITIES

| SHEET | TYPE 1 | TYPE 2 | | |
|---|---|---|---|---|
| | DRILL SEED | HYDROSEED | STRAW | HYDROMULCH |
| | ACRE | SQFT | TON | SQFT |
| EC-1 | 0.00 | 32,590 | 1.31 | 32,590 |
| EC-2 | 0.80 | 178,025 | 7.15 | 178,025 |
| EC-3 | 0.65 | 205,194 | 8.24 | 205,194 |
| EC-4 | 1.69 | 236,135 | 9.49 | 236,135 |
| EC-5 | 1.66 | 201,610 | 8.10 | 201,610 |
| EC-6 | 0.67 | 150,135 | 6.03 | 150,135 |
| EC-7 | 1.40 | 226,755 | 9.11 | 226,755 |
| EC-8 | 1.45 | 221,820 | 8.91 | 221,820 |
| EC-9 | 1.30 | 234,607 | 9.43 | 234,607 |
| EC-10 | 0.55 | 315,025 | 12.66 | 315,025 |
| EC-11 | 0.00 | 313,464 | 12.59 | 313,464 |
| | | | | |
| | | | | |
| TOTAL | 10.17 | 2,315,360 | 93.02 | 2,315,360 |

# EROSION CONTROL LEGEND AND QUANTITIES
# ECL-1

STATE OF CALIFORNIA - DEPARTMENT OF TRANSPORTATION
Caltrans® LANDSCAPE ARCHITECTURE
SENIOR LANDSCAPE ARCHITECT: BRAD COLE
CALCULATED-DESIGNED BY: GLORIA RAMIREZ
CHECKED BY: KEVIN GALLO
REVISED BY
DATE REVISED

LAST REVISION 06-05-12
DATE PLOTTED => 13-DEC-2012
TIME PLOTTED => 06:40

| Dist | COUNTY | ROUTE | POST MILES TOTAL PROJECT | SHEET No. | TOTAL SHEETS |
|---|---|---|---|---|---|
| 06 | Fre | 180 | R71.8/74.5 | 70 | 235 |

Gloria Ramirez
LICENSED LANDSCAPE ARCHITECT

12-10-12
PLANS APPROVAL DATE

LICENSED LANDSCAPE ARCHITECT
GLORIA RAMIREZ No. 5083
Gloria Ramirez
Signature
04/30/12
Renewal Date
02/14/12
Date
STATE OF CALIFORNIA

*THE STATE OF CALIFORNIA OR ITS OFFICERS OR AGENTS SHALL NOT BE RESPONSIBLE FOR THE ACCURACY OR COMPLETENESS OF SCANNED COPIES OF THIS PLAN SHEET.*

# EROSION CONTROL

| SHEET | DESCRIPTION | DRILL SEED | HYDROSEED | STRAW | HYDROMULCH |
|---|---|---|---|---|---|
| | | ACRE | SQFT | TON | SQFT |
| EC SHEETS | EROSION CONTROL TYPE 1 | 10.17 | - | - | - |
| | EROSION CONTROL TYPE 2 | - | 2,315,360 | 93.33 | 2,315,360 |
| | TOTAL | 10.17 | 2,315,360 | 93.33 | 2,315,360 |

## EROSION CONTROL QUANTITIES
## ECQ-1

REVISED BY | DATE REVISED
GLORIA RAMIREZ | KEVIN GALLO
CALCULATED-DESIGNED BY | CHECKED BY
SENIOR LANDSCAPE ARCHITECT
BRAD COLE
STATE OF CALIFORNIA - DEPARTMENT OF TRANSPORTATION
Caltrans® LANDSCAPE ARCHITECTURE

LAST REVISION 04-04-12
DATE PLOTTED => 13-DEC-2012
TIME PLOTTED => 06:40

| Dist | COUNTY | ROUTE | POST MILES TOTAL PROJECT | SHEET No. | TOTAL SHEETS |
|---|---|---|---|---|---|
| 06 | Fre | 180 | R71.8/74.5 | 71 | 235 |

REGISTERED CIVIL ENGINEER 7-09-12 DATE

12-10-12
PLANS APPROVAL DATE

REGISTERED PROFESSIONAL ENGINEER HARJINDER SEKHON No. 76396 Exp. 12-31-12 CIVIL STATE OF CALIFORNIA

*THE STATE OF CALIFORNIA OR ITS OFFICERS OR AGENTS SHALL NOT BE RESPONSIBLE FOR THE ACCURACY OR COMPLETENESS OF SCANNED COPIES OF THIS PLAN SHEET.*

**NOTE:**

FOR ACCURATE RIGHT OF WAY DATA, CONTACT RIGHT OF WAY ENGINEERING AT THE DISTRICT OFFICE.

**LEGEND:**

- EARTH BERM
- DITCH FLOW LINE
- BACKFILL OPEN CHANNEL
- ROCK SLOPE PROTECTION

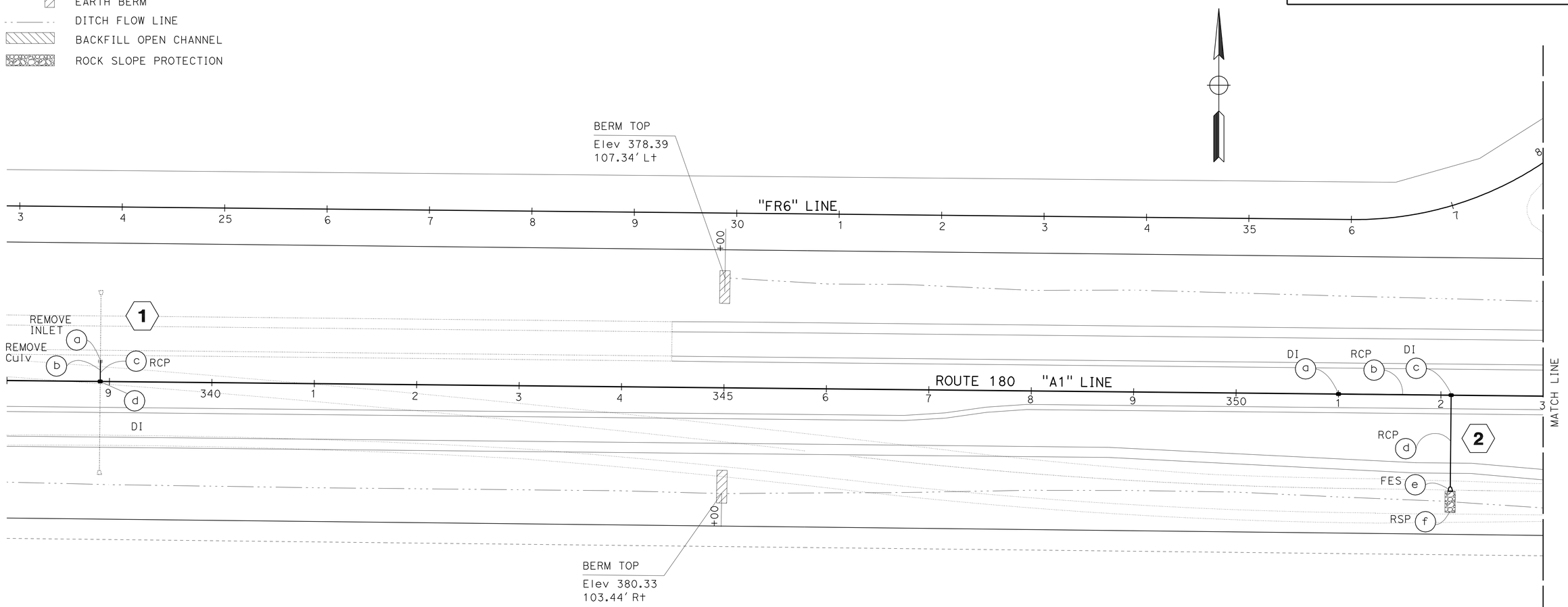


*APPROVED FOR DRAINAGE WORK ONLY*

# DRAINAGE PLAN
# D-1

SCALE: 1" = 50'

STATE OF CALIFORNIA - DEPARTMENT OF TRANSPORTATION
Caltrans
DESIGN

FUNCTIONAL SUPERVISOR: SANKU G. MOHAN
CALCULATED-DESIGNED BY: KHALID CHAOUI
CHECKED BY: HARJINDER SEKHON
REVISED BY: IA
DATE REVISED: 04/24/12

LAST REVISION 07-09-12 | DATE PLOTTED => 13-DEC-2012 | TIME PLOTTED => 06:40

| Dist | COUNTY | ROUTE | POST MILES TOTAL PROJECT | SHEET No. | TOTAL SHEETS |
|---|---|---|---|---|---|
| 06 | Fre | 180 | R71.8/74.5 | 72 | 235 |

REGISTERED CIVIL ENGINEER 7-09-12 DATE

12-10-12
PLANS APPROVAL DATE

REGISTERED PROFESSIONAL ENGINEER HARJINDER SEKHON No. 76396 Exp. 12-31-12 CIVIL STATE OF CALIFORNIA

*THE STATE OF CALIFORNIA OR ITS OFFICERS OR AGENTS SHALL NOT BE RESPONSIBLE FOR THE ACCURACY OR COMPLETENESS OF SCANNED COPIES OF THIS PLAN SHEET.*

**NOTE:**

FOR ACCURATE RIGHT OF WAY DATA, CONTACT RIGHT OF WAY ENGINEERING AT THE DISTRICT OFFICE.

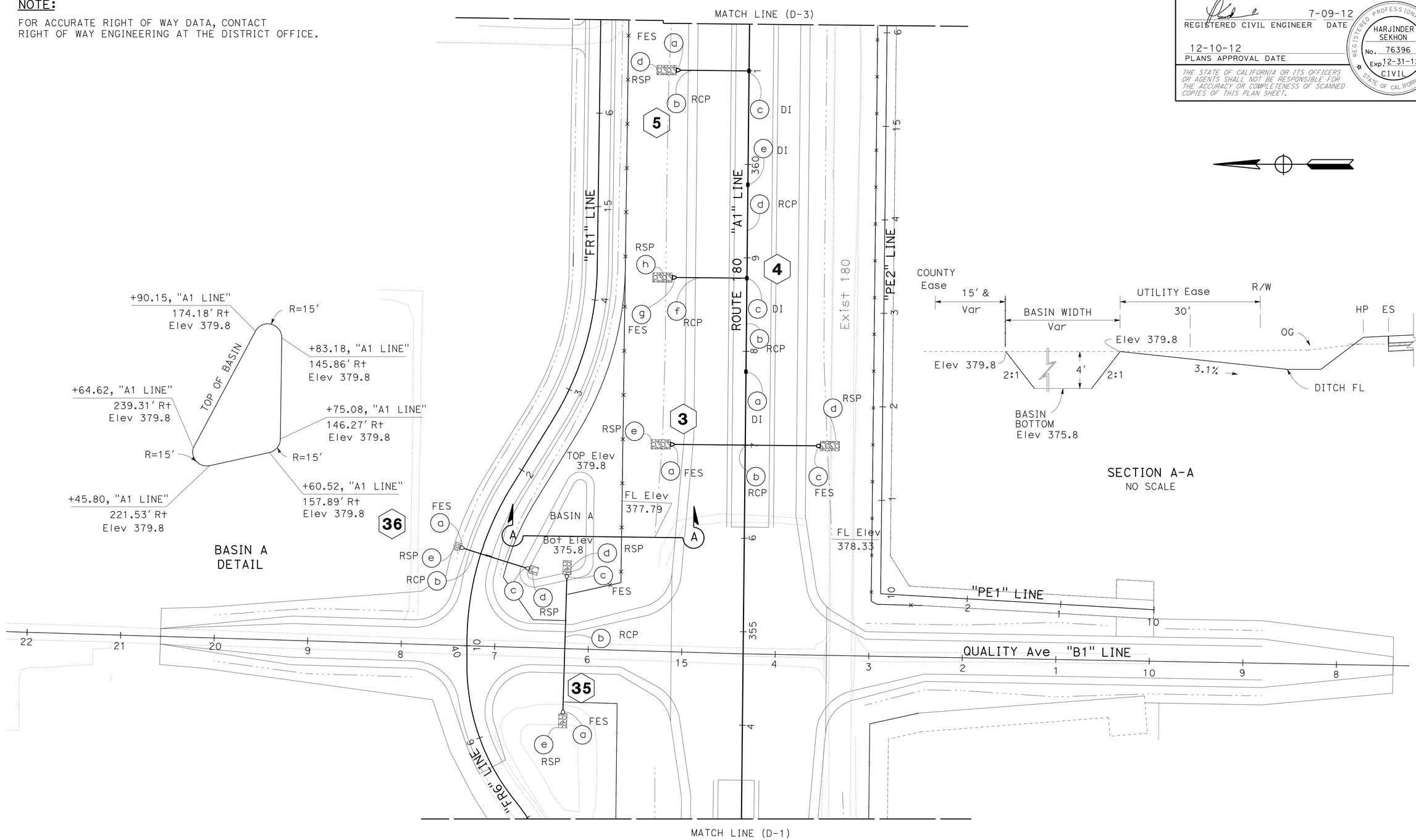





SECTION A-A
NO SCALE

*APPROVED FOR DRAINAGE WORK ONLY*

# DRAINAGE PLAN
## D-2

SCALE: 1" = 50'

| | |
|---|---|
| REVISED BY | IA |
| DATE REVISED | 04/25/12 |
| CALCULATED-DESIGNED BY | KHALID CHAOUI |
| CHECKED BY | HARJINDER SEKHON |
| FUNCTIONAL SUPERVISOR | SANKU G. MOHAN |

STATE OF CALIFORNIA - DEPARTMENT OF TRANSPORTATION
Caltrans
DESIGN

LAST REVISION 07-09-12
DATE PLOTTED => 13-DEC-2012
TIME PLOTTED => 06:40

| Dist | COUNTY | ROUTE | POST MILES TOTAL PROJECT | SHEET No. | TOTAL SHEETS |
|---|---|---|---|---|---|
| 06 | Fre | 180 | R71.8/74.5 | 73 | 235 |

REGISTERED CIVIL ENGINEER 7-09-12 DATE

12-10-12
PLANS APPROVAL DATE

REGISTERED PROFESSIONAL ENGINEER HARJINDER SEKHON No. 76396 Exp. 12-31-12 CIVIL STATE OF CALIFORNIA

*THE STATE OF CALIFORNIA OR ITS OFFICERS OR AGENTS SHALL NOT BE RESPONSIBLE FOR THE ACCURACY OR COMPLETENESS OF SCANNED COPIES OF THIS PLAN SHEET.*

**NOTE:**

FOR ACCURATE RIGHT OF WAY DATA, CONTACT RIGHT OF WAY ENGINEERING AT THE DISTRICT OFFICE.

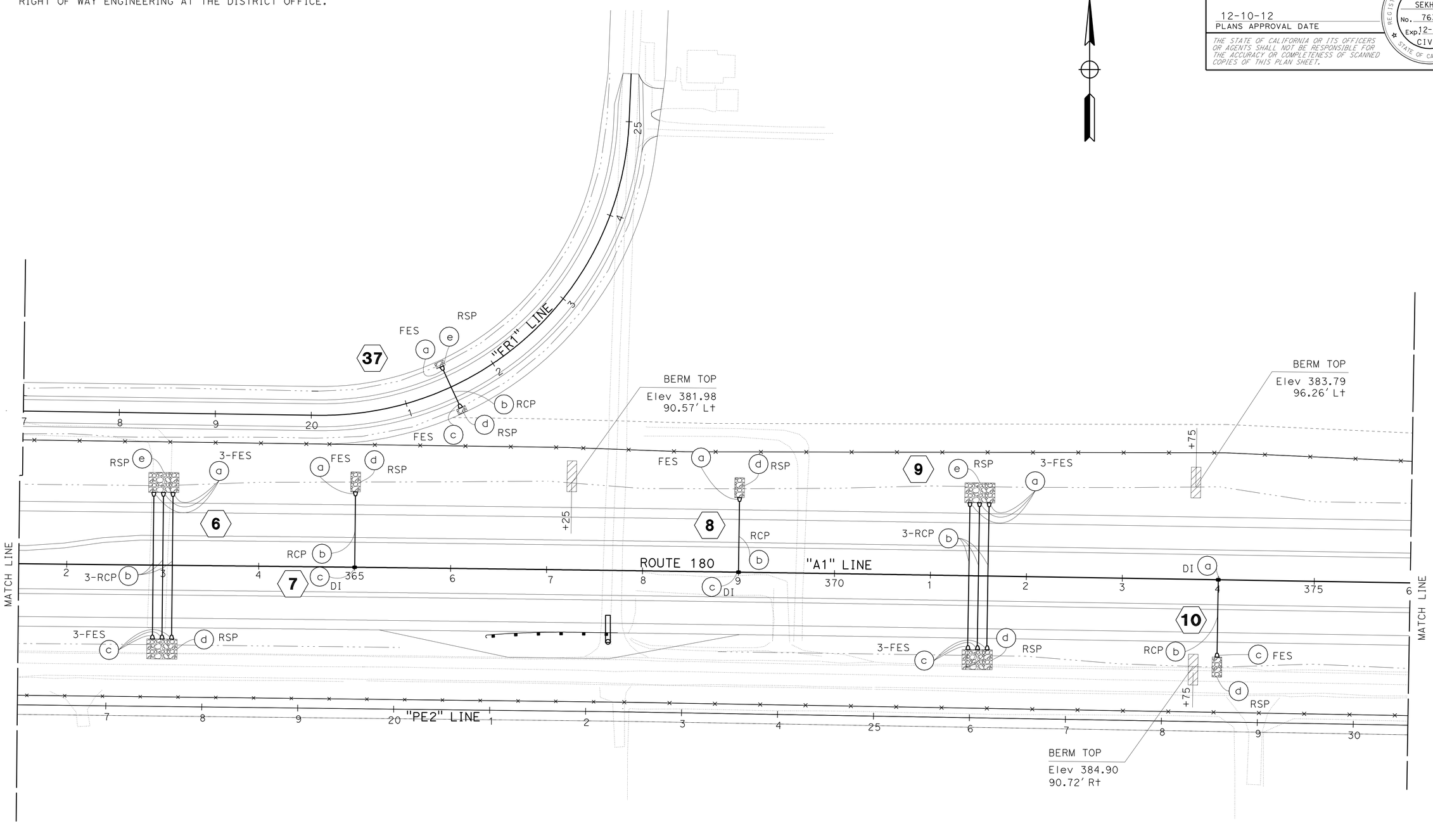


*APPROVED FOR DRAINAGE WORK ONLY*

# DRAINAGE PLAN
# D-3

SCALE: 1" = 50'

STATE OF CALIFORNIA - DEPARTMENT OF TRANSPORTATION
Caltrans
DESIGN

FUNCTIONAL SUPERVISOR: SANKU G. MOHAN

CALCULATED-DESIGNED BY: KHALID CHAOUI
CHECKED BY: HARJINDER SEKHON

REVISED BY: IA
DATE REVISED: 02/06/12

LAST REVISION: DATE PLOTTED => 13-DEC-2012
07-09-12 TIME PLOTTED => 06:40

| Dist | COUNTY | ROUTE | POST MILES TOTAL PROJECT | SHEET No. | TOTAL SHEETS |
|---|---|---|---|---|---|
| 06 | Fre | 180 | R71.8/74.5 | 74 | 235 |

REGISTERED CIVIL ENGINEER 7-09-12 DATE

12-10-12
PLANS APPROVAL DATE

REGISTERED PROFESSIONAL ENGINEER HARJINDER SEKHON No. 76396 Exp. 12-31-12 CIVIL STATE OF CALIFORNIA

*THE STATE OF CALIFORNIA OR ITS OFFICERS OR AGENTS SHALL NOT BE RESPONSIBLE FOR THE ACCURACY OR COMPLETENESS OF SCANNED COPIES OF THIS PLAN SHEET.*

**NOTE:**

FOR ACCURATE RIGHT OF WAY DATA, CONTACT RIGHT OF WAY ENGINEERING AT THE DISTRICT OFFICE.

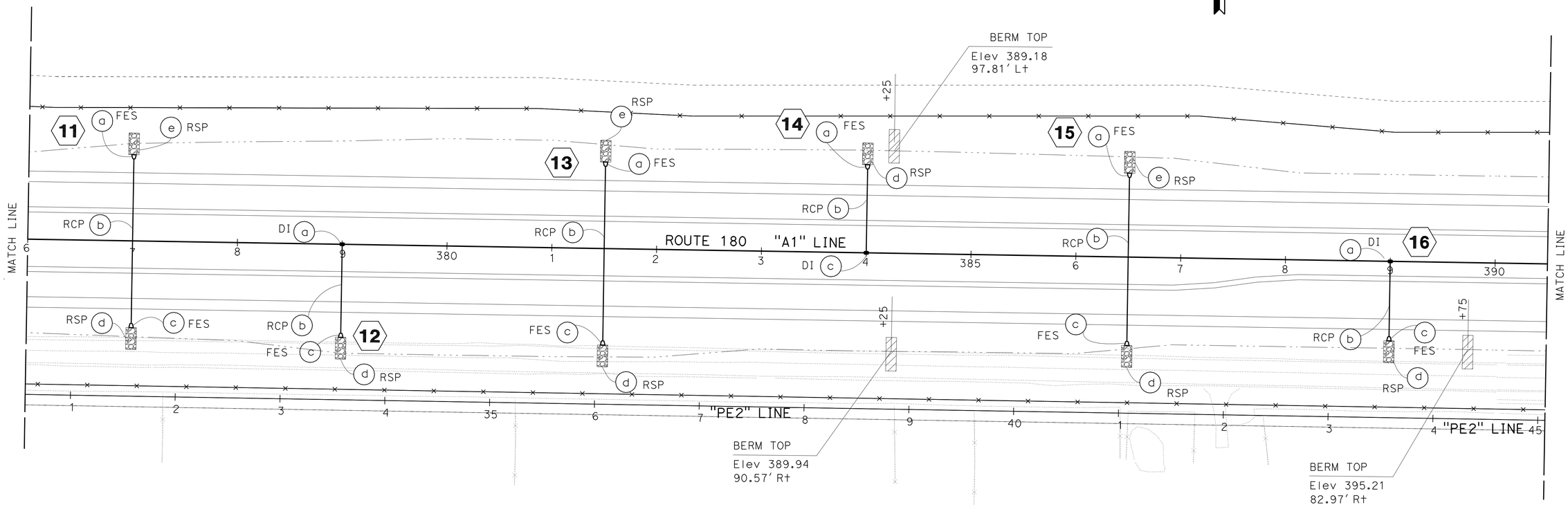


*APPROVED FOR DRAINAGE WORK ONLY*

# DRAINAGE PLAN
## D-4

SCALE: 1" = 50'

STATE OF CALIFORNIA - DEPARTMENT OF TRANSPORTATION
Caltrans
DESIGN

FUNCTIONAL SUPERVISOR: SANKU G. MOHAN
CALCULATED-DESIGNED BY: KHALID CHAOUI
CHECKED BY: HARJINDER SEKHON
REVISED BY: IA
DATE REVISED: 02/06/12

LAST REVISION 07-09-12
DATE PLOTTED => 13-DEC-2012
TIME PLOTTED => 06:40

| Dist | COUNTY | ROUTE | POST MILES TOTAL PROJECT | SHEET No. | TOTAL SHEETS |
|---|---|---|---|---|---|
| 06 | Fre | 180 | R71.8/74.5 | 75 | 235 |

REGISTERED CIVIL ENGINEER 7-09-12 DATE

12-10-12
PLANS APPROVAL DATE

REGISTERED PROFESSIONAL ENGINEER HARJINDER SEKHON No. 76396 Exp. 12-31-12 CIVIL STATE OF CALIFORNIA

*THE STATE OF CALIFORNIA OR ITS OFFICERS OR AGENTS SHALL NOT BE RESPONSIBLE FOR THE ACCURACY OR COMPLETENESS OF SCANNED COPIES OF THIS PLAN SHEET.*

NOTE:

FOR ACCURATE RIGHT OF WAY DATA, CONTACT RIGHT OF WAY ENGINEERING AT THE DISTRICT OFFICE.

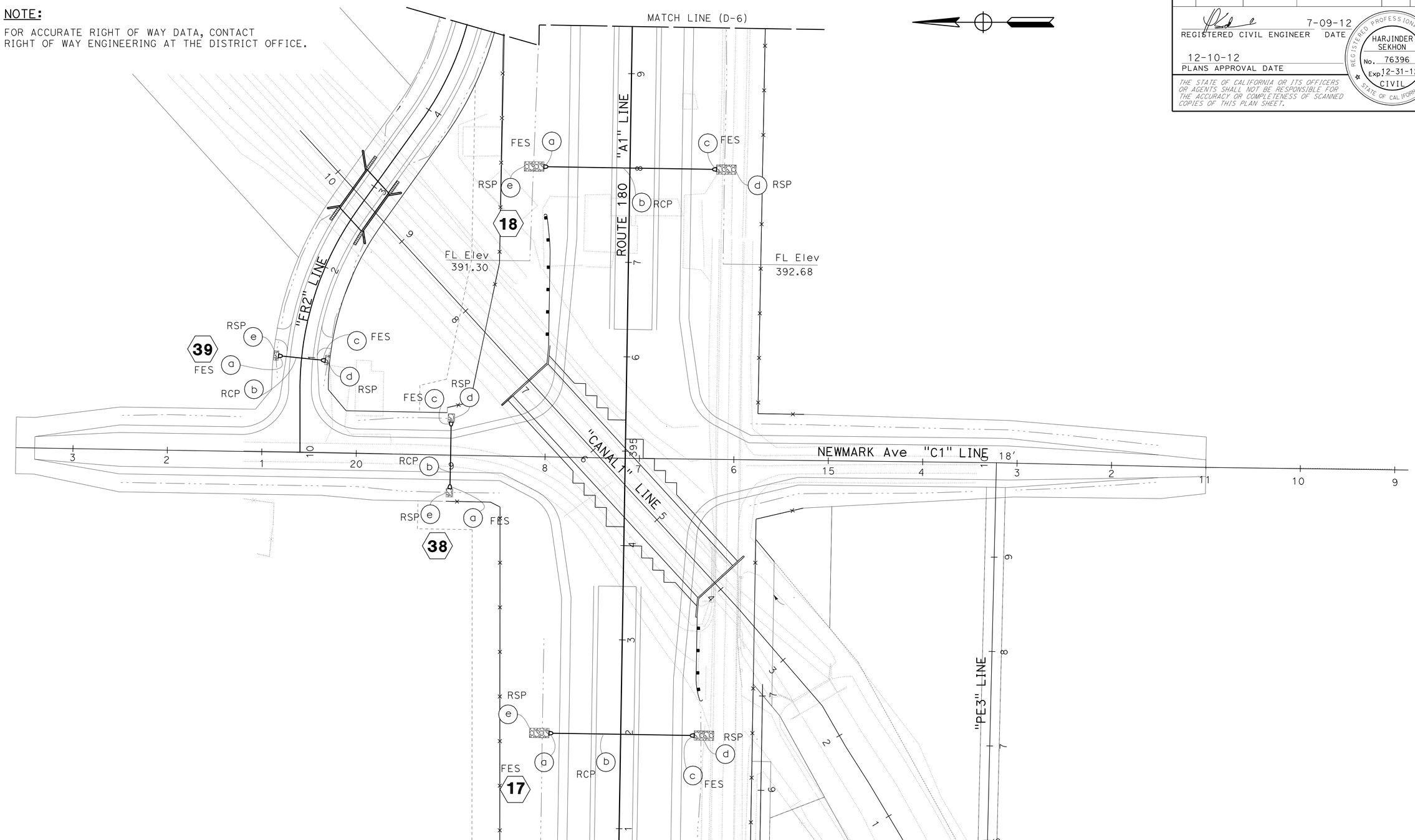


*APPROVED FOR DRAINAGE WORK ONLY*

# DRAINAGE PLAN
## D-5

SCALE: 1" = 50'

STATE OF CALIFORNIA - DEPARTMENT OF TRANSPORTATION
Caltrans
DESIGN

FUNCTIONAL SUPERVISOR: SANKU G. MOHAN
CALCULATED-DESIGNED BY: KHALID CHAOUI
CHECKED BY: HARJINDER SEKHON
REVISED BY: IA
DATE REVISED: 02/06/12

LAST REVISION 07-09-12
DATE PLOTTED => 13-DEC-2012
TIME PLOTTED => 06:40

| Dist | COUNTY | ROUTE | POST MILES TOTAL PROJECT | SHEET No. | TOTAL SHEETS |
|---|---|---|---|---|---|
| 06 | Fre | 180 | R71.8/74.5 | 76 | 235 |

REGISTERED CIVIL ENGINEER 7-09-12 DATE

12-10-12
PLANS APPROVAL DATE

REGISTERED PROFESSIONAL ENGINEER HARJINDER SEKHON No. 76396 Exp. 12-31-12 CIVIL STATE OF CALIFORNIA

*THE STATE OF CALIFORNIA OR ITS OFFICERS OR AGENTS SHALL NOT BE RESPONSIBLE FOR THE ACCURACY OR COMPLETENESS OF SCANNED COPIES OF THIS PLAN SHEET.*

NOTE:

FOR ACCURATE RIGHT OF WAY DATA, CONTACT RIGHT OF WAY ENGINEERING AT THE DISTRICT OFFICE.

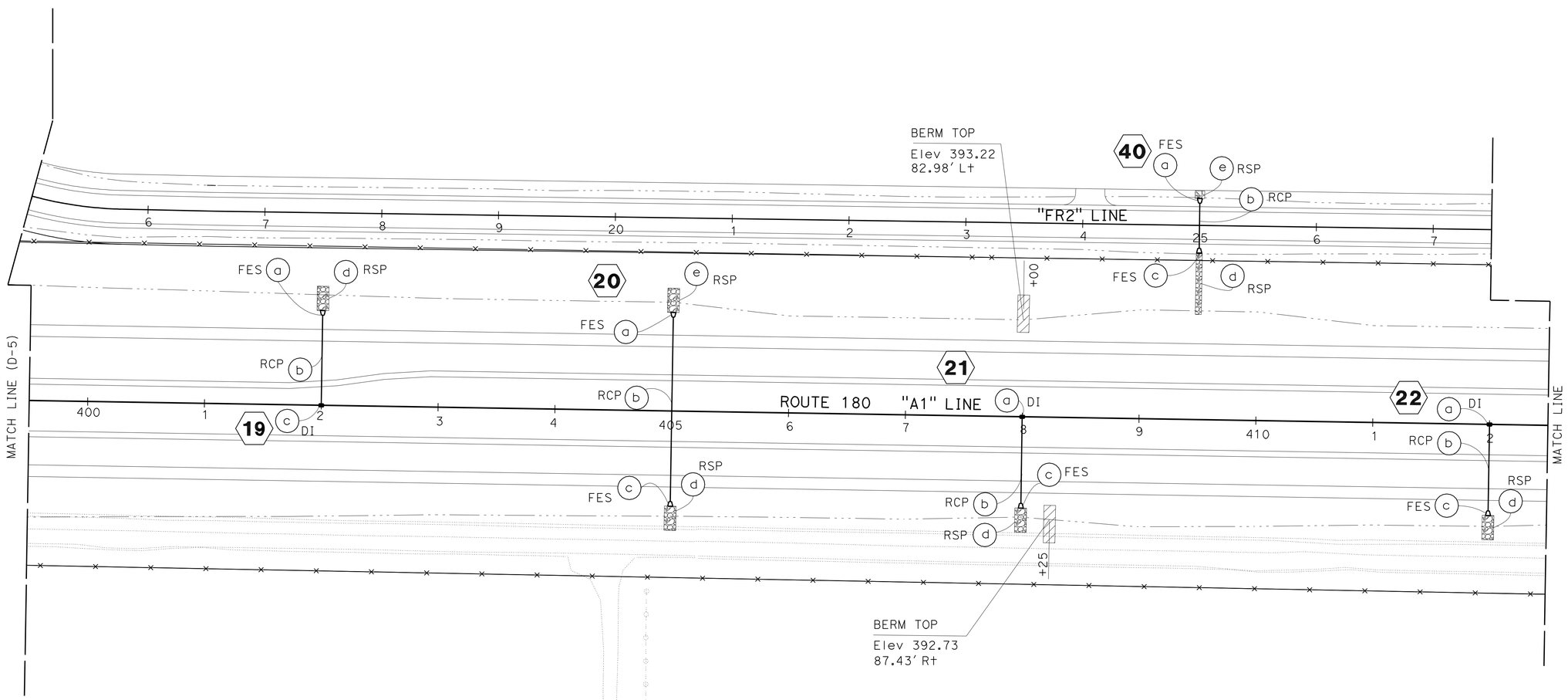


*APPROVED FOR DRAINAGE WORK ONLY*

# DRAINAGE PLAN
## D-6

SCALE: 1" = 50'

STATE OF CALIFORNIA - DEPARTMENT OF TRANSPORTATION
Caltrans
DESIGN

FUNCTIONAL SUPERVISOR: SANKU G. MOHAN
CALCULATED-DESIGNED BY: KHALID CHAOUI
CHECKED BY: HARJINDER SEKHON
REVISED BY: IA
DATE REVISED: 02/06/12

LAST REVISION 07-09-12
DATE PLOTTED => 13-DEC-2012
TIME PLOTTED => 06:40

| Dist | COUNTY | ROUTE | POST MILES TOTAL PROJECT | SHEET No. | TOTAL SHEETS |
|---|---|---|---|---|---|
| 06 | Fre | 180 | R71.8/74.5 | 77 | 235 |

REGISTERED CIVIL ENGINEER 7-09-12 DATE

12-10-12
PLANS APPROVAL DATE

REGISTERED PROFESSIONAL ENGINEER HARJINDER SEKHON No. 76396 Exp. 12-31-12 CIVIL STATE OF CALIFORNIA

*THE STATE OF CALIFORNIA OR ITS OFFICERS OR AGENTS SHALL NOT BE RESPONSIBLE FOR THE ACCURACY OR COMPLETENESS OF SCANNED COPIES OF THIS PLAN SHEET.*

**NOTE:**

FOR ACCURATE RIGHT OF WAY DATA, CONTACT RIGHT OF WAY ENGINEERING AT THE DISTRICT OFFICE.

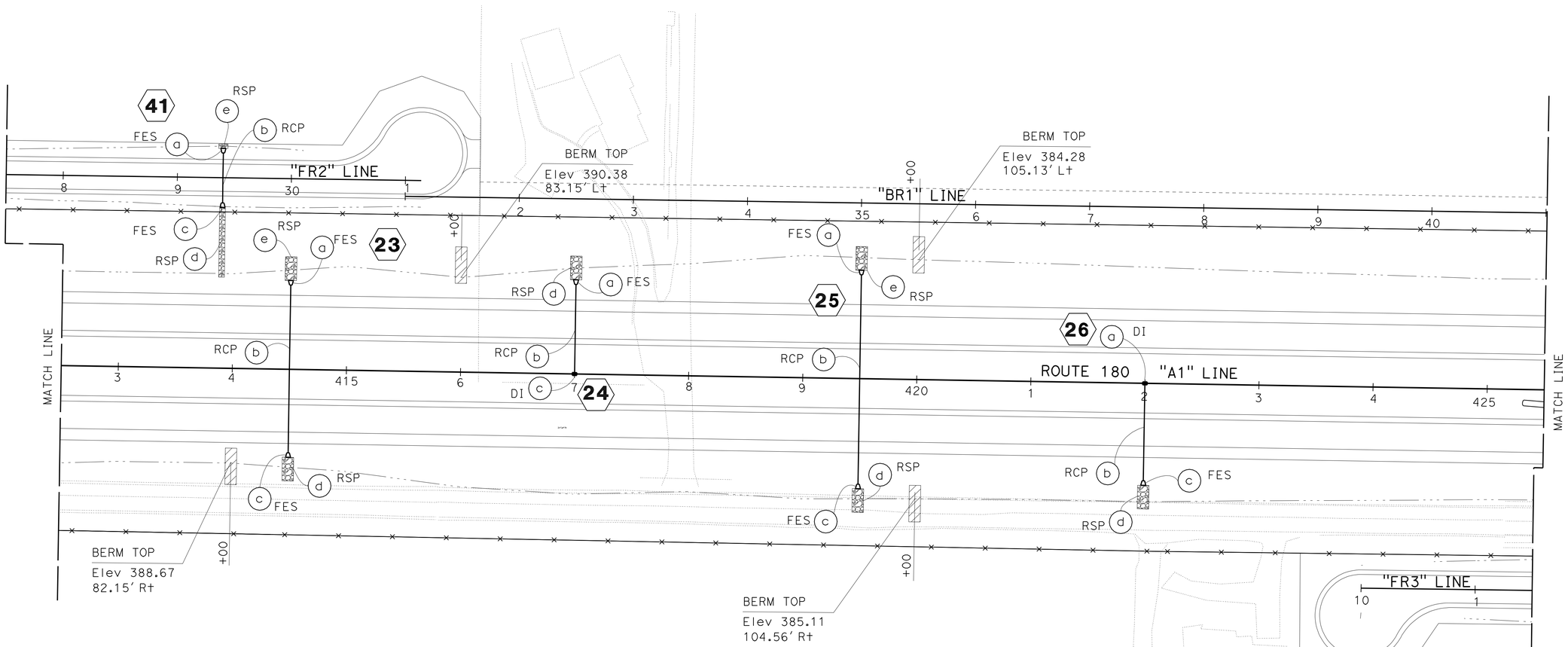


*APPROVED FOR DRAINAGE WORK ONLY*

# DRAINAGE PLAN
# D-7

SCALE: 1" = 50'

STATE OF CALIFORNIA - DEPARTMENT OF TRANSPORTATION
Caltrans
DESIGN

FUNCTIONAL SUPERVISOR: SANKU G. MOHAN

CALCULATED-DESIGNED BY: KHALID CHAOUI
CHECKED BY: HARJINDER SEKHON

REVISED BY: IA
DATE REVISED: 02/06/12

LAST REVISION 07-09-12 | DATE PLOTTED => 13-DEC-2012 | TIME PLOTTED => 06:40

| Dist | COUNTY | ROUTE | POST MILES TOTAL PROJECT | SHEET No. | TOTAL SHEETS |
|---|---|---|---|---|---|
| 06 | Fre | 180 | R71.8/74.5 | 78 | 235 |

REGISTERED CIVIL ENGINEER 7-09-12 DATE

12-10-12
PLANS APPROVAL DATE

REGISTERED PROFESSIONAL ENGINEER HARJINDER SEKHON No. 76396 Exp. 12-31-12 CIVIL STATE OF CALIFORNIA

*THE STATE OF CALIFORNIA OR ITS OFFICERS OR AGENTS SHALL NOT BE RESPONSIBLE FOR THE ACCURACY OR COMPLETENESS OF SCANNED COPIES OF THIS PLAN SHEET.*

NOTE:

FOR ACCURATE RIGHT OF WAY DATA, CONTACT RIGHT OF WAY ENGINEERING AT THE DISTRICT OFFICE.

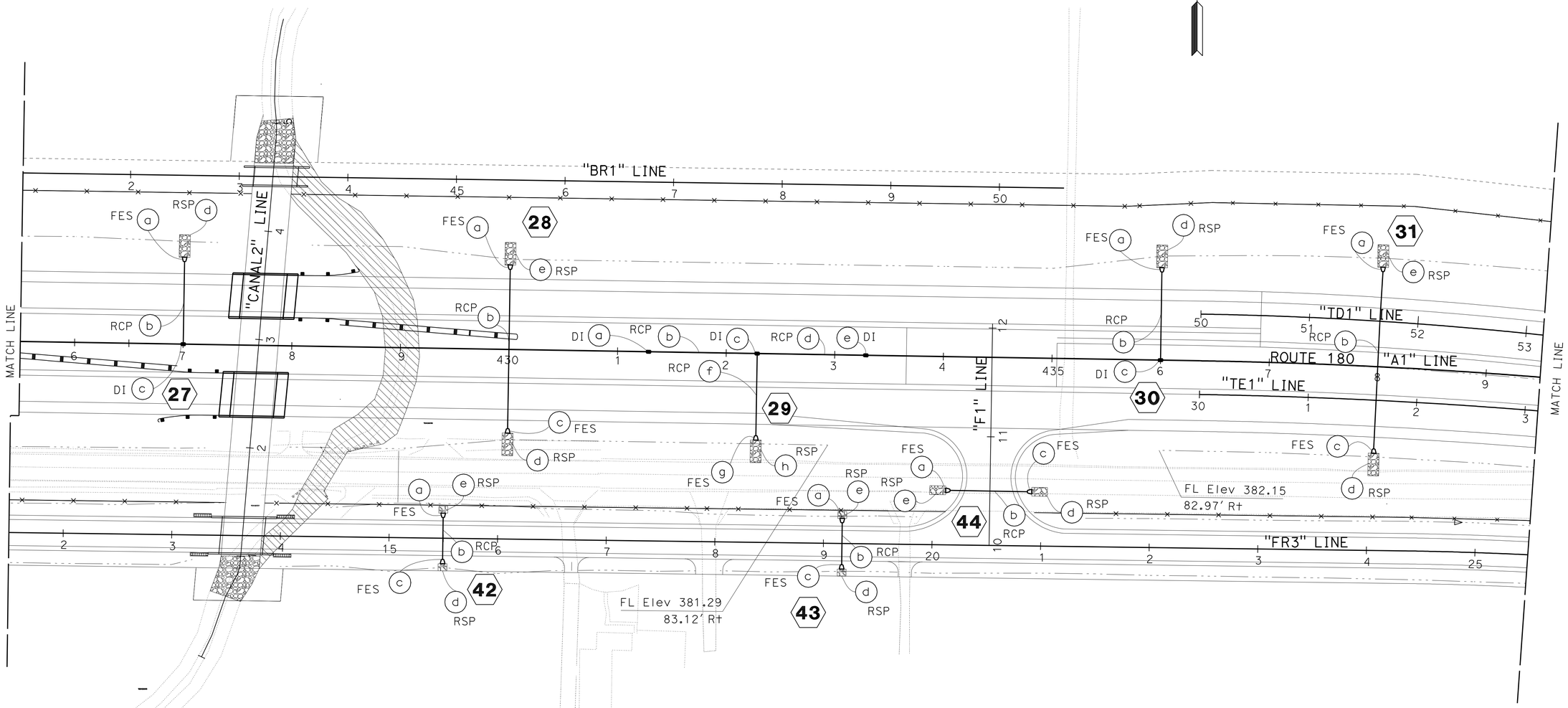


*APPROVED FOR DRAINAGE WORK ONLY*

# DRAINAGE PLAN
## D-8

SCALE: 1" = 50'

STATE OF CALIFORNIA - DEPARTMENT OF TRANSPORTATION
Caltrans
DESIGN

FUNCTIONAL SUPERVISOR: SANKU G. MOHAN
CALCULATED-DESIGNED BY: KHALID CHAOUI
CHECKED BY: HARJINDER SEKHON
REVISED BY: IA
DATE REVISED: 02/06/12

LAST REVISION DATE PLOTTED => 13-DEC-2012
TIME PLOTTED => 06:40
07-09-12

BORDER LAST REVISED 7/2/2010
USERNAME => s121614
DGN FILE => 06000003811ia008.dgn
RELATIVE BORDER SCALE IS IN INCHES 0 1 2 3
UNIT 1460
PROJECT NUMBER & PHASE 06000003811

| Dist | COUNTY | ROUTE | POST MILES TOTAL PROJECT | SHEET No. | TOTAL SHEETS |
|---|---|---|---|---|---|
| 06 | Fre | 180 | R71.8/74.5 | 79 | 235 |

REGISTERED CIVIL ENGINEER 7-09-12 DATE

12-10-12
PLANS APPROVAL DATE

REGISTERED PROFESSIONAL ENGINEER HARJINDER SEKHON No. 76396 Exp. 12-31-12 CIVIL STATE OF CALIFORNIA

*THE STATE OF CALIFORNIA OR ITS OFFICERS OR AGENTS SHALL NOT BE RESPONSIBLE FOR THE ACCURACY OR COMPLETENESS OF SCANNED COPIES OF THIS PLAN SHEET.*

**NOTE:**

FOR ACCURATE RIGHT OF WAY DATA, CONTACT
RIGHT OF WAY ENGINEERING AT THE DISTRICT OFFICE.

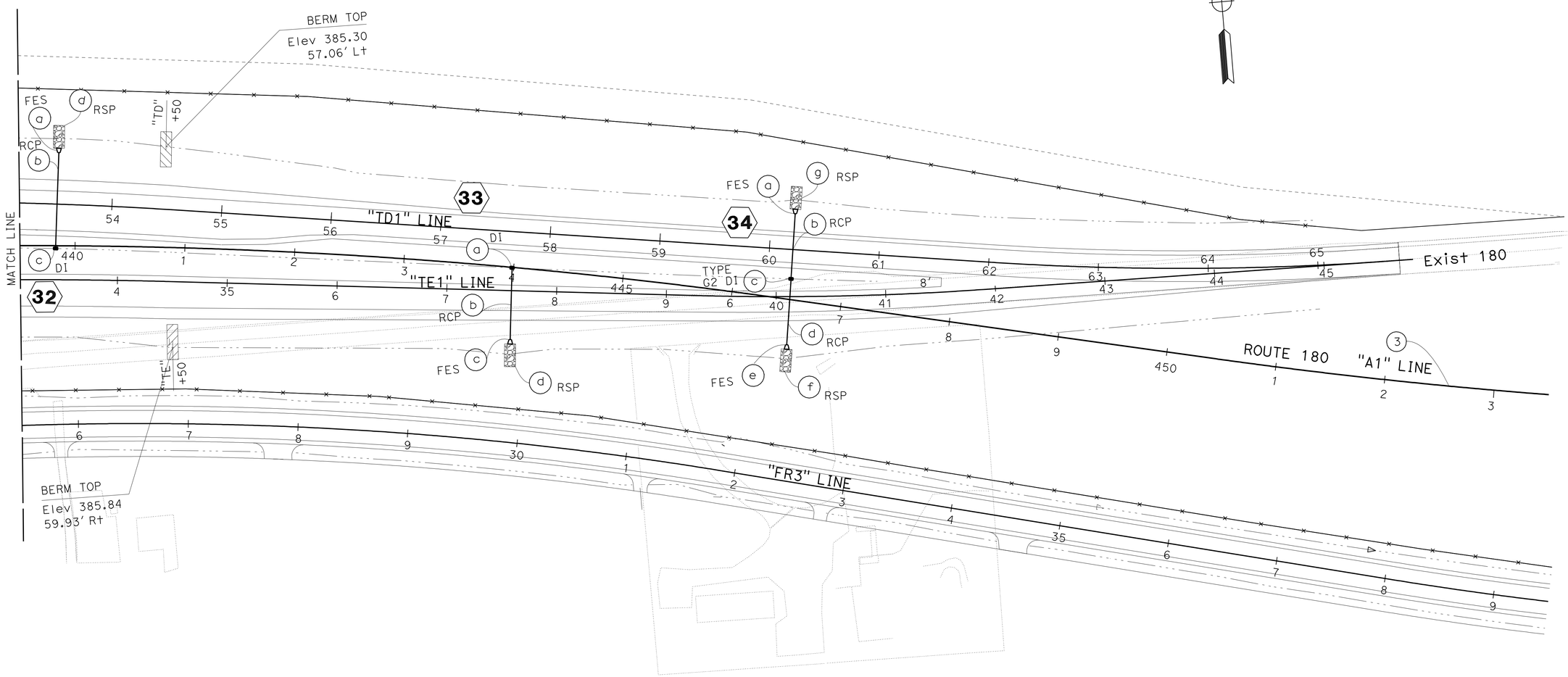


*APPROVED FOR DRAINAGE WORK ONLY*

# DRAINAGE PLAN
## D-9

SCALE: 1" = 50'

| REVISED BY | DATE REVISED |
|---|---|
| IA | 02/06/12 |

CALCULATED-DESIGNED BY: KHALID CHAOUI
CHECKED BY: HARJINDER SEKHON
FUNCTIONAL SUPERVISOR: SANKU G. MOHAN

STATE OF CALIFORNIA - DEPARTMENT OF TRANSPORTATION
Caltrans
DESIGN

LAST REVISION 07-09-12
DATE PLOTTED => 13-DEC-2012
TIME PLOTTED => 06:40

| Dist | COUNTY | ROUTE | POST MILES TOTAL PROJECT | SHEET No. | TOTAL SHEETS |
|---|---|---|---|---|---|
| 06 | Fre | 180 | R71.8/74.5 | 80 | 235 |

REGISTERED CIVIL ENGINEER 7-09-12 DATE

12-10-12
PLANS APPROVAL DATE

REGISTERED PROFESSIONAL ENGINEER HARJINDER SEKHON No. 76396 Exp. 12-31-12 CIVIL STATE OF CALIFORNIA

*THE STATE OF CALIFORNIA OR ITS OFFICERS OR AGENTS SHALL NOT BE RESPONSIBLE FOR THE ACCURACY OR COMPLETENESS OF SCANNED COPIES OF THIS PLAN SHEET.*

**NOTE:**

1. Exist DRAINAGE LOCATIONS ARE APPROXIMATE ONLY. VERIFY LOCATION & ELEVATION BEFORE MODIFYING Exist DRAINAGE FACALITIES.
2. TOP OF GRATE ELEVATIONS FOR INLETS WITH INLET DEPRESSIONS INCLUDE THE DEPTH OF THE DEPRESSION.
3. CONTRACTOR SHALL VERIFY ALL CONTROLLING FIELD DIMENSIONS BEFORE ODERING OR FABRICATING ANY MATERIAL.

**ABBREVIATIONS:**

CFES Conc FES

**LEGEND:**

ROCK SLOPE PROTECTION

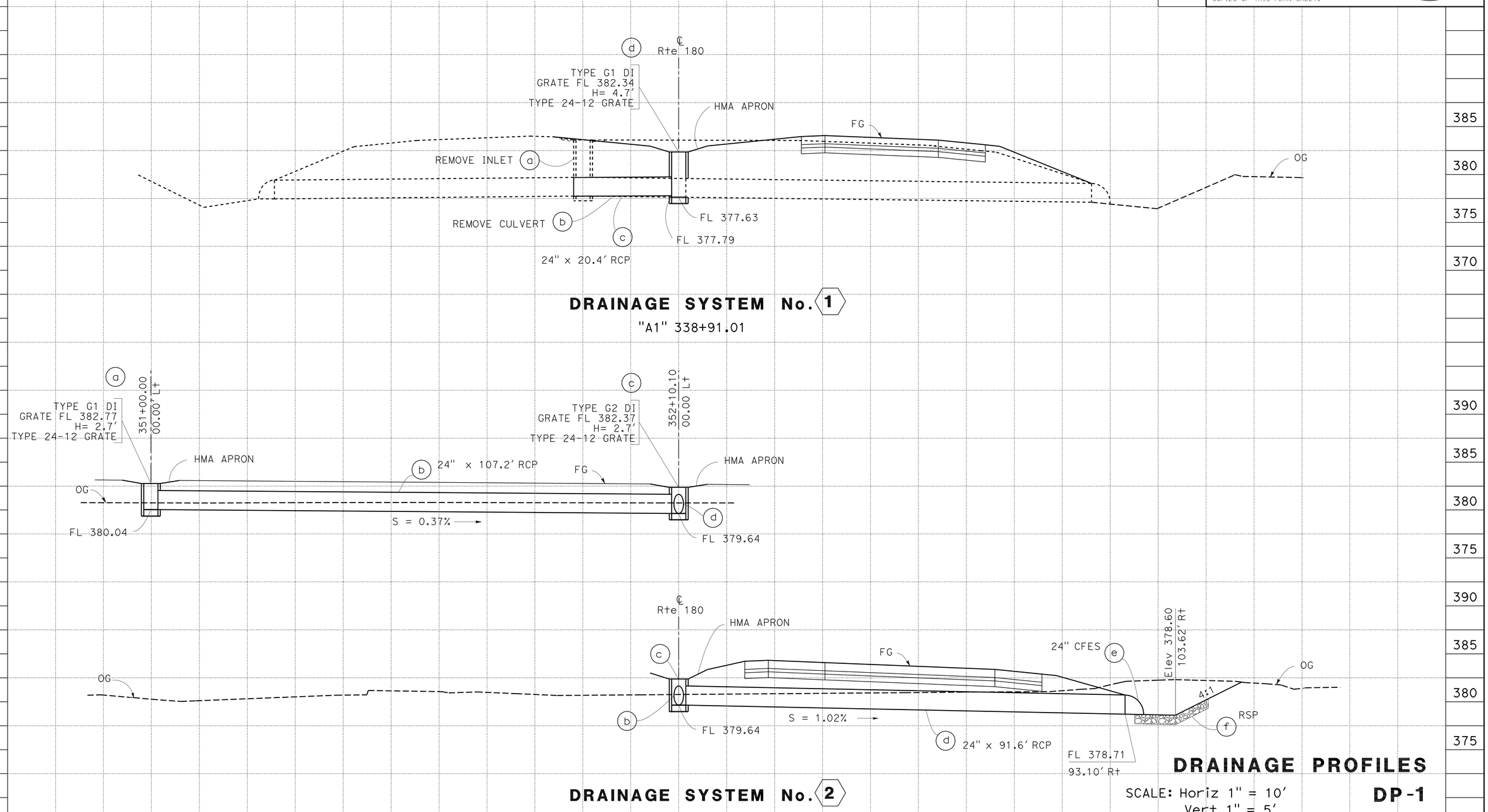


**DRAINAGE PROFILES**

SCALE: Horiz 1" = 10'
Vert 1" = 5'

**DP-1**

STATE OF CALIFORNIA - DEPARTMENT OF TRANSPORTATION
Caltrans
DESIGN
FUNCTIONAL SUPERVISOR SANKU G. MOHAN
CALCULATED-DESIGNED BY HARJINDER SEKHON
CHECKED BY KHALID CHAOUI
REVISED BY IA
DATE REVISED 02/06/12

LAST REVISION 07-09-12 | DATE PLOTTED => 13-DEC-2012 | TIME PLOTTED => 06:40

| Dist | COUNTY | ROUTE | POST MILES TOTAL PROJECT | SHEET No. | TOTAL SHEETS |
|---|---|---|---|---|---|
| 06 | Fre | 180 | R71.8/74.5 | 81 | 235 |

REGISTERED CIVIL ENGINEER 7-09-12 DATE

12-10-12
PLANS APPROVAL DATE

REGISTERED PROFESSIONAL ENGINEER HARJINDER SEKHON No. 76396 Exp. 12-31-12 CIVIL STATE OF CALIFORNIA

*THE STATE OF CALIFORNIA OR ITS OFFICERS OR AGENTS SHALL NOT BE RESPONSIBLE FOR THE ACCURACY OR COMPLETENESS OF SCANNED COPIES OF THIS PLAN SHEET.*

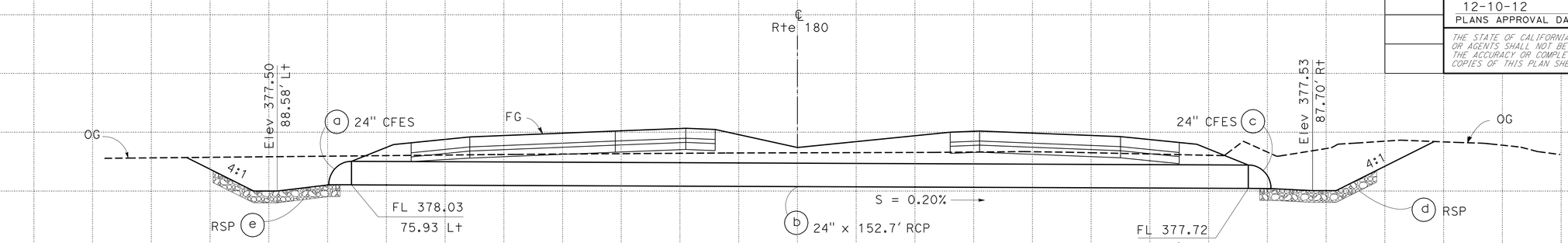


## DRAINAGE SYSTEM No. 3

"A1" 357+00

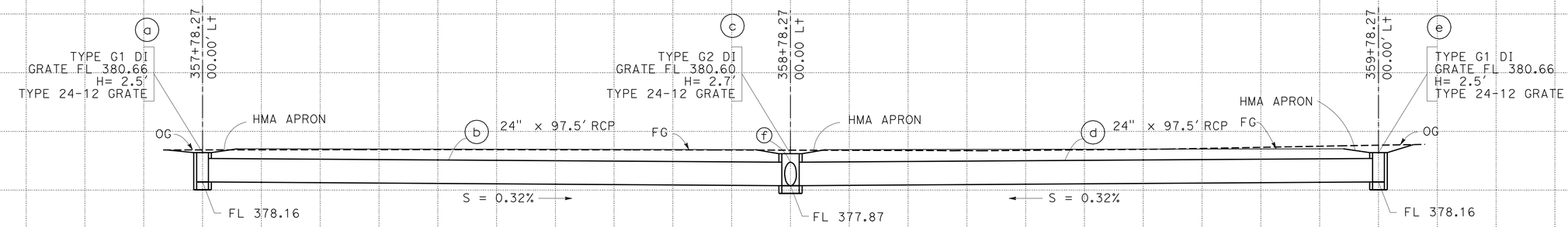


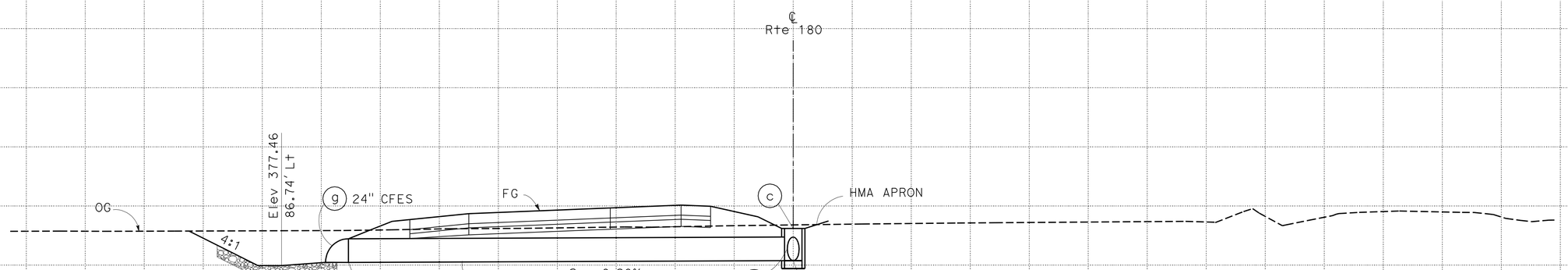


## DRAINAGE SYSTEM No. 4

"A1" 358+78.27

## DRAINAGE PROFILES

SCALE: Horiz 1" = 10'
Vert 1" = 5'

**DP-2**

STATE OF CALIFORNIA - DEPARTMENT OF TRANSPORTATION
Caltrans
DESIGN

FUNCTIONAL SUPERVISOR: SANKU G. MOHAN

CALCULATED-DESIGNED BY: KHALID CHAOUI
CHECKED BY: HARJINDER SEKHON

REVISED BY: IA
DATE REVISED: 02/06/12

LAST REVISION 07-09-12 | DATE PLOTTED => 13-DEC-2012 | TIME PLOTTED => 06:40

| Dist | COUNTY | ROUTE | POST MILES TOTAL PROJECT | SHEET No. | TOTAL SHEETS |
|---|---|---|---|---|---|
| 06 | Fre | 180 | R71.8/74.5 | 82 | 235 |

REGISTERED CIVIL ENGINEER 7-09-12 DATE

12-10-12
PLANS APPROVAL DATE

REGISTERED PROFESSIONAL ENGINEER HARJINDER SEKHON No. 76396 Exp. 12-31-12 CIVIL STATE OF CALIFORNIA

*THE STATE OF CALIFORNIA OR ITS OFFICERS OR AGENTS SHALL NOT BE RESPONSIBLE FOR THE ACCURACY OR COMPLETENESS OF SCANNED COPIES OF THIS PLAN SHEET.*

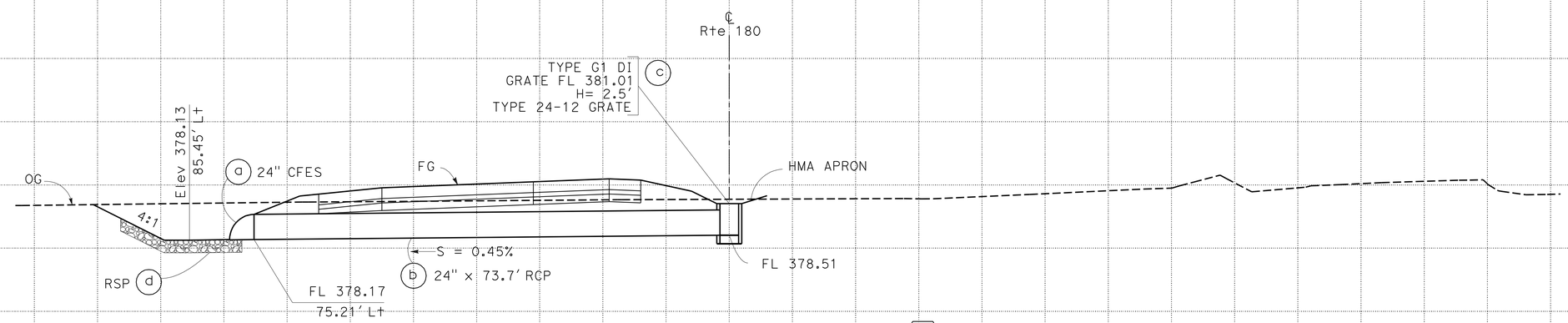


**DRAINAGE SYSTEM No. 5**

"A1" 361+00

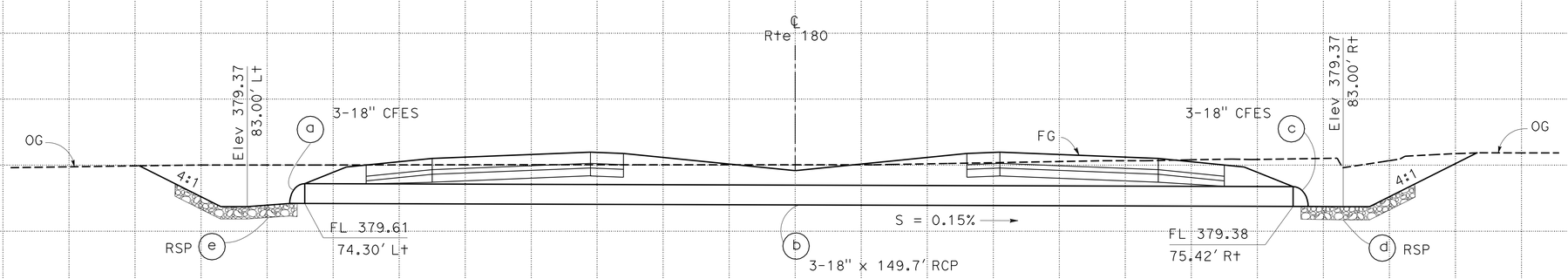


**DRAINAGE SYSTEM No. 6**

"A1" 363+00

# DRAINAGE PROFILES

SCALE: Horiz 1" = 10'
Vert 1" = 5'

**DP-3**

| REVISED BY | DATE REVISED |
|---|---|
| IA | 02/06/12 |

CALCULATED-DESIGNED BY: KHALID CHAOUI
CHECKED BY: HARJINDER SEKHON
FUNCTIONAL SUPERVISOR: SANKU G. MOHAN

STATE OF CALIFORNIA - DEPARTMENT OF TRANSPORTATION
Caltrans
DESIGN

LAST REVISION 07-09-12
DATE PLOTTED => 13-DEC-2012
TIME PLOTTED => 06:41

| Dist | COUNTY | ROUTE | POST MILES TOTAL PROJECT | SHEET No. | TOTAL SHEETS |
|---|---|---|---|---|---|
| 06 | Fre | 180 | R71.8/74.5 | 83 | 235 |

REGISTERED CIVIL ENGINEER 7-09-12 DATE

12-10-12
PLANS APPROVAL DATE

REGISTERED PROFESSIONAL ENGINEER HARJINDER SEKHON No. 76396 Exp. 12-31-12 CIVIL STATE OF CALIFORNIA

*THE STATE OF CALIFORNIA OR ITS OFFICERS OR AGENTS SHALL NOT BE RESPONSIBLE FOR THE ACCURACY OR COMPLETENESS OF SCANNED COPIES OF THIS PLAN SHEET.*

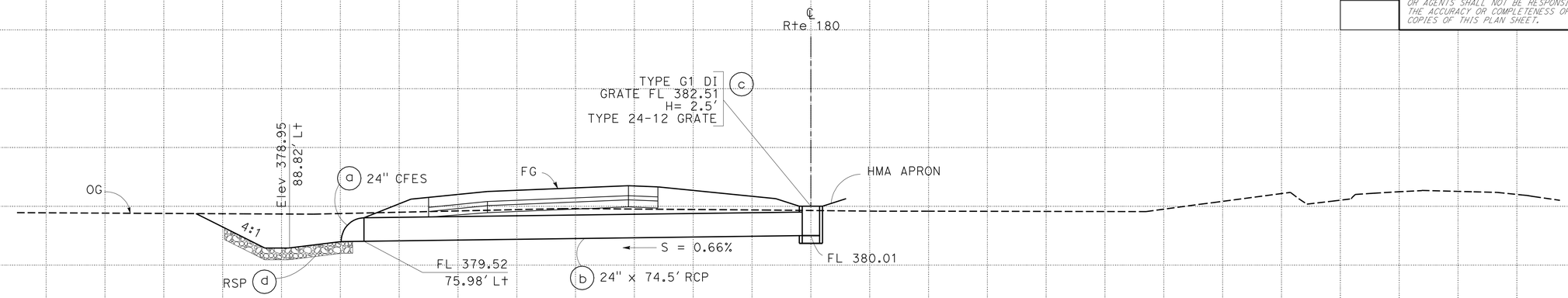


**DRAINAGE SYSTEM No. 7**

"A1" 365+00

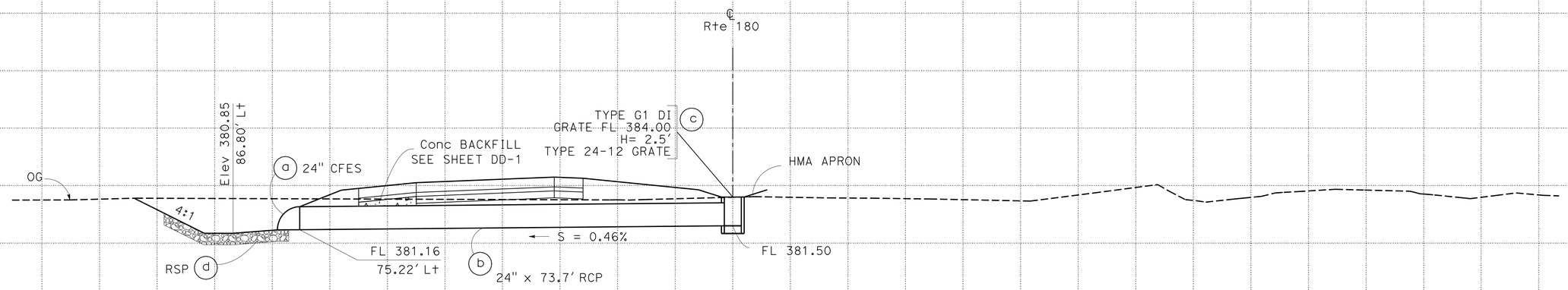


**DRAINAGE SYSTEM No. 8**

"A1" 369+00

# DRAINAGE PROFILES

SCALE: Horiz 1" = 10'
Vert 1" = 5'

**DP-4**

STATE OF CALIFORNIA - DEPARTMENT OF TRANSPORTATION
Caltrans
DESIGN

FUNCTIONAL SUPERVISOR: SANKU G. MOHAN
CALCULATED-DESIGNED BY: HARJINDER SEKHON
CHECKED BY: KHALID CHAOUI
REVISED BY: IA
DATE REVISED: 02/06/12

LAST REVISION 07-09-12 | DATE PLOTTED => 13-DEC-2012 | TIME PLOTTED => 06:41

| Dist | COUNTY | ROUTE | POST MILES TOTAL PROJECT | SHEET No. | TOTAL SHEETS |
|---|---|---|---|---|---|
| 06 | Fre | 180 | R71.8/74.5 | 84 | 235 |

REGISTERED CIVIL ENGINEER 7-09-12 DATE

12-10-12
PLANS APPROVAL DATE

REGISTERED PROFESSIONAL ENGINEER HARJINDER SEKHON No. 76396 Exp. 12-31-12 CIVIL STATE OF CALIFORNIA

*THE STATE OF CALIFORNIA OR ITS OFFICERS OR AGENTS SHALL NOT BE RESPONSIBLE FOR THE ACCURACY OR COMPLETENESS OF SCANNED COPIES OF THIS PLAN SHEET.*

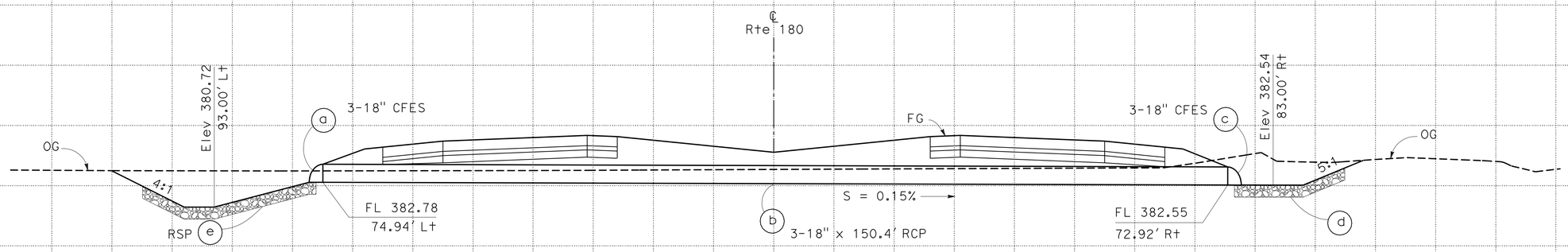


## DRAINAGE SYSTEM No. 9

"A1" 371+50

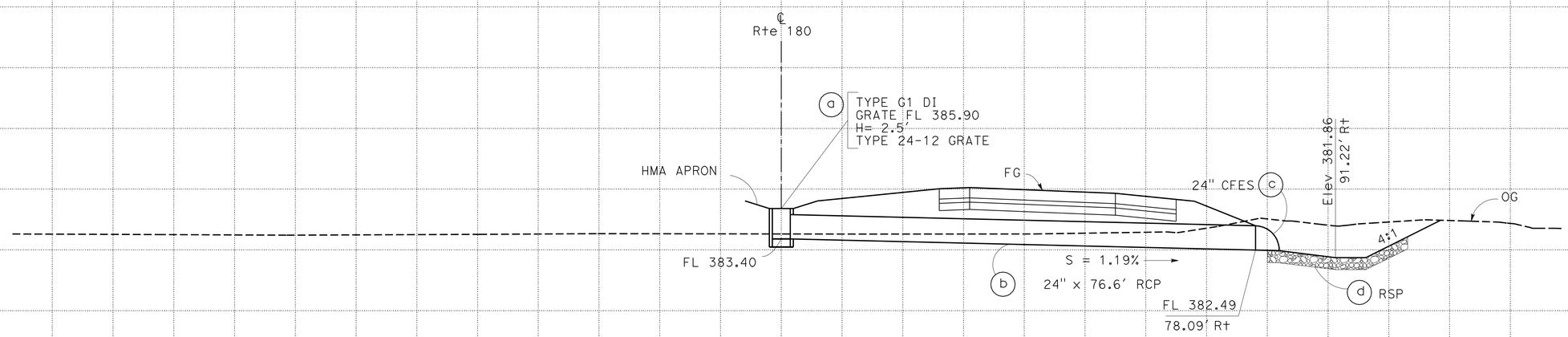


## DRAINAGE SYSTEM No. 10

"A1" 374+00

# DRAINAGE PROFILES

SCALE: Horiz 1" = 10'
Vert 1" = 5'

**DP-5**

STATE OF CALIFORNIA - DEPARTMENT OF TRANSPORTATION
Caltrans
DESIGN
FUNCTIONAL SUPERVISOR: SANKU G. MOHAN
CALCULATED-DESIGNED BY: HARJINDER SEKHON
CHECKED BY: KHALID CHAOUI
REVISED BY: IA
DATE REVISED: 02/06/12

LAST REVISION 07-09-12 | DATE PLOTTED => 13-DEC-2012 | TIME PLOTTED => 06:41

| Dist | COUNTY | ROUTE | POST MILES TOTAL PROJECT | SHEET No. | TOTAL SHEETS |
|---|---|---|---|---|---|
| 06 | Fre | 180 | R71.8/74.5 | 85 | 235 |

REGISTERED CIVIL ENGINEER 7-09-12 DATE

12-10-12
PLANS APPROVAL DATE

REGISTERED PROFESSIONAL ENGINEER
HARJINDER SEKHON
No. 76396
Exp. 12-31-12
CIVIL
STATE OF CALIFORNIA

*THE STATE OF CALIFORNIA OR ITS OFFICERS OR AGENTS SHALL NOT BE RESPONSIBLE FOR THE ACCURACY OR COMPLETENESS OF SCANNED COPIES OF THIS PLAN SHEET.*

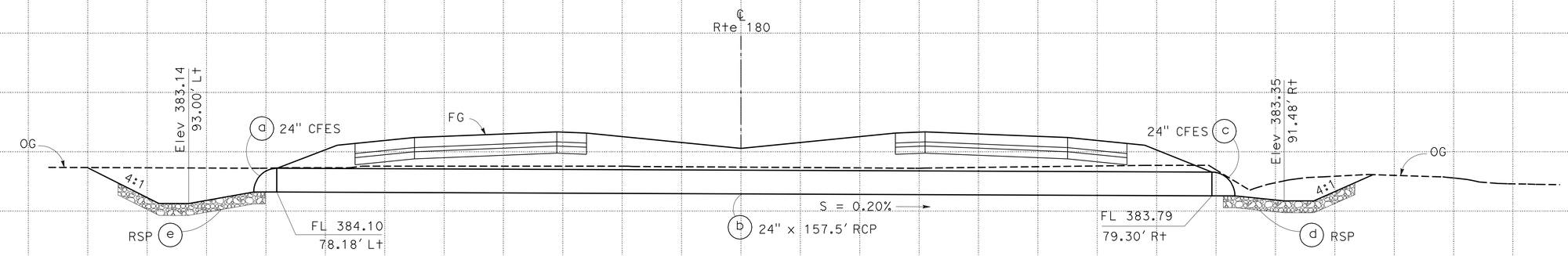


## DRAINAGE SYSTEM No. 11

"A1" 377+00

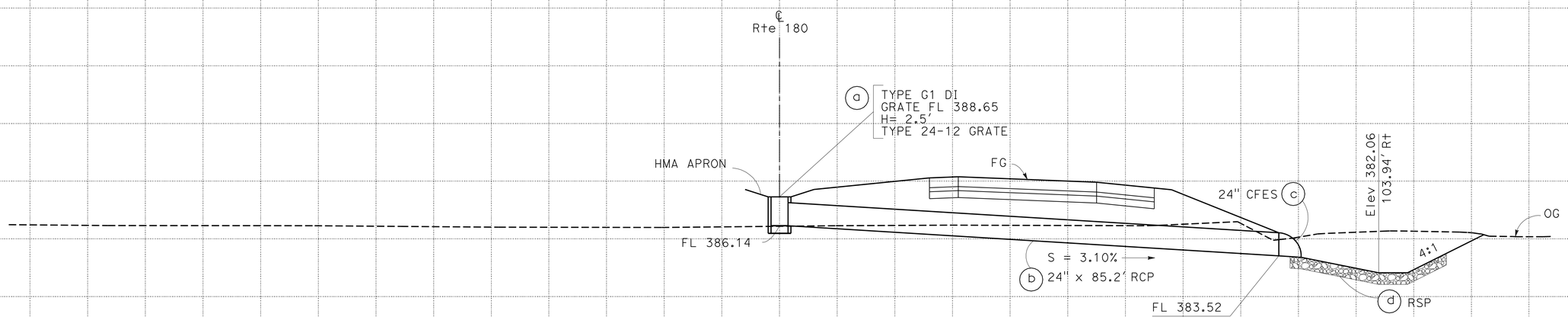


## DRAINAGE SYSTEM No. 12

"A1" 379+00

# DRAINAGE PROFILES

SCALE: Horiz 1" = 10'
Vert 1" = 5'

**DP-6**

| REVISED BY | DATE REVISED |
|---|---|
| IA | 02/06/12 |

KHALID CHAOUI
HARJINDER SEKHON
CALCULATED-DESIGNED BY
CHECKED BY
FUNCTIONAL SUPERVISOR
SANKU G. MOHAN

STATE OF CALIFORNIA - DEPARTMENT OF TRANSPORTATION
Caltrans
DESIGN

LAST REVISION 07-09-12
DATE PLOTTED => 13-DEC-2012
TIME PLOTTED => 06:41

| Dist | COUNTY | ROUTE | POST MILES TOTAL PROJECT | SHEET No. | TOTAL SHEETS |
|---|---|---|---|---|---|
| 06 | Fre | 180 | R71.8/74.5 | 86 | 235 |

REGISTERED CIVIL ENGINEER 7-09-12 DATE

12-10-12
PLANS APPROVAL DATE

REGISTERED PROFESSIONAL ENGINEER HARJINDER SEKHON No. 76396 Exp. 12-31-12 CIVIL STATE OF CALIFORNIA

*THE STATE OF CALIFORNIA OR ITS OFFICERS OR AGENTS SHALL NOT BE RESPONSIBLE FOR THE ACCURACY OR COMPLETENESS OF SCANNED COPIES OF THIS PLAN SHEET.*

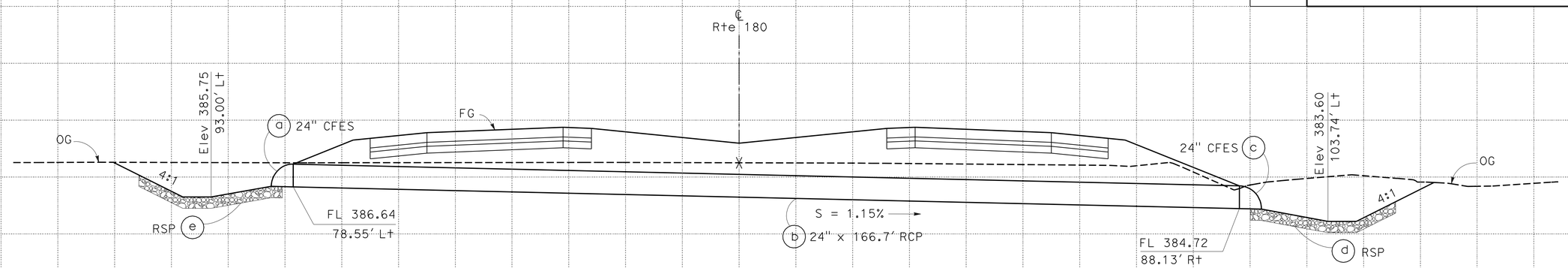


## DRAINAGE SYSTEM No. 13

"A1" 381+50

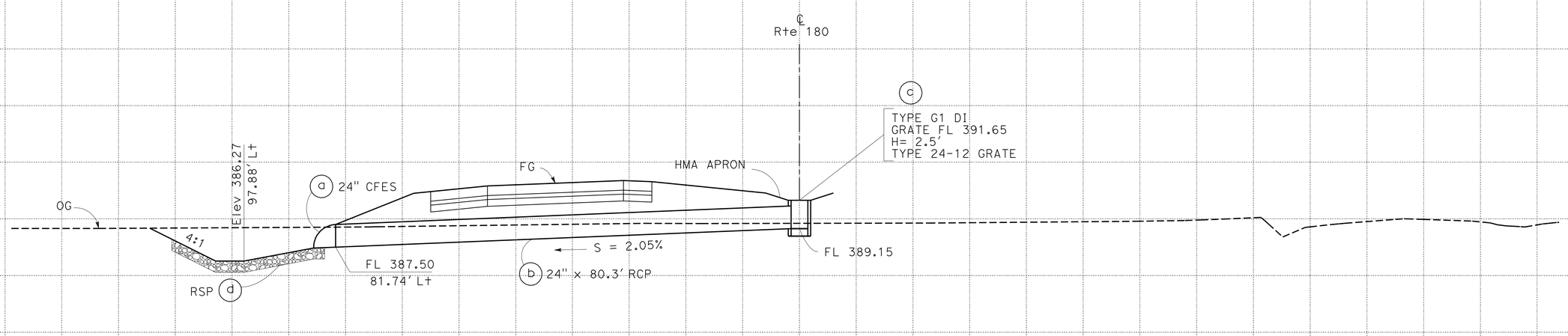


## DRAINAGE SYSTEM No. 14

"A1" 384+00

# DRAINAGE PROFILES

SCALE: Horiz 1" = 10'
Vert 1" = 5'

**DP-7**

| REVISED BY | DATE REVISED |
|---|---|
| IA | 02/06/12 |

CALCULATED-DESIGNED BY: KHALID CHAOUI
CHECKED BY: HARJINDER SEKHON

FUNCTIONAL SUPERVISOR: SANKU G. MOHAN

STATE OF CALIFORNIA - DEPARTMENT OF TRANSPORTATION
DESIGN
Caltrans

LAST REVISION 07-09-12 | DATE PLOTTED => 13-DEC-2012 | TIME PLOTTED => 06:41

| Dist | COUNTY | ROUTE | POST MILES TOTAL PROJECT | SHEET No. | TOTAL SHEETS |
|---|---|---|---|---|---|
| 06 | Fre | 180 | R71.8/74.5 | 87 | 235 |

REGISTERED CIVIL ENGINEER 7-09-12 DATE

12-10-12
PLANS APPROVAL DATE

REGISTERED PROFESSIONAL ENGINEER HARJINDER SEKHON No. 76396 Exp. 12-31-12 CIVIL STATE OF CALIFORNIA

*THE STATE OF CALIFORNIA OR ITS OFFICERS OR AGENTS SHALL NOT BE RESPONSIBLE FOR THE ACCURACY OR COMPLETENESS OF SCANNED COPIES OF THIS PLAN SHEET.*

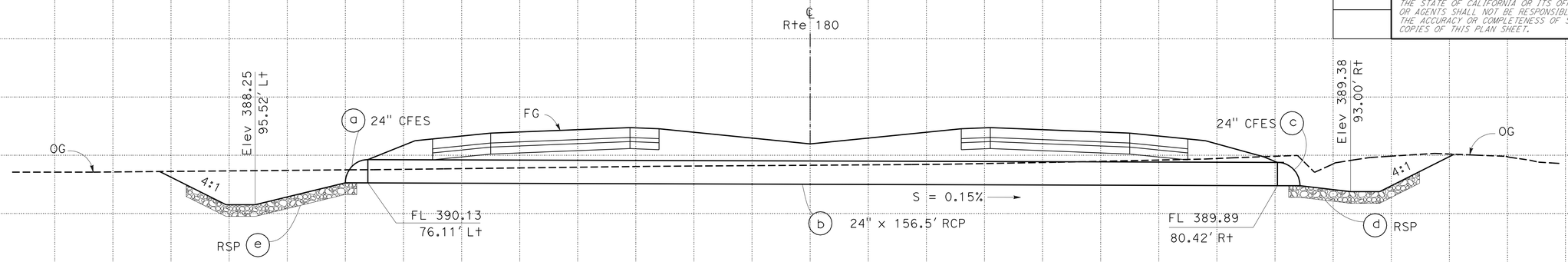


## DRAINAGE SYSTEM No. 15

"A1" 386+50

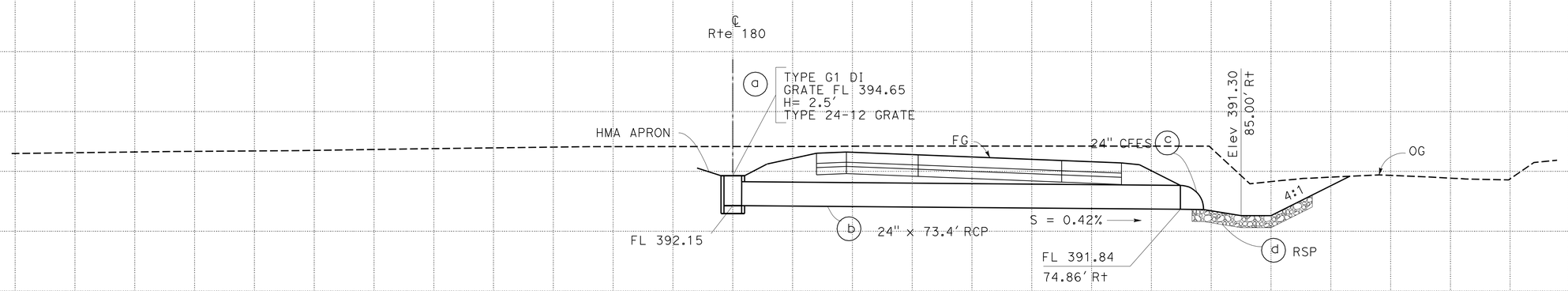


## DRAINAGE SYSTEM No. 16

"A1" 389+00

# DRAINAGE PROFILES

SCALE: Horiz 1" = 10'
Vert 1" = 5'

**DP-8**

STATE OF CALIFORNIA - DEPARTMENT OF TRANSPORTATION
Caltrans DESIGN

FUNCTIONAL SUPERVISOR: SANKU G. MOHAN
CALCULATED-DESIGNED BY: KHALID CHAOUI
CHECKED BY: HARJINDER SEKHON
REVISED BY: IA
DATE REVISED: 02/06/12

LAST REVISION 07-09-12 | DATE PLOTTED => 13-DEC-2012 | TIME PLOTTED => 06:41

| Dist | COUNTY | ROUTE | POST MILES TOTAL PROJECT | SHEET No. | TOTAL SHEETS |
|---|---|---|---|---|---|
| 06 | Fre | 180 | R71.8/74.5 | 88 | 235 |

REGISTERED CIVIL ENGINEER 7-09-12 DATE

12-10-12
PLANS APPROVAL DATE

REGISTERED PROFESSIONAL ENGINEER HARJINDER SEKHON No. 76396 Exp. 12-31-12 CIVIL STATE OF CALIFORNIA

*THE STATE OF CALIFORNIA OR ITS OFFICERS OR AGENTS SHALL NOT BE RESPONSIBLE FOR THE ACCURACY OR COMPLETENESS OF SCANNED COPIES OF THIS PLAN SHEET.*

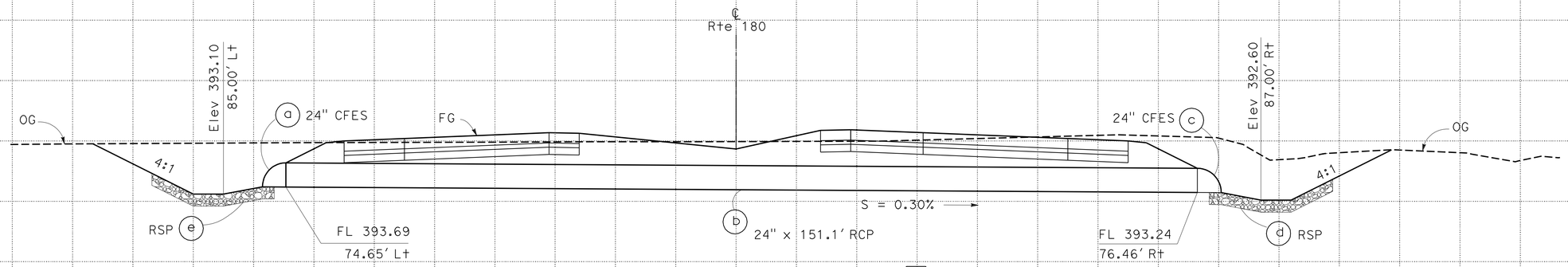


## DRAINAGE SYSTEM No. 17

"A1" 392+00

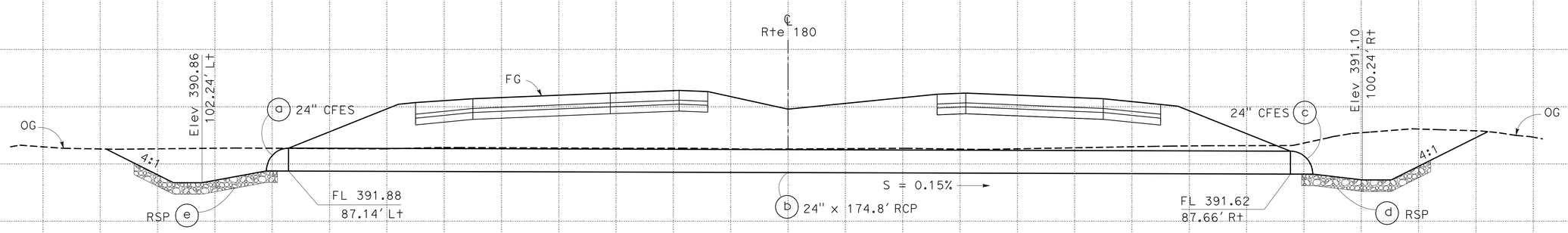


## DRAINAGE SYSTEM No. 18

"A1" 398+00

## DRAINAGE PROFILES

SCALE: Horiz 1" = 10'
Vert 1" = 5'

**DP-9**

REVISED BY IA DATE REVISED 02/06/12

KHALID CHAOUI
HARJINDER SEKHON

CALCULATED-DESIGNED BY
CHECKED BY

FUNCTIONAL SUPERVISOR SANKU G. MOHAN

STATE OF CALIFORNIA - DEPARTMENT OF TRANSPORTATION
Caltrans
DESIGN

LAST REVISION 07-09-12 | DATE PLOTTED => 13-DEC-2012 TIME PLOTTED => 06:41

| Dist | COUNTY | ROUTE | POST MILES TOTAL PROJECT | SHEET No. | TOTAL SHEETS |
|---|---|---|---|---|---|
| 06 | Fre | 180 | R71.8/74.5 | 89 | 235 |

REGISTERED CIVIL ENGINEER 7-09-12 DATE

12-10-12
PLANS APPROVAL DATE

REGISTERED PROFESSIONAL ENGINEER
HARJINDER SEKHON
No. 76396
Exp. 12-31-12
CIVIL
STATE OF CALIFORNIA

*THE STATE OF CALIFORNIA OR ITS OFFICERS OR AGENTS SHALL NOT BE RESPONSIBLE FOR THE ACCURACY OR COMPLETENESS OF SCANNED COPIES OF THIS PLAN SHEET.*

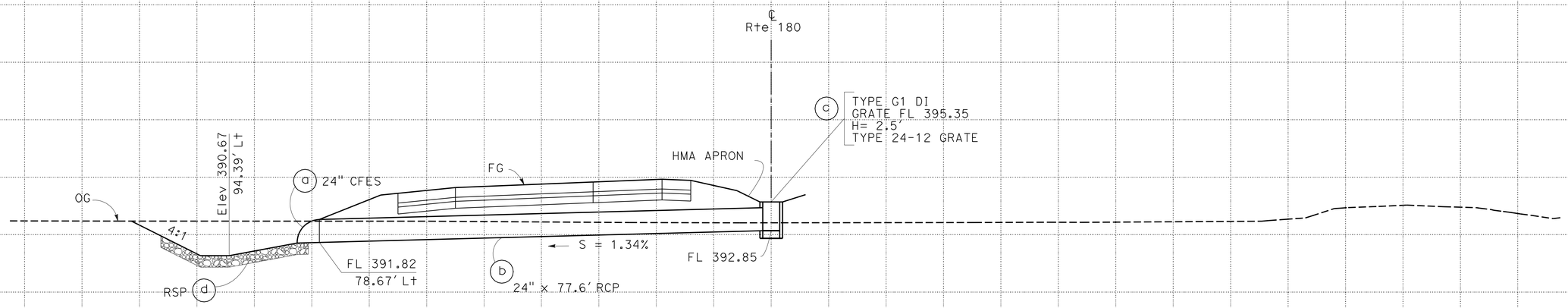


## DRAINAGE SYSTEM No. 19

"A1" 402+00

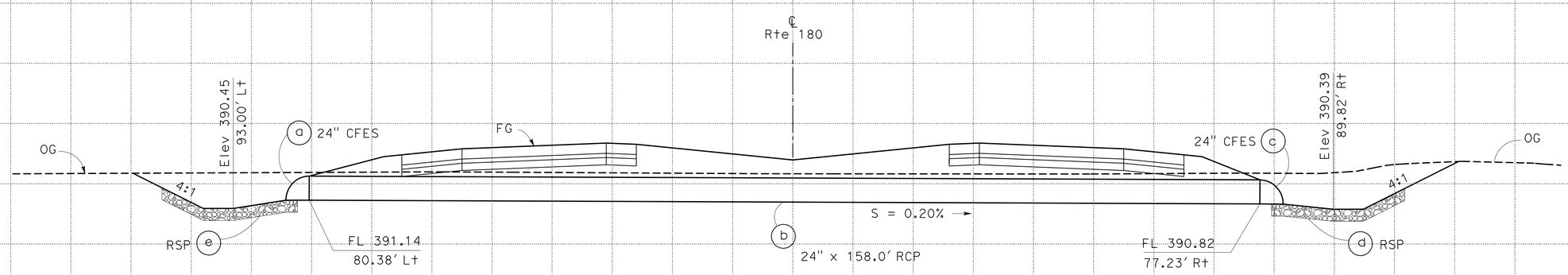


## DRAINAGE SYSTEM No. 20

"A1" 405+00

# DRAINAGE PROFILES

SCALE: Horiz 1" = 10'
Vert 1" = 5'

**DP-10**

| REVISED BY | DATE REVISED |
|---|---|
| IA | 02/06/12 |

CALCULATED-DESIGNED BY: KHALID CHAOUI
CHECKED BY: HARJINDER SEKHON

FUNCTIONAL SUPERVISOR: SANKU G. MOHAN

STATE OF CALIFORNIA - DEPARTMENT OF TRANSPORTATION
Caltrans
DESIGN

LAST REVISION 07-09-12 | DATE PLOTTED => 13-DEC-2012 | TIME PLOTTED => 06:41

| Dist | COUNTY | ROUTE | POST MILES TOTAL PROJECT | SHEET No. | TOTAL SHEETS |
|---|---|---|---|---|---|
| 06 | Fre | 180 | R71.8/74.5 | 90 | 235 |

REGISTERED CIVIL ENGINEER 7-09-12 DATE

12-10-12
PLANS APPROVAL DATE

REGISTERED PROFESSIONAL ENGINEER HARJINDER SEKHON No. 76396 Exp. 12-31-12 CIVIL STATE OF CALIFORNIA

*THE STATE OF CALIFORNIA OR ITS OFFICERS OR AGENTS SHALL NOT BE RESPONSIBLE FOR THE ACCURACY OR COMPLETENESS OF SCANNED COPIES OF THIS PLAN SHEET.*

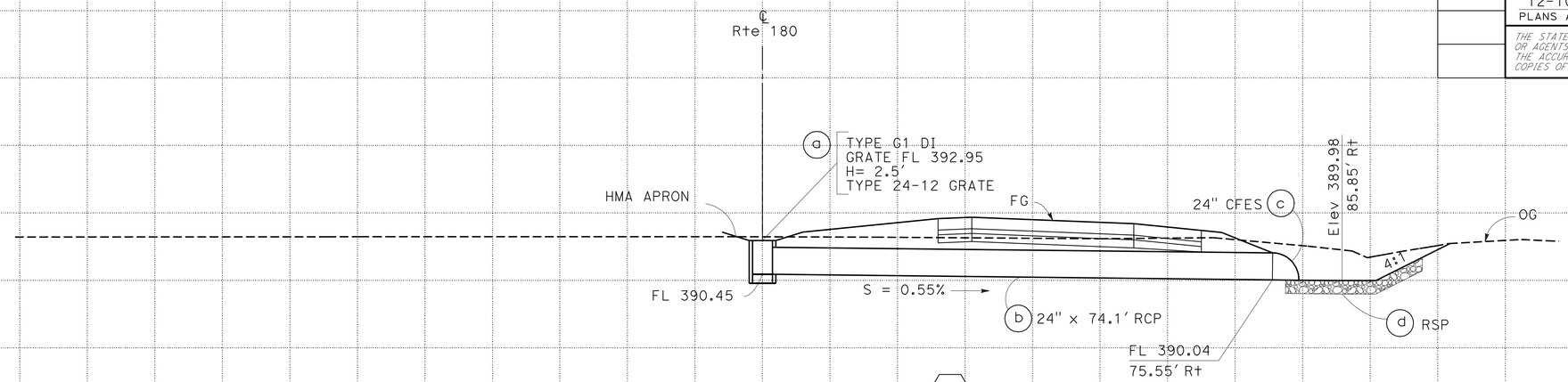


**DRAINAGE SYSTEM No. 21**

"A1" 408+00

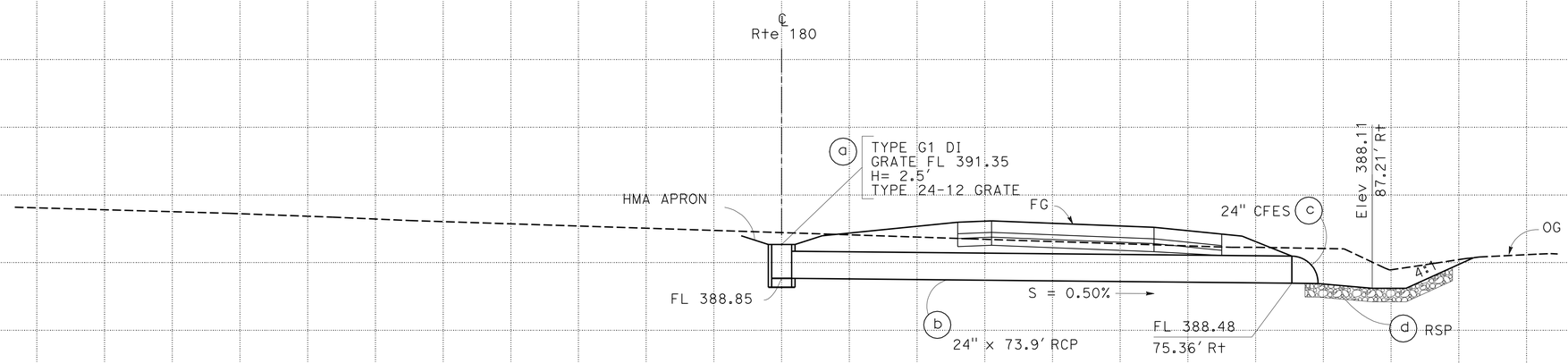


**DRAINAGE SYSTEM No. 22**

"A1" 412+00

# DRAINAGE PROFILES

SCALE: Horiz 1" = 10'
Vert 1" = 5'

**DP-11**

REVISED BY: IA — DATE REVISED: 02/06/12

KHALID CHAOUI — HARJINDER SEKHON

CALCULATED-DESIGNED BY — CHECKED BY

FUNCTIONAL SUPERVISOR: SANKU G. MOHAN

STATE OF CALIFORNIA - DEPARTMENT OF TRANSPORTATION — DESIGN — Caltrans

LAST REVISION 07-09-12 | DATE PLOTTED => 13-DEC-2012 | TIME PLOTTED => 06:41

| Dist | COUNTY | ROUTE | POST MILES TOTAL PROJECT | SHEET No. | TOTAL SHEETS |
|---|---|---|---|---|---|
| 06 | Fre | 180 | R71.8/74.5 | 91 | 235 |

REGISTERED CIVIL ENGINEER 7-09-12 DATE

12-10-12
PLANS APPROVAL DATE

REGISTERED PROFESSIONAL ENGINEER HARJINDER SEKHON No. 76396 Exp. 12-31-12 CIVIL STATE OF CALIFORNIA

*THE STATE OF CALIFORNIA OR ITS OFFICERS OR AGENTS SHALL NOT BE RESPONSIBLE FOR THE ACCURACY OR COMPLETENESS OF SCANNED COPIES OF THIS PLAN SHEET.*

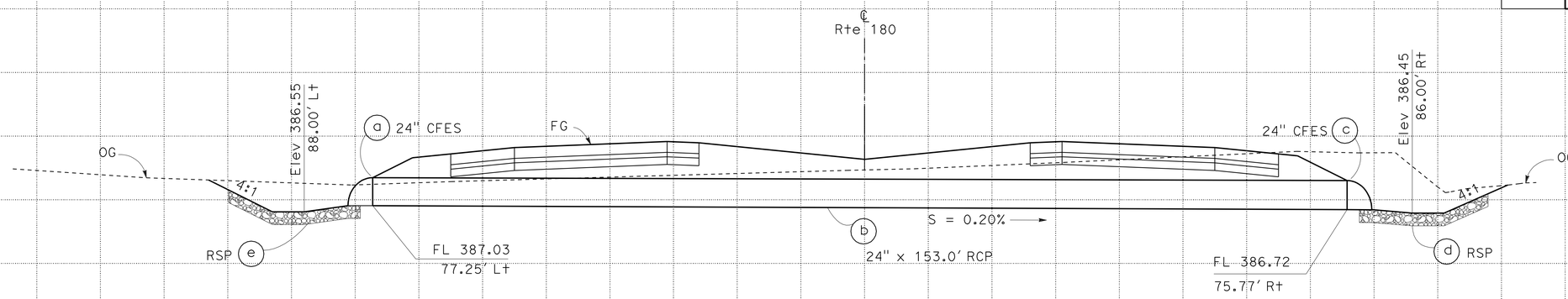


## DRAINAGE SYSTEM No. 23

"A1" 414+50

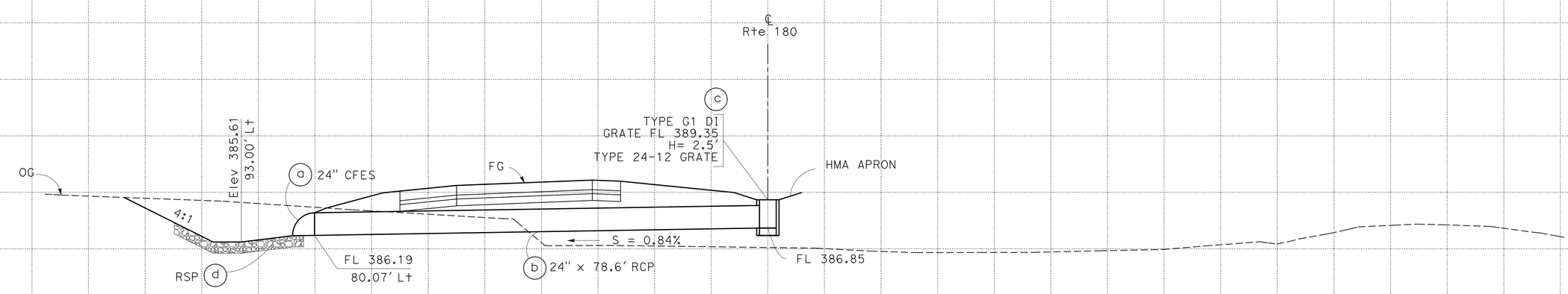


## DRAINAGE SYSTEM No. 24

"A1" 417+00

# DRAINAGE PROFILES

SCALE: Horiz 1" = 10'
Vert 1" = 5'

DP-12

REVISED BY: IA — DATE REVISED: 02/06/12
CALCULATED-DESIGNED BY: KHALID CHAOUI — CHECKED BY: HARJINDER SEKHON
FUNCTIONAL SUPERVISOR: SANKU G. MOHAN

STATE OF CALIFORNIA - DEPARTMENT OF TRANSPORTATION
Caltrans DESIGN

LAST REVISION 07-09-12 | DATE PLOTTED => 13-DEC-2012 | TIME PLOTTED => 06:41

| Dist | COUNTY | ROUTE | POST MILES TOTAL PROJECT | SHEET No. | TOTAL SHEETS |
|---|---|---|---|---|---|
| 06 | Fre | 180 | R71.8/74.5 | 92 | 235 |

REGISTERED CIVIL ENGINEER 7-09-12 DATE

12-10-12
PLANS APPROVAL DATE

REGISTERED PROFESSIONAL ENGINEER HARJINDER SEKHON No. 76396 Exp. 12-31-12 CIVIL STATE OF CALIFORNIA

*THE STATE OF CALIFORNIA OR ITS OFFICERS OR AGENTS SHALL NOT BE RESPONSIBLE FOR THE ACCURACY OR COMPLETENESS OF SCANNED COPIES OF THIS PLAN SHEET.*

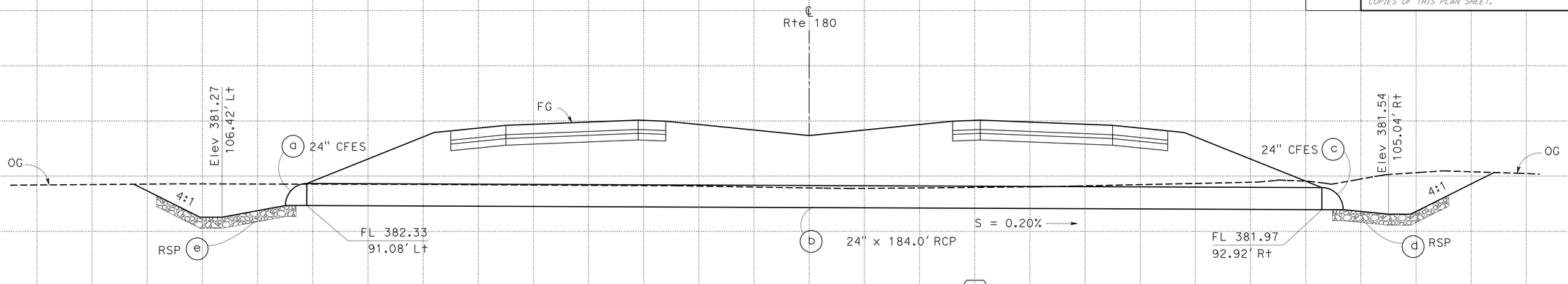


**DRAINAGE SYSTEM No. 25**

"A1" 419+50

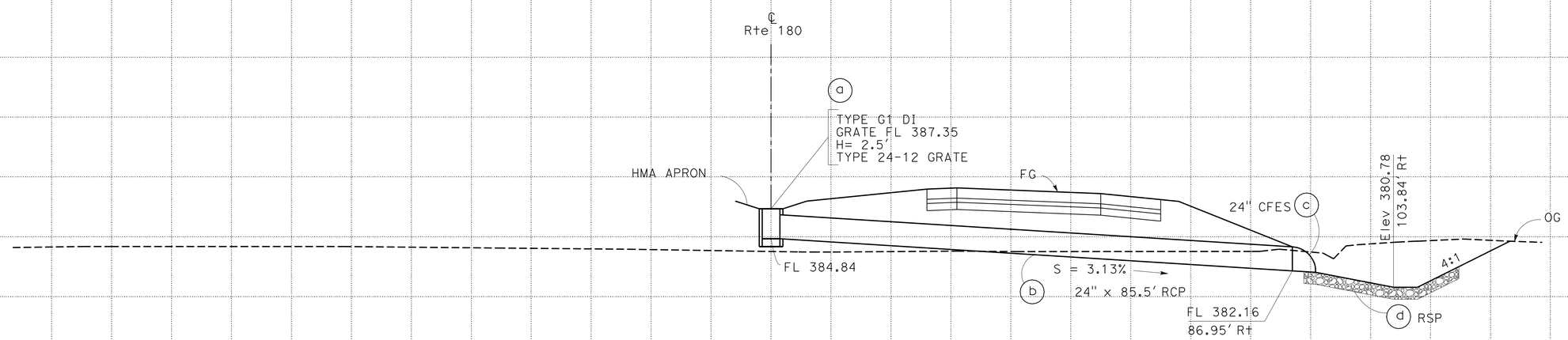


**DRAINAGE SYSTEM No. 26**

"A1" 422+00

# DRAINAGE PROFILES

SCALE: Horiz 1" = 10'
Vert 1" = 5'

**DP-13**

STATE OF CALIFORNIA - DEPARTMENT OF TRANSPORTATION
Caltrans
DESIGN
FUNCTIONAL SUPERVISOR: SANKU G. MOHAN
CALCULATED-DESIGNED BY: KHALID CHAOUI
CHECKED BY: HARJINDER SEKHON
REVISED BY: IA
DATE REVISED: 02/06/12

LAST REVISION 07-09-12 | DATE PLOTTED => 13-DEC-2012 | TIME PLOTTED => 06:41

| Dist | COUNTY | ROUTE | POST MILES TOTAL PROJECT | SHEET No. | TOTAL SHEETS |
|---|---|---|---|---|---|
| 06 | Fre | 180 | R71.8/74.5 | 93 | 235 |

REGISTERED CIVIL ENGINEER 7-09-12 DATE

12-10-12
PLANS APPROVAL DATE

REGISTERED PROFESSIONAL ENGINEER HARJINDER SEKHON No. 76396 Exp. 12-31-12 CIVIL STATE OF CALIFORNIA

*THE STATE OF CALIFORNIA OR ITS OFFICERS OR AGENTS SHALL NOT BE RESPONSIBLE FOR THE ACCURACY OR COMPLETENESS OF SCANNED COPIES OF THIS PLAN SHEET.*

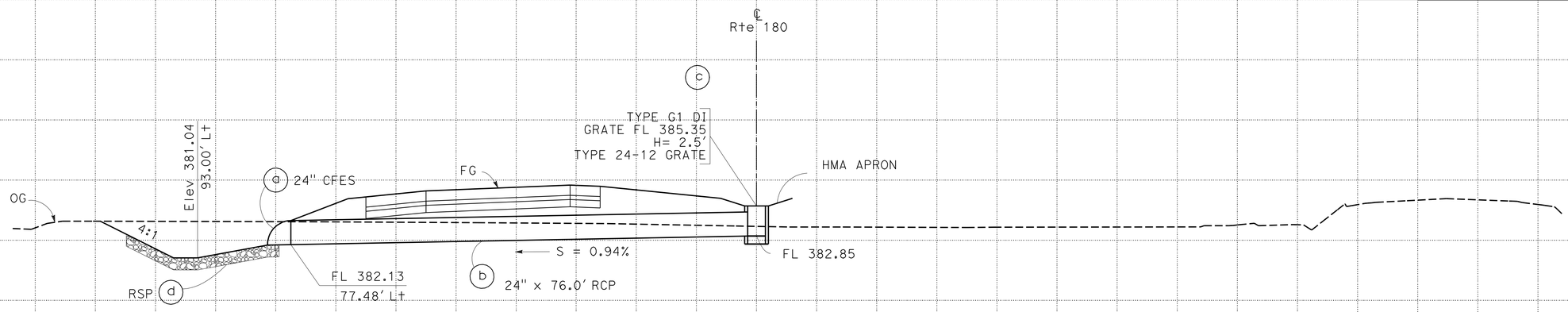


## DRAINAGE SYSTEM No. 27

"A1" 427+00

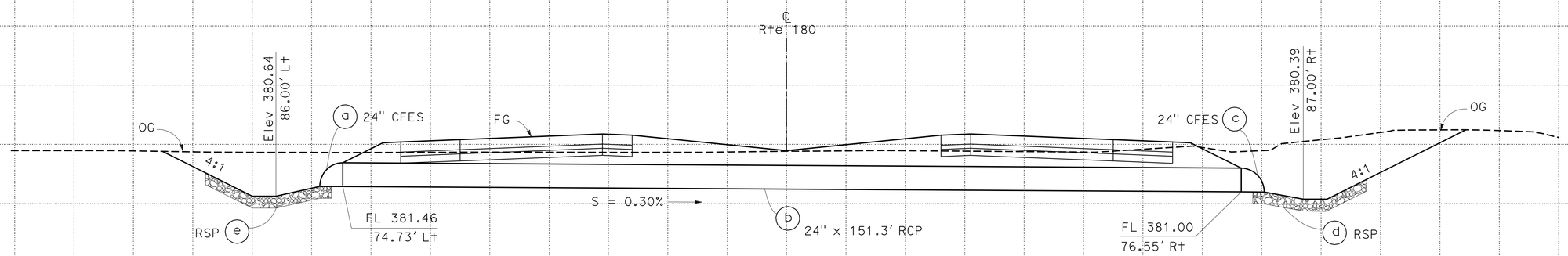


## DRAINAGE SYSTEM No. 28

"A1" 430+00

# DRAINAGE PROFILES

SCALE: Horiz 1" = 10'
Vert 1" = 5'

**DP-14**

STATE OF CALIFORNIA - DEPARTMENT OF TRANSPORTATION
Caltrans
DESIGN

FUNCTIONAL SUPERVISOR: SANKU G. MOHAN
CALCULATED-DESIGNED BY: KHALID CHAOUI
CHECKED BY: HARJINDER SEKHON
REVISED BY: IA
DATE REVISED: 02/06/12

LAST REVISION 07-09-12 | DATE PLOTTED => 13-DEC-2012 | TIME PLOTTED => 06:42

| Dist | COUNTY | ROUTE | POST MILES TOTAL PROJECT | SHEET No. | TOTAL SHEETS |
|---|---|---|---|---|---|
| 06 | Fre | 180 | R71.8/74.5 | 94 | 235 |

REGISTERED CIVIL ENGINEER 7-09-12 DATE

12-10-12
PLANS APPROVAL DATE

REGISTERED PROFESSIONAL ENGINEER HARJINDER SEKHON No. 76396 Exp. 12-31-12 CIVIL STATE OF CALIFORNIA

*THE STATE OF CALIFORNIA OR ITS OFFICERS OR AGENTS SHALL NOT BE RESPONSIBLE FOR THE ACCURACY OR COMPLETENESS OF SCANNED COPIES OF THIS PLAN SHEET.*

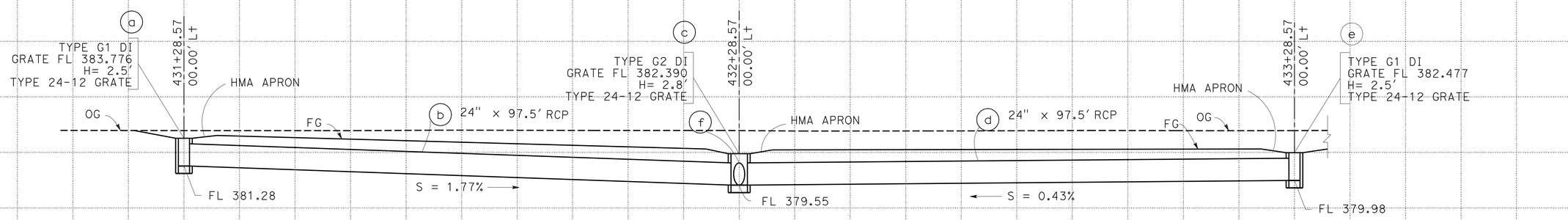


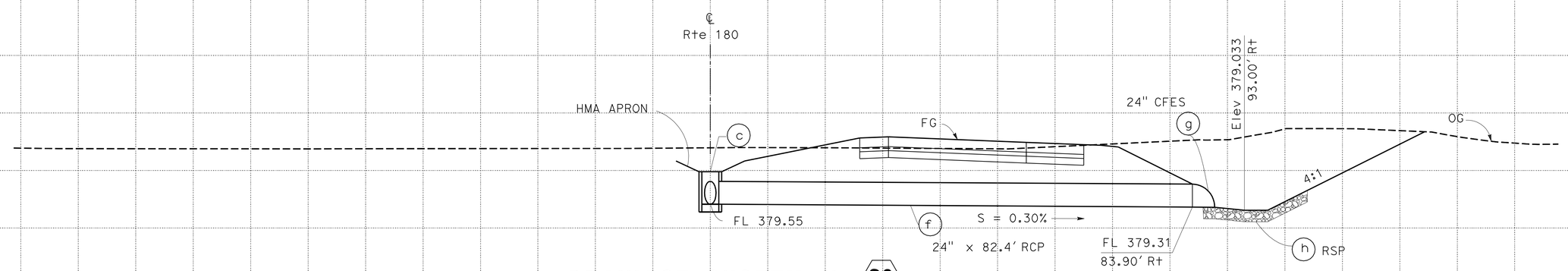


## DRAINAGE SYSTEM No. 29

"A1" 432+28.57

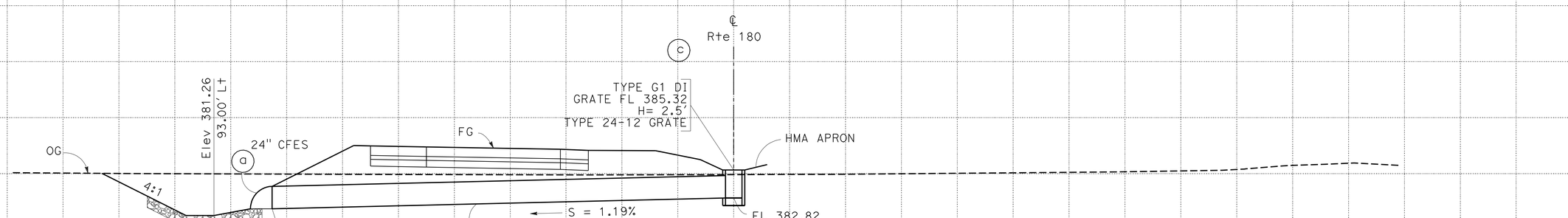


## DRAINAGE SYSTEM No. 30

"A1" 436+00

# DRAINAGE PROFILES

SCALE: Horiz 1" = 10'
Vert 1" = 5'

**DP-15**

STATE OF CALIFORNIA - DEPARTMENT OF TRANSPORTATION
Caltrans
DESIGN
FUNCTIONAL SUPERVISOR: SANKU G. MOHAN
CALCULATED-DESIGNED BY: KHALID CHAOUI
CHECKED BY: HARJINDER SEKHON
REVISED BY: IA
DATE REVISED: 02/06/12

LAST REVISION DATE PLOTTED => 13-DEC-2012
07-09-12 TIME PLOTTED => 06:42

| Dist | COUNTY | ROUTE | POST MILES TOTAL PROJECT | SHEET No. | TOTAL SHEETS |
|---|---|---|---|---|---|
| 06 | Fre | 180 | R71.8/74.5 | 95 | 235 |

REGISTERED CIVIL ENGINEER 7-09-12 DATE

12-10-12
PLANS APPROVAL DATE

REGISTERED PROFESSIONAL ENGINEER HARJINDER SEKHON No. 76396 Exp. 12-31-12 CIVIL STATE OF CALIFORNIA

*THE STATE OF CALIFORNIA OR ITS OFFICERS OR AGENTS SHALL NOT BE RESPONSIBLE FOR THE ACCURACY OR COMPLETENESS OF SCANNED COPIES OF THIS PLAN SHEET.*

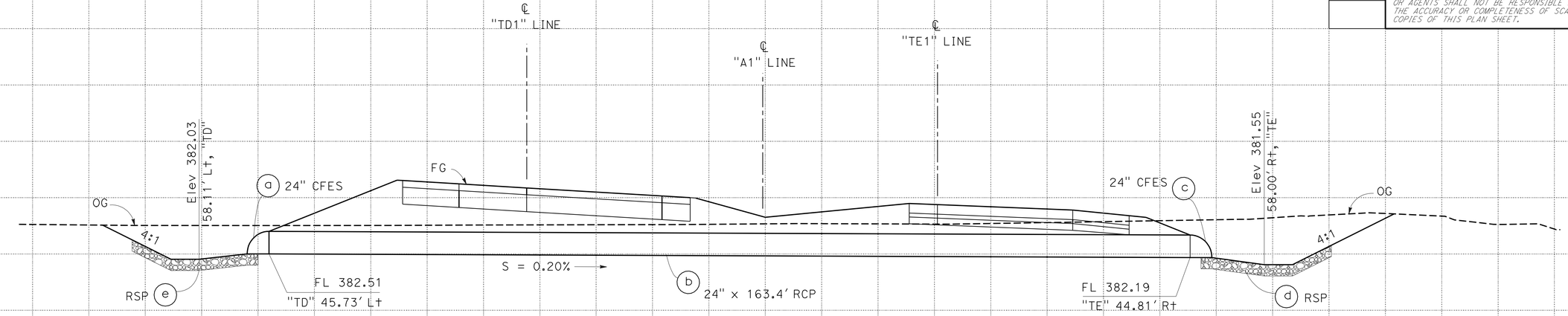


## DRAINAGE SYSTEM No. 31

"TD" 51+64.94, "TE" 31+62.61

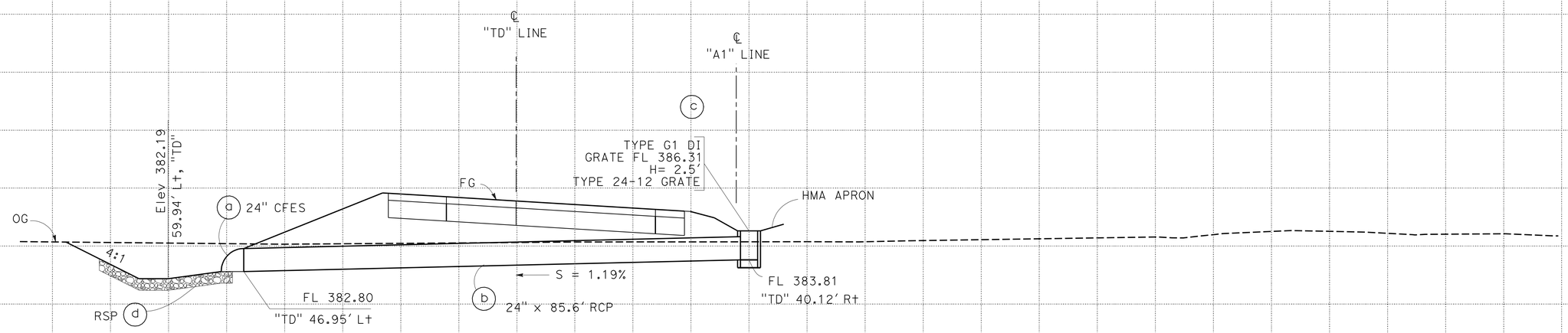


## DRAINAGE SYSTEM No. 32

"TD" 53+66.61

# DRAINAGE PROFILES

SCALE: Horiz 1" = 10'
Vert 1" = 5'

**DP-16**

STATE OF CALIFORNIA - DEPARTMENT OF TRANSPORTATION
Caltrans
DESIGN
FUNCTIONAL SUPERVISOR: SANKU G. MOHAN
CALCULATED-DESIGNED BY: KHALID CHAOUI
CHECKED BY: HARJINDER SEKHON
REVISED BY: IA
DATE REVISED: 02/06/12

LAST REVISION 07-09-12 | DATE PLOTTED => 13-DEC-2012 | TIME PLOTTED => 06:42

| Dist | COUNTY | ROUTE | POST MILES TOTAL PROJECT | SHEET No. | TOTAL SHEETS |
|---|---|---|---|---|---|
| 06 | Fre | 180 | R71.8/74.5 | 96 | 235 |

REGISTERED CIVIL ENGINEER 7-09-12 DATE

12-10-12
PLANS APPROVAL DATE

REGISTERED PROFESSIONAL ENGINEER HARJINDER SEKHON No. 76396 Exp. 12-31-12 CIVIL STATE OF CALIFORNIA

*THE STATE OF CALIFORNIA OR ITS OFFICERS OR AGENTS SHALL NOT BE RESPONSIBLE FOR THE ACCURACY OR COMPLETENESS OF SCANNED COPIES OF THIS PLAN SHEET.*

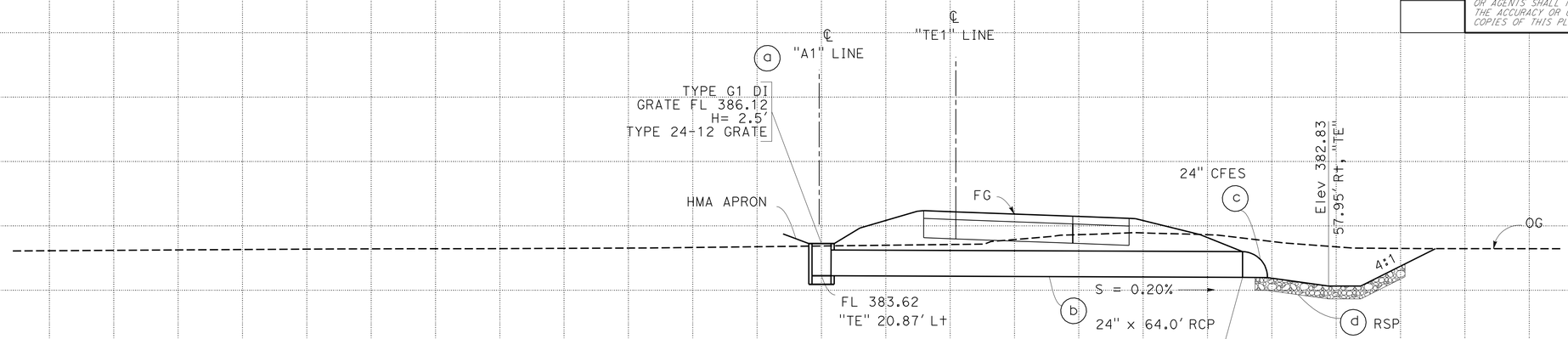


## DRAINAGE SYSTEM No. 33

"TE" 37+58.87

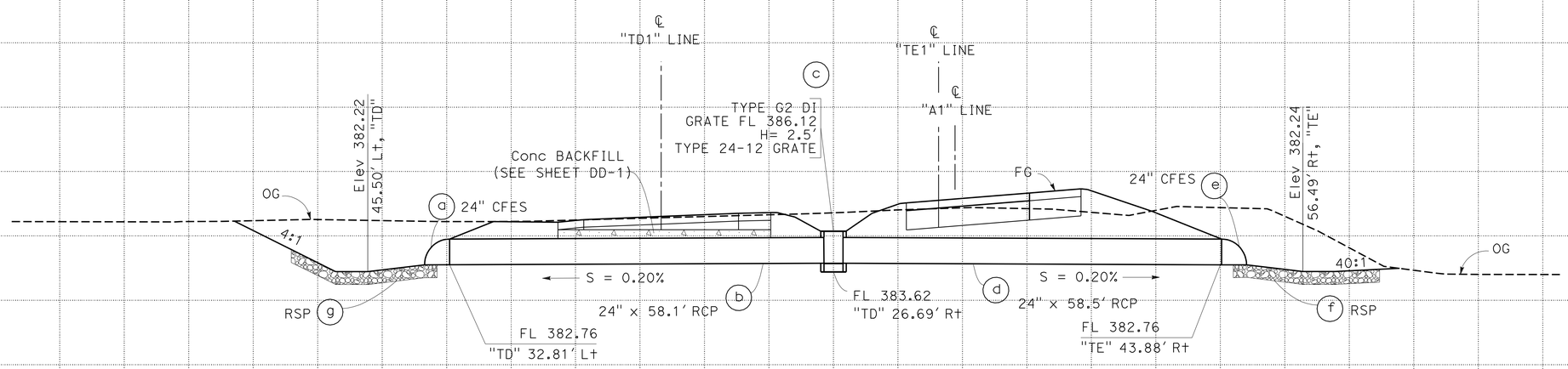


## DRAINAGE SYSTEM No. 34

"TD" 60+21.43, "TE" 40+09.53

# DRAINAGE PROFILES

SCALE: Horiz 1" = 10'
Vert 1" = 5'

**DP-17**

STATE OF CALIFORNIA - DEPARTMENT OF TRANSPORTATION
Caltrans DESIGN
FUNCTIONAL SUPERVISOR: SANKU G. MOHAN
CALCULATED-DESIGNED BY: KHALID CHAOUI
CHECKED BY: HARJINDER SEKHON
REVISED BY: IA
DATE REVISED: 02/06/12

LAST REVISION 07-09-12 | DATE PLOTTED => 13-DEC-2012 | TIME PLOTTED => 06:42

| Dist | COUNTY | ROUTE | POST MILES TOTAL PROJECT | SHEET No. | TOTAL SHEETS |
|---|---|---|---|---|---|
| 06 | Fre | 180 | R71.8/74.5 | 97 | 235 |

REGISTERED CIVIL ENGINEER 7-09-12 DATE

12-10-12
PLANS APPROVAL DATE

REGISTERED PROFESSIONAL ENGINEER HARJINDER SEKHON No. 76396 Exp. 12-31-12 CIVIL STATE OF CALIFORNIA

*THE STATE OF CALIFORNIA OR ITS OFFICERS OR AGENTS SHALL NOT BE RESPONSIBLE FOR THE ACCURACY OR COMPLETENESS OF SCANNED COPIES OF THIS PLAN SHEET.*

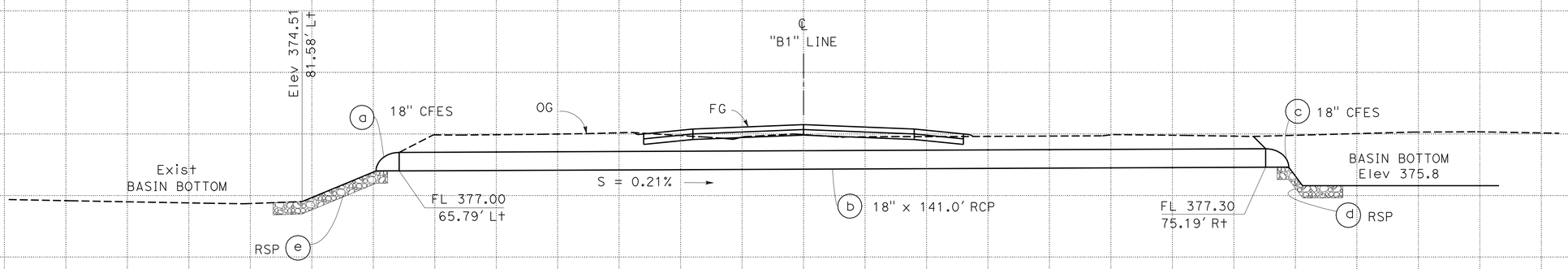


## DRAINAGE SYSTEM No. 35

"B1" 16+25

SCALE: Horiz 1" = 10'
Vert 1" = 5'

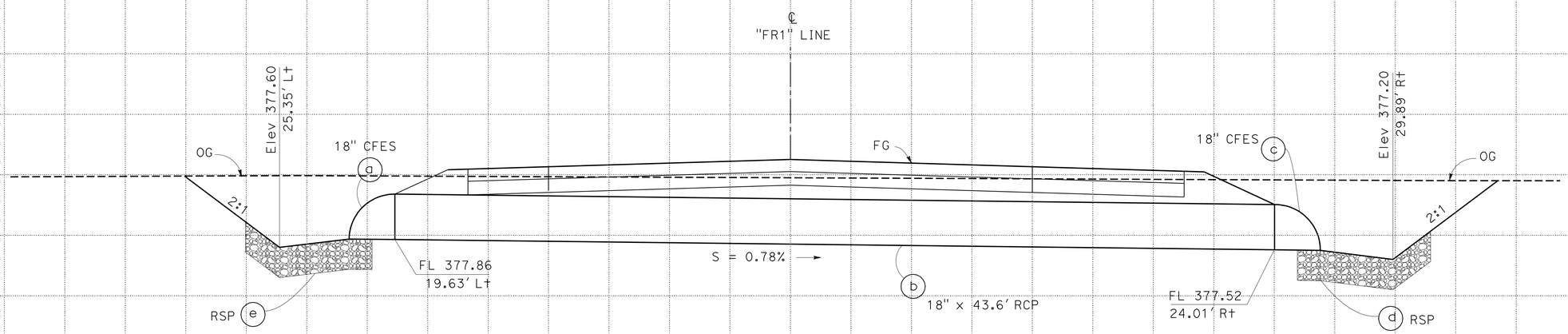


## DRAINAGE SYSTEM No. 36

"FR1" 11+00

SCALE: Horiz 1" = 3'
Vert 1" = 2'

# DRAINAGE PROFILES

SCALE AS SHOWN

**DP-18**

STATE OF CALIFORNIA - DEPARTMENT OF TRANSPORTATION
Caltrans
DESIGN

FUNCTIONAL SUPERVISOR: SANKU G. MOHAN
CALCULATED-DESIGNED BY: KHALID CHAOUI
CHECKED BY: HARJINDER SEKHON
REVISED BY: IA
DATE REVISED: 02/06/12

LAST REVISION 07-09-12 | DATE PLOTTED => 13-DEC-2012 | TIME PLOTTED => 06:42

| Dist | COUNTY | ROUTE | POST MILES TOTAL PROJECT | SHEET No. | TOTAL SHEETS |
|---|---|---|---|---|---|
| 06 | Fre | 180 | R71.8/74.5 | 98 | 235 |

REGISTERED CIVIL ENGINEER 7-09-12 DATE

12-10-12
PLANS APPROVAL DATE

REGISTERED PROFESSIONAL ENGINEER
HARJINDER SEKHON
No. 76396
Exp. 12-31-12
CIVIL
STATE OF CALIFORNIA

*THE STATE OF CALIFORNIA OR ITS OFFICERS OR AGENTS SHALL NOT BE RESPONSIBLE FOR THE ACCURACY OR COMPLETENESS OF SCANNED COPIES OF THIS PLAN SHEET.*

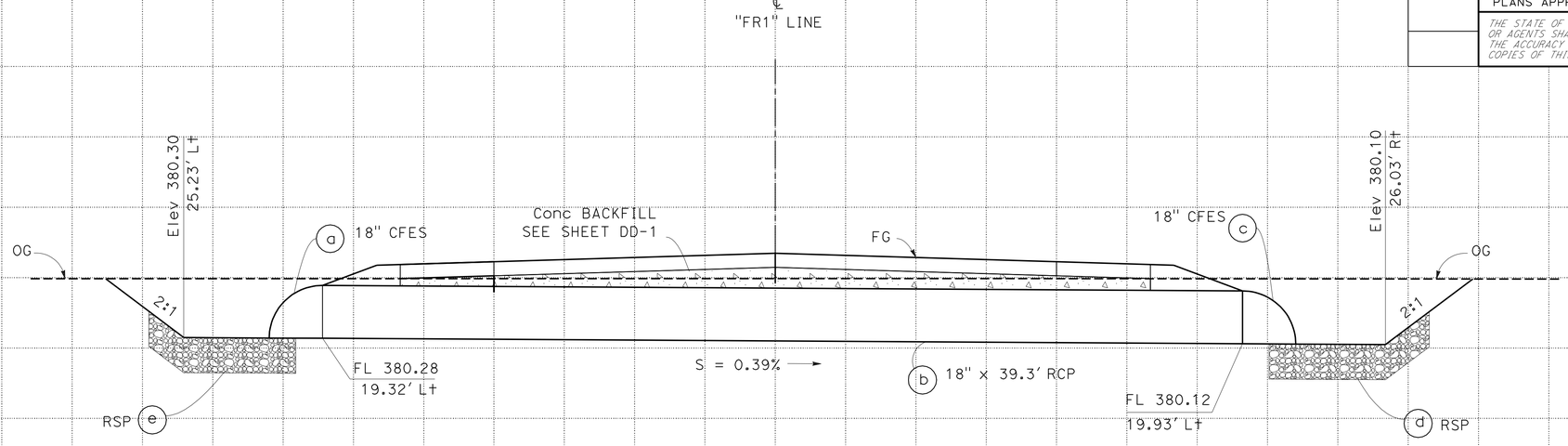


## DRAINAGE SYSTEM No. 37

"FR1" 21+50

SCALE: Horiz 1" = 3'
Vert 1" = 2'

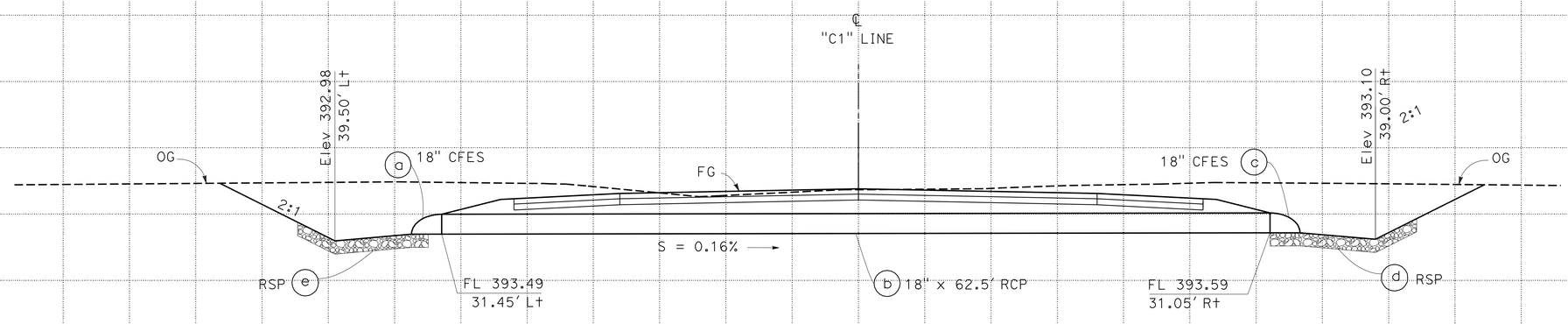


## DRAINAGE SYSTEM No. 38

"C1" 19+00

SCALE: Horiz 1" = 5'
Vert 1" = 5'

# DRAINAGE PROFILES

SCALE AS SHOWN

**DP-19**

| REVISED BY | DATE REVISED |
|---|---|
| IA | 02/06/12 |

KHALID CHAOUI — HARJINDER SEKHON

CALCULATED-DESIGNED BY — CHECKED BY

FUNCTIONAL SUPERVISOR: SANKU G. MOHAN

STATE OF CALIFORNIA - DEPARTMENT OF TRANSPORTATION

**DESIGN**

Caltrans

LAST REVISION 07-09-12 | DATE PLOTTED => 13-DEC-2012 | TIME PLOTTED => 06:42

| Dist | COUNTY | ROUTE | POST MILES TOTAL PROJECT | SHEET No. | TOTAL SHEETS |
|---|---|---|---|---|---|
| 06 | Fre | 180 | R71.8/74.5 | 99 | 235 |

REGISTERED CIVIL ENGINEER 7-09-12 DATE

12-10-12
PLANS APPROVAL DATE

REGISTERED PROFESSIONAL ENGINEER HARJINDER SEKHON No. 76396 Exp. 12-31-12 CIVIL STATE OF CALIFORNIA

*THE STATE OF CALIFORNIA OR ITS OFFICERS OR AGENTS SHALL NOT BE RESPONSIBLE FOR THE ACCURACY OR COMPLETENESS OF SCANNED COPIES OF THIS PLAN SHEET.*

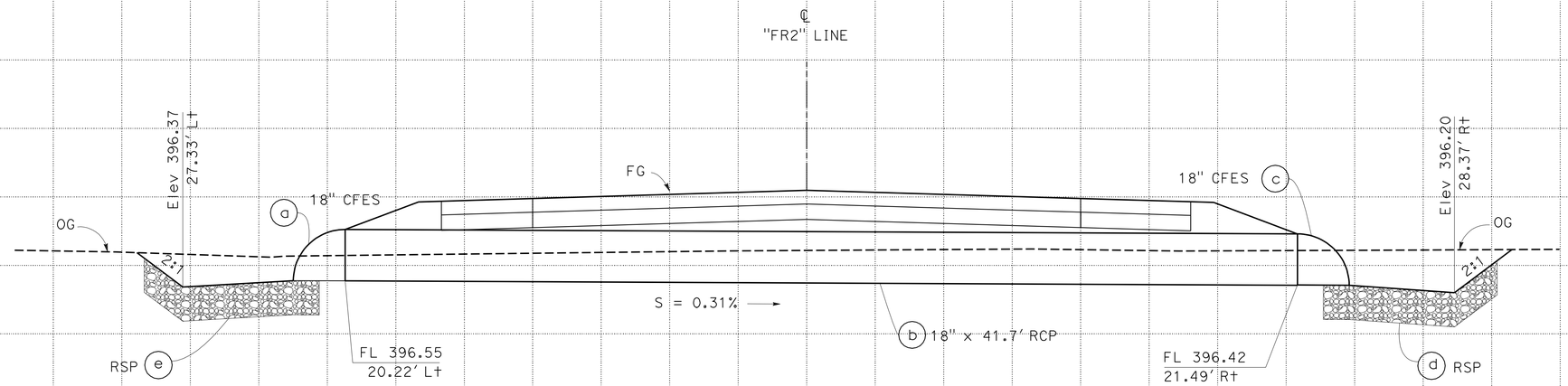


## DRAINAGE SYSTEM No. 39

"FR2" 11+00

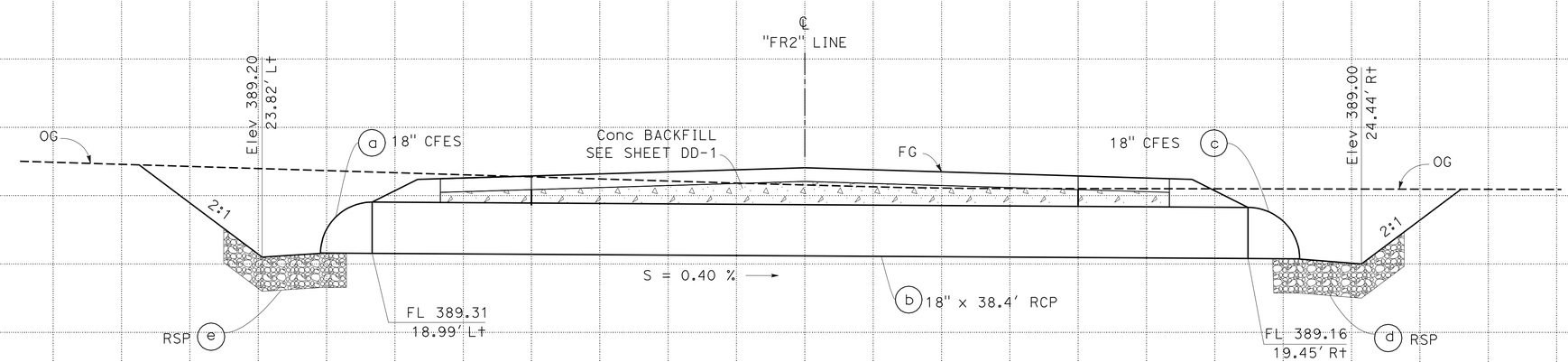


## DRAINAGE SYSTEM No. 40

"FR2" 25+00

# DRAINAGE PROFILES

SCALE: Horiz 1" = 3'
Vert 1" = 2'

**DP-20**

STATE OF CALIFORNIA - DEPARTMENT OF TRANSPORTATION
Caltrans
DESIGN
FUNCTIONAL SUPERVISOR: SANKU G. MOHAN
CALCULATED-DESIGNED BY: KHALID CHAOUI
CHECKED BY: HARJINDER SEKHON
REVISED BY: IA
DATE REVISED: 02/06/12

LAST REVISION 07-09-12 | DATE PLOTTED => 13-DEC-2012 | TIME PLOTTED => 06:42

| Dist | COUNTY | ROUTE | POST MILES TOTAL PROJECT | SHEET No. | TOTAL SHEETS |
|---|---|---|---|---|---|
| 06 | Fre | 180 | R71.8/74.5 | 100 | 235 |

REGISTERED CIVIL ENGINEER 7-09-12 DATE

12-10-12
PLANS APPROVAL DATE

REGISTERED PROFESSIONAL ENGINEER HARJINDER SEKHON No. 76396 Exp. 12-31-12 CIVIL STATE OF CALIFORNIA

*THE STATE OF CALIFORNIA OR ITS OFFICERS OR AGENTS SHALL NOT BE RESPONSIBLE FOR THE ACCURACY OR COMPLETENESS OF SCANNED COPIES OF THIS PLAN SHEET.*

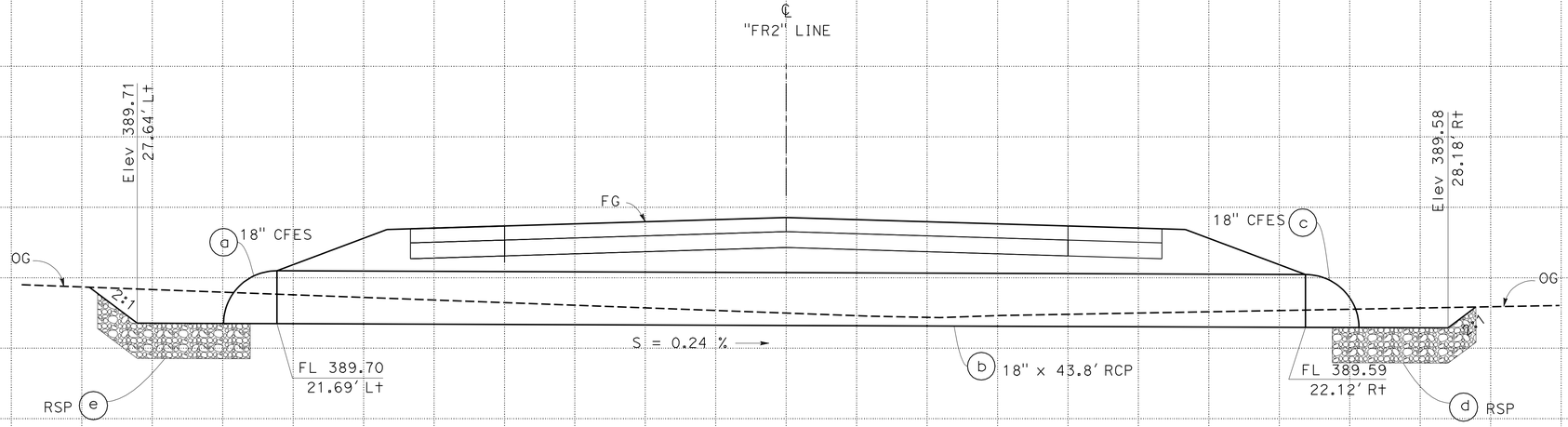


## DRAINAGE SYSTEM No. 41

"FR2" 29+40

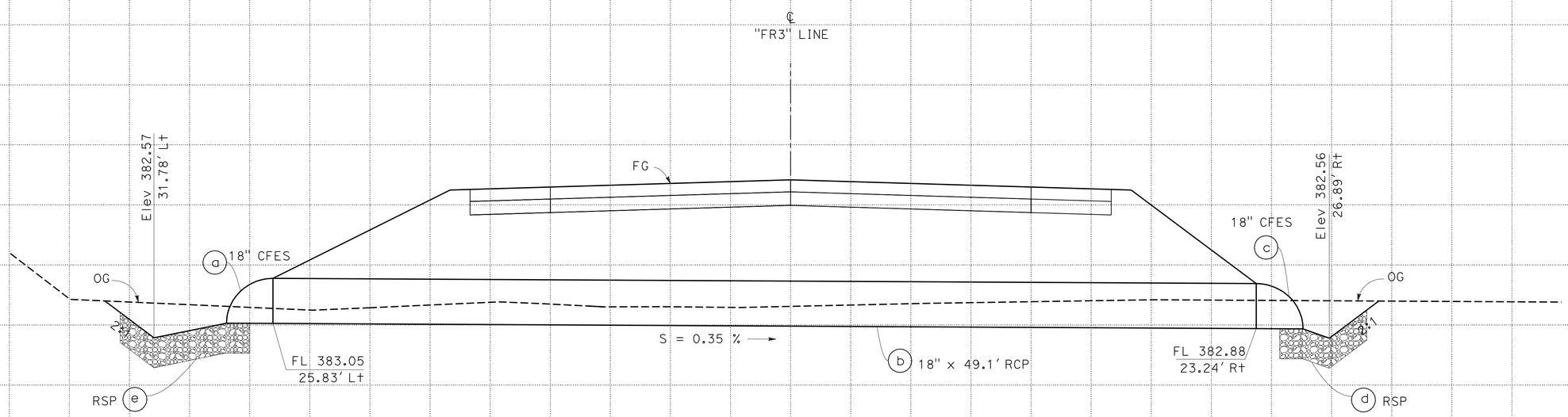


## DRAINAGE SYSTEM No. 42

"FR3" 15+50

## DRAINAGE PROFILES

SCALE: Horiz 1" = 3'
Vert 1" = 2'

**DP-21**

| REVISED BY | DATE REVISED |
|---|---|
| IA | 02/06/12 |

KHALID CHAOUI — HARJINDER SEKHON

CALCULATED-DESIGNED BY / CHECKED BY

FUNCTIONAL SUPERVISOR: SANKU G. MOHAN

STATE OF CALIFORNIA - DEPARTMENT OF TRANSPORTATION — DESIGN — Caltrans

LAST REVISION 07-09-12 | DATE PLOTTED => 13-DEC-2012 | TIME PLOTTED => 06:42