Dist	COUNTY	ROUTE	POST MILES TOTAL PROJECT	SHEET No.	TOTAL SHEETS
06	Mad, Tul	63, 99, 145, 198	Var	1	19

STATE OF CALIFORNIA

DEPARTMENT OF TRANSPORTATION

PROJECT PLANS FOR CONSTRUCTION ON STATE HIGHWAY

IN MADERA AND TULARE COUNTIES AT VARIOUS LOCATIONS

TO BE SUPPLEMENTED BY STANDARD PLANS DATED 2010

INDEX OF PLANS

SHEET No.	DESCRIPTION
1	TITLE AND LOCATION MAP
2	CONSTRUCTION AREA SIGNS, PAVEMENT DELINEATION QUANTITIES AND CONSTRUCTION DETAILS
3-7	TRAFFIC CONTROL SYSTEM
8-12	REVISED AND NEW STANDARD PLANS
	STRUCTURE PLANS
13-19	ROUTE 63,99,145 AND 198 BRIDGES

THE STANDARD PLANS LIST APPLICABLE TO THIS CONTRACT IS INCLUDED IN THE NOTICE TO BIDDERS AND SPECIAL PROVISIONS BOOK.

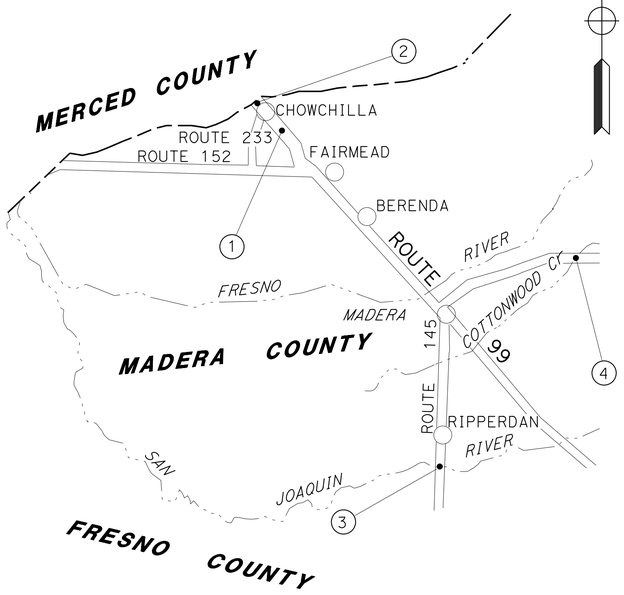

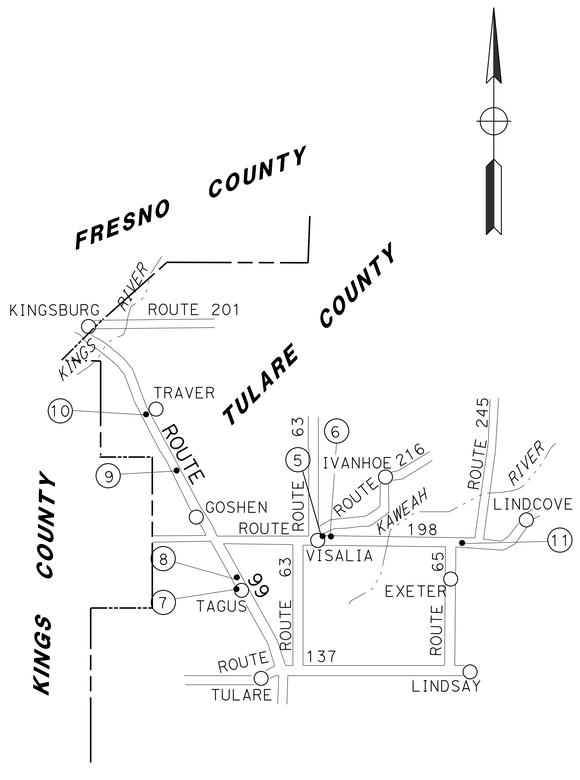

LOCATIONS OF CONSTRUCTION

Loc	COUNTY	ROUTE	PM	DESCRIPTION	BRIDGE No.
(1)	Mad	99	24.78	BERENDA SLOUGH (JOINT SEALS)	41-0044L
(2)	Mad	99	26.80	ASH SLOUGH (JOINT SEALS)	41-0045L
(3)	Mad	145	R0.01	SAN JOAQUIN RIVER BRIDGE (METHACRYLATE)	41-0086
(4)	Mad	145	18.41	COTTONWOOD CREEK (METHACRYLATE)	41-0029
(5)	Tul	63	7.98	COURT St SEPARATION (METHACRYLATE)	46-0206G
(6)	Tul	63	7.98	LOCUST St SEPARATION (METHACRYLATE)	46-0205F
(7)	Tul	99	33.22	So TAGUS OC (JOINT SEALS)	46-0162C
(8)	Tul	99	33.94	TAGUS OC (JOINT SEALS, POLYESTER OVERLAY)	46-0194
(9)	Tul	99	43.41	Ave 328 OC (JOINT SEALS)	46-0198
(10)	Tul	99	48.71	MERITT Dr OC (JOINT SEALS, METHACRYLATE, DECK PATCH)	46-0176
(11)	Tul	198	R19.01	MATCHIN OH (REMOVE AC, POLYESTER OVERLAY)	46-0041

PROJECT MANAGER: BILL MOSES

DESIGN ENGINEER: FRANK GONZALEZ

PROJECT ENGINEER
REGISTERED CIVIL ENGINEER

1-13-12
DATE

Jose Victor Echeveste
No. 50825
Exp. 09-30-13
CIVIL
REGISTERED PROFESSIONAL ENGINEER
STATE OF CALIFORNIA

December 17, 2012
PLANS APPROVAL DATE

THE STATE OF CALIFORNIA OR ITS OFFICERS OR AGENTS SHALL NOT BE RESPONSIBLE FOR THE ACCURACY OR COMPLETENESS OF SCANNED COPIES OF THIS PLAN SHEET.

THE CONTRACTOR SHALL POSSESS THE CLASS (OR CLASSES) OF LICENSE AS SPECIFIED IN THE "NOTICE TO BIDDERS."

NO SCALE

CONTRACT No.	06-0N7704
PROJECT ID	0612000024

LAST REVISION 07-11-12
DATE PLOTTED => 02-JAN-2013
TIME PLOTTED => 09:08

Dist	COUNTY	ROUTE	POST MILES TOTAL PROJECT	SHEET No.	TOTAL SHEETS
06	Mad, Tul	63, 99, 145, 198	Var	2	19

11-30-10
REGISTERED CIVIL ENGINEER DATE

Jose Victor Echeveste No. 50825 Exp.09-30-13 CIVIL — REGISTERED PROFESSIONAL ENGINEER — STATE OF CALIFORNIA

12-17-12
PLANS APPROVAL DATE

THE STATE OF CALIFORNIA OR ITS OFFICERS OR AGENTS SHALL NOT BE RESPONSIBLE FOR THE ACCURACY OR COMPLETENESS OF SCANNED COPIES OF THIS PLAN SHEET.

LEGEND:

CONSTRUCTION AREA SIGNS - 1 POST

COLD PLANE AC PAVEMENT

REMOVE 2" Exist AC SURFACING

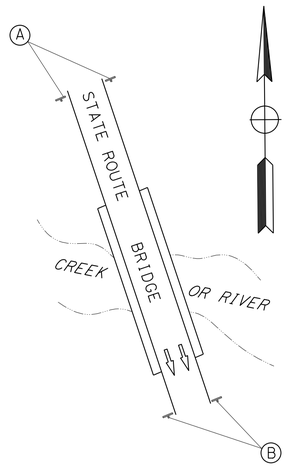

LOCATIONS 1 AND 2

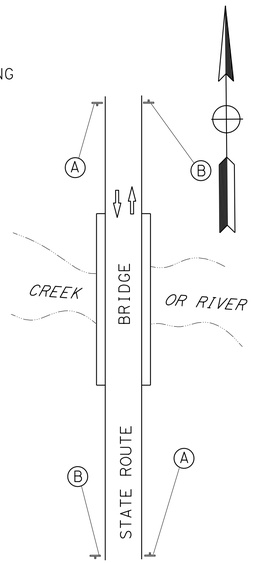

LOCATION 3

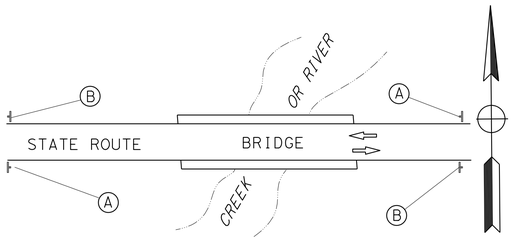

LOCATION 4

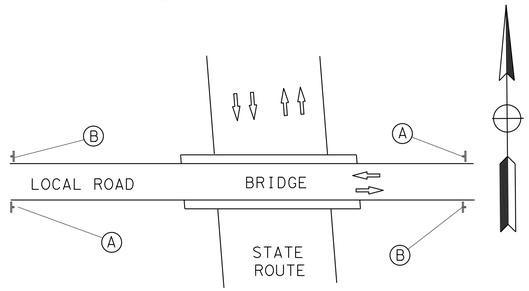

LOCATIONS 8 - 10

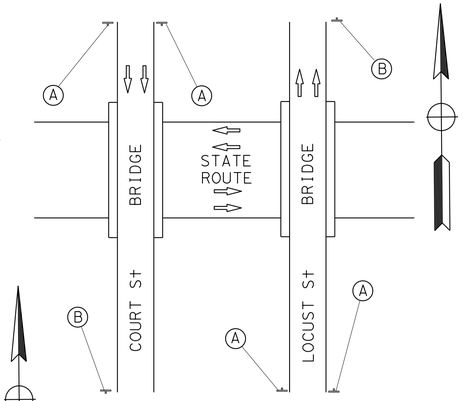

LOCATIONS 5 AND 6

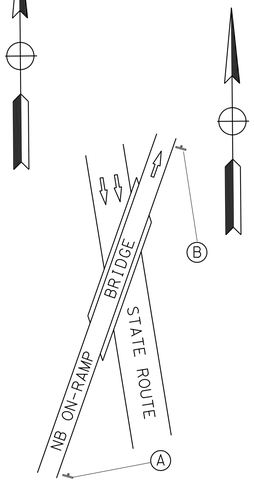

LOCATION 7

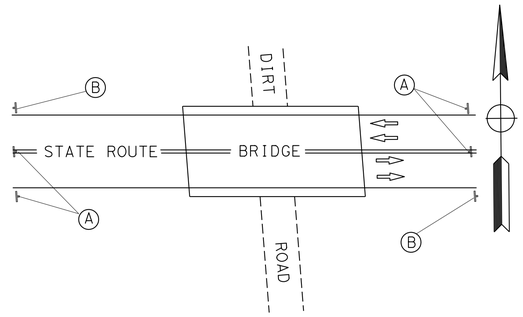

LOCATION 11

PAVEMENT DELINEATION QUANTITIES

LOCATION	THERMOPLASTIC TRAFFIC STRIPE							REMOVE YELLOW THERMOPLASTIC TRAFFIC STRIPE	REMOVE THERMOPLASTIC TRAFFIC STRIPE	PAVEMENT MARKER (RETROREFLECTIVE) TYPE			THERMOPLASTIC PAVEMENT MARKING		REMOVE THERMOPLASTIC PAVEMENT MARKING	REMOVE PAVEMENT MARKER (N)
	4" (BROKEN 17 - 7)	4" (BROKEN 36 - 12)	4" (BROKEN 36 - 12)	4" (SOLID)	4" (SOLID)	4" (SOLID)	4" (SOLID)	(HAZARDOUS WASTE)	WHITE	D	G	H	DESCRIPTION	SQFT	SQFT	EA
	DETAIL 9	DETAIL 12	DETAIL 19	DETAIL 19	DETAIL 22	DETAIL 25	DETAIL 27B									
	LF	LF	LF	LF	LF	LF	LF	LF	LF	EA	EA	EA				
(3)		335					670	85	670		10					200
(4)			145	145			290	185	290	5		10				
(5)	370								110		10					
(6)	370								110		10		1-TYPE III Arr (Lt)	42	42	
(8)					370		370	370	370	10						
(10)					390			390		10						
(11)		260				260	260	260	325		10	10				
SUB-TOTAL	740	595	145	145	760	260	1,590	1,290	1,875	25	40	20		42	42	
TOTAL	740	740			2,755			1,290	1,875	85				42	42	

(N) NOT A SEPERATE PAY ITEM, FOR INFORMATION ONLY

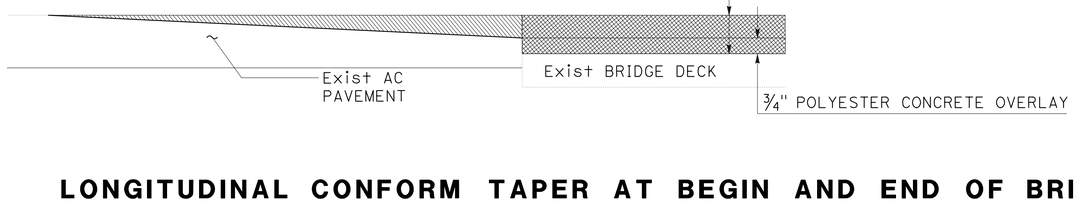

LONGITUDINAL CONFORM TAPER AT BEGIN AND END OF BRIDGE (LOCATION 11)

NO SCALE

COLD PLANE AC PAVEMENT

LOCATION	END	SQYD
(11)	EAST	240
	WEST	240
TOTAL		480

STATIONARY MOUNTED CONSTRUCTION AREA SIGNS

SIGN MESSAGE	ROAD WORK AHEAD	END ROAD WORK
SIGN CODE	W20-1	G20-2
PANEL SIZE	36" x 36"	36" x 18"
No. OF POST AND SIZE	1 - 4" x 4"	1 - 4" x 4"
SIGN No.	(A)	(B)
LOCATION	No. OF SIGNS	No. OF SIGNS
1	2	2
2	2	2
3	2	2
4	2	2
5	2	1
6	2	1
7	1	1
8	2	1
9	2	1
10	2	1
11	4	2

NOTE: EXACT SIGN LOCATIONS TO BE DETERMINED BY THE ENGINEER.

CONSTRUCTION DETAILS, CONSTRUCTION AREA SIGNS, PAVEMENT DELINEATION QUANTITIES AND SUMMARY OF QUANTITIES

C-1

REVISED BY | DATE REVISED
PANAYIOTIS K STRATARAS | JOSE VICTOR ECHEVESTE
CALCULATED-DESIGNED BY | CHECKED BY
FUNCTIONAL SUPERVISOR: FRANK GONZALEZ

STATE OF CALIFORNIA - DEPARTMENT OF TRANSPORTATION
Caltrans® MAINTENANCE DESIGN

LAST REVISION DATE PLOTTED => 02-JAN-2013
TIME PLOTTED => 07:33

Dist	COUNTY	ROUTE	POST MILES TOTAL PROJECT	SHEET No.	TOTAL SHEETS
06	Mad, Tul	63,99, 145,198	Var	3	19

REGISTERED CIVIL ENGINEER — 12-7-12 DATE

Gurinderpal Bhullar No. C48815 Exp 9-30-14 CIVIL — REGISTERED PROFESSIONAL ENGINEER — STATE OF CALIFORNIA

12-17-12
PLANS APPROVAL DATE

THE STATE OF CALIFORNIA OR ITS OFFICERS OR AGENTS SHALL NOT BE RESPONSIBLE FOR THE ACCURACY OR COMPLETENESS OF SCANNED COPIES OF THIS PLAN SHEET.

NOTES:

Unless otherwise specified in the special provisions, all temporary warning signs shall have black legend on orange background.

California code are designated by (CA).
Otherwise, Federal (MUTCD) codes are shown.

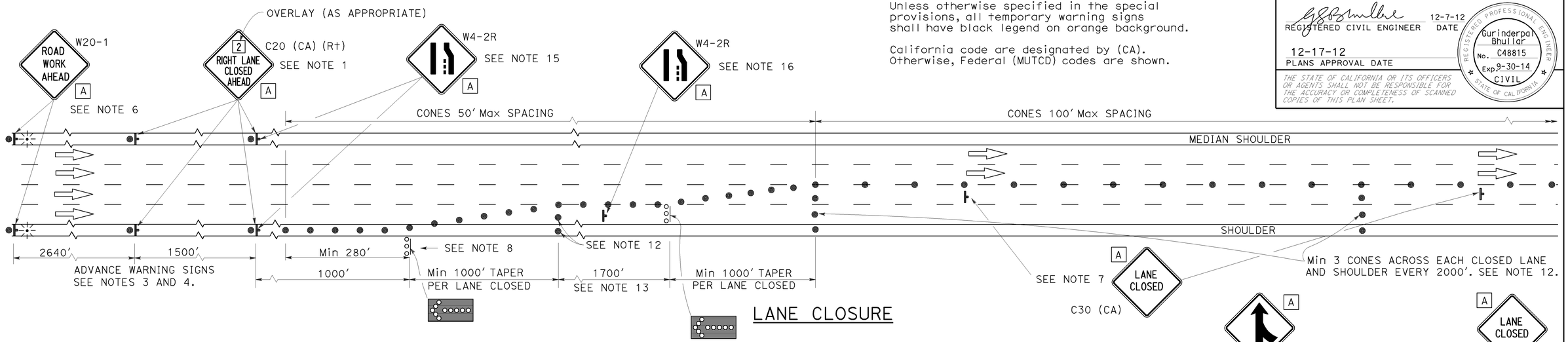

LANE CLOSURE

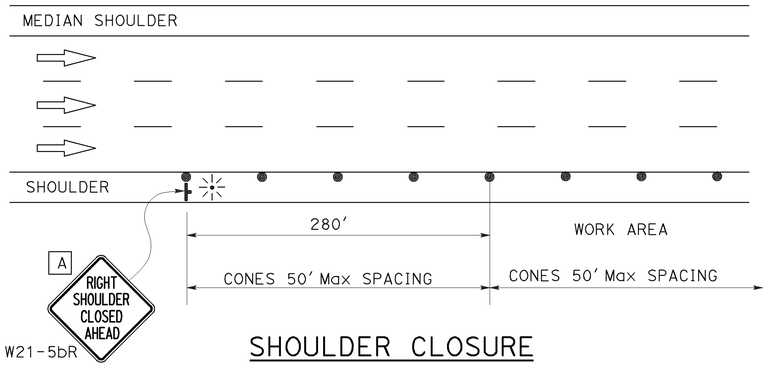

SHOULDER CLOSURE

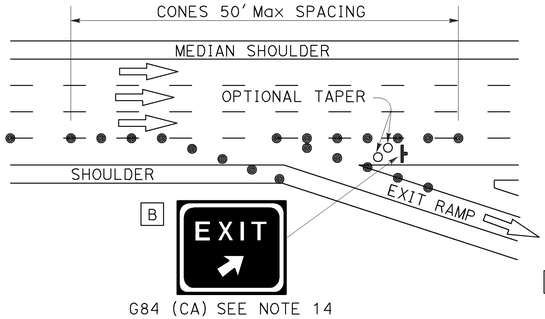

LANE CLOSURE AT EXIT RAMP

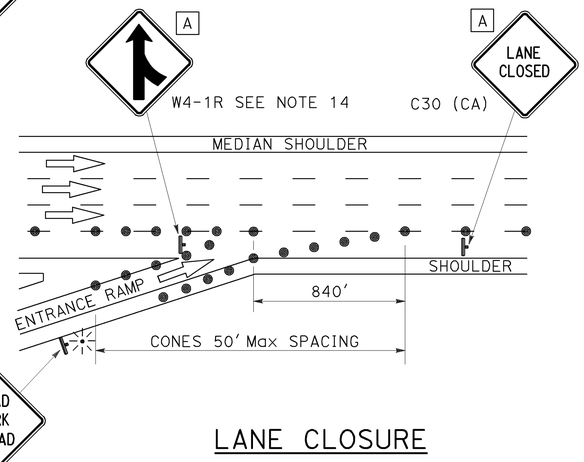

LANE CLOSURE AT ENTRANCE RAMP

NOTES:

1. Median lane closures shall conform to the details for outside lane closures except that C20 (CA) (Lt) signs shall be used.
2. At least one person shall be assigned to provide full time maintenance of traffic control devices for lane closures.
3. Duplicate sign installations are not required:
   a) On opposite shoulder if at least one-half of the available lanes remain open to traffic.
   b) In the median if the width of the median shoulder is less than 8' and the outside lanes are to be closed.
4. Each advance warning sign on each side of the roadway shall be equipped with at least two flags for daytime closure. Each flag shall be at least 16" x 16" in size and shall be orange or fluorescent red-orange in color. Flashing beacons shall be placed at the locations indicated for lane closure during hours of darkness.
5. A C14 (CA) "END ROAD WORK" sign, as appropriate, shall be placed at the end of the lane closure unless the end of work area is obvious or ends within a larger project's limits.
6. If the W20-1 sign would follow within 2000' of a stationary W20-1 or C11 (CA) "ROAD WORK NEXT _____ MILES", use a C20 (CA) sign for the first advance warning sign.
7. Place a C30 (CA) sign every 2000' throughout length of lane closure.
8. One flashing arrow sign for each lane closed. The first flashing arrow sign shall be Type I. All others may be either Type I or Type II.
9. A minimum 1500' of sight distance shall be provided where possible for vehicles approaching the first flashing arrow sign. Lane closures shall not begin at top of crest vertical curve or on a horizontal curve.
10. All cones used for lane closures during the hours of darkness shall be fitted with retroreflective bands (or sleeves) as specified in the specifications.
11. Portable delineators, placed at one-half the spacing indicated for traffic cones may be used instead of cones for daytime closures only.
12. Unless otherwise specified in the special provisions, a minimum of 3 cones shall be placed transversely across each closed lane and shoulder at each location where a taper across a traffic lane ends and every 2000' as shown on the "Lane Closure" detail. Two Type II barricades may be used instead of the 3 cones. The transverse alignment of the cones or barricades on the closed shoulder may be shifted from the transverse alignment to provide access to the work.
13. Unless otherwise specified in the special provisions, the 1700' tangent shown along lane lines shall be used between the 1000' tapers required for each closed traffic lane.
14. Unless otherwise specified in the special provisions, the G84 (CA) and W4-1 signs shall be used as shown.
15. When specified in the special provisions, a W4-2 "LANE ENDS" symbol sign is to be used in place of the C20 (CA) "RIGHT LANE CLOSED AHEAD" sign.
16. The W4-2 "LANE ENDS" symbol sign shown at this location is to be used where the W4-2 sign is used as advance warning as described in Note 15.

SIGN PANEL SIZE (Min)

A	48" × 48"
B	54" × 48"

LEGEND

●	TRAFFIC CONE
○	TRAFFIC CONE (OPTIONAL TAPER)
	TEMPORARY SIGN
	FLASHING ARROW SIGN (FAS)
	FAS SUPPORT OR TRAILER
	PORTABLE FLASHING BEACON

STATE OF CALIFORNIA
DEPARTMENT OF TRANSPORTATION

TRAFFIC CONTROL SYSTEM FOR LANE CLOSURE ON FREEWAYS AND EXPRESSWAYS

NO SCALE

TCS-1

REVISED BY | DATE REVISED
CALCULATED-DESIGNED BY | CHECKED BY
FUNCTIONAL SUPERVISOR
STATE OF CALIFORNIA - DEPARTMENT OF TRANSPORTATION
Caltrans

LAST REVISION | DATE PLOTTED => 10-DEC-2012
00-00-00 | TIME PLOTTED => 09:45

BORDER LAST REVISED 7/2/2010 | USERNAME => s114640 | DGN FILE => tcs10.dgn | RELATIVE BORDER SCALE IS IN INCHES 0 1 2 3 | UNIT 1594 | PROJECT NUMBER & PHASE 06120000241

Dist	COUNTY	ROUTE	POST MILES TOTAL PROJECT	SHEET No.	TOTAL SHEETS
06	Mad, Tul	63,99, 145,198	Var	4	19

REGISTERED CIVIL ENGINEER — 12-7-12 DATE

12-17-12
PLANS APPROVAL DATE

Gurinderpal Bhullar
No. C48815
Exp 9-30-14
CIVIL
REGISTERED PROFESSIONAL ENGINEER
STATE OF CALIFORNIA

THE STATE OF CALIFORNIA OR ITS OFFICERS OR AGENTS SHALL NOT BE RESPONSIBLE FOR THE ACCURACY OR COMPLETENESS OF SCANNED COPIES OF THIS PLAN SHEET.

TYPICAL LANE CLOSURE

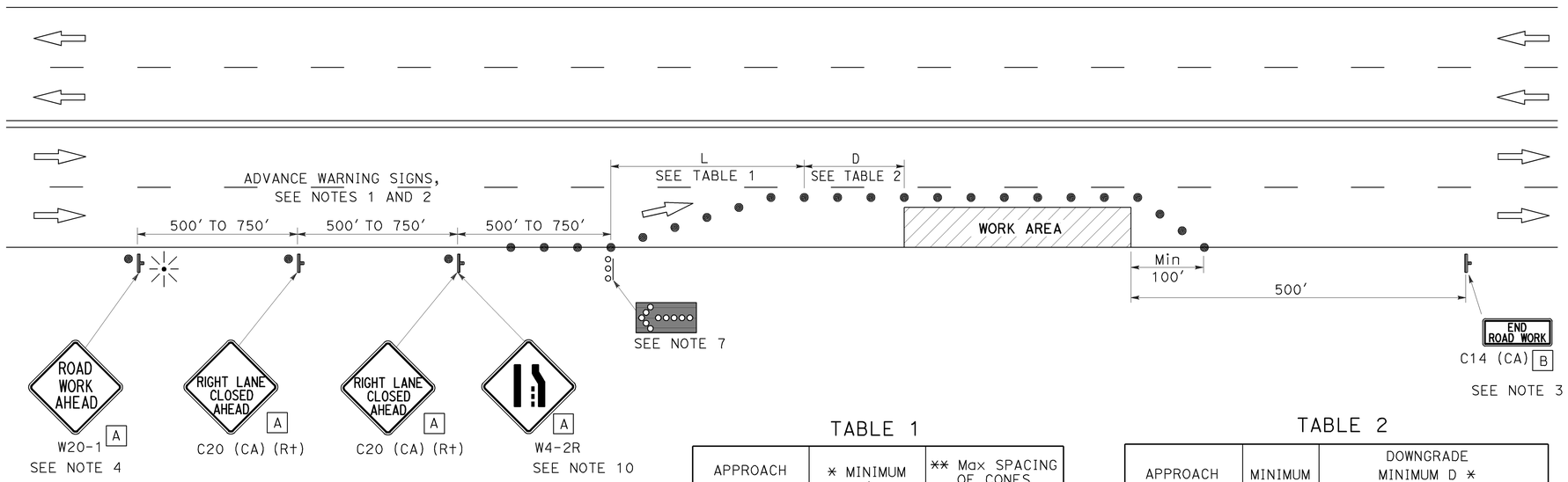

TABLE 1

APPROACH SPEED	* MINIMUM L	** Max SPACING OF CONES ALONG TAPER
mph	ft	ft
20 AND BELOW	80	20
25	125	25
30	180	30
35	245	35
40	320	40
45	540	45
50	600	50
Over 50	SEE NOTE 9	

* USE L FOR LANE WIDTHS LESS THAN OR EQUAL TO 12'.
** SEE NOTE 8.

TABLE 2

APPROACH SPEED	MINIMUM D	DOWNGRADE MINIMUM D *		
		-3%	-6%	-9%
mph	ft	ft	ft	ft
25 AND BELOW	155	158	165	173
30	200	205	215	227
35	250	257	271	287
40	305	315	333	354
45	360	378	400	427
50	425	446	474	507
OVER 50	SEE NOTE 9			

* USE ON SUSTAINED DOWNGRADE STEEPER THAN -3 PERCENT AND LONGER THAN 1 MILE.

NOTES:

Unless otherwise specified in the special provisions, all temporary warning signs shall have black legend on orange background.

California code are designated by (CA). Otherwise, Federal (MUTCD) codes are shown.

LEGEND

- TRAFFIC CONE
- TEMPORARY SIGN
- FLASHING ARROW SIGN (FAS)
- FAS SUPPORT OR TRAILER
- PORTABLE FLASHING BEACON

SIGN PANEL SIZE (Min)

A 36" x 36"

B 36" x 18"

NOTES:

1. Where approach speeds are low, advance warning signs may be placed at 300' spacing and placed closer in urban areas.
2. Each advance warning sign shall be equipped with at least two flags for daytime closure. Each flag shall be at least 16" x 16" in size and shall be orange or fluorescent red-orange in color. Flashing beacons shall be placed at the locations indicated for lane closure during hours of darkness.
3. A C14 (CA) "END ROAD WORK" sign, as appropriate, shall be placed at the end of the lane closure unless the end of work area is obvious, or ends within a larger project's limits.
4. If the W20-1 sign would follow within 2000' of a stationary W20-1 or C11 (CA) "ROAD WORK NEXT _____ MILES", use a C20 (CA) sign for the first advance warning sign.
5. All cones used for lane closures during the hours of darkness shall be fitted with retroreflective bands (or sleeves) as specified in the specifications.
6. Portable delineators, placed at one-half the spacing indicated for traffic cones, may be used instead of cones for daytime closures only.
7. Flashing arrow sign shall be either Type I or Type II.
8. The maximum spacing between cones along a tangent shall be 50' and along a taper shall be approximately as shown in Table 1.
9. For approach speeds over 50 mph, use the "Traffic Control System for Lane Closure On Freeways And Expressways" plan for lane closure details and requirements.
10. When specified in the special provisions, a W4-2 "LANE ENDS" symbol sign is to be used in place of the C20 (CA) "RIGHT LANE CLOSED AHEAD" sign.

STATE OF CALIFORNIA
DEPARTMENT OF TRANSPORTATION

TRAFFIC CONTROL SYSTEM FOR LANE CLOSURE ON MULTILANE CONVENTIONAL HIGHWAYS

NO SCALE

TCS-2

REVISED BY | DATE REVISED
CALCULATED-DESIGNED BY | CHECKED BY
FUNCTIONAL SUPERVISOR
STATE OF CALIFORNIA - DEPARTMENT OF TRANSPORTATION
Caltrans

LAST REVISION | DATE PLOTTED => 10-DEC-2012
00-00-00 | TIME PLOTTED => 09:45

Dist	COUNTY	ROUTE	POST MILES TOTAL PROJECT	SHEET No.	TOTAL SHEETS
06	Mad, Tul	63,99, 145,198	Var	5	19

REGISTERED CIVIL ENGINEER — 12-7-12 DATE

Gurinderpal Bhullar, No. C48815, Exp 9-30-14, CIVIL, REGISTERED PROFESSIONAL ENGINEER, STATE OF CALIFORNIA

12-17-12
PLANS APPROVAL DATE

THE STATE OF CALIFORNIA OR ITS OFFICERS OR AGENTS SHALL NOT BE RESPONSIBLE FOR THE ACCURACY OR COMPLETENESS OF SCANNED COPIES OF THIS PLAN SHEET.

REVISED BY | DATE REVISED

CALCULATED-DESIGNED BY | CHECKED BY

FUNCTIONAL SUPERVISOR

STATE OF CALIFORNIA - DEPARTMENT OF TRANSPORTATION

Caltrans

NOTES:

Unless otherwise specified in the special provisions, all temporary warning signs shall have black legend on orange background.

California code are designated by (CA). Otherwise, Federal (MUTCD) codes are shown.

TYPICAL LANE CLOSURE WITH REVERSIBLE CONTROL

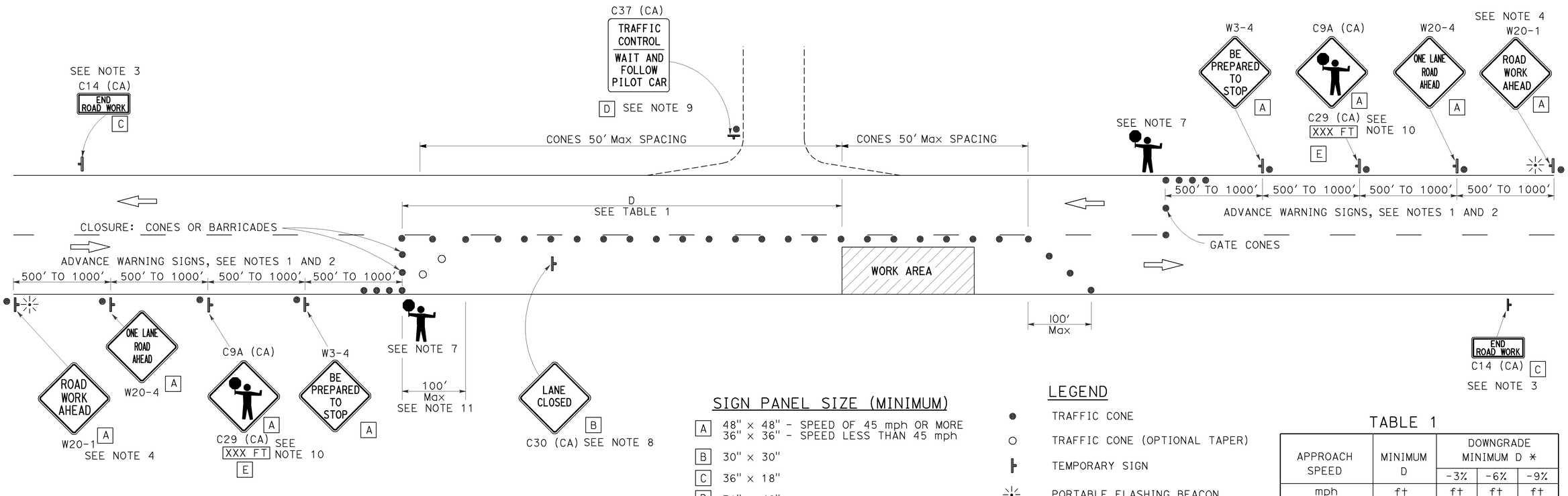

SIGN PANEL SIZE (MINIMUM)

- A — 48" x 48" - SPEED OF 45 mph OR MORE; 36" x 36" - SPEED LESS THAN 45 mph
- B — 30" x 30"
- C — 36" x 18"
- D — 36" x 42"
- E — 36" x 9"

LEGEND

- TRAFFIC CONE
- TRAFFIC CONE (OPTIONAL TAPER)
- TEMPORARY SIGN
- PORTABLE FLASHING BEACON
- FLAGGER

NOTES:

1. Where approach speeds are low, advance warning signs may be placed at 300' spacing, and closer in urban areas.
2. Each advance warning sign in each direction of travel shall be equipped with at least two flags for daytime closure. Each flag shall be at least 16" x 16" in size and shall be orange or fluorescent red-orange in color. Flashing beacons shall be placed at the locations indicated for lane closure during hours of darkness.
3. A C14 (CA) "END ROAD WORK" sign, as appropriate, shall be placed at the end of the lane control unless the end of work area is obvious, or ends within a larger project's limits.
4. If the W20-1 sign would follow within 2000' of a stationary W20-1 or C11 (CA) "ROAD WORK NEXT _____MILES", use a W20-4 sign for the first advance warning sign.
5. All cones used for lane closures during the hours of darkness shall be fitted with retroreflective bands (or sleeves) as specified in the specifications.
6. Portable delineators, placed at one-half the spacing indicated for traffic cones, may be used instead of cones for daytime closures only.
7. Additional advance flaggers may be required. Flagger should stand in a conspicuous place, be visible to approaching traffic as well as approaching vehicles after the first vehicle has stopped. During the hours of darkness, the flagging-station and flagger shall be illuminated and clearly visible to approaching traffic. The illumination footprint of the lighting on the ground shall be at least 20' in diameter. Place a minimum of four cones at 50' intervals in advance of flagger station as shown.
8. Place C30 (CA) "LANE CLOSED" sign at 500' to 1000' intervals throughout extended work areas. They are optional if the work area is visible from the flagger station.
9. When a pilot car is used, place a C37 (CA) "TRAFFIC CONTROL-WAIT AND FOLLOW PILOT CAR" sign at all intersections within traffic control area. Signs shall be clean and visible at all times.
10. An optional C29 (CA) sign may be placed below the C9A (CA) sign.
11. Traffic cones or barricades may be placed on the optional taper as shown, barricades shall be Type I, II, or III.

TABLE 1

APPROACH SPEED	MINIMUM D	DOWNGRADE MINIMUM D *		
		-3%	-6%	-9%
mph	ft	ft	ft	ft
25 AND BELOW	155	158	165	173
30	200	205	215	227
35	250	257	271	287
40	305	315	333	354
45	360	378	400	427
50	425	446	474	507
55	495	520	553	593
60	570	598	638	686
65	645	682	728	785

* USE ON SUSTAINED DOWNGRADE STEEPER THAN -3 PERCENT AND LONGER THAN 1 MILE.

STATE OF CALIFORNIA
DEPARTMENT OF TRANSPORTATION

TRAFFIC CONTROL SYSTEM FOR LANE CLOSURE ON TWO LANE CONVENTIONAL HIGHWAYS

NO SCALE

TCS-3

LAST REVISION | DATE PLOTTED => 10-DEC-2012
00-00-00 | TIME PLOTTED => 09:45

Dist	COUNTY	ROUTE	POST MILES TOTAL PROJECT	SHEET No.	TOTAL SHEETS
06	Mad, Tul	63,99 145,198	Var	6	19

REGISTERED CIVIL ENGINEER — 12-7-12 DATE

12-17-12
PLANS APPROVAL DATE

Gurinderpal Bhullar
No. C48815
Exp 9-30-14
CIVIL
REGISTERED PROFESSIONAL ENGINEER
STATE OF CALIFORNIA

THE STATE OF CALIFORNIA OR ITS OFFICERS OR AGENTS SHALL NOT BE RESPONSIBLE FOR THE ACCURACY OR COMPLETENESS OF SCANNED COPIES OF THIS PLAN SHEET.

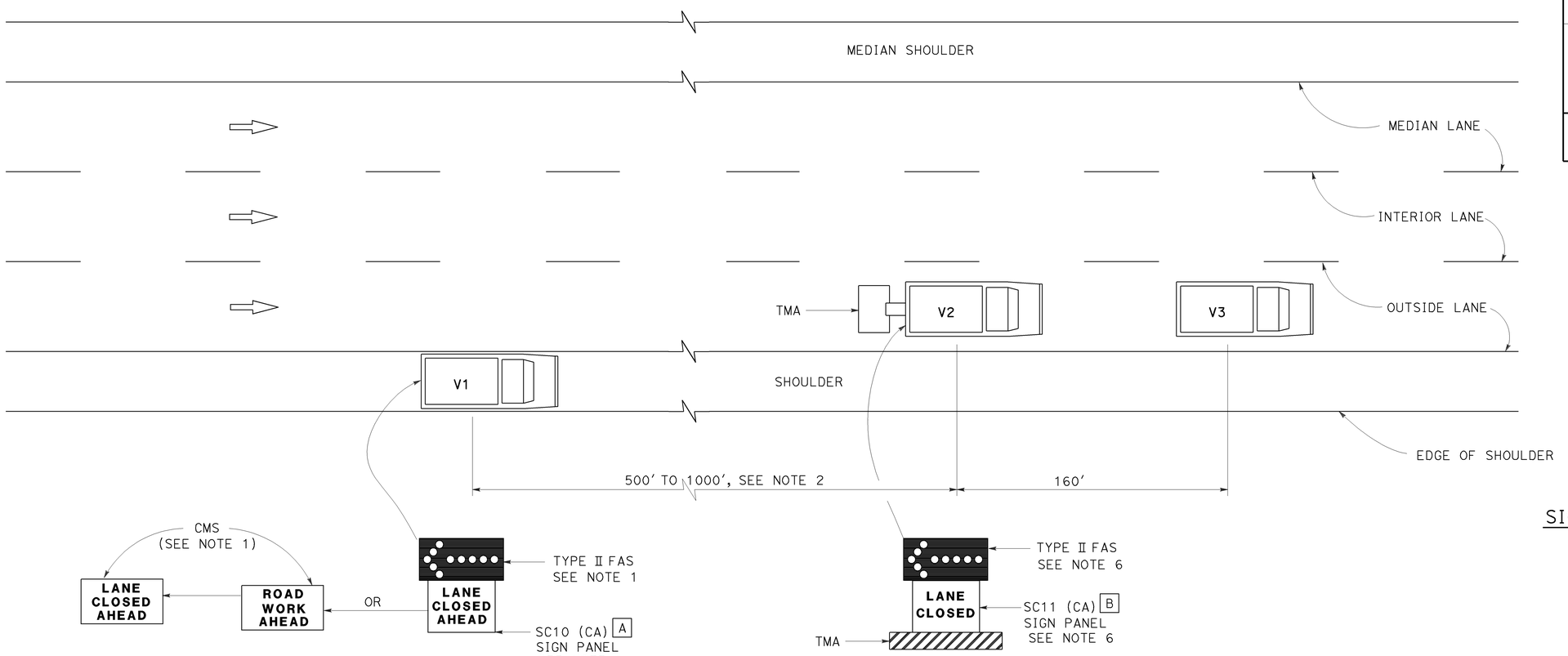

SIGN PANEL SIZE (Min)

A 66" x 36"

B 54" x 42"

LEGEND

V1	SIGN VEHICLE
V2	SHADOW VEHICLE
V3	WORK/APPLICATION VEHICLE
	FLASHING ARROW SIGN (FAS)
CMS	CHANGEABLE MESSAGE SIGN
TMA	TRUCK-MOUNTED ATTENUATOR

MOVING LANE CLOSURE ON MEDIAN LANE OR OUTSIDE LANE OF MULTILANE HIGHWAYS

NOTES:

1. Either a changeable message sign or a SC10 (CA) sign panel and a Type II flashing arrow sign shall be mounted on the rear of sign vehicle V1. A Type II flashing arrow sign shall be mounted on the rear of sign vehicle V1 and used with the SC10 (CA) sign panel. A Type II flashing arrow sign will not be required with the changeable message sign provided the flashing arrow sign symbol is displayed on the changeable message sign board. The changeable message sign shall be sequenced to show the "ROAD WORK AHEAD" message first, followed by the "LANE CLOSED AHEAD" message and then the flashing arrow sign symbol. For median lane closure, the flashing arrow symbol shall be reversed with the arrowhead on the right.
2. If traffic queues develop, sign vehicle V1 should be positioned upstream from the end of queue. Sign vehicle V1 shall be positioned where highly visible when shoulders are not available.
3. A minimum sight distance of 1500′ should be provided in advance of sign vehicle V1.
4. Sign vehicle V1 should remain at the beginning of horizontal or vertical curves until the other vehicles (V2 and V3) are far enough beyond the curve to resume the minimum sight distance of 1500′.
5. Vehicle-mounted sign panels shall be Type III, IV, VII, VIII or IX retroreflective sheeting, black on white, black on orange, or black on fluorescent orange, with 6" minimum series D letters per Caltrans sign specifications.
6. Gross Vehicle Weight of shadow vehicle V2 shall be a minimum of 20,000 pounds and shall be equipped with a truck-mounted attenuator. The sign panel shown and a Type II flashing arrow sign shall be mounted on the rear of shadow vehicle V2. For median lane closure the flashing arrow sign symbol shall be displayed with the arrowhead on the right.
7. All vehicles used for lane closures shall be equipped with two-way radios, and the vehicle operators shall maintain communication during the work or application operation.
9. Where sufficient shoulder width is not available, sign vehicle V1 may encroach into the traffic lane staying as close to the edge of shoulder as practicable. Both V1 and V2 shall be equipped with a truck-mounted attenuator. The Gross Vehicle Weight of V1 and V2 shall be at least 20,000 pounds, respectively.
10. When multiple work vehicles are used in close proximity to each other, only one shadow vehicle is required, and spacing between work vehicles shall be minimized in order to deter traffic from entering the closed lane.

STATE OF CALIFORNIA
DEPARTMENT OF TRANSPORTATION

TRAFFIC CONTROL SYSTEM FOR MOVING LANE CLOSURE ON MULTILANE HIGHWAYS (OUTSIDE AND MEDIAN LANES)

NO SCALE

TCS-4

STATE OF CALIFORNIA - DEPARTMENT OF TRANSPORTATION
Caltrans
FUNCTIONAL SUPERVISOR
CALCULATED-DESIGNED BY
CHECKED BY
REVISED BY
DATE REVISED

LAST REVISION DATE PLOTTED => 10-DEC-2012
00-00-00 TIME PLOTTED => 09:45

Dist	COUNTY	ROUTE	POST MILES TOTAL PROJECT	SHEET No.	TOTAL SHEETS
06	Mad, Tul	63,99, 145,198	Var	7	19

REGISTERED CIVIL ENGINEER — 12-7-12 DATE

12-17-12
PLANS APPROVAL DATE

Gurinderpal Bhullar
No. C48815
Exp 9-30-14
CIVIL
REGISTERED PROFESSIONAL ENGINEER
STATE OF CALIFORNIA

THE STATE OF CALIFORNIA OR ITS OFFICERS OR AGENTS SHALL NOT BE RESPONSIBLE FOR THE ACCURACY OR COMPLETENESS OF SCANNED COPIES OF THIS PLAN SHEET.

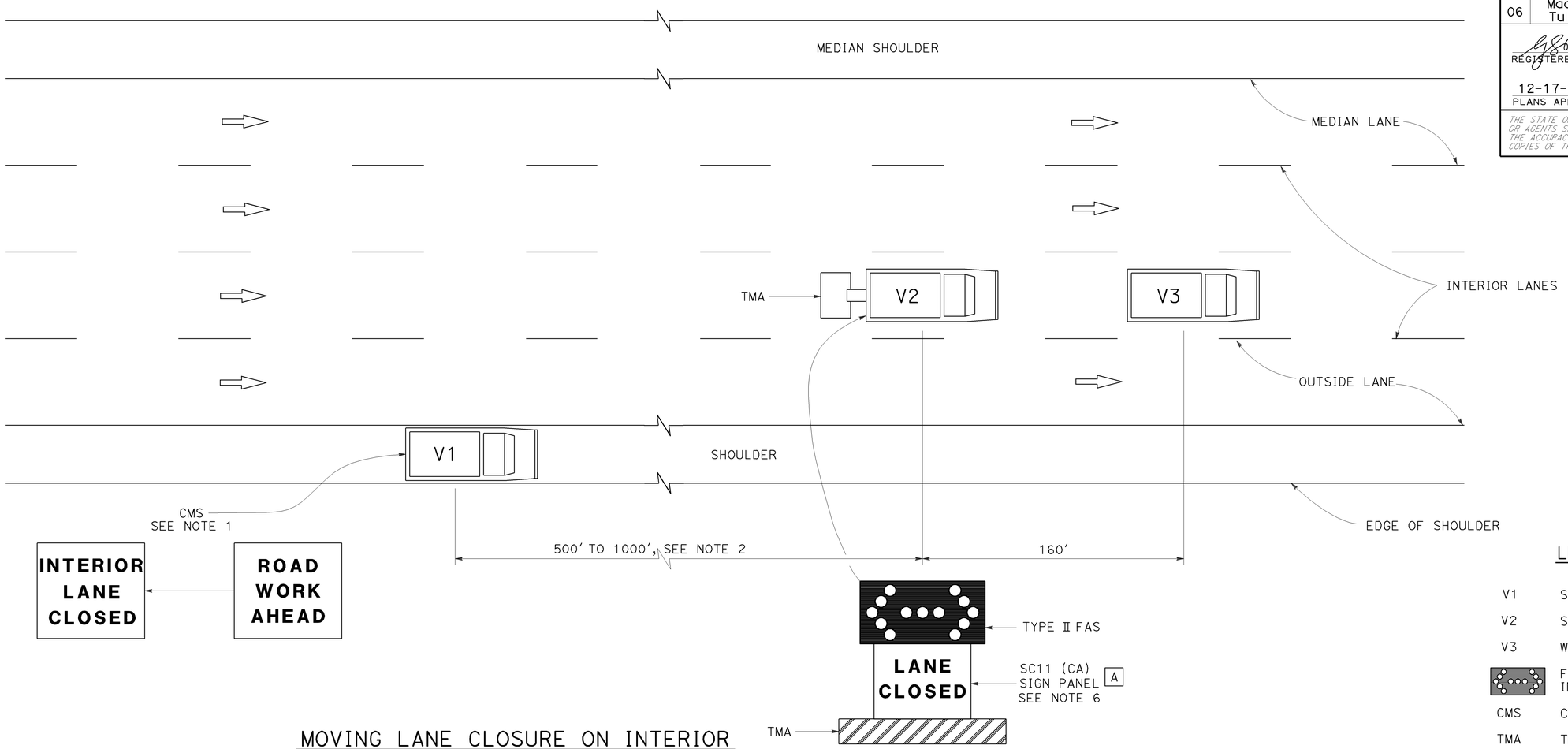

MOVING LANE CLOSURE ON INTERIOR LANE OF MULTILANE HIGHWAYS

LEGEND

V1	SIGN VEHICLE
V2	SHADOW VEHICLE
V3	WORK/APPLICATION VEHICLE
	FLASHING ARROW SIGN (FAS) IN FLASHING DOUBLE ARROW MODE
CMS	CHANGEABLE MESSAGE SIGN
TMA	TRUCK-MOUNTED ATTENUATOR

NOTES:

1. A changeable message sign shall be mounted on the rear of sign vehicle V1. The changeable message sign shall be sequenced to show the "ROAD WORK AHEAD" message first, followed by the "INTERIOR LANE CLOSED" message. The message "CENTER LANE CLOSED" may be used in place of the "INTERIOR LANE CLOSED" message.
2. If traffic queues develop, sign vehicle V1 should be positioned upstream from the end of queue. Sign vehicle V1 shall be positioned where highly visible when shoulders are not available.
3. A minimum sight distance of 1500′ should be provided in advance of sign vehicle V1.
4. Sign vehicle V1 should remain at the beginning of horizontal or vertical curves until the other vehicles (V2 and V3) are far enough beyond the curve to resume the minimum sight distance of 1500′.
5. Vehicle-mounted sign panels shall be Type III, IV, VII, VIII, or IX retroreflective sheeting, black on white, black on orange, or black on fluorescent orange, with 6" minimum series D letters per Caltrans sign specifications.
6. Gross Vehicle Weight of shadow vehicle V2 shall be a minimum of 20,000 pounds and shall be equipped with a truck-mounted attenuator. The sign panel shown and a Type II flashing arrow sign shall be mounted on the rear of shadow vehicle V2.
7. All vehicles used for lane closures shall be equipped with two-way radios, and the vehicle operators shall maintain communication during the work or application operation.
8. All vehicles shall be equipped with flashing or rotating amber lights.
9. Where sufficient shoulder width is not available, sign vehicle V1 may encroach into the traffic lane staying as close to the edge of shoulder as practicable. Both V1 and V2 shall be equipped with a truck-mounted attenuator. The Gross Vehicle Weight of V1 and V2 shall be at least 20,000 pounds, respectively.
10. When multiple work vehicles are used in close proximity to each other, only one shadow vehicle is required, and spacing between work vehicles shall be minimized in order to deter traffic from entering the closed lane.

STATE OF CALIFORNIA
DEPARTMENT OF TRANSPORTATION

TRAFFIC CONTROL SYSTEM FOR MOVING LANE CLOSURE ON MULTILANE HIGHWAYS (INTERIOR LANES)

NO SCALE

TCS-5

REVISED BY | DATE REVISED
CALCULATED-DESIGNED BY | CHECKED BY
FUNCTIONAL SUPERVISOR
STATE OF CALIFORNIA - DEPARTMENT OF TRANSPORTATION
Caltrans

LAST REVISION | DATE PLOTTED => 10-DEC-2012
00-00-00 | TIME PLOTTED => 09:45

DIST	COUNTY	ROUTE	POST MILES TOTAL PROJECT	SHEET NO.	TOTAL SHEETS
06	Mad, Tul	63,99 145,198	Var	8	19

Randell D. Hiatt
REGISTERED CIVIL ENGINEER

June 6, 2008
PLANS APPROVAL DATE

Randell D. Hiatt No. C50200 Exp. 6-30-09 CIVIL — REGISTERED PROFESSIONAL ENGINEER — STATE OF CALIFORNIA

The State of California or its officers or agents shall not be responsible for the accuracy or completeness of electronic copies of this plan sheet.

To accompany plans dated 12-17-12

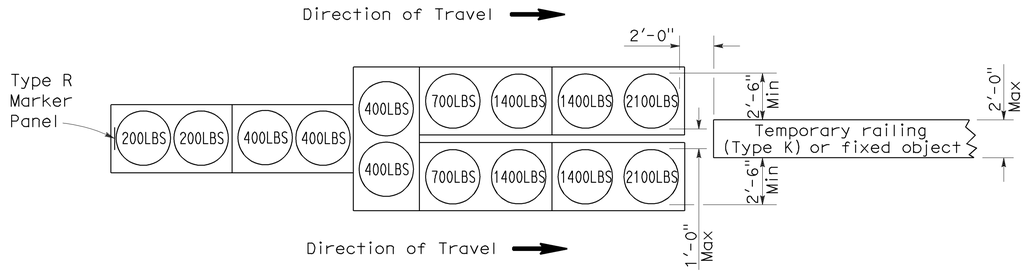

ARRAY 'TU14'

Approach speed 45 mph or more

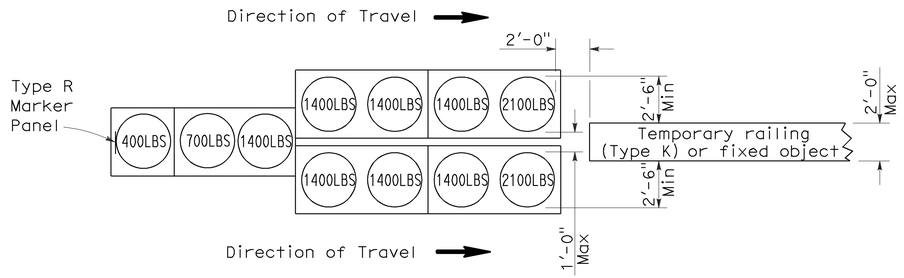

ARRAY 'TU11'

Approach speed less than 45 mph

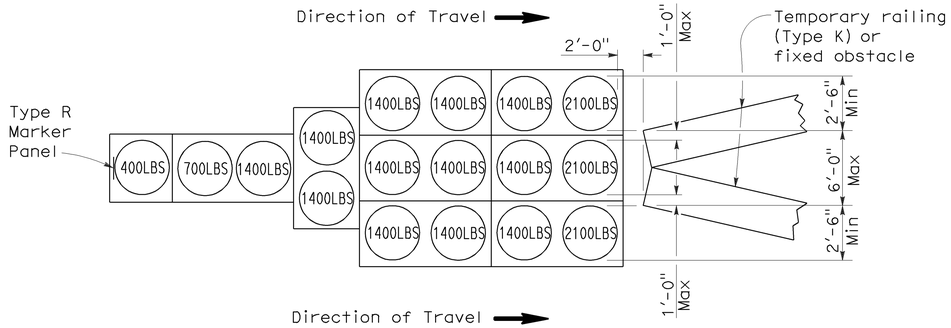

ARRAY 'TU17'

Approach speed less than 45 mph

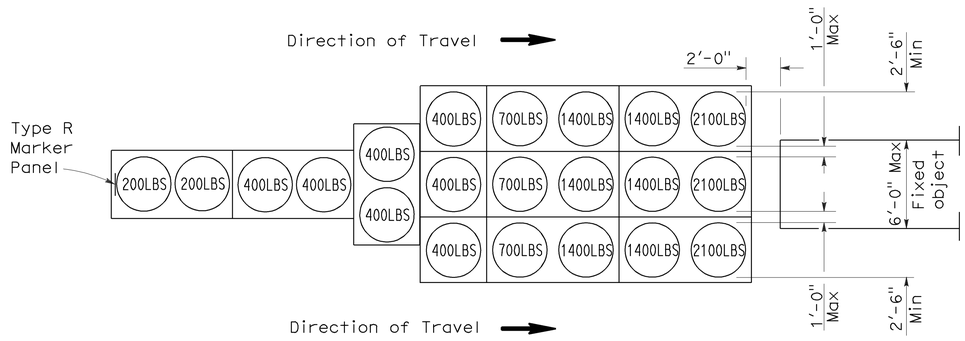

ARRAY 'TU21'

Approach speed 45 mph or more

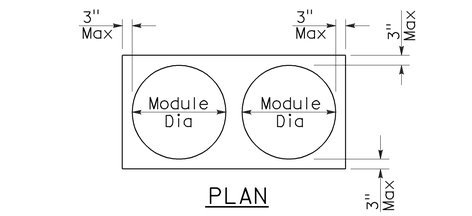

PLAN

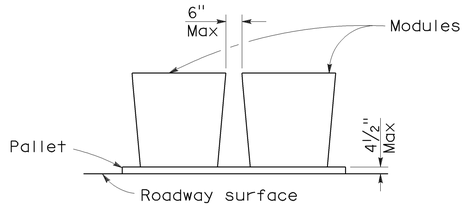

ELEVATION

CRASH CUSHION PALLET DETAIL

See Note 7

NOTES:

1. (XXX) Indicates sand filled module location and weight of sand in pounds for each module. Module spacing is based on the greater diameter of the module.
2. All sand weights are nominal.
3. Temporary crash cushion arrays shall not encroach on the traveled way.
4. Place the top of Type R marker panel 1" below the module lid.
5. Refer to Standard Plan A73B for marker details.
6. Approach speeds indicated conform to NCHRP 350 Report criteria.
7. Use of pallets is optional.

STATE OF CALIFORNIA
DEPARTMENT OF TRANSPORTATION

TEMPORARY CRASH CUSHION, SAND FILLED (UNIDIRECTIONAL)

NO SCALE

RSP T1A DATED JUNE 6, 2008 SUPERSEDES STANDARD PLAN T1A
DATED MAY 1, 2006 - PAGE 211 OF THE STANDARD PLANS BOOK DATED MAY 2006.

REVISED STANDARD PLAN RSP T1A

2006 REVISED STANDARD PLAN RSP T1A

5-15-08

DIST	COUNTY	ROUTE	POST MILES TOTAL PROJECT	SHEET NO.	TOTAL SHEETS
06	Mad, Tul	63,99 145,198	Var	9	19

Randell D. Hiatt
REGISTERED CIVIL ENGINEER

June 6, 2008
PLANS APPROVAL DATE

Randell D. Hiatt
No. C50200
Exp. 6-30-09
CIVIL
REGISTERED PROFESSIONAL ENGINEER
STATE OF CALIFORNIA

The State of California or its officers or agents shall not be responsible for the accuracy or completeness of electronic copies of this plan sheet.

To accompany plans dated 12-17-12

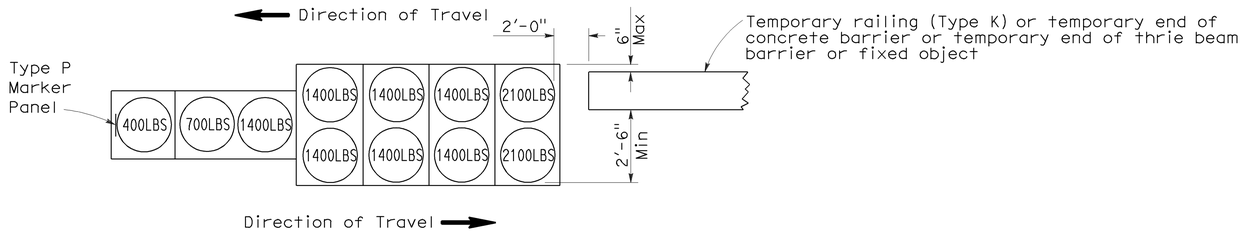

ARRAY 'TB11'

Approach speed less than 45 mph

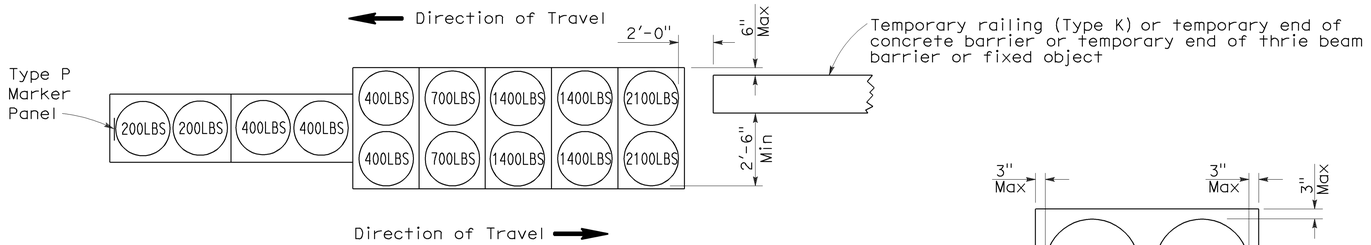

ARRAY 'TB14'

Approach speed 45 mph or more

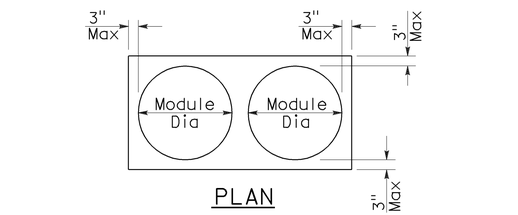

CRASH CUSHION PALLET DETAIL

See Note 7

NOTES:

1. (XXX) Indicates sand filled module location and weight of sand in pounds for each module. Module spacing is based on the greater diameter of the module.
2. All sand weights are nominal.
3. Temporary crash cushion arrays shall not encroach on the traveled way.
4. Place the Type P marker panel so that the bottom of the panel rests upon the pallet.
5. Refer to Standard Plan A73B for marker details.
6. Approach speeds indicated conform to NCHRP 350 Report criteria.
7. Use of pallets is optional.

STATE OF CALIFORNIA
DEPARTMENT OF TRANSPORTATION

TEMPORARY CRASH CUSHION, SAND FILLED (BIDIRECTIONAL)

NO SCALE

RSP T1B DATED JUNE 6, 2008 SUPERSEDES STANDARD PLAN T1B
DATED MAY 1, 2006 - PAGE 212 OF THE STANDARD PLANS BOOK DATED MAY 2006.

REVISED STANDARD PLAN RSP T1B

2006 REVISED STANDARD PLAN RSP T1B

5-15-08

DIST	COUNTY	ROUTE	POST MILES TOTAL PROJECT	SHEET NO.	TOTAL SHEETS
06	Mad, Tul	63,99 145,198	Var	10	19

Randell D. Hiatt
REGISTERED CIVIL ENGINEER

June 6, 2008
PLANS APPROVAL DATE

REGISTERED PROFESSIONAL ENGINEER
Randell D. Hiatt
No. C50200
Exp. 6-30-09
CIVIL
STATE OF CALIFORNIA

The State of California or its officers or agents shall not be responsible for the accuracy or completeness of electronic copies of this plan sheet.

To accompany plans dated 12-17-12

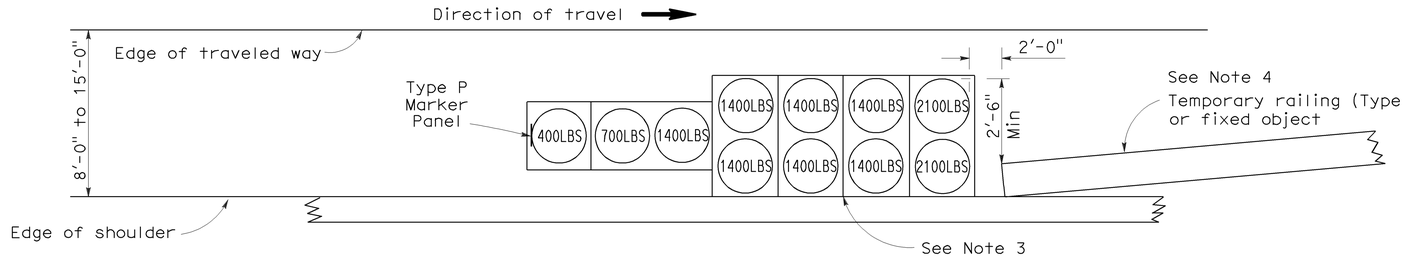

ARRAY 'TS11'

Approach speed less than 45 mph
See Note 9

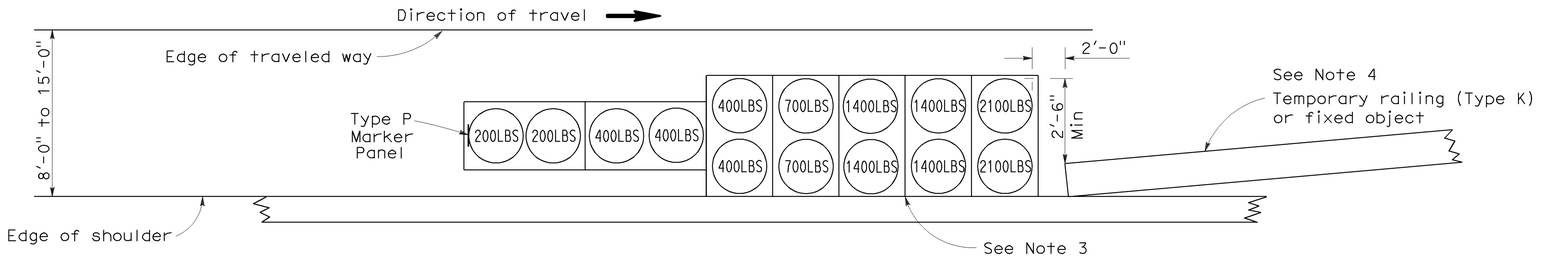

ARRAY 'TS14'

Approach speed 45 mph or more
See Note 9

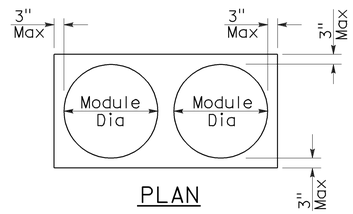

PLAN

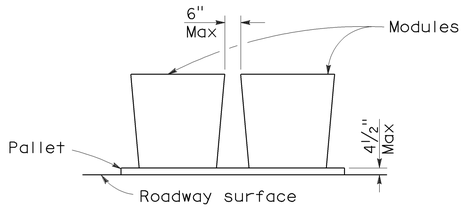

ELEVATION

CRASH CUSHION PALLET DETAIL

See Note 11

NOTES:

1. (XXX) Indicates sand filled module location and weight of sand in pounds for each module. Module spacing is based on the greater diameter of the module.
2. All sand weights are nominal.
3. The temporary crash cushion arrays shown on this plan shall be used only in locations where there will be traffic on one side of the temporary crash cushion array.
4. If the fixed object or approach end of the temporary railing is less than 15'-0" from the edge of traveled way, a temporary crash cushion is required in a construction or work zone.
5. Temporary crash cushion arrays shall not encroach on the traveled way.
6. Arrays for median shoulders shall conform to details shown on this plan for outside shoulders.
7. Place the Type P marker panel so that the bottom of the panel rests upon the pallet and faces traffic.
8. Refer to Standard Plan A73B for marker details.
9. For shoulder widths less than 8'-0", appropriate approved crash cushion protection, other than sand filled modules, shall be provided at fixed objects and at approach ends of temporary railing. The specific type of crash cushion shall be as shown on the project plans or as specified in the Special Provisions, or if not shown on the project plans or specified in the Special Provisions, shall be as approved by the Engineer.
10. Approach speeds indicated conform to NCHRP 350 Report criteria.
11. Use of pallets is optional.

STATE OF CALIFORNIA
DEPARTMENT OF TRANSPORTATION

TEMPORARY CRASH CUSHION, SAND FILLED (SHOULDER INSTALLATIONS)

NO SCALE

RSP T2 DATED JUNE 6, 2008 SUPERSEDES STANDARD PLAN T2
DATED MAY 1, 2006 - PAGE 213 OF THE STANDARD PLANS BOOK DATED MAY 2006.

REVISED STANDARD PLAN RSP T2

2006 REVISED STANDARD PLAN RSP T2

5-15-08

Dist	COUNTY	ROUTE	POST MILES TOTAL PROJECT	SHEET No.	TOTAL SHEETS
06	Mad, Tul	63,99 145,198	Var	11	19

Randell D. Hiatt
REGISTERED CIVIL ENGINEER

May 20, 2011
PLANS APPROVAL DATE

REGISTERED PROFESSIONAL ENGINEER
Randell D. Hiatt
No. C50200
Exp. 6-30-11
CIVIL
STATE OF CALIFORNIA

The State of California or its officers or agents shall not be responsible for the accuracy or completeness of electronic copies of this plan sheet.

To accompany plans dated 12-17-12

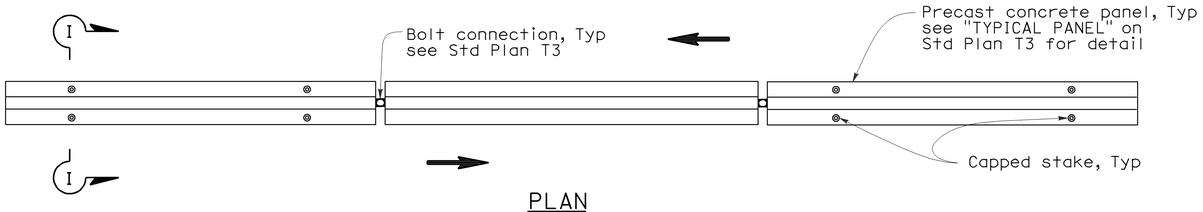

PLAN

RAILING STAKING CONFIGURATION FOR TWO-WAY TRAFFIC

See Note 1

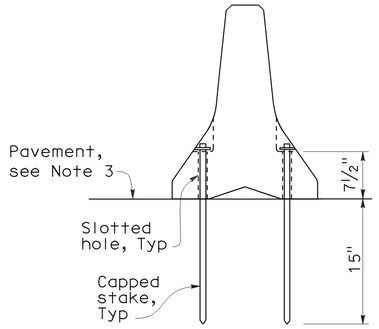

SECTION I-I

NOTES:

1. Where Type K Temporary Railing is placed as a temporary or long term barrier in two-way traffic on highways with less than 24" from the edge of traveled way, use four capped stakes per every other panel with end panels staked.
2. Where Type K Temporary Railing is placed 3" to 24" from the edge of an excavation on highways, use two capped stakes per panel along the traffic side.
3. Staked Type K Temporary Railing must be supported by at least 4" thick concrete, hot mix asphalt or existing asphalt concrete pavement.
4. The minimum yield strength for the washer must be 60,000 psi.
5. Direction of adjacent traffic indicated by ⟶.

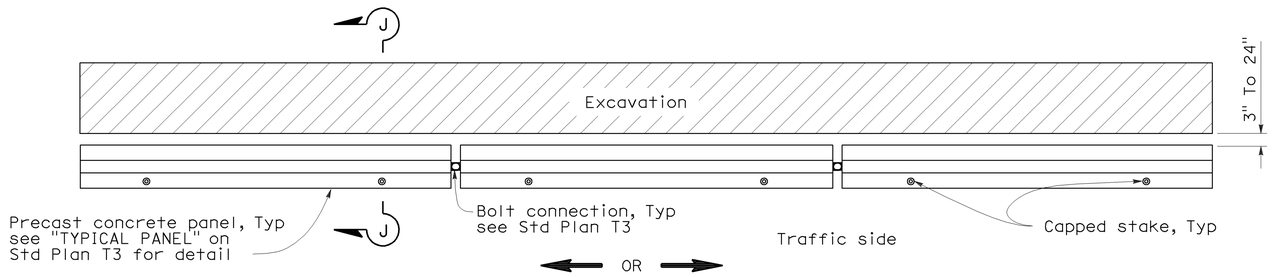

PLAN

RAILING STAKING CONFIGURATION ADJACENT TO AN EXCAVATION

See Note 2

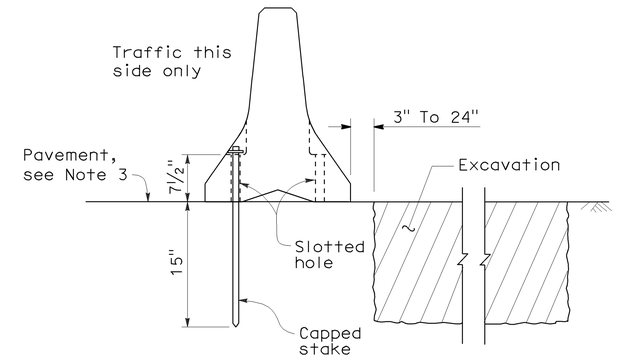

SECTION J-J

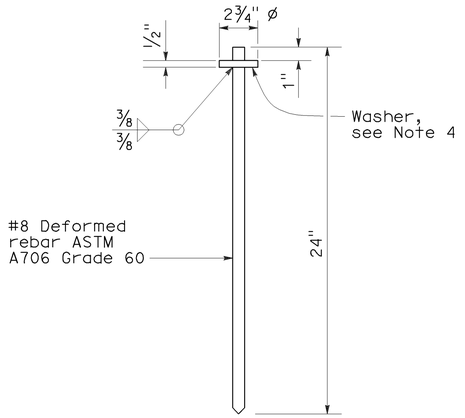

CAPPED STAKE DETAIL

STATE OF CALIFORNIA
DEPARTMENT OF TRANSPORTATION

TEMPORARY RAILING (TYPE K)

NO SCALE

NSP T3A DATED MAY 20, 2011 SUPPLEMENTS
THE STANDARD PLANS BOOK DATED MAY 2006.

NEW STANDARD PLAN NSP T3A

2006 NEW STANDARD PLAN NSP T3A

8-31-10

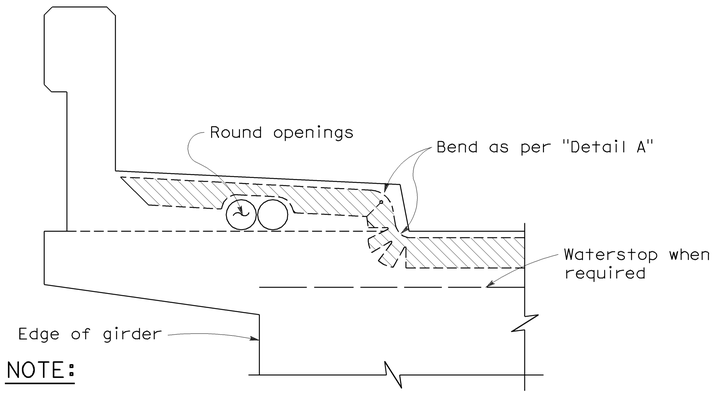

NOTE:

Type "B" seal shown. Type "A" seals to comform to the general path of seal shown, cuts for bending not required. Bend Type "A" seals 3" up into curb or barrier rail on only the low end of the seal.

CONCRETE BARRIER AND SIDEWALK

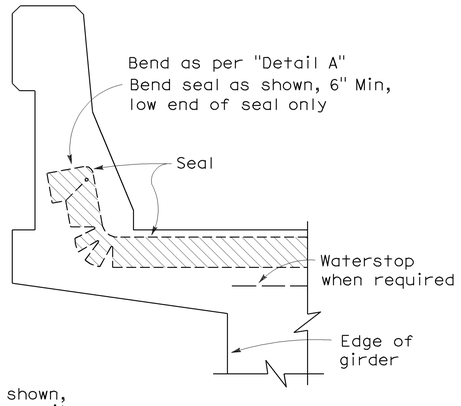

CONCRETE BARRIER

JOINT SEALS DETAILS

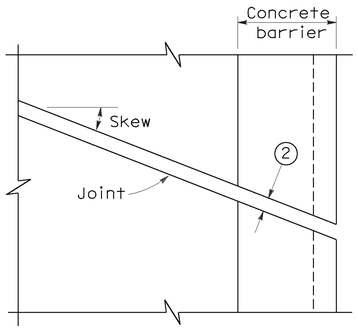

PLAN OF JOINT (SKEW ≤ 20°)

Min ℄ radius to be 4 times uncompressed width of seal or as recommended by the manufacturer, whichever is greater

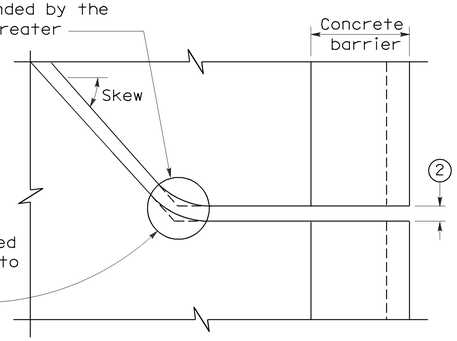

PLAN OF JOINT (SKEW > 20°)

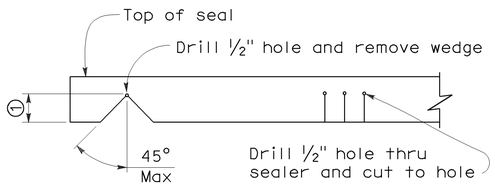

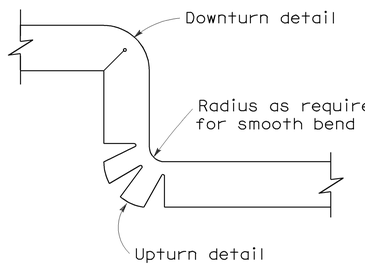

DETAIL A

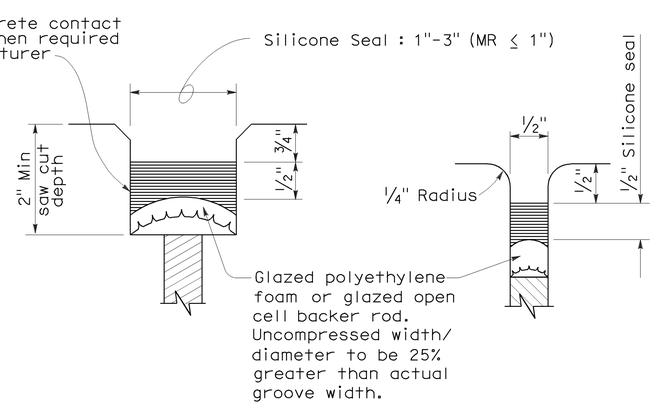

TYPE A SEAL

Movement rating : Silicone = 1" Max

TYPE AL SEAL

Longitudinal joints only

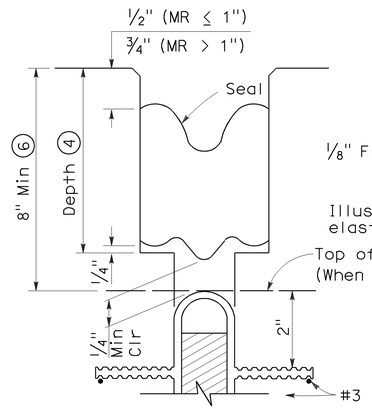

TYPE B JOINT SEAL
IN MINIMUM WIDTH POSITION (W_2)

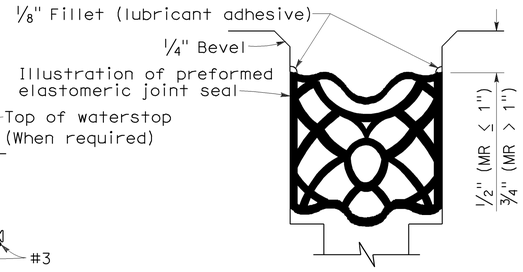

TYPE B SEAL

Movement Rating ≤ 2"

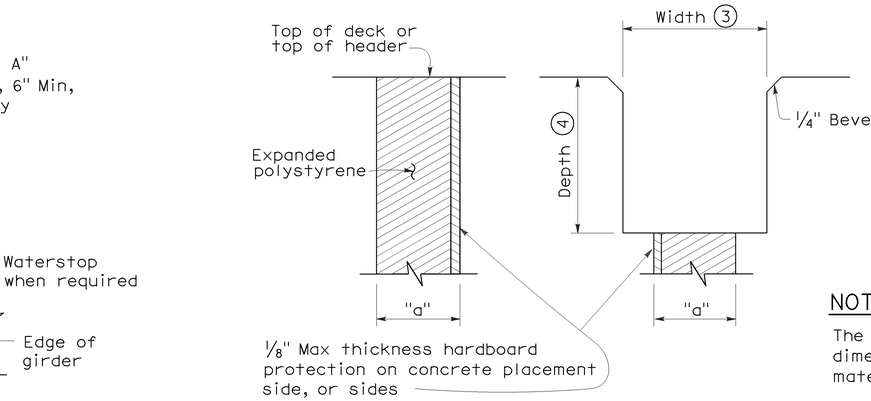

FORMING DETAIL SAWCUT DETAIL

NOTE:

The Contractor shall verify all controlling field dimensions before ordering or fabricatiing any material.

DIST	COUNTY	ROUTE	POST MILES TOTAL PROJECT	SHEET NO.	TOTAL SHEETS
06	Mad, Tul	63,99 145,198	Var	12	19

REGISTERED CIVIL ENGINEER

Efthymios Delis
No. C51434
Exp. 6-30-08
CIVIL
REGISTERED PROFESSIONAL ENGINEER
STATE OF CALIFORNIA

October 5, 2007
PLANS APPROVAL DATE

The State of California or its officers or agents shall not be responsible for the accuracy or completeness of electronic copies of this plan sheet.

To accompany plans dated 12-17-12

NOTES:

1. Make smooth cuts from the bottom of seal to 1½" clear of top leaving at least one complete cell between the top of the cut and top of the seal. When necessary cut back of seal to clear conduit and round openings.
2. Opening in barrier to match width of sawn deck joint.
3. Sawcut groove widths shall be as ordered by the Engineer.
4. Depth of sawcut: Type A - Depth to be 2" minimum.
   Type B - Depth to be equal to or greater than the depth of seal measured along the contact surface, when compressed to minimum width position (W_2) plus dimensions shown.
5. MR (movement rating) as shown on other plan sheets.
6. Other depths must be approved by the Engineer.

DIMENSIONS "a" OF JOINT REQUIRED

Movement Rating (MR) 5	Bridge Type	"a" Dimension Deck Concrete Placed		
		Winter	Fall-Spring	Summer
2"	All except CIP/PS	1½"	1¼"	¾"
	CIP/PS	1¼"	1"	½"
1½"	All except CIP/PS	1¼"	1"	½"
	CIP/PS	1"	¾"	½"
1"	All except CIP/PS	1"	¾"	½"
	CIP/PS	¾"	½"	½"
½"	All except CIP/PS	¾"	¾"	½"
	CIP/PS	½"	½"	½"

STATE OF CALIFORNIA
DEPARTMENT OF TRANSPORTATION

JOINT SEALS (MAXIMUM MOVEMENT RATING = 2")

NO SCALE

RSP B6-21 DATED OCTOBER 5, 2007 SUPERSEDES STANDARD PLAN B6-21 DATED MAY 1, 2006 - PAGE 258 OF THE STANDARD PLANS BOOK DATED MAY 2006.

REVISED STANDARD PLAN RSP B6-21

2006 REVISED STANDARD PLAN RSP B6-21

5-8-07

DIST	COUNTY	ROUTE	POST MILES TOTAL PROJECT	SHEET NO.	TOTAL SHEETS
06	Mad, Tul	63, 99 145, 198	Var	13	19

REGISTERED CIVIL ENGINEER — 11-16-12 DATE

12-17-12
PLANS APPROVAL DATE

THE STATE OF CALIFORNIA OR ITS OFFICERS OR AGENTS SHALL NOT BE RESPONSIBLE FOR THE ACCURACY OR COMPLETENESS OF ELECTRONIC COPIES OF THIS PLAN SHEET.

REGISTERED PROFESSIONAL ENGINEER
BRIAN P. NGUYEN
No. 68270
Exp. 9-30-13
CIVIL
STATE OF CALIFORNIA

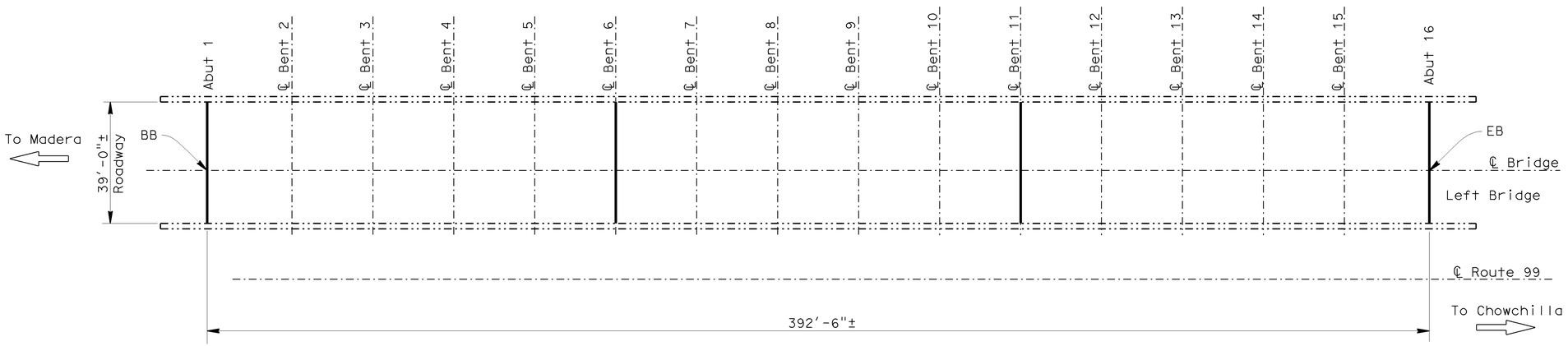

BERENDA SLOUGH BR NO. 41-0044L

QUANTITIES

CLEAN EXPANSION JOINT	160	LF
JOINT SEAL (MR 1")	80	LF
JOINT SEAL (MR 1½")	80	LF

BERENDA SLOUGH

BR. NO. 41-0044L, RTE 99, PM 24.78
1"=20′

Notes:

Indicates existing structure.

Indicates location of remove existing joint seals and place new joint seals. For details, see "JOINT SEAL DETAILS" sheet.

GENERAL NOTES
LOAD FACTOR DESIGN

DESIGN: BRIDGE DESIGN SPECIFICATIONS (1996 AASHTO with Interims and Revisions by CALTRANS)

LIVE LOADING: HS20-44 and alternative and permit design load.

REINFORCED CONCRETE: fy = 60 ksi
f′c = 4000 psi
n = 8

STANDARD PLANS DATED 2010

SHEET NO.	TITLE
A10A	ABBREVIATIONS (SHEET 1 OF 2)
A10B	ABBREVIATIONS (SHEET 2 OF 2)

INDEX TO PLANS

SHEET NO.	TITLE
1	GENERAL PLAN NO. 1
2	GENERAL PLAN NO. 2
3	GENERAL PLAN NO. 3
4	GENERAL PLAN NO. 4
5	GENERAL PLAN NO. 5
6	GENERAL PLAN NO. 6
7	JOINT SEAL DETAILS

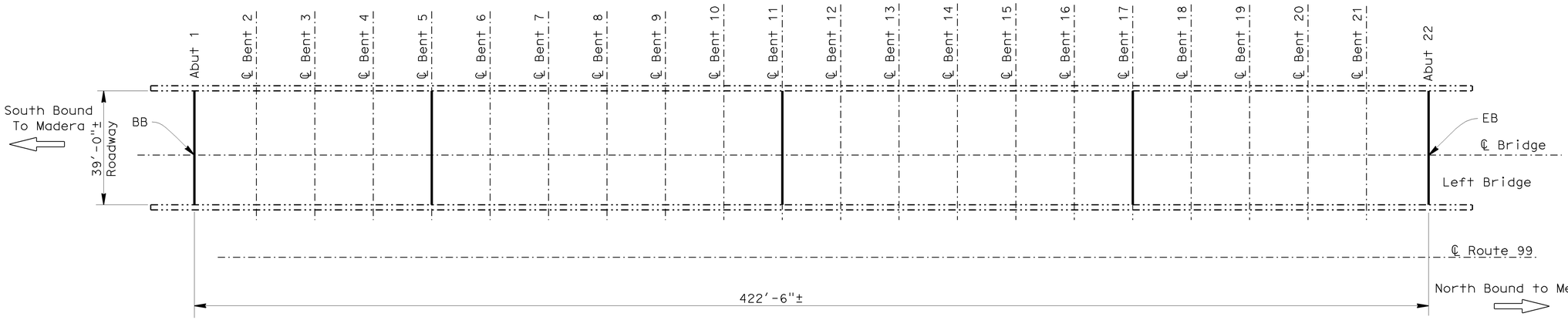

Standard Plan Sheet No.
Detail No.

NOTE:
THE CONTRACTOR SHALL VERIFY ALL CONTROLLING FIELD DIMENSIONS BEFORE ORDERING OR FABRICATING ANY MATERIAL.

ASH SLOUGH

BR. NO. 41-0045L, RTE 99, PM 26.8
1"=20′

ASH SLOUGH BR NO. 41-0045L

QUANTITIES

CLEAN EXPANSION JOINT	197	LF
JOINT SEAL (MR 1")	197	LF

DESIGN ENGINEER — Michael J. Lee 11-16-12	DESIGN	BY BRIAN NGUYEN	CHECKED FRANZ ESPINOZA	LAYOUT	BY TRUNG LAM	CHECKED BRIAN NGUYEN	STATE OF CALIFORNIA DEPARTMENT OF TRANSPORTATION	DIVISION OF MAINTENANCE STRUCTURE MAINTENANCE DESIGN	BRIDGE NO. VARIOUS
	DETAILS	BY TRUNG LAM	CHECKED FRANZ ESPINOZA			PLANS AND SPECIFICATIONS COMPARED			POST MILE VARIES
	QUANTITIES	BY BRIAN NGUYEN	CHECKED FRANZ ESPINOZA	SPECIFICATIONS	BY				

ROUTE 63,99,145 & 198 BRIDGES
GENERAL PLAN NO. 1

STRUCTURES MAINTENANCE GENERAL PLAN & DETAIL SHEET (ENGLISH) (REV. 10/17/07)

ORIGINAL SCALE IN INCHES FOR REDUCED PLANS 0 1 2 3

UNIT: 3488
PROJECT NUMBER & PHASE: 0612000024 1 CONTRACT NUMBER: 06-0N7701

DISREGARD PRINTS BEARING EARLIER REVISION DATES → REVISION DATES: 11-01-11 12-15-11 01-13-12 11-16-12

SHEET 1 OF 7

FILE => 06-0n7701_01_gp1.dgn

USERNAME = s1121289 DATE PLOTTED => 19-DEC-2012 TIME PLOTTED => 10:00

DIST	COUNTY	ROUTE	POST MILES TOTAL PROJECT	SHEET NO.	TOTAL SHEETS
06	Mad, Tul	63,99 145,198	Var	14	19

REGISTERED CIVIL ENGINEER 11-16-12 DATE

12-17-12
PLANS APPROVAL DATE

REGISTERED PROFESSIONAL ENGINEER BRIAN P. NGUYEN No. 68270 Exp. 9-30-13 CIVIL STATE OF CALIFORNIA

THE STATE OF CALIFORNIA OR ITS OFFICERS OR AGENTS SHALL NOT BE RESPONSIBLE FOR THE ACCURACY OR COMPLETENESS OF ELECTRONIC COPIES OF THIS PLAN SHEET.

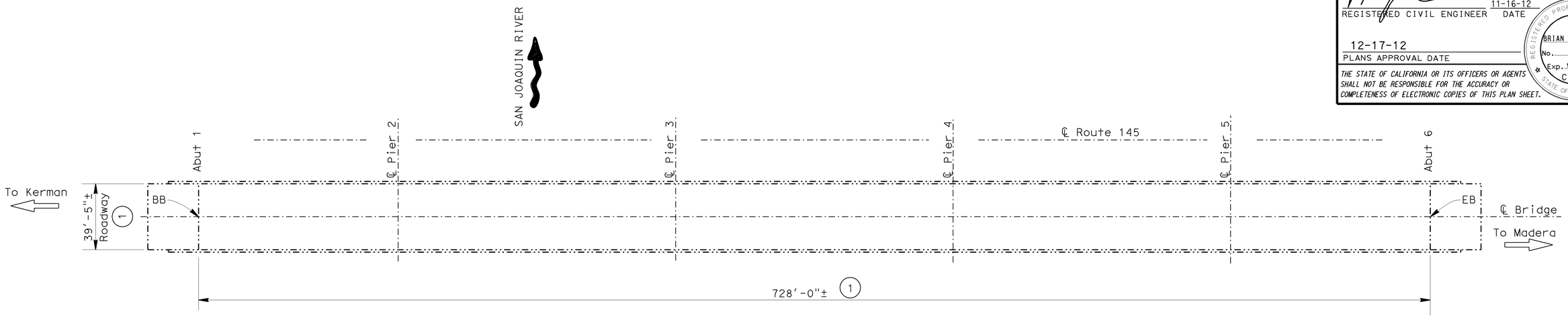

SAN JOAQUIN RV (SKAGGS) BR NO. 41-0086

QUANTITIES

PREPARE CONCRETE BRIDGE DECK SURFACE	28,675	SQFT
TREAT BRIDGE DECK	28,675	SQFT
FURNISH BRIDGE DECK TREATMENT MATERIAL	320	GAL

SAN JOAQUIN RV (SKAGGS)

BR. NO. 41-0086, RTE 145, PM R0.01
1"=30'

Notes:

-·-·-·-·- Indicates existing structure.

(1) Indicates limits of prepare and treat bridge deck with high molecular weight methacrylate.

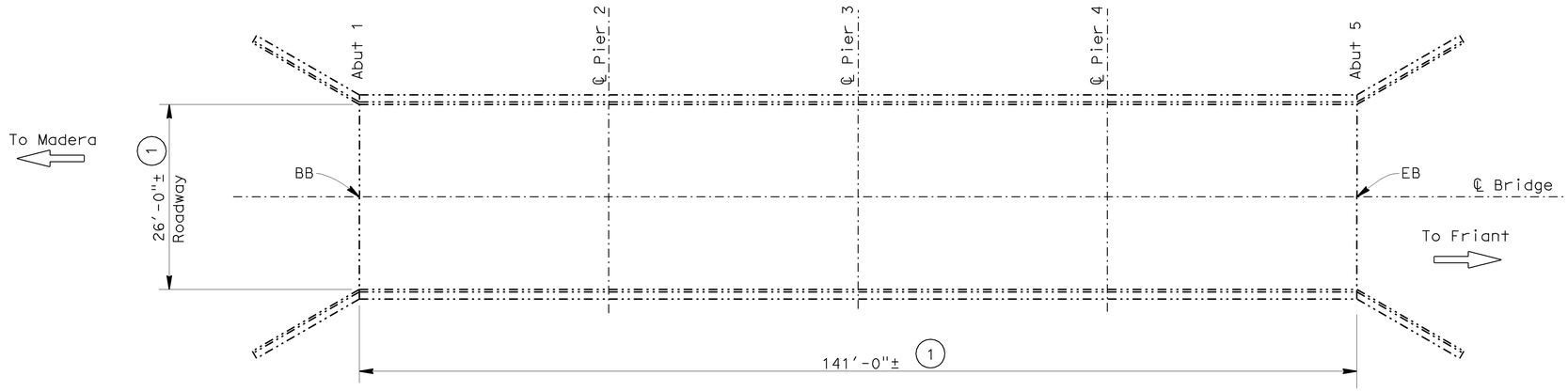

COTTONWOOD CREEK

BR. NO. 41-0029, RTE 145, PM 18.41
1"=10'

COTTONWOOD CREEK BR NO. 41-0029

QUANTITIES

PREPARE CONCRETE BRIDGE DECK SURFACE	3,660	SQFT
TREAT BRIDGE DECK	3,660	SQFT
FURNISH BRIDGE DECK TREATMENT MATERIAL	41	GAL

NOTE:
THE CONTRACTOR SHALL VERIFY ALL CONTROLLING FIELD DIMENSIONS BEFORE ORDERING OR FABRICATING ANY MATERIAL.

Michael J. Lee 11-16-12 DESIGN ENGINEER	DESIGN	BY BRIAN NGUYEN	CHECKED FRANZ ESPINOZA	LAYOUT	BY TRUNG LAM	CHECKED BRIAN NGUYEN	STATE OF CALIFORNIA DEPARTMENT OF TRANSPORTATION	DIVISION OF MAINTENANCE STRUCTURE MAINTENANCE DESIGN	BRIDGE NO. VARIOUS
	DETAILS	BY TRUNG LAM	CHECKED FRANZ ESPINOZA	SPECIFICATIONS	BY	PLANS AND SPECIFICATIONS COMPARED			POST MILE VARIES
	QUANTITIES	BY BRIAN NGUYEN	CHECKED FRANZ ESPINOZA						

ROUTE 63,99,145 & 198 BRIDGES

GENERAL PLAN NO. 2

STRUCTURES MAINTENANCE GENERAL PLAN & DETAIL SHEET (ENGLISH) (REV. 10/17/07)

ORIGINAL SCALE IN INCHES FOR REDUCED PLANS 0 1 2 3

UNIT: 3488
PROJECT NUMBER & PHASE: 0612000024 1 CONTRACT NUMBER: 06-0N7701

DISREGARD PRINTS BEARING EARLIER REVISION DATES

REVISION DATES 11-01-11 12-15-11 01-19-12 11-16-12

SHEET 2 OF 7

FILE => 06-0n7701_02_gp2.dgn

USERNAME => s121289 DATE PLOTTED => 19-DEC-2012 TIME PLOTTED => 10:01

DIST	COUNTY	ROUTE	POST MILES TOTAL PROJECT	SHEET NO.	TOTAL SHEETS
06	Mad, Tul	63, 99 145, 198	Var	15	19

REGISTERED CIVIL ENGINEER — 11-16-12 DATE

12-17-12
PLANS APPROVAL DATE

THE STATE OF CALIFORNIA OR ITS OFFICERS OR AGENTS SHALL NOT BE RESPONSIBLE FOR THE ACCURACY OR COMPLETENESS OF ELECTRONIC COPIES OF THIS PLAN SHEET.

REGISTERED PROFESSIONAL ENGINEER
BRIAN P. NGUYEN
No. 68270
Exp. 9-30-13
CIVIL
STATE OF CALIFORNIA

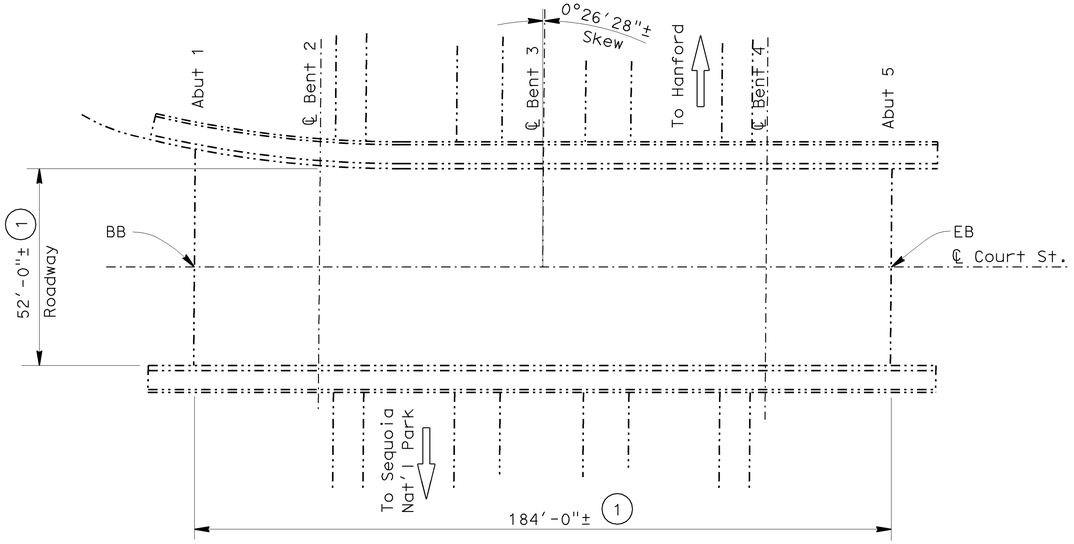

EI98-N63 CONNECTOR

BR. NO. 46-0206G, RTE 198, PM R9.97
1"=20'

Notes:

Indicates existing structure.

(1) Indicates limits of prepare and treat bridge deck with high molecular weight methecrylate.

E198-N63 CONNECTOR BR NO. 46-0206G

QUANTITIES

PUBLIC SAFETY PLAN	LUMP	SUM
PREPARE CONCRETE BRIDGE DECK SURFACE	9,568	SQFT
TREAT BRIDGE DECK	9,568	SQFT
FURNISH BRIDGE DECK TREATMENT MATERIAL	107	GAL

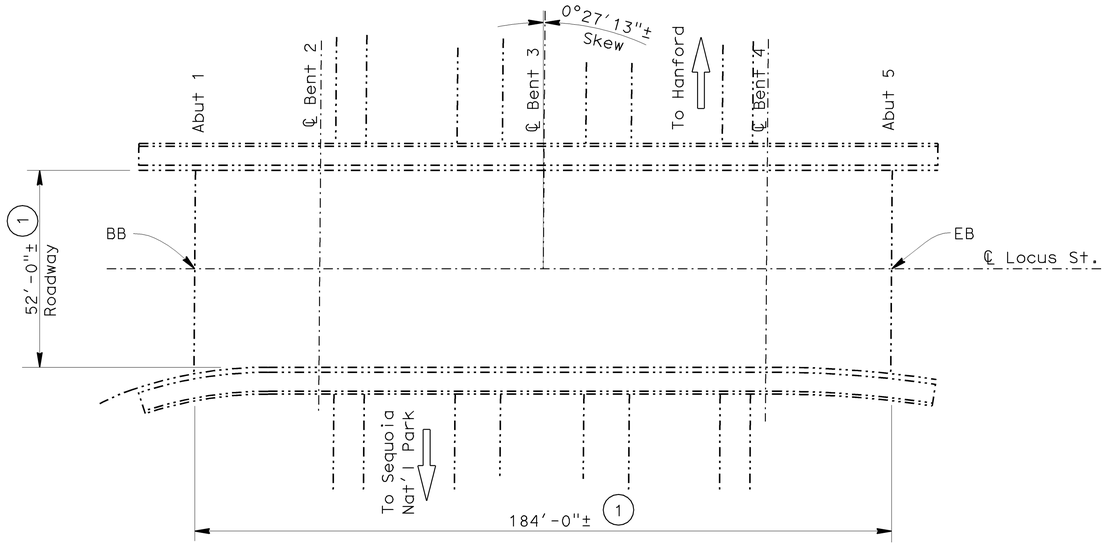

LOCUST STREET SEPARATION

BR. NO. 46-0205F, RTE 63, PM 7.98
1"=20'

LOCUST STREET SEPARATION BR NO. 46-0205F

QUANTITIES

PREPARE CONCRETE BRIDGE DECK SURFACE	9,568	SQFT
TREAT BRIDGE DECK	9,568	SQFT
FURNISH BRIDGE DECK TREATMENT MATERIAL	107	GAL

NOTE:
THE CONTRACTOR SHALL VERIFY ALL CONTROLLING FIELD DIMENSIONS BEFORE ORDERING OR FABRICATING ANY MATERIAL.

Michael J. Lee 11-16-12
DESIGN ENGINEER

DESIGN	BY BRIAN NGUYEN	CHECKED FRANZ ESPINOZA	LAYOUT	BY TRUNG LAM	CHECKED BRIAN NGUYEN
DETAILS	BY TRUNG LAM	CHECKED FRANZ ESPINOZA	SPECIFICATIONS	BY	PLANS AND SPECIFICATIONS COMPARED
QUANTITIES	BY BRIAN NGUYEN	CHECKED FRANZ ESPINOZA			

STRUCTURES MAINTENANCE GENERAL PLAN & DETAIL SHEET (ENGLISH) (REV. 10/17/07)

STATE OF CALIFORNIA
DEPARTMENT OF TRANSPORTATION

DIVISION OF MAINTENANCE
STRUCTURE MAINTENANCE DESIGN

BRIDGE NO. VARIOUS
POST MILE VARIES

ROUTE 63,99,145 & 198 BRIDGES

GENERAL PLAN NO. 3

ORIGINAL SCALE IN INCHES FOR REDUCED PLANS 0 1 2 3

UNIT: 3488
PROJECT NUMBER & PHASE: 0612000024 1
CONTRACT NUMBER: 06-0N7701

DISREGARD PRINTS BEARING EARLIER REVISION DATES

REVISION DATES	SHEET	OF
11-01-11 12-15-11 01-13-12 11-16-12	3	7

FILE => 06-0n7701_03_gp3.dgn

USERNAME => s121289 DATE PLOTTED => 19-DEC-2012 TIME PLOTTED => 10:01

DIST	COUNTY	ROUTE	POST MILES TOTAL PROJECT	SHEET NO.	TOTAL SHEETS
06	Mad, Tul	63, 99 145, 198	Var	16	19

11-16-12
REGISTERED CIVIL ENGINEER DATE

REGISTERED PROFESSIONAL ENGINEER
BRIAN P. NGUYEN
No. 68270
Exp. 9-30-13
CIVIL
STATE OF CALIFORNIA

12-17-12
PLANS APPROVAL DATE

THE STATE OF CALIFORNIA OR ITS OFFICERS OR AGENTS SHALL NOT BE RESPONSIBLE FOR THE ACCURACY OR COMPLETENESS OF ELECTRONIC COPIES OF THIS PLAN SHEET.

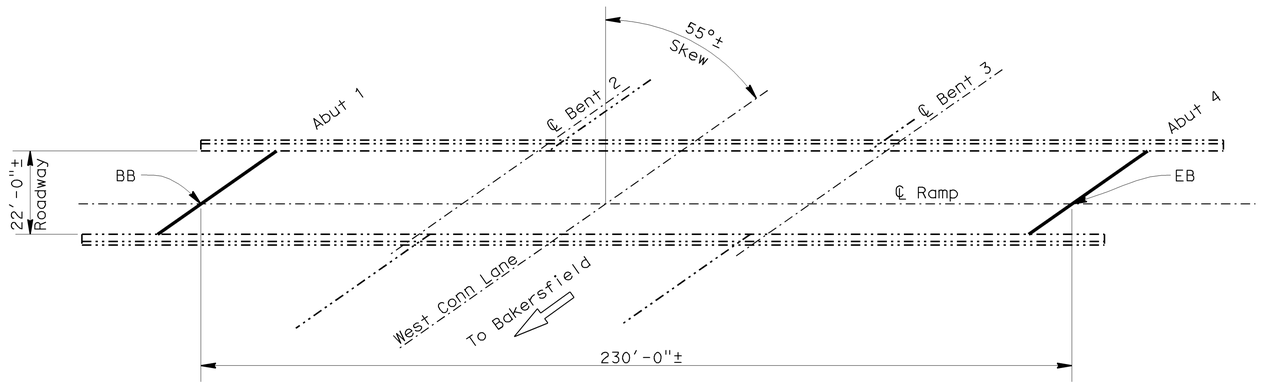

SOUTH TAGUS OVERCROSSING

BR. NO. 46-0162C, RTE 99, PM 33.22
1"=20'

SOUTH TAGUS OVERCROSSING BR NO. 46-0162C

QUANTITIES

CLEAN EXPANSION JOINT	80	LF
JOINT SEAL (MR 1")	80	LF

Notes:

Indicates existing structure.

Indicates location of remove existing joint seals and place new joint seals. For details, see "JOINT SEAL DETAILS" sheet.

(2) Indicates limits of remove existing 1½"± polyester overlay, prepare existing concrete deck, remove unsound concrete and patch with rapid setting concrete and place new 1½"± min depth Polyester concrete overlay. For details, see "JOINT SEAL DETAILS" sheet.

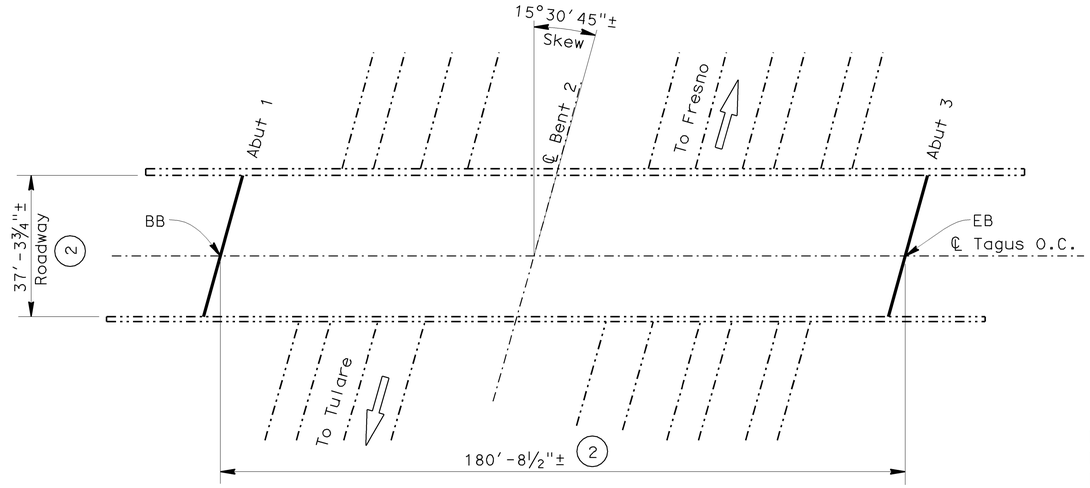

TAGUS OVERCROSSING

BR. NO. 46-0194, RTE 99, PM 33.94
1"=20'

TAGUS OVERCROSSING BR NO. 46-0194

QUANTITIES

RAPID SETTING CONCRETE (PATCH)	17	CF
REMOVE POLYESTER DECK OVERLAY	6,769	SQFT
REMOVE UNSOUND CONCRETE	17	CF
PREPARE CONCRETE BRIDGE DECK SURFACE	6,769	SQFT
FURNISH POLYESTER CONCRETE OVERLAY	1,015	CF
PLACE POLYESTER CONCRETE OVERLAY	6,769	SQFT
CLEAN EXPANSION JOINT	80	LF
JOINT SEAL (MR 1")	80	LF

NOTE:
THE CONTRACTOR SHALL VERIFY ALL CONTROLLING FIELD DIMENSIONS BEFORE ORDERING OR FABRICATING ANY MATERIAL.

Michael J. Lee 11-16-12
DESIGN ENGINEER

	BY	CHECKED
DESIGN	BRIAN NGUYEN	FRANZ ESPINOZA
DETAILS	TRUNG LAM	FRANZ ESPINOZA
QUANTITIES	BRIAN NGUYEN	FRANZ ESPINOZA
LAYOUT	TRUNG LAM	BRIAN NGUYEN
SPECIFICATIONS		PLANS AND SPECIFICATIONS COMPARED

STATE OF CALIFORNIA
DEPARTMENT OF TRANSPORTATION

DIVISION OF MAINTENANCE
STRUCTURE MAINTENANCE DESIGN

BRIDGE NO. VARIOUS
POST MILE VARIES

ROUTE 63,99,145 & 198 BRIDGES
GENERAL PLAN NO. 4

STRUCTURES MAINTENANCE GENERAL PLAN & DETAIL SHEET (ENGLISH) (REV. 10/17/07)

ORIGINAL SCALE IN INCHES FOR REDUCED PLANS 0 1 2 3

UNIT: 3488
PROJECT NUMBER & PHASE: 0612000024 1
CONTRACT NUMBER: 06-0N7701

DISREGARD PRINTS BEARING EARLIER REVISION DATES

REVISION DATES	SHEET	OF
11-01-11 12-15-11 01-19-12 11-16-12	4	7

USERNAME => s1212289 DATE PLOTTED => 19-DEC-2012 TIME PLOTTED => 10:02
FILE => 06-0n7701_04_gp4.dgn

DIST	COUNTY	ROUTE	POST MILES TOTAL PROJECT	SHEET NO.	TOTAL SHEETS
06	Mad, Tul	63, 99 145, 198	Var	17	19

REGISTERED CIVIL ENGINEER — 11-16-12 DATE

12-17-12
PLANS APPROVAL DATE

REGISTERED PROFESSIONAL ENGINEER — BRIAN P. NGUYEN No. 68270 Exp. 9-30-13 CIVIL — STATE OF CALIFORNIA

THE STATE OF CALIFORNIA OR ITS OFFICERS OR AGENTS SHALL NOT BE RESPONSIBLE FOR THE ACCURACY OR COMPLETENESS OF ELECTRONIC COPIES OF THIS PLAN SHEET.

Notes:

Indicates existing structure.

Indicates location of remove existing joint seals and place new joint seals. For details, see "JOINT SEAL DETAILS" sheet.

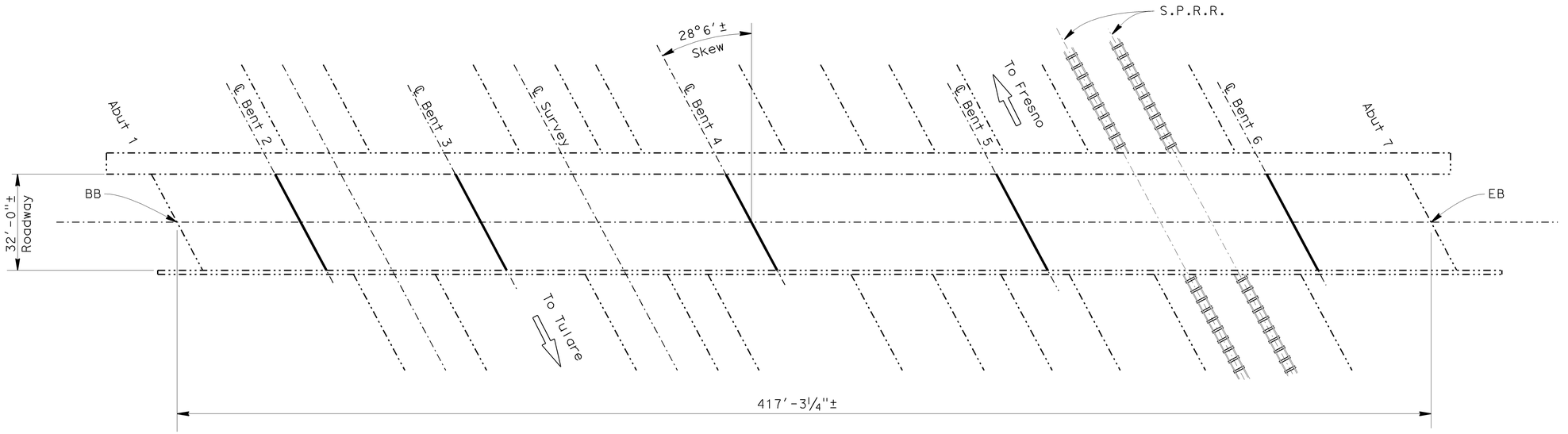

AVENUE 328 OVERCROSSING

BR. NO. 46-0198, RTE 99, PM 43.41
1"=20′

AVENUE 328 OVERCROSSING BR NO. 46-0198

QUANTITIES

CLEAN EXPANSION JOINT	185	LF
JOINT SEAL (MR 1")	185	LF

NOTE:
THE CONTRACTOR SHALL VERIFY ALL CONTROLLING FIELD DIMENSIONS BEFORE ORDERING OR FABRICATING ANY MATERIAL.

Michael J. Lee 11-16-12
DESIGN ENGINEER

DESIGN	BY BRIAN NGUYEN	CHECKED FRANZ ESPINOZA	LAYOUT	BY TRUNG LAM	CHECKED BRIAN NGUYEN
DETAILS	BY TRUNG LAM	CHECKED FRANZ ESPINOZA	SPECIFICATIONS	BY	PLANS AND SPECIFICATIONS COMPARED
QUANTITIES	BY BRIAN NGUYEN	CHECKED FRANZ ESPINOZA			

STATE OF CALIFORNIA
DEPARTMENT OF TRANSPORTATION

DIVISION OF MAINTENANCE
STRUCTURE MAINTENANCE DESIGN

BRIDGE NO. VARIOUS
POST MILE VARIES

ROUTE 63,99,145 & 198 BRIDGES
GENERAL PLAN NO. 5

STRUCTURES MAINTENANCE GENERAL PLAN & DETAIL SHEET (ENGLISH) (REV. 10/17/07)

ORIGINAL SCALE IN INCHES FOR REDUCED PLANS 0 1 2 3

UNIT: 3488
PROJECT NUMBER & PHASE: 0612000024 1
CONTRACT NUMBER: 06-0N7701

DISREGARD PRINTS BEARING EARLIER REVISION DATES →
REVISION DATES: 11-01-11 12-15-11 01-19-12 11-16-12

SHEET 5 OF 7

FILE => 06-0n7701_05_gp5.dgn

USERNAME => s1212289 DATE PLOTTED => 19-DEC-2012 TIME PLOTTED => 10:02

DIST	COUNTY	ROUTE	POST MILES TOTAL PROJECT	SHEET NO.	TOTAL SHEETS
06	Mad, Tul	63, 99 145, 198	Var	18	19

REGISTERED CIVIL ENGINEER — 11-16-12 DATE

12-17-12
PLANS APPROVAL DATE

REGISTERED PROFESSIONAL ENGINEER — BRIAN P. NGUYEN No. 68270 Exp. 9-30-13 CIVIL — STATE OF CALIFORNIA

THE STATE OF CALIFORNIA OR ITS OFFICERS OR AGENTS SHALL NOT BE RESPONSIBLE FOR THE ACCURACY OR COMPLETENESS OF ELECTRONIC COPIES OF THIS PLAN SHEET.

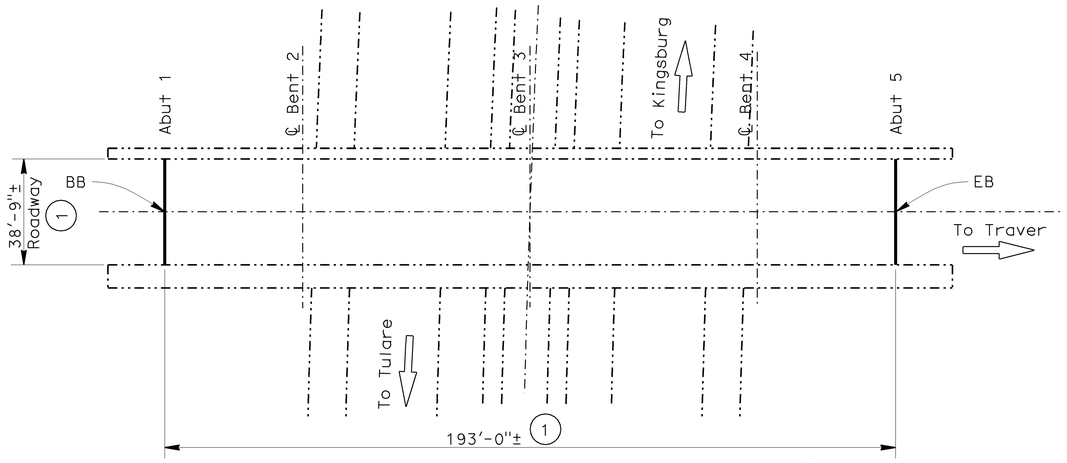

MERRITT DR OVERCROSSING

BR. NO. 46-0176, RTE 99, PM 48.71
1"=20'

Notes:

- Indicates existing structure.
- Indicates location of remove existing joint seals and place new joint seals. For details, see "JOINT SEAL DETAILS" sheet.
- (1) Indicates limits of prepare and treat bridge deck with high molecular weight methecrylate.
- (3) Indicates limits of remove 2"± AC overlay and heavy duty Bituthene membrance, prepare existing concrete deck, remove unsound concrete and patch with rapid setting concrete and place new ¾" min depth polyester concrete overlay. For details, see "JOINT SEAL DETAILS" sheet.

MERRITT DR OVERCROSSING BR NO. 46-0176

QUANTITIES

PREPARE CONCRETE BRIDGE DECK SURFACE	7,478	SQFT
TREAT BRIDGE DECK	7,478	SQFT
FURNISH BRIDGE DECK TREATMENT MATERIAL	83	GAL
CLEAN EXPANSION JOINT	80	LF
JOINT SEAL (MR 1")	80	LF

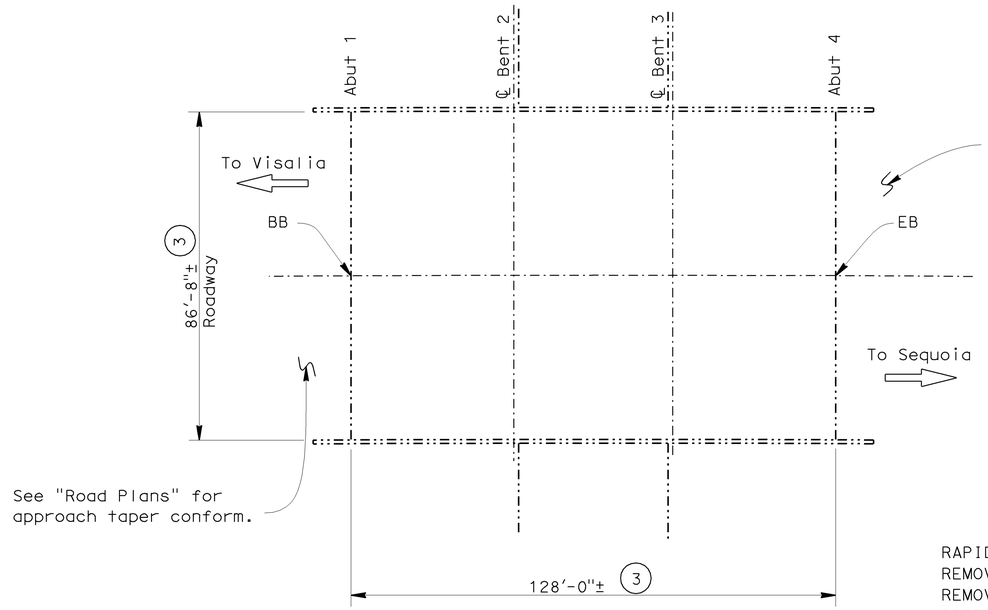

MATCHIN OVERHEAD

BR. NO. 46-0041, RTE 198, PM R19.01
1"=20'

MATCHIN OVERHEAD BR NO. 46-0041

QUANTITIES

RAPID SETTING CONCRETE (PATCH)	28	CF
REMOVE ASPHALT CONCRETE SURFACING	11,150	SQFT
REMOVE UNSOUND CONCRETE	28	CF
PREPARE CONCRETE BRIDGE DECK SURFACE	11,150	SQFT
FURNISH POLYESTER CONCRETE OVERLAY	845	CF
PLACE POLYESTER CONCRETE OVERLAY	11,150	SQFT

NOTE:
THE CONTRACTOR SHALL VERIFY ALL CONTROLLING FIELD DIMENSIONS BEFORE ORDERING OR FABRICATING ANY MATERIAL.

Michael J. Lee 11-16-12
DESIGN ENGINEER

DESIGN	BY BRIAN NGUYEN	CHECKED FRANZ ESPINOZA	LAYOUT	BY TRUNG LAM	CHECKED BRIAN NGUYEN	STATE OF CALIFORNIA DEPARTMENT OF TRANSPORTATION	DIVISION OF MAINTENANCE STRUCTURE MAINTENANCE DESIGN	BRIDGE NO. VARIOUS	ROUTE 63,99,145 & 198 BRIDGES
DETAILS	BY TRUNG LAM	CHECKED FRANZ ESPINOZA			PLANS AND SPECIFICATIONS COMPARED			POST MILE VARIES	GENERAL PLAN NO. 6
QUANTITIES	BY BRIAN NGUYEN	CHECKED FRANZ ESPINOZA	SPECIFICATIONS	BY					

STRUCTURES MAINTENANCE GENERAL PLAN & DETAIL SHEET (ENGLISH) (REV. 10/17/07)

ORIGINAL SCALE IN INCHES FOR REDUCED PLANS 0 1 2 3

UNIT: 3488
PROJECT NUMBER & PHASE: 0612000024 1 CONTRACT NUMBER: 06-0N7701

DISREGARD PRINTS BEARING EARLIER REVISION DATES → REVISION DATES 11-01-11 12-15-11 01-13-12 11-16-12

SHEET 6 OF 7

FILE => 06-0n7701_06_gp6.dgn

USERNAME => s121269 DATE PLOTTED => 19-DEC-2012 TIME PLOTTED => 10:02

DIST	COUNTY	ROUTE	POST MILES TOTAL PROJECT	SHEET NO.	TOTAL SHEETS
06	Mad, Tul	63,99 145,198	Var	19	19

REGISTERED CIVIL ENGINEER — 11-16-12 DATE

12-17-12
PLANS APPROVAL DATE

REGISTERED PROFESSIONAL ENGINEER — BRIAN P. NGUYEN No. 68270 Exp. 9-30-13 CIVIL — STATE OF CALIFORNIA

THE STATE OF CALIFORNIA OR ITS OFFICERS OR AGENTS SHALL NOT BE RESPONSIBLE FOR THE ACCURACY OR COMPLETENESS OF ELECTRONIC COPIES OF THIS PLAN SHEET.

JOINT SEAL TABLE

BRIDGE NAME	BRIDGE NUMBER	LOCATION		MINIMUM "MR" (inch)	APPROXIMATE LENGTH (feet)	EXISTING WATERSTOP	APPROX DEPTH TO CLEAN EXP JOINT (inch)
BERENDA SLOUGH	41-0044L	Abut 1	BB	1	39.5	No	12.0
		Bent 6	H	1½	39.5	No	12.0
		Bent 11	H	1½	39.5	No	12.0
		Abut 16	EB	1	39.5	No	12.0
ASH SLOUGH	41-0045L	Abut 1	BB	1	39.5	No	12.0
		Bent 5	H	1	39.5	No	12.0
		Bent 11	H	1	39.5	No	12.0
		Bent 17	H	1	39.5	No	12.0
		Abut 22	EB	1	39.5	No	12.0
TAGUS O.C.	46-0194	Abut 1	BB	1	40.0	No	12.0
		Abut 3	EB	1	40.0	No	12.0
SOUTH TAGUS O.C.	46-0162C	Abut 1	BB	1	39.5	No	12.0
		Abut 4	EB	1	39.5	No	12.0
AVENUE 328 O.C.	46-0198	Bent 2	℄	1	37.0	No	12.0
		Bent 3	℄	1	37.0	No	12.0
		Bent 4	℄	1	37.0	No	12.0
		Bent 5	℄	1	37.0	No	12.0
		Bent 6	℄	1	37.0	No	12.0
MERRITT DR O.C.	46-0176	Abut 1	BB	1	40.0	No	12.0
		Abut 5	EB	1	40.0	No	12.0

LEGEND:

BB = Begining of Bridge
EB = End of Bridge
H = Hinge
℄ = Center line

DECK REPAIR TABLE

REMOVE UNSOUND CONCRETE AND RAPID SETTING CONCRETE (PATCH)

BRIDGE NAME	BRIDGE NUMBER	APPROXIMATE AREA DAMAGED (percent)	APPROXIMATE DEPTH (inches)
MATCHIN OVERHEAD	46-0041	1	3
TAGUS OVERCROSSING	46-0194	1	3

Location to be determined by the Engineer.

The following note applies to JOINT SEAL TYPE A:
Install Type A joint seal 3" up into curb or rail on the low side of deck where joint matches curb or rail joint. For details not shown see RSP B6-21

The following notes apply to JOINT SEAL TYPE B:

1) Seal must satisfy both minimum Movement Rating (MR) and minimum WI requirements.
2) Minimum WI is the calculated maximum width of the joint based on field measurements. After the joints have been cleaned, minimum WI is to be recalculated by the Engineer.
3) WI shall be the smaller of the values determined as follows:
   A) 0.85 times the manufacturer's designed minimum uncompressed width of the seal.
   B) The width of the seal on the third successive test cycle of the pressure deflection test, when compressed to an average pressure of 20.68 kPa.
4) Bend Type B joint seal 152 mm up into curb or rail on the low side of the deck where deck joint matches curb or rail joint.
5) For details not shown see RSP B6-21

Indicates limits of remove existing AC overlay and membrane seal, or polyester overlay.

Indicates limits of new polyester overlay.

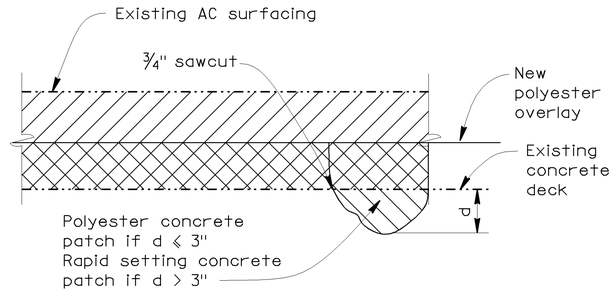

DETAIL FOR BRIDGE NO. 46-0041

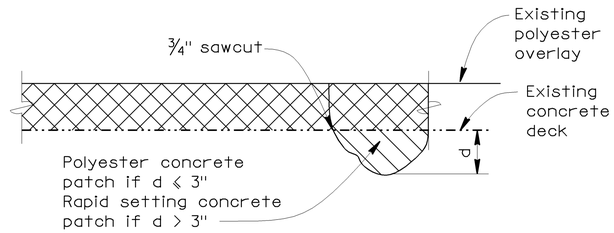

DETAIL FOR BRIDGE NO. 46-0194

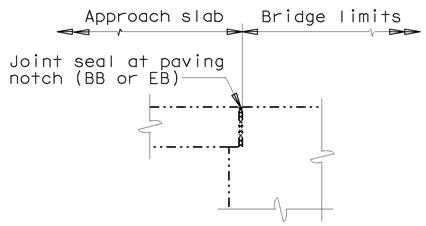

DIAPHRAGM ABUTMENT

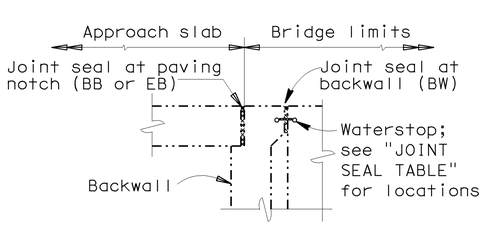

ABUTMENT WITH BACKWALL

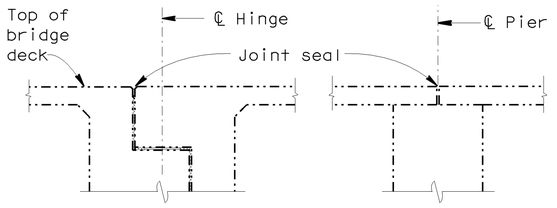

HINGE PIER

JOINT SEAL LOCATION

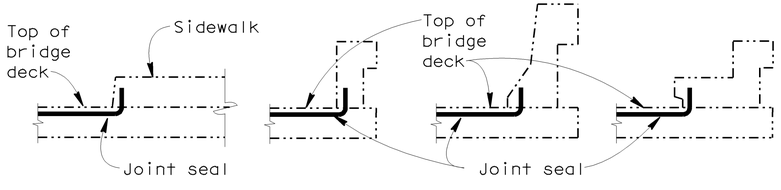

SIDEWALK BARRIER RAIL

JOINT SEAL AT LOW SIDE OF DECK

Notes: Details shown for illustration purposes only. For use only where deck joint matches the barrier rail joint.

NOTE:
THE CONTRACTOR SHALL VERIFY ALL CONTROLLING FIELD DIMENSIONS BEFORE ORDERING OR FABRICATING ANY MATERIAL.

DESIGN	BY BRIAN NGUYEN	CHECKED FRANZ ESPINOZA	STATE OF CALIFORNIA DEPARTMENT OF TRANSPORTATION
DETAILS	BY TRUNG LAM	CHECKED FRANZ ESPINOZA	
QUANTITIES	BY BRIAN NGUYEN	CHECKED FRANZ ESPINOZA	

DIVISION OF MAINTENANCE
STRUCTURE MAINTENANCE DESIGN

BRIDGE NO. VARIOUS
POST MILE VARIES

ROUTE 63,99,145 & 198 BRIDGES

JOINT SEAL DETAILS

STRUCTURES MAINTENANCE GENERAL PLAN & DETAIL SHEET (ENGLISH) (REV. 10/17/07)

ORIGINAL SCALE IN INCHES FOR REDUCED PLANS 0 1 2 3

UNIT: 3488
PROJECT NUMBER & PHASE: 0612000024 1
CONTRACT NUMBER: 06-0N7701

DISREGARD PRINTS BEARING EARLIER REVISION DATES →

REVISION DATES: 11-01-11 | 12-15-11 | 01-19-12

SHEET 7 OF 7

FILE => 06-0n7701_07_js_dets.dgn

USERNAME => s1212289 DATE PLOTTED => 19-DEC-2012 TIME PLOTTED => 10:03