Dist	COUNTY	ROUTE	POST MILES TOTAL PROJECT	SHEET No.	TOTAL SHEETS
06	Fre	41	R27.6/R29.8	1	107

NH-P041(111)E

STATE OF CALIFORNIA
DEPARTMENT OF TRANSPORTATION

PROJECT PLANS FOR CONSTRUCTION ON
STATE HIGHWAY

IN FRESNO COUNTY
IN FRESNO AT VARIOUS LOCATIONS
FROM ASHLAN AVENUE OVERCROSSING
TO 0.2 MILE NORTH OF BULLARD AVENUE OVERCROSSING

TO BE SUPPLEMENTED BY STANDARD PLANS DATED MAY 2006

INDEX OF PLANS

SHEET No.	DESCRIPTION
1	TITLE AND LOCATION MAP
2-4	TYPICAL CROSS SECTIONS
5-9	LAYOUTS
10-11	PROFILE AND SUPERELEVATION DIAGRAMS
12-14	CONSTRUCTION DETAILS
15-16	TEMPORARY WATER POLLUTION CONTROL PLAN, DETAILS AND QUANTITIES
17-33	DRAINAGE PLANS, PROFILES, DETAILS AND QUANTITIES
34-38	UTILITY PLAN, DETAILS AND QUANTITIES
39	CONSTRUCTION AREA SIGNS
40-42	TRAFFIC HANDLING PLAN, DETAILS AND QUANTITIES
43-48	PAVEMENT DELINEATION PLAN, DETAILS AND QUANTITIES
49-60	SIGN PLANS, DETAILS AND QUANTITIES
61-62	SUMMARY OF QUANTITIES
63-67	RETAINING WALL PLAN, TYPICAL, DETAILS AND QUANTITIES
68-72	IRRIGATION REMOVAL PLANS
73-80	ELECTRICAL PLANS
81-107	REVISED AND NEW STANDARD PLANS

THE STANDARD PLANS LIST APPLICABLE TO THIS CONTRACT IS INCLUDED IN THE NOTICE TO BIDDERS AND SPECIAL PROVISIONS BOOK.

LOCATION MAP

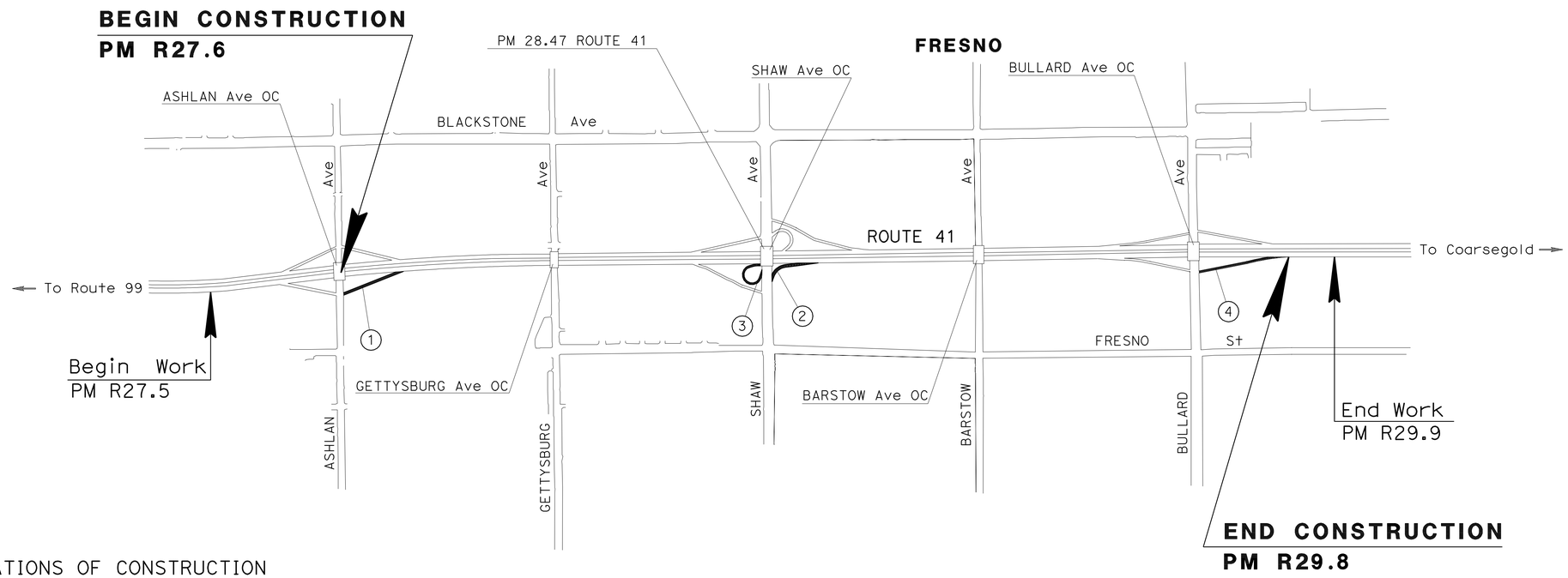

LOCATIONS OF CONSTRUCTION

No.	DESCRIPTION	PM
1	NB ON-RAMP AT ASHLAN AVENUE	R27.6
2	NB ON-RAMP AT SHAW AVENUE	R28.6
3	NB ON-RAMP LOOP AT SHAW AVENUE	R28.4
4	NB ON-RAMP BULLARD AVENUE	R29.6

NO SCALE

THE CONTRACTOR SHALL POSSESS THE CLASS (OR CLASSES) OF LICENSE AS SPECIFIED IN THE "NOTICE TO BIDDERS."

PROJECT MANAGER: ANAND KAPOOR
DESIGN ENGINEER: MIKE BETTEGA

Michael S. Bettega 04/07/09
PROJECT ENGINEER DATE
REGISTERED CIVIL ENGINEER

August 17, 2008
PLANS APPROVAL DATE

REGISTERED PROFESSIONAL ENGINEER MICHAEL S. BETTEGA No. C 34348 Exp. 9/30/09 CIVIL STATE OF CALIFORNIA

THE STATE OF CALIFORNIA OR ITS OFFICERS OR AGENTS SHALL NOT BE RESPONSIBLE FOR THE ACCURACY OR COMPLETENESS OF SCANNED COPIES OF THIS PLAN SHEET.

LAST REVISION 04-30-09
DATE PLOTTED => 30-DEC-2009
TIME PLOTTED => 10:13

CONTRACT No. 06-0E9704

Dist	COUNTY	ROUTE	POST MILES TOTAL PROJECT	SHEET No.	TOTAL SHEETS
06	Fre	41	R27.6/R29.8	2	107

Michael S. Bettega 04/07/09
REGISTERED CIVIL ENGINEER DATE

8-17-09
PLANS APPROVAL DATE

REGISTERED PROFESSIONAL ENGINEER MICHAEL S. BETTEGA No. C 34348 Exp. 9/30/09 CIVIL STATE OF CALIFORNIA

THE STATE OF CALIFORNIA OR ITS OFFICERS OR AGENTS SHALL NOT BE RESPONSIBLE FOR THE ACCURACY OR COMPLETENESS OF SCANNED COPIES OF THIS PLAN SHEET.

NOTES:

1. DIMENSIONS OF THE PAVEMENT STRUCTURES (STRUCTURAL SECTIONS) ARE SUBJECT TO TOLERANCES SPECIFIED IN THE STANDARD SPECIFICATIONS.
2. SUPERELEVATION AS SHOWN OR AS DIRECTED BY THE ENGINEER.

DESIGN DESIGNATION

ADT (2010)	8,400
ADT (2020)	10,600
ADT (2030)	13,500
DHV (2020)	1,050
DHV (2030)	1,350
D	100%
T	3%

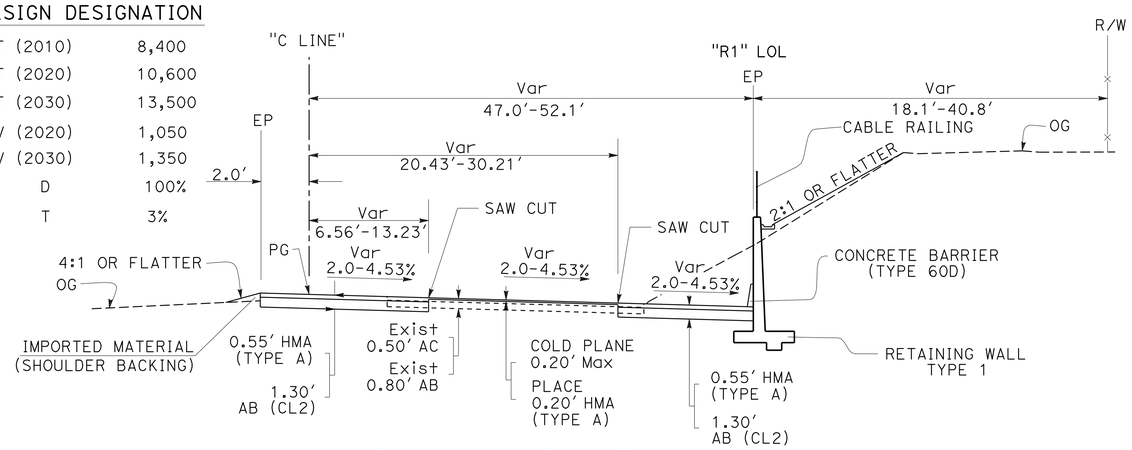

Sta 12+50.00 - Sta 15+84.17

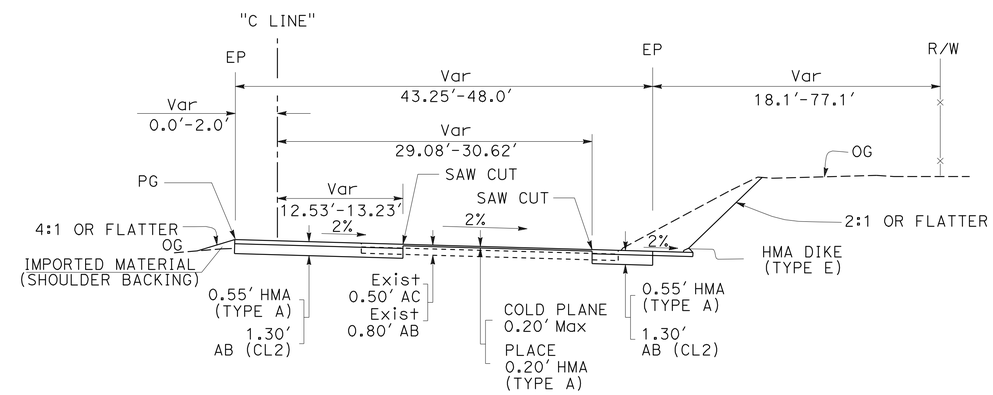

Sta 11+75.70 - Sta 12+50.00

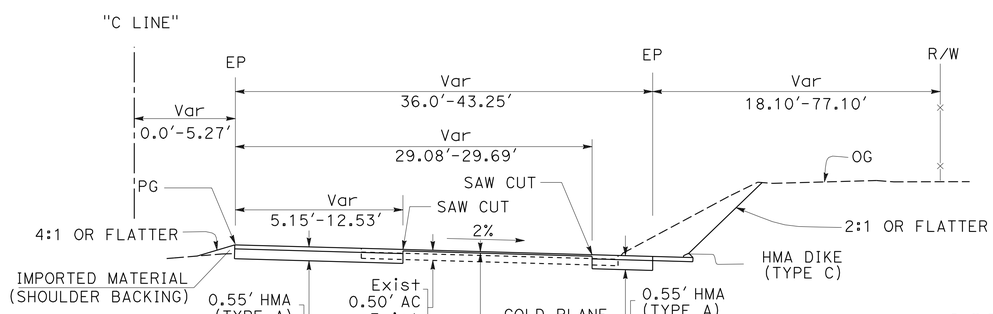

Sta 11+32.92 - Sta 11+75.70

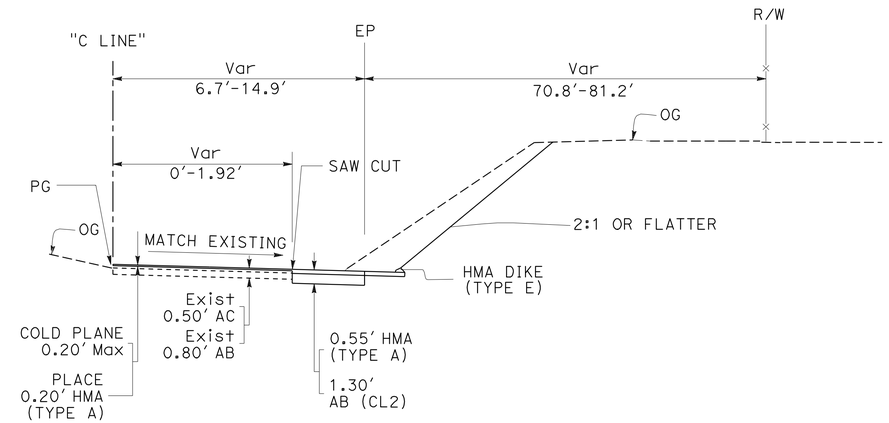

Sta 21+50.00 - Sta 22+74.65

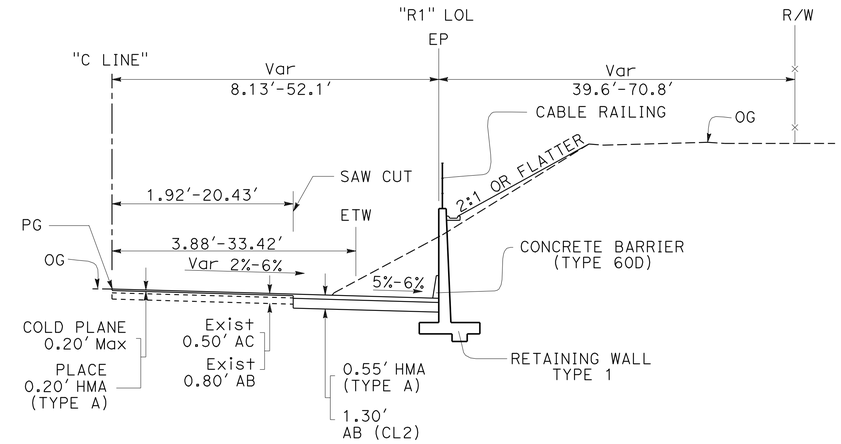

Sta 15+84.17 - Sta 21+50.00

ROUTE 41
ASHLAN AVENUE
LOCATION 1
NB DIRECTIONAL ON-RAMP

TYPICAL CROSS SECTIONS

NO SCALE

X-1

STATE OF CALIFORNIA - DEPARTMENT OF TRANSPORTATION
Caltrans®
DESIGN

FUNCTIONAL SUPERVISOR: GETACHEW ESHETE
CALCULATED-DESIGNED BY: MIKE BETTEGA
CHECKED BY: TRIET LY
REVISED BY
DATE REVISED

LAST REVISION 04-30-09
DATE PLOTTED => 20-AUG-2009
TIME PLOTTED => 10:07

Dist	COUNTY	ROUTE	POST MILES TOTAL PROJECT	SHEET No.	TOTAL SHEETS
06	Fre	41	R27.6/R29.8	3	107

REGISTERED CIVIL ENGINEER 04/07/09 DATE

8-17-09
PLANS APPROVAL DATE

REGISTERED PROFESSIONAL ENGINEER MICHAEL S. BETTEGA No. C 34348 Exp. 9/30/09 CIVIL STATE OF CALIFORNIA

THE STATE OF CALIFORNIA OR ITS OFFICERS OR AGENTS SHALL NOT BE RESPONSIBLE FOR THE ACCURACY OR COMPLETENESS OF SCANNED COPIES OF THIS PLAN SHEET.

DESIGN DESIGNATION

ADT (2010)	8,500
ADT (2020)	10,400
ADT (2030)	12,800
DHV (2020)	1,050
DHV (2030)	1,300
D	100%
T	3%

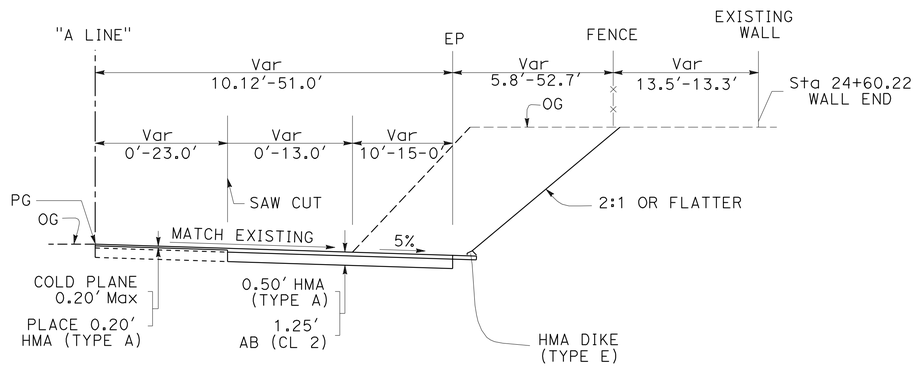

Sta 19+50.00 - Sta 30+90.69

DESIGN DESIGNATION

ADT (2010)	4,350
ADT (2020)	5,300
ADT (2030)	6,600
DHV (2020)	540
DHV (2030)	660
D	100%
T	3%

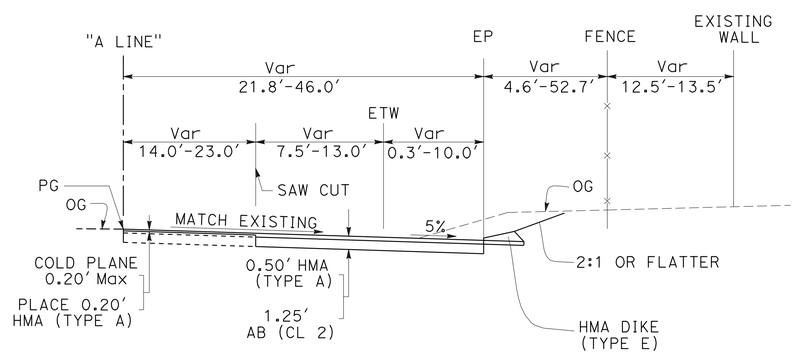

Sta 11+68.14 - Sta 19+50.00

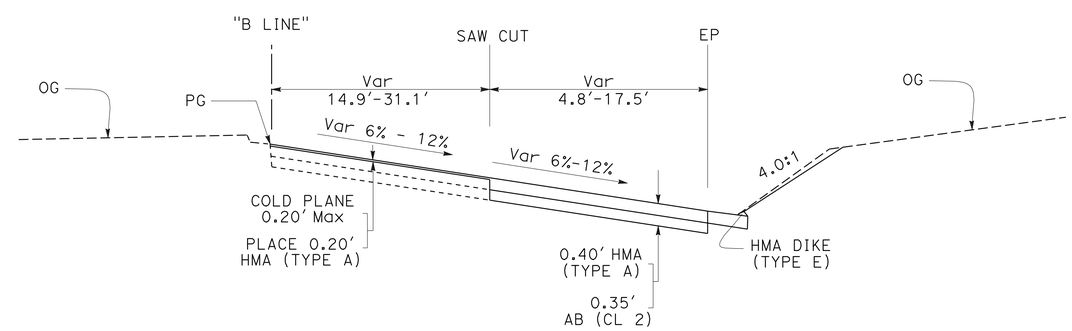

Sta 23+03.67 - Sta 28+19.02

ROUTE 41
SHAW AVENUE
LOCATION 2
NB DIRECTIONAL ON-RAMP

ROUTE 41
SHAW AVENUE
LOCATION 3
NB LOOP RAMP

TYPICAL CROSS SECTIONS

NO SCALE **X-2**

STATE OF CALIFORNIA - DEPARTMENT OF TRANSPORTATION
DESIGN
FUNCTIONAL SUPERVISOR: GETACHEW ESHETE
CALCULATED-DESIGNED BY: MIKE BETTEGA
CHECKED BY: TRIET LY
REVISED BY
DATE REVISED

LAST REVISION 04-30-09
DATE PLOTTED => 20-AUG-2009
TIME PLOTTED => 10:07

Dist	COUNTY	ROUTE	POST MILES TOTAL PROJECT	SHEET No.	TOTAL SHEETS
06	Fre	41	R27.6/R29.8	4	107

REGISTERED CIVIL ENGINEER 04/07/09 DATE

8-17-09
PLANS APPROVAL DATE

REGISTERED PROFESSIONAL ENGINEER MICHAEL S. BETTEGA No. C 34348 Exp. 9/30/09 CIVIL STATE OF CALIFORNIA

THE STATE OF CALIFORNIA OR ITS OFFICERS OR AGENTS SHALL NOT BE RESPONSIBLE FOR THE ACCURACY OR COMPLETENESS OF SCANNED COPIES OF THIS PLAN SHEET.

DESIGN DESIGNATION

ADT (2010)	6,800
ADT (2020)	8,600
ADT (2030)	10,700
DHV (2020)	860
DHV (2030)	1,050
D	100%
T	3%

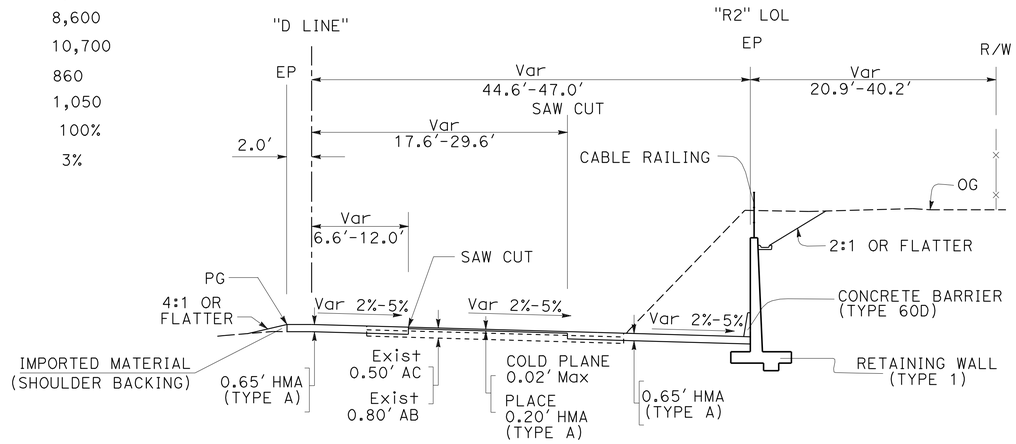

Sta 101+51.44 - Sta 106+28.52

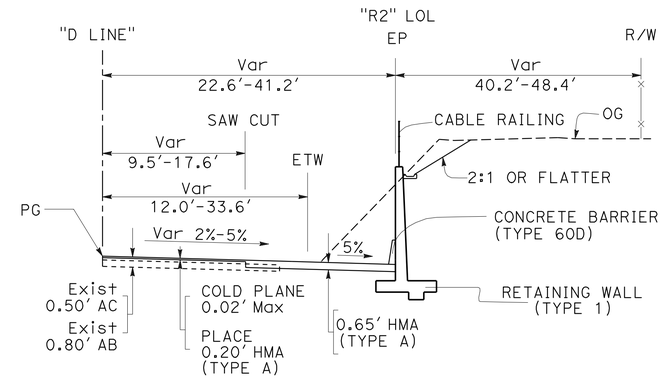

Sta 106+28.52 - Sta 118+97.15

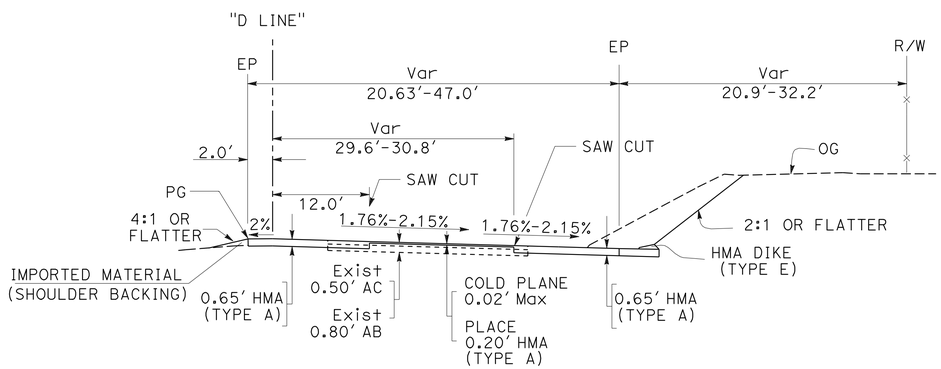

Sta 100+57.48 - Sta 101+51.44

ROUTE 41
BULLARD AVENUE
LOCATION 4
NB DIRECTIONAL ON-RAMP

TYPICAL CROSS SECTIONS

NO SCALE **X-3**

STATE OF CALIFORNIA - DEPARTMENT OF TRANSPORTATION
Caltrans
DESIGN

FUNCTIONAL SUPERVISOR: GETACHEW ESHETE
CALCULATED-DESIGNED BY: MIKE BETTEGA
CHECKED BY: TRIET LY
REVISED BY
DATE REVISED

LAST REVISION 04-30-09 | DATE PLOTTED => 20-AUG-2009 | TIME PLOTTED => 10:08

Dist	COUNTY	ROUTE	POST MILES TOTAL PROJECT	SHEET No.	TOTAL SHEETS
06	Fre	41	R27.6/R29.8	5	107

Michael S. Bettega 04/07/09
REGISTERED CIVIL ENGINEER DATE

8-17-09
PLANS APPROVAL DATE

REGISTERED PROFESSIONAL ENGINEER MICHAEL S. BETTEGA No. C 34348 Exp. 9/30/09 CIVIL STATE OF CALIFORNIA

THE STATE OF CALIFORNIA OR ITS OFFICERS OR AGENTS SHALL NOT BE RESPONSIBLE FOR THE ACCURACY OR COMPLETENESS OF SCANNED COPIES OF THIS PLAN SHEET.

NOTE: FOR COMPLETE RIGHT OF WAY AND ACCURATE ACCESS DATA, SEE RIGHT OF WAY RECORD MAPS AT DISTRICT OFFICE

LEGEND

COLD PLANE AC PAVEMENT

RELOCATE (FROM / TO)

ABBREVIATIONS

AFTS - ALTERNATIVE FLARED TERMINAL SYSTEM
EAA - END ANCHOR ASSEMBLY (TYPE SFT)
MVP - MAINTENANCE VEHICLE PULLOUT

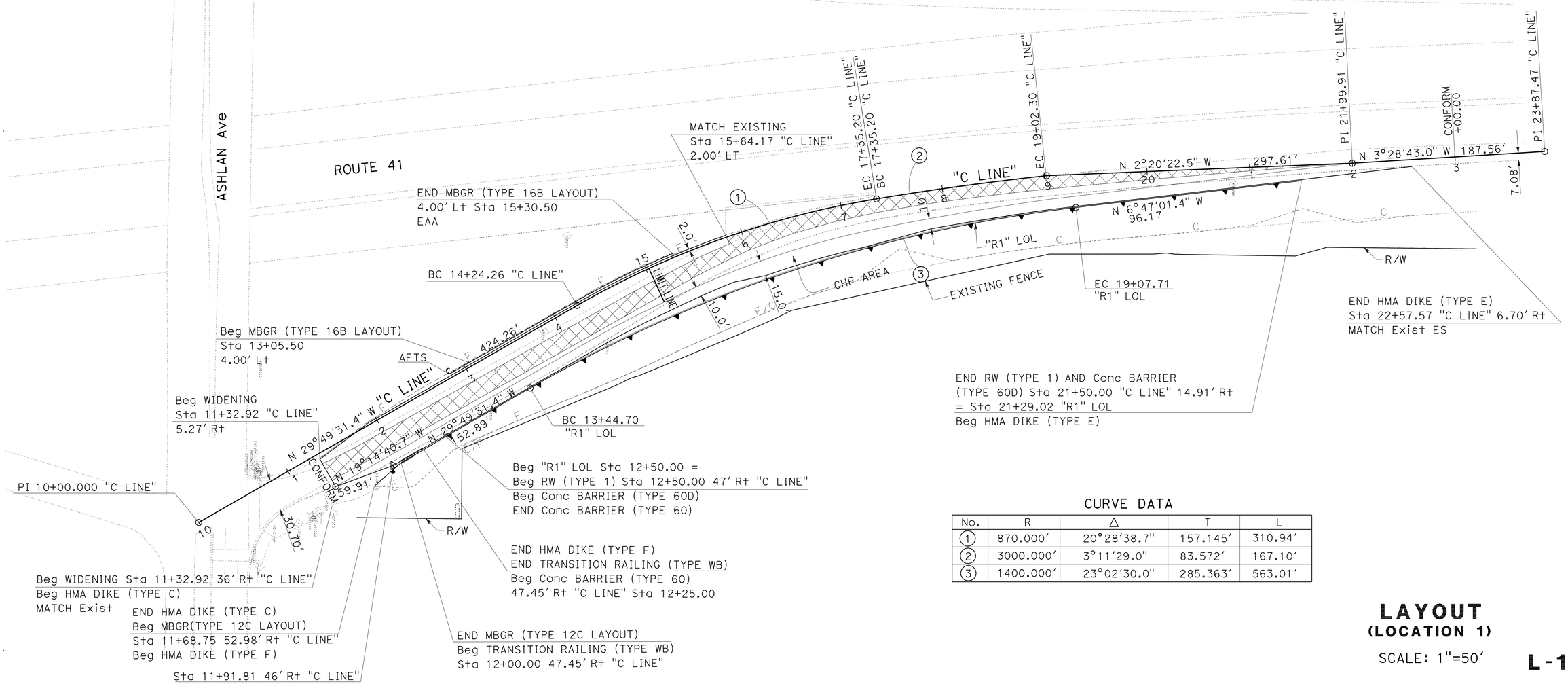

CURVE DATA

No.	R	Δ	T	L
1	870.000'	20°28'38.7"	157.145'	310.94'
2	3000.000'	3°11'29.0"	83.572'	167.10'
3	1400.000'	23°02'30.0"	285.363'	563.01'

LAYOUT
(LOCATION 1)

SCALE: 1"=50'

L-1

STATE OF CALIFORNIA - DEPARTMENT OF TRANSPORTATION
Caltrans DESIGN
FUNCTIONAL SUPERVISOR: GETACHEW ESHETE
MIKE BETTEGA / TRIET LY
CALCULATED-DESIGNED BY / CHECKED BY
REVISED BY / DATE REVISED

LAST REVISION 04-30-09 | DATE PLOTTED => 20-AUG-2009 | TIME PLOTTED => 10:08

BORDER LAST REVISED 4/11/2008 | RELATIVE BORDER SCALE IS IN INCHES 0 1 2 3 | USERNAME => trmikesl | DGN FILE => 60E970ea001.dgn | CU 06261 | EA 0E9701

Dist	COUNTY	ROUTE	POST MILES TOTAL PROJECT	SHEET No.	TOTAL SHEETS
06	Fre	41	R27.6/R29.8	6	107

REGISTERED CIVIL ENGINEER 04/07/09 DATE

8-17-09
PLANS APPROVAL DATE

REGISTERED PROFESSIONAL ENGINEER MICHAEL S. BETTEGA No. C 34348 Exp. 9/30/09 CIVIL STATE OF CALIFORNIA

THE STATE OF CALIFORNIA OR ITS OFFICERS OR AGENTS SHALL NOT BE RESPONSIBLE FOR THE ACCURACY OR COMPLETENESS OF SCANNED COPIES OF THIS PLAN SHEET.

NOTE: FOR COMPLETE RIGHT OF WAY AND ACCURATE ACCESS DATA, SEE RIGHT OF WAY RECORD MAPS AT DISTRICT OFFICE

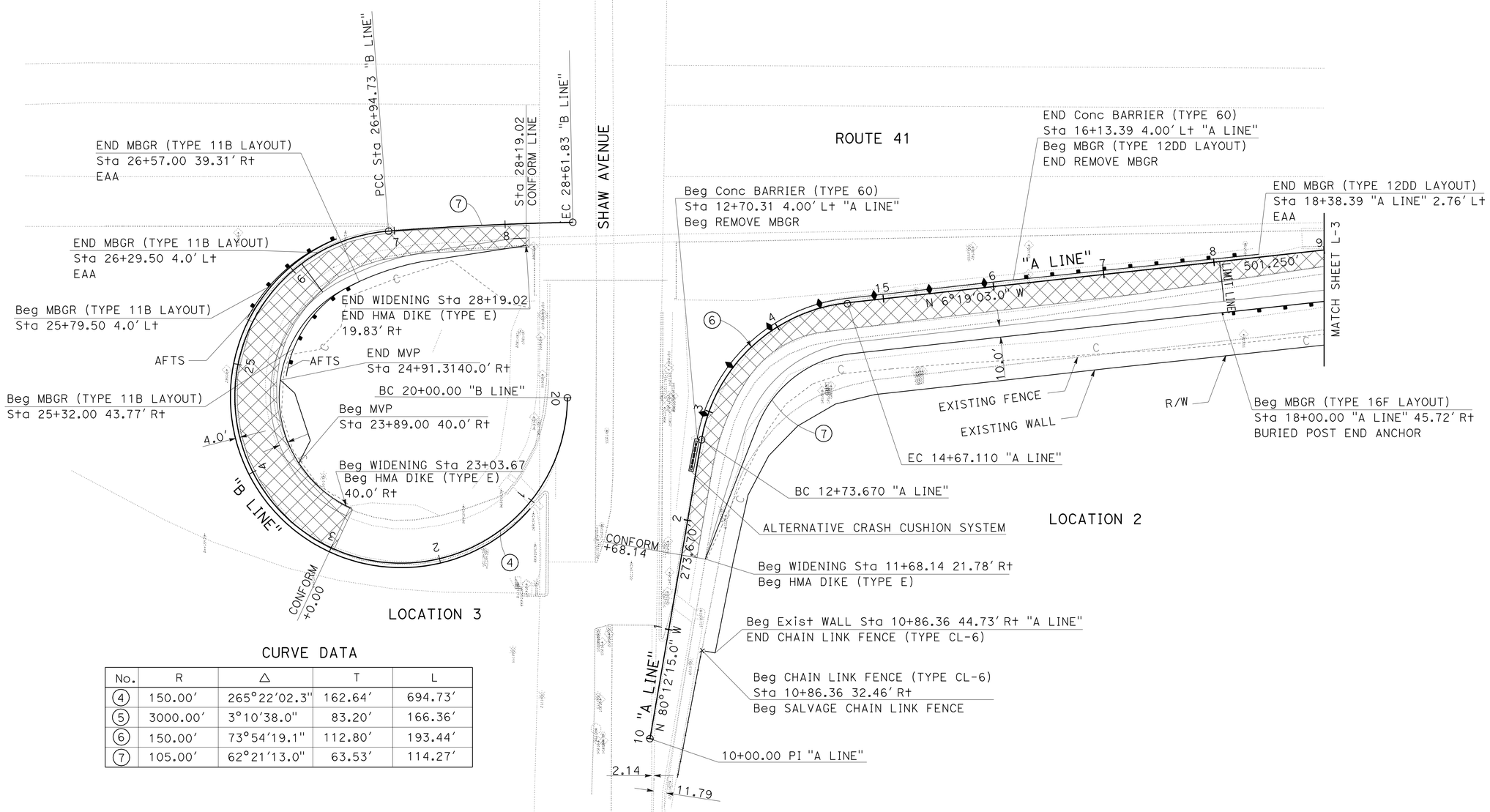

CURVE DATA

No.	R	Δ	T	L
4	150.00'	265°22'02.3"	162.64'	694.73'
5	3000.00'	3°10'38.0"	83.20'	166.36'
6	150.00'	73°54'19.1"	112.80'	193.44'
7	105.00'	62°21'13.0"	63.53'	114.27'

LAYOUT
(LOCATION 2 AND 3)

SCALE: 1"=50'

L-2

STATE OF CALIFORNIA - DEPARTMENT OF TRANSPORTATION
DESIGN
FUNCTIONAL SUPERVISOR: GETACHEW ESHETE
CALCULATED-DESIGNED BY: MIKE BETTEGA
CHECKED BY: TRIET LY
REVISED BY
DATE REVISED

LAST REVISION 04-30-09
DATE PLOTTED => 20-AUG-2009
TIME PLOTTED => 10:08

Dist	COUNTY	ROUTE	POST MILES TOTAL PROJECT	SHEET No.	TOTAL SHEETS
06	Fre	41	R27.6/R29.8	7	107

REGISTERED CIVIL ENGINEER 04/07/09 DATE

8-17-09
PLANS APPROVAL DATE

REGISTERED PROFESSIONAL ENGINEER MICHAEL S. BETTEGA No. C 34348 Exp. 9/30/09 CIVIL STATE OF CALIFORNIA

THE STATE OF CALIFORNIA OR ITS OFFICERS OR AGENTS SHALL NOT BE RESPONSIBLE FOR THE ACCURACY OR COMPLETENESS OF SCANNED COPIES OF THIS PLAN SHEET.

NOTE: FOR COMPLETE RIGHT OF WAY AND ACCURATE ACCESS DATA, SEE RIGHT OF WAY RECORD MAPS AT DISTRICT OFFICE

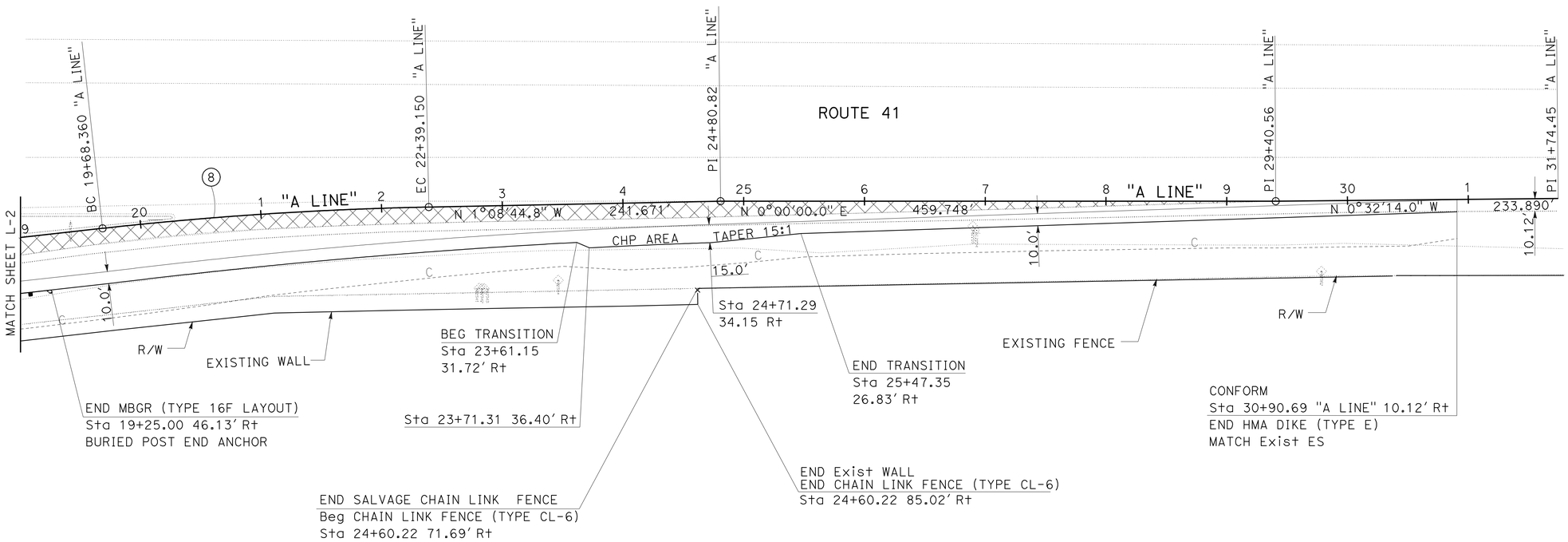

CURVE DATA

No.	R	△	T	L
8	3000.000'	5°10'18.5"	135.48'	270.79'

LAYOUT
(LOCATION 2)

SCALE: 1"=50'

L-3

STATE OF CALIFORNIA - DEPARTMENT OF TRANSPORTATION
Caltrans
DESIGN

FUNCTIONAL SUPERVISOR: GETACHEW ESHETE
CALCULATED-DESIGNED BY: MIKE BETTEGA
CHECKED BY: TRIET LY
REVISED BY
DATE REVISED

LAST REVISION 04-30-09
DATE PLOTTED => 20-AUG-2009
TIME PLOTTED => 10:08

Dist	COUNTY	ROUTE	POST MILES TOTAL PROJECT	SHEET No.	TOTAL SHEETS
06	Fre	41	R27.6/R29.8	8	107

Michael S. Bettega 04/07/09
REGISTERED CIVIL ENGINEER DATE

8-17-09
PLANS APPROVAL DATE

REGISTERED PROFESSIONAL ENGINEER MICHAEL S. BETTEGA No. C 34348 Exp. 9/30/09 CIVIL STATE OF CALIFORNIA

THE STATE OF CALIFORNIA OR ITS OFFICERS OR AGENTS SHALL NOT BE RESPONSIBLE FOR THE ACCURACY OR COMPLETENESS OF SCANNED COPIES OF THIS PLAN SHEET.

NOTE: FOR COMPLETE RIGHT OF WAY AND ACCURATE ACCESS DATA, SEE RIGHT OF WAY RECORD MAPS AT DISTRICT OFFICE

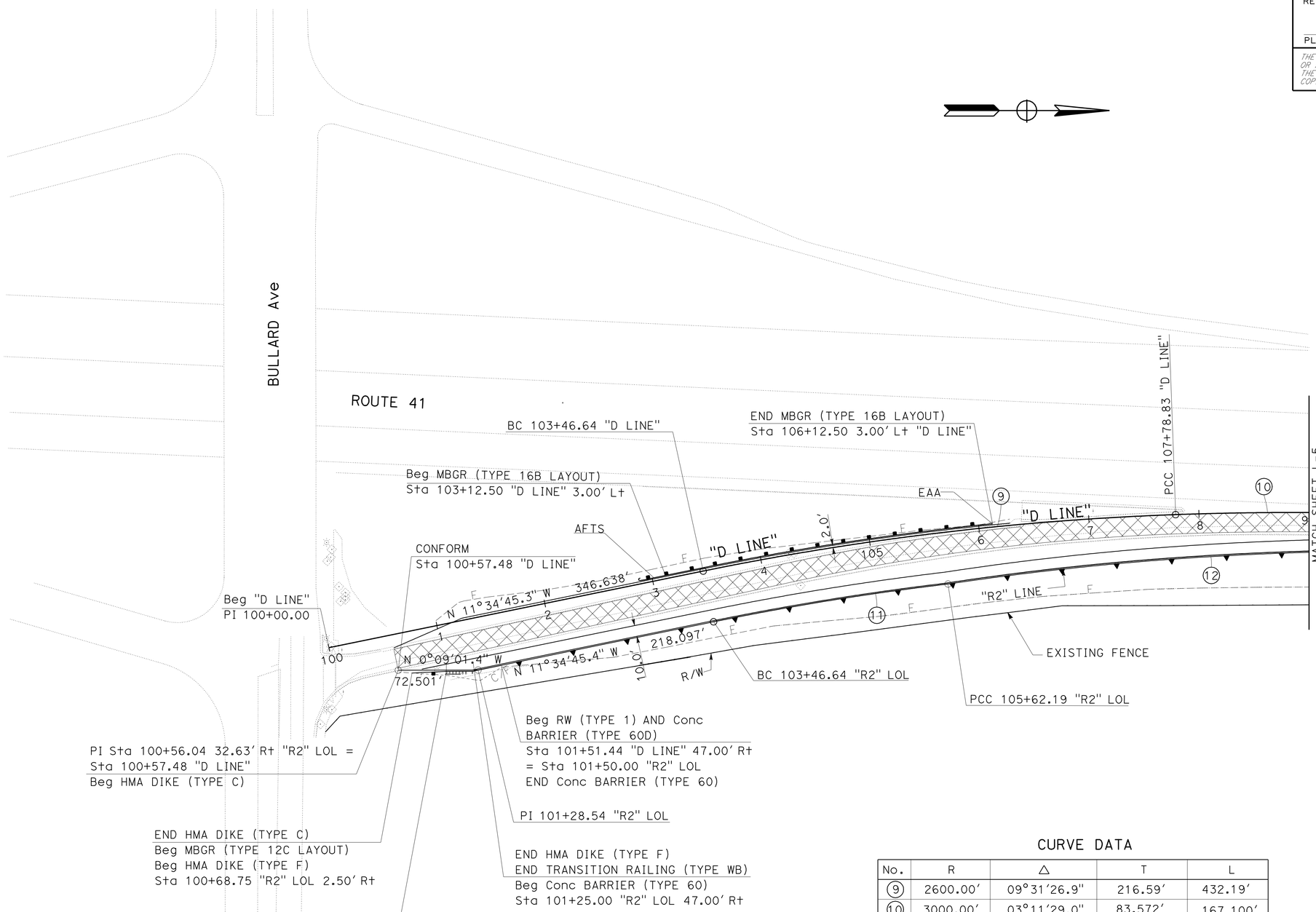

CURVE DATA

No.	R	Δ	T	L
9	2600.00'	09°31'26.9"	216.59'	432.19'
10	3000.00'	03°11'29.0"	83.572'	167.100'
11	2553.00'	04°50'14.7"	107.83'	215.54'
12	2730.00'	08°51'53.3"	211.615'	422.386'

LAYOUT
(LOCATION 4)

SCALE: 1"=50'

L-4

STATE OF CALIFORNIA - DEPARTMENT OF TRANSPORTATION
Caltrans
DESIGN

FUNCTIONAL SUPERVISOR: GETACHEW ESHETE
CALCULATED-DESIGNED BY: MIKE BETTEGA
CHECKED BY: TRIET LY
REVISED BY
DATE REVISED

LAST REVISION 04-30-09
DATE PLOTTED => 20-AUG-2009
TIME PLOTTED => 10:08

Dist	COUNTY	ROUTE	POST MILES TOTAL PROJECT	SHEET No.	TOTAL SHEETS
06	Fre	41	R27.6/R29.8	9	107

REGISTERED CIVIL ENGINEER 04/07/09 DATE

8-17-09
PLANS APPROVAL DATE

REGISTERED PROFESSIONAL ENGINEER MICHAEL S. BETTEGA No. C 34348 Exp. 9/30/09 CIVIL STATE OF CALIFORNIA

THE STATE OF CALIFORNIA OR ITS OFFICERS OR AGENTS SHALL NOT BE RESPONSIBLE FOR THE ACCURACY OR COMPLETENESS OF SCANNED COPIES OF THIS PLAN SHEET.

NOTE: FOR COMPLETE RIGHT OF WAY AND ACCURATE ACCESS DATA, SEE RIGHT OF WAY RECORD MAPS AT DISTRICT OFFICE

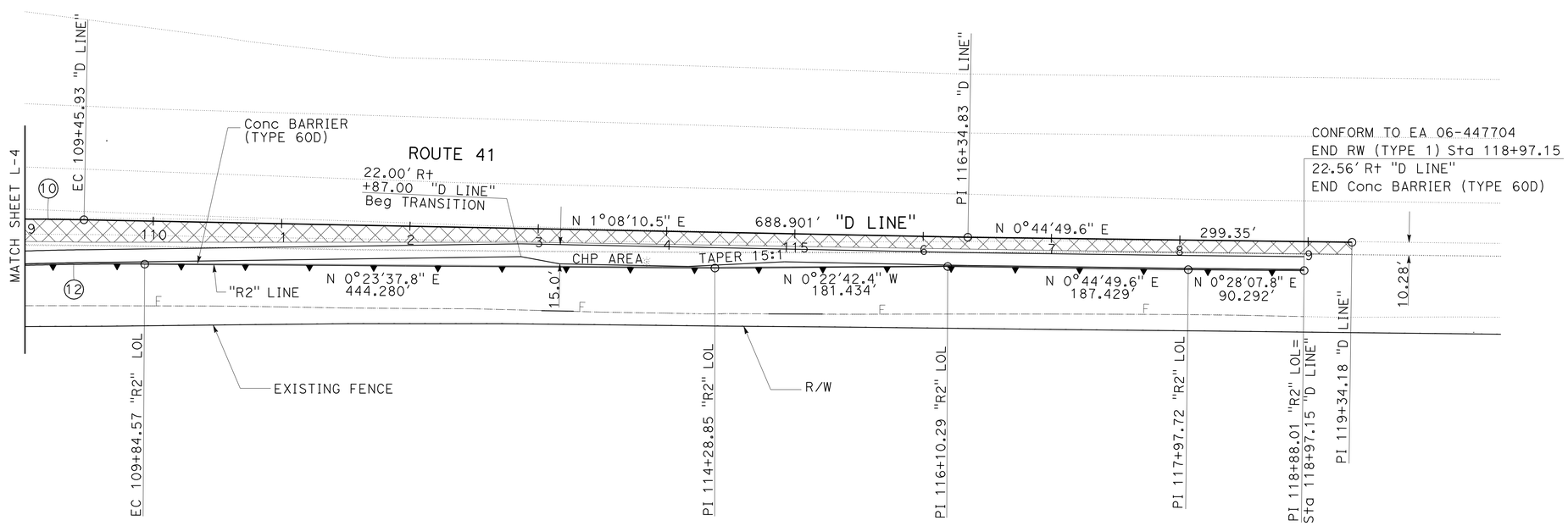

CURVE DATA

No.	R	Δ	T	L
10	3000.00'	03°11'29.0"	83.572'	167.100'
12	2730.00'	08°51'53.3"	211.615'	422.386'

LAYOUT
(LOCATION 4)
SCALE: 1"=50'

L-5

STATE OF CALIFORNIA - DEPARTMENT OF TRANSPORTATION
Caltrans
DESIGN

FUNCTIONAL SUPERVISOR: GETACHEW ESHETE
CALCULATED-DESIGNED BY: MIKE BETTEGA
CHECKED BY: TRIET LY
REVISED BY
DATE REVISED

LAST REVISION 04-30-09
DATE PLOTTED => 20-AUG-2009
TIME PLOTTED => 10:08

Dist	COUNTY	ROUTE	POST MILES TOTAL PROJECT	SHEET No.	TOTAL SHEETS
06	Fre	41	R27.6/R29.8	10	107

REGISTERED CIVIL ENGINEER 04/07/09 DATE

8-17-09
PLANS APPROVAL DATE

REGISTERED PROFESSIONAL ENGINEER MICHAEL S. BETTEGA No. C 34348 Exp. 9/30/09 CIVIL STATE OF CALIFORNIA

THE STATE OF CALIFORNIA OR ITS OFFICERS OR AGENTS SHALL NOT BE RESPONSIBLE FOR THE ACCURACY OR COMPLETENESS OF SCANNED COPIES OF THIS PLAN SHEET.

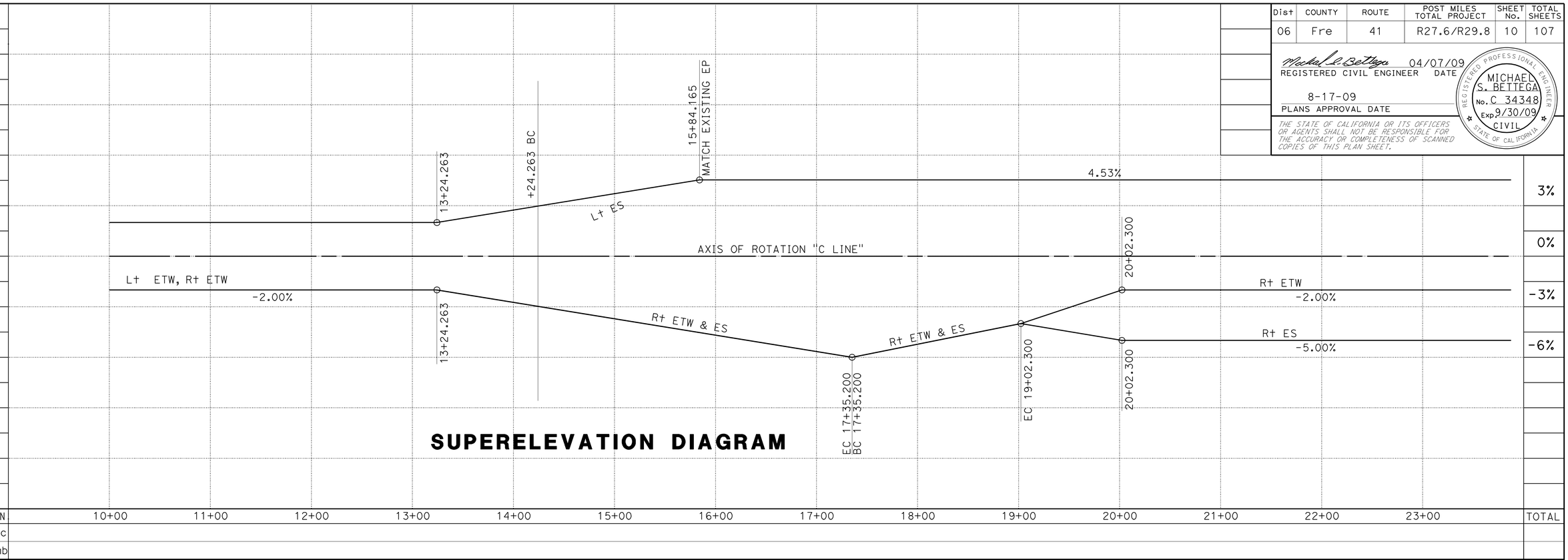

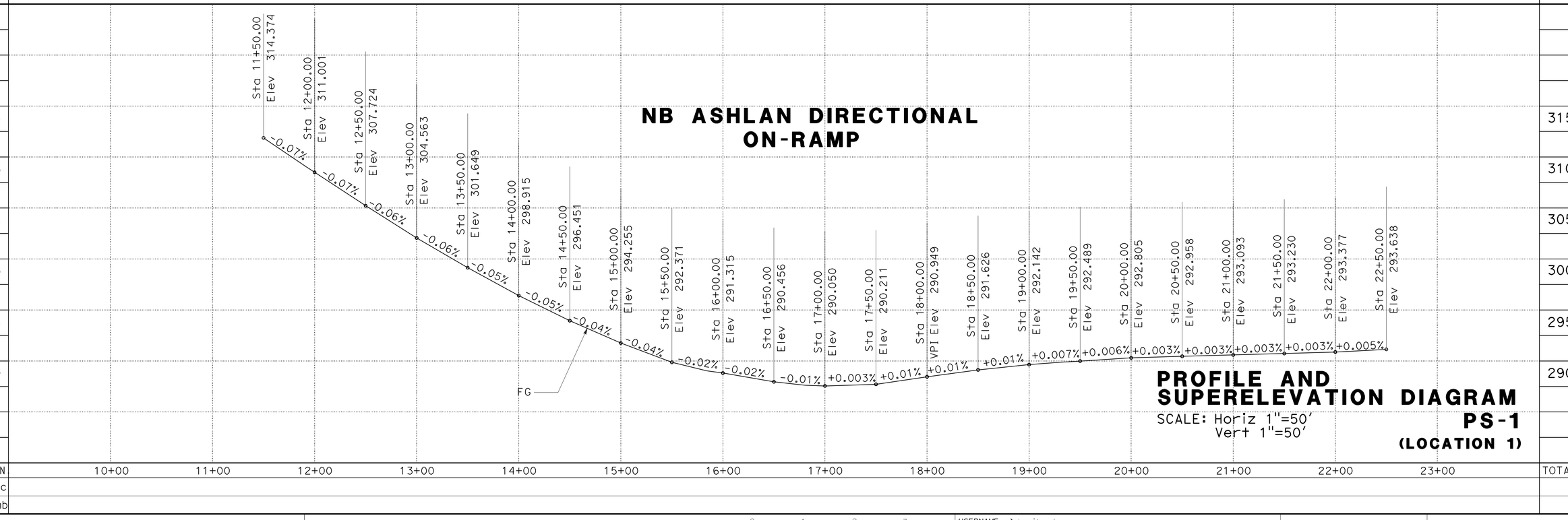

PROFILE AND SUPERELEVATION DIAGRAM

SCALE: Horiz 1"=50'
Vert 1"=50'

PS-1
(LOCATION 1)

REVISED BY	DATE REVISED

CALCULATED-DESIGNED BY: MIKE BETTEGA
CHECKED BY: TRIET LY
FUNCTIONAL SUPERVISOR: GETACHEW ESHETE

STATE OF CALIFORNIA - DEPARTMENT OF TRANSPORTATION
Caltrans
DESIGN

LAST REVISION 04-30-09
DATE PLOTTED => 20-AUG-2009
TIME PLOTTED => 10:09

Dist	COUNTY	ROUTE	POST MILES TOTAL PROJECT	SHEET No.	TOTAL SHEETS
06	Fre	41	R27.6/R29.8	11	107

Michael S. Bettega 04/07/09
REGISTERED CIVIL ENGINEER DATE

8-17-09
PLANS APPROVAL DATE

REGISTERED PROFESSIONAL ENGINEER
MICHAEL S. BETTEGA
No. C 34348
Exp. 9/30/09
CIVIL
STATE OF CALIFORNIA

THE STATE OF CALIFORNIA OR ITS OFFICERS OR AGENTS SHALL NOT BE RESPONSIBLE FOR THE ACCURACY OR COMPLETENESS OF SCANNED COPIES OF THIS PLAN SHEET.

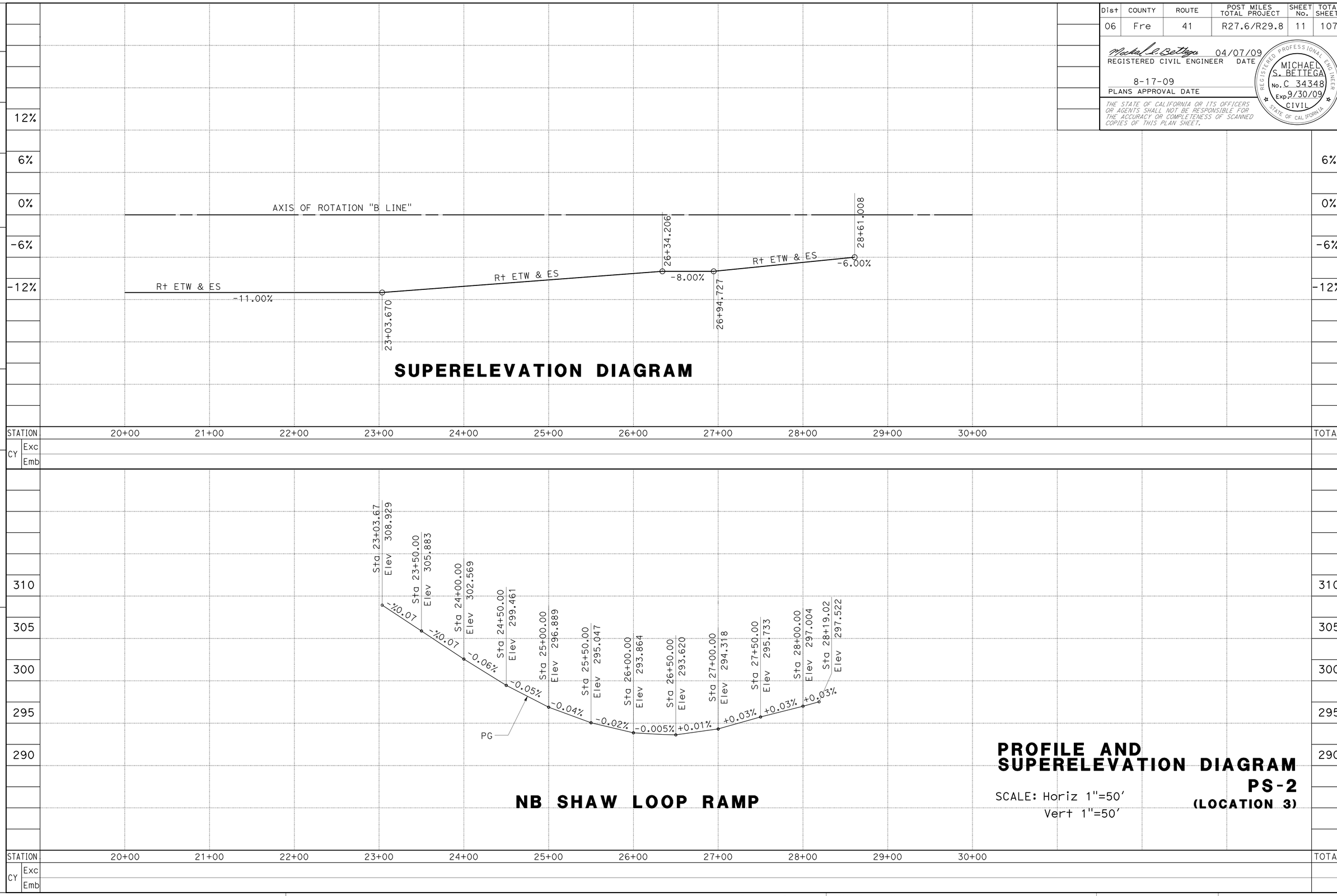

PROFILE AND SUPERELEVATION DIAGRAM

SCALE: Horiz 1"=50'
Vert 1"=50'

PS-2
(LOCATION 3)

REVISED BY | DATE REVISED
MIKE BETTEGA | TRIET LY
CALCULATED-DESIGNED BY | CHECKED BY
FUNCTIONAL SUPERVISOR
GETACHEW ESHETE

STATE OF CALIFORNIA - DEPARTMENT OF TRANSPORTATION
Caltrans
DESIGN

LAST REVISION 04-30-09 | DATE PLOTTED => 20-AUG-2009 | TIME PLOTTED => 10:09

Dist	COUNTY	ROUTE	POST MILES TOTAL PROJECT	SHEET No.	TOTAL SHEETS
06	Fre	41	R27.6/R29.8	12	107

REGISTERED CIVIL ENGINEER 04/07/09 DATE

8-17-09
PLANS APPROVAL DATE

REGISTERED PROFESSIONAL ENGINEER MICHAEL S. BETTEGA No. C 34348 Exp. 9/30/09 CIVIL STATE OF CALIFORNIA

THE STATE OF CALIFORNIA OR ITS OFFICERS OR AGENTS SHALL NOT BE RESPONSIBLE FOR THE ACCURACY OR COMPLETENESS OF SCANNED COPIES OF THIS PLAN SHEET.

NOTE:

FOR TYPICAL METAL RAILING CONNECTION DETAILS, SEE STANDARD PLANS B11-54 AND B11-55.

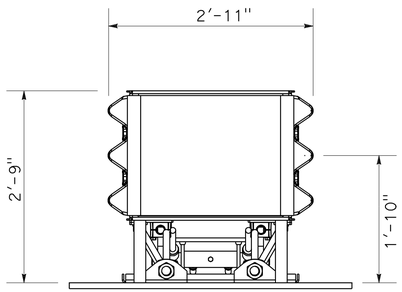

SECTION A-A

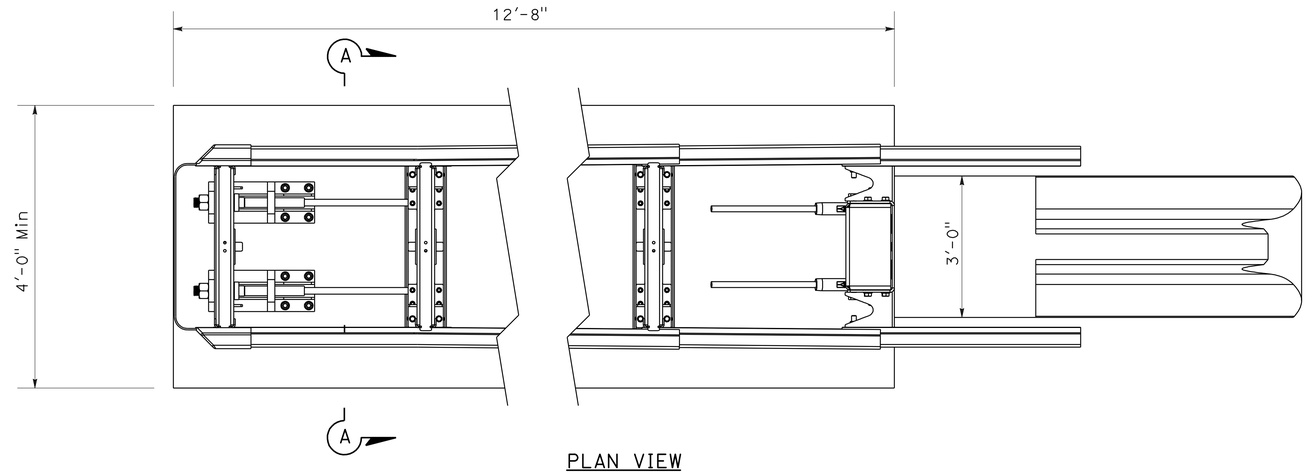

PLAN VIEW

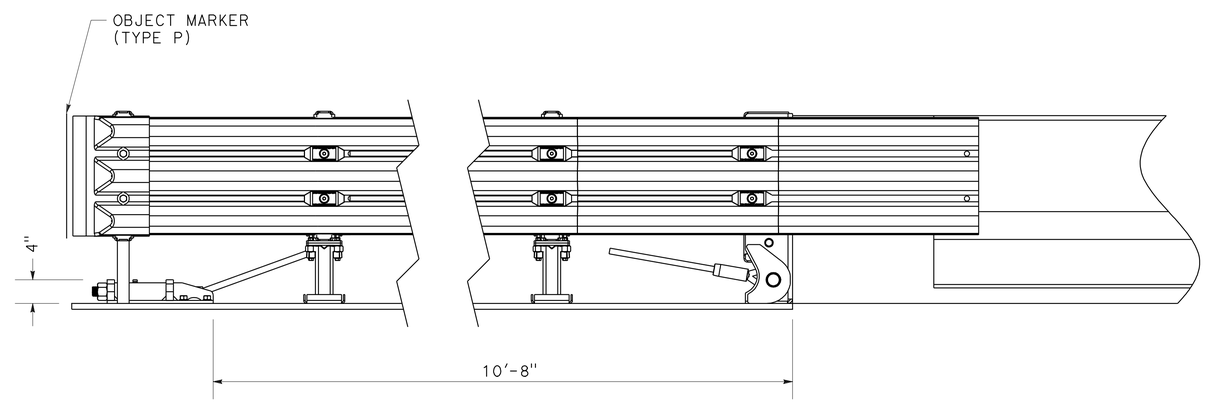

ELEVATION

CRASH CUSHION (TYPE TAU-II)

CONSTRUCTION DETAILS

NO SCALE

C-1

REVISED BY	DATE REVISED

MIKE BETTEGA — TRIET LY

CALCULATED-DESIGNED BY — CHECKED BY

FUNCTIONAL SUPERVISOR: GETACHEW ESHETE

STATE OF CALIFORNIA - DEPARTMENT OF TRANSPORTATION

Caltrans® DESIGN

LAST REVISION 04-30-09 | DATE PLOTTED => 20-AUG-2009 | TIME PLOTTED => 10:09

Dist	COUNTY	ROUTE	POST MILES TOTAL PROJECT	SHEET No.	TOTAL SHEETS
06	Fre	41	R27.6/R29.8	13	107

Michael S. Bettega 04/07/09
REGISTERED CIVIL ENGINEER DATE

8-17-09
PLANS APPROVAL DATE

REGISTERED PROFESSIONAL ENGINEER MICHAEL S. BETTEGA No. C 34348 Exp. 9/30/09 CIVIL STATE OF CALIFORNIA

THE STATE OF CALIFORNIA OR ITS OFFICERS OR AGENTS SHALL NOT BE RESPONSIBLE FOR THE ACCURACY OR COMPLETENESS OF SCANNED COPIES OF THIS PLAN SHEET.

NOTES:

1. FOR TRANSITION PANEL AND REINFORCEMENT DETAILS SEE MANUFACTURER'S DETAILS.
2. FOR ALL ACCESSORIES TO CRASH CUSHION (TYPE SMART SCI100GM) AS WELL AS ADDITIONAL DETAILS SEE MANUFACTURER'S DETAILS.
3. FOR CONCRETE PAD REINFORCEMENTS SEE MANUFACTURER'S DETAILS.
4. CROSS SLOPE AT TOP OF CONCRETE PAD NOT TO EXCEED 1:12, CROSS SLOPE SHOULD NOT VARY MORE THAN 1:48.

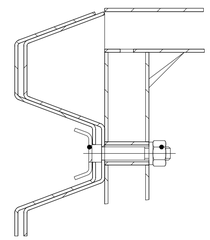

DETAIL B

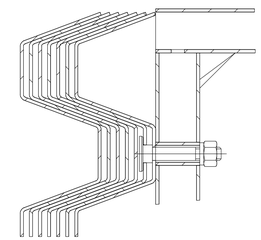

DETAIL A

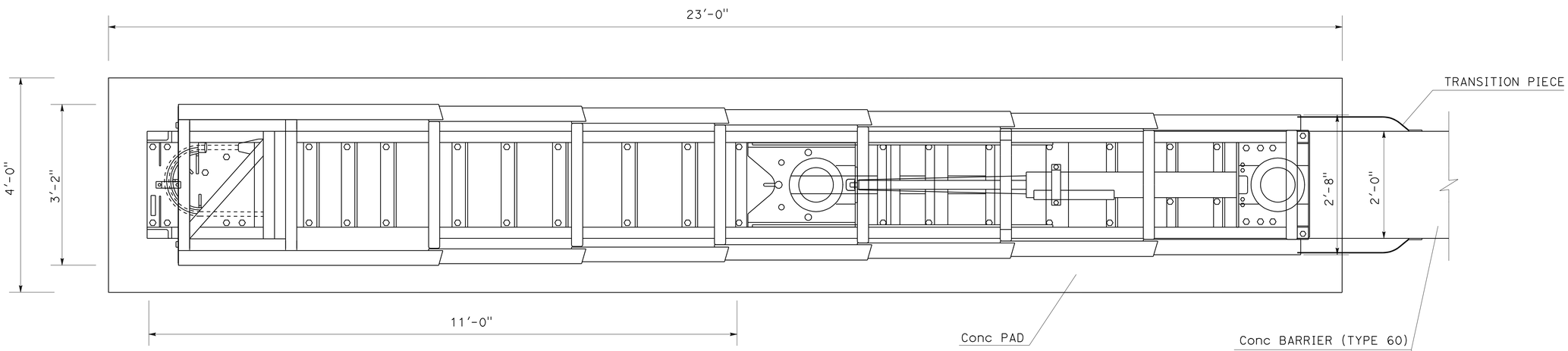

PLAN VIEW

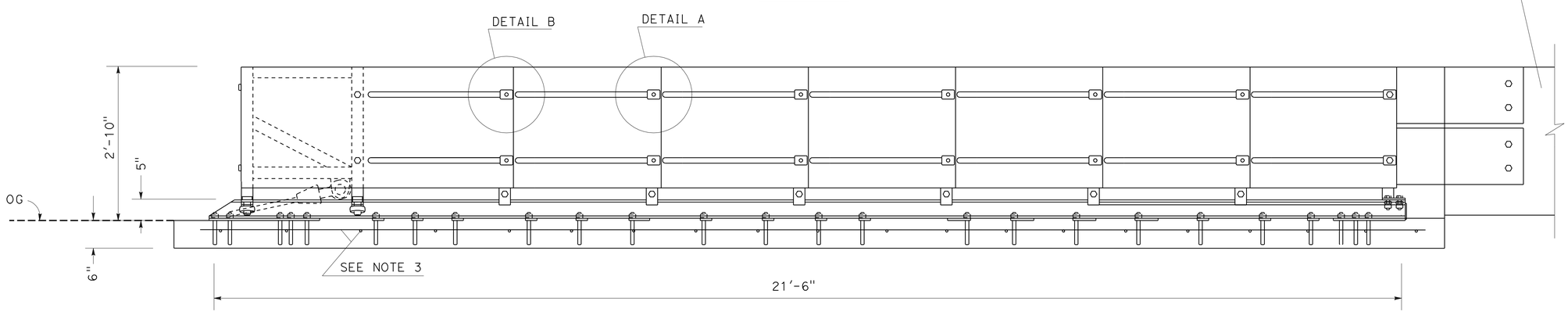

ELEVATION

CRASH CUSHION (TYPE SMART SCI100GM)

CONSTRUCTION DETAILS

NO SCALE

C-2

STATE OF CALIFORNIA - DEPARTMENT OF TRANSPORTATION
Caltrans®
DESIGN

FUNCTIONAL SUPERVISOR: GETACHEW ESHETE
CALCULATED-DESIGNED BY: MIKE BETTEGA
CHECKED BY: TRIET LY
REVISED BY
DATE REVISED

LAST REVISION 04-30-09
DATE PLOTTED => 20-AUG-2009
TIME PLOTTED => 10:09

Dist	COUNTY	ROUTE	POST MILES TOTAL PROJECT	SHEET No.	TOTAL SHEETS
06	Fre	41	R27.6/R29.8	14	107

REGISTERED CIVIL ENGINEER 04/07/09 DATE

8-17-09
PLANS APPROVAL DATE

REGISTERED PROFESSIONAL ENGINEER MICHAEL S. BETTEGA No. C 34348 Exp. 9/30/09 CIVIL STATE OF CALIFORNIA

THE STATE OF CALIFORNIA OR ITS OFFICERS OR AGENTS SHALL NOT BE RESPONSIBLE FOR THE ACCURACY OR COMPLETENESS OF SCANNED COPIES OF THIS PLAN SHEET.

NOTES:

1. INSTALLATION TO COMPLY WITH MANUFACTURER INSTRUCTIONS. FOR ALL ACCESSORIES TO QUADGUARD SYSTEM AND ADDITIONAL INFORMATION SEE MANUFACTURER'S DETAILS.
2. FOR CONCRETE PAD DETAILS, SEE MANUFACTURER'S DETAILS.
3. PROVISION SHALL BE MADE FOR REAR FENDER PANELS TO SLIDE REARWARD UPON IMPACT 2.5 feet Min.
4. FOR DETAILS OF QUADGUARD SYSTEM COMPONETS NOT SHOWN, INCLUDING CONCRETE BACKUP AND CONCRETE PAD DIMENSIONS AND BAR REINFORCING STEEL, SEE MANUFACTURER'S RECOMMENDATIONS.
5. END CAP (TYPE A). FOR ADDITIONAL DETAILS SEE CONNECTION DETAIL EE ON STANDARD PLAN A77J3.

LEGEND:

1. QUADGUARD CARTRIDGE
2. DIAPHRAGM
3. FENDER PANEL
4. MONORAIL
5. NOSE ASSEMBLY
6. Conc BACKUP

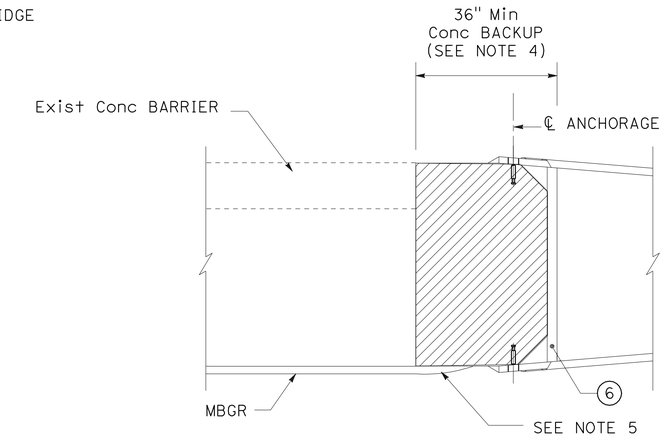

CONCRETE BACKUP DETAIL

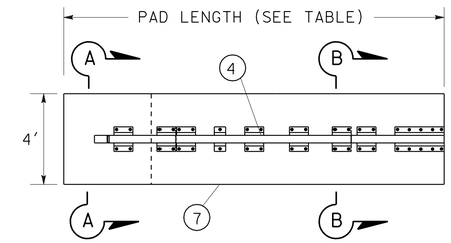

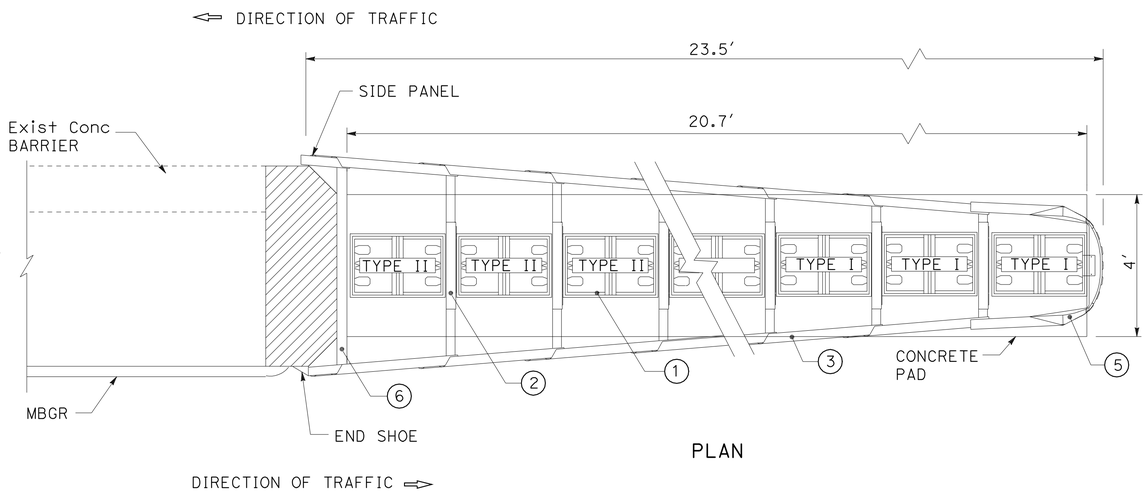

PLAN

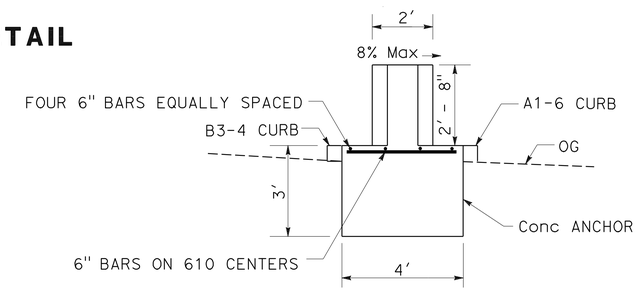

SECTION A-A

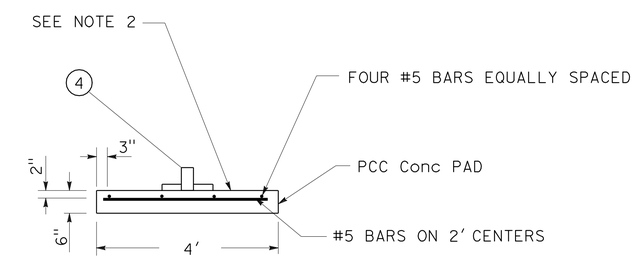

SECTION B-B

CONCRETE PAD DETAILS

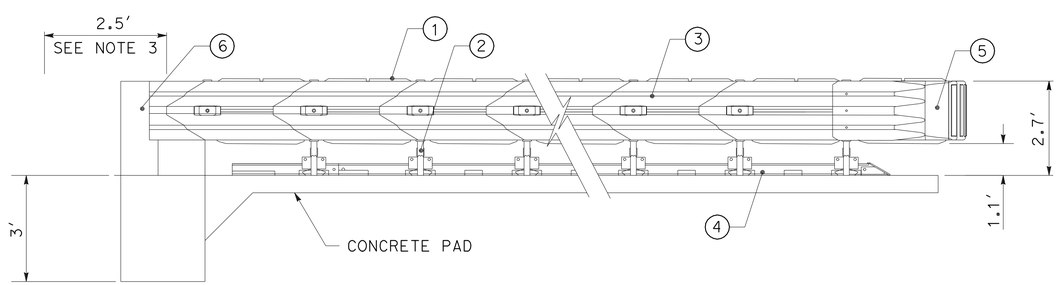

ELEVATION

QUADGUARD SYSTEM DETAIL

(MODEL No. QS2406Y)

PROPOSED No. BAYS	MODEL	SYSTEM LENGTH	EFFECTIVE LENGTH	CONCRETE PAD LENGTH
		LF	LF	LF
6	QS2406Y	23'-6"	20'-8"	20'-6"

CONSTRUCTION DETAILS

NO SCALE

C-3

STATE OF CALIFORNIA - DEPARTMENT OF TRANSPORTATION
DESIGN
FUNCTIONAL SUPERVISOR: GETACHEW ESHETE
CALCULATED-DESIGNED BY: MIKE BETTEGA
CHECKED BY: TRIET LY
REVISED BY
DATE REVISED

LAST REVISION 04-30-09
DATE PLOTTED => 20-AUG-2009
TIME PLOTTED => 10:09

Dist	COUNTY	ROUTE	POST MILES TOTAL PROJECT	SHEET No.	TOTAL SHEETS
06	Fre	41	R27.6/R29.8	15	107

Michael S. Bettega 04/07/09
REGISTERED CIVIL ENGINEER DATE

8-17-09
PLANS APPROVAL DATE

REGISTERED PROFESSIONAL ENGINEER MICHAEL S. BETTEGA No. C 34348 Exp. 9/30/09 CIVIL STATE OF CALIFORNIA

THE STATE OF CALIFORNIA OR ITS OFFICERS OR AGENTS SHALL NOT BE RESPONSIBLE FOR THE ACCURACY OR COMPLETENESS OF SCANNED COPIES OF THIS PLAN SHEET.

LEGEND:

TFR TEMPORARY FIBER ROLLS

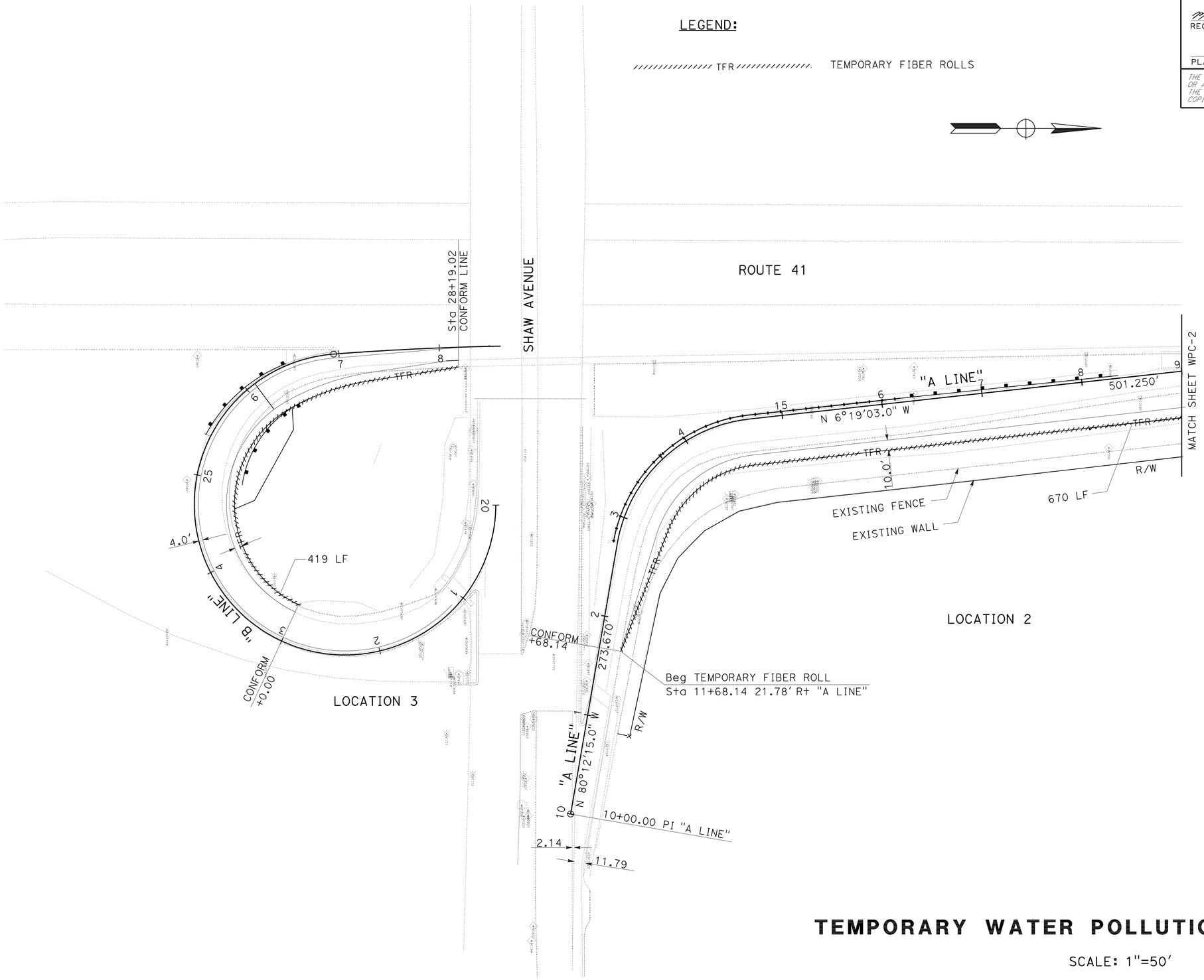

TEMPORARY WATER POLLUTION CONTROL PLAN

SCALE: 1"=50'

WPC-1

THIS PLAN ACCURATE FOR TEMPORARY WATER POLLUTION CONTROL WORK ONLY

REVISED BY	DATE REVISED

CALCULATED-DESIGNED BY: MIKE BETTEGA
CHECKED BY: TRIET LY
FUNCTIONAL SUPERVISOR: GETACHEW ESHETE

STATE OF CALIFORNIA - DEPARTMENT OF TRANSPORTATION
Caltrans
DESIGN

LAST REVISION 04-30-09
DATE PLOTTED => 20-AUG-2009
TIME PLOTTED => 10:10

Dist	COUNTY	ROUTE	POST MILES TOTAL PROJECT	SHEET No.	TOTAL SHEETS
06	Fre	41	R27.6/R29.8	16	107

Michael S. Bettega 04/07/09
REGISTERED CIVIL ENGINEER DATE

8-17-09
PLANS APPROVAL DATE

REGISTERED PROFESSIONAL ENGINEER
MICHAEL S. BETTEGA
No. C 34348
Exp. 9/30/09
CIVIL
STATE OF CALIFORNIA

THE STATE OF CALIFORNIA OR ITS OFFICERS OR AGENTS SHALL NOT BE RESPONSIBLE FOR THE ACCURACY OR COMPLETENESS OF SCANNED COPIES OF THIS PLAN SHEET.

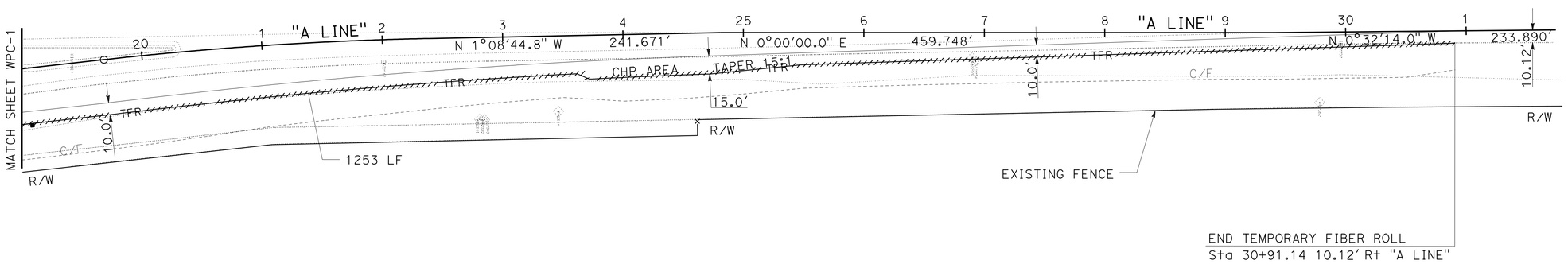

TEMPORARY WATER POLLUTION CONTROL PLAN

SCALE: 1"=50'

WPC-2

THIS PLAN ACCURATE FOR TEMPORARY WATER POLLUTION CONTROL WORK ONLY

STATE OF CALIFORNIA - DEPARTMENT OF TRANSPORTATION
Caltrans DESIGN

FUNCTIONAL SUPERVISOR: GETACHEW ESHETE
CALCULATED-DESIGNED BY: MIKE BETTEGA
CHECKED BY: TRIET LY
REVISED BY
DATE REVISED

LAST REVISION 04-30-09
DATE PLOTTED => 20-AUG-2009
TIME PLOTTED => 10:10

Dist	COUNTY	ROUTE	POST MILES TOTAL PROJECT	SHEET No.	TOTAL SHEETS
06	Fre	41	R27.6/R29.8	17	107

Michael S. Bettega 04/07/09
REGISTERED CIVIL ENGINEER DATE

8-17-09
PLANS APPROVAL DATE

REGISTERED PROFESSIONAL ENGINEER
MICHAEL S. BETTEGA
No. C 34348
Exp. 9/30/09
CIVIL
STATE OF CALIFORNIA

THE STATE OF CALIFORNIA OR ITS OFFICERS OR AGENTS SHALL NOT BE RESPONSIBLE FOR THE ACCURACY OR COMPLETENESS OF SCANNED COPIES OF THIS PLAN SHEET.

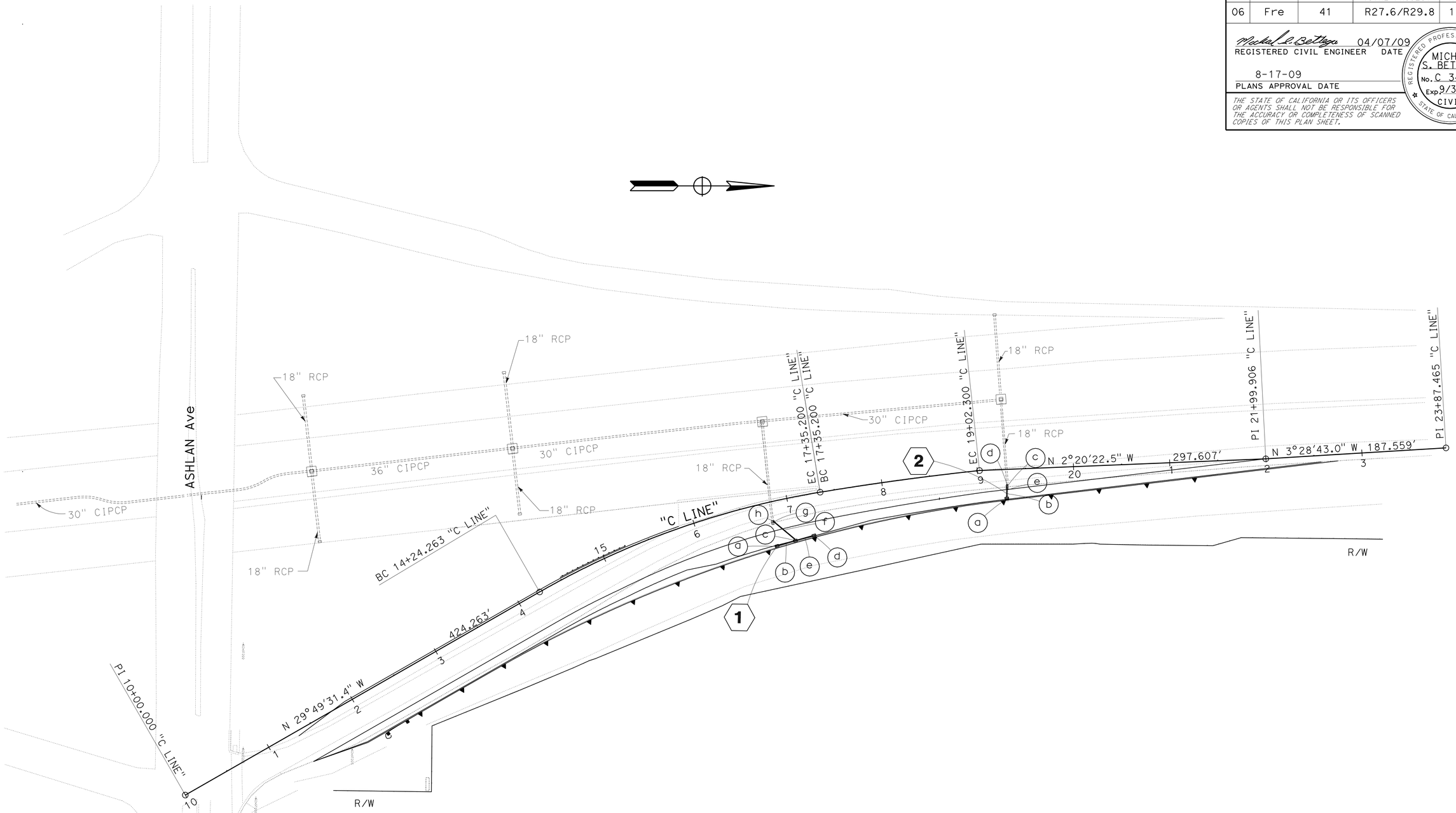

DRAINAGE PLAN

SCALE: 1"=50'

D-1

THIS PLAN ACCURATE FOR DRAINAGE ONLY

STATE OF CALIFORNIA - DEPARTMENT OF TRANSPORTATION
Caltrans
DESIGN

FUNCTIONAL SUPERVISOR: GETACHEW ESHETE
CALCULATED-DESIGNED BY: MIKE BETTEGA
CHECKED BY: TRIET LY
REVISED BY
DATE REVISED

LAST REVISION 04-30-09
DATE PLOTTED => 20-AUG-2009
TIME PLOTTED => 10:10

Dist	COUNTY	ROUTE	POST MILES TOTAL PROJECT	SHEET No.	TOTAL SHEETS
06	Fre	41	R27.6/R29.8	18	107

Michael S. Bettega 04/07/09
REGISTERED CIVIL ENGINEER DATE

8-17-09
PLANS APPROVAL DATE

REGISTERED PROFESSIONAL ENGINEER
MICHAEL S. BETTEGA
No. C 34348
Exp. 9/30/09
CIVIL
STATE OF CALIFORNIA

THE STATE OF CALIFORNIA OR ITS OFFICERS OR AGENTS SHALL NOT BE RESPONSIBLE FOR THE ACCURACY OR COMPLETENESS OF SCANNED COPIES OF THIS PLAN SHEET.

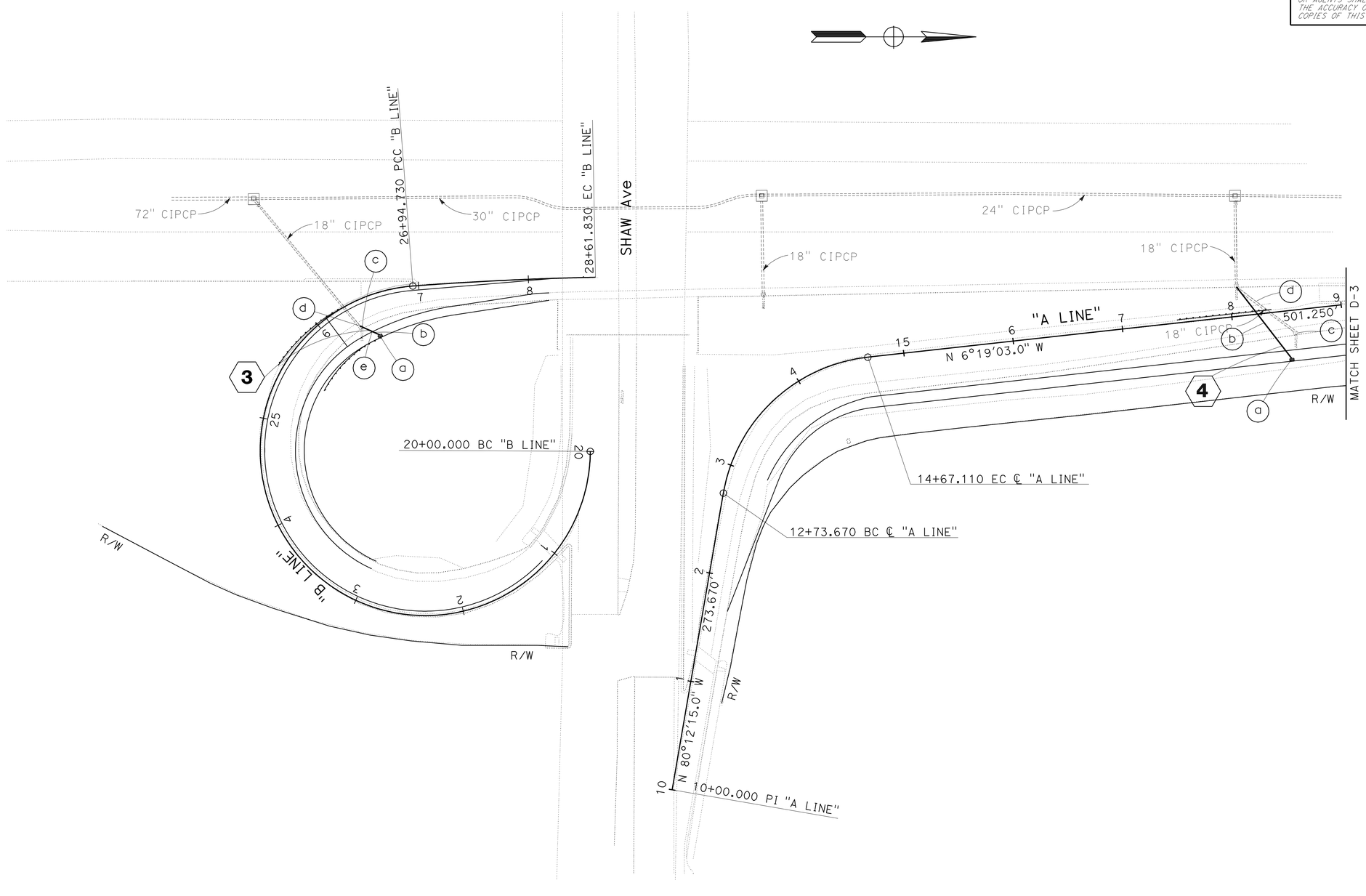

THIS PLAN ACCURATE FOR DRAINAGE ONLY

DRAINAGE PLAN

SCALE: 1"=50'

D-2

REVISED BY	DATE REVISED

CALCULATED-DESIGNED BY	CHECKED BY
MIKE BETTEGA	TRIET LY

FUNCTIONAL SUPERVISOR
GETACHEW ESHETE

STATE OF CALIFORNIA - DEPARTMENT OF TRANSPORTATION
Caltrans
DESIGN

LAST REVISION 04-30-09 | DATE PLOTTED => 20-AUG-2009 | TIME PLOTTED => 10:10

Dist	COUNTY	ROUTE	POST MILES TOTAL PROJECT	SHEET No.	TOTAL SHEETS
06	Fre	41	R27.6/R29.8	19	107

Michael S. Bettega 04/07/09
REGISTERED CIVIL ENGINEER DATE

8-17-09
PLANS APPROVAL DATE

REGISTERED PROFESSIONAL ENGINEER
MICHAEL S. BETTEGA
No. C 34348
Exp. 9/30/09
CIVIL
STATE OF CALIFORNIA

THE STATE OF CALIFORNIA OR ITS OFFICERS OR AGENTS SHALL NOT BE RESPONSIBLE FOR THE ACCURACY OR COMPLETENESS OF SCANNED COPIES OF THIS PLAN SHEET.

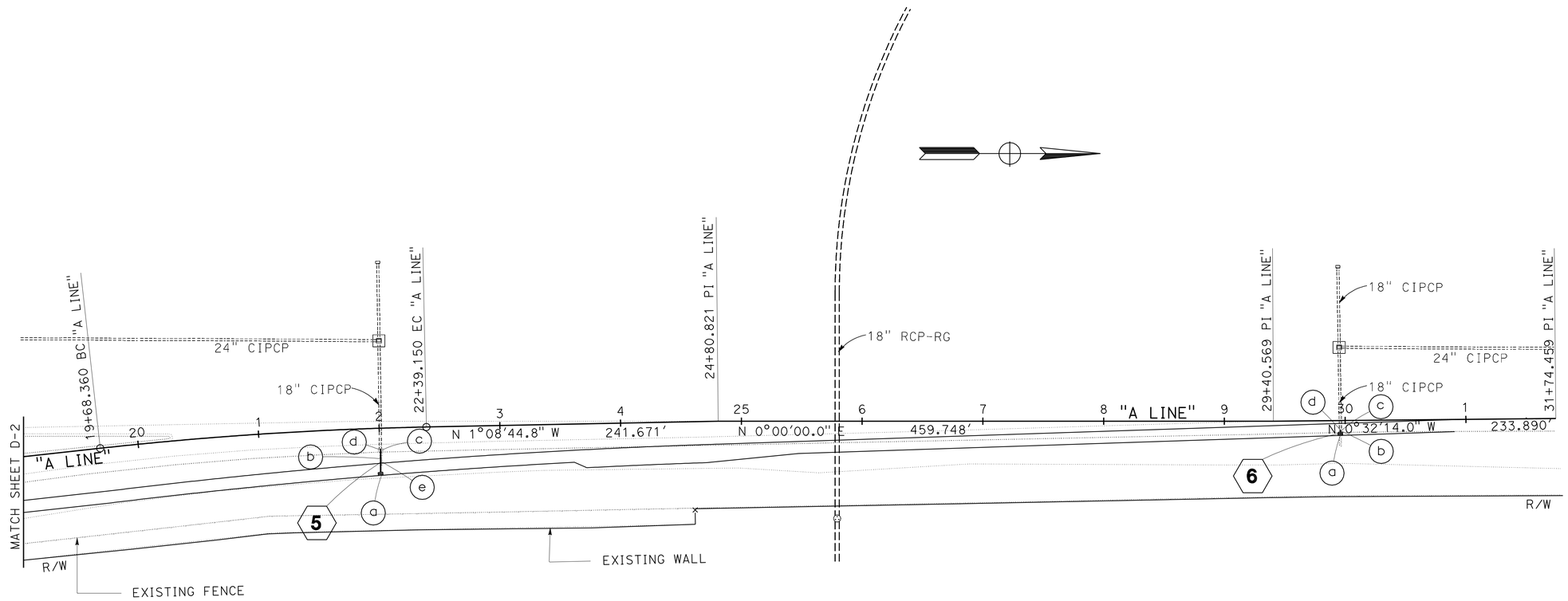

DRAINAGE PLAN

SCALE: 1"=50'

D-3

THIS PLAN ACCURATE FOR DRAINAGE ONLY

STATE OF CALIFORNIA - DEPARTMENT OF TRANSPORTATION
Caltrans
DESIGN

FUNCTIONAL SUPERVISOR: GETACHEW ESHETE

CALCULATED-DESIGNED BY: MIKE BETTEGA
CHECKED BY: TRIET LY

REVISED BY
DATE REVISED

LAST REVISION 04-30-09
DATE PLOTTED => 20-AUG-2009
TIME PLOTTED => 10:10

Dist	COUNTY	ROUTE	POST MILES TOTAL PROJECT	SHEET No.	TOTAL SHEETS
06	Fre	41	R27.6/R29.8	20	107

Michael S. Bettega 04/07/09
REGISTERED CIVIL ENGINEER DATE

8-17-09
PLANS APPROVAL DATE

REGISTERED PROFESSIONAL ENGINEER
MICHAEL S. BETTEGA
No. C 34348
Exp. 9/30/09
CIVIL
STATE OF CALIFORNIA

THE STATE OF CALIFORNIA OR ITS OFFICERS OR AGENTS SHALL NOT BE RESPONSIBLE FOR THE ACCURACY OR COMPLETENESS OF SCANNED COPIES OF THIS PLAN SHEET.

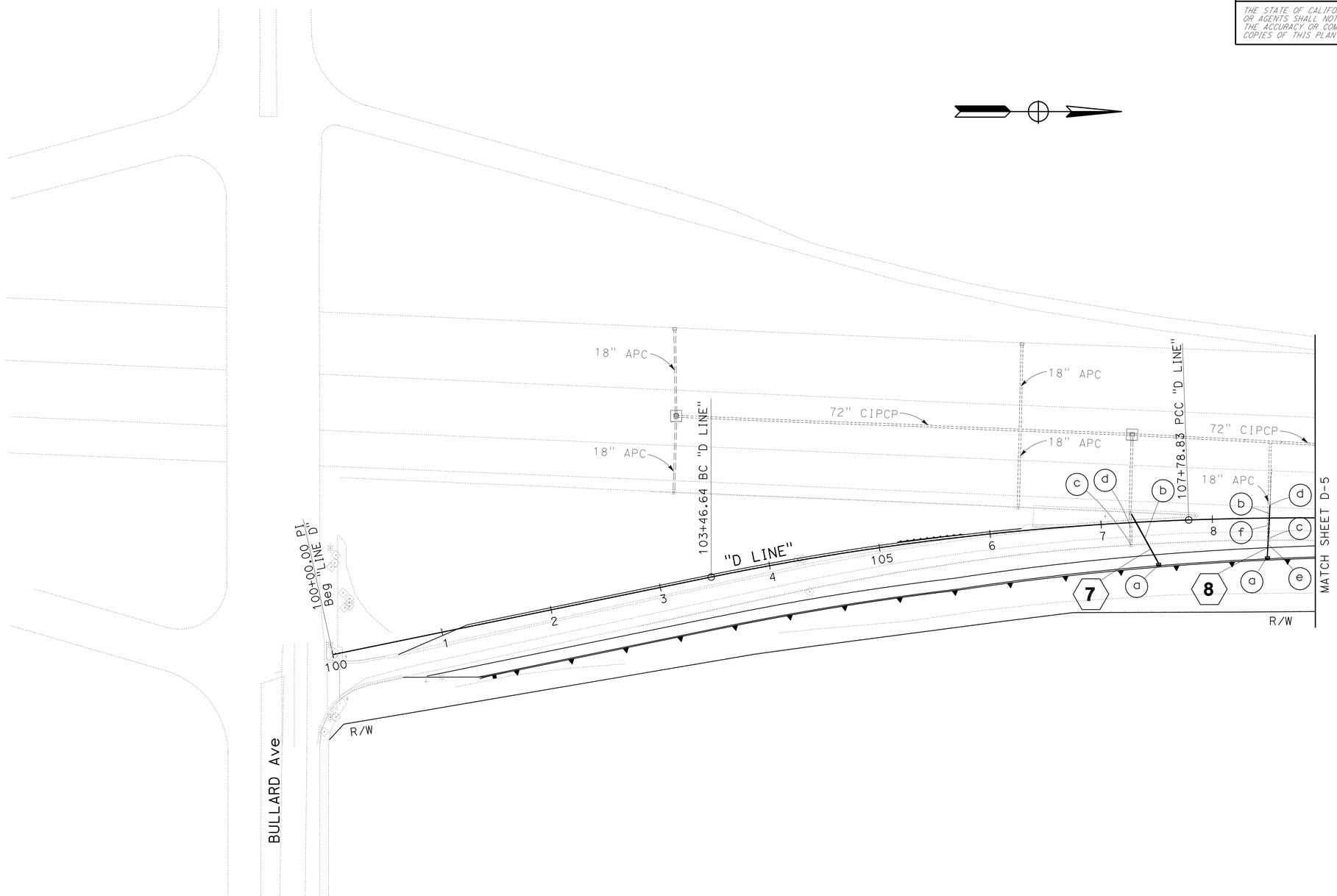

THIS PLAN ACCURATE FOR DRAINAGE ONLY

DRAINAGE PLAN

SCALE: 1"=50'

D-4

REVISED BY	DATE REVISED

CALCULATED-DESIGNED BY: MIKE BETTEGA
CHECKED BY: TRIET LY

FUNCTIONAL SUPERVISOR: GETACHEW ESHETE

STATE OF CALIFORNIA - DEPARTMENT OF TRANSPORTATION
Caltrans
DESIGN

LAST REVISION 04-30-09
DATE PLOTTED => 20-AUG-2009
TIME PLOTTED => 10:10

Dist	COUNTY	ROUTE	POST MILES TOTAL PROJECT	SHEET No.	TOTAL SHEETS
06	Fre	41	R27.6/R29.8	21	107

Michael S. Bettega 04/07/09
REGISTERED CIVIL ENGINEER DATE

8-17-09
PLANS APPROVAL DATE

REGISTERED PROFESSIONAL ENGINEER MICHAEL S. BETTEGA No. C 34348 Exp. 9/30/09 CIVIL STATE OF CALIFORNIA

THE STATE OF CALIFORNIA OR ITS OFFICERS OR AGENTS SHALL NOT BE RESPONSIBLE FOR THE ACCURACY OR COMPLETENESS OF SCANNED COPIES OF THIS PLAN SHEET.

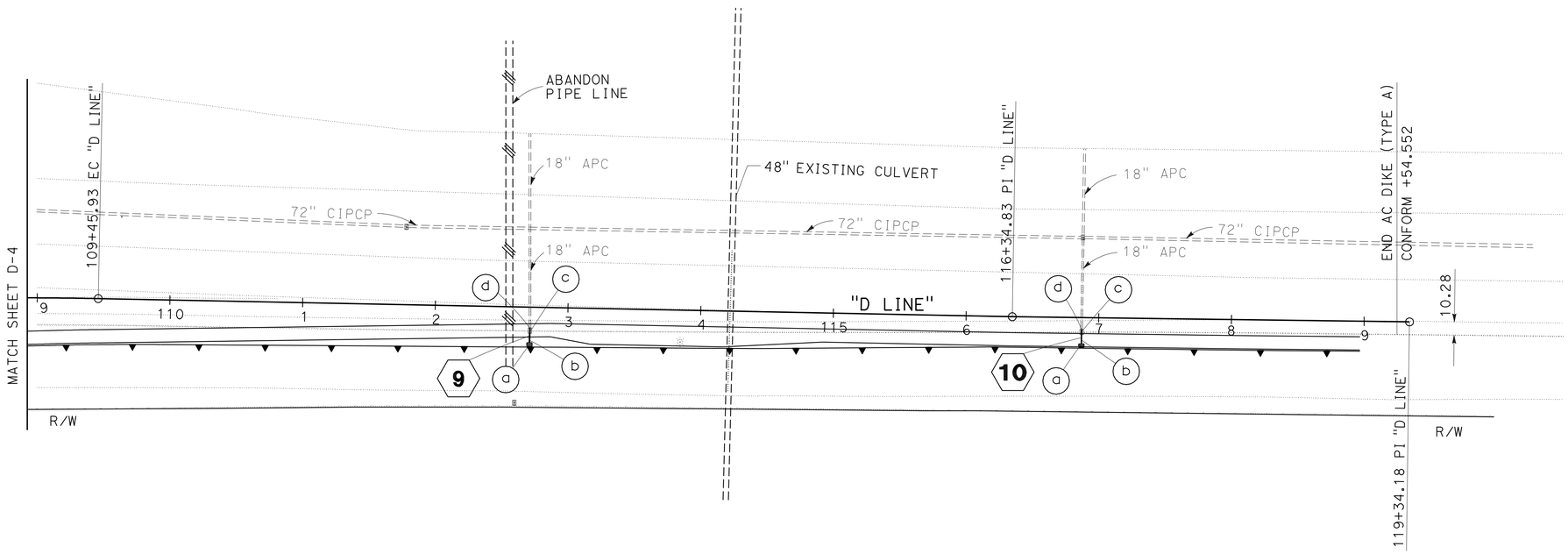

THIS PLAN ACCURATE FOR DRAINAGE ONLY

DRAINAGE PLAN

SCALE: 1"=50'

D-5

STATE OF CALIFORNIA - DEPARTMENT OF TRANSPORTATION
Caltrans
DESIGN

FUNCTIONAL SUPERVISOR: GETACHEW ESHETE
CALCULATED-DESIGNED BY: MIKE BETTEGA
CHECKED BY: TRIET LY
REVISED BY
DATE REVISED

LAST REVISION 04-30-09 DATE PLOTTED => 20-AUG-2009 TIME PLOTTED => 10:11

Dist	COUNTY	ROUTE	POST MILES TOTAL PROJECT	SHEET No.	TOTAL SHEETS
06	Fre	41	R27.6/R29.8	22	107

REGISTERED CIVIL ENGINEER 04/07/09 DATE

8-17-09
PLANS APPROVAL DATE

REGISTERED PROFESSIONAL ENGINEER MICHAEL S. BETTEGA No. C 34348 Exp. 9/30/09 CIVIL STATE OF CALIFORNIA

THE STATE OF CALIFORNIA OR ITS OFFICERS OR AGENTS SHALL NOT BE RESPONSIBLE FOR THE ACCURACY OR COMPLETENESS OF SCANNED COPIES OF THIS PLAN SHEET.

LEGEND

- MINOR CONCRETE BACKFILL

ABBREVIATION:

S - SLOPE

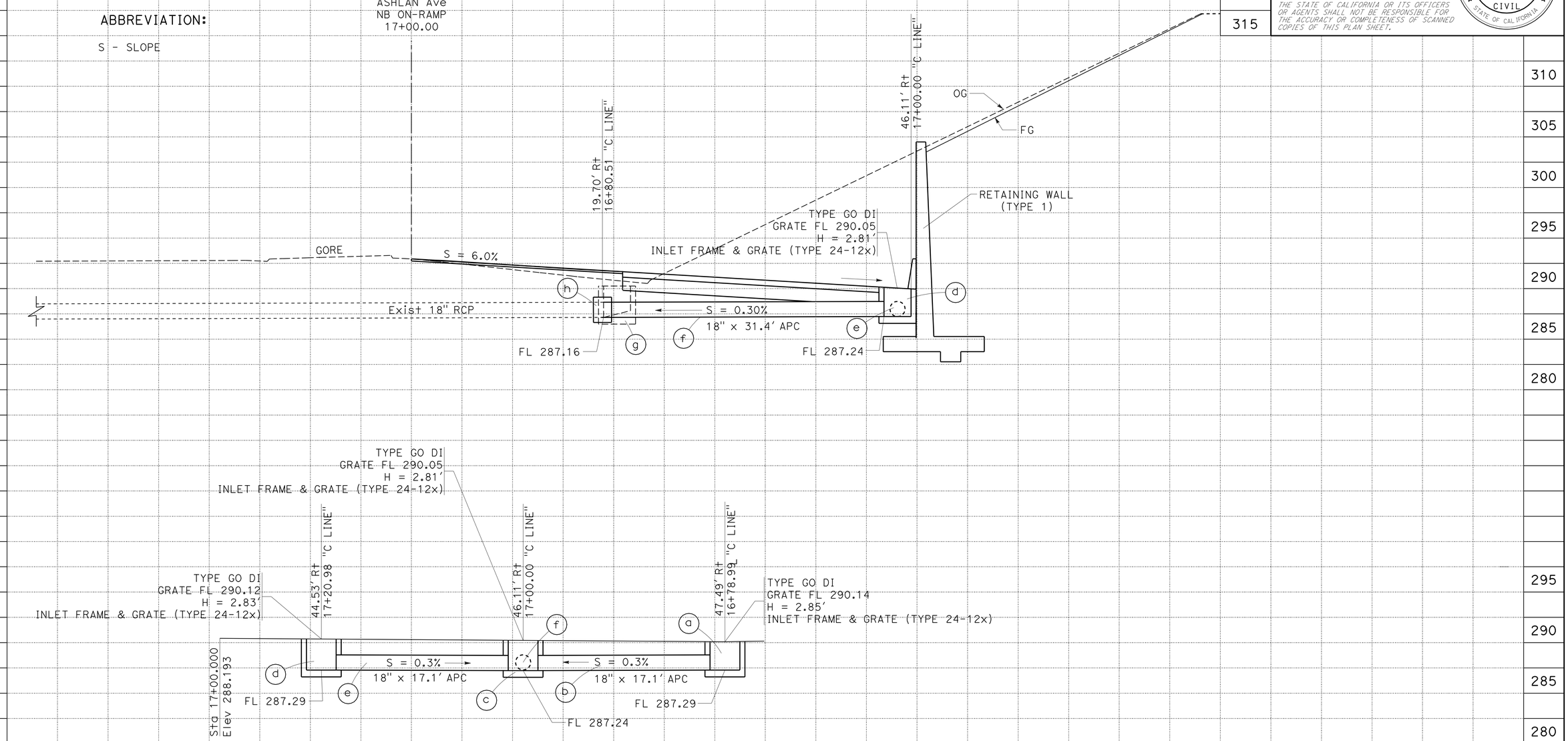

DRAINAGE SYSTEM No. 1

DRAINAGE PROFILES

SCALE: 1"=5' Vert
1"=5' Horiz

DP-1

STATION		TOTAL
CY	Exc	
	Emb	

STATE OF CALIFORNIA - DEPARTMENT OF TRANSPORTATION
Caltrans®
DESIGN

FUNCTIONAL SUPERVISOR: GETACHEW ESHETE

CALCULATED-DESIGNED BY: MIKE BETTEGA
CHECKED BY: TRIET LY

REVISED BY | DATE REVISED

LAST REVISION 04-30-09 | DATE PLOTTED => 20-AUG-2009 | TIME PLOTTED => 10:11

Dist	COUNTY	ROUTE	POST MILES TOTAL PROJECT	SHEET No.	TOTAL SHEETS
06	Fre	41	R27.6/R29.8	23	107

REGISTERED CIVIL ENGINEER 04/07/09 DATE

8-17-09
PLANS APPROVAL DATE

REGISTERED PROFESSIONAL ENGINEER MICHAEL S. BETTEGA No. C 34348 Exp. 9/30/09 CIVIL STATE OF CALIFORNIA

THE STATE OF CALIFORNIA OR ITS OFFICERS OR AGENTS SHALL NOT BE RESPONSIBLE FOR THE ACCURACY OR COMPLETENESS OF SCANNED COPIES OF THIS PLAN SHEET.

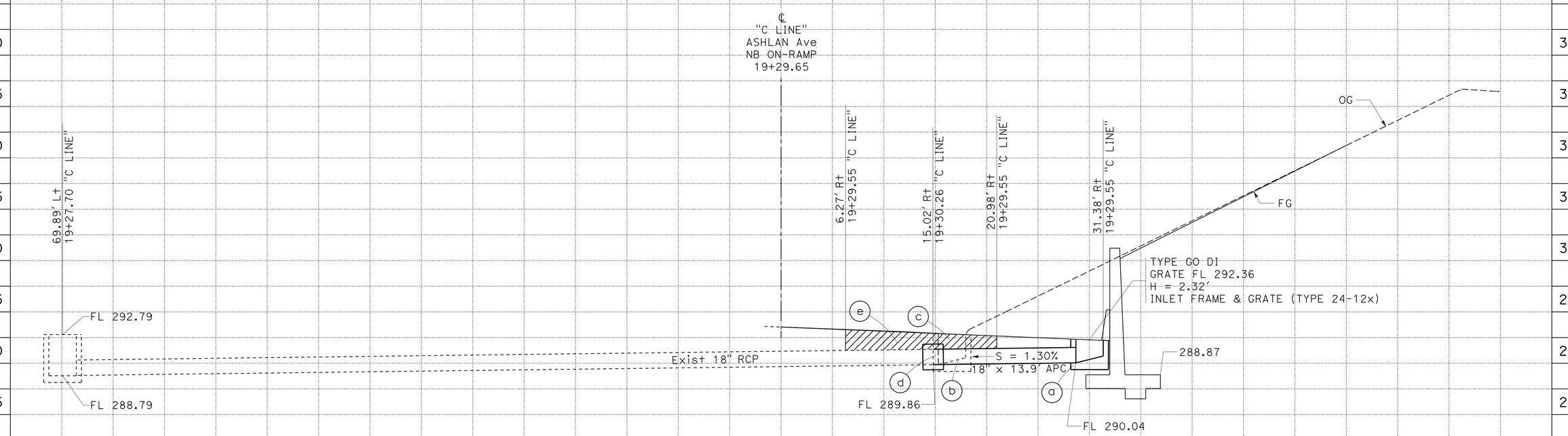

DRAINAGE SYSTEM No. 2

DRAINAGE PROFILES

SCALE: 1"=5' Vert
1"=5' Horiz

DP-2

STATION		
CY	Exc	
	Emb	

TOTAL

STATE OF CALIFORNIA - DEPARTMENT OF TRANSPORTATION
Caltrans
DESIGN

FUNCTIONAL SUPERVISOR: GETACHEW ESHETE
CALCULATED-DESIGNED BY: MIKE BETTEGA
CHECKED BY: TRIET LY
REVISED BY
DATE REVISED

LAST REVISION 04-30-09
DATE PLOTTED => 20-AUG-2009
TIME PLOTTED => 10:11

Dist	COUNTY	ROUTE	POST MILES TOTAL PROJECT	SHEET No.	TOTAL SHEETS
06	Fre	41	R27.6/R29.8	24	107

REGISTERED CIVIL ENGINEER 04/07/09 DATE

8-17-09
PLANS APPROVAL DATE

REGISTERED PROFESSIONAL ENGINEER MICHAEL S. BETTEGA No. C 34348 Exp. 9/30/09 CIVIL STATE OF CALIFORNIA

THE STATE OF CALIFORNIA OR ITS OFFICERS OR AGENTS SHALL NOT BE RESPONSIBLE FOR THE ACCURACY OR COMPLETENESS OF SCANNED COPIES OF THIS PLAN SHEET.

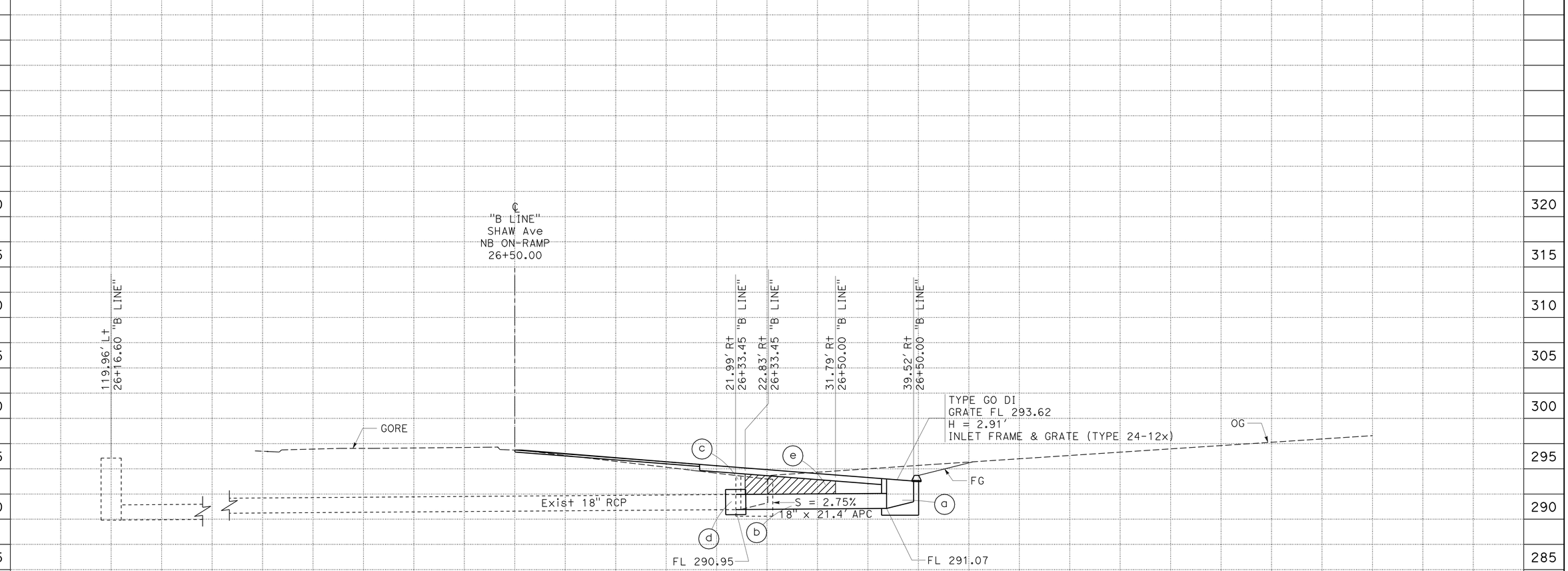

DRAINAGE SYSTEM No. 3

DRAINAGE PROFILES

SCALE: 1"=5' Vert
1"=5' Horiz

DP-3

STATION		TOTAL
CY	Exc	
	Emb	

STATE OF CALIFORNIA - DEPARTMENT OF TRANSPORTATION
Caltrans
DESIGN

FUNCTIONAL SUPERVISOR: GETACHEW ESHETE
CALCULATED-DESIGNED BY: MIKE BETTEGA
CHECKED BY: TRIET LY
REVISED BY
DATE REVISED

LAST REVISION 04-30-09
DATE PLOTTED => 20-AUG-2009
TIME PLOTTED => 10:11

Dist	COUNTY	ROUTE	POST MILES TOTAL PROJECT	SHEET No.	TOTAL SHEETS
06	Fre	41	R27.6/R29.8	25	107

REGISTERED CIVIL ENGINEER 04/07/09 DATE

8-17-09
PLANS APPROVAL DATE

REGISTERED PROFESSIONAL ENGINEER MICHAEL S. BETTEGA No. C 34348 Exp. 9/30/09 CIVIL STATE OF CALIFORNIA

THE STATE OF CALIFORNIA OR ITS OFFICERS OR AGENTS SHALL NOT BE RESPONSIBLE FOR THE ACCURACY OR COMPLETENESS OF SCANNED COPIES OF THIS PLAN SHEET.

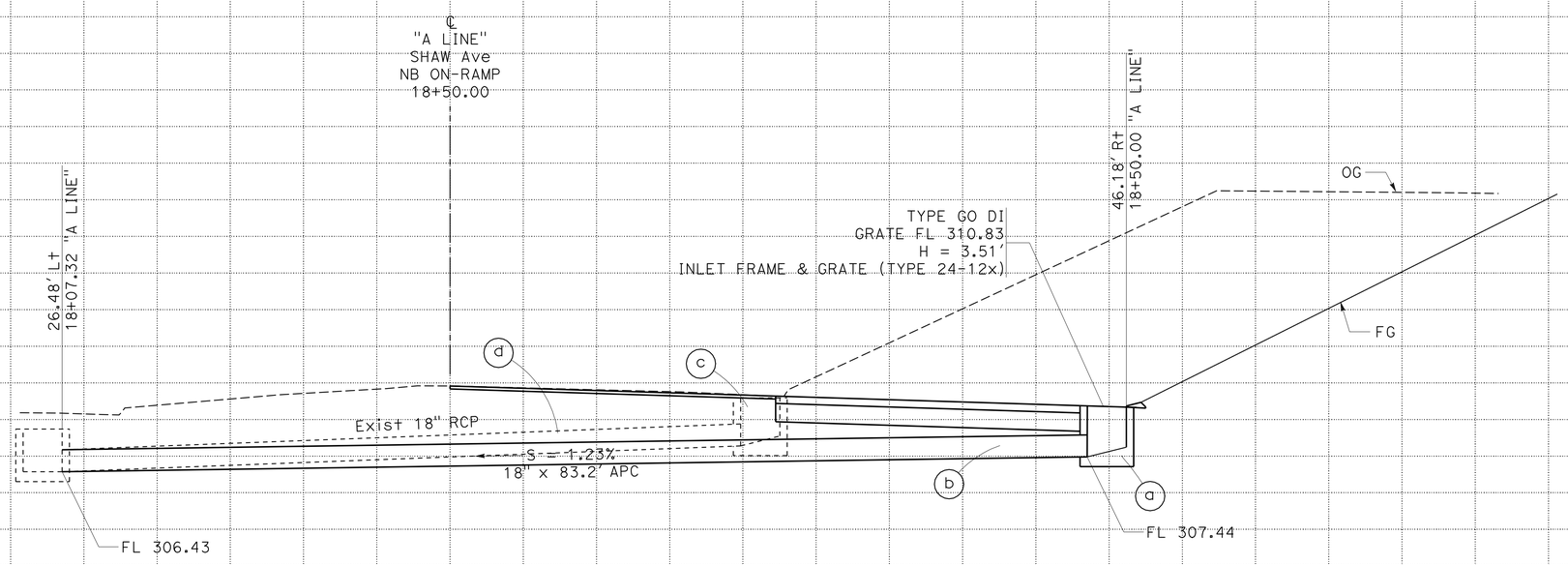

DRAINAGE SYSTEM No. 4

DRAINAGE PROFILES

SCALE: 1"=5' Vert
1"=5' Horiz

DP-4

STATION		TOTAL
CY	Exc	
	Emb	

STATE OF CALIFORNIA - DEPARTMENT OF TRANSPORTATION
Caltrans
DESIGN

FUNCTIONAL SUPERVISOR: GETACHEW ESHETE
CALCULATED-DESIGNED BY: MIKE BETTEGA
CHECKED BY: TRIET LY
REVISED BY
DATE REVISED

LAST REVISION 04-30-09
DATE PLOTTED => 20-AUG-2009
TIME PLOTTED => 10:11

Dist	COUNTY	ROUTE	POST MILES TOTAL PROJECT	SHEET No.	TOTAL SHEETS
06	Fre	41	R27.6/R29.8	26	107

REGISTERED CIVIL ENGINEER 04/07/09 DATE

8-17-09
PLANS APPROVAL DATE

REGISTERED PROFESSIONAL ENGINEER MICHAEL S. BETTEGA No. C 34348 Exp. 9/30/09 CIVIL STATE OF CALIFORNIA

THE STATE OF CALIFORNIA OR ITS OFFICERS OR AGENTS SHALL NOT BE RESPONSIBLE FOR THE ACCURACY OR COMPLETENESS OF SCANNED COPIES OF THIS PLAN SHEET.

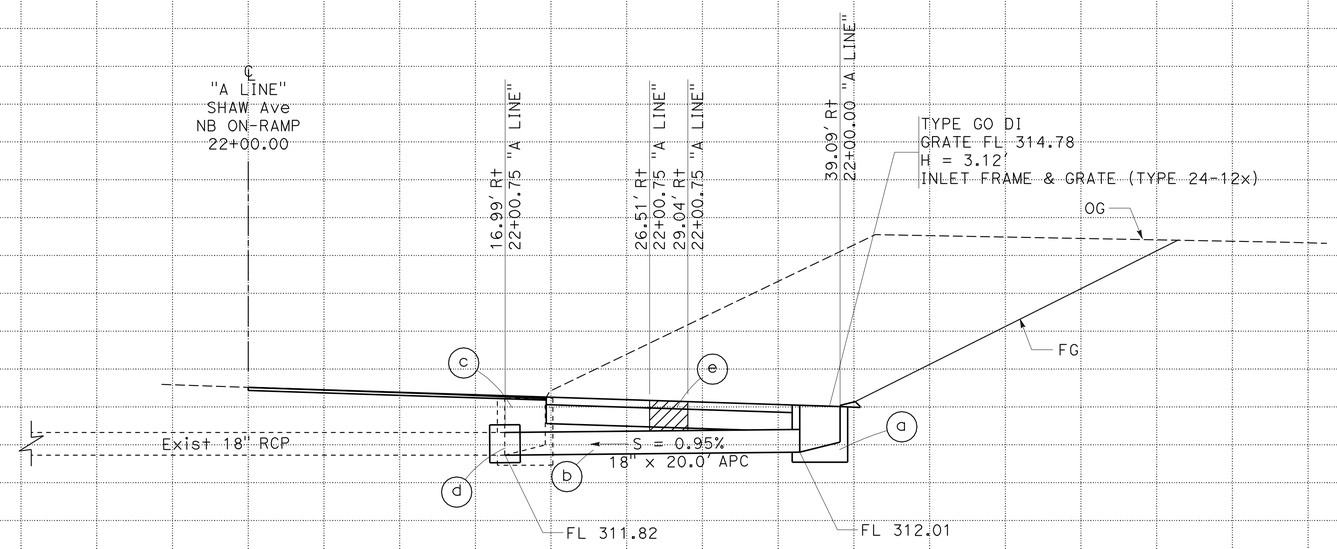

DRAINAGE SYSTEM No. 5

DRAINAGE PROFILES

SCALE: 1"=5' Vert
1"=5' Horiz

DP-5

STATION		TOTAL
CY	Exc	
	Emb	

STATE OF CALIFORNIA - DEPARTMENT OF TRANSPORTATION
DESIGN
Caltrans

FUNCTIONAL SUPERVISOR: GETACHEW ESHETE
CALCULATED-DESIGNED BY: MIKE BETTEGA
CHECKED BY: TRIET LY
REVISED BY
DATE REVISED

LAST REVISION 04-30-09
DATE PLOTTED => 20-AUG-2009
TIME PLOTTED => 10:11

Dist	COUNTY	ROUTE	POST MILES TOTAL PROJECT	SHEET No.	TOTAL SHEETS
06	Fre	41	R27.6/R29.8	27	107

REGISTERED CIVIL ENGINEER 04/07/09 DATE

8-17-09
PLANS APPROVAL DATE

REGISTERED PROFESSIONAL ENGINEER MICHAEL S. BETTEGA No. C 34348 Exp. 9/30/09 CIVIL STATE OF CALIFORNIA

THE STATE OF CALIFORNIA OR ITS OFFICERS OR AGENTS SHALL NOT BE RESPONSIBLE FOR THE ACCURACY OR COMPLETENESS OF SCANNED COPIES OF THIS PLAN SHEET.

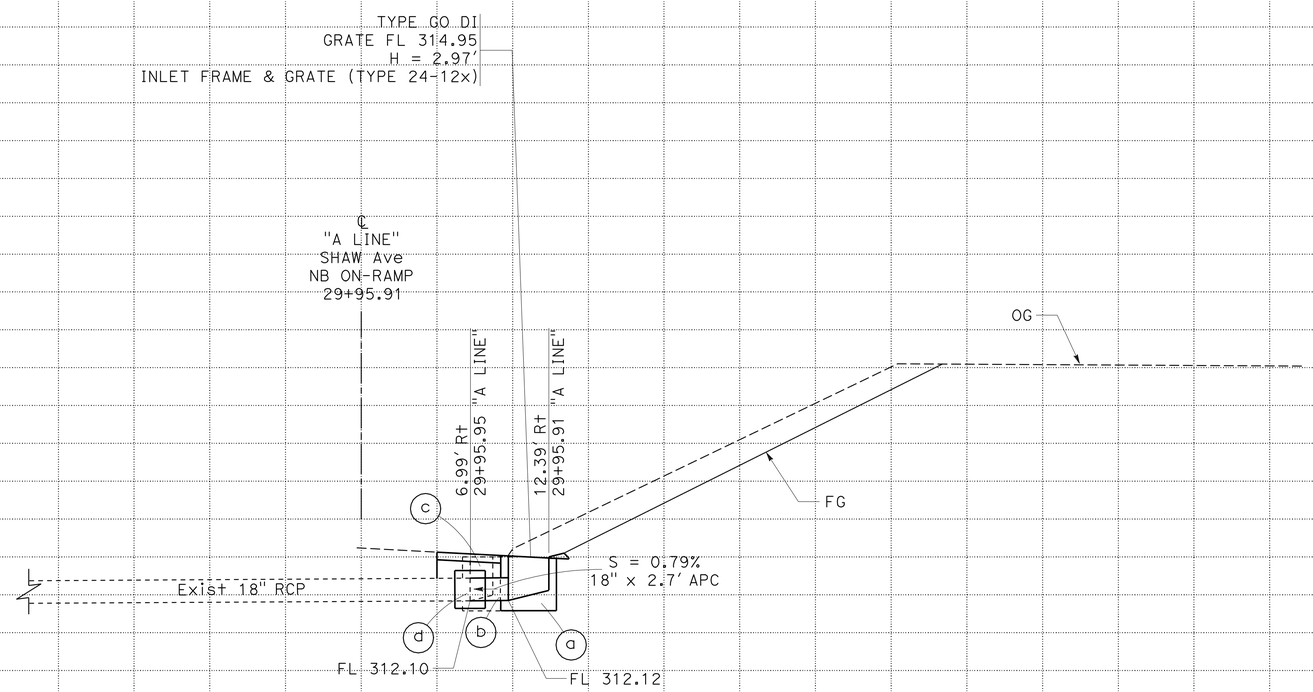

DRAINAGE SYSTEM No. 6

DRAINAGE PROFILES

SCALE: 1"=5' Vert
1"=5' Horiz

DP-6

STATION		TOTAL
CY	Exc	
	Emb	

STATE OF CALIFORNIA - DEPARTMENT OF TRANSPORTATION
Caltrans
DESIGN

FUNCTIONAL SUPERVISOR: GETACHEW ESHETE
CALCULATED-DESIGNED BY: MIKE BETTEGA
CHECKED BY: TRIET LY
REVISED BY
DATE REVISED

LAST REVISION 04-30-09
DATE PLOTTED => 20-AUG-2009
TIME PLOTTED => 10:11

Dist	COUNTY	ROUTE	POST MILES TOTAL PROJECT	SHEET No.	TOTAL SHEETS
06	Fre	41	R27.6/R29.8	28	107

REGISTERED CIVIL ENGINEER 04/07/09 DATE

8-17-09
PLANS APPROVAL DATE

REGISTERED PROFESSIONAL ENGINEER MICHAEL S. BETTEGA No. C 34348 Exp. 9/30/09 CIVIL STATE OF CALIFORNIA

THE STATE OF CALIFORNIA OR ITS OFFICERS OR AGENTS SHALL NOT BE RESPONSIBLE FOR THE ACCURACY OR COMPLETENESS OF SCANNED COPIES OF THIS PLAN SHEET.

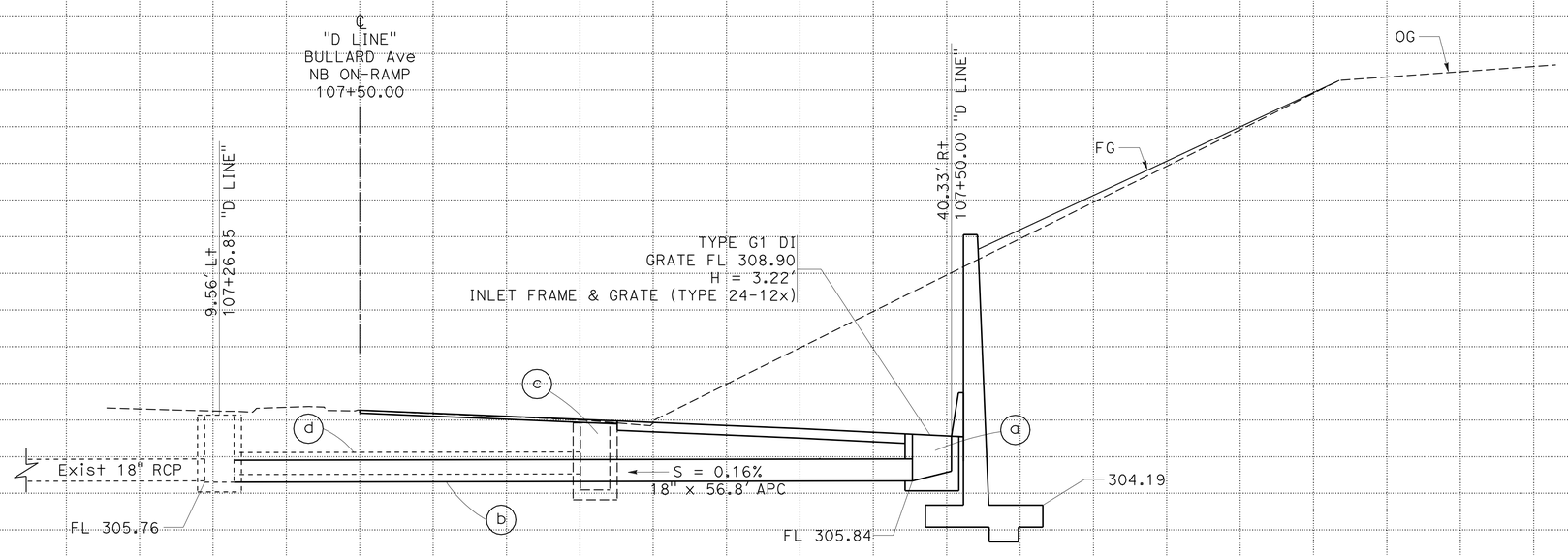

DRAINAGE SYSTEM No. 7

DRAINAGE PROFILES

SCALE: 1"=5' Vert
1"=5' Horiz

DP-7

STATION		TOTAL
CY	Exc	
	Emb	

STATE OF CALIFORNIA - DEPARTMENT OF TRANSPORTATION
Caltrans®
DESIGN

FUNCTIONAL SUPERVISOR: GETACHEW ESHETE
CALCULATED-DESIGNED BY: MIKE BETTEGA
CHECKED BY: TRIET LY
REVISED BY
DATE REVISED

LAST REVISION 04-30-09
DATE PLOTTED => 20-AUG-2009
TIME PLOTTED => 10:12

Dist	COUNTY	ROUTE	POST MILES TOTAL PROJECT	SHEET No.	TOTAL SHEETS
06	Fre	41	R27.6/R29.8	29	107

REGISTERED CIVIL ENGINEER 04/07/09 DATE

8-17-09
PLANS APPROVAL DATE

REGISTERED PROFESSIONAL ENGINEER MICHAEL S. BETTEGA No. C 34348 Exp. 9/30/09 CIVIL STATE OF CALIFORNIA

THE STATE OF CALIFORNIA OR ITS OFFICERS OR AGENTS SHALL NOT BE RESPONSIBLE FOR THE ACCURACY OR COMPLETENESS OF SCANNED COPIES OF THIS PLAN SHEET.

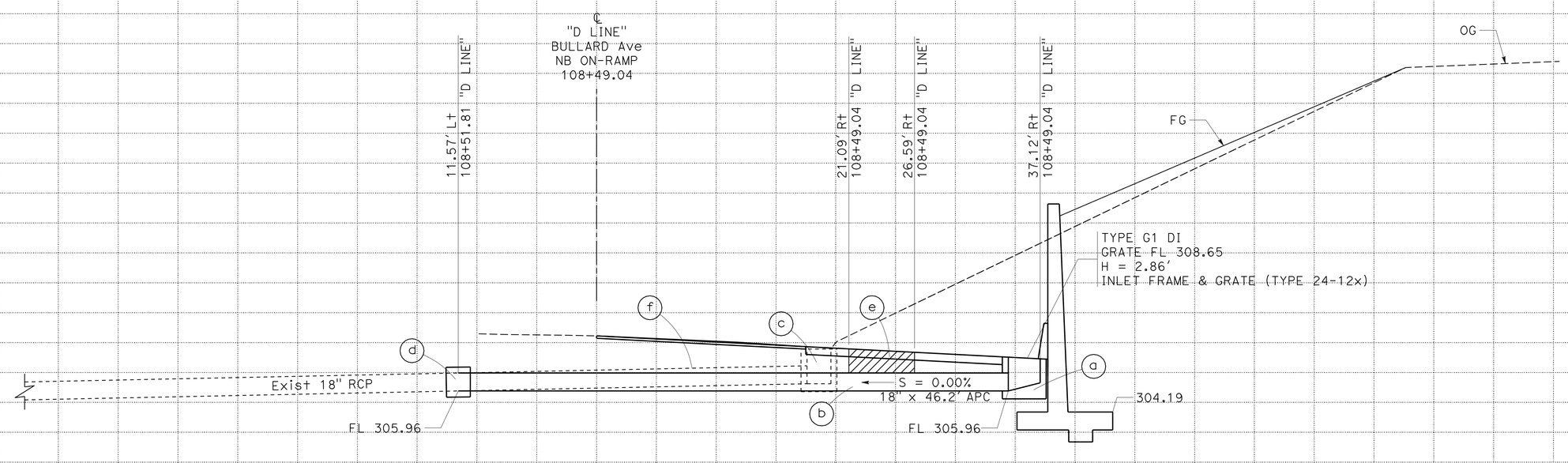

DRAINAGE SYSTEM No. 8

DRAINAGE PROFILES

SCALE: 1"=5' Vert
1"=5' Horiz

DP-8

STATION		TOTAL
CY	Exc	
	Emb	

STATE OF CALIFORNIA - DEPARTMENT OF TRANSPORTATION
Caltrans
DESIGN

FUNCTIONAL SUPERVISOR: GETACHEW ESHETE

CALCULATED-DESIGNED BY: MIKE BETTEGA
CHECKED BY: TRIET LY

REVISED BY
DATE REVISED

LAST REVISION 04-30-09
DATE PLOTTED => 20-AUG-2009
TIME PLOTTED => 10:12

Dist	COUNTY	ROUTE	POST MILES TOTAL PROJECT	SHEET No.	TOTAL SHEETS
06	Fre	41	R27.6/R29.8	30	107

REGISTERED CIVIL ENGINEER 04/07/09 DATE

8-17-09
PLANS APPROVAL DATE

REGISTERED PROFESSIONAL ENGINEER MICHAEL S. BETTEGA No. C 34348 Exp. 9/30/09 CIVIL STATE OF CALIFORNIA

THE STATE OF CALIFORNIA OR ITS OFFICERS OR AGENTS SHALL NOT BE RESPONSIBLE FOR THE ACCURACY OR COMPLETENESS OF SCANNED COPIES OF THIS PLAN SHEET.

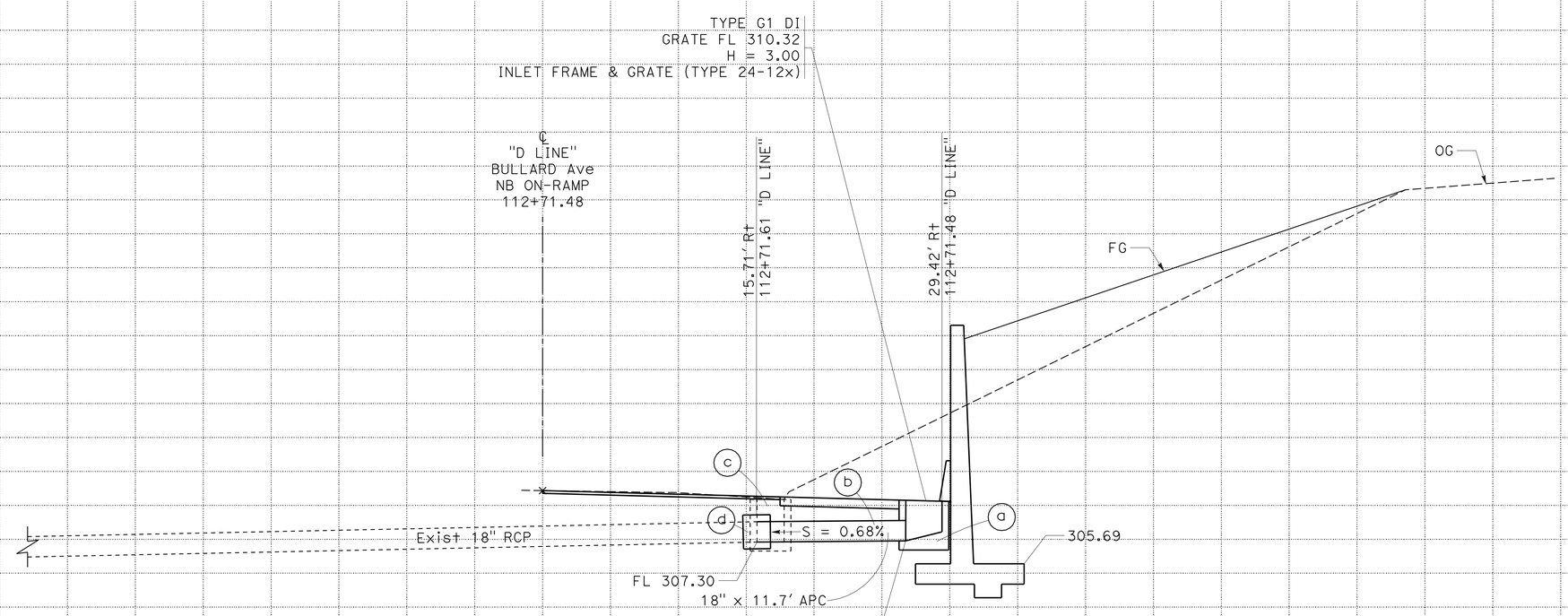

DRAINAGE SYSTEM No. 9

DRAINAGE PROFILES

SCALE: 1"=5' Vert
1"=5' Horiz

DP-9

STATION		TOTAL
CY	Exc	
	Emb	

STATE OF CALIFORNIA - DEPARTMENT OF TRANSPORTATION
Caltrans
DESIGN

FUNCTIONAL SUPERVISOR: GETACHEW ESHETE

CALCULATED-DESIGNED BY: MIKE BETTEGA
CHECKED BY: TRIET LY

REVISED BY
DATE REVISED

LAST REVISION: DATE PLOTTED => 20-AUG-2009
04-30-09 TIME PLOTTED => 10:12

Dist	COUNTY	ROUTE	POST MILES TOTAL PROJECT	SHEET No.	TOTAL SHEETS
06	Fre	41	R27.6/R29.8	31	107

REGISTERED CIVIL ENGINEER 04/07/09 DATE

8-17-09
PLANS APPROVAL DATE

REGISTERED PROFESSIONAL ENGINEER MICHAEL S. BETTEGA No. C 34348 Exp. 9/30/09 CIVIL STATE OF CALIFORNIA

THE STATE OF CALIFORNIA OR ITS OFFICERS OR AGENTS SHALL NOT BE RESPONSIBLE FOR THE ACCURACY OR COMPLETENESS OF SCANNED COPIES OF THIS PLAN SHEET.

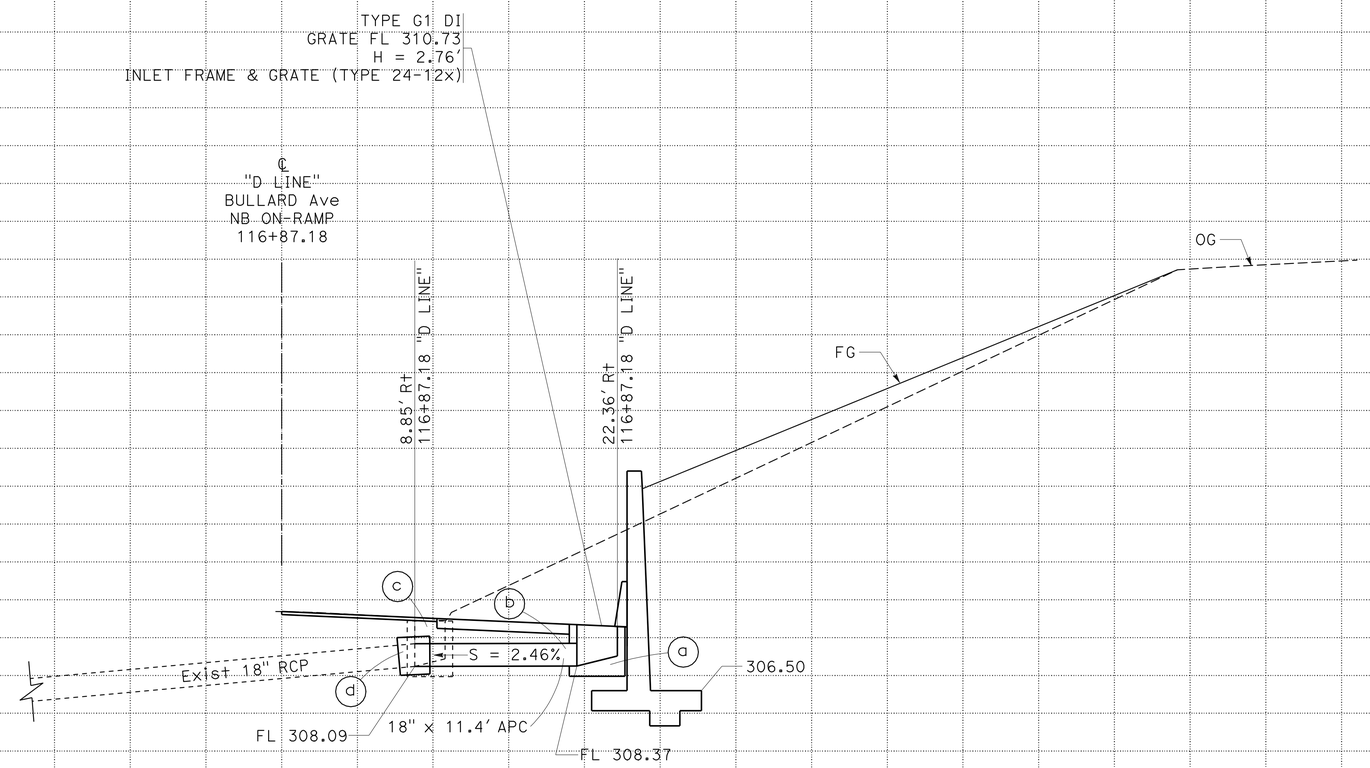

DRAINAGE SYSTEM No. 10

DRAINAGE PROFILES

SCALE: 1"=5' Vert
1"=5' Horiz

DP-10

STATION		TOTAL
CY	Exc	
	Emb	

STATE OF CALIFORNIA - DEPARTMENT OF TRANSPORTATION
Caltrans®
DESIGN

FUNCTIONAL SUPERVISOR: GETACHEW ESHETE

CALCULATED-DESIGNED BY: MIKE BETTEGA
CHECKED BY: TRIET LY

REVISED BY
DATE REVISED

LAST REVISION 04-30-09
DATE PLOTTED => 20-AUG-2009
TIME PLOTTED => 10:12

Dist	COUNTY	ROUTE	POST MILES TOTAL PROJECT	SHEET No.	TOTAL SHEETS
06	Fre	41	R27.6/R29.8	32	107

REGISTERED CIVIL ENGINEER 04/07/09 DATE

8-17-09
PLANS APPROVAL DATE

REGISTERED PROFESSIONAL ENGINEER MICHAEL S. BETTEGA No. C 34348 Exp. 9/30/09 CIVIL STATE OF CALIFORNIA

THE STATE OF CALIFORNIA OR ITS OFFICERS OR AGENTS SHALL NOT BE RESPONSIBLE FOR THE ACCURACY OR COMPLETENESS OF SCANNED COPIES OF THIS PLAN SHEET.

NOTES:

1. USE A WIRE BRUSH TO CLEAN THE PIPE SURFACE AND APPLY EPOXY TO THE PIPE PER CALTRANS SPECIFICATION 95-2.03.

2. DRYPACK AND BAND INTERIOR PIPE JOINT.

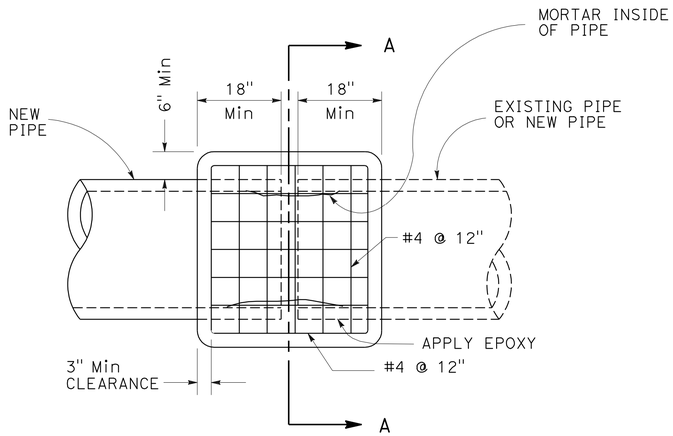

SIDE VIEW

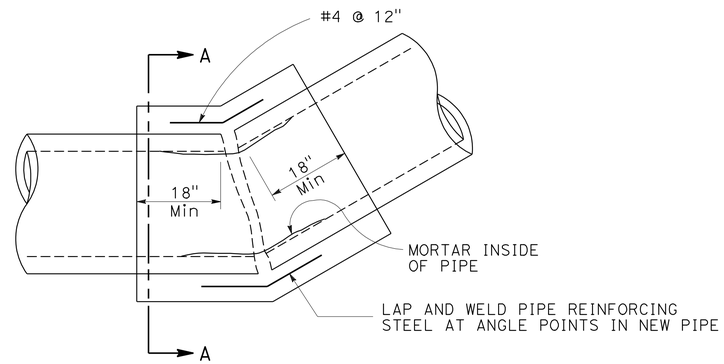

ANGLE POINT

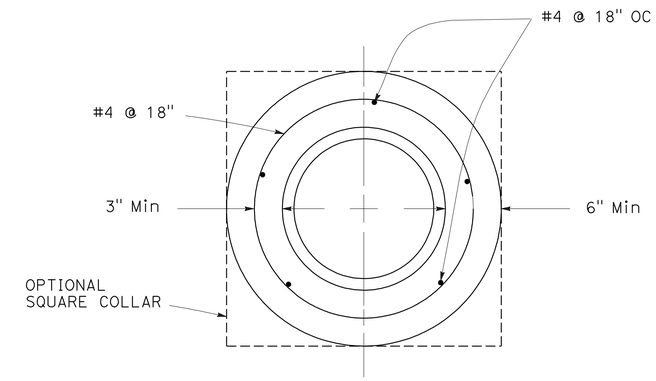

SECTION A-A

CONCRETE COLLAR FOR DRAINAGE PIPES

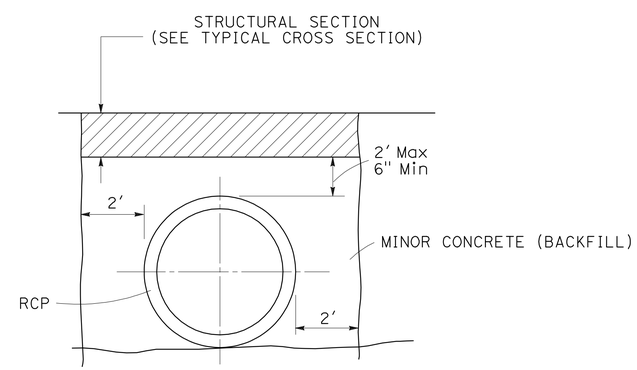

MINOR CONCRETE (BACKFILL) DRAINAGE SYSTEM No. 2, 3, 5, 8

DRAINAGE DETAILS

NO SCALE **DD-1**

STATE OF CALIFORNIA - DEPARTMENT OF TRANSPORTATION
Caltrans
DESIGN

FUNCTIONAL SUPERVISOR: GETACHEW ESHETE
CALCULATED-DESIGNED BY: MIKE BETTEGA
CHECKED BY: TRIET LY
REVISED BY
DATE REVISED

LAST REVISION 04-30-09
DATE PLOTTED => 20-AUG-2009
TIME PLOTTED => 10:12

Dist	COUNTY	ROUTE	POST MILES TOTAL PROJECT	SHEET No.	TOTAL SHEETS
06	Fre	41	R27.6/R29.8	33	107

REGISTERED CIVIL ENGINEER 04/07/09 DATE

8-17-09
PLANS APPROVAL DATE

REGISTERED PROFESSIONAL ENGINEER MICHAEL S. BETTEGA No. C 34348 Exp. 9/30/09 CIVIL STATE OF CALIFORNIA

THE STATE OF CALIFORNIA OR ITS OFFICERS OR AGENTS SHALL NOT BE RESPONSIBLE FOR THE ACCURACY OR COMPLETENESS OF SCANNED COPIES OF THIS PLAN SHEET.

ALTERNATIVE PIPE CULVERTS

ALLOWABLE PIPE MATERIAL AND PROTECTION

DESIGNATION	RCP	CSP				CAP			
	SIZE	SIZE	THICK	Bit Ctd	Bit PAVED INVERT	SIZE	THICK	Bit Ctd	Bit PAVED INVERT
18" APC	18"	18"*	0.079"	NO	NO	18"*	0.060"	NO	NO

* EITHER HELICAL OR ANNULAR CORRUGATIONS ARE ALLOWABLE.

DRAINAGE SYSTEM No.	DRAINAGE UNIT	STRUCTURE TYPE	MINOR CONCRETE (MINOR STRUCTURE) CY	(N) DESIGN H FT	INLET FRAME & GRATE TYPE 24-12X EA	** 18" ALTERNATIVE PIPE CULVERT LF	MINOR CONCRETE (BACKFILL) CY	(N) CONCRETE COLLAR (DRAINAGE PIPE) EA	REMOVE INLET EA	REMOVE PIPE LF	DESCRIPTION	STATION	DRAINAGE PROFILE SHEET No.	DRAINAGE SYSTEM No.	DRAINAGE UNIT
1	a	GO	1.24	2.85	1						GO DI	47.49' Rt 16+78.99 ℄ ASHLAN Ave NB ON-RAMP	DP-1	1	a
	b					17.1					18" Alt PIPE				b
	c	GO	1.24	2.81	1						GO DI	46.11' Rt 17+00.00 ℄ ASHLAN Ave NB ON-RAMP			c
	d	GO	1.24	2.83	1						GO DI	43.53' Rt 17+20.98 ℄ ASHLAN Ave NB ON-RAMP			d
	e					17.1					18" Alt PIPE				e
	f					31.4					18" Alt PIPE				f
	g								1		REMOVE EXISTING DI				g
1	h							1			CONCRETE COLLAR	19.70' Rt 16+80.51 ℄ ASHLAN Ave NB ON-RAMP	DP-1	1	h
2	a	GO	1.24	2.32	1						GO DI	31.38' Rt 19+29.55 ℄ ASHLAN Ave NB ON-RAMP	DP-2	2	a
	b					13.9					18 " Alt PIPE				b
	c								1		REMOVE EXISTING DI				c
	d							1			CONCRETE COLLAR	15.02' Rt 19+30.26 ℄ ASHLAN Ave NB ON-RAMP			d
2	e						8.40				MINOR CONCRETE Bkf		DP-2	2	e
3	a	GO	1.24	2.91	1						GO DI	39.52' Rt 26+50.00 ℄ SHAW NB LOOP ON-RAMP	DP-3	3	a
	b					21.4					18" Alt PIPE				b
	c								1		REMOVE EXISTING DI				c
	d							1			CONCRETE COLLAR	21.99' Rt 26+33.45 ℄ SHAW NB LOOP ON-RAMP			d
3	e						5.14				MINOR CONCRETE Bkf		DP-3	3	e
4	a	GO	1.36	3.51	1						GO DI	46.18' Rt 18+50.00 ℄ SHAW Ave NB ON-RAMP	DP-4	4	a
	b					83.2					18" Alt PIPE				b
	c								1		REMOVE EXISTING DI				c
4	d									66	REMOVE EXISTING PIPE		DP-4	4	d
5	a	GO	1.26	3.12	1						GO DI	39.09' Rt 22+00.00 ℄ SHAW Ave NB ON-RAMP	DP-5	5	a
	b					20.0					18" Alt PIPE				b
	c								1		REMOVE EXISTING DI				c
	d							1			CONCRETE COLLAR	16.99' Rt 22+00.75 ℄ SHAW Ave NB ON-RAMP			d
5	e						1.54				MINOR CONCRETE Bkf		DP-5	5	e
6	a	GO	1.24	2.97	1						GO DI	12.39' Rt 29+95.91 ℄ SHAW Ave NB ON-RAMP	DP-6	6	a
	b					2.7					18" Alt PIPE				b
	c								1		REMOVE EXISTING DI				c
6	d							1			CONCRETE COLLAR	6.99' Rt 29+95.95 ℄ SHAW Ave NB ON-RAMP	DP-6	6	d
7	a	G1	1.24	3.22	1						GO DI	40.33' Rt 107+50.00 ℄ BULLARD NB ON-RAMP	DP-7	7	a
	b					56.8					18" Alt PIPE				b
	c								1		REMOVE EXISTING DI				c
7	d									28	REMOVE EXISTING PIPE		DP-7	7	d
8	a	G1	0.95	2.86	1						GO DI	37.12' Rt 108+49.04 ℄ BULLARD NB ON-RAMP	DP-8	8	a
	b					46.2					18" Alt PIPE				b
	c								1		REMOVE EXISTING DI				c
	d							1			CONCRETE COLLAR	11.57' Rt 108+51.81 ℄ BULLARD NB ON-RAMP			d
	e						3.41				MINOR CONCRETE Bkf				e
8	f									29	REMOVE EXISTING PIPE		DP-8	8	f
9	a	G1	0.95	3.00	1						GO DI	29.42' Rt 112+71.48 ℄ BULLARD NB ON-RAMP	DP-9	9	a
	b					11.7					18" Alt PIPE				b
	c								1		REMOVE EXISTING DI				c
9	d							1			CONCRETE COLLAR	15.71' Rt 112+71.61 ℄ BULLARD NB ON-RAMP	DP-9	9	d
10	a	G1	0.95	2.76	1						GO DI	22.36' Rt 116+87.18 ℄ BULLARD NB ON-RAMP	DP-10	10	a
	b					11.4					18" Alt PIPE				b
	c								1		REMOVE EXISTING DI				c
10	d							1			CONCRETE COLLAR	8.85' Rt 116+87.18 ℄ BULLARD NB ON-RAMP	DP-10	10	d
SHEET TOTAL		—	15.02	—	12	333.0	18.5	—	10	123					

(N) NOT A SEPARATE PAY ITEM, FOR INFORMATION ONLY.
** RCP

DRAINAGE QUANTITIES
DQ-1

STATE OF CALIFORNIA - DEPARTMENT OF TRANSPORTATION
Caltrans® DESIGN

FUNCTIONAL SUPERVISOR: GETACHEW ESHETE
CALCULATED-DESIGNED BY: MIKE BETTEGA
CHECKED BY: TRIET LY
REVISED BY / DATE REVISED

LAST REVISION 04-30-09
DATE PLOTTED => 20-AUG-2009
TIME PLOTTED => 10:12

Dist	COUNTY	ROUTE	POST MILES TOTAL PROJECT	SHEET No.	TOTAL SHEETS
06	Fre	41	R27.6/R29.8	34	107

Michael S. Bettega 04/07/09
REGISTERED CIVIL ENGINEER DATE

8-17-09
PLANS APPROVAL DATE

REGISTERED PROFESSIONAL ENGINEER MICHAEL S. BETTEGA No. C 34348 Exp. 9/30/09 CIVIL STATE OF CALIFORNIA

THE STATE OF CALIFORNIA OR ITS OFFICERS OR AGENTS SHALL NOT BE RESPONSIBLE FOR THE ACCURACY OR COMPLETENESS OF SCANNED COPIES OF THIS PLAN SHEET.

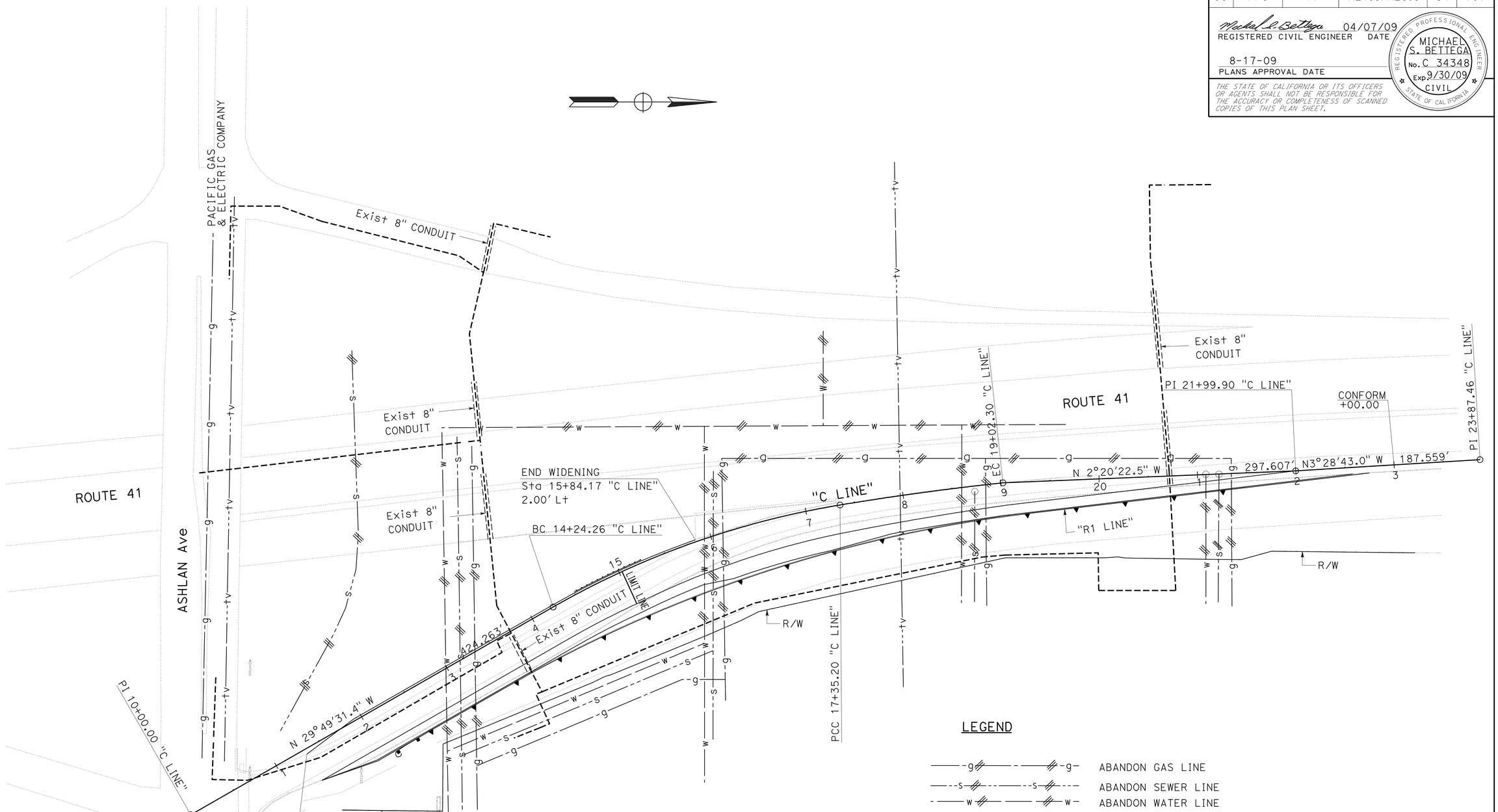

UTILITY PLAN

SCALE: 1"=50'

U-1

THIS PLAN ACCURATE FOR EXISTING UTILITIES ONLY

STATE OF CALIFORNIA - DEPARTMENT OF TRANSPORTATION
Caltrans®
DESIGN

FUNCTIONAL SUPERVISOR: GETACHEW ESHETE
CALCULATED-DESIGNED BY: MIKE BETTEGA
CHECKED BY: TRIET LY
REVISED BY
DATE REVISED

LAST REVISION 04-30-09
DATE PLOTTED => 20-AUG-2009
TIME PLOTTED => 10:12

Dist	COUNTY	ROUTE	POST MILES TOTAL PROJECT	SHEET No.	TOTAL SHEETS
06	Fre	41	R27.6/R29.8	35	107

REGISTERED CIVIL ENGINEER 04/07/09 DATE

8-17-09
PLANS APPROVAL DATE

REGISTERED PROFESSIONAL ENGINEER MICHAEL S. BETTEGA No. C 34348 Exp. 9/30/09 CIVIL STATE OF CALIFORNIA

THE STATE OF CALIFORNIA OR ITS OFFICERS OR AGENTS SHALL NOT BE RESPONSIBLE FOR THE ACCURACY OR COMPLETENESS OF SCANNED COPIES OF THIS PLAN SHEET.

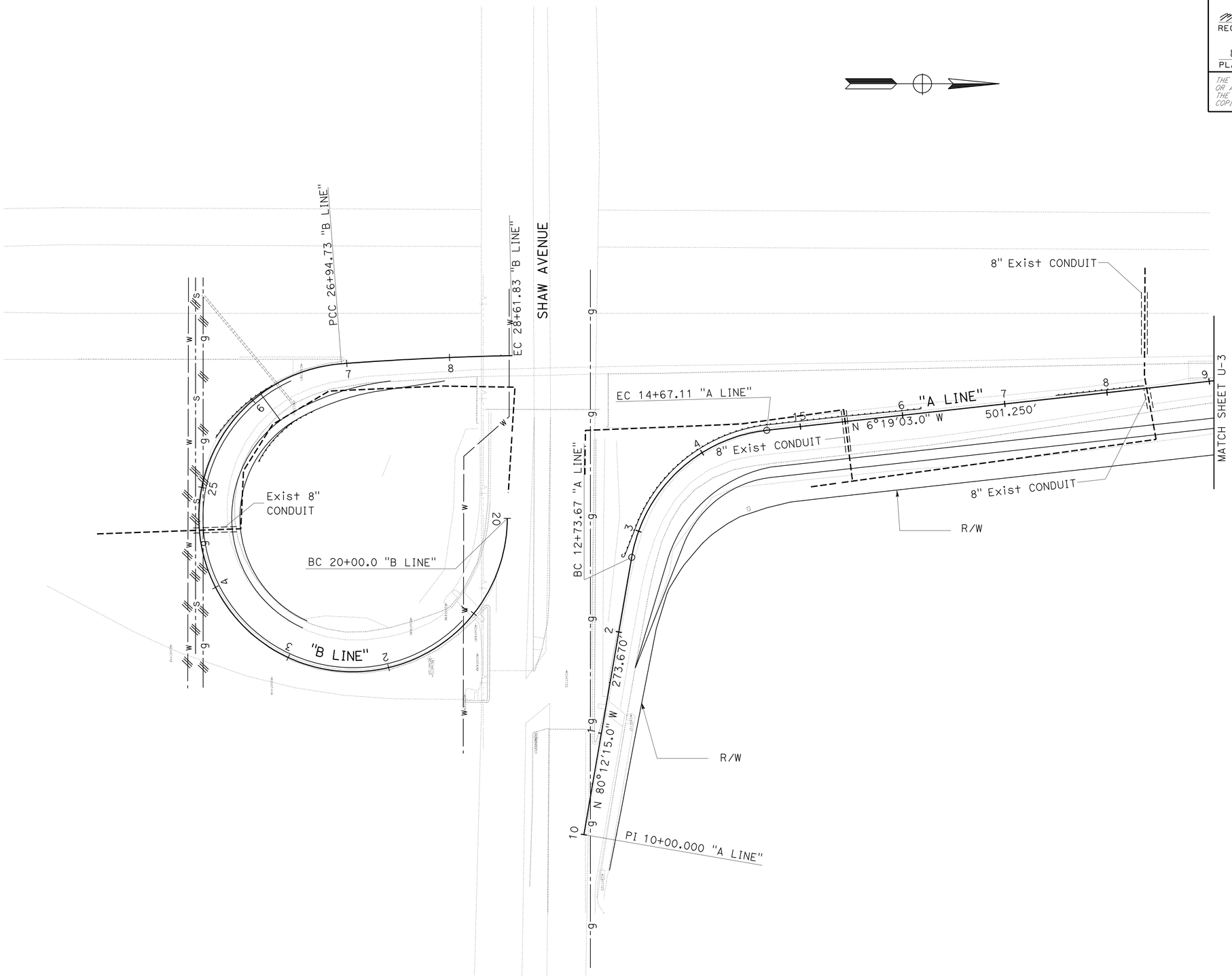

UTILITY PLAN

SCALE: 1"=50'

U-2

THIS PLAN ACCURATE FOR EXISTING UTILITIES ONLY

STATE OF CALIFORNIA - DEPARTMENT OF TRANSPORTATION
Caltrans
DESIGN

FUNCTIONAL SUPERVISOR: GETACHEW ESHETE
CALCULATED-DESIGNED BY: MIKE BETTEGA
CHECKED BY: TRIET LY
REVISED BY
DATE REVISED

LAST REVISION 04-30-09
DATE PLOTTED => 20-AUG-2009
TIME PLOTTED => 10:13

Dist	COUNTY	ROUTE	POST MILES TOTAL PROJECT	SHEET No.	TOTAL SHEETS
06	Fre	41	R27.6/R29.8	36	107

Michael S. Bettega 04/07/09
REGISTERED CIVIL ENGINEER DATE

8-17-09
PLANS APPROVAL DATE

REGISTERED PROFESSIONAL ENGINEER
MICHAEL S. BETTEGA
No. C 34348
Exp. 9/30/09
CIVIL
STATE OF CALIFORNIA

THE STATE OF CALIFORNIA OR ITS OFFICERS OR AGENTS SHALL NOT BE RESPONSIBLE FOR THE ACCURACY OR COMPLETENESS OF SCANNED COPIES OF THIS PLAN SHEET.

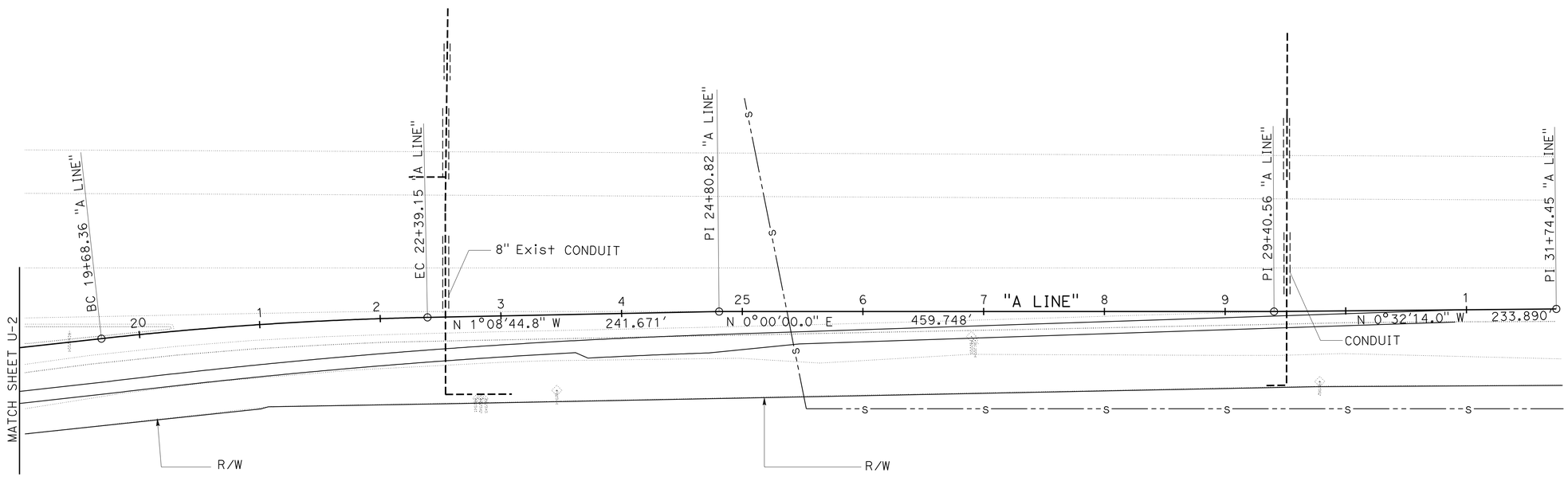

UTILITY PLAN

SCALE: 1"=50'

U-3

THIS PLAN ACCURATE FOR EXISTING UTILITIES ONLY

STATE OF CALIFORNIA - DEPARTMENT OF TRANSPORTATION
Caltrans
DESIGN

FUNCTIONAL SUPERVISOR: GETACHEW ESHETE

CALCULATED-DESIGNED BY: MIKE BETTEGA
CHECKED BY: TRIET LY

REVISED BY
DATE REVISED

LAST REVISION 04-30-09
DATE PLOTTED => 20-AUG-2009
TIME PLOTTED => 10:13

Dist	COUNTY	ROUTE	POST MILES TOTAL PROJECT	SHEET No.	TOTAL SHEETS
06	Fre	41	R27.6/R29.8	37	107

Michael S. Bettega 04/07/09
REGISTERED CIVIL ENGINEER DATE

8-17-09
PLANS APPROVAL DATE

REGISTERED PROFESSIONAL ENGINEER
MICHAEL S. BETTEGA
No. C 34348
Exp. 9/30/09
CIVIL
STATE OF CALIFORNIA

THE STATE OF CALIFORNIA OR ITS OFFICERS OR AGENTS SHALL NOT BE RESPONSIBLE FOR THE ACCURACY OR COMPLETENESS OF SCANNED COPIES OF THIS PLAN SHEET.

UTILITY PLAN

SCALE: 1"=50'

U-4

THIS PLAN ACCURATE FOR EXISTING UTILITIES ONLY

STATE OF CALIFORNIA - DEPARTMENT OF TRANSPORTATION
Caltrans
DESIGN

FUNCTIONAL SUPERVISOR: GETACHEW ESHETE
CALCULATED-DESIGNED BY: MIKE BETTEGA
CHECKED BY: TRIET LY
REVISED BY
DATE REVISED

LAST REVISION 04-30-09
DATE PLOTTED => 20-AUG-2009
TIME PLOTTED => 10:13

Dist	COUNTY	ROUTE	POST MILES TOTAL PROJECT	SHEET No.	TOTAL SHEETS
06	Fre	41	R27.6/R29.8	38	107

Michael S. Bettega 04/07/09
REGISTERED CIVIL ENGINEER DATE

8-17-09
PLANS APPROVAL DATE

REGISTERED PROFESSIONAL ENGINEER
MICHAEL S. BETTEGA
No. C 34348
Exp. 9/30/09
CIVIL
STATE OF CALIFORNIA

THE STATE OF CALIFORNIA OR ITS OFFICERS OR AGENTS SHALL NOT BE RESPONSIBLE FOR THE ACCURACY OR COMPLETENESS OF SCANNED COPIES OF THIS PLAN SHEET.

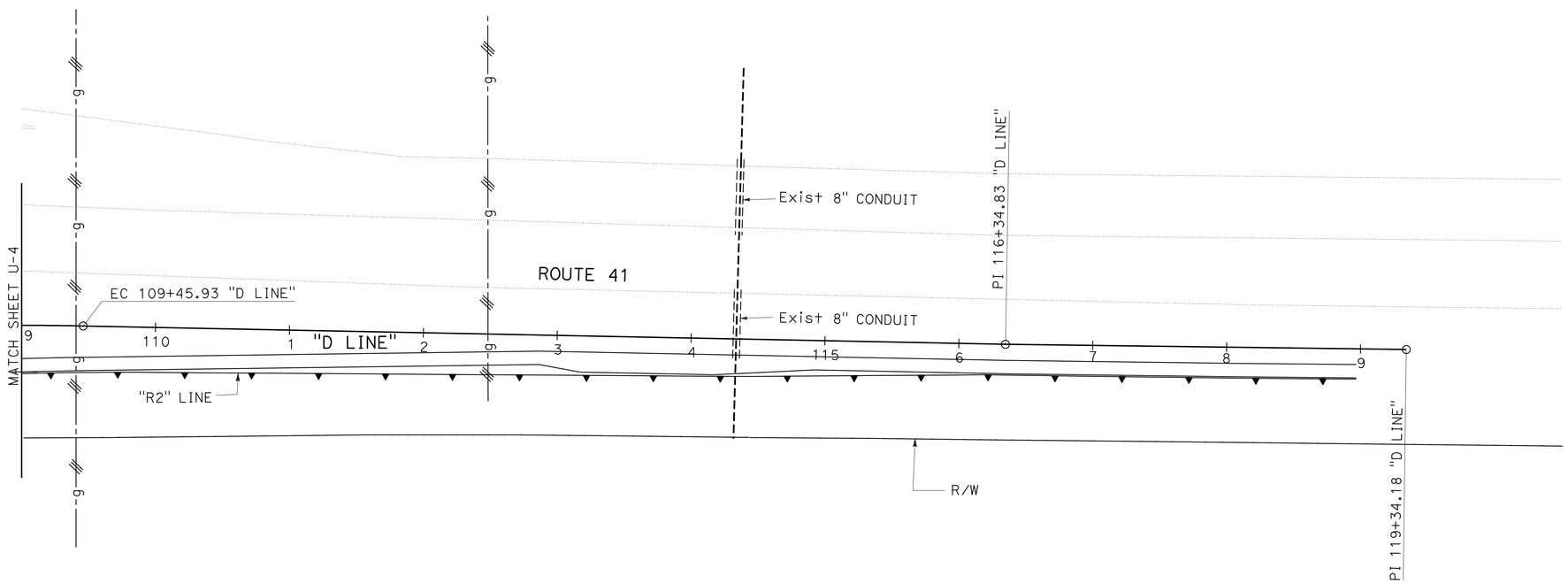

UTILITY PLAN

SCALE: 1"=50' **U-5**

THIS PLAN ACCURATE FOR EXISTING UTILITIES ONLY

STATE OF CALIFORNIA - DEPARTMENT OF TRANSPORTATION
Caltrans
DESIGN

FUNCTIONAL SUPERVISOR: GETACHEW ESHETE
CALCULATED-DESIGNED BY: MIKE BETTEGA
CHECKED BY: TRIET LY
REVISED BY
DATE REVISED

LAST REVISION 04-30-09 | DATE PLOTTED => 20-AUG-2009 | TIME PLOTTED => 10:13

Dist	COUNTY	ROUTE	POST MILES TOTAL PROJECT	SHEET No.	TOTAL SHEETS
06	Fre	41	R27.6/R29.8	39	107

Sandy L Le 04-22-09
REGISTERED CIVIL ENGINEER DATE

8-17-09
PLANS APPROVAL DATE

REGISTERED PROFESSIONAL ENGINEER
SANDY L. LE
No. 67065
Exp. 9/30/10
CIVIL
STATE OF CALIFORNIA

THE STATE OF CALIFORNIA OR ITS OFFICERS OR AGENTS SHALL NOT BE RESPONSIBLE FOR THE ACCURACY OR COMPLETENESS OF ELECTRONIC COPIES OF THIS PLAN SHEET.

STATIONARY MOUNTED CONSTRUCTION AREA SIGNS

SIGN No.	SIGN CODE	PANEL SIZE	SIGN MESSAGE	No. OF POSTS	POST SIZE	No. OF SIGNS
A	W20-1	48" x 48"	ROAD WORK AHEAD	2	6" x 6"	1
B	W20-1	30" x 30"	ROAD WORK AHEAD	1	6" x 6"	6
C	G20-2	36" x 18"	END ROAD WORK	1	4" x 4"	7

NOTE: SIGN LOCATIONS SHOWN ARE APPROXIMATE ONLY. EXACT LOCATIONS TO BE DETERMINED BY THE ENGINEER.

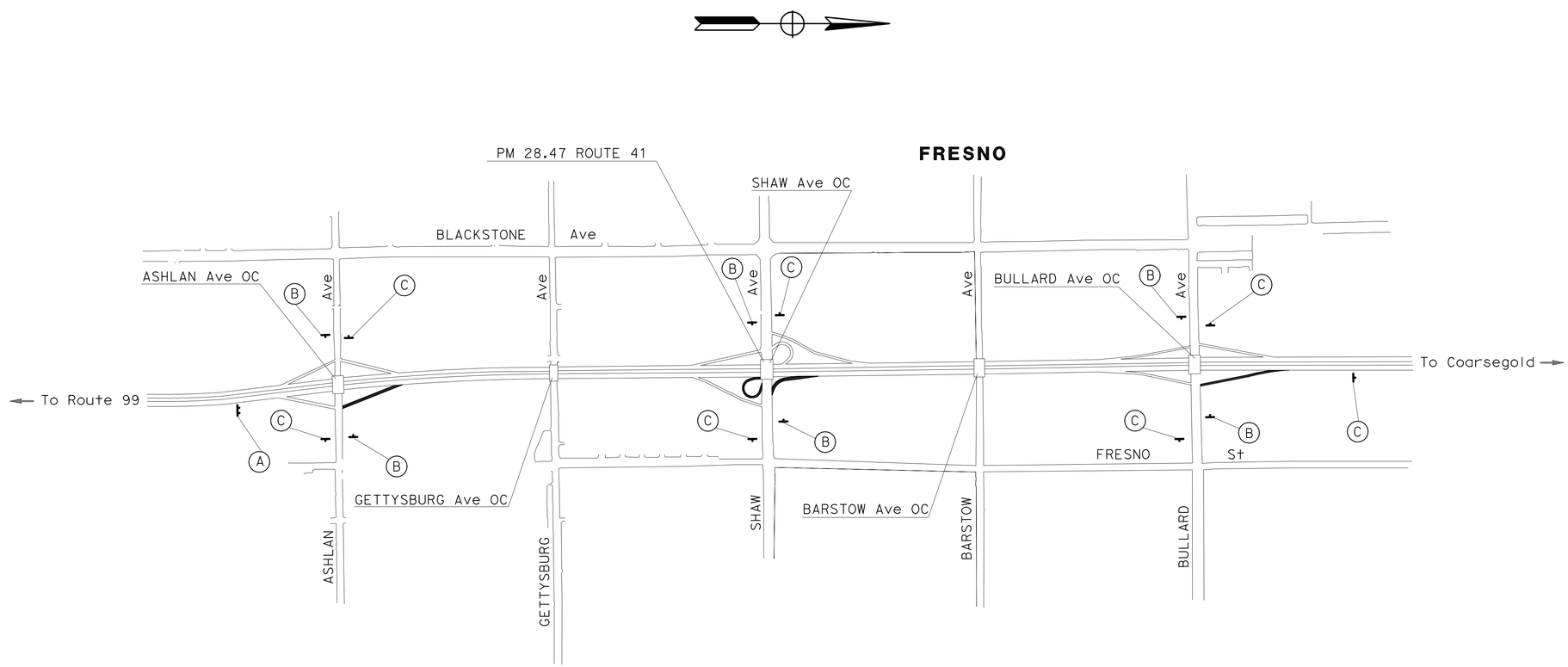

THIS PLAN ACCURATE FOR CONSTRUCTION AREA SIGN ONLY

CONSTRUCTION AREA SIGNS

NO SCALE

CS-1

STATE OF CALIFORNIA - DEPARTMENT OF TRANSPORTATION
Caltrans
TRAFFIC DESIGN

FUNCTIONAL SUPERVISOR: MOHAMMED QATAMI
CALCULATED-DESIGNED BY: SANDY LE
CHECKED BY: HASSAN TAHA
REVISED BY
DATE REVISED

LAST REVISION 04-30-09
DATE PLOTTED => 20-AUG-2009
TIME PLOTTED => 10:13

Dist	COUNTY	ROUTE	POST MILES TOTAL PROJECT	SHEET No.	TOTAL SHEETS
06	Fre	41	R27.6/R29.8	40	107

Sandy L Le 04-22-09
REGISTERED CIVIL ENGINEER DATE

8-17-09
PLANS APPROVAL DATE

REGISTERED PROFESSIONAL ENGINEER
SANDY L. LE
No. 67065
Exp. 9/30/10
CIVIL
STATE OF CALIFORNIA

THE STATE OF CALIFORNIA OR ITS OFFICERS OR AGENTS SHALL NOT BE RESPONSIBLE FOR THE ACCURACY OR COMPLETENESS OF ELECTRONIC COPIES OF THIS PLAN SHEET.

LEGEND

- DIRECTION OF TRAFFIC
- Temp RAILING (TYPE K)
- CHANNELIZERS (SURFACE MOUNTED)
- Temp CRASH CUSHION

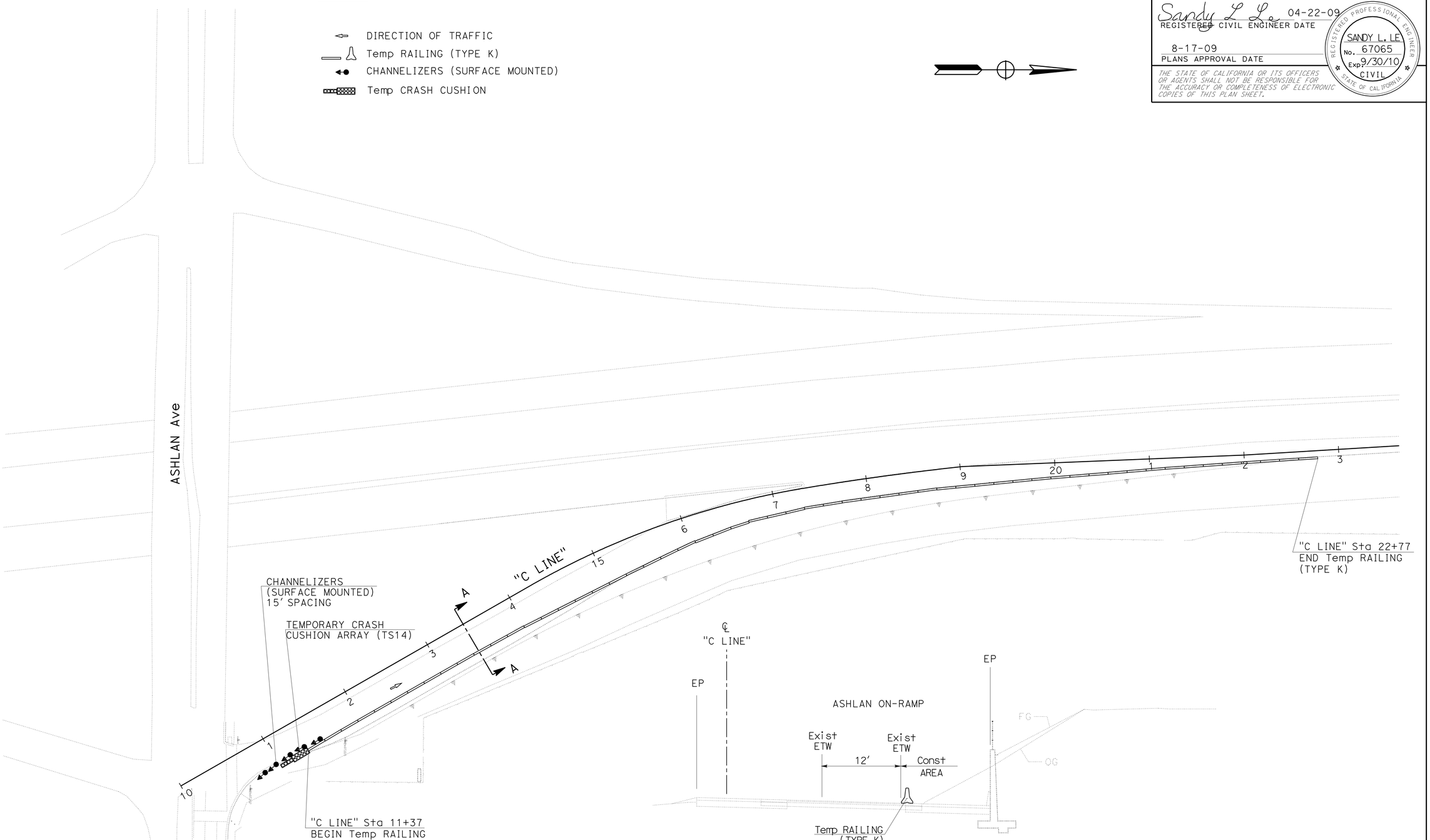

SECTION A-A
NO SCALE

TRAFFIC HANDLING PLAN
(ASHLAN Ave)
(LOCATION 1)

SCALE: 1"=50'

TH-1

THIS PLAN ACCURATE FOR TRAFFIC HANDLING ONLY

STATE OF CALIFORNIA - DEPARTMENT OF TRANSPORTATION
Caltrans
TRAFFIC DESIGN

FUNCTIONAL SUPERVISOR: MOHAMMED QATAMI
CALCULATED-DESIGNED BY: SANDY LE
CHECKED BY: HASSAN TAHA
REVISED BY
DATE REVISED

LAST REVISION 04-22-09
DATE PLOTTED => 20-AUG-2009
TIME PLOTTED => 10:13

Dist	COUNTY	ROUTE	POST MILES TOTAL PROJECT	SHEET No.	TOTAL SHEETS
06	Fre	41	R27.6/R29.8	41	107

Sandy L Le 04-22-09
REGISTERED CIVIL ENGINEER DATE

8-17-09
PLANS APPROVAL DATE

REGISTERED PROFESSIONAL ENGINEER
SANDY L. LE
No. 67065
Exp. 9/30/10
CIVIL
STATE OF CALIFORNIA

THE STATE OF CALIFORNIA OR ITS OFFICERS OR AGENTS SHALL NOT BE RESPONSIBLE FOR THE ACCURACY OR COMPLETENESS OF ELECTRONIC COPIES OF THIS PLAN SHEET.

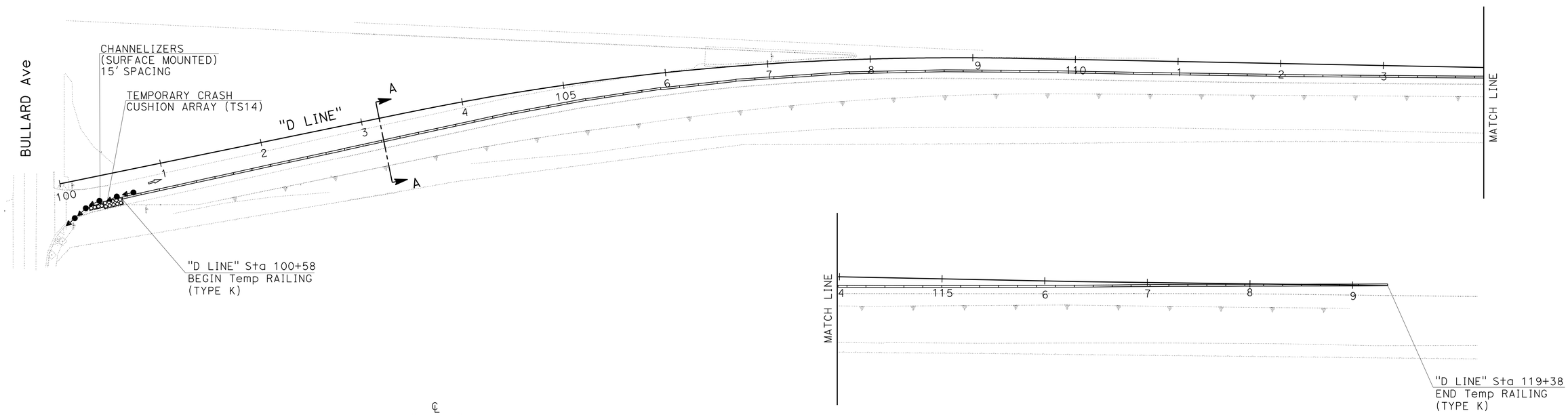

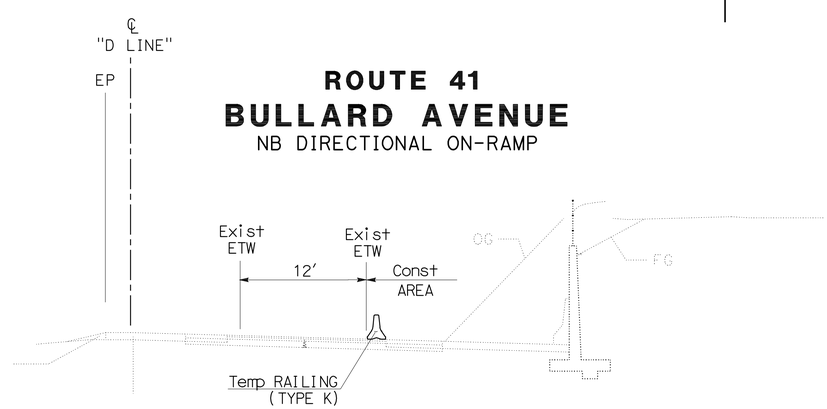

ROUTE 41
BULLARD AVENUE
NB DIRECTIONAL ON-RAMP

SECTION A-A
NO SCALE

TRAFFIC HANDLING PLAN
(BULLARD Ave)
(LOCATION 4)

SCALE: 1"=50'

TH-2

THIS PLAN ACCURATE FOR TRAFFIC HANDLING ONLY

STATE OF CALIFORNIA - DEPARTMENT OF TRANSPORTATION
Caltrans
TRAFFIC DESIGN

FUNCTIONAL SUPERVISOR: MOHAMMED QATAMI
CALCULATED-DESIGNED BY: SANDY LE
CHECKED BY: HASSAN TAHA
REVISED BY
DATE REVISED

LAST REVISION 04-30-09
DATE PLOTTED => 20-AUG-2009
TIME PLOTTED => 10:13

Dist	COUNTY	ROUTE	POST MILES TOTAL PROJECT	SHEET No.	TOTAL SHEETS
06	Fre	41	R27.6/R29.8	42	107

Sandy L Le 04-22-09
REGISTERED CIVIL ENGINEER DATE

8-17-09
PLANS APPROVAL DATE

REGISTERED PROFESSIONAL ENGINEER
SANDY L. LE
No. 67065
Exp 9/30/10
CIVIL
STATE OF CALIFORNIA

THE STATE OF CALIFORNIA OR ITS OFFICERS OR AGENTS SHALL NOT BE RESPONSIBLE FOR THE ACCURACY OR COMPLETENESS OF ELECTRONIC COPIES OF THIS PLAN SHEET.

TEMPORARY RAILING (TYPE K)

SHEET No.	LOCATION	LF
TH-1	Sta 11+37 TO 22+77	1140
TH-2	Sta 100+58 TO 119+38	1880
TOTAL		3020

TEMPORARY CRASH CUSHION MODULE

SHEET No.	EA
TH-1	14
TH-2	14
TOTAL	28

CHANNELIZER (SURFACE MOUNTED)

SHEET No.	EA
TH-1	5
TH-2	5
TOTAL	10

TRAFFIC HANDLING QUANTITIES

THQ-1

STATE OF CALIFORNIA - DEPARTMENT OF TRANSPORTATION
Caltrans TRAFFIC DESIGN
FUNCTIONAL SUPERVISOR: MOHAMMED QATAMI
CALCULATED-DESIGNED BY: SANDY LE
CHECKED BY: HASSAN TAHA
REVISED BY
DATE REVISED

LAST REVISION 04-30-09
DATE PLOTTED => 20-AUG-2009
TIME PLOTTED => 10:14

Dist	COUNTY	ROUTE	POST MILES TOTAL PROJECT	SHEET No.	TOTAL SHEETS
06	Fre	41	R27.6/R29.8	43	107

Sandy L Le 04-22-09
REGISTERED CIVIL ENGINEER DATE

8-17-09
PLANS APPROVAL DATE

REGISTERED PROFESSIONAL ENGINEER
SANDY L. LE
No. 67065
Exp. 9/30/10
CIVIL
STATE OF CALIFORNIA

THE STATE OF CALIFORNIA OR ITS OFFICERS OR AGENTS SHALL NOT BE RESPONSIBLE FOR THE ACCURACY OR COMPLETENESS OF ELECTRONIC COPIES OF THIS PLAN SHEET.

LEGEND

- XX — TRAFFIC STRIPE DETAIL No.
- XX — ROADSIDE SIGN No.
- ROADSIDE SIGN-ONE POST
- RESET ROADSIDE SIGN
- INSTALL ROADSIDE SIGN - SEE ELECTRICAL PLANS
- RESET ROADSIDE SIGN (STRAP AND SADDLE BRACKET METHOD)- SEE ELECTRICAL PLANS
- ELECTRICAL SIGNAL SYSTEM: SEE "E" SHEETS
- DELINEATOR -CLASS I (TYPE G, F)
- DIAMOND SYMBOL
- LIMITS OF DESIGNATED TRAFFIC STRIPING DETAIL
- OVERHEAD SIGN

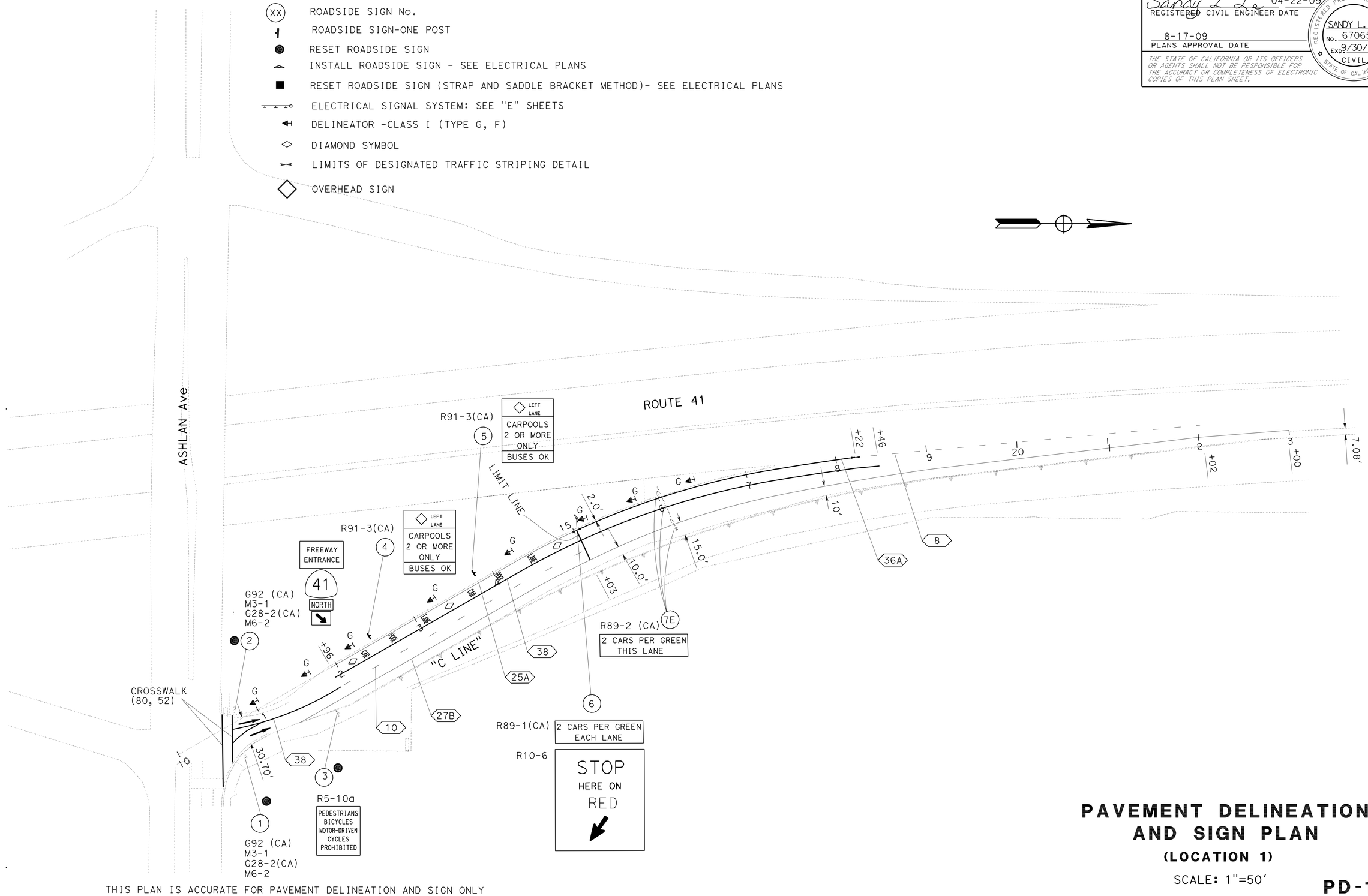

THIS PLAN IS ACCURATE FOR PAVEMENT DELINEATION AND SIGN ONLY

PAVEMENT DELINEATION AND SIGN PLAN

(LOCATION 1)

SCALE: 1"=50'

PD-1

STATE OF CALIFORNIA - DEPARTMENT OF TRANSPORTATION
Caltrans **TRAFFIC DESIGN**
FUNCTIONAL SUPERVISOR **MOHAMMED QATAMI**
CALCULATED-DESIGNED BY SANDY LE
CHECKED BY HASSAN TAHA
REVISED BY
DATE REVISED

LAST REVISION 04-30-09
DATE PLOTTED => 20-AUG-2009
TIME PLOTTED => 10:14

Dist	COUNTY	ROUTE	POST MILES TOTAL PROJECT	SHEET No.	TOTAL SHEETS
06	Fre	41	R27.6/R29.8	44	107

Sandy L Le 04-22-09
REGISTERED CIVIL ENGINEER DATE

8-17-09
PLANS APPROVAL DATE

REGISTERED PROFESSIONAL ENGINEER
SANDY L. LE
No. 67065
Exp. 9/30/10
CIVIL
STATE OF CALIFORNIA

THE STATE OF CALIFORNIA OR ITS OFFICERS OR AGENTS SHALL NOT BE RESPONSIBLE FOR THE ACCURACY OR COMPLETENESS OF ELECTRONIC COPIES OF THIS PLAN SHEET.

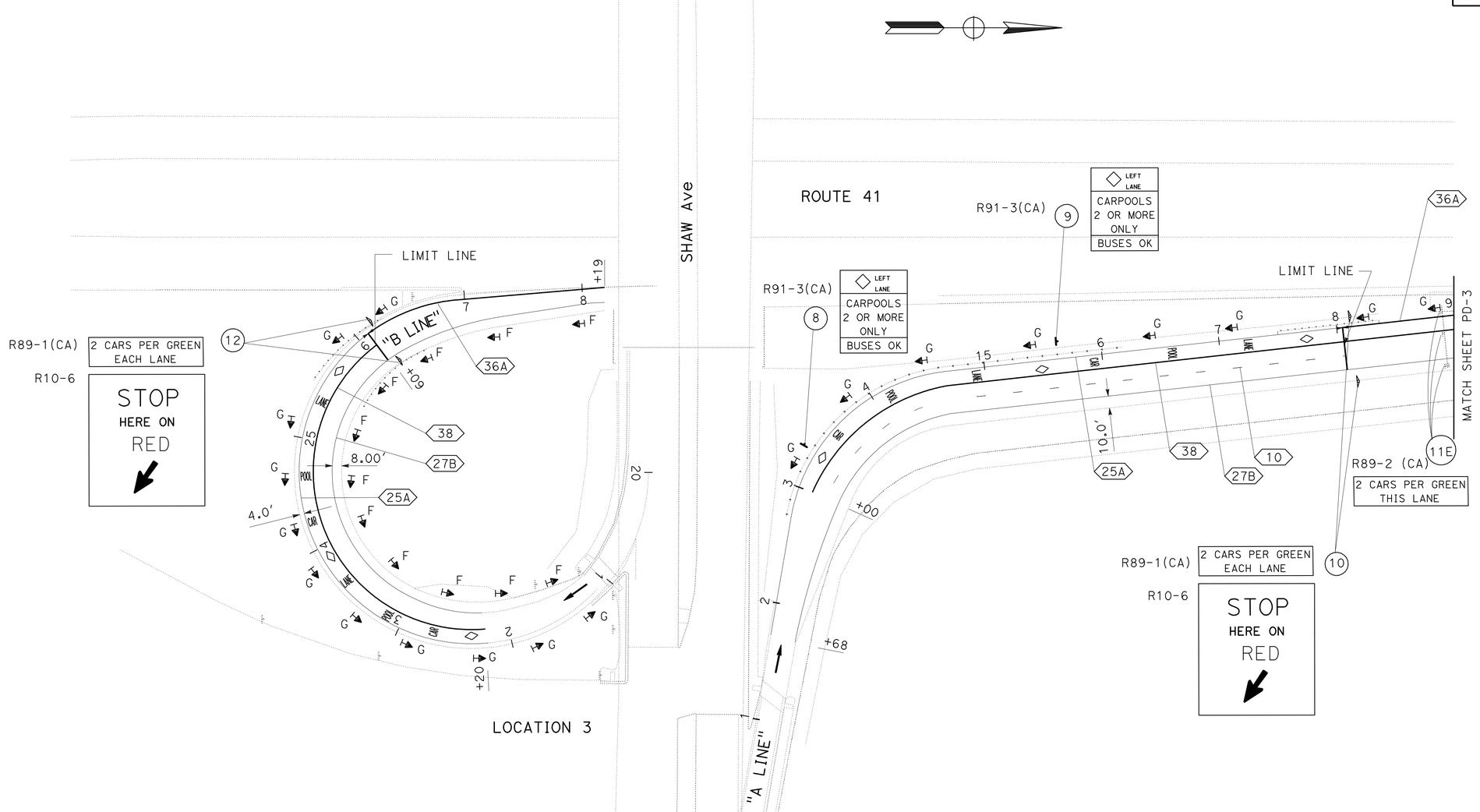

THIS PLAN IS ACCURATE FOR PAVEMENT DELINEATION AND SIGN ONLY

PAVEMENT DELINEATION AND SIGN PLAN
(LOCATION 2 AND 3)

SCALE: 1"=50'

PD-2

STATE OF CALIFORNIA - DEPARTMENT OF TRANSPORTATION
Caltrans
TRAFFIC DESIGN

FUNCTIONAL SUPERVISOR: MOHAMMED QATAMI
CALCULATED-DESIGNED BY: SANDY LE
CHECKED BY: HASSAN TAHA
REVISED BY
DATE REVISED

LAST REVISION 04-30-09
DATE PLOTTED => 20-AUG-2009
TIME PLOTTED => 10:14

BORDER LAST REVISED 4/11/2008
RELATIVE BORDER SCALE IS IN INCHES 0 1 2 3
USERNAME => trmikesl
DGN FILE => 60E970na002.dgn
CU 06386
EA 0E9701

Dist	COUNTY	ROUTE	POST MILES TOTAL PROJECT	SHEET No.	TOTAL SHEETS
06	Fre	41	R27.6/R29.8	45	107

Sandy L Le 04-22-09
REGISTERED CIVIL ENGINEER DATE

8-17-09
PLANS APPROVAL DATE

REGISTERED PROFESSIONAL ENGINEER
SANDY L. LE
No. 67065
Exp. 9/30/10
CIVIL
STATE OF CALIFORNIA

THE STATE OF CALIFORNIA OR ITS OFFICERS OR AGENTS SHALL NOT BE RESPONSIBLE FOR THE ACCURACY OR COMPLETENESS OF ELECTRONIC COPIES OF THIS PLAN SHEET.

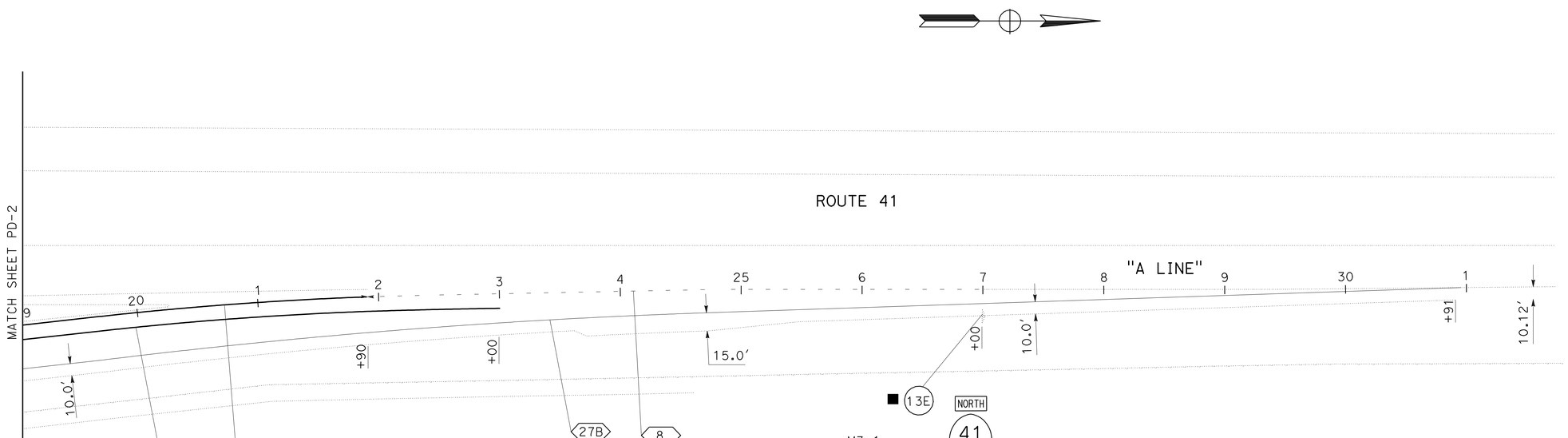

THIS PLAN IS ACCURATE FOR PAVEMENT DELINEATION AND SIGN ONLY

PAVEMENT DELINEATION AND SIGN PLAN
(LOCATION 2)

SCALE: 1"=50'

PD-3

STATE OF CALIFORNIA - DEPARTMENT OF TRANSPORTATION
Caltrans
TRAFFIC DESIGN

FUNCTIONAL SUPERVISOR: MOHAMMED QATAMI
CALCULATED-DESIGNED BY: SANDY LE
CHECKED BY: HASSAN TAHA
REVISED BY
DATE REVISED

LAST REVISION 04-30-09
DATE PLOTTED => 20-AUG-2009
TIME PLOTTED => 10:14

Dist	COUNTY	ROUTE	POST MILES TOTAL PROJECT	SHEET No.	TOTAL SHEETS
06	Fre	41	R27.6/R29.8	46	107

Sandy L Le 04-22-09
REGISTERED CIVIL ENGINEER DATE

8-17-09
PLANS APPROVAL DATE

REGISTERED PROFESSIONAL ENGINEER
SANDY L. LE
No. 67065
Exp 9/30/10
CIVIL
STATE OF CALIFORNIA

THE STATE OF CALIFORNIA OR ITS OFFICERS OR AGENTS SHALL NOT BE RESPONSIBLE FOR THE ACCURACY OR COMPLETENESS OF ELECTRONIC COPIES OF THIS PLAN SHEET.

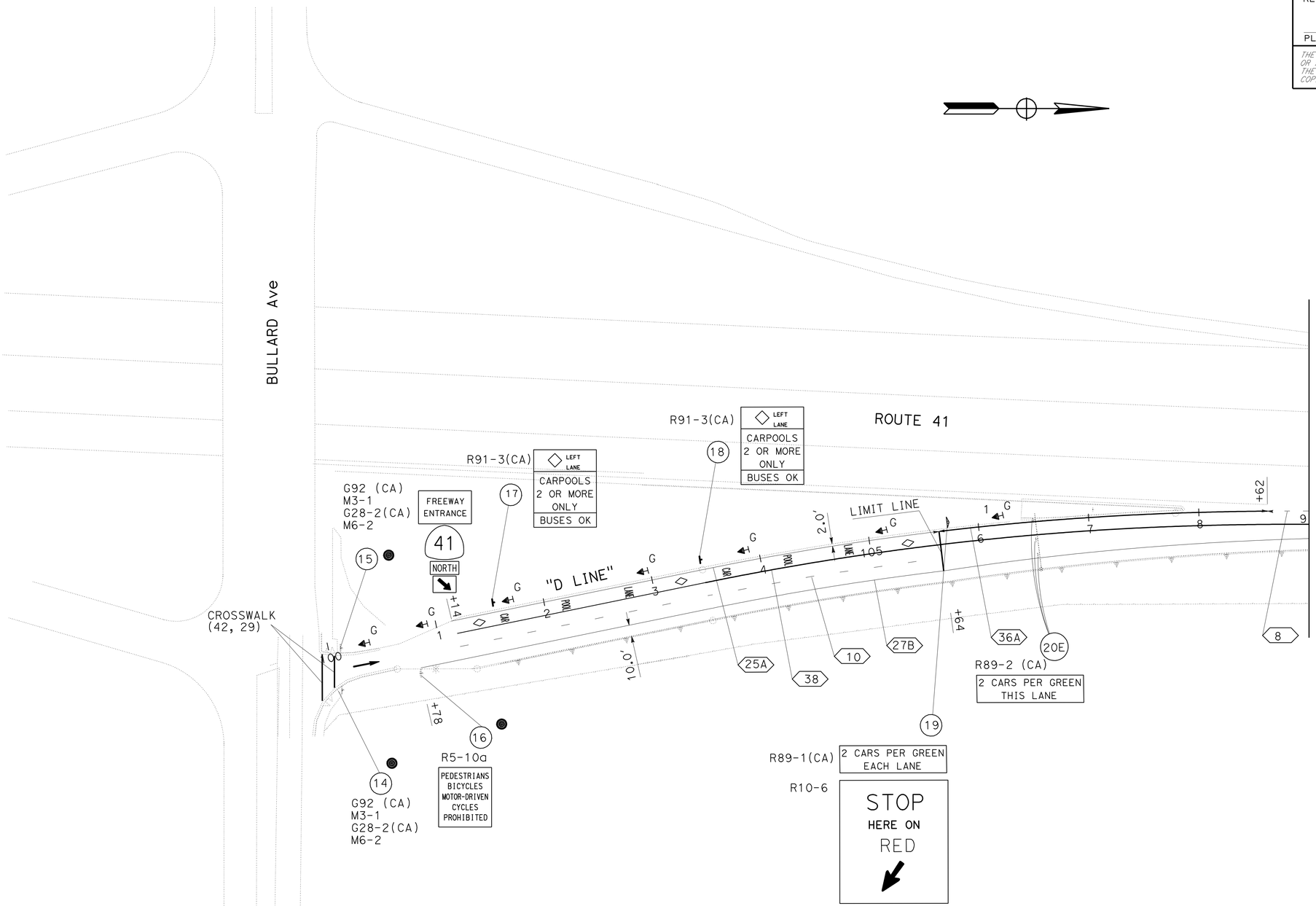

THIS PLAN IS ACCURATE FOR PAVEMENT DELINEATION AND SIGN ONLY

PAVEMENT DELINEATION AND SIGN PLAN
(LOCATION 4)

SCALE: 1"=50'

PD-4

STATE OF CALIFORNIA - DEPARTMENT OF TRANSPORTATION
Caltrans TRAFFIC DESIGN

FUNCTIONAL SUPERVISOR: MOHAMMED QATAMI
CALCULATED-DESIGNED BY: SANDY LE
CHECKED BY: HASSAN TAHA
REVISED BY
DATE REVISED

LAST REVISION 04-30-09
DATE PLOTTED => 20-AUG-2009
TIME PLOTTED => 10:14

Dist	COUNTY	ROUTE	POST MILES TOTAL PROJECT	SHEET No.	TOTAL SHEETS
06	Fre	41	R27.6/R29.8	47	107

Sandy L Le 04-22-09
REGISTERED CIVIL ENGINEER DATE

8-17-09
PLANS APPROVAL DATE

REGISTERED PROFESSIONAL ENGINEER
SANDY L. LE
No. 67065
Exp. 9/30/10
CIVIL
STATE OF CALIFORNIA

THE STATE OF CALIFORNIA OR ITS OFFICERS OR AGENTS SHALL NOT BE RESPONSIBLE FOR THE ACCURACY OR COMPLETENESS OF ELECTRONIC COPIES OF THIS PLAN SHEET.

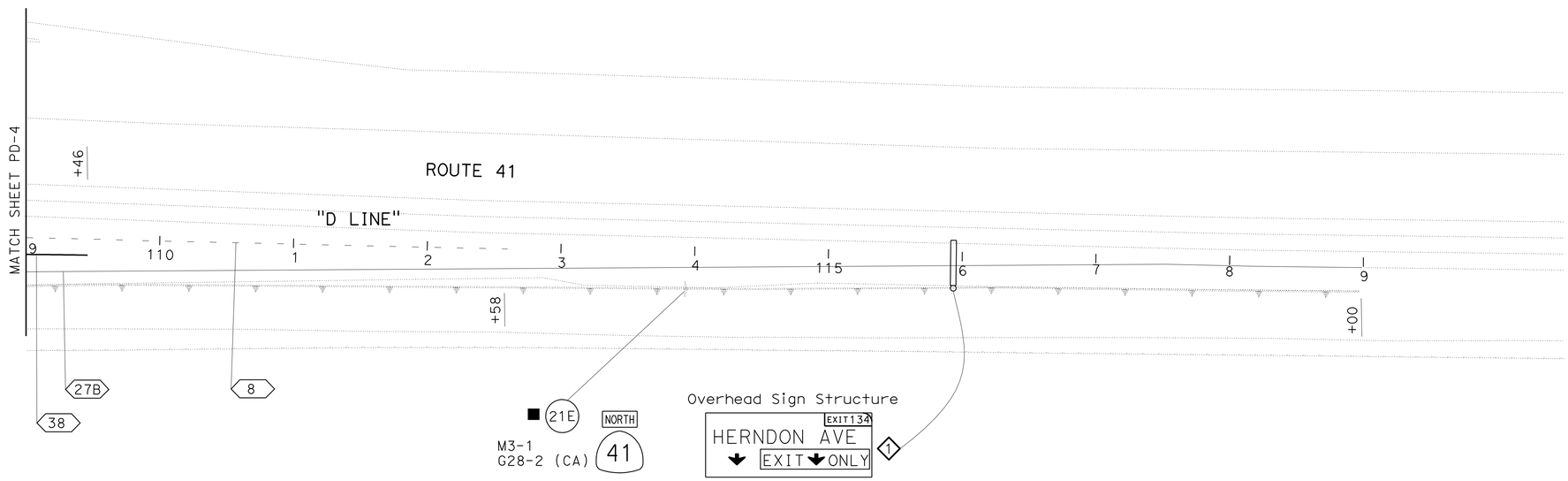

THIS PLAN IS ACCURATE FOR PAVEMENT DELINEATION AND SIGN ONLY

PAVEMENT DELINEATION AND SIGN PLAN

(LOCATION 4)

SCALE: 1"=50'

PD-5

STATE OF CALIFORNIA - DEPARTMENT OF TRANSPORTATION
Caltrans TRAFFIC DESIGN

FUNCTIONAL SUPERVISOR: MOHAMMED QATAMI

CALCULATED-DESIGNED BY: SANDY LE
CHECKED BY: HASSAN TAHA

REVISED BY
DATE REVISED

LAST REVISION 04-30-09
DATE PLOTTED => 20-AUG-2009
TIME PLOTTED => 10:15

Dist	COUNTY	ROUTE	POST MILES TOTAL PROJECT	SHEET No.	TOTAL SHEETS
06	Fre	41	R27.6/R29.8	48	107

Sandy L Le 04-22-09
REGISTERED CIVIL ENGINEER DATE

8-17-09
PLANS APPROVAL DATE

REGISTERED PROFESSIONAL ENGINEER
SANDY L. LE
No. 67065
Exp 9/30/10
CIVIL
STATE OF CALIFORNIA

THE STATE OF CALIFORNIA OR ITS OFFICERS OR AGENTS SHALL NOT BE RESPONSIBLE FOR THE ACCURACY OR COMPLETENESS OF ELECTRONIC COPIES OF THIS PLAN SHEET.

PAVEMENT DELINEATION QUANTITIES

SHEET No.	LOCATION ROUTE 41		DIRECTION	DETAIL No.	PAVEMENT MARKER (RETROREFLECTIVE) TYPE G YELLOW (ONE-WAY)	PAVEMENT MARKER (RETROREFLECTIVE) TYPE H YELLOW (ONE-WAY)	PAVEMENT MARKER (NON-REFLECTIVE) TYPE A WHITE	REMOVE PAVEMENT MARKER	THERMOPLASTIC TRAFFIC STRIPE SOLID 8"	THERMOPLASTIC TRAFFIC STRIPE SOLID 4"	THERMOPLASTIC TRAFFIC STRIPE BROKEN 17-7 4"	THERMOPLASTIC PAVEMENT MARKING	
	Sta	Sta			EA	EA	EA	EA	LF	LF	LF	DESCRIPTION	SQFT
PD-1	10+60	11+96	NB	38	7			7	136			1-CROSSWALK	132
	11+40	23+00	NB	27B						1160		2-TYPE I(18) ARROW	50
	11+96	18+46	NB	38	28			28	650			3-DIAMOND SYMBOLS	33
	11+96	15+03	NB	25A		14		14		307		2-CAR	34
	15+03	18+22	NB	36A	14			14	319			2-POOL	46
	18+22	22+02	NB	8							380	2-LANE	48
	11+96	15+03	NB	10	7		40	47				1-LIMIT LINE	36
PD-2 TO PD-3	22+20	28+19	NB	27B						599		1-LIMIT LINE	28
	22+20	26+09	NB	25A		17		17		389		1-TYPE I(18) ARROW	25
	26+09	28+19	NB	36A	10			10	210			3-DIAMOND SYMBOLS	33
	22+20	26+09	NB	38	17			17	389			2-CAR	34
												2-POOL	46
												2-LANE	48
	11+68	30+91	NB	27B						1923		1-LIMIT LINE	36
	11+68	18+04	NB	25A		28		28		636		1-TYPE I(18) ARROW	25
	18+04	21+90	NB	36A	17			17	386			3-DIAMOND SYMBOLS	33
	21+90	27+00	NB	8							510	2-CAR	34
	13+00	23+00	NB	38	43			43	1000			2-POOL	46
	13+00	18+04	NB	10	12		64	76				2-LANE	48
PD-4 TO PD-5	100+78	119+00	NB	27B						1822		1-CROSSWALK	71
	101+14	105+64	NB	25A		20		20		450		1-TYPE I(18) ARROW	25
	101+14	109+46	NB	38	36			36	832			3-DIAMOND SYMBOLS	33
	105+64	108+62	NB	36A	13			13	298			2-CAR	34
	108+62	112+58	NB	8							396	2-POOL	46
	101+14	105+64	NB	10	10		58	68				2-LANE	48
												1-LIMIT LINE	36
SHEET SUBTOTAL					214	79	162	455	4220	7286	1286		1108
SHEET TOTAL					293		162	455	4220	7286	1286		1108

REVISED BY | DATE REVISED

SANDY LE | HASSAN TAHA

CALCULATED-DESIGNED BY | CHECKED BY

FUNCTIONAL SUPERVISOR

MOHAMMED QATAMI

STATE OF CALIFORNIA - DEPARTMENT OF TRANSPORTATION

Caltrans TRAFFIC DESIGN

PAVEMENT DELINEATION QUANTITIES
PDQ-1

LAST REVISION 04-30-09 | DATE PLOTTED => 20-AUG-2009 | TIME PLOTTED => 10:15

DIST	COUNTY	ROUTE	POST MILES TOTAL PROJECT	SHEET No	TOTAL SHEETS
06	Fre	41	R27.6/R29.8	49	107

REGISTERED CIVIL ENGINEER 6/10/09

8-17-09
PLANS APPROVAL DATE

REGISTERED PROFESSIONAL ENGINEER JOEL MAGANA No. C61500 Exp. 6/30/11 CIVIL STATE OF CALIFORNIA

The State of California or its officers or agents shall not be responsible for the accuracy or completeness of electronic copies of this plan sheet.

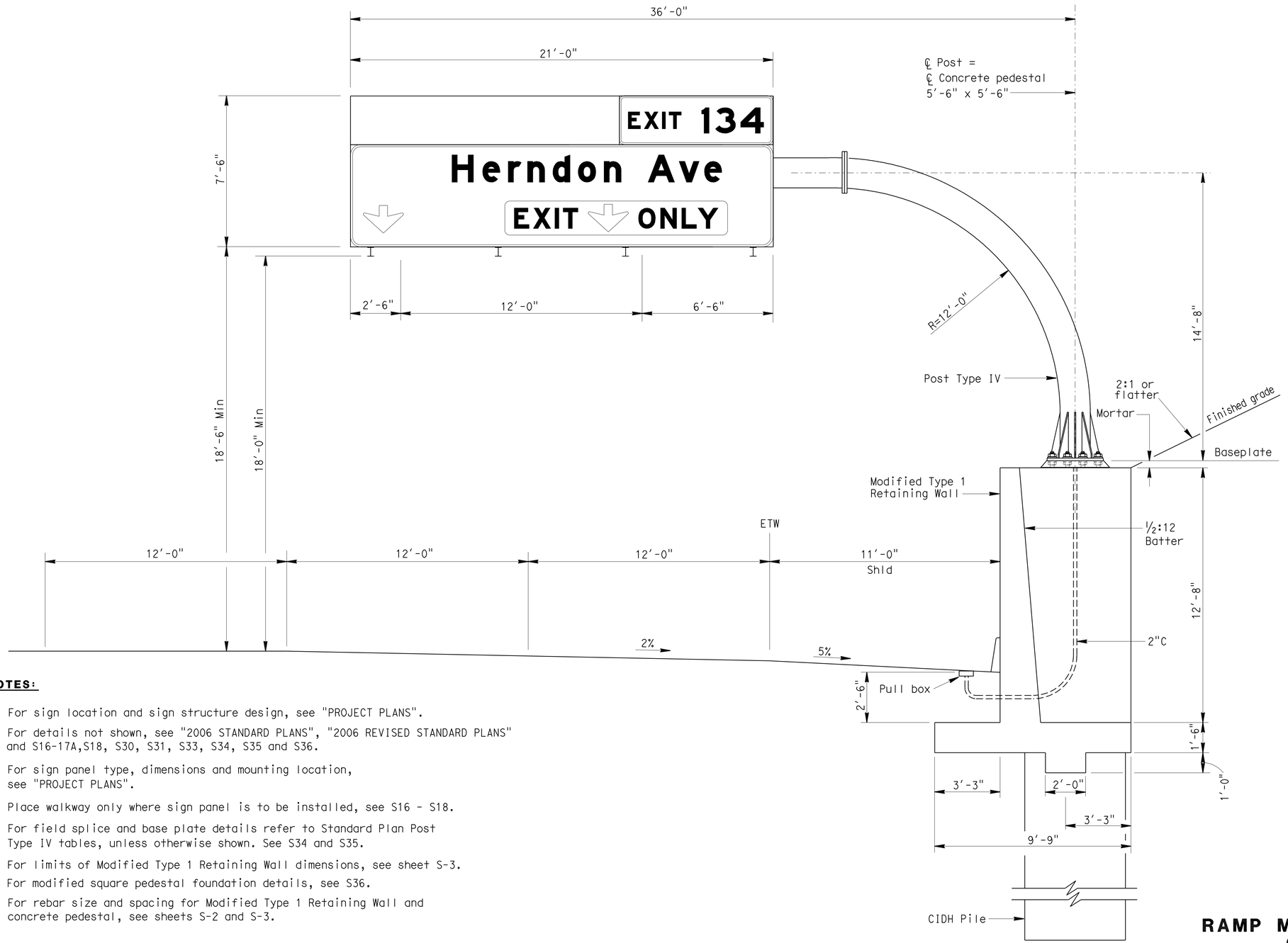

GENERAL NOTES:

DESIGN:

Load Factor Design

Bridge Design Specifications

LOADING:

WIND LOADING:

Normal to face of sign: 40.3 psf on 100% panel coverage.

Transverse to face of sign: 30% of normal force.

WALKWAY LOADING:

Dead load +500 lb concentrated live load.

UNIT STRESSES:

STRUCTURAL STEEL: fy = 36,000 psi

REINFORCED CONCRETE: fy = 60,000 psi

f'c = 3,600 psi

MINIMUM CLEARANCE:

Vertical roadway clearance 18'-0" above roadway and shoulders.

NOTES:

1. For sign location and sign structure design, see "PROJECT PLANS".
2. For details not shown, see "2006 STANDARD PLANS", "2006 REVISED STANDARD PLANS" and S16-17A,S18, S30, S31, S33, S34, S35 and S36.
3. For sign panel type, dimensions and mounting location, see "PROJECT PLANS".
4. Place walkway only where sign panel is to be installed, see S16 - S18.
5. For field splice and base plate details refer to Standard Plan Post Type IV tables, unless otherwise shown. See S34 and S35.
6. For limits of Modified Type 1 Retaining Wall dimensions, see sheet S-3.
7. For modified square pedestal foundation details, see S36.
8. For rebar size and spacing for Modified Type 1 Retaining Wall and concrete pedestal, see sheets S-2 and S-3.

NOTE:
THE CONTRACTOR SHALL VERIFY ALL CONTROLLING FIELD DIMENSIONS BEFORE ORDERING OR FABRICATING ANY MATERIAL.

RAMP METERING SYSTEM DETAILS
OVERHEAD SIGN AT
Sta 115+94 "D LINE" =
Sta 115+84.69 LOL "R2"
LOCATION 4
SIGN LAYOUT

NO SCALE

S-1

ALL DIMENSIONS ARE IN INCHES UNLESS OTHERWISE SHOWN

ORIGINAL SCALE IN INCHES FOR REDUCED PLANS 0 1 2 3

USERNAME => trmikesl
DGN FILE => spec_des_br_prj/misc/ray/06_0e9701_s1.dgn

CU 06

EA 0E9701

LAST REVISION 6/10/09

DATE PLOTTED => 20-AUG-2009
TIME PLOTTED => 11:34

STATE OF CALIFORNIA - DEPARTMENT OF TRANSPORTATION
Caltrans SPECIAL DESIGNS BRANCH

PROJECT ENGINEER ELISEO LOPEZ

CALCULATED/DESIGNED BY ELISEO LOPEZ
CHECKED BY JOEL MAGANA

DATE 7/5/08 7/5/08

DETAILS QUANTITIES

R. YEE ELISEO LOPEZ

DIST	COUNTY	ROUTE	POST MILES TOTAL PROJECT	SHEET No	TOTAL SHEETS
06	Fre	41	R27.6/R29.8	50	107

REGISTERED CIVIL ENGINEER 6/10/09

8-17-09
PLANS APPROVAL DATE

REGISTERED PROFESSIONAL ENGINEER JOEL MAGANA No. C61500 Exp. 6/30/11 CIVIL STATE OF CALIFORNIA

The State of California or its officers or agents shall not be responsible for the accuracy or completeness of electronic copies of this plan sheet.

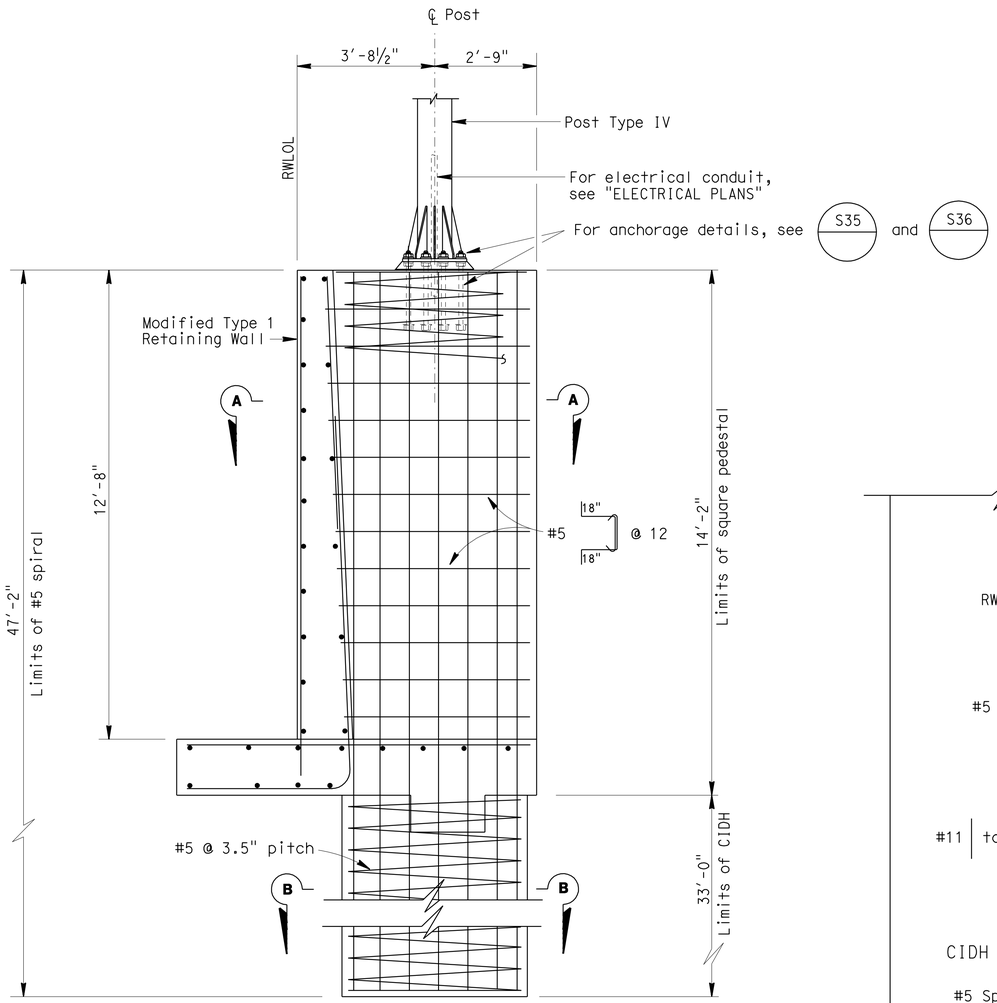

PEDESTAL SECTION VIEW

Scale: ½" = 1'-0"

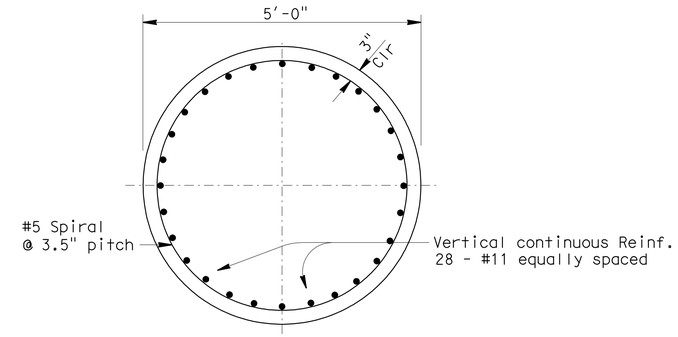

SECTION B-B

Scale: ¾" = 1'-0"

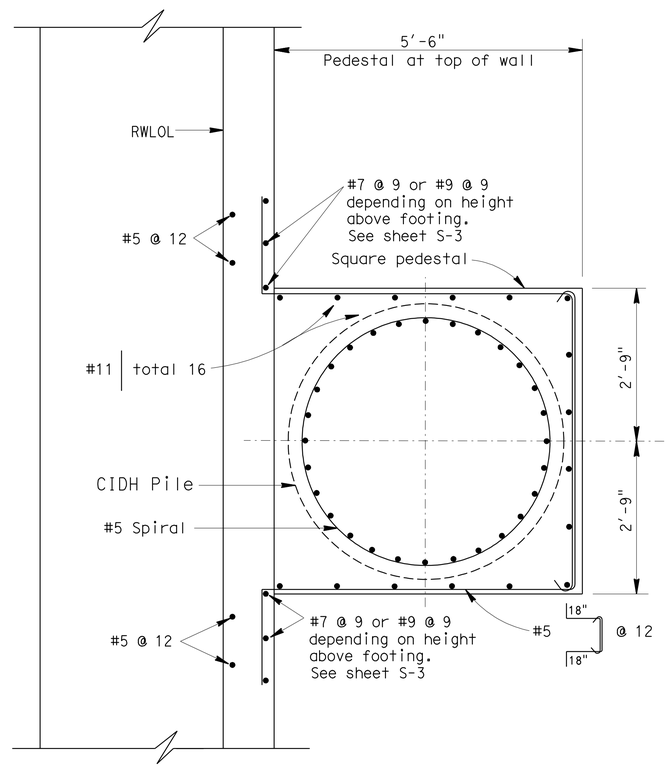

SECTION A-A

Scale: ¾" = 1'-0"

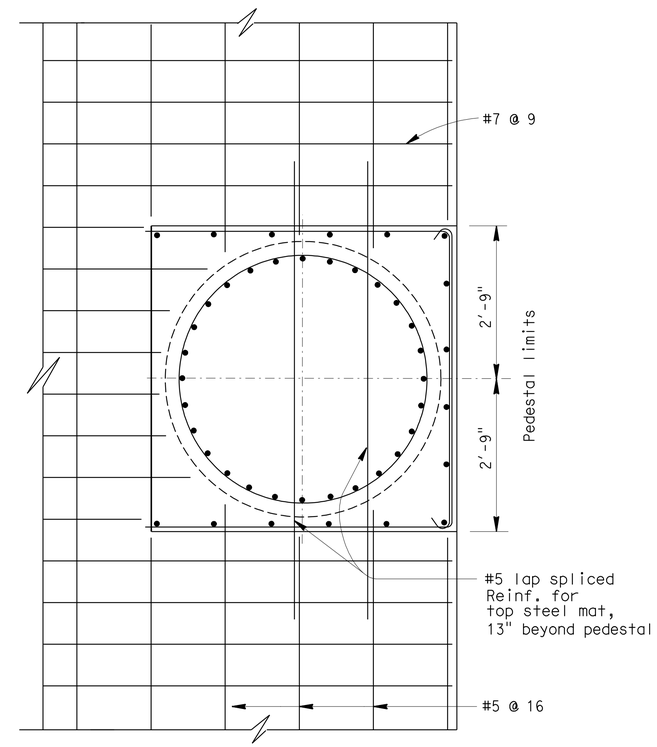

FOOTING REINFORCING PLAN

Scale: ¾" = 1'-0"

NOTES:

1. Reinforcing shall be centered from sign axis.
2. For sign location, see "PROJECT PLANS".
3. For details not shown, see "2006 STANDARD PLANS", "2006 REVISED STANDARD PLANS" and S30, S31, S33, S34, S35 and S36.
4. For modified square pedestal foundation details, see "2006 STANDARD PLANS", S36.
5. For Modified Type 1 Retaining Wall rebar size and spacing, see sheet S-3.

NOTE:
THE CONTRACTOR SHALL VERIFY ALL CONTROLLING FIELD DIMENSIONS BEFORE ORDERING OR FABRICATING ANY MATERIAL.

ALL DIMENSIONS ARE IN INCHES UNLESS OTHERWISE SHOWN

RAMP METERING SYSTEM DETAILS OVERHEAD SIGN AT Sta 115+94 "D LINE" = Sta 115+84.69 LOL "R2" LOCATION 4 DETAILS

S-2

R. YEE	DETAILS	DATE 8/25/08	CALCULATED/DESIGNED BY E. LOPEZ
E. LOPEZ	QUANTITIES	8/25/08	CHECKED BY J. MAGANA

PROJECT ENGINEER ELISEO LOPEZ

STATE OF CALIFORNIA - DEPARTMENT OF TRANSPORTATION
Caltrans SPECIAL DESIGNS BRANCH

LAST REVISION 6/10/09 | DATE PLOTTED => 20-AUG-2009 | TIME PLOTTED => 11:35

ORIGINAL SCALE IN INCHES FOR REDUCED PLANS 0 1 2 3

USERNAME => trmikesi
DGN FILE => spec_des_br_prj/misc/ray/06_0e9701_s2.dgn

CU 06 | EA 0E9701

DIST	COUNTY	ROUTE	POST MILES TOTAL PROJECT	SHEET No	TOTAL SHEETS
06	Fre	41	R27.6/29.8	51	107

REGISTERED CIVIL ENGINEER 6/10/09

8-17-09
PLANS APPROVAL DATE

REGISTERED PROFESSIONAL ENGINEER JOEL MAGANA No. C61500 Exp. 6/30/11 CIVIL STATE OF CALIFORNIA

The State of California or its officers or agents shall not be responsible for the accuracy or completeness of electronic copies of this plan sheet.

NOTE:

1. For details not shown, see "2006 STANDARD PLANS" and "2006 REVISED STANDARD PLANS".

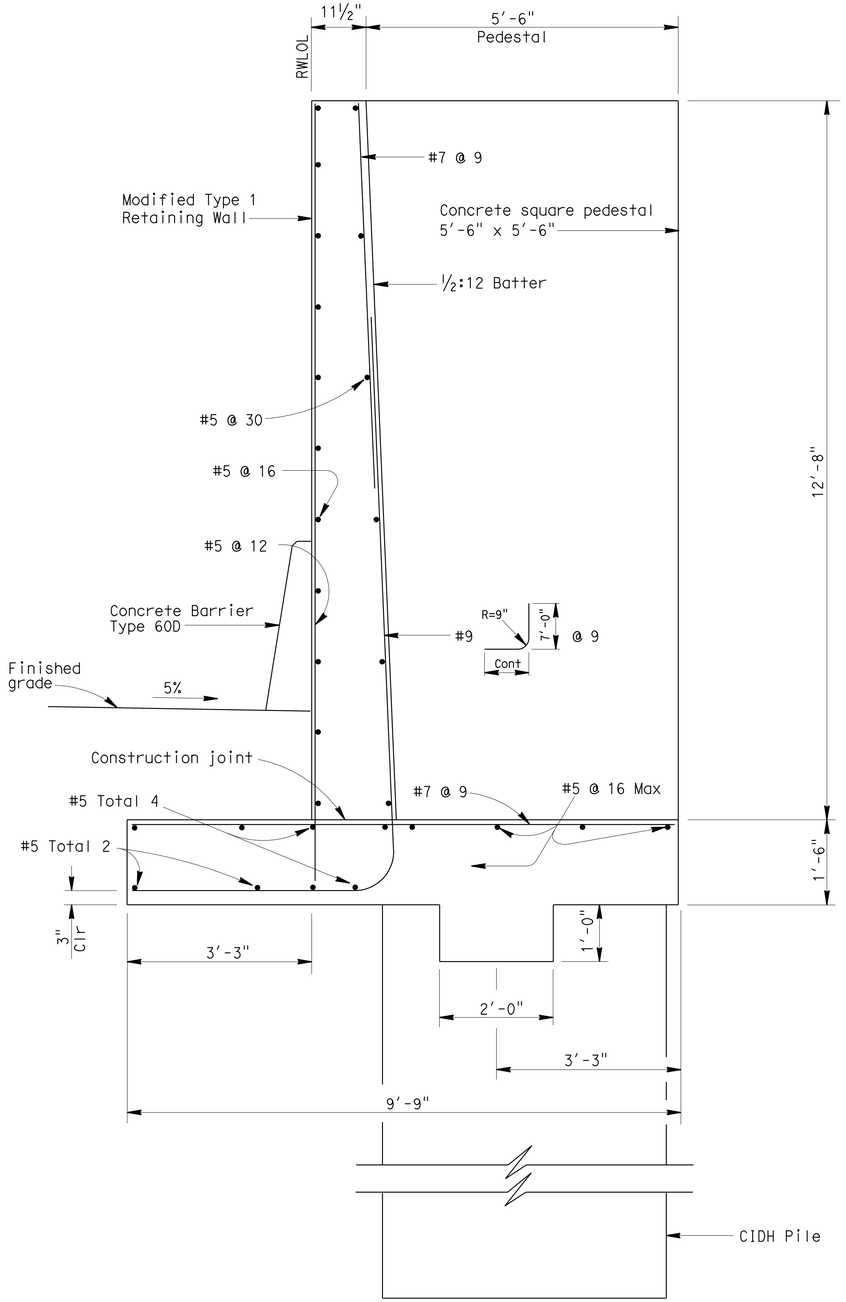

PEDESTAL SECTION VIEW

Scale: ¾" = 1'-0"

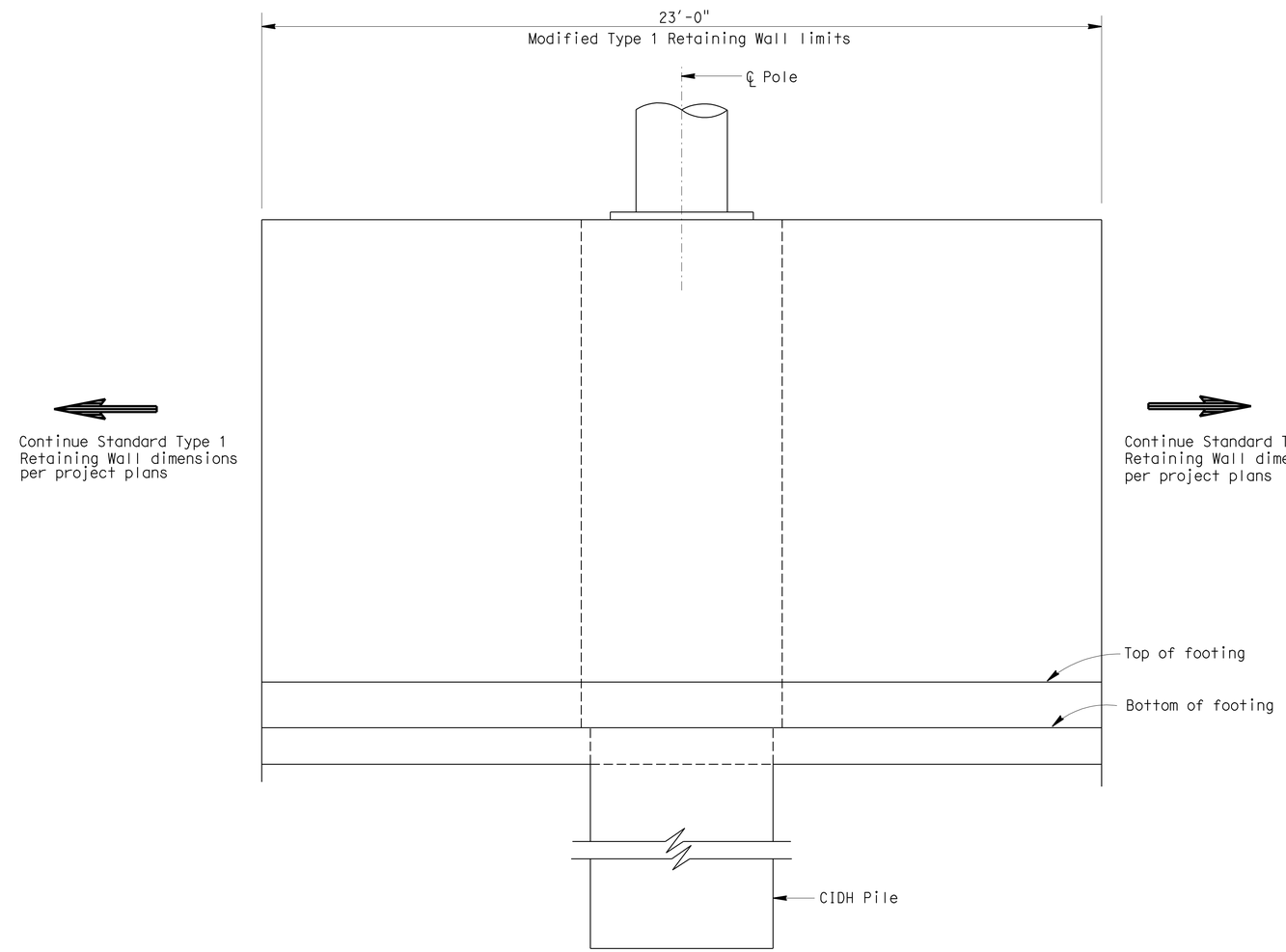

MIRROR PEDESTAL ELEVATION VIEW

Scale: ½" = 1'-0"

NOTE:
THE CONTRACTOR SHALL VERIFY ALL CONTROLLING FIELD DIMENSIONS BEFORE ORDERING OR FABRICATING ANY MATERIAL.

ALL DIMENSIONS ARE IN INCHES UNLESS OTHERWISE SHOWN

RAMP METERING SYSTEM DETAILS OVERHEAD SIGN AT Sta 115+94 "D LINE" = Sta 115+84.69 LOL "R2" LOCATION 4 DETAILS

S-3

STATE OF CALIFORNIA - DEPARTMENT OF TRANSPORTATION
Caltrans SPECIAL DESIGNS BRANCH

PROJECT ENGINEER ELISEO LOPEZ

CALCULATED/ DESIGNED BY	E. LOPEZ	DATE 8/25/08	DETAILS	R. YEE
CHECKED BY	J. MAGANA	8/25/08	QUANTITIES	E. LOPEZ

LAST REVISION 6/10/09 DATE PLOTTED => 20-AUG-2009 TIME PLOTTED => 11:35

ORIGINAL SCALE IN INCHES FOR REDUCED PLANS 0 1 2 3

USERNAME => trmikesl
DGN FILE => spec_des_br_prj/misc/ray/06_0e9701_s3.dgn

CU 06 EA 0E9701

DIST	COUNTY	ROUTE	POST MILES TOTAL PROJECT	SHEET No	TOTAL SHEETS
06	Fre	41	R27.6/29.8	52	107

Eliseo Lopez
REGISTERED CIVIL ENGINEER 6/10/09

8-17-09
PLANS APPROVAL DATE

REGISTERED PROFESSIONAL ENGINEER ELISEO LOPEZ No. C72910 Exp. 12/31/10 CIVIL STATE OF CALIFORNIA

The State of California or its officers or agents shall not be responsible for the accuracy or completeness of electronic copies of this plan sheet.

R. YEE	ELISEO LOPEZ	DETAILS	QUANTITIES
DATE 7/5/08	7/5/08		
ELISEO LOPEZ	JOEL MAGANA		
CALCULATED/ DESIGNED BY	CHECKED BY		
PROJECT ENGINEER	ELISEO LOPEZ		

STATE OF CALIFORNIA - DEPARTMENT OF TRANSPORTATION
Caltrans SPECIAL DESIGNS BRANCH

SIGNAL ARM DATA

C Projected Length	Min OD at Pole	Thickness	I Bolt Circle	HS Cap Screws	J Plate Size	K Arm ℄ Thickness	L Pole ℄ Thickness	θ	Q Section Length	Q Section Thickness	X Max
C	11 7/16"	0.1793"	16"	1½"-6NC-3¼"	1'-4"	1¾"	1¾"	15°	18'-0"	0.2391"	14'-0"

Pole Type	Load Case	Wind Velocity mph	POLE DATA A Height	Min OD Base	Min OD Top	Thickness	BASE PLATE DATA C	D1 Bolt Circle	Thickness	Anchor Bolts Size	CIDH PILE FOUNDATION Diameter	Depth	Reinforced
29A-5-100	5	100	A	14"	11¼"	0.3125"	23"	23"	1¾"	2"Ø x 42" x 6"	3'-0"	9'-2"	Yes

LUMINAIRE ARM DATA

M Projected Length	N Rise	Min OD at Pole	Thickness	P Mounting Height 30'-0" Pole	P Mounting Height 35'-0" Pole
12'-0"	4'-3"±	3⅞"	0.1196"	33'-9"±	38'-9"±

TABLE A

Location 1 See Note A	A = 20'-0"	B = 17'-1"	C = 50'-0"	D = 3'-8"
Location 4 See Note B	A = 20'-0"	B = 16'-10"	C = 40'-0"	D = 2'-1"

Note A: Sta 16 + 00 "C Line" = Sta 15 = 89.68 LOL "R-1"
Note B: Sta 106 + 65 "D Line" = Sta 106 + 59.35 LOL "R-2"

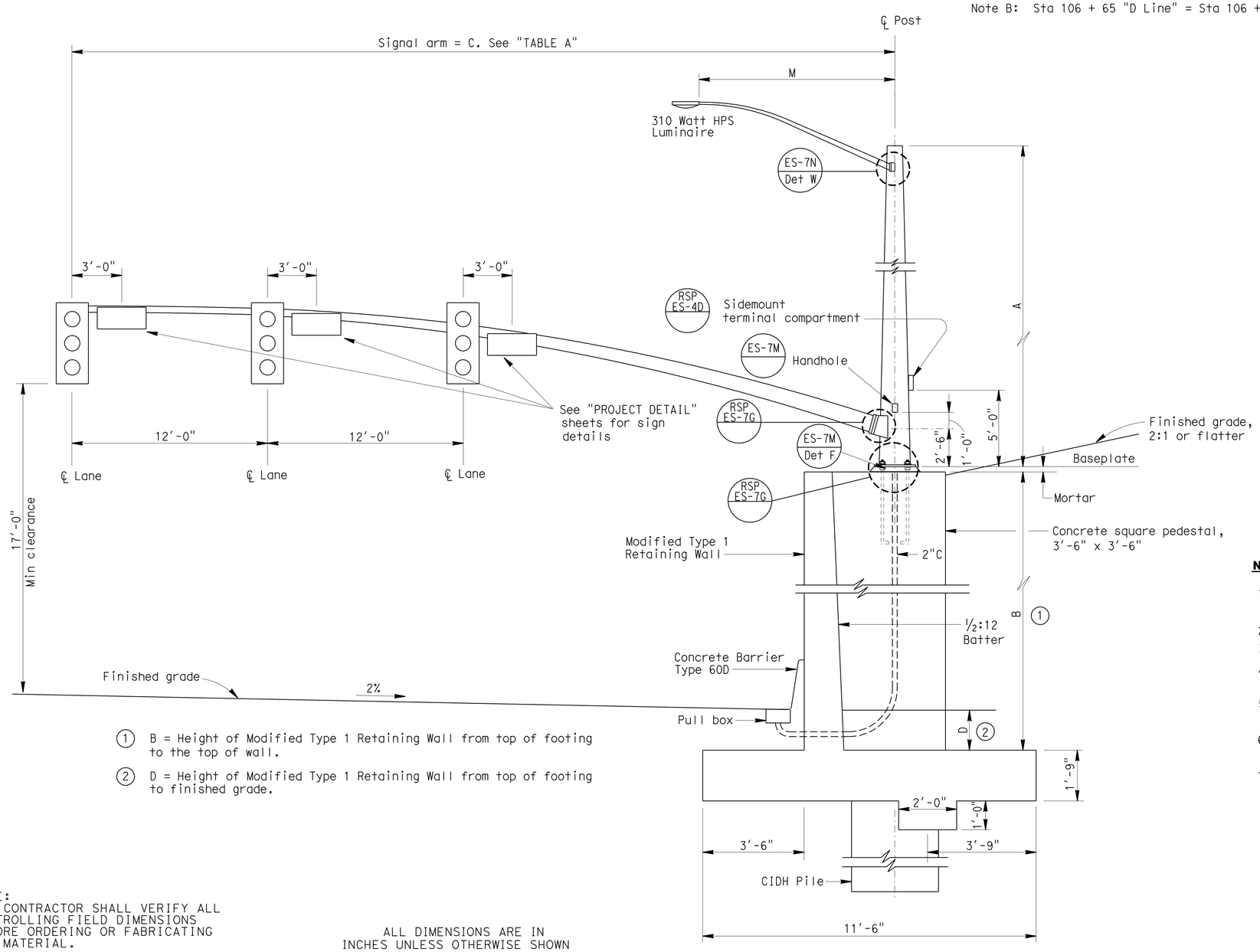

1 B = Height of Modified Type 1 Retaining Wall from top of footing to the top of wall.

2 D = Height of Modified Type 1 Retaining Wall from top of footing to finished grade.

NOTE:
THE CONTRACTOR SHALL VERIFY ALL CONTROLLING FIELD DIMENSIONS BEFORE ORDERING OR FABRICATING ANY MATERIAL.

ALL DIMENSIONS ARE IN INCHES UNLESS OTHERWISE SHOWN

GENERAL NOTES:

SPECIFICATIONS
Load Factor Design
Bridge Design Specifications

LOADING
Wind Loadings: 85 MPH

UNIT STRESSES
Structural Steel: fy = 48,000 psi tapered steel tube
fy = 36,000 psi unless otherwise noted

Anchor bolts = A307
Reinforced Concrete: f'c = 3,600 psi
fy = 60,000 psi

NOTES:

1. For details not shown, see "2006 STANDARD PLANS", "2006 REVISED STANDARD PLANS" and RSP ES-7G, ES-7M and ES-7N.
2. For Modified Type 29A-5-100 pole location, see "PROJECT PLANS".
3. All steel shall be galvanized after fabrication.
4. During pole erection, the pole shall be raked as necessary with use of leveling nuts to provide a plunb pole axis.
5. For limits of Modified Type 1 Retaining Wall dimensions shown, see sheet S-6.
6. For rebar size and spacing for Modified Type 1 Retaining Wall and concrete pedestal, see sheets S-5 and S-6.
7. Sign panels to be placed at signal arm to be R89-2 (CA), 22" x 10".

RAMP METERING SYSTEM DETAILS MODIFIED TYPE 29A-5-100 POLE LOCATIONS 1 & 4 DETAILS

Scale: ½" = 1'-0"

S-4

LAST REVISION 6/10/09 DATE PLOTTED => 20-AUG-2009 TIME PLOTTED => 11:35

ORIGINAL SCALE IN INCHES FOR REDUCED PLANS 0 1 2 3

USERNAME => trmikesl
DGN FILE => spec_des_br_prj/misc/ray/06_0e9701_s4.dgn

CU 06 EA 0E9701

DIST	COUNTY	ROUTE	POST MILES TOTAL PROJECT	SHEET No	TOTAL SHEETS
06	Fre	41	R27.6/29.8	53	107

Eliseo Lopez 6/10/09
REGISTERED CIVIL ENGINEER

8-17-09
PLANS APPROVAL DATE

REGISTERED PROFESSIONAL ENGINEER ELISEO LOPEZ No. C72910 Exp. 12/31/10 CIVIL STATE OF CALIFORNIA

The State of California or its officers or agents shall not be responsible for the accuracy or completeness of electronic copies of this plan sheet.

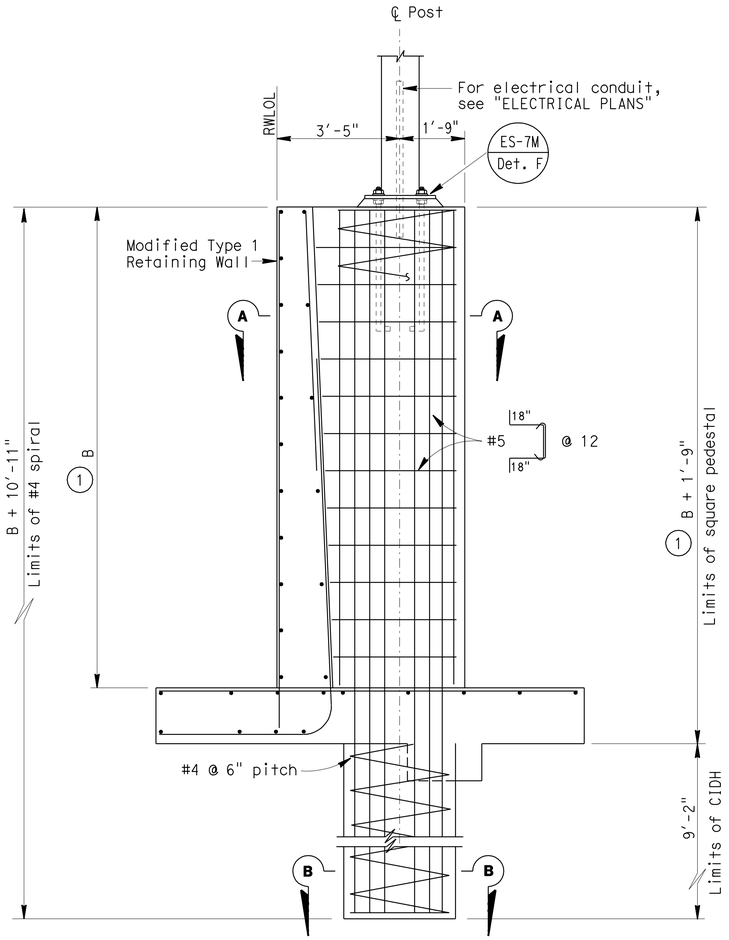

PEDESTAL SECTION VIEW

Scale: ½" = 1'-0"

(1) B = Height of Modified Type 1 Retaining Wall from top of footing to the top of wall. See Table A on sheet S-4.

NOTES:

1. Reinforcing shall be centered from sign axis.
2. For details not shown, see "2006 STANDARD PLANS, "2006 REVISED STANDARD PLANS" and RSP ES-7G and ES-7N.

NOTE:
THE CONTRACTOR SHALL VERIFY ALL CONTROLLING FIELD DIMENSIONS BEFORE ORDERING OR FABRICATING ANY MATERIAL.

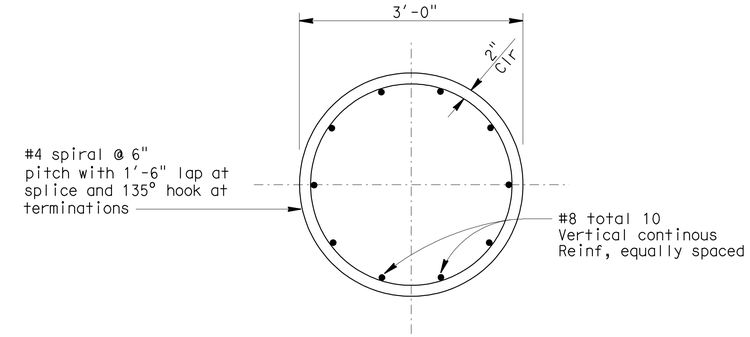

SECTION B-B

Scale: 1" = 1'-0"

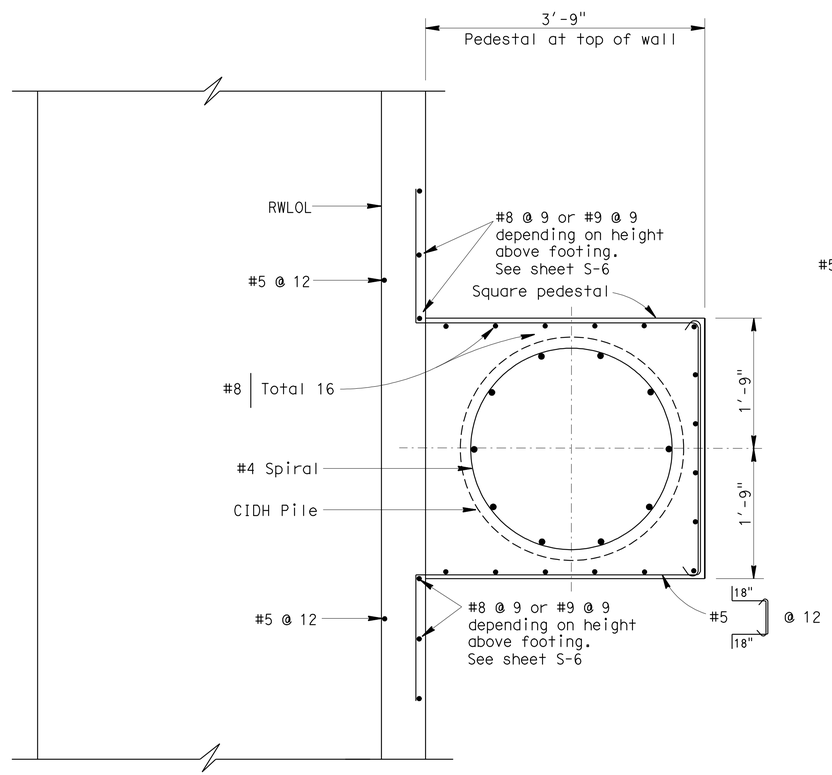

SECTION A-A

Scale: 1" = 1'-0"

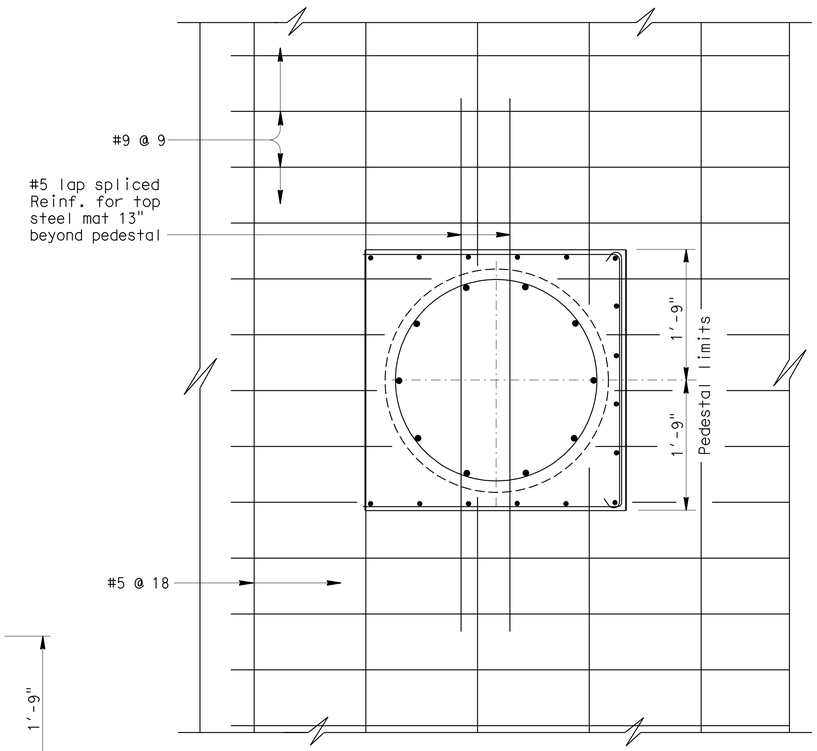

FOOTING REINFORCING PLAN

Scale: 1" = 1'-0"

RAMP METERING SYSTEM DETAILS MODIFIED TYPE 29A-5-100 POLE LOCATIONS 1 & 4 DETAILS

ALL DIMENSIONS ARE IN INCHES UNLESS OTHERWISE SHOWN

S-5

R. YEE	DETAILS	8/25/08	
E. LOPEZ	QUANTITIES	8/25/08	
CALCULATED/DESIGNED BY	E. LOPEZ		
CHECKED BY	J. MAGANA		

PROJECT ENGINEER
ELISEO LOPEZ

STATE OF CALIFORNIA - DEPARTMENT OF TRANSPORTATION
Caltrans SPECIAL DESIGNS BRANCH

LAST REVISION 6/10/09
DATE PLOTTED => 20-AUG-2009
TIME PLOTTED => 11:36

ORIGINAL SCALE IN INCHES FOR REDUCED PLANS 0 1 2 3

USERNAME => trmikesl
DGN FILE => spec_des_br_prj/misc/ray/06_0e9701s5.dgn

CU 06 | EA 0E9701

DIST	COUNTY	ROUTE	POST MILES TOTAL PROJECT	SHEET No	TOTAL SHEETS
06	Fre	41	R27.6/29.8	54	107

Eliseo Lopez 6/10/09
REGISTERED CIVIL ENGINEER

8-17-09
PLANS APPROVAL DATE

REGISTERED PROFESSIONAL ENGINEER ELISEO LOPEZ No. C72910 Exp. 12/31/10 CIVIL STATE OF CALIFORNIA

The State of California or its officers or agents shall not be responsible for the accuracy or completeness of electronic copies of this plan sheet.

NOTE:

1. For details not shown, see "2006 STANDARD PLANS" and "2006 REVISED STANDARD PLANS".

① B = Height of Modified Type 1 Retaining Wall from top of footing to the top of wall. See Table A on sheet S-4.

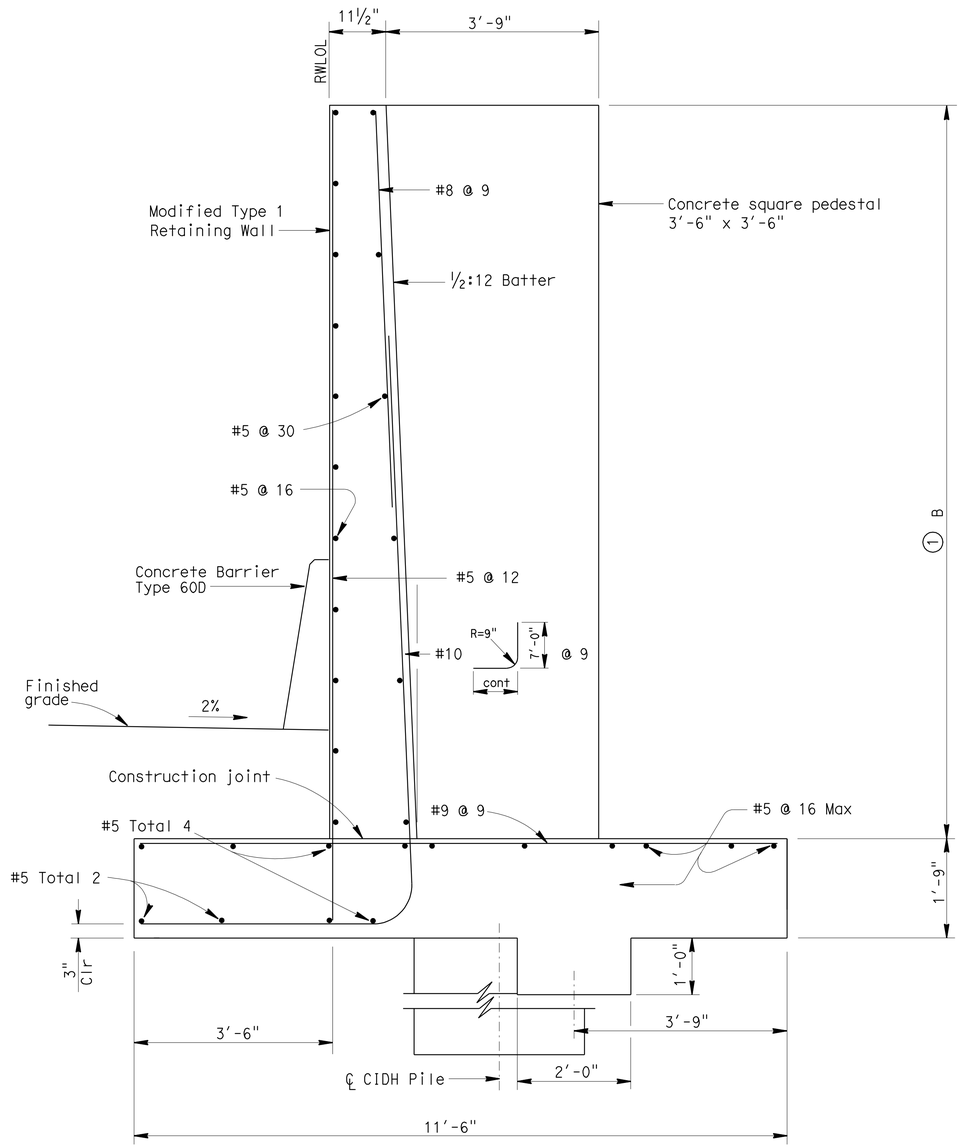

PEDESTAL SECTION VIEW

Scale: ¾" = 1'-0"

Continue Standard Type 1 retaining Wall dimensions per project plans

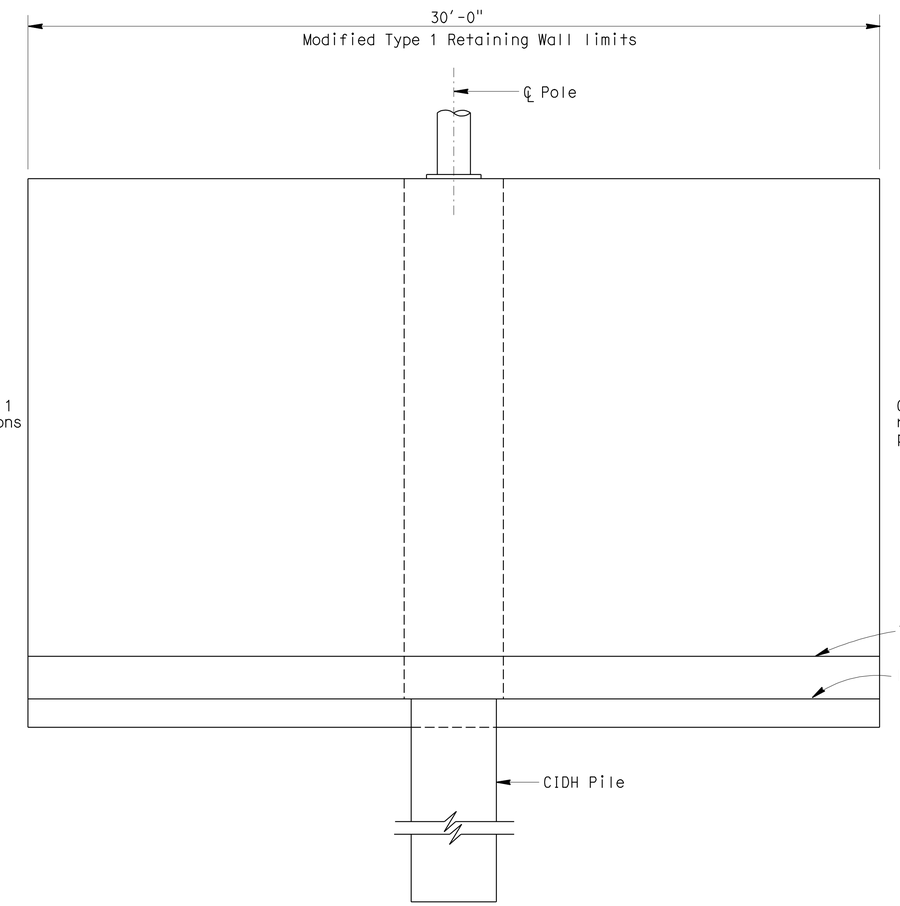

MIRROR PEDESTAL ELEVATION VIEW

Scale: ½" = 1'-0"

Continue Standard Type 1 retaining Wall dimensions per project plans

NOTE:
THE CONTRACTOR SHALL VERIFY ALL CONTROLLING FIELD DIMENSIONS BEFORE ORDERING OR FABRICATING ANY MATERIAL.

ALL DIMENSIONS ARE IN INCHES UNLESS OTHERWISE SHOWN

RAMP METERING SYSTEM DETAILS
MODIFIED TYPE 29A-5-100 POLE
LOCATIONS 1 & 4
DETAILS

S-6

R. YEE	DETAILS	DATE 8/25/08	
E. LOPEZ	QUANTITIES	8/25/08	
CALCULATED/DESIGNED BY	E. LOPEZ		
CHECKED BY	J. MAGANA		
PROJECT ENGINEER	ELISEO LOPEZ		

STATE OF CALIFORNIA - DEPARTMENT OF TRANSPORTATION
Caltrans SPECIAL DESIGNS BRANCH

ORIGINAL SCALE IN INCHES FOR REDUCED PLANS 0 1 2 3

USERNAME => trmikesl
DGN FILE => spec_des_br_prj/misc/ray/06_0e9701_s6.dgn

CU 06 | EA 0E9701

LAST REVISION 6/10/09 | DATE PLOTTED => 20-AUG-2009 | TIME PLOTTED => 11:36

Pole Type	POLE DATA				BASE PLATE DATA			
	A Height	Min OD		Wall Thickness	C	D1 Bolt Circle	Thickness	Anchor Bolts
		Base	Top					Size
21	A	8⅝"	5¼"	0.1196"	1'-0"	1'-0"	1"	1", See Detail B

LUMINAIRE ARM DATA					
M Projected Length	N Rise	Min OD at Pole	Thickness	P	
				Type 15	Type 21
12'-0"	4'-3"±	3⅞"	0.1196"	33'-9"±	38'-9"±

TABLE A			
Location 4 See Note A	A = 24'-0"	B = 12'-8"	C = 1'-11"

Note A: Sta 113 + 85 "D Line" = Sta 113 + 75.63 LOL "R2"

DIST	COUNTY	ROUTE	POST MILES TOTAL PROJECT	SHEET No	TOTAL SHEETS
06	Fre	41	R27.6/29.8	55	107

Eliseo Lopez 6/10/09
REGISTERED CIVIL ENGINEER

8-17-09
PLANS APPROVAL DATE

REGISTERED PROFESSIONAL ENGINEER ELISEO LOPEZ No. C72910 Exp. 12/31/10 CIVIL STATE OF CALIFORNIA

The State of California or its officers or agents shall not be responsible for the accuracy or completeness of electronic copies of this plan sheet.

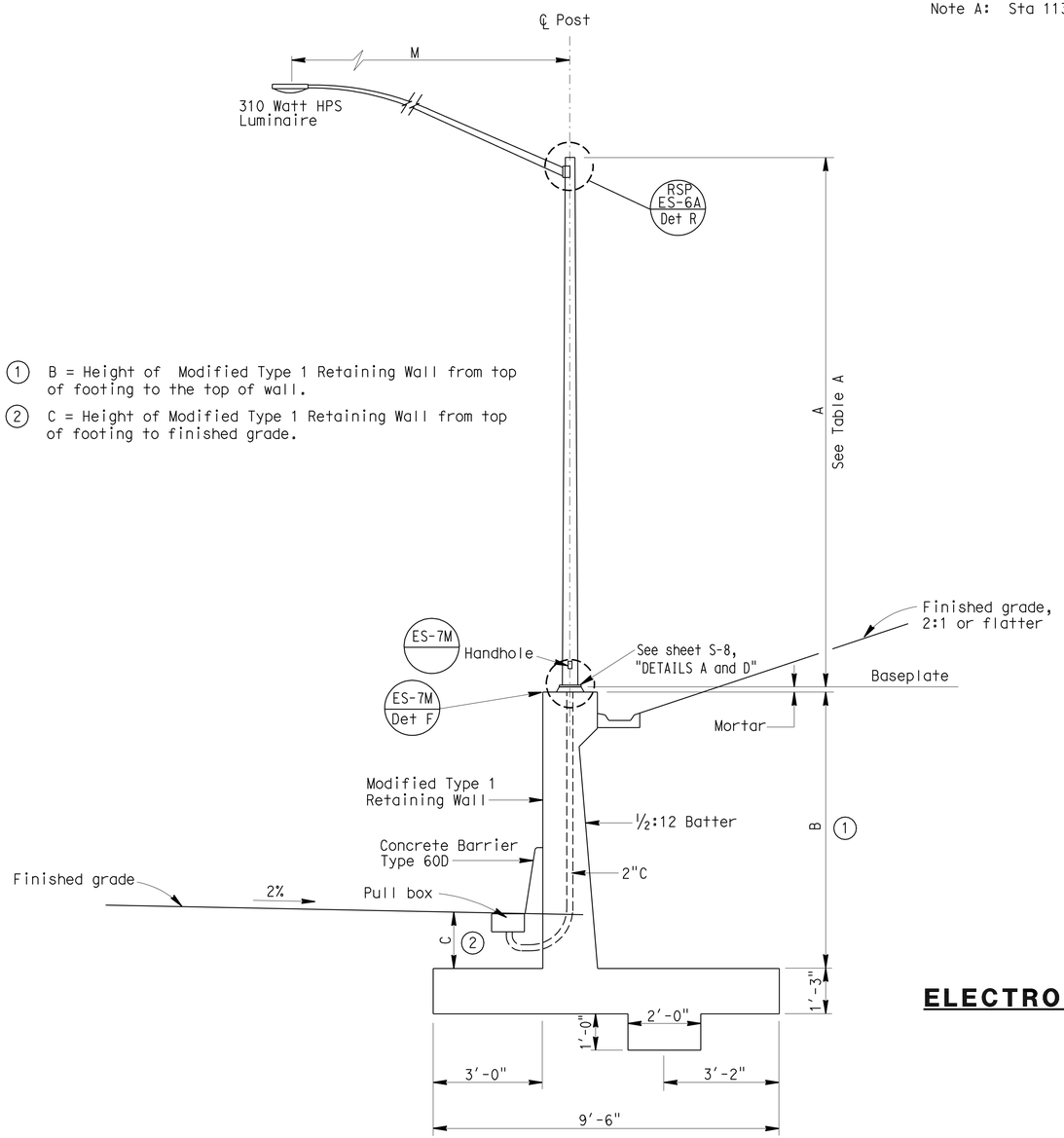

① B = Height of Modified Type 1 Retaining Wall from top of footing to the top of wall.

② C = Height of Modified Type 1 Retaining Wall from top of footing to finished grade.

NOTE:
THE CONTRACTOR SHALL VERIFY ALL CONTROLLING FIELD DIMENSIONS BEFORE ORDERING OR FABRICATING ANY MATERIAL.

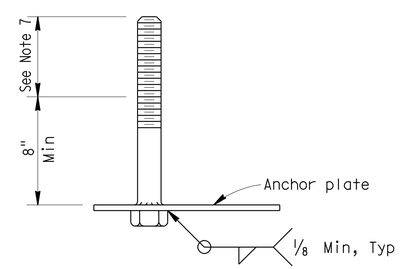

DETAIL B
ELECTROLIER ANCHORAGE (MODIFIED)

GENERAL NOTES:

SPECIFICATIONS
Load Factor Design
Bridge Design Specifications

LOADING
Wind Loadings: 85 MPH

UNIT STRESSES
Structural Steel: fy = 48,000 psi tapered steel tube
fy = 36,000 psi unless otherwise noted

Anchor bolts = A307
Reinforced Concrete: f'c = 3,600 psi
fy = 60,000 psi

NOTES:

1. For details not shown, see "2006 STANDARD PLANS", "2006 REVISED STANDARD PLANS" and RSP ES-6A, ES-6B, ES-7M and ES-7N.
2. For Modified Type 1 Pole location, see "PROJECT PLANS".
3. All steel shall be galvanized after fabrication.
4. During pole erection, the pole shall be raked as necessary with the use of leveling nuts to provide a plumb pole axis.
5. For rebar size and spacing for Modified Type 1 Retaining Wall, see sheet S-8.
6. For limits of Modified Type 1 Retaining Wall dimensions shown, see sheet S-8.
7. Anchor bolt or stud length shall be such that thread extends ½" maximum above nut on level base plate after grouting. See "2006 STANDARD PLAN" ES-6B, Detail N.
8. Electrolier anchorage bolts shall be held in position for pouring by means of anchor plates and suitable templates. Deviation from the true position, vertical and height, shall not exceed 1/16".

RAMP METERING SYSTEM DETAILS
MODIFIED TYPE 21 POLE ON TOP OF RETAINING WALL TYPE 1
LOCATION 4
DETAILS

NO SCALE

S-7

ALL DIMENSIONS ARE IN INCHES UNLESS OTHERWISE SHOWN

ORIGINAL SCALE IN INCHES FOR REDUCED PLANS 0 1 2 3

USERNAME => trmikesl
DGN FILE => spec_des_br_prj/misc/ray/06_0e9701_s7.dgn

CU 06

EA 0E9701

LAST REVISION 6/10/09
DATE PLOTTED => 20-AUG-2009
TIME PLOTTED => 11:36

STATE OF CALIFORNIA - DEPARTMENT OF TRANSPORTATION
Caltrans SPECIAL DESIGNS BRANCH

PROJECT ENGINEER ELISEO LOPEZ

CALCULATED/DESIGNED BY ELISEO LOPEZ
CHECKED BY JOEL MAGANA

DATE 7/5/08 7/5/08

DETAILS QUANTITIES

R. YEE ELISEO LOPEZ

DIST	COUNTY	ROUTE	POST MILES TOTAL PROJECT	SHEET No	TOTAL SHEETS
06	Fre	41	R27.6/29.8	56	107

Eliseo Lopez
REGISTERED CIVIL ENGINEER 6/10/09

8-17-09
PLANS APPROVAL DATE

REGISTERED PROFESSIONAL ENGINEER ELISEO LOPEZ No. C72910 Exp. 12/31/10 CIVIL STATE OF CALIFORNIA

The State of California or its officers or agents shall not be responsible for the accuracy or completeness of electronic copies of this plan sheet.

① B = height of Modified Type 1 Retaining Wall from top of footing to the top of wall

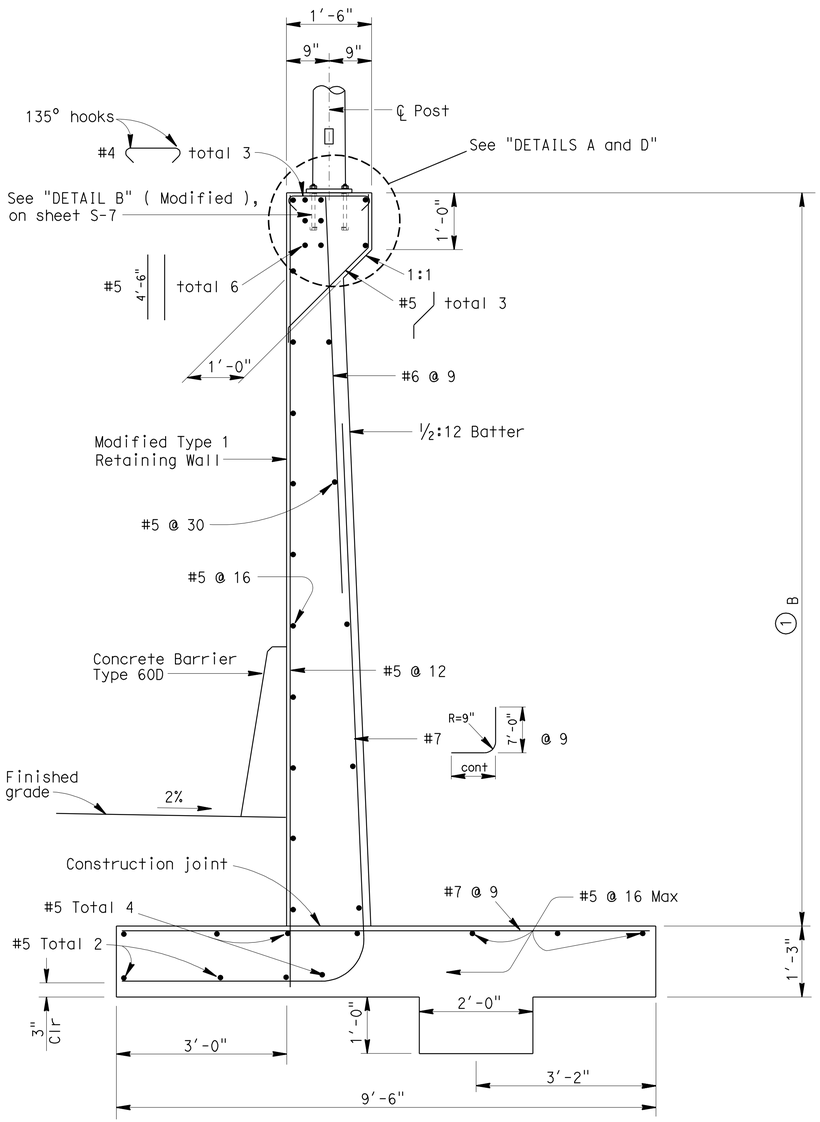

SECTION VIEW

Scale: ¾" = 1'-0"

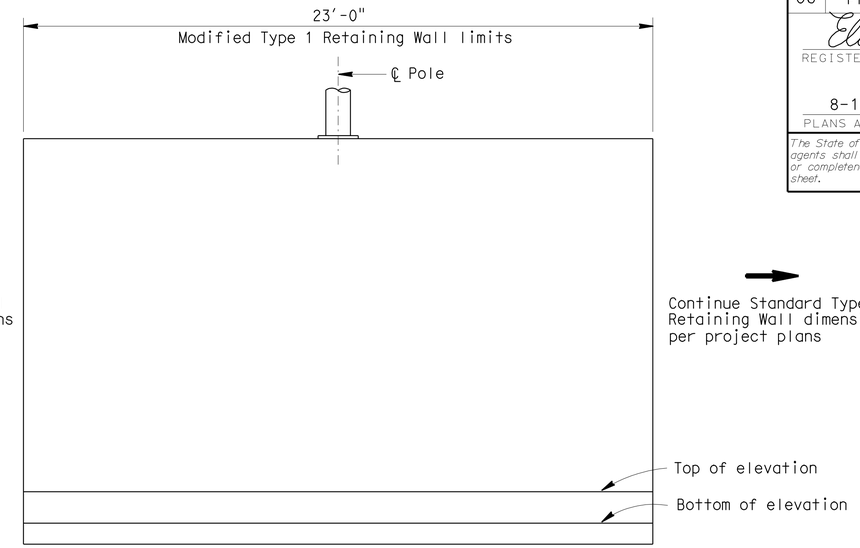

MIRROR ELEVATION

No Scale

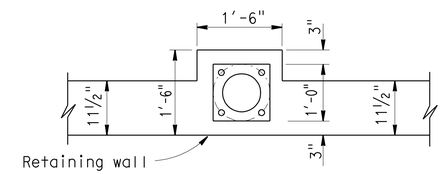

DETAIL A
PLAN VIEW

No Scale

Note: Top of wall at pole location

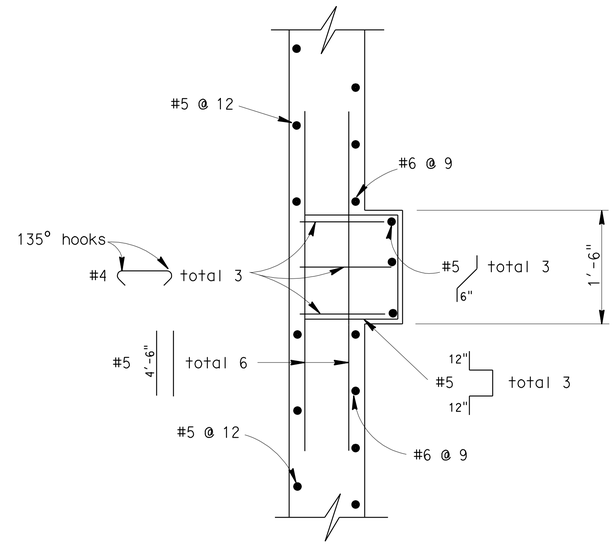

DETAIL D
PLAN VIEW

No Scale

Note: Top of wall reinforcement

NOTES:

1. For details not shown, see "2006 STANDARD PLANS" and "2006 REVISED STANDARD PLANS".
2. Top of Modified Type 1 Retaining Wall haunch dimensions for 1'-6" in length. See "DETAIL A".

NOTE:
THE CONTRACTOR SHALL VERIFY ALL CONTROLLING FIELD DIMENSIONS BEFORE ORDERING OR FABRICATING ANY MATERIAL.

ALL DIMENSIONS ARE IN INCHES UNLESS OTHERWISE SHOWN

RAMP METERING SYSTEM DETAILS MODIFIED TYPE 21 POLE ON TOP OF RETAINING WALL TYPE 1 LOCATION 4 DETAILS

S-8

DETAILS	R. YEE
QUANTITIES	E. LOPEZ
DATE 8/25/08	
8/25/08	
CALCULATED/DESIGNED BY	E. LOPEZ
CHECKED BY	J. MAGANA
PROJECT ENGINEER	ELISEO LOPEZ

STATE OF CALIFORNIA - DEPARTMENT OF TRANSPORTATION
Caltrans SPECIAL DESIGNS BRANCH

ORIGINAL SCALE IN INCHES FOR REDUCED PLANS 0 1 2 3

USERNAME => trmikesl
DGN FILE => spec_des_br_prj/misc/ray/06_0e9701_s8.dgn

CU 06 | EA 0E9701

LAST REVISION 6/10/09
DATE PLOTTED => 20-AUG-2009
TIME PLOTTED => 11:37

DIST	COUNTY	ROUTE	POST MILES TOTAL PROJECT	SHEET No	TOTAL SHEETS
06	Fre	41	R27.6/29.8	57	107

Eliseo Lopez 6/10/09
REGISTERED CIVIL ENGINEER

8-17-09
PLANS APPROVAL DATE

REGISTERED PROFESSIONAL ENGINEER ELISEO LOPEZ No. C72910 Exp. 12/31/10 CIVIL STATE OF CALIFORNIA

The State of California or its officers or agents shall not be responsible for the accuracy or completeness of electronic copies of this plan sheet.

TABLE A		
Location 1 See Note A	A = 17'-1"	B = 6'-7"
Location 4 See Note B	A = 18'-8"	B = 3'-3"

Note A: Sta 15 + 05 "C Line" = Sta 15 + 00.37 LOL "R-1"
Note B: Sta 105 + 70 "O Line" = Sta 105 + 65.96 LOL "R-2"

(1) A = Height of Modified Type 1 Retaining Wall from top of footing to the top of wall.

(2) B = Height of Modified Type 1 Retaining Wall from top of footing to finished grade.

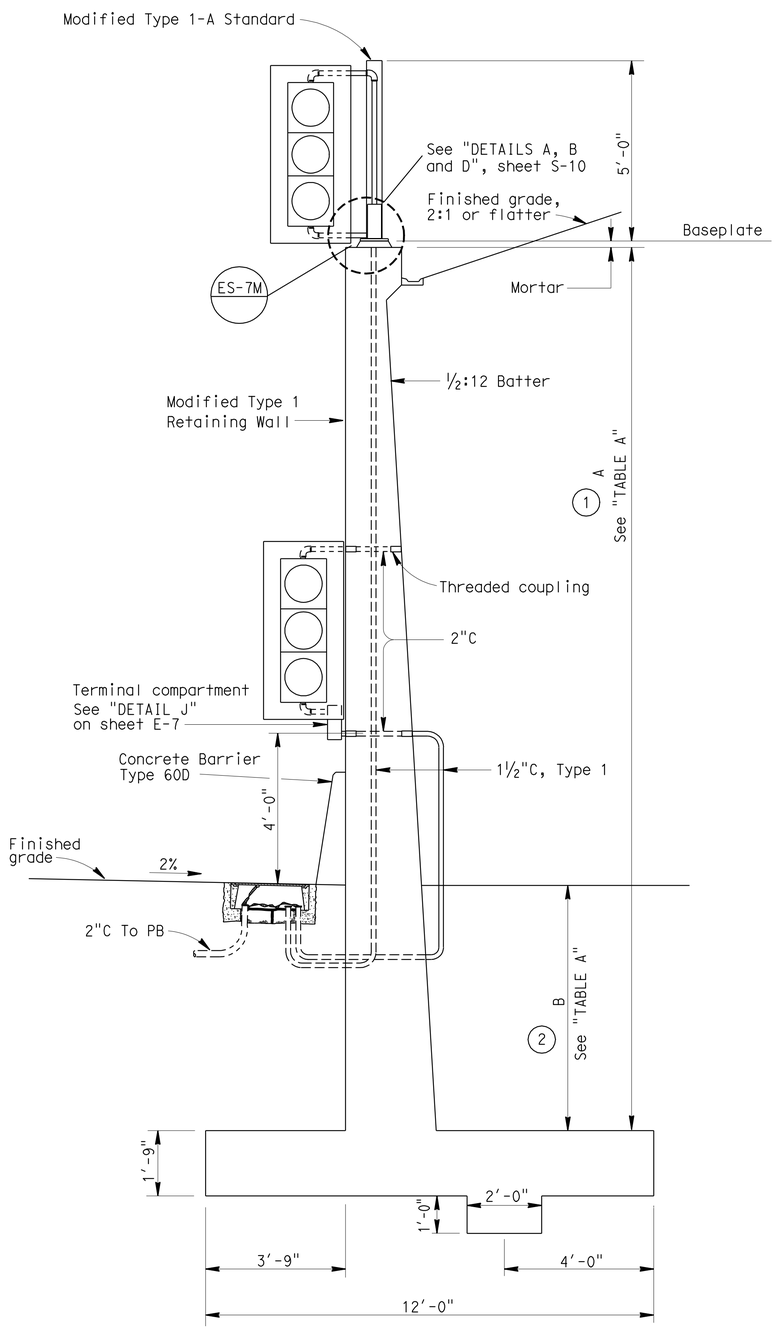

LOCATION 1

Scale: ½" = 1'-0"

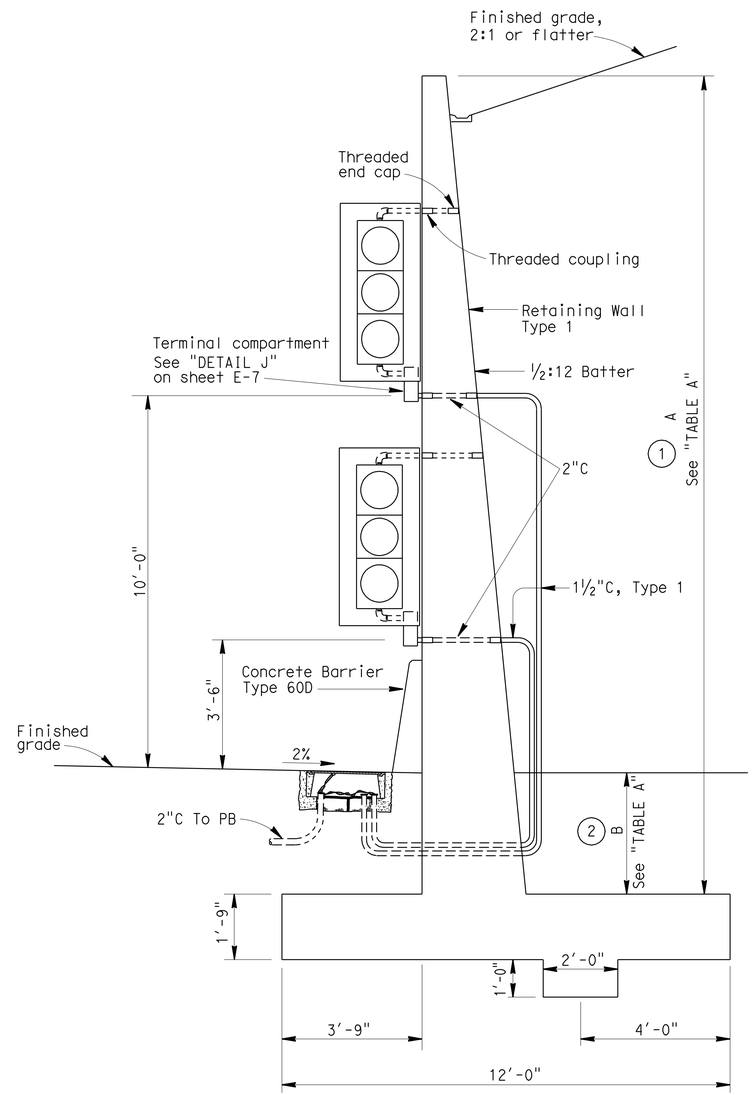

LOCATION 4

Scale: ½" = 1'-0"

GENERAL NOTES:

SPECIFICATIONS

Load Factor Design
Bridge Design Specifications

LOADING

Wind Loadings : 85 MPH

UNIT STRESSES

Structural Steel: fy = 48,000 psi tapered steel tube
fy = 36,000 psi unless otherwise noted

Anchor bolts = A307
Reinforced Concrete : f'c = 3,600 psi
fy = 60,000 psi

NOTES:

1. For details not shown, see "2006 STANDARD PLANS and "2006 REVISED STANDARD PLANS".
2. For Modified Type 1 Retaining Wall and Type 1 Retaining Wall locations, see "PROJECT PLANS".
3. Place 2" steel pipe through entire width of new wall. Then attach mast arm mounting - Type "MAT".
4. See "2006 STANDARD PLAN" RSP ES-4D for attachment fitting details and sheet E-7 for side mounting terminal compartment.
5. See "2006 STANDARD PLAN" RSP ES-7B for Type 1-A Standard.
6. See "2006 STANDARD PLAN" ES-4A for side mounted signal heads.
7. See "2006 STANDARD PLAN" B3-1 for Modified Type 1 Retaining Wall and Type 1 Retaining Wall rebar size, rebar spacing and footing dimensions.
8. For anchorage details, see sheet S-10 and "2006 STANDARD PLAN" ES-6B.
9. See "PROJECT PLANS" for length of Type 1 Retaining Wall and Mofified Type 1 Retaining Walls for each specified location.
10. See sheet S-10, "DETAIL D" for reinforcement layout at haunch for location 1.

NOTE:
THE CONTRACTOR SHALL VERIFY ALL CONTROLLING FIELD DIMENSIONS BEFORE ORDERING OR FABRICATING ANY MATERIAL.

ALL DIMENSIONS ARE IN INCHES UNLESS OTHERWISE SHOWN

RAMP METERING SYSTEM DETAILS SIGNAL HEADS MOUNTED ON MODIFIED TYPE 1 RETAINING WALL LOCATIONS 1 & 4 DETAILS

S-9

STATE OF CALIFORNIA - DEPARTMENT OF TRANSPORTATION
Caltrans SPECIAL DESIGNS BRANCH

PROJECT ENGINEER: ELISEO LOPEZ

CALCULATED/ DESIGNED BY	ELISEO LOPEZ	DATE 7/5/07	DETAILS	R. YEE
CHECKED BY	JOEL MAGANA	7/5/07	QUANTITIES	ELISEO LOPEZ

LAST REVISION 6/10/09 | DATE PLOTTED => 20-AUG-2009 TIME PLOTTED => 11:37

ORIGINAL SCALE IN INCHES FOR REDUCED PLANS 0 1 2 3

USERNAME => trmikesl
DGN FILE => spec_des_br_prj/2008sd/06_0e9701/s9.dgn

CU 06 | EA 0E9701

DIST	COUNTY	ROUTE	POST MILES TOTAL PROJECT	SHEET No	TOTAL SHEETS
06	Fre	41	R27.6/29.8	58	107

Eliseo Lopez 6/10/09
REGISTERED CIVIL ENGINEER

8-17-09
PLANS APPROVAL DATE

REGISTERED PROFESSIONAL ENGINEER ELISEO LOPEZ No. C72910 Exp. 12/31/10 CIVIL STATE OF CALIFORNIA

The State of California or its officers or agents shall not be responsible for the accuracy or completeness of electronic copies of this plan sheet.

(1) A = Height of Modified Type 1 Retaining Wall from top of footing to the top of wall.

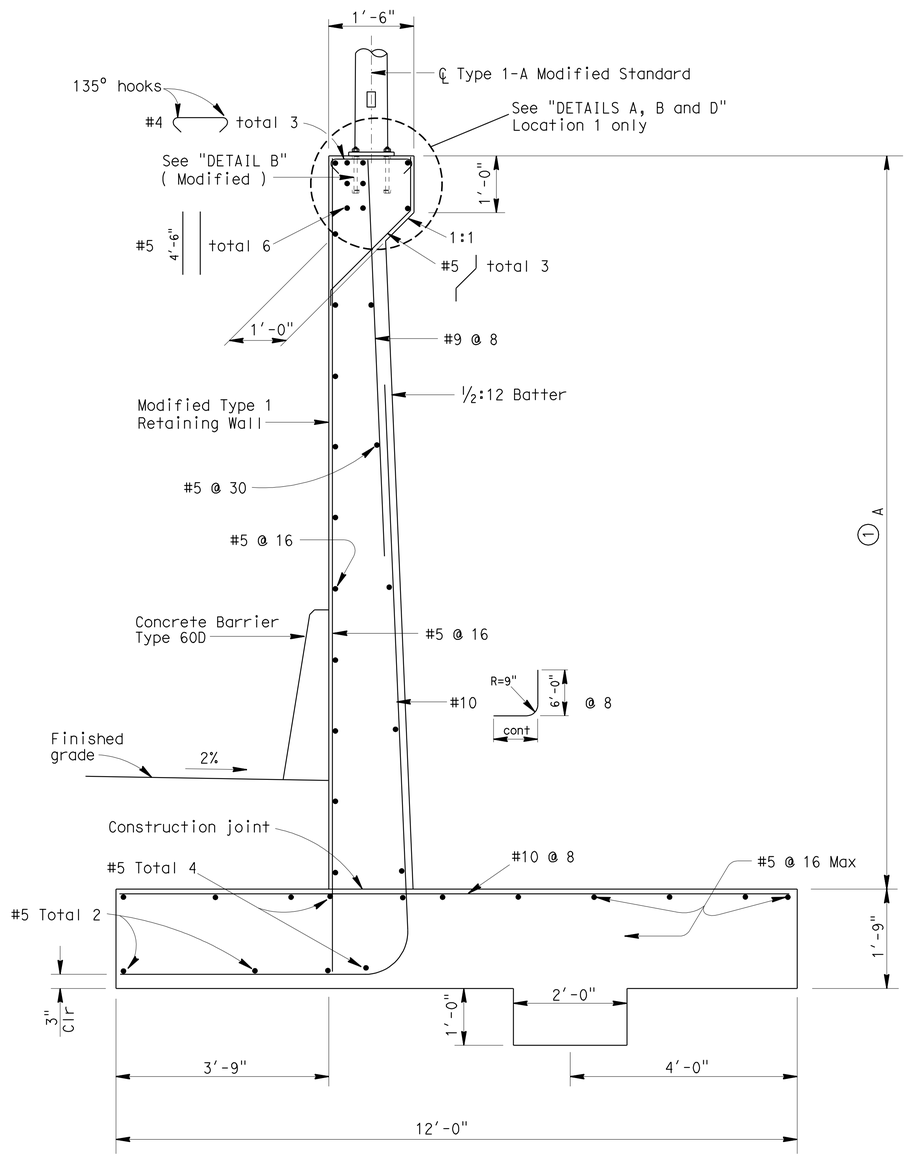

SECTION VIEW

Scale: ¾" = 1'-0"

NOTE:
THE CONTRACTOR SHALL VERIFY ALL CONTROLLING FIELD DIMENSIONS BEFORE ORDERING OR FABRICATING ANY MATERIAL.

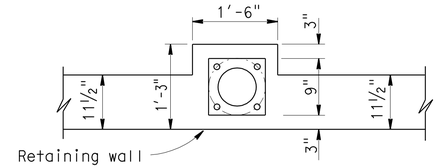

DETAIL A
PLAN VIEW

No Scale

Note: Top of wall at pole location

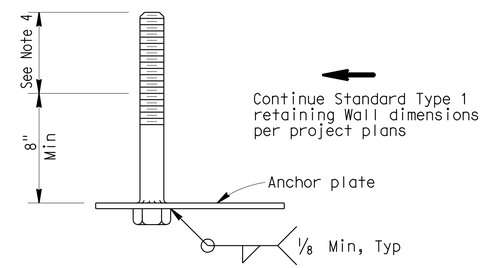

DETAIL B
ELECTROLIER ANCHORAGE (MODIFIED)

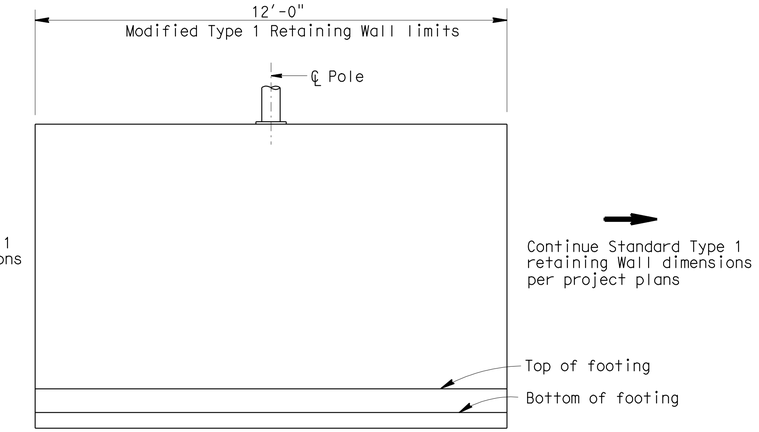

MIRROR ELEVATION

No Scale

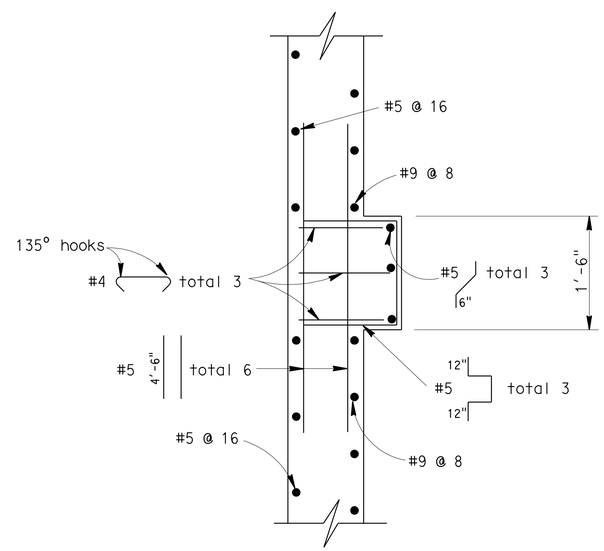

DETAIL D
PLAN VIEW

No Scale

Note: Top of wall reinforcement

NOTES:

1. For details not shown, see "2006 STANDARD PLANS" and "2006 REVISED STANDARD PLANS".
2. Top of Modified Type 1 Retaining Wall haunch dimensions for 1'-6" in length. See "DETAIL A". See "DETAIL A" for rebar reinforcement layout at haunch for locations 1 and 3.
3. Anchor bolt or stud length shall be such that thread extends ½" maximum above nut on level base plate after grouting. See "2006 STANDARD PLAN" ES-6B, Detail N.
4. Type 1A Modified Standard anchorage bolts shall be held in position for pouring by means of anchor plates and suitable templates. Deviation from the true position, vertical and height, shall not exceed 1/16".
5. See "2006 STANDARD PLAN" ES-6B for mounting and anchorage reference details.
6. Footing dimensions and rebar shown for footing and retaining wall stem is for wall (Location 1), see Table A on sheet S-9.

RAMP METERING SYSTEM DETAILS SIGNAL HEADS MOUNTED ON MODIFIED TYPE 1 RETAINING WALL LOCATIONS 1 & 4 DETAILS

ALL DIMENSIONS ARE IN INCHES UNLESS OTHERWISE SHOWN

S-10

R. YEE	DETAILS	DATE 8/25/08	PROJECT ENGINEER
E. LOPEZ	QUANTITIES	8/25/08	ELISEO LOPEZ
CALCULATED/DESIGNED BY	E. LOPEZ		
CHECKED BY	J. MAGANA		

STATE OF CALIFORNIA - DEPARTMENT OF TRANSPORTATION
Caltrans SPECIAL DESIGNS BRANCH

LAST REVISION 6/10/09
DATE PLOTTED => 20-AUG-2009
TIME PLOTTED => 11:57

ORIGINAL SCALE IN INCHES FOR REDUCED PLANS 0 1 2 3

USERNAME => trmikesl
DGN FILE => spec_des_br_prj/misc/ray/06_0e9701_s10.dgn

CU 06 EA 0E9701

Dist	COUNTY	ROUTE	POST MILES TOTAL PROJECT	SHEET No.	TOTAL SHEETS
06	Fre	41	R27.6/R29.8	59	107

Sandy L Le 04-22-09
REGISTERED CIVIL ENGINEER DATE

8-17-09
PLANS APPROVAL DATE

REGISTERED PROFESSIONAL ENGINEER
SANDY L. LE
No. 67065
Exp. 9/30/10
CIVIL
STATE OF CALIFORNIA

THE STATE OF CALIFORNIA OR ITS OFFICERS OR AGENTS SHALL NOT BE RESPONSIBLE FOR THE ACCURACY OR COMPLETENESS OF ELECTRONIC COPIES OF THIS PLAN SHEET.

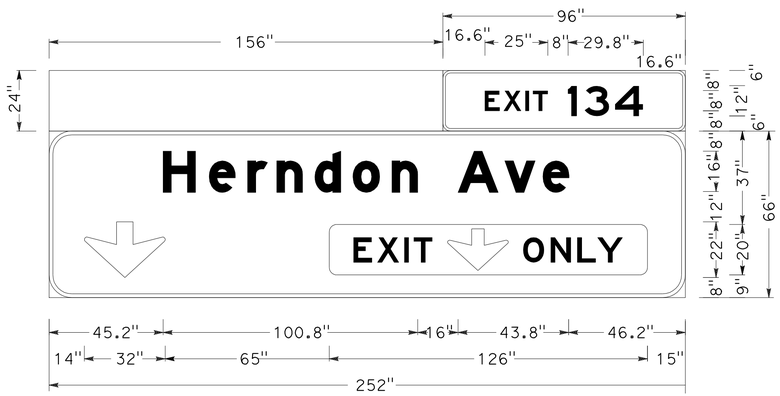

No border, White on Green;
3.0" Radius, 1.0" Border, White on Green;
[EXIT] E; [134] E;
9.0" Radius, 1.5" Border, White on Green;
[Herndon Ave] E Mod; Down Arrow 22.0" 270{; Rounded Rectangle 3.0" Radius Yellow;

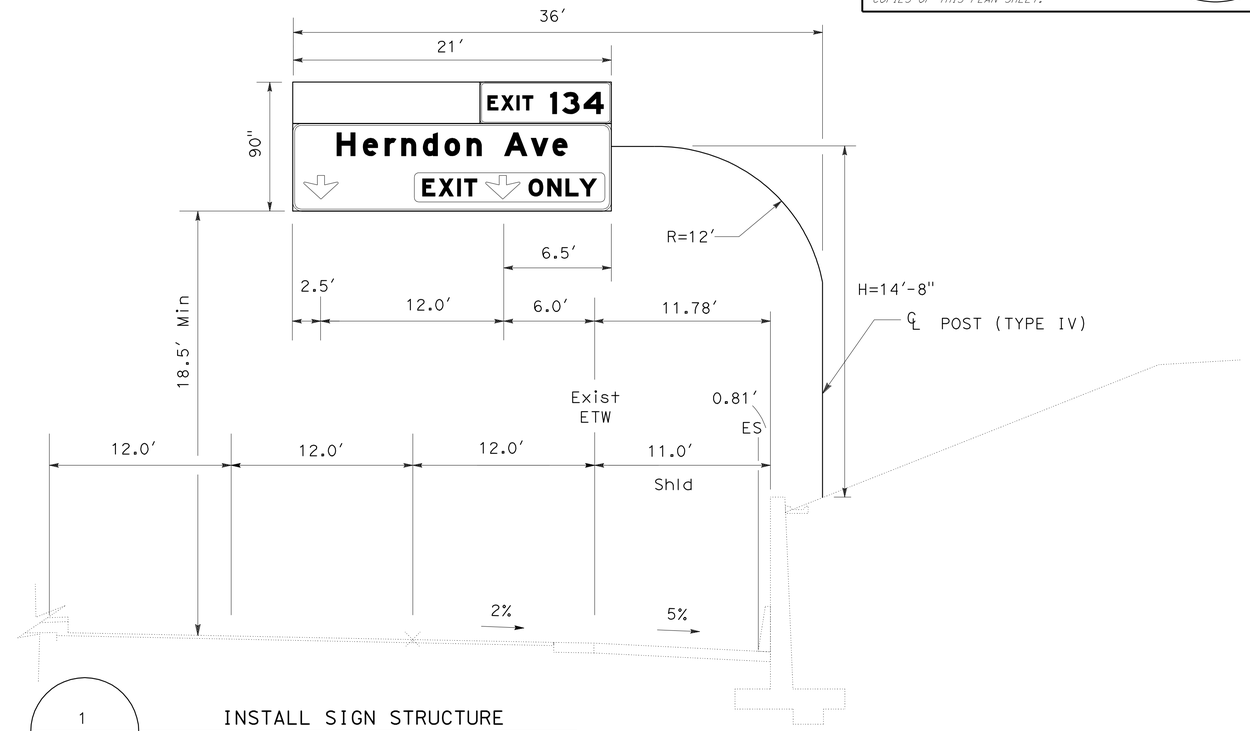

1
G83-3(CA)

INSTALL SIGN STRUCTURE
FNBT OVER ROUTE 41 AT STA 115+94

OVERHEAD SIGN STRUCTURE QUANTITIES

SIGN No.	LOCATION ROUTE 41	PANEL SIZE	OVERHEAD SIGN PANEL: BACKGROUND SHEETING COLOR	BACKGROUND RETROREFLECTIVITY ASTM TYPE	LEGEND SHEETING COLOR	LEGEND RETROREFLECTIVITY ASTM TYPE	GRAFFITI FLOW SINGLE FACED PREMIUM	FURNISH LAMINATED SIGN PANEL TYPE A (1" THICK) SQFT	FURNISH SIGN STRUCTURE (TUBULAR) LB	INSTALL SIGN STRUCTURE (TUBULAR) LB	60" CAST-IN-DRILLED-HOLE CONCRETE PILE (SIGN FOUNDATION) LF
1	Sta 115+94	252" x 90"	GREEN	IV	WHITE	IV	X	157.5	13,000	13,000	33
	TOTAL							157.5	13,000	13,000	33

NOTES:

1. BASE PLATE ELEVATIONS SHALL BE SET IN THE FIELD TO PROVIDE A VERTICAL CLEARANCE OF 18'-6" MINIMUM FROM BOTTOM OF FRAME OR LIGHTING FIXTURE TO THE ROADBED.
2. THE CONTRACTOR SHALL VERIFY ALL FIELD CONTROLLING DIMENSIONS BEFORE ORDERING OR FABRICATING ANY MATERIAL.
3. "H" AND BASE PLATE ELEVATIONS ARE FOR QUANTITIES ONLY AND ARE SUBJECTED TO CHANGE BASED ON NOTE 1.

THIS PLAN IS ACCURATE FOR SIGN WORK ONLY

OVERHEAD SIGN DETAILS
SD-1

STATE OF CALIFORNIA - DEPARTMENT OF TRANSPORTATION
Caltrans
TRAFFIC DESIGN
FUNCTIONAL SUPERVISOR: MOHAMMED QATAMI
CALCULATED-DESIGNED BY: SANDY LE
CHECKED BY: HASSAN TAHA
REVISED BY
DATE REVISED

LAST REVISION 04-30-09
DATE PLOTTED => 24-AUG-2009
TIME PLOTTED => 10:23

Dist	COUNTY	ROUTE	POST MILES TOTAL PROJECT	SHEET No.	TOTAL SHEETS
06	Fre	41	R27.6/R29.8	60	107

Sandy L Le 04-22-09
REGISTERED CIVIL ENGINEER DATE

8-17-09
PLANS APPROVAL DATE

REGISTERED PROFESSIONAL ENGINEER
SANDY L. LE
No. 67065
Exp. 9/30/10
CIVIL
STATE OF CALIFORNIA

THE STATE OF CALIFORNIA OR ITS OFFICERS OR AGENTS SHALL NOT BE RESPONSIBLE FOR THE ACCURACY OR COMPLETENESS OF ELECTRONIC COPIES OF THIS PLAN SHEET.

SIGN QUANTITIES

SHEET No.	SIGN No.	SIGN CODE	SIGN MESSAGE	No. OF POST AND SIZE	PANEL SIZE	SINGLE FACED	BACKGROUND SHEETING COLOR	BACKGROUND RETROREFLECTIVITY ASTM TYPE	LEGEND SHEETING COLOR	LEGEND RETROREFLECTIVITY ASTM TYPE	STANDARD GRAFFITI FILM	PREMIUM GRAFFITI FILM	FURNISH SINGLE SHEET ALUMINUM SIGN (0.063"-UNFRAMED) SQFT	FURNISH SINGLE SHEET ALUMINUM SIGN (0.080"-UNFRAMED) SQFT	ROADSIDE SIGN ONE POST EA	RESET ROADSIDE SIGN EA	(N) RESET ROADSIDE SIGN (SSBM) EA	(N) (INSTALL ROADSIDE SIGN (SSBM) EA
PD-1	1	G92(CA),M3-1, G28-2(CA),M6-2	FREEWAY ENTRANCE, ROUTE 41, NORTH, ARROW, OM TYPE 2													1		
	2	G92(CA),M3-1, G28-2(CA),M6-2	FREEWAY ENTRANCE, ROUTE 41, NORTH, ARROW, OM TYPE 2													1		
	3	R5-10a	PEDESTRIANS PROHIBITED													1		
	4	R91-3(CA)	CARPOOLS 2 OR MORE ONLY..	1 - 6" x 6"	54" x 60"	X	WHITE	III	BLACK	IV	X			22.5	1			
	5	R91-3(CA)	CARPOOLS 2 OR MORE ONLY..	1 - 6" x 6"	54" x 60"	X	WHITE	III	BLACK	IV	X			22.5	1			
	6	R10-6	STOP HERE ON RED	ON POLE	24" x 36"	X	WHITE	III	BLACK	IV	X		6.0					1
		R89-1(CA)	2 CARS PER GREEN EACH LANE		24" x 10"	X	WHITE	III	BLACK	IV	X		1.67					
	7E	R89-2(CA)	2 CARS PER GREEN THIS LANE	MAST ARM	22" x 10"	X	WHITE	III	BLACK	IV	X		8.0					3
PD-2	8	R91-3(CA)	CARPOOLS 2 OR MORE ONLY..	1 - 6" x 6"	54" x 60"	X	WHITE	III	BLACK	IV	X			22.5	1			
	9	R91-3(CA)	CARPOOLS 2 OR MORE ONLY..	1 - 6" x 6"	54" x 60"	X	WHITE	III	BLACK	IV	X			22.5	1			
	10	R10-6	STOP HERE ON RED	ON POLE	24" x 36"	X	WHITE	III	BLACK	IV	X		12.0					2
		R89-1(CA)	2 CARS PER GREEN EACH LANE		24" x 10"	X	WHITE	III	BLACK	IV	X		3.33					
	11E	R89-2(CA)	2 CARS PER GREEN THIS LANE	MAST ARM	22" x 10"	X	WHITE	III	BLACK	IV	X		8.0					3
	12	R10-6	STOP HERE ON RED	ON POLE	24" x 36"	X	WHITE	III	BLACK	IV	X		12.0					2
		R89-1(CA)	2 CARS PER GREEN EACH LANE		24" x 10"	X	WHITE	III	BLACK	IV	X		3.33					
PD-3	13E	M3-1,G28-2(CA), G66-56(CA)	NORTH, ROUTE 41, TRUCK TERMINAL	ON POLE													1	
PD-4	14	G92(CA),M3-1, G28-2(CA),M6-2	FREEWAY ENTRANCE, ROUTE 41, NORTH, ARROW, OM TYPE 2													1		
	15	G92(CA),M3-1, G28-2(CA),M6-2	FREEWAY ENTRANCE, ROUTE 41, NORTH, ARROW, OM TYPE 2													1		
	16	R5-10a	PEDESTRIANS PROHIBITED													1		
	17	R91-3(CA)	CARPOOLS 2 OR MORE ONLY..	1 - 6" x 6"	54" x 60"	X	WHITE	III	BLACK	IV	X			22.5	1			
	18	R91-3(CA)	CARPOOLS 2 OR MORE ONLY..	1 - 6" x 6"	54" x 60"	X	WHITE	III	BLACK	IV	X			22.5	1			
	19	R10-6	STOP HERE ON RED	ON POLE	24" x 36"	X	WHITE	III	BLACK	IV	X		6.0					1
		R89-1(CA)	2 CARS PER GREEN EACH LANE		24" x 10"	X	WHITE	III	BLACK	IV	X		1.67					
	20E	R89-2(CA)	2 CARS PER GREEN THIS LANE	MAST ARM	22" x 10"	X	WHITE	III	BLACK	IV	X		8.0					3
PD-5	21E	M3-1,G28-2(CA)	NORTH, ROUTE 41	ON POLE													1	
											TOTAL		70.0	135.0	6	6	2(N)	15(N)

NOTES: 1. (N): NOT A SEPARATE PAY ITEM, FOR INFORMATION ONLY
SEE ELECTRICAL PLANS FOR INSTALLATION DETAILS.

2. BLACK LEGEND SHALL BE NON-REFLECTIVE.

DELINEATOR

SHEET No.	(CLASS-1) TYPE G (EA)	(CLASS-1) TYPE F (EA)
PD-1	8	
PD-2	19	11
PD-4	7	
SUBTOTAL	34	11
TOTAL	45	

STATE OF CALIFORNIA - DEPARTMENT OF TRANSPORTATION
Caltrans TRAFFIC DESIGN

FUNCTIONAL SUPERVISOR: MOHAMMED QATAMI
CALCULATED-DESIGNED BY: SANDY LE
CHECKED BY: HASSAN TAHA
REVISED BY
DATE REVISED

SIGN QUANTITIES
SQ-1

LAST REVISION 04-30-09 | DATE PLOTTED => 20-AUG-2009 | TIME PLOTTED => 10:20

Dist	COUNTY	ROUTE	POST MILES TOTAL PROJECT	SHEET No.	TOTAL SHEETS
06	Fre	41	R27.6/R29.8	61	107

Michael S. Bettega 04/07/09
REGISTERED CIVIL ENGINEER DATE

8-17-09
PLANS APPROVAL DATE

REGISTERED PROFESSIONAL ENGINEER MICHAEL S. BETTEGA No. C 34348 Exp. 9/30/09 CIVIL STATE OF CALIFORNIA

THE STATE OF CALIFORNIA OR ITS OFFICERS OR AGENTS SHALL NOT BE RESPONSIBLE FOR THE ACCURACY OR COMPLETENESS OF SCANNED COPIES OF THIS PLAN SHEET.

RETAINING WALL

LOCATION	STRUCTURAL CONCRETE, RETAINING WALL	STRUCTURE EXCAVATION (RETAINING WALL)	BAR REINFORCING STEEL (RETAINING WALL)	STRUCTURE BACKFILL (RETAINING WALL)	PERVIOUS BACKFILL MATERIAL (RETAINING WALL)
	CY	CY	LB	CY	CY
1	997	9275	121,506	3046	227
4	2123	9275	260,651	6148	589
TOTAL	3120	18,550	382,157	9194	816

CONCRETE BARRIER

LOCATION	Sta TO Sta	CONCRETE BARRIER (TYPE 60D)	CONCRETE BARRIER (TYPE 60)	ALTERNATIVE CRASH CUSHION SYSTEM
		LF	LF	EA
1	12+25.00 TO 12+50.00 "C LINE"	-	25	-
	12+50.00 TO 21+50.00 "C LINE"	874	-	-
2	12+70.31 TO 16+13.39 "A LINE"	-	343	1
4	101+25.00 TO 101+50.00 "R2 LINE"	-	25	-
	101+50.00 TO 118+88.01 "R2 LINE"	1738	-	-
TOTAL		2612	393	1

COLD PLANE ASPHALT CONCRETE PAVEMENT

LOCATION	Sta TO Sta	SQYD
1	11+32.92 TO 21+29.02 "C LINE"	1539
2	12+05.36 TO 30+90.69 "A LINE"	2687
3	23+00.00 TO 28+19.02 "B LINE"	1101
4	100+57.48 TO 118+97.15 "D LINE"	2962
TOTAL		8289

HMA DIKE

LOCATION	Sta TO Sta	TYPE C	TYPE E	TYPE F
		LF	LF	LF
1	Sta 11+32.92 TO 11+65.75 "C LINE" (R+)	37	-	-
1	Sta 11+68.75 TO 12+25.00 "C LINE" (R+)	-	-	25
1	Sta 21+50.00 TO 22+57.57 "A LINE" (R+)	-	108	-
2	Sta 11+68.14 TO 30+90.69 "B LINE" (R+)	-	1923	-
3	Sta 23+03.67 TO 28+19.02 "B LINE" (R+)	-	516	-
4	Sta 100+56.04 TO 100+68.75 "R2" LINE (R+)	13	-	-
	Sta 100+68.75 TO 101+25.00 "R2" LINE (R+)	-	-	57
TOTAL		50	2547	82

ROADWAY QUANTITIES

LOCATION	ROADWAY EXCAVATION	(N) EMBANKMENT	CLASS 2 AGGREGATE BASE	HOT MIX ASPHALT (TYPE A)	TACK COAT	IMPORTED MATERIAL (SHOULDER BACKING)
	CY	CY	CY	TON	TON	TON
1	2,191	-	1373	1453	8.0	25
2	14,024	-	1946	1943	7.1	-
3	450	-	-	580	6.3	-
4	894	33	-	2294	7.4	189
TOTAL	17,559	33	3319	6270	28.8	214

(N) NOT A SEPARATE PAY ITEM, FOR INFORMATION ONLY

CABLE RAILING

LOCATION	Sta TO Sta	CABLE RAILING
		LF
1	12+50.00 TO 21+29.02 "R1 LINE"	879
4	101+50.00 TO 118+88.01 "R2 LINE"	1738
	TOTAL	2617

METAL BEAM GUARD RAILING

LOCATION	℄	Sta TO Sta	MBGR LAYOUT	TRANSITION RAILING (TYPE WB)	MBGR (STEEL POST)	END ANCHOR ASSEMBLY (TYPE SFT)	BURIED POST ANCHOR (N)	ALTERNATE FLARED TERMINAL SYSTEM (AFTS)	REMOVE MBGR
			(TYPE)	EA	LF	EA	EA	EA	LF
1	"C LINE"	11+68.75 TO 12+00.00 (R+)	12C	-	31.25	-	1	-	-
		12+00.00 TO 12+25.00 (R+)	-	1	-	-	-	-	-
		13+05.50 TO 15+30.50 (L+)	16B	-	225.00	1	-	1	-
2	"A LINE"	12+70.31 TO 16+13.39 (L+)	-	-	-	-	-	-	343.00
		16+13.39 TO 18+38.39 (L+)	12DD	-	225.00	1	-	-	-
		18+00.00 TO 19+25.00 (R+)	16F	-	125.00	-	2	-	-
3	"B LINE"	25+32.00 TO 26+57.00 (R+)	11B	-	125.00	1	-	1	-
		25+79.50 TO 26+29.50 (L+)	11B	-	50.00	1	-	1	-
4	"R2" LINE	100+68.75 TO 101+00.00 (R+)	12C	-	31.25	-	1	-	
		101+00.00 TO 101+25.00 (R+)	-	1	-	-	-	-	-
		103+12.50 TO 106+12.50 (L+)	16B		300.00	1	-	1	-
TOTAL				2	1112.50	5	-	4	343.00

STRUCTURAL CONCRETE

LOCATION		CY
4	115+94.00 - 27.85 R+ "D LINE"	16
	TOTAL	16

BAR REINFORCING STEEL

LOCATION		LB
4	115+94.00 - 27.85 R+ "D LINE"	1100
	TOTAL	1100

SUMMARY OF QUANTITIES
Q-1

REVISED BY | DATE REVISED
MIKE BETTEGA | TRIET LY
CALCULATED-DESIGNED BY | CHECKED BY
FUNCTIONAL SUPERVISOR
GETACHEW ESHETE

STATE OF CALIFORNIA - DEPARTMENT OF TRANSPORTATION
Caltrans®
DESIGN

LAST REVISION 04-30-09 | DATE PLOTTED => 20-AUG-2009 | TIME PLOTTED => 10:20

Dist	COUNTY	ROUTE	POST MILES TOTAL PROJECT	SHEET No.	TOTAL SHEETS
06	Fre	41	R27.6/R29.8	62	107

REGISTERED CIVIL ENGINEER 04/07/09 DATE

8-17-09
PLANS APPROVAL DATE

REGISTERED PROFESSIONAL ENGINEER MICHAEL S. BETTEGA No. C 34348 Exp. 9/30/09 CIVIL STATE OF CALIFORNIA

THE STATE OF CALIFORNIA OR ITS OFFICERS OR AGENTS SHALL NOT BE RESPONSIBLE FOR THE ACCURACY OR COMPLETENESS OF SCANNED COPIES OF THIS PLAN SHEET.

EROSION CONTROL

LOCATION	COMPOST (INCORPORATE) AREA		EROSION CONTROL (HYDROSEED) (N) STRAW	(N) FIBER	(N) PURE LIVE SEED	(N) TACKIFIER
	SQYD	ACRE	TON	LB	LB	LB
1	2904	0.6	1.2	280	12.12	75.0
2	2420	0.5	1.0	250	10.12	62.5
3	484	0.1	0.2	30	2.00	12.5
4	5324	1.1	2.2	330	22.00	137.0
TOTAL	11132	2.3	4.6	890	46.24	287.0

(N) NOT A SEPARATE PAY ITEM, FOR INFORMATION ONLY

EXTEND IRRIGATION CROSSOVERS

LOCATION	STATION	SIDE R+	SIDE L+	EXTEND CONDUIT SIZE (in) DN 8 LENGTH (ft)	CB	OL	NP	(N) WATER LINE CROSSOVER SIZE (in) DN	(N) SPRINKLER CONTROL CROSSOVER SIZE (in) DN
HP-1	13+70	X	X	23.9			X	3"	2"
HP-1	20+60	X		20.4	X			3"	2"
HP-2	24 +50	X		5			X	3"	2"
HP-2	15+40	X	X	10			X	3"	2"
HP-2	18+70	X		5			X	3"	2"
HP-3	22+80	X		17			X	3"	2"
HP-3	29+70	X		5			X	3"	2"
HP-4	104+20	X	X	35.8	X			3"	2"
HP-5	114+20	X		28.4	X			3"	2"
TOTAL				150.5					

(N) - NOT A SEPARATE PAY ITEM, FOR INFORMATION ONLY.
DN - DIAMETER NOMINAL
X - DENOTES REQUIREMENT

CB - COUPLING BAND
OL - OVERLAP
NP - NESTABLE PIPE

CHAIN LINK FENCE

LOCATION	Sta TO Sta	CHAIN LINK FENCE (TYPE CL-6)	SALVAGE CHAIN LINK FENCE
		LF	LF
2	10+86.36 (32.46' R+) TO 10+86.36 (44.73 R+) "A LINE"	13	-
2	24+60.22 (71.69' R+) TO 24+60.22 (85.02 R+) "A LINE"	14	-
2	10+86.36 (32.46' R+) TO 24+60.22 (71.69' R+) "A LINE"	-	1374
TOTAL		27	1374

TEMPORARY FIBER ROLL

SHEET	LENGTH (LF)
WPC-1	670
WPC-2	1253
TOTAL	1923

SUMMARY OF QUANTITIES
Q-2

STATE OF CALIFORNIA - DEPARTMENT OF TRANSPORTATION
Caltrans
DESIGN

FUNCTIONAL SUPERVISOR: GETACHEW ESHETE
CALCULATED-DESIGNED BY: MIKE BETTEGA
CHECKED BY: TRIET LY
REVISED BY
DATE REVISED

LAST REVISION 04-30-09
DATE PLOTTED => 20-AUG-2009
TIME PLOTTED => 10:20

Dist	COUNTY	ROUTE	POST MILES TOTAL PROJECT	SHEET No.	TOTAL SHEETS
06	Fre	41	R27.6/R29.8	63	107

REGISTERED CIVIL ENGINEER 04/07/09 DATE

8-17-09
PLANS APPROVAL DATE

REGISTERED PROFESSIONAL ENGINEER MICHAEL S. BETTEGA No. C 34348 Exp. 9/30/09 CIVIL STATE OF CALIFORNIA

THE STATE OF CALIFORNIA OR ITS OFFICERS OR AGENTS SHALL NOT BE RESPONSIBLE FOR THE ACCURACY OR COMPLETENESS OF SCANNED COPIES OF THIS PLAN SHEET.

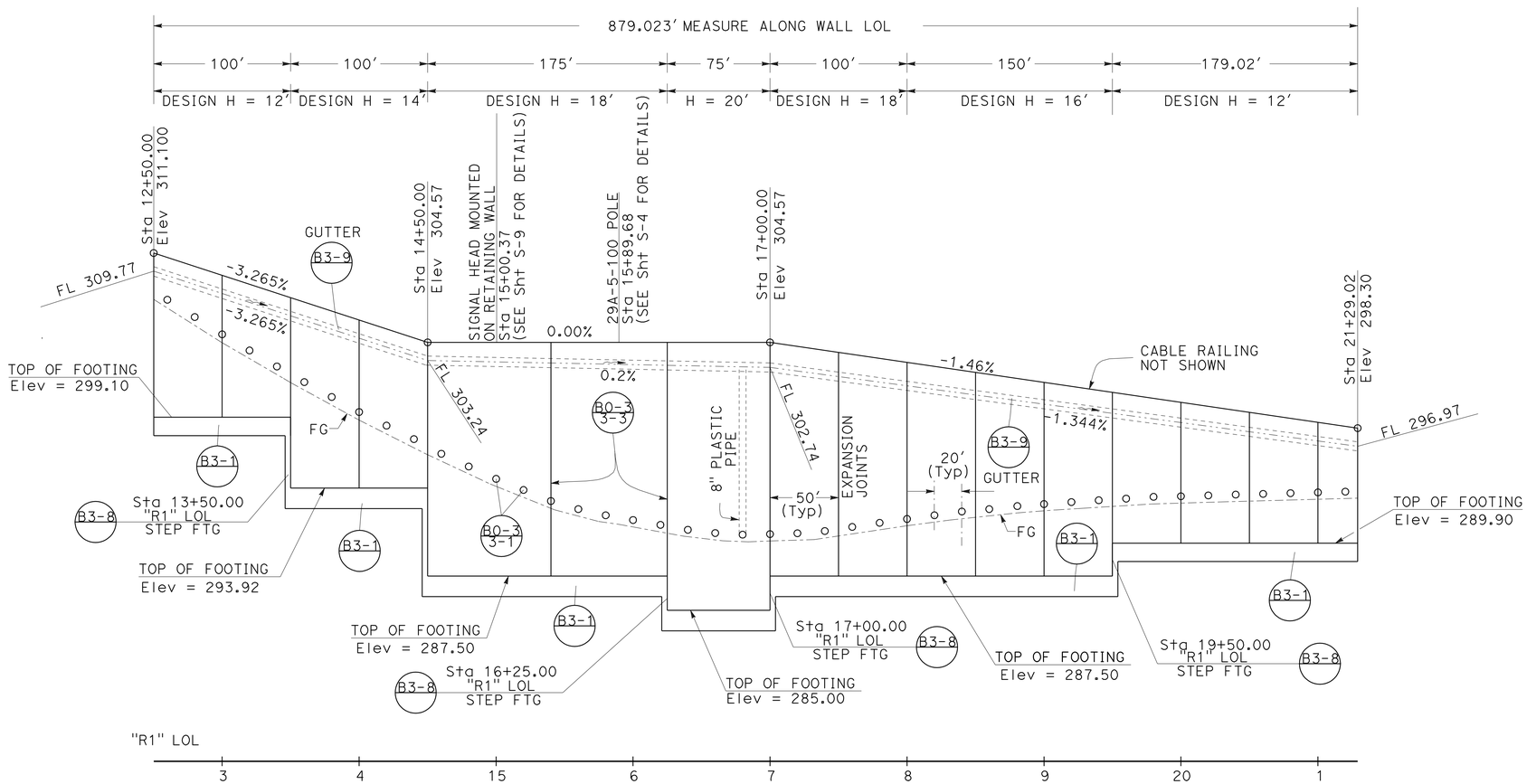

PROFILE VIEW "R1" LINE

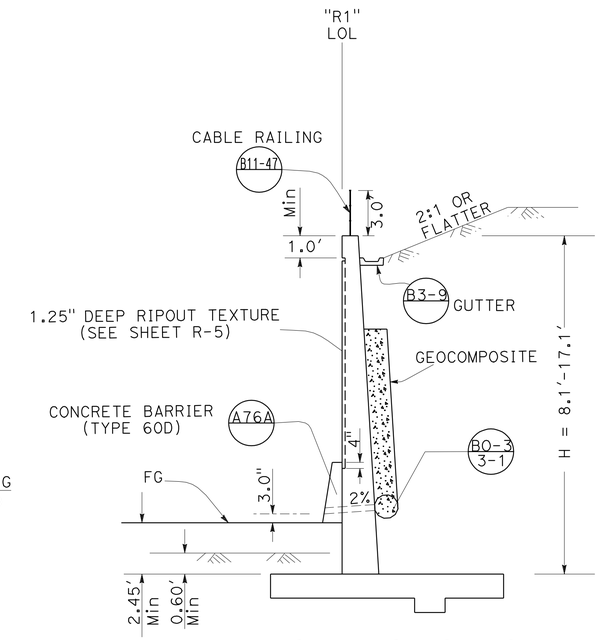

TYPICAL SECTION

RETAINING WALL TYPE 1

NO SCALE

RETAINING WALL DETAILS

(LOCATION 1)

SCALE: Horiz 1"=50'
Vert 1"=5'

R-1

REVISED BY	DATE REVISED

CALCULATED-DESIGNED BY: MIKE BETTEGA
CHECKED BY: TRIET LY
FUNCTIONAL SUPERVISOR: GETACHEW ESHETE

STATE OF CALIFORNIA - DEPARTMENT OF TRANSPORTATION
Caltrans
DESIGN

LAST REVISION 04-30-09 | DATE PLOTTED => 20-AUG-2009 | TIME PLOTTED => 10:20

Dist	COUNTY	ROUTE	POST MILES TOTAL PROJECT	SHEET No.	TOTAL SHEETS
06	Fre	41	R27.6/R29.8	64	107

REGISTERED CIVIL ENGINEER 04/07/09 DATE

8-17-09
PLANS APPROVAL DATE

REGISTERED PROFESSIONAL ENGINEER MICHAEL S. BETTEGA No. C 34348 Exp. 9/30/09 CIVIL STATE OF CALIFORNIA

THE STATE OF CALIFORNIA OR ITS OFFICERS OR AGENTS SHALL NOT BE RESPONSIBLE FOR THE ACCURACY OR COMPLETENESS OF SCANNED COPIES OF THIS PLAN SHEET.

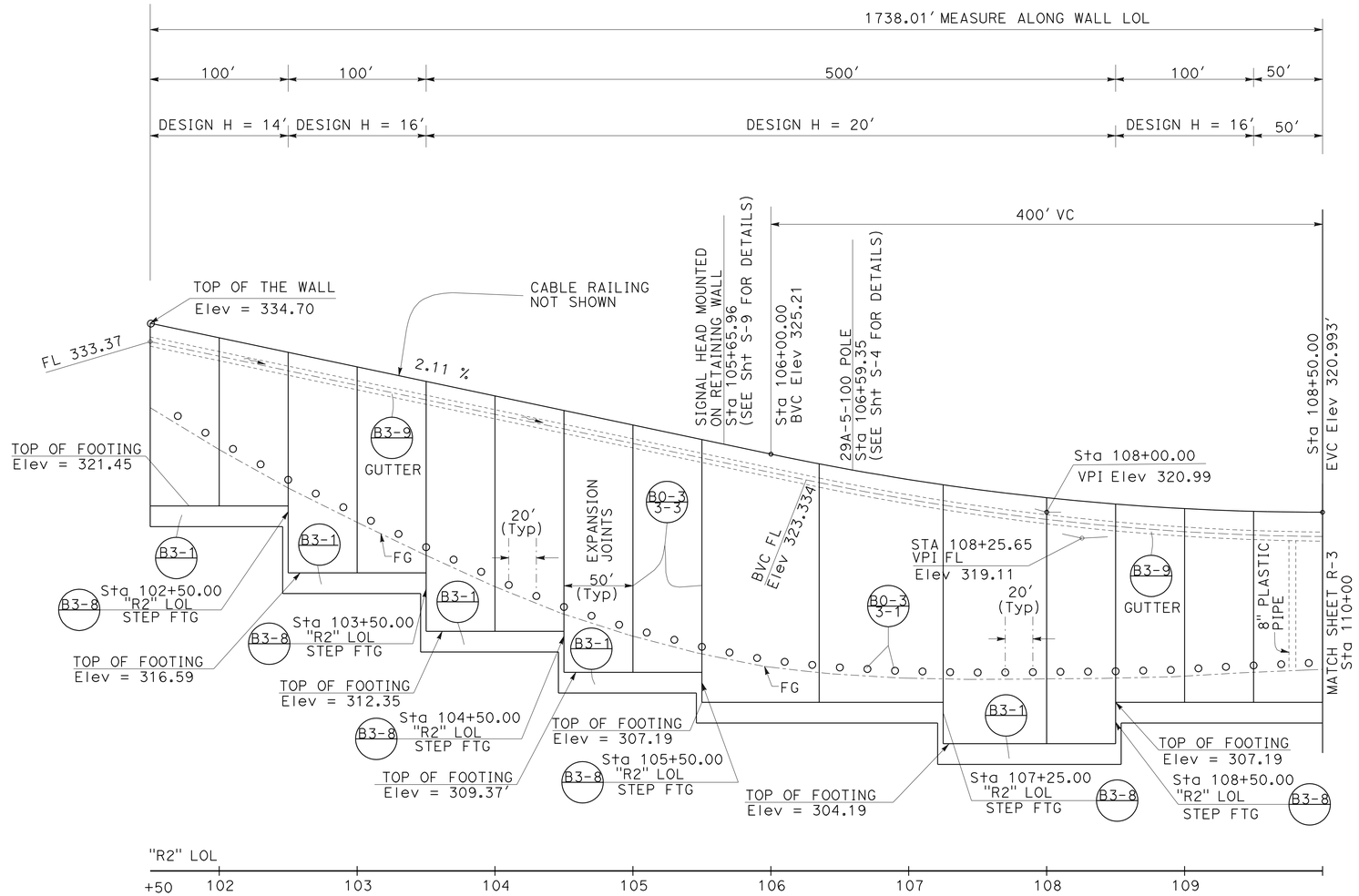

PROFILE VIEW "R2" LINE

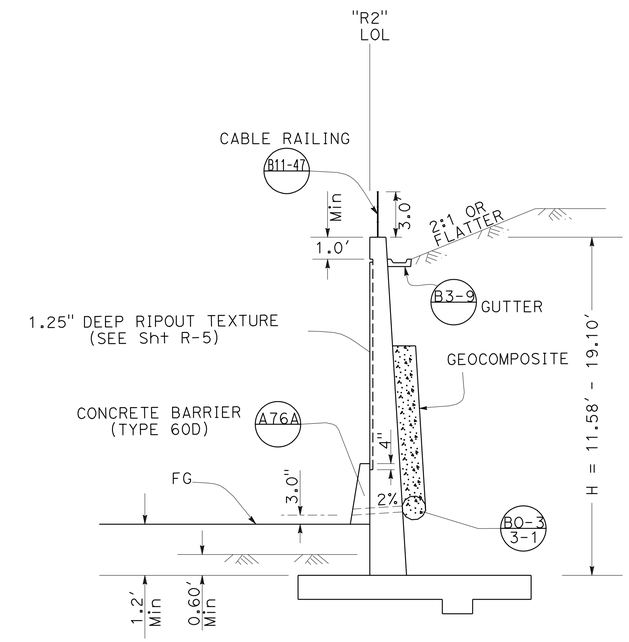

TYPICAL SECTION

RETAINING WALL TYPE 1

NO SCALE

RETAINING WALL DETAILS

(LOCATION 4)

SCALE: Horiz 1"=50'
Vert 1"=5'

R-2

REVISED BY	DATE REVISED

CALCULATED-DESIGNED BY	CHECKED BY
MIKE BETTEGA	TRIET LY

FUNCTIONAL SUPERVISOR
GETACHEW ESHETE

STATE OF CALIFORNIA - DEPARTMENT OF TRANSPORTATION

Caltrans®

DESIGN

LAST REVISION 04-30-09 | DATE PLOTTED => 20-AUG-2009 | TIME PLOTTED => 10:21

Dist	COUNTY	ROUTE	POST MILES TOTAL PROJECT	SHEET No.	TOTAL SHEETS
06	Fre	41	R27.6/R29.8	65	107

REGISTERED CIVIL ENGINEER 04/07/09 DATE

8-17-09
PLANS APPROVAL DATE

REGISTERED PROFESSIONAL ENGINEER MICHAEL S. BETTEGA No. C 34348 Exp. 9/30/09 CIVIL STATE OF CALIFORNIA

THE STATE OF CALIFORNIA OR ITS OFFICERS OR AGENTS SHALL NOT BE RESPONSIBLE FOR THE ACCURACY OR COMPLETENESS OF SCANNED COPIES OF THIS PLAN SHEET.

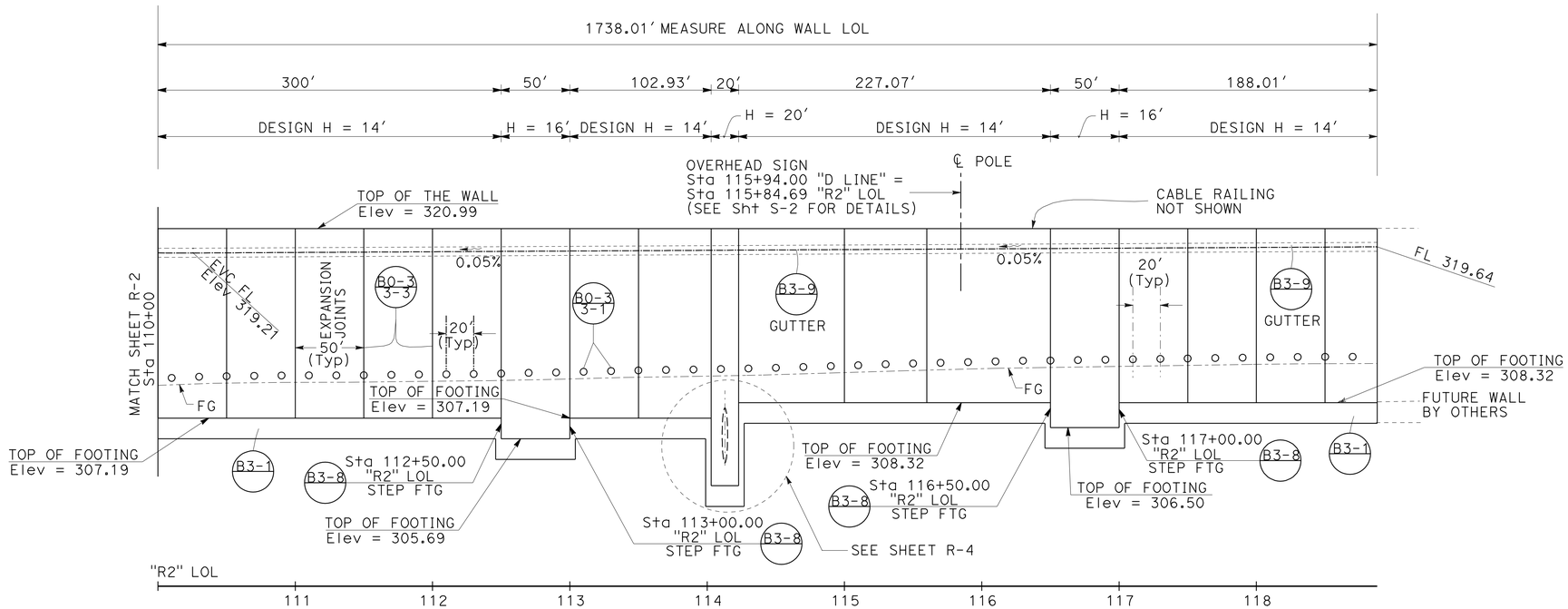

PROFILE VIEW "R2" LINE

RETAINING WALL DETAILS

(LOCATION 4)

SCALE: Horiz 1"=50'
Vert 1"=5'

R-3

STATE OF CALIFORNIA - DEPARTMENT OF TRANSPORTATION
Caltrans®
DESIGN

FUNCTIONAL SUPERVISOR: GETACHEW ESHETE
CALCULATED-DESIGNED BY: MIKE BETTEGA
CHECKED BY: TRIET LY
REVISED BY
DATE REVISED

LAST REVISION 04-30-09
DATE PLOTTED => 20-AUG-2009
TIME PLOTTED => 10:21

Dist	COUNTY	ROUTE	POST MILES TOTAL PROJECT	SHEET No.	TOTAL SHEETS
06	Fre	41	R27.6/R29.8	66	107

Michael S. Bettega 4/07/09
REGISTERED CIVIL ENGINEER DATE

8-17-09
PLANS APPROVAL DATE

REGISTERED PROFESSIONAL ENGINEER MICHAEL S. BETTEGA No. C34348 Exp. 9/30/09 CIVIL STATE OF CALIFORNIA

THE STATE OF CALIFORNIA OR ITS OFFICERS OR AGENTS SHALL NOT BE RESPONSIBLE FOR THE ACCURACY OR COMPLETENESS OF SCANNED COPIES OF THIS PLAN SHEET.

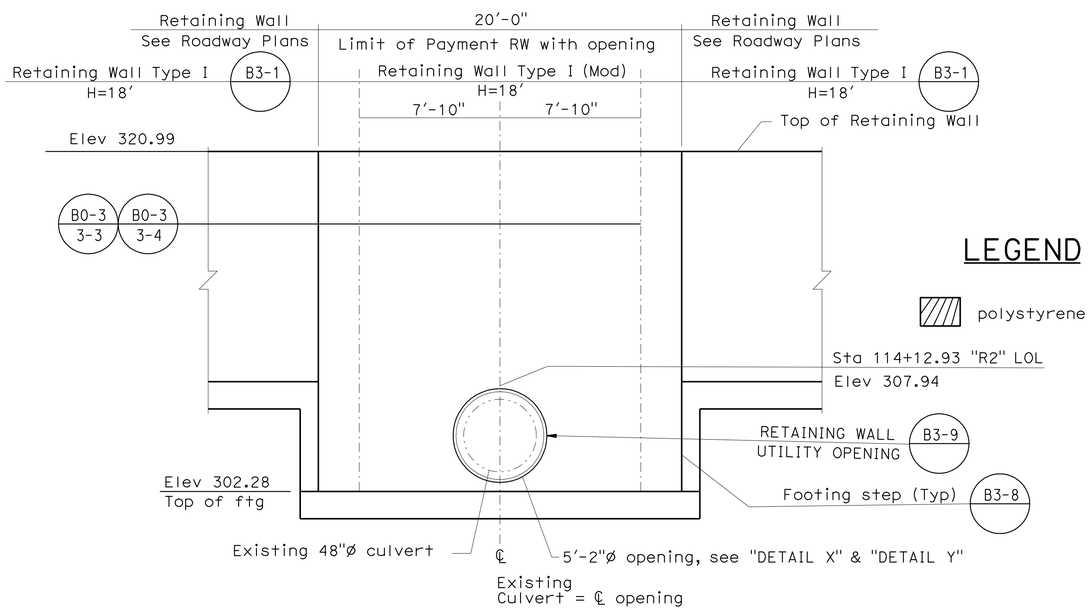

ELEVATION
RETAINING WALL WITH OPENING

1/4" = 1'-0"

LEGEND

polystyrene

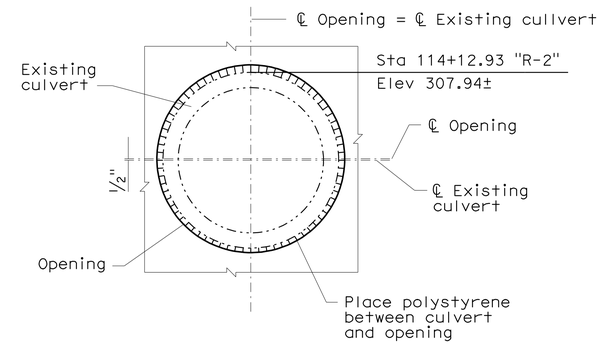

DETAIL Y

1/2"=1'-0"

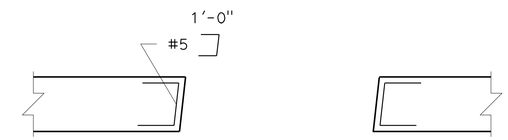

SECTION A-A

1/2"=1'-0"

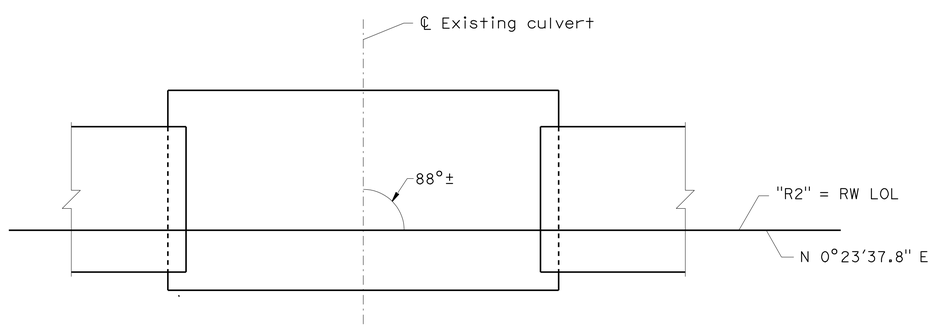

PLAN
RETAINING WALL WITH OPENING FOOTING

1/4" = 1'-0"

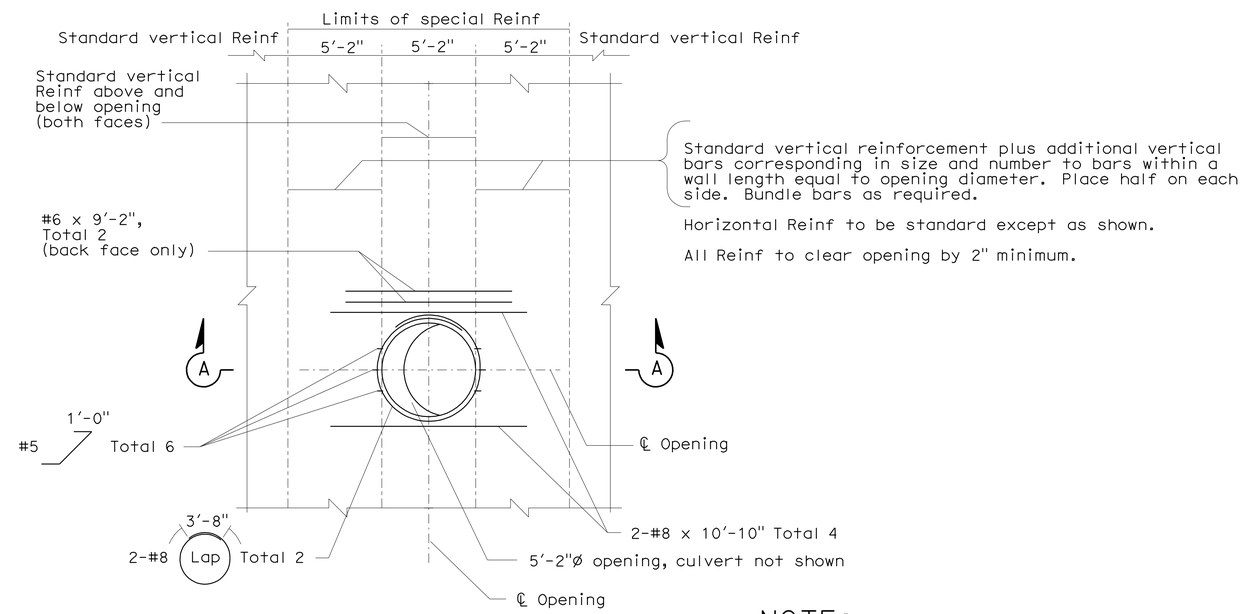

DETAIL "X"

1/4" = 1'-0"

CONTRACTOR SHALL VERIFY ALL DIMENSIONS IN THE FIELD BEFORE FABRICATING ANY MATERIAL

NOTE:

For details not shown, see standard plans B3-1 and B3-8.

RETAINING WALL DETAILS

SCALE AS SHOWN

R-4

STATE OF CALIFORNIA - DEPARTMENT OF TRANSPORTATION
DESIGN
FUNCTIONAL SUPERVISOR: GETACHEW ESHETE
CALCULATED-DESIGNED BY: MIKE BETTEGA
CHECKED BY: TRIET LY
REVISED BY
DATE REVISED

LAST REVISION 04-30-09
DATE PLOTTED => 20-AUG-2009
TIME PLOTTED => 10:21

Dist	COUNTY	ROUTE	POST MILES TOTAL PROJECT	SHEET No.	TOTAL SHEETS
06	Fre	41	R27.6/R29.8	67	107

REGISTERED CIVIL ENGINEER 04/07/09 DATE

8-17-09
PLANS APPROVAL DATE

REGISTERED PROFESSIONAL ENGINEER MICHAEL S. BETTEGA No. C 34348 Exp. 9/30/09 CIVIL STATE OF CALIFORNIA

THE STATE OF CALIFORNIA OR ITS OFFICERS OR AGENTS SHALL NOT BE RESPONSIBLE FOR THE ACCURACY OR COMPLETENESS OF SCANNED COPIES OF THIS PLAN SHEET.

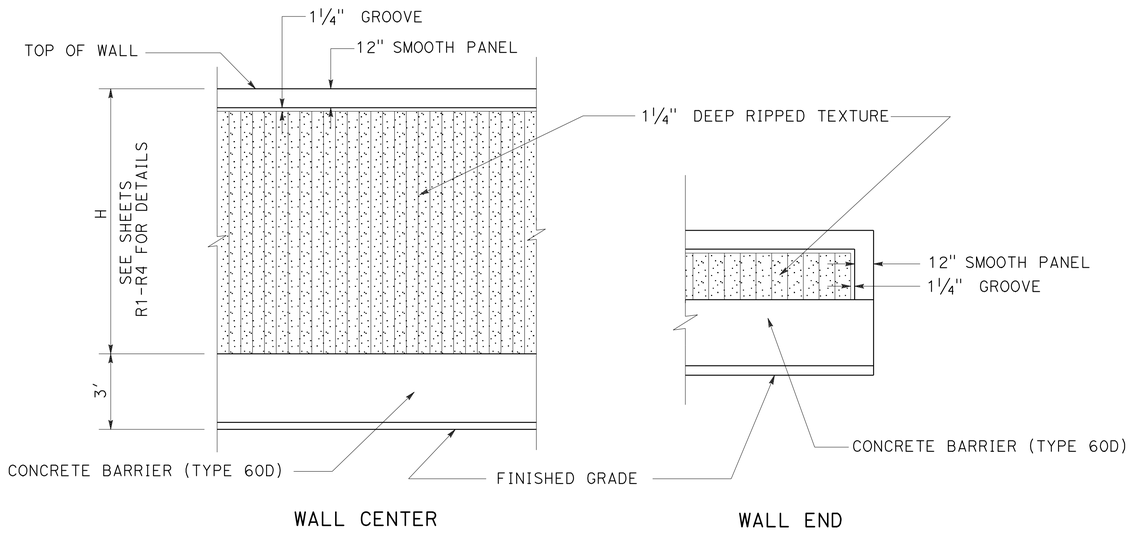

WALL CENTER

WALL END

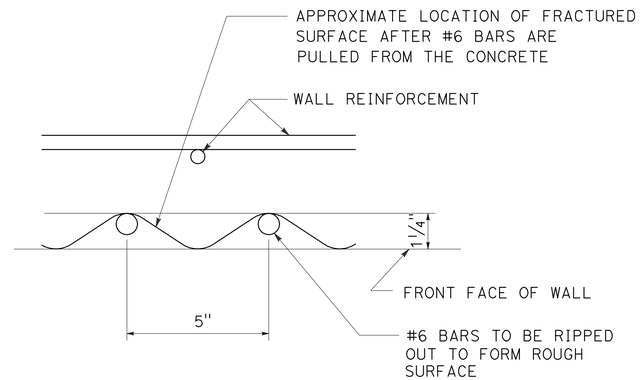

RIPPED TEXTURE DETAIL

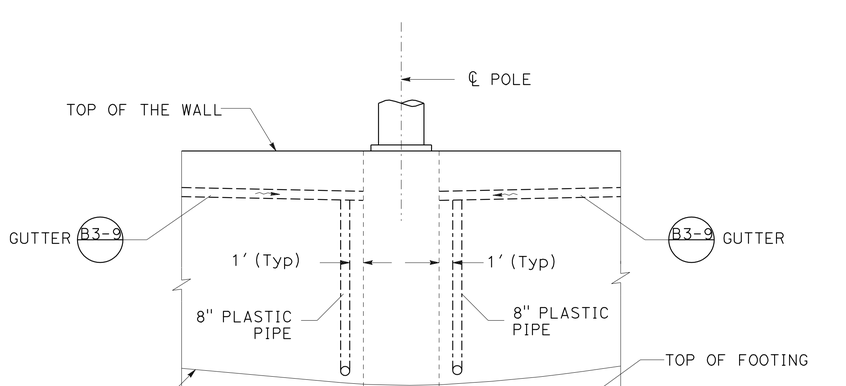

GUTTER DETAILS

Sta 12+50 "C LINE" = Sta 12+50 "R1" LOL
Sta 106+65 "D LINE" = Sta 106+59.35 "R2" LOL
Sta 115+94 "D LINE" = Sta 115+84.69 "R2" LOL

RETAINING WALL DETAILS

NO SCALE

R-5

REVISED BY | DATE REVISED
MIKE BETTEGA | TRIET LY
CALCULATED-DESIGNED BY | CHECKED BY
FUNCTIONAL SUPERVISOR | GETACHEW ESHETE

STATE OF CALIFORNIA - DEPARTMENT OF TRANSPORTATION
Caltrans
DESIGN

LAST REVISION 04-30-09 | DATE PLOTTED => 20-AUG-2009 | TIME PLOTTED => 10:21

Dist	COUNTY	ROUTE	POST MILES TOTAL PROJECT	SHEET No.	TOTAL SHEETS
06	Fre	41	R27.6/R29.8	68	107

Gloria Ramirez
LICENSED LANDSCAPE ARCHITECT

8-17-09
PLANS APPROVAL DATE

LICENSED LANDSCAPE ARCHITECT
GLORIA RAMIREZ No. 5089
Gloria Ramirez
SIGNATURE
04/30/10
RENEWAL DATE
05/13/09
DATE
STATE OF CALIFORNIA

THE STATE OF CALIFORNIA OR ITS OFFICERS OR AGENTS SHALL NOT BE RESPONSIBLE FOR THE ACCURACY OR COMPLETENESS OF SCANNED COPIES OF THIS PLAN SHEET.

LEGEND

Existing Irrigation Sprinkler Heads

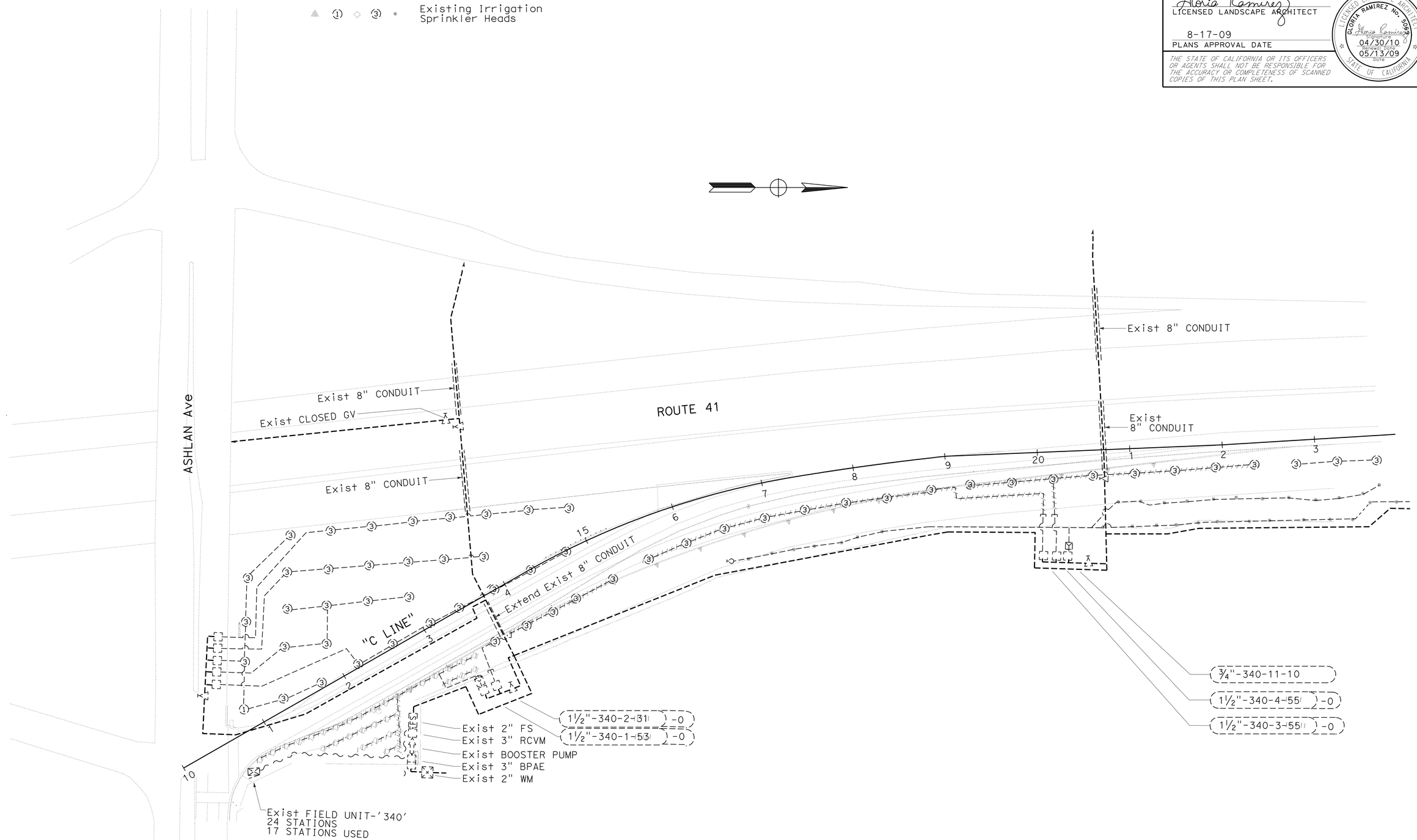

IRRIGATION REMOVAL PLAN

(LOCATION 1)

SCALE: 1"=50'

IR-1

THIS PLAN ACCURATE FOR IRRIGATION REMOVAL WORK ONLY.

STATE OF CALIFORNIA - DEPARTMENT OF TRANSPORTATION
Caltrans® LANDSCAPE ARCHITECTURE

FUNCTIONAL SUPERVISOR: ELBERT COX

CALCULATED-DESIGNED BY: HEIDI MISSLBECK
CHECKED BY: GLORIA RAMIREZ

REVISED BY
DATE REVISED

LAST REVISION 05-13-09 | DATE PLOTTED => 20-AUG-2009 | TIME PLOTTED => 10:21

Dist	COUNTY	ROUTE	POST MILES TOTAL PROJECT	SHEET No.	TOTAL SHEETS
06	Fre	41	R27.6/R29.8	69	107

Gloria Ramirez
LICENSED LANDSCAPE ARCHITECT

8-17-09
PLANS APPROVAL DATE

LICENSED LANDSCAPE ARCHITECT
GLORIA RAMIREZ No. 5989
Gloria Ramirez
Signature
04/30/10
Renewal Date
05/13/09
Date
STATE OF CALIFORNIA

THE STATE OF CALIFORNIA OR ITS OFFICERS OR AGENTS SHALL NOT BE RESPONSIBLE FOR THE ACCURACY OR COMPLETENESS OF SCANNED COPIES OF THIS PLAN SHEET.

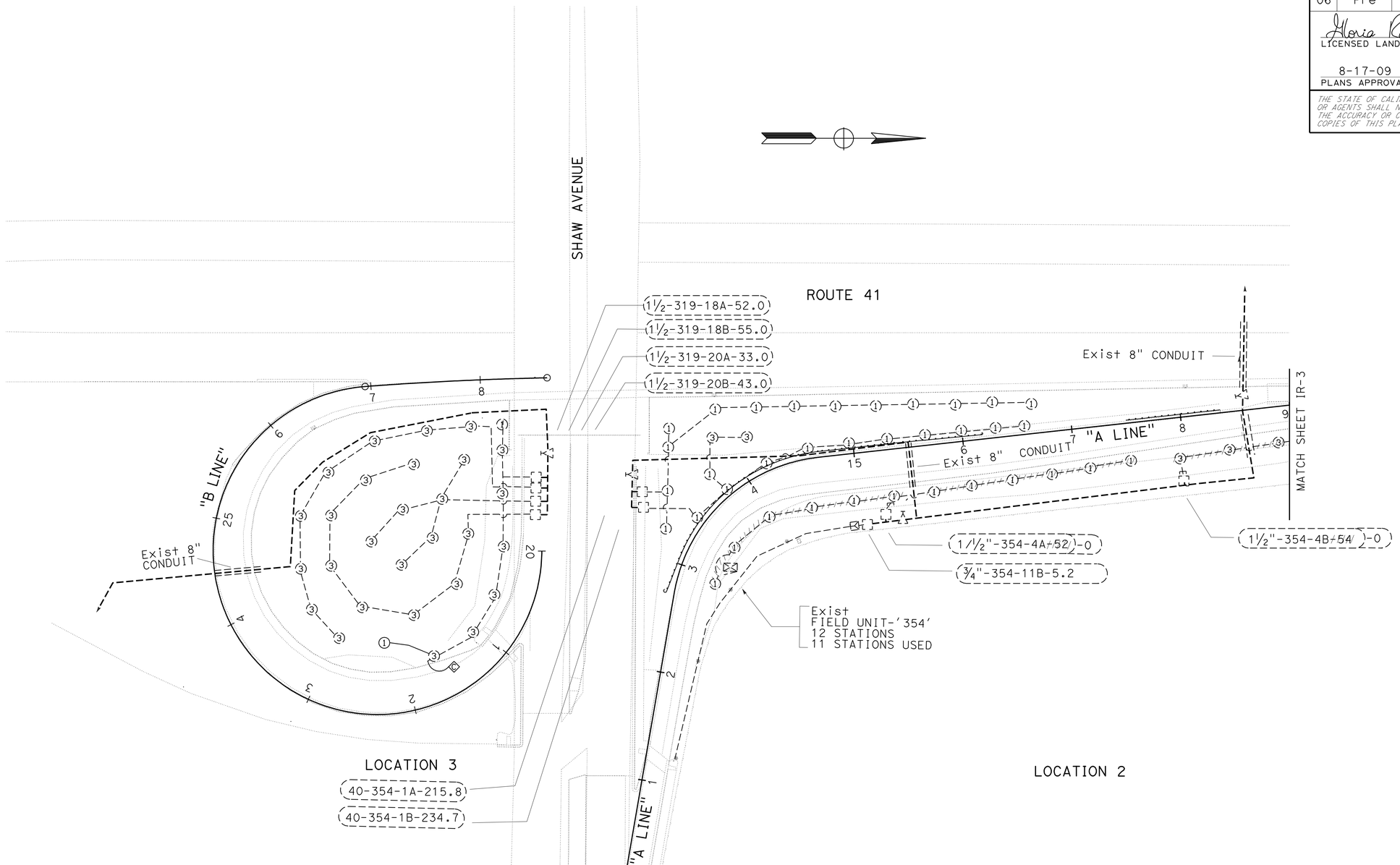

IRRIGATION REMOVAL PLAN
(LOCATION 2 AND 3)

SCALE: 1"=50' **IR-2**

THIS PLAN ACCURATE FOR IRRIGATION REMOVAL WORK ONLY.

STATE OF CALIFORNIA - DEPARTMENT OF TRANSPORTATION
Caltrans® LANDSCAPE ARCHITECTURE

FUNCTIONAL SUPERVISOR: ELBERT COX
CALCULATED-DESIGNED BY: HEIDI MISSLBECK
CHECKED BY: GLORIA RAMIREZ
REVISED BY
DATE REVISED

LAST REVISION 05-13-09
DATE PLOTTED => 20-AUG-2009
TIME PLOTTED => 10:22

Dist	COUNTY	ROUTE	POST MILES TOTAL PROJECT	SHEET No.	TOTAL SHEETS
06	Fre	41	R27.6/R29.8	70	107

Gloria Ramirez
LICENSED LANDSCAPE ARCHITECT

8-17-09
PLANS APPROVAL DATE

LICENSED LANDSCAPE ARCHITECT
GLORIA RAMIREZ No. 5989
Gloria Ramirez
Signature
04/30/10
Renewal Date
05/13/09
Date
STATE OF CALIFORNIA

THE STATE OF CALIFORNIA OR ITS OFFICERS OR AGENTS SHALL NOT BE RESPONSIBLE FOR THE ACCURACY OR COMPLETENESS OF SCANNED COPIES OF THIS PLAN SHEET.

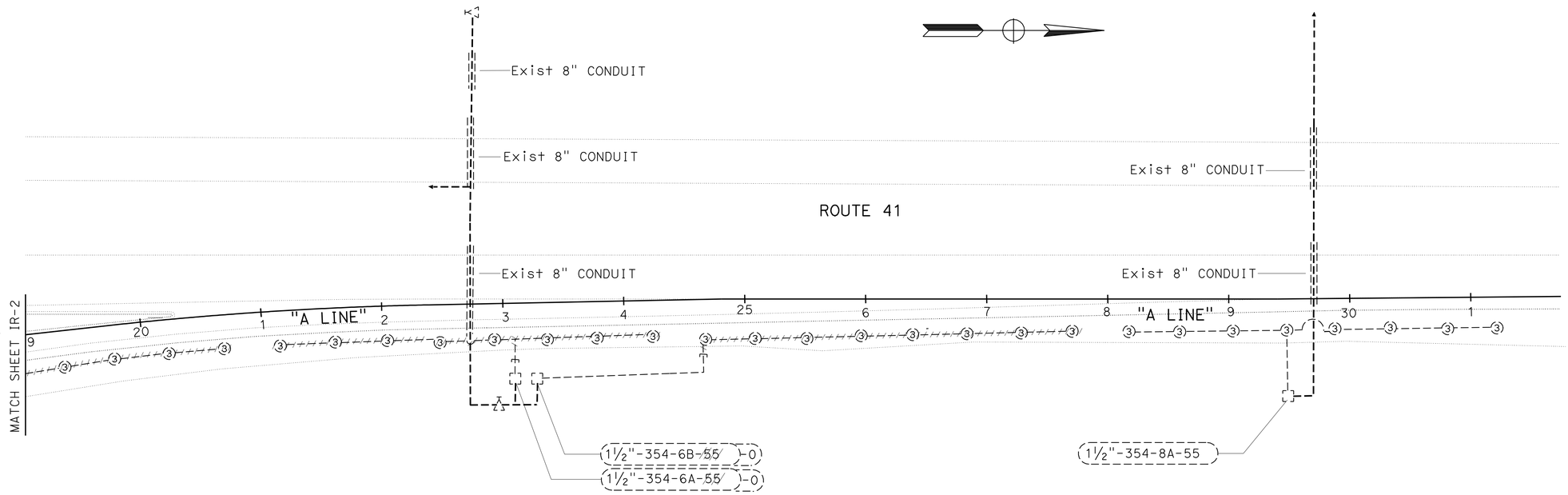

IRRIGATION REMOVAL PLAN

(LOCATION 2)

SCALE: 1"=50′ **IR-3**

THIS PLAN ACCURATE FOR IRRIGATION REMOVAL WORK ONLY.

REVISED BY	DATE REVISED

CALCULATED-DESIGNED BY	CHECKED BY
HEIDI MISSLBECK	GLORIA RAMIREZ

FUNCTIONAL SUPERVISOR: ELBERT COX

STATE OF CALIFORNIA - DEPARTMENT OF TRANSPORTATION
Caltrans® LANDSCAPE ARCHITECTURE

LAST REVISION 05-13-09 | DATE PLOTTED => 20-AUG-2009 | TIME PLOTTED => 10:22

Dist	COUNTY	ROUTE	POST MILES TOTAL PROJECT	SHEET No.	TOTAL SHEETS
06	Fre	41	R27.6/R29.8	71	107

Gloria Ramirez
LICENSED LANDSCAPE ARCHITECT

8-17-09
PLANS APPROVAL DATE

LICENSED LANDSCAPE ARCHITECT
GLORIA RAMIREZ No. 5089
Gloria Ramirez
Signature
04/30/10
Renewal Date
05/13/09
Date
STATE OF CALIFORNIA

THE STATE OF CALIFORNIA OR ITS OFFICERS OR AGENTS SHALL NOT BE RESPONSIBLE FOR THE ACCURACY OR COMPLETENESS OF SCANNED COPIES OF THIS PLAN SHEET.

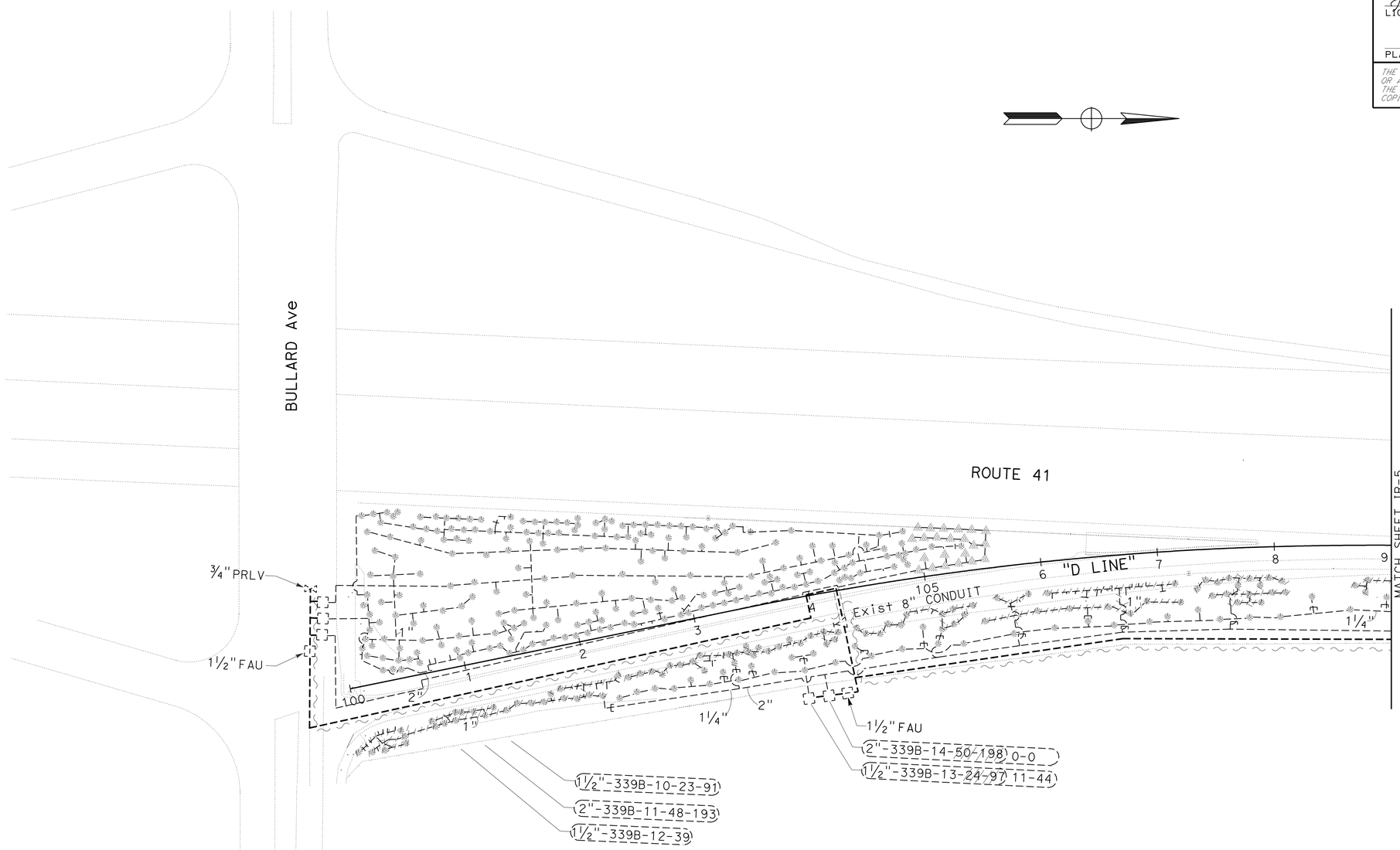

IRRIGATION REMOVAL PLAN

(LOCATION 4)

SCALE: 1"=50'

IR-4

THIS PLAN ACCURATE FOR IRRIGATION REMOVAL WORK ONLY.

STATE OF CALIFORNIA - DEPARTMENT OF TRANSPORTATION
Caltrans LANDSCAPE ARCHITECTURE

FUNCTIONAL SUPERVISOR: ELBERT COX

CALCULATED-DESIGNED BY: HEIDI MISSLBECK
CHECKED BY: GLORIA RAMIREZ

REVISED BY
DATE REVISED

LAST REVISION 05-13-09
DATE PLOTTED => 20-AUG-2009
TIME PLOTTED => 10:22

Dist	COUNTY	ROUTE	POST MILES TOTAL PROJECT	SHEET No.	TOTAL SHEETS
06	Fre	41	R27.6/R29.8	72	107

Gloria Ramirez
LICENSED LANDSCAPE ARCHITECT

8-17-09
PLANS APPROVAL DATE

LICENSED LANDSCAPE ARCHITECT
GLORIA RAMIREZ No. 5088
Gloria Ramirez
Signature
04/30/10
Renewal Date
05/13/09
Date
STATE OF CALIFORNIA

THE STATE OF CALIFORNIA OR ITS OFFICERS OR AGENTS SHALL NOT BE RESPONSIBLE FOR THE ACCURACY OR COMPLETENESS OF SCANNED COPIES OF THIS PLAN SHEET.

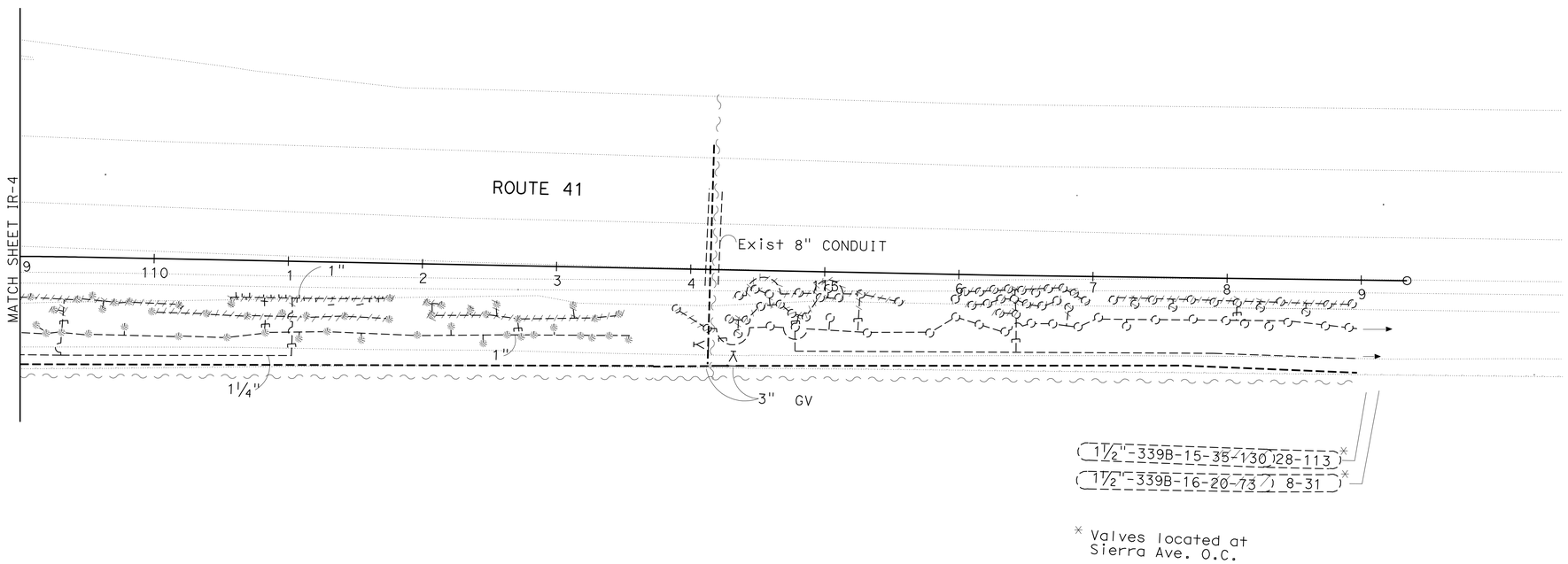

* Valves located at Sierra Ave. O.C.

IRRIGATION REMOVAL PLAN

(LOCATION 4)

SCALE: 1"=50'

IR-5

THIS PLAN ACCURATE FOR IRRIGATION REMOVAL WORK ONLY.

STATE OF CALIFORNIA - DEPARTMENT OF TRANSPORTATION
Caltrans LANDSCAPE ARCHITECTURE

FUNCTIONAL SUPERVISOR: ELBERT COX

CALCULATED-DESIGNED BY: HEIDI MISSLBECK
CHECKED BY: GLORIA RAMIREZ

REVISED BY
DATE REVISED

LAST REVISION 05-13-09
DATE PLOTTED => 20-AUG-2009
TIME PLOTTED => 10:22

Dist	COUNTY	ROUTE	POST MILES TOTAL PROJECT	SHEET No.	TOTAL SHEETS
06	Fre	41	R27.6/R29.8	73	107

Omar Mendoza 04-07-09
REGISTERED ELECTRICAL ENGINEER

8-17-09
PLANS APPROVAL DATE

REGISTERED PROFESSIONAL ENGINEER OMAR MENDOZA No. 17982 Exp. 12/31/10 ELECTRICAL STATE OF CALIFORNIA

THE STATE OF CALIFORNIA OR ITS OFFICERS OR AGENTS SHALL NOT BE RESPONSIBLE FOR THE ACCURACY OR COMPLETENESS OF SCANNED COPIES OF THIS PLAN SHEET.

NOTES:

1 120/240 V, 1ø, 3-WIRE TYPE III-CF SERVICE EQUIPMENT ENCLOSURE WITH THE FOLLOWING CIRCUIT BREAKERS:

CTID No. 06420410027484T

AMPERES	VOLTS	POLES	NAMEPLATE DESCRIPTION	METER	PHOTOELECTRIC CONTROL TYPE
100	240	2	MAIN	YES	——
50	120	1	RAMP METERING	YES	——
50	120	1	SPARE	YES	——
——	——	6	SPACE	YES	——

CTID No. 06420410027484L

AMPERES	VOLTS	POLES	NAMEPLATE DESCRIPTION	METER	PHOTOELECTRIC CONTROL TYPE
100	240	2	MAIN	YES	——
30	240	2	HIGHWAY LIGHTING	YES	IV
30	120	1	SPARE	YES	——
——	——	6	SPACE	YES	——

2 STATE-FURNISHED MODEL 2070 CONTROLLER ASSEMBLY AND FIBER OPTIC MODEM, TERMINATE 6 SMFO, ADD 2 SMFOJ FROM THE ITU TO THE FIBER OPTIC MODEM.

3 Exist MODEL 334 CABINET. ADD STATE-FURNISHED ITU, TERMINATE 6 SMFO, ADD 2 SMFOJ FROM THE Exist itu TO THE NEW ITU.

4 SPLICE VAULT WITH LID, SEE DETAIL K AND DETAIL L ON SHEET E-8.

5 TYPE 1-A 7′ SIGNAL STANDARD, SEE DETAIL F ON SHEET E-7.

6 SEE DETAIL H ON SHEET E-7 FOR INDUCTIVE LOOP DETECTOR PLACEMENT AND IDENTIFICATION.

7 TYPE 1-A SIGNAL STANDARD, SEE DETAIL E ON SHEET E-7.

8 SEE DETAIL G ON SHEET E-7 FOR INDUCTIVE LOOP DETECTOR PLACEMENT AND IDENTIFICATION.

9 SEE SHEET S-9 FOR WALL MOUNTED SIGNAL HEADS AND TOP WALL MOUNTED TYPE 1-A 5′ SIGNAL STANDARD.

10 MODIFIED TYPE 29A-5-100 SIGNAL STANDARD, SEE SHEET S-4 FOR TOP WALL MOUNTED STANDARD.

11 6-1½"C HDPE, SEE DETAIL B ON SHEET E-4.

12 2-1½"C HDPE, SEE DETAIL A ON SHEET E-4.

13 SPLICE VAULT WITH EXTENSION AND LID, SEE DETAIL K AND DETAIL L ON SHEET E-8.

14 COMMUNICATION PULL BOX WITH EXTENSION AND LID, SEE DETAIL M AND DETAIL N ON SHEET E-8.

15 120/240 V, 1ø, 3-WIRE TYPE III-CF SERVICE EQUIPMENT ENCLOSURE WITH THE FOLLOWING CIRCUIT BREAKERS:

CTID No. 06420410028476T

AMPERES	VOLTS	POLES	NAMEPLATE DESCRIPTION	METER	PHOTOELECTRIC CONTROL TYPE
100	240	2	MAIN	YES	——
50	120	1	RAMP METERING #1	YES	——
50	120	1	RAMP METERING #2	YES	——
15	120	1	ICC Q	YES	——
——	——	6	SPACE	YES	——

CTID No. 06420410028476L

AMPERES	VOLTS	POLES	NAMEPLATE DESCRIPTION	METER	PHOTOELECTRIC CONTROL TYPE
100	240	2	MAIN	YES	——
30	240	2	HIGHWAY LIGHTING	YES	IV
30	240	2	SPARE	YES	——
——	——	6	SPACE	YES	——

16 Exist MODEL 334 CABINET. ADD STATE-FURNISHED ITU, TERMINATE 2-6 SMFO, ADD 4 SMFOJ FROM THE Exist itu TO THE NEW ITU.

17 SEE DETAIL C ON SHEET E-4 FOR INDUCTIVE LOOP DETECTOR PLACEMENT AND IDENTIFICATION.

18 TYPE 15TS SIGNAL STANDARD, SEE DETAIL D ON SHEET E-4.

19 TYPE 29A-5-100 SIGNAL STANDARD WITH 40′ SMA, SEE DETAIL I ON SHEET E-7.

20 Exist 120/240 V, 1ø, 3-WIRE TYPE III-AF SERVICE EQUIPMENT ENCLOSURE WITH THE FOLLOWING CIRCUIT BREAKERS:

CTID No. 06420410028470T

AMPERES	VOLTS	POLES	NAMEPLATE DESCRIPTION	METER	PHOTOELECTRIC CONTROL TYPE
100	240	3	MAIN	YES/NO	——
30	120	1	SIGNAL	YES	——
30	240	2	LIGHTING	NO	IV
20	120	1	SIGN	YES	——

21 RL Exist SIGNS, SEE SIGN PLANS FOR SIGN DETAILS.

22 120/240 V, 1ø, 3-WIRE TYPE III-CF SERVICE EQUIPMENT ENCLOSURE WITH THE FOLLOWING CIRCUIT BREAKERS:

CTID No. 06420410029474T

AMPERES	VOLTS	POLES	NAMEPLATE DESCRIPTION	METER	PHOTOELECTRIC CONTROL TYPE
100	240	2	MAIN	YES	——
50	120	1	RAMP METERING	YES	——
15	120	1	SPARE	YES	——
——	——	6	SPACE	YES	——

CTID No. 06420410029474L

AMPERES	VOLTS	POLES	NAMEPLATE DESCRIPTION	METER	PHOTOELECTRIC CONTROL TYPE
100	240	2	MAIN	YES	——
30	240	2	HIGHWAY LIGHTING	YES	IV
30	240	2	SIGN ILLUMINATION	YES	LC3
30	240	2	SPARE	YES	——
——	——	6	SPACE	YES	——

23 SEE SHEET S-9 FOR WALL MOUNTED SIGNAL HEADS.

24 Exist 120/240 V, 1ø, 3-WIRE TYPE III-BF SERVICE EQUIPMENT ENCLOSURE WITH THE FOLLOWING CIRCUIT BREAKERS:

CTID No. 06420410029270T

AMPERES	VOLTS	POLES	NAMEPLATE DESCRIPTION	METER	PHOTOELECTRIC CONTROL TYPE
100	240	3	SERVICE DISCONNECT	YES/NO	——
30	120	1	SIGNAL	YES	——
30	120	2	LIGHTING & SIGNS	NO	II
15	120	1	CONTROL	NO	——
20	120	1	IRRIGATION CONTROL	YES	——

25 MODIFIED WALL MOUNTED TYPE 21 24.5′ LTG STANDARD, SEE SHEET S-7 FOR STANDARD DETAILS.

26 OH ILLUMINATED SIGN 2-85 W, INDUCTION SIGN LTG FIXTURE, TYPE LC2 SIGN CONTROL, SEE SHEET S-1 FOR CONDUIT INSTALLATION.

27 Exist 120/240 V, 1ø, 3-WIRE TYPE III-AF SERVICE EQUIPMENT ENCLOSURE WITH THE FOLLOWING CIRCUIT BREAKERS:

AMPERES	VOLTS	POLES	NAMEPLATE DESCRIPTION	METER	PHOTOELECTRIC CONTROL TYPE
100	240	3	SERVICE DISCONNECT	YES/NO	——
70	120	1	SIGNAL	YES	——
30	120	2	LIGHTING	NO	V
20	120	1	SIGN	YES	——
15	120	1	CONTROL	NO	——
20	120	1	EAC-G,H	YES	——

28 Exist 120/240 V, 1ø, 3-WIRE TYPE III-AF SERVICE EQUIPMENT ENCLOSURE WITH THE FOLLOWING CIRCUIT BREAKERS:

CTID No. 06420410028480T

AMPERES	VOLTS	POLES	NAMEPLATE DESCRIPTION	METER	PHOTOELECTRIC CONTROL TYPE
100	240	3	SERVICE DISCONNECT	YES/NO	——
30	120	1	SIGNAL	YES	——
30	120	2	LIGHTING	NO	V
20	120	1	SIGN	YES	——
15	120	1	CONTROL	NO	——
15	120	1	EAC-K,L,M,G	YES	——

29 Exist 120/240 V, 1ø, 3-WIRE TYPE III-AF SERVICE EQUIPMENT ENCLOSURE WITH THE FOLLOWING CIRCUIT BREAKERS:

CTID No. 06420410029260T

AMPERES	VOLTS	POLES	NAMEPLATE DESCRIPTION	METER	PHOTOELECTRIC CONTROL TYPE
100	240	3	MAIN	YES/NO	——
30	120	1	SIGNAL	YES	——
30	240	2	LIGHTING	NO	IV
20	120	1	SIGN	YES	——

30 2-1½C" HDPE (CONDUIT SHALL BE INSTALLED BY DRILLING METHOD AT A DEPTH OF 60").

31. ALL PULL BOXES SHALL BE No. 5 (E) UNLESS OTHERWISE NOTED.

32. FIBER OPTIC CONDUIT INSTALLED UNDERNEATH MBGR SHALL HAVE A DEPTH OF 60".

THIS PLAN IS ACCURATE FOR ELECTRICAL WORK ONLY.

RAMP METERING SYSTEM
MODIFY LIGHTING AND SIGN ILLUMINATION
FIBER OPTIC SYSTEM
E-1

STATE OF CALIFORNIA - DEPARTMENT OF TRANSPORTATION
Caltrans®
ELECTRICAL DESIGN

FUNCTIONAL SUPERVISOR: ALI BAKHDOUD
CALCULATED-DESIGNED BY: OMAR MENDOZA
CHECKED BY: RAJPREET SINGH
REVISED BY
DATE REVISED

LAST REVISION 05-07-09
DATE PLOTTED => 20-AUG-2009
TIME PLOTTED => 10:22

Dist	COUNTY	ROUTE	POST MILES TOTAL PROJECT	SHEET No.	TOTAL SHEETS
06	Fre	41	R27.6/R29.8	74	107

Omar Mendoza 04-07-09
REGISTERED ELECTRICAL ENGINEER

8-17-09
PLANS APPROVAL DATE

REGISTERED PROFESSIONAL ENGINEER OMAR MENDOZA No. 17982 Exp. 12/31/10 ELECTRICAL STATE OF CALIFORNIA

THE STATE OF CALIFORNIA OR ITS OFFICERS OR AGENTS SHALL NOT BE RESPONSIBLE FOR THE ACCURACY OR COMPLETENESS OF SCANNED COPIES OF THIS PLAN SHEET.

NOTE:

FOR COMPLETE RIGHT OF WAY AND ACCURATE ACCESS DATA, SEE RIGHT OF WAY RECORD MAPS AT DISTRICT OFFICE.

ABBREVIATIONS:

PG&E - PACIFIC GAS AND ELECTRIC COMPANY
AT&T - AMERICAN TELEPHONE AND TELEGRAPH
CTID - CALTRANS IDENTIFICATION
HDPE - HIGH-DENSITY POLYETHYLENE
X SMFO - X STRAND SINGLEMODE FIBER OPTIC CABLE
X SMFOJ - X STRAND SINGLEMODE FIBER OPTIC JUMPER
X smfo - Exist X STRAND SINGLEMODE FIBER OPTIC CABLE
itu - Exist INTERCONNECT TERMINATION UNIT
ITU - INTERCONNECT TERMINATION UNIT
FOM - FIBER OPTIC MODEM

LEGEND:

V - SPLICE VAULT
V - Exist SPLICE VAULT
CP - COMMUNICATION PULL BOX

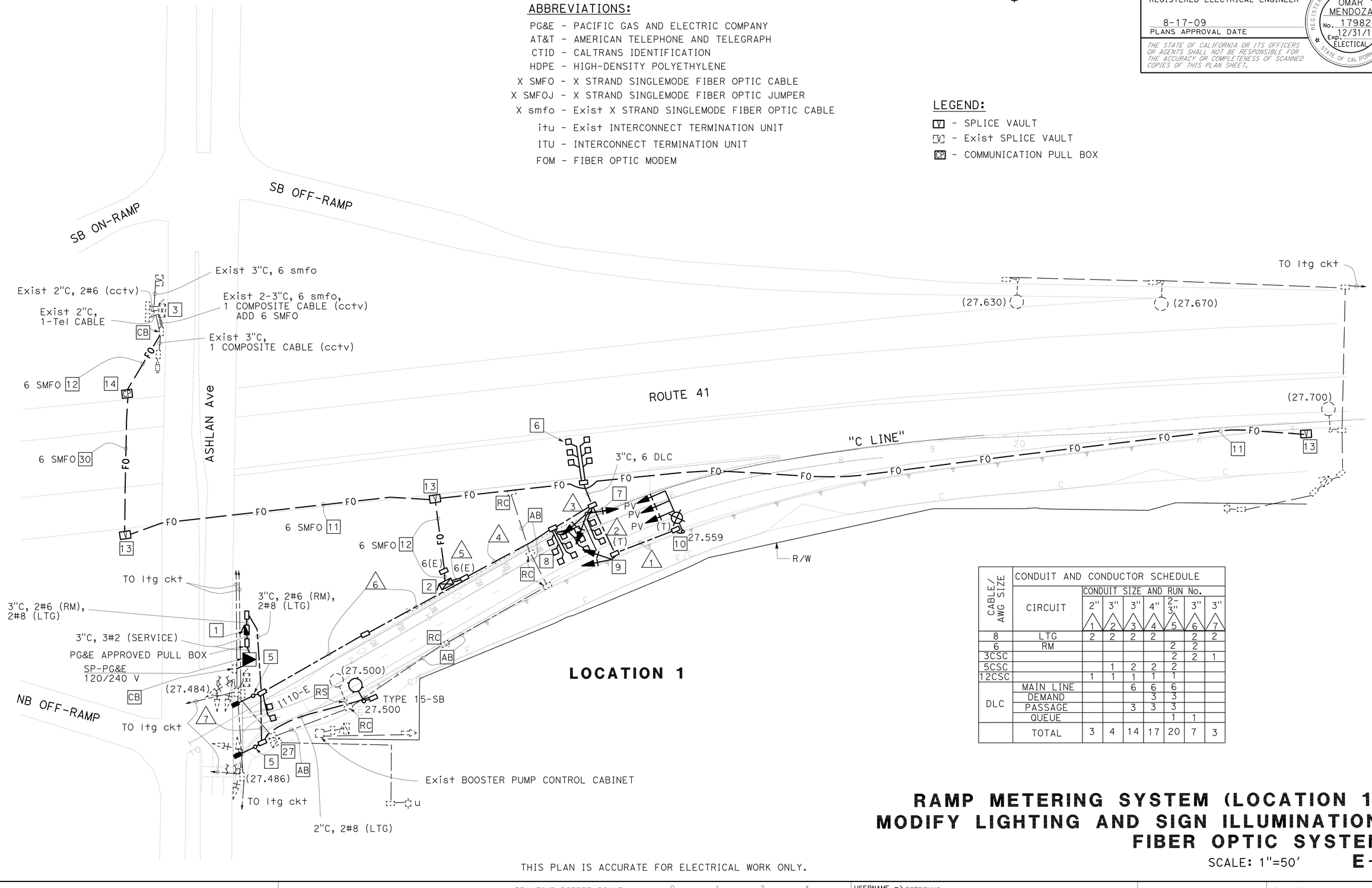

CABLE/ AWG SIZE	CONDUIT AND CONDUCTOR SCHEDULE							
	CIRCUIT	CONDUIT SIZE AND RUN No.						
		2" 1	3" 2	3" 3	4" 4	2-3" 5	3" 6	3" 7
8	LTG	2	2	2	2		2	2
6	RM					2	2	
3CSC						2	2	1
5CSC			1	2	2	2		
12CSC		1	1	1	1	1		
DLC	MAIN LINE			6	6	6		
	DEMAND				3	3		
	PASSAGE			3	3	3		
	QUEUE					1	1	
	TOTAL	3	4	14	17	20	7	3

RAMP METERING SYSTEM (LOCATION 1)
MODIFY LIGHTING AND SIGN ILLUMINATION
FIBER OPTIC SYSTEM

SCALE: 1"=50'

E-2

THIS PLAN IS ACCURATE FOR ELECTRICAL WORK ONLY.

REVISED BY	DATE REVISED

CALCULATED-DESIGNED BY	CHECKED BY
OMAR MENDOZA	RAJPREET SINGH

FUNCTIONAL SUPERVISOR: ALI BAKHDOUD

STATE OF CALIFORNIA - DEPARTMENT OF TRANSPORTATION
Caltrans
ELECTRICAL DESIGN

LAST REVISION 05-07-09 | DATE PLOTTED => 24-AUG-2009 | TIME PLOTTED => 10:22

Dist	COUNTY	ROUTE	POST MILES TOTAL PROJECT	SHEET No.	TOTAL SHEETS
06	Fre	41	R27.6/R29.8	75	107

Omar Mendoza 04-07-09
REGISTERED ELECTRICAL ENGINEER

8-17-09
PLANS APPROVAL DATE

REGISTERED PROFESSIONAL ENGINEER OMAR MENDOZA No. 17982 Exp. 12/31/10 ELECTICAL STATE OF CALIFORNIA

THE STATE OF CALIFORNIA OR ITS OFFICERS OR AGENTS SHALL NOT BE RESPONSIBLE FOR THE ACCURACY OR COMPLETENESS OF SCANNED COPIES OF THIS PLAN SHEET.

NOTE:

FOR COMPLETE RIGHT OF WAY AND ACCURATE ACCESS DATA, SEE RIGHT OF WAY RECORD MAPS AT DISTRICT OFFICE.

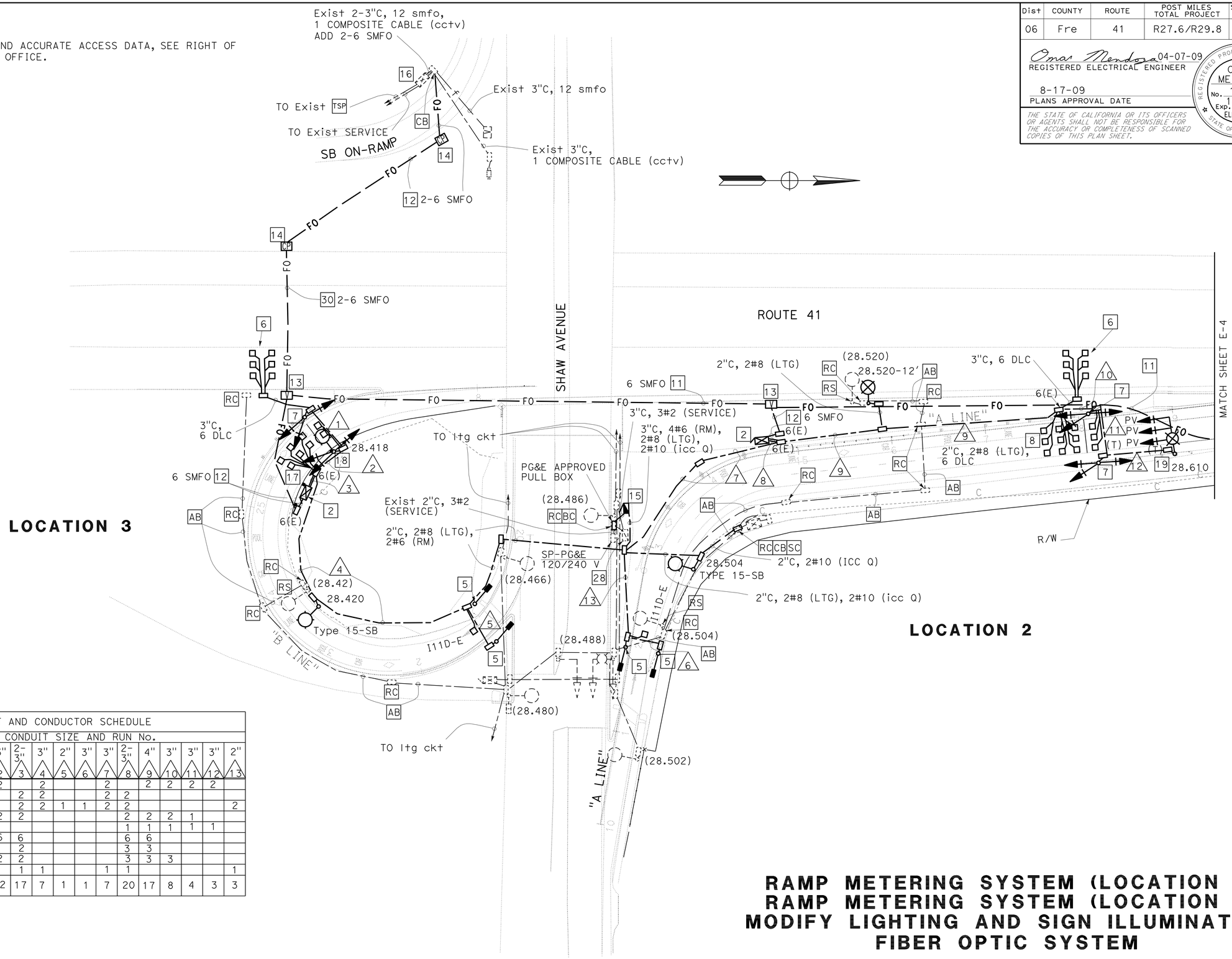

CABLE/ AWG SIZE	CIRCUIT	CONDUIT AND CONDUCTOR SCHEDULE — CONDUIT SIZE AND RUN No.												
		3" △1	3" △2	2-3" △3	3" △4	2" △5	3" △6	3" △7	2-3" △8	4" △9	3" △10	3" △11	3" △12	2" △13
8	LTG		2		2			2		2	2	2	2	
6	RM			2	2			2	2					
3CSC				2	2	1	1	2	2					2
5CSC		1	2	2					2	2	2	1		
12CSC									1	1	1	1	1	
DLC	MAIN LINE	6	6	6					6	6				
	DEMAND			2					3	3				
	PASSAGE		2	2					3	3	3			
	QUEUE			1	1			1	1					1
	TOTAL	7	12	17	7	1	1	7	20	17	8	4	3	3

RAMP METERING SYSTEM (LOCATION 2)
RAMP METERING SYSTEM (LOCATION 3)
MODIFY LIGHTING AND SIGN ILLUMINATION
FIBER OPTIC SYSTEM

SCALE: 1"=50'

E-3

THIS PLAN IS ACCURATE FOR ELECTRICAL WORK ONLY.

STATE OF CALIFORNIA - DEPARTMENT OF TRANSPORTATION
Caltrans®
ELECTRICAL DESIGN

FUNCTIONAL SUPERVISOR: ALI BAKHDOUD
CALCULATED-DESIGNED BY: OMAR MENDOZA
CHECKED BY: RAJPREET SINGH
REVISED BY
DATE REVISED

LAST REVISION 05-07-09
DATE PLOTTED => 20-AUG-2009
TIME PLOTTED => 10:23

Dist	COUNTY	ROUTE	POST MILES TOTAL PROJECT	SHEET No.	TOTAL SHEETS
06	Fre	41	R27.6/R29.8	76	107

Omar Mendoza 04-07-09
REGISTERED ELECTRICAL ENGINEER

8-17-09
PLANS APPROVAL DATE

REGISTERED PROFESSIONAL ENGINEER
OMAR MENDOZA
No. 17982
Exp. 12/31/10
ELECTICAL
STATE OF CALIFORNIA

THE STATE OF CALIFORNIA OR ITS OFFICERS OR AGENTS SHALL NOT BE RESPONSIBLE FOR THE ACCURACY OR COMPLETENESS OF SCANNED COPIES OF THIS PLAN SHEET.

NOTE:

FOR COMPLETE RIGHT OF WAY AND ACCURATE ACCESS DATA, SEE RIGHT OF WAY RECORD MAPS AT DISTRICT OFFICE.

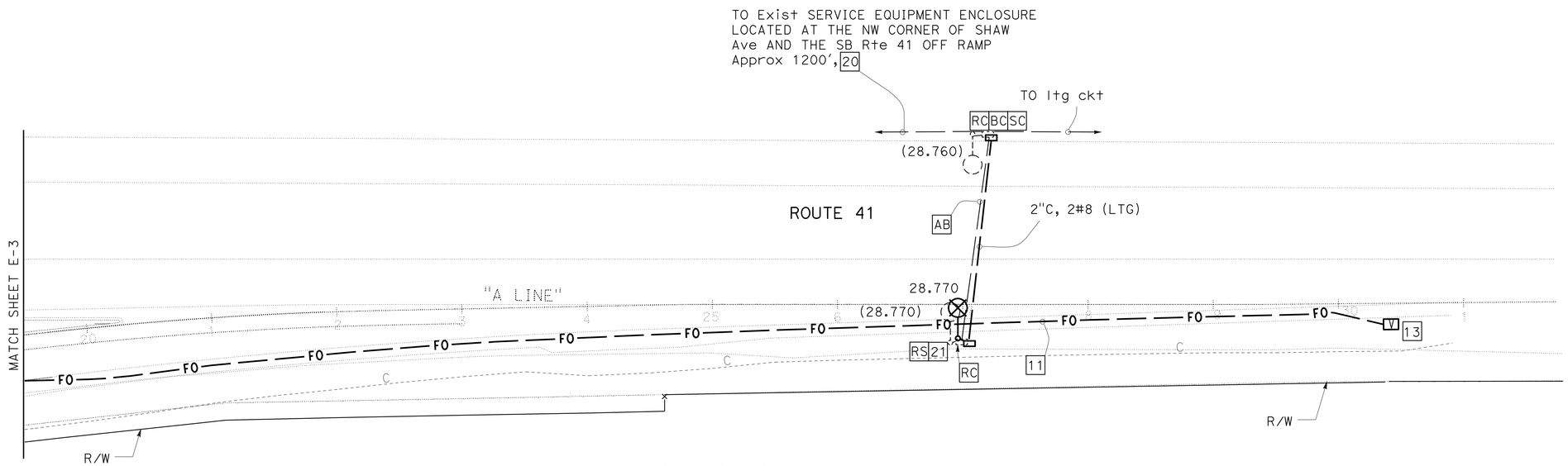

LOCATION 2

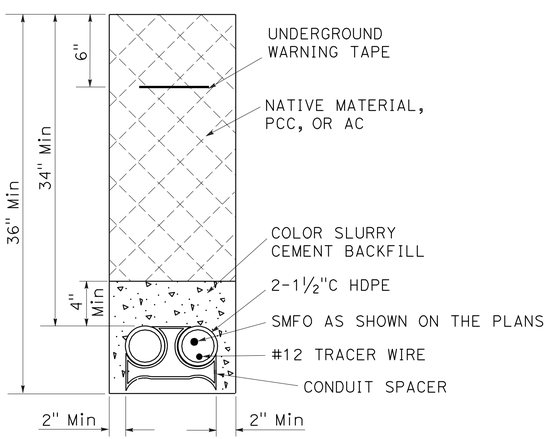

DETAIL A
NO SCALE

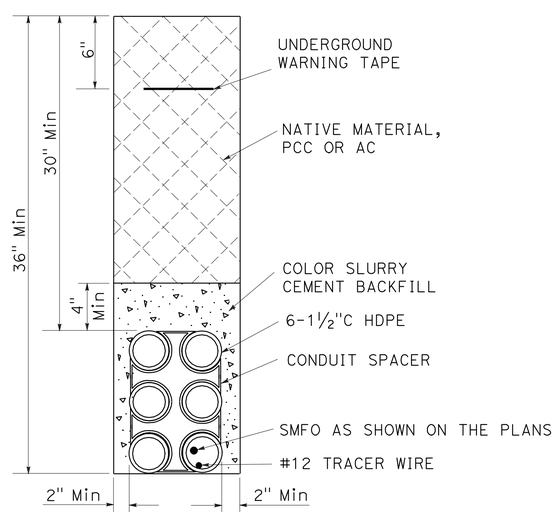

DETAIL B
NO SCALE

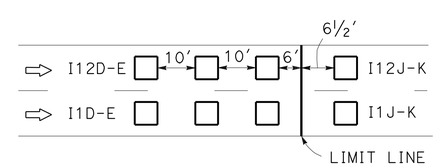

DETAIL C
NO SCALE

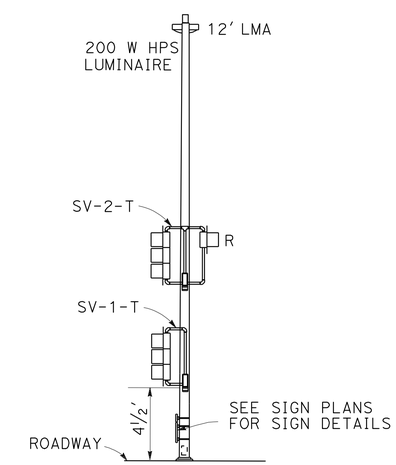

DETAIL D
NO SCALE

THIS PLAN IS ACCURATE FOR ELECTRICAL WORK ONLY.

RAMP METERING SYSTEM (LOCATION 2)
MODIFY LIGHTING AND SIGN ILLUMINATION
FIBER OPTIC SYSTEM

SCALE: 1"=50'

E-4

STATE OF CALIFORNIA - DEPARTMENT OF TRANSPORTATION
Caltrans
ELECTRICAL DESIGN

FUNCTIONAL SUPERVISOR: ALI BAKHDOUD
CALCULATED-DESIGNED BY: OMAR MENDOZA
CHECKED BY: RAJPREET SINGH
REVISED BY
DATE REVISED

LAST REVISION 05-07-09
DATE PLOTTED => 20-AUG-2009
TIME PLOTTED => 10:23

Dist	COUNTY	ROUTE	POST MILES TOTAL PROJECT	SHEET No.	TOTAL SHEETS
06	Fre	41	R27.6/R29.8	77	107

Omar Mendoza 04-07-09
REGISTERED ELECTRICAL ENGINEER

8-17-09
PLANS APPROVAL DATE

REGISTERED PROFESSIONAL ENGINEER OMAR MENDOZA No. 17982 Exp. 12/31/10 ELECTRICAL STATE OF CALIFORNIA

THE STATE OF CALIFORNIA OR ITS OFFICERS OR AGENTS SHALL NOT BE RESPONSIBLE FOR THE ACCURACY OR COMPLETENESS OF SCANNED COPIES OF THIS PLAN SHEET.

NOTE:

FOR COMPLETE RIGHT OF WAY AND ACCURATE ACCESS DATA, SEE RIGHT OF WAY RECORD MAPS AT DISTRICT OFFICE.

CABLE/ AWG SIZE	CONDUIT AND CONDUCTOR SCHEDULE							
	CIRCUIT	CONDUIT SIZE AND RUN No.						
		3" 1	3" 2	2-3" 3	4" 4	4" 5	3" 6	3" 7
8	LTG	2	2		2	2	2	2
8	SIGN ILLUMINATION	2	2		2	2	2	2
6	RM	2	2	2				
3CSC		1	2	2				
5CSC				2	2	2	1	
12CSC				1	1	1	1	1
DLC	MAIN LINE			6	6	6		
	DEMAND			3	3			
	PASSAGE			3	3	3		
	QUEUE		1	1				
TOTAL		7	9	20	19	16	6	5

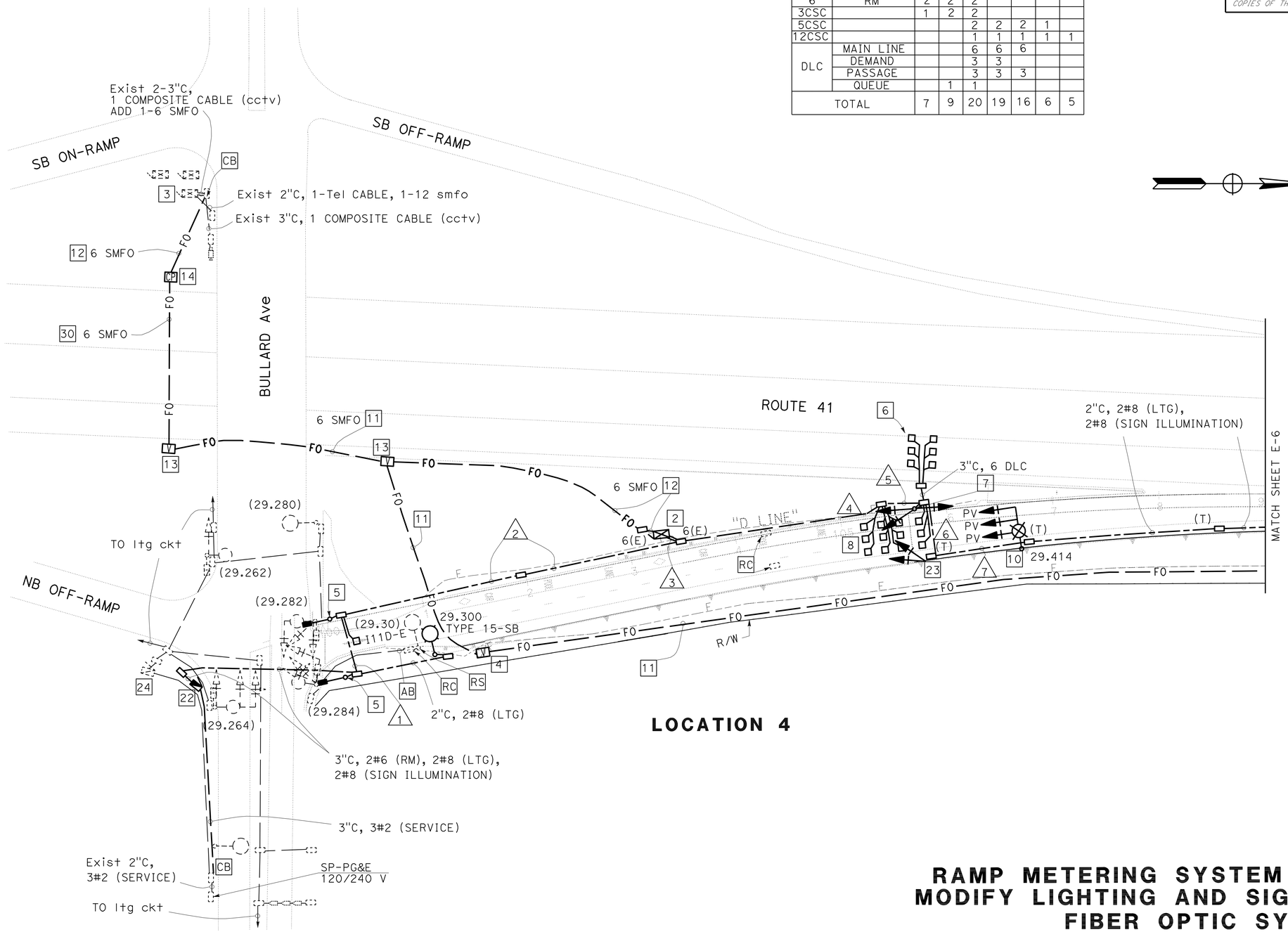

LOCATION 4

RAMP METERING SYSTEM (LOCATION 4)
MODIFY LIGHTING AND SIGN ILLUMINATION
FIBER OPTIC SYSTEM

SCALE: 1"=50'

E-5

THIS PLAN IS ACCURATE FOR ELECTRICAL WORK ONLY.

STATE OF CALIFORNIA - DEPARTMENT OF TRANSPORTATION
Caltrans
ELECTRICAL DESIGN

FUNCTIONAL SUPERVISOR: ALI BAKHDOUD
CALCULATED-DESIGNED BY: OMAR MENDOZA
CHECKED BY: RAJPREET SINGH
REVISED BY
DATE REVISED

LAST REVISION 05-07-09
DATE PLOTTED => 20-AUG-2009
TIME PLOTTED => 10:23

Dist	COUNTY	ROUTE	POST MILES TOTAL PROJECT	SHEET No.	TOTAL SHEETS
06	Fre	41	R27.6/R29.8	78	107

Omar Mendoza 04-07-09
REGISTERED ELECTRICAL ENGINEER

8-17-09
PLANS APPROVAL DATE

REGISTERED PROFESSIONAL ENGINEER
OMAR MENDOZA
No. 17982
Exp. 12/31/10
ELECTRICAL
STATE OF CALIFORNIA

THE STATE OF CALIFORNIA OR ITS OFFICERS OR AGENTS SHALL NOT BE RESPONSIBLE FOR THE ACCURACY OR COMPLETENESS OF SCANNED COPIES OF THIS PLAN SHEET.

NOTE:

FOR COMPLETE RIGHT OF WAY AND ACCURATE ACCESS DATA, SEE RIGHT OF WAY RECORD MAPS AT DISTRICT OFFICE.

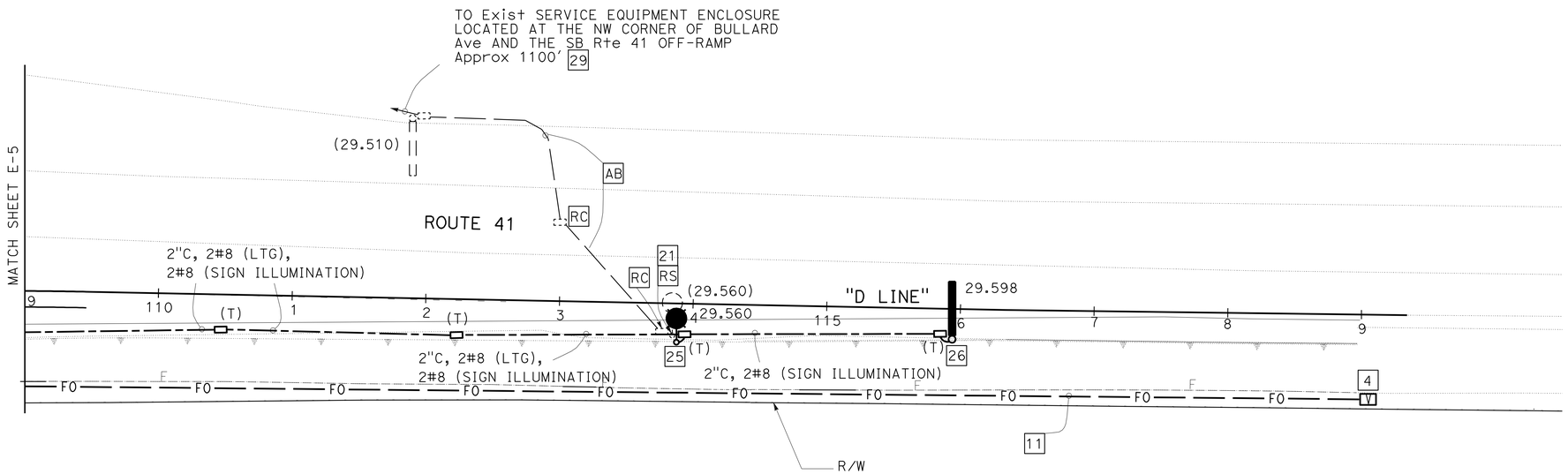

LOCATION 4

MODIFY LIGHTING AND SIGN ILLUMINATION FIBER OPTIC SYSTEM

SCALE: 1"=50'

E-6

THIS PLAN IS ACCURATE FOR ELECTRICAL WORK ONLY.

STATE OF CALIFORNIA - DEPARTMENT OF TRANSPORTATION
Caltrans® **ELECTRICAL DESIGN**

FUNCTIONAL SUPERVISOR: ALI BAKHDOUD
CALCULATED-DESIGNED BY: OMAR MENDOZA
CHECKED BY: RAJPREET SINGH
REVISED BY
DATE REVISED

LAST REVISION 05-07-09 | DATE PLOTTED => 20-AUG-2009 | TIME PLOTTED => 10:24

Dist	COUNTY	ROUTE	POST MILES TOTAL PROJECT	SHEET No.	TOTAL SHEETS
06	Fre	41	R27.6/R29.8	79	107

Omar Mendoza 04-07-09
REGISTERED ELECTRICAL ENGINEER

8-17-09
PLANS APPROVAL DATE

REGISTERED PROFESSIONAL ENGINEER
OMAR MENDOZA
No. 17982
Exp. 12/31/10
ELECTRICAL
STATE OF CALIFORNIA

THE STATE OF CALIFORNIA OR ITS OFFICERS OR AGENTS SHALL NOT BE RESPONSIBLE FOR THE ACCURACY OR COMPLETENESS OF SCANNED COPIES OF THIS PLAN SHEET.

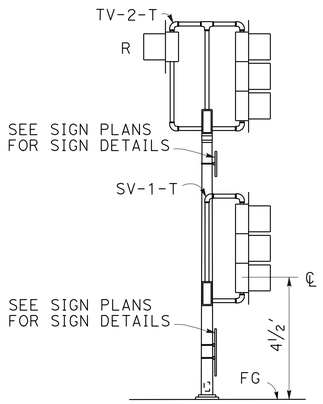

DETAIL E

DLC IDENTIFICATION

D-L-N

- D: DIRECTION OF TRAFFIC
  - N - NORTHBOUND
  - S - SOUTHBOUND
  - E - EASTBOUND
  - W - WESTBOUND
- L: 1 - ENTERING, 2 - LEAVING
- N: LANE NUMBER

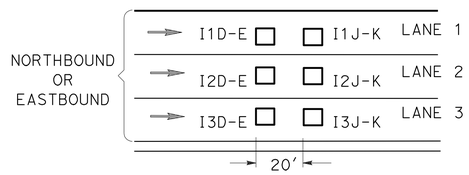

DETAIL H

DLC TERMINATION (TB2)

I1D-E

- I - INPUT PANEL (TB2)
- DETECTOR ASSIGNMENT
  - 1 - NORTHBOUND/EASTBOUND LANE 1
  - 2 - NORTHBOUND/EASTBOUND LANE 2
  - 3 - NORTHBOUND/EASTBOUND LANE 3
- D-E - ENTERING
- J-K - LEAVING

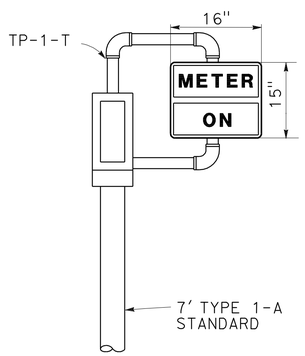

DETAIL F

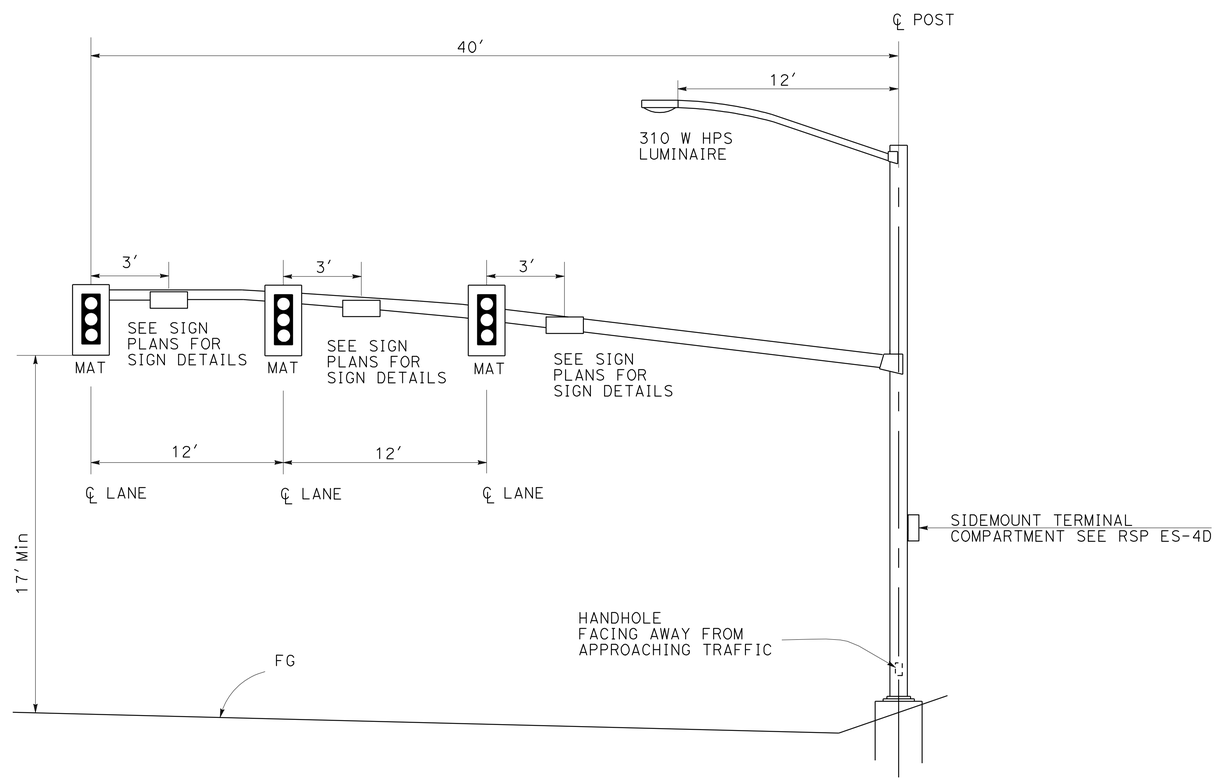

DETAIL I

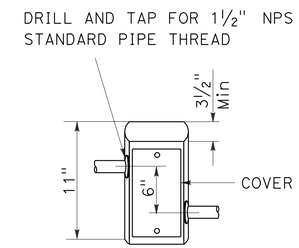

DETAIL J

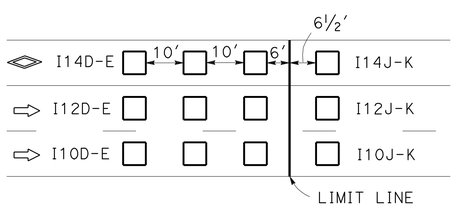

DETAIL G

RAMP METERING SYSTEM

NO SCALE

E-7

THIS PLAN IS ACCURATE FOR ELECTRICAL WORK ONLY.

REVISED BY	OMAR MENDOZA
DATE REVISED	
CALCULATED-DESIGNED BY	RAJPREET SINGH
CHECKED BY	
FUNCTIONAL SUPERVISOR	ALI BAKHDOUD

STATE OF CALIFORNIA - DEPARTMENT OF TRANSPORTATION
Caltrans
ELECTRICAL DESIGN

LAST REVISION 05-07-09 | DATE PLOTTED => 20-AUG-2009 | TIME PLOTTED => 10:24

Dist	COUNTY	ROUTE	POST MILES TOTAL PROJECT	SHEET No.	TOTAL SHEETS
06	Fre	41	R27.6/R29.8	80	107

Omar Mendoza 04-07-09
REGISTERED ELECTRICAL ENGINEER

8-17-09
PLANS APPROVAL DATE

REGISTERED PROFESSIONAL ENGINEER
OMAR MENDOZA
No. 17982
Exp. 12/31/10
ELECTRICAL
STATE OF CALIFORNIA

THE STATE OF CALIFORNIA OR ITS OFFICERS OR AGENTS SHALL NOT BE RESPONSIBLE FOR THE ACCURACY OR COMPLETENESS OF SCANNED COPIES OF THIS PLAN SHEET.

NOTES: (THIS SHEET ONLY)

1. GALVANIZED CAST-IN ANGLE FRAME.
2. TWO PIECE TRAFFIC RATED TORSION ASSISTED COVER, WITH PICK SLOTS AND BOLT DOWN HOLES. GALVANIZED AFTER FABRICATION.
3. 12" DIAMETER DRAIN HOLE. LOCATE AT CENTER.
4. 7/8" DIAMETER PULL IRONS.
5. 8" x 4" KNOCK-OUTS.
6. CAST-IN CABLE RACK.
7. GALVANIZED CAST-IN ANGLE FRAME EXTENSION.
8. VAULT/PB DESIGNED IN ACCORDANCE WITH AASHTO 04-08-08 TRAFFIC Br LOADING USING 3.756 kPSI COMPRESSIVE STRENGTH CONCRETE AND 60 kPSI YIELD STRENGTH ASTM A-706 STEEL REINFORCEMENT PER CALCULATIONS.
9. EACH VAULT/PB TO BE PLACED ON A 12" BASE OF CRUSHED ROCK.
10. EACH VAULT/PB SHALL COME PROVIDED WITH TWO SETS BOLT/LID REMOVERS.
11. ALL MOUNTING HARDWARE SHALL BE GALVANIZED OR STAINLESS STEEL.

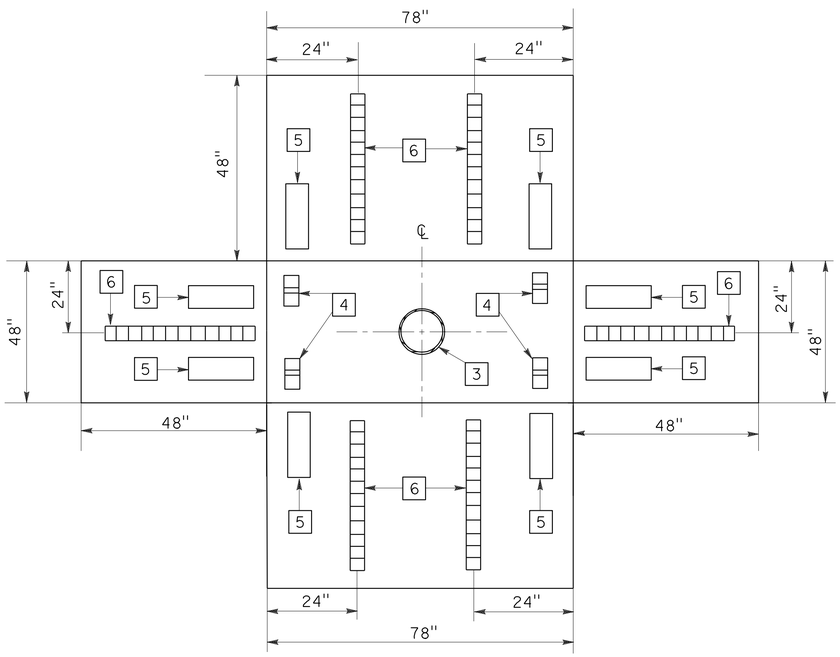

DETAIL K

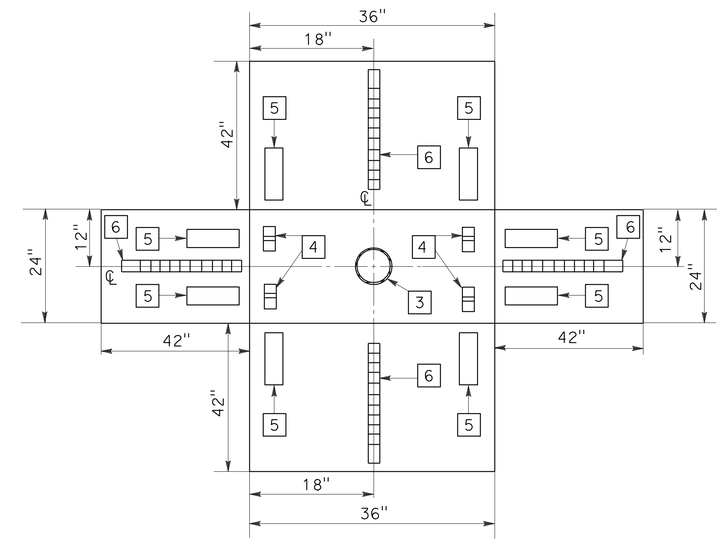

DETAIL M

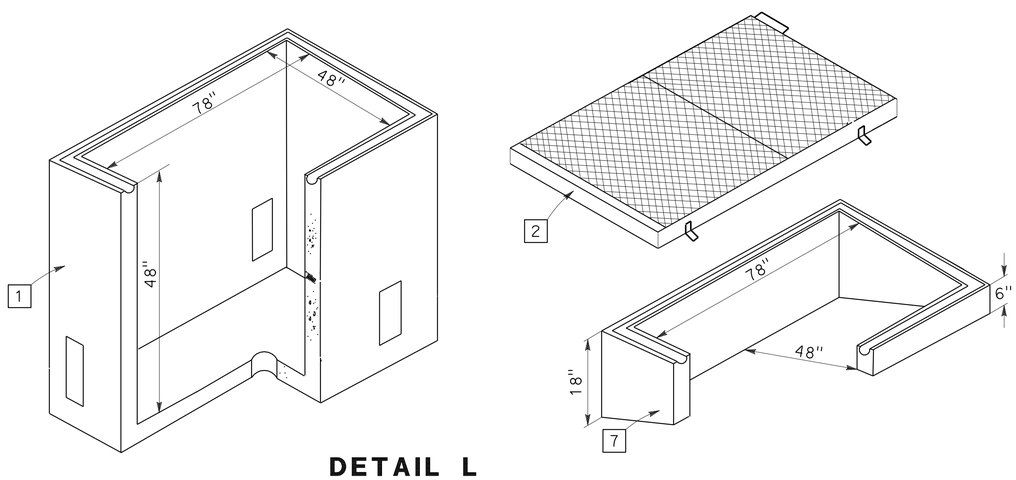

DETAIL L

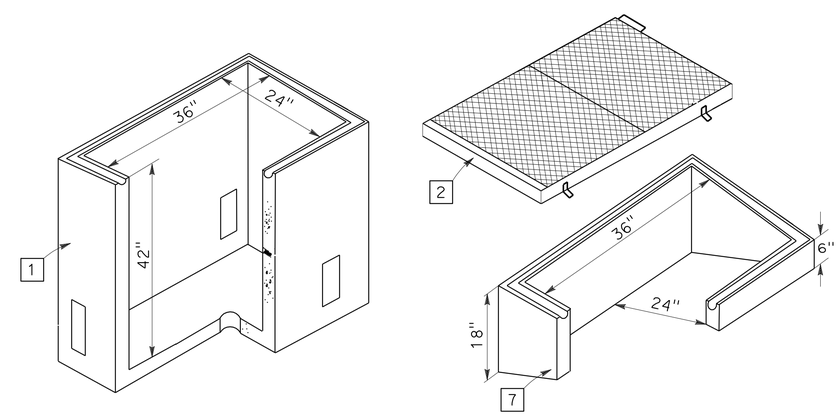

DETAIL N

THIS PLAN IS ACCURATE FOR ELECTRICAL WORK ONLY.

FIBER OPTIC SYSTEM

NO SCALE **E-8**

STATE OF CALIFORNIA - DEPARTMENT OF TRANSPORTATION
Caltrans® **ELECTRICAL DESIGN**

FUNCTIONAL SUPERVISOR: ALI BAKHDOUD
CALCULATED-DESIGNED BY: OMAR MENDOZA
CHECKED BY: RAJPREET SINGH
REVISED BY / DATE REVISED

LAST REVISION 05-07-09 | DATE PLOTTED => 20-AUG-2009 | TIME PLOTTED => 10:24

DIST	COUNTY	ROUTE	POST MILES TOTAL PROJECT	SHEET NO.	TOTAL SHEETS
06	Fre	41	R27.6/R29.8	81	107

REGISTERED CIVIL ENGINEER

June 6, 2008
PLANS APPROVAL DATE

REGISTERED PROFESSIONAL ENGINEER
Donald E. Howe
No. C46402
Exp. 3-31-09
CIVIL
STATE OF CALIFORNIA

The State of California or its officers or agents shall not be responsible for the accuracy or completeness of electronic copies of this plan sheet.

To accompany plans dated 8-17-09

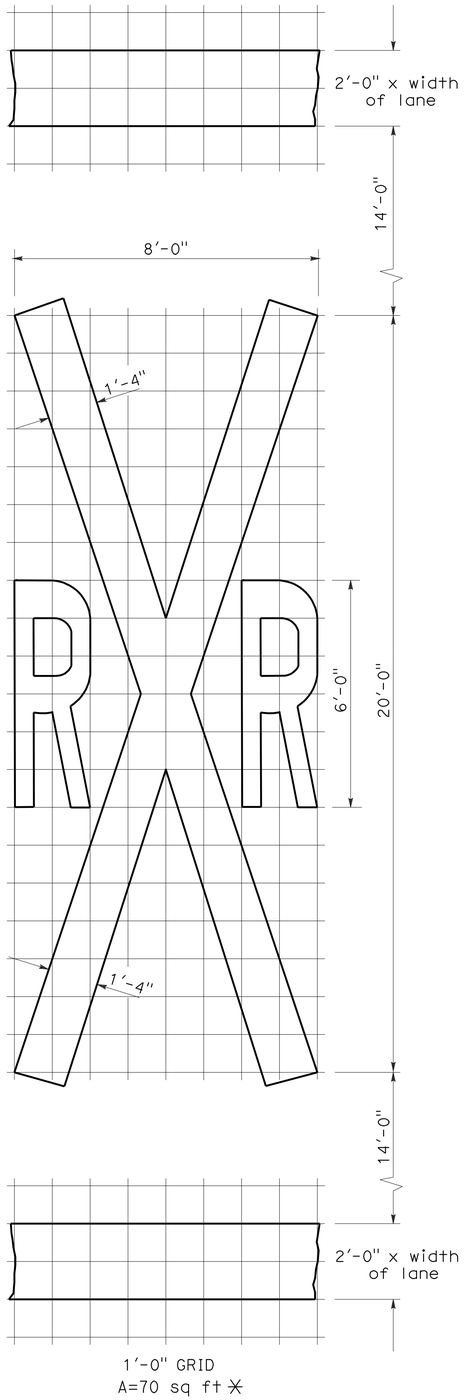

RAILROAD CROSSING SYMBOL

✳70 sq ft DOES NOT INCLUDE THE 2'-0" x VARIABLE WIDTH TRANSVERSE LINES.

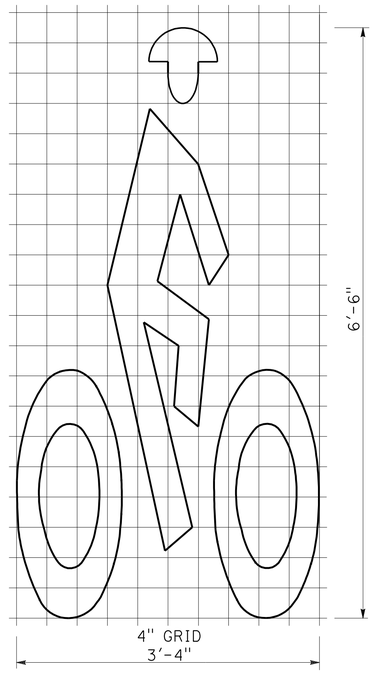

BIKE LANE SYMBOL

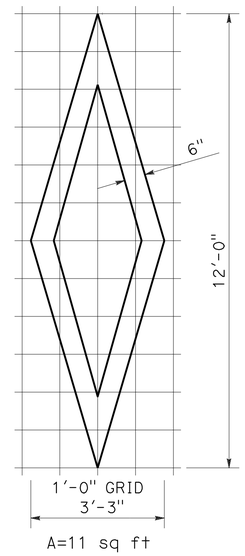

DIAMOND SYMBOL

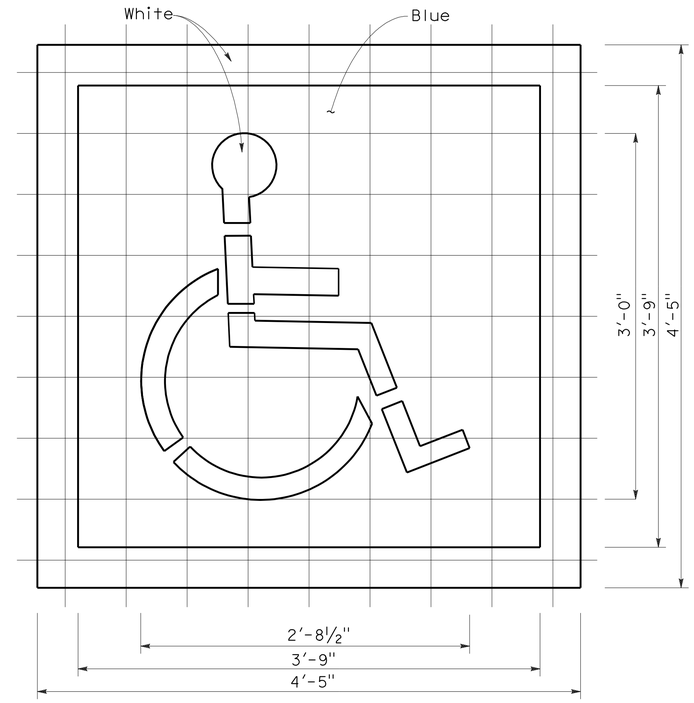

INTERNATIONAL SYMBOL OF ACCESSIBILITY MARKING

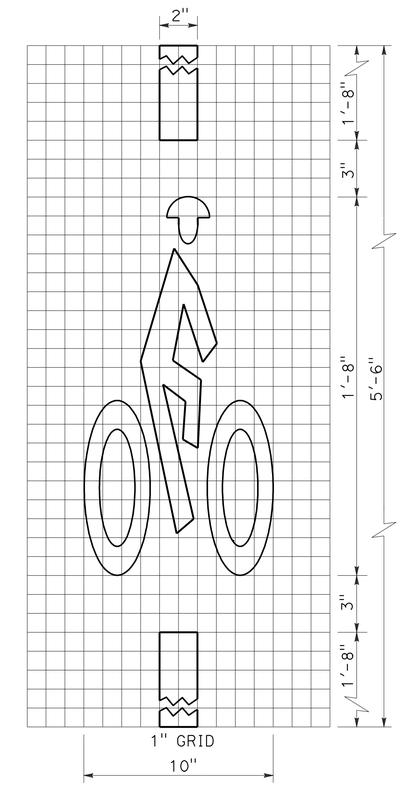

BICYCLE LOOP DETECTOR SYMBOL

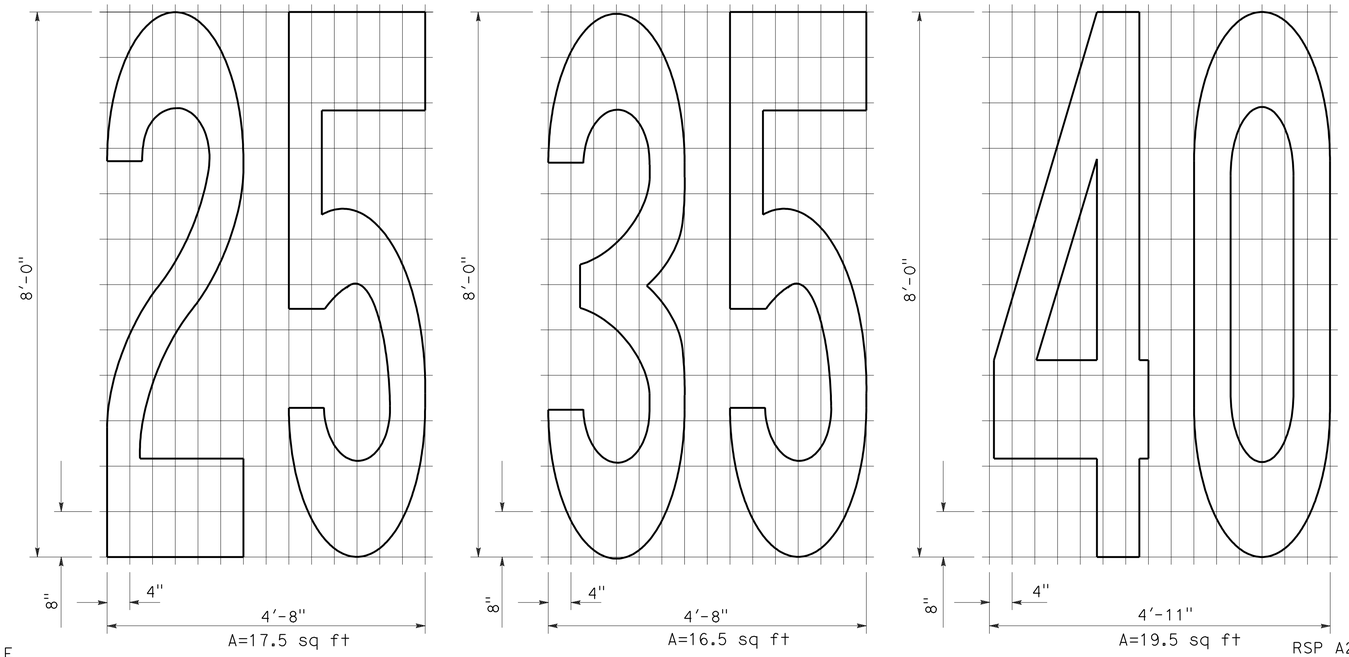

NUMERALS

NOTE:

1. Minor variations in dimensions may be accepted by the Engineer.

STATE OF CALIFORNIA
DEPARTMENT OF TRANSPORTATION

PAVEMENT MARKINGS SYMBOLS AND NUMERALS

NO SCALE

RSP A24C DATED JUNE 6, 2008 SUPERSEDES STANDARD PLAN A24C DATED MAY 1, 2006 - PAGE 11 OF THE STANDARD PLANS BOOK DATED MAY 2006.

REVISED STANDARD PLAN RSP A24C

2006 REVISED STANDARD PLAN RSP A24C

5-27-08

DIST	COUNTY	ROUTE	POST MILES TOTAL PROJECT	SHEET NO.	TOTAL SHEETS
06	Fre	41	R27.6/R29.8	82	107

REGISTERED CIVIL ENGINEER

November 17, 2006
PLANS APPROVAL DATE

REGISTERED PROFESSIONAL ENGINEER Dallas Forester No. C37765 Exp. 12-31-06 CIVIL STATE OF CALIFORNIA

The State of California or its officers or agents shall not be responsible for the accuracy or completeness of electronic copies of this plan sheet.

To accompany plans dated 8-17-09

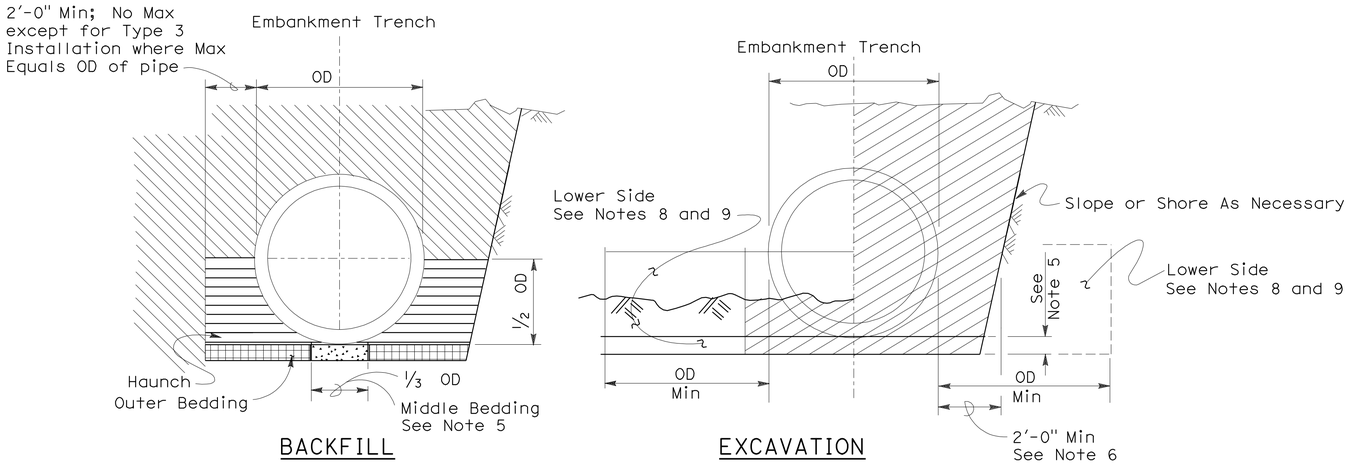

Roadway Embankment

Structure Backfill (Culvert) See Note 6

Structure Backfill (Culvert) See Note 6

Loose Backfill

Excavation Structure (Culvert)

TYPE 1 INSTALLATION:

The haunch and outer bedding shall be compacted to a minimum 90 percent relative compaction. In addition, the minimum sand equivalent in these areas shall be 30 and the maximum percentage passing the 75 μm sieve size shall be 12.

TYPE 2 INSTALLATION:

The haunch and outer bedding shall be compacted to a minimum 90 percent relative compaction. In addition, the minimum sand equivalent in these areas shall be 25.

TYPE 3 INSTALLATION:

The haunch and outer bedding shall be compacted to a minimum 85 percent relative compaction. 90 percent relative compaction will be required where the fill over the pipe is less than 4'-0" or 1/2 OD.

INSTALLATION TYPE 1

MINIMUM CLASS AND D-LOAD	COVER	
	108" Dia AND SMALLER	OVER 108" Dia
Class II 1000D	14.9'	12.9'
Class III 1350D	15.0' - 20.9'	13.0' - 18.9'
Class III Special 1700D	21.0' - 26.9'	19.0' - 24.9'
Class IV 2000D	27.0' - 31.9'	25.0' - 29.9'
Class IV Special 2500D	32.0' - 40.9'	30.0' - 38.9'
Class V 3000D	41.0' - 49.9'	39.0' - 46.9'
Class V Special 3600D	50.0' - 59.0'	47.0' - 58.0'

INSTALLATION TYPE 2

MINIMUM CLASS AND D-LOAD	COVER
Class II 1000D	9.9'
Class III 1350D	10.0'- 14.9'
Class III Special 1700D	15.0' - 19.9'
Class IV 2000D	20.0' - 24.9'
Class IV Special 2500D	25.0' - 31.9'
Class V 3000D	32.0' - 38.9'
Class V Special 3600D	39.0' - 47.0'

INSTALLATION TYPE 3

MINIMUM CLASS AND D-LOAD	COVER	
	48" Dia AND SMALLER	OVER 48" Dia
Class II 1000D	7.9'	5.9'
Class III 1350D	8.0' - 10.9'	6.0' - 8.9'
Class III Special 1700D	11.0' - 14.9'	9.0' - 12.9'
Class IV 2000D	15.0' - 17.9'	13.0' - 15.9'
Class IV Special 2500D	18.0' - 21.9'	16.0' - 19.9'
Class V 3000D	22.0' - 26.9'	20.0' - 24.9'
Class V Special 3600D	30.0' - 33.0'	25.0' - 31.0'

NOTES:

1. Unless otherwise shown on the plans or specified in the special provision, the Contractor shall have the option of selecting the class of RCP and the type of installation to be used, provided the height of cover does not exceed the value shown for the RCP selected.
   Example: 24" RCP culvert with maximum cover of 19'-0" the options are:
   a) Class III or stronger with Installation Type 1.
   b) Class III Special or stronger with Installation Type 2.
   c) Class IV Special or stronger with Installation Type 3.
   Cover is defined as the maximum vertical distance from top of the pipe to finished grade within the length of any given culvert.
2. The class of RCP and Installation Type selected shall be the same throughout the length of any given culvert.
3. The "length of any culvert" is defined as the culvert between:
   a) Successive drainage structure (inlets, junction boxes, headwalls, etc.).
   b) A drainage structure and the inlet or outlet end of the culvert.
   c) The inlet and outlet end of the culvert when there are no intervening drainage structures.
4. Oval and arch shaped RCP shall not be used.
5. 1/25 OD Min, not less than 3".
6. Slurry cement backfill may be substituted for backfill in the outer bedding and haunch areas. If slurry is used the outer and middle beddings shall be omitted. Prior to installation the soil under the middle 1/3 of the outside diameter of the pipe shall be softened by scarifying or other means to a minimum depth of 1/25 OD, but not less than 3". Where slurry cement backfill is used clear distance to trench wall may be reduced as set forth in Section 19-3.062 of the Standard Specifications.
7. Backfill shall be placed full width of excavation except where dimensions are shown for backfill width or thickness. Dimensions shown are minimums.
8. Lower side shall be suitable material as determined by the Engineer. Otherwise it shall be considered unsuitable as set forth in Section 19-2.02 of the Standard Specifications. See Note 9.
9. Where the pipe is placed in a trench, if the trench walls are sloped at 5 vertical to 1 horizontal or steeper for at least 90 percent of the trench height or up to not less than 12" from the grading plane, the firmness of the soil in the lower side need not be considered.
10. Non-reinforced precast concrete pipe sizes 3'-0" or smaller may be placed under installation Types 1, 2 or 3.

STATE OF CALIFORNIA
DEPARTMENT OF TRANSPORTATION

EXCAVATION AND BACKFILL CONCRETE PIPE CULVERTS

NO SCALE

RSP A62DA DATED NOVEMBER 17, 2006 SUPERSEDES STANDARD PLAN A62DA DATED MAY 1, 2006 - PAGE 20 OF THE STANDARD PLANS BOOK DATED MAY 2006.

REVISED STANDARD PLAN RSP A62DA

2006 REVISED STANDARD PLAN RSP A62DA

10-26-06

DIST	COUNTY	ROUTE	POST MILES TOTAL PROJECT	SHEET NO.	TOTAL SHEETS
06	Fre	41	R27.6/R29.8	83	107

Randell D. Hiatt
REGISTERED CIVIL ENGINEER

June 6, 2008
PLANS APPROVAL DATE

REGISTERED PROFESSIONAL ENGINEER Randell D. Hiatt No. C50200 Exp. 6-30-09 CIVIL STATE OF CALIFORNIA

The State of California or its officers or agents shall not be responsible for the accuracy or completeness of electronic copies of this plan sheet.

To accompany plans dated 8-17-09

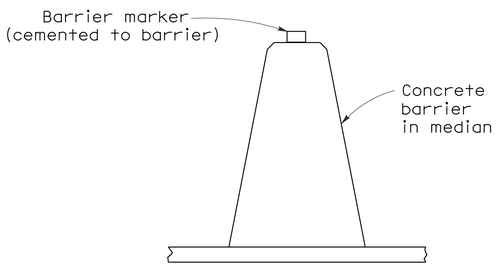

CONCRETE BARRIER TYPE 60 DELINEATION

See Notes 7 and 8

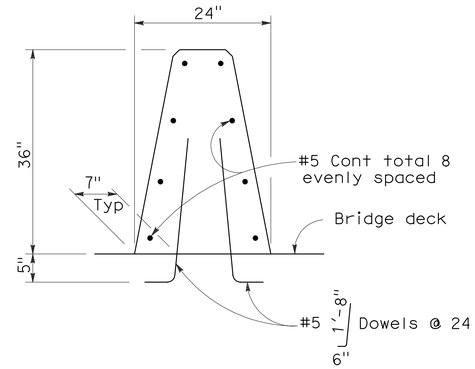

CONCRETE BARRIER TYPE 60A

Details similar to Type 60 except as noted.

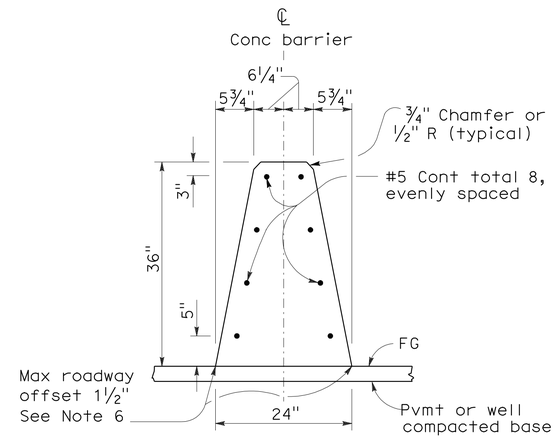

CONCRETE BARRIER TYPE 60

NOTES:

1. See Standard Plan A76B for details of Concrete Barrier Type 60 end anchors, connection to structures and transitions to Concrete Barrier Type 50 and Concrete Barrier Type 60S.
2. See Standard Plan A76C for Concrete Barrier Type 60 transitions at bridge column and sign pedestals.
3. Where glare screen is required on Concrete Barrier Type 60, use Concrete Barrier Type 60G.
4. Where the concrete barrier is added to the face of existing concrete structure, match existing weep holes.
5. Expansion joints in concrete barrier shall be located at all deck, pavement and principal wall joints. Expansion joint filler material shall be the same size as joint or ½" minimum.
6. Where roadway offset is greater than 1½", see Concrete Barrier Type 60C.
7. Barrier delineation to be used when required by the Special Provisions.
8. Spacing of barrier markers to match spacing of raised pavement markers on the adjacent median edgeline pavement delineation.
9. Reinforcing stirrup not required for roadway offsets less than 1'-0".
10. For roadway surfaces offset greater than 1½" to 3", no rebars required. For roadway surfaces offset greater than 3" to 8" use two #4 rebars at 3" above the lower roadway surface. For roadway surfaces offset greater than 8" to 12", use two #4 rebars at 3" above the lower roadway surface and two #4 rebars at 8" above the lower roadway surface. For roadway surfaces offset greater than 12" to 36", use two #4 rebars at 3" above the lower roadway surface and two #4 rebars at every 8" increment vertical spacing above the first two #4 rebars.

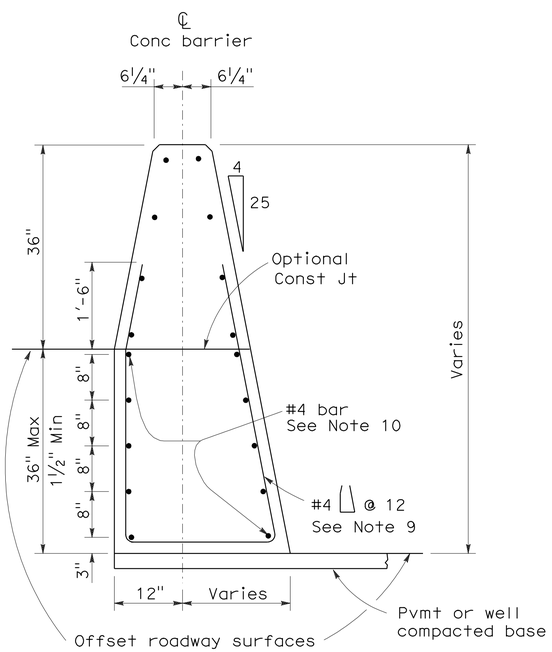

CONCRETE BARRIER TYPE 60C

Details similar to Type 60 except as noted.
Concrete barrier end anchor when necessary.
36" roadway surfaces offset shown.

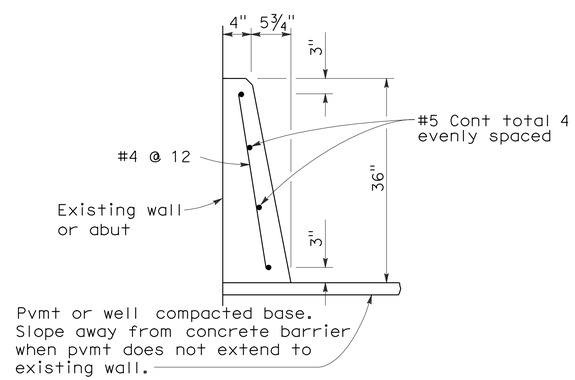

CONCRETE BARRIER TYPE 60D

STATE OF CALIFORNIA
DEPARTMENT OF TRANSPORTATION

CONCRETE BARRIER TYPE 60

NO SCALE

RSP A76A DATED JUNE 6, 2008 SUPERSEDES STANDARD PLAN A76A
DATED MAY 1, 2006 - PAGE 29 OF THE STANDARD PLANS BOOK DATED MAY 2006.

REVISED STANDARD PLAN RSP A76A

2006 REVISED STANDARD PLAN RSP A76A

5-21-08

DIST	COUNTY	ROUTE	POST MILES TOTAL PROJECT	SHEET NO.	TOTAL SHEETS
06	Fre	41	R27.6/R29.8	84	107

Randell D. Hiatt
REGISTERED CIVIL ENGINEER

June 6, 2008
PLANS APPROVAL DATE

REGISTERED PROFESSIONAL ENGINEER
Randell D. Hiatt
No. C50200
Exp. 6-30-09
CIVIL
STATE OF CALIFORNIA

The State of California or its officers or agents shall not be responsible for the accuracy or completeness of electronic copies of this plan sheet.

To accompany plans dated 8-17-09

NOTES:

1. When necessary to place dike in front of face of guard railing, only Type C dike may be used. For dike details, see Standard Plan A87B.
2. For standard railing post embedment, see Standard Plans A77C3.
3. Guard railing delineation to be used where shown on the Project Plans.
4. When dike or curb is placed under guard railing, the maximum height of the dike or curb shall be 4". Mountable dike should not be used. For dike and curb details, see Revised Standard Plans RSP A87A and Standard Plan A87B.
5. For details of typical distance between the face of rail and hinge point, see Standard Plan A77C3.

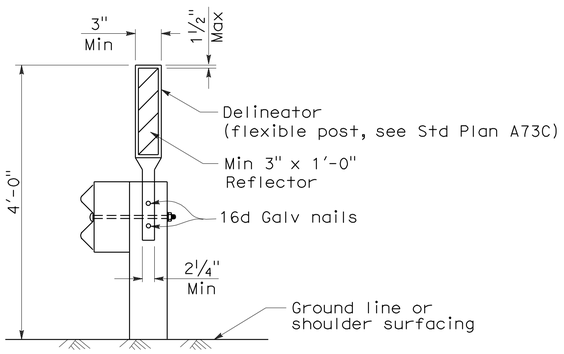

GUARD RAILING DELINEATION

See Note 3

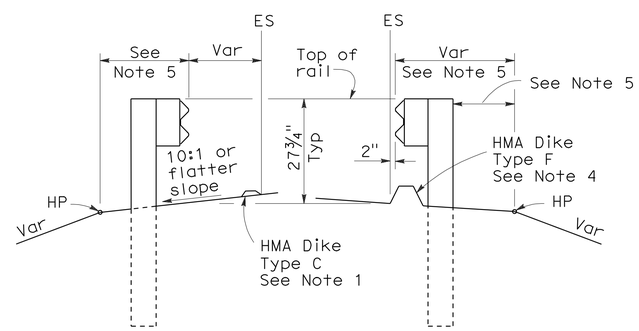

DIKE POSITIONING

See Note 1

STATE OF CALIFORNIA
DEPARTMENT OF TRANSPORTATION

METAL BEAM GUARD RAILING TYPICAL RAILING DELINEATION AND DIKE POSITIONING DETAILS

NO SCALE

RSP A77C4 DATED JUNE 6, 2008 SUPERSEDES STANDARD PLAN A77C4
DATED MAY 1, 2006 - PAGE 47 OF THE STANDARD PLANS BOOK DATED MAY 2006.

REVISED STANDARD PLAN RSP A77C4

2006 REVISED STANDARD PLAN RSP A77C4

12-10-07

DIST	COUNTY	ROUTE	POST MILES TOTAL PROJECT	SHEET NO.	TOTAL SHEETS
06	Fre	41	R27.6/R29.8	85	107

Randell D. Hiatt
REGISTERED CIVIL ENGINEER

June 6, 2008
PLANS APPROVAL DATE

REGISTERED PROFESSIONAL ENGINEER Randell D. Hiatt No. C50200 Exp. 6-30-09 CIVIL STATE OF CALIFORNIA

The State of California or its officers or agents shall not be responsible for the accuracy or completeness of electronic copies of this plan sheet.

To accompany plans dated 8-17-09

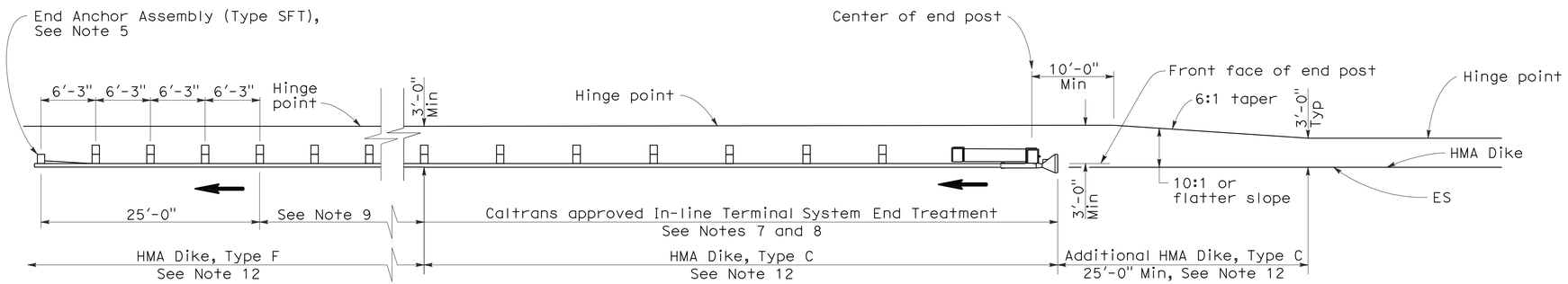

TYPE 11A LAYOUT

(EMBANKMENT GUARD INSTALLATION WITH IN-LINE END TREATMENT AT TRAFFIC APPROACH END OF RAILING)
See Note 6

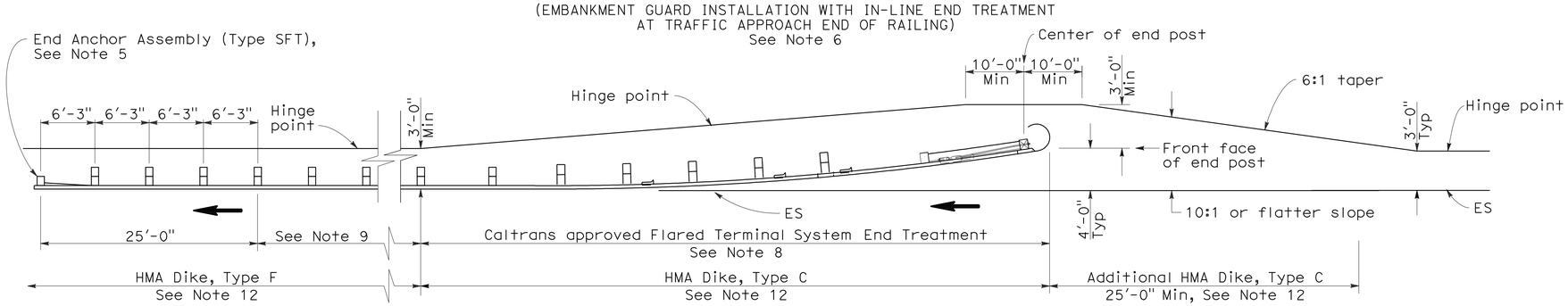

TYPE 11B LAYOUT

(EMBANKMENT GUARD RAILING INSTALLATION WITH FLARED END TREATMENT AT TRAFFIC APPROACH END OF RAILING)
See Note 6

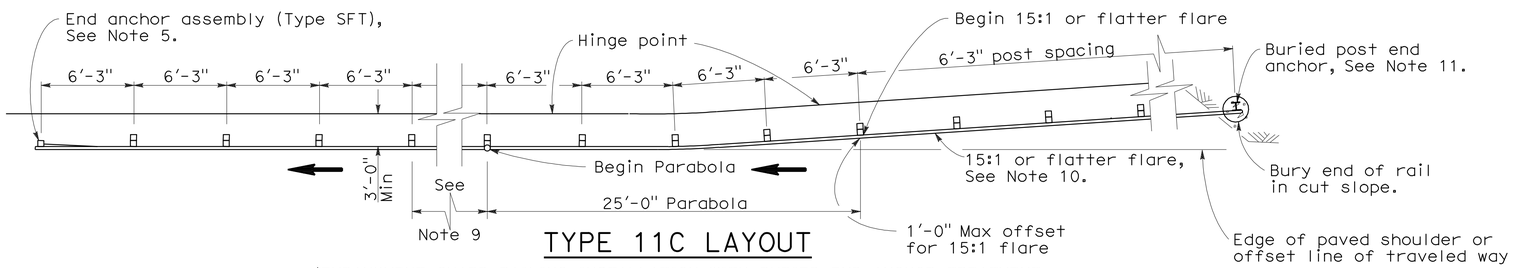

TYPE 11C LAYOUT

(EMBANKMENT GUARD RAILING INSTALLATION WITH BURIED END ANCHOR TREATMENT AT TRAFFIC APPROACH END OF RAILING)
See Notes 6 and 12

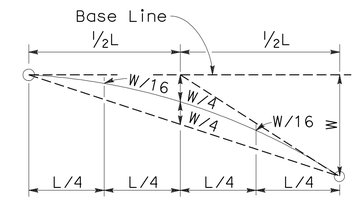

TYPICAL PARABOLIC LAYOUT

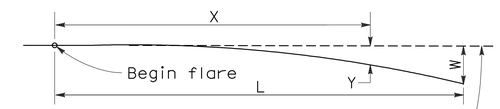

Base Line (Edge of paved shoulder or offset line of edge of traveled way)

$$Y = \frac{WX^2}{L^2}$$

Y = Offset from base line
W = Maximum offset
X = Distance along base line
L = Length of flare

PARABOLIC FLARE OFFSETS

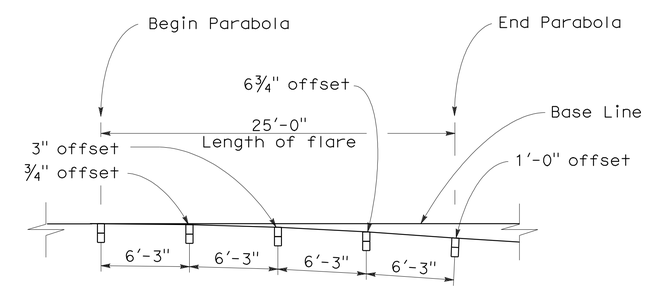

TYPICAL FLARE OFFSETS FOR 1 FOOT MAX END OFFSET

NOTES:

1. Line post, blocks and hardware to be used are shown on Standard Plans A77A1, A77A2, A77B1, A77C1, and A77C2.
2. Guard rail post spacing to be 6'-3" center to center, except as otherwise noted.
3. Except as noted, line posts are 6" x 8" x 6'-0" wood with 6" x 8" x 1'-2" wood blocks. W6 x 9 steel posts, 6'-0" in length, with 6" x 8" x 1'-2" notched wood blocks or recycled plastic blocks may be used for 6" x 8" x 6'-0" wood post with 6" x 8" x 1'-2" wood blocks where applicable and when specified.
4. Direction of adjacent traffic indicated by ⟶.
5. For End Anchor Assembly (Type SFT) details, see Standard Plan A77H1.
6. Layout Types 11A, 11B or 11C are typically used where guard railing is recommended to shield embankment slopes and a crashworthy end treatment is required for only one direction of traffic.
7. In-line Terminal System End Treatments are used where site conditions will not accommodate a flared end treatment.
8. The type of terminal system end treatment to be used will be shown on the Project Plans.
9. Dependent on site conditions (embankment height and side slope), construction of additional guard railing (length equal to multiples of 12'-6" with 6'-3" post spacing) may be advisable.
10. The 15:1 or flatter flare used with buried end anchors is based on the edge of the paved shoulder or offset line of edge of the traveled way. The length of guard railing within the 15:1 or flatter flare is based on site conditions and should be a length equal to multiples of 12'-6".
11. For details of the buried post end anchor used with Type 11C Layout, see Standard Plan A77I2.
12. Where placement of dike is required with guard railing installations, see Revised Standard Plan RSP A77C4 for dike positioning details.

STATE OF CALIFORNIA
DEPARTMENT OF TRANSPORTATION

METAL BEAM GUARD RAILING TYPICAL LAYOUTS FOR EMBANKMENTS

NO SCALE

RSP A77E1 DATED JUNE 6, 2008 SUPERSEDES STANDARD PLAN A77E1 DATED MAY 1, 2006 - PAGE 48 OF THE STANDARD PLANS BOOK DATED MAY 2006.

REVISED STANDARD PLAN RSP A77E1

2006 REVISED STANDARD PLAN RSP A77E1

12-10-07

DIST	COUNTY	ROUTE	POST MILES TOTAL PROJECT	SHEET NO.	TOTAL SHEETS
06	Fre	41	R27.6/R29.8	86	107

Randell D. Hiatt
REGISTERED CIVIL ENGINEER

June 6, 2008
PLANS APPROVAL DATE

REGISTERED PROFESSIONAL ENGINEER
Randell D. Hiatt
No. C50200
Exp. 6-30-09
CIVIL
STATE OF CALIFORNIA

The State of California or its officers or agents shall not be responsible for the accuracy or completeness of electronic copies of this plan sheet.

To accompany plans dated 8-17-09

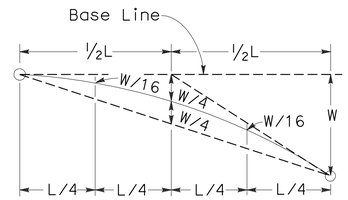

TYPICAL PARABOLIC LAYOUT

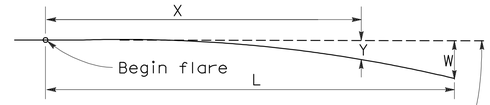

Base Line (Edge of paved shoulder or offset line of edge of traveled way)

$$Y = \frac{WX^2}{L^2}$$

Y = Offset from base line
W = Maximum offset
X = Distance along base line
L = Length of flare

PARABOLIC FLARE OFFSETS

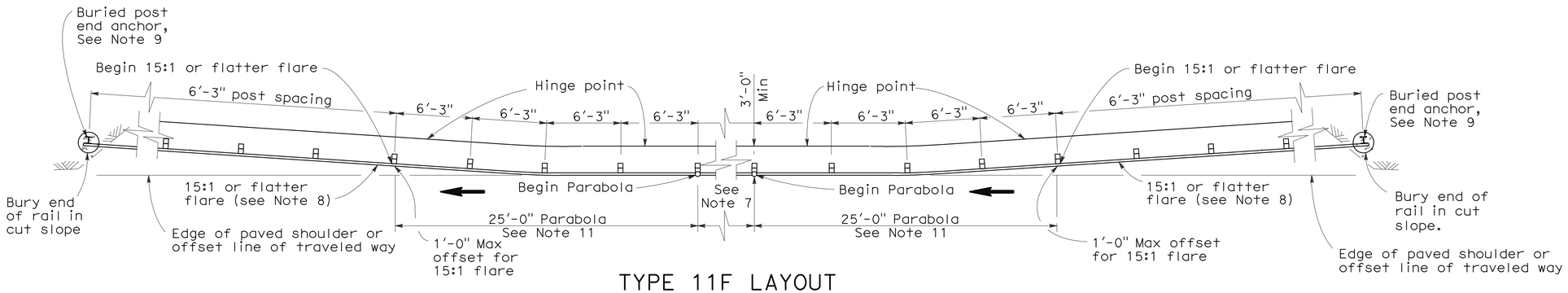

TYPE 11F LAYOUT

(EMBANKMENT GUARD RAILING INSTALLATION WITH A BURIED END ANCHOR TREATMENT AT EACH END OF RAILING)
See Notes 5 and 10

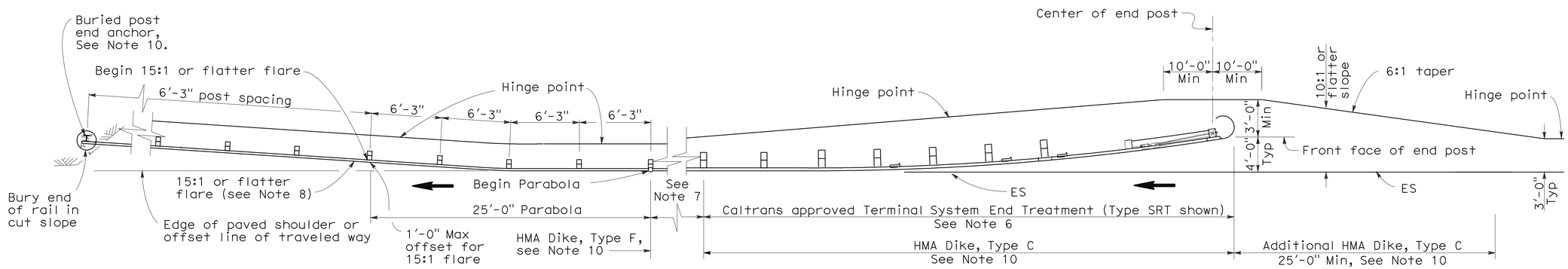

TYPE 11G LAYOUT

(EMBANKMENT GUARD RAILING INSTALLATION WITH FLARED END TREATMENT AND A BURIED END ANCHOR TREATMENT AT THE ENDS OF RAILING)
See Notes 5 and 10

NOTES:

1. Line post, blocks and hardware to be used are shown on Standard Plans A77A1, A77A2, A77B1, A77C1 and A77C2.
2. Guard rail post spacing to be 6'-3" center to center, except as otherwise noted.
3. Except as noted, line posts are 6" x 8" x 6'-0" wood with 6" x 8" x 1'-2" wood blocks. W6 x 9 steel posts, 6'-0" in length, with 6" x 8" x 1'-2" notched wood blocks or plastic blocks may be used for 6" x 8" x 6'-0" wood post with 6" x 8" x 1'-2" wood blocks where applicable and when specified.
4. Direction of adjacent traffic indicated by ⟶.
5. Layout Types 11D through 11L, shown on the A77E Series of Revised Standard Plans, are typically used where guard railing is recommended to shield embankment slopes and a crashworthy end treatment is required for both directions of traffic.
6. The type of terminal system end treatment to be used will be shown on the Project Plans.
7. Dependent on site conditions (embankment height and side slope), construction of additional guard railing (length equal to multiples of 12'-6" with 6'-3" post spacing) may be advisable.
8. The 15:1 or flatter flare used with buried end anchors is based on the edge of the paved shoulder or offset line of edge of the traveled way. The length of guard railing within the 15:1 or flatter flare is based on site conditions and should be a length equal to multiples of 12'-6".
9. For details of the buried post end anchor used with Type 11F and 11G Layouts, see Standard Plan A77I2.
10. Where placement of dike is required with guard railing installations, see Revised Standard Plan RSP A77C4 for dike positioning details.
11. For typical flare offsets for 25'-0" length parabola with maximum offset of 1'-0", see Revised Standard Plan RSP A77E1.

STATE OF CALIFORNIA
DEPARTMENT OF TRANSPORTATION

METAL BEAM GUARD RAILING TYPICAL LAYOUTS FOR EMBANKMENTS

NO SCALE

RSP A77E3 DATED JUNE 6, 2008 SUPERSEDES STANDARD PLAN A77E3 DATED MAY 1, 2006 - PAGE 50 OF THE STANDARD PLANS BOOK DATED MAY 2006.

REVISED STANDARD PLAN RSP A77E3

2006 REVISED STANDARD PLAN RSP A77E3

12-10-07

DIST	COUNTY	ROUTE	POST MILES TOTAL PROJECT	SHEET NO.	TOTAL SHEETS
06	Fre	41	R27.6/R29.8	87	107

REGISTERED CIVIL ENGINEER

June 5, 2009
PLANS APPROVAL DATE

REGISTERED PROFESSIONAL ENGINEER Glenn DeCou No. C34547 Exp. 9-30-09 CIVIL STATE OF CALIFORNIA

The State of California or its officers or agents shall not be responsible for the accuracy or completeness of electronic copies of this plan sheet.

To accompany plans dated 8-17-09

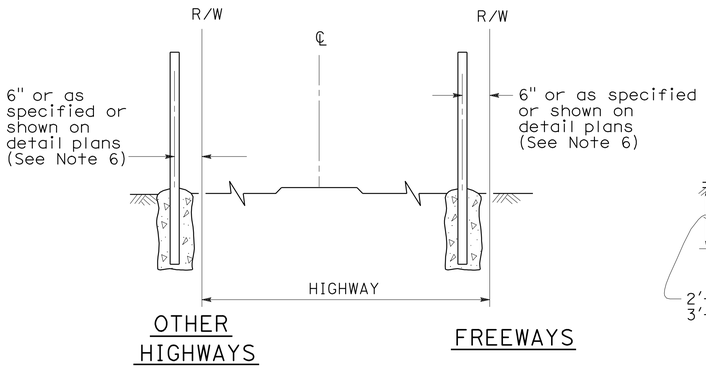

FENCE LOCATION

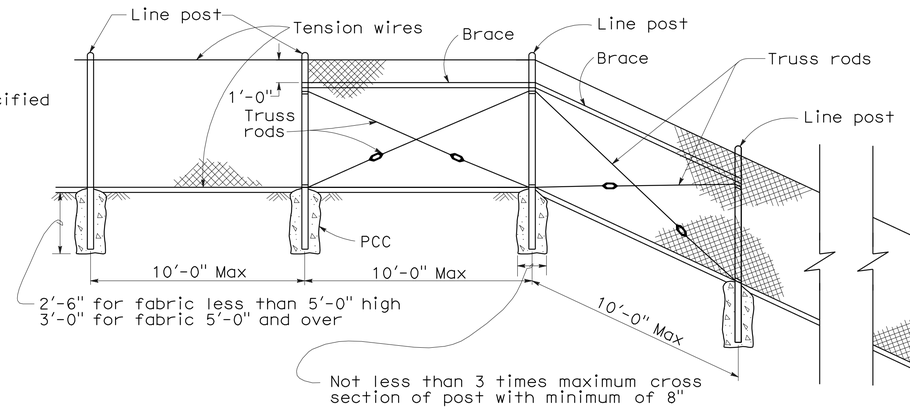

CHAIN LINK FENCE ON SHARP BREAK IN GRADE

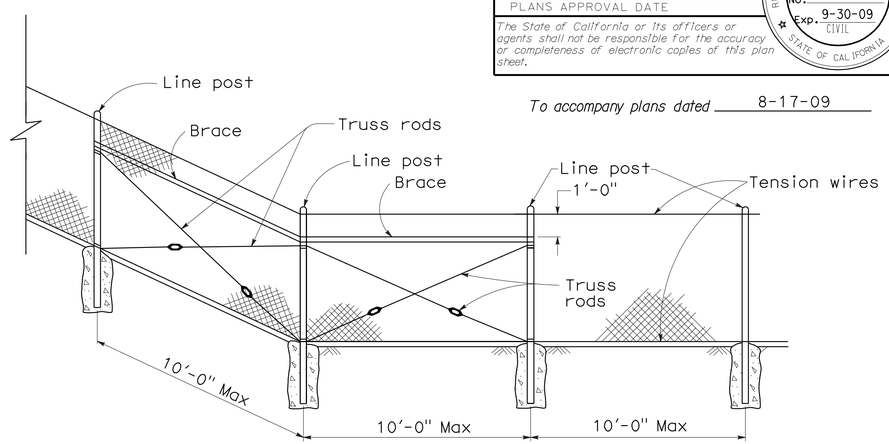

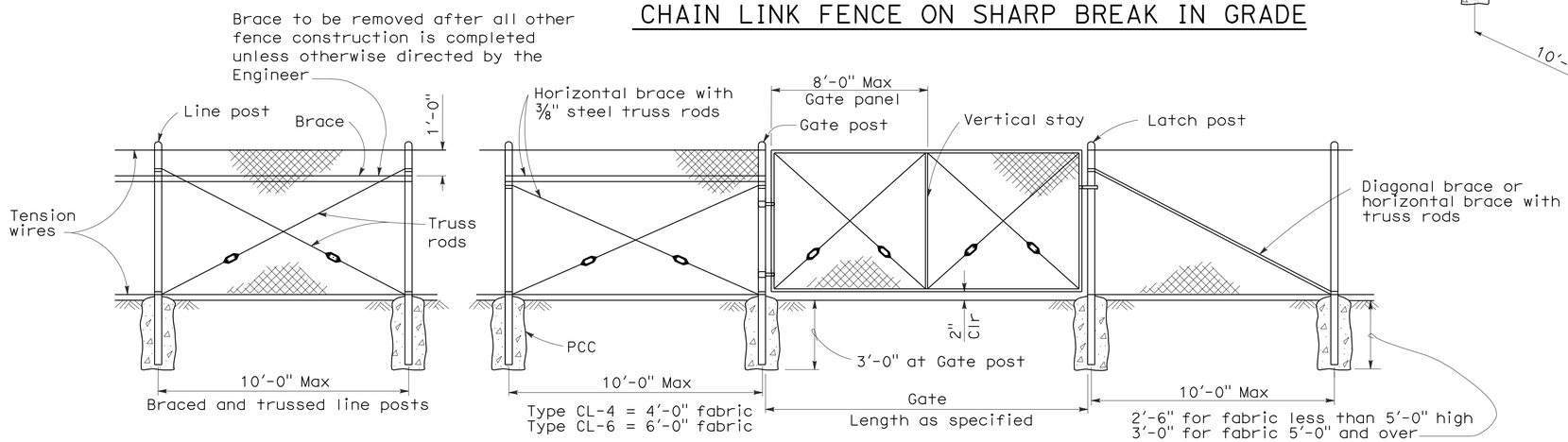

CHAIN LINK GATE INSTALLATION

GATE POST			
FENCE HEIGHT	GATE WIDTHS	NOMINAL ID	WEIGHT PER FOOT
6'-0" and Less	Up thru 6'-0"	2½"	4.95 LB
	Over 6'-0" thru 12'-0"	4"	10.79 LB
	Over 12'-0" thru 18'-0"	5"	14.62 LB
	Over 18'-0" to 24'-0" Max	6"	18.97 LB
Over 6'-0"	Up thru 6'-0"	3"	7.58 LB
	Over 6'-0" thru 12'-0"	5"	14.62 LB
	Over 12'-0" thru 18'-0"	6"	18.97 LB
	Over 18'-0" to 24'-0" Max	8"	28.55 LB

Above post dimensions and weights are minimums. Larger sizes may be used on approval of the Engineer.

NOTES:

1. The below table shows examples of post and brace sections which may comply with the Specifications.
2. Sections shown in the tables must also comply with the strength requirements and other provisions of the Specifications.
3. Other sections which comply with the strength requirements and other provisions of the Specifications may be used on approval of the Engineer.
4. Options exercised shall be uniform on any one project.
5. Dimensions shown are nominal.
6. Offset to be 2'-0" at monument locations, measured at right angles to R/W lines. Taper to achieve offset to be at least 20'-0" long.

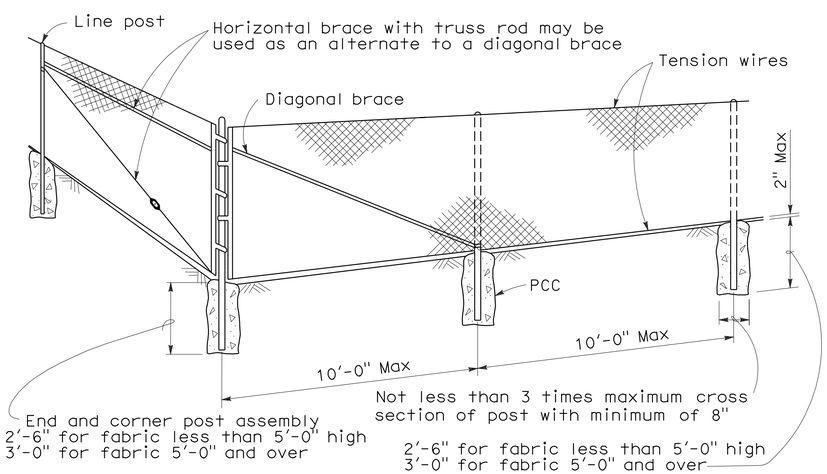

CORNER POST

TYPICAL MEMBER DIMENSIONS (See Notes)											
FENCE HEIGHT	LINE POSTS			END, LATCH & CORNER POSTS				BRACES			
	ROUND ID	H	ROLL FORMED	ROUND ID	ROLL FORMED			ROUND ID	H	ROLL FORMED	
6' & less	1½"	1⅞" × 1⅝"	1⅞" × 1⅝"	2"	3½" × 3½"	2" × 1¾"		1¼"	1½" × 1 5/16"	1⅝" × 1¼"	1¾" × 1¼"
Over 6'	2"	2¼" × 2"	2" × 1¾"	2½"	3½" × 3½"	2½" × 2½"		1¼"	1½" × 1 5/16"	1⅝" × 1¼"	1¾" × 1¼"

STATE OF CALIFORNIA
DEPARTMENT OF TRANSPORTATION

CHAIN LINK FENCE

NO SCALE

RSP A85 DATED JUNE 5, 2009 SUPERSEDES STANDARD PLAN A85
DATED MAY 1, 2006 - PAGE 111 OF THE STANDARD PLANS BOOK DATED MAY 2006.

REVISED STANDARD PLAN RSP A85

2006 REVISED STANDARD PLAN RSP A85

5-7-09

DIST	COUNTY	ROUTE	POST MILES TOTAL PROJECT	SHEET NO.	TOTAL SHEETS
06	Fre	41	R27.6/R29.8	88	107

REGISTERED CIVIL ENGINEER

June 15, 2007
PLANS APPROVAL DATE

REGISTERED PROFESSIONAL ENGINEER Glenn DeCou No. C34547 Exp. 9-30-07 CIVIL STATE OF CALIFORNIA

The State of California or its officers or agents shall not be responsible for the accuracy or completeness of electronic copies of this plan sheet.

To accompany plans dated 8-17-09

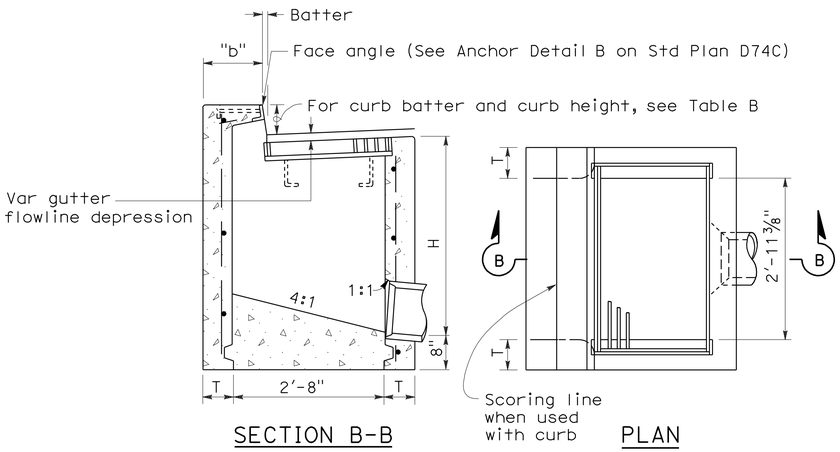

TYPE GO

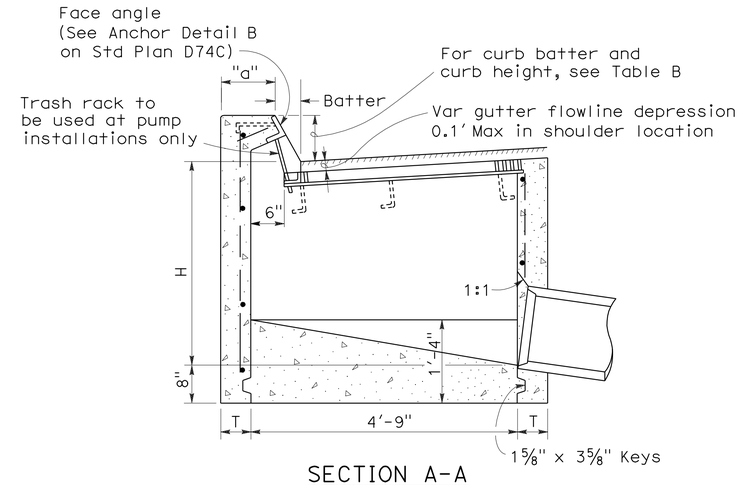

SECTION A-A

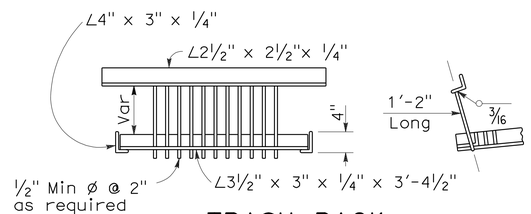

TRASH RACK

(For use with pump installation)

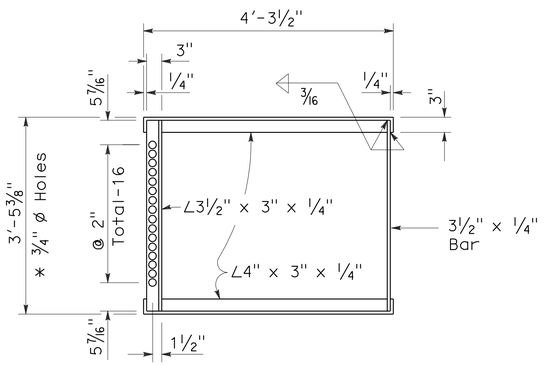

* 3/4" ø Holes required only with trash rack

GRATE FRAME FOR TYPE GDO INLET

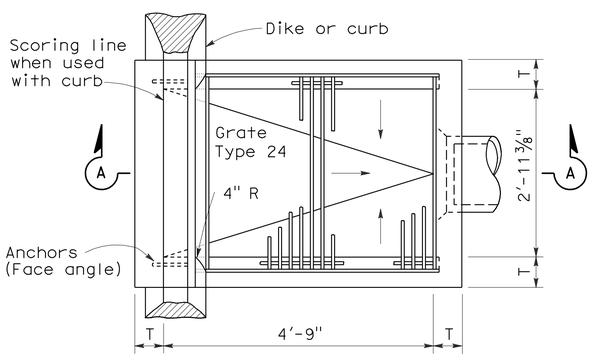

PLAN

TYPE GDO

TABLE A

CONCRETE QUANTITIES				
	H=3'-0" TO 8'-0" (T=6")		H=8'-1" TO 20'-0" (T=8")	
TYPE	H=3'-0" (CY)	ADDITIONAL PCC PER FOOT (CY)	H=8'-1" (CY)	ADDITIONAL PCC PER FOOT (CY)
GO	1.24	0.245	3.39	0.346
GDO	1.62	0.322	4.36	0.446

Table based on 8" floor slab, no deduction for pipe openings, and curb type giving highest quantity of concrete. No deductions or adjustments are to be made to these quantities because of pipe openings, different floor alternatives or different curb type.

TABLE B

CURB TYPE	NORMAL CURB HEIGHT	CURB BATTER	"a" DIMENSION	"b" DIMENSION
A1-6	6"	1 1/2"	T+7 1/2"	T+6 1/2"
A1-8	8"	2"	T+7"	T+6"
B1-6	6"	4"	T+5"	T+4"
Type A Dike	6"	3"	T+6"	T+5"

NOTES:

1. "H" is the difference in elevation between the outlet pipe flow line and the normal gutter grade line undepressed.
2. For "T" wall thickness, see Table A below.
3. Wall reinforcing not required when "H" is 8'-0" or less and the unsupported width or length is 7'-0" or less. Walls exceeding these limits shall be reinforced with #4 @ 18"± centers placed 1 1/2" clear to inside of box unless otherwise shown.
4. Inlet bottom reinforcing not required. See Standard Plan D74C for alternative reinforced bottom.
5. Steps - None required where "H" is less than 2'-6" Where "H" is 2'-6" or more, install steps with lowest rung 1'-0" above the floor and highest rung not more than 6" below top of inlet. The distance between steps shall not exceed 1'-0" and shall be uniform throughout the length of the wall. Place steps in the wall without an opening. Step inserts may be substituted for the bar steps. Step Inserts shall comply with State Industrial Safety requirements. See Standard Plan D74C for step details.
6. When shown on the project plans, place a 3/4" plain round protection bar horizontally across the length of the opening and bend back 4" into the inlet wall on each side.
7. Pipe(s) can be placed in any wall.
8. Curb section shall match adjacent curb.
9. Basin floors shall have wood trowel finish and shall slope toward the outlet pipe as shown.
10. Galvanizing - See Standard Specifications or Special Provisions.
11. See Standard Plan D77A and D77B for grate and frame details and weights of miscellaneous iron and Steel.
12. See Standard Plan D78A for gutter depression details.
13. Full penetration butt welds may be substituted for the fillet welds on all anchors.
14. Standard square, hexagon, round or equivalent headed anchors may be substituted for the right angle hooks on the anchors shown on this plan.
15. Cast-in-place or precast alternative is optional with contractor. See Standard Specifications.
16. Cast-in-place inlets to be formed around all pipes/stubs intersecing the inlet and concrete poured in one continuous operation. Precast inlets shall have mortared pipe connections conforming to details for Type GCP inlets on Standard Plan D75B. See Standard Specifications for mortar composition.

STATE OF CALIFORNIA
DEPARTMENT OF TRANSPORTATION

DRAINAGE INLETS

NO SCALE

RSP D74B DATED JUNE 15, 2007 SUPERSEDES STANDARD PLAN D74B DATED MAY 1, 2006 - PAGE 150 OF THE STANDARD PLANS BOOK DATED MAY 2006.

REVISED STANDARD PLAN RSP D74B

2006 REVISED STANDARD PLAN RSP D74B

4-16-07

DIST	COUNTY	ROUTE	POST MILES TOTAL PROJECT	SHEET NO.	TOTAL SHEETS
06	Fre	41	R27.6/R29.8	89	107

Raymond Don Tsztoo
REGISTERED CIVIL ENGINEER

January 18, 2008
PLANS APPROVAL DATE

REGISTERED PROFESSIONAL ENGINEER Raymond Don Tsztoo No. C37332 Exp. 6-30-08 CIVIL STATE OF CALIFORNIA

The State of California or its officers or agents shall not be responsible for the accuracy or completeness of electronic copies of this plan sheet.

To accompany plans dated 8-17-09

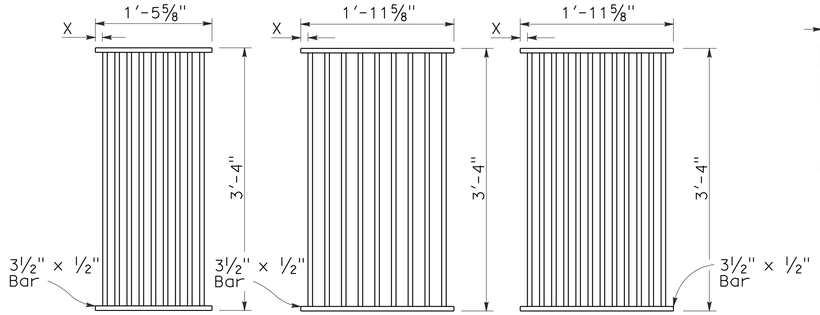

TYPE 18-9

1⅜" Clear spacing. Use within the roadbed on highways where bicycles and pedestrians are excluded.

TYPE 24-9

2" Clear spacing. Use in locations off the roadbed on all types of highways.

TYPE 24-12

1⅜" Clear spacing. Use within the roadbed on highways where bicycles and pedestrians are excluded.

RECTANGULAR GRATE DETAILS

(See table below)

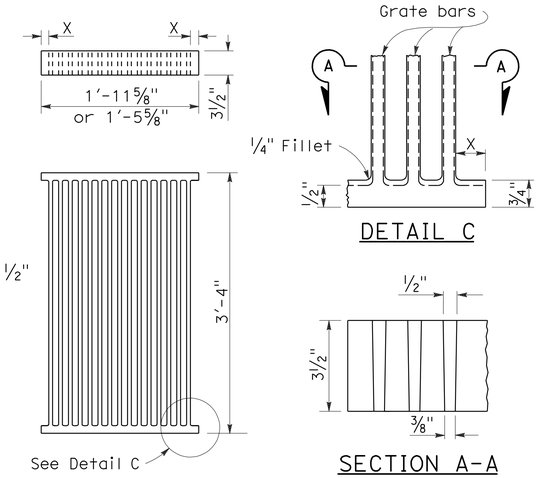

ALTERNATIVE CAST NODULAR IRON GRATE OR CAST STEEL GRATE

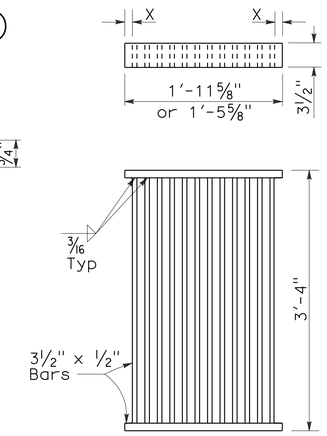

ALTERNATIVE WELDED GRATE

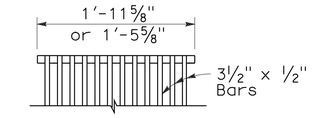

CAST END BLOCK

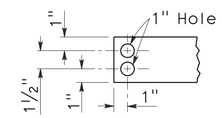

END OF BAR

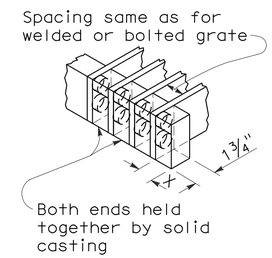

ALTERNATIVE CAST NODULAR IRON OR CAST STEEL END BLOCK GRATE

NOTES:

1. Grate type numbers refer to approximate width of grate in inches and number of bars, respectively.
2. Contractor has the option of using cast nodular iron, cast steel, welded, bolted, or cast end block grate.
3. See Special Provisions for requirements pertaining to galvanizing or asphalt dipping of grates and frames.
4. Rounded top of bars optional on all grates.
5. Pipe inlets with a grate shall be placed so that bars parallel direction of principle surface flow.
6. Full penetration butt welds may be substituted for the fillet welds on all anchors.
7. Standard square, hexagon, round or equivalent headed anchors may be substituted for the right angle hooks on the anchors shown on this plan.
8. Grate and frame weights are based on welded grates (weights of face angles, steps, protection bars, etc. are not included).

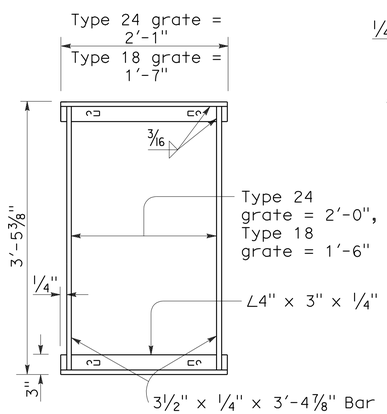

TYPICAL FRAME

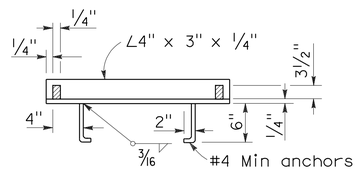

CROSS SECTION

(Thru frame)

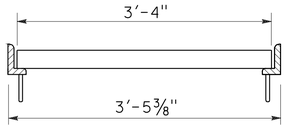

LONGITUDINAL SECTION

(Thru frame and grate)

RECTANGULAR FRAME DETAILS

(For all rectangular grates)

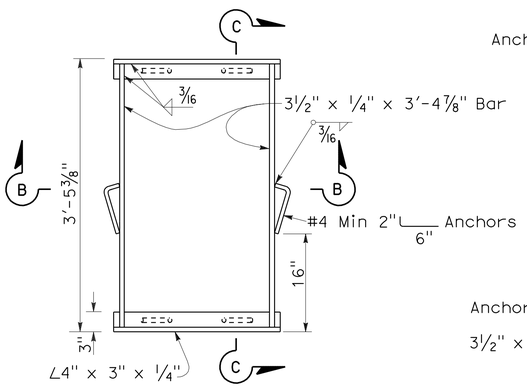

TYPICAL FRAME

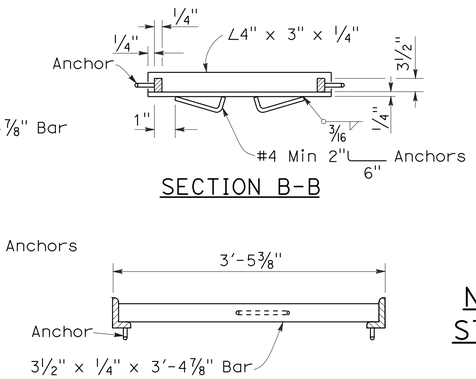

SECTION B-B

SECTION C-C

ALTERNATIVE ANCHOR FOR RECTANGULAR FRAME

(For details not shown, See Rectangular Frame Details)

INLET TYPE	GRATE TYPE	No. OF GRATES	WEIGHT LB
GDO	24-12	2	634
GOL-7	24-12	1	326
GOL-10	24-12	1	326
GO,G1,G2,G3,G4 (TYPE 24)	24-9	1	263
	24-12	1	326
G4 (TYPE 18),G5,G6	18-9	1	249
GT1	18-9	2	498
GT2	18-9	2	498
GT3	24-12	2	652
GT4	24-12	2	652
TRASH RACK			22

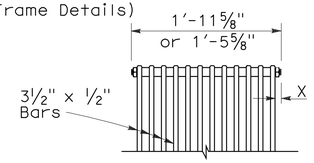

BOLTED END BLOCK

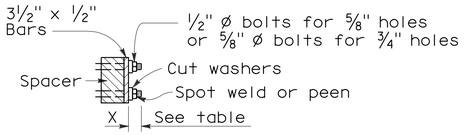

BOLTING DETAIL

ALTERNATIVE BOLTED GRATE

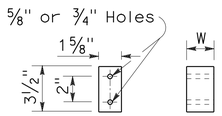

BAR SPACER

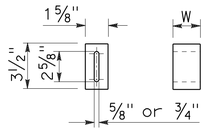

ALTERNATIVE SPACER

W = 1⅜" or 2"

GRATE BAR SPACING TABLE

TYPE	No. OF BARS	CLEAR BAR SPACING	X
18-9	9	1⅜"	1 1/16"
24-9	9	2"	1 9/16"
24-12	12	1⅜"	1¼"

INLET TYPE	COVER TYPE	WEIGHT LB
OS	PLATE	174
OL-7	PLATE	170
OL-10	PLATE	170
OL-14	PLATE	170
OL-21	PLATE	170
OCP	PLATE	112
OCPI	PLATE	112
OCPI	REDWOOD	42
OMP	PLATE	177
OMPI	PLATE	177

BASIS FOR MISC IRON & STEEL FINAL PAY WEIGHTS FOR DRAINAGE INLETS

(See General Notes, No 8)

STATE OF CALIFORNIA
DEPARTMENT OF TRANSPORTATION

GRATE DETAILS

NO SCALE

RSP D77A DATED JANUARY 18, 2008 SUPERSEDES STANDARD PLAN D77A DATED MAY 1, 2006 - PAGE 155 OF THE STANDARD PLANS BOOK DATED MAY 2006.

REVISED STANDARD PLAN RSP D77A

2006 REVISED STANDARD PLAN RSP D77A

12-14-07

DIST	COUNTY	ROUTE	POST MILES TOTAL PROJECT	SHEET NO.	TOTAL SHEETS
06	Fre	41	R27.6/R29.8	90	107

Randell D. Hiatt
REGISTERED CIVIL ENGINEER

June 6, 2008
PLANS APPROVAL DATE

REGISTERED PROFESSIONAL ENGINEER
Randell D. Hiatt
No. C50200
Exp. 6-30-09
CIVIL
STATE OF CALIFORNIA

The State of California or its officers or agents shall not be responsible for the accuracy or completeness of electronic copies of this plan sheet.

To accompany plans dated 8-17-09

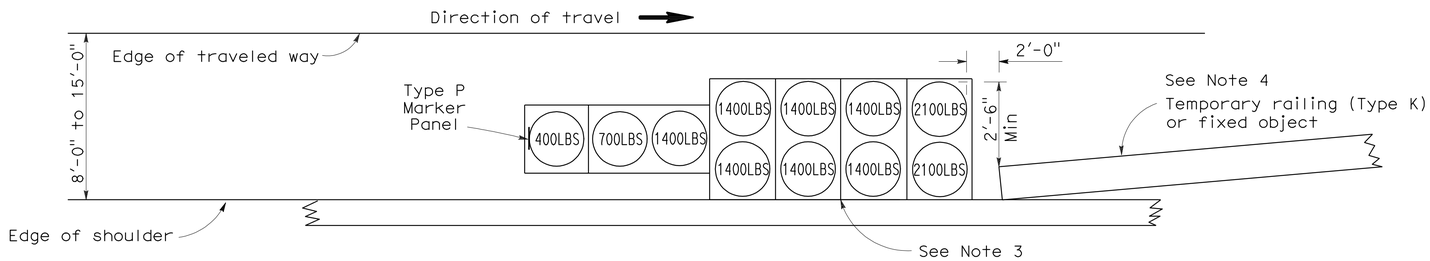

ARRAY 'TS11'

Approach speed less than 45 mph
See Note 9

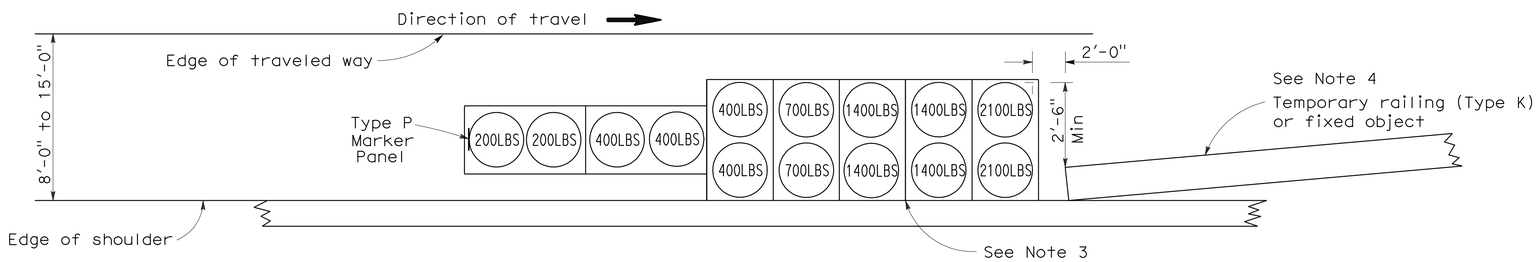

ARRAY 'TS14'

Approach speed 45 mph or more
See Note 9

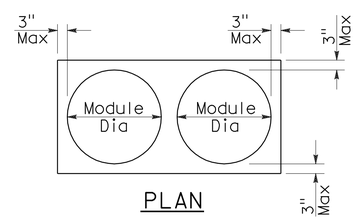

PLAN

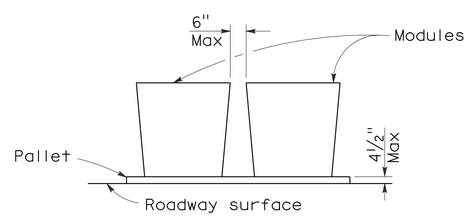

ELEVATION

CRASH CUSHION PALLET DETAIL

See Note 11

NOTES:

1. (XXX) Indicates sand filled module location and weight of sand in pounds for each module. Module spacing is based on the greater diameter of the module.
2. All sand weights are nominal.
3. The temporary crash cushion arrays shown on this plan shall be used only in locations where there will be traffic on one side of the temporary crash cushion array.
4. If the fixed object or approach end of the temporary railing is less than 15'-0" from the edge of traveled way, a temporary crash cushion is required in a construction or work zone.
5. Temporary crash cushion arrays shall not encroach on the traveled way.
6. Arrays for median shoulders shall conform to details shown on this plan for outside shoulders.
7. Place the Type P marker panel so that the bottom of the panel rests upon the pallet and faces traffic.
8. Refer to Standard Plan A73B for marker details.
9. For shoulder widths less than 8'-0", appropriate approved crash cushion protection, other than sand filled modules, shall be provided at fixed objects and at approach ends of temporary railing. The specific type of crash cushion shall be as shown on the project plans or as specified in the Special Provisions, or if not shown on the project plans or specified in the Special Provisions, shall be as approved by the Engineer.
10. Approach speeds indicated conform to NCHRP 350 Report criteria.
11. Use of pallets is optional.

STATE OF CALIFORNIA
DEPARTMENT OF TRANSPORTATION

TEMPORARY CRASH CUSHION, SAND FILLED (SHOULDER INSTALLATIONS)

NO SCALE

RSP T2 DATED JUNE 6, 2008 SUPERSEDES STANDARD PLAN T2
DATED MAY 1, 2006 - PAGE 213 OF THE STANDARD PLANS BOOK DATED MAY 2006.

REVISED STANDARD PLAN RSP T2

2006 REVISED STANDARD PLAN RSP T2

5-15-08

DIST	COUNTY	ROUTE	POST MILES TOTAL PROJECT	SHEET NO.	TOTAL SHEETS
06	Fre	41	R27.6/R29.8	91	107

Robert B Schott
LICENSED LANDSCAPE ARCHITECT

April 3, 2009
PLANS APPROVAL DATE

LICENSED LANDSCAPE ARCHITECT — Robert B. Schott 3625 — Robert B Schott — Registered Date 11-30-10 — Renewal Date 2-25-09 Date — STATE OF CALIFORNIA

The State of California or its officers or agents shall not be responsible for the accuracy or completeness of electronic copies of this plan sheet.

To accompany plans dated 8-17-09

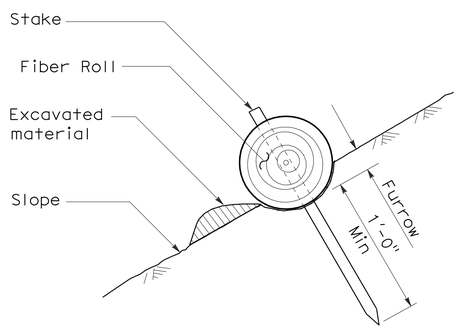

SECTION

TEMPORARY FIBER ROLL (TYPE 1)

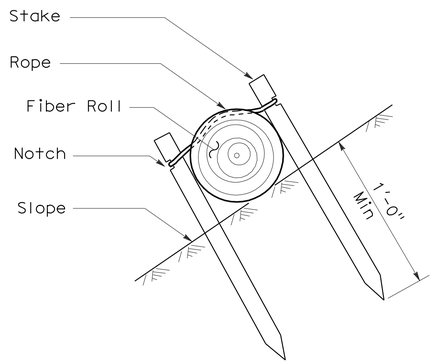

SECTION

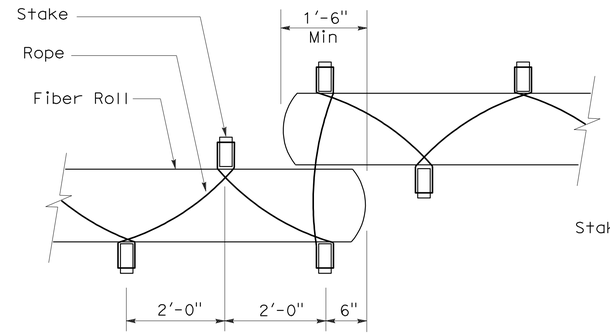

PLAN

TEMPORARY FIBER ROLL (TYPE 2)

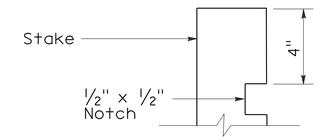

ELEVATION

STAKE NOTCH DETAIL

NOTES:

1. Temporary fiber roll spacing varies depending upon slope inclination.
2. Installations shown in the perspectives are for slope inclination of 10:1 and steeper.

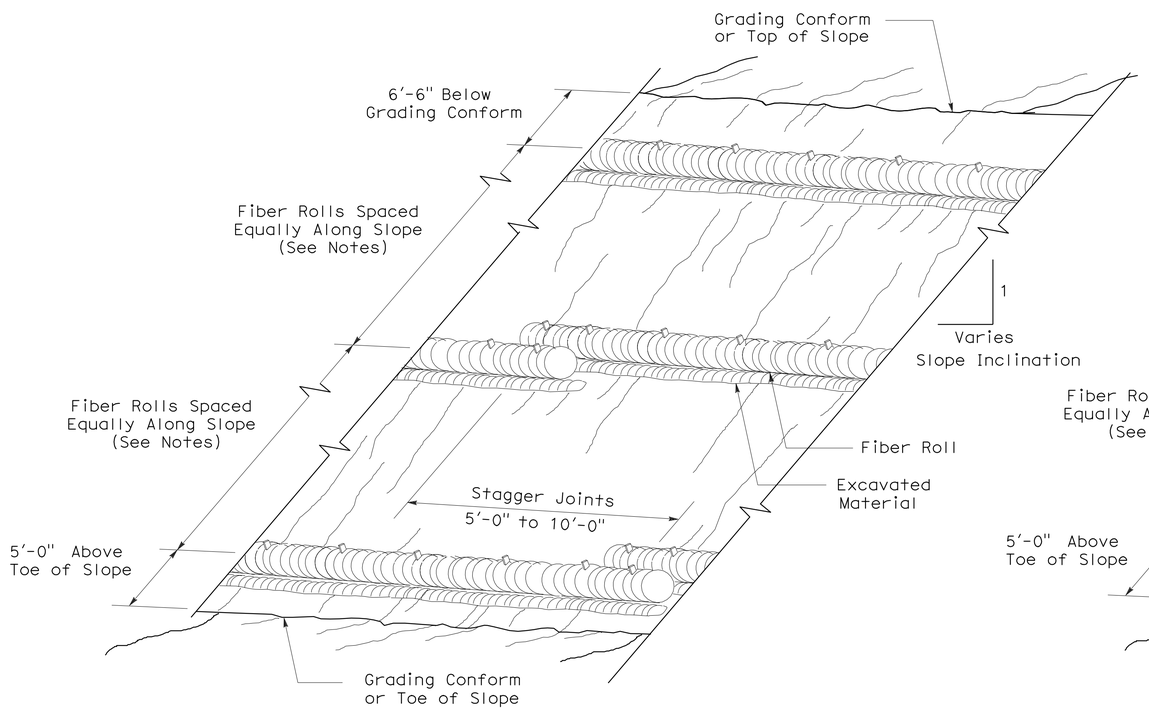

PERSPECTIVE

TEMPORARY FIBER ROLL (TYPE 1)

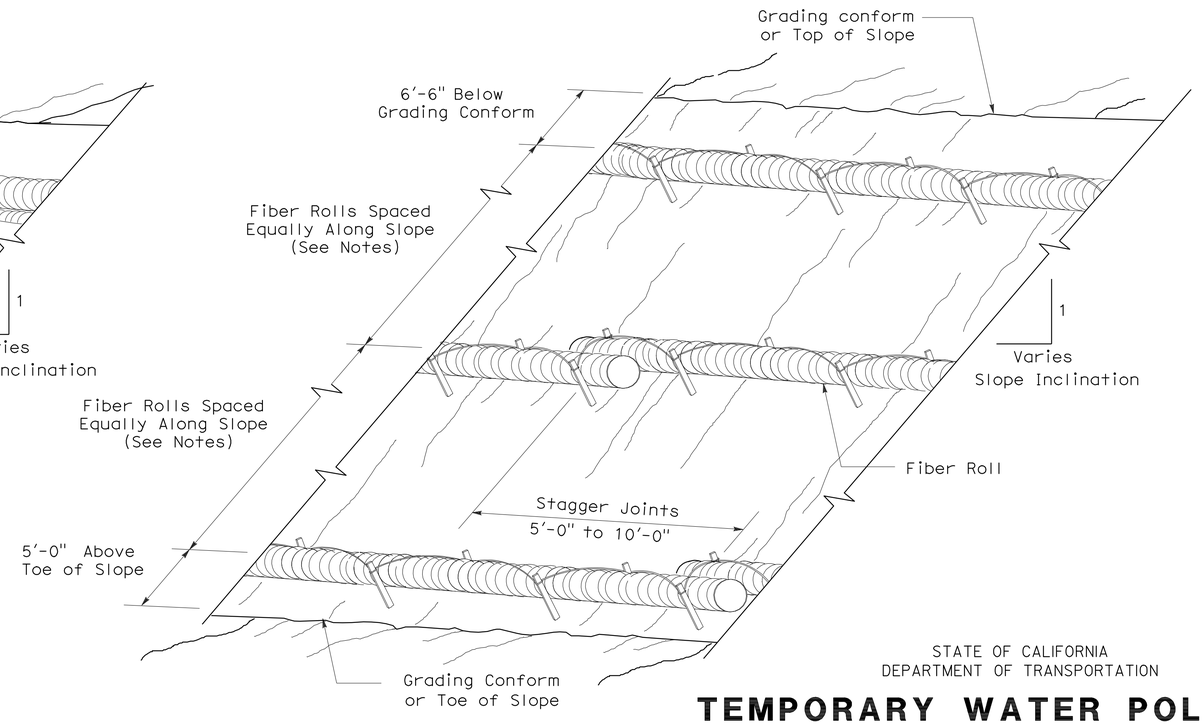

PERSPECTIVE

TEMPORARY FIBER ROLL (TYPE 2)

STATE OF CALIFORNIA
DEPARTMENT OF TRANSPORTATION

TEMPORARY WATER POLLUTION CONTROL DETAILS (TEMPORARY FIBER ROLL)

NO SCALE

RSP T56 DATED APRIL 3, 2009 SUPERSEDES STANDARD PLAN T56
DATED MAY 1, 2006 - PAGE 232 OF THE STANDARD PLANS BOOK DATED MAY 2006.

REVISED STANDARD PLAN RSP T56

2006 REVISED STANDARD PLAN RSP T56

DIST	COUNTY	ROUTE	POST MILES TOTAL PROJECT	SHEET NO.	TOTAL SHEETS
06	Fre	41	R27.6/R29.8	92	107

Robert B Schott
LICENSED LANDSCAPE ARCHITECT

August 15, 2008
PLANS APPROVAL DATE

LICENSED LANDSCAPE ARCHITECT Robert B. Schott 3625 Signature 11-04-08 Renewal Date 08-11-08 Date STATE OF CALIFORNIA

The State of California or its officers or agents shall not be responsible for the accuracy or completeness of electronic copies of this plan sheet.

To accompany plans dated 8-17-09

FLEXIBLE SEDIMENT BARRIER SPACING TABLE

SLOPE OF ROADWAY (PERCENT)	0 to 0.9	1 to 1.9	2 to 2.9	3 to 4	5+
INTERVAL BETWEEN BARRIERS	50′	35′	30′	25′	20′
ANGLE FROM FACE OF CURB	70°	70°	70°	45°	45°
SUGGESTED BARRIER LENGTH	6′	6′	6′	6′	6′

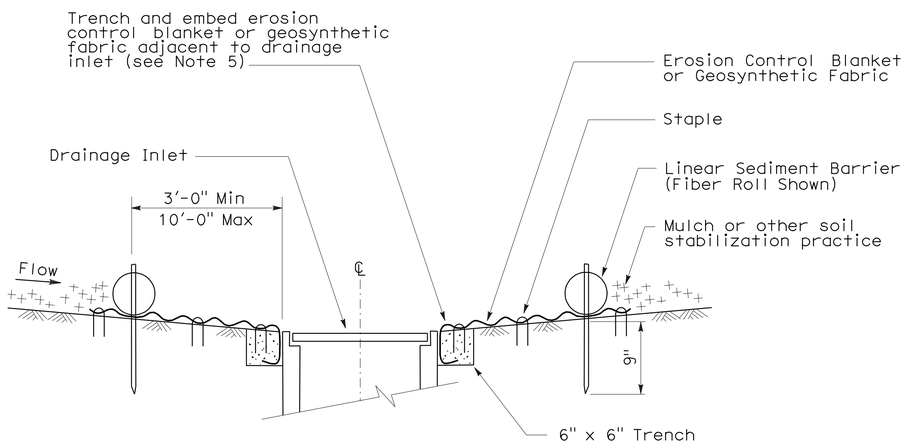

SECTION A-A

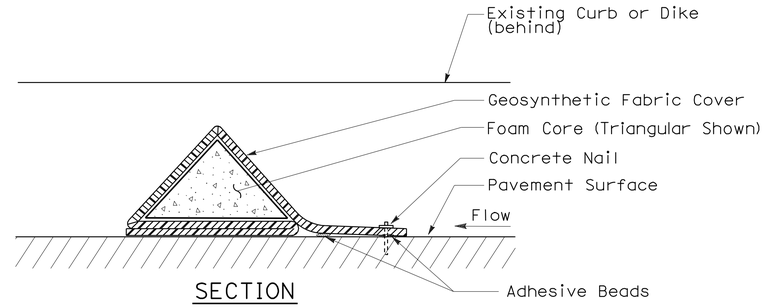

SECTION

FLEXIBLE SEDIMENT BARRIER DETAIL (FOAM BARRIER SHOWN)

NOTES:

1. See Standard Plan T51 for Temporary Silt Fence.
2. Dimensions may vary to fit field conditions.
3. Install a minimum of 3 flexible sediment barriers upstream of each drainage inlet to be protected.
4. Position erosion control blanket or geosynthetic fabric at edge of concrete apron and secure in trench.
5. Erosion control blanket or geosynthetic fabric is not required if the area adjacent to the drainage inlet is vegetated.

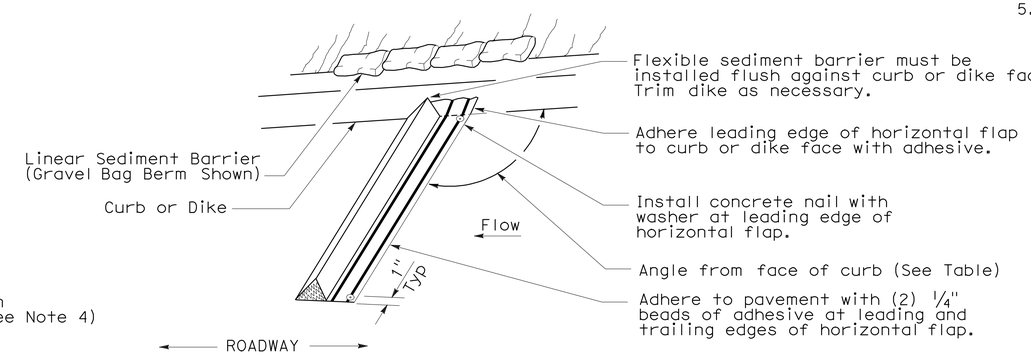

PERSPECTIVE

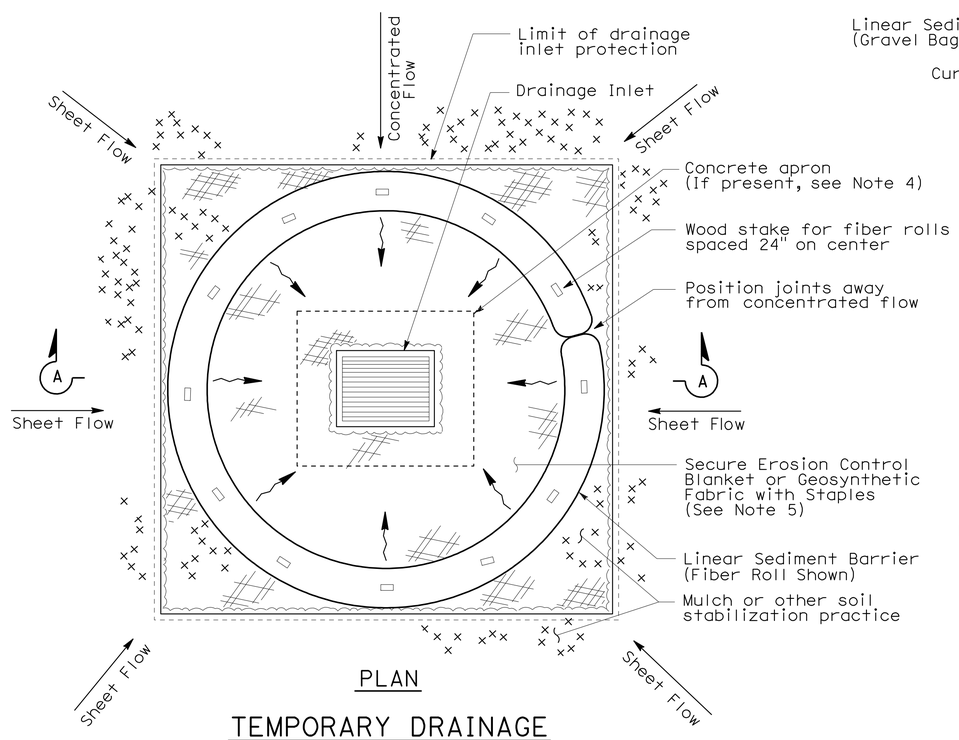

PLAN

TEMPORARY DRAINAGE INLET PROTECTION (TYPE 4A)

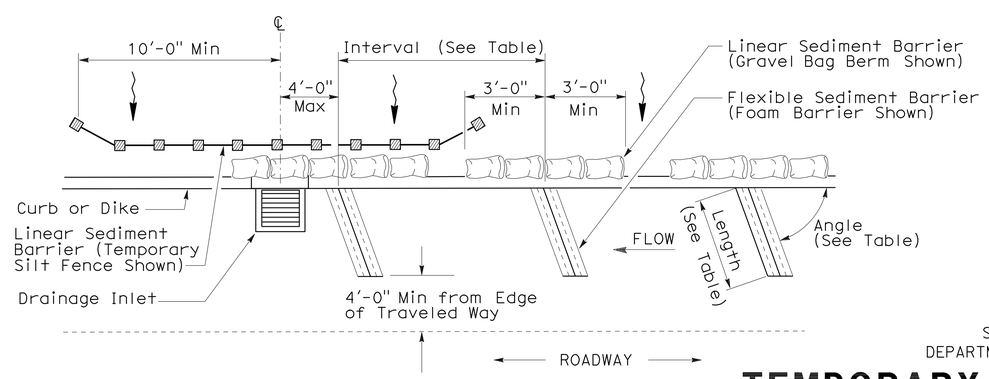

PLAN

TEMPORARY DRAINAGE INLET PROTECTION (TYPE 4B) FLEXIBLE SEDIMENT BARRIER

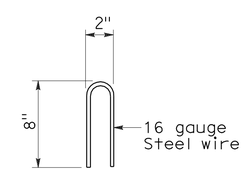

STAPLE DETAIL

STATE OF CALIFORNIA
DEPARTMENT OF TRANSPORTATION

TEMPORARY WATER POLLUTION CONTROL DETAILS (TEMPORARY DRAINAGE INLET PROTECTION)

NO SCALE

NSP T63 DATED AUGUST 15, 2008 SUPPLEMENTS THE STANDARD PLANS BOOK DATED MAY 2006.

NEW STANDARD PLAN NSP T63

2006 NEW STANDARD PLAN NSP T63

DIST	COUNTY	ROUTE	POST MILES TOTAL PROJECT	SHEET NO.	TOTAL SHEETS
06	Fre	41	R27.6/R29.8	93	107

LICENSED LANDSCAPE ARCHITECT

August 15, 2008
PLANS APPROVAL DATE

LICENSED LANDSCAPE ARCHITECT
Robert B. Schott 3625
Signature
11-04-08
Renewal Date
08-11-08
Date
STATE OF CALIFORNIA

The State of California or its officers or agents shall not be responsible for the accuracy or completeness of electronic copies of this plan sheet.

To accompany plans dated 8-17-09

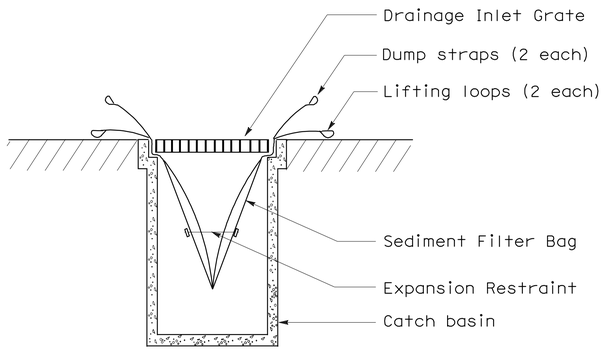

SECTION B-B

SEDIMENT FILTER BAG DETAIL

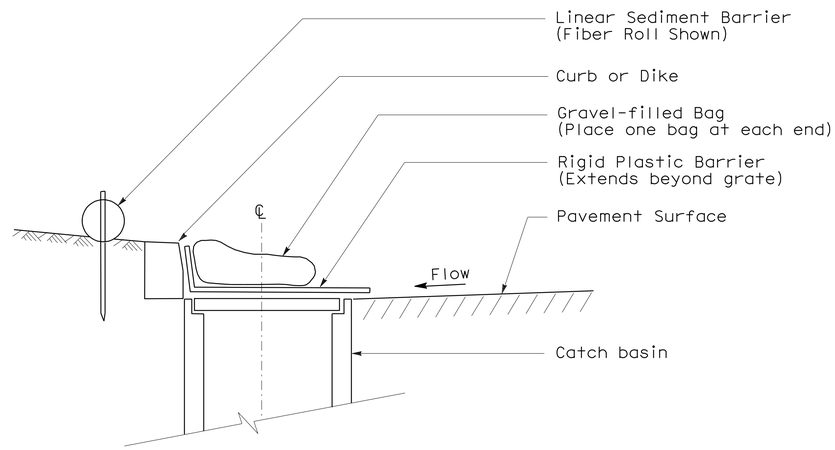

SECTION

TEMPORARY DRAINAGE INLET PROTECTION (TYPE 6A) (CATCH BASIN WITH GRATE)

NOTES:

1. See Standard Plan T51 for Temporary Silt Fence.
2. Dimensions may vary to fit field conditions.

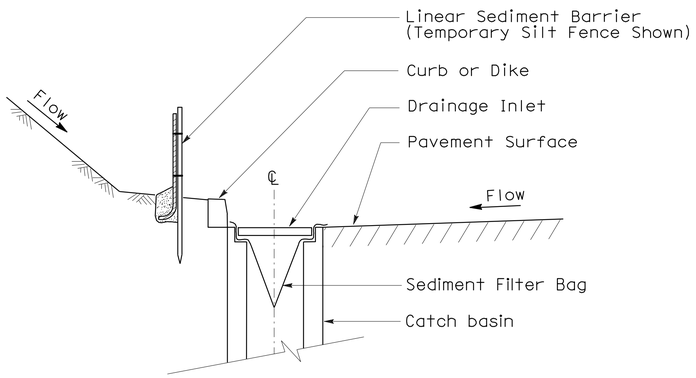

SECTION A-A

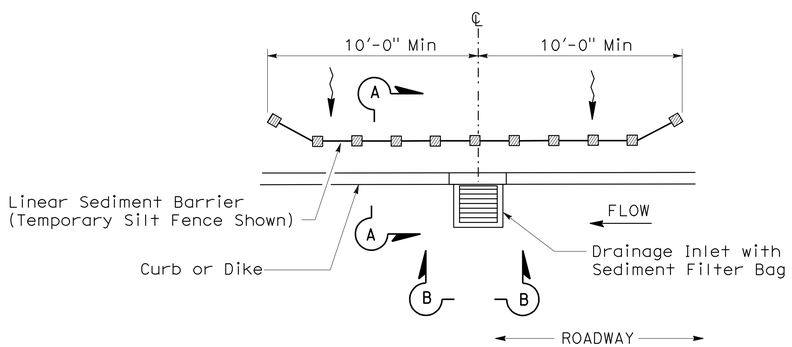

PLAN

TEMPORARY DRAINAGE INLET PROTECTION (TYPE 5) (SEDIMENT FILTER BAG)

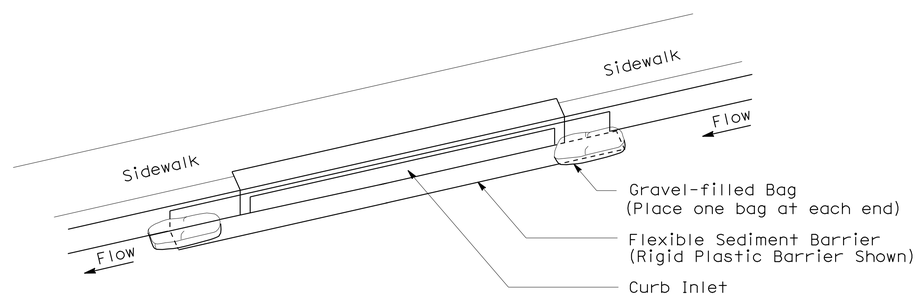

PERSPECTIVE

TEMPORARY DRAINAGE INLET PROTECTION (TYPE 6B) (CURB INLET WITHOUT GRATE)

STATE OF CALIFORNIA
DEPARTMENT OF TRANSPORTATION

TEMPORARY WATER POLLUTION CONTROL DETAILS (TEMPORARY DRAINAGE INLET PROTECTION)

NO SCALE

NSP T64 DATED AUGUST 15, 2008 SUPPLEMENTS
THE STANDARD PLANS BOOK DATED MAY 2006.

NEW STANDARD PLAN NSP T64

2006 NEW STANDARD PLAN NSP T64

7-11-08

DIST	COUNTY	ROUTE	POST MILES TOTAL PROJECT	SHEET NO.	TOTAL SHEETS
06	Fre	41	R27.6/R29.8	94	107

REGISTERED ELECTRICAL ENGINEER

October 5, 2007
PLANS APPROVAL DATE

REGISTERED PROFESSIONAL ENGINEER Jeffery G. McRae No. E14512 Exp. 6-30-08 ELECTRICAL STATE OF CALIFORNIA

The State of California or its officers or agents shall not be responsible for the accuracy or completeness of electronic copies of this plan sheet.

To accompany plans dated 8-17-09

ELECTROLIERS

STANDARD TYPES
15, 15D
15 STRUCTURE
21, 21D STRUCTURE
30
31
32
35
36-20A

High mast light pole

Double Arm lighting standard

Existing electrolier

Electrolier foundation (Future installation)

NOTES:

1. Luminaires shall be 310 W HPS when installed on Type 21, 21D, 30, 31, 32, 35 and 36-20A Standards, unless otherwise specified. Luminaires shall be 200 W HPS when installed on other type standards or poles, unless otherwise specified.
2. Luminaires shall be the cutoff type, ANSI Type III medium cutoff lighting distribution, unless otherwise specified.
3. Variations noted adjacent to symbol on project plans.

Electrolier (see project notes or project plans)

Luminaire on wood pole

STANDARD NOTES:

- AB — Abandon. If applied to conduit, remove conductors.
- BC — Install pull box in existing conduit run.
- BP — Pedestrian barricade, type as indicated on plan.
- CB — Install conduit into existing pull box.
- CC — Connect new and existing conduit. Remove existing conductors and install conductors as indicated.
- CF — Conduit to remain for future use. Remove conductors. Install pull wire or rope.
- DH — Detector handhole.
- FA — Foundation to be abandoned.
- IS — Install sign on signal mast arm.
- NS — No slip base on standard.
- PEC — Photoelectric control.
- PEU — Photoelectric unit.
- RC — Equipment or material to be removed and become the property of the Contractor.
- RE — Remove electrolier, fuses and ballast. Tape ends of conductors.
- RL — Relocate equipment.
- RR — Remove and reuse equipment.
- RS — Remove and salvage equipment.
- SC — Splice new to existing conductors.
- SD — Service disconnect.
- SF — Standard to remain for future use. Remove luminaire, pole conductors, fuses and ballast.
- TSP — Telephone service point.

ABBREVIATIONS AND EQUIPMENT DESIGNATIONS

PROPOSED	EXISTING	
BBS	bbs	Battery backup system
BC	bc	Bolt circle
C	C	Conduit
CCTV	cctv	Closed circuit television
CKT	ckt	Circuit
CMS	cms	Changeable message sign
DLC	dlc	Loop detector lead-in cable
EMS	ems	Extinguishable message sign
EVC	evc	Emergency vehicle cable
EVD	evd	Emergency vehicle detector
FB	fb	Flashing beacon
FBCA	fbca	Flashing beacon control assembly
FBS	fbs	Flashing beacon with slip base
FO	fo	Fiber optic
G	G	Ground (Equipment Grounding Conductor)
GFCI	GFCI	Ground fault circuit interrupt
HAR	har	Highway advisory radio
HEX	hex	Hexagonal
HPS	hps	High pressure sodium
IISNS	iisns	Internally illuminated street name sign
ISL	isl	Induction sign lighting
LED	led	Light emitting diode
LMA	lma	Luminaire mast arm
LPS	lps	Low pressure sodium
LTG	ltg	Lighting
LUM	lum	Luminaire
MAT	mat	Mast arm mounting vehicle signal faces, top attachment
MAS	mas	Mast arm mounting vehicle signal faces, side attachment
MAS-4A	mas-4A	Mast arm mounting vehicle signal faces, side attachment - 4 signal section
MAS-4B	mas-4B	
MAS-4C	mas-4C	
MAS-5A	mas-5A	Mast arm mounting vehicle signal faces, side attachment - 5 signal section
MAS-5B	mas-5B	
MC	mc	Mercury contactor
M/M	m/m	Multiple to multiple transformer
MT	mt	Conduit with pull wire or rope only
MTG	mtg	Mounting
	mv	Mercury vapor lighting fixture
N	N	Neutral (Grounded Conductor)
NC	NC	Normally closed
NO	NO	Normally open
PB	pb	Pull box
PEC	pec	Photoelectric control (Type I, II, III, IV or V as shown)
PED	ped	Pedestrian
PEU	peu	Photoelectric unit
PPB	ppb	Pedestrian push button
RL		Relocated equipment
RM	rm	Ramp metering
SB	sb	Slip base
SIC	sic	Signal interconnect cable
SIG	sig	Signal
SMA	sma	Signal mast arm
SNS	sns	Street name sign
SP	sp	Service point
TDC	tdc	Telephone demarcation cabinet
TMS	tms	Traffic monitoring station
TOS	tos	Traffic Operations System
VEH	veh	Vehicle
XFMR	xfmr	Transformer
COMM	comm	Communication
RWIS	rwis	Roadway weather information system

SOFFIT AND WALL MOUNTED LUMINAIRES

Pendant, 70 W HPS unless otherwise specified.

Flush, 70 W HPS unless otherwise specified.

Wall surface, 70 W HPS unless otherwise specified.

Existing soffit or wall luminaire to remain unmodified.

Existing soffit or wall luminaire to be modified as specified.

NOTE:

Arrow indicates "street side" of luminaire.

STATE OF CALIFORNIA
DEPARTMENT OF TRANSPORTATION

ELECTRICAL SYSTEMS (SYMBOLS AND ABBREVIATIONS)

NO SCALE

RSP ES-1A DATED OCTOBER 5, 2007 SUPERSEDES STANDARD PLAN ES-1A DATED MAY 1, 2006 - PAGE 400 OF THE STANDARD PLANS BOOK DATED MAY 2006.

REVISED STANDARD PLAN RSP ES-1A

2006 REVISED STANDARD PLAN RSP ES-1A

DIST	COUNTY	ROUTE	POST MILES TOTAL PROJECT	SHEET NO.	TOTAL SHEETS
06	Fre	41	R27.6/R29.8	95	107

REGISTERED ELECTRICAL ENGINEER

October 5, 2007
PLANS APPROVAL DATE

REGISTERED PROFESSIONAL ENGINEER Jeffery G. McRae No. E14512 Exp. 6-30-08 ELECTRICAL STATE OF CALIFORNIA

The State of California or its officers or agents shall not be responsible for the accuracy or completeness of electronic copies of this plan sheet.

To accompany plans dated 8-17-09

CONDUIT

PROPOSED	EXISTING	
		Lighting Conduit, unless otherwise indicated or noted
		Traffic signal conduit
C	c	Communication conduit
T	t	Telephone conduit
F	f	Fire alarm conduit
FO	fo	Fiber optic conduit
		Conduit termination (RSP ES-9A C)
R	r	Conduit riser in/on structure or service pole

SERVICE EQUIPMENT

PROPOSED	EXISTING	
OH	oh	Overhead lines
U	U	Wood pole "U" indicates utility owned
		Pole guy with anchor
		Utility transformer - ground mounted
III		Service equipment enclosure type
		Service equipment enclosure door indicates front of enclosure
T	t	Telephone demarcation cabinet

POLE-MOUNTED SERVICE DESIGNATION

Type of installation

TYPE H SERVICE - 28'-10" ← Pole height above grade

ILLUMINATED OVERHEAD SIGN

PROPOSED	EXISTING	
		Overhead sign - Single post
		Overhead sign - Two post
		Overhead sign - Mounted on structure
		Overhead sign with electrolier

SIGNAL EQUIPMENT

PROPOSED	EXISTING	
		Pedestrian signal face
		Pedestrian push button post
		Pedestrian barricade
		Vehicle signal face (with backplate, 3-Section: red, yellow and green)
		Vehicle signal face with angle visors
PV	PV	Modifications of basic symbols: "L" indicates all non-arrow sections louvered "LG" indicates louvered green section only "PV" indicates 12" programmed visibility sections "8" indicates all 8" sections (only when specified)
		Type 15TS and Vehicle signal face
		Vehicle signal face with red, yellow and green left arrow sections
		Vehicle signal face with red and yellow sections and up green arrow
		Vehicle signal face (5 Section) with red, yellow and green sections and yellow and green right arrows
		Type 1 Standard and attached vehicle signal faces
		Standard with signal mast arm only and attached vehicle signal faces and internally illuminated street name sign
		Type 33 Standard, Left-turn vehicle signal face and sign
		Standard with luminaire and signal mast arms and attached vehicle signal faces
		Cantilever flashing beacon Type 9 Frame, with a sign unless otherwise specified or indicated
		Type 15-FBS Standard with two vehicle signal face sections with lens, backplate and visor with a sign
R	Y	Flashing beacon. One vehicle signal face section with lens, backplate and visor. "R" indicates red indication, "Y" indicates yellow indication
		Controller assembly. Door indicates front of cabinet

SIGNAL EQUIPMENT Cont

PROPOSED	EXISTING	
		Guard post
		Type 1 Standard with "Meter On" sign
		Emergency Vehicle detector

NOTES:

1. All signal sections shall be 12" unless shown otherwise.
2. Signal heads shall be provided with backplates unless shown otherwise.
3. Signal indication shall be LED.

STATE OF CALIFORNIA
DEPARTMENT OF TRANSPORTATION

ELECTRICAL SYSTEMS (SYMBOLS AND ABBREVIATIONS)

NO SCALE

RSP ES-1B DATED OCTOBER 5, 2007 SUPERCEDES STANDARD PLAN ES-1B DATED MAY 1, 2006 - PAGE 401 OF THE STANDARD PLANS BOOK DATED MAY 2006.

REVISED STANDARD PLAN RSP ES-1B

2006 REVISED STANDARD PLAN RSP ES-1B

7-10-07

DIST	COUNTY	ROUTE	POST MILES TOTAL PROJECT	SHEET NO.	TOTAL SHEETS
06	Fre	41	R27.6/R29.8	96	107

REGISTERED ELECTRICAL ENGINEER

October 5, 2007
PLANS APPROVAL DATE

REGISTERED PROFESSIONAL ENGINEER Jeffery G. McRae No. E14512 Exp. 6-30-08 ELECTRICAL STATE OF CALIFORNIA

The State of California or its officers or agents shall not be responsible for the accuracy or completeness of electronic copies of this plan sheet.

To accompany plans dated 8-17-09

EQUIPMENT IDENTIFICATION

ILLUMINATED SIGN IDENTIFICATION NUMBER:

Sign No. 12345
10 ISL SCI 1.0

- Sign number - Place on post or structure
- Transformer rating (kVA)
- Lighting control type
- Number and type of fixtures

Do NOT place on standard or structure

ELECTROLIER OR EQUIPMENT IDENTIFICATION NUMBER:

12345 - 15'-0"

- Mast arm length, if shown. Do not place on standard or structure.
- Equipment number - Place on standard or structure. Existing equipment numbers are shown in parenthesis

CONDUIT AND CONDUCTOR IDENTIFICATION:

1½"C, 2#10, 15#14, 2 DLC

- Number and size of conductors and cables
- Size of conduit in inches

Ø1, Ø2, Ø2P, etc.	Traffic phase identification for signal faces, detectors and phase diagrams
1 2 3	Project note numbers
A B C	Equipment description, installation or item numbers
1 2 3	Conduit run numbers

SIGNAL AND LIGHTING STANDARD (TYPICAL DESIGNATION):

19A - 3 - 100

- Wind velocity = 100 mph
- Case 3 arm loading
- Standard type
- Standard Plan sheet number
- Detail number or letter

MISCELLANEOUS EQUIPMENT

PROPOSED	EXISTING	
CMS	cms	Changeable message sign
		Closed circuit television camera
		Highway advisory radio pole and antenna
EMS	ems	Extinguishable message sign
M V	m v	Detection device M = Microwave sensor V = Video image sensor

WIRING DIAGRAM LEGEND

P	Pole
CB	Circuit breaker
A	Ampere
V	Volt
M	Metered
UM	Unmetered
NB	Neutral bus
GB	Ground bus
G	Equipment grounding conductor
N	Grounded conductor (Neutral)

- External conductor
- Conductor or bus
- Tie point
- Contactor coil
- Contactor, Contact NO
- Terminal blocks
- Contactor, Contact NC
- Enclosure bond
- Grounding electrode
- Circuit breaker
- Receptacle

PULL BOXES

PROPOSED EXISTING

Pull box-No. 5 unless otherwise indicated or noted.

3 9A(21)

Pull box-Additional designations or descriptions

3	= No. 3½ pull box
5	= No. 5 pull box
6	= No. 6 pull box
7	= No. 7 (Ceiling pull box)
8	= No. 8 (Pendant soffit pull box)
9	= No. 9 pull box
9A	= No. 9A pull box

(C) = Communications pull box
(E) = Pull box with extension
(S) = Sprinkler control pull box
(21) = Anchor bolts and conduit for future installation of Type 21 Standard
(T) = Traffic pull box

VEHICLE DETECTORS

5 J 9 U

- Vehicle detector designation
- U = Upper
- L = Lower
- Slot number in input file
- Input file (I or J)
- Phase

PROPOSED EXISTING

	Type A detector loop. Outline of sawcut shown.
	Type B detector loop. Outline of sawcut shown.
	Type C detector loop. Outline of sawcut shown.
	Type D detector loop. Outline of sawcut shown.
	Type E detector loop. Outline of sawcut shown.
	Type Q detector loop. Outline of sawcut shown.
	Magnetic detector
DH dh	Detector handhole
	Microwave or video detection zone

STATE OF CALIFORNIA
DEPARTMENT OF TRANSPORTATION

ELECTRICAL SYSTEMS (SYMBOLS AND ABBREVIATIONS)

NO SCALE

RSP ES-1C DATED OCTOBER 5, 2007 SUPERCEDES STANDARD PLAN ES-1C DATED MAY 1, 2006 - PAGE 402 OF THE STANDARD PLANS BOOK DATED MAY 2006.

REVISED STANDARD PLAN RSP ES-1C

2006 REVISED STANDARD PLAN RSP ES-1C

DIST	COUNTY	ROUTE	POST MILES TOTAL PROJECT	SHEET NO.	TOTAL SHEETS
06	Fre	41	R27.6/R29.8	97	107

REGISTERED ELECTRICAL ENGINEER

October 5, 2007
PLANS APPROVAL DATE

REGISTERED PROFESSIONAL ENGINEER
Jeffery G. McRae
No. E14512
Exp. 6-30-08
ELECTRICAL
STATE OF CALIFORNIA

The State of California or its officers or agents shall not be responsible for the accuracy or completeness of electronic copies of this plan sheet.

To accompany plans dated 8-17-09

2006 REVISED STANDARD PLAN RSP ES-2C

NOTES-TYPE III SERVICE EQUIPMENT ENCLOSURES:

1. Service equipment enclosure and metering equipment shall meet the requirements of the service utility. The meter area shall have a sealable, lockable, weathertight cover that can be removed without the use of tools.

2. Service equipment enclosures shall be factory wired and conform to NEMA standards.

3. Dimensions of service equipment enclosures shall meet the requirements of the service utility.

4. The dead front panels on Type III service equipment enclosures shall have a continuous stainless steel or aluminum piano hinge. The panel in front of the breakers shall be secured with a latch or captive screws. No live parts shall be mounted on the dead front panel.

5. The exterior door shall have provisions for padlocking. The padlock hole shall be a minimum diameter of 7/16".

6. Enclosures housing transformers of more than one kVA shall have effective screened ventilation louver of not less than 50 square inches. Screen shall be stainless steel No. 304, with a No. 10 size mesh. Framed screen shall be secured with at least four bolts.

7. Fasteners on the exterior of the enclosure shall be vandal-resistant and shall not be removable from the exterior. Exterior screws, nuts, bolts and washers shall be stainless steel.

8. Landing lugs for incoming service conductors shall be compatible with either copper or aluminum conductors sized to suit the conductors shown on the plan. Landing lugs shall be copper or tin-plated aluminum. Neutral bus shall be rated for 125 A and be suitable for copper or aluminum conductors unless otherwise specified. The terminal shall include but not be limited to:

   a) Incoming terminals (landing lugs)
   b) Neutral lugs
   c) Solid neutral terminal strip

9. At least 6 standard single pole circuit breaker spaces, 3/4" nominal, shall be provided for branch circuits. Circuit breaker interiors shall be copper. Interiors of enclosure shall accept plug-in or cable-in/cable-out circuit breakers.

10. Control wiring shall be 600 V, 14 stranded machine tool wire. Where subject to flexing, 19 strand wire shall be used.

11. Main bus shall be rated for 125 A and shall be tin-plated copper.

12. A plastic laminated wiring diagram shall be provided with brass mounting eyelets and attached to the inside of the enclosure and the wiring diagram shall be affixed to the interior with a UL or ETL approved method.

13. An engraved phenolic nameplate on the dead front panel indicating the function of each circuit or device shall be installed with stainless steel rivets or stainless steel screws:

    a) Adjacent to the breaker or device with character size a minimum of 1/8".

    b) At the top of the exterior door panel indicating State system number, voltage level and number of phases with character size a minimum of 3/16".

14. The plan shows the approximate location of devices within the enclosure. Components may be rearranged, however, the "working" clearances within the service equipment enclosure shall be maintained.

15. In unpaved areas a raised portland cement concrete pad 2'-0" x 4" x width of foundation shall be constructed in front of new service equipment enclosure installation. Pad shall be set to elevation of foundation.

16. Foundation shall extend 2" minimum beyond edge of service equipment enclosure.

17. Internal bus, where shown, is typical only. Alternative design of proposed service equipment enclosure shall be submitted to the Engineer for approval.

18. Plug-in circuit breakers may be mounted in the vertical or horizontal position. Cable-in/cable-out circuit breakers shall be mounted in the vertical position.

19. Type III-AF and Type III-BF service equipment enclosures shall have the meter viewing windows located on the front side of the service equipment enclosures.

20. Type III-AR and Type III-BR service equipment enclosures shall be similarly constructed as Type III-AF and Type III-BF respectively, except the meter viewing windows shall be located on the back side of the service equipment enclosures.

21. Minimum clearance shall be required for front and back of service equipment enclosure per National Electrical Code, Article 110.26, "Spaces About Electric Equipment (600 Volts, Nominal, or Less)."

STATE OF CALIFORNIA
DEPARTMENT OF TRANSPORTATION

ELECTRICAL SYSTEMS (SERVICE EQUIPMENT NOTES TYPE III SERIES)

NO SCALE

RSP ES-2C DATED OCTOBER 5, 2007 SUPERCEDES STANDARD PLAN ES-2C
DATED MAY 1, 2006 - PAGE 405 OF THE STANDARD PLANS BOOK DATED MAY 2006.

REVISED STANDARD PLAN RSP ES-2C

DIST	COUNTY	ROUTE	POST MILES TOTAL PROJECT	SHEET NO.	TOTAL SHEETS
06	Fre	41	R27.6/R29.8	98	107

REGISTERED ELECTRICAL ENGINEER

October 5, 2007
PLANS APPROVAL DATE

REGISTERED PROFESSIONAL ENGINEER Jeffery G. McRae No. E14512 Exp. 6-30-08 ELECTRICAL STATE OF CALIFORNIA

The State of California or its officers or agents shall not be responsible for the accuracy or completeness of electronic copies of this plan sheet.

To accompany plans dated 8-17-09

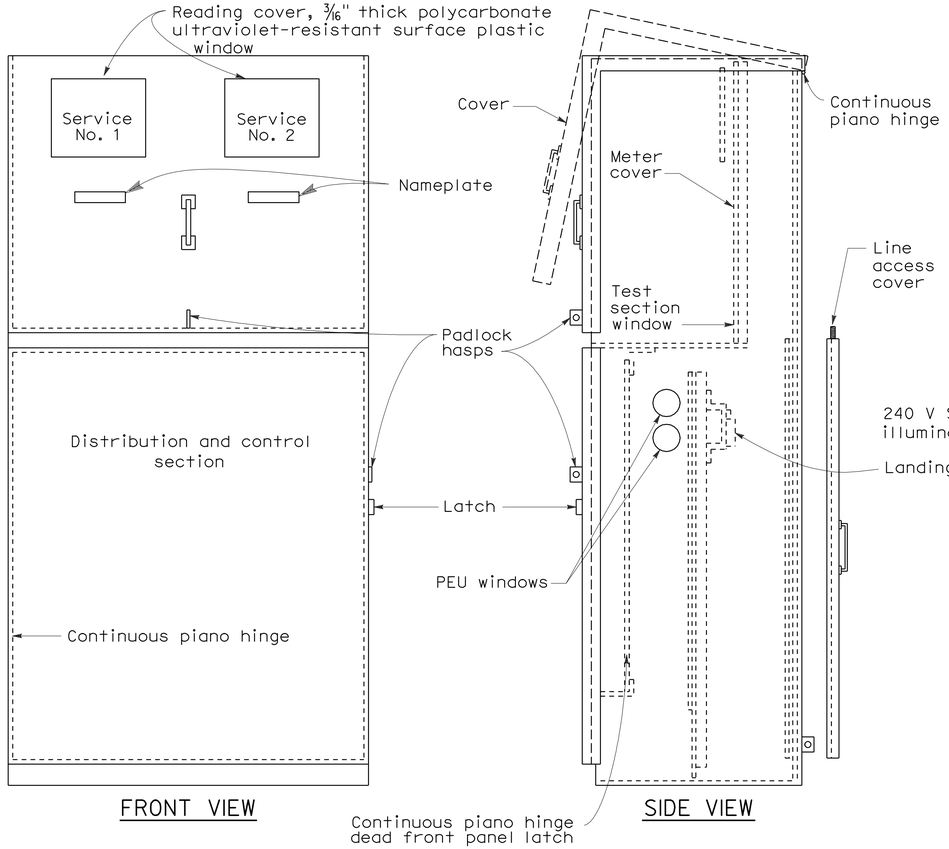

TYPE III-CF SERVICE EQUIPMENT ENCLOSURE WITH PROVISIONS FOR TWO 100 A METERS (TYPICAL)

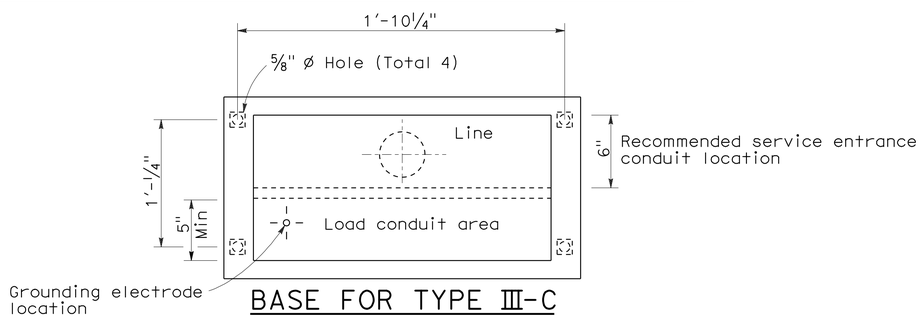

BASE FOR TYPE III-C SERVICE EQUIPMENT ENCLOSURE

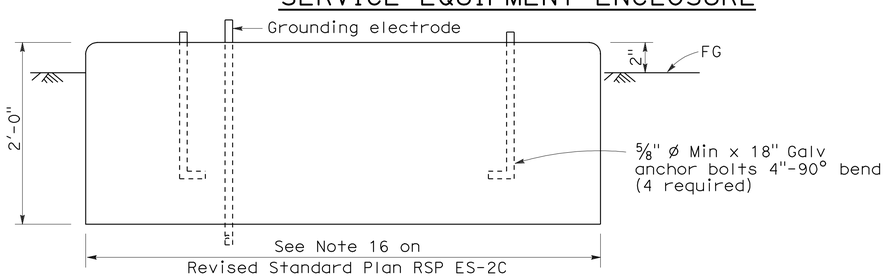

FOUNDATION DETAIL

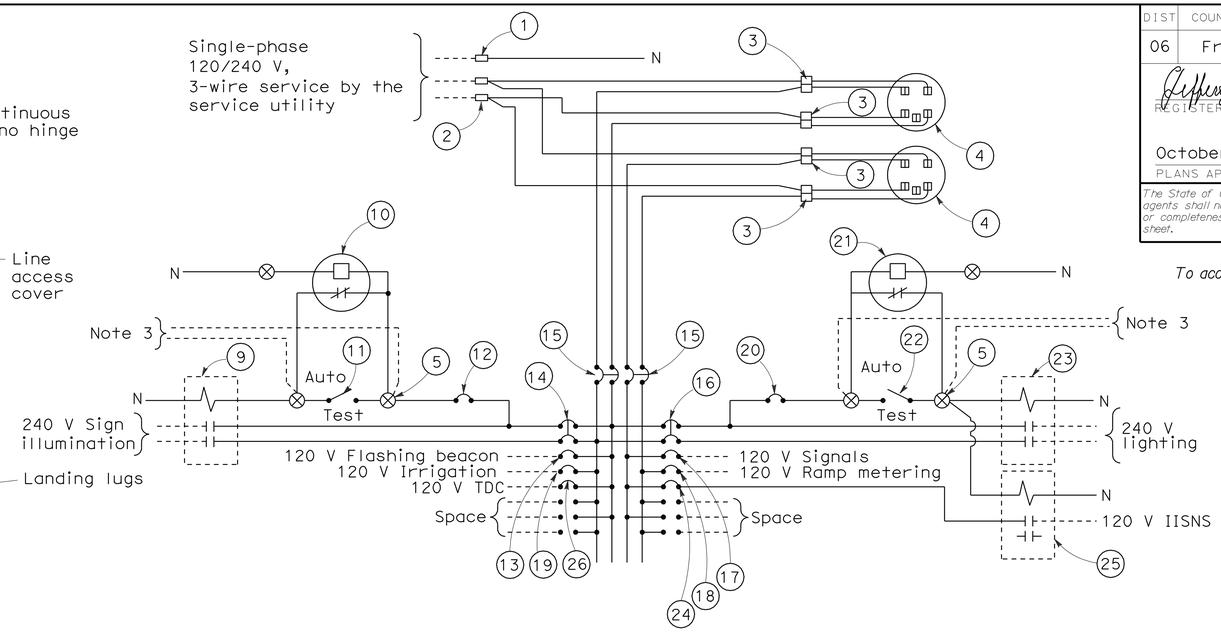

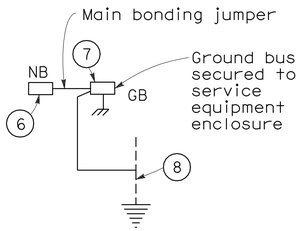

120/240 V SERVICE WIRING DIAGRAM (TYPICAL)

TYPE III-C SERVICE (120/240 V) EQUIPMENT LEGEND

ITEM No.	COMPONENT	NAME PLATE DESCRIPTION	ITEM No.	COMPONENT	NAME PLATE DESCRIPTION
1	Neutral lug		14	30 A, 240 V, 2P, CB	Sign Illumination
2	Landing lug (Note 6)		15	100 A, 240 V, 2P, CB	Main Breaker
3	Test bypass facility		16	30 A, 240 V, 2P, CB	Lighting
4	Meter socket and support		17	50 A, 120 V, 1P, CB	Signals
5	Terminal blocks		18	30 A, 120 V, 1P, CB	Ramp Metering
6	Neutral bus		19	20 A, 120 V, 1P, CB	Irrigation
7	Ground bus		20	15 A, 120 V, 1P, CB	Lighting Control
8	Grounding electrode		21	Photoelectric unit (Note 7)	
9	30 A, 2PNO, Contactor	Sign Illumination	22	15 A, 1P, Test switch	Lighting Control
10	Photoelectric unit (Note 7)		23	60 A, 2PNO Contactor	Lighting
11	15 A, 1P, Test switch	Sign Illumination Test Switch	24	15 A, 120 V, 1P, CB	IISNS
12	15 A, 120 V, 1P, CB	Sign Illumination Control	25	30 A, 2PNO Contactor	IISNS
13	15 A, 120 V, 1P, CB	Flashing Beacon	26	20 A, 120 V, 1P, CB	Telephone Demarcation Cabinet

NOTES: (FOR SERVICE EQUIPMENT ENCLOSURE)

1. Voltage ratings of service equipment shall conform to the service voltages indicated on the plans.
2. Unless otherwise indicated on the plans, service equipment items shall be provided for each service equipment enclosure as shown.
3. Connect to remote test switch mounted on lighting standards, sign post or structure when required.
4. Items No. 1 and 6 shall be isolated from the service equipment enclosure.
5. Meter sockets shall be 5 clip type.
6. The landing lug shall be suitable for multiple conductors.
7. Type V photoelectric control shall be used unless otherwise indicated on the plans.

STATE OF CALIFORNIA
DEPARTMENT OF TRANSPORTATION

ELECTRICAL SYSTEMS (SERVICE EQUIPMENT AND TYPICAL WIRING DIAGRAM TYPE III-C SERIES)

NO SCALE

RSP ES-2F DATED OCTOBER 5, 2007 SUPERCEDES STANDARD PLAN ES-2F DATED MAY 1, 2006 - PAGE 408 OF THE STANDARD PLANS BOOK DATED MAY 2006.

REVISED STANDARD PLAN RSP ES-2F

2006 REVISED STANDARD PLAN RSP ES-2F

8-17-07

DIST	COUNTY	ROUTE	POST MILES TOTAL PROJECT	SHEET NO.	TOTAL SHEETS
06	Fre	41	R27.6/R29.8	99	107

REGISTERED ELECTRICAL ENGINEER

June 6, 2008
PLANS APPROVAL DATE

REGISTERED PROFESSIONAL ENGINEER Jeffery G. McRae No. E14512 Exp. 6-30-10 ELECTRICAL STATE OF CALIFORNIA

The State of California or its officers or agents shall not be responsible for the accuracy or completeness of electronic copies of this plan sheet.

To accompany plans dated 8-17-09

VISORS

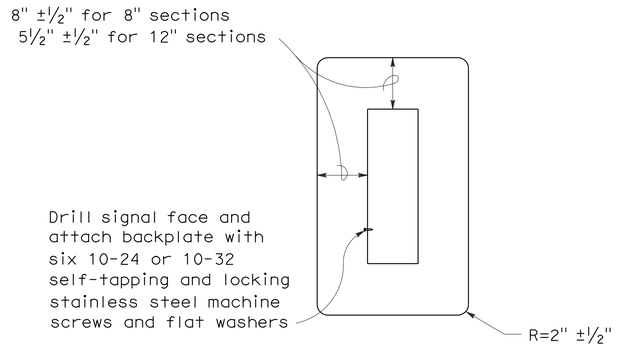

8" AND 12" SECTIONS

BACKPLATE

1/16" minimum thickness
3001-14 aluminum, or plastic when specified

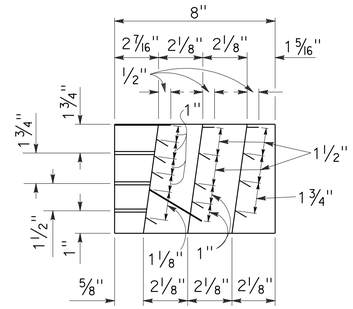

SECTION A-A

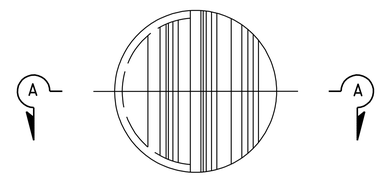

FRONT VIEW

DIRECTIONAL LOUVER

Directional louvers shall be oriented as directed by the Engineer and secured in place with one plated brass machine screw and nut.

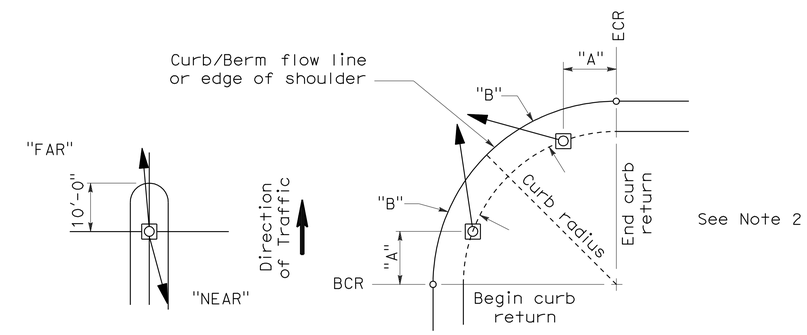

NOTES:

1. Typical signal pole placement unless dimensioned on plans.
2. For "A" and "B" dimensions, see Pole Schedule, or as directed by the Engineer.

SIGNAL STANDARD PLACEMENT DIMENSIONS AND EQUIPMENT LOCATIONS

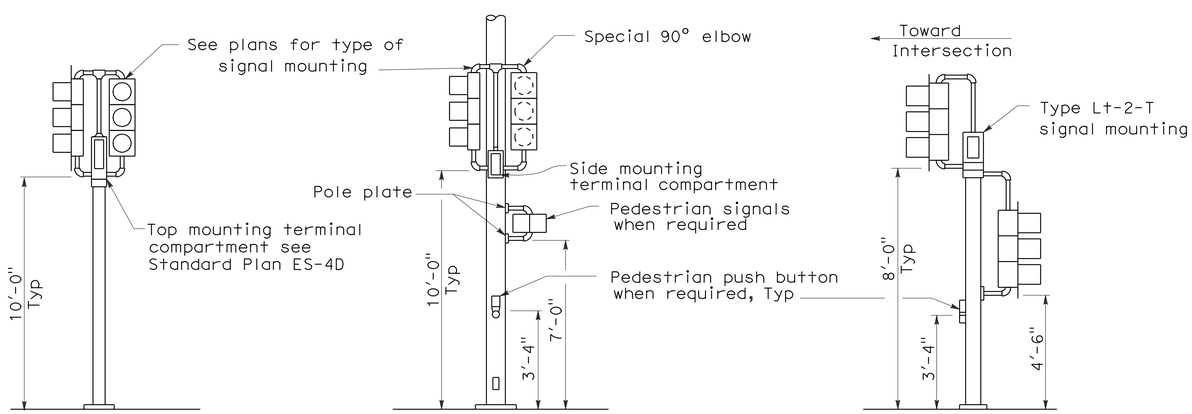

TOP MOUNTED SIGNALS (TV)

Type 1-A, 1-B, 1-C and 1-D standard as indicated on the plans

SIDE MOUNTED SIGNALS (SV AND SP)

Normally used on standards with luminaire or signal mast arm

LEFT TURN LANE SIGNAL

Type 1-A, 1-B, 1-C and 1-D standard as indicated on plans

TYPICAL SIGNAL INSTALLATIONS

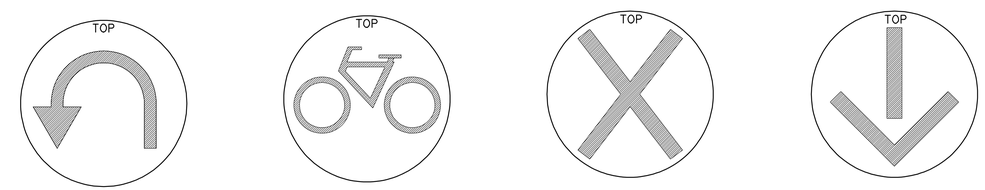

U-TURN SIGNAL FACE

BICYCLE SIGNAL FACE

LANE CONTROL SIGNAL FACE

LANE CONTROL SIGNAL FACE

STATE OF CALIFORNIA
DEPARTMENT OF TRANSPORTATION

ELECTRICAL SYSTEMS (SIGNAL HEADS AND MOUNTINGS)

NO SCALE

RSP ES-4C DATED JUNE 6, 2008 SUPERSEDES STANDARD PLAN ES-4C DATED MAY 1, 2006 - PAGE 420 OF THE STANDARD PLANS BOOK DATED MAY 2006.

REVISED STANDARD PLAN RSP ES-4C

2006 REVISED STANDARD PLAN RSP ES-4C

5-19-08

DIST	COUNTY	ROUTE	POST MILES TOTAL PROJECT	SHEET NO.	TOTAL SHEETS
06	Fre	41	R27.6/R29.8	100	107

REGISTERED ELECTRICAL ENGINEER

June 6, 2008
PLANS APPROVAL DATE

REGISTERED PROFESSIONAL ENGINEER Jeffery G. McRae No. E14512 Exp. 6-30-10 ELECTRICAL STATE OF CALIFORNIA

The State of California or its officers or agents shall not be responsible for the accuracy or completeness of electronic copies of this plan sheet.

To accompany plans dated 8-17-09

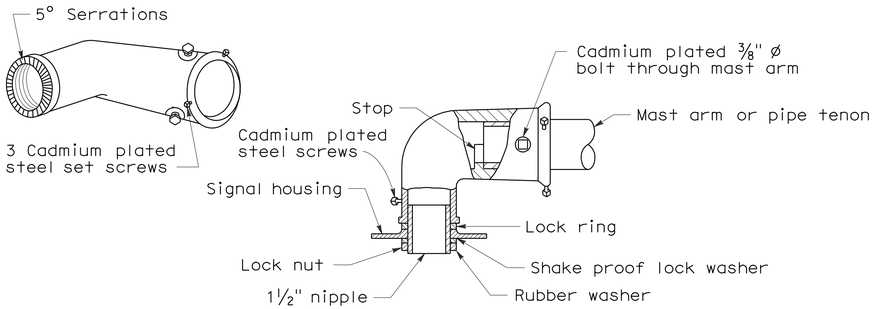

MAST ARM MOUNTING - TYPE "MAT"

For 2 NPS pipe, see Note 1.

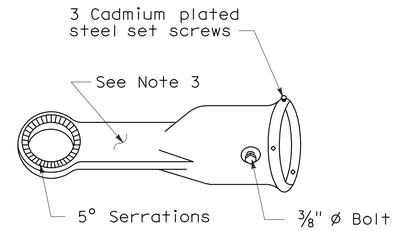

MAST ARM MOUNTING - TYPE "MAS"

For 2 NPS pipe. See Note 1.

SIGNAL SLIP FITTERS

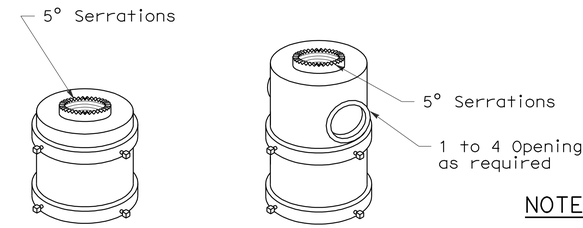

For one mounting For mulitiple mountings

TOP MOUNTINGS

For 4 NPS pipe, see Note 2.

NOTES:

1. After mast arm signal has been plumbed and secured, drill 7/16" hole through mast arm tenon in line with slip fitter hole. Place a cadmium plated 3/8" ø galvanized bolt with washer under bolt head through hole and secure with washer, nut, and locknut. Seal openings between mast arm mountings and mast arm with mastic.
2. (a) Threaded top mounted slip fitter openings shall be 1 1/2 NPS.

   (b) Serrations in fittings shall match those on bottom of signal heads or in lock ring.

   (c) Top opening shall be offset when backplate is used.
3. Wireway shall have a cross section area of 0.95 square inch minimum. Minimum width of 1/2".

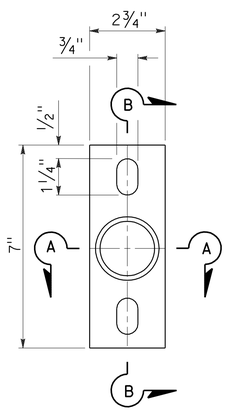

POLE PLATE

For side mountings

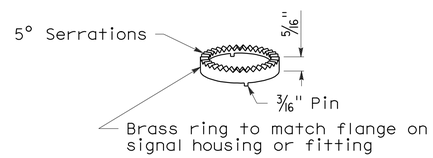

LOCK RING

Use where locking ring is not integral with signal housing or fitting.

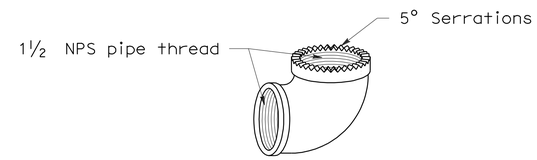

SPECIAL 90° ELBOW

One for each signal head, except those with special slip fitter mounting

MISCELLANEOUS MOUNTING HARDWARE

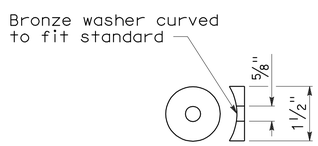

DETAIL "C"

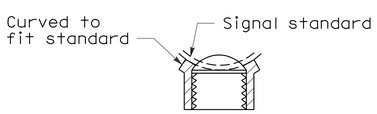

SECTION A-A

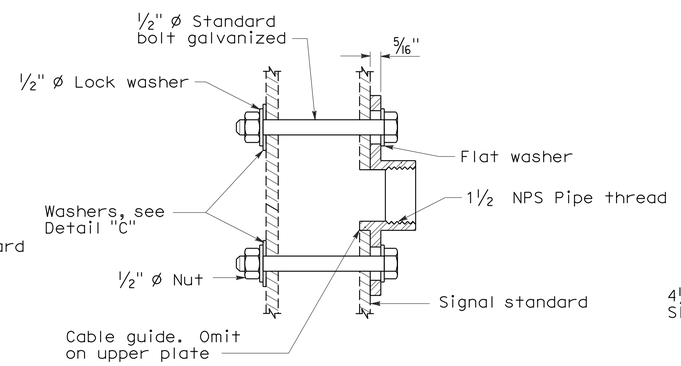

SECTION B-B

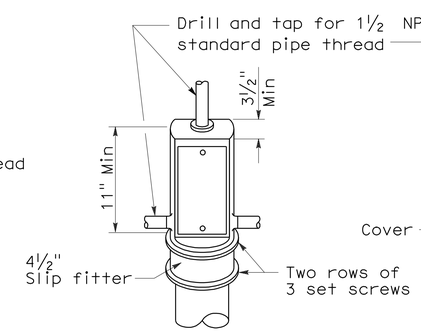

TOP MOUNTING

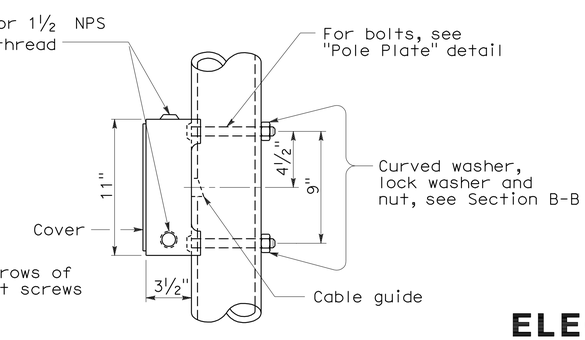

SIDE MOUNTING

TERMINAL COMPARTMENTS

STATE OF CALIFORNIA
DEPARTMENT OF TRANSPORTATION

ELECTRICAL SYSTEMS (SIGNAL HEADS AND MOUNTINGS)

NO SCALE

RSP ES-4D DATED June 6, 2008 SUPERSEDES STANDARD PLAN ES-4D
DATED MAY 1, 2006 - PAGE 421 OF THE STANDARD PLANS BOOK DATED MAY 2006.

REVISED STANDARD PLAN RSP ES-4D

2006 REVISED STANDARD PLAN RSP ES-4D

5-19-08

DIST	COUNTY	ROUTE	POST MILES TOTAL PROJECT	SHEET NO.	TOTAL SHEETS
06	Fre	41	R27.6/R29.8	101	107

REGISTERED ELECTRICAL ENGINEER

October 5, 2007
PLANS APPROVAL DATE

REGISTERED PROFESSIONAL ENGINEER Jeffery G. McRae No. E14512 Exp. 6-30-08 ELECTRICAL STATE OF CALIFORNIA

The State of California or its officers or agents shall not be responsible for the accuracy or completeness of electronic copies of this plan sheet.

To accompany plans dated 8-17-09

LOOP INSTALLATION PROCEDURE

1. Loops shall be centered in lanes.
2. Saw slots in pavement for loop conductors as shown in details.
3. Distance between side of loop and a lead-in saw cut from adjacent detectors shall be 2'-0" minimum. Distance between lead-in saw cuts shall be 6" minimum.
4. Bottom of saw slot shall be smooth with no sharp edges.
5. Slots shall be washed until clean, blown out and thoroughly dried before installing loop conductors.
6. Adjacent loops on the same sensor unit channel shall be wound in opposite directions.
7. Identify and tag loop circuit pairs in the pull box with loop number, start (S) and finish (F) of conductor. Identify and tag lead-in-cable with sensor number and phase.
8. Install loop conductor in slot using a 3/16" to 1/4" thick wood paddle. Hold loop conductors with wood paddles (at the bottom of the sawed slot) during sealant placement.
9. No more than 2 twisted pairs shall be installed in one sawed slot.
10. Allow additional 5'-0" of slack length of conductor for the lead-in run to pull box.
11. The additional length of each conductor for each loop shall be twisted together into a pair (6 turns per 3'-4" minimum) before being placed in the slot and conduit leading to pull box.
12. Test each loop circuit for continuity, circuit resistance and insulation resistance at the pull box before filling slots.
13. Fill slots as shown in details.
14. Splice loop conductors to lead-in-cable. Splices shall be soldered.
15. End of lead-in-cable and Type 2 loop conductor shall be waterproofed prior to installing in conduit to prevent moisture from entering the cable.
16. Lead-in-cable shall not be spliced between the pull box and the controller cabinet terminals.
17. Test each loop circuit for continuity, circuit resistance and insulation resistance at the controller cabinet location.
18. Where loop conductors are not to be spliced to a lead-in-cable, the ends of the conductors shall be taped and waterproofed with electrical insulating coating.

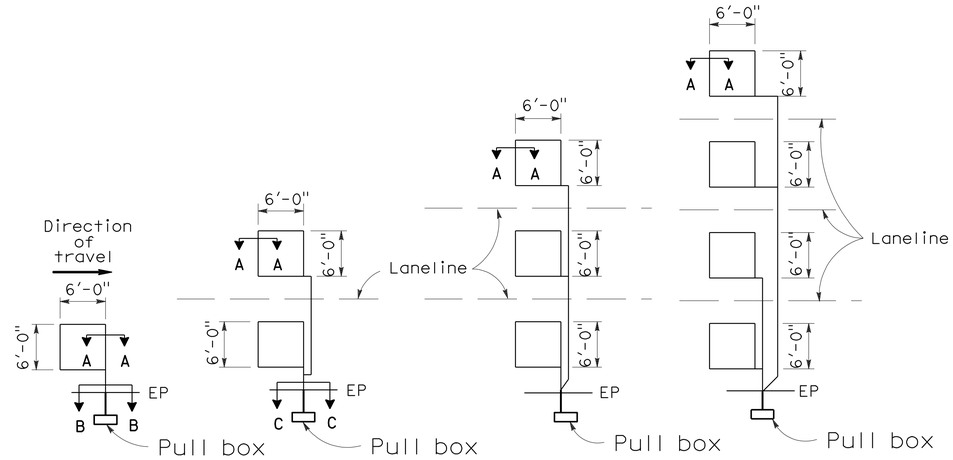

TYPE 1A INSTALLATION | TYPE 2A INSTALLATION | TYPE 3A INSTALLATION | TYPE 4A INSTALLATION

SAWCUT DETAILS

(Type A loop detector configurations illustrated)

1. 1A thru 4A = 1 Type A loop configuration in each lane.
2. 1B thru 4B = 1 Type B loop configuration in each lane.
3. 1C = 1 Type C loop configuration entering lanes as required.
4. 1D thru 4D = 1 Type D loop configuration in each lane.
5. 1E thru 4E = 1 Type E loop configuration in each lane.
6. 1Q thru 4Q = 1 Type Q loop configuration in each lane. (Use Type A, B, C, D, E or Q loop detector configurations only when specified or shown on plans)

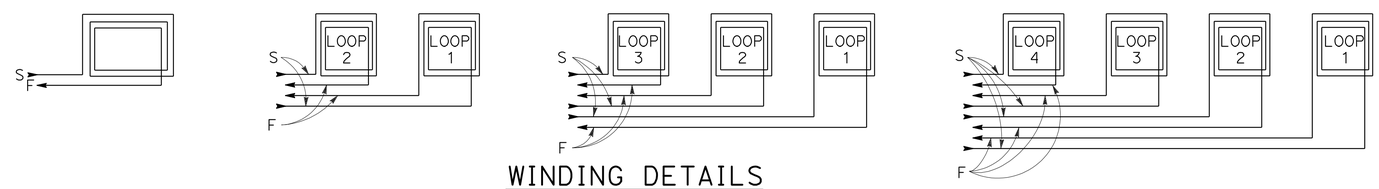

WINDING DETAILS

See Notes 6 and 7

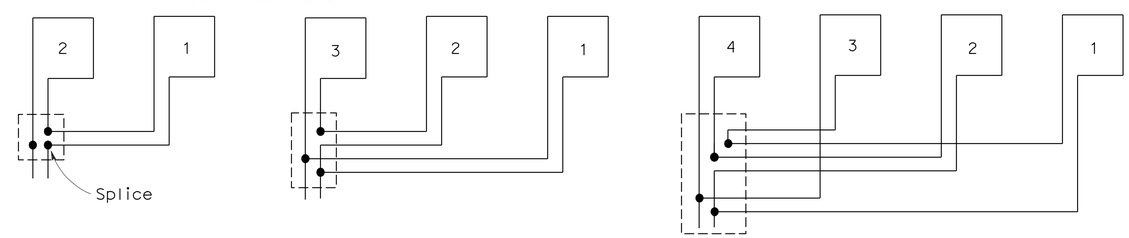

TYPICAL LOOP CONNECTIONS

(Dashed lines represent the pull box)

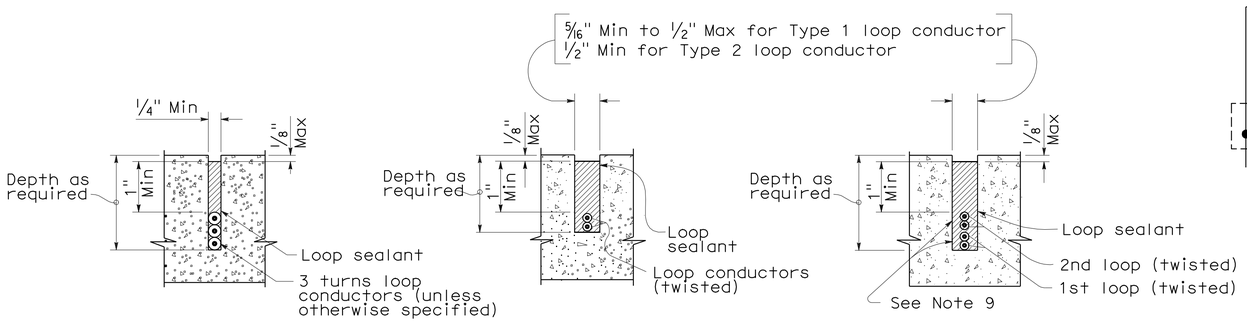

SECTION A-A | SECTION B-B | SECTION C-C

SLOT DETAILS - TYPE 1 AND TYPE 2 LOOP CONDUCTOR

STATE OF CALIFORNIA
DEPARTMENT OF TRANSPORTATION

ELECTRICAL SYSTEMS (DETECTORS)

NO SCALE

RSP ES-5A DATED OCTOBER 5, 2007 SUPERCEDES STANDARD PLAN ES-5A DATED MAY 1, 2006 - PAGE 423 OF THE STANDARD PLANS BOOK DATED MAY 2006.

REVISED STANDARD PLAN RSP ES-5A

2006 REVISED STANDARD PLAN RSP ES-5A

DIST	COUNTY	ROUTE	POST MILES TOTAL PROJECT	SHEET NO.	TOTAL SHEETS
06	Fre	41	R27.6/R29.8	102	107

REGISTERED CIVIL ENGINEER

October 5, 2007
PLANS APPROVAL DATE

REGISTERED PROFESSIONAL ENGINEER
Stanley P. Johnson
No. C57793
Exp. 3-31-08
CIVIL
STATE OF CALIFORNIA

The State of California or its officers or agents shall not be responsible for the accuracy or completeness of electronic copies of this plan sheet.

To accompany plans dated 8-17-09

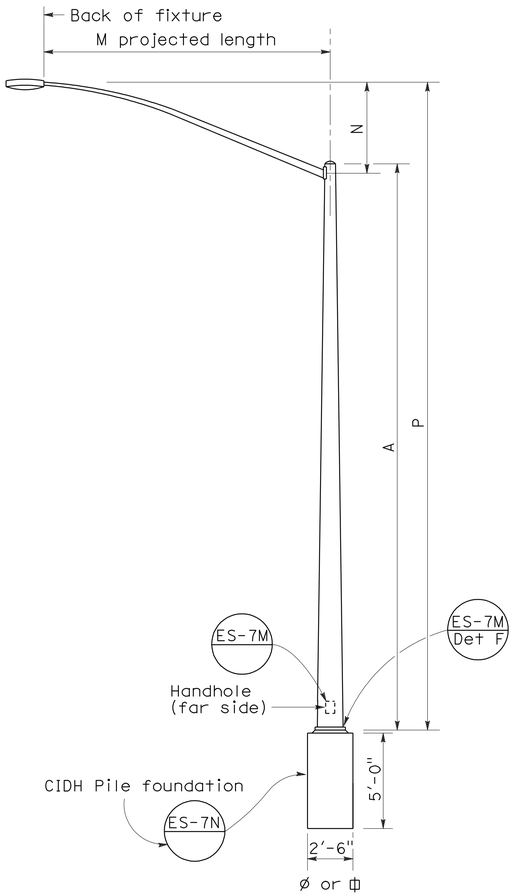

ELEVATION
TYPE 15 AND TYPE 21

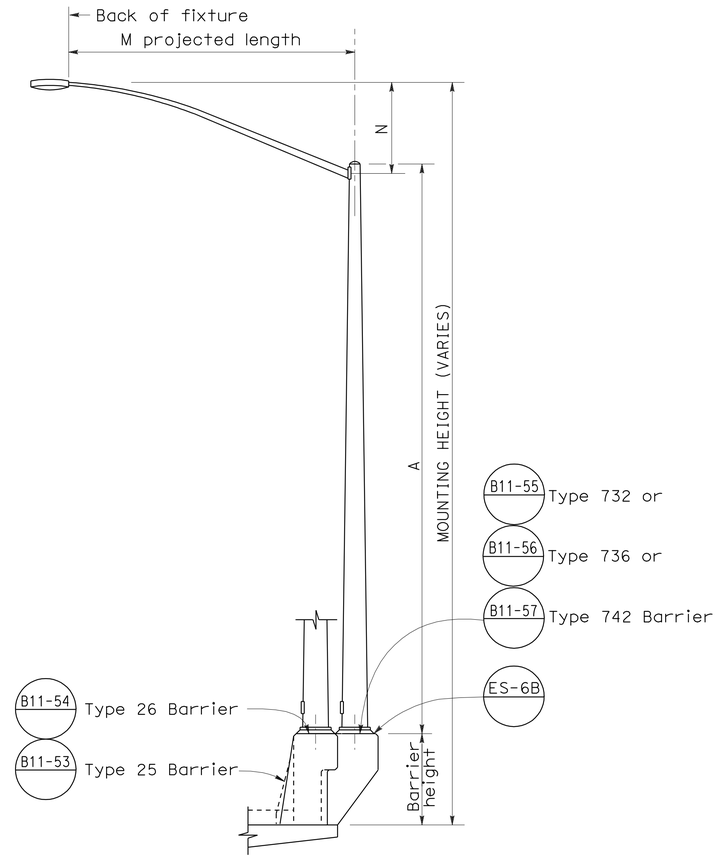

ELEVATION
TYPE 15 AND TYPE 21 BARRIER RAIL MOUNTED

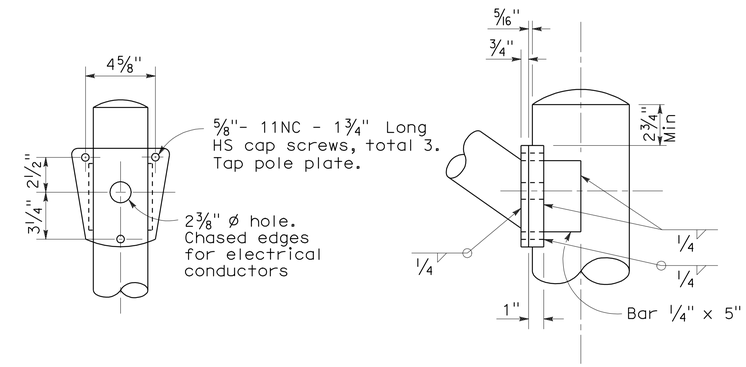

DETAIL R
LUMINAIRE ARM CONNECTION

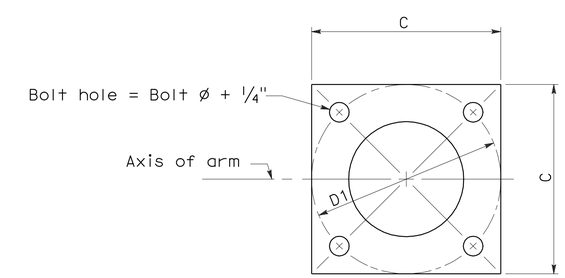

BASE PLATE

POLE TYPE	POLE DATA				BASE PLATE DATA				LUMINAIRE ARM
	A Height	Min OD		Wall Thickness	C	D1 Bolt Circle	Thick-ness	Anchor Bolts	
		Base	Top					Size	
15	30′	8"	3 7/8"	0.1196"	1′-0"	1′-0"	1"	1" ø x 3′-0" x 4"*	6′ - 15′ [12′]
21	35′	8 5/8"	3 7/8"	0.1196"	1′-0"	1′-0"	1"	1 1/4"ø x 3′-0" x 4"*	6′ - 15′ [12′]

* For barrier rail bolts, see Standard Plan ES-6B.

LUMINAIRE ARM DATA					
M Projected Length	N Rise	Min OD At Pole	Nominal Thickness	P	
				Type 15	Type 21
6′-0"	2′-0"±	3 1/4"	0.1196"	31′-6"±	36′-6"±
8′-0"	2′-6"±	3 1/2"	0.1196"	32′-0"±	37′-0"±
10′-0"	3′-3"±	3 7/8"	0.1196"	32′-9"±	37′-9"±
12′-0"	4′-3"±	3 7/8"	0.1196"	33′-9"±	38′-9"±
15′-0"	4′-9"±	4 1/4"	0.1196"	34′-3"±	39′-3"±

NOTES:

1. ☐ Indicates arm length to be used unless otherwise noted on the plans.
2. For Type 15-SB, use Type 15 standard with Type 30 slip base plate details, see Standard Plan ES-6F.
3. For additional notes, see Standard Plan ES-7M and ES-7N.

STATE OF CALIFORNIA
DEPARTMENT OF TRANSPORTATION

ELECTRICAL SYSTEMS (LIGHTING STANDARD TYPES 15 AND 21)

NO SCALE

RSP ES-6A DATED OCTOBER 5, 2007 SUPERCEDES STANDARD PLAN ES-6A
DATED MAY 1, 2006 - PAGE 427 OF THE STANDARD PLANS BOOK DATED MAY 2006.

REVISED STANDARD PLAN RSP ES-6A

2006 REVISED STANDARD PLAN RSP ES-6A

7-10-07

DIST	COUNTY	ROUTE	POST MILES TOTAL PROJECT	SHEET NO.	TOTAL SHEETS
06	Fre	41	R27.6/R29.8	103	107

REGISTERED CIVIL ENGINEER

January 18, 2008
PLANS APPROVAL DATE

REGISTERED PROFESSIONAL ENGINEER
Stanley P. Johnson
No. C57793
Exp. 03-31-08
CIVIL
STATE OF CALIFORNIA

The State of California or its officers or agents shall not be responsible for the accuracy or completeness of electronic copies of this plan sheet.

To accompany plans dated 8-17-09

LUMINAIRE ARM DATA

PROJECTED LENGTH	THICKNESS	MINIMUM OD @ POLE	MOUNTING HEIGHT
* 6'-0"	0.1196"	3¼"	36'-9"±
8'-0"		3½"	37'-3"±
10'-0"		3¾"	38'-0"±
12'-0"		3¾"	39'-0"±
15'-0"		4¼"	39'-6"±
** 20'-0"	0.1793"	5"	37'-0"±

* Type 30 - arm length 6'-0" - 15'-0" maximum
** Type 31 - arm lengths 20'-0"

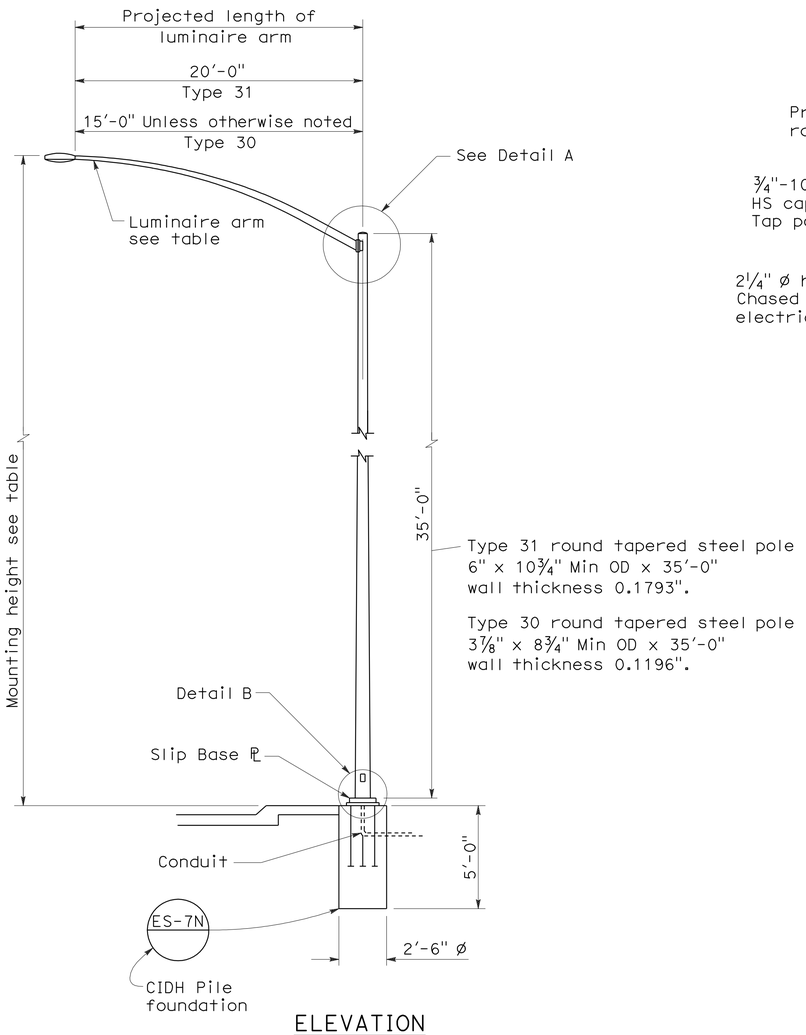

ELEVATION

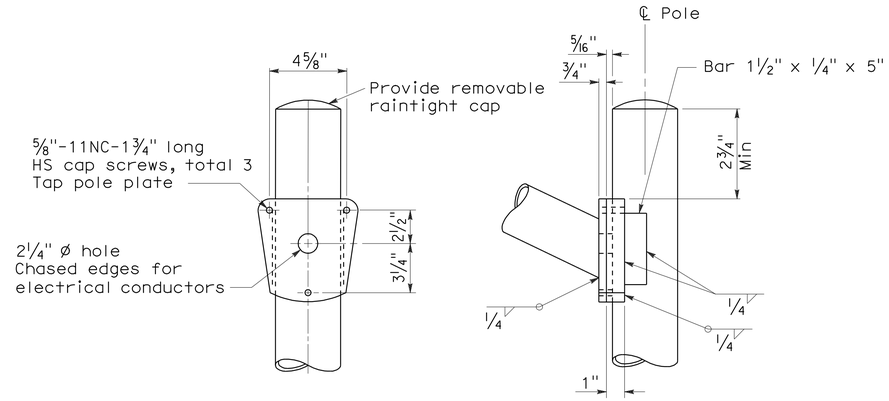

DETAIL A - TYPE 30

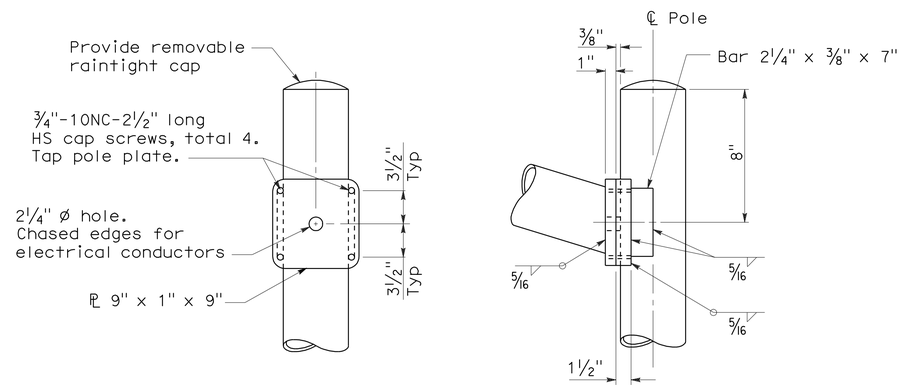

DETAIL A - TYPE 31

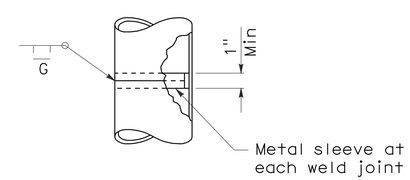

POLE SPLICE

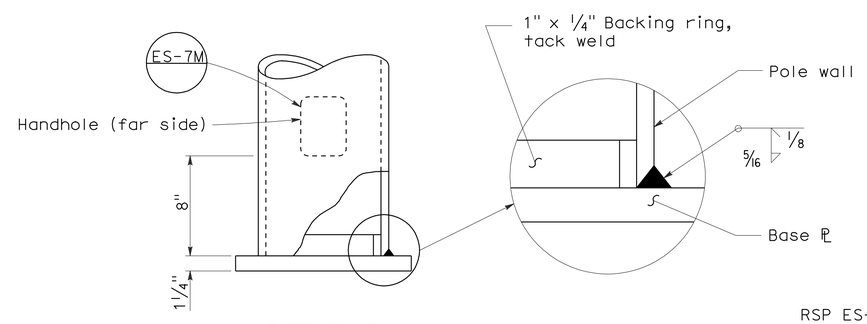

DETAIL B

NOTES:

1. Sheet steel shall have a minimum yield of 48,000 psi.
2. For slip base details see Standard Plan ES-6F.
3. For Type 30 fixed base use Type 15 base plate, and foundation shown on Revised Standard Plan RSP ES-6A. Use 1¼" Dia x 3'-6" x 4" anchor bolts.
4. For Type 31 fixed base use Type 32 base plate, anchor bolts and foundation on Standard Plan ES-6G.
5. Handhole shall be located on downstream side of traffic unless noted otherwise on plans.
6. For additional general notes refer to Standard Plan ES-7M.

STATE OF CALIFORNIA
DEPARTMENT OF TRANSPORTATION

ELECTRICAL SYSTEMS (LIGHTING STANDARD TYPES 30 AND 31)

NO SCALE

RSP ES-6E DATED JANUARY 18, 2008 SUPERCEDES STANDARD PLAN ES-6E DATED MAY 1, 2006 - PAGE 430 OF THE STANDARD PLANS BOOK DATED MAY 2006.

REVISED STANDARD PLAN RSP ES-6E

2006 REVISED STANDARD PLAN RSP ES-6E

11-19-07

DIST	COUNTY	ROUTE	POST MILES TOTAL PROJECT	SHEET NO.	TOTAL SHEETS
06	Fre	41	R27.6/R29.8	104	107

REGISTERED CIVIL ENGINEER

October 5, 2007
PLANS APPROVAL DATE

REGISTERED PROFESSIONAL ENGINEER Stanley P. Johnson No. C57793 Exp. 3-31-08 CIVIL STATE OF CALIFORNIA

The State of California or its officers or agents shall not be responsible for the accuracy or completeness of electronic copies of this plan sheet.

To accompany plans dated 8-17-09

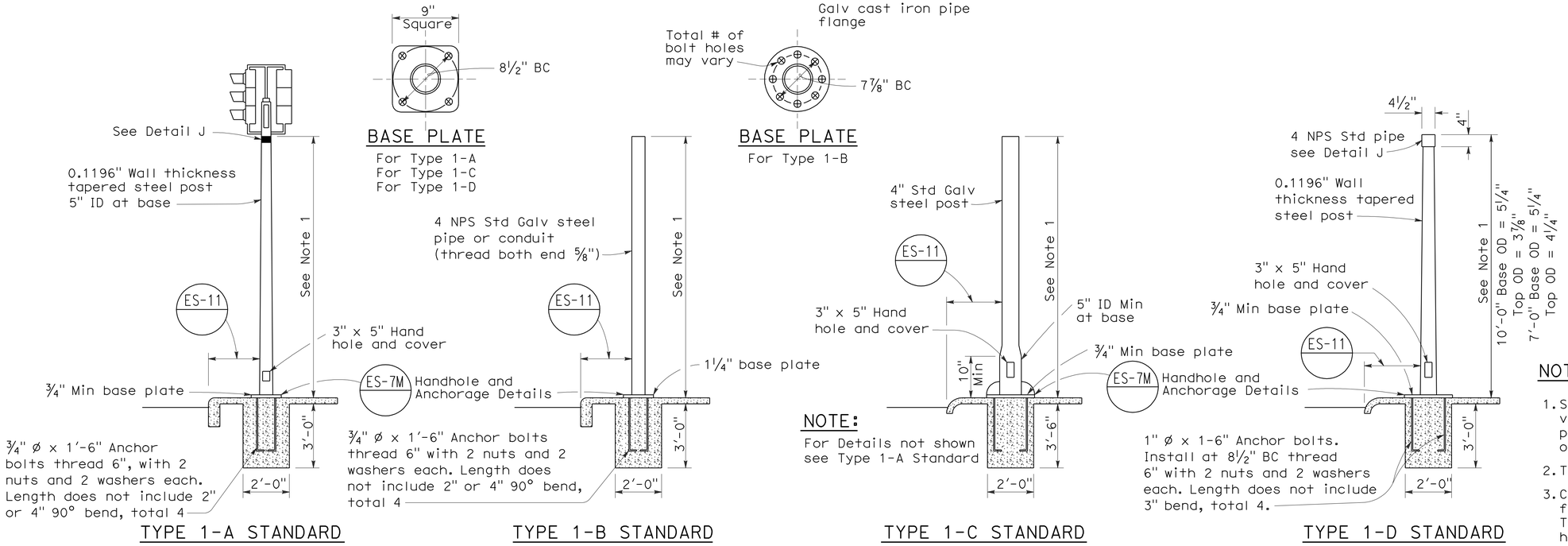

TYPE 1 SIGNAL STANDARDS

NOTES:

1. Standards shall be 10'-0" ± 2" for vehicle signals and 7'-0" ± 2" for pedestrian signals unless otherwise noted on plans.
2. Top of standards shall be 4½" OD.
3. Conduits shall extend 2" maximum above finished surface of foundation and for Types 1-A, 1-C and 1-D shall be sloped toward handhole.
4. Anchor bolts shall be bonded to conduit or grounding conductor.
5. Conduit between standard and adjacent pull box shall be 2" minimum.
6. Paint numbers on roadway side facing traffic when electrolier or post is left of direction of traffic.

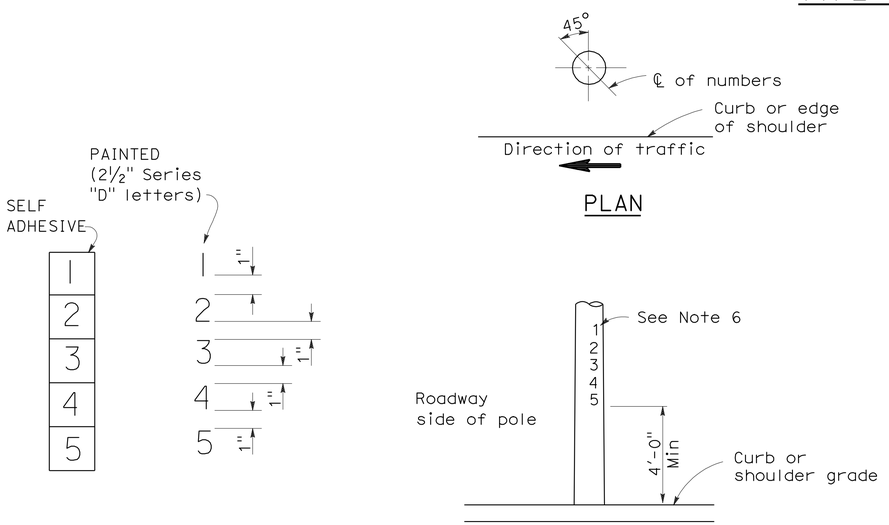

LOCATION OF EQUIPMENT NUMBERS ON STANDARDS AND POSTS

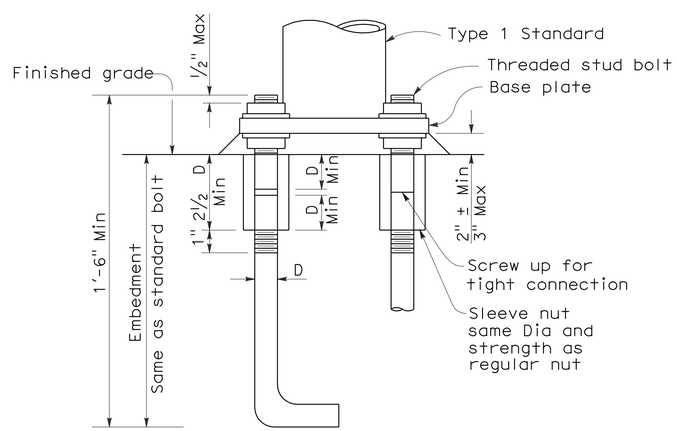

ANCHOR BOLTS WITH SLEEVE NUTS

Sleeve nuts to be used only when shown or specified on Project Plans

D = Diameter of anchor bolt

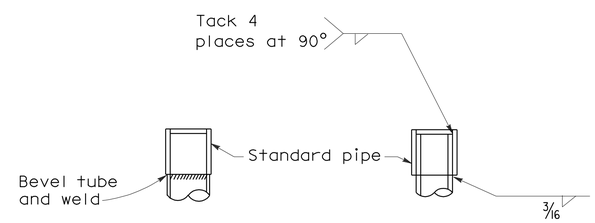

DETAIL J

Tube may be inserted into pipe or butted as required

STATE OF CALIFORNIA
DEPARTMENT OF TRANSPORTATION

ELECTRICAL SYSTEMS (SIGNAL AND LIGHTING STANDARD TYPE 1 STANDARD AND EQUIPMENT NUMBERING)

NO SCALE

RSP ES-7B DATED OCTOBER 5, 2007 SUPERCEDES STANDARD PLAN ES-7B DATED MAY 1, 2006 - PAGE 438 OF THE STANDARD PLANS BOOK DATED MAY 2006.

REVISED STANDARD PLAN RSP ES-7B

2006 REVISED STANDARD PLAN RSP ES-7B

7-10-07

DIST	COUNTY	ROUTE	POST MILES TOTAL PROJECT	SHEET NO.	TOTAL SHEETS
06	Fre	41	R27.6/R29.8	105	107

REGISTERED CIVIL ENGINEER

June 15, 2007
PLANS APPROVAL DATE

REGISTERED PROFESSIONAL ENGINEER Stanley P. Johnson No. C57793 Exp. 3-31-08 CIVIL STATE OF CALIFORNIA

The State of California or its officers or agents shall not be responsible for the accuracy or completeness of electronic copies of this plan sheet.

To accompany plans dated 8-17-09

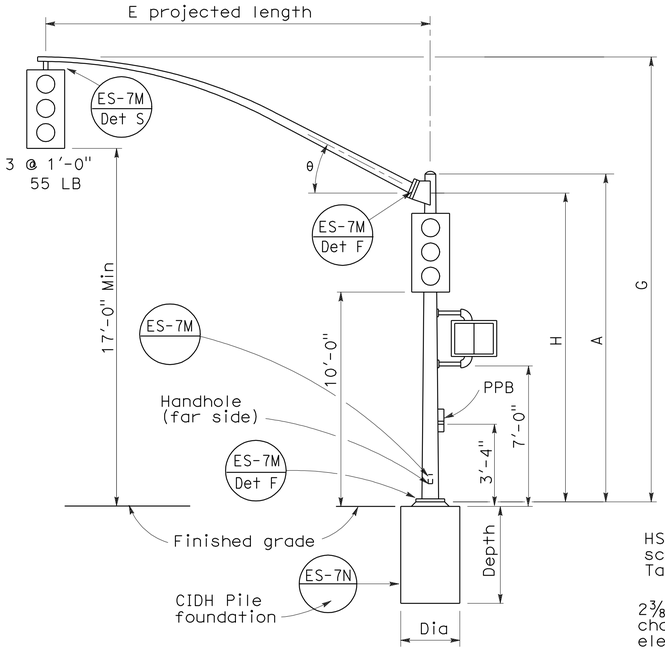

ELEVATION

TYPE 16-1-100, 18-1-100

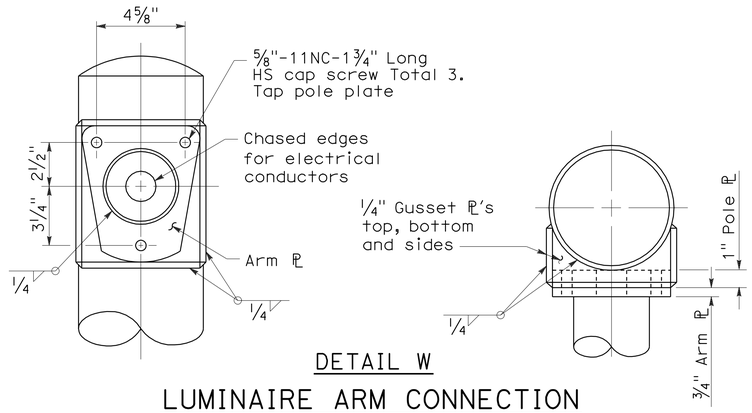

DETAIL W

LUMINAIRE ARM CONNECTION

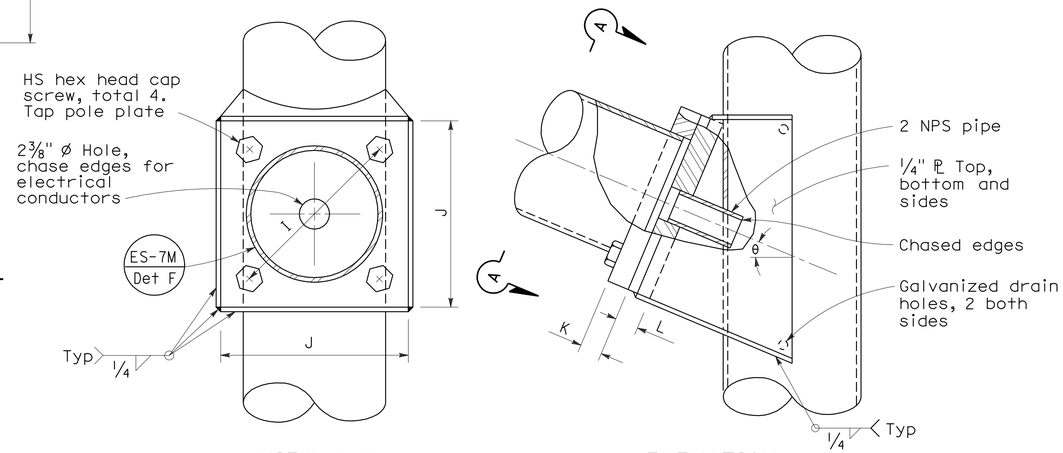

VIEW A-A ELEVATION

SIGNAL ARM CONNECTION DETAILS

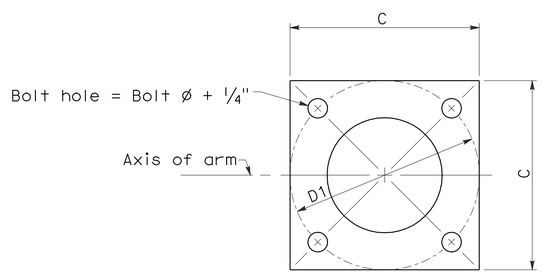

BASE PLATE

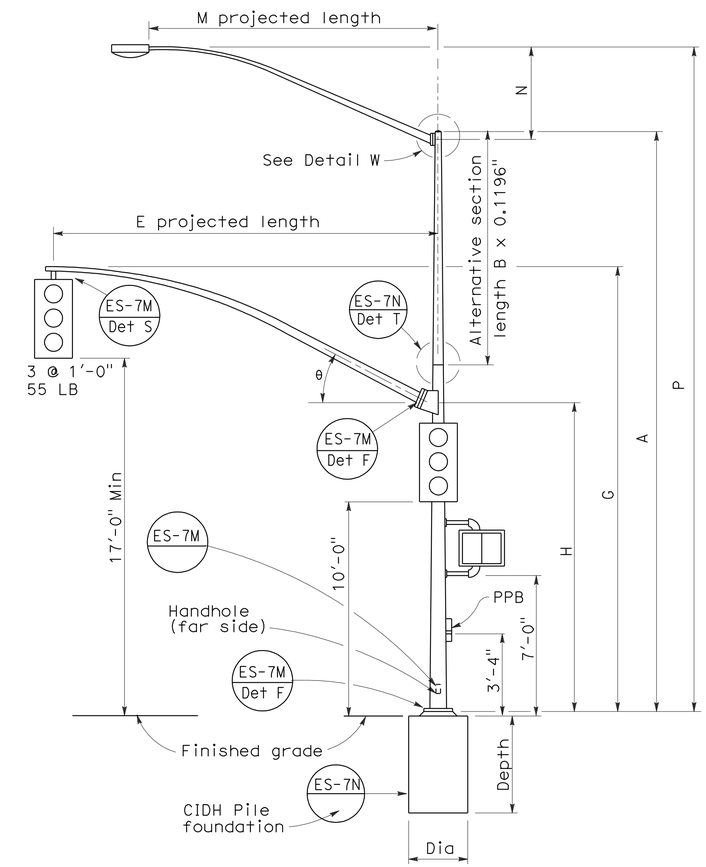

ELEVATION

TYPE 19-1-100, 19A-1-100

SIGNAL ARM DATA										
E Projected Length	G Mounting Height	H	Min OD At Pole	Thickness	I Bolt Circle	HS Cap Screws	J Plate size	K Arm ℙ Thickness	L Pole ℙ Thickness	θ
15'-0"	21'-8"±	17'-6"	7"	0.1196"	12"	1¼"-7NC-3"	1'-0"	1¼"	1½"	23°
20'-0"	21'-8"±		7⅛"							
25'-0"	22'-8"±	16'-0"	7 5/16"							
30'-0"	23'-0"±		8"							

LUMINAIRE ARM DATA					
M Projected Length	N Rise	Min OD at Pole	Thickness	P Mounting Height 30'-0" Pole	P Mounting Height 35'-0" Pole
6'-0"	2'-0"±	3¼"	0.1196"	31'-6"±	36'-6"±
8'-0"	2'-6"±	3½"		32'-0"±	37'-0"±
10'-0"	3'-3"±	3⅞"		32'-9"±	37'-9"±
12'-0"	4'-3"±			33'-9"±	38'-9"±
15'-0"	4'-9"±	4¼"		34'-3"±	39'-3"±

Pole Type	Load Case	Wind Velocity mph	POLE DATA: A Height	Min OD Base	Min OD Top	Thickness	Alternative Section B Length	Alternative Section Bottom	Alternative Section Top	BASE PLATE DATA: C	D1 Bolt Circle	Thickness	Anchor Bolts Size	Luminaire Arm	Signal Arm	CIDH PILE FOUNDATION: Diameter	Depth	Reinforced
16-1-100	1	100	18'-6"	10¾"	8¼"	0.1793"	None			1'-6"	1'-5½"	1¼"	1½" Ø x 42" x 6"	None	15'-0", 20'-0"	2'-6"	7'-2"	Yes
18-1-100			17'-0"		8 7/16"		None							None				
19-1-100			30'-0"		6⅝"		10'-0"	8"	6⅝"					6'-15' [12'-0"]	25'-0", 30'-0"			
19A-1-100			35'-0"		5 15/16"		15'-0"		5 15/16"					6'-15' [15'-0"]				

☐ Indicates arm length to be used unless otherwise noted on plans.

STATE OF CALIFORNIA
DEPARTMENT OF TRANSPORTATION

ELECTRICAL SYSTEMS (SIGNAL AND LIGHTING STANDARD CASE 1 ARM LOADING WIND VELOCITY = 100 MPH ARM LENGTHS 15' TO 30')

NO SCALE

RSP ES-7C DATED JUNE 15, 2007 SUPERSEDES STANDARD PLAN ES-7C DATED MAY 1, 2006 - PAGE 439 OF THE STANDARD PLANS BOOK DATED MAY 2006.

REVISED STANDARD PLAN RSP ES-7C

2006 REVISED STANDARD PLAN RSP ES-7C

1-26-07

DIST	COUNTY	ROUTE	POST MILES TOTAL PROJECT	SHEET NO.	TOTAL SHEETS
06	Fre	41	R27.6/R29.8	106	107

REGISTERED CIVIL ENGINEER

November 17, 2006
PLANS APPROVAL DATE

REGISTERED PROFESSIONAL ENGINEER Stanley P. Johnson No. C57793 Exp. 03-31-08 CIVIL STATE OF CALIFORNIA

The State of California or its officers or agents shall not be responsible for the accuracy or completeness of electronic copies of this plan sheet.

To accompany plans dated 8-17-09

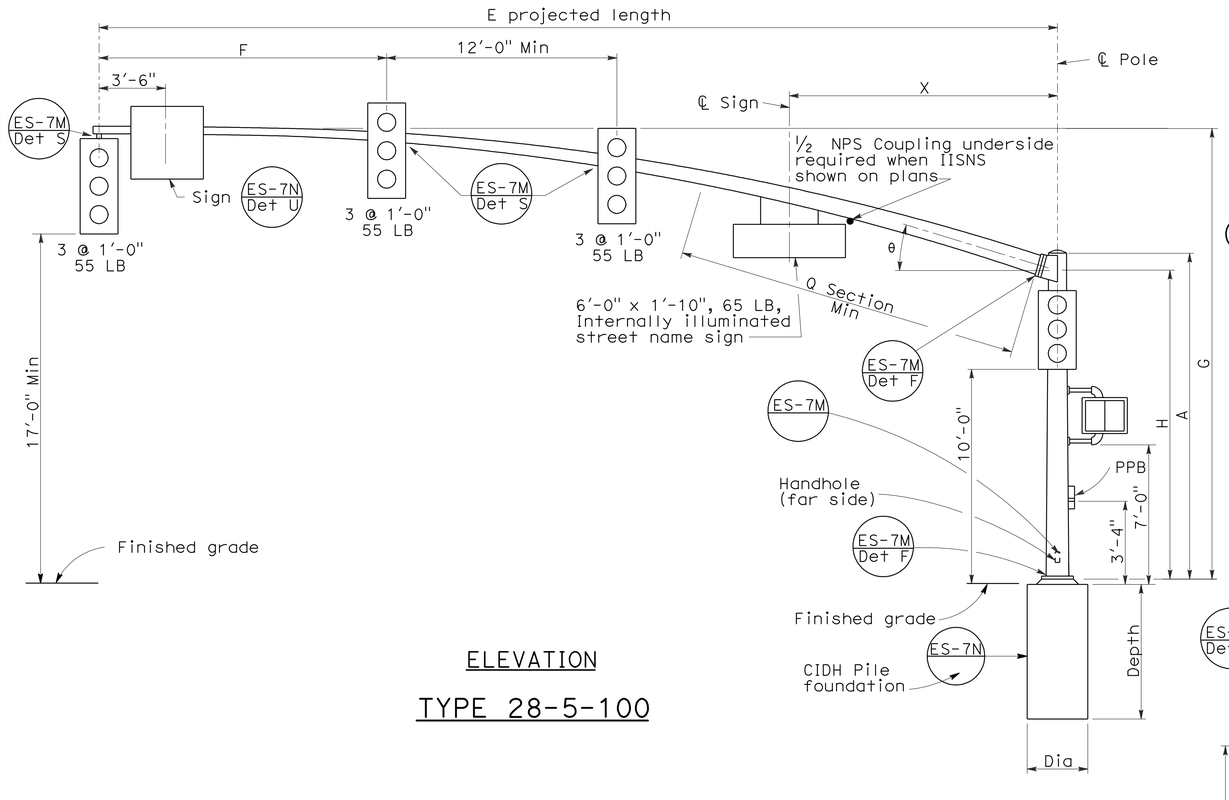

ELEVATION

TYPE 28-5-100

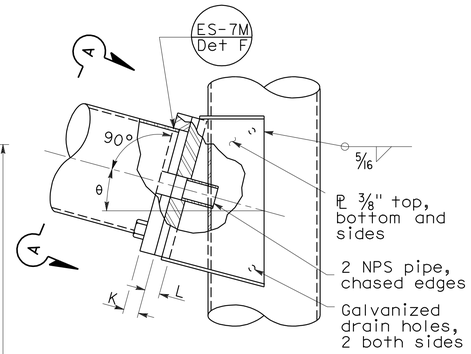

ELEVATION

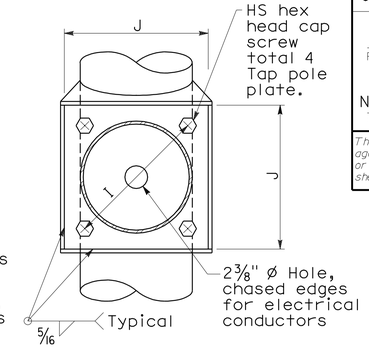

VIEW A-A

SIGNAL ARM CONNECTION DETAILS

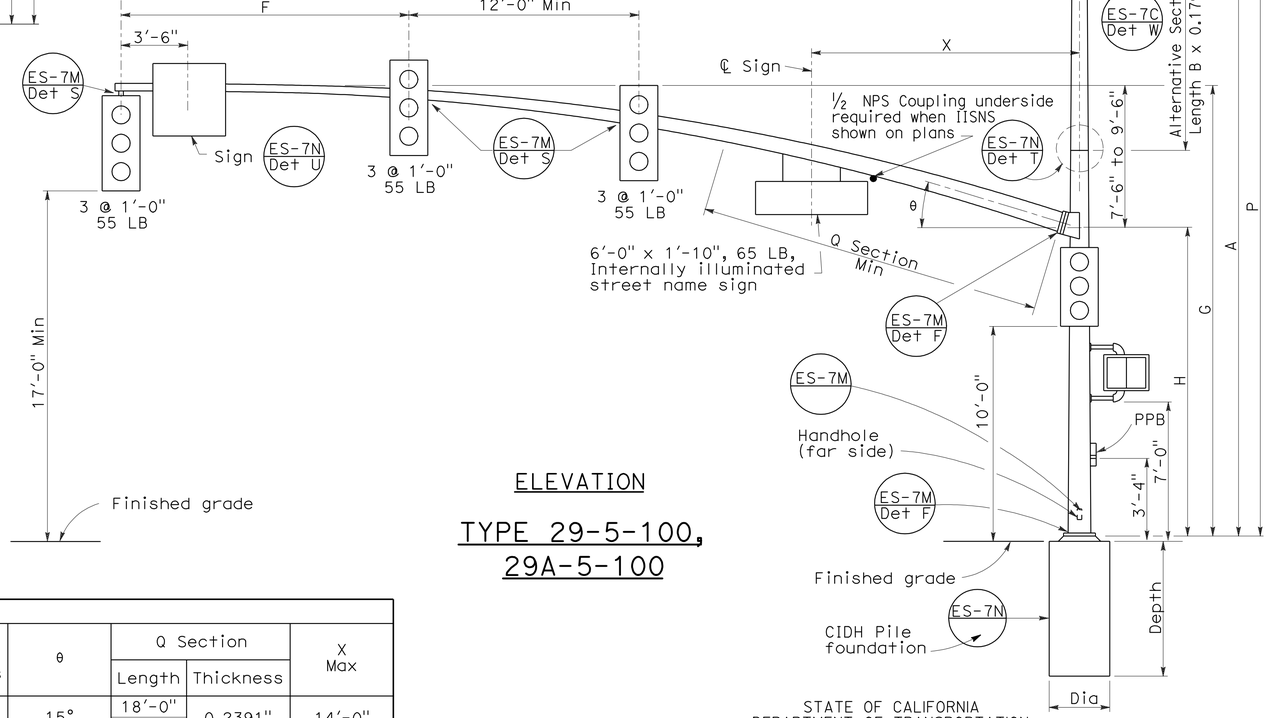

ELEVATION

TYPE 29-5-100, 29A-5-100

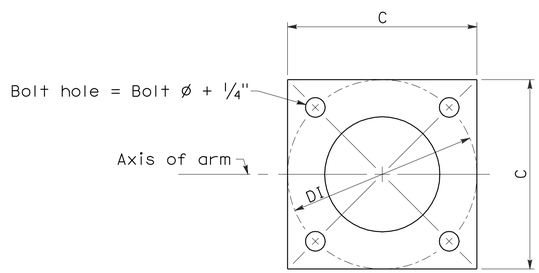

BASE PLATE

LUMINAIRE ARM DATA					
M Projected Length	N Rise	Min OD at Pole	Thickness	P Mounting Height 30'-0" Pole	P Mounting Height 35'-0" Pole
6'-0"	2'-0"±	3 1/4"	0.1196"	31'-6"±	36'-6"±
8'-0"	2'-6"±	3 1/2"		32'-0"±	37'-0"±
10'-0"	3'-3"±	3 7/8"		32'-9"±	37'-9"±
12'-0"	4'-3"±			33'-9"±	38'-9"±
15'-0"	4'-9"±	4 1/4"		34'-3"±	39'-3"±

SIGNAL ARM DATA														
E Projected Length	F Min Spacing	G Mounting Height	H	Min OD at Pole	Thickness	I Bolt Circle	HS Cap Screws	J Plate Size	K Arm ℄ Thickness	L Pole ℄ Thickness	θ	Q Section Length	Q Section Thickness	X Max
50'-0"	15'-0"	23'-7"± to 25'-7"±	16'-0"	11 7/16"	0.1793"	16"	1 1/2"-6NC-3 1/4"	1'-4"	1 3/4"	1 3/4"	15°	18'-0"	0.2391"	14'-0"
55'-0"				1'-1/4"								23'-0"		

POLE DATA									BASE PLATE DATA						CIDH PILE FOUNDATION		
Pole Type	Load Case	Wind Velocity mph	A Height	Min OD Base	Min OD Top	Thickness	Alternative Section B Length	Alternative Section Bottom	Alternative Section Top	C	DI Bolt Circle	Thickness	Anchor Bolts Size	Luminaire Arm	Signal Arm	Dia	Depth	Reinforced
28-5-100	5	100	17'-0"	14"	11 11/16"	0.3125"	None	11 1/4"	9 7/8"	21"	21"	1 3/4"	2" ø x 42" x 6"	None	50'-0", 55'-0"	3'-0"	9'-2"	Yes
29-5-100			30'-0"		9 7/8"		10'-0"							6'-15' [15'-0"]				
29A-5-100			35'-0"		9 3/16"		15'-0"		9 3/16"	23"	23"							

[ ] Indicates arm length to be used unless otherwise noted on plans.

STATE OF CALIFORNIA
DEPARTMENT OF TRANSPORTATION

ELECTRICAL SYSTEMS (SIGNAL AND LIGHTING STANDARD CASE 5 ARM LOADING WIND VELOCITY=100 MPH ARM LENGTHS 50' TO 55')

NO SCALE

RSP ES-7G DATED NOVEMBER 17, 2006 SUPERSEDES STANDARD PLAN ES-7G DATED MAY 1, 2006 - PAGE 443 OF THE STANDARD PLANS BOOK DATED MAY 2006.

REVISED STANDARD PLAN RSP ES-7G

2006 REVISED STANDARD PLAN RSP ES-7G

5-15-06

DIST	COUNTY	ROUTE	POST MILES TOTAL PROJECT	SHEET NO.	TOTAL SHEETS
06	Fre	41	R27.6/R29.8	107	107

REGISTERED ELECTRICAL ENGINEER

October 5, 2007
PLANS APPROVAL DATE

REGISTERED PROFESSIONAL ENGINEER Jeffery G. McRae No. E14512 Exp. 6-30-08 ELECTRICAL STATE OF CALIFORNIA

The State of California or its officers or agents shall not be responsible for the accuracy or completeness of electronic copies of this plan sheet.

To accompany plans dated 8-17-09

2006 REVISED STANDARD PLAN RSP ES-15D

NOTES: (FOR LIGHTING AND SIGN ILLUMINATION CONTROL)

1. The ballast voltages of lighting fixtures and luminaires shall match line service voltages.
2. Voltage rating of photoelectric controls shall conform to the service voltage indicated on the plans.
3. Terminal strip shall be provided for wiring to fixtures.
4. Type SC1A, SC2A, SC3A controls are similar to Types SC1, SC2 and SC3 controls respectively except test switch and wiring are not required.

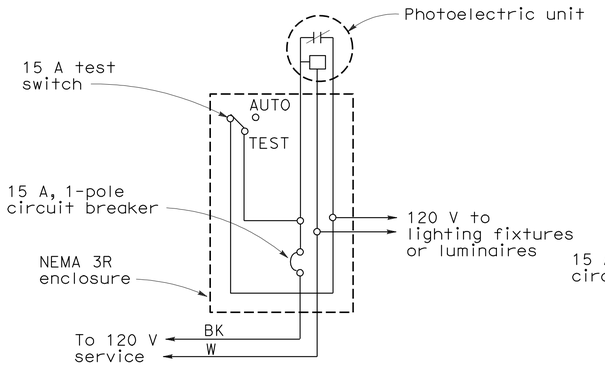

TYPE LC1 CONTROL

For 120 V unswitched circuit with no more than 800 W load.

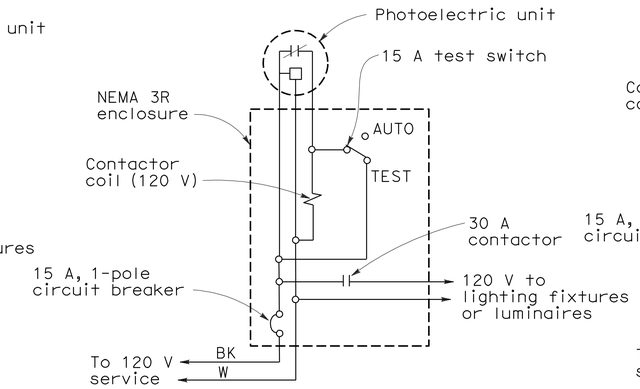

TYPE LC2 CONTROL

For 120 V unswitched circuit

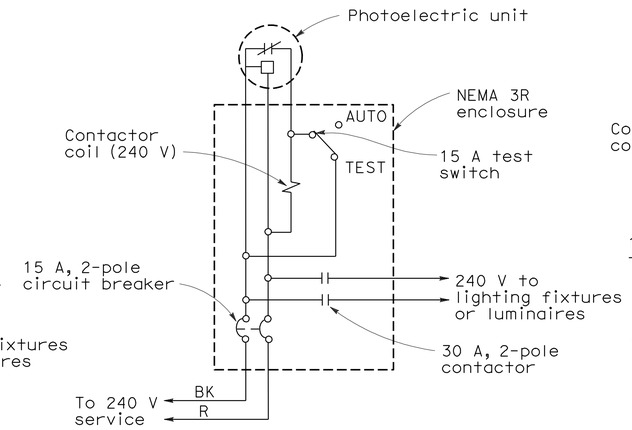

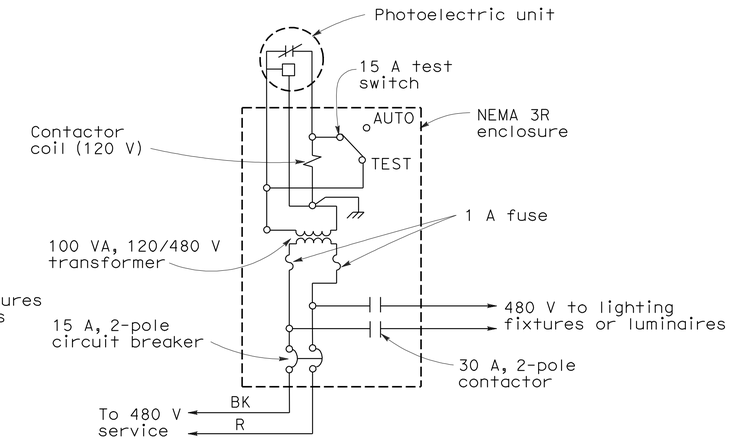

TYPE LC3 CONTROL

For 240 V and 480 V unswitched circuits

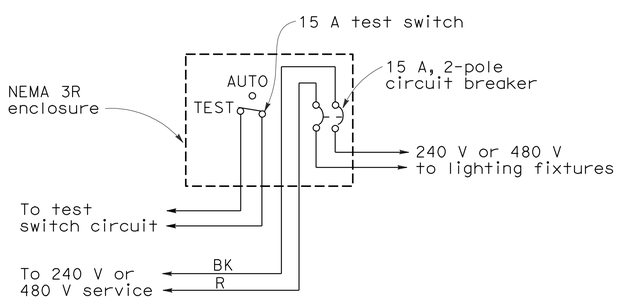

TYPE SC1 CONTROL

For 240 V or 480 V switched circuit, see Note 4 for Type SC1A

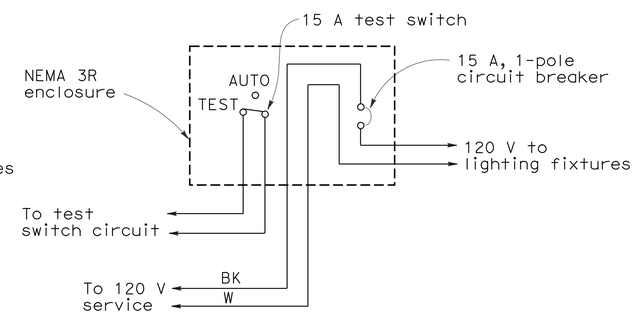

TYPE SC2 CONTROL

For 120 V switched circuit, see Note 4 for Type SC2A

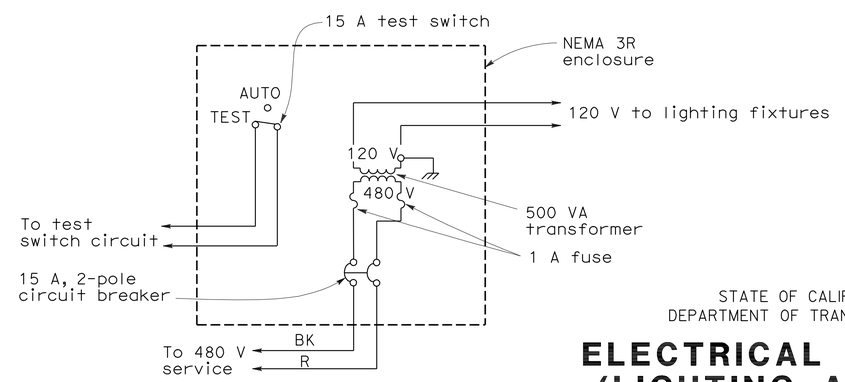

TYPE SC3 CONTROL

For 480 V switched sign circuit, see Note 4 for Type SC3A

STATE OF CALIFORNIA
DEPARTMENT OF TRANSPORTATION

ELECTRICAL SYSTEMS (LIGHTING AND SIGN ILLUMINATION CONTROL)

NO SCALE

RSP ES-15D DATED OCTOBER 5, 2007 SUPERCEDES STANDARD PLAN ES-15D DATED MAY 1, 2006 - PAGE 472 OF THE STANDARD PLANS BOOK DATED MAY 2006.

REVISED STANDARD PLAN RSP ES-15D