Dist	COUNTY	ROUTE	POST MILES TOTAL PROJECT	SHEET No.	TOTAL SHEETS
05	SLO	46	40.7/46.3	201	541

Sumangali Hoode 11-10-11
REGISTERED CIVIL ENGINEER DATE

2-13-12
PLANS APPROVAL DATE

REGISTERED PROFESSIONAL ENGINEER
SUMANGALI HOODE
No. 59498
Exp. 12-31-11
CIVIL
STATE OF CALIFORNIA

THE STATE OF CALIFORNIA OR ITS OFFICERS OR AGENTS SHALL NOT BE RESPONSIBLE FOR THE ACCURACY OR COMPLETENESS OF SCANNED COPIES OF THIS PLAN SHEET.

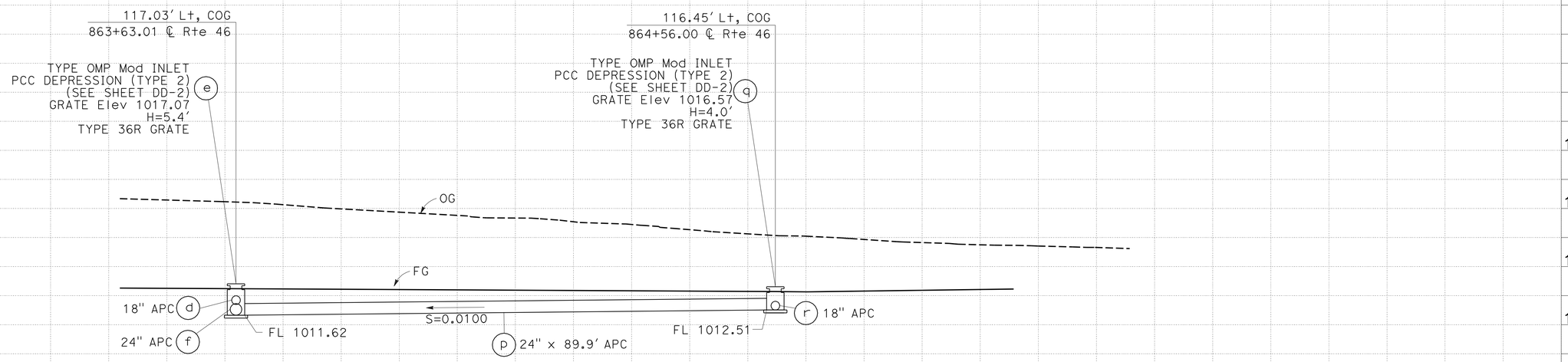

(CONTINUED)
DRAINAGE SYSTEM No. 34

DRAINAGE PROFILES

SCALE: Horiz 1" = 10'
Vert 1" = 10'

DP-56

STATE OF CALIFORNIA - DEPARTMENT OF TRANSPORTATION
Caltrans
06-DESIGN

FUNCTIONAL SUPERVISOR: JACK WALKER
CALCULATED-DESIGNED BY: SUMANGALI HOODE
CHECKED BY: TOM LIU
REVISED BY
DATE REVISED

LAST REVISION 10-19-11
DATE PLOTTED => 17-FEB-2012
TIME PLOTTED => 06:28

Dist	COUNTY	ROUTE	POST MILES TOTAL PROJECT	SHEET No.	TOTAL SHEETS
05	SLO	46	40.7/46.3	202	541

Sumangali Hoode 11-10-11
REGISTERED CIVIL ENGINEER DATE

2-13-12
PLANS APPROVAL DATE

REGISTERED PROFESSIONAL ENGINEER SUMANGALI HOODE No. 59498 Exp. 12-31-11 CIVIL STATE OF CALIFORNIA

THE STATE OF CALIFORNIA OR ITS OFFICERS OR AGENTS SHALL NOT BE RESPONSIBLE FOR THE ACCURACY OR COMPLETENESS OF SCANNED COPIES OF THIS PLAN SHEET.

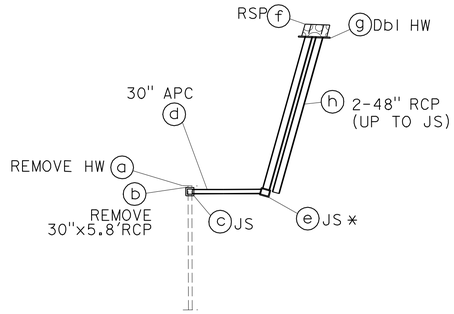

STAGE 1 - PHASE 1

NO SCALE

* JS (e) IS BUILT TO CARRY WATER FROM ONLY ONE 48" RCP DURING THE STAGING OF THE PROJECT.

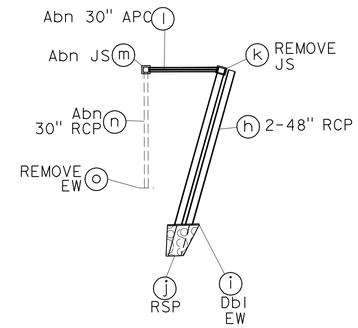

STAGE 4

NO SCALE

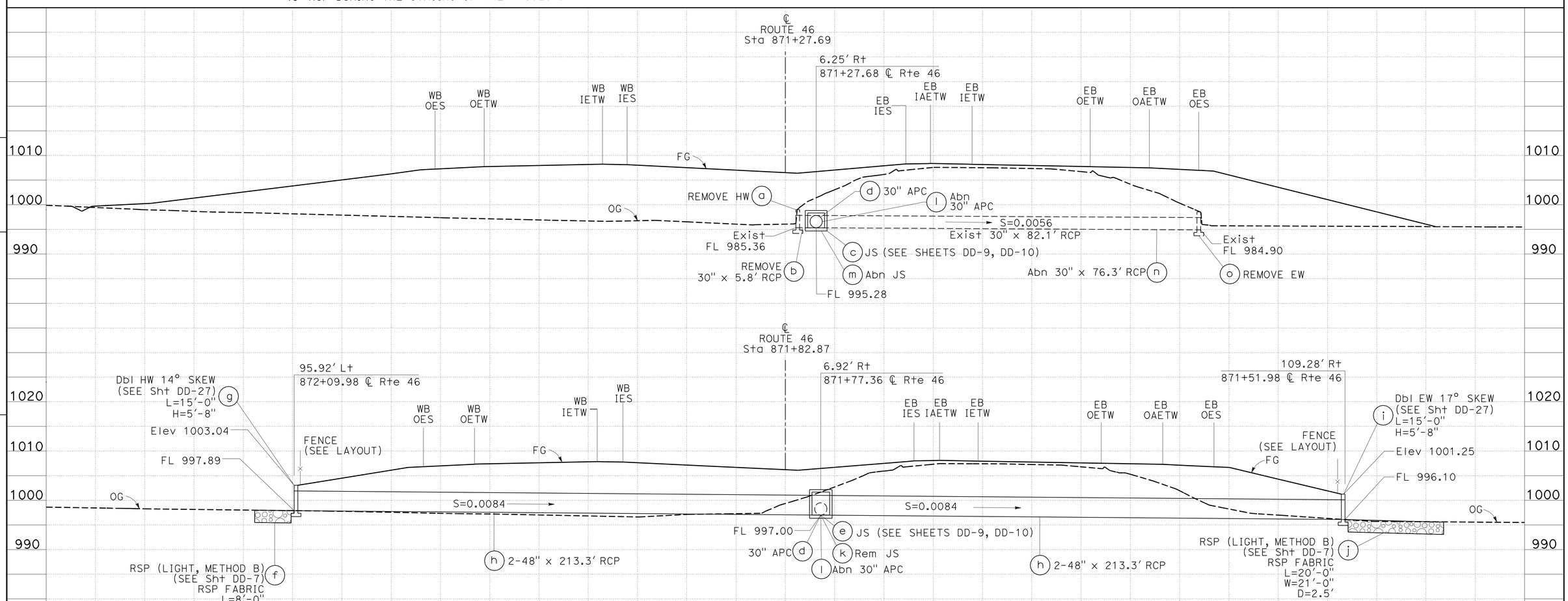

DRAINAGE SYSTEM No. 35

AND KIT FOX CROSSING

DRAINAGE PROFILES

SCALE: Horiz 1" = 10'
Vert 1" = 10'

DP-57

STATE OF CALIFORNIA - DEPARTMENT OF TRANSPORTATION
Caltrans®
06-DESIGN

FUNCTIONAL SUPERVISOR: JACK WALKER
CALCULATED-DESIGNED BY: SUMANGALI HOODE
CHECKED BY: TOM LIU
REVISED BY
DATE REVISED

LAST REVISION 09-29-11
DATE PLOTTED => 16-FEB-2012
TIME PLOTTED => 14:45

Dist	COUNTY	ROUTE	POST MILES TOTAL PROJECT	SHEET No.	TOTAL SHEETS
05	SLO	46	40.7/46.3	203	541

REGISTERED CIVIL ENGINEER 11-10-11 DATE

2-13-12
PLANS APPROVAL DATE

REGISTERED PROFESSIONAL ENGINEER SUMANGALI HOODE No. 59498 Exp. 12-31-11 CIVIL STATE OF CALIFORNIA

THE STATE OF CALIFORNIA OR ITS OFFICERS OR AGENTS SHALL NOT BE RESPONSIBLE FOR THE ACCURACY OR COMPLETENESS OF SCANNED COPIES OF THIS PLAN SHEET.

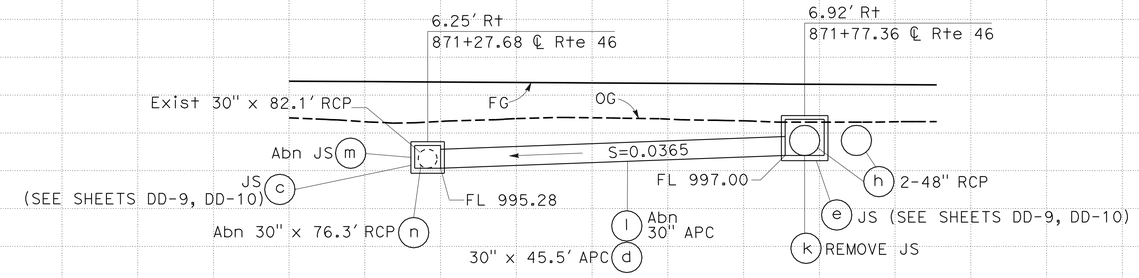

(CONTINUED) DRAINAGE SYSTEM No. 35

AND KIT FOX CROSSING

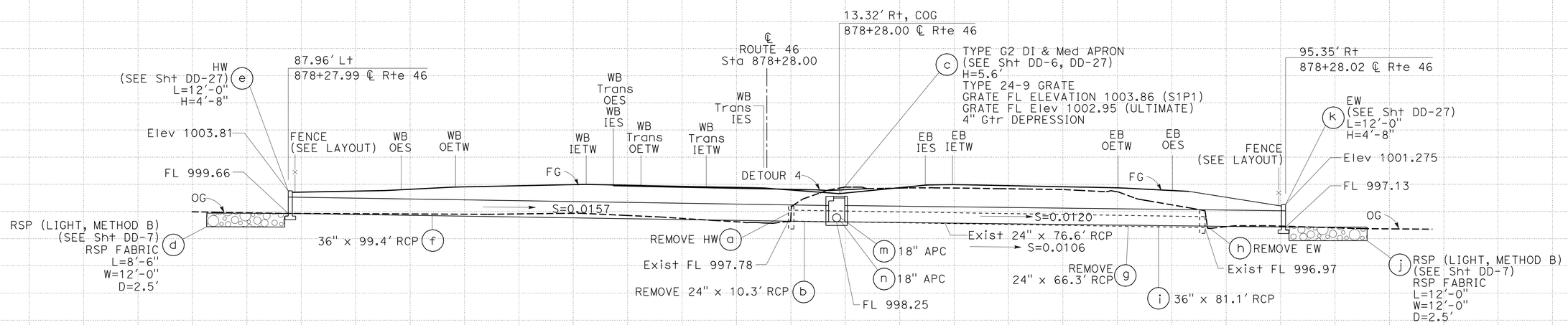

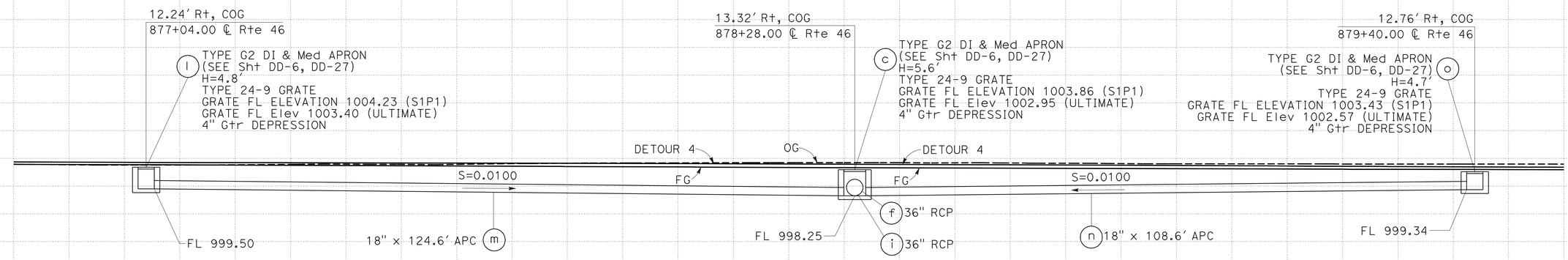

DRAINAGE SYSTEM No. 36

AND KIT FOX CROSSING

DRAINAGE PROFILES

SCALE: Horiz 1" = 10′
Vert 1" = 10′

DP-58

SUMANGALI HOODE — TOM LIU — REVISED BY — DATE REVISED — CALCULATED-DESIGNED BY — CHECKED BY — FUNCTIONAL SUPERVISOR — JACK WALKER

STATE OF CALIFORNIA - DEPARTMENT OF TRANSPORTATION — 06-DESIGN — Caltrans

LAST REVISION 10-20-11 — DATE PLOTTED => 16-FEB-2012 — TIME PLOTTED => 14:45

Dist	COUNTY	ROUTE	POST MILES TOTAL PROJECT	SHEET No.	TOTAL SHEETS
05	SLO	46	40.7/46.3	204	541

Sumangali Hoode 11-10-11
REGISTERED CIVIL ENGINEER DATE

2-13-12
PLANS APPROVAL DATE

REGISTERED PROFESSIONAL ENGINEER
SUMANGALI HOODE
No. 59498
Exp. 12-31-11
CIVIL
STATE OF CALIFORNIA

THE STATE OF CALIFORNIA OR ITS OFFICERS OR AGENTS SHALL NOT BE RESPONSIBLE FOR THE ACCURACY OR COMPLETENESS OF SCANNED COPIES OF THIS PLAN SHEET.

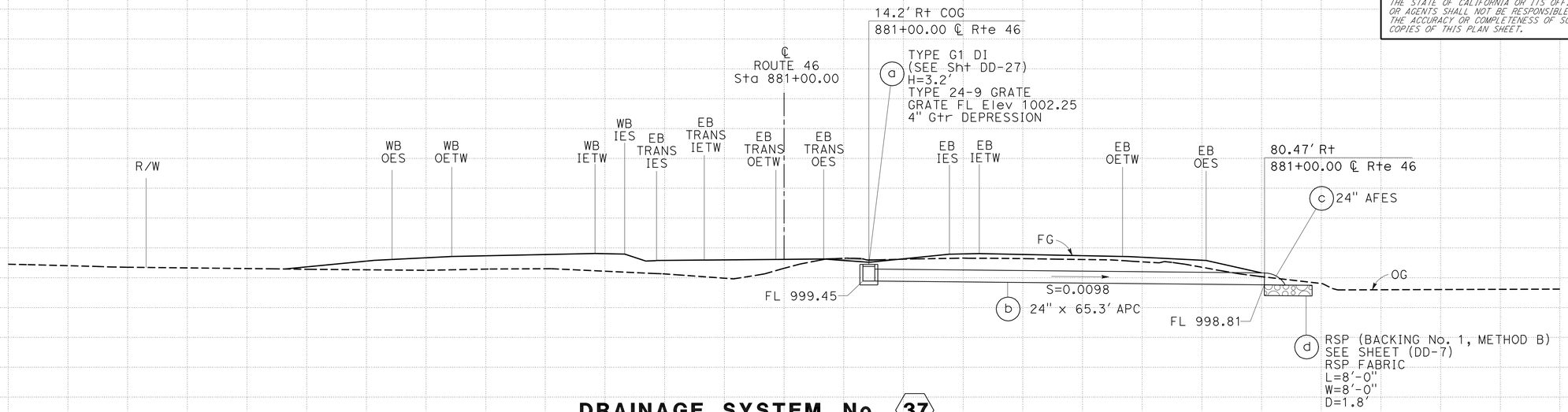

DRAINAGE SYSTEM No. 37

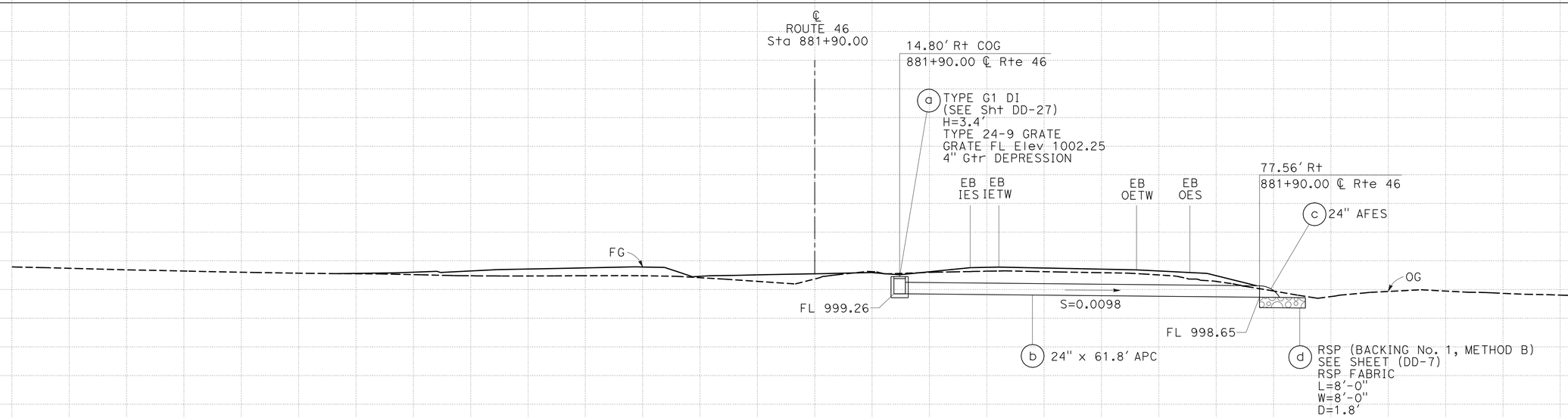

DRAINAGE SYSTEM No. 38

DRAINAGE PROFILES

SCALE: Horiz 1" = 10'
Vert 1" = 10'

DP-59

STATE OF CALIFORNIA - DEPARTMENT OF TRANSPORTATION
Caltrans
06-DESIGN
FUNCTIONAL SUPERVISOR: JACK WALKER
CALCULATED-DESIGNED BY: SUMANGALI HOODE
CHECKED BY: TOM LIU
REVISED BY
DATE REVISED

LAST REVISION 09-29-11
DATE PLOTTED => 16-FEB-2012
TIME PLOTTED => 14:45

Dist	COUNTY	ROUTE	POST MILES TOTAL PROJECT	SHEET No.	TOTAL SHEETS
05	SLO	46	40.7/46.3	205	541

Sumangali Hoode 11-10-11
REGISTERED CIVIL ENGINEER DATE

2-13-12
PLANS APPROVAL DATE

REGISTERED PROFESSIONAL ENGINEER
SUMANGALI HOODE
No. 59498
Exp. 12-31-11
CIVIL
STATE OF CALIFORNIA

THE STATE OF CALIFORNIA OR ITS OFFICERS OR AGENTS SHALL NOT BE RESPONSIBLE FOR THE ACCURACY OR COMPLETENESS OF SCANNED COPIES OF THIS PLAN SHEET.

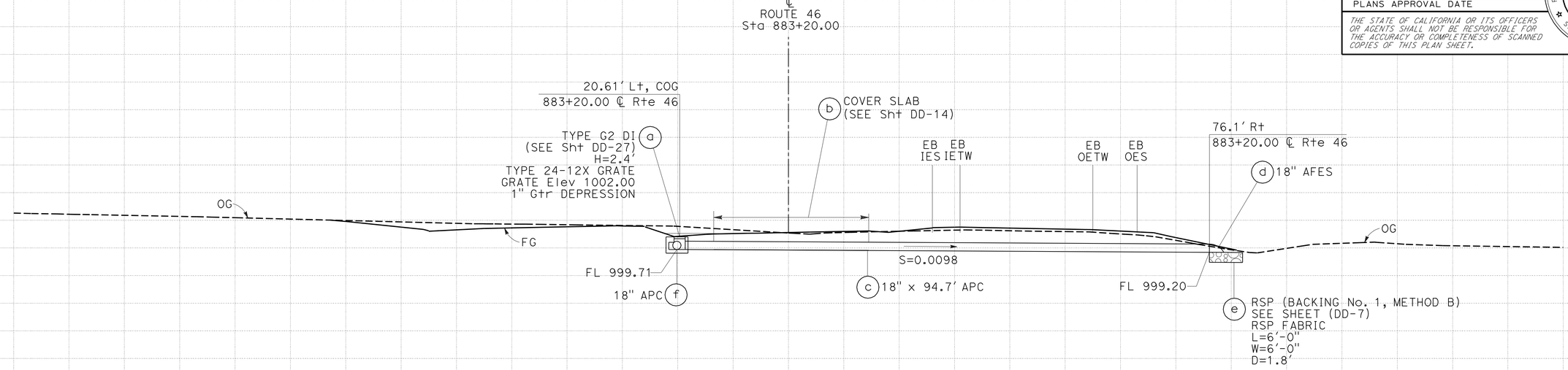

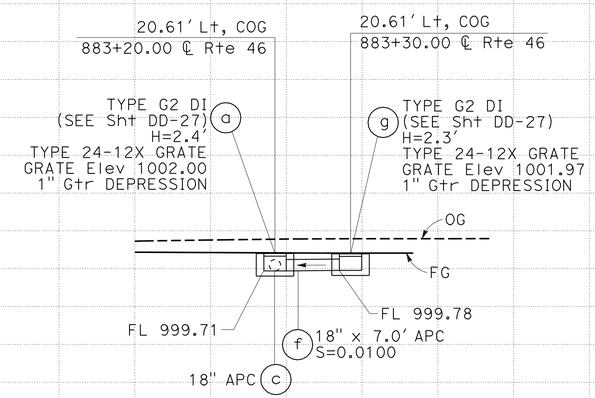

DRAINAGE SYSTEM No. 39

DRAINAGE PROFILES

SCALE: Horiz 1" = 10'
Vert 1" = 10'

DP-60

STATE OF CALIFORNIA - DEPARTMENT OF TRANSPORTATION
Caltrans
06-DESIGN

FUNCTIONAL SUPERVISOR: JACK WALKER
CALCULATED-DESIGNED BY: SUMANGALI HOODE
CHECKED BY: TOM LIU
REVISED BY
DATE REVISED

LAST REVISION 09-28-11
DATE PLOTTED => 16-FEB-2012
TIME PLOTTED => 14:45

Dist	COUNTY	ROUTE	POST MILES TOTAL PROJECT	SHEET No.	TOTAL SHEETS
05	SLO	46	40.7/46.3	206	541

Sumangali Hoode 11-10-11
REGISTERED CIVIL ENGINEER DATE

2-13-12
PLANS APPROVAL DATE

REGISTERED PROFESSIONAL ENGINEER
SUMANGALI HOODE
No. 59498
Exp. 12-31-11
CIVIL
STATE OF CALIFORNIA

THE STATE OF CALIFORNIA OR ITS OFFICERS OR AGENTS SHALL NOT BE RESPONSIBLE FOR THE ACCURACY OR COMPLETENESS OF SCANNED COPIES OF THIS PLAN SHEET.

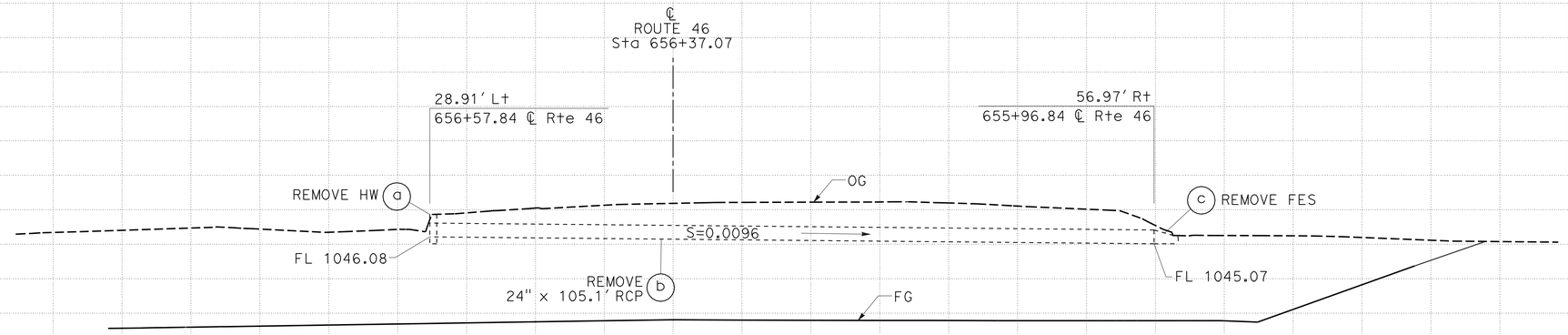

DRAINAGE SYSTEM No. 4X

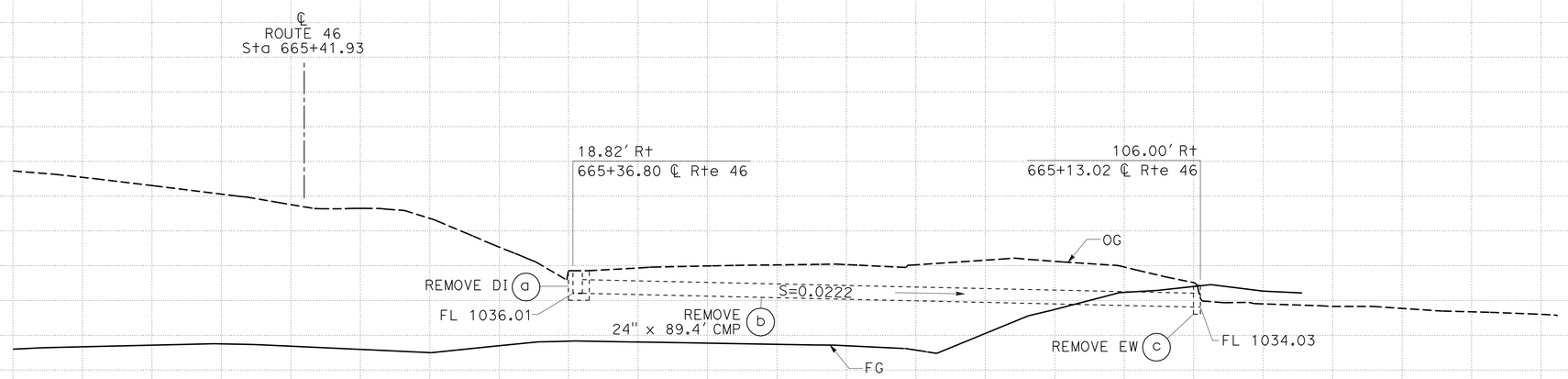

DRAINAGE SYSTEM No. 6X

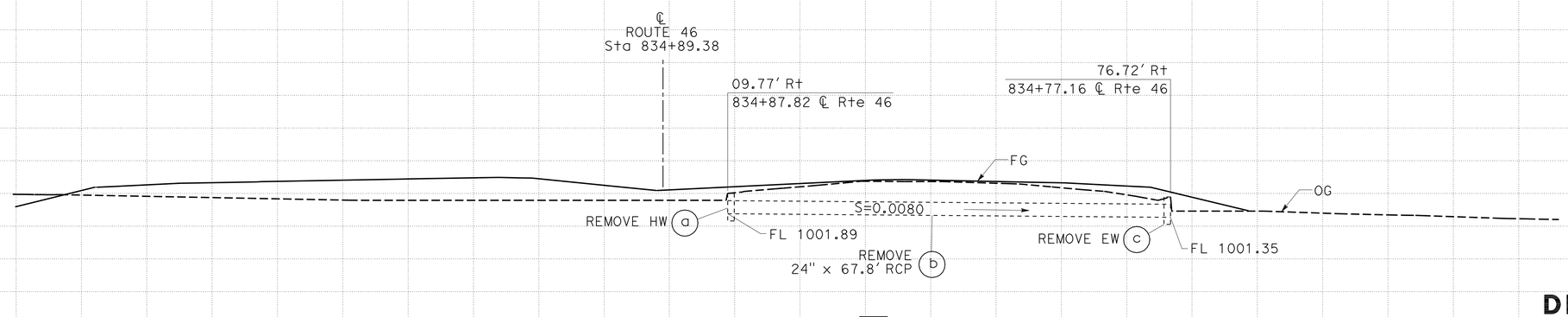

DRAINAGE SYSTEM No. 35X

DRAINAGE PROFILES

SCALE: Horiz 1" = 10'
Vert 1" = 10'

DP-61

STATE OF CALIFORNIA - DEPARTMENT OF TRANSPORTATION
Caltrans
06-DESIGN

FUNCTIONAL SUPERVISOR: JACK WALKER
CALCULATED-DESIGNED BY: SUMANGALI HOODE
CHECKED BY: TOM LIU
REVISED BY
DATE REVISED

LAST REVISION 09-13-11
DATE PLOTTED => 16-FEB-2012
TIME PLOTTED => 14:45

Dist	COUNTY	ROUTE	POST MILES TOTAL PROJECT	SHEET No.	TOTAL SHEETS
05	SLO	46	40.7/46.3	207	541

Sumangali Hoode 11-10-11
REGISTERED CIVIL ENGINEER DATE

2-13-12
PLANS APPROVAL DATE

REGISTERED PROFESSIONAL ENGINEER
SUMANGALI HOODE
No. 59498
Exp. 12-31-11
CIVIL
STATE OF CALIFORNIA

THE STATE OF CALIFORNIA OR ITS OFFICERS OR AGENTS SHALL NOT BE RESPONSIBLE FOR THE ACCURACY OR COMPLETENESS OF SCANNED COPIES OF THIS PLAN SHEET.

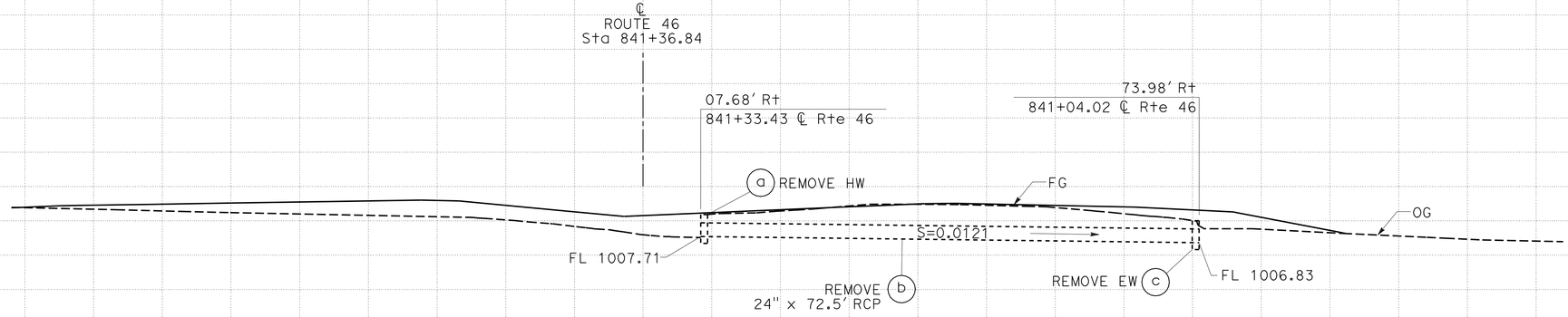

DRAINAGE SYSTEM No. 37X

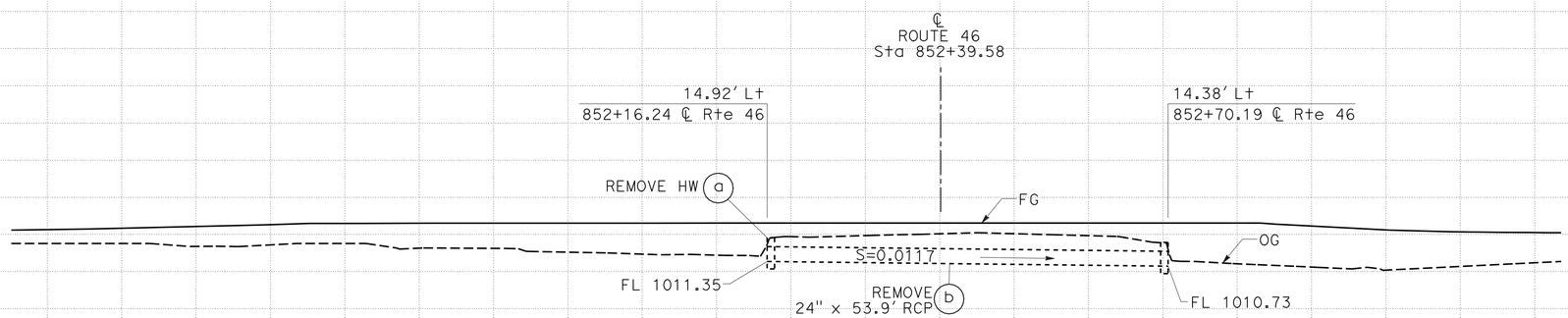

DRAINAGE SYSTEM No. 38X

DRAINAGE PROFILES

SCALE: Horiz 1" = 10'
Vert 1" = 10'

DP-62

STATE OF CALIFORNIA - DEPARTMENT OF TRANSPORTATION
Caltrans® 06-DESIGN

FUNCTIONAL SUPERVISOR: JACK WALKER
CALCULATED-DESIGNED BY: SUMANGALI HOODE
CHECKED BY: TOM LIU
REVISED BY
DATE REVISED

LAST REVISION 09-13-11
DATE PLOTTED => 16-FEB-2012
TIME PLOTTED => 14:45

Dist	COUNTY	ROUTE	POST MILES TOTAL PROJECT	SHEET No.	TOTAL SHEETS
05	SLO	46	40.7/46.3	208	541

REGISTERED CIVIL ENGINEER Sumangali Hoode 11-10-11 DATE

2-13-12
PLANS APPROVAL DATE

REGISTERED PROFESSIONAL ENGINEER SUMANGALI HOODE No. 59498 Exp. 12-31-11 CIVIL STATE OF CALIFORNIA

THE STATE OF CALIFORNIA OR ITS OFFICERS OR AGENTS SHALL NOT BE RESPONSIBLE FOR THE ACCURACY OR COMPLETENESS OF SCANNED COPIES OF THIS PLAN SHEET.

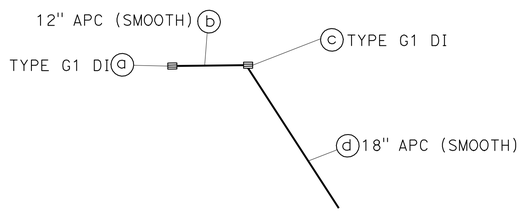

STAGE 1 - PHASE 1

NO SCALE

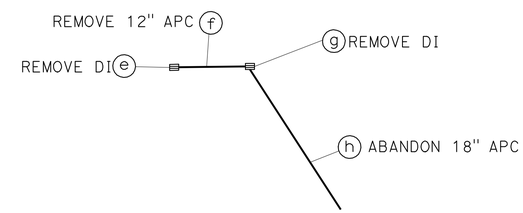

STAGE 3

NO SCALE

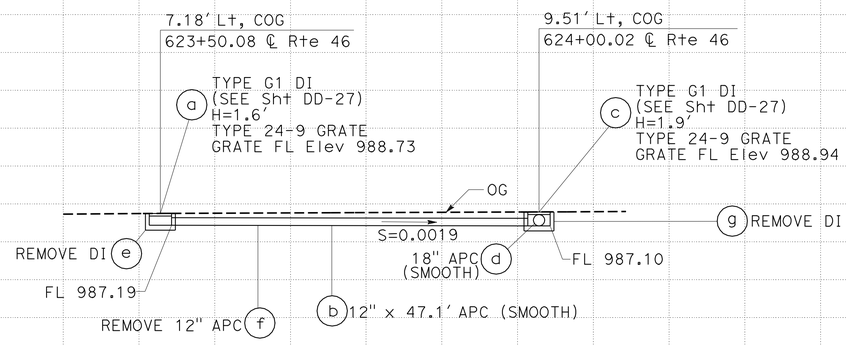

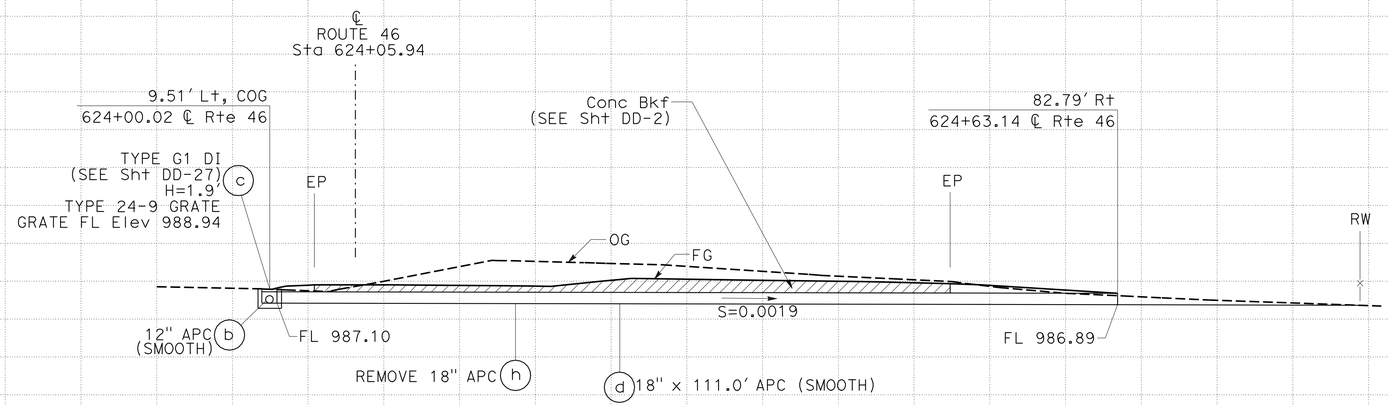

DRAINAGE SYSTEM No. T1

DRAINAGE PROFILES

SCALE: Horiz 1" = 10'
Vert 1" = 10'

DP-63

REVISED BY	DATE REVISED

CALCULATED-DESIGNED BY	CHECKED BY
JIM MILLS	SUMANGALI HOODE

FUNCTIONAL SUPERVISOR: JACK WALKER

STATE OF CALIFORNIA - DEPARTMENT OF TRANSPORTATION
Caltrans
06-DESIGN

LAST REVISION 10-04-11 | DATE PLOTTED => 16-FEB-2012 | TIME PLOTTED => 14:46

Dist	COUNTY	ROUTE	POST MILES TOTAL PROJECT	SHEET No.	TOTAL SHEETS
05	SLO	46	40.7/46.3	209	541

Sumangali Hoode 11-10-11
REGISTERED CIVIL ENGINEER DATE

2-13-12
PLANS APPROVAL DATE

REGISTERED PROFESSIONAL ENGINEER SUMANGALI HOODE No. 59498 Exp. 12-31-11 CIVIL STATE OF CALIFORNIA

THE STATE OF CALIFORNIA OR ITS OFFICERS OR AGENTS SHALL NOT BE RESPONSIBLE FOR THE ACCURACY OR COMPLETENESS OF SCANNED COPIES OF THIS PLAN SHEET.

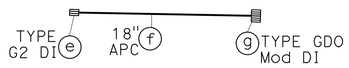

STAGE 1 - PHASE 1
NO SCALE

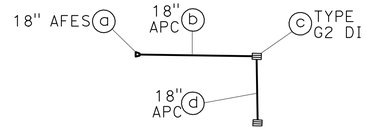

STAGE 2 - PHASE 1
NO SCALE

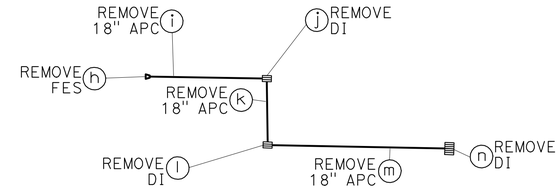

STAGE 5
NO SCALE

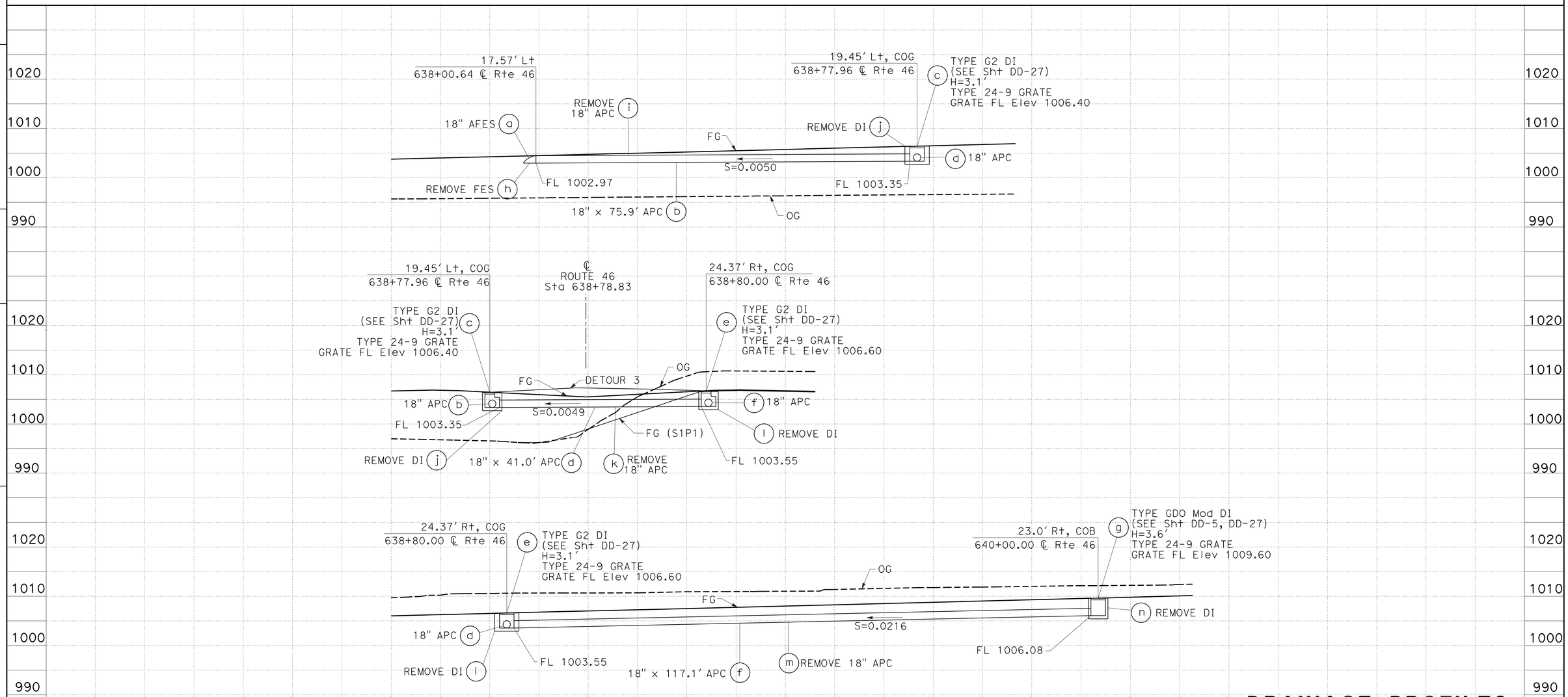

DRAINAGE SYSTEM No. T2

DRAINAGE PROFILES
SCALE: Horiz 1" = 10'
Vert 1" = 10'
DP-64

STATE OF CALIFORNIA - DEPARTMENT OF TRANSPORTATION
Caltrans® 06-DESIGN

FUNCTIONAL SUPERVISOR: JACK WALKER
CALCULATED-DESIGNED BY: TOM LIU
CHECKED BY: JIM MILLS
REVISED BY / DATE REVISED

LAST REVISION 10-20-11
DATE PLOTTED => 16-FEB-2012
TIME PLOTTED => 14:46

Dist	COUNTY	ROUTE	POST MILES TOTAL PROJECT	SHEET No.	TOTAL SHEETS
05	SLO	46	40.7/46.3	210	541

REGISTERED CIVIL ENGINEER Sumangali Hoode DATE 11-10-11

PLANS APPROVAL DATE 2-13-12

REGISTERED PROFESSIONAL ENGINEER SUMANGALI HOODE No. 59498 Exp. 12-31-11 CIVIL STATE OF CALIFORNIA

THE STATE OF CALIFORNIA OR ITS OFFICERS OR AGENTS SHALL NOT BE RESPONSIBLE FOR THE ACCURACY OR COMPLETENESS OF SCANNED COPIES OF THIS PLAN SHEET.

NOTES:

1. CROSS SECTION OF SLOPE DITCH MAY BE SEMICIRCULAR, VEE OR TRAPEZOIDAL.
2. FOR SECTIONS G-G AND F-F SEE Std PLAN D87D.
3. FOR DIMENSIONS AND Const DETAILS NOT SHOWN, SEE Std PLAN D87D.
4. FOR DIMENSIONS AND Const DETAILS NOT SHOWN, SEE Std PLANS D87A AND D87B.

ABBREVIATIONS:

Prvt	PRIVATE
COG	CENTER OF GRATE
COB	CENTER OF BOX
TOF	TOE OF FILL
TOC	TOP OF CUT

LEGEND

- DRAINAGE SYSTEM No.
- DRAINAGE UNIT No.
- PLACE HMA (Misc AREA)
- MINOR CONCRETE BACKFILL
- HMA
- STRUCTURE BACKFILL (SLURRY CEMENT)

OVERSIDE DRAIN Loc

LOCATION	L	M	B	W
649+75 Rt	0 *'	0	0'-9"	2'-1"
678+97 Lt	20'	2'-0"	0'-9"	2'-1"
723+60 Lt	20'	1'-10"	0'-9"	2'-1"
745+03 Lt	14'	1'-8"	0'-9"	2'-1"
882+00 Lt	0 *'	0	0'-9"	2'-1"

* FLARES NOT NEEDED WHEN DRAINING HIGH SIDE SUPER DITCH

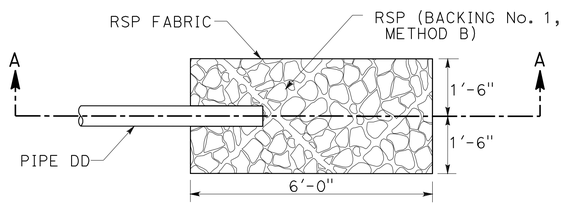

PLAN

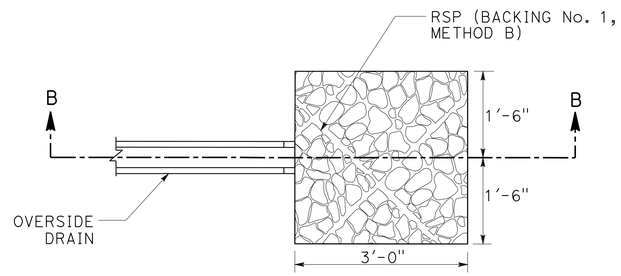

PLAN

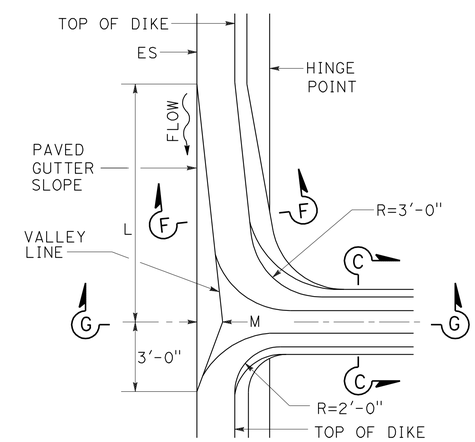

PLAN

(SEE NOTE 2)

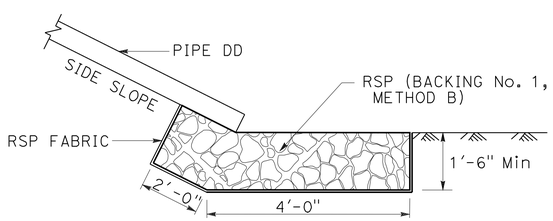

SECTION A-A

(SEE NOTE 4)

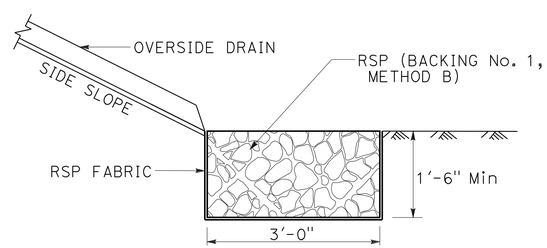

SECTION B-B

(SEE NOTE 3)

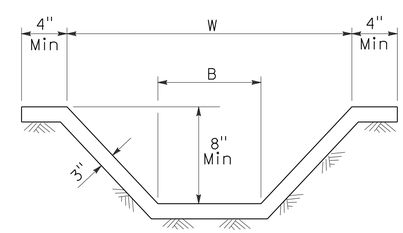

SECTION C-C

(SEE NOTE 1)

RSP (PIPE DOWNDRAIN)

RSP (HMA OVERSIDE DRAIN)

HMA OVERSIDE DRAIN

DRAINAGE DETAILS

NO SCALE

DD-1

STATE OF CALIFORNIA - DEPARTMENT OF TRANSPORTATION

06-DESIGN

FUNCTIONAL SUPERVISOR: JACK WALKER

CALCULATED-DESIGNED BY: JIM MILLS

CHECKED BY: TOM LIU

REVISED BY / DATE REVISED

LAST REVISION 10-27-11

DATE PLOTTED => 16-FEB-2012

TIME PLOTTED => 14:46

Dist	COUNTY	ROUTE	POST MILES TOTAL PROJECT	SHEET No.	TOTAL SHEETS
05	SLO	46	40.7/46.3	211	541

REGISTERED CIVIL ENGINEER 11-10-11 DATE

2-13-12
PLANS APPROVAL DATE

REGISTERED PROFESSIONAL ENGINEER SUMANGALI HOODE No. 59498 Exp. 12-31-11 CIVIL STATE OF CALIFORNIA

THE STATE OF CALIFORNIA OR ITS OFFICERS OR AGENTS SHALL NOT BE RESPONSIBLE FOR THE ACCURACY OR COMPLETENESS OF SCANNED COPIES OF THIS PLAN SHEET.

NOTES:

1. COLLAR TO BE USED WHEN A STANDARD JOINT CANNOT BE MADE DUE TO PIPES OF DIFFERENT SIZES OR MATERIALS, OR A CHANGE IN ALIGNMENT LESS THAN 10°, AS DIRECTED BY THE ENGINEER.
2. USE WHEN COVER IS LESS THAN 2′ IN TRAVELED WAY OR SHOULDER.
3. FOR SIDE OPENING DIMENSIONS, SEE TYPE OMP ON Std PLAN D75A.
4. FOR DETAILS NOT SHOWN, SEE TYPE GMP ON Std PLAN D75A.
5. FOR PIPE CULVERTS PLACED ACROSS TRAVELED WAYS OPEN TO PUBLIC TRAFFIC.

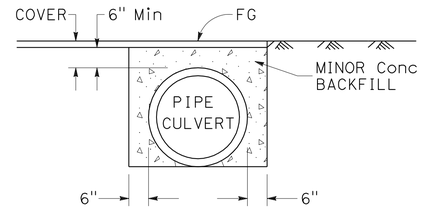

(SEE NOTE 2)

MINOR CONCRETE BACKFILL

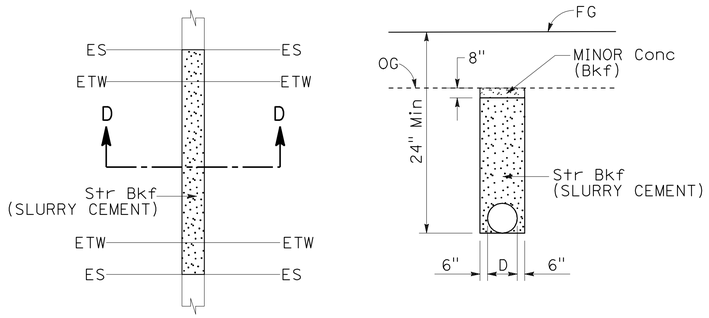

PLAN SECTION D-D

(SEE NOTE 5)

SLURRY CEMENT AND MINOR CONCRETE BACKFILL

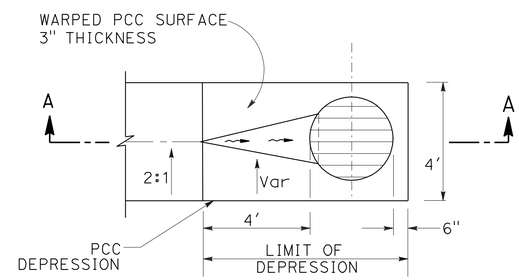

PLAN

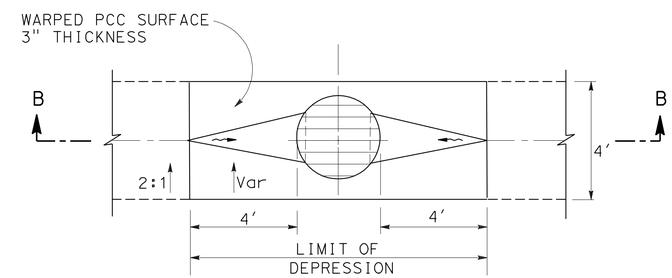

PLAN

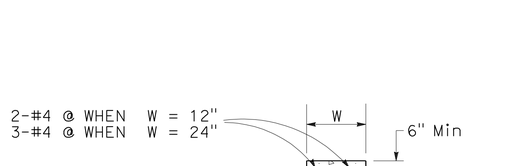

(SEE NOTE 1)

TYPICAL CONCRETE COLLAR

SECTION A-A

(SEE NOTES 3 AND 4)

PCC DEPRESSION (TYPE 1) AND TYPE OMP Mod INLET

SECTION B-B

(SEE NOTES 3 AND 4)

PCC DEPRESSION (TYPE 2) AND TYPE OMP Mod INLET

DRAINAGE DETAILS

NO SCALE

DD-2

STATE OF CALIFORNIA - DEPARTMENT OF TRANSPORTATION
Caltrans 06-DESIGN

FUNCTIONAL SUPERVISOR: JACK WALKER
CALCULATED-DESIGNED BY: TOM LIU
CHECKED BY: JIM MILLS
REVISED BY / DATE REVISED

LAST REVISION 08-31-11
DATE PLOTTED => 16-FEB-2012
TIME PLOTTED => 14:46

Dist	COUNTY	ROUTE	POST MILES TOTAL PROJECT	SHEET No.	TOTAL SHEETS
05	SLO	46	40.7/46.3	212	541

REGISTERED CIVIL ENGINEER Sumangali Hoode DATE 11-10-11

PLANS APPROVAL DATE 2-13-12

REGISTERED PROFESSIONAL ENGINEER SUMANGALI HOODE No. 59498 Exp. 12-31-11 CIVIL STATE OF CALIFORNIA

THE STATE OF CALIFORNIA OR ITS OFFICERS OR AGENTS SHALL NOT BE RESPONSIBLE FOR THE ACCURACY OR COMPLETENESS OF SCANNED COPIES OF THIS PLAN SHEET.

NOTES:

1. D = INLET DEPRESSION. THE INLET DEPRESSION SHALL BE 1" UNLESS INDICATED OTHERWISE.
   DH = DIKE HEIGHT.
2. APRON SHALL BE HMA AND MATCH THICKNESS OF ADJACENT SHOULDER.
3. FOR DETAILS AND DIMENSIONS NOT SHOWN, SEE Std PLAN D87C.

LEGEND

PLACE HMA (Misc AREA)

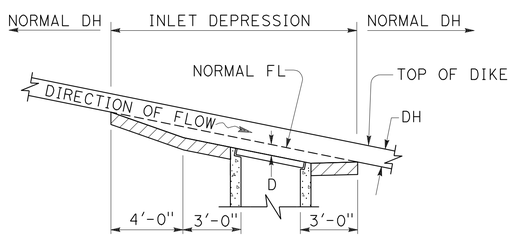

SECTION A-A

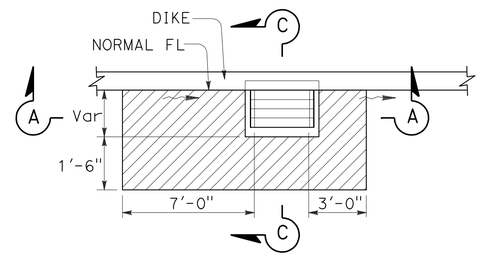

PLAN
ON GRADE

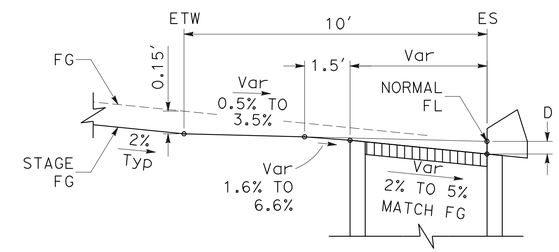

STAGE

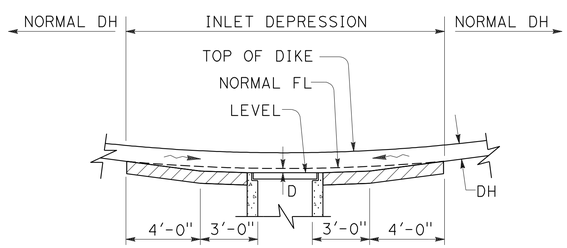

SECTION B-B

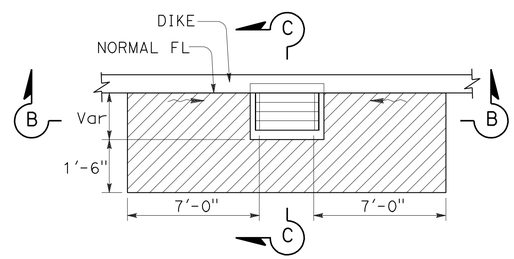

PLAN
SAG

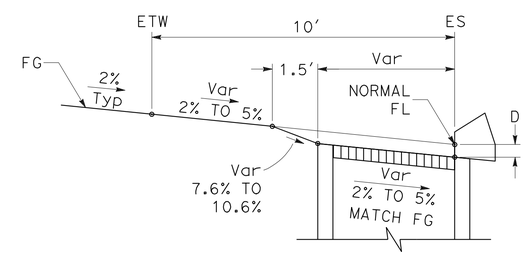

FINAL

TYPICAL SECTION

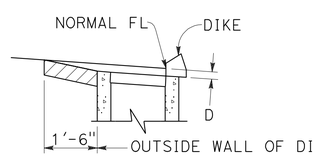

SECTION C-C

PAY LIMITS OF INLET DEPRESSION

DRAINAGE INLET DEPRESSION

DRAINAGE DETAILS
NO SCALE **DD-3**

STATE OF CALIFORNIA - DEPARTMENT OF TRANSPORTATION
Caltrans® 06-DESIGN

FUNCTIONAL SUPERVISOR: JACK WALKER
CALCULATED-DESIGNED BY: SUMANGALI HOODE
CHECKED BY: TOM LIU
REVISED BY / DATE REVISED

LAST REVISION 01-20-11 DATE PLOTTED => 16-FEB-2012 TIME PLOTTED => 14:46

Dist	COUNTY	ROUTE	POST MILES TOTAL PROJECT	SHEET No.	TOTAL SHEETS
05	SLO	46	40.7/46.3	213	541

Sumangali Hoode 11-10-11
REGISTERED CIVIL ENGINEER DATE

2-13-12
PLANS APPROVAL DATE

REGISTERED PROFESSIONAL ENGINEER SUMANGALI HOODE No. 59498 Exp. 12-31-11 CIVIL STATE OF CALIFORNIA

THE STATE OF CALIFORNIA OR ITS OFFICERS OR AGENTS SHALL NOT BE RESPONSIBLE FOR THE ACCURACY OR COMPLETENESS OF SCANNED COPIES OF THIS PLAN SHEET.

NOTES:
1. CUTOFF WALLS ARE REQUIRED AT THE BEGINNING AND END OF ALL PCC DITCHES.
2. CUTOFF WALLS ARE TO BE PLACED AT 100' INTERVALS ALONG PCC LINED DITCH.
3. FOR DIMENSIONS OF THE PIPE, SIZE & TYPE OF RSP, SEE THE DRAINAGE PROFILE.

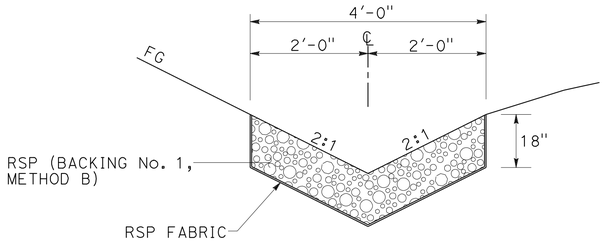

RSP LINED TOF DITCH

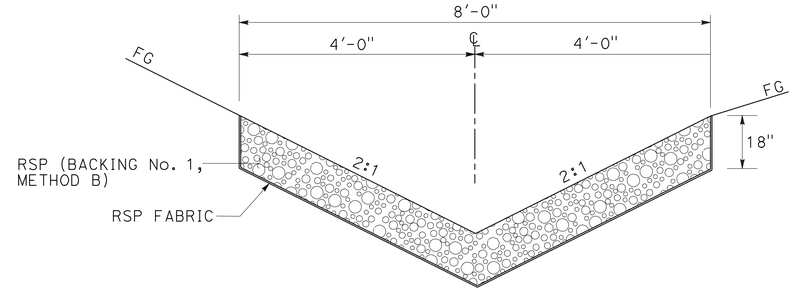

RSP LINED TOF DITCH
Sta 637+08 TO Sta 642+11.41

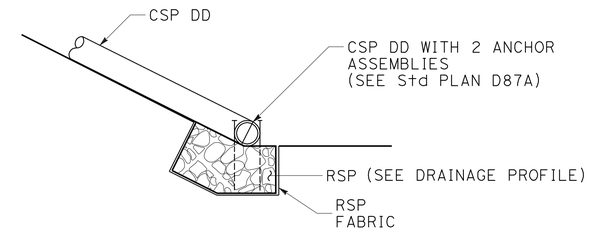

SECTION D-D

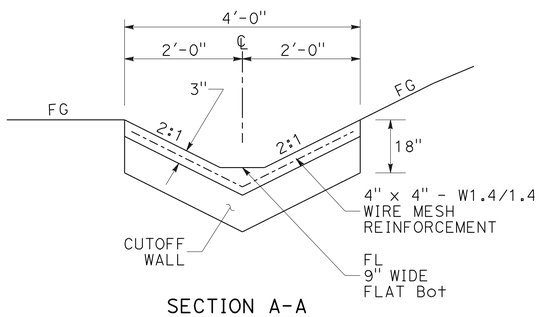

SECTION A-A

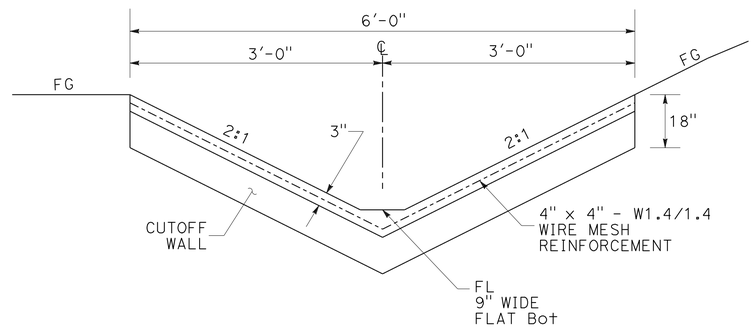

SECTION B-B

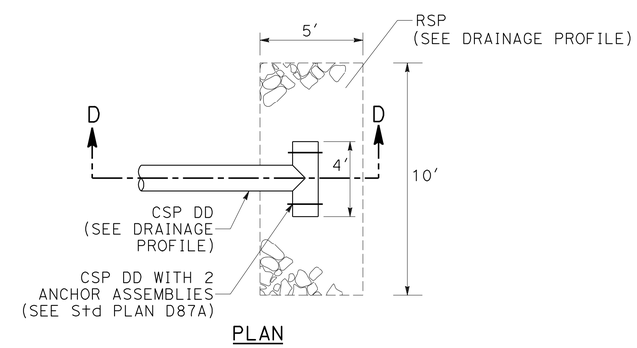

PLAN

(SEE NOTE 3)

TYPICAL CSP DD T-DISSIPATOR

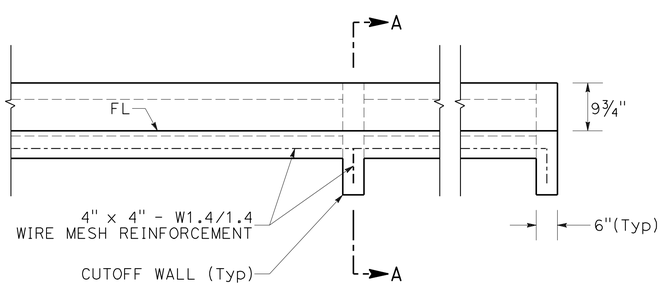

PCC LINED TOC DITCH

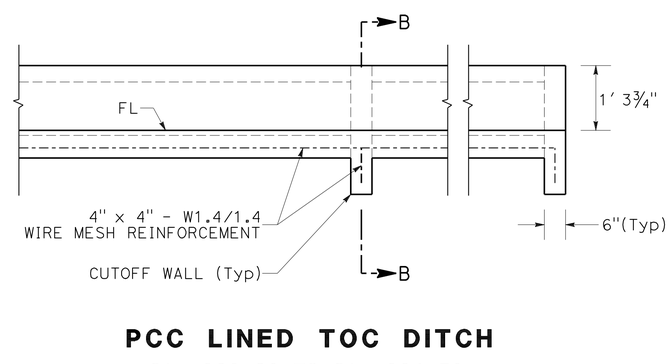

PCC LINED TOC DITCH
Sta 860+20 TO Sta 864+50

DRAINAGE DETAILS
NO SCALE
DD-4

REVISED BY	DATE REVISED

CALCULATED-DESIGNED BY	CHECKED BY
JIM MILLS	TOM LIU

FUNCTIONAL SUPERVISOR: JACK WALKER

STATE OF CALIFORNIA - DEPARTMENT OF TRANSPORTATION
Caltrans
06-DESIGN

LAST REVISION 11-03-11 | DATE PLOTTED => 16-FEB-2012 | TIME PLOTTED => 14:46

Dist	COUNTY	ROUTE	POST MILES TOTAL PROJECT	SHEET No.	TOTAL SHEETS
05	SLO	46	40.7/46.3	214	541

Sumangali Hoode 11-10-11
REGISTERED CIVIL ENGINEER DATE

2-13-12
PLANS APPROVAL DATE

REGISTERED PROFESSIONAL ENGINEER
SUMANGALI HOODE
No. 59498
Exp. 12-31-11
CIVIL
STATE OF CALIFORNIA

THE STATE OF CALIFORNIA OR ITS OFFICERS OR AGENTS SHALL NOT BE RESPONSIBLE FOR THE ACCURACY OR COMPLETENESS OF SCANNED COPIES OF THIS PLAN SHEET.

NOTES:

1. SEE ALL NOTES ON Std PLAN D74B, EXCEPT No.6 AND No.12.
2. FOR DIMENSIONS NOT SHOWN, SEE Std PLAN D73.

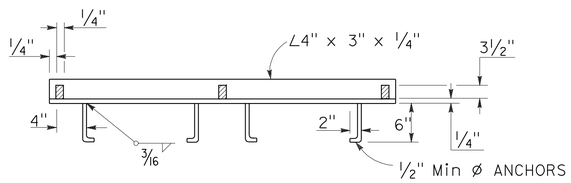

CROSS SECTION
(THRU FRAME)

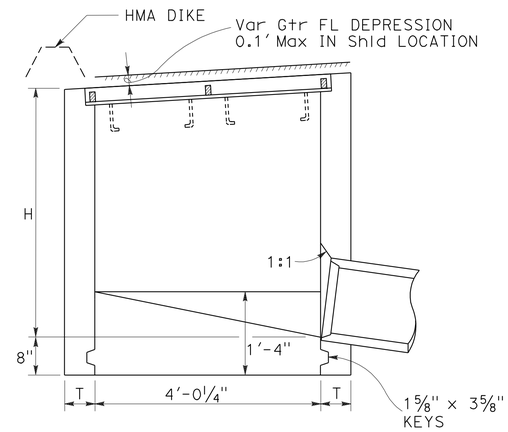

SECTION A-A

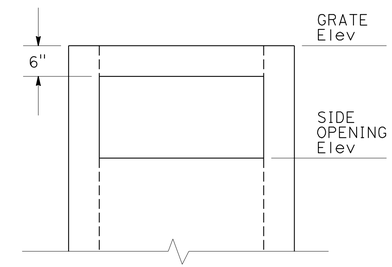

SECTION B-B

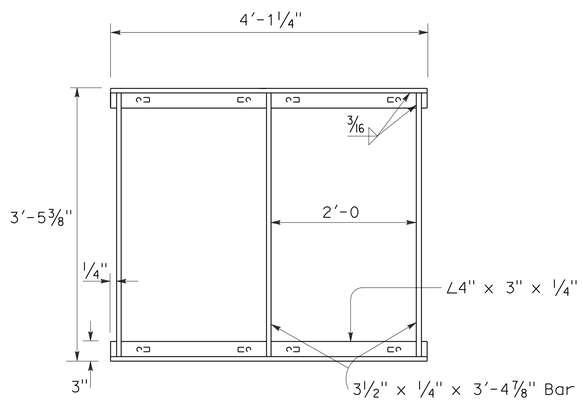

GRATE FRAME FOR TYPE GDO Mod DI

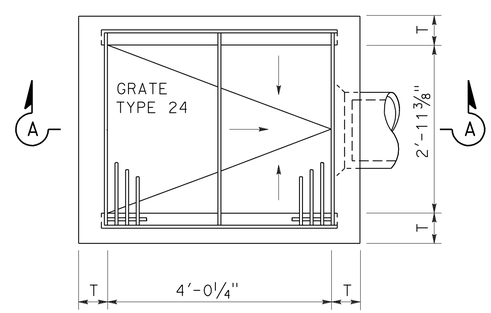

PLAN

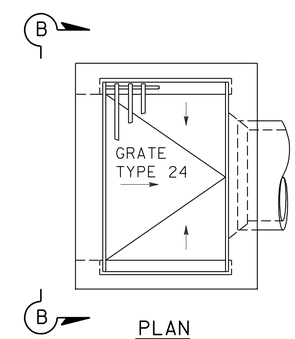

PLAN

TYPE GDO Mod DI

(SEE NOTE 1)

TYPE G1 DI WITH SIDE OPENING

(SEE NOTE 2)

DRAINAGE DETAILS

NO SCALE

DD-5

STATE OF CALIFORNIA - DEPARTMENT OF TRANSPORTATION
Caltrans®
06-DESIGN

FUNCTIONAL SUPERVISOR: JACK WALKER
CALCULATED-DESIGNED BY: JIM MILLS
CHECKED BY: TOM LIU
REVISED BY
DATE REVISED

LAST REVISION 05-26-11
DATE PLOTTED => 16-FEB-2012
TIME PLOTTED => 14:46

Dist	COUNTY	ROUTE	POST MILES TOTAL PROJECT	SHEET No.	TOTAL SHEETS
05	SLO	46	40.7/46.3	215	541

Sumangali Hoode 11-10-11
REGISTERED CIVIL ENGINEER DATE

2-13-12
PLANS APPROVAL DATE

REGISTERED PROFESSIONAL ENGINEER SUMANGALI HOODE No. 59498 Exp. 12-31-11 CIVIL STATE OF CALIFORNIA

THE STATE OF CALIFORNIA OR ITS OFFICERS OR AGENTS SHALL NOT BE RESPONSIBLE FOR THE ACCURACY OR COMPLETENESS OF SCANNED COPIES OF THIS PLAN SHEET.

NOTES:

1. " H " IS THE DIFFERENCE IN ELEVATION BETWEEN THE OUTLET CULVERT FLOW LINE AND THE NORMAL MEDIAN GUTTER GRADE LINE UNDEPRESSED.
2. " H′ " IS THE DIFFERENCE IN ELEVATION BETWEEN THE OUTLET CULVERT FLOW LINE AND THE TOP OF GRATE DEPRESSED. 4" Typ BELOW THE NORMAL MEDIAN GUTTER GRADE LINE.
3. THE APRON SHALL NOT ENCROACH INTO THE SHOULDER AREA.
4. MEDIAN DRAIN INLET TYPE VARIES, SEE Std PLANS FOR EXTERIOR DIMENSIONS.

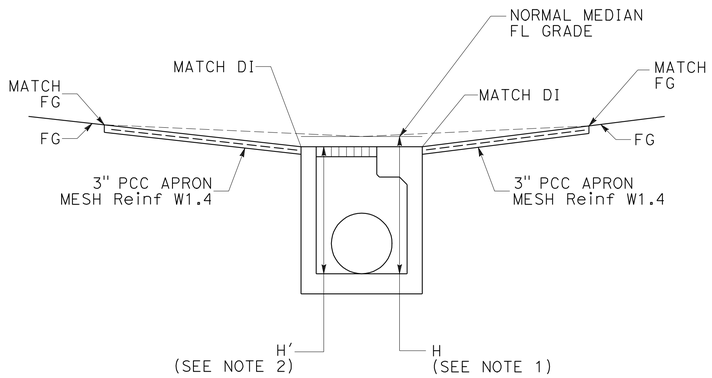

SECTION A-A

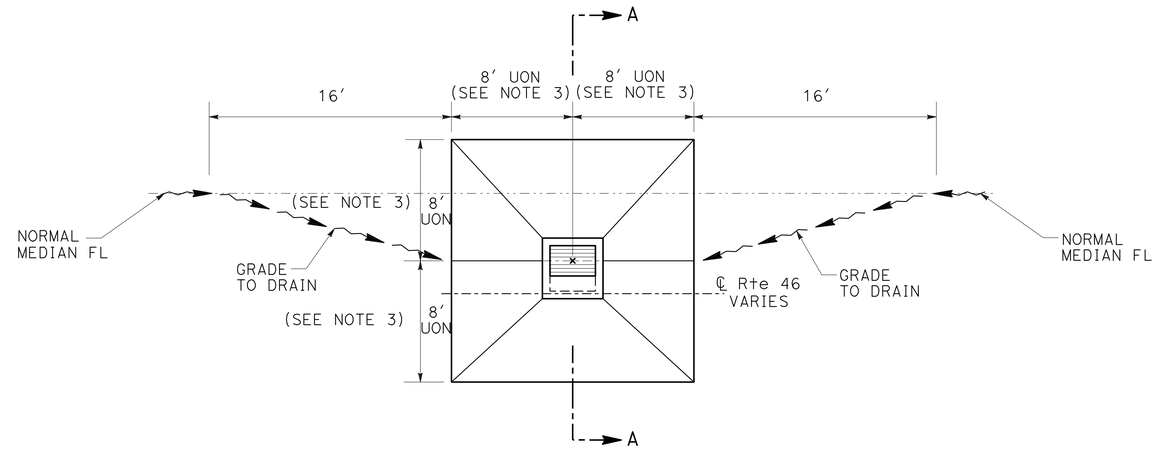

PLAN

Med DI APRON AND GRADING

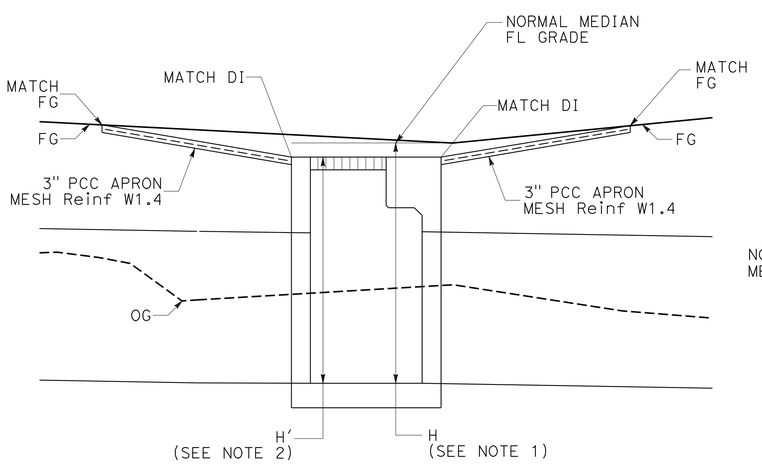

SECTION B-B

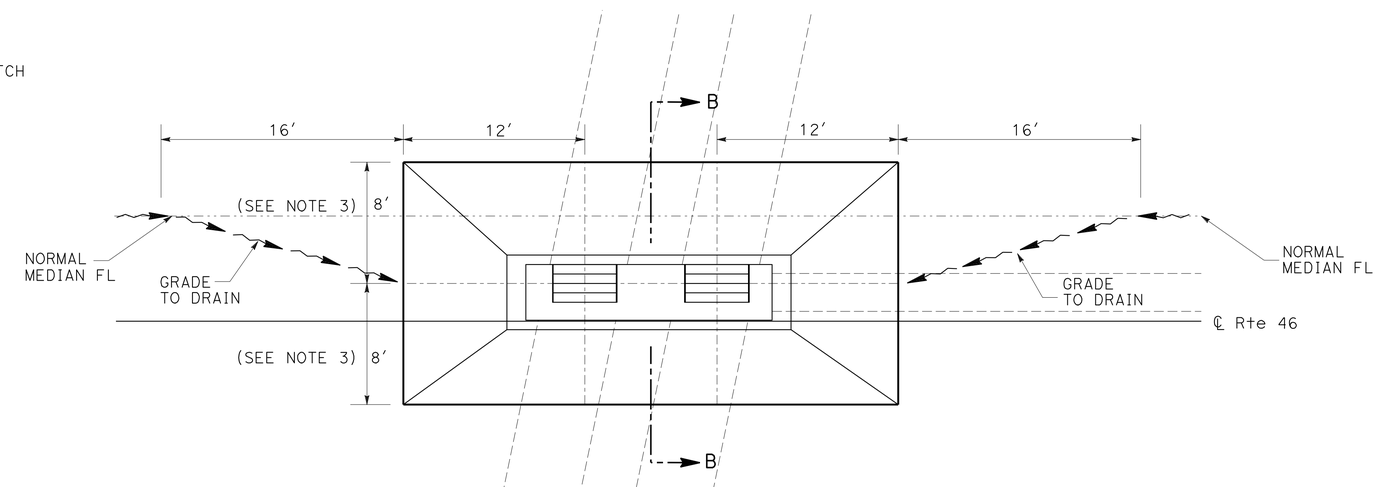

PLAN

TYPE G2 Mod DI APRON AND GRADING

DRAINAGE SYSTEM No. 13

DRAINAGE DETAILS

NO SCALE

DD-6

STATE OF CALIFORNIA - DEPARTMENT OF TRANSPORTATION
Caltrans®
06-DESIGN

FUNCTIONAL SUPERVISOR: JACK WALKER
CALCULATED-DESIGNED BY: SUMANGALI HOODE
CHECKED BY: TOM LIU
REVISED BY
DATE REVISED

LAST REVISION 08-31-11
DATE PLOTTED => 16-FEB-2012
TIME PLOTTED => 14:46

Dist	COUNTY	ROUTE	POST MILES TOTAL PROJECT	SHEET No.	TOTAL SHEETS
05	SLO	46	40.7/46.3	216	541

REGISTERED CIVIL ENGINEER 11-10-11 DATE

2-13-12
PLANS APPROVAL DATE

REGISTERED PROFESSIONAL ENGINEER SUMANGALI HOODE No. 59498 Exp. 12-31-11 CIVIL STATE OF CALIFORNIA

THE STATE OF CALIFORNIA OR ITS OFFICERS OR AGENTS SHALL NOT BE RESPONSIBLE FOR THE ACCURACY OR COMPLETENESS OF SCANNED COPIES OF THIS PLAN SHEET.

NOTE:

1. FOR TYPE OF RSP AND LENGTH, WIDTH AND DEPTH OF RSP PLACEMENT, SEE DRAINAGE PROFILES.

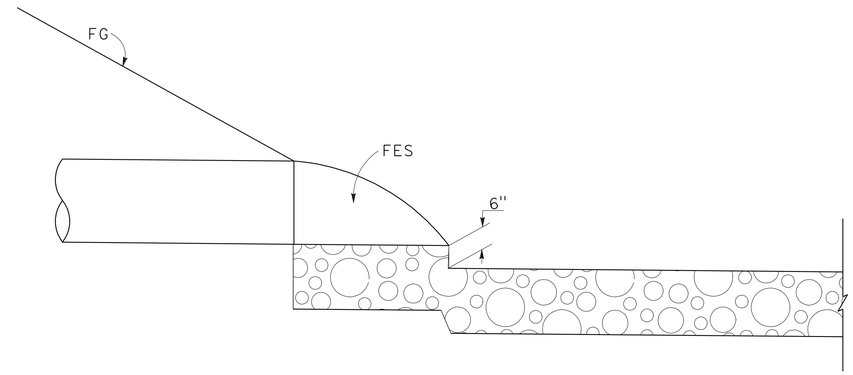

RSP AT FES

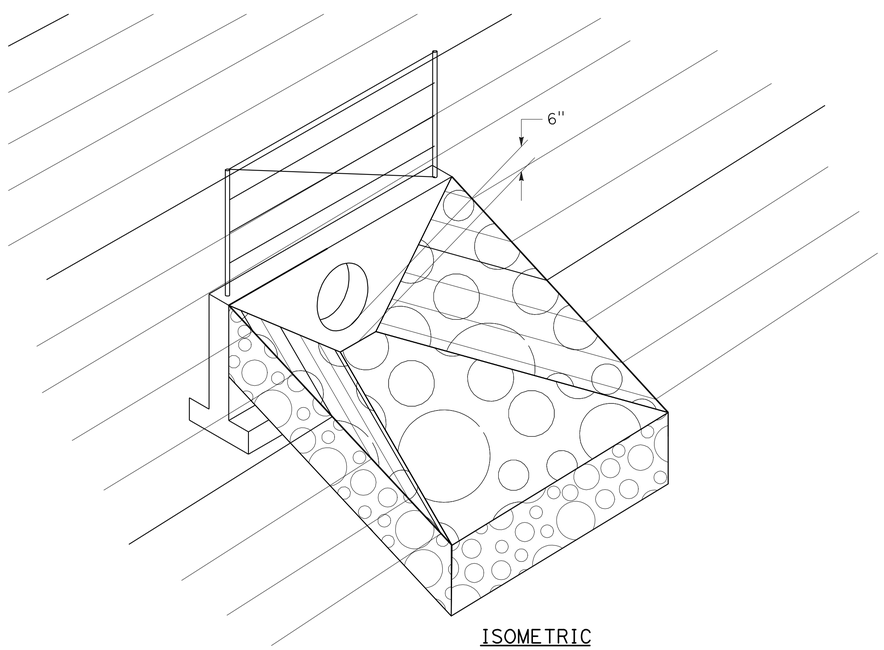

ISOMETRIC

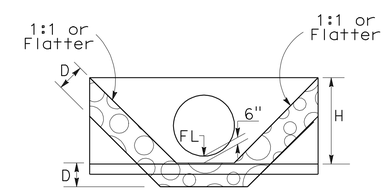

FRONT ELEVATION
SINGLE HEADWALL

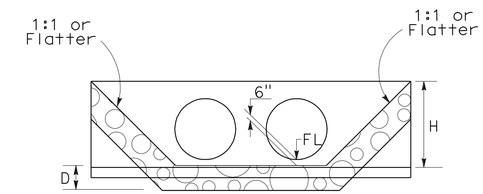

FRONT ELEVATION
DOUBLE HEADWALL

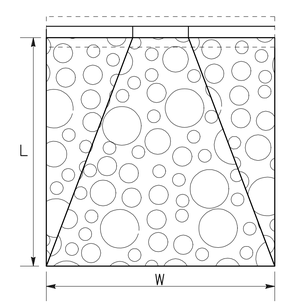

PLAN VIEW

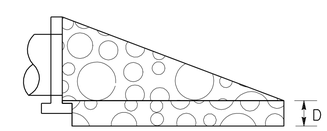

SECTION, SINGLE &
DOUBLE HEADWALLS

TYPICAL RSP AT HEADWALLS/ENDWALLS AND FES

DRAINAGE DETAILS

NO SCALE

DD-7

STATE OF CALIFORNIA - DEPARTMENT OF TRANSPORTATION
Caltrans®
06-DESIGN

FUNCTIONAL SUPERVISOR: JACK WALKER
CALCULATED-DESIGNED BY: JIM MILLS
CHECKED BY: TOM LIU
REVISED BY
DATE REVISED

LAST REVISION 09-12-11
DATE PLOTTED => 16-FEB-2012
TIME PLOTTED => 14:46

Dist	COUNTY	ROUTE	POST MILES TOTAL PROJECT	Sht No.	TOTAL Shts
05	SLO	46	40.7/46.3	217	541

Sumangali Hoode 11-10-11
REGISTERED CIVIL ENGINEER DATE

2-13-12
PLANS APPROVAL DATE

REGISTERED PROFESSIONAL ENGINEER
SUMANGALI HOODE
No. 59498
Exp. 12-31-11
CIVIL
STATE OF CALIFORNIA

THE STATE OF CALIFORNIA OR ITS OFFICERS OR AGENTS SHALL NOT BE RESPONSIBLE FOR THE ACCURACY OR COMPLETENESS OF SCANNED COPIES OF THIS PLAN SHEET.

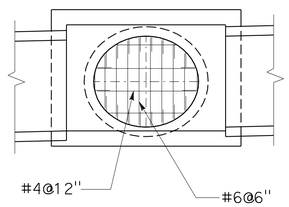

SECTION X-X

STAGE 2

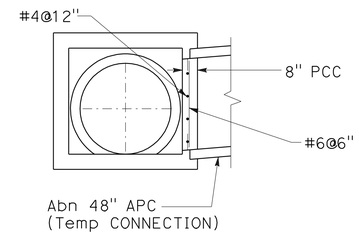

SECTION Y-Y

STAGE 2

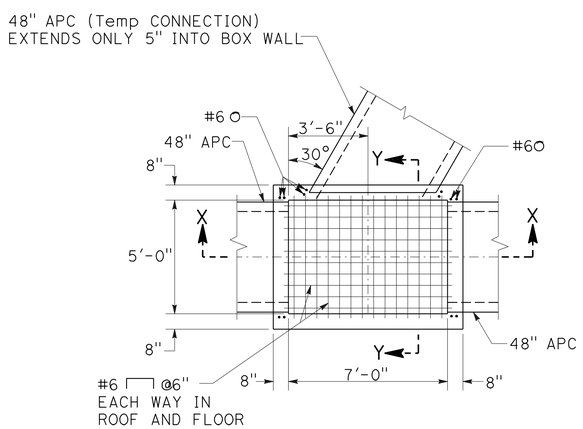

PLAN VIEW

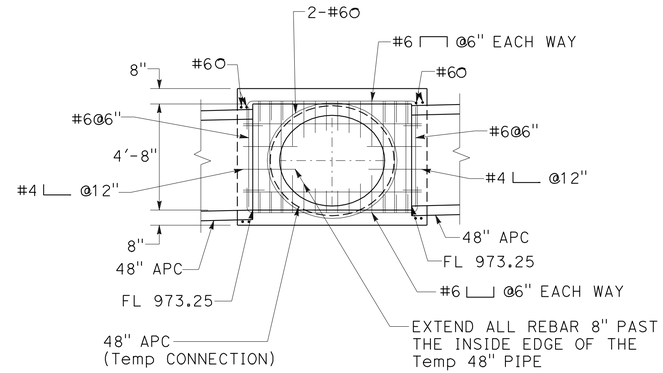

SECTION X-X

STAGE 1

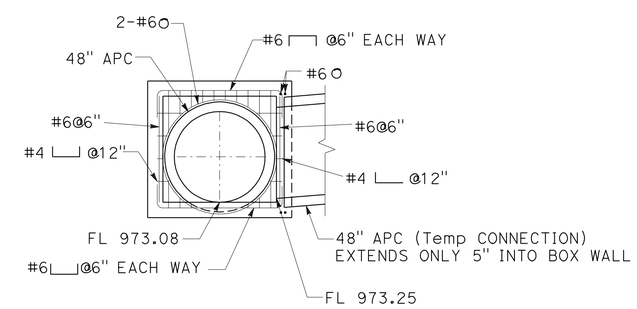

SECTION Y-Y

STAGE 1

JUNCTION STRUCTURE

DRAINAGE SYSTEM No. 4

DRAINAGE DETAILS

NO SCALE

DD-8

REVISED BY	DATE REVISED
JIM MILLS	TOM LIU
CALCULATED-DESIGNED BY	CHECKED BY
FUNCTIONAL SUPERVISOR	JACK WALKER

STATE OF CALIFORNIA - DEPARTMENT OF TRANSPORTATION
Caltrans
06-DESIGN

LAST REVISION 05-06-11 | DATE PLOTTED => 16-FEB-2012 | TIME PLOTTED => 14:46

Dist	COUNTY	ROUTE	POST MILES TOTAL PROJECT	Sht No.	TOTAL Shts
05	SLO	46	40.7/46.3	218	541

Sumangali Hoode 11-10-11
REGISTERED CIVIL ENGINEER DATE

2-13-12
PLANS APPROVAL DATE

REGISTERED PROFESSIONAL ENGINEER SUMANGALI HOODE No. 59498 Exp. 12-31-11 CIVIL STATE OF CALIFORNIA

THE STATE OF CALIFORNIA OR ITS OFFICERS OR AGENTS SHALL NOT BE RESPONSIBLE FOR THE ACCURACY OR COMPLETENESS OF SCANNED COPIES OF THIS PLAN SHEET.

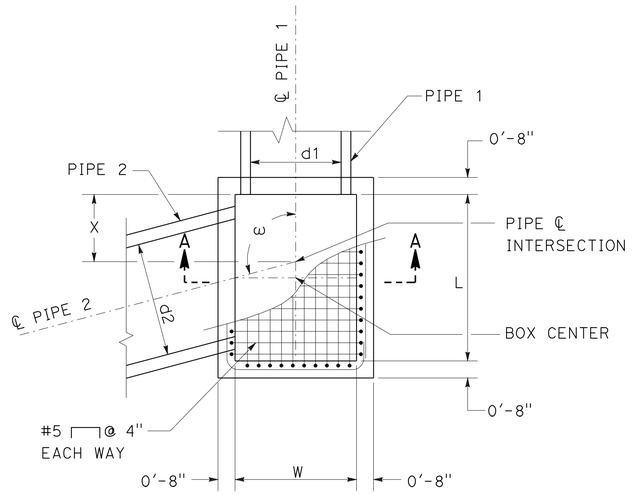

PLAN VIEW

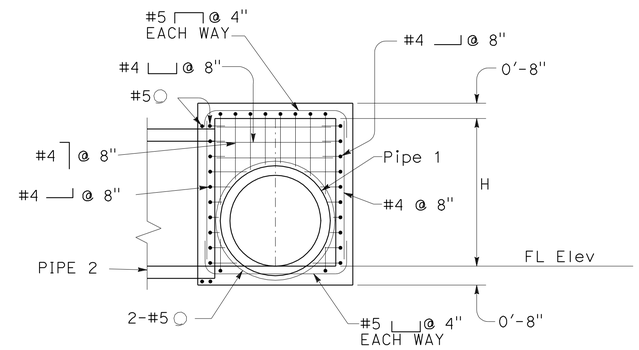

SECTION A-A

STRUCTURE DATA

DRAINAGE SYSTEM No.	DRAINAGE UNIT No.	PIPE 1	d1	PIPE 2	d2	L	W	H	X	ω (LEFT SHOWN)	FL Elev	BOX CENTER LOCATION
9	k	TEMPORARY APC	24"	EXISTING RCP	24"	3'-0"	3'-0"	2'-6"	1'- 6"	80.3° LEFT	993.13	Sta 675+15.30 1.53 Lt
9	s	PERMANENT RCP	36"	TEMPORARY APC	24"	3'-0"	3'-11"	3'-11"	1'- 7 25/32"	94.4° LEFT	987.58	Sta 674+89.44 74.49' Rt
9	w	EXISTING RCP	24"	TEMPORARY APC	24"	3'-0"	3'-0"	2'-6"	1'- 6"	90° LEFT	987.83	Sta 675+01.96 76.78' Rt
14	h	PERMANENT APC	36"	TEMPORARY APC	24"	3'-0"	3'-11"	3'-11"	0'-5 1/16"	118.9° RIGHT	953.12	Sta 707+64.47 0.68 Rt
14	i	EXISTING RCP	24"	TEMPORARY APC	24"	3'-0"	3'-0"	2'-6"	0'-11 7/8"	108.9° RIGHT	950.54	Sta 707+76.52 5.77 Lt
17	i	PERMANENT APC	48"	TEMPORARY APC	24"	3'-0"	5'-2"	4'-8"	1'-6"	90° RIGHT	968.56	Sta 717+88.11 0.00 Rt
17	j	EXISTING RCP	30"	TEMPORARY APC	24"	3'-0"	3'-8"	3'-0"	1'-6 3/4"	88.1° RIGHT	968.11	Sta 718+00.85 8.78 Rt
35	e	PERMANENT RCP	48"	TEMPORARY RCP	30"	3'-7"	5'-2"	4'-8"	1'-0 3/4"	106° LEFT	997.00	Sta 871+77.36 6.92 Rt
35	c	EXISTING RCP	30"	TEMPORARY RCP	30"	3'-5"	3'-5"	3'-0"	1'-8 1/2"	90° LEFT	995.28	Sta 871+27.68 6.25 Rt

JUNCTION STRUCTURE

DRAINAGE SYSTEM No. 9

DRAINAGE SYSTEM No. 14

DRAINAGE SYSTEM No. 17

DRAINAGE SYSTEM No. 35

DRAINAGE DETAILS

NO SCALE

DD-9

REVISED BY	DATE REVISED
JIM MILLS	TOM LIU
CALCULATED-DESIGNED BY	CHECKED BY
FUNCTIONAL SUPERVISOR	JACK WALKER

STATE OF CALIFORNIA - DEPARTMENT OF TRANSPORTATION
Caltrans
06-DESIGN

LAST REVISION 10-06-11 | DATE PLOTTED => 16-FEB-2012 | TIME PLOTTED => 14:46

Dist	COUNTY	ROUTE	POST MILES TOTAL PROJECT	Sht No.	TOTAL Shts
05	SLO	46	40.7/46.3	219	541

Sumangali Hoode 11-10-11
REGISTERED CIVIL ENGINEER DATE

2-13-12
PLANS APPROVAL DATE

REGISTERED PROFESSIONAL ENGINEER
SUMANGALI HOODE
No. 59498
Exp. 12-31-11
CIVIL
STATE OF CALIFORNIA

THE STATE OF CALIFORNIA OR ITS OFFICERS OR AGENTS SHALL NOT BE RESPONSIBLE FOR THE ACCURACY OR COMPLETENESS OF SCANNED COPIES OF THIS PLAN SHEET.

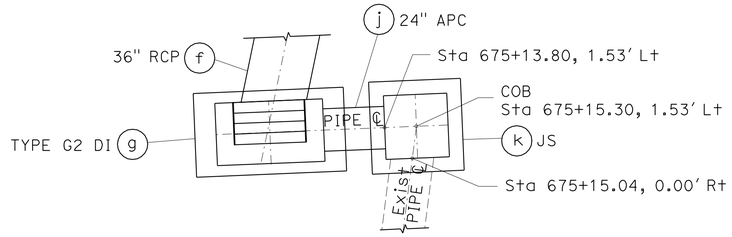

9 (k) BOX ORIENTATION
NO SCALE

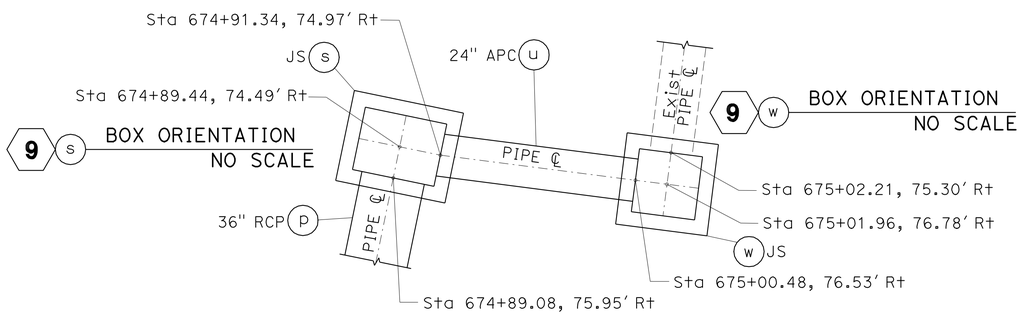

9 (s) BOX ORIENTATION
NO SCALE

9 (w) BOX ORIENTATION
NO SCALE

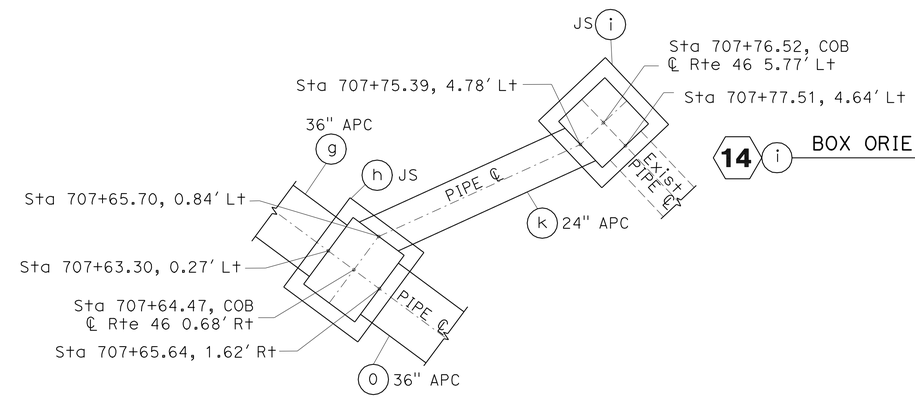

14 (i) BOX ORIENTATION
NO SCALE

14 (h) BOX ORIENTATION
NO SCALE

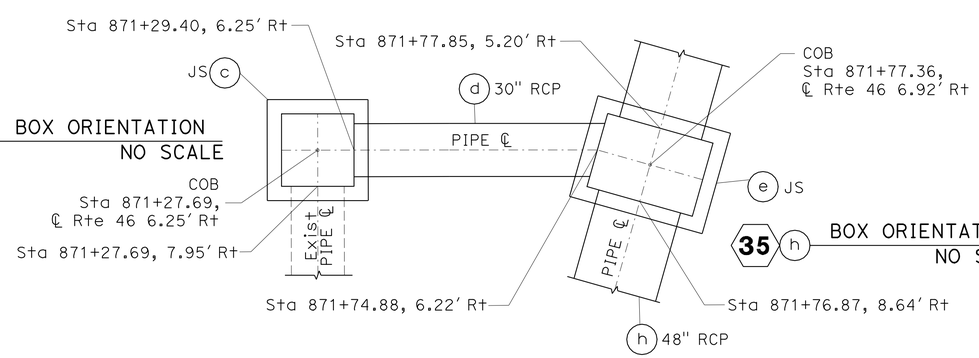

35 (c) BOX ORIENTATION
NO SCALE

35 (h) BOX ORIENTATION
NO SCALE

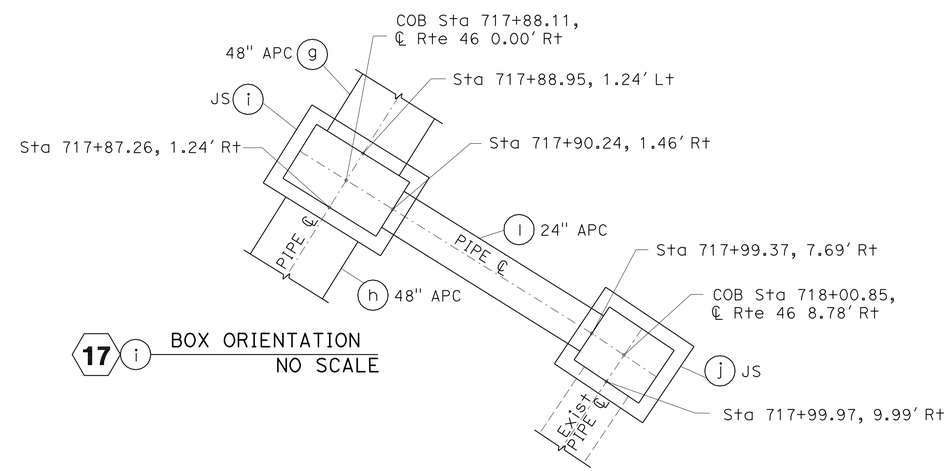

17 (i) BOX ORIENTATION
NO SCALE

17 (j) BOX ORIENTATION
NO SCALE

JUNCTION STRUCTURE
DRAINAGE SYSTEM No. 9
DRAINAGE SYSTEM No. 14
DRAINAGE SYSTEM No. 17
DRAINAGE SYSTEM No. 35

DRAINAGE DETAILS
NO SCALE

DD-10

STATE OF CALIFORNIA - DEPARTMENT OF TRANSPORTATION
Caltrans®
06-DESIGN

FUNCTIONAL SUPERVISOR: JACK WALKER
CALCULATED-DESIGNED BY: JIM MILLS
CHECKED BY: TOM LIU
REVISED BY
DATE REVISED

LAST REVISION 10-27-11
DATE PLOTTED => 16-FEB-2012
TIME PLOTTED => 14:47

Dist	COUNTY	ROUTE	POST MILES TOTAL PROJECT	SHEET No.	TOTAL SHEETS
05	SLO	46	40.7/46.3	220	541

Sumangali Hoode 11-10-11
REGISTERED CIVIL ENGINEER DATE

2-13-12
PLANS APPROVAL DATE

REGISTERED PROFESSIONAL ENGINEER SUMANGALI HOODE No. 59498 Exp. 12-31-11 CIVIL STATE OF CALIFORNIA

THE STATE OF CALIFORNIA OR ITS OFFICERS OR AGENTS SHALL NOT BE RESPONSIBLE FOR THE ACCURACY OR COMPLETENESS OF SCANNED COPIES OF THIS PLAN SHEET.

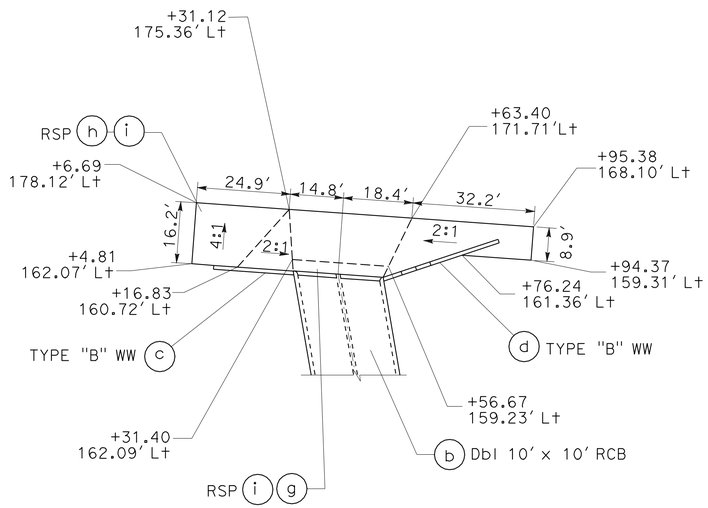

INLET PLAN VIEW
NO SCALE

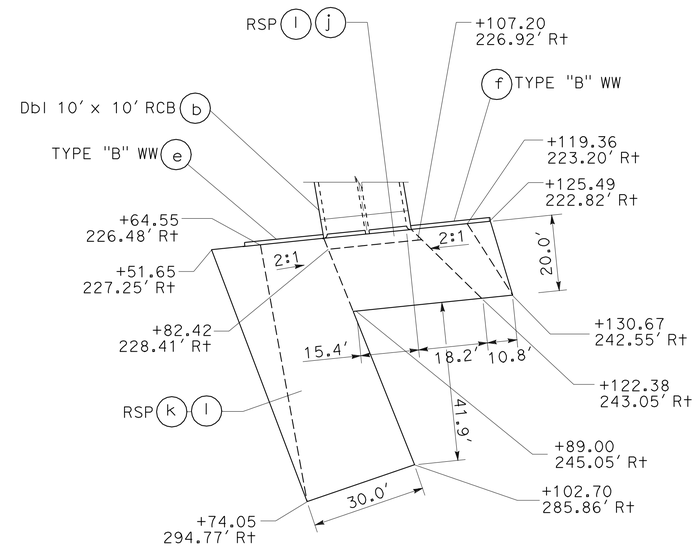

OUTLET PLAN VIEW
NO SCALE

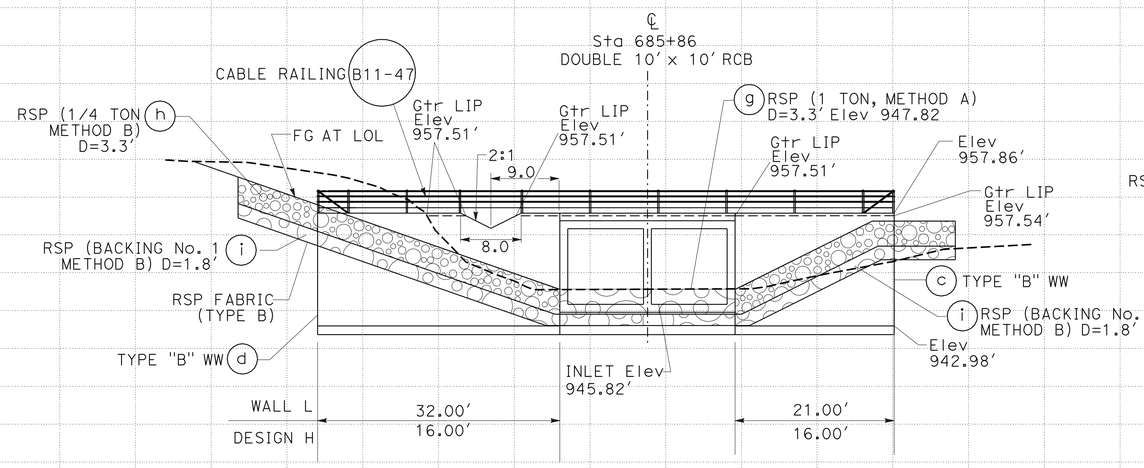

INLET ELEVATION
SCALE: Horiz 1" = 10'
Vert 1" = 10'

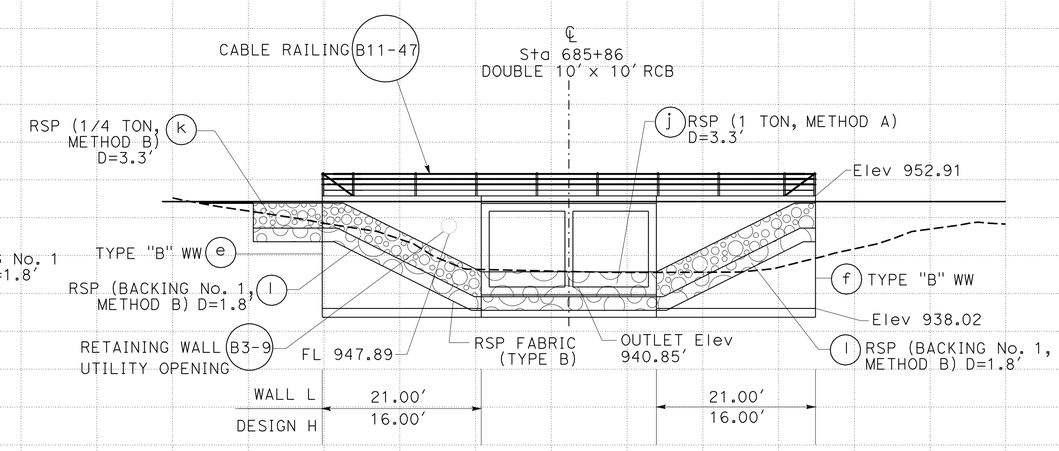

OUTLET ELEVATION
SCALE: Horiz 1" = 10'
Vert 1" = 10'

DRAINAGE SYSTEM No. 10

DRAINAGE DETAILS
DD-11

STATION		TOTAL
CY	Exc	
	Emb	

REVISED BY | DATE REVISED
JIM MILLS | TOM LIU
CALCULATED-DESIGNED BY | CHECKED BY
FUNCTIONAL SUPERVISOR: JACK WALKER

STATE OF CALIFORNIA - DEPARTMENT OF TRANSPORTATION
Caltrans
06-DESIGN

LAST REVISION 11-04-11
DATE PLOTTED => 16-FEB-2012
TIME PLOTTED => 14:47

Dist	COUNTY	ROUTE	POST MILES TOTAL PROJECT	SHEET No.	TOTAL SHEETS
05	SLO	46	40.7/46.3	221	541

REGISTERED CIVIL ENGINEER Sumangali Hoode DATE 11-10-11

PLANS APPROVAL DATE 2-13-12

REGISTERED PROFESSIONAL ENGINEER SUMANGALI HOODE No. 59498 Exp. 12-31-11 CIVIL STATE OF CALIFORNIA

THE STATE OF CALIFORNIA OR ITS OFFICERS OR AGENTS SHALL NOT BE RESPONSIBLE FOR THE ACCURACY OR COMPLETENESS OF SCANNED COPIES OF THIS PLAN SHEET.

NOTES:

1. "e" BARS ARE AT HALF SPACING.
2. FOR DESIGN AND DETAILS NOT SHOWN, SEE STANDARD PLAN D82.

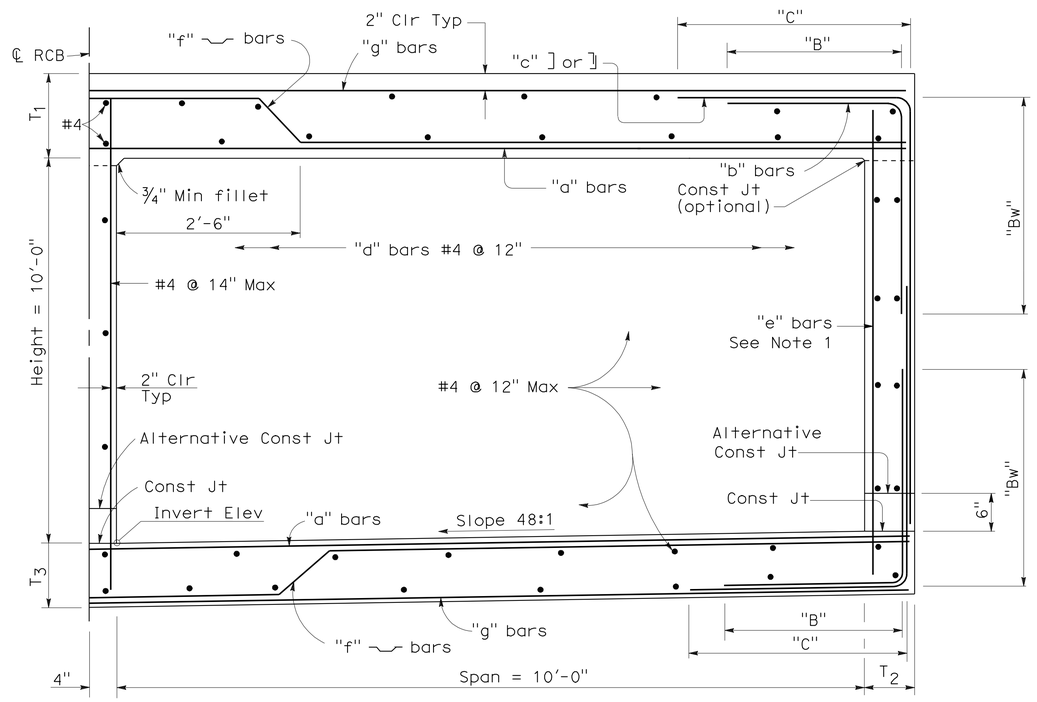

TYPICAL SECTION

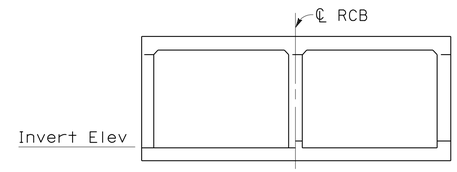

FLAT INVERT ALTERNATIVE

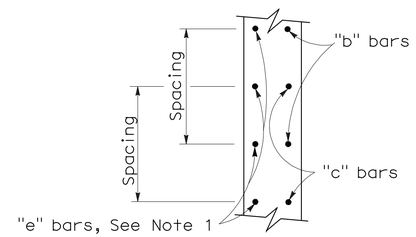

EXTERIOR WALL SECTION

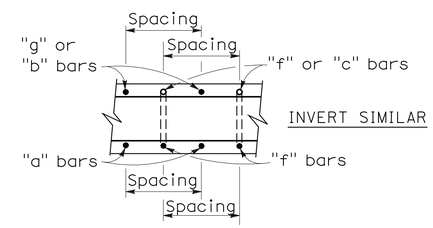

ROOF SECTION

BOX DATA

SPAN			10'
HEIGHT			10'
Maximum Earth Cover			26'
Conc	Roof	T1	1'-½"
	Walls	T2	1'-½"
	Invert	T3	1'-½"
Reinforcement	Spacing		7"
	"g"	Size Bar	#7
	"f"	Size Bar	#6
	"a"	Size Bar	#4
	"b"	Size Bar	#6
		Dim "B"	3'-1"
		Dim "Bw"	4'-11"
	"c"	Size Bar	#6
		Dim "C"	4'-9"
	* "e"	Size Bar	#5

*See NOTE 1

CAST-IN-PLACE REINFORCED CONCRETE DOUBLE BOX CULVERT

DRAINAGE SYSTEM No. 10

DRAINAGE DETAILS

NO SCALE **DD-12**

STATE OF CALIFORNIA - DEPARTMENT OF TRANSPORTATION
06-DESIGN
Caltrans

FUNCTIONAL SUPERVISOR: JACK WALKER
CALCULATED-DESIGNED BY: JIM MILLS
CHECKED BY: KOU-KWANG LIN
REVISED BY
DATE REVISED

LAST REVISION 08-09-11
DATE PLOTTED => 16-FEB-2012
TIME PLOTTED => 14:47

Dist	COUNTY	ROUTE	POST MILES TOTAL PROJECT	SHEET No.	TOTAL SHEETS
05	SLO	46	40.7/46.3	222	541

REGISTERED CIVIL ENGINEER 11-10-11 DATE

2-13-12
PLANS APPROVAL DATE

REGISTERED PROFESSIONAL ENGINEER SUMANGALI HOODE No. 59498 Exp. 12-31-11 CIVIL STATE OF CALIFORNIA

THE STATE OF CALIFORNIA OR ITS OFFICERS OR AGENTS SHALL NOT BE RESPONSIBLE FOR THE ACCURACY OR COMPLETENESS OF SCANNED COPIES OF THIS PLAN SHEET.

NOTES:

1. FOR SECTION B-B, SEE Std PLAN D73.
2. FOR REINFORCEMENT NOT SHOWN, SEE TYPE G2, Std PLAN D73.

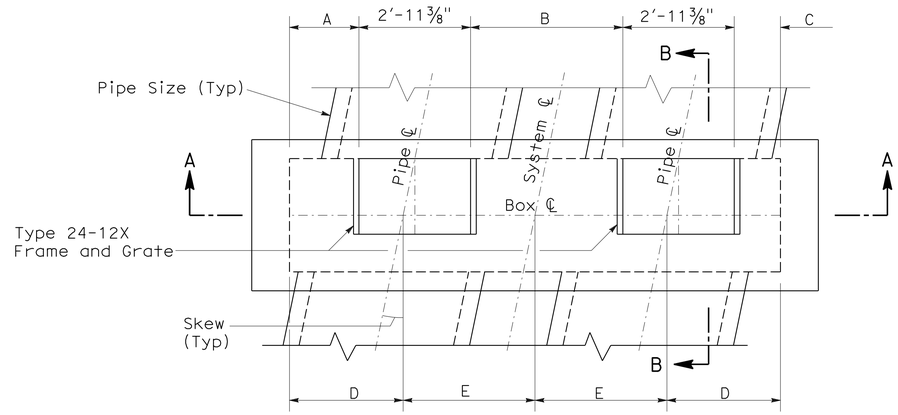

PLAN VIEW
(SEE NOTE 1)

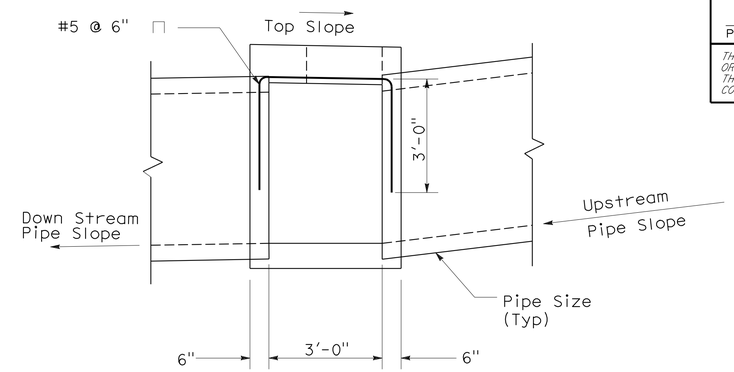

SECTION D-D

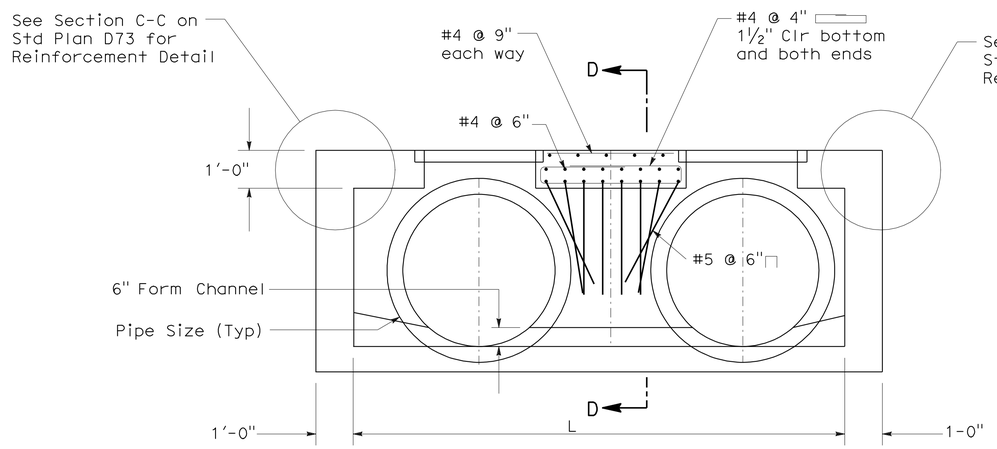

SECTION A-A

DRAINAGE INLET DATA

Drainage System No.	Location	Pipe Size	A	B	C	D	E	L	Skew	Top Slope	Upstream Pipe Slope	Downstream Pipe Slope
13	Shoulder	48" APC (smooth)	1'-7 39/64"	4'-0 5/16"	1'-5 17/64"	3'-0"	3'-6"	13'-0"	11.6°	Match shoulder slope	0.1199	0.0173
13	Median	48" APC (smooth)	1'-7 39/64"	4'-0 3/8"	1'-5 17/64"	3'-0"	3'-6"	13'-0"	12°	Flat	0.0173	0.0170
18	Shoulder	36" RCP	1'-5 5/8"	2'-10 3/8"	0'-9 5/16"	2'-7 5/32"	2'-10 57/64"	11'-0"	13.2°	Match shoulder slope	0.0655	0.0183

TYPE G2 Mod DI

DRAINAGE SYSTEM No. 13 **DRAINAGE SYSTEM No. 18**

DRAINAGE DETAILS
NO SCALE
DD-13

STATE OF CALIFORNIA - DEPARTMENT OF TRANSPORTATION
Caltrans
06-DESIGN
FUNCTIONAL SUPERVISOR: JACK WALKER
CALCULATED-DESIGNED BY: JIM MILLS
CHECKED BY: TOM LIU
REVISED BY
DATE REVISED

LAST REVISION 08-09-11
DATE PLOTTED => 16-FEB-2012
TIME PLOTTED => 14:47

Dist	COUNTY	ROUTE	POST MILES TOTAL PROJECT	SHEET No.	TOTAL SHEETS
05	SLO	46	40.7/46.3	223	541

Sumangali Hoode 11-10-11
REGISTERED CIVIL ENGINEER DATE

2-13-12
PLANS APPROVAL DATE

REGISTERED PROFESSIONAL ENGINEER
SUMANGALI HOODE
No. 59498
Exp. 12-31-11
CIVIL
STATE OF CALIFORNIA

THE STATE OF CALIFORNIA OR ITS OFFICERS OR AGENTS SHALL NOT BE RESPONSIBLE FOR THE ACCURACY OR COMPLETENESS OF SCANNED COPIES OF THIS PLAN SHEET.

NOTE:

1. MAXIMUM PIPE CULVERT DIAMETER IS 48".

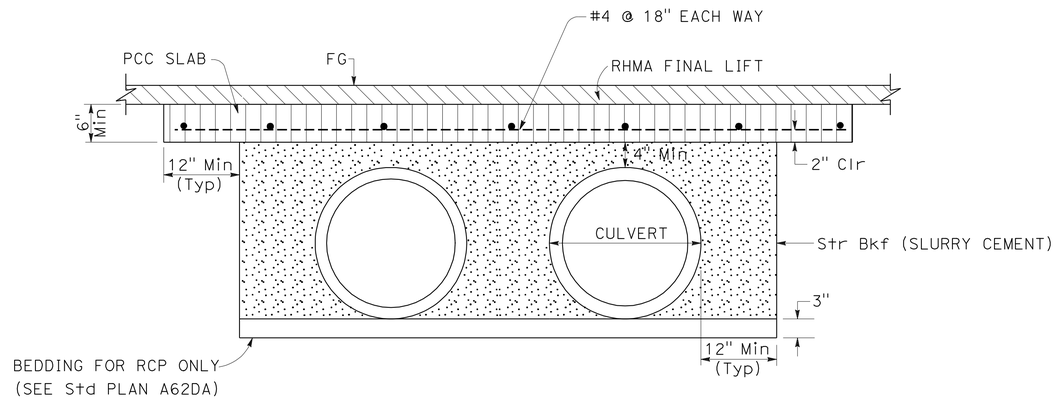

SECTION X-X

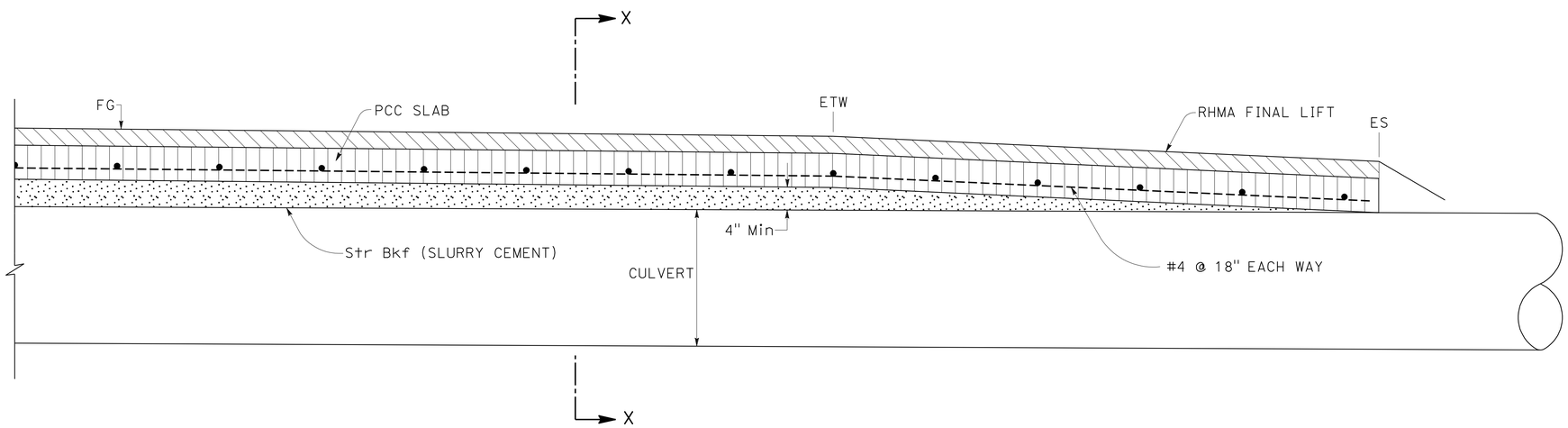

PROFILE

LEGEND

- MINOR CONCRETE (MINOR STRUCTURE)
- RHMA
- STRUCTURE BACKFILL (SLURRY CEMENT)

COVER SLAB DETAIL

DRAINAGE SYSTEM No. 13

DRAINAGE SYSTEM No. 18

DRAINAGE DETAILS

NO SCALE **DD-14**

STATE OF CALIFORNIA - DEPARTMENT OF TRANSPORTATION
Caltrans
06-DESIGN

FUNCTIONAL SUPERVISOR: JACK WALKER
CALCULATED-DESIGNED BY: JIM MILLS
CHECKED BY: TOM LIU
REVISED BY
DATE REVISED

LAST REVISION 10-27-11
DATE PLOTTED => 16-FEB-2012
TIME PLOTTED => 14:47

Dist	COUNTY	ROUTE	POST MILES TOTAL PROJECT	SHEET No.	TOTAL SHEETS
05	SLO	46	40.7/46.3	224	541

Sumangali Hoode 11-10-11
REGISTERED CIVIL ENGINEER DATE

2-13-12
PLANS APPROVAL DATE

REGISTERED PROFESSIONAL ENGINEER SUMANGALI HOODE No. 59498 Exp. 12-31-11 CIVIL STATE OF CALIFORNIA

THE STATE OF CALIFORNIA OR ITS OFFICERS OR AGENTS SHALL NOT BE RESPONSIBLE FOR THE ACCURACY OR COMPLETENESS OF SCANNED COPIES OF THIS PLAN SHEET.

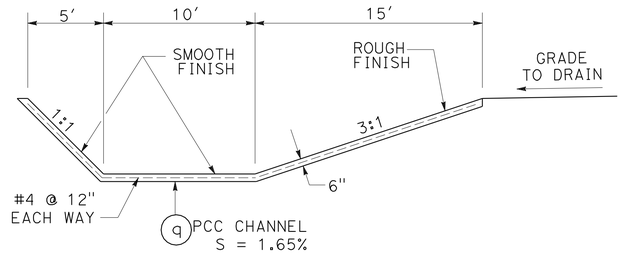

PCC CHANNEL

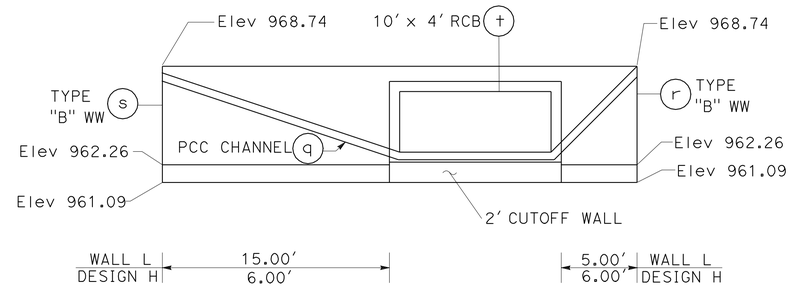

RCB INLET ELEVATION

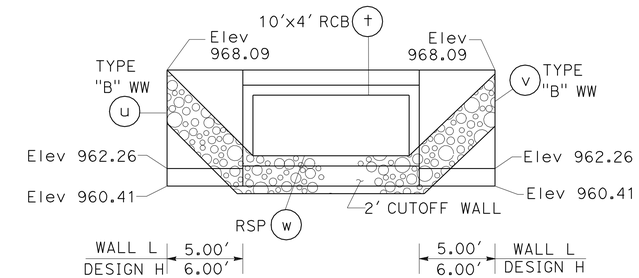

RCB OUTLET ELEVATION

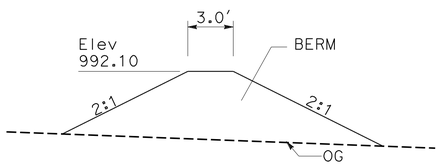

SECTION C-C

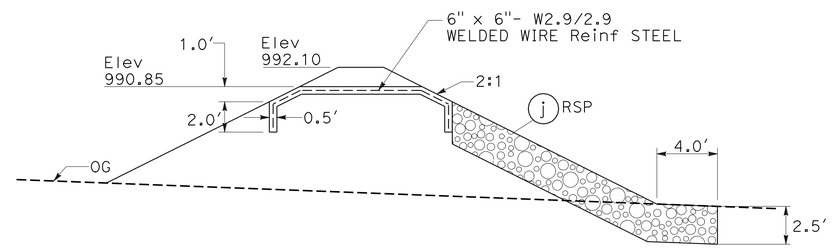

SECTION A-A

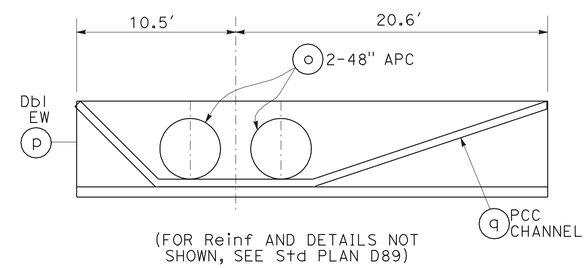

ENDWALL ELEVATION

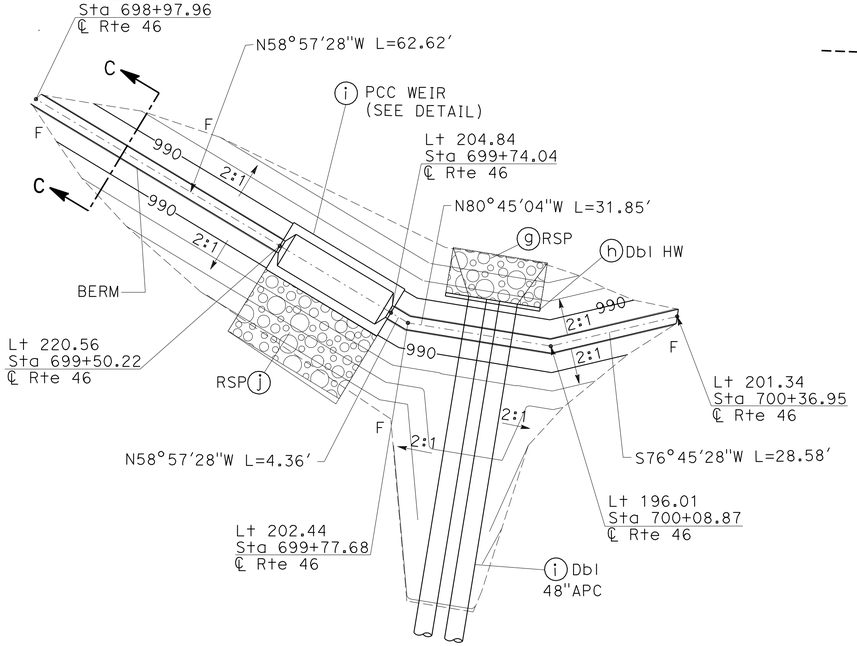

GRADING AT PCC WEIR AND INLET

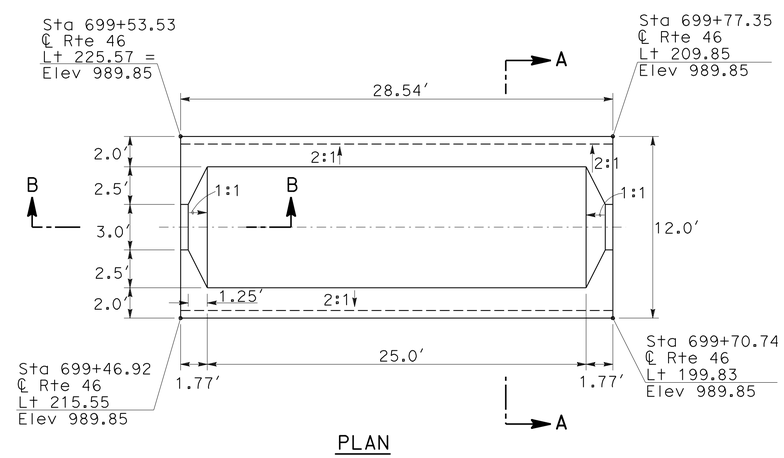

PLAN

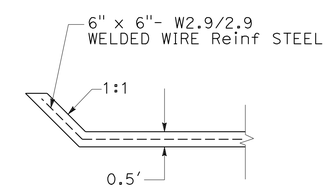

SECTION B-B

PCC WEIR

DRAINAGE SYSTEM No. 13

DRAINAGE DETAILS

NO SCALE

DD-15

STATE OF CALIFORNIA - DEPARTMENT OF TRANSPORTATION
06-DESIGN
Caltrans®

FUNCTIONAL SUPERVISOR: JACK WALKER
CALCULATED-DESIGNED BY: JIM MILLS
CHECKED BY: TOM LIU
REVISED BY
DATE REVISED

LAST REVISION 09-23-11
DATE PLOTTED => 16-FEB-2012
TIME PLOTTED => 14:47

Dist	COUNTY	ROUTE	POST MILES TOTAL PROJECT	SHEET No.	TOTAL SHEETS
05	SLO	46	40.7/46.3	225	541

Sumangali Hoode 11-10-11
REGISTERED CIVIL ENGINEER DATE

2-13-12
PLANS APPROVAL DATE

REGISTERED PROFESSIONAL ENGINEER SUMANGALI HOODE No. 59498 Exp. 12-31-11 CIVIL STATE OF CALIFORNIA

THE STATE OF CALIFORNIA OR ITS OFFICERS OR AGENTS SHALL NOT BE RESPONSIBLE FOR THE ACCURACY OR COMPLETENESS OF SCANNED COPIES OF THIS PLAN SHEET.

NOTES:

1. DIMENSIONS NOT SHOWN ARE TO BE DETERMINED IN THE FIELD AND APPROVED BY THE ENGINEER.
2. S = 1:1 OR FLATTER.

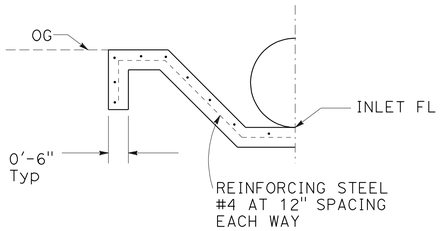

SECTION A-A

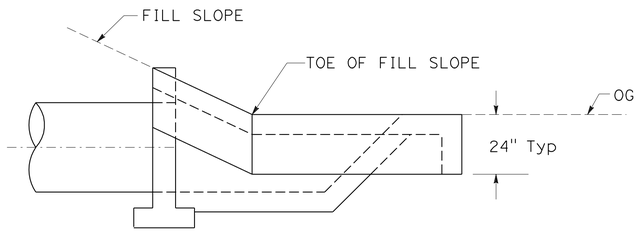

SECTION B-B

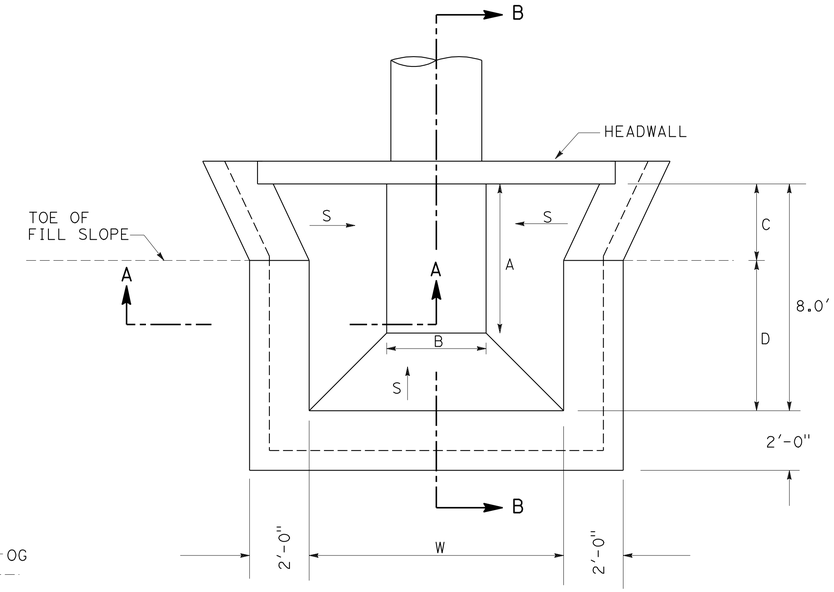

PLAN VIEW

APRON DIMENSION TABLE

DRAINAGE SYSTEM No.	W	A	B	C	D
14	8.0'	6.0'	4.0'	3.9'	2.0'
18	12.0'	6.2'	8.4'	4.0'	1.8'
27	13.0'	6.5'	10.0'	2.4'	1.5'
29	16.0'	5.8'	11.6'	3.6'	2.2'

PCC APRON

DRAINAGE SYSTEM No. 14 **DRAINAGE SYSTEM No. 18**

DRAINAGE SYSTEM No. 27 **DRAINAGE SYSTEM No. 29**

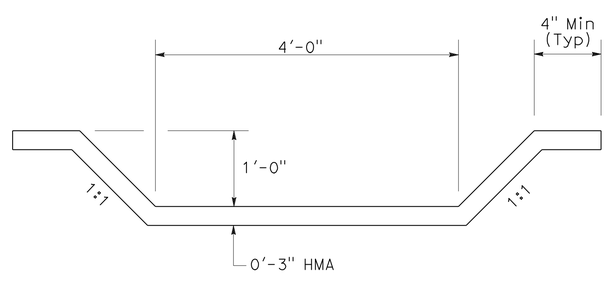

HMA DITCH

STATION 800+00

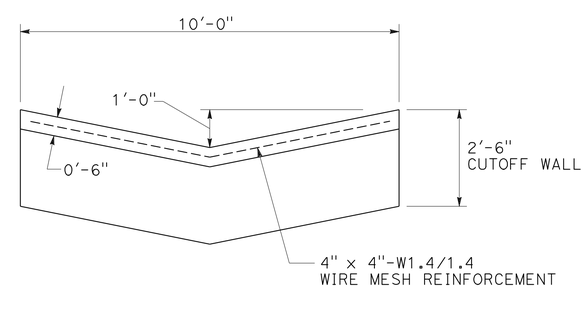

PCC CROSSING

DRAINAGE SYSTEM No. 20

DRAINAGE SYSTEM No. 22

DRAINAGE DETAILS

NO SCALE

DD-16

STATE OF CALIFORNIA - DEPARTMENT OF TRANSPORTATION
Caltrans® 06-DESIGN

FUNCTIONAL SUPERVISOR: JACK WALKER
CALCULATED-DESIGNED BY: JIM MILLS
CHECKED BY: TOM LIU
REVISED BY / DATE REVISED

LAST REVISION 11-08-11
DATE PLOTTED => 16-FEB-2012
TIME PLOTTED => 14:47

Dist	COUNTY	ROUTE	POST MILES TOTAL PROJECT	SHEET No.	TOTAL SHEETS
05	SLO	46	40.7/46.3	226	541

Sumangali Hoode 11-10-11
REGISTERED CIVIL ENGINEER DATE

2-13-12
PLANS APPROVAL DATE

REGISTERED PROFESSIONAL ENGINEER SUMANGALI HOODE No. 59498 Exp. 12-31-11 CIVIL STATE OF CALIFORNIA

THE STATE OF CALIFORNIA OR ITS OFFICERS OR AGENTS SHALL NOT BE RESPONSIBLE FOR THE ACCURACY OR COMPLETENESS OF SCANNED COPIES OF THIS PLAN SHEET.

NOTES:

1. "e" BARS ARE AT HALF SPACING.
2. "a" BARS ARE AT HALF SPACING.
3. FOR DESIGN AND DETAILS NOT SHOWN, SEE STANDARD PLAN D82.

BOX DATA

	SPAN		12′
	HEIGHT		14′
	MAXIMUM EARTH COVER		26′
Conc	ROOF	T_1	14"
Conc	WALLS	T_2	19½"
Conc	INVERT	T_3	16"
REINFORCEMENT	SPACING		8"
REINFORCEMENT	** "a"	SIZE BAR	#7
REINFORCEMENT	"b"	SIZE BAR	#8
REINFORCEMENT	"b"	DIMENSION "B"	6′-0"
REINFORCEMENT	"b"	DIMENSION "Bw"	6′-0"
REINFORCEMENT	"c"	SIZE BAR #	#8
REINFORCEMENT	"c"	DIMENSION "C"	6′-4"
REINFORCEMENT	* "e"	SIZE BAR	#6

* SEE NOTE 1
** SEE NOTE 2

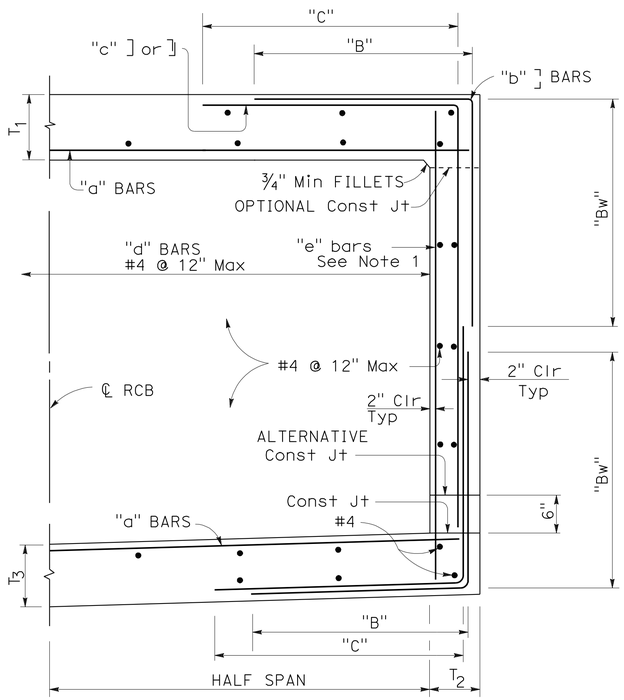

TYPICAL SECTION

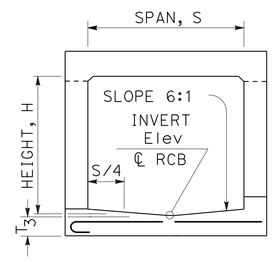

V INVERT

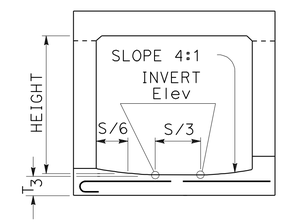

TRAPEZOIDAL INVERT

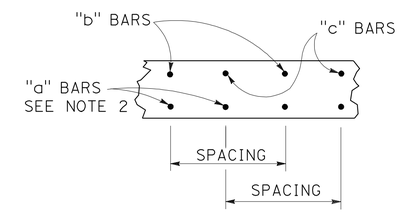

ROOF SECTION
(INVERT SIMILAR)

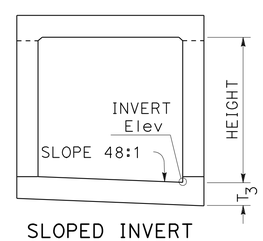

SLOPED INVERT

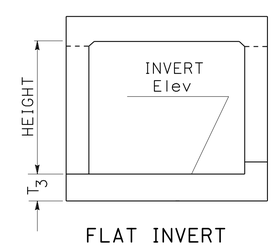

FLAT INVERT

ALTERNATIVE INVERTS

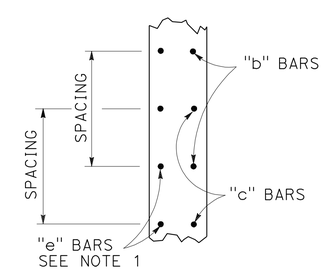

WALL SECTION

CAST-IN-PLACE REINFORCED CONCRETE SINGLE BOX CULVERT DRAINAGE SYSTEM No. 21

DRAINAGE DETAILS
NO SCALE
DD-17

STATE OF CALIFORNIA - DEPARTMENT OF TRANSPORTATION
Caltrans 06-DESIGN

FUNCTIONAL SUPERVISOR: JACK WALKER
CALCULATED-DESIGNED BY: KOU-KWANG LIN
CHECKED BY: JIM MILLS
REVISED BY
DATE REVISED

LAST REVISION 10-27-11
DATE PLOTTED => 16-FEB-2012
TIME PLOTTED => 12:55

Dist	COUNTY	ROUTE	POST MILES TOTAL PROJECT	SHEET No.	TOTAL SHEETS
05	SLO	46	40.7/46.3	227	541

Sumangali Hoode 11-10-11
REGISTERED CIVIL ENGINEER DATE

2-13-12
PLANS APPROVAL DATE

REGISTERED PROFESSIONAL ENGINEER
SUMANGALI HOODE
No. 59498
Exp. 12-31-11
CIVIL
STATE OF CALIFORNIA

THE STATE OF CALIFORNIA OR ITS OFFICERS OR AGENTS SHALL NOT BE RESPONSIBLE FOR THE ACCURACY OR COMPLETENESS OF SCANNED COPIES OF THIS PLAN SHEET.

NOTE:

1. REINFORCEMENT SHOWN SHOULD BE IN PLACE BEFORE TOP OF RCB Conc.

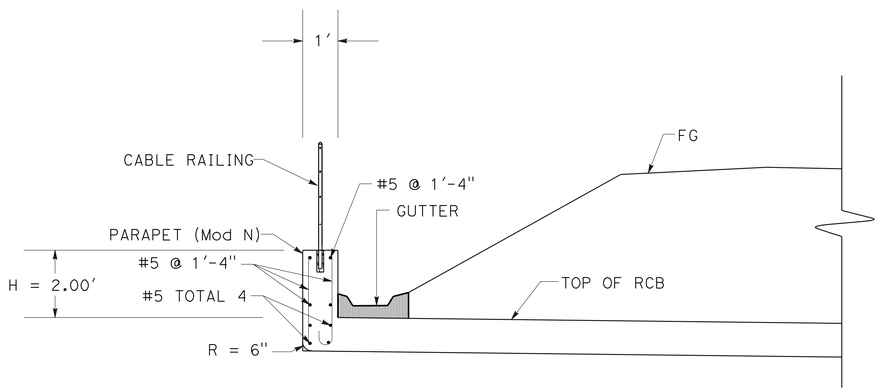

PARAPET (Mod N)

(SEE NOTE 1)

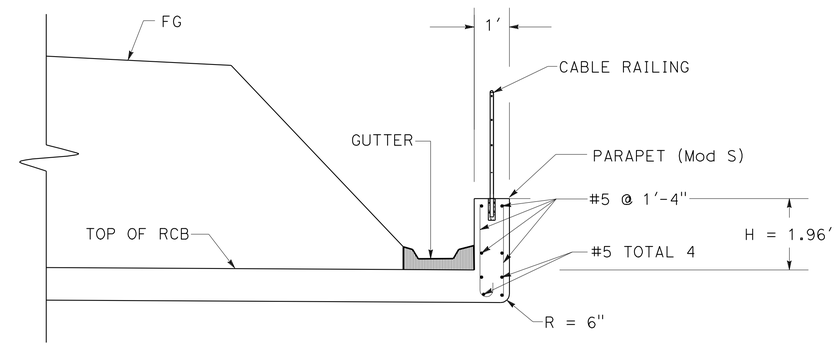

PARAPET (Mod S)

(SEE NOTE 1)

DRAINAGE SYSTEM No. 21

DRAINAGE DETAILS

NO SCALE **DD-18**

STATE OF CALIFORNIA - DEPARTMENT OF TRANSPORTATION
Caltrans
06-DESIGN

FUNCTIONAL SUPERVISOR: JACK WALKER
CALCULATED-DESIGNED BY: SUMANGALI HOODE
CHECKED BY: TOM LIU
REVISED BY
DATE REVISED

LAST REVISION 09-22-11
DATE PLOTTED => 16-FEB-2012
TIME PLOTTED => 12:55

Dist	COUNTY	ROUTE	POST MILES TOTAL PROJECT	SHEET No.	TOTAL SHEETS
05	SLO	46	40.7/46.3	228	541

Sumangali Hoode 11-10-11
REGISTERED CIVIL ENGINEER DATE

2-13-12
PLANS APPROVAL DATE

REGISTERED PROFESSIONAL ENGINEER
SUMANGALI HOODE
No. 59498
Exp. 12-31-11
CIVIL
STATE OF CALIFORNIA

THE STATE OF CALIFORNIA OR ITS OFFICERS OR AGENTS SHALL NOT BE RESPONSIBLE FOR THE ACCURACY OR COMPLETENESS OF SCANNED COPIES OF THIS PLAN SHEET.

NOTE:

1. MAXIMUM ALTERNATIVE PIPE CULVERT DIAMETER IS 48".

LEGEND:

- MINOR CONCRETE (MINOR STRUCTURE)
- RHMA
- STRUCTURE BACKFILL (SLURRY CEMENT)

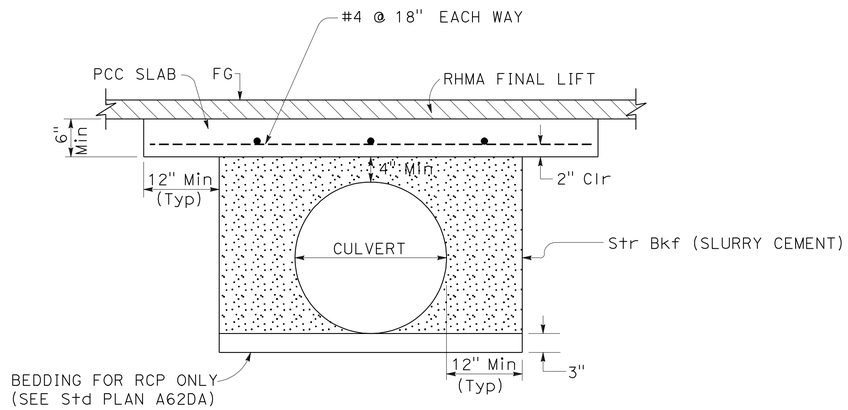

SECTION B-B

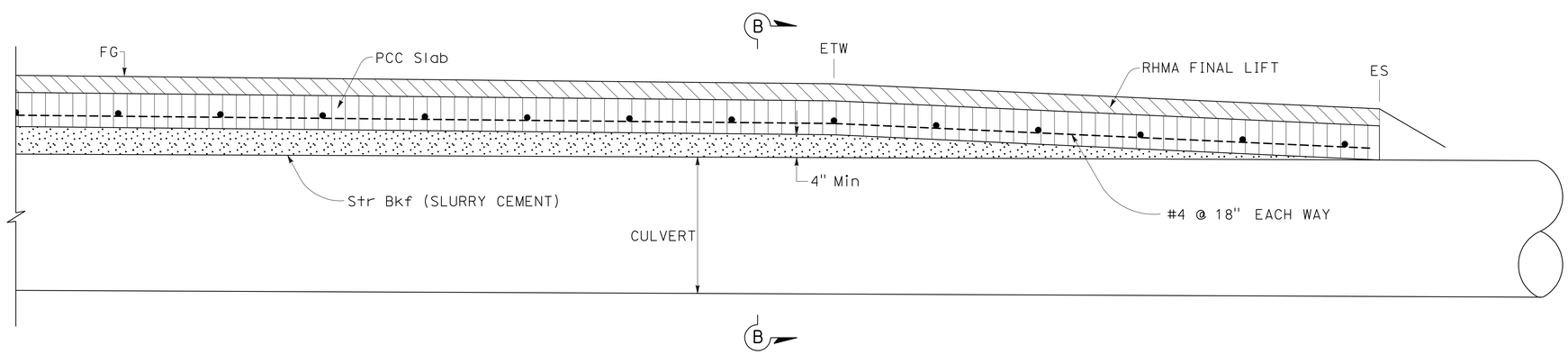

PROFILE

COVER SLAB DETAIL

DRAINAGE SYSTEM No. 25

DRAINAGE SYSTEM No. 26

DRAINAGE SYSTEM No. 39

DRAINAGE DETAILS

NO SCALE **DD-19**

STATE OF CALIFORNIA - DEPARTMENT OF TRANSPORTATION
Caltrans
06-DESIGN

FUNCTIONAL SUPERVISOR: JACK WALKER
CALCULATED-DESIGNED BY: JIM MILLS
CHECKED BY: TOM LIU
REVISED BY
DATE REVISED

LAST REVISION 10-27-11
DATE PLOTTED => 16-FEB-2012
TIME PLOTTED => 12:55

Dist	COUNTY	ROUTE	POST MILES TOTAL PROJECT	SHEET No.	TOTAL SHEETS
05	SLO	46	40.7/46.3	229	541

Sumangali Hoode 11-10-11
REGISTERED CIVIL ENGINEER DATE

2-13-12
PLANS APPROVAL DATE

REGISTERED PROFESSIONAL ENGINEER
SUMANGALI HOODE
No. 59498
Exp. 12-31-11
CIVIL
STATE OF CALIFORNIA

THE STATE OF CALIFORNIA OR ITS OFFICERS OR AGENTS SHALL NOT BE RESPONSIBLE FOR THE ACCURACY OR COMPLETENESS OF SCANNED COPIES OF THIS PLAN SHEET.

NOTE:

1. MAXIMUM PIPE CULVERT DIAMETER IS 48".

LEGEND

- MINOR CONCRETE (MINOR STRUCTURE)
- RHMA
- STRUCTURE BACKFILL (SLURRY CEMENT)

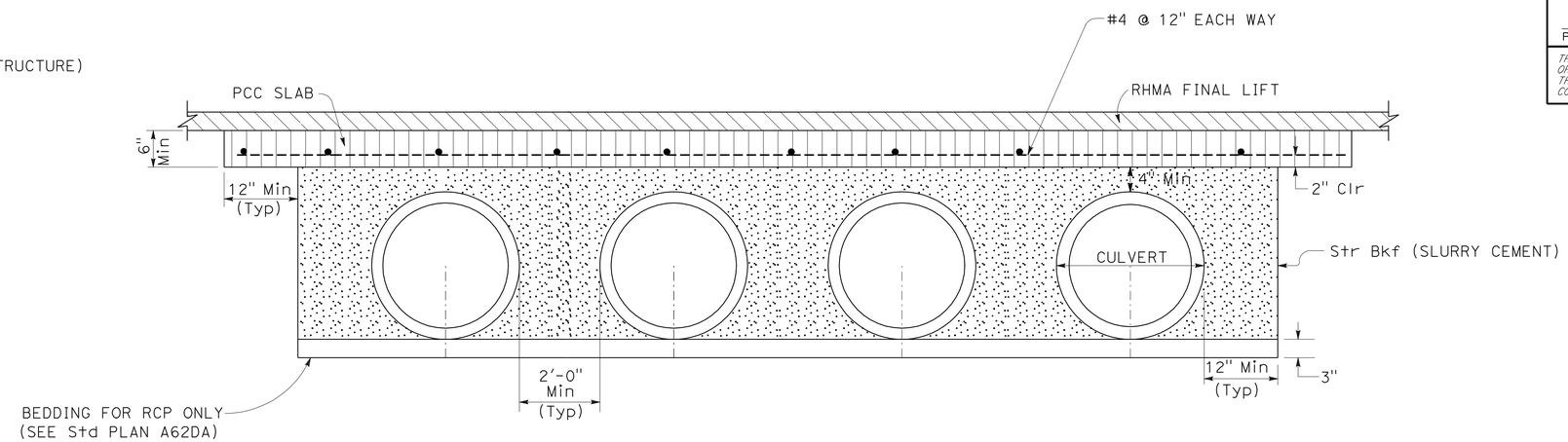

SECTION B-B

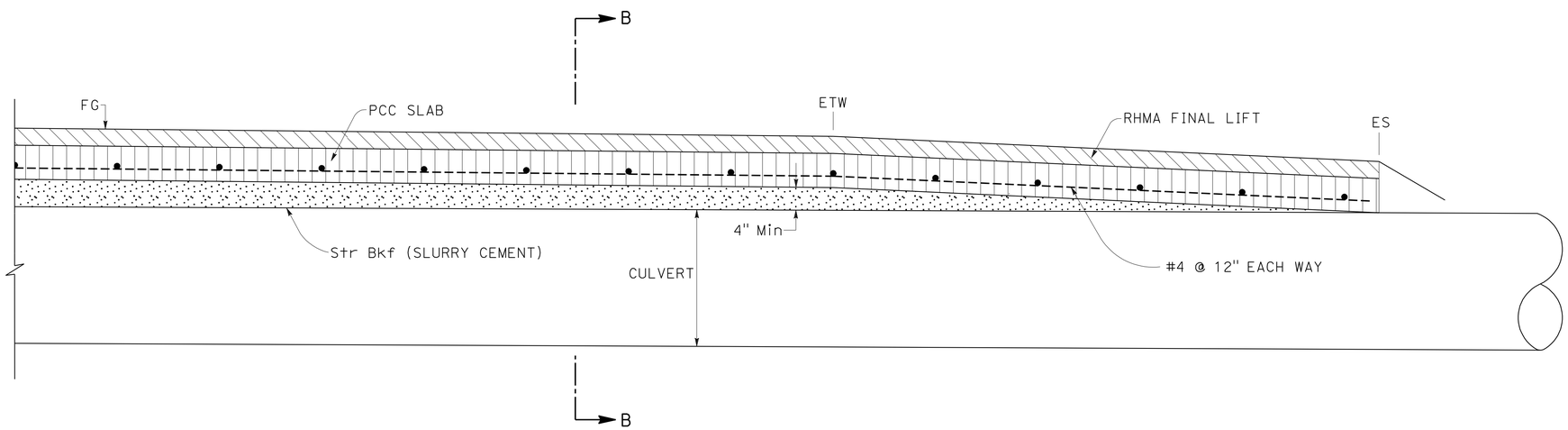

PROFILE

COVER SLAB DETAIL

DRAINAGE SYSTEM No. 30

DRAINAGE DETAILS

NO SCALE **DD-20**

STATE OF CALIFORNIA - DEPARTMENT OF TRANSPORTATION
Caltrans
06-DESIGN

FUNCTIONAL SUPERVISOR: JACK WALKER
CALCULATED-DESIGNED BY: JIM MILLS
CHECKED BY: TOM LIU
REVISED BY
DATE REVISED

LAST REVISION 10-27-11
DATE PLOTTED => 16-FEB-2012
TIME PLOTTED => 12:55

Dist	COUNTY	ROUTE	POST MILES TOTAL PROJECT	SHEET No.	TOTAL SHEETS
05	SLO	46	40.7/46.3	230	541

Sumangali Hoode 11-10-11
REGISTERED CIVIL ENGINEER DATE

2-13-12
PLANS APPROVAL DATE

REGISTERED PROFESSIONAL ENGINEER
SUMANGALI HOODE
No. 59498
Exp. 12-31-11
CIVIL
STATE OF CALIFORNIA

THE STATE OF CALIFORNIA OR ITS OFFICERS OR AGENTS SHALL NOT BE RESPONSIBLE FOR THE ACCURACY OR COMPLETENESS OF SCANNED COPIES OF THIS PLAN SHEET.

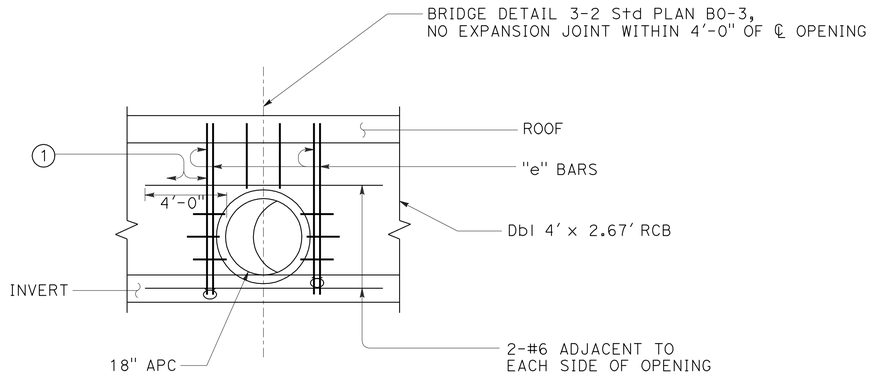

(1) ADJACENT TO EACH SIDE OF THE OPENING, PLACE ADDITIONAL BARS EQUIVALENT TO HALF THE INTERRUPTED MAIN REINFORCEMENT.

LONGITUDINAL SECTION

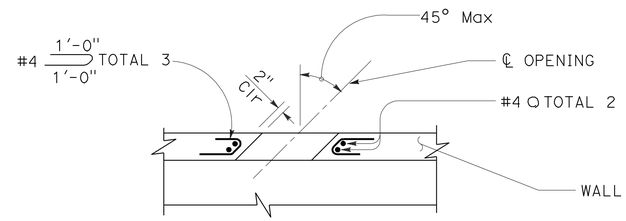

PART PLAN-SECTION

18" APC CONNECTION TO RCB

DRAINAGE SYSTEM No. 27

DRAINAGE DETAILS

NO SCALE

DD-21

STATE OF CALIFORNIA - DEPARTMENT OF TRANSPORTATION
Caltrans 06-DESIGN

FUNCTIONAL SUPERVISOR: JACK WALKER
CALCULATED-DESIGNED BY: JIM MILLS
CHECKED BY: TOM LIU
REVISED BY
DATE REVISED

LAST REVISION 08-31-11
DATE PLOTTED => 16-FEB-2012
TIME PLOTTED => 12:55

Dist	COUNTY	ROUTE	POST MILES TOTAL PROJECT	Sht No.	TOTAL Shts
05	SLO	46	40.7/46.3	231	541

Sumangali Hoode 11-10-11
REGISTERED CIVIL ENGINEER DATE

2-13-12
PLANS APPROVAL DATE

REGISTERED PROFESSIONAL ENGINEER SUMANGALI HOODE No. 59498 Exp. 12-31-11 CIVIL STATE OF CALIFORNIA

THE STATE OF CALIFORNIA OR ITS OFFICERS OR AGENTS SHALL NOT BE RESPONSIBLE FOR THE ACCURACY OR COMPLETENESS OF SCANNED COPIES OF THIS PLAN SHEET.

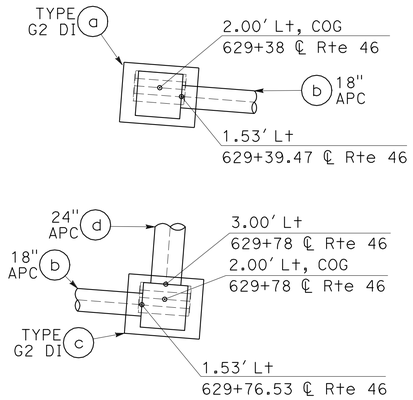

DRAINAGE SYSTEM No. 2

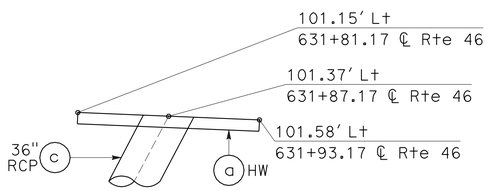

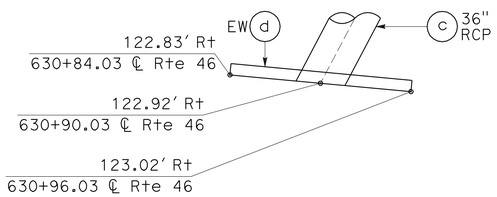

DRAINAGE SYSTEM No. 3

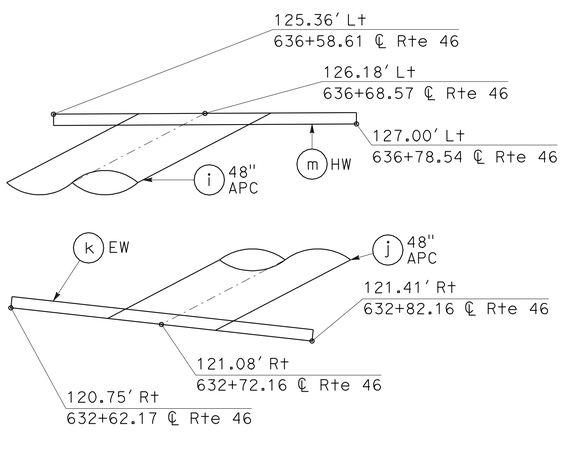

DRAINAGE SYSTEM No. 4

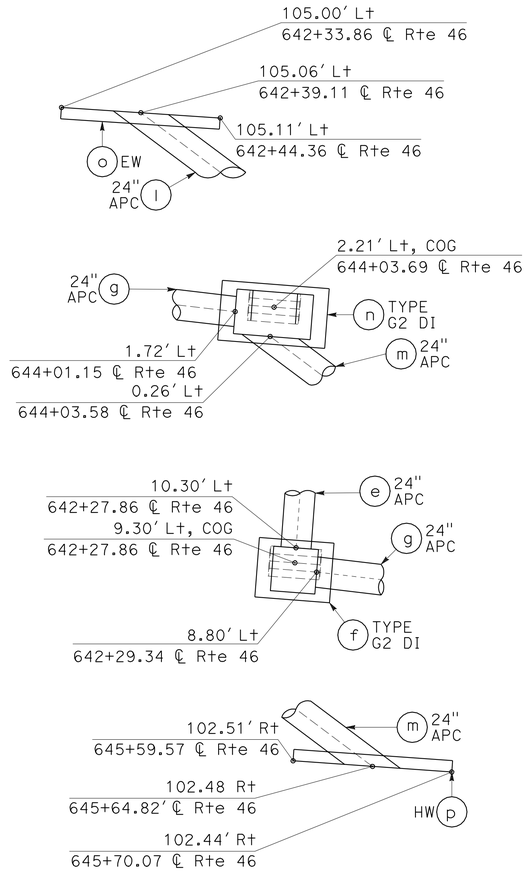

DRAINAGE SYSTEM No. 5

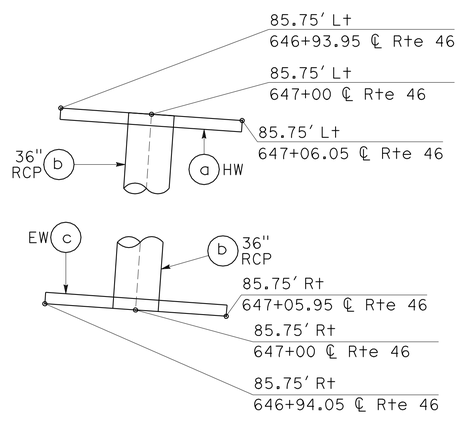

DRAINAGE SYSTEM No. 6

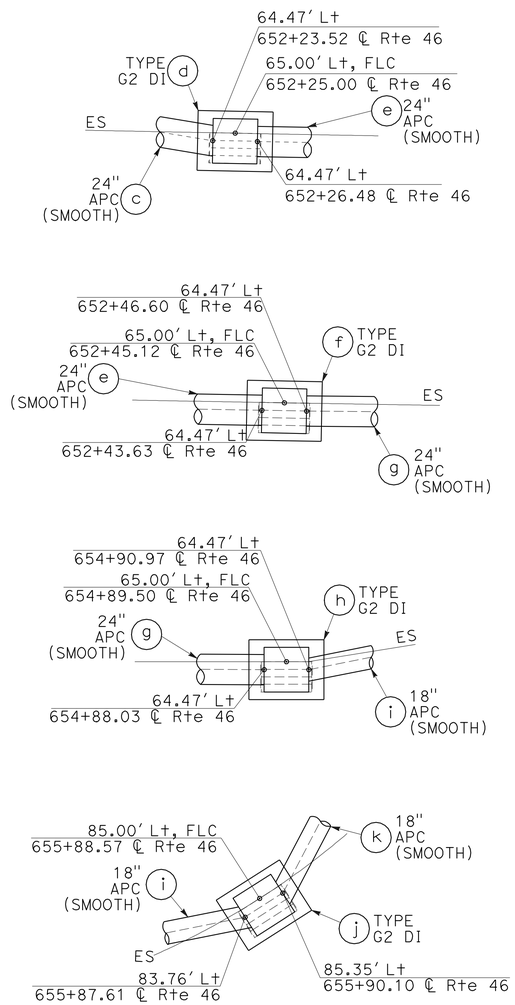

DRAINAGE SYSTEM No. 7

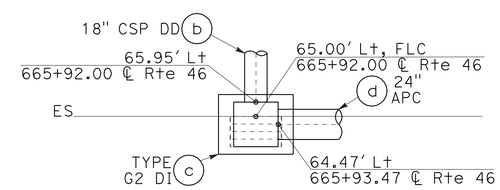

DRAINAGE SYSTEM No. 8

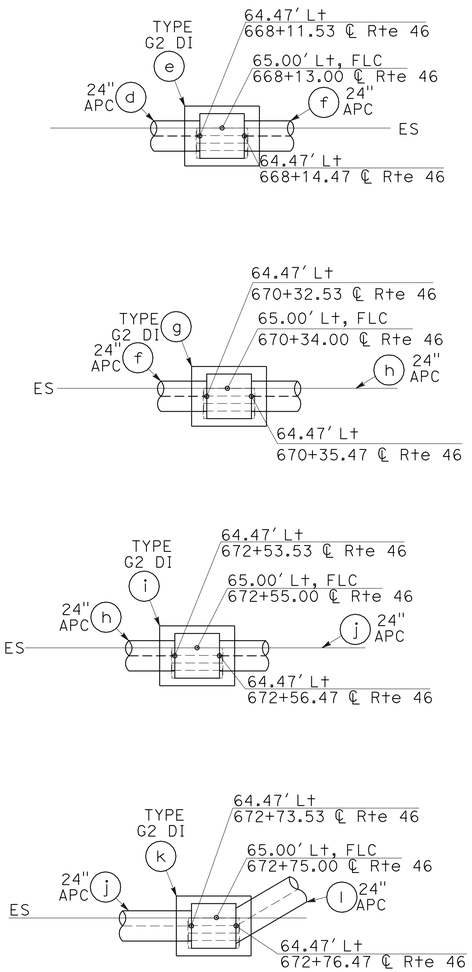

(CONTINUED)

DRAINAGE SYSTEM No. 8

STRUCTURE ORIENTATIONS

DRAINAGE DETAILS

NO SCALE

DD-22

LAST REVISION 11-09-11 | DATE PLOTTED => 16-FEB-2012 | TIME PLOTTED => 12:55

STATE OF CALIFORNIA - DEPARTMENT OF TRANSPORTATION
Caltrans
06-DESIGN
FUNCTIONAL SUPERVISOR: JACK WALKER
CALCULATED-DESIGNED BY: SUMANGALI HOODE
CHECKED BY: TOM LIU
REVISED BY
DATE REVISED

Dist	COUNTY	ROUTE	POST MILES TOTAL PROJECT	Sht No.	TOTAL Shts
05	SLO	46	40.7/46.3	232	541

Sumangali Hoode 11-10-11
REGISTERED CIVIL ENGINEER DATE

2-13-12
PLANS APPROVAL DATE

REGISTERED PROFESSIONAL ENGINEER SUMANGALI HOODE No. 59498 Exp. 12-31-11 CIVIL STATE OF CALIFORNIA

THE STATE OF CALIFORNIA OR ITS OFFICERS OR AGENTS SHALL NOT BE RESPONSIBLE FOR THE ACCURACY OR COMPLETENESS OF SCANNED COPIES OF THIS PLAN SHEET.

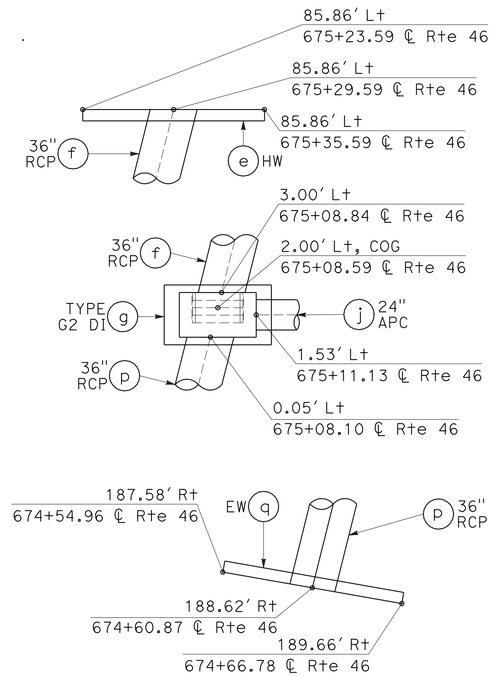

DRAINAGE SYSTEM No. 9

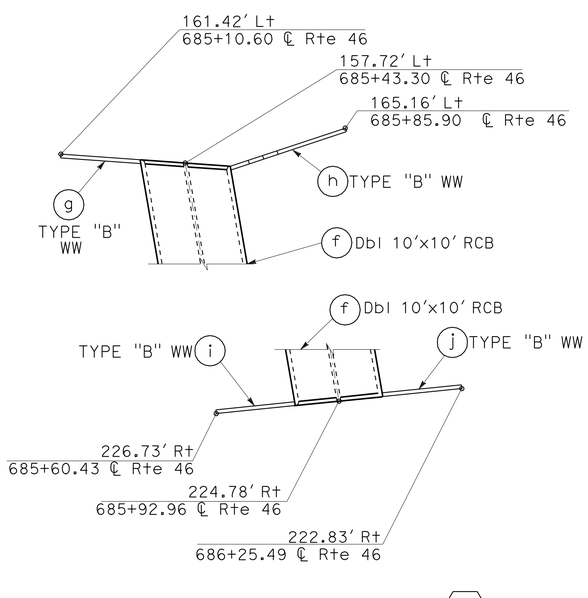

DRAINAGE SYSTEM No. 10

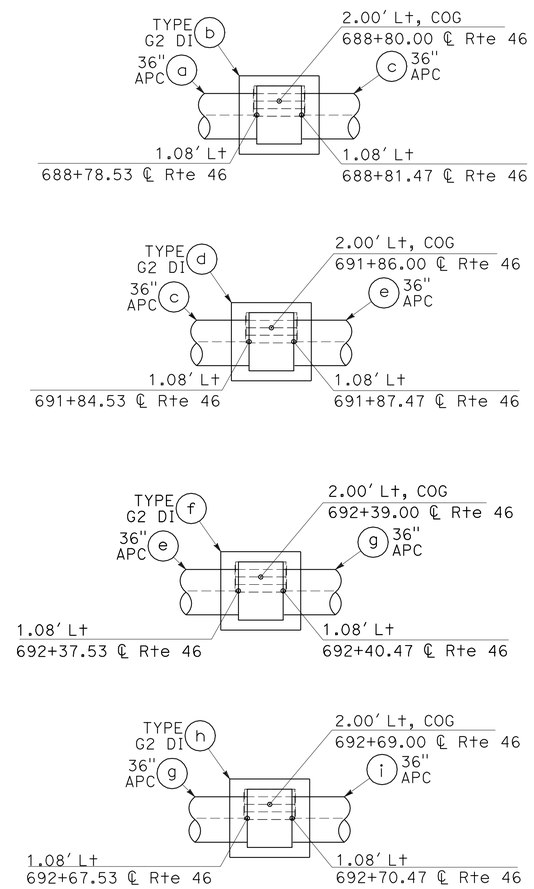

DRAINAGE SYSTEM No. 11

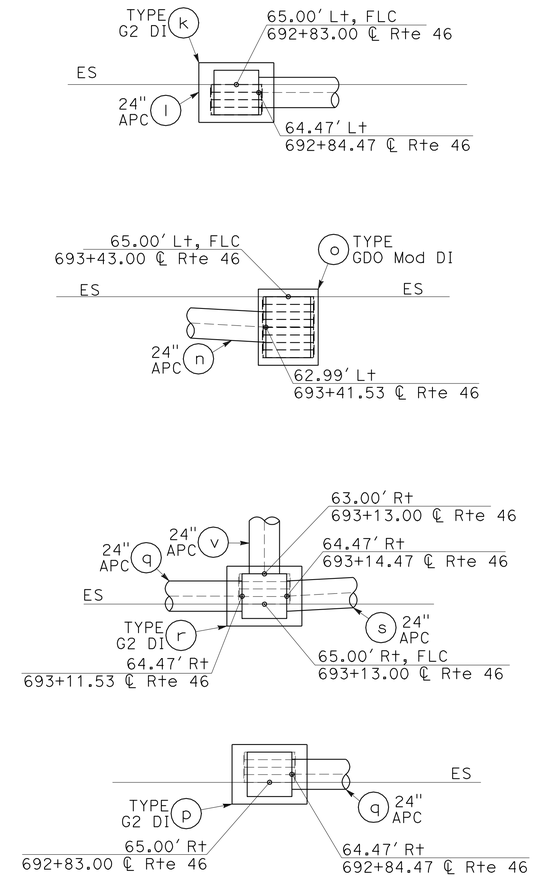

(CONTINUED) DRAINAGE SYSTEM No. 11

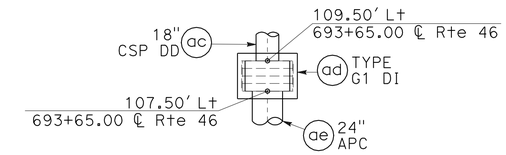

(CONTINUED) DRAINAGE SYSTEM No. 11

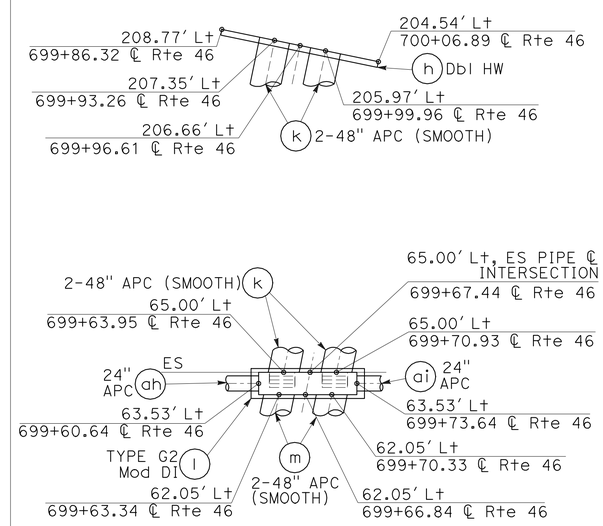

DRAINAGE SYSTEM No. 13

DRAINAGE DETAILS

NO SCALE

DD-23

STRUCTURE ORIENTATIONS

STATE OF CALIFORNIA - DEPARTMENT OF TRANSPORTATION
Caltrans®
06-DESIGN
FUNCTIONAL SUPERVISOR: JACK WALKER
CALCULATED-DESIGNED BY: SUMANGALI HOODE
CHECKED BY: TOM LIU
REVISED BY
DATE REVISED

LAST REVISION 11-09-11
DATE PLOTTED => 16-FEB-2012
TIME PLOTTED => 12:56

Dist	COUNTY	ROUTE	POST MILES TOTAL PROJECT	Sht No.	TOTAL Shts
05	SLO	46	40.7/46.3	233	541

Sumangali Hoode 11-10-11
REGISTERED CIVIL ENGINEER DATE

2-13-12
PLANS APPROVAL DATE

REGISTERED PROFESSIONAL ENGINEER SUMANGALI HOODE No. 59498 Exp. 12-31-11 CIVIL STATE OF CALIFORNIA

THE STATE OF CALIFORNIA OR ITS OFFICERS OR AGENTS SHALL NOT BE RESPONSIBLE FOR THE ACCURACY OR COMPLETENESS OF SCANNED COPIES OF THIS PLAN SHEET.

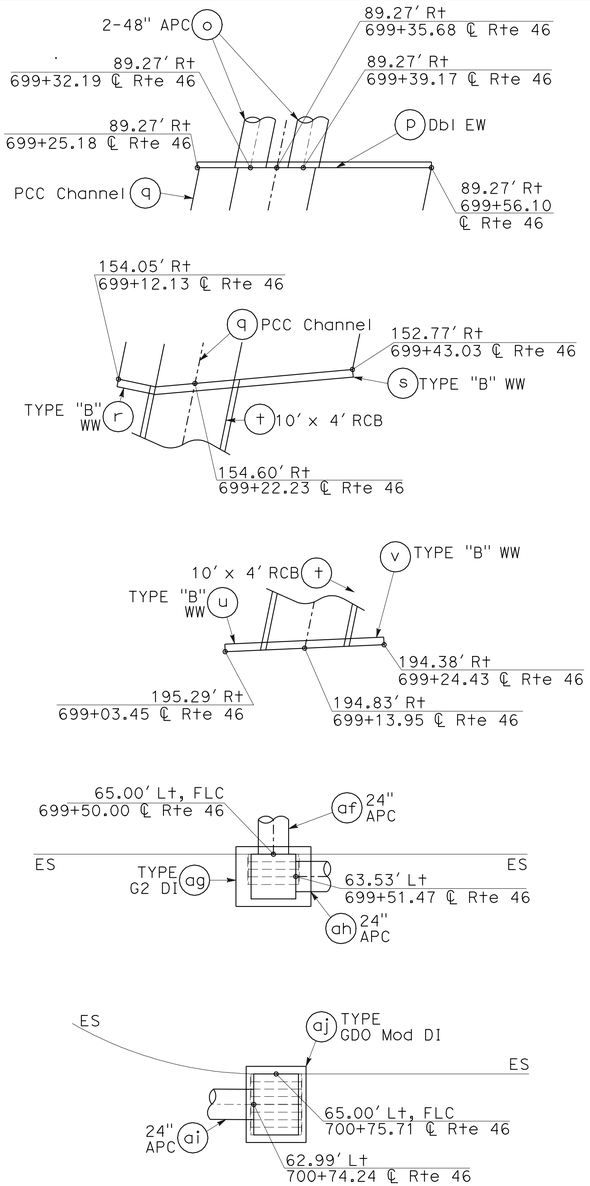

(CONTINUED) DRAINAGE SYSTEM No. 13

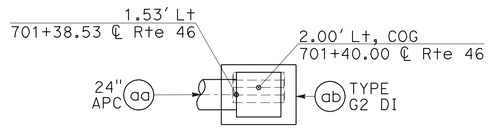

DRAINAGE SYSTEM No. 13

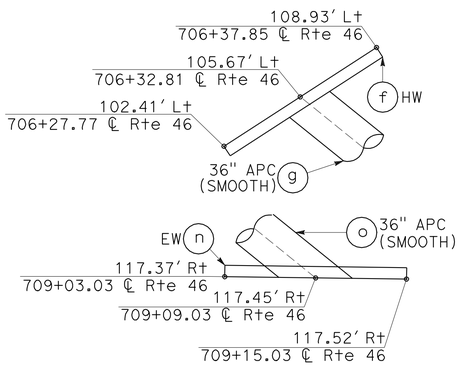

DRAINAGE SYSTEM No. 14

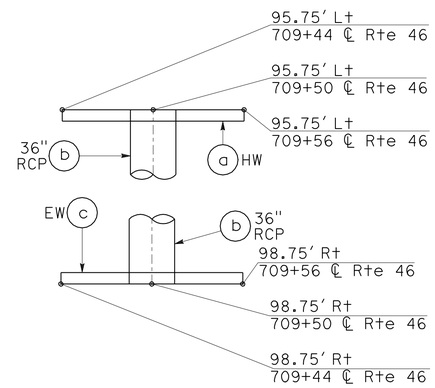

DRAINAGE SYSTEM No. 15

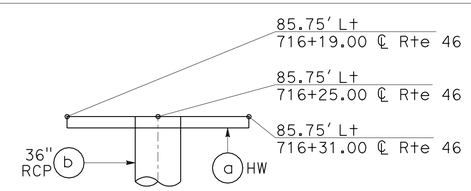

DRAINAGE SYSTEM No. 16

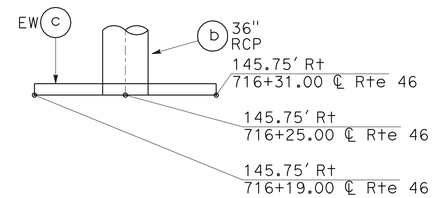

(CONTINUED) DRAINAGE SYSTEM No. 16

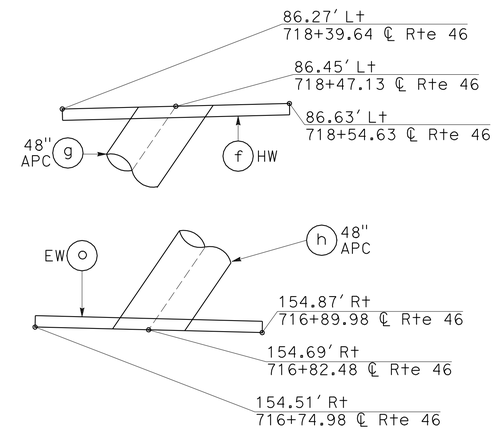

DRAINAGE SYSTEM No. 17

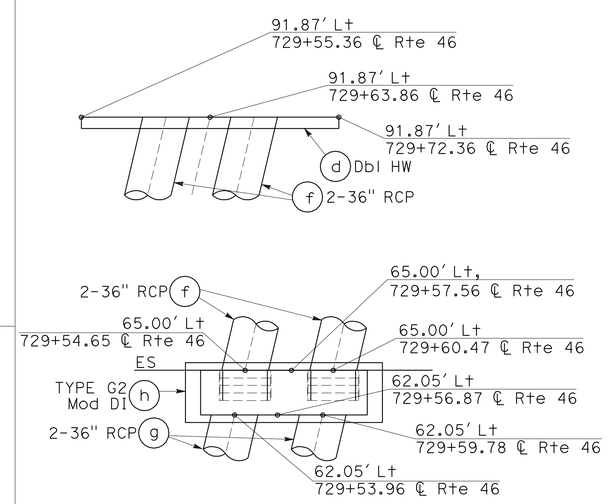

DRAINAGE SYSTEM No. 18

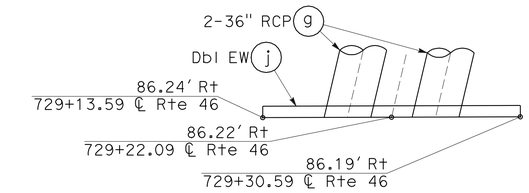

(CONTINUED) DRAINAGE SYSTEM No. 18

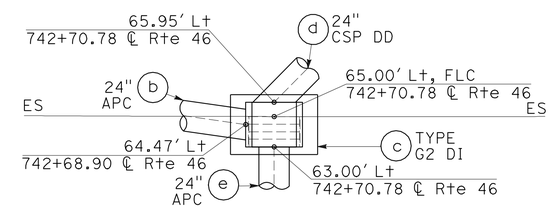

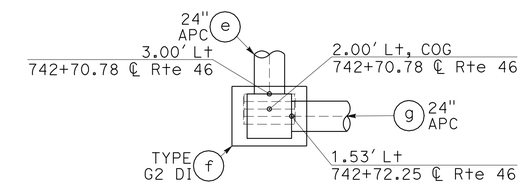

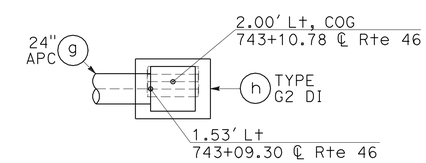

DRAINAGE SYSTEM No. 19

STRUCTURE ORIENTATIONS

DRAINAGE DETAILS
NO SCALE

DD-24

REVISED BY	DATE REVISED

SUMANGALI HOODE — TOM LIU — CALCULATED-DESIGNED BY — CHECKED BY

FUNCTIONAL SUPERVISOR: JACK WALKER

STATE OF CALIFORNIA - DEPARTMENT OF TRANSPORTATION — 06-DESIGN — Caltrans

LAST REVISION 11-09-11 — DATE PLOTTED => 16-FEB-2012 — TIME PLOTTED => 12:56

Dist	COUNTY	ROUTE	POST MILES TOTAL PROJECT	Sht No.	TOTAL Shts
05	SLO	46	40.7/46.3	234	541

Sumangali Hoode 11-10-11
REGISTERED CIVIL ENGINEER DATE

2-13-12
PLANS APPROVAL DATE

REGISTERED PROFESSIONAL ENGINEER SUMANGALI HOODE No. 59498 Exp. 12-31-11 CIVIL STATE OF CALIFORNIA

THE STATE OF CALIFORNIA OR ITS OFFICERS OR AGENTS SHALL NOT BE RESPONSIBLE FOR THE ACCURACY OR COMPLETENESS OF SCANNED COPIES OF THIS PLAN SHEET.

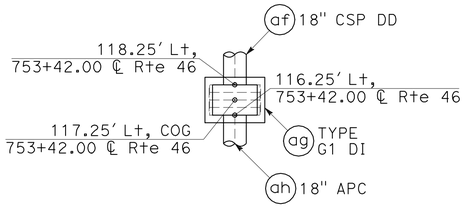

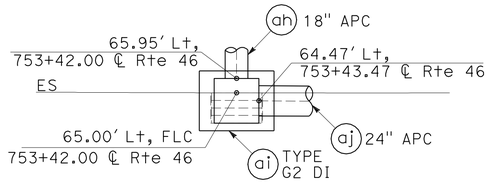

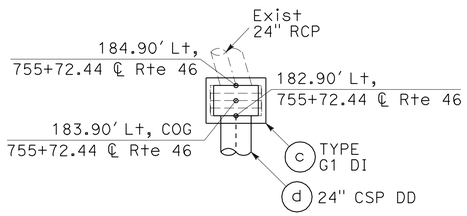

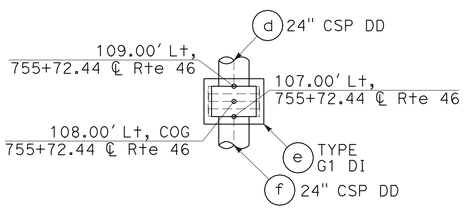

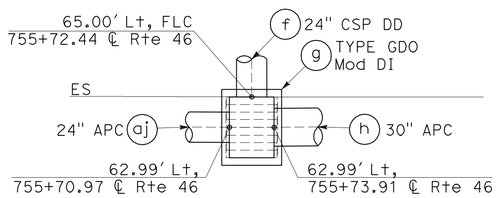

DRAINAGE SYSTEM No. 22

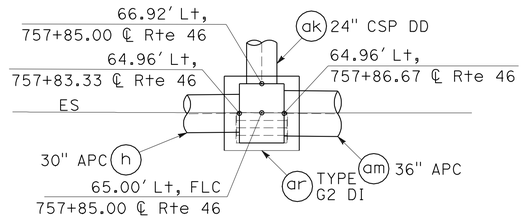

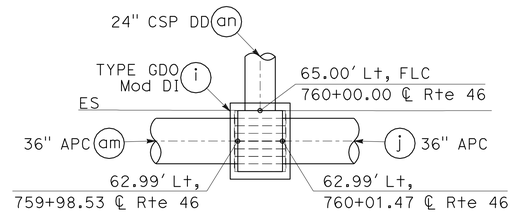

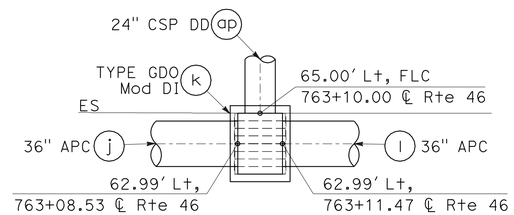

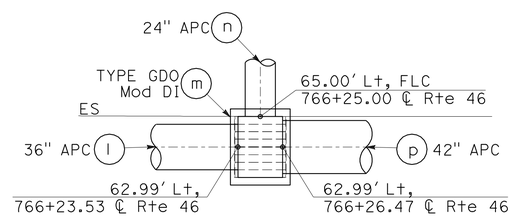

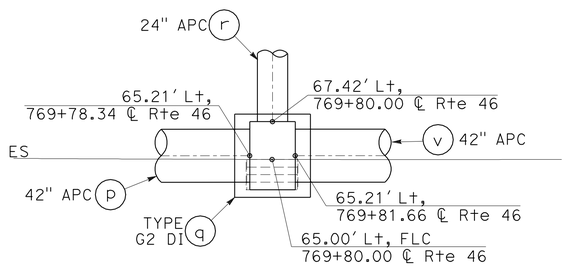

(CONTINUED)
DRAINAGE SYSTEM No. 22

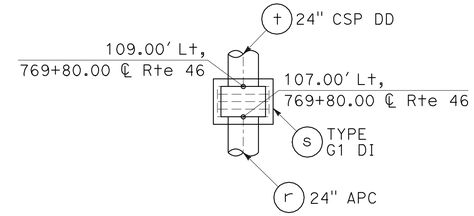

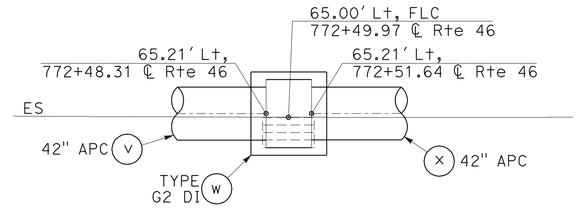

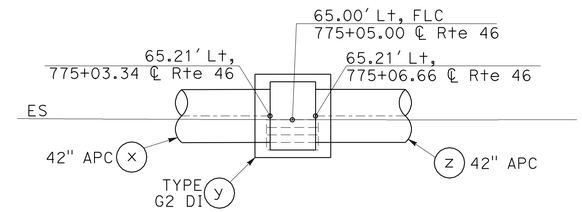

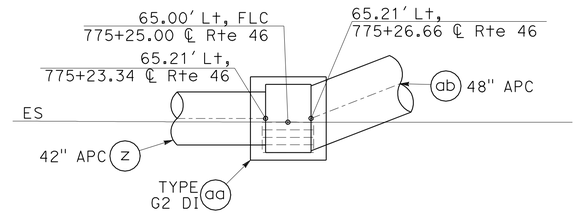

(CONTINUED)
DRAINAGE SYSTEM No. 22

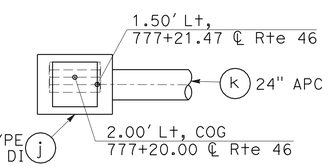

DRAINAGE SYSTEM No. 24

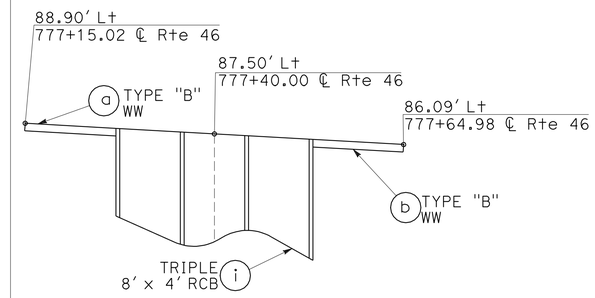

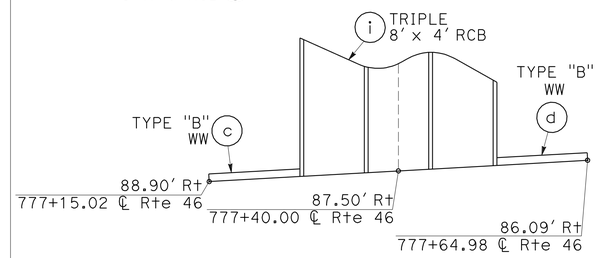

(CONTINUED)
DRAINAGE SYSTEM No. 24

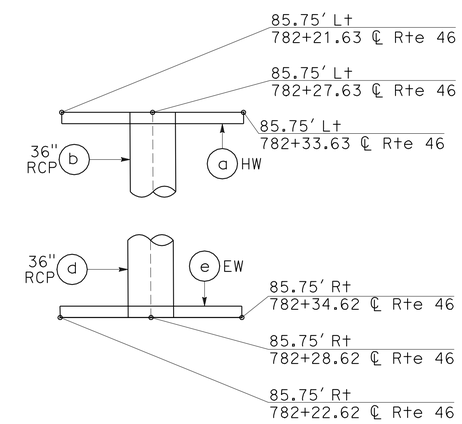

DRAINAGE SYSTEM No. 25

STRUCTURE ORIENTATIONS

DRAINAGE DETAILS
NO SCALE
DD-25

REVISED BY	DATE REVISED
SUMANGALI HOODE	TOM LIU
CALCULATED-DESIGNED BY	CHECKED BY
FUNCTIONAL SUPERVISOR	JACK WALKER

STATE OF CALIFORNIA - DEPARTMENT OF TRANSPORTATION
Caltrans 06-DESIGN

LAST REVISION 11-09-11 | DATE PLOTTED => 16-FEB-2012 | TIME PLOTTED => 12:56

Dist	COUNTY	ROUTE	POST MILES TOTAL PROJECT	Sht No.	TOTAL Shts
05	SLO	46	40.7/46.3	235	541

Sumangali Hoode 11-10-11
REGISTERED CIVIL ENGINEER DATE

2-13-12
PLANS APPROVAL DATE

REGISTERED PROFESSIONAL ENGINEER SUMANGALI HOODE No. 59498 Exp. 12-31-11 CIVIL STATE OF CALIFORNIA

THE STATE OF CALIFORNIA OR ITS OFFICERS OR AGENTS SHALL NOT BE RESPONSIBLE FOR THE ACCURACY OR COMPLETENESS OF SCANNED COPIES OF THIS PLAN SHEET.

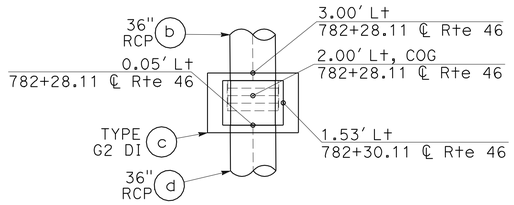

(CONTINUED)
DRAINAGE SYSTEM No. 25

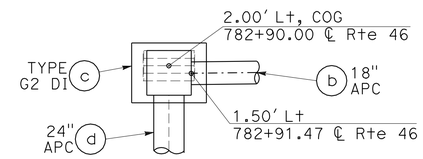

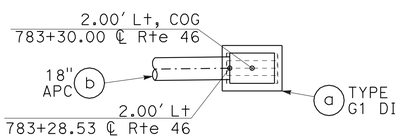

DRAINAGE SYSTEM No. 26

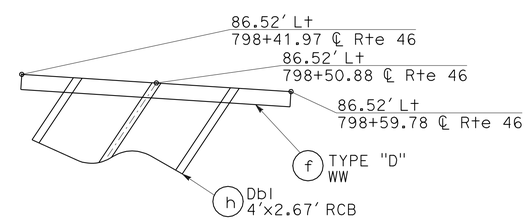

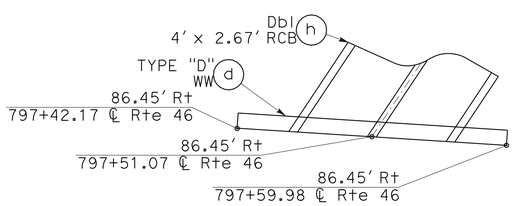

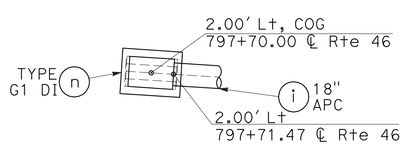

DRAINAGE SYSTEM No. 27

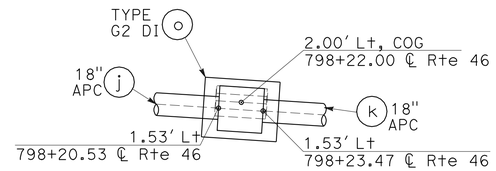

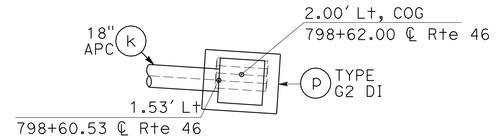

(CONTINUED)
DRAINAGE SYSTEM No. 27

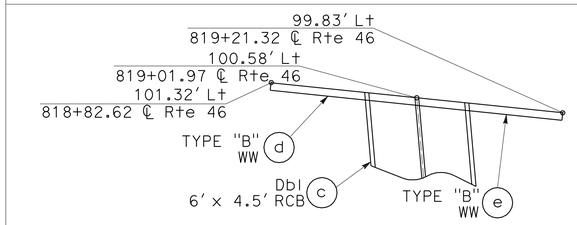

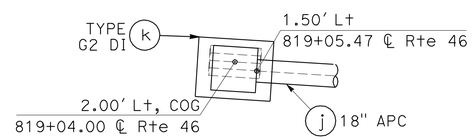

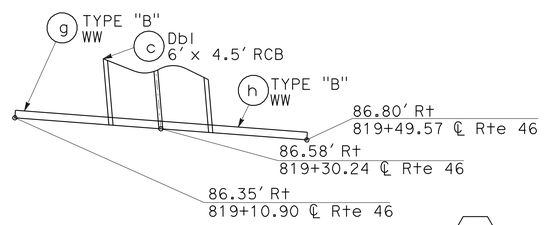

DRAINAGE SYSTEM No. 28

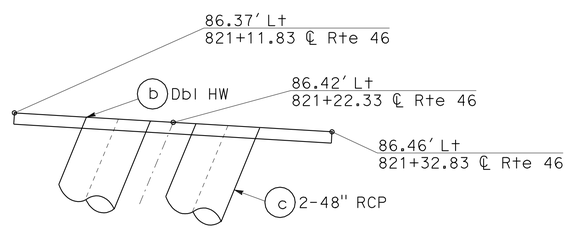

DRAINAGE SYSTEM No. 29

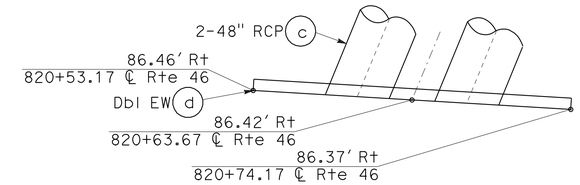

DRAINAGE SYSTEM No. 29

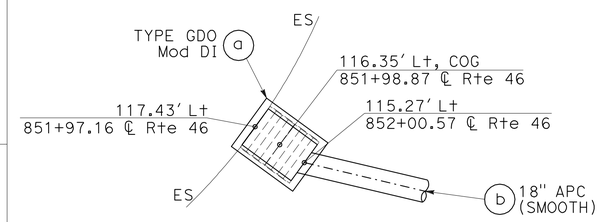

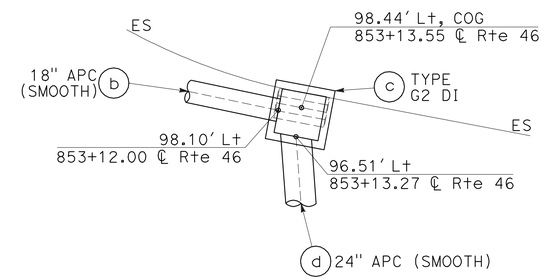

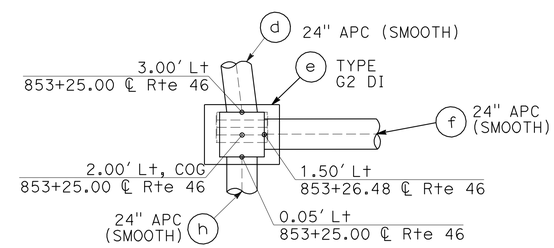

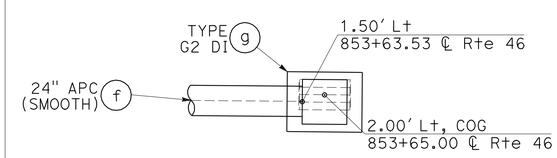

DRAINAGE SYSTEM No. 31

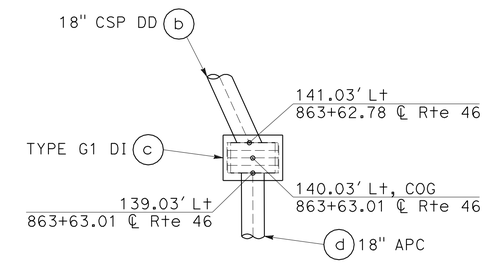

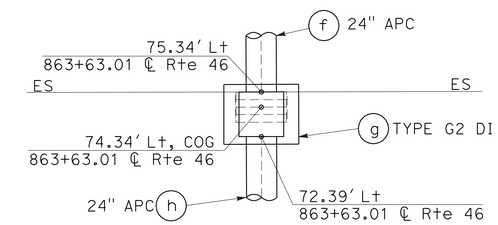

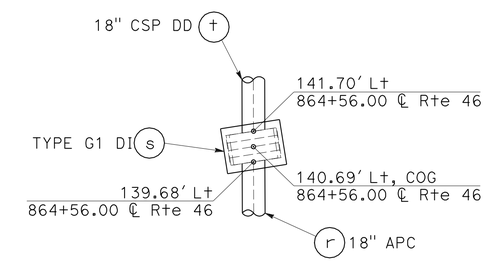

DRAINAGE SYSTEM No. 34

STRUCTURE ORIENTATIONS

DRAINAGE DETAILS
NO SCALE
DD-26

STATE OF CALIFORNIA - DEPARTMENT OF TRANSPORTATION
Caltrans 06-DESIGN
FUNCTIONAL SUPERVISOR: JACK WALKER
CALCULATED-DESIGNED BY: SUMANGALI HOODE
CHECKED BY: TOM LIU
REVISED BY
DATE REVISED

LAST REVISION 11-09-11
DATE PLOTTED => 16-FEB-2012
TIME PLOTTED => 12:57

Dist	COUNTY	ROUTE	POST MILES TOTAL PROJECT	Sht No.	TOTAL Shts
05	SLO	46	40.7/46.3	236	541

Sumangali Hoode 11-10-11
REGISTERED CIVIL ENGINEER DATE

2-13-12
PLANS APPROVAL DATE

REGISTERED PROFESSIONAL ENGINEER SUMANGALI HOODE No. 59498 Exp. 12-31-11 CIVIL STATE OF CALIFORNIA

THE STATE OF CALIFORNIA OR ITS OFFICERS OR AGENTS SHALL NOT BE RESPONSIBLE FOR THE ACCURACY OR COMPLETENESS OF SCANNED COPIES OF THIS PLAN SHEET.

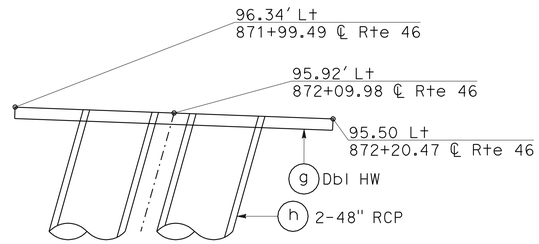

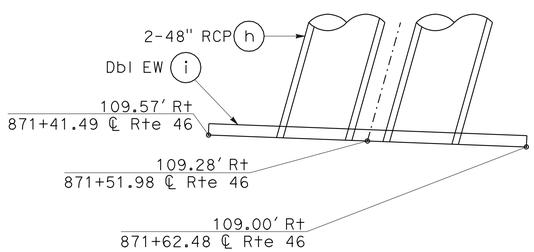

DRAINAGE SYSTEM No. 35

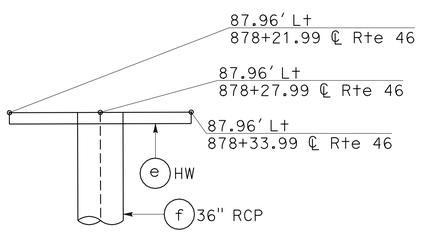

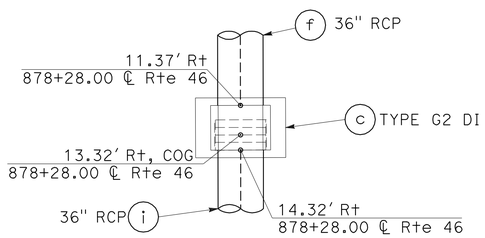

DRAINAGE SYSTEM No. 36

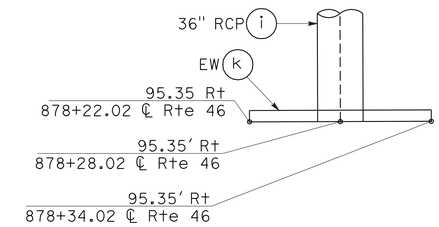

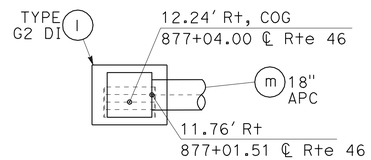

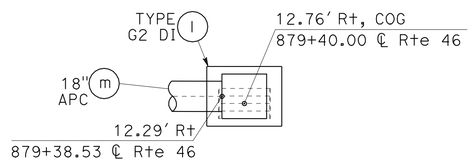

DRAINAGE SYSTEM No. 36

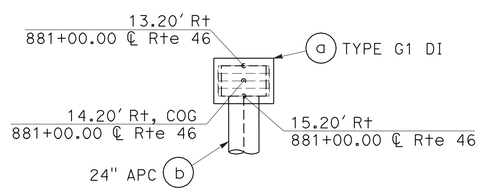

DRAINAGE SYSTEM No. 37

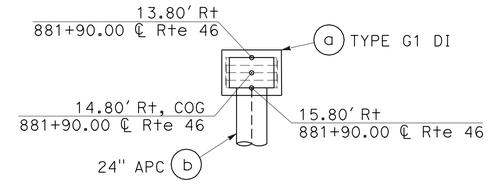

DRAINAGE SYSTEM No. 38

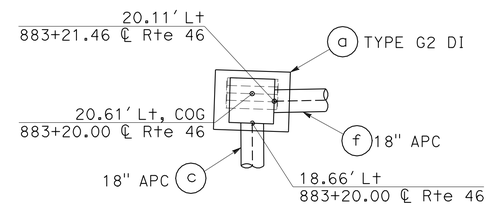

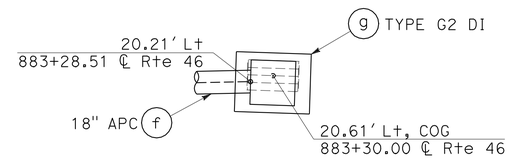

(CONTINUED)

DRAINAGE SYSTEM No. 39

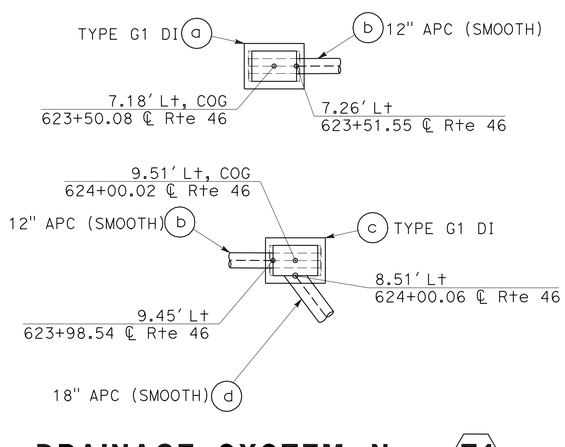

DRAINAGE SYSTEM No. T1

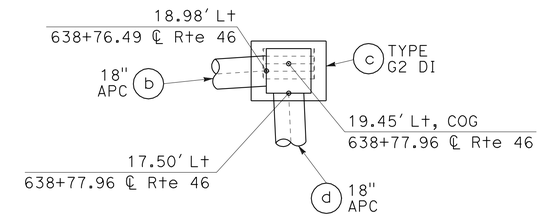

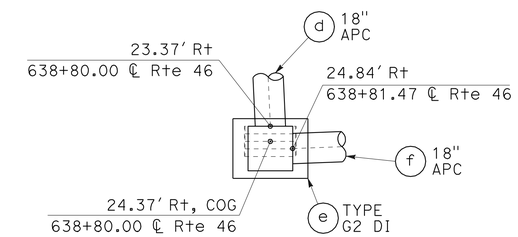

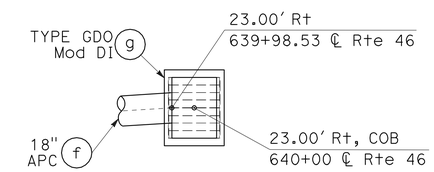

DRAINAGE SYSTEM No. T2

STRUCTURE ORIENTATIONS

DRAINAGE DETAILS
NO SCALE
DD-27

STATE OF CALIFORNIA - DEPARTMENT OF TRANSPORTATION
06-DESIGN
Caltrans
FUNCTIONAL SUPERVISOR: JACK WALKER
CALCULATED-DESIGNED BY: SUMANGALI HOODE
CHECKED BY: JOSE ARGUELLO
REVISED BY
DATE REVISED

LAST REVISION 10-26-11
DATE PLOTTED => 17-FEB-2012
TIME PLOTTED => 05:33

Dist	COUNTY	ROUTE	POST MILES TOTAL PROJECT	SHEET No.	TOTAL SHEETS
05	SLO	46	40.7/46.3	237	541

Sumangali Hoode 11-10-11
REGISTERED CIVIL ENGINEER DATE

2-13-12
PLANS APPROVAL DATE

REGISTERED PROFESSIONAL ENGINEER SUMANGALI HOODE No. 59498 Exp. 12-31-11 CIVIL STATE OF CALIFORNIA

THE STATE OF CALIFORNIA OR ITS OFFICERS OR AGENTS SHALL NOT BE RESPONSIBLE FOR THE ACCURACY OR COMPLETENESS OF SCANNED COPIES OF THIS PLAN SHEET.

NOTES:

1. INTERNAL CONNECTING WIRES (13.5 GAGE) TO BE LOCATED AT TOP AND BOTTOM PANELS.
2. INTERNAL CONNECTING WIRES (13.5 GAGE) SHOWN PARALLEL WITH THE LENGTH OF THE GABION BASKET ARE NOT REQUIRED IF THE MESH STYLE IS WELDED MESH. INTERNAL CONNECTING WIRES (13.5 GAGE) SHOWN CONNECTED TO THE 1½" PIPE STAKE ARE REQUIRED FOR ALL MESH STYLES.
3. INTERNAL CONNECTING WIRES, GABION MESH, AND 1½" PIPE STAKES SHALL BE GALVANIZED.
4. PLACE ROCK IN GABION CELL AT BOTTOM OF SLOPE FIRST, AND CONTINUE BY FILLING NEXT ADJACENT UPHILL CELLS.
5. FOR TYPICAL GABION BASKET, TYPICAL ACCEPTABLE MESH STYLES, AND STANDARD GABION SIZES SEE STANDARD PLAN D100A.
6. FOR JOINT CONNECTIONS BETWEEN ADJACENT GABION BASKETS SEE STANDARD PLAN D100B.

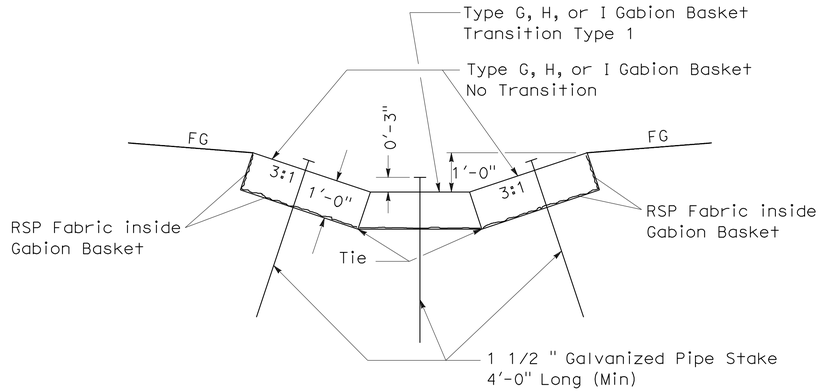

SECTION A-A

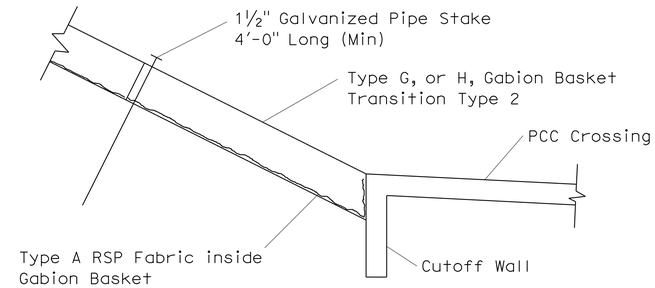

SECTION B-B

TYPE I GABION BASKET
PLAN VIEW
(Requires 2 - 1½" Pipe Stakes)

TYPE H GABION BASKET
PLAN VIEW

TYPE G GABION BASKET
PLAN VIEW

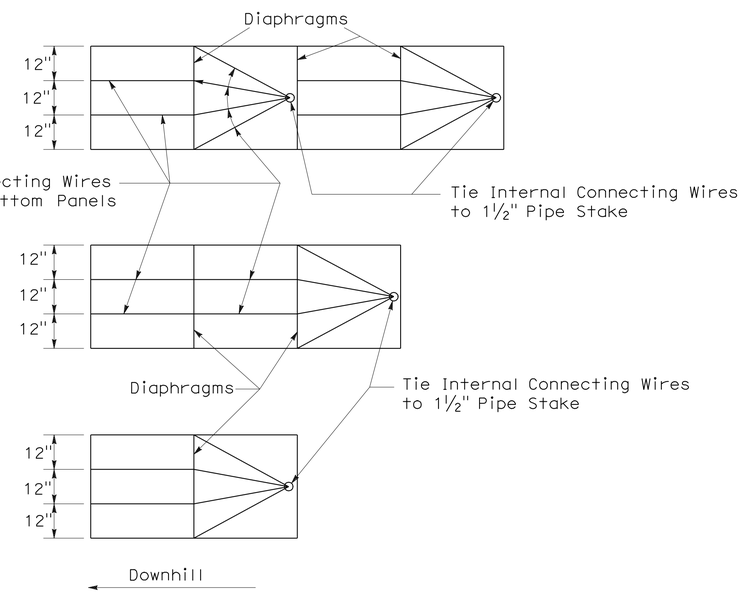

13.5-GAGE INTERNAL CONNECTING WIRES

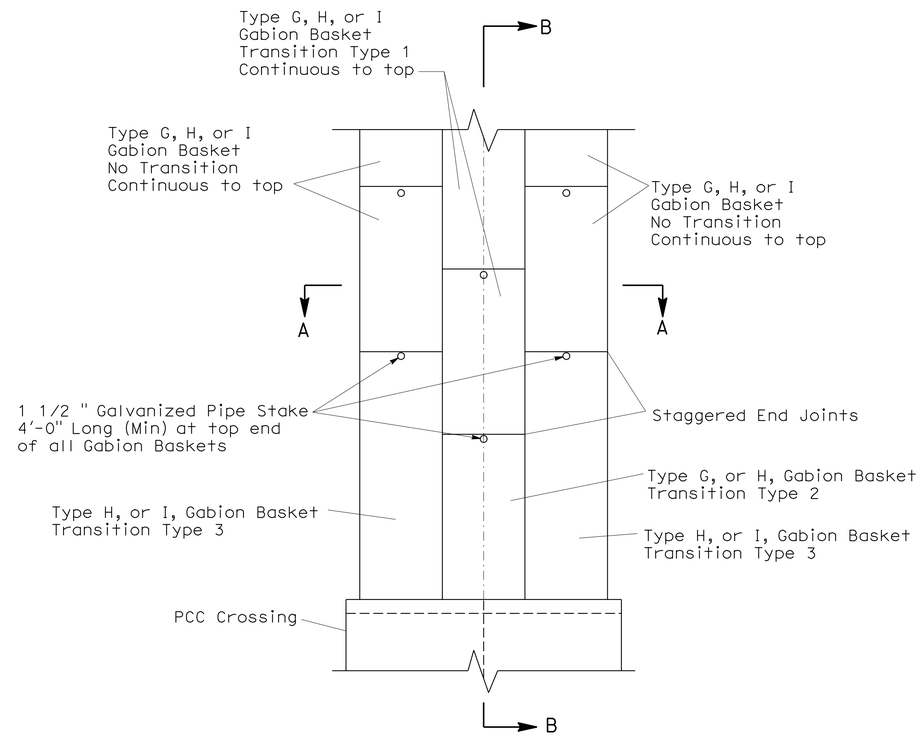

PLAN VIEW

GABION BASKET DETAILS

DRAINAGE DETAILS

NO SCALE

DD-28

REVISED BY	DATE REVISED

CALCULATED-DESIGNED BY	JIM MILLS
CHECKED BY	SUMANGALI HOODE
FUNCTIONAL SUPERVISOR	JACK WALKER

STATE OF CALIFORNIA - DEPARTMENT OF TRANSPORTATION
Caltrans
06-DESIGN

LAST REVISION 10-27-11 | DATE PLOTTED => 17-FEB-2012 | TIME PLOTTED => 05:34

Dist	COUNTY	ROUTE	POST MILES TOTAL PROJECT	SHEET No.	TOTAL SHEETS
05	SLO	46	40.7/46.3	238	541

Sumangali Hoode 11-10-11
REGISTERED CIVIL ENGINEER DATE

2-13-12
PLANS APPROVAL DATE

REGISTERED PROFESSIONAL ENGINEER
SUMANGALI HOODE
No. 59498
Exp. 12-31-11
CIVIL
STATE OF CALIFORNIA

THE STATE OF CALIFORNIA OR ITS OFFICERS OR AGENTS SHALL NOT BE RESPONSIBLE FOR THE ACCURACY OR COMPLETENESS OF SCANNED COPIES OF THIS PLAN SHEET.

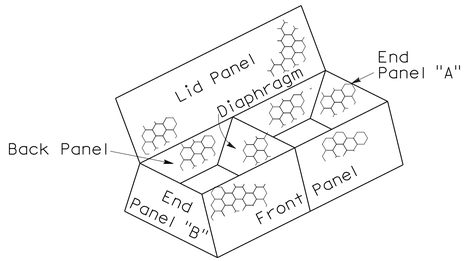

Transition Type 1

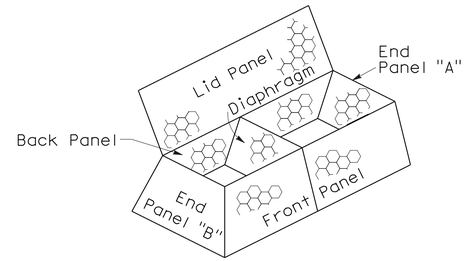

Transition Type 2

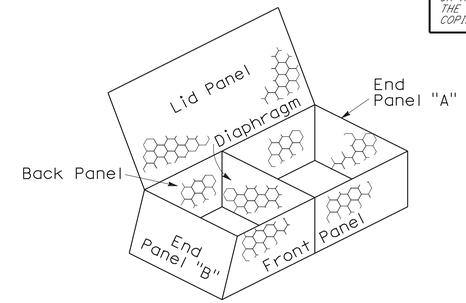

Transition Type 3

ASSEMBLED TRANSITIONAL GABION BASKETS

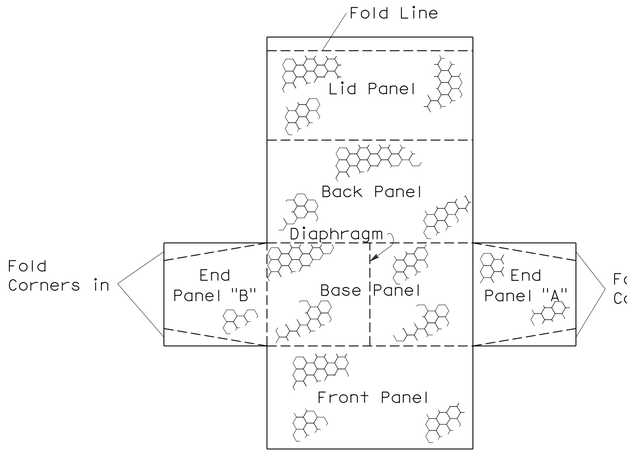

Transition Type 1

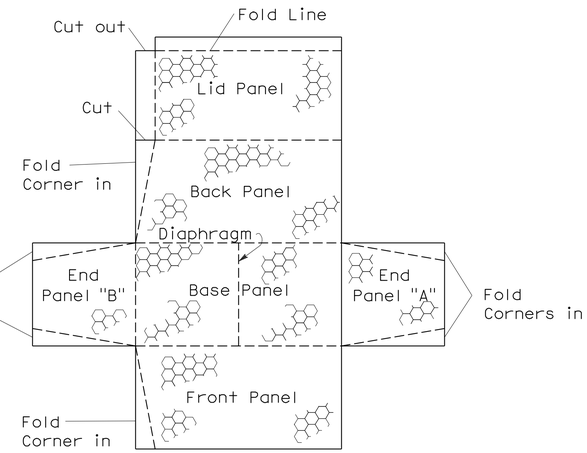

Transition Type 2

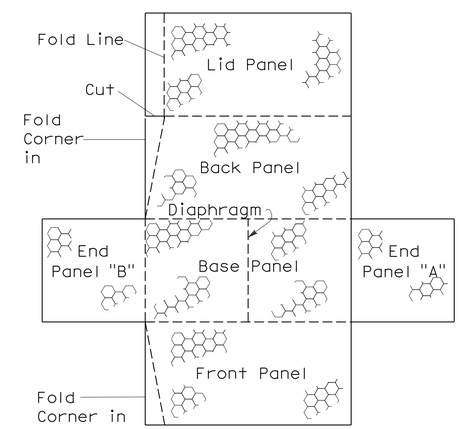

Transition Type 3

FLAT LAYOUT OF GABION BASKETS

TRANSITIONAL GABION BASKETS

(For 6'-0", 9'-0", or 12'-0" Gabion)

DRAINAGE DETAILS

NO SCALE

DD-29

STATE OF CALIFORNIA - DEPARTMENT OF TRANSPORTATION
Caltrans
06-DESIGN

FUNCTIONAL SUPERVISOR: JACK WALKER
CALCULATED-DESIGNED BY: JIM MILLS
CHECKED BY: SUMANGALI HOODE
REVISED BY
DATE REVISED

LAST REVISION 10-27-11
DATE PLOTTED => 17-FEB-2012
TIME PLOTTED => 05:34

Dist	COUNTY	ROUTE	POST MILES TOTAL PROJECT	SHEET No.	TOTAL SHEETS
05	SLO	46	40.7/46.3	239	541

Sumangali Hoode 11-10-11
REGISTERED CIVIL ENGINEER DATE

2-13-12
PLANS APPROVAL DATE

REGISTERED PROFESSIONAL ENGINEER SUMANGALI HOODE No. 59498 Exp. 12-31-11 CIVIL STATE OF CALIFORNIA

THE STATE OF CALIFORNIA OR ITS OFFICERS OR AGENTS SHALL NOT BE RESPONSIBLE FOR THE ACCURACY OR COMPLETENESS OF SCANNED COPIES OF THIS PLAN SHEET.

NOTE:

FOR SECTIONS A-A, B-B, C-C, D-D, E-E, F-F, AND G-G, SEE Sht DD-31.

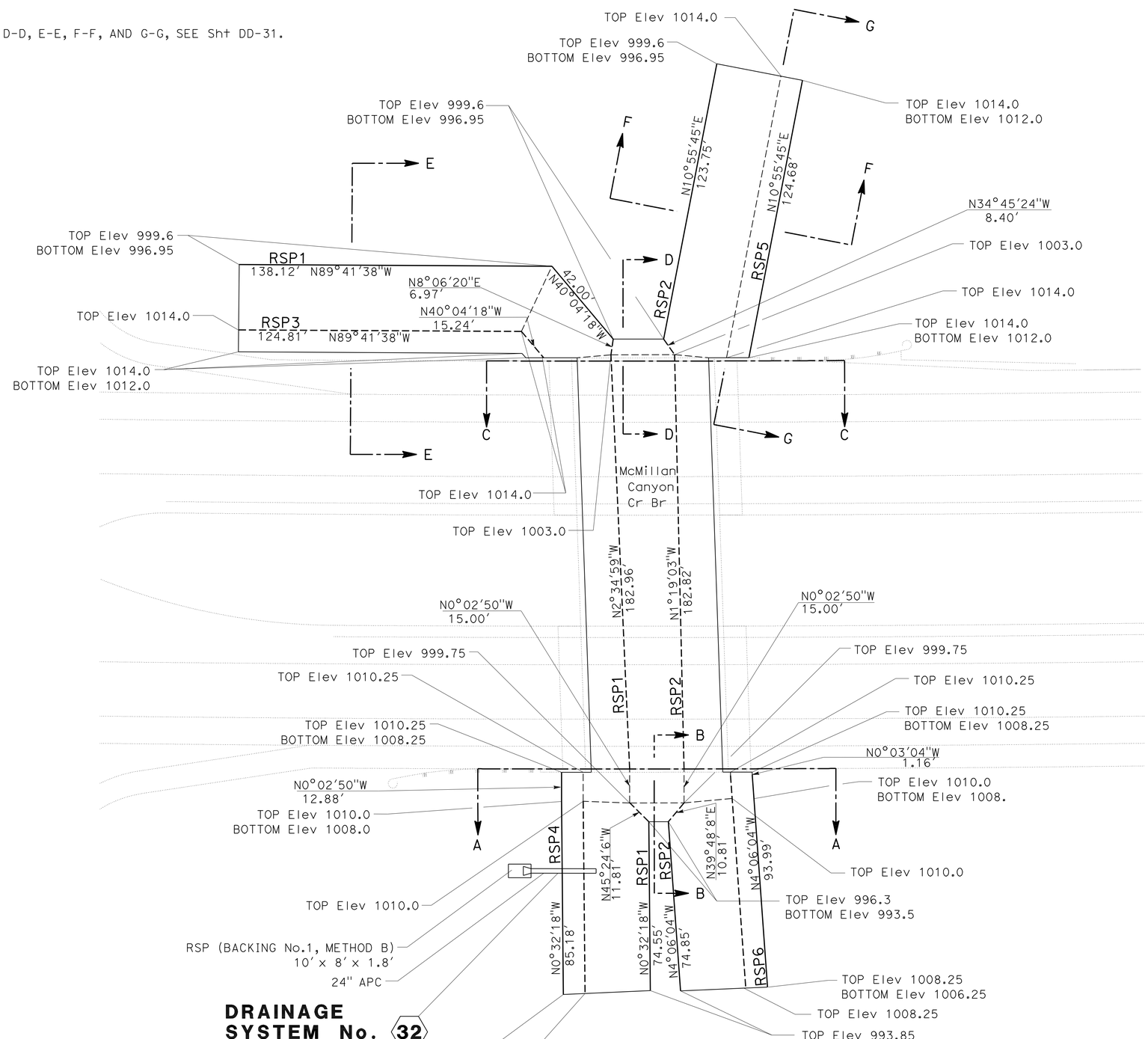

DRAINAGE SYSTEM No. 32

PLAN

ROCK SLOPE PROTECTION AT McMILLAN CANYON CREEK

DRAINAGE DETAILS

SCALE: 1" = 50'

DD-30

STATE OF CALIFORNIA - DEPARTMENT OF TRANSPORTATION
Caltrans
06-DESIGN

FUNCTIONAL SUPERVISOR: JACK WALKER
CALCULATED-DESIGNED BY: JIM MILLS
CHECKED BY: JOSE BAUTISTA
REVISED BY
DATE REVISED

LAST REVISION 11-10-11
DATE PLOTTED => 17-FEB-2012
TIME PLOTTED => 05:34

Dist	COUNTY	ROUTE	POST MILES TOTAL PROJECT	SHEET No.	TOTAL SHEETS
05	SLO	46	40.7/46.3	240	541

Sumangali Hoode 11-10-11
REGISTERED CIVIL ENGINEER DATE

2-13-12
PLANS APPROVAL DATE

REGISTERED PROFESSIONAL ENGINEER SUMANGALI HOODE No. 59498 Exp. 12-31-11 CIVIL STATE OF CALIFORNIA

THE STATE OF CALIFORNIA OR ITS OFFICERS OR AGENTS SHALL NOT BE RESPONSIBLE FOR THE ACCURACY OR COMPLETENESS OF SCANNED COPIES OF THIS PLAN SHEET.

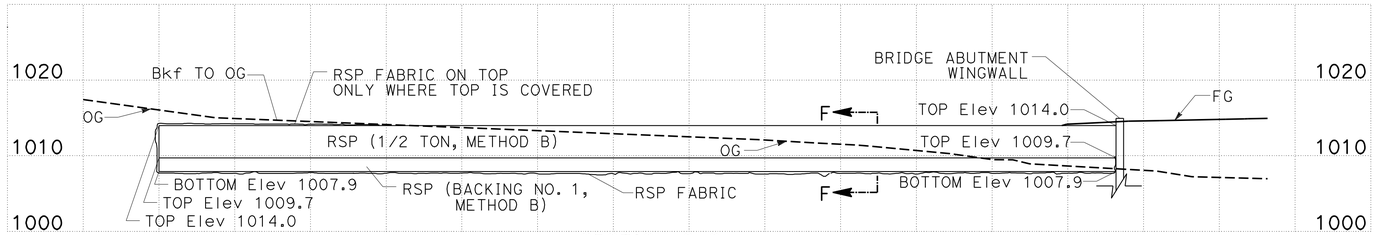

SECTION G-G

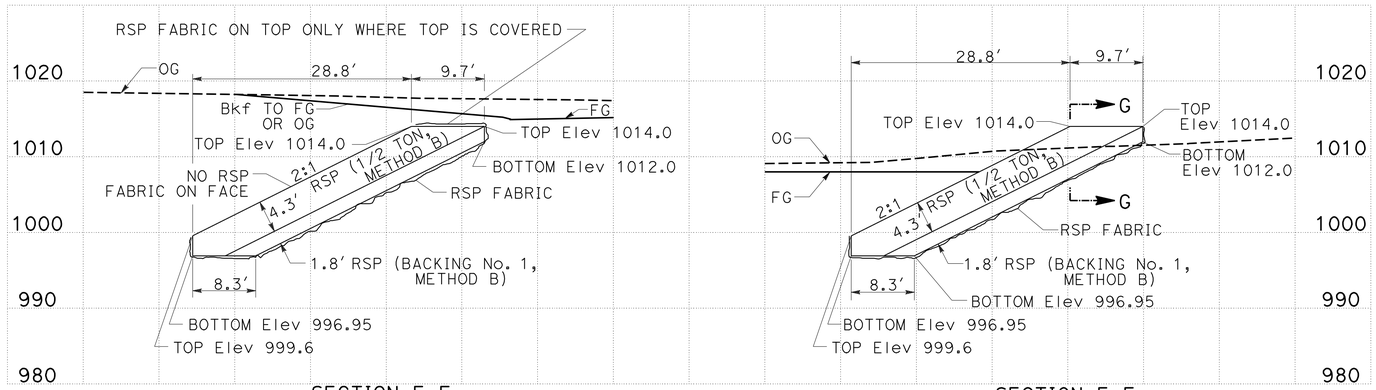

SECTION E-E

SECTION F-F

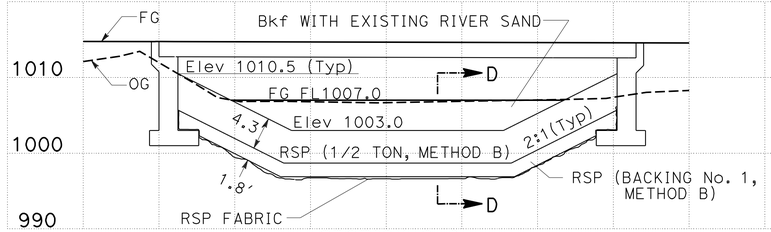

SECTION C-C

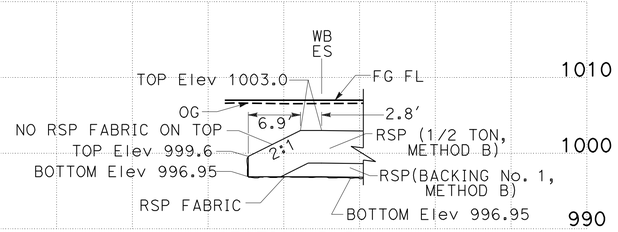

SECTION D-D

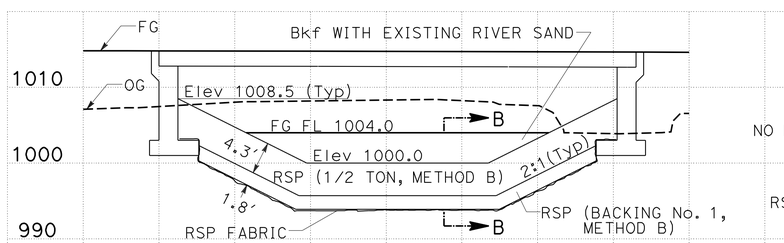

SECTION A-A

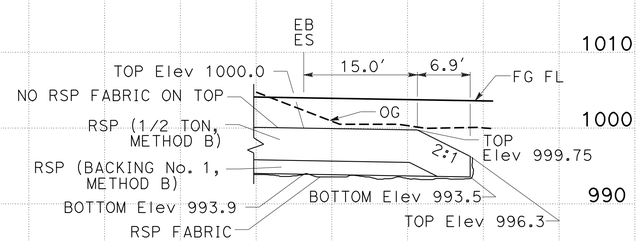

SECTION B-B

ROCK SLOPE PROTECTION AT McMILLAN CANYON CREEK

DRAINAGE DETAILS

SCALE: Horiz 1" = 10′
Vert 1" = 10′

DD-31

STATE OF CALIFORNIA - DEPARTMENT OF TRANSPORTATION
Caltrans®
06-DESIGN

FUNCTIONAL SUPERVISOR: JACK WALKER
CALCULATED-DESIGNED BY: JIM MILLS
CHECKED BY: JOSE BAUTISTA
REVISED BY
DATE REVISED

LAST REVISION 11-01-11
DATE PLOTTED => 17-FEB-2012
TIME PLOTTED => 05:34

Dist	COUNTY	ROUTE	POST MILES TOTAL PROJECT	SHEET No.	TOTAL SHEETS
05	SLO	46	40.7/46.3	241	541

Sumangali Hoode 11-10-11
REGISTERED CIVIL ENGINEER DATE

2-13-12
PLANS APPROVAL DATE

REGISTERED PROFESSIONAL ENGINEER SUMANGALI HOODE No. 59498 Exp. 12-31-11 CIVIL STATE OF CALIFORNIA

THE STATE OF CALIFORNIA OR ITS OFFICERS OR AGENTS SHALL NOT BE RESPONSIBLE FOR THE ACCURACY OR COMPLETENESS OF SCANNED COPIES OF THIS PLAN SHEET.

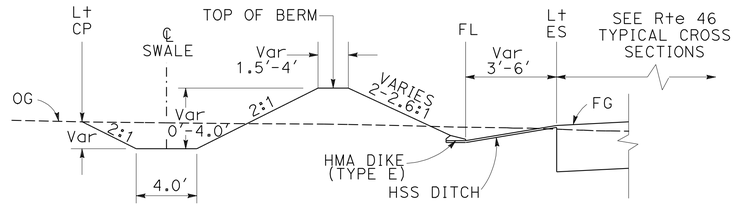

Sta 881+00.00 TO Sta 883+25.46

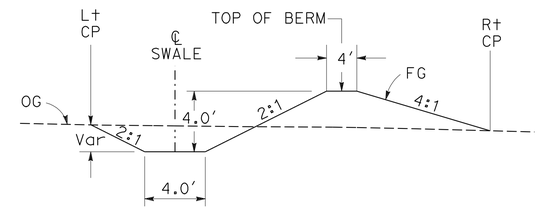

Sta 883+25.46 TO Sta 892+00

BERM & SWALE

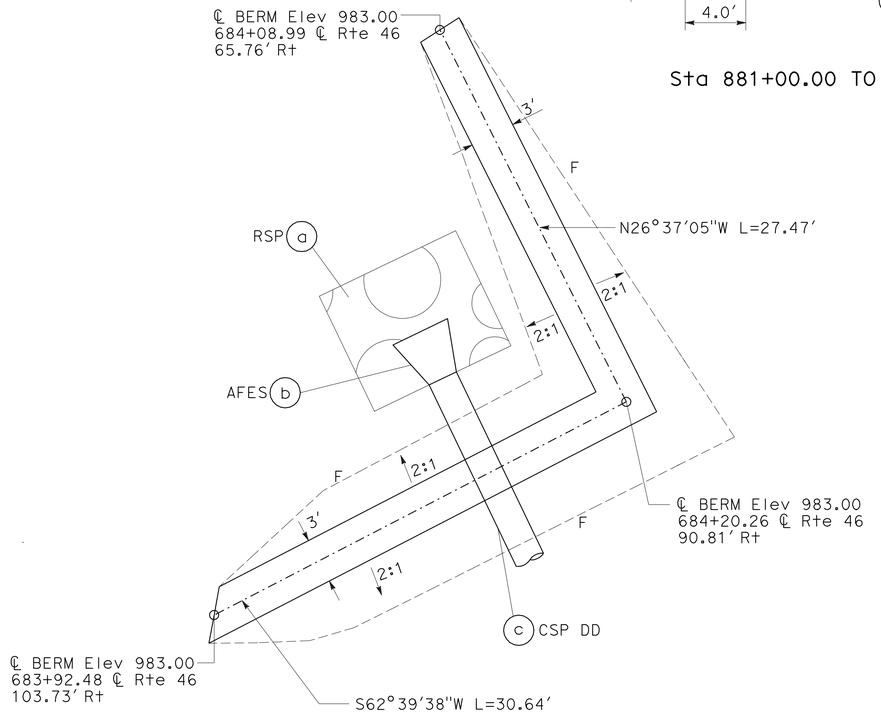

DRAINAGE SYSTEM No. 12

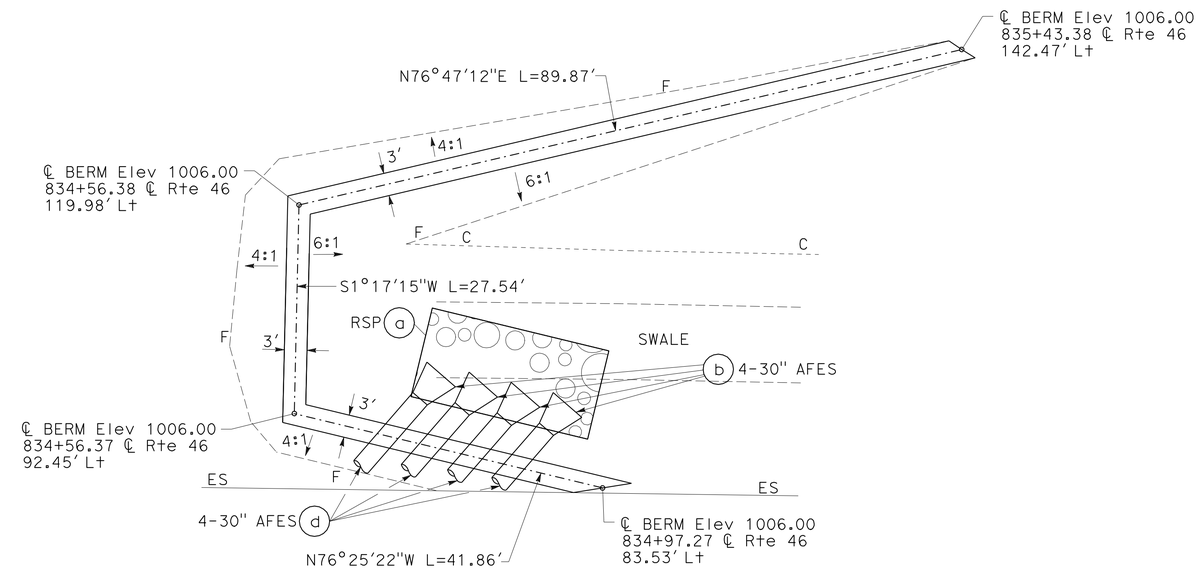

DRAINAGE SYSTEM No. 30

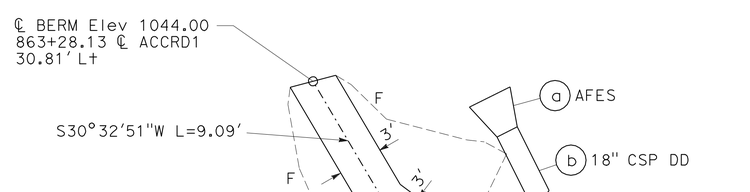

DRAINAGE SYSTEM No. 34

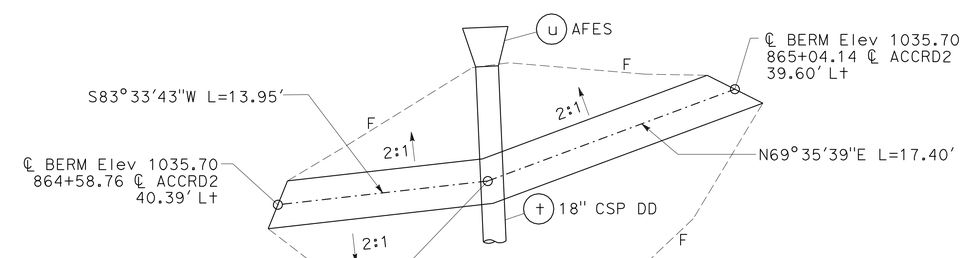

DRAINAGE SYSTEM No. 34

BERM

DRAINAGE DETAILS

NO SCALE

DD-32

STATE OF CALIFORNIA - DEPARTMENT OF TRANSPORTATION
Caltrans
06-DESIGN

FUNCTIONAL SUPERVISOR: JACK WALKER
CALCULATED-DESIGNED BY: JIM MILLS
CHECKED BY: TOM LIU
REVISED BY
DATE REVISED

LAST REVISION: 10-28-11
DATE PLOTTED => 17-FEB-2012
TIME PLOTTED => 05:34

Dist	COUNTY	ROUTE	POST MILES TOTAL PROJECT	Sht No.	TOTAL Shts
05	SLO	46	40.7/46.3	242	541

Sumangali Hoode 11-10-11
REGISTERED CIVIL ENGINEER DATE

2-13-12
PLANS APPROVAL DATE

REGISTERED PROFESSIONAL ENGINEER
SUMANGALI HOODE
No. 59498
Exp. 12-31-11
CIVIL
STATE OF CALIFORNIA

THE STATE OF CALIFORNIA OR ITS OFFICERS OR AGENTS SHALL NOT BE RESPONSIBLE FOR THE ACCURACY OR COMPLETENESS OF SCANNED COPIES OF THIS PLAN SHEET.

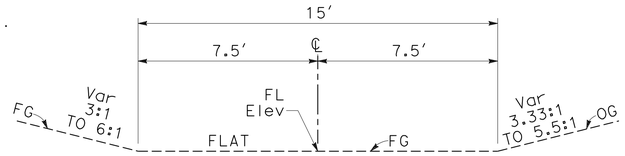

BIOSWALE No. 1

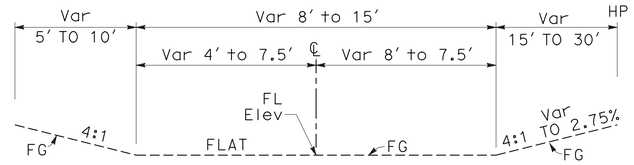

BIOSWALE No. 5

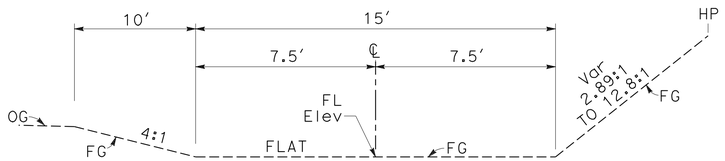

BIOSWALE No. 2

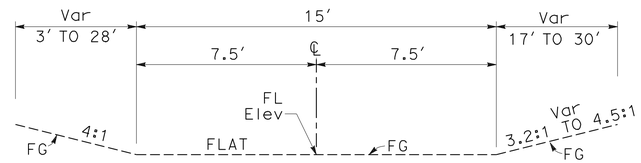

BIOSWALE No. 6

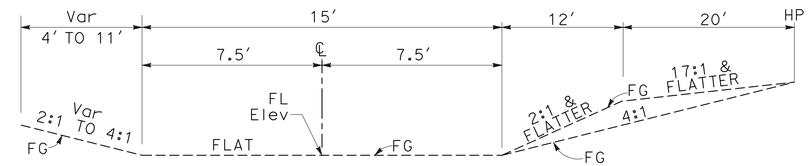

BIOSWALE No. 8

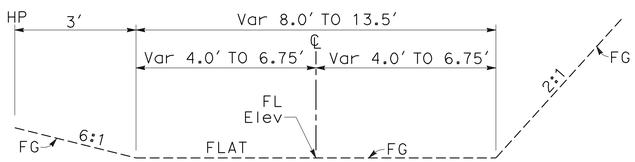

BIOSWALE No. 3

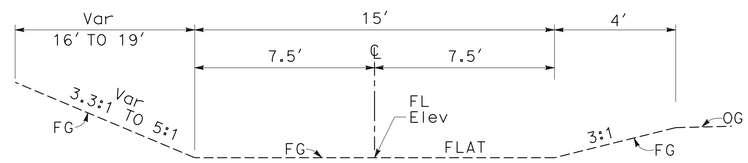

BIOSWALE No. 7

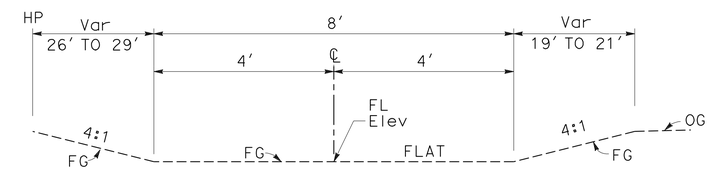

BIOSWALE No. 11

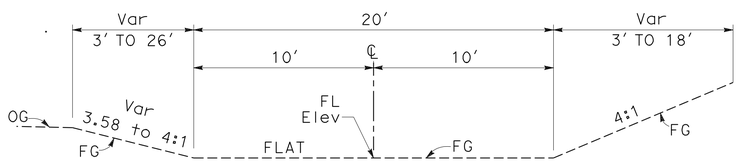

BIOSWALE No. 4

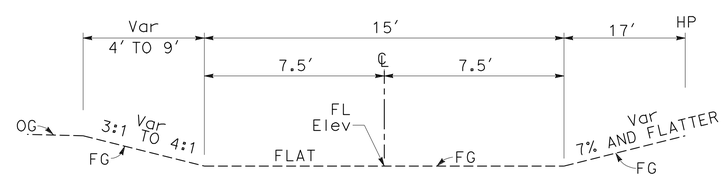

BIOSWALE No. 9

BIOSTRIP LOCATION OF CONSTRUCTION

No.	Beg Sta	END Sta	SIDE	ALIGNMENT	LENGTH
1	624+50	628+00	R+	ROUTE 46	Var 24′ TO 29′
2	7+27.94 Prv+ Dwy 2	630+00	R+	ROUTE 46	Var 24′ TO 63′
3	629+13.24	632+00	L+	ROUTE 46	Var 24′ TO 46′
4	635+00	636+75	R+	ROUTE 46	Var 39′ TO 63′
5	635+65	651+00	L+	ROUTE 46	Var 15′ TO 100′
6	642+20	644+50	R+	ROUTE 46	40′
7	672+75	674+75	L+	ROUTE 46	Var 20′ TO 45′
8	679+25	688+50	L+	ROUTE 46	Var 15′ TO 100′
9	684+00	691+50	R+	ROUTE 46	Var 15′ TO 100′
10	700+74.24	703+12.50	R+	ROUTE 46	20′
11	701+50	702+50	L+	ROUTE 46	Var 25′ TO 30′
12	707+25	723+57	L+	ROUTE 46	Var 15′ TO 65′
13	713+00	749+75	R+	ROUTE 46	Var 15′ TO 100′
14	742+29	745+00	L+	ROUTE 46	20′
15	760+00	795+90	R+	ROUTE 46	Var 15′ TO 40′
16	775+25	785+75	L+	ROUTE 46	20′
17	796+70	818+50	R+	ROUTE 46	Var 15′ TO 30′
18	820+75	834+75	L+	ROUTE 46	Var 10′ TO 30′
19	821+50	850+59	R+	ROUTE 46	Var 15′ TO 30′
20	857+00	881+50	R+	ROUTE 46	Var 15′ TO 45′
21	870+50	882+00	L+	ROUTE 46	Var 15′ TO 65′

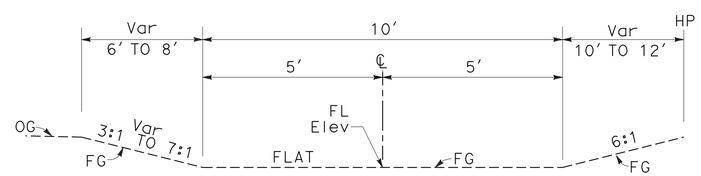

BIOSWALE No. 10

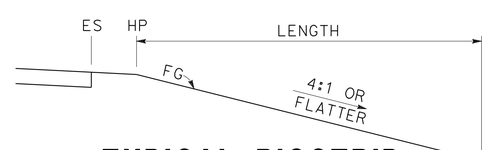

TYPICAL BIOSTRIP

(FOR BIOSTRIP No. 1 THROUGH No.21)

BIOSWALE LOCATION OF CONSTRUCTION

No.	℄ Sta	℄ OFFSET	℄ FL Elev	ALIGNMENT	SLOPE
1	633+75.00	138.50 R+	973.82′	Rte 46	S=0.0723
	636+00.00	138.50 R+	988.51′		
2	673+00.00	114.17 L+	1011.27′	Rte 46	S=0.0439
	675+22.00	97.57 L+	999.13′		
3	680+00.00	75.01 R+	994.38′	Rte 46	S=0.0293
	683+75.00	77.74 R+	983.38′		
4	679+25.00	93.06 L+	993.32′	Rte 46	S=0.0663
	683+25.00	156.96 L+	965.61′		
5	719+00.00	106.24 L+	976.50′	Rte 46	S=0.0223
	723+60.00	87.00 L+	986.79′		
6	743+80.00	137.36 L+	984.03′	Rte 46	S=0.1281
	744+75.00	192.00 L+	977.60′		
7	760+25.00	116.43 R+	987.65′	Rte 46	S=0.0233
	763+50.00	117.46 R+	980.08′		
8	775+75.00	100.67 L+	958.00′	Rte 46	S=0.0260
	777+15.00	107.59 L+	954.35′		
9	799+25.00	92.50 L+	970.95′	Rte 46	S=0.0132
	800+00.00	92.50 L+	971.94′		
10	835+10.00	102.88 L+	1002.91′	Rte 46	S=0.0132
	839+00.00	104.24 L+	1008.17′		
11	853+25.00	130.79 R+	1008.00′	Rte 46	S=0.0050
	854+75.00	128.41 R+	1007.25′		

DRAINAGE DETAILS

NO SCALE

DD-33

REVISED BY	DATE REVISED
SUMANGALI HOODE	10-28-11

CALCULATED-DESIGNED BY	CHECKED BY
JOSE ARGUELLO	

FUNCTIONAL SUPERVISOR: JACK WALKER

STATE OF CALIFORNIA - DEPARTMENT OF TRANSPORTATION
Caltrans
06-DESIGN

LAST REVISION | DATE PLOTTED => 17-FEB-2012 | TIME PLOTTED => 05:34

NOTES:

1. CSP SHALL BE MADE OF ONLY GALVANIZED STEEL.

ABBREVIATIONS:

Prvt	Private
(N)	NOT A SEPARATE PAY ITEM, FOR INFORMATION ONLY.

ALTERNATIVE FLARED END SECTIONS

ALLOWABLE MATERIAL
PRECAST CONCRETE
PREFABRICATED STEEL

ALTERNATIVE PIPE CULVERTS

Sta 607+00 TO 690+00
Sta 745+00 TO 894+00

ALLOWABLE MATERIAL
REINFORCED CONCRETE PIPE
PLASTIC PIPE WITH SMOOTH INTERIOR
CSP (0.064" THICK) WITH POLYMERIZED ASPHALT COATING
CSP (0.064" THICK) WITH POLYMERIC SHEET COATING
CSP (0.138" THICK) WITH HOT DIPPED BITUMINOUS COATING
CSP (0.168" THICK)

ALTERNATIVE PIPE CULVERT CALLED OUT AS SMOOTH SHALL BE ONLY PLASTIC OR REINFORCED CONCRETE.

ALTERNATIVE PIPE CULVERTS

Sta 690+00 TO 745+00

ALLOWABLE MATERIAL
REINFORCED CONCRETE PIPE
PLASTIC PIPE WITH SMOOTH INTERIOR
CSP (0.079" THICK) WITH POLYMERIZED ASPHALT COATING
CSP (0.079" THICK) WITH POLYMERIC SHEET COATING
CSP (0.138" THICK) WITH HOT DIPPED BITUMINOUS COATING AND PAVED INVERT

ALTERNATIVE PIPE CULVERT CALLED OUT AS SMOOTH SHALL BE ONLY PLASTIC OR REINFORCED CONCRETE.

Dist	COUNTY	ROUTE	POST MILES TOTAL PROJECT	SHEET No.	TOTAL SHEETS
05	SLO	46	40.7/46.3	243	541

Tom W. Liu 11-10-11
REGISTERED CIVIL ENGINEER DATE

2-13-12
PLANS APPROVAL DATE

REGISTERED PROFESSIONAL ENGINEER TOM W. LIU No. 77212 Exp. 6-30-13 CIVIL STATE OF CALIFORNIA

THE STATE OF CALIFORNIA OR ITS OFFICERS OR AGENTS SHALL NOT BE RESPONSIBLE FOR THE ACCURACY OR COMPLETENESS OF SCANNED COPIES OF THIS PLAN SHEET.

DRAINAGE QUANTITIES

DESIGN HEIGHT (N)	Max COVER (N)	36" CSP INLET (0.168" THICK)	Misc IRON & STEEL	Str Bkf (SLURRY CEMENT)	Conc		MINOR Conc		PLACE HMA		BOX Culv		CSP DD		AFES				ROCK SLOPE PROTECTION						GABION	RCP		ALTERNATIVE PIPE CULVERT												REMOVE						ABANDON			SAND Bkf	DESCRIPTION	STATION	DRAINAGE PLAN Sht No.	DRAINAGE SYSTEM No.	DRAINAGE UNIT No.
					Conc APRON	(SLOPE PROTECTION)	(MINOR Str)	(Bkf)	Misc AREA	HMA	Str Conc	BAR Reinf STEEL	18" (0.079" THICK)	24" (0.138" THICK)	18"	24"	30"	48"	1 TON, METHOD A	1/4TON, METHOD B	LIGHT, METHOD B	BACKING No. 1, METHOD B	FABRIC			36"	48"	12" (SMOOTH)	18"	18" (SMOOTH)	24"	24" (SMOOTH)	30"	30" (SMOOTH)	36"	36" (SMOOTH)	42"	48"	48" (SMOOTH)	CULVERT	FES	HW	JS	DI	WW	LENGTH (N)	CULVERT	JS						
FT	FT	LF	LB	CY	CY	CY	CY	CY	SQYD	TON	CY	LB	LF	LF	EA	EA	EA	EA	CY	CY	CY	CY	SQYD	CY	LF	LF	LF	LF	LF	LF	LF	LF	LF	LF	LF	LF	LF	LF	LF	EA	EA	EA	EA	EA	LF	EA	EA	CY					
																1																																	24" AFES	629+00	D-2	1	a
	1.7							12.1																						43.3																			24" APC				b
																1																																	24" AFES				c
																						5	15																										RSP				d
3.5			263		2.3		1.5																																										G2 DI 24-9 GRATE	629+78	D-2	2	a
	2.5																											37.1																					18" APC				b
3.9			263		2.3		1.6																																										G2 DI 24-9 GRATE				c
	3.4																													77.1																			24" APC				d
																1																																	24" AFES				e
																						10	26																										RSP				f
4.7							2.0																																										HW	631+00	D-2	3	a
																						16	32																										RSP				b
	17.7																								244.7																								36" RCP				c
4.7							2.0																																										EW				d
																						16	46																										RSP				e
																																											1							REMOVE WW	632+80	D-2	4	a
																																											1							REMOVE WW				b
																																										1							REMOVE HW				c
	16.1																																													105.6	1		98.2	Abn 48" RCP				d
	15.5																																								3.0									REMOVE 48" RCP				e
	22.4																																						48.1											48" APC				f
	22.4																																													48.1	1		44.8	Abn 48" APC				g
							4.8																																										JS				h
	19.2																																						334.5											48" APC				i
	19.2																																						123.3											48" APC				j
5.7							3.7																																										EW				k
																					94		103																										RSP				l
5.7							3.7																																										HW				m
																						78	113																										RSP				n
	1.2																																								26.4									REMOVE 18" CMP				o
																																										1							REMOVE EW				p
																																											1							REMOVE FES	642+60	D-3	5	a
	1.1																																								39.4									REMOVE 24" RCP				b
																																												1					REMOVE DI				c
	1.6																																								4.3									REMOVE 24" CMP				d
	15.0																													10.0																			24" APC				e
3.1			263				1.4																																										G2 DI 24-9 GRATE				f
-	-	-	789	-	4.6	-	20.7	12.1	-	-	-	-	-	-	-	3	-	-	-	-	94	125	335	-	244.7	-	-	37.1	-	130.4	-	-	-	-	-	-	505.9	-	73.1	1	2	-	1	2	153.7	2	-	143.0	SHEET DQ-1 TOTAL				

DRAINAGE QUANTITIES
DQ-1

STATE OF CALIFORNIA - DEPARTMENT OF TRANSPORTATION
06-DESIGN
Caltrans®

FUNCTIONAL SUPERVISOR: JACK WALKER
CALCULATED-DESIGNED BY: TOM LIU
CHECKED BY: SUMANGALI HOODE
REVISED BY
DATE REVISED

LAST REVISION 11-07-11
DATE PLOTTED => 17-FEB-2012
TIME PLOTTED => 14:41

Dist	COUNTY	ROUTE	POST MILES TOTAL PROJECT	SHEET No.	TOTAL SHEETS
05	SLO	46	40.7/46.3	244	541

Tom W. Liu 11-10-11
REGISTERED CIVIL ENGINEER DATE

2-13-12
PLANS APPROVAL DATE

REGISTERED PROFESSIONAL ENGINEER TOM W. LIU No. 77212 Exp. 6-30-13 CIVIL STATE OF CALIFORNIA

THE STATE OF CALIFORNIA OR ITS OFFICERS OR AGENTS SHALL NOT BE RESPONSIBLE FOR THE ACCURACY OR COMPLETENESS OF SCANNED COPIES OF THIS PLAN SHEET.

DRAINAGE QUANTITIES (CONTINUED)

DESIGN HEIGHT (N)	Max COVER (N)	36" CSP INLET (0.168" THICK)	Misc IRON & STEEL	Str Bkf (SLURRY CEMENT)	Conc: Conc APRON	Conc: (SLOPE PROTECTION)	MINOR Conc: (MINOR Str)	MINOR Conc: (Bkf)	PLACE HMA: Misc AREA	PLACE HMA: HMA	BOX Culv: Str Conc	BOX Culv: BAR Reinf STEEL	CSP DD: 18" (0.079" THICK)	CSP DD: 24" (0.138" THICK)	AFES: 18"	AFES: 24"	AFES: 30"	AFES: 48"	ROCK SLOPE PROTECTION: 1 TON, METHOD A	ROCK SLOPE PROTECTION: 1/4TON, METHOD B	ROCK SLOPE PROTECTION: LIGHT, METHOD B	ROCK SLOPE PROTECTION: BACKING No. 1, METHOD B	ROCK SLOPE PROTECTION: FABRIC	GABION	RCP: 36"	RCP: 48"	ALTERNATIVE PIPE CULVERT: 12" (SMOOTH)	ALTERNATIVE PIPE CULVERT: 18" (SMOOTH)	ALTERNATIVE PIPE CULVERT: 18" (SMOOTH)	ALTERNATIVE PIPE CULVERT: 24" (SMOOTH)	ALTERNATIVE PIPE CULVERT: 24" (SMOOTH)	ALTERNATIVE PIPE CULVERT: 30"	ALTERNATIVE PIPE CULVERT: 30" (SMOOTH)	ALTERNATIVE PIPE CULVERT: 36"	ALTERNATIVE PIPE CULVERT: 36" (SMOOTH)	ALTERNATIVE PIPE CULVERT: 42"	ALTERNATIVE PIPE CULVERT: 48"	ALTERNATIVE PIPE CULVERT: 48" (SMOOTH)	REMOVE: CULVERT	REMOVE: FES	REMOVE: HW	REMOVE: JS	REMOVE: DI	REMOVE: WW	ABANDON: LENGTH (N)	ABANDON: CULVERT	ABANDON: JS	SAND Bkf	DESCRIPTION	STATION	DRAINAGE PLAN Sht No.	DRAINAGE SYSTEM No.	DRAINAGE UNIT No.
FT	FT	LF	LB	CY	CY	CY	CY	CY	SQYD	TON	CY	LB	LF	LF	EA	EA	EA	EA	CY	CY	CY	CY	SQYD	CY	LF	LF	LF	LF	LF	LF	LF	LF	LF	LF	LF	LF	LF	LF	LF	EA	EA	EA	EA	EA	LF	EA	EA	CY					
	19.3																													172.1																				24" APC	642+60	D-3	5	g
	19.3																																					172.1											REMOVE 24" APC				h
	15.6																																					93.0											REMOVE 24" CMP				i
	15.0																																					10.0											REMOVE 24" APC				j
																																										1						REMOVE DI				k
	12.5																												196.6																				24" APC				l
	14.6																												191.2																				24" APC				m
3.9			263				2.5																																										G2 DI 24-9 GRATE				n
3.7							1.5																																										EW				o
3.7							1.5																																										HW				p
																						7	14																										RSP				q
																																										1						REMOVE DI				r
																						45	72																										RSP				s
4.7							2.0																																										HW	647+00	D-3	6	a
	6.3																								171.5																								36" RCP				b
4.7							2.0																																										EW				c
																						39	124																										RSP	651+42	D-4	7	a
																1																																24" AFES				b
	0.7							3.0																							82.5																	24" APC (SMOOTH)				c
2.8			239				1.4		9	0.9																																						G2 DI 24-12X GRATE				d
	0.8							4.8																							17.1																	24" APC (SMOOTH)				e
2.9			239				1.4		9	0.9																																						G2 DI 24-12X GRATE				f
	0.9							66.8																							240.4																	24" APC (SMOOTH)				g
3.0			239				1.4		9	0.9																																						G2 DI 24-12X GRATE				h
	1.5							7.0																					98.6																				18" APC (SMOOTH)				i
2.4			239				1.4		9	0.9																																						G2 DI 24-12X GRATE				j
	2.1							7.6																					140.0																				18" APC (SMOOTH)				k
4.8		5.3	215		0.2		0.4																																									OMP Mod DI 36RX GRATE				l
3.5		4.0	236		0.2		0.4																																									OMP Mod DI 36R GRATE	665+92	D-5	8	a
	3.2												69.4																																			18" CSP DD				b
4.2			239				1.7		9	0.9																																						G2 DI 24-12X GRATE				c
	2.3																												218.1																				24" APC				d
4.3			239				1.7		9	0.9																																						G2 DI 24-12X GRATE				e
	2.3																												218.1																				24" APC				f
4.3			239				1.7		9	0.9																																						G2 DI 24-12X GRATE				g
	2.3																												218.1																				24" APC				h
4.3			239				1.7		9	0.9																																						G2 DI 24-12X GRATE				i
	2.3																												17.1																				24" APC				j
4.3			239				1.7		9	0.9																																						G2 DI 24-12X GRATE				k
-	-	9.3	2865	-	0.4	-	24.4	89.2	81	8.1	-	-	69.4	-	-	1	-	-	-	-	-	91	210	-	171.5	-	-	-	238.6	1231.3	340.0	-	-	-	-	-	-	-	275.1	-	-	-	2	-	-	-	-	-	SHEET DQ-2 TOTAL				

DRAINAGE QUANTITIES
DQ-2

STATE OF CALIFORNIA - DEPARTMENT OF TRANSPORTATION
06-DESIGN
Caltrans®

FUNCTIONAL SUPERVISOR: JACK WALKER
CALCULATED-DESIGNED BY: TOM LIU
CHECKED BY: SUMANGALI HOODE
REVISED BY
DATE REVISED

LAST REVISION 11-07-11
DATE PLOTTED => 17-FEB-2012
TIME PLOTTED => 14:42

Dist	COUNTY	ROUTE	POST MILES TOTAL PROJECT	SHEET No.	TOTAL SHEETS
05	SLO	46	40.7/46.3	245	541

Tom W. Liu 11-10-11
REGISTERED CIVIL ENGINEER DATE

2-13-12
PLANS APPROVAL DATE

REGISTERED PROFESSIONAL ENGINEER TOM W. LIU No. 77212 Exp. 6-30-13 CIVIL STATE OF CALIFORNIA

THE STATE OF CALIFORNIA OR ITS OFFICERS OR AGENTS SHALL NOT BE RESPONSIBLE FOR THE ACCURACY OR COMPLETENESS OF SCANNED COPIES OF THIS PLAN SHEET.

DRAINAGE QUANTITIES (CONTINUED)

DESIGN HEIGHT (N)	Max COVER (N)	36" CSP INLET (0.168" THICK)	Misc IRON & STEEL	Str Bkf (SLURRY CEMENT)	Conc APRON	Conc (SLOPE PROTECTION)	MINOR Conc (MINOR Str)	MINOR Conc (Bkf)	PLACE HMA Misc AREA	PLACE HMA HMA	BOX Culv Str Conc	BOX Culv BAR Reinf STEEL	CSP DD 18" (0.079" THICK)	CSP DD 24" (0.138" THICK)	AFES 18"	AFES 24"	AFES 30"	AFES 48"	ROCK SLOPE PROTECTION 1 TON, METHOD A	ROCK SLOPE PROTECTION ¼TON, METHOD B	ROCK SLOPE PROTECTION LIGHT, METHOD B	ROCK SLOPE PROTECTION BACKING No. 1, METHOD B	ROCK SLOPE PROTECTION FABRIC	GABION	RCP 36"	RCP 48"	ALTERNATIVE PIPE CULVERT 12" (SMOOTH)	ALTERNATIVE PIPE CULVERT 18" (SMOOTH)	ALTERNATIVE PIPE CULVERT 18" (SMOOTH)	ALTERNATIVE PIPE CULVERT 24" (SMOOTH)	ALTERNATIVE PIPE CULVERT 24" (SMOOTH)	ALTERNATIVE PIPE CULVERT 30"	ALTERNATIVE PIPE CULVERT 30" (SMOOTH)	ALTERNATIVE PIPE CULVERT 36"	ALTERNATIVE PIPE CULVERT 36" (SMOOTH)	ALTERNATIVE PIPE CULVERT 42"	ALTERNATIVE PIPE CULVERT 48"	ALTERNATIVE PIPE CULVERT 48" (SMOOTH)	REMOVE CULVERT	REMOVE FES	REMOVE HW	REMOVE JS	REMOVE DI	REMOVE WW	ABANDON LENGTH (N)	ABANDON CULVERT	ABANDON JS	SAND Bkf	DESCRIPTION	STATION	DRAINAGE PLAN Sht No.	DRAINAGE SYSTEM No.	DRAINAGE UNIT No.
FT	FT	LF	LB	CY	CY	CY	CY	CY	SQYD	TON	CY	LB	LF	LF	EA	EA	EA	EA	CY	CY	CY	CY	SQYD	CY	LF	LF	LF	LF	LF	LF	LF	LF	LF	LF	LF	LF	LF	LF	LF	EA	EA	EA	EA	EA	EA	LF	EA	EA	CY					
	2.4																													38.2																						24" APC	665+92	D-5	8	l
																1																																			24" AFES				m
																						30	69																												RSP				n
																																										1									REMOVE HW	674+66	D-5	9	a
	4.9																																							49.5										REMOVE 30" CMP				b
																																										1									REMOVE EW				c
																						15	36																												RSP				d
4.7							2.0																																												HW				e
	12.5																								85.7																										36" RCP				f
15.5			263		2.3		6.2																																											G2 DI 24-9 GRATE				g
																																										1									REMOVE HW				h
	7.3																																							25.7										REMOVE 24" RCP				i
	13.6																													2.7																				24" APC				j
							1.7																																											JS				k
																																																1	0.9	Abn JS				l
	13.6																																														2.7	1		0.4	Abn 24" APC				m
	19.5																																														76.6	1		8.9	Abn 24" RCP				n
																																										1									REMOVE EW				o
	20.3																								77.9																										36" RCP				p
4.7							2.0																																												EW				q
																						17	40																												RSP				r
							2.4																																												JS				s
																																										1									REMOVE JS				t
	21.4																													9.3																				24" APC				u
																																														9.3	1		1.1	Abn 24" APC				v
							1.7																																												JS				w
																																																1	0.9	Abn JS				x
	38.5																								117.1																										RCP 36"				y
																																								13.4										REMOVE 24" RCP				z
																								SEE Sht Q-16																										REMOVE 12'x10' RCB	685+86	D-6	10	a
	25.0					0.8					1076.6	284,670																																							DOUBLE 10'x10' RCB				b
16.0						0.7					26.5	2,625																																							TYPE "B" WW				c
16.0						1.0					40.4	4,000																																							TYPE "B" WW				d
16.0						0.7					26.5	2,625																																							TYPE "B" WW				e
16.0						0.7					26.5	2,625																																							TYPE "B" WW				f
																			10																																RSP				g
																				150																															RSP				h
																						86	139																												RSP				i
																			9																																RSP				j
																				358																															RSP				k
-	-	-	263	-	2.3	3.9	16.0	-	-	-	1196.5	296,545	-	-	-	1	-	-	19	508	-	148	284	-	280.7	-	-	-	-	50.2	-	-	-	-	-	-	-	-	88.6	-	4	1	-	-	88.6	3	2	15.8	SHEET DQ-3 TOTAL				

DRAINAGE QUANTITIES
DQ-3

STATE OF CALIFORNIA - DEPARTMENT OF TRANSPORTATION
Caltrans®
06-DESIGN

TOM LIU — REVISED BY
SUMANGALI HOODE — DATE REVISED
CALCULATED-DESIGNED BY
CHECKED BY
FUNCTIONAL SUPERVISOR
JACK WALKER

LAST REVISION 11-07-11
DATE PLOTTED => 17-FEB-2012
TIME PLOTTED => 14:42

Dist	COUNTY	ROUTE	POST MILES TOTAL PROJECT	SHEET No.	TOTAL SHEETS
05	SLO	46	40.7/46.3	246	541

Tom W. Liu 11-10-11
REGISTERED CIVIL ENGINEER DATE

2-13-12
PLANS APPROVAL DATE

REGISTERED PROFESSIONAL ENGINEER TOM W. LIU No. 77212 Exp. 6-30-13 CIVIL STATE OF CALIFORNIA

THE STATE OF CALIFORNIA OR ITS OFFICERS OR AGENTS SHALL NOT BE RESPONSIBLE FOR THE ACCURACY OR COMPLETENESS OF SCANNED COPIES OF THIS PLAN SHEET.

DRAINAGE QUANTITIES (CONTINUED)

DESIGN HEIGHT (N)	Max COVER (N)	36" CSP INLET (0.168" THICK)	Misc IRON & STEEL	Str Bkf (SLURRY CEMENT)	Conc: Conc APRON	Conc: (SLOPE PROTECTION)	MINOR Conc: (MINOR Str)	MINOR Conc: (Bkf)	PLACE HMA: Misc AREA	PLACE HMA: HMA	BOX Culv: Str Conc	BOX Culv: BAR Reinf STEEL	CSP DD: 18" (0.079" THICK)	CSP DD: 24" (0.138" THICK)	AFES: 18"	AFES: 24"	AFES: 30"	AFES: 48"	ROCK SLOPE PROTECTION: 1 TON, METHOD A	ROCK SLOPE PROTECTION: 1/4TON, METHOD B	ROCK SLOPE PROTECTION: LIGHT, METHOD B	ROCK SLOPE PROTECTION: BACKING No. 1, METHOD B	ROCK SLOPE PROTECTION: FABRIC	GABION	RCP: 36"	RCP: 48"	ALTERNATIVE PIPE CULVERT: 12" (SMOOTH)	18" (SMOOTH)	18" (SMOOTH)	24"	24" (SMOOTH)	30"	30" (SMOOTH)	36"	36" (SMOOTH)	42"	48"	48" (SMOOTH)	REMOVE: CULVERT	FES	HW	JS	DI	WW	ABANDON: LENGTH (N)	CULVERT	JS	SAND Bkf	DESCRIPTION	STATION	DRAINAGE PLAN Sht No.	DRAINAGE SYSTEM No.	DRAINAGE UNIT No.
FT	FT	LF	LB	CY	CY	CY	CY	CY	SQYD	TON	CY	LB	LF	LF	EA	EA	EA	EA	CY	CY	CY	CY	SQYD	CY	LF	LF	LF	LF	LF	LF	LF	LF	LF	LF	LF	LF	LF	LF	LF	EA	EA	EA	EA	EA	LF	EA	EA	CY					
																						200	337																											RSP	685+86	D-6	10	l
																								SEE Sht Q-16																									CL-2 AB				m
	24.6																																	304.6														36" APC	685+74	D-6	11	a
13.0			263		2.3		7.2																																										G2 DI 24-9 GRATE				b
	9.9																																	303.0														36" APC				c
6.9			263		2.3		3.2																																										G2 DI 24-9 GRATE				d
	3.8																																	50.0														36" APC				e
6.2			263		2.3		2.9																																										G2 DI 24-9 GRATE				f
	3.1																																	27.0														36" APC				g
5.9			263		2.3		2.8																																										G2 DI 24-9 GRATE				h
	2.8																																	41.0														36" APC				i
5.4			263		2.3		2.6																																										G2 DI 24-9 GRATE				j
4.4			239				1.7		9	0.9																																							G2 DI 24-12X GRATE				k
	2.7																													26.9																			24" APC				l
5.2			239				1.9		9	0.9																																							G2 DI 24-12X GRATE				m
	2.7																													26.9																			24" APC				n
4.4			473				2.1		17	1.6																																							GDO Mod DI 24-12X GRATE				o
4.4			239				1.7		9	0.9																																							G2 DI 24-12X GRATE				p
	2.6																													26.9																			24" APC				q
4.6			239				1.8		9	0.9																																							G2 DI 24-12X GRATE				r
	2.6																													26.9																			24" APC				s
4.4			473				2.1		17	1.6																																							GDO Mod DI 24-12X				t
	3.9																															60.0																	30" APC				u
	4.5																													62.0																			24" APC				v
3.4		3.9	236		0.2		0.4																																										OMP Mod DI 36R GRATE				w
	5.6												88.9																																				18" CSP DD				x
4.3			239				1.3																																										G1 DI 24-12X GRATE				y
	2.2																													21.6																			24" APC				z
4.1		4.6	236		0.2		0.4																																										OMP Mod DI 36R GRATE				aa
3.1		3.6	236		0.2		0.4																																										OMP Mod DI 36R GRATE				ab
	6.8												106.7																																				18" CSP DD				ac
4.3			239				1.3																																										G1 DI 24-12X GRATE				ad
	2.2																													21.6																			24" APC				ae
4.1		4.6	236		0.2		0.4																																										OMP Mod DI 36R GRATE				af
	1.8																													65.0																			24" APC				ag
4.7		5.2	236		0.2		0.4																																										OMP Mod DI 36R GRATE				ah
	1.8																													49.0																			24" APC				ai
	3.3																													18.8																			24" APC	685+74	D-6	11	aj
-	-	21.9	4875	-	12.5	-	34.6	-	70	6.8	-	-	195.6	-	-	-	-	-	-	-	-	200	337	-	-	-	-	-	-	345.6	-	60.0	-	725.6	-	-	-	-	-	-	-	-	-	-	-	-	-	-	SHEET DQ-4 TOTAL				

DRAINAGE QUANTITIES
DQ-4

STATE OF CALIFORNIA - DEPARTMENT OF TRANSPORTATION
Caltrans®
06-DESIGN

FUNCTIONAL SUPERVISOR: JACK WALKER
CALCULATED-DESIGNED BY: TOM LIU
CHECKED BY: SUMANGALI HOODE
REVISED BY
DATE REVISED

LAST REVISION 11-07-11
DATE PLOTTED => 17-FEB-2012
TIME PLOTTED => 14:42

Dist	COUNTY	ROUTE	POST MILES TOTAL PROJECT	SHEET No.	TOTAL SHEETS
05	SLO	46	40.7/46.3	247	541

REGISTERED CIVIL ENGINEER 11-10-11 DATE

2-13-12
PLANS APPROVAL DATE

REGISTERED PROFESSIONAL ENGINEER TOM W. LIU No. 77212 Exp. 6-30-13 CIVIL STATE OF CALIFORNIA

THE STATE OF CALIFORNIA OR ITS OFFICERS OR AGENTS SHALL NOT BE RESPONSIBLE FOR THE ACCURACY OR COMPLETENESS OF SCANNED COPIES OF THIS PLAN SHEET.

DRAINAGE QUANTITIES (CONTINUED)

DESIGN HEIGHT (N)	Max COVER (N)	36" CSP INLET (0.168" THICK)	Misc IRON & STEEL	Str Bkf (SLURRY CEMENT)	Conc		MINOR Conc		PLACE HMA		BOX Culv		CSP DD		AFES				ROCK SLOPE PROTECTION					GABION	RCP		ALTERNATIVE PIPE CULVERT												REMOVE						ABANDON			SAND Bkf	DESCRIPTION	STATION	DRAINAGE PLAN Sht No.	DRAINAGE SYSTEM No.	DRAINAGE UNIT No.
					Conc APRON	(SLOPE PROTECTION)	(MINOR Str)	(Bkf)	Misc AREA	HMA	Str Conc	BAR Reinf STEEL	18" (0.079" THICK)	24" (0.138" THICK)	18"	24"	30"	48"	1 TON, METHOD A	1/4TON, METHOD B	LIGHT, METHOD B	BACKING No. 1, METHOD B	FABRIC		36"	48"	12" (SMOOTH)	18"	18" (SMOOTH)	24"	24" (SMOOTH)	30"	30" (SMOOTH)	36"	36" (SMOOTH)	42"	48"	48" (SMOOTH)	CULVERT	FES	HW	JS	DI	WW	LENGTH (N)	CULVERT	JS					
FT	FT	LF	LB	CY	CY	CY	CY	CY	SQYD	TON	CY	LB	LF	LF	EA	EA	EA	EA	CY	CY	CY	CY	SQYD	CY	LF	LF	LF	LF	LF	LF	LF	LF	LF	LF	LF	LF	LF	LF	LF	EA	EA	EA	EA	EA	LF	EA	EA	CY					
																						6	17																										RSP	685+77	D-6	12	a
																1																																	24" AFES				b
	5.8													98.9																																			24" CSP DD				c
4.0		4.5	236				0.4																																										GMP DI 36R GRATE				d
	2.0																													105.6																			24" APC				e
4.3		4.8	236				0.4																																										GMP DI 36R GRATE				f
	1.9																													58.0																			24" APC				g
																																								1									REMOVE Dbl HW	699+54	D-7	13	a
	3.5																																						144.6										REMOVE 2-24" RCP				b
																																								1									REMOVE Dbl EW				c
																																								1									REMOVE Dbl HW				d
	1.6																																						60.4										REMOVE 2-24" RCP				e
																																								1									REMOVE Dbl EW				f
																					22		42																											RSP				g
5.7							5.1																																											Dbl HW				h
						10.2																																												PCC WEIR				i
																					46		86																											RSP				j
	5.1																																				291.2													2-48" APC (SMOOTH)				k
5.8			478				7.1		9	0.9																																								G2 Mod DI 24-12X				l
	3.3																																				120.8													2-48" APC (SMOOTH)				m
				103.7			11.7																																											COVER SLAB				n
	4.1																																				182.4													2-48" APC (SMOOTH)				o
5.7							5.4																																											Dbl EW				p
						396																																												PCC CHANNEL				q
6.0											2.2	95																																						TYPE "B" WW				r
6.0											6.6	285																																						TYPE "B" WW				s
	1.8										33.2	8216																																						10'x4' RCB				t
6.0											2.2	95																																						TYPE "B" WW				u
6.0											2.2	95																																						TYPE "B" WW				v
																					38		62																											RSP				w
6.3			526		4.5		7.2																																											G2 Mod DI 24-9 GRATE				x
	3.9																													137.1																			24" APC				y
4.1			263		2.3		1.6																																											G2 DI 24-9 GRATE				z
	2.1																													36.6																			24" APC				aa
4.0			263		2.3		1.6																																											G2 DI 24-9 GRATE				ab
5.0		5.5	236		0.1		0.4																																											OMP Mod DI 36R GRATE				ac
	3.9																													40.3																			24" APC				ad
5.3		5.8	236		0.2		0.4																																											OMP Mod DI 36R GRATE				ae
	3.4																													18.1																			24" APC				af
4.2			239				1.7		9	0.9																																								G2 DI 24-12X GRATE				ag
	2.4																													9.1																			24" APC				ah
	3.2																													99.6																			24" APC				ai
4.2			473				2.1		17	1.6																																										GDO Mod DI 24-12X GRATE				aj
—	-	20.6	3186	103.7	9.4	406.2	45.1	-	35	3.4	46.4	8786	-	98.9	-	1	-	-	-	-	106	6	207	-	-	-	-	-	-	504.4	-	-	-	-	-	-	-	594.4	205.0	-	4	-	-	-	-	-	-	-	SHEET DQ-5 TOTAL				

STATE OF CALIFORNIA - DEPARTMENT OF TRANSPORTATION
06-DESIGN
Caltrans

REVISED BY | DATE REVISED
TOM LIU | SUMANGALI HOODE
CALCULATED-DESIGNED BY | CHECKED BY
FUNCTIONAL SUPERVISOR
JACK WALKER

DRAINAGE QUANTITIES
DQ-5

LAST REVISION 11-07-11
DATE PLOTTED => 17-FEB-2012
TIME PLOTTED => 14:42

Dist	COUNTY	ROUTE	POST MILES TOTAL PROJECT	SHEET No.	TOTAL SHEETS
05	SLO	46	40.7/46.3	248	541

Tom W. Liu 11-10-11
REGISTERED CIVIL ENGINEER DATE

2-13-12
PLANS APPROVAL DATE

REGISTERED PROFESSIONAL ENGINEER TOM W. LIU No. 77212 Exp. 6-30-13 CIVIL STATE OF CALIFORNIA

THE STATE OF CALIFORNIA OR ITS OFFICERS OR AGENTS SHALL NOT BE RESPONSIBLE FOR THE ACCURACY OR COMPLETENESS OF SCANNED COPIES OF THIS PLAN SHEET.

DRAINAGE QUANTITIES (CONTINUED)

DESIGN HEIGHT (N)	Max COVER (N)	36" CSP INLET (0.168" THICK)	Misc IRON & STEEL	Str Bkf (SLURRY CEMENT)	Conc APRON	Conc (SLOPE PROTECTION)	MINOR Conc (MINOR Str)	MINOR Conc (Bkf)	PLACE HMA Misc AREA	PLACE HMA HMA	BOX Culv Str Conc	BOX Culv BAR Reinf STEEL	CSP DD 18" (0.079" THICK)	CSP DD 24" (0.138" THICK)	AFES 18"	AFES 24"	AFES 30"	AFES 48"	ROCK SLOPE PROTECTION 1 TON, METHOD A	ROCK SLOPE PROTECTION 1/4TON, METHOD B	ROCK SLOPE PROTECTION LIGHT, METHOD B	ROCK SLOPE PROTECTION BACKING No. 1, METHOD B	ROCK SLOPE PROTECTION FABRIC	GABION	RCP 36"	RCP 48"	ALTERNATIVE PIPE CULVERT 12" (SMOOTH)	ALTERNATIVE PIPE CULVERT 18"	ALTERNATIVE PIPE CULVERT 18" (SMOOTH)	ALTERNATIVE PIPE CULVERT 24"	ALTERNATIVE PIPE CULVERT 24" (SMOOTH)	ALTERNATIVE PIPE CULVERT 30"	ALTERNATIVE PIPE CULVERT 30" (SMOOTH)	ALTERNATIVE PIPE CULVERT 36"	ALTERNATIVE PIPE CULVERT 36" (SMOOTH)	ALTERNATIVE PIPE CULVERT 42"	ALTERNATIVE PIPE CULVERT 48"	ALTERNATIVE PIPE CULVERT 48" (SMOOTH)	REMOVE CULVERT	REMOVE FES	REMOVE HW	REMOVE JS	REMOVE DI	REMOVE WW	ABANDON LENGTH (N)	ABANDON CULVERT	ABANDON JS	SAND Bkf	DESCRIPTION	STATION	DRAINAGE PLAN Sht No.	DRAINAGE SYSTEM No.	DRAINAGE UNIT No.
FT	FT	LF	LB	CY	CY	CY	CY	CY	SQYD	TON	CY	LB	LF	LF	EA	EA	EA	EA	CY	CY	CY	CY	SQYD	CY	LF	LF	LF	LF	LF	LF	LF	LF	LF	LF	LF	LF	LF	LF	EA	EA	EA	EA	EA	EA	LF	EA	EA	CY					
																																								1										REMOVE HW	709+00	D-8	14	a
	10.9																																						29.2											REMOVE 24" RCP				b
	27.2																																												170.6	1		19.9	Abn 24" RCP				c
																																									1								REMOVE EW				d
					4.3																																												PCC APRON				e
4.7							2.0																																										HW				f
	23.4																																	167.8																36" APC (SMOOTH)				g
							2.1																																										JS				h
							1.7																																										JS				i
																																									1								REMOVE JS				j
	11.3																													10.8																			24" APC				k
	24.5																																						10.8										REMOVE 24" APC				l
																					32		56																										RSP				m
4.7							2.0																																										EW				n
	23.4																																	188.1																36" APC (SMOOTH)				o
																																									1								REMOVE JS				p
4.7							2.0																																										HW	709+50	D-8	15	a
	15.4																								194.7																								36" RCP				b
4.7							2.0																																										EW				c
4.7							2.0																																										HW	716+25	D-8	16	a
	14.3																								232.2																								36" RCP				b
4.7							2.0																																										EW				c
																																									1								REMOVE HW	717+00	D-8	17	a
	7.2																																						12.0										REMOVE 30" RCP				b
	15.7																																												105.8	1		24.1	Abn 30" RCP				c
	15.7																																												105.8	1		24.1	Abn 30" RCP				c
																																									1								REMOVE EW				d
																					16		31																										RSP				e
5.7							2.8																																										HW				f
	10.8																																		103.4																48" APC				g
	16.1																																		189.2																48" APC				h
							2.2																																										JS				i
							1.9																																										JS				j
																																									1								REMOVE JS				k
	13.6																														11.1																		24" APC				l
	13.6																																						11.1										REMOVE 24" APC				m
																					82		104																										RSP				n
5.7							2.8																																										EW				o
																																									1								REMOVE JS				p
																																								1								REMOVE FES	729+20	D-9	18	a
	3.7																																						98.1										REMOVE 30" RCP				b
																																								1								REMOVE FES				c
4.7							2.7																																										Dbl HW				d
-	-	-	-	-	4.3	-	28.2	-	-	-	-	-	-	-	-	-	-	-	-	-	130	-	191	-	426.9	-	-	-	-	10.8	11.1	-	-	-	355.9	-	292.6	-	161.2	2	4	4	-	-	382.2	3	-	68.1	SHEET DQ-6 TOTAL				

DRAINAGE QUANTITIES
DQ-6

STATE OF CALIFORNIA - DEPARTMENT OF TRANSPORTATION
Caltrans®
06-DESIGN

FUNCTIONAL SUPERVISOR: JACK WALKER
CALCULATED-DESIGNED BY: TOM LIU
CHECKED BY: SUMANGALI HOODE
REVISED BY
DATE REVISED

LAST REVISION 11-07-11
DATE PLOTTED => 17-FEB-2012
TIME PLOTTED => 14:42

Dist	COUNTY	ROUTE	POST MILES TOTAL PROJECT	SHEET No.	TOTAL SHEETS
05	SLO	46	40.7/46.3	249	541

Tom W. Liu 11-10-11
REGISTERED CIVIL ENGINEER DATE

2-13-12
PLANS APPROVAL DATE

REGISTERED PROFESSIONAL ENGINEER TOM W. LIU No. 77212 Exp. 6-30-13 CIVIL STATE OF CALIFORNIA

THE STATE OF CALIFORNIA OR ITS OFFICERS OR AGENTS SHALL NOT BE RESPONSIBLE FOR THE ACCURACY OR COMPLETENESS OF SCANNED COPIES OF THIS PLAN SHEET.

DRAINAGE QUANTITIES (CONTINUED)

DESIGN HEIGHT (N)	Max COVER (N)	36" CSP INLET (0.168" THICK)	Misc IRON & STEEL	Str Bkf (SLURRY CEMENT)	Conc: Conc APRON	Conc: (SLOPE PROTECTION)	MINOR Conc: (MINOR Str)	MINOR Conc: (Bkf)	PLACE HMA: Misc AREA	PLACE HMA: HMA	BOX Culv: Str Conc	BOX Culv: BAR Reinf STEEL	CSP DD: 18" (0.079" THICK)	CSP DD: 24" (0.138" THICK)	AFES: 18"	AFES: 24"	AFES: 30"	AFES: 48"	ROCK SLOPE PROTECTION: 1 TON, METHOD A	ROCK SLOPE PROTECTION: 1/4TON, METHOD B	ROCK SLOPE PROTECTION: LIGHT, METHOD B	ROCK SLOPE PROTECTION: BACKING No. 1, METHOD B	ROCK SLOPE PROTECTION: FABRIC	GABION	RCP: 36"	RCP: 48"	ALTERNATIVE PIPE CULVERT: 12" (SMOOTH)	18"	18" (SMOOTH)	24"	24" (SMOOTH)	30"	30" (SMOOTH)	36"	36" (SMOOTH)	42"	48"	48" (SMOOTH)	REMOVE: CULVERT	FES	HW	JS	DI	WW	ABANDON: LENGTH (N)	CULVERT	JS	SAND Bkf	DESCRIPTION	STATION	DRAINAGE PLAN Sht No.	DRAINAGE SYSTEM No.	DRAINAGE UNIT No.
FT	FT	LF	LB	CY	CY	CY	CY	CY	SQYD	TON	CY	LB	LF	LF	EA	EA	EA	EA	CY	CY	CY	CY	SQYD	CY	LF	LF	LF	LF	LF	LF	LF	LF	LF	LF	LF	LF	LF	LF	LF	EA	EA	EA	EA	EA	LF	EA	EA	CY					
					5.3																																												PCC APRON	729+20	D-9	18	e
	3.6																								55.4																								2-36" RCP				f
	3.3																								304.8																								2-36" RCP				g
3.8			478				4.8		9	0.9																																							G2 Mod DI 24-12X GRATE				h
																					25		47																										RSP				i
4.7							2.7																																										Dbl EW				j
				54.8			9.2																																										COVER SLAB				k
4.0		4.5	236		0.2		0.4																																										OMP Mod DI 36R GRATE	743+26	D-10	19	a
	5.3																													149.4																			24" APC				b
7.3			239				2.5		9	0.9																																							G2 DI 24-12X GRATE				c
	5.3													80.8																																			24" CSP DD				d
	3.6																													60.0																			24" APC				e
4.6			263		2.3		1.8																																										G2 DI 24-9 GRATE				f
																														37.1																			24" APC				g
4.1			263		2.3		1.6																																										G2 DI 24-9 GRATE				h
																						26	74																											RSP	749+32	D-11	20	a
						4.2																																											PCC Xing				b
SEE Sht Q-16																																																	REMOVE 12'x12' RCB	743+50	D-10	21	a
	23.3					0.9					767.9	206,632																																					12'x14' RCB				b
																			5																														RSP				c
																						52																											RSP				d
																				91			107																										RSP				e
																			5																														RSP				f
																						85																											RSP				g
																				136			170																											RSP				h
SEE Sht Q-16																																																	CL-2 AB				i
	2.0																																									11.9							REMOVE 24" RCP	775+25	D-12	22	a
																																											1						REMOVE EW				b
4.0			263				1.2																																										G1 DI 24-9 GRATE				c
	2.8													79.8																																			24" CSP DD				d
4.3			263				1.3																																										G1 DI 24-9 GRATE				e
	6.8													43.3																																			24" CSP DD				f
5.1			473				2.3		17	1.6																																							GDO Mod DI 24-12X GRATE				g
	3.0																																209.5																30" APC				h
5.4			473				2.4		17	1.6																																							GDO Mod DI 24-12X GRATE				i
	2.7																																		307.1														36" APC				j
5.4			473				2.4		17	1.6																																							GDO Mod DI 24-12X GRATE				k
	2.9																																		312.2														36" APC				l
-	-	4.5	3424	54.8	10.1	5.1	32.6	-	69	6.6	767.9	206,632	-	203.9	-	-	-	-	10	227	25	163	398	-	360.2	-	-	-	-	246.5	-	209.5	-	619.3	-	-	-	-	11.9	-	1	-	-	-	-	-	-	-	SHEET DQ-7 TOTAL				

DRAINAGE QUANTITIES
DQ-7

STATE OF CALIFORNIA - DEPARTMENT OF TRANSPORTATION
Caltrans
06-DESIGN

FUNCTIONAL SUPERVISOR: JACK WALKER
CALCULATED-DESIGNED BY: TOM LIU
CHECKED BY: SUMANGALI HOODE
REVISED BY
DATE REVISED

LAST REVISION 11-07-11
DATE PLOTTED => 17-FEB-2012
TIME PLOTTED => 14:42

Dist	COUNTY	ROUTE	POST MILES TOTAL PROJECT	SHEET No.	TOTAL SHEETS
05	SLO	46	40.7/46.3	250	541

Tom W. Liu 11-10-11
REGISTERED CIVIL ENGINEER DATE

2-13-12
PLANS APPROVAL DATE

REGISTERED PROFESSIONAL ENGINEER TOM W. LIU No. 77212 Exp. 6-30-13 CIVIL STATE OF CALIFORNIA

THE STATE OF CALIFORNIA OR ITS OFFICERS OR AGENTS SHALL NOT BE RESPONSIBLE FOR THE ACCURACY OR COMPLETENESS OF SCANNED COPIES OF THIS PLAN SHEET.

DRAINAGE QUANTITIES (CONTINUED)

DESIGN HEIGHT (N)	Max COVER (N)	36" CSP INLET (0.168" THICK)	Misc IRON & STEEL	Str Bkf (SLURRY CEMENT)	Conc		MINOR Conc		PLACE HMA		BOX Culv		CSP DD		AFES				ROCK SLOPE PROTECTION					GABION	RCP		ALTERNATIVE PIPE CULVERT												REMOVE						ABANDON			SAND Bkf	DESCRIPTION	STATION	DRAINAGE PLAN Sht No.	DRAINAGE SYSTEM No.	DRAINAGE UNIT No.
					Conc APRON	(SLOPE PROTECTION)	(MINOR Str)	(Bkf)	Misc AREA	HMA	Str Conc	BAR Reinf STEEL	18" (0.079" THICK)	24" (0.138" THICK)	18"	24"	30"	48"	1 TON, METHOD A	1/4TON, METHOD B	LIGHT, METHOD B	BACKING No. 1, METHOD B	FABRIC		36"	48"	12" (SMOOTH)	18"	18" (SMOOTH)	24"	24" (SMOOTH)	30"	30" (SMOOTH)	36"	36" (SMOOTH)	42"	48"	48" (SMOOTH)	CULVERT	FES	HW	JS	DI	WW	LENGTH (N)	CULVERT	JS					
FT	FT	LF	LB	CY	CY	CY	CY	CY	SQYD	TON	CY	LB	LF	LF	EA	EA	EA	EA	CY	CY	CY	CY	SQYD	CY	LF	LF	LF	LF	LF	LF	LF	LF	LF	LF	LF	LF	LF	LF	LF	EA	EA	EA	EA	EA	LF	EA	EA	CY					
5.9			473				2.6		17	1.6																																							GDO Mod DI 24-12X GRATE	775+25	D-12	22	m
	4.0																													79.2																			24" APC				n
																1																																	24" AFES				o
	2.5																																		352.0														42" APC				p
5.8			239				3.3		9	0.9																																							G2 DI 24-12X GRATE				q
	3.9																													40.1																			24" APC				r
4.8			263				1.4																																										G1 DI 24-9 GRATE				s
	4.7													55.6																																			24" CSP DD				t
4.6		5.1	236		0.2		0.4																																										OMP Mod IINLET 36R GRATE				u
	2.5																																		266.8														42" APC				v
5.9			239				3.3		9	0.9																																							G2 DI 24-12X GRATE				w
	2.5																																		251.8														42" APC				x
5.9			239				3.3		9	0.9																																							G2 DI 24-12X GRATE				y
	3.1																																		16.7														42" APC				z
6.4			239				3.5		9	0.9																																							G2 DI 24-12X GRATE				aa
	2.7																																			39.7													48" APC				ab
																		1																															48" AFES				ac
																						35	82																										RSP				ad
3.1		3.6	236				0.4																																										OMP Mod INLET 36R GRATE				ae
	4.2												134.4																																				18" CSP DD				af
3.7			239				1.2																																										G1 DI 24-12X				ag
	4.1																											50.7																					18" APC				ah
4.2			239				1.7		9	0.9																																							G2 DI 24-12X GRATE				ai
	3.1																													227.6																			24" APC				aj
	3.3													21.4																																			24" CSP DD				ak
3.7		4.2	236		0.2		0.4																																										OMP Mod INLET 36R GRATE				al
	2.5																																211.9																36" APC				am
	3.1													23.1																																			24" CSP DD				an
3.7		4.2	236		0.2		0.4																																										OMP Mod INLET 36R GRATE				ao
	3.2													23.1																																			24" CSP DD				ap
3.5		4.0	236		0.1		0.4																																										OMP Mod INLET 36R GRATE				aq
5.4			239				2.8		9	0.9																																							G2 DI 24-12X GRATE				ar
																								33																									GABION				as
						4.2																																											PCC Xing				at
																								98																									GABION				au
						4.2																																											PCC Xing				av
																						21	50																										RSP				aw
																1																																			30" AFES	774+00	D-11	23	a
																						22	45																										RSP				b
	3.0																																						34.0										30" APC				c
																1																																	30" AFES				d
																						106	238																										RSP				e
8.0											6.6	360																																					TYPE "B" WW	777+40	D-13	24	a
-	-	21.1	3589	-	0.7	8.4	25.1	-	71	7.0	6.6	360	134.4	123.2	-	1	2	1	-	-	-	184	415	131	-	-	-	50.7	-	346.9	-	34.0	-	211.9	-	887.3	39.7	-	-	-	-	-	-	-	-	-	-	-	SHEET DQ-8 TOTAL				

DRAINAGE QUANTITIES
DQ-8

STATE OF CALIFORNIA - DEPARTMENT OF TRANSPORTATION
Caltrans® 06-DESIGN

FUNCTIONAL SUPERVISOR: JACK WALKER
CALCULATED-DESIGNED BY: TOM LIU
CHECKED BY: SUMANGALI HOODE
REVISED BY / DATE REVISED

LAST REVISION 11-07-11
DATE PLOTTED => 17-FEB-2012
TIME PLOTTED => 14:42

Dist	COUNTY	ROUTE	POST MILES TOTAL PROJECT	SHEET No.	TOTAL SHEETS
05	SLO	46	40.7/46.3	251	541

Tom W. Liu 11-10-11
REGISTERED CIVIL ENGINEER DATE

2-13-12
PLANS APPROVAL DATE

REGISTERED PROFESSIONAL ENGINEER TOM W. LIU No. 77212 Exp. 6-30-13 CIVIL STATE OF CALIFORNIA

THE STATE OF CALIFORNIA OR ITS OFFICERS OR AGENTS SHALL NOT BE RESPONSIBLE FOR THE ACCURACY OR COMPLETENESS OF SCANNED COPIES OF THIS PLAN SHEET.

DRAINAGE QUANTITIES (CONTINUED)

DESIGN HEIGHT (N)	Max COVER (N)	36" CSP INLET (0.168" THICK)	Misc IRON & STEEL	Str Bkf (SLURRY CEMENT)	Conc		MINOR Conc		PLACE HMA		BOX Culv		CSP DD		AFES				ROCK SLOPE PROTECTION					GABION	RCP		ALTERNATIVE PIPE CULVERT												REMOVE						ABANDON			SAND Bkf	DESCRIPTION	STATION	DRAINAGE PLAN Sht No.	DRAINAGE SYSTEM No.	DRAINAGE UNIT No.
					Conc APRON	(SLOPE PROTECTION)	(MINOR Str)	(Bkf)	Misc AREA	HMA	Str Conc	BAR Reinf STEEL	18" (0.079" THICK)	24" (0.138" THICK)	18"	24"	30"	48"	1 TON, METHOD A	1/4TON, METHOD B	LIGHT, METHOD B	BACKING No. 1, METHOD B	FABRIC		36"	48"	12" (SMOOTH)	18"	18" (SMOOTH)	24"	24" (SMOOTH)	30"	30" (SMOOTH)	36"	36" (SMOOTH)	42"	48"	48" (SMOOTH)	CULVERT	FES	HW	JS	DI	WW	LENGTH (N)	CULVERT	JS						
FT	FT	LF	LB	CY	CY	CY	CY	CY	SQYD	TON	CY	LB	LF	LF	EA	EA	EA	EA	CY	CY	CY	CY	SQYD	CY	LF	LF	LF	LF	LF	LF	LF	LF	LF	LF	LF	LF	LF	LF	LF	EA	EA	EA	EA	EA	LF	EA	EA	CY					
8.0											6.6	360																																					TYPE "B" WW	777+40	D-13	24	b
8.0											6.6	360																																					TYPE "B" WW				c
8.0											6.6	360																																					TYPE "B" WW				d
																					34		66																											RSP				e
			235																																															MH				f
			235																																															MH				g
			235																																															MH				h
	2.9										288.4	74,787																																						TRIPLE 8'x4' RCB				i
5.4			263		2.3		2.0																																											G2 DI 24-9 GRATE				j
	3.3																												6.0																					24" APC				k
4.7							2.0																																												HW	782+28	D-13	25	a
	2.1																								82.8																									36" RCP				b
4.0			263		2.3		2.5																																											G2 DI 24-9 GRATE				c
	2.7																								85.8																									36" RCP				d
4.7							2.0																																												EW				e
																																									1										REMOVE FES				f
	2.6																																								79.5										REMOVE 24" RCP				g
																																										1								REMOVE EW				h
				33.4			5.1																																											COVER SLAB				i
2.2			263		2.3		1.0																																											G1 DI 24-9 GRATE	782+90	D-13	26	a
	1.1																											37.0																						18" APC (SMOOTH)				b
2.6			263		2.3		1.4																																											G2 DI 24-9 GRATE				c
	2.1																													78.5																			24" APC (SMOOTH)				d
				22.7			4.4																																											COVER SLAB				e
															1																																			24" AFES				f
																																										1								REMOVE HW	797+50	D-14	27	a
	3.2																																								303.3										REMOVE 3-24" RCP				b
																																										1								REMOVE EW				c
4.2											3.3	138																																						TYPE "D" WW				d
																					18		36																											RSP				e
4.2											3.3	138																																						TYPE "D" WW				f
					5.9																																													PCC APRON				g
	1.1										114.7	16,776																																						DOUBLE 4'x2.67' RCB				h
	1.9																										25.8																								18" APC				i
	1.8																										13.6																								18" APC				j
	1.5																										37.1																								18" APC				k
			235																																															MH				l
			235																																															MH				m
2.4			263		2.3		1.0																																											G1 DI 24-9 GRATE				n
2.9			263		2.3		1.4																																											G2 DI 24-9 GRATE				o
2.9			263		2.3		1.4																																											G2 DI 24-9 GRATE				p
																																										1								REMOVE FES	819+30	D-16	28	a
	5.3																																								70.1										REMOVE 60" CMP				b
-	-	-	3016	56.1	22.0	-	24.2	-	-	-	429.5	92,919	-	-	-	1	-	-	-	-	52	-	102	-	168.6	-	-	76.5	37.0	6.0	78.5	-	-	-	-	-	-	-	452.9	2	3	-	-	-	-	-	-	-	SHEET DQ-9 TOTAL				

DRAINAGE QUANTITIES
DQ-9

STATE OF CALIFORNIA - DEPARTMENT OF TRANSPORTATION
Caltrans®
06-DESIGN

FUNCTIONAL SUPERVISOR: JACK WALKER
CALCULATED-DESIGNED BY: TOM LIU
CHECKED BY: SUMANGALI HOODE
REVISED BY
DATE REVISED

LAST REVISION 11-07-11
DATE PLOTTED => 17-FEB-2012
TIME PLOTTED => 14:42

Dist	COUNTY	ROUTE	POST MILES TOTAL PROJECT	SHEET No.	TOTAL SHEETS
05	SLO	46	40.7/46.3	252	541

Tom W. Liu 11-10-11
REGISTERED CIVIL ENGINEER DATE

2-13-12
PLANS APPROVAL DATE

REGISTERED PROFESSIONAL ENGINEER TOM W. LIU No. 77212 Exp. 6-30-13 CIVIL STATE OF CALIFORNIA

THE STATE OF CALIFORNIA OR ITS OFFICERS OR AGENTS SHALL NOT BE RESPONSIBLE FOR THE ACCURACY OR COMPLETENESS OF SCANNED COPIES OF THIS PLAN SHEET.

DRAINAGE QUANTITIES (CONTINUED)

DESIGN HEIGHT (N)	Max COVER (N)	36" CSP INLET (0.168" THICK)	Misc IRON & STEEL	Str Bkf (SLURRY CEMENT)	Conc APRON	Conc (SLOPE PROTECTION)	MINOR Conc (MINOR Str)	MINOR Conc (Bkf)	PLACE HMA Misc AREA	PLACE HMA HMA	BOX Culv Str Conc	BOX Culv BAR Reinf STEEL	CSP DD 18" (0.079" THICK)	CSP DD 24" (0.138" THICK)	AFES 18"	AFES 24"	AFES 30"	AFES 48"	ROCK SLOPE PROTECTION 1 TON, METHOD A	ROCK SLOPE PROTECTION 1/4 TON, METHOD B	ROCK SLOPE PROTECTION LIGHT, METHOD B	ROCK SLOPE PROTECTION BACKING No. 1, METHOD B	ROCK SLOPE PROTECTION FABRIC	GABION	RCP 36"	RCP 48"	ALTERNATIVE PIPE CULVERT 12" (SMOOTH)	ALTERNATIVE PIPE CULVERT 18"	ALTERNATIVE PIPE CULVERT 18" (SMOOTH)	ALTERNATIVE PIPE CULVERT 24"	ALTERNATIVE PIPE CULVERT 24" (SMOOTH)	ALTERNATIVE PIPE CULVERT 30"	ALTERNATIVE PIPE CULVERT 30" (SMOOTH)	ALTERNATIVE PIPE CULVERT 36"	ALTERNATIVE PIPE CULVERT 36" (SMOOTH)	ALTERNATIVE PIPE CULVERT 42"	ALTERNATIVE PIPE CULVERT 48"	ALTERNATIVE PIPE CULVERT 48" (SMOOTH)	REMOVE CULVERT	REMOVE FES	REMOVE HW	REMOVE JS	REMOVE DI	REMOVE WW	ABANDON LENGTH (N)	ABANDON CULVERT	ABANDON JS	SAND Bkf	DESCRIPTION	STATION	DRAINAGE PLAN Sht No.	DRAINAGE SYSTEM No.	DRAINAGE UNIT No.
FT	FT	LF	LB	CY	CY	CY	CY	CY	SQYD	TON	CY	LB	LF	LF	EA	EA	EA	EA	CY	CY	CY	CY	SQYD	CY	LF	LF	LF	LF	LF	LF	LF	LF	LF	LF	LF	LF	LF	LF	LF	EA	EA	EA	EA	EA	EA	LF	EA	EA	CY					
	2.3										165.6	39,484																																						DOUBLE 6'x4.5' RCB	819+30	D-16	28	c
8.0											7.2	390																																						TYPE "B" WW				d
8.0											7.2	390																																						TYPE "B" WW				e
																					45		80																												RSP				f
8.0											7.2	390																																						TYPE "B" WW				g
8.0											7.2	390																																						TYPE "B" WW				h
																					45		81																												RSP				i
	2.3																											5.1																								18" APC				j
3.7			263		2.3		1.5																																		1										G2 DI 24-9 GRATE				k
																																																			REMOVE FES				l
					5.9																																														PCC APRON	820+60	D-16	29	a
5.7							3.7																																												DOUBLE HW				b
	4.6																									365.2																									2-48" RCP				c
5.7							3.7																																												DOUBLE EW				d
																					35		62																												RSP				e
																						20	47																												RSP	833+39	D-17	30	a
																	4																																		4-30" AFES				b
				172.5			33.3																																												COVER SLAB				c
	2.4																																	888.0																	4-30" APC				d
				103.7			20.3																																												COVER SLAB				e
																	4																																		4-30" AFES				f
																						45	98																												RSP				g
2.4			473				1.7		17	1.6																																									GDO Mod DI 24-12X GRATE	853+25	D-18	31	a
	2.9							7.7																					112.2																						18" APC (SMOOTH)				b
4.3			239				1.7		9	0.9																																									G2 DI 24-12X GRATE				c
	4.2																															94.2																			24" APC (SMOOTH)				d
4.7			263		2.3		1.8																																												G2 DI 24-9 GRATE				e
	2.7																															37.0																			24" APC (SMOOTH)				f
4.2			263		2.3		1.7																																												G2 DI 24-9 GRATE				g
	4.6			62.9				8.8																								119.4																			24" APC (SMOOTH)				h
																1																																			24" AFES				i
																						11	27																												RSP				j
																						6	16																												RSP	855+08	D-18	32	a
																1																																			24" AFES				b
	2.9																													28.8																					24" APC				c
4.0		4.5	215		0.2		0.4																																												OMP MOD INLET 36R GRATE	860+27	D-19	33	a
	3.7												65.4																																						18" CSP DD				b
																						3	12																												RSP				c
															1																																					18" AFES	843+64	D-19	34	a
	13.9												96.5																																						18" CSP DD				b
3.1			239				1.0		9	0.9																																									G1 DI 24-12X GRATE				c
		4.5	1955	339.1	13.0	-	70.8	16.5	35	3.4	194.4	41,044	161.9	-	1	2	8	-	-	-	125	85	423	-	-	365.2	-	5.1	112.2	28.8	250.6	-	888.0	-	-	-	-	-	-	1	-	-	-	-	-	-	-	-	SHEET DQ-10 TOTAL				

STATE OF CALIFORNIA - DEPARTMENT OF TRANSPORTATION
06-DESIGN
Caltrans

FUNCTIONAL SUPERVISOR: JACK WALKER
CALCULATED-DESIGNED BY: TOM LIU
CHECKED BY: SUMANGALI HOODE
REVISED BY
DATE REVISED

DRAINAGE QUANTITIES
DQ-10

LAST REVISION 11-07-11
DATE PLOTTED => 17-FEB-2012
TIME PLOTTED => 14:43

Dist	COUNTY	ROUTE	POST MILES TOTAL PROJECT	SHEET No.	TOTAL SHEETS
05	SLO	46	40.7/46.3	253	541

Tom W. Liu 11-10-11
REGISTERED CIVIL ENGINEER DATE

2-13-12
PLANS APPROVAL DATE

REGISTERED PROFESSIONAL ENGINEER TOM W. LIU No. 77212 Exp. 6-30-13 CIVIL STATE OF CALIFORNIA

THE STATE OF CALIFORNIA OR ITS OFFICERS OR AGENTS SHALL NOT BE RESPONSIBLE FOR THE ACCURACY OR COMPLETENESS OF SCANNED COPIES OF THIS PLAN SHEET.

DRAINAGE QUANTITIES (CONTINUED)

DESIGN HEIGHT (N)	Max COVER (N)	36" CSP INLET (0.168" THICK)	Misc IRON & STEEL	Str Bkf (SLURRY CEMENT)	Conc APRON	Conc (SLOPE PROTECTION)	MINOR Conc (MINOR Str)	MINOR Conc (Bkf)	PLACE HMA Misc AREA	PLACE HMA HMA	BOX Culv Str Conc	BOX Culv BAR Reinf STEEL	CSP DD 18" (0.079" THICK)	CSP DD 24" (0.138" THICK)	AFES 18"	AFES 24"	AFES 30"	AFES 48"	ROCK SLOPE PROTECTION 1 TON, METHOD A	ROCK SLOPE PROTECTION 1/4TON, METHOD B	ROCK SLOPE PROTECTION LIGHT, METHOD B	ROCK SLOPE PROTECTION BACKING No. 1, METHOD B	ROCK SLOPE PROTECTION FABRIC	GABION	RCP 36"	RCP 48"	ALTERNATIVE PIPE CULVERT 12" (SMOOTH)	ALTERNATIVE PIPE CULVERT 18"	ALTERNATIVE PIPE CULVERT 18" (SMOOTH)	ALTERNATIVE PIPE CULVERT 24"	ALTERNATIVE PIPE CULVERT 24" (SMOOTH)	ALTERNATIVE PIPE CULVERT 30"	ALTERNATIVE PIPE CULVERT 30" (SMOOTH)	ALTERNATIVE PIPE CULVERT 36"	ALTERNATIVE PIPE CULVERT 36" (SMOOTH)	ALTERNATIVE PIPE CULVERT 42"	ALTERNATIVE PIPE CULVERT 48"	ALTERNATIVE PIPE CULVERT 48" (SMOOTH)	REMOVE CULVERT	REMOVE FES	REMOVE HW	REMOVE JS	REMOVE DI	REMOVE WW	ABANDON LENGTH (N)	ABANDON CULVERT	ABANDON JS	SAND Bkf	DESCRIPTION	STATION	DRAINAGE PLAN Sht No.	DRAINAGE SYSTEM No.	DRAINAGE UNIT No.
FT	FT	LF	LB	CY	CY	CY	CY	CY	SQYD	TON	CY	LB	LF	LF	EA	EA	EA	EA	CY	CY	CY	CY	SQYD	CY	LF	LF	LF	LF	LF	LF	LF	LF	LF	LF	LF	LF	LF	LF	LF	EA	EA	EA	EA	EA	LF	EA	EA	CY					
	2.6																											20.7																						18" APC	843+64	D-19	34	d
5.4		5.9	215		0.2		0.4																																											OMP MOD INLET 36R GRATE				e
	5.7																													40.5																				24" APC				f
3.9			239				1.6		9	0.9																																							G2 DI 24-12X GRATE				g
	3.1																													86.3																				24" APC				h
																																										1								REMOVE HW				i
	1.5																																								3.0									REMOVE 24" RCP				j
	1.5																																								3.0									REMOVE 24" RCP				k
																																										1								REMOVE EW				l
	4.5																													33.4																				24" APC				m
																1																																		24" AFES				n
																						9	24																												RSP				o
	3.1																													89.9																				24" APC				p
4.0		4.5	236		0.2		0.4																																											OMP Mod INLET 36R GRATE				q
	3.3																											22.2																						18" APC				r
3.1			239				1.0		9	0.9																																								G1 DI 24-12X GRATE				s
	5.4												43.8																																					18" CSP DD				t
															1																																			18" AFES				u
																																											1								REMOVE HW	871+50	D-19	35	a
	4.4																																								5.8									REMOVE 30" RCP				b
							2.2																																											JS				c
	8.9																																45.5																	30" APC				d
							1.7																																											JS				e
																					15		29																											RSP				f
5.7							3.7																																											DOUBLE HW				g
	6.5																									426.6																								2-48" RCP				h
5.7							3.7																																											DOUBLE EW				i
																					34		57																											RSP				j
																																											1							REMOVE JS				k
	8.9																																													45.5	1		10.4	Abn 30" APC				l
																																															1	0.9	Abn JS				m
	15.3																																													76.3	1		17.4	Abn 30" RCP				n
																																										1								REMOVE EW				o
																																											1								REMOVE HW	878+28	D-20	36	a
																																									10.3									REMOVE 24" RCP				b
5.6			263		2.3		2.2																																											G2 DI 24-9 GRATE				c
																					13		24																											RSP				d
4.7							2.0																																											HW				e
	3.2																								99.3																									36" RCP				f
	4.5																																								66.3									REMOVE 24" RCP				g
																																										1								REMOVE EW				h
	3.2																								81.1																									36" RCP				i
																					17		31																											RSP				j
4.7							2.0																																											EW				k
-	-	10.4	1192	-	2.7	-	20.9	-	18	1.8	-	-	43.8	-	1	1	-	-	-	-	79	9	165	-	180.4	426.6	-	42.9	-	250.1	-	45.5	-	-	-	-	-	-	76.6	-	6	1	-	-	121.8	2	1	28.7	SHEET DQ-11 TOTAL				

DRAINAGE QUANTITIES
DQ-11

STATE OF CALIFORNIA - DEPARTMENT OF TRANSPORTATION
Caltrans®
06-DESIGN

FUNCTIONAL SUPERVISOR: JACK WALKER
CALCULATED-DESIGNED BY: TOM LIU
CHECKED BY: SUMANGALI HOODE
REVISED BY
DATE REVISED

LAST REVISION 11-07-11
DATE PLOTTED => 17-FEB-2012
TIME PLOTTED => 14:43

Dist	COUNTY	ROUTE	POST MILES TOTAL PROJECT	SHEET No.	TOTAL SHEETS
05	SLO	46	40.7/46.3	254	541

Tom W. Liu 11-10-11
REGISTERED CIVIL ENGINEER DATE

2-13-12
PLANS APPROVAL DATE

REGISTERED PROFESSIONAL ENGINEER TOM W. LIU No. 77212 Exp. 6-30-13 CIVIL STATE OF CALIFORNIA

THE STATE OF CALIFORNIA OR ITS OFFICERS OR AGENTS SHALL NOT BE RESPONSIBLE FOR THE ACCURACY OR COMPLETENESS OF SCANNED COPIES OF THIS PLAN SHEET.

DRAINAGE QUANTITIES (CONTINUED)

DESIGN HEIGHT (N)	Max COVER (N)	36" CSP INLET (0.168" THICK)	Misc IRON & STEEL	Str Bkf (SLURRY CEMENT)	Conc: Conc APRON	Conc: (SLOPE PROTECTION)	MINOR Conc: (MINOR Str)	MINOR Conc: (Bkf)	PLACE HMA: Misc AREA	PLACE HMA: HMA	BOX Culv: Str Conc	BOX Culv: BAR Reinf STEEL	CSP DD: 18" (0.079" THICK)	CSP DD: 24" (0.138" THICK)	AFES: 18"	AFES: 24"	AFES: 30"	AFES: 48"	ROCK SLOPE PROTECTION: 1 TON, METHOD A	ROCK SLOPE PROTECTION: 1/4TON, METHOD B	ROCK SLOPE PROTECTION: LIGHT, METHOD B	ROCK SLOPE PROTECTION: BACKING No. 1, METHOD B	ROCK SLOPE PROTECTION: FABRIC	GABION	RCP: 36"	RCP: 48"	ALTERNATIVE PIPE CULVERT: 12" (SMOOTH)	ALTERNATIVE PIPE CULVERT: 18"	ALTERNATIVE PIPE CULVERT: 18" (SMOOTH)	ALTERNATIVE PIPE CULVERT: 24"	ALTERNATIVE PIPE CULVERT: 24" (SMOOTH)	ALTERNATIVE PIPE CULVERT: 30"	ALTERNATIVE PIPE CULVERT: 30" (SMOOTH)	ALTERNATIVE PIPE CULVERT: 36"	ALTERNATIVE PIPE CULVERT: 36" (SMOOTH)	ALTERNATIVE PIPE CULVERT: 42"	ALTERNATIVE PIPE CULVERT: 48"	ALTERNATIVE PIPE CULVERT: 48" (SMOOTH)	REMOVE: CULVERT	REMOVE: FES	REMOVE: HW	REMOVE: JS	REMOVE: DI	REMOVE: WW	ABANDON: LENGTH (N)	ABANDON: CULVERT	ABANDON: JS	SAND Bkf	DESCRIPTION	STATION	DRAINAGE PLAN Sht No.	DRAINAGE SYSTEM No.	DRAINAGE UNIT No.
FT	FT	LF	LB	CY	CY	CY	CY	CY	SQYD	TON	CY	LB	LF	LF	EA	EA	EA	EA	CY	CY	CY	CY	SQYD	CY	LF	LF	LF	LF	LF	LF	LF	LF	LF	LF	LF	LF	LF	LF	LF	EA	EA	EA	EA	EA	LF	EA	EA	CY					
4.8			263		2.3		1.8																																											G2 DI 24-9 GRATE	878+28	D-20	36	l
	4.2																											124.6																						18" APC				m
	4.2																											108.6																						18" APC				n
4.7			263		2.3		1.8																																										G2 DI 24-9 GRATE				o
3.2			263				1.0																																										G1 DI 24-9 GRATE	881+00	D-20	37	a
	2.8																													65.3																				24" APC				b
																1																																		24" AFES				c
																						5	17																											RSP				d
3.4			263				1.1																																											G1 DI 24-9 GRATE	881+90	D-20	38	a
	2.8																													61.8																				24" APC				b
																1																																		24" AFES				c
																						5	17																											RSP				d
2.4			239				1.4																																											G2 DI 24-12X GRATE	883+20	D-20	39	a
				13.5			2.9																																											COVER SLAB				b
	2.8																											94.7																						18" APC				c
															1																																		18" AFES				d
																						3	11																											RSP				e
	0.9																											7.0																						18" APC				f
2.3			239				1.4																																											G2 DI 24-12X GRATE				g
1.6			263				1.0																																											G1 DI 24-9 GRATE	624+00	D-2	T1	a
	1.0																										47.1																						12" APC (SMOOTH)				b
1.9			263				1.0																																											G1 DI 24-9 GRATE				c
	1.9							17.0																					111.0																				18" APC (SMOOTH)				d
																																											1							REMOVE DI				e
																																									47.1								REMOVE 12" APC				f
																																											1							REMOVE DI				g
																																									111.0								REMOVE 18" APC				h
															1																																		18" AFES	638+80	D-3	T2	a
	1.6																											75.9																						18" APC				b
3.1			263				1.4																																											G2 DI 24-9 GRATE				c
	2.4																											41.0																						18" APC				d
3.1			263				1.4																																											G2 DI 24-9 GRATE				e
	2.1																											117.1																						18" APC				f
3.6			263				1.9																																											GDO Mod DI 24-9 GRATE				g
																																										1							REMOVE FES				h
																																									75.9								REMOVE 18" APC				i
																																											1							REMOVE DI				j
																																									41.0								REMOVE 18" APC				k
																																											1							REMOVE DI				l
																																									117.1								REMOVE 18" APC				m
																																											1							REMOVE DI				n
-	-	-	2845	13.5	4.6	-	18.1	17.0	-	-	-	-	-	-	2	2	-	-	-	-	-	13	45	-	-	-	47.1	568.9	111.0	127.1	-	-	-	-	-	-	-	-	392.1	1	-	-	5	-	-	-	-	-	SHEET DQ-12 TOTAL				

STATE OF CALIFORNIA - DEPARTMENT OF TRANSPORTATION
Caltrans®
06-DESIGN

FUNCTIONAL SUPERVISOR: JACK WALKER
CALCULATED-DESIGNED BY: TOM LIU
CHECKED BY: SUMANGALI HOODE
REVISED BY
DATE REVISED

DRAINAGE QUANTITIES
DQ-12

LAST REVISION 11-07-11
DATE PLOTTED => 17-FEB-2012
TIME PLOTTED => 14:43

Dist	COUNTY	ROUTE	POST MILES TOTAL PROJECT	SHEET No.	TOTAL SHEETS
05	SLO	46	40.7/46.3	255	541

Tom W. Liu 11-10-11
REGISTERED CIVIL ENGINEER DATE

2-13-12
PLANS APPROVAL DATE

REGISTERED PROFESSIONAL ENGINEER TOM W. LIU No. 77212 Exp. 6-30-13 CIVIL STATE OF CALIFORNIA

THE STATE OF CALIFORNIA OR ITS OFFICERS OR AGENTS SHALL NOT BE RESPONSIBLE FOR THE ACCURACY OR COMPLETENESS OF SCANNED COPIES OF THIS PLAN SHEET.

DRAINAGE QUANTITIES SUMMARY

36" CSP INLET (0.168" THICK)	Misc IRON & STEEL	Str Bkf (SLURRY CEMENT)	Conc Conc APRON	Conc (SLOPE PROTECTION)	MINOR Conc (MINOR Str)	MINOR Conc (Bkf)	PLACE HMA * (Misc AREA)	PLACE HMA * HMA	BOX Culv Str Conc	BOX Culv BAR Reinf STEEL	CSP DD 18" (0.079" THICK)	CSP DD 24" (0.138" THICK)	AFES 18"	AFES 24"	AFES 30"	AFES 48"	ROCK SLOPE PROTECTION ** 1 TON, METHOD A	ROCK SLOPE PROTECTION ** 1/4 TON, METHOD B	ROCK SLOPE PROTECTION ** LIGHT, METHOD B	ROCK SLOPE PROTECTION ** BACKING No. 1, METHOD B	ROCK SLOPE PROTECTION ** FABRIC	GABION	RCP 36"	RCP 48"	ALTERNATIVE PIPE CULVERT 12" (SMOOTH)	ALTERNATIVE PIPE CULVERT 18"	ALTERNATIVE PIPE CULVERT 18" (SMOOTH)	ALTERNATIVE PIPE CULVERT 24"	ALTERNATIVE PIPE CULVERT 24" (SMOOTH)	ALTERNATIVE PIPE CULVERT 30"	ALTERNATIVE PIPE CULVERT 30" (SMOOTH)	ALTERNATIVE PIPE CULVERT 36"	ALTERNATIVE PIPE CULVERT 36" (SMOOTH)	ALTERNATIVE PIPE CULVERT 42"	ALTERNATIVE PIPE CULVERT 48"	ALTERNATIVE PIPE CULVERT 48" (SMOOTH)	REMOVE *** CULVERT	REMOVE *** FES	REMOVE *** HW	REMOVE *** JS	REMOVE *** DI	REMOVE *** WW	ABANDON *** LENGTH (N)	ABANDON *** CULVERT	ABANDON *** JS	SAND Bkf ***	DESCRIPTION
LF	LB	CY	CY	CY	CY	CY	SQYD	TON	CY	LB	LF	LF	EA	EA	EA	EA	CY	CY	CY	CY	SQYD	CY	LF	LF	LF	LF	LF	LF	LF	LF	LF	LF	LF	LF	LF	LF	LF	EA	EA	EA	EA	EA	LF	EA	EA	CY	
-	789	-	4.6	-	20.7	12.1	-	-	-	-	-	-	-	3	-	-	-	-	94	125	335	-	244.7	-	-	37.1	-	130.4	-	-	-	-	-	-	505.9	-	73.1	1	2	-	1	2	153.7	2	-	143.0	SHEET DQ-1 TOTAL
9.3	2,865	-	0.4	-	24.4	89.2	81	8.1	-	-	69.4	-	-	1	-	-	-	-	-	91	210	-	171.5	-	-	-	238.6	1231.2	340.0	-	-	-	-	-	-	-	275.1	-	-	-	2	-	-	-	-	-	-	SHEET DQ-2 TOTAL
-	263	-	2.3	3.9	16.0	-	-	-	1,196.5	296,545	-	-	-	1	-	-	19	508	-	148	284	-	280.7	-	-	-	-	50.2	-	-	-	-	-	-	-	88.6	-	4	1	-	-	88.6	3	2	15.8	SHEET DQ-3 TOTAL
21.9	4,875	-	12.5	-	34.6	-	70	6.8	-	-	195.6	-	-	-	-	-	-	-	-	200	337	-	-	-	-	-	-	345.6	-	60.0	-	725.6	-	-	-	-	-	-	-	-	-	-	-	-	-	-	SHEET DQ-4 TOTAL
20.6	3,186	103.7	9.4	406.2	45.1	-	35	3.4	46.4	8,786	-	98.9	-	1	-	-	-	-	106	6	207	-	-	-	-	-	-	504.4	-	-	-	-	-	-	-	594.4	205.0	-	4	-	-	-	-	-	-	-	SHEET DQ-5 TOTAL
-	-	-	4.3	-	28.2	-	-	-	-	-	-	-	-	-	-	-	-	-	130	-	191	-	426.9	-	-	-	-	10.8	11.1	-	-	-	355.9	-	292.6	-	161.2	2	4	4	-	-	382.2	3	-	68.1	SHEET DQ-6 TOTAL
4.5	3,424	54.8	10.1	5.1	32.6	-	69	6.6	767.9	206,632	-	203.9	-	-	-	-	10	227	25	163	398	-	360.2	-	-	-	-	246.5	-	209.5	-	619.3	-	-	-	-	11.9	-	1	-	-	-	-	-	-	-	SHEET DQ-7 TOTAL
21.1	3,589	-	0.7	8.4	25.1	-	71	7.0	6.6	360	134.4	123.2	-	1	2	1	-	-	-	184	415	131	-	-	-	50.7	-	346.9	-	34.0	-	211.9	-	887.3	39.7	-	-	-	-	-	-	-	-	-	-	-	SHEET DQ-8 TOTAL
-	3,016	56.1	22.0	-	24.2	-	-	-	429.5	92,919	-	-	-	1	-	-	-	-	52	-	102	-	168.6	-	-	76.5	37.0	6.0	78.5	-	-	-	-	-	-	-	452.9	2	3	-	-	-	-	-	-	-	SHEET DQ-9 TOTAL
4.5	1,955	339.1	13.0	-	70.8	16.5	35	3.4	194.4	41,044	161.9	-	1	2	8	-	-	-	125	85	423	-	-	365.2	-	5.1	112.2	28.8	250.6	-	888.0	-	-	-	-	-	-	1	-	-	-	-	-	-	-	-	SHEET DQ-10 TOTAL
10.4	1,192	-	2.7	-	20.9	-	18	1.8	-	-	43.8	-	1	1	-	-	-	-	79	9	165	-	180.4	426.6	-	42.9	-	250.1	-	45.5	-	-	-	-	-	-	76.6	-	6	1	-	-	121.8	2	1	28.7	SHEET DQ-11 TOTAL
-	2,845	13.5	4.6	-	18.1	17.0	-	-	-	-	-	-	2	2	-	-	-	-	-	13	45	-	-	-	47.1	568.9	111.0	127.1	-	-	-	-	-	-	-	-	392.1	1	-	-	5	-	-	-	-	-	SHEET DQ-12 TOTAL
																										781.2	498.8	3278.0	680.2	349.0	888.0	1556.8	355.9	887.3	838.2	594.4										SUBTOTAL
92.3	27,999	567.2	86.6	423.6	360.7	134.8	379	37.1	2,641.3	646,286	605.1	426.0	4	13	10	1	29	735	611	1024	3112	131	1833.0	791.8	47.1	1280.0		3958.2		1237.0		1912.7		887.3	1432.6		1736.5	7	24	6	8	2	746.3	10	3	255.6	TOTAL

* INCLUDED IN PLACE HMA (Misc AREA) TABLE (Sht Q-15)
** INCLUDED IN ROCK SLOPE PROTECTION TABLE (Sht Q-17)
*** INCLUDED IN ABANDON AND REMOVE DRAINAGE FACILITY TABLE (Sht Q-6)

REVISED BY | DATE REVISED
TOM LIU | SUMANGALI HOODE
CALCULATED-DESIGNED BY | CHECKED BY
FUNCTIONAL SUPERVISOR: JACK WALKER
STATE OF CALIFORNIA - DEPARTMENT OF TRANSPORTATION
Caltrans 06-DESIGN

DRAINAGE QUANTITIES
DQ-13

LAST REVISION 11-08-11 | DATE PLOTTED => 17-FEB-2012 | TIME PLOTTED => 09:38

Dist	COUNTY	ROUTE	POST MILES TOTAL PROJECT	SHEET No.	TOTAL SHEETS
05	SLO	46	40.7/46.3	256	541

REGISTERED CIVIL ENGINEER 11-10-11 DATE

2-13-12
PLANS APPROVAL DATE

REGISTERED PROFESSIONAL ENGINEER JOSE M. ARGUELLO No. 51321 Exp 06-30-12 CIVIL STATE OF CALIFORNIA

THE STATE OF CALIFORNIA OR ITS OFFICERS OR AGENTS SHALL NOT BE RESPONSIBLE FOR THE ACCURACY OR COMPLETENESS OF SCANNED COPIES OF THIS PLAN SHEET.

NOTE:

SEE Sht D-2 FOR POSITIVE LOCATION INFORMATION OF THE GAS LINE.

ABBREVIATIONS:

IES	INSIDE EDGE OF SHOULDER
IETW	INSIDE EDGE OF TRAVELED WAY
OETW	OUTSIDE EDGE OF TRAVELED WAY
TP	Temp POLE
PG&E	PACIFIC GAS AND ELECTRIC COMPANY
AT&T	ORIGINALLY AMERICAN TELEPHONE AND TELEGRAPH

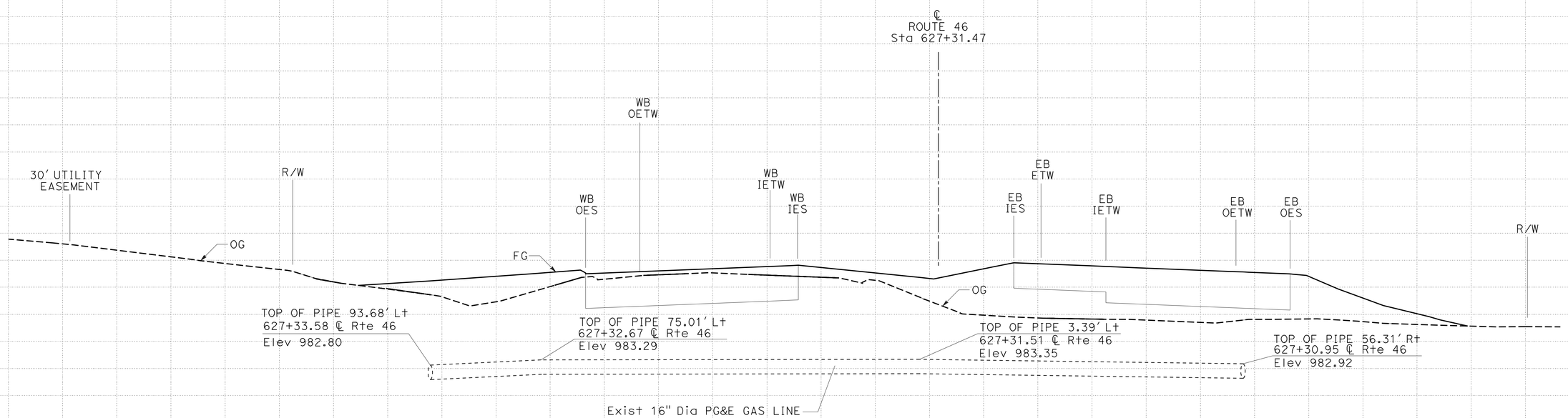

PG&E GAS LINE

UTILITY DETAILS

SCALE: Horiz 1" = 10'
Vert 1" = 5'

UD-1

STATION	10	+10	+20	+30	+40	+50	+60	+70	+80	+90	11	+10	+20	+30	+40	+50	+60	+70	+80	+90	12	+10	+20	+30	+40	+50	+60	+70	+80	TOTAL
CY Exc																														
CY Emb																														

STATE OF CALIFORNIA - DEPARTMENT OF TRANSPORTATION
Caltrans 06-DESIGN

FUNCTIONAL SUPERVISOR: JACK WALKER
CALCULATED-DESIGNED BY: JOSE ARGUELLO
CHECKED BY: JOSE BAUTISTA
REVISED BY / DATE REVISED

LAST REVISION 10-26-11
DATE PLOTTED => 17-FEB-2012
TIME PLOTTED => 05:38

Dist	COUNTY	ROUTE	POST MILES TOTAL PROJECT	SHEET No.	TOTAL SHEETS
05	SLO	46	40.7/46.3	257	541

REGISTERED CIVIL ENGINEER DATE 11-10-11

2-13-12
PLANS APPROVAL DATE

REGISTERED PROFESSIONAL ENGINEER JOSE M. ARGUELLO No. 51321 Exp 06-30-12 CIVIL STATE OF CALIFORNIA

THE STATE OF CALIFORNIA OR ITS OFFICERS OR AGENTS SHALL NOT BE RESPONSIBLE FOR THE ACCURACY OR COMPLETENESS OF ELECTRONIC COPIES OF THIS PLAN SHEET.

NOTE: FOR ACCURATE RIGHT OF WAY DATA, CONTACT RIGHT OF WAY ENGINEERING AT THE DISTRICT OFFICE.

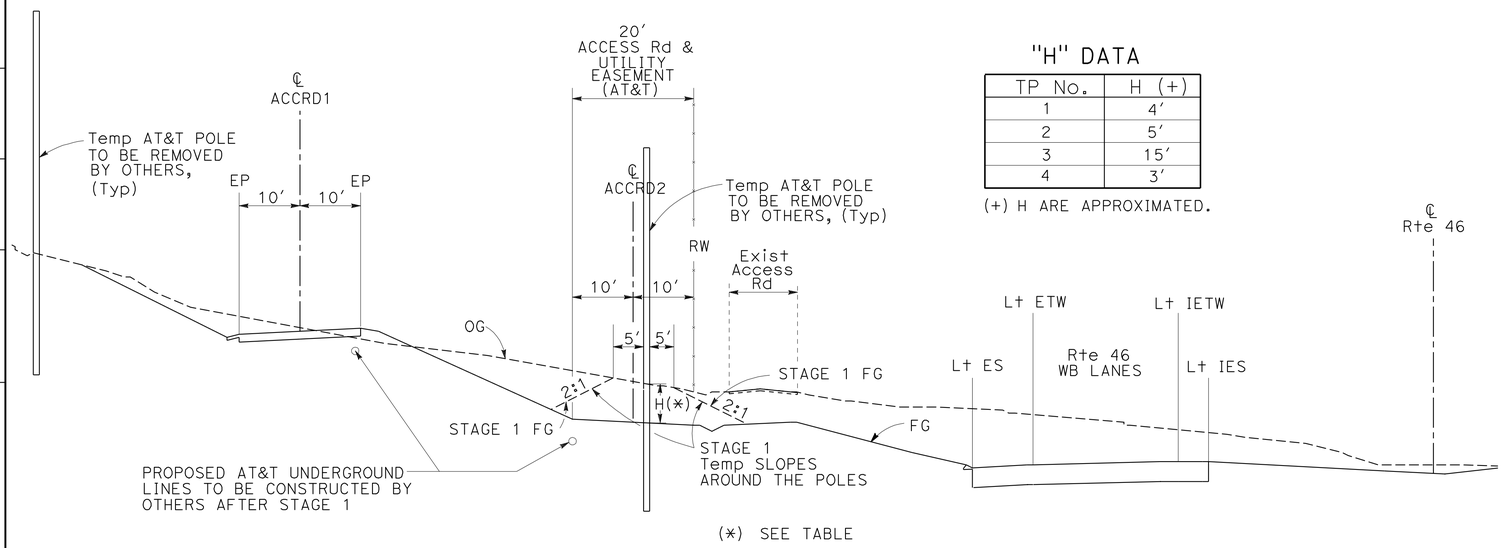

(*) SEE TABLE

SECTION A-A
NO SCALE

"H" DATA

TP No.	H (+)
1	4'
2	5'
3	15'
4	3'

(+) H ARE APPROXIMATED.

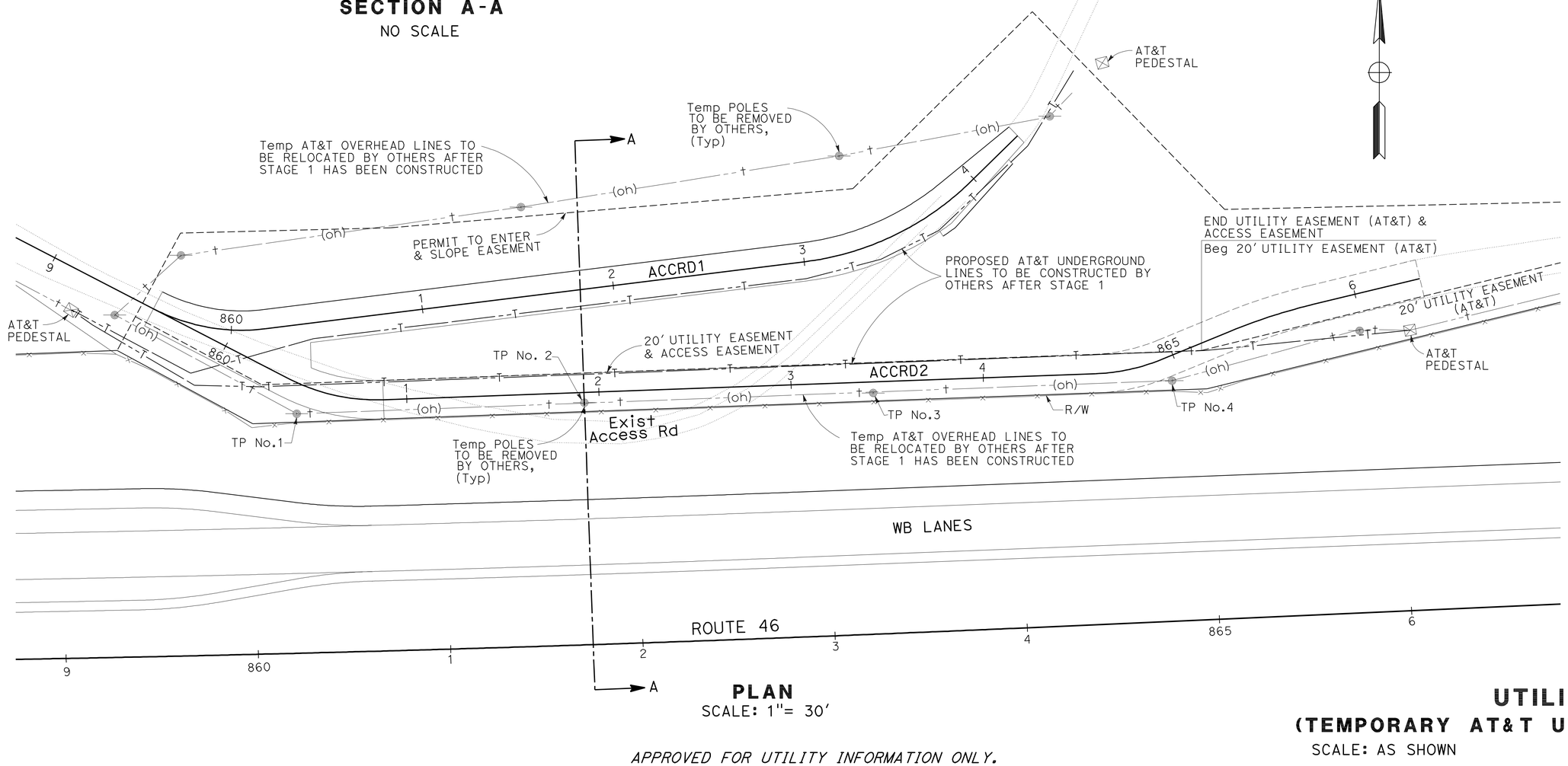

PLAN
SCALE: 1"= 30'

APPROVED FOR UTILITY INFORMATION ONLY.

UTILITY DETAILS
(TEMPORARY AT&T UTILITY POLES)
SCALE: AS SHOWN

UD-2

STATE OF CALIFORNIA - DEPARTMENT OF TRANSPORTATION
Caltrans
06-DESIGN

FUNCTIONAL SUPERVISOR: JACK WALKER
CALCULATED-DESIGNED BY: JOSE ARGUELLO
CHECKED BY: SUMANGALI HOODE
REVISED BY
DATE REVISED

LAST REVISION 11-04-11
DATE PLOTTED => 17-FEB-2012
TIME PLOTTED => 05:38

Dist	COUNTY	ROUTE	POST MILES TOTAL PROJECT	SHEET No.	TOTAL SHEETS
05	SLO	46	40.7/46.3	258	541

REGISTERED CIVIL ENGINEER 11-10-11 DATE

2-13-12
PLANS APPROVAL DATE

REGISTERED PROFESSIONAL ENGINEER JOSE A. BAUTISTA No. 68527 Exp. 9/30/13 CIVIL STATE OF CALIFORNIA

THE STATE OF CALIFORNIA OR ITS OFFICERS OR AGENTS SHALL NOT BE RESPONSIBLE FOR THE ACCURACY OR COMPLETENESS OF SCANNED COPIES OF THIS PLAN SHEET.

LEGEND

- Const TO 0.15' BELOW FG
- REMOVE THIS STAGE
- CONSTRUCTION COMPLETED IN PREVIOUS PHASE
- CONSTRUCTION COMPLETED IN PREVIOUS PHASE WITHOUT FINAL LIFT OF HMA ON TW AND Shld
- Const Temp Pvmt AND Temp Pvmt WIDENING THIS STAGE
- Const TO FG THIS STAGE
- (X) TRAFFIC THIS STAGE AND NUMBER OF LANES IN USE
- Const TO SUBGRADE LEVEL THIS STAGE

ABBREVIATIONS:

Prvt	PRIVATE
TW	TRAVELED WAY
Ult	ULTIMATE
DS	DRAINAGE SYSTEM

CONSTRUCTION SEQUENCE

STAGE 1 PHASE 1

Const Temp BERM FROM Sta 667+25 to taS 684+25.

Const Temp Prvt Dwy 2.

Const NORTH PORTION OF DS No. 10 FROM Sta 685+43.30 157.73' Lt TO Sta 685+64.65 6.60' Rt

Const NORTH PORTION OF DS No. 21 FROM Sta 743+40.36 113.50' Lt TO Sta 743+61.95 3.20' Rt

Const Ult EB Rte 46, WITHOUT FINAL LIFT, FROM Sta 615+25 TO Sta 644+00.

Const DETOUR 2 FROM Sta 44+00.00 TO Sta 52+00.00.

Const Ult WB Rte 46, WITHOUT FINAL LIFT, FROM Sta 660+00 TO Sta 715+00, FROM Sta 740+00 TO Sta 745+00, FROM Sta 795+00 TO Sta 797+00, AND FROM Sta 850+00 TO Sta 857+00.

Const TO SUBGRADE LEVEL WB Rte 46 FROM Sta 657+00 TO Sta 660+00, FROM Sta 715+00 TO Sta 740+00, FROM Sta 745+00 TO Sta 795+00, FROM Sta 797+00 TO Sta 850+00, AND FROM Sta 857+00 TO Sta 883+25.46.

Const DETOUR 5 FROM Sta 106+00.32 TO Sta 112+25.

Const NORTH PORTION OF McMILLAN CANYON CREEK BRIDGE.
Const WB WEIGH-IN-MOTION.
Const McMILLAN CANYON Rd.
Const ACCRD 1, 2, 4, AND 5.
Const Prvt Dwy 2, 5, 7, AND 8.
Const Temp Prvt Dwy 1 FROM STA 1+29.08 TO STA 6+61.15

TRAFFIC NOTES:

Rte 46 ON Exist ALIGNMENT.

TRAFFIC AT Prvt Dwy 7 TO USE Temp Prvt Dwy 2.

ALL MINOR ROADS ON RESPECTIVE ALIGNMENTS.

CONTRACTOR TO PROVIDE ACCESS AT ALL ACCESS OPENINGS OF Rte 46 AT ALL TIMES THIS PHASE.

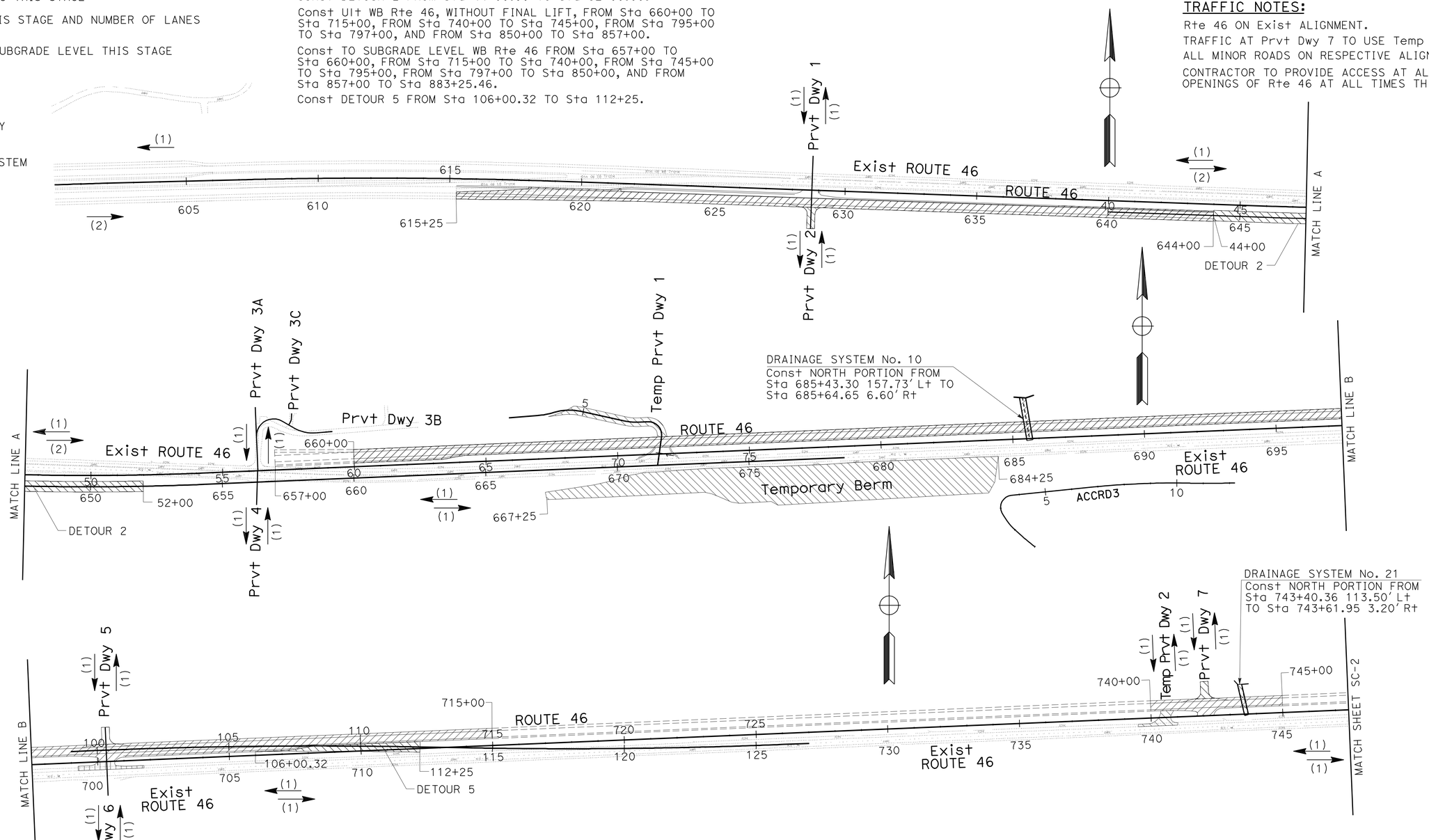

STAGE CONSTRUCTION
(STAGE 1 PHASE 1)
SCALE: 1" = 200'

SC-1

APPROVED FOR STAGE CONSTRUCTION WORK ONLY

REVISED BY	DATE REVISED
JOSE BAUTISTA	JACK WALKER
CALCULATED-DESIGNED BY	CHECKED BY
FUNCTIONAL SUPERVISOR	JACK WALKER

STATE OF CALIFORNIA - DEPARTMENT OF TRANSPORTATION
Caltrans
06-DESIGN

LAST REVISION 10-21-11 | DATE PLOTTED => 16-FEB-2012 | TIME PLOTTED => 13:49

Dist	COUNTY	ROUTE	POST MILES TOTAL PROJECT	SHEET No.	TOTAL SHEETS
05	SLO	46	40.7/46.3	259	541

REGISTERED CIVIL ENGINEER 11-10-11 DATE

2-13-12
PLANS APPROVAL DATE

REGISTERED PROFESSIONAL ENGINEER JOSE A. BAUTISTA No. 68527 Exp. 9/30/13 CIVIL STATE OF CALIFORNIA

THE STATE OF CALIFORNIA OR ITS OFFICERS OR AGENTS SHALL NOT BE RESPONSIBLE FOR THE ACCURACY OR COMPLETENESS OF SCANNED COPIES OF THIS PLAN SHEET.

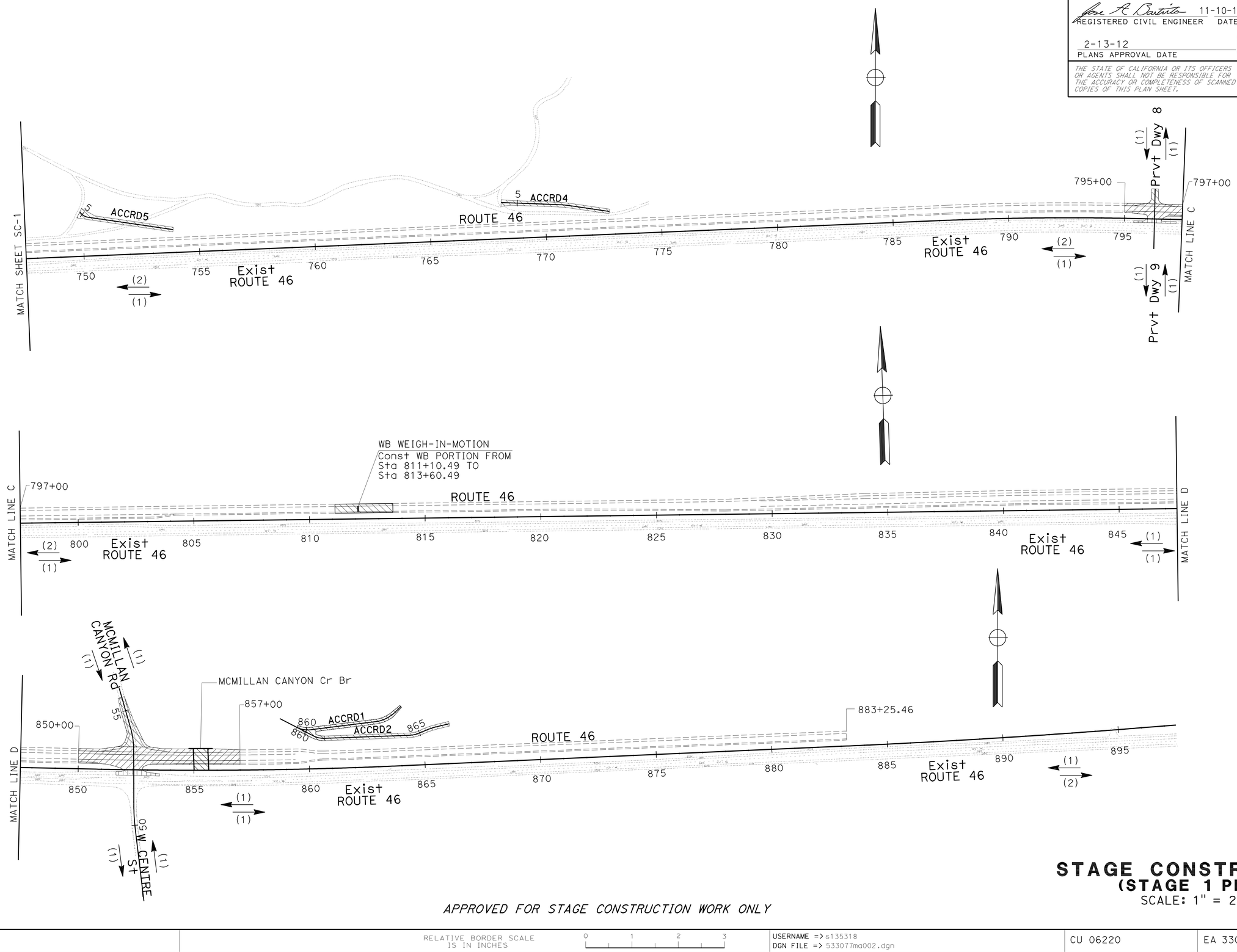

APPROVED FOR STAGE CONSTRUCTION WORK ONLY

STAGE CONSTRUCTION
(STAGE 1 PHASE 1)
SCALE: 1" = 200'

SC-2

STATE OF CALIFORNIA - DEPARTMENT OF TRANSPORTATION
Caltrans
06-DESIGN

FUNCTIONAL SUPERVISOR: JACK WALKER
CALCULATED-DESIGNED BY: JOSE BAUTISTA
CHECKED BY: JACK WALKER
REVISED BY
DATE REVISED

LAST REVISION 12-06-11
DATE PLOTTED => 16-FEB-2012
TIME PLOTTED => 13:49

BORDER LAST REVISED 4/11/2008
RELATIVE BORDER SCALE IS IN INCHES 0 1 2 3
USERNAME => s135318
DGN FILE => 533077ma002.dgn
CU 06220
EA 330771

Dist	COUNTY	ROUTE	POST MILES TOTAL PROJECT	SHEET No.	TOTAL SHEETS
05	SLO	46	40.7/46.3	260	541

REGISTERED CIVIL ENGINEER 11-10-11 DATE

2-13-12
PLANS APPROVAL DATE

REGISTERED PROFESSIONAL ENGINEER JOSE A. BAUTISTA No. 68527 Exp. 9/30/13 CIVIL STATE OF CALIFORNIA

THE STATE OF CALIFORNIA OR ITS OFFICERS OR AGENTS SHALL NOT BE RESPONSIBLE FOR THE ACCURACY OR COMPLETENESS OF SCANNED COPIES OF THIS PLAN SHEET.

CONSTRUCTION SEQUENCE
STAGE 1 PHASE 2

Const DETOUR 1 FROM Sta 5+73.18 TO taS 38+13.14.
Const DETOUR 2 FROM Sta 52+00.00 TO Sta 78+56.50.
Const Temp Prvt Dwy 1 FROM Sta 0+78.52 TO Sta 1+29.08.
REMOVE Temp Prvt Dwy 2.

TRAFFIC NOTES:

Rte 46 ON Exist ALIGNMENT.

ALL MINOR ROADS ON RESPECTIVE ALIGNMENTS.

CONTRACTOR TO PROVIDE ACCESS AT ALL ACCESS OPENINGS OF Rte 46 AT ALL TIMES THIS PHASE.

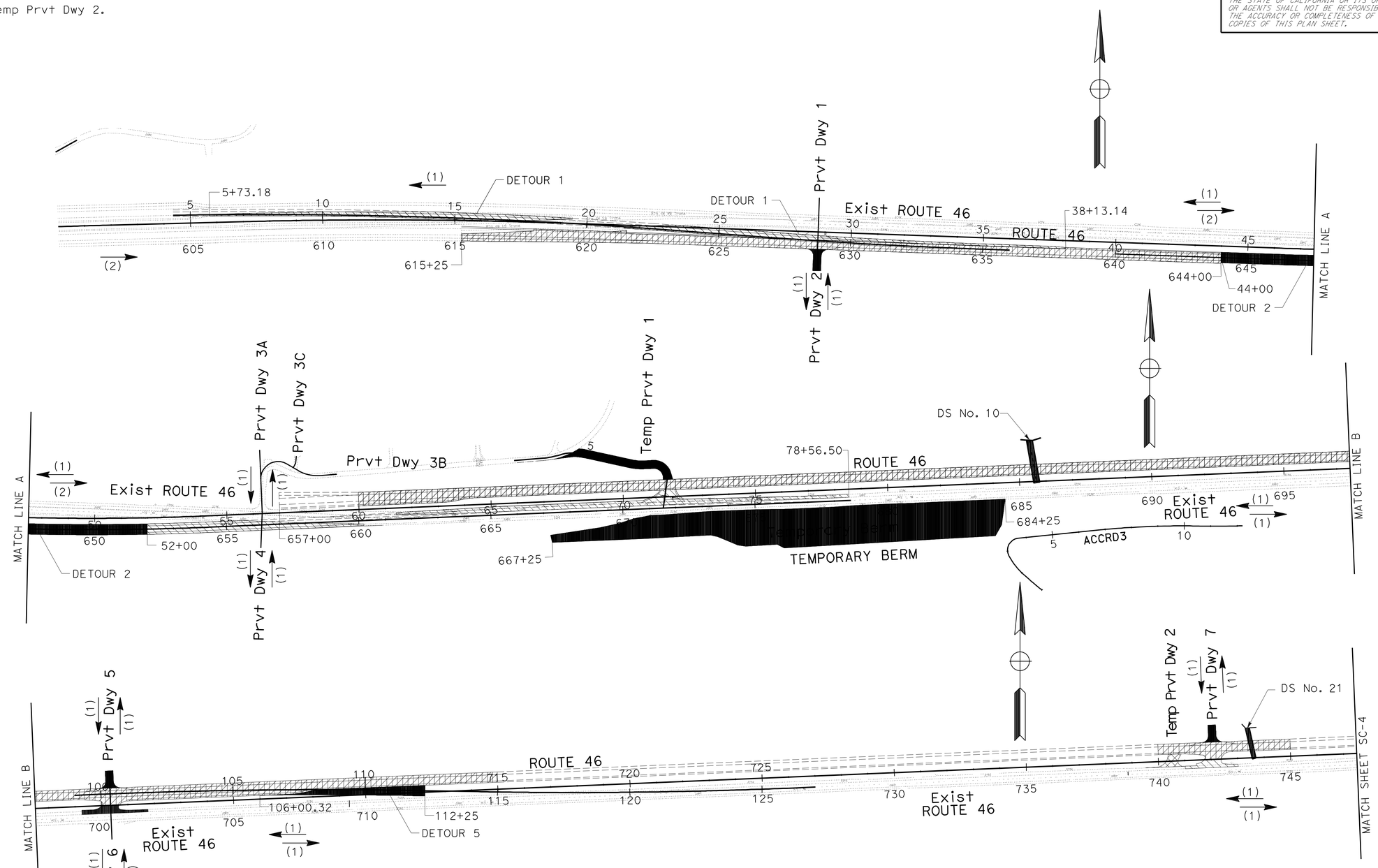

STAGE CONSTRUCTION
(STAGE 1 PHASE 2)
SCALE: 1" = 200'

SC-3

APPROVED FOR STAGE CONSTRUCTION WORK ONLY

STATE OF CALIFORNIA - DEPARTMENT OF TRANSPORTATION
Caltrans
06-DESIGN

FUNCTIONAL SUPERVISOR: JACK WALKER
CALCULATED-DESIGNED BY: JOSE BAUTISTA
CHECKED BY: JACK WALKER
REVISED BY
DATE REVISED

LAST REVISION 10-21-11
DATE PLOTTED => 16-FEB-2012
TIME PLOTTED => 13:49

Dist	COUNTY	ROUTE	POST MILES TOTAL PROJECT	SHEET No.	TOTAL SHEETS
05	SLO	46	40.7/46.3	261	541

REGISTERED CIVIL ENGINEER 11-10-11 DATE

2-13-12
PLANS APPROVAL DATE

REGISTERED PROFESSIONAL ENGINEER JOSE A. BAUTISTA No. 68527 Exp. 9/30/13 CIVIL STATE OF CALIFORNIA

THE STATE OF CALIFORNIA OR ITS OFFICERS OR AGENTS SHALL NOT BE RESPONSIBLE FOR THE ACCURACY OR COMPLETENESS OF SCANNED COPIES OF THIS PLAN SHEET.

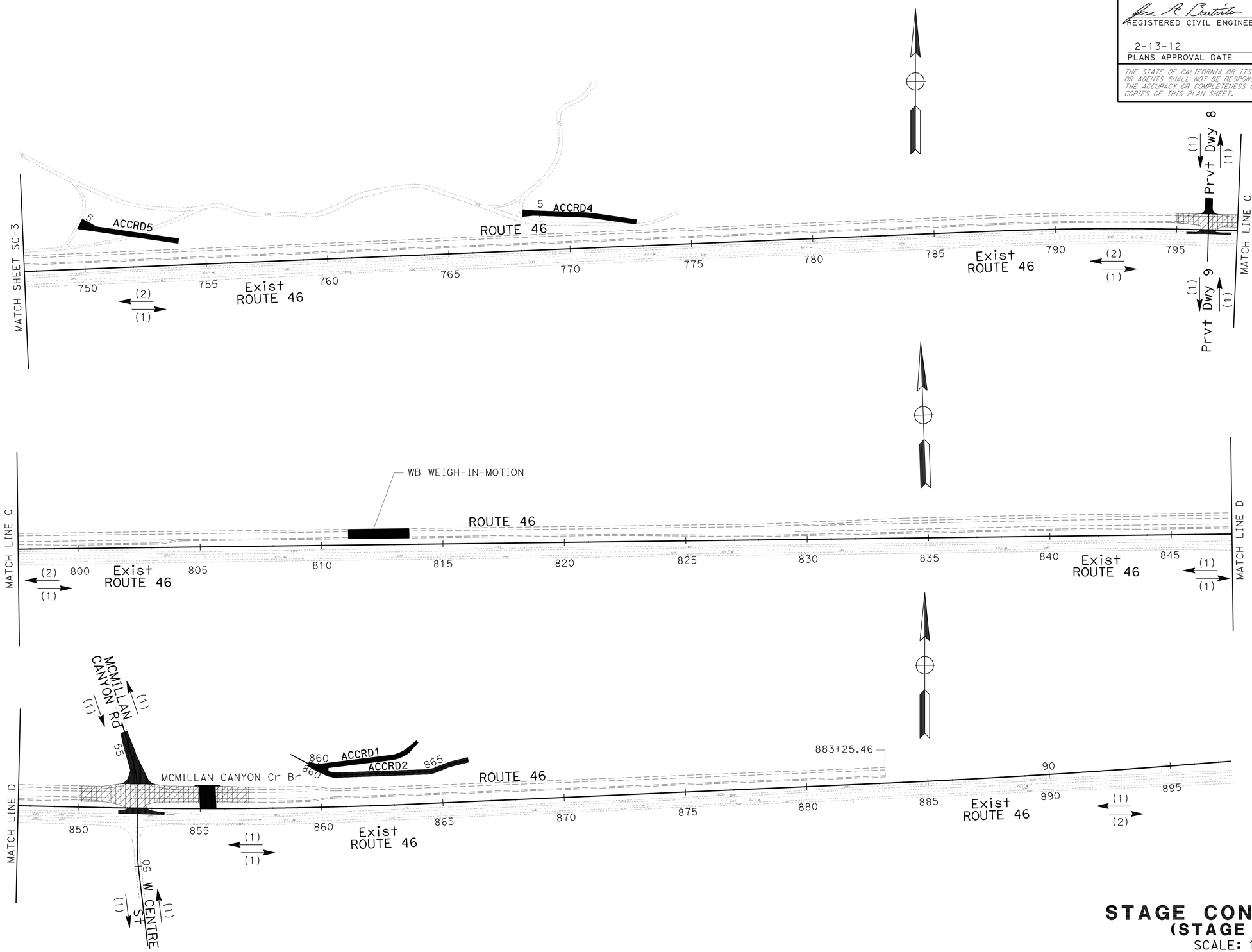

APPROVED FOR STAGE CONSTRUCTION WORK ONLY

STAGE CONSTRUCTION
(STAGE 1 PHASE 2)
SCALE: 1" = 200'

SC-4

STATE OF CALIFORNIA - DEPARTMENT OF TRANSPORTATION
Caltrans
06-DESIGN

FUNCTIONAL SUPERVISOR: JACK WALKER
CALCULATED-DESIGNED BY: JOSE BAUTISTA
CHECKED BY: JACK WALKER
REVISED BY
DATE REVISED

LAST REVISION 12-07-11
DATE PLOTTED => 16-FEB-2012
TIME PLOTTED => 13:49

Dist	COUNTY	ROUTE	POST MILES TOTAL PROJECT	SHEET No.	TOTAL SHEETS
05	SLO	46	40.7/46.3	262	541

REGISTERED CIVIL ENGINEER 11-10-11 DATE

2-13-12
PLANS APPROVAL DATE

REGISTERED PROFESSIONAL ENGINEER JOSE A. BAUTISTA No. 68527 Exp. 9/30/13 CIVIL STATE OF CALIFORNIA

THE STATE OF CALIFORNIA OR ITS OFFICERS OR AGENTS SHALL NOT BE RESPONSIBLE FOR THE ACCURACY OR COMPLETENESS OF SCANNED COPIES OF THIS PLAN SHEET.

CONSTRUCTION SEQUENCE
STAGE 2 PHASE 1

Const Ult WB Rte 46, TO FINISHED GRADE, FROM Sta 618+00 TO Sta 643+75.

Const Ult WB Rte 46, WITHOUT FINAL LIFT, FROM Sta 643+75 TO Sta 660+00.

Const Prvt Dwy 1,3A,3B,3C.

Const DETOUR 3 FROM Sta 42+25.00 TO Sta 55+99.41.

TRAFFIC NOTES:

EB AND WB TRAFFIC Rte 46 ON Ult EB LANES FROM Sta 615+25 TO Sta 644+00.

EB AND WB TRAFFIC Rte 46 ON Exist ALIGNMENT LANES FROM Sta 660+00 TO Sta 894+00.

WB TRAFFIC ON DETOUR 1.

EB AND WB TRAFFIC ON DETOUR 2.

Prvt Dwy 3 IS CLOSED. TRAFFIC TO USE Temp Prvt Dwy 1 AND ALMOND DRIVE.

ALL MINOR ROADS ON RESPECTIVE ALIGNMENTS.

CONTRACTOR TO PROVIDE ACCESS AT ALL ACCESS OPENINGS OF Rte 46 AT ALL TIMES THIS PHASE.

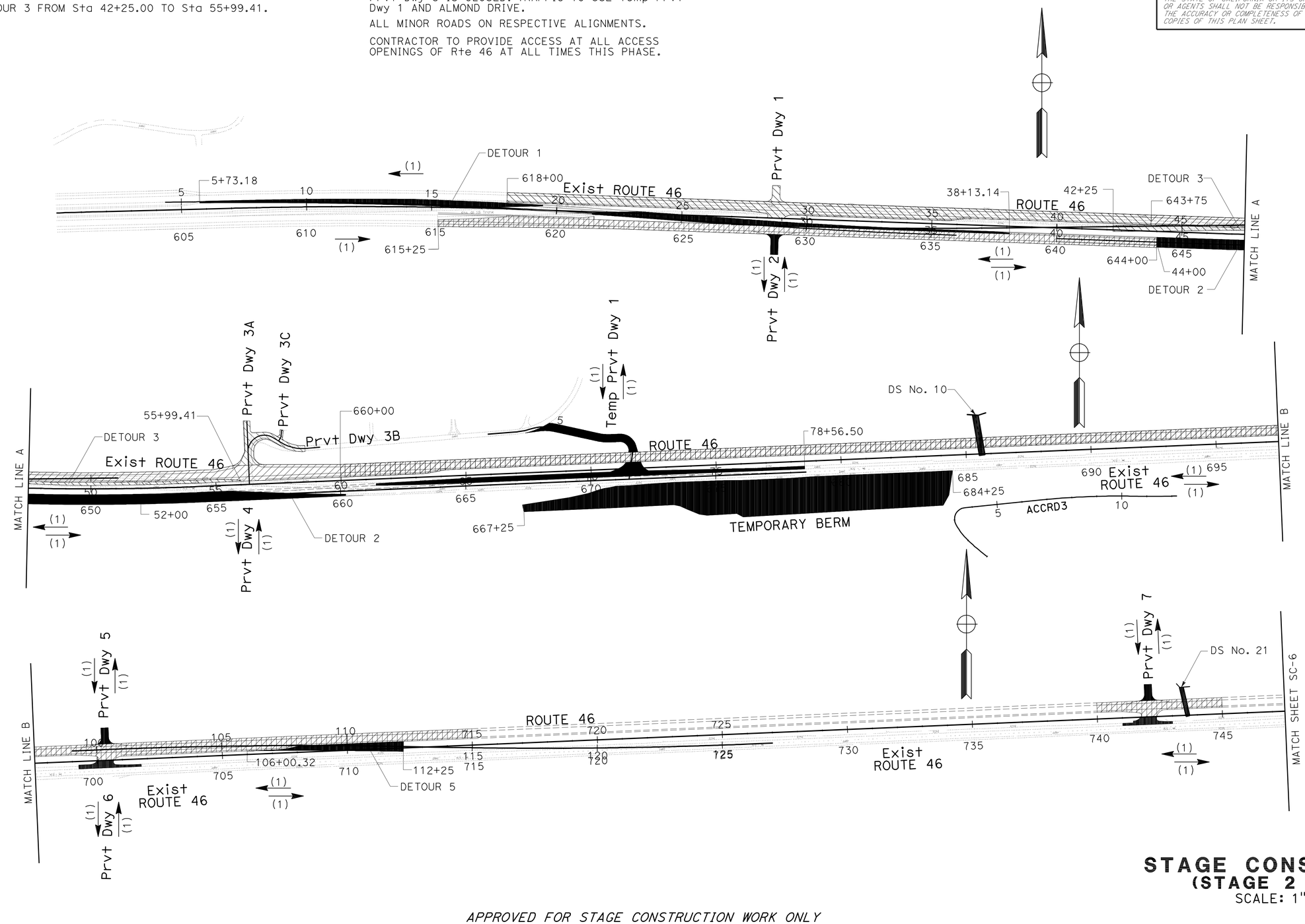

STAGE CONSTRUCTION
(STAGE 2 PHASE 1)
SCALE: 1" = 200'

SC-5

APPROVED FOR STAGE CONSTRUCTION WORK ONLY

STATE OF CALIFORNIA - DEPARTMENT OF TRANSPORTATION
Caltrans 06-DESIGN

FUNCTIONAL SUPERVISOR: JACK WALKER
CALCULATED-DESIGNED BY: JOSE BAUTISTA
CHECKED BY: JACK WALKER
REVISED BY
DATE REVISED

LAST REVISION 10-21-11 | DATE PLOTTED => 16-FEB-2012 | TIME PLOTTED => 13:50

Dist	COUNTY	ROUTE	POST MILES TOTAL PROJECT	SHEET No.	TOTAL SHEETS
05	SLO	46	40.7/46.3	263	541

REGISTERED CIVIL ENGINEER 11-10-11 DATE

2-13-12
PLANS APPROVAL DATE

REGISTERED PROFESSIONAL ENGINEER JOSE A. BAUTISTA No. 68527 Exp. 9/30/13 CIVIL STATE OF CALIFORNIA

THE STATE OF CALIFORNIA OR ITS OFFICERS OR AGENTS SHALL NOT BE RESPONSIBLE FOR THE ACCURACY OR COMPLETENESS OF SCANNED COPIES OF THIS PLAN SHEET.

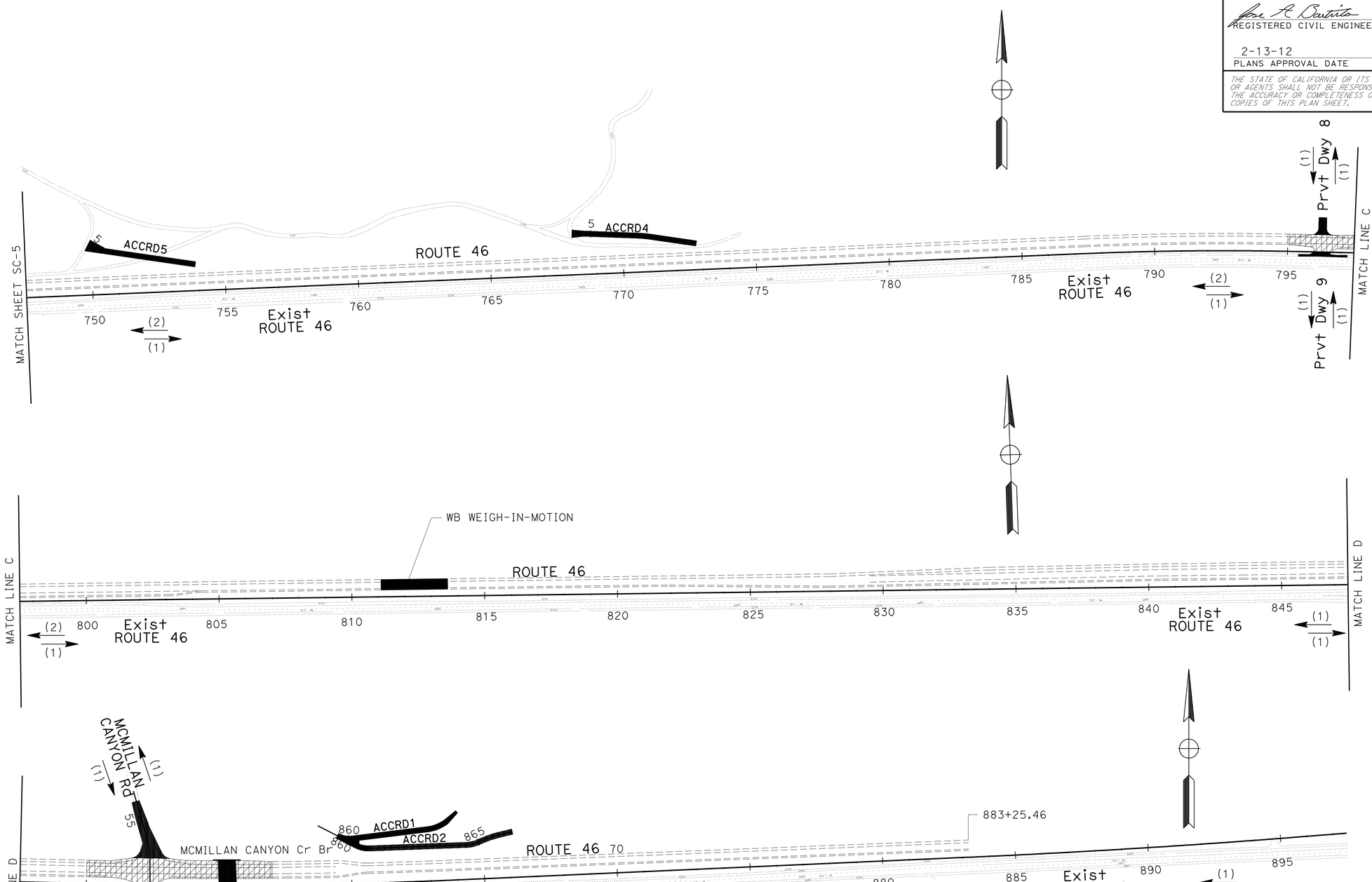

APPROVED FOR STAGE CONSTRUCTION WORK ONLY

STAGE CONSTRUCTION
(STAGE 2 PHASE 1)
SCALE: 1" = 200'

SC-6

STATE OF CALIFORNIA - DEPARTMENT OF TRANSPORTATION
Caltrans
06-DESIGN

FUNCTIONAL SUPERVISOR: JACK WALKER
CALCULATED-DESIGNED BY: JOSE BAUTISTA
CHECKED BY: JACK WALKER
REVISED BY
DATE REVISED

LAST REVISION 12-07-11
DATE PLOTTED => 16-FEB-2012
TIME PLOTTED => 13:50

Dist	COUNTY	ROUTE	POST MILES TOTAL PROJECT	SHEET No.	TOTAL SHEETS
05	SLO	46	40.7/46.3	264	541

REGISTERED CIVIL ENGINEER 11-10-11 DATE

2-13-12
PLANS APPROVAL DATE

REGISTERED PROFESSIONAL ENGINEER JOSE A. BAUTISTA No. 68527 Exp. 9/30/13 CIVIL STATE OF CALIFORNIA

THE STATE OF CALIFORNIA OR ITS OFFICERS OR AGENTS SHALL NOT BE RESPONSIBLE FOR THE ACCURACY OR COMPLETENESS OF SCANNED COPIES OF THIS PLAN SHEET.

CONSTRUCTION SEQUENCE

STAGE 2 PHASE 2

Const DETOUR 3 FROM Sta 32+41.09 TO Sta 42+25.00.

Const DETOUR 5 FROM Sta 112+25.00 TO Sta 123+49.09.

TRAFFIC NOTES:

EB AND WB TRAFFIC Rte 46 ON Ult EB LANES FROM Sta 615+25 TO Sta 644+00.

EB AND WB TRAFFIC Rte 46 ON Exist ALIGNMENT LANES FROM Sta 660+00 TO Sta 894+00.

WB TRAFFIC ON DETOUR 1.

EB AND WB TRAFFIC ON DETOUR 2.

Prvt Dwy 3 IS CLOSED. TRAFFIC TO USE Temp Prvt Dwy 1 AND ALMOND DRIVE.

ALL MINOR ROADS ON RESPECTIVE ALIGNMENTS.

CONTRACTOR TO PROVIDE ACCESS AT ALL ACCESS OPENINGS OF Rte 46 AT ALL TIMES THIS PHASE.

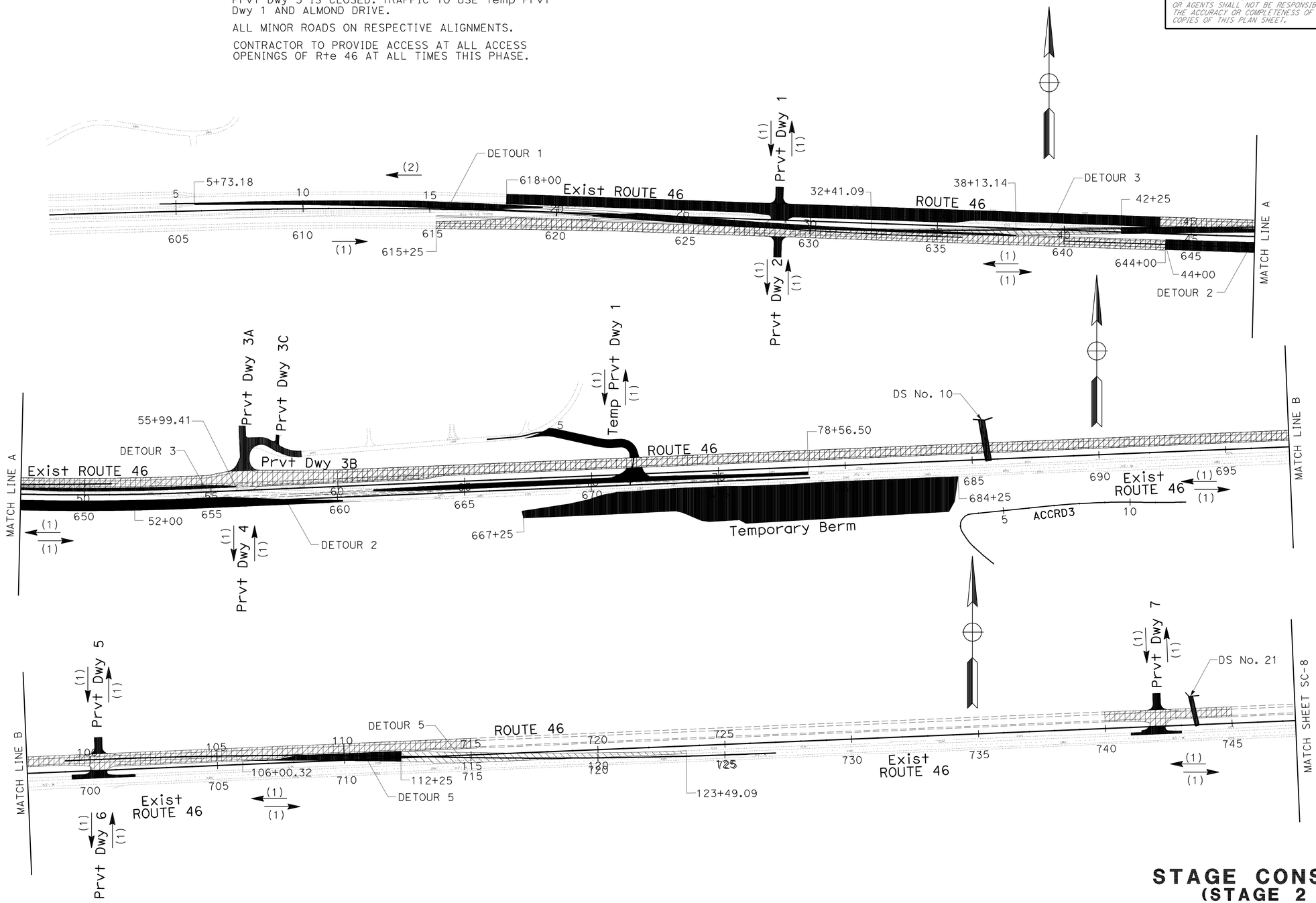

APPROVED FOR STAGE CONSTRUCTION WORK ONLY

STAGE CONSTRUCTION
(STAGE 2 PHASE 2)
SCALE: 1" = 200'

SC-7

STATE OF CALIFORNIA - DEPARTMENT OF TRANSPORTATION
Caltrans
06-DESIGN

FUNCTIONAL SUPERVISOR: JACK WALKER
CALCULATED-DESIGNED BY: JOSE BAUTISTA
CHECKED BY: JACK WALKER
REVISED BY
DATE REVISED

LAST REVISION 10-21-11
DATE PLOTTED => 16-FEB-2012
TIME PLOTTED => 13:50

Dist	COUNTY	ROUTE	POST MILES TOTAL PROJECT	SHEET No.	TOTAL SHEETS
05	SLO	46	40.7/46.3	265	541

REGISTERED CIVIL ENGINEER 11-10-11 DATE

2-13-12
PLANS APPROVAL DATE

REGISTERED PROFESSIONAL ENGINEER JOSE A. BAUTISTA No. 68527 Exp. 9/30/13 CIVIL STATE OF CALIFORNIA

THE STATE OF CALIFORNIA OR ITS OFFICERS OR AGENTS SHALL NOT BE RESPONSIBLE FOR THE ACCURACY OR COMPLETENESS OF SCANNED COPIES OF THIS PLAN SHEET.

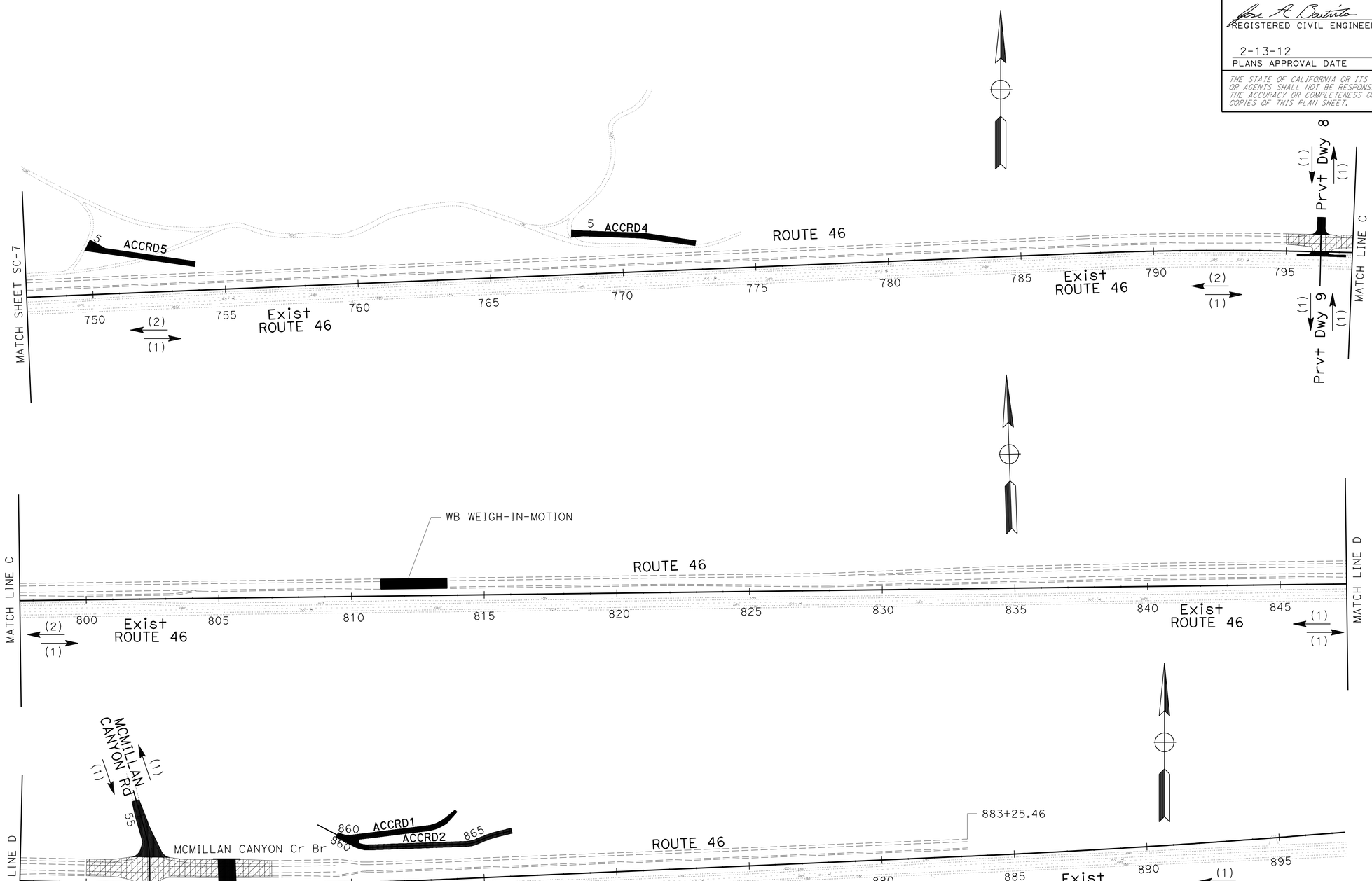

STAGE CONSTRUCTION
(STAGE 2 PHASE 2)
SCALE: 1" = 200'

SC-8

APPROVED FOR STAGE CONSTRUCTION WORK ONLY

STATE OF CALIFORNIA - DEPARTMENT OF TRANSPORTATION
Caltrans
06-DESIGN

FUNCTIONAL SUPERVISOR: JACK WALKER
CALCULATED-DESIGNED BY: JOSE BAUTISTA
CHECKED BY: JACK WALKER
REVISED BY
DATE REVISED

LAST REVISION 12-07-11
DATE PLOTTED => 16-FEB-2012
TIME PLOTTED => 13:50

Dist	COUNTY	ROUTE	POST MILES TOTAL PROJECT	SHEET No.	TOTAL SHEETS
05	SLO	46	40.7/46.3	266	541

REGISTERED CIVIL ENGINEER 11-10-11 DATE

2-13-12
PLANS APPROVAL DATE

REGISTERED PROFESSIONAL ENGINEER JOSE A. BAUTISTA No. 68527 Exp. 9/30/13 CIVIL STATE OF CALIFORNIA

THE STATE OF CALIFORNIA OR ITS OFFICERS OR AGENTS SHALL NOT BE RESPONSIBLE FOR THE ACCURACY OR COMPLETENESS OF SCANNED COPIES OF THIS PLAN SHEET.

CONSTRUCTION SEQUENCE
STAGE 3

Const SOUTH PORTION OF DS No.10 FROM Sta 685+64.65 6.60′ Rt TO Sta 685+92.96 224.78′ Rt.

REMOVE DETOUR 1 & 2.

REMOVE Exist Rte 46 EB Trans FROM Sta 607+03.76 TO Sta 628+41.86.

REMOVE Temp Dwy 1.

Const Ult EB Rte 46, WITHOUT FINAL LIFT, LEFT TURN POCKET, FROM Sta 621+50 TO Sta 629+00.

Const Ult WB Rte 46, WITHOUT FINAL LIFT, FROM Sta 715+00 TO Sta 740+00, FROM Sta 745+00 TO STA 795+00, FROM Sta 797+00 TO Sta 850+00, AND FROM Sta 857+00 TO Sta 883+25.46.

Const Ult EB Rte 46 TO FINISHED GRADE FROM Sta 644+00 TO Sta 710+00.

Const Prvt Dwy 4,6.

Const ACCRD3.

Const DETOUR 4.

TRAFFIC NOTES:

EB AND WB TRAFFIC Rte 46 ON Ult WB LANES FROM Sta 644+00 TO Sta 715+00.

EB TRAFFIC ON DETOUR 3.

EB AND WB TRAFFIC ON DETOUR 5.

EB AND WB TRAFFIC ON Exist ALIGNMENT FROM Sta 720+00 TO Sta 894+00.

ALL MINOR ROADS ON RESPECTIVE ALIGNMENTS.

CONTRACTOR TO PROVIDE ACCESS AT ALL ACCESS OPENINGS OF Rte 46 AT ALL TIMES THIS PHASE.

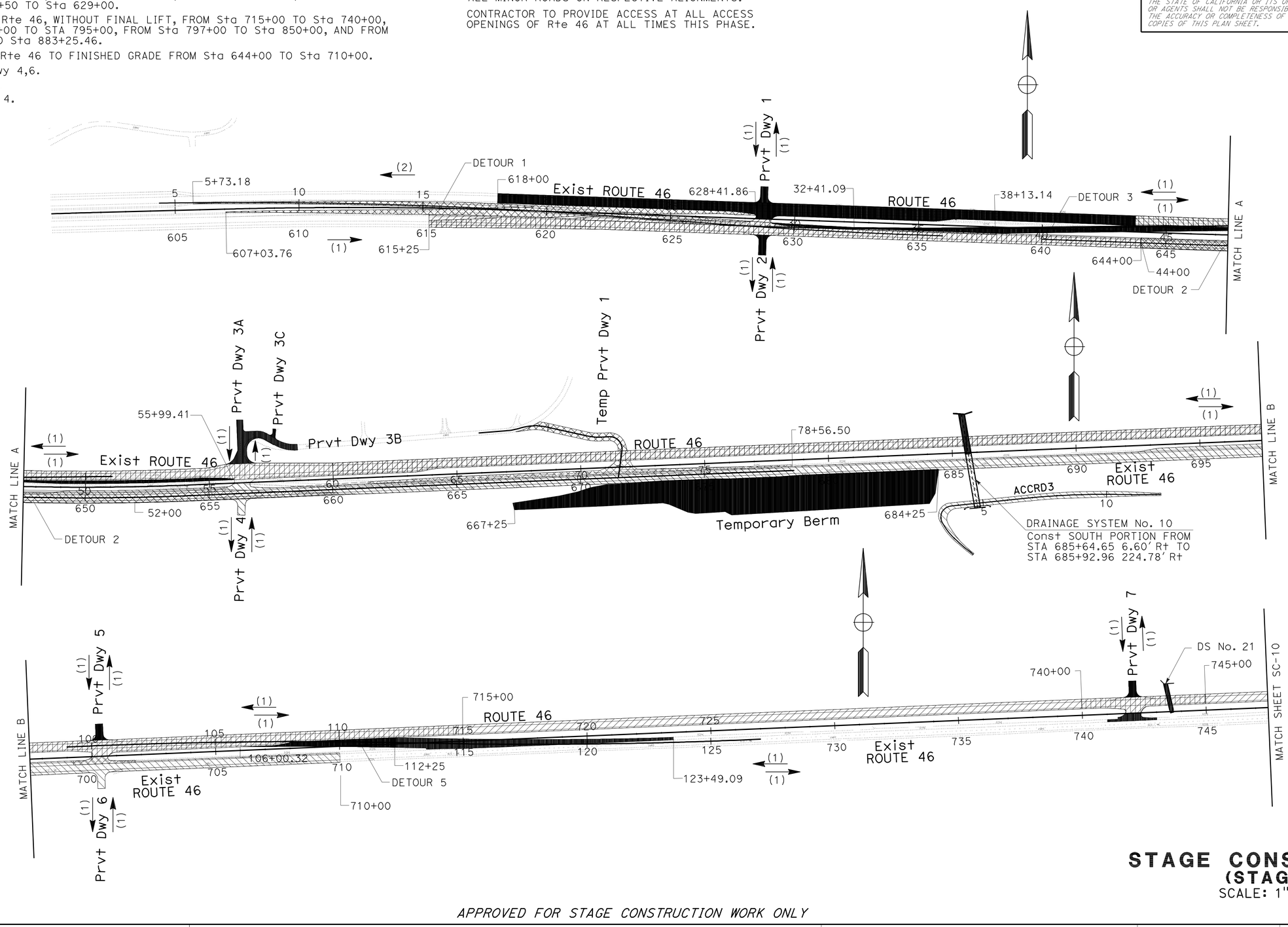

APPROVED FOR STAGE CONSTRUCTION WORK ONLY

STAGE CONSTRUCTION
(STAGE 3)
SCALE: 1" = 200′

SC-9

REVISED BY	DATE REVISED
JOSE BAUTISTA	JACK WALKER
CALCULATED-DESIGNED BY	CHECKED BY
FUNCTIONAL SUPERVISOR	JACK WALKER

STATE OF CALIFORNIA - DEPARTMENT OF TRANSPORTATION
Caltrans
06-DESIGN

LAST REVISION 10-21-11 | DATE PLOTTED => 16-FEB-2012 | TIME PLOTTED => 13:50

Dist	COUNTY	ROUTE	POST MILES TOTAL PROJECT	SHEET No.	TOTAL SHEETS
05	SLO	46	40.7/46.3	267	541

REGISTERED CIVIL ENGINEER 11-10-11 DATE

2-13-12
PLANS APPROVAL DATE

REGISTERED PROFESSIONAL ENGINEER JOSE A. BAUTISTA No. 68527 Exp. 9/30/13 CIVIL STATE OF CALIFORNIA

THE STATE OF CALIFORNIA OR ITS OFFICERS OR AGENTS SHALL NOT BE RESPONSIBLE FOR THE ACCURACY OR COMPLETENESS OF SCANNED COPIES OF THIS PLAN SHEET.

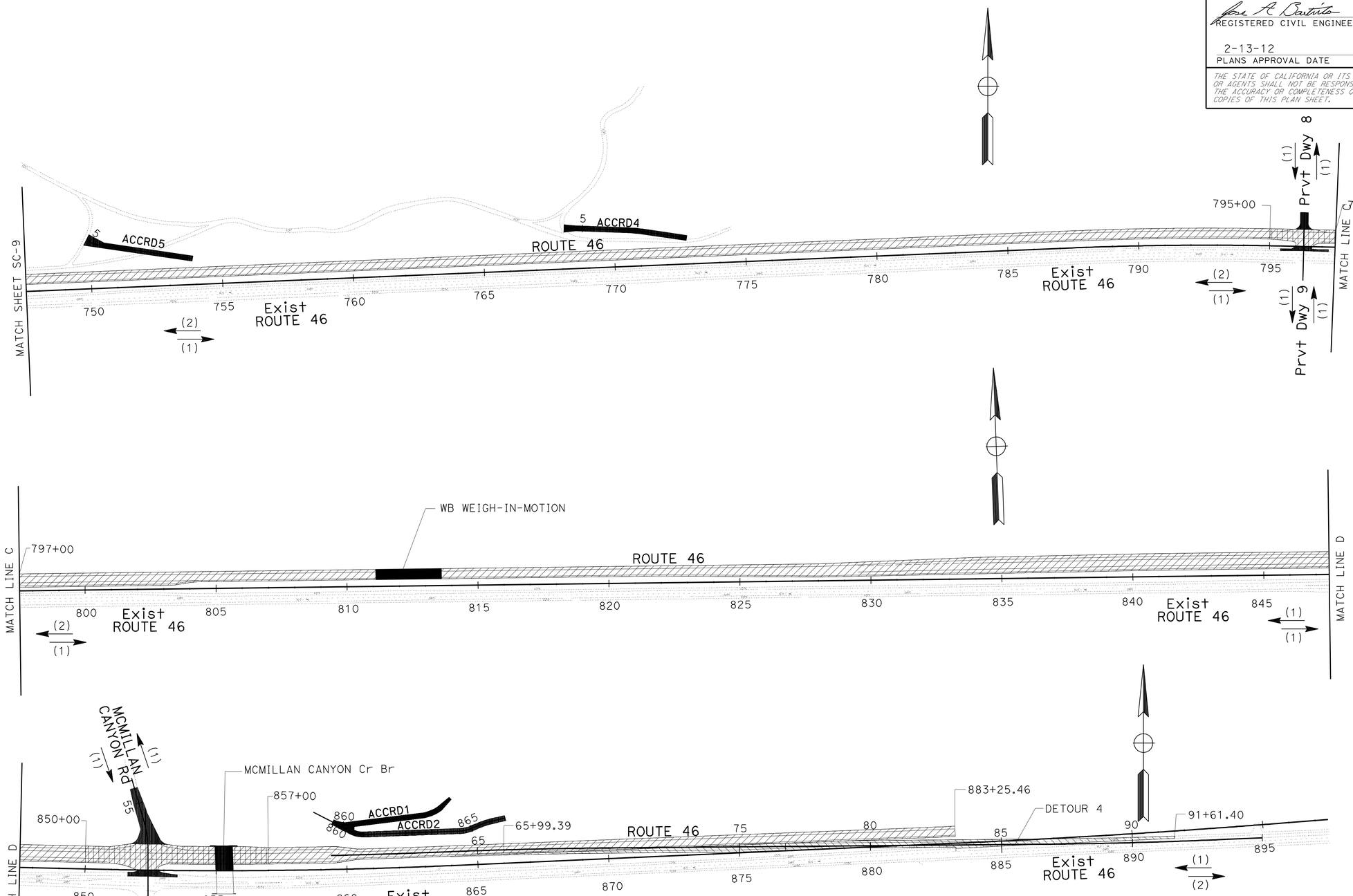

STAGE CONSTRUCTION
(STAGE 3)
SCALE: 1" = 200'

SC-10

APPROVED FOR STAGE CONSTRUCTION WORK ONLY

STATE OF CALIFORNIA - DEPARTMENT OF TRANSPORTATION
Caltrans
06-DESIGN

FUNCTIONAL SUPERVISOR: JACK WALKER
CALCULATED-DESIGNED BY: JOSE BAUTISTA
CHECKED BY: JACK WALKER
REVISED BY
DATE REVISED

LAST REVISION 10-21-11
DATE PLOTTED => 16-FEB-2012
TIME PLOTTED => 13:50

BORDER LAST REVISED 4/11/2008
RELATIVE BORDER SCALE IS IN INCHES 0 1 2 3
USERNAME => s135318
DGN FILE => 533077ma010.dgn
CU 06220
EA 330771

Dist	COUNTY	ROUTE	POST MILES TOTAL PROJECT	SHEET No.	TOTAL SHEETS
05	SLO	46	40.7/46.3	268	541

REGISTERED CIVIL ENGINEER 11-10-11 DATE

2-13-12
PLANS APPROVAL DATE

REGISTERED PROFESSIONAL ENGINEER JOSE A. BAUTISTA No. 68527 Exp. 9/30/13 CIVIL STATE OF CALIFORNIA

THE STATE OF CALIFORNIA OR ITS OFFICERS OR AGENTS SHALL NOT BE RESPONSIBLE FOR THE ACCURACY OR COMPLETENESS OF SCANNED COPIES OF THIS PLAN SHEET.

CONSTRUCTION SEQUENCE

STAGE 4

Const SOUTH PORTION OF DS No.21 FROM Sta 743+61.95 3.2′ Rt TO Sta 743+85.04 127.98′ Rt.

Const Ult EB Rte 46 TO FINISHED GRADE FROM Sta 710+00 TO Sta 881+50.

Const Rte 46 EB Trans.

Const REMAINDER OF McMILLAN CANYON CREEK BRIDGE.

Const EB WEIGH-IN-MOTION.

Const Prvt Dwy 9.

Const W CENTRE St.

REMOVE DETOUR 5.

TRAFFIC NOTES:

EB AND WB TRAFFIC Rte 46 ON Ult WB LANES FROM Sta 644+00 TO Sta 894+00.

EB TRAFFIC ON DETOUR 3.

EB AND WB TRAFFIC ON DETOUR 4.

ALL MINOR ROADS ON RESPECTIVE ALIGNMENTS.

CONTRACTOR TO PROVIDE ACCESS AT ALL ACCESS OPENINGS OF Rte 46 AT ALL TIMES THIS PHASE.

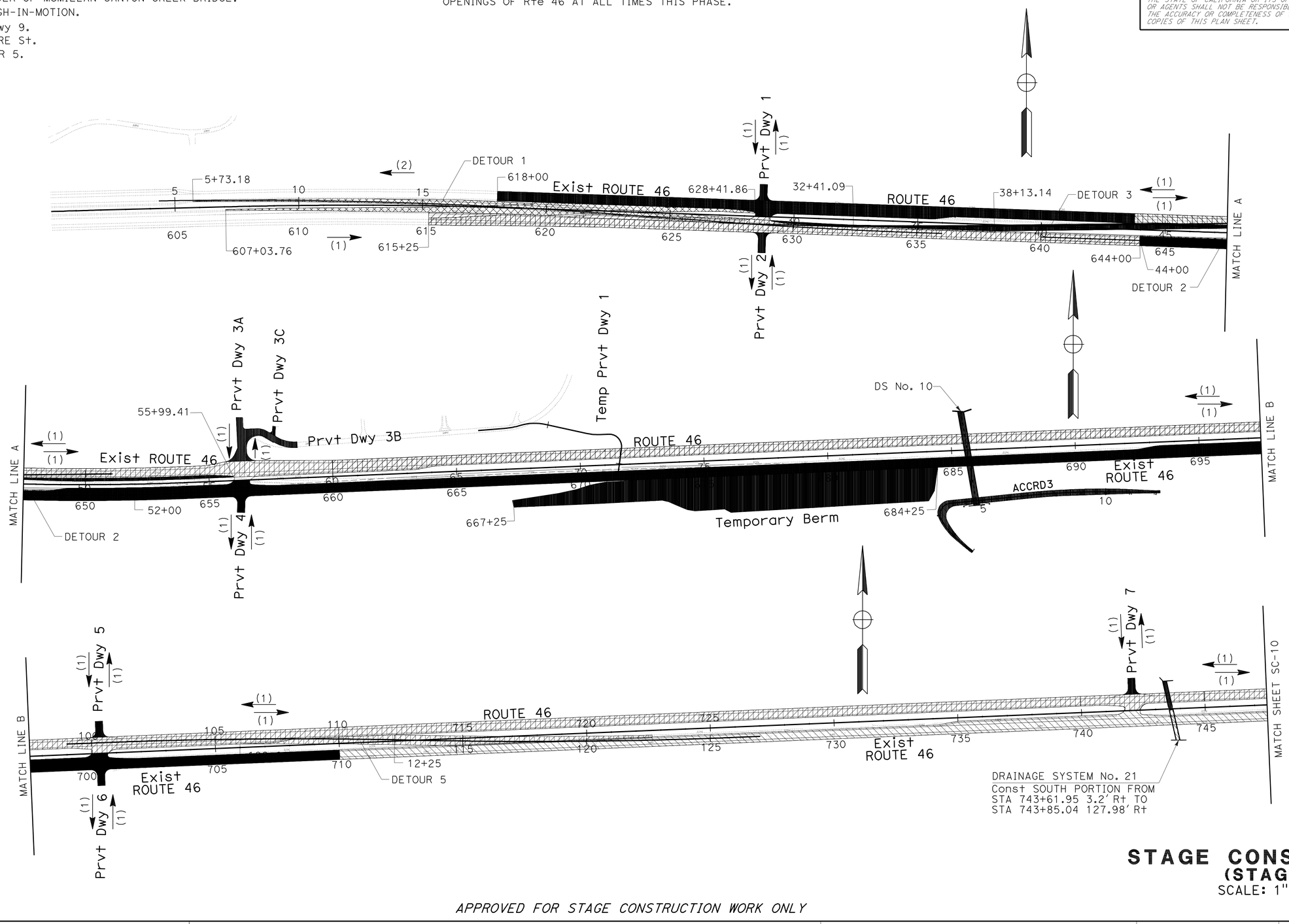

STAGE CONSTRUCTION
(STAGE 4)
SCALE: 1" = 200′

SC-11

APPROVED FOR STAGE CONSTRUCTION WORK ONLY

STATE OF CALIFORNIA - DEPARTMENT OF TRANSPORTATION
Caltrans
06-DESIGN

FUNCTIONAL SUPERVISOR: JACK WALKER
CALCULATED-DESIGNED BY: JOSE BAUTISTA
CHECKED BY: JACK WALKER
REVISED BY
DATE REVISED

LAST REVISION 10-21-11
DATE PLOTTED => 16-FEB-2012
TIME PLOTTED => 13:51

Dist	COUNTY	ROUTE	POST MILES TOTAL PROJECT	SHEET No.	TOTAL SHEETS
05	SLO	46	40.7/46.3	269	541

REGISTERED CIVIL ENGINEER 11-10-11 DATE

2-13-12
PLANS APPROVAL DATE

REGISTERED PROFESSIONAL ENGINEER JOSE A. BAUTISTA No. 68527 Exp. 9/30/13 CIVIL STATE OF CALIFORNIA

THE STATE OF CALIFORNIA OR ITS OFFICERS OR AGENTS SHALL NOT BE RESPONSIBLE FOR THE ACCURACY OR COMPLETENESS OF SCANNED COPIES OF THIS PLAN SHEET.

STAGE CONSTRUCTION
(STAGE 4)
SCALE: 1" = 200'

SC-12

APPROVED FOR STAGE CONSTRUCTION WORK ONLY

STATE OF CALIFORNIA - DEPARTMENT OF TRANSPORTATION
Caltrans
06-DESIGN

FUNCTIONAL SUPERVISOR: JACK WALKER
CALCULATED-DESIGNED BY: JOSE BAUTISTA
CHECKED BY: JACK WALKER
REVISED BY
DATE REVISED

LAST REVISION 12-07-11
DATE PLOTTED => 16-FEB-2012
TIME PLOTTED => 13:51

Dist	COUNTY	ROUTE	POST MILES TOTAL PROJECT	SHEET No.	TOTAL SHEETS
05	SLO	46	40.7/46.3	270	541

REGISTERED CIVIL ENGINEER 11-10-11 DATE

2-13-12
PLANS APPROVAL DATE

REGISTERED PROFESSIONAL ENGINEER JOSE A. BAUTISTA No. 68527 Exp. 9/30/13 CIVIL STATE OF CALIFORNIA

THE STATE OF CALIFORNIA OR ITS OFFICERS OR AGENTS SHALL NOT BE RESPONSIBLE FOR THE ACCURACY OR COMPLETENESS OF SCANNED COPIES OF THIS PLAN SHEET.

CONSTRUCTION SEQUENCE

STAGE 5

REMOVE DETOUR 3.

PLACE FINAL LIFT ON WB Rte 46 FROM Sta 643+75 TO Sta 883+25.46.

PLACE FINAL LIFT ON EB Rte 46 FROM Sta 615+25 TO Sta 644+00.

Const Rte 46 WB Trans BY OVERLAYING DETOUR 4.

REMOVE TOP PORTION OF Temp BERM LOCATED FROM Sta 670+25 TO Sta 684+25 TO Ult FG.

TRAFFIC NOTES:

WB TRAFFIC Rte 46 ON Ult WB LANES.

EB TRAFFIC Rte 46 ON Ult EB LANES.

CONTRACTOR TO PROVIDE ACCESS AT ALL ACCESS OPENINGS OF Rte 46 AT ALL TIMES THIS PHASE.

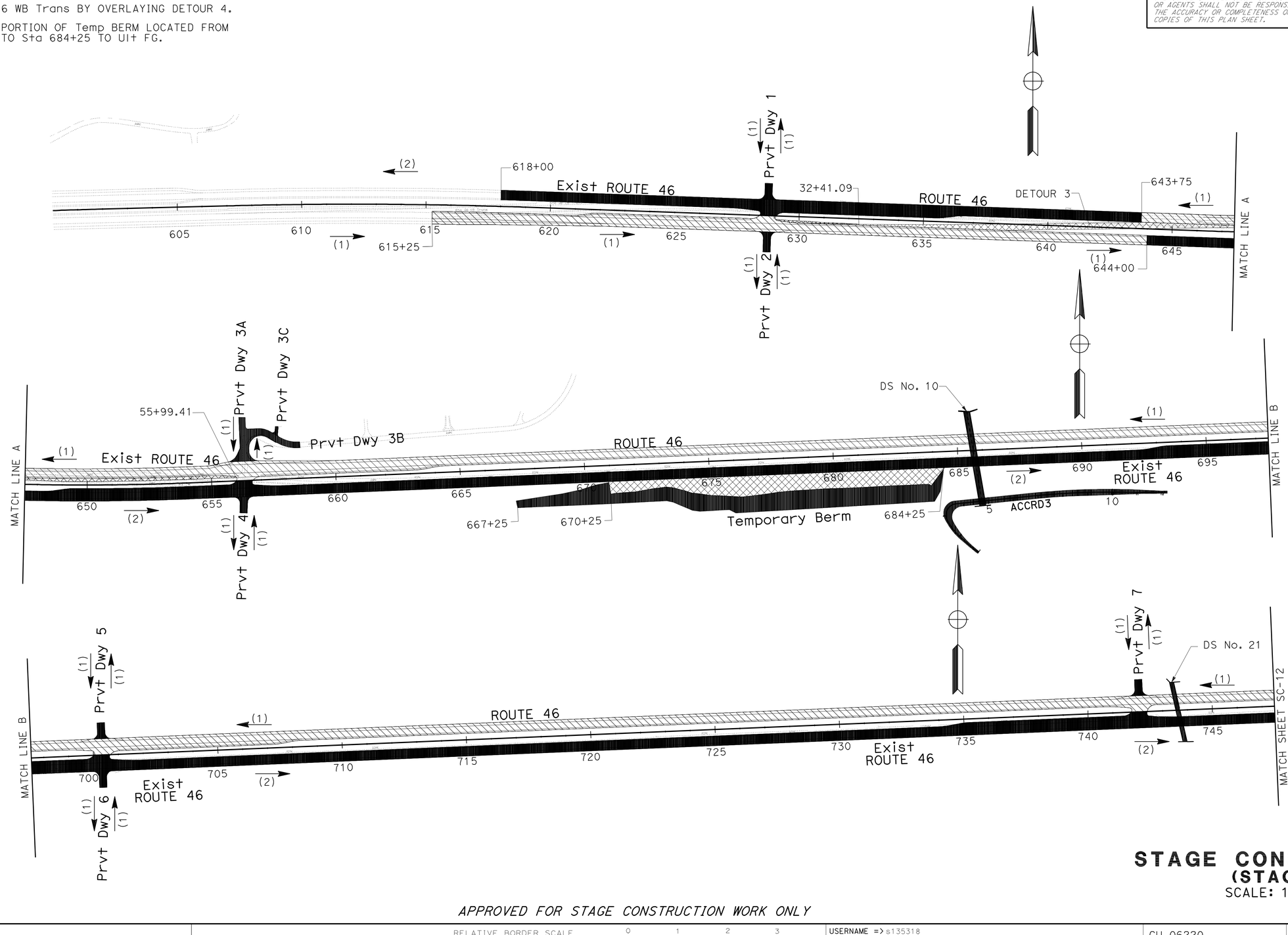

STAGE CONSTRUCTION
(STAGE 5)
SCALE: 1" = 200'

SC-13

APPROVED FOR STAGE CONSTRUCTION WORK ONLY

REVISED BY	DATE REVISED
JOSE BAUTISTA	
JACK WALKER	

CALCULATED-DESIGNED BY
CHECKED BY

FUNCTIONAL SUPERVISOR
JACK WALKER

STATE OF CALIFORNIA - DEPARTMENT OF TRANSPORTATION
Caltrans
06-DESIGN

LAST REVISION 10-21-11
DATE PLOTTED => 16-FEB-2012
TIME PLOTTED => 13:51

Dist	COUNTY	ROUTE	POST MILES TOTAL PROJECT	SHEET No.	TOTAL SHEETS
05	SLO	46	40.7/46.3	271	541

REGISTERED CIVIL ENGINEER 11-10-11 DATE

2-13-12
PLANS APPROVAL DATE

REGISTERED PROFESSIONAL ENGINEER JOSE A. BAUTISTA No. 68527 Exp. 9/30/13 CIVIL STATE OF CALIFORNIA

THE STATE OF CALIFORNIA OR ITS OFFICERS OR AGENTS SHALL NOT BE RESPONSIBLE FOR THE ACCURACY OR COMPLETENESS OF SCANNED COPIES OF THIS PLAN SHEET.

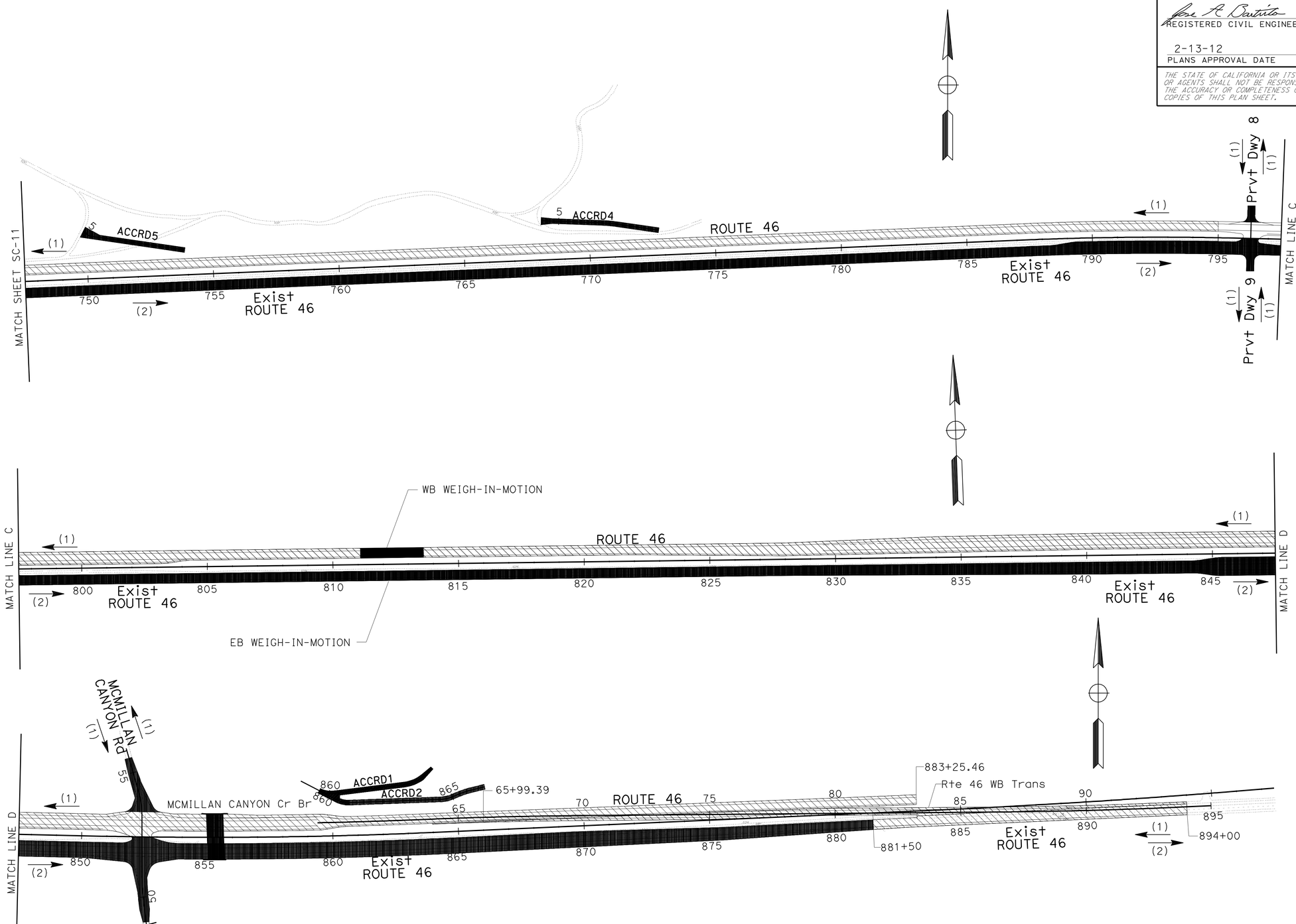

STAGE CONSTRUCTION
(STAGE 5)
SCALE: 1" = 200'

SC-14

APPROVED FOR STAGE CONSTRUCTION WORK ONLY

STATE OF CALIFORNIA - DEPARTMENT OF TRANSPORTATION
Caltrans
06-DESIGN

FUNCTIONAL SUPERVISOR: JACK WALKER
CALCULATED-DESIGNED BY: JOSE BAUTISTA
CHECKED BY: JACK WALKER
REVISED BY
DATE REVISED

LAST REVISION 10-31-11
DATE PLOTTED => 16-FEB-2012
TIME PLOTTED => 13:51

Dist	COUNTY	ROUTE	POST MILES TOTAL PROJECT	SHEET No.	TOTAL SHEETS
05	SLO	46	40.7/46.3	272	541

REGISTERED CIVIL ENGINEER 11-10-11 date

2-13-12
PLANS APPROVAL DATE

REGISTERED PROFESSIONAL ENGINEER JOSE M. ARGUELLO No. 51321 Exp. 06-30-12 CIVIL STATE OF CALIFORNIA

THE STATE OF CALIFORNIA OR ITS OFFICERS OR AGENTS SHALL NOT BE RESPONSIBLE FOR THE ACCURACY OR COMPLETENESS OF ELECTRONIC COPIES OF THIS PLAN SHEET.

NOTES:

1. SEE Rte 46 TYPICAL CROSS SECTIONS.
2. STAGE PG IS 0.15′ BELOW ULTIMATE PG Elev.
3. POINT "A" IS AT 0.15′ BELOW ULTIMATE FG. POINT "B" IS AT ULTIMATE FG.
4. COLD PLANE DEPTH AT ETW (POINT "A") IS 0′. COLD PLANE DEPTH AT ES (POINT "B") IS 0.15′.
5. REMOVE Temp Pvmt WIDENING.
6. FOR MEDIAN GRADING, SEE SHEET X-17.
7. CONSTRUCT OUTSIDE OF POINT "B" TO ULTIMATE FG.
8. FOR COLD PLANE LIMITS AND LOCATIONS, SEE LAYOUTS AND SHEET C-10.
9. Rte 46 WB LANES, SOUTH SIDE, FROM Sta 650+00 TO Sta 680+00, BUILD TEMPORARY 1.5:1 SLOPES.
10. For Temp Prvt Dwy 2 Pvmt LIMITS AND Pvmt ELEVATIONS, SEE STAGE CONSTRUCTION DETAIL PLANS.
11. FOR LIMITS OF TEMPORARY HOT MIX ASPHALT PAVEMENT MEDIAN CROSSOVER, SEE STAGE CONSTRUCTION DETAIL PLANS.
12. FOR MEDIAN GRADE, SEE STAGE CONSTRUCTION DETAILS TYPICAL CROSS SECTION STAGE 1 PHASE 1.
13. SUPERELEVATION AT THE SUBGRADE LEVEL TO FOLLOW THE FINISHED GRADE SUPERELEVATIOM, SEE Rte 46 TYPICAL CROSS SECTION PLANS.
14. For Temp RAILING (TYPE K) LOCATIONS, SEE TRAFFIC HANDLING PLANS.

LEGEND

- Temp Pvmt WIDENING
- ESA / TFESA — ENVIRONMENTALLY SENSITIVE AREA (ESA)
- LIMITS OF BIOLOGICAL MONITORING AREA (BMA)
- Temp BERM LIMITS

ABBREVIATIONS:

Prvt	PRIVATE
IES	INSIDE EDGE OF Shld
IETW	INSIDE EDGE OF TRAVELED WAY
OETW	OUTSIDE EDGE OF TRAVELED WAY
46TR	Rte 46 TRANSITION
TL	TRIM LINE
Ult	ULTIMATE
D1	DETOUR 1
D3	DETOUR 3
D4	DETOUR 4
D5	DETOUR 5
ST	STAGE
PH	PHASE
DS	DRAINAGE SYSTEM
ESA	ENVIRONMENTALLY SENSITIVE AREA
BMA	BIOLOGICAL MONITORING AREA
WIM	WEIGH-IN-MOTION
BkLn	BREAKLINE
ISS	INTERMEDIATE SLOPE STAKE
SFL	STAGE FLOW LINE
SHP	STAGE HINGE POINT

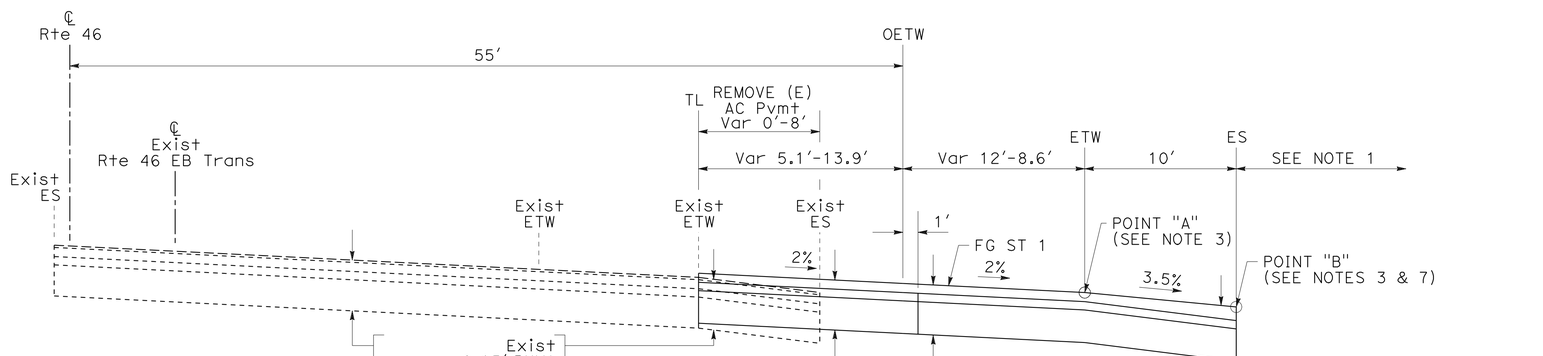

ROUTE 46 EB LANES
Sta 615+25.00 TO Sta 618+00.00

STAGE CONSTRUCTION DETAILS
(TYPICAL CROSS SECTIONS STAGE 1 PHASE 1)

NO SCALE **SCD-1**

STATE OF CALIFORNIA - DEPARTMENT OF TRANSPORTATION
Caltrans® 06-DESIGN

FUNCTIONAL SUPERVISOR: JACK WALKER
CALCULATED-DESIGNED BY: JOSE ARGUELLO
CHECKED BY: JOHN CLARKE
REVISED BY / DATE REVISED

LAST REVISION 11-14-11 | DATE PLOTTED => 16-FEB-2012 | TIME PLOTTED => 13:51

Dist	COUNTY	ROUTE	POST MILES TOTAL PROJECT	SHEET No.	TOTAL SHEETS
05	SLO	46	40.7/46.3	273	541

REGISTERED CIVIL ENGINEER DATE 11-10-11

2-13-12
PLANS APPROVAL DATE

REGISTERED PROFESSIONAL ENGINEER JOSE M. ARGUELLO No. 51321 Exp 06-30-12 CIVIL STATE OF CALIFORNIA

THE STATE OF CALIFORNIA OR ITS OFFICERS OR AGENTS SHALL NOT BE RESPONSIBLE FOR THE ACCURACY OR COMPLETENESS OF ELECTRONIC COPIES OF THIS PLAN SHEET.

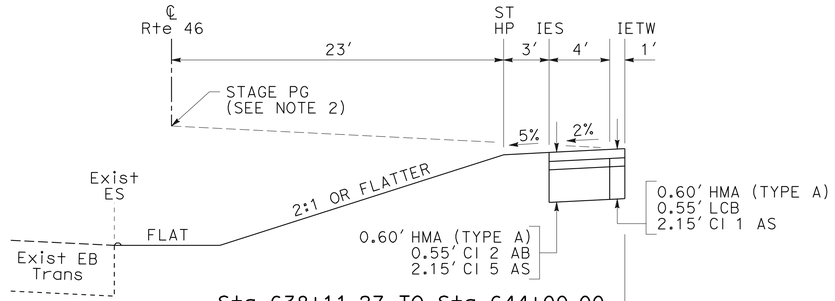

Sta 638+11.27 TO Sta 644+00.00

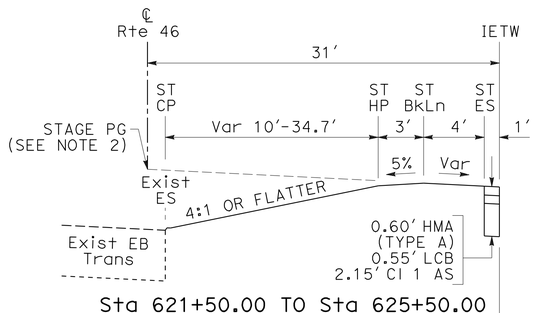

Sta 621+50.00 TO Sta 625+50.00

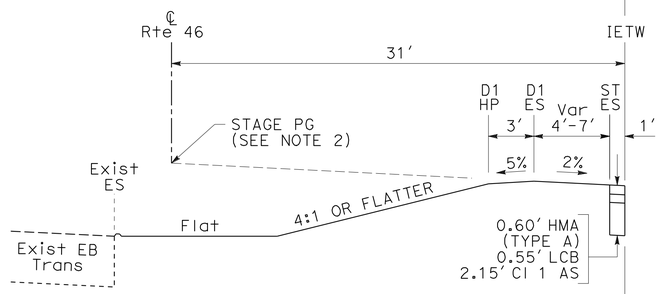

Sta 635+00.00 TO Sta 638+11.27

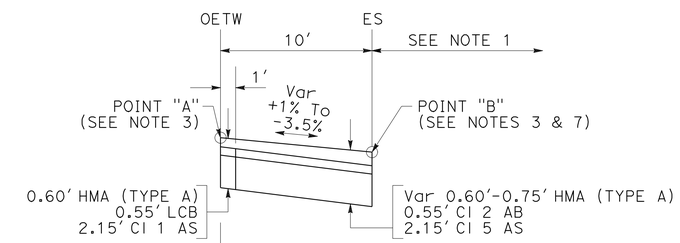

Sta 622+27.75 TO Sta 644+00.00

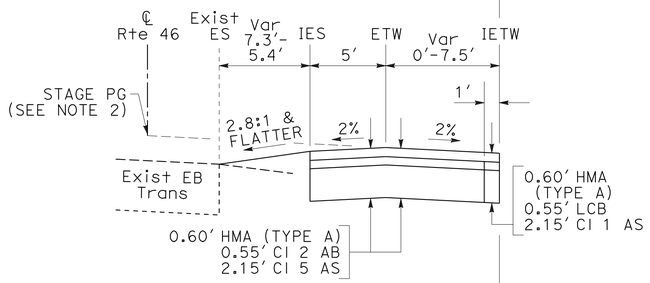

Sta 620+80.00 TO Sta 621+50.00

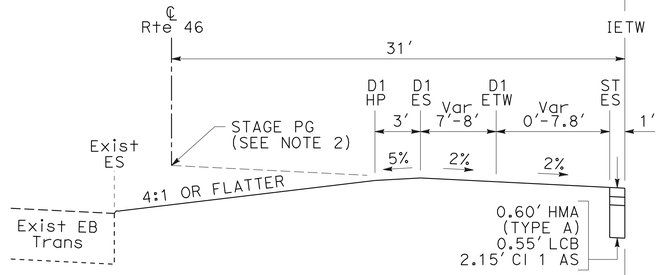

Sta 629+06.01 TO Sta 635+00.00

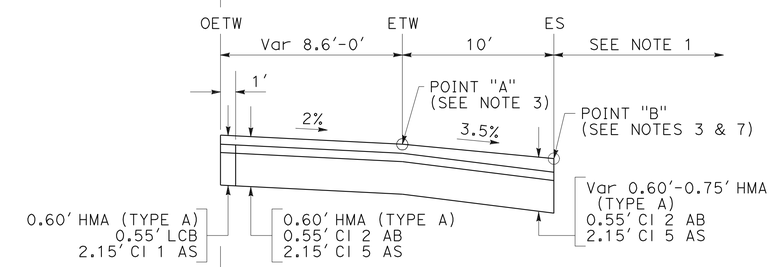

Sta 618+00.00 TO Sta 622+27.75

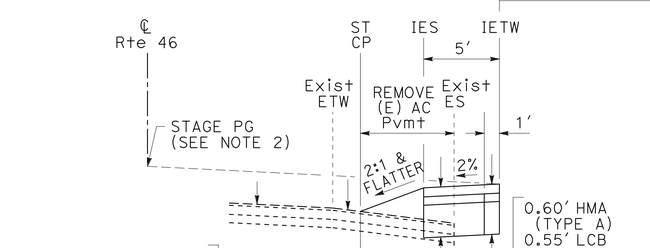

Sta 618+00.00 TO Sta 620+80.00

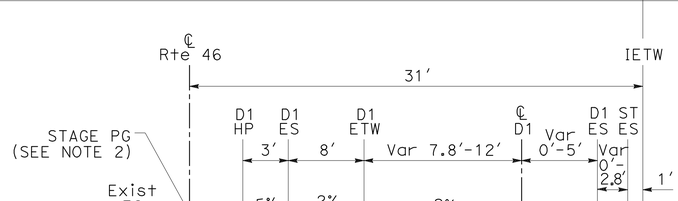

Sta 625+50.00 TO Sta 629+06.01

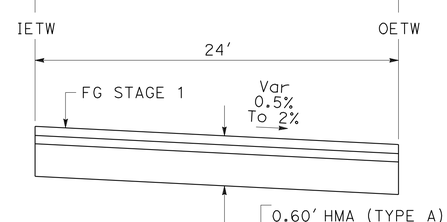

ROUTE 46 EB LANES
Sta 618+00.00 TO Sta 644+00.00

STAGE CONSTRUCTION DETAILS
(TYPICAL CROSS SECTIONS STAGE 1 PHASE 1)

NO SCALE

SCD-2

STATE OF CALIFORNIA - DEPARTMENT OF TRANSPORTATION
Caltrans® 06-DESIGN
FUNCTIONAL SUPERVISOR: JACK WALKER
CALCULATED-DESIGNED BY: JOSE ARGUELLO
CHECKED BY: JOHN CLARKE
REVISED BY / DATE REVISED

LAST REVISION 11-14-11
DATE PLOTTED => 16-FEB-2012
TIME PLOTTED => 13:52

Dist	COUNTY	ROUTE	POST MILES TOTAL PROJECT	SHEET No.	TOTAL SHEETS
05	SLO	46	40.7/46.3	274	541

REGISTERED CIVIL ENGINEER DATE 11-10-11

2-13-12
PLANS APPROVAL DATE

REGISTERED PROFESSIONAL ENGINEER JOSE M. ARGUELLO No. 51321 Exp. 06-30-12 CIVIL STATE OF CALIFORNIA

THE STATE OF CALIFORNIA OR ITS OFFICERS OR AGENTS SHALL NOT BE RESPONSIBLE FOR THE ACCURACY OR COMPLETENESS OF ELECTRONIC COPIES OF THIS PLAN SHEET.

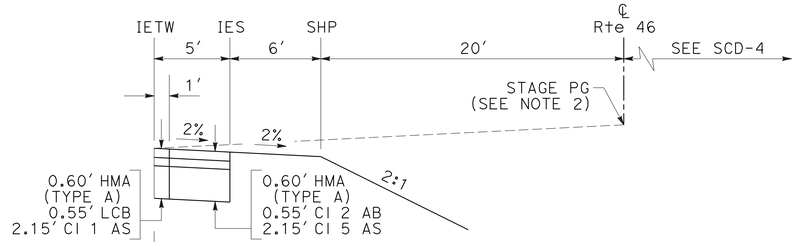

Sta 671+25.00 TO Sta 679+00.00

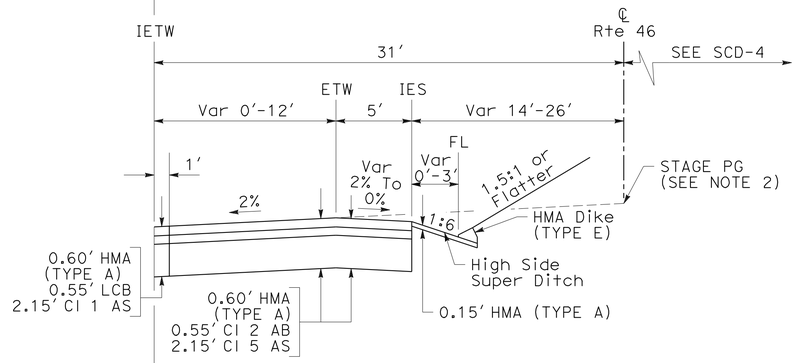

Sta 660+00.00 TO Sta 671+25.00

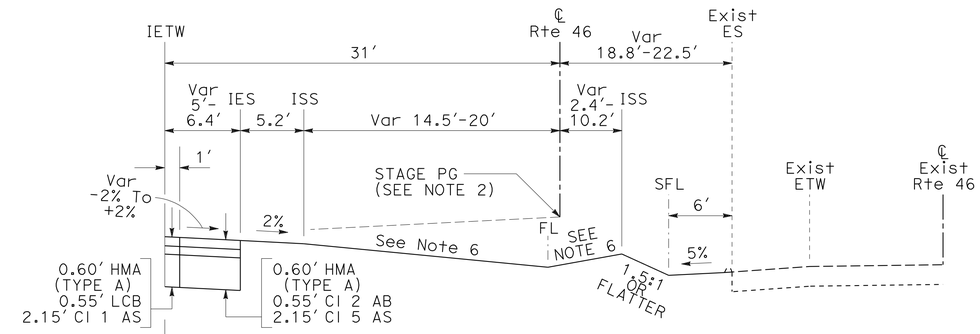

Sta 688+00.00 TO Sta 699+25.18

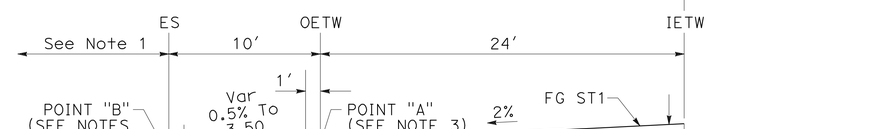

ROUTE 46 WB LANES
Sta 660+00.00 TO Sta 685+00.00
Sta 686+00.00 TO Sta 699+25.18

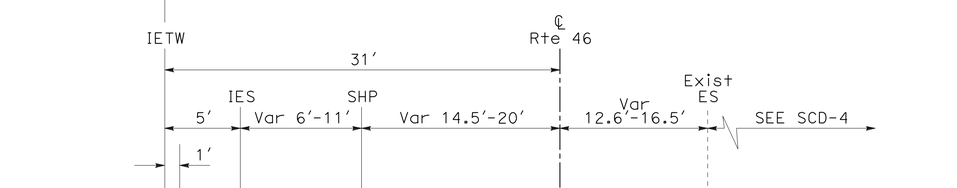

Sta 679+00.00 TO Sta 685+00.00
Sta 686+00.00 TO Sta 688+00.00

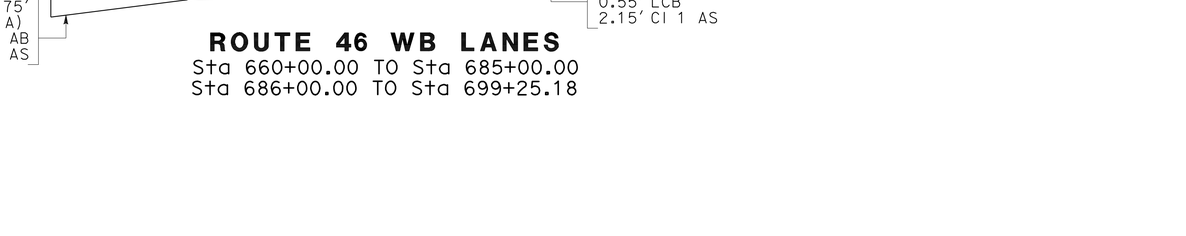

ROUTE 46 WB LANES
Sta 657+00.00 TO Sta 660+00.00

STAGE CONSTRUCTION DETAILS
(TYPICAL CROSS SECTIONS STAGE 1 PHASE 1)

NO SCALE **SCD-3**

STATE OF CALIFORNIA - DEPARTMENT OF TRANSPORTATION
Caltrans® 06-DESIGN

FUNCTIONAL SUPERVISOR: JACK WALKER
CALCULATED-DESIGNED BY: JOHN CLARKE
CHECKED BY: JOSE ARGUELLO
REVISED BY
DATE REVISED

LAST REVISION 11-14-11
DATE PLOTTED => 16-FEB-2012
TIME PLOTTED => 13:52

Dist	COUNTY	ROUTE	POST MILES TOTAL PROJECT	SHEET No.	TOTAL SHEETS
05	SLO	46	40.7/46.3	275	541

REGISTERED CIVIL ENGINEER DATE 11-10-11

2-13-12
PLANS APPROVAL DATE

REGISTERED PROFESSIONAL ENGINEER JOSE M. ARGUELLO No. 51321 Exp. 06-30-12 CIVIL STATE OF CALIFORNIA

THE STATE OF CALIFORNIA OR ITS OFFICERS OR AGENTS SHALL NOT BE RESPONSIBLE FOR THE ACCURACY OR COMPLETENESS OF ELECTRONIC COPIES OF THIS PLAN SHEET.

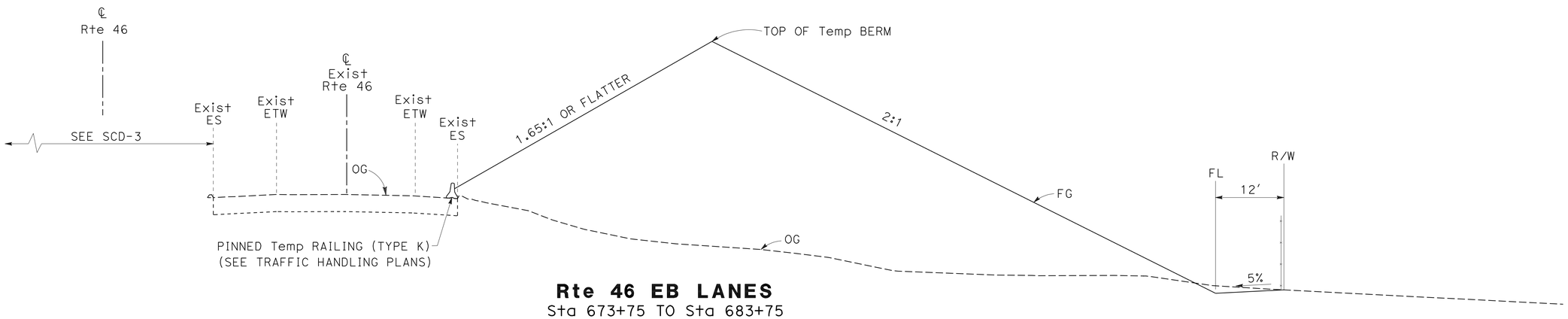

Rte 46 EB LANES
Sta 673+75 TO Sta 683+75

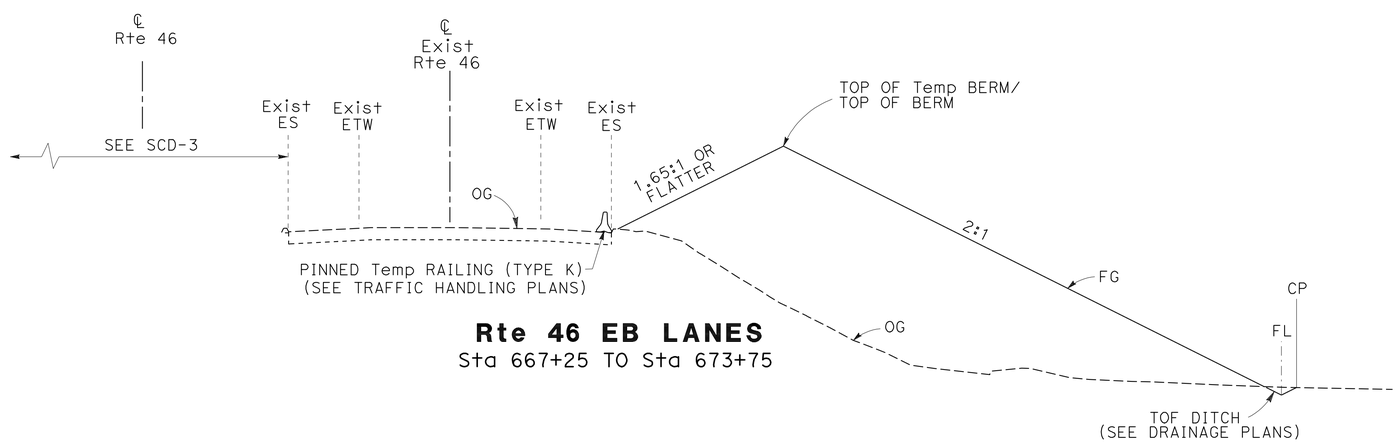

Rte 46 EB LANES
Sta 667+25 TO Sta 673+75

STAGE CONSTRUCTION DETAILS
(TYPICAL CROSS SECTIONS STAGE 1 PHASE 1)

NO SCALE **SCD-4**

REVISED BY | DATE REVISED
JOHN CLARKE | JOSE ARGUELLO
CALCULATED-DESIGNED BY | CHECKED BY
FUNCTIONAL SUPERVISOR
JACK WALKER

STATE OF CALIFORNIA - DEPARTMENT OF TRANSPORTATION
Caltrans
06-DESIGN

LAST REVISION 11-01-11 | DATE PLOTTED => 16-FEB-2012 | TIME PLOTTED => 13:52

Dist	COUNTY	ROUTE	POST MILES TOTAL PROJECT	SHEET No.	TOTAL SHEETS
05	SLO	46	40.7/46.3	276	541

REGISTERED CIVIL ENGINEER DATE 11-10-11

2-13-12
PLANS APPROVAL DATE

REGISTERED PROFESSIONAL ENGINEER JOSE M. ARGUELLO No. 51321 Exp. 06-30-12 CIVIL STATE OF CALIFORNIA

THE STATE OF CALIFORNIA OR ITS OFFICERS OR AGENTS SHALL NOT BE RESPONSIBLE FOR THE ACCURACY OR COMPLETENESS OF ELECTRONIC COPIES OF THIS PLAN SHEET.

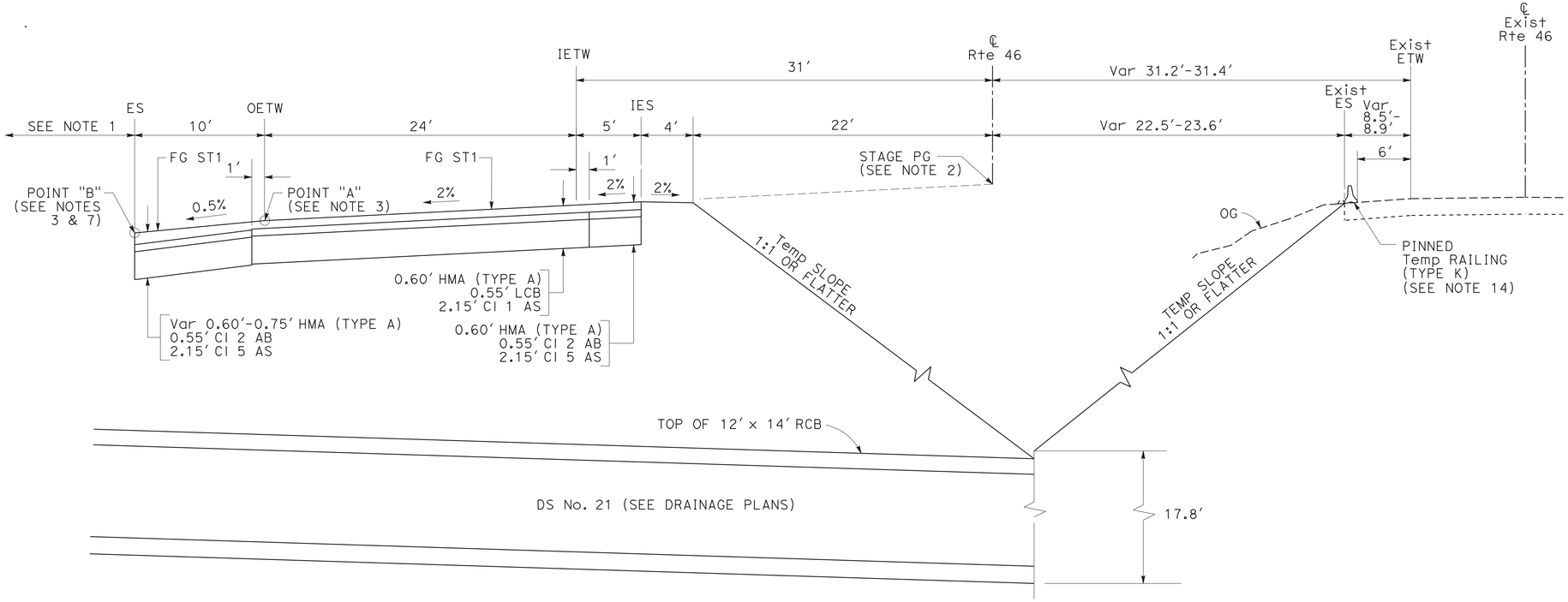

ROUTE 46 WB LANES
Sta 743+00.00 TO Sta 744+00.00

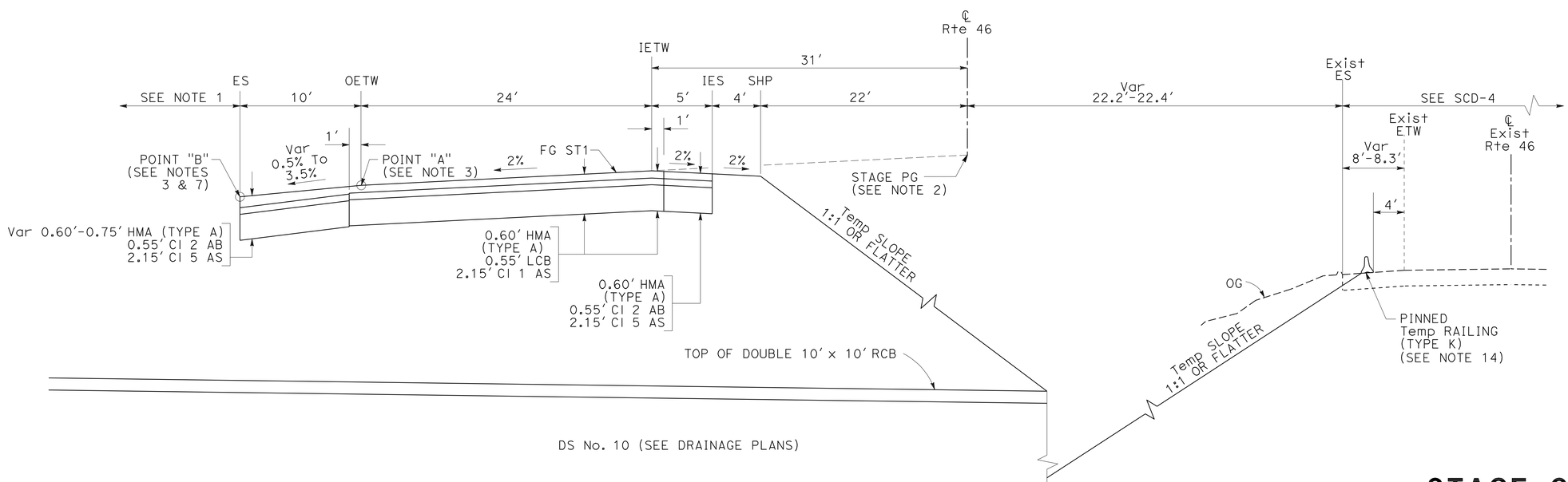

ROUTE 46 WB LANES
Sta 685+00.00 TO Sta 686+00.00

STAGE CONSTRUCTION DETAILS
(TYPICAL CROSS SECTIONS STAGE 1 PHASE 1)

NO SCALE **SCD-5**

REVISED BY	DATE REVISED
JOHN CLARKE	JOSE ARGUELLO
CALCULATED-DESIGNED BY	CHECKED BY
FUNCTIONAL SUPERVISOR	JACK WALKER

STATE OF CALIFORNIA - DEPARTMENT OF TRANSPORTATION
Caltrans 06-DESIGN

LAST REVISION 11-14-11 | DATE PLOTTED => 16-FEB-2012 | TIME PLOTTED => 13:52

Dist	COUNTY	ROUTE	POST MILES TOTAL PROJECT	SHEET No.	TOTAL SHEETS
05	SLO	46	40.7/46.3	277	541

REGISTERED CIVIL ENGINEER DATE 11-10-11

2-13-12
PLANS APPROVAL DATE

REGISTERED PROFESSIONAL ENGINEER JOSE M. ARGUELLO No. 51321 Exp. 06-30-12 CIVIL STATE OF CALIFORNIA

THE STATE OF CALIFORNIA OR ITS OFFICERS OR AGENTS SHALL NOT BE RESPONSIBLE FOR THE ACCURACY OR COMPLETENESS OF ELECTRONIC COPIES OF THIS PLAN SHEET.

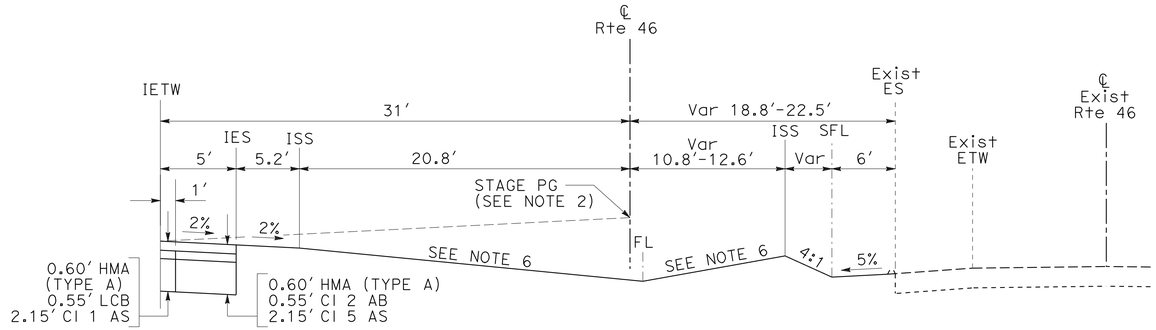

Sta 708+39.24 TO Sta 715+00.00

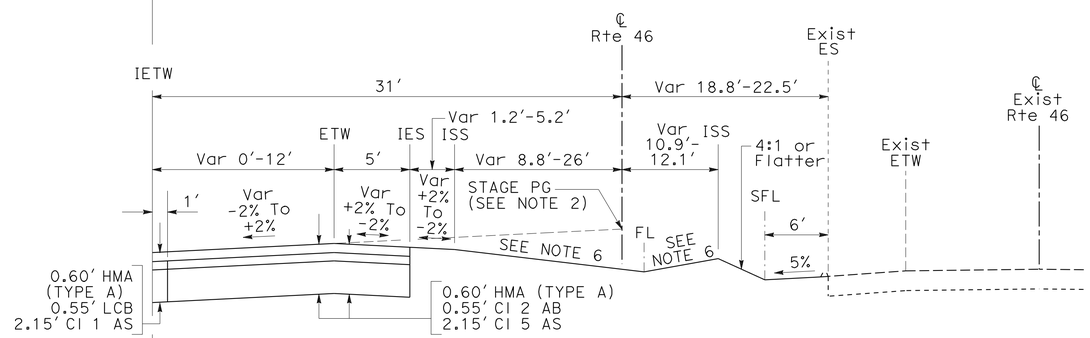

Sta 700+98.30 TO Sta 708+39.24

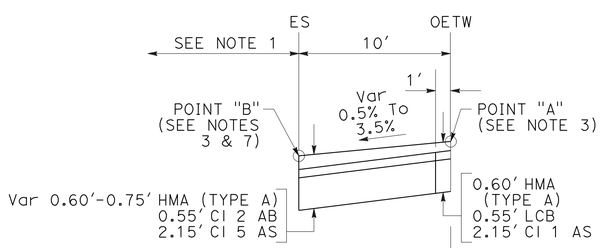

Sta 699+25.18 TO Sta 715+00.00

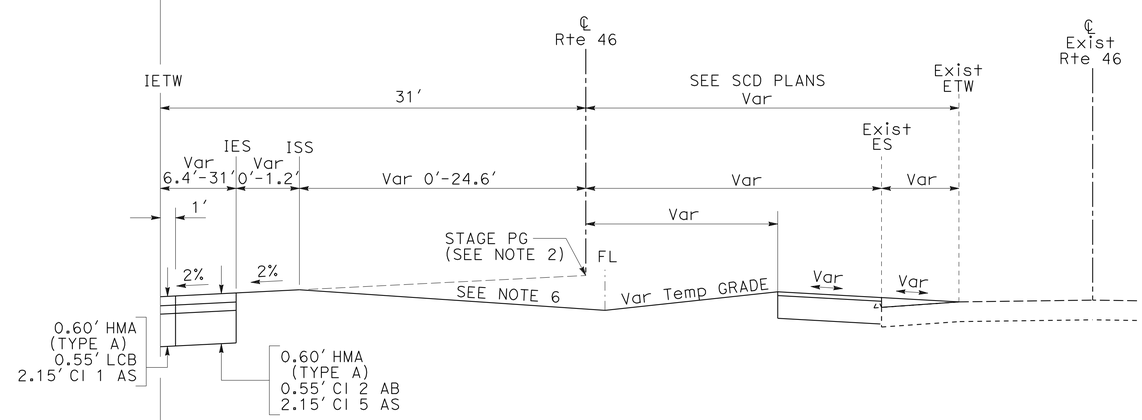

Sta 699+25.18 TO Sta 700+98.30

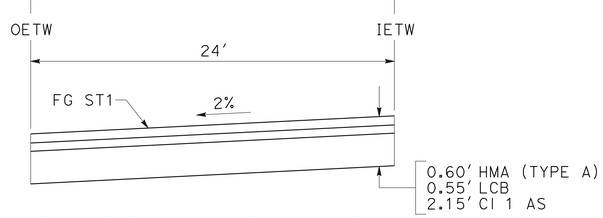

ROUTE 46 WB LANES
Sta 699+25.18 TO Sta 715+00.00

STAGE CONSTRUCTION DETAILS
(TYPICAL CROSS SECTIONS STAGE 1 PHASE 1)

NO SCALE **SCD-6**

STATE OF CALIFORNIA - DEPARTMENT OF TRANSPORTATION
Caltrans® 06-DESIGN

FUNCTIONAL SUPERVISOR: JACK WALKER
CALCULATED-DESIGNED BY: JOSE ARGUELLO
CHECKED BY: JOHN CLARKE
REVISED BY / DATE REVISED

LAST REVISION 11-14-11
DATE PLOTTED => 16-FEB-2012
TIME PLOTTED => 13:52

Dist	COUNTY	ROUTE	POST MILES TOTAL PROJECT	SHEET No.	TOTAL SHEETS
05	SLO	46	40.7/46.3	278	541

REGISTERED CIVIL ENGINEER DATE 11-10-11

2-13-12
PLANS APPROVAL DATE

REGISTERED PROFESSIONAL ENGINEER JOSE M. ARGUELLO No. 51321 Exp 06-30-12 CIVIL STATE OF CALIFORNIA

THE STATE OF CALIFORNIA OR ITS OFFICERS OR AGENTS SHALL NOT BE RESPONSIBLE FOR THE ACCURACY OR COMPLETENESS OF ELECTRONIC COPIES OF THIS PLAN SHEET.

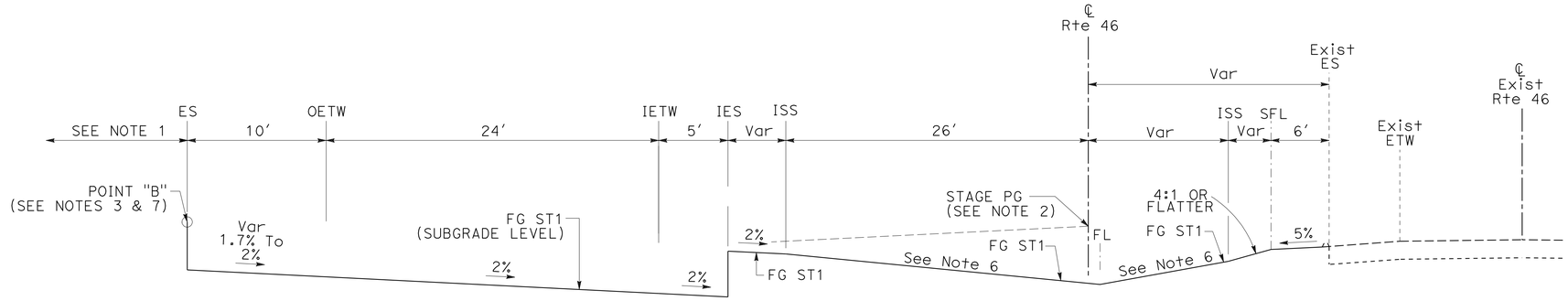

ROUTE 46 WB LANES
Sta 788+25.00 TO Sta 795+00.00

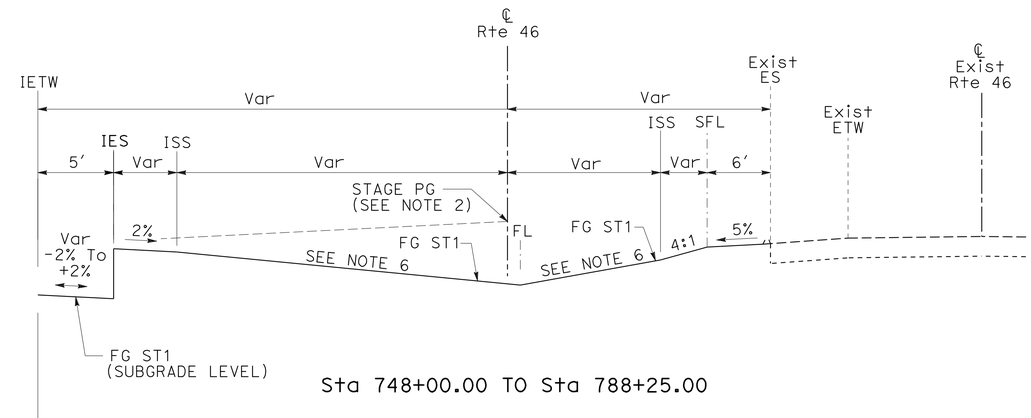

Sta 748+00.00 TO Sta 788+25.00

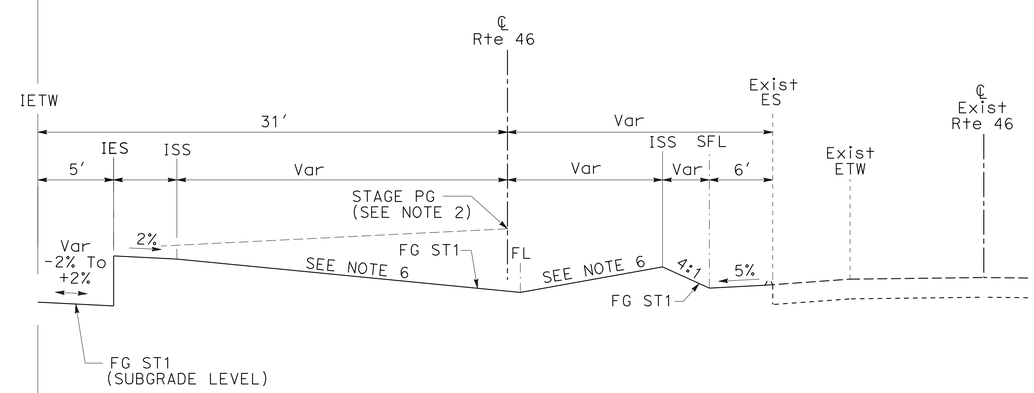

Sta 715+00.00 TO Sta 740+00.00
Sta 745+00.00 TO Sta 748+00.00

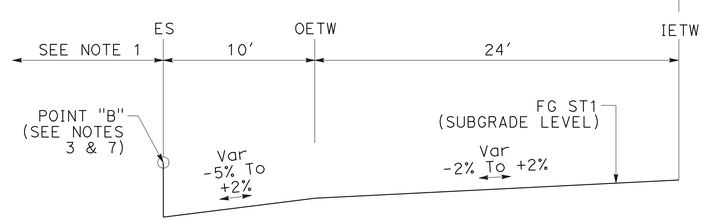

ROUTE 46 WB LANES
Sta 715+00.00 TO Sta 740+00.00
Sta 745+00.00 TO Sta 788+25.00

STAGE CONSTRUCTION DETAILS
(TYPICAL CROSS SECTIONS STAGE 1 PHASE 1)
NO SCALE

SCD-7

REVISED BY	DATE REVISED

CALCULATED-DESIGNED BY	CHECKED BY
JOHN CLARKE	JOSE ARGUELLO

FUNCTIONAL SUPERVISOR: JACK WALKER

STATE OF CALIFORNIA - DEPARTMENT OF TRANSPORTATION
Caltrans
06-DESIGN

LAST REVISION 11-14-11
DATE PLOTTED => 16-FEB-2012
TIME PLOTTED => 13:52

Dist	COUNTY	ROUTE	POST MILES TOTAL PROJECT	SHEET No.	TOTAL SHEETS
05	SLO	46	40.7/46.3	279	541

REGISTERED CIVIL ENGINEER DATE 11-10-11

2-13-12
PLANS APPROVAL DATE

REGISTERED PROFESSIONAL ENGINEER JOSE M. ARGUELLO No. 51321 Exp. 06-30-12 CIVIL STATE OF CALIFORNIA

THE STATE OF CALIFORNIA OR ITS OFFICERS OR AGENTS SHALL NOT BE RESPONSIBLE FOR THE ACCURACY OR COMPLETENESS OF ELECTRONIC COPIES OF THIS PLAN SHEET.

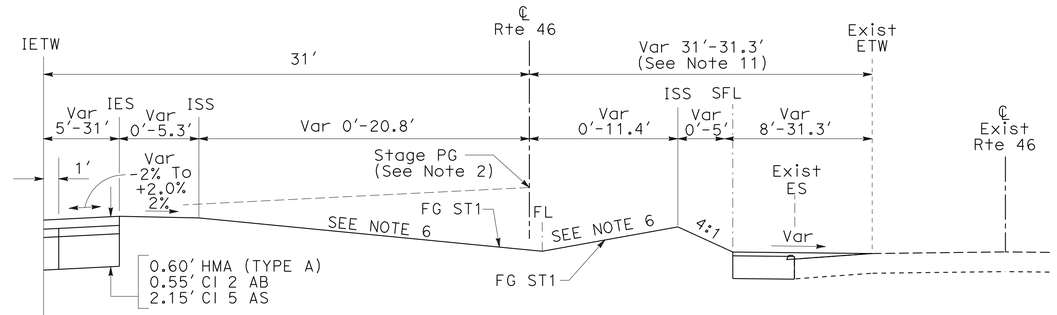

Sta 741+00.00 TO Sta 743+00.00
Sta 795+50.00 TO Sta 797+00.00

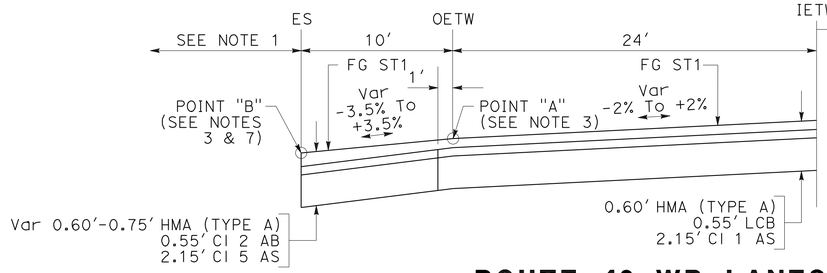

ROUTE 46 WB LANES

Sta 741+00.00 TO Sta 743+00.00
Sta 744+00.00 TO Sta 745+00.00
Sta 795+00.00 TO Sta 797+00.00

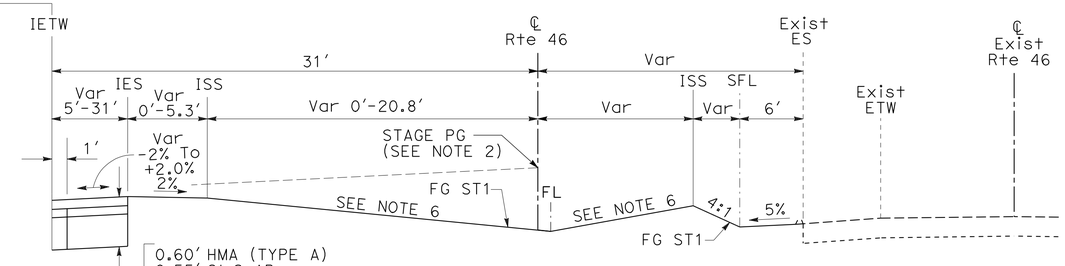

Sta 744+00.00 TO Sta 745+00.00
Sta 795+00.00 TO Sta 795+50.00

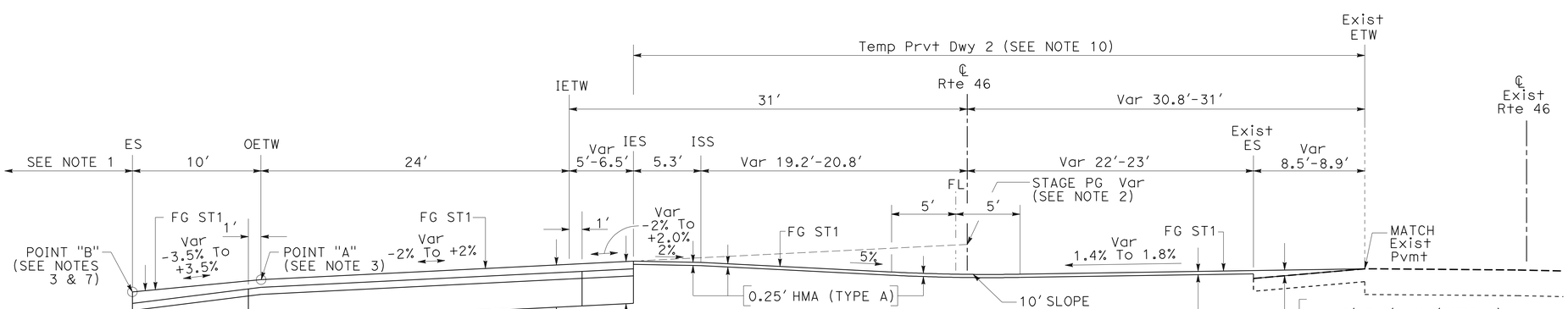

ROUTE 46 WB LANES

Sta 740+00.00 TO Sta 741+00.00

STAGE CONSTRUCTION DETAILS

(TYPICAL CROSS SECTIONS STAGE 1 PHASE 1)

NO SCALE **SCD-8**

REVISED BY	JOHN CLARKE
DATE REVISED	JOSE ARGUELLO
CALCULATED-DESIGNED BY	JOSE ARGUELLO
CHECKED BY	JOSE ARGUELLO
FUNCTIONAL SUPERVISOR	JACK WALKER

STATE OF CALIFORNIA - DEPARTMENT OF TRANSPORTATION
Caltrans
06-DESIGN

LAST REVISION 11-14-11 | DATE PLOTTED => 16-FEB-2012 | TIME PLOTTED => 13:52

Dist	COUNTY	ROUTE	POST MILES TOTAL PROJECT	SHEET No.	TOTAL SHEETS
05	SLO	46	40.7/46.3	280	541

REGISTERED CIVIL ENGINEER DATE 11-10-11

2-13-12
PLANS APPROVAL DATE

REGISTERED PROFESSIONAL ENGINEER
JOSE M. ARGUELLO
No. 51321
Exp. 06-30-12
CIVIL
STATE OF CALIFORNIA

THE STATE OF CALIFORNIA OR ITS OFFICERS OR AGENTS SHALL NOT BE RESPONSIBLE FOR THE ACCURACY OR COMPLETENESS OF ELECTRONIC COPIES OF THIS PLAN SHEET.

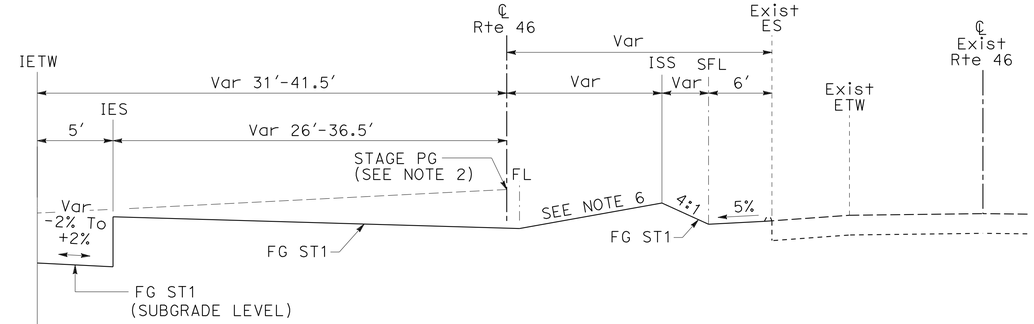

Sta 804+35.14 TO Sta 810+00.00

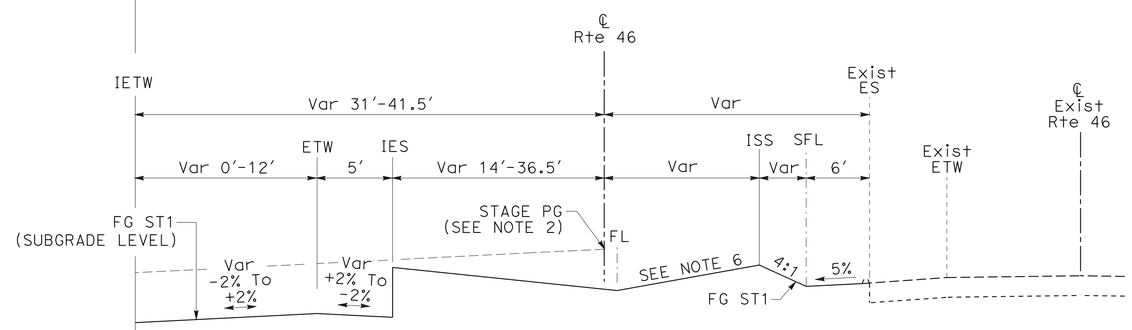

Sta 803+50.00 TO Sta 804+35.14

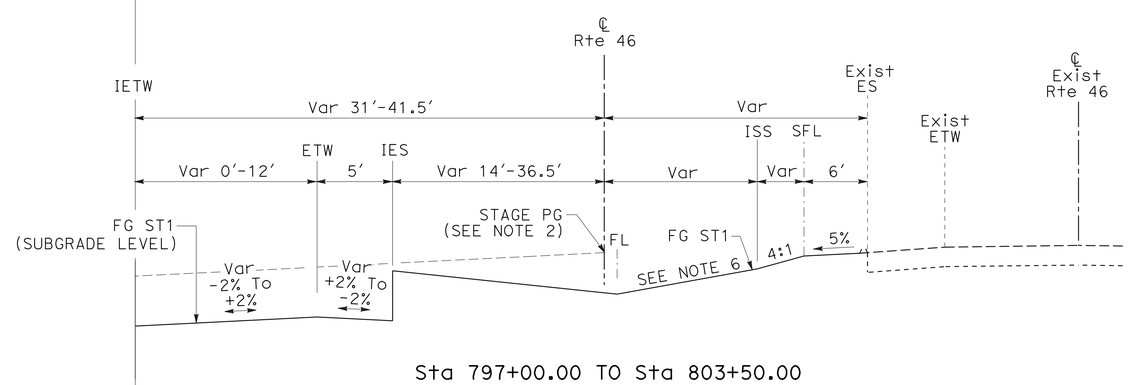

Sta 797+00.00 TO Sta 803+50.00

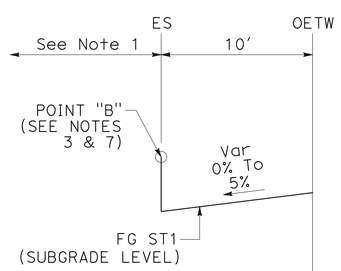

Sta 797+00.00 TO Sta 810+00.00

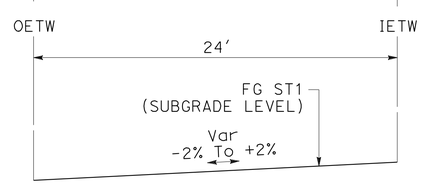

ROUTE 46 WB LANES
Sta 797+00.00 TO Sta 810+00.00

STAGE CONSTRUCTION DETAILS
(TYPICAL CROSS SECTIONS STAGE 1 PHASE 1)

NO SCALE **SCD-9**

STATE OF CALIFORNIA - DEPARTMENT OF TRANSPORTATION
Caltrans® 06-DESIGN

FUNCTIONAL SUPERVISOR: JACK WALKER
CALCULATED-DESIGNED BY: JOHN CLARKE
CHECKED BY: JOSE ARGUELLO
REVISED BY
DATE REVISED

LAST REVISION 11-14-11
DATE PLOTTED => 16-FEB-2012
TIME PLOTTED => 13:52

Dist	COUNTY	ROUTE	POST MILES TOTAL PROJECT	SHEET No.	TOTAL SHEETS
05	SLO	46	40.7/46.3	281	541

REGISTERED CIVIL ENGINEER DATE 11-10-11

2-13-12
PLANS APPROVAL DATE

REGISTERED PROFESSIONAL ENGINEER JOSE M. ARGUELLO No. 51321 Exp. 06-30-12 CIVIL STATE OF CALIFORNIA

THE STATE OF CALIFORNIA OR ITS OFFICERS OR AGENTS SHALL NOT BE RESPONSIBLE FOR THE ACCURACY OR COMPLETENESS OF ELECTRONIC COPIES OF THIS PLAN SHEET.

NOTE:

* Sta 811+10.49 TO Sta 813+60.49, SEE Sht C-13, WEIGH-IN-MOTION SENSOR, FOR ADDITIONAL DETAILS.

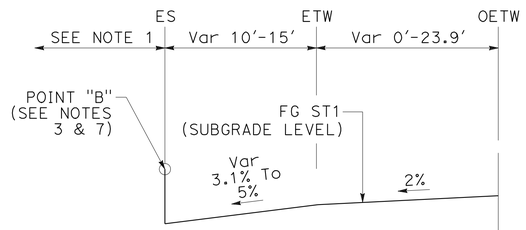

Sta 828+00.00 TO Sta 850+00.00

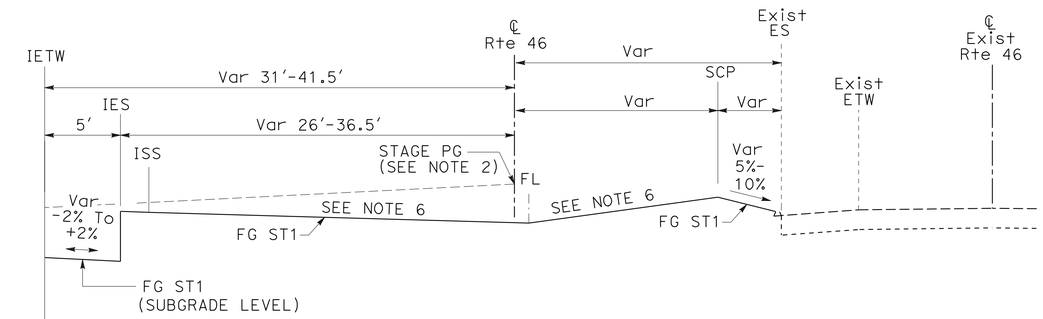

Sta 815+75.00 TO Sta 850+00.00

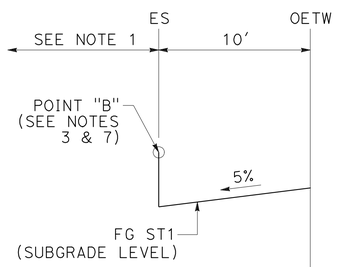

Sta 810+00.00 TO Sta 811+10.49
Sta 813+60.49 TO Sta 828+00.00

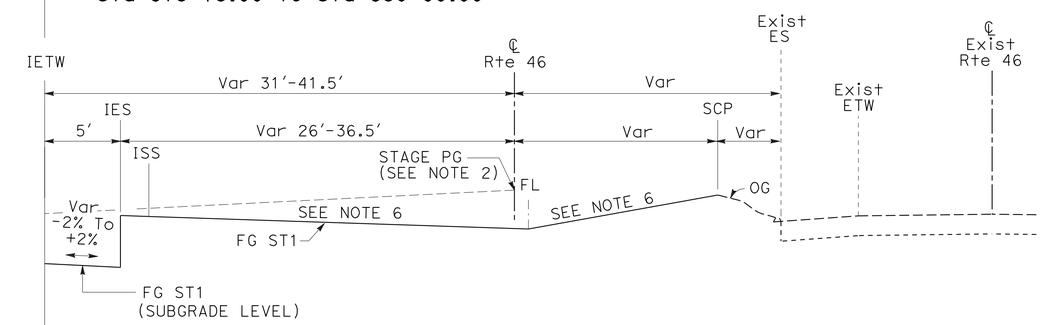

Sta 810+00.00 TO Sta 811+10.49
Sta 813+60.49 TO Sta 815+75.00

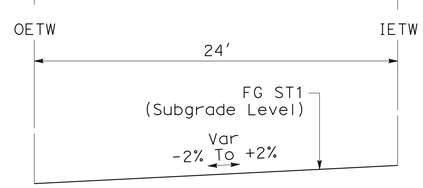

ROUTE 46 WB LANES *
Sta 810+00.00 TO Sta 811+10.49
Sta 813+60.49 TO Sta 850+00.00

STAGE CONSTRUCTION DETAILS
(TYPICAL CROSS SECTIONS STAGE 1 PHASE 1)

NO SCALE **SCD-10**

STATE OF CALIFORNIA - DEPARTMENT OF TRANSPORTATION
Caltrans 06-DESIGN

FUNCTIONAL SUPERVISOR: JACK WALKER
CALCULATED-DESIGNED BY: JOSE ARGUELLO
CHECKED BY: JOHN CLARKE
REVISED BY / DATE REVISED

LAST REVISION 12-22-11 | DATE PLOTTED => 16-FEB-2012 | TIME PLOTTED => 13:45

Dist	COUNTY	ROUTE	POST MILES TOTAL PROJECT	SHEET No.	TOTAL SHEETS
05	SLO	46	40.7/46.3	282	541

REGISTERED CIVIL ENGINEER DATE 11-10-11

2-13-12
PLANS APPROVAL DATE

REGISTERED PROFESSIONAL ENGINEER JOSE M. ARGUELLO No. 51321 Exp. 06-30-12 CIVIL STATE OF CALIFORNIA

THE STATE OF CALIFORNIA OR ITS OFFICERS OR AGENTS SHALL NOT BE RESPONSIBLE FOR THE ACCURACY OR COMPLETENESS OF ELECTRONIC COPIES OF THIS PLAN SHEET.

NOTE:

* (Sta 854+89.95 TO Sta 855+71.95, SEE McMILLAN CANYON Cr Br PLANS FOR ADDITIONAL DETAIL)

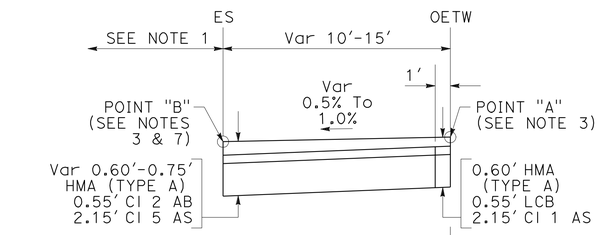

Sta 854+00.00 TO Sta 857+00.00 *

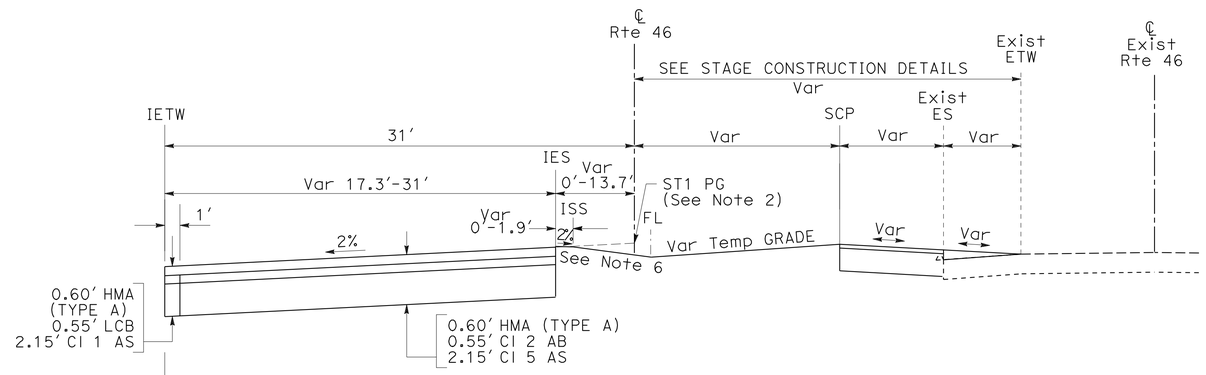

Sta 851+60.98 TO Sta 853+18.71

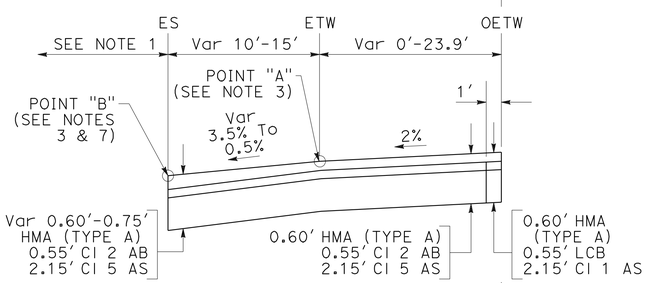

Sta 850+00.00 TO Sta 854+00.00

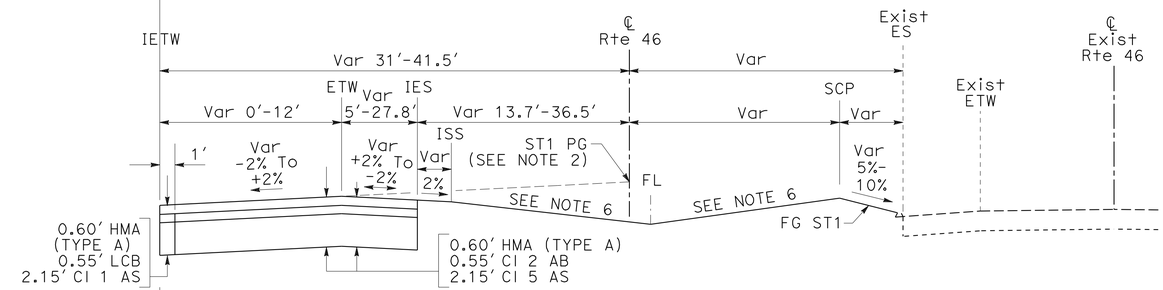

Sta 850+00.00 TO Sta 851+60.98
Sta 853+18.71 TO Sta 857+00.00 *

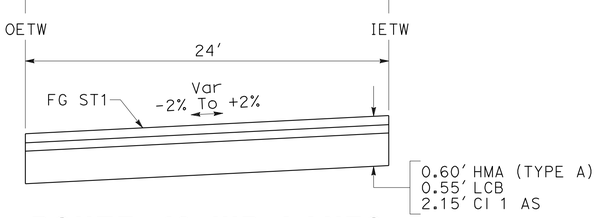

ROUTE 46 WB LANES
Sta 850+00.00 TO Sta 857+00.00 *

STAGE CONSTRUCTION DETAILS
(TYPICAL CROSS SECTIONS STAGE 1 PHASE 1)

NO SCALE **SCD-11**

STATE OF CALIFORNIA - DEPARTMENT OF TRANSPORTATION
Caltrans® 06-DESIGN

FUNCTIONAL SUPERVISOR: JACK WALKER
CALCULATED-DESIGNED BY: JOSE ARGUELLO
CHECKED BY: JOHN CLARKE
REVISED BY
DATE REVISED

LAST REVISION 11-14-11
DATE PLOTTED => 16-FEB-2012
TIME PLOTTED => 13:45

Dist	COUNTY	ROUTE	POST MILES TOTAL PROJECT	SHEET No.	TOTAL SHEETS
05	SLO	46	40.7/46.3	283	541

REGISTERED CIVIL ENGINEER DATE 11-10-11

2-13-12
PLANS APPROVAL DATE

REGISTERED PROFESSIONAL ENGINEER JOSE M. ARGUELLO No. 51321 Exp. 06-30-12 CIVIL STATE OF CALIFORNIA

THE STATE OF CALIFORNIA OR ITS OFFICERS OR AGENTS SHALL NOT BE RESPONSIBLE FOR THE ACCURACY OR COMPLETENESS OF ELECTRONIC COPIES OF THIS PLAN SHEET.

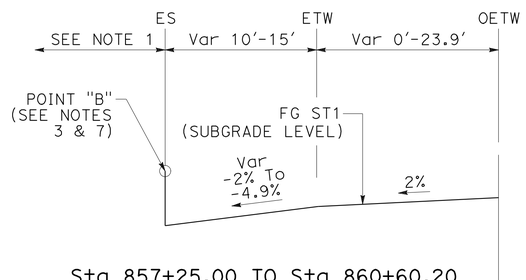

Sta 857+25.00 TO Sta 860+60.20

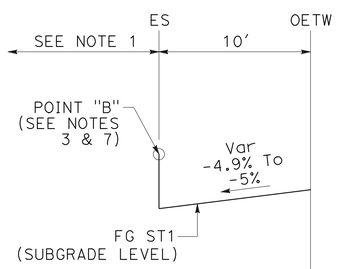

Sta 860+60.20 TO Sta 883+25.46

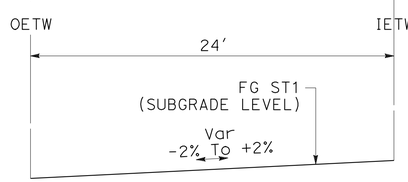

ROUTE 46 WB LANES
Sta 857+25.00 TO Sta 883+25.46

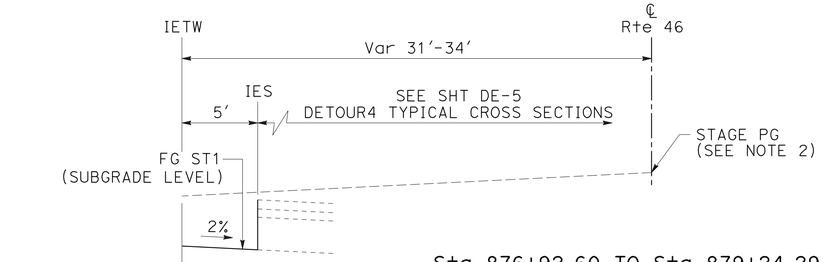

Sta 876+92.60 TO Sta 879+24.29

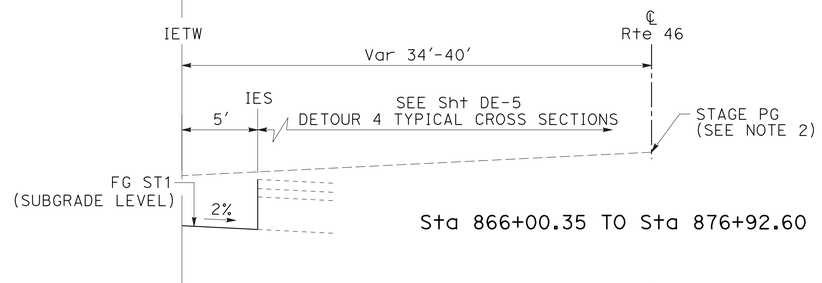

Sta 866+00.35 TO Sta 876+92.60

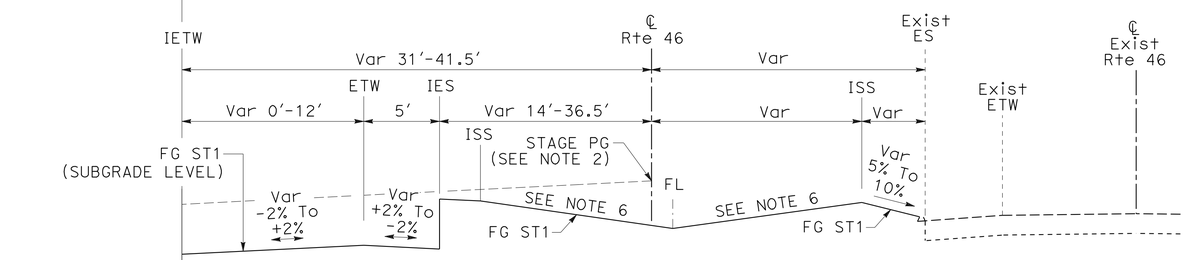

Sta 857+25.00 TO Sta 860+50.00

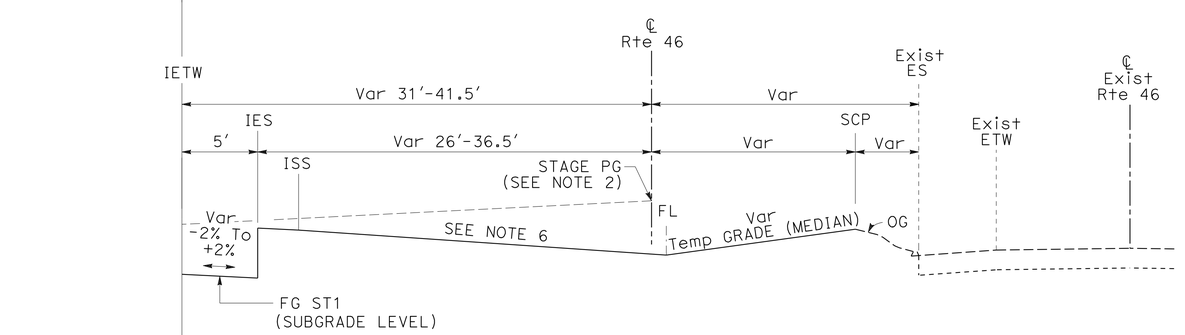

Sta 860+50.00 TO Sta 866+00.35
Sta 879+24.29 TO Sta 883+25.46

STAGE CONSTRUCTION DETAILS
(TYPICAL CROSS SECTIONS STAGE 1 PHASE 1)

NO SCALE **SCD-12**

STATE OF CALIFORNIA - DEPARTMENT OF TRANSPORTATION
Caltrans® 06-DESIGN

FUNCTIONAL SUPERVISOR: JACK WALKER
CALCULATED-DESIGNED BY: JOHN CLARKE
CHECKED BY: JOSE ARGUELLO
REVISED BY
DATE REVISED

LAST REVISION 11-14-11
DATE PLOTTED => 16-FEB-2012
TIME PLOTTED => 13:46

Dist	COUNTY	ROUTE	POST MILES TOTAL PROJECT	SHEET No.	TOTAL SHEETS
05	SLO	46	40.7/46.3	284	541

REGISTERED CIVIL ENGINEER DATE 11-10-11

2-13-12
PLANS APPROVAL DATE

REGISTERED PROFESSIONAL ENGINEER JOSE M. ARGUELLO No. 51321 Exp. 06-30-12 CIVIL STATE OF CALIFORNIA

THE STATE OF CALIFORNIA OR ITS OFFICERS OR AGENTS SHALL NOT BE RESPONSIBLE FOR THE ACCURACY OR COMPLETENESS OF ELECTRONIC COPIES OF THIS PLAN SHEET.

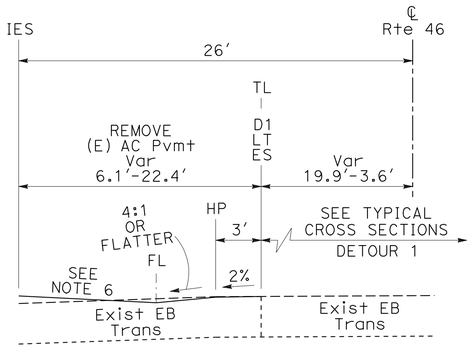

ROUTE 46 WB LANES
Sta 619+42.76 TO Sta 624+25.57

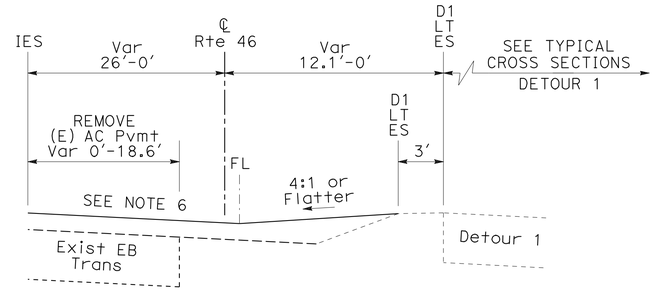

ROUTE 46 WB LANES
Sta 625+18.45 TO Sta 628+40.28

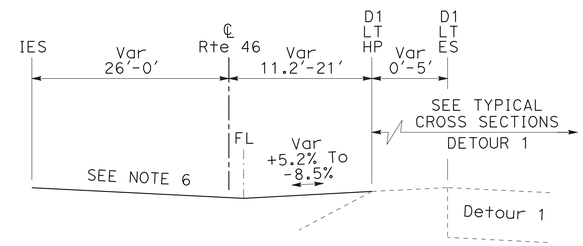

ROUTE 46 WB LANES
Sta 629+07.61 TO Sta 638+11.27

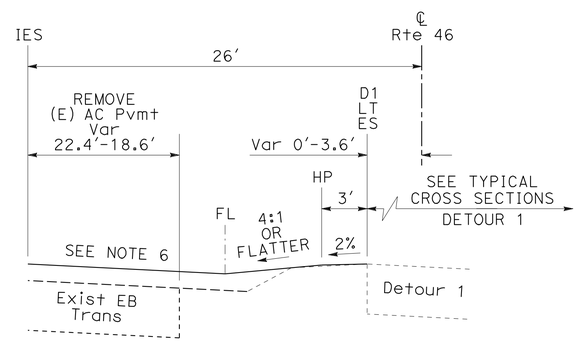

ROUTE 46 WB LANES
Sta 624+25.57 TO Sta 625+18.45

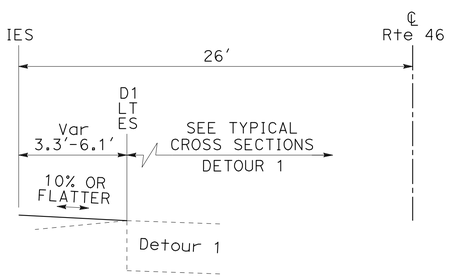

ROUTE 46 WB LANES
Sta 618+00.00 TO Sta 619+42.76

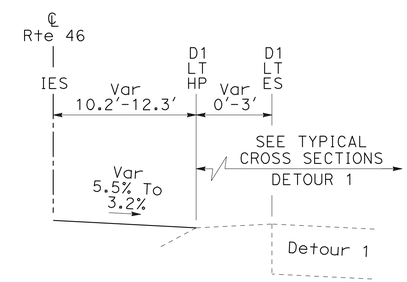

ROUTE 46 WB LANES
Sta 628+40.28 TO Sta 629+07.61

STAGE CONSTRUCTION DETAILS
(TYPICAL CROSS SECTIONS STAGE 2 PHASE 1)

NO SCALE **SCD-13**

STATE OF CALIFORNIA - DEPARTMENT OF TRANSPORTATION
Caltrans 06-DESIGN

FUNCTIONAL SUPERVISOR: JACK WALKER
CALCULATED-DESIGNED BY: JOHN CLARKE
CHECKED BY: JOSE ARGUELLO
REVISED BY
DATE REVISED

LAST REVISION 11-09-11
DATE PLOTTED => 16-FEB-2012
TIME PLOTTED => 13:46

Dist	COUNTY	ROUTE	POST MILES TOTAL PROJECT	SHEET No.	TOTAL SHEETS
05	SLO	46	40.7/46.3	285	541

REGISTERED CIVIL ENGINEER 11-10-11 DATE

2-13-12
PLANS APPROVAL DATE

REGISTERED PROFESSIONAL ENGINEER JOSE M. ARGUELLO No. 51321 Exp. 06-30-12 CIVIL STATE OF CALIFORNIA

THE STATE OF CALIFORNIA OR ITS OFFICERS OR AGENTS SHALL NOT BE RESPONSIBLE FOR THE ACCURACY OR COMPLETENESS OF ELECTRONIC COPIES OF THIS PLAN SHEET.

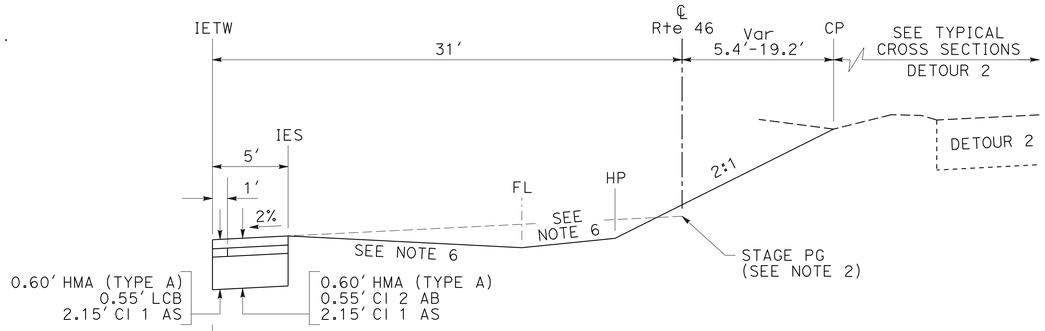

Sta 649+75.00 TO Sta 654+50.00

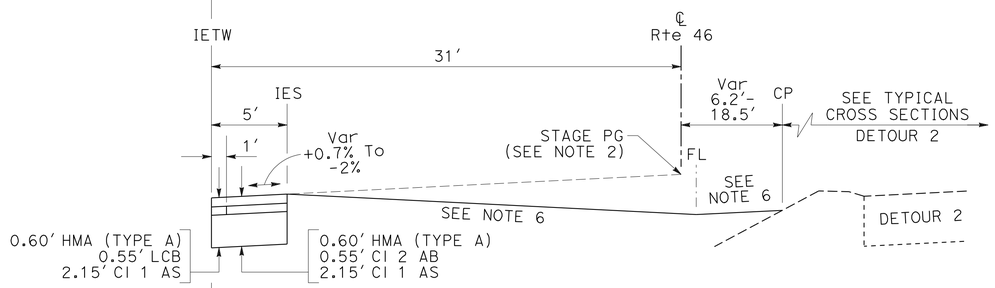

Sta 643+75.00 TO Sta 649+75.00

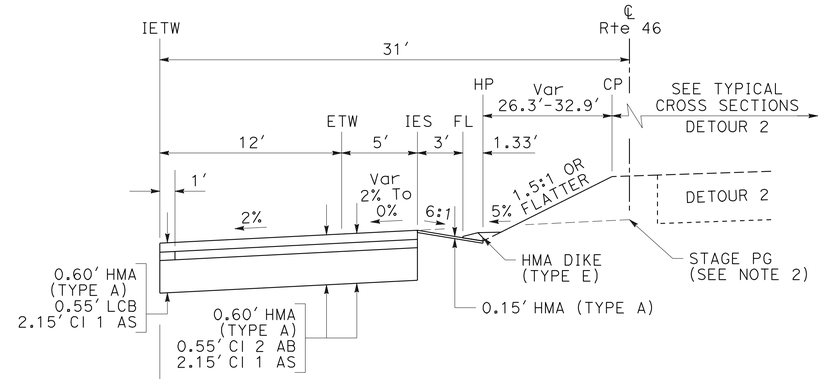

Sta 657+04.89 TO Sta 660+00.00

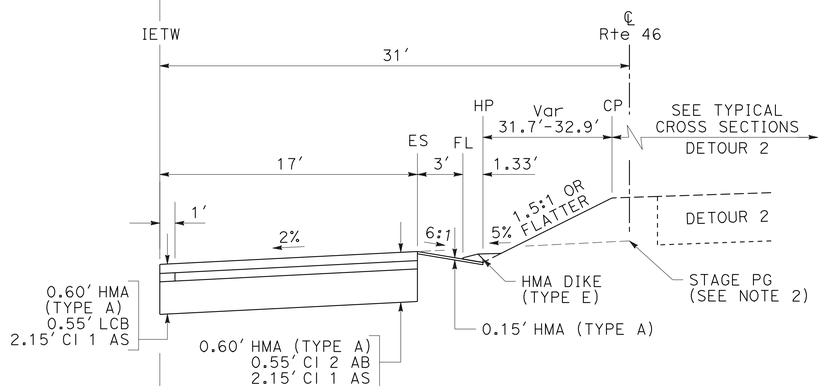

Sta 656+01.06 TO Sta 657+04.89

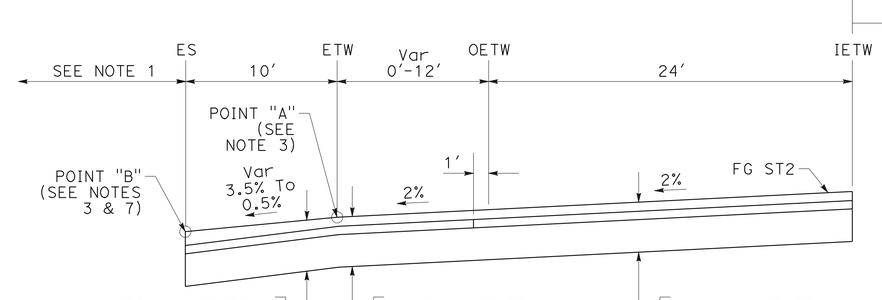

ROUTE 46 WB LANES
Sta 643+75.00 TO Sta 660+00.00

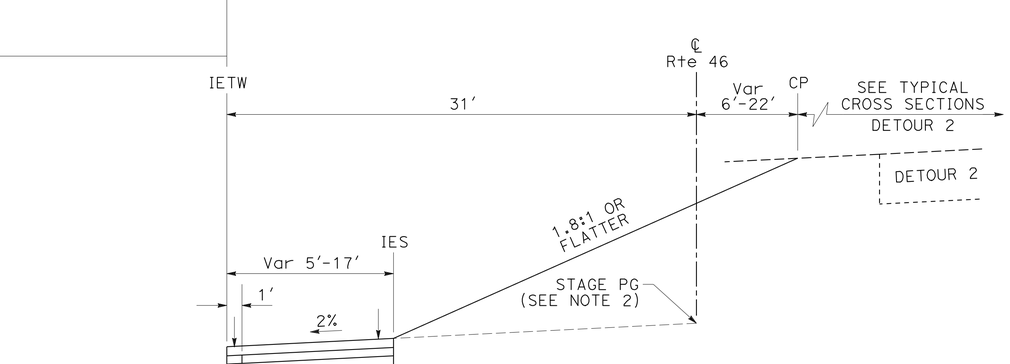

Sta 654+50.00 TO Sta 656+01.06

STAGE CONSTRUCTION DETAILS
(TYPICAL CROSS SECTIONS STAGE 2 PHASE 1)

NO SCALE **SCD-14**

STATE OF CALIFORNIA - DEPARTMENT OF TRANSPORTATION
Caltrans® 06-DESIGN

FUNCTIONAL SUPERVISOR: JACK WALKER
CALCULATED-DESIGNED BY: JOSE ARGUELLO
CHECKED BY: JOHN CLARKE
REVISED BY / DATE REVISED

LAST REVISION 11-10-11 | DATE PLOTTED => 16-FEB-2012 | TIME PLOTTED => 13:46

Dist	COUNTY	ROUTE	POST MILES TOTAL PROJECT	SHEET No.	TOTAL SHEETS
05	SLO	46	40.7/46.3	286	541

REGISTERED CIVIL ENGINEER DATE 11-10-11

2-13-12
PLANS APPROVAL DATE

REGISTERED PROFESSIONAL ENGINEER JOSE M. ARGUELLO No. 51321 Exp. 06-30-12 CIVIL STATE OF CALIFORNIA

THE STATE OF CALIFORNIA OR ITS OFFICERS OR AGENTS SHALL NOT BE RESPONSIBLE FOR THE ACCURACY OR COMPLETENESS OF ELECTRONIC COPIES OF THIS PLAN SHEET.

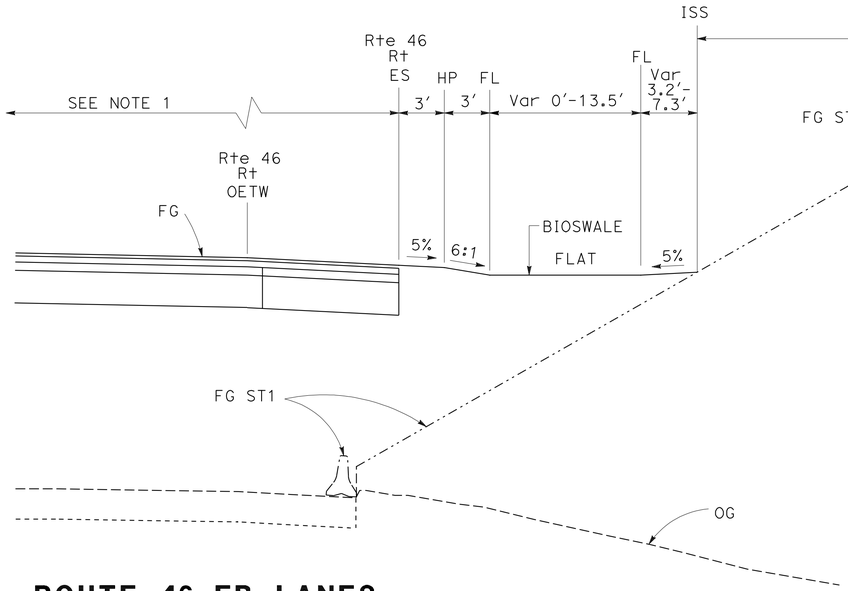

ROUTE 46 EB LANES
Sta 676+50.00 TO Sta 684+25.00

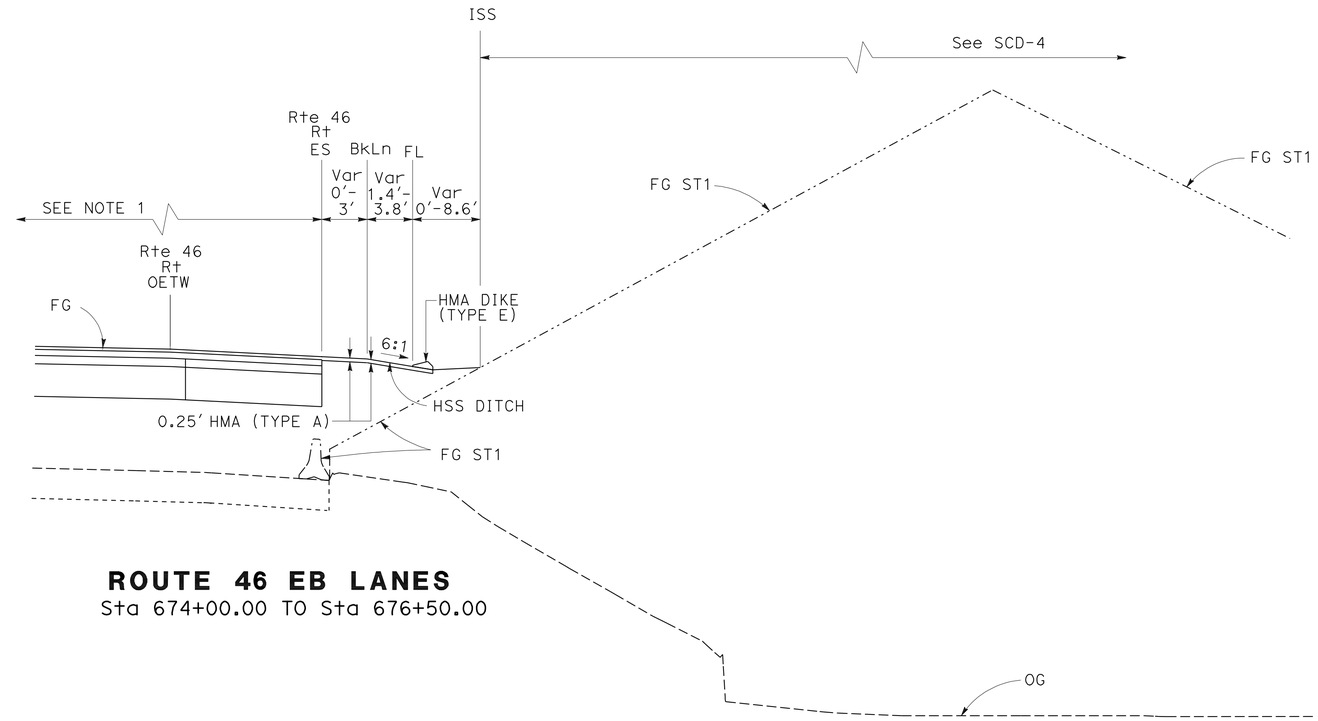

ROUTE 46 EB LANES
Sta 674+00.00 TO Sta 676+50.00

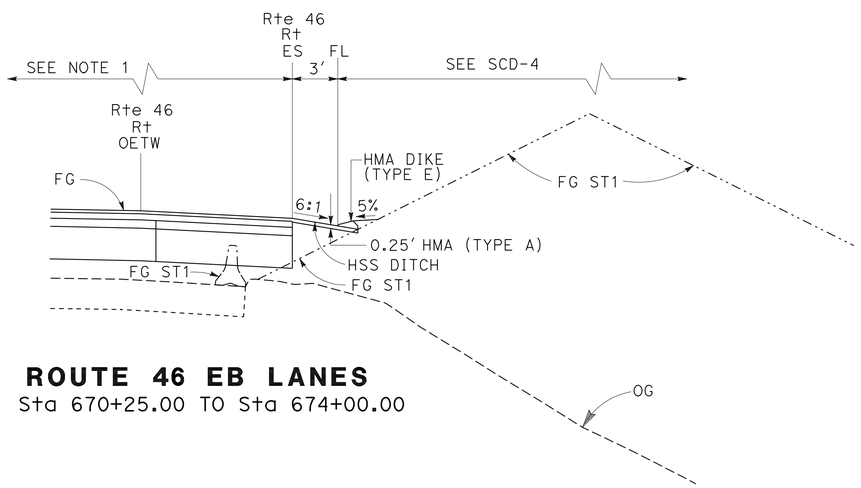

ROUTE 46 EB LANES
Sta 670+25.00 TO Sta 674+00.00

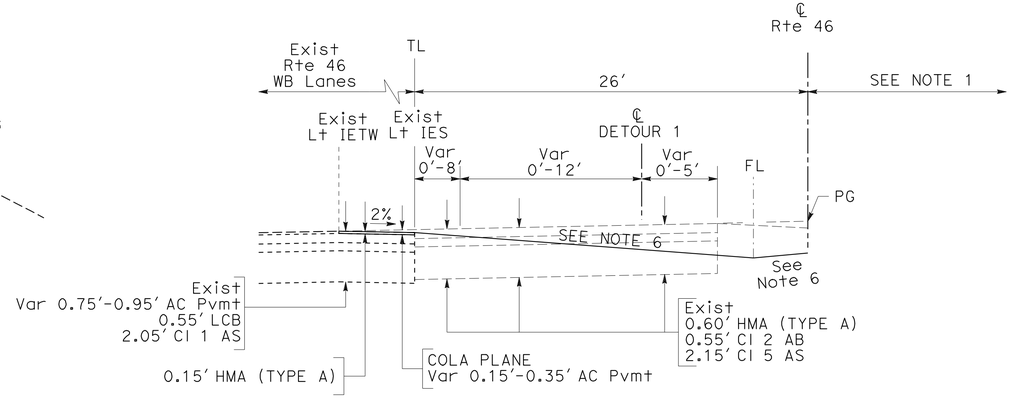

ROUTE 46 WB LANES
Sta 605+72.90 TO Sta 616+58.75

STAGE CONSTRUCTION DETAILS
(TYPICAL CROSS SECTIONS STAGE 3)

NO SCALE **SCD-15**

REVISED BY	DATE REVISED
JOHN CLARKE	JOSE ARGUELLO
CALCULATED-DESIGNED BY	CHECKED BY
FUNCTIONAL SUPERVISOR	JACK WALKER

STATE OF CALIFORNIA - DEPARTMENT OF TRANSPORTATION 06-DESIGN

LAST REVISION 11-09-11 | DATE PLOTTED => 16-FEB-2012 | TIME PLOTTED => 13:46

Dist	COUNTY	ROUTE	POST MILES TOTAL PROJECT	SHEET No.	TOTAL SHEETS
05	SLO	46	40.7/46.3	287	541

REGISTERED CIVIL ENGINEER DATE 11-10-11

2-13-12
PLANS APPROVAL DATE

REGISTERED PROFESSIONAL ENGINEER JOSE M. ARGUELLO No. 51321 Exp. 06-30-12 CIVIL STATE OF CALIFORNIA

THE STATE OF CALIFORNIA OR ITS OFFICERS OR AGENTS SHALL NOT BE RESPONSIBLE FOR THE ACCURACY OR COMPLETENESS OF ELECTRONIC COPIES OF THIS PLAN SHEET.

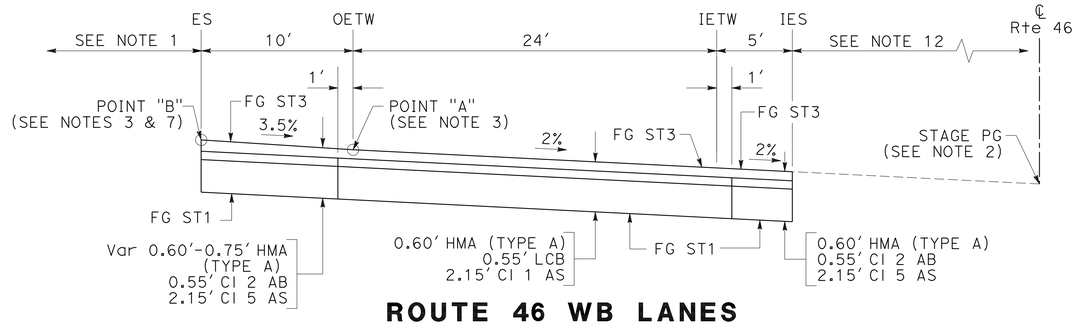

ROUTE 46 WB LANES

Sta 788+25.00 TO Sta 794+60.00

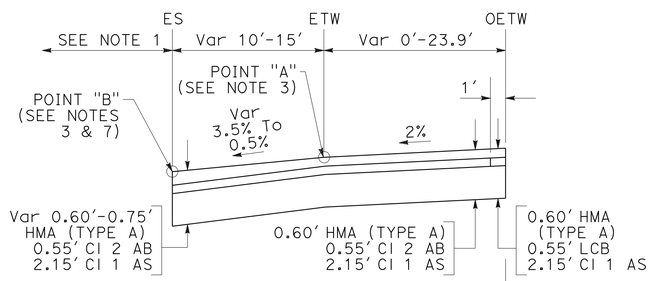

Sta 828+00.00 TO Sta 850+00.00
Sta 857+00.00 TO Sta 860+60.20

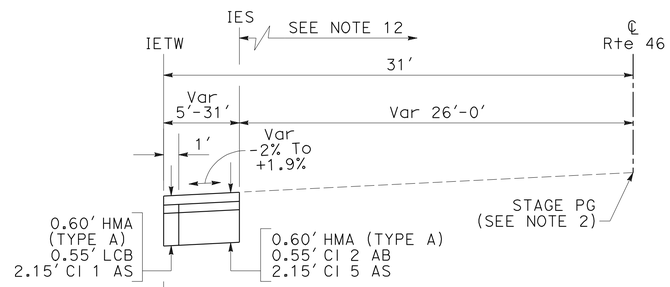

Sta 794+67.99 TO Sta 795+00.00

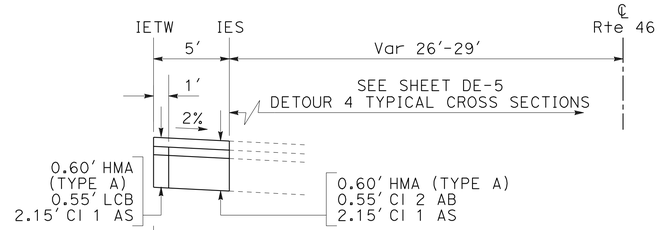

Sta 876+92.60 TO Sta 879+24.29

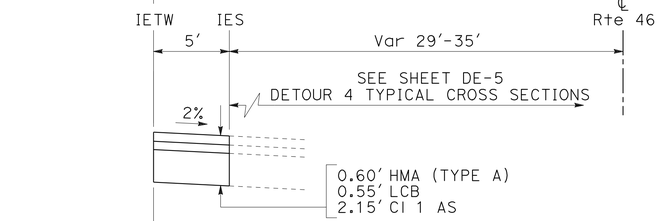

Sta 866+00.35 TO Sta 876+92.60

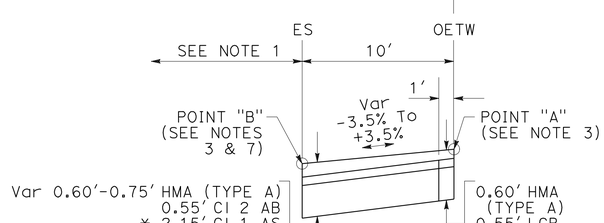

Sta 715+00.00 TO Sta 740+00.00 **
Sta 745+00.00 TO Sta 788+25.00 **
Sta 794+60.00 TO Sta 795+00.00 **
Sta 797+00.00 TO Sta 811+10.49 **
Sta 813+60.49 TO Sta 828+00.00 *
Sta 860+60.20 TO Sta 883+25.46 *

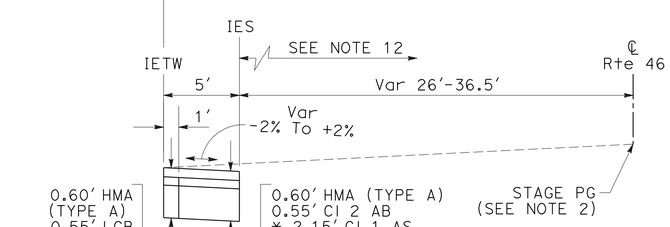

Sta 715+00.00 TO Sta 740+00.00 **
Sta 745+00.00 TO Sta 788+25.00 **
Sta 794+60.00 TO Sta 794+67.99 **
Sta 804+35.14 TO Sta 811+10.49 **
Sta 813+60.49 TO Sta 822+00.00 **
Sta 860+60.13 TO Sta 866+00.35 *
Sta 879+24.29 TO Sta 883+25.46 *

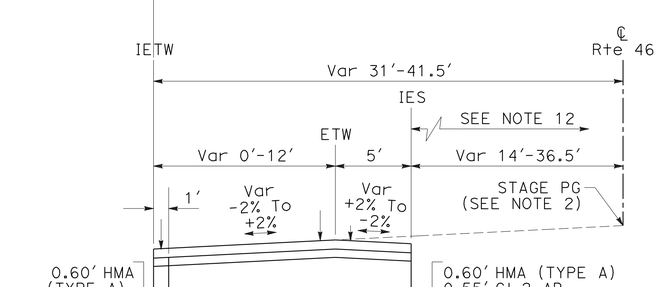

Sta 797+00.00 TO Sta 804+35.14 **
Sta 822+00.00 TO Sta 850+00.00 *
Sta 857+00.00 TO Sta 860+60.13 *

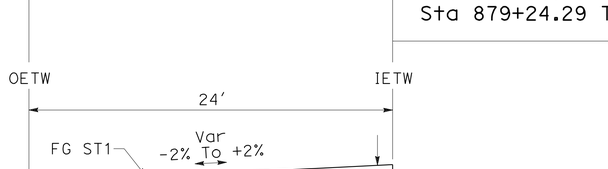

ROUTE 46 WB LANES

Sta 715+00.00 TO Sta 740+00.00
Sta 745+00.00 TO Sta 788+25.00
Sta 794+60.00 TO Sta 795+00.00
Sta 797+00.00 TO Sta 811+10.49
Sta 813+60.49 TO Sta 850+00.00
Sta 857+00.00 TO Sta 883+25.46

STAGE CONSTRUCTION DETAILS
(TYPICAL CROSS SECTIONS STAGE 3)

NO SCALE

SCD-16

STATE OF CALIFORNIA - DEPARTMENT OF TRANSPORTATION
Caltrans
06-DESIGN

FUNCTIONAL SUPERVISOR: JACK WALKER
CALCULATED-DESIGNED BY: JOSE ARGUELLO
CHECKED BY: JOHN CLARKE
REVISED BY
DATE REVISED

LAST REVISION 12-07-11
DATE PLOTTED => 16-FEB-2012
TIME PLOTTED => 13:46

Dist	COUNTY	ROUTE	POST MILES TOTAL PROJECT	SHEET No.	TOTAL SHEETS
05	SLO	46	40.7/46.3	288	541

REGISTERED CIVIL ENGINEER DATE 11-10-11

2-13-12
PLANS APPROVAL DATE

REGISTERED PROFESSIONAL ENGINEER JOSE M. ARGUELLO No. 51321 Exp. 06-30-12 CIVIL STATE OF CALIFORNIA

THE STATE OF CALIFORNIA OR ITS OFFICERS OR AGENTS SHALL NOT BE RESPONSIBLE FOR THE ACCURACY OR COMPLETENESS OF ELECTRONIC COPIES OF THIS PLAN SHEET.

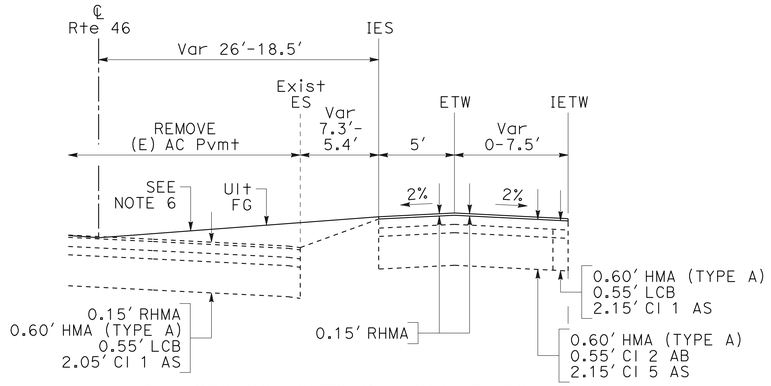

Sta 620+80.00 TO Sta 621+50.00

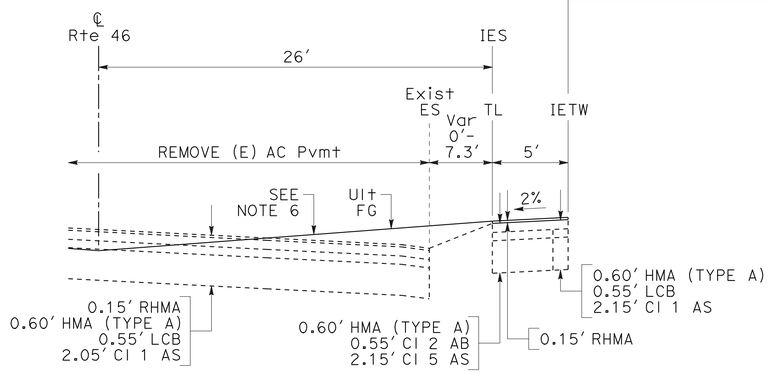

Sta 618+00.00 TO Sta 620+80.00

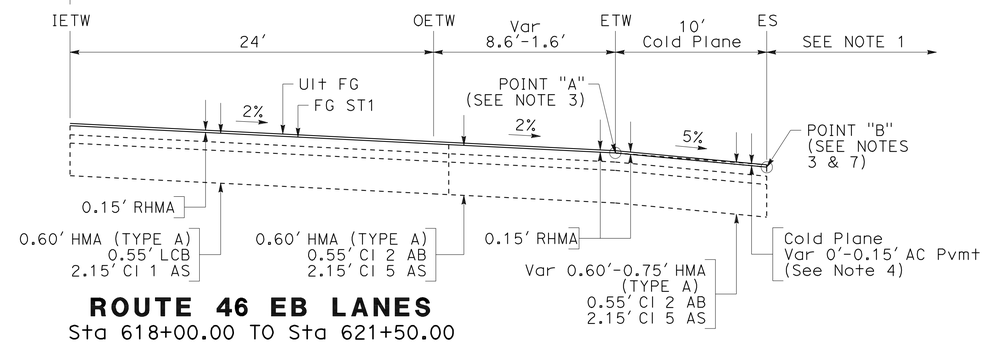

ROUTE 46 EB LANES
Sta 618+00.00 TO Sta 621+50.00

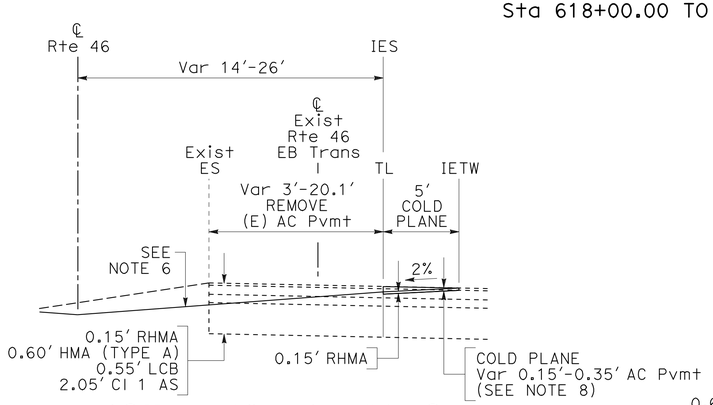

ROUTE 46 EB LANES
Sta 607+03.76 TO Sta 615+25.00

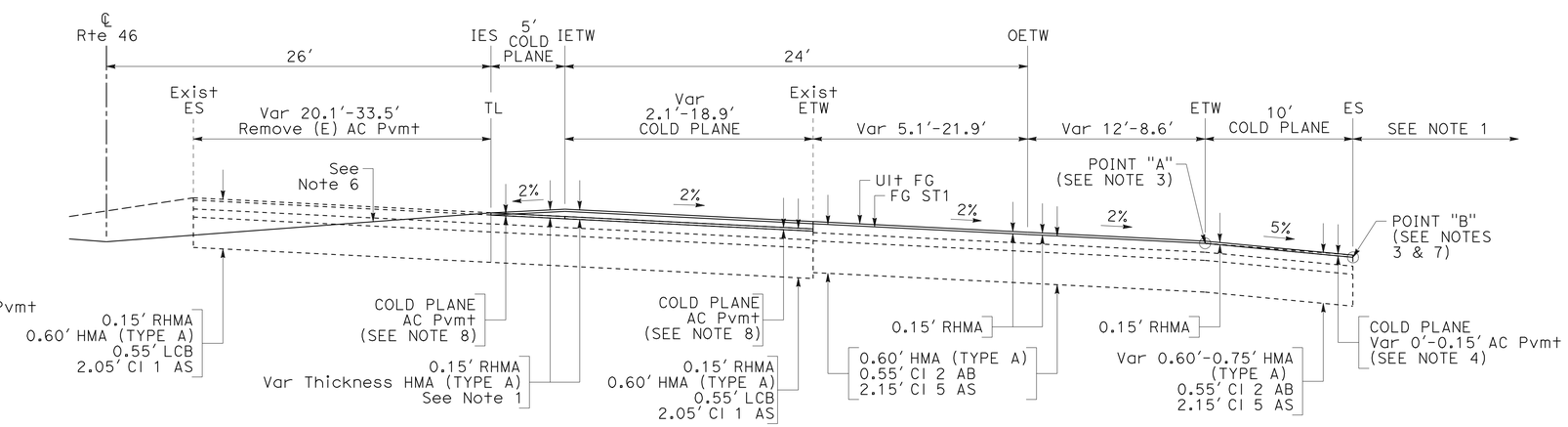

ROUTE 46 EB LANES
Sta 615+25.00 TO Sta 618+00.00

STAGE CONSTRUCTION DETAILS
(TYPICAL CROSS SECTIONS STAGE 5)

NO SCALE **SCD-17**

STATE OF CALIFORNIA - DEPARTMENT OF TRANSPORTATION
Caltrans
06-DESIGN

FUNCTIONAL SUPERVISOR: JACK WALKER
CALCULATED-DESIGNED BY: JOHN CLARKE
CHECKED BY: JOSE ARGUELLO
REVISED BY
DATE REVISED

LAST REVISION 11-14-11
DATE PLOTTED => 16-FEB-2012
TIME PLOTTED => 13:46

Dist	COUNTY	ROUTE	POST MILES TOTAL PROJECT	SHEET No.	TOTAL SHEETS
05	SLO	46	40.7/46.3	289	541

REGISTERED CIVIL ENGINEER DATE 11-10-11

2-13-12
PLANS APPROVAL DATE

REGISTERED PROFESSIONAL ENGINEER JOSE M. ARGUELLO No. 51321 Exp. 06-30-12 CIVIL STATE OF CALIFORNIA

THE STATE OF CALIFORNIA OR ITS OFFICERS OR AGENTS SHALL NOT BE RESPONSIBLE FOR THE ACCURACY OR COMPLETENESS OF ELECTRONIC COPIES OF THIS PLAN SHEET.

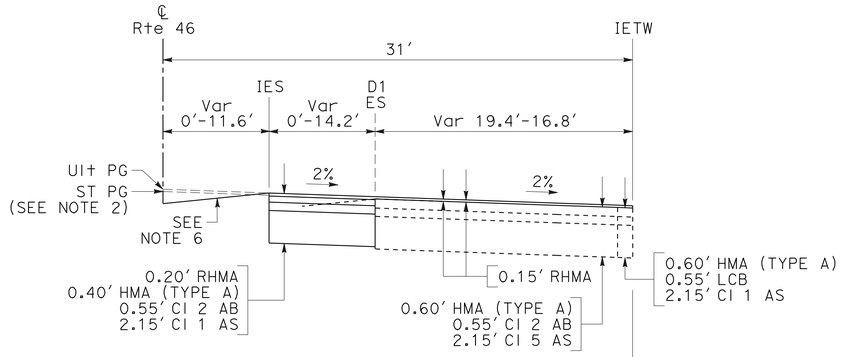

Sta 628+23.66 TO Sta 629+06.01

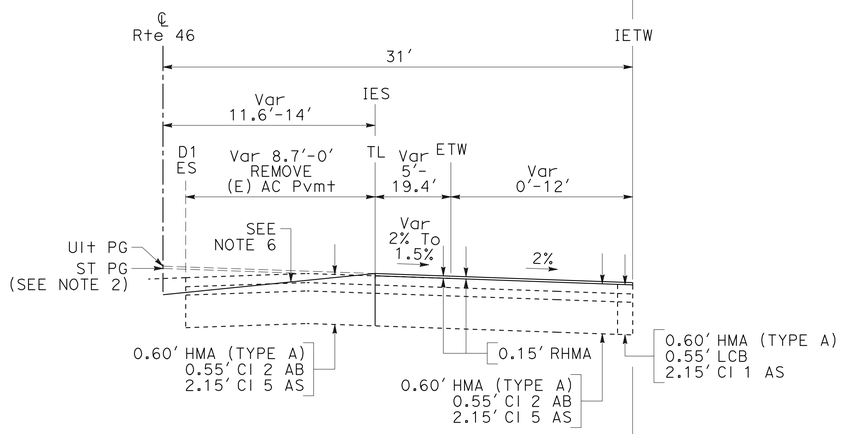

Sta 627+00.00 TO Sta 628+23.66
Sta 629+06.01 TO Sta 630+32.67

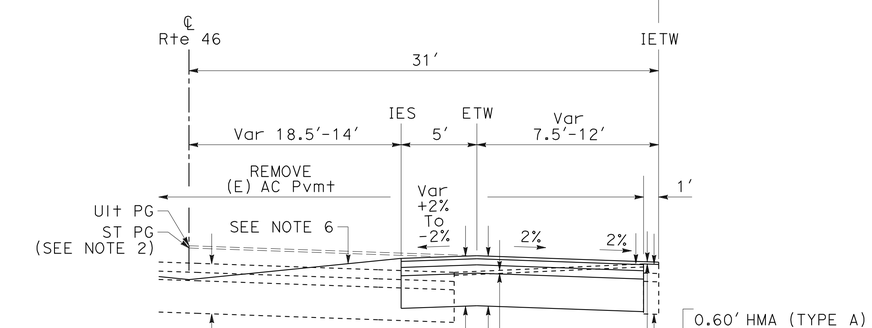

Sta 621+50.00 TO Sta 627+00.00

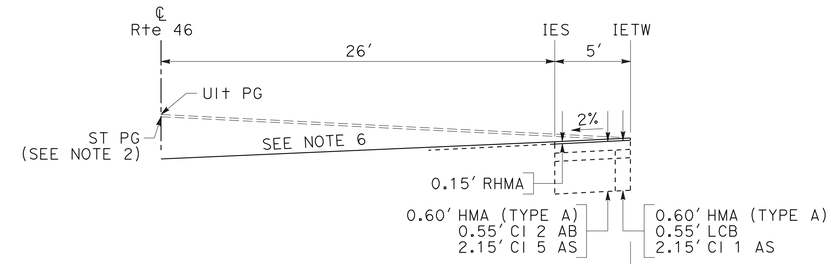

Sta 638+11.27 TO Sta 644+00.00

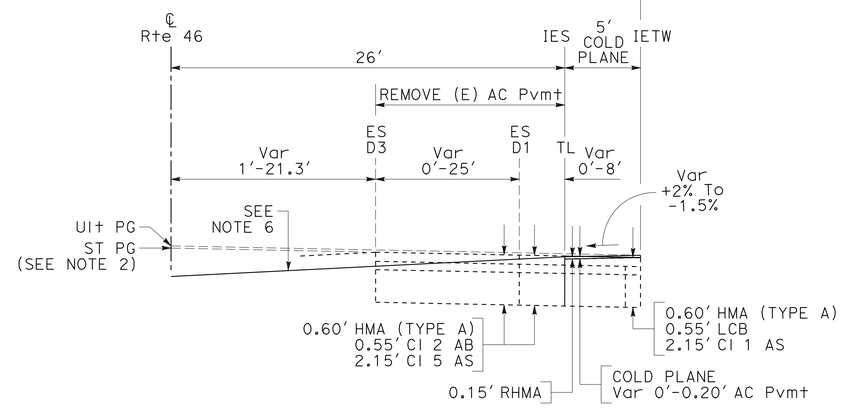

Sta 630+32.67 TO Sta 638+11.27

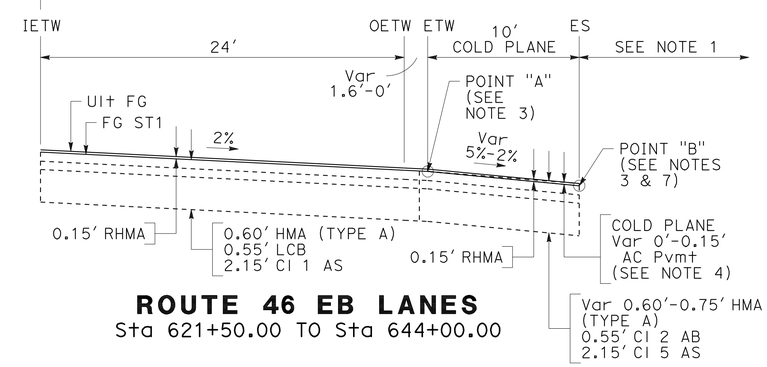

ROUTE 46 EB LANES
Sta 621+50.00 TO Sta 644+00.00

STAGE CONSTRUCTION DETAILS
(TYPICAL CROSS SECTIONS STAGE 5)

NO SCALE **SCD-18**

STATE OF CALIFORNIA - DEPARTMENT OF TRANSPORTATION
Caltrans
06-DESIGN

FUNCTIONAL SUPERVISOR: JACK WALKER
CALCULATED-DESIGNED BY: JOHN CLARKE
CHECKED BY: JOSE ARGUELLO
REVISED BY
DATE REVISED

LAST REVISION 11-14-11
DATE PLOTTED => 16-FEB-2012
TIME PLOTTED => 13:46

Dist	COUNTY	ROUTE	POST MILES TOTAL PROJECT	SHEET No.	TOTAL SHEETS
05	SLO	46	40.7/46.3	290	541

REGISTERED CIVIL ENGINEER DATE 11-10-11

2-13-12
PLANS APPROVAL DATE

REGISTERED PROFESSIONAL ENGINEER JOSE M. ARGUELLO No. 51321 Exp 06-30-12 CIVIL STATE OF CALIFORNIA

THE STATE OF CALIFORNIA OR ITS OFFICERS OR AGENTS SHALL NOT BE RESPONSIBLE FOR THE ACCURACY OR COMPLETENESS OF ELECTRONIC COPIES OF THIS PLAN SHEET.

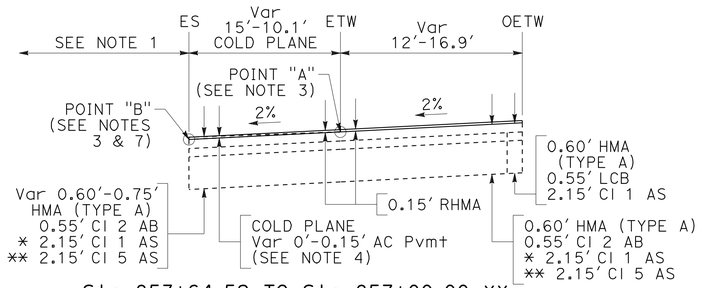

Sta 853+64.52 TO Sta 857+00.00 **
Sta 857+00.00 TO Sta 857+25.00 *

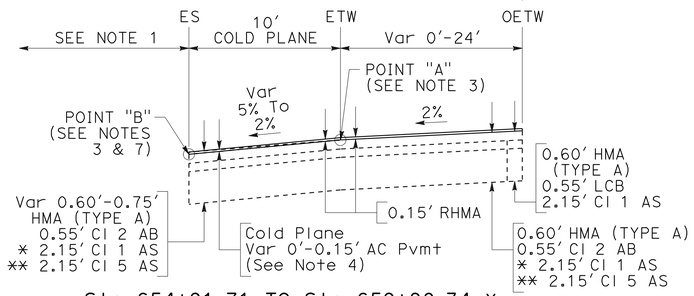

Sta 654+91.71 TO Sta 659+98.34 *
Sta 828+00.00 TO Sta 850+00.00 *
Sta 850+00.00 TO Sta 853+64.52 **
Sta 857+25.00 TO Sta 860+60.20 *

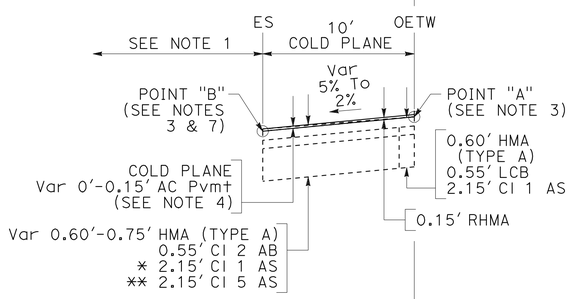

Sta 643+75.00 TO Sta 654+91.71 *
Sta 659+98.34 TO Sta 660+00.00 *
Sta 660+00.00 TO Sta 783+25.00 **
Sta 799+40.00 TO Sta 811+10.49 **
Sta 813+60.49 TO Sta 828+00.00 *
Sta 860+60.20 TO Sta 883+25.46 *

ROUTE 46 WB LANES
Sta 643+75.00 TO Sta 783+25.00
Sta 799+40.00 TO Sta 811+10.49
Sta 813+60.49 TO Sta 866+00.35

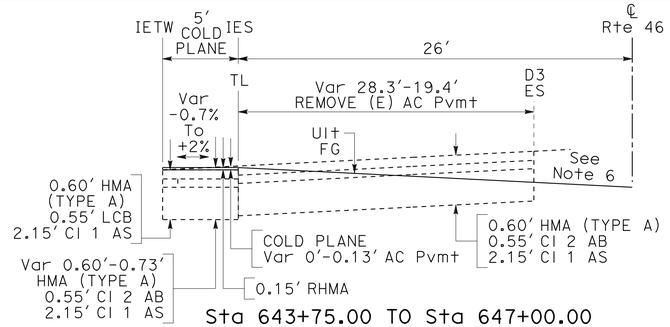

Sta 643+75.00 TO Sta 647+00.00

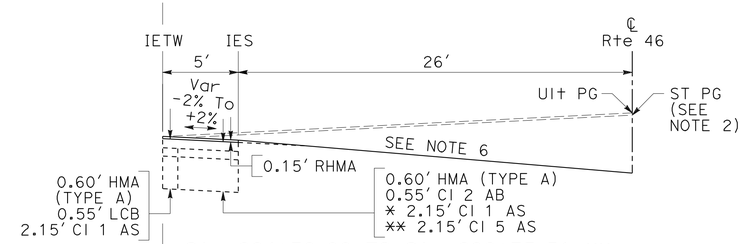

Sta 664+38.00 TO Sta 698+75.51 **
Sta 712+16.80 TO Sta 740+48.05 **
Sta 742+70.78 TO Sta 783+25.00 **
Sta 804+35.14 TO Sta 811+10.49 **
Sta 813+60.49 TO Sta 822+00.00 *
Sta 860+60.13 TO Sta 866+00.35 *

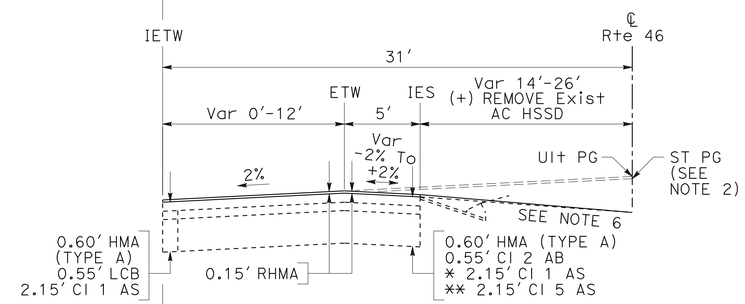

Sta 657+04.89 TO Sta 660+00.00 (+) *
Sta 660+00.00 TO Sta 664+38.00 (+) **
Sta 700+98.30 TO Sta 705+99.63 **
Sta 799+40.00 TO Sta 804+35.14 **
Sta 822+00.00 TO Sta 850+00.00 *
Sta 850+00.00 TO Sta 850+84.35 **
Sta 853+18.71 TO Sta 857+00.00 **
Sta 857+00.00 TO Sta 860+60.13 *

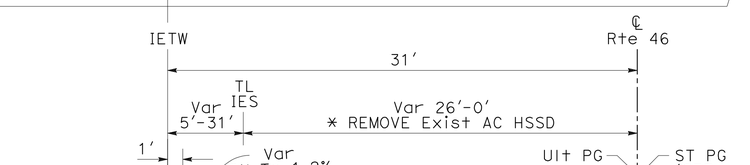

Sta 656+01.06 TO Sta 657+04.89 *
Sta 698+75.51 TO Sta 700+98.30 **
Sta 740+48.05 TO Sta 742+70.78 **
Sta 850+84.35 TO Sta 853+18.71 **

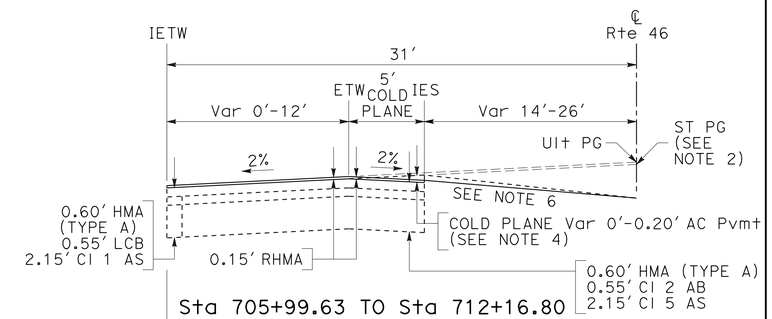

Sta 705+99.63 TO Sta 712+16.80

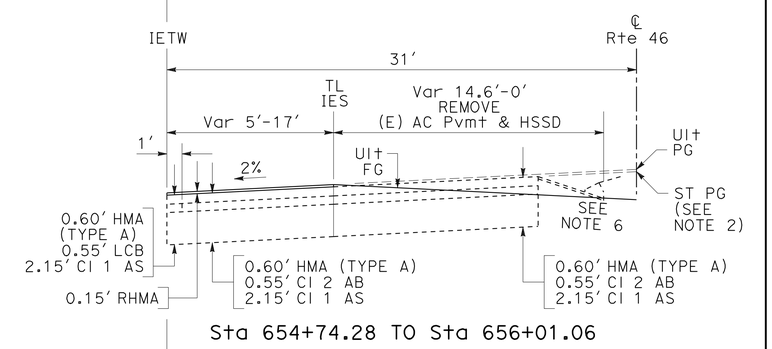

Sta 654+74.28 TO Sta 656+01.06

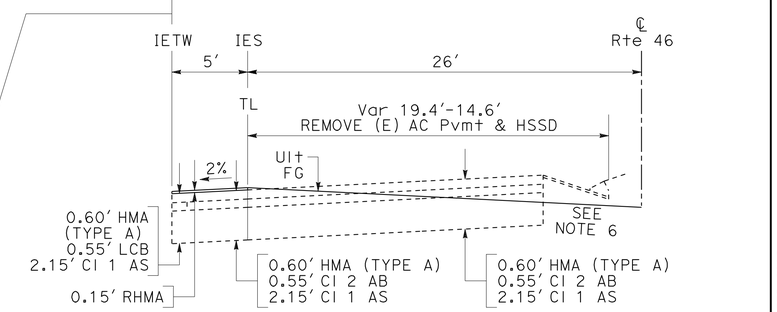

Sta 647+00.00 TO Sta 654+74.28

STAGE CONSTRUCTION DETAILS
(TYPICAL CROSS SECTIONS STAGE 5)

NO SCALE **SCD-19**

STATE OF CALIFORNIA - DEPARTMENT OF TRANSPORTATION
Caltrans® 06-DESIGN
FUNCTIONAL SUPERVISOR: JACK WALKER
CALCULATED-DESIGNED BY: JOHN CLARKE
CHECKED BY: JOSE ARGUELLO
REVISED BY
DATE REVISED

LAST REVISION 11-14-11
DATE PLOTTED => 16-FEB-2012
TIME PLOTTED => 13:46

Dist	COUNTY	ROUTE	POST MILES TOTAL PROJECT	SHEET No.	TOTAL SHEETS
05	SLO	46	40.7/46.3	291	541

REGISTERED CIVIL ENGINEER DATE 11-10-11

2-13-12
PLANS APPROVAL DATE

REGISTERED PROFESSIONAL ENGINEER JOSE M. ARGUELLO No. 51321 Exp. 06-30-12 CIVIL STATE OF CALIFORNIA

THE STATE OF CALIFORNIA OR ITS OFFICERS OR AGENTS SHALL NOT BE RESPONSIBLE FOR THE ACCURACY OR COMPLETENESS OF ELECTRONIC COPIES OF THIS PLAN SHEET.

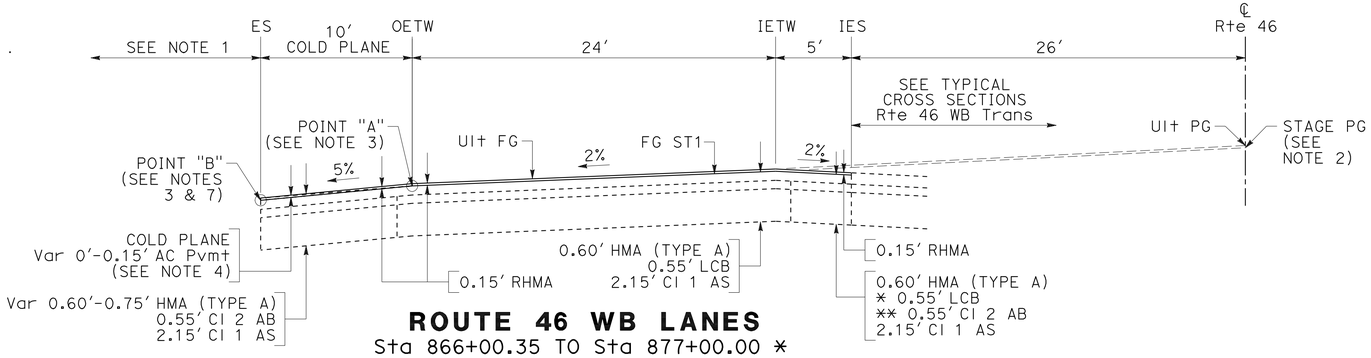

ROUTE 46 WB LANES
Sta 866+00.35 TO Sta 877+00.00 *
Sta 877+00.00 TO Sta 883+25.46 **

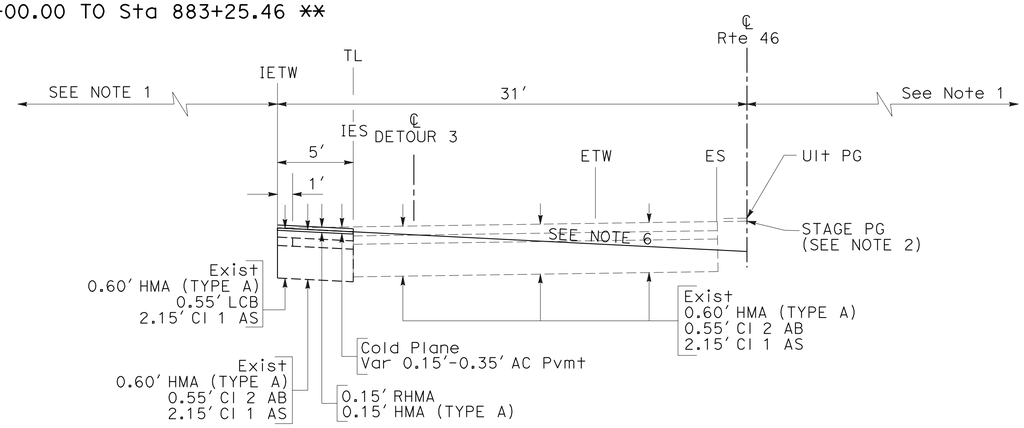

ROUTE 46 WB LANES
Sta 643+75.00 TO Sta 647+00.00

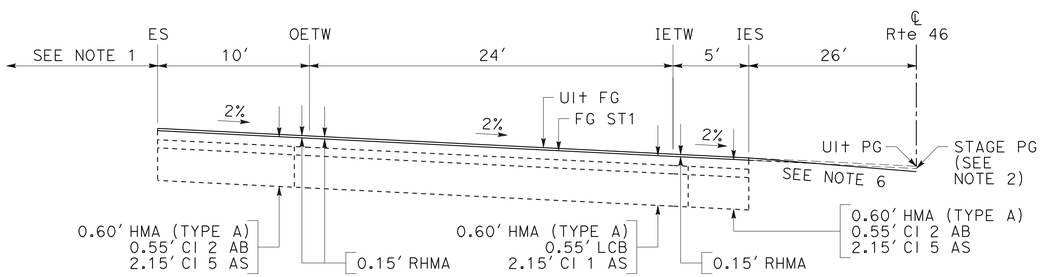

ROUTE 46 WB LANES
Sta 788+25.00 TO Sta 794+60.00

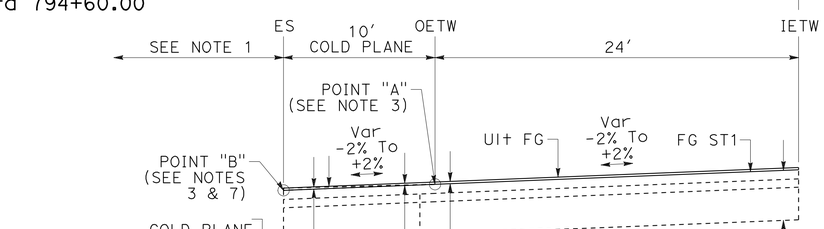

ROUTE 46 WB LANES
Sta 783+25.00 TO Sta 788+25.00
Sta 794+60.00 TO Sta 799+40.00

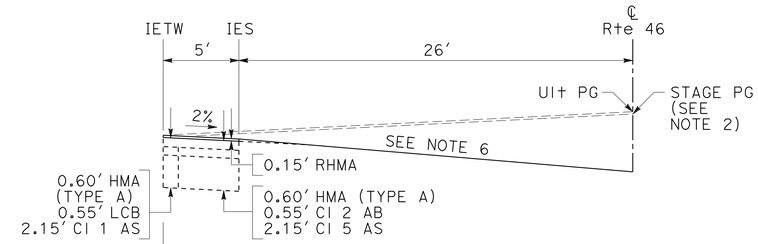

Sta 783+25.00 TO Sta 788+25.00
Sta 794+60.00 TO Sta 794+67.99

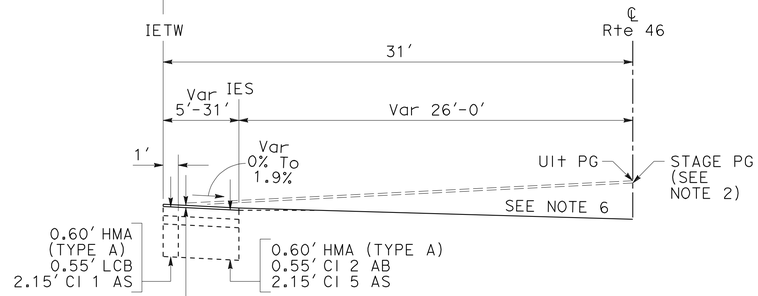

Sta 794+67.99 TO Sta 796+94.20

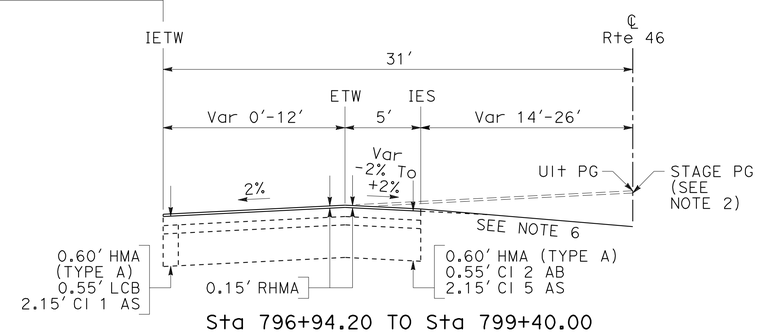

Sta 796+94.20 TO Sta 799+40.00

STAGE CONSTRUCTION DETAILS
(TYPICAL CROSS SECTIONS STAGE 5)

NO SCALE **SCD-20**

STATE OF CALIFORNIA - DEPARTMENT OF TRANSPORTATION
Caltrans
06-DESIGN
FUNCTIONAL SUPERVISOR: JACK WALKER
CALCULATED-DESIGNED BY: JOSE ARGUELLO
CHECKED BY: JOHN CLARKE
REVISED BY
DATE REVISED

LAST REVISION 11-09-11
DATE PLOTTED => 16-FEB-2012
TIME PLOTTED => 13:47

Dist	COUNTY	ROUTE	POST MILES TOTAL PROJECT	SHEET No.	TOTAL SHEETS
05	SLO	46	40.7/46.3	292	541

REGISTERED CIVIL ENGINEER DATE 11-10-11

PLANS APPROVAL DATE 2-13-12

REGISTERED PROFESSIONAL ENGINEER JOSE M. ARGUELLO No. 51321 Exp. 06-30-12 CIVIL STATE OF CALIFORNIA

THE STATE OF CALIFORNIA OR ITS OFFICERS OR AGENTS SHALL NOT BE RESPONSIBLE FOR THE ACCURACY OR COMPLETENESS OF ELECTRONIC COPIES OF THIS PLAN SHEET.

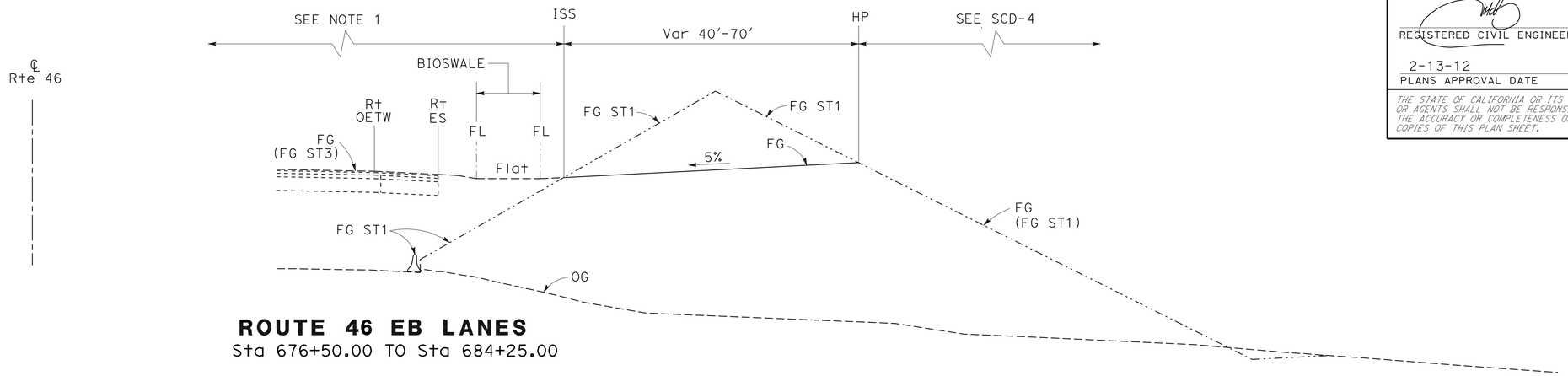

ROUTE 46 EB LANES
Sta 676+50.00 TO Sta 684+25.00

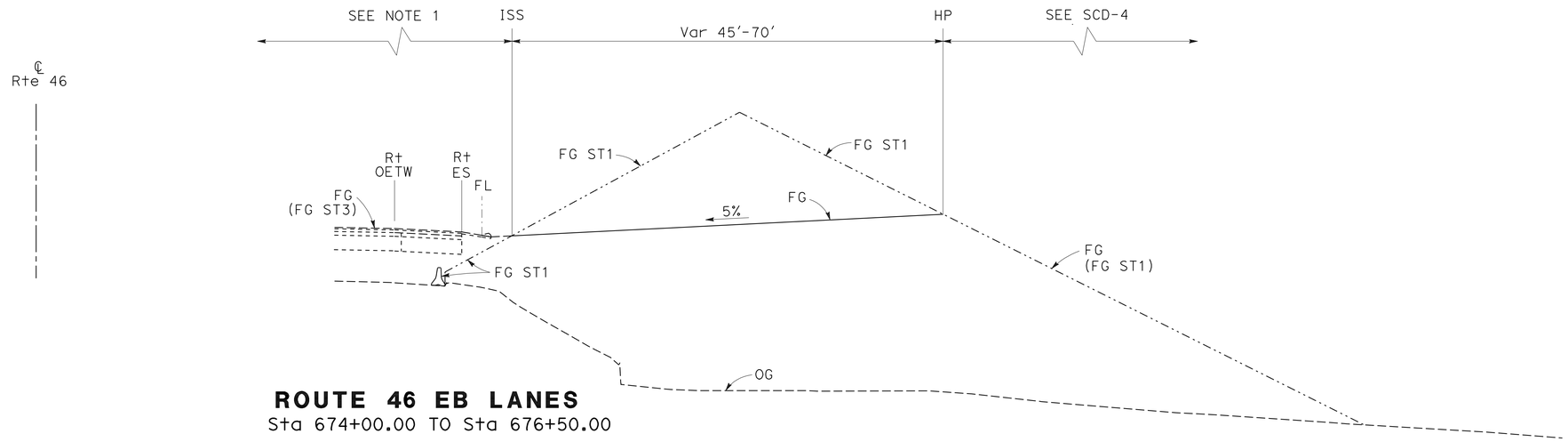

ROUTE 46 EB LANES
Sta 674+00.00 TO Sta 676+50.00

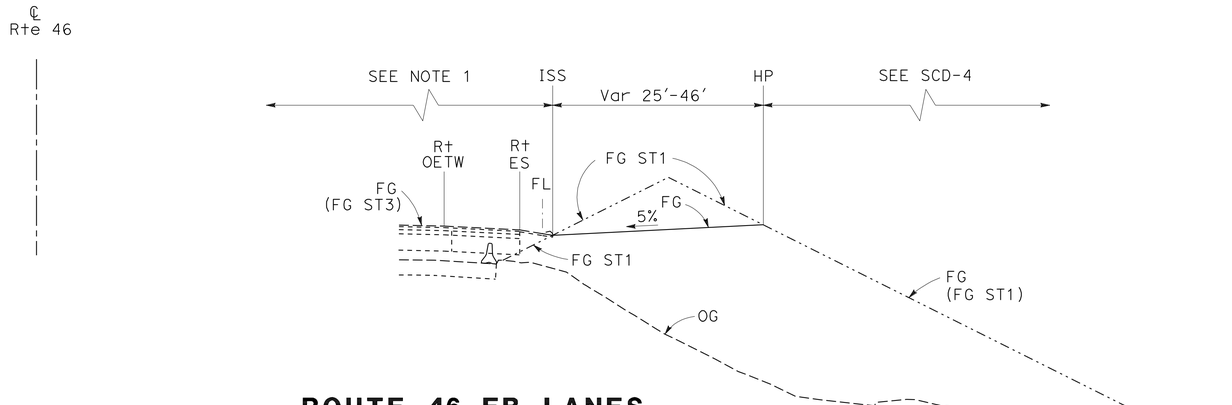

ROUTE 46 EB LANES
Sta 670+25.00 TO Sta 674+00.00

STAGE CONSTRUCTION DETAILS
(TYPICAL CROSS SECTIONS STAGE 5)

NO SCALE **SCD-21**

STATE OF CALIFORNIA - DEPARTMENT OF TRANSPORTATION
Caltrans® 06-DESIGN

FUNCTIONAL SUPERVISOR: JACK WALKER
CALCULATED-DESIGNED BY: JOSE ARGUELLO
CHECKED BY: JOHN CLARKE
REVISED BY / DATE REVISED

LAST REVISION 11-09-11 | DATE PLOTTED => 16-FEB-2012 | TIME PLOTTED => 13:47

Dist	COUNTY	ROUTE	POST MILES TOTAL PROJECT	SHEET No.	TOTAL SHEETS
05	SLO	46	40.7/46.3	293	541

REGISTERED CIVIL ENGINEER DATE 11-10-11

2-13-12
PLANS APPROVAL DATE

REGISTERED PROFESSIONAL ENGINEER JOSE M. ARGUELLO No. 51321 Exp. 06-30-12 CIVIL STATE OF CALIFORNIA

THE STATE OF CALIFORNIA OR ITS OFFICERS OR AGENTS SHALL NOT BE RESPONSIBLE FOR THE ACCURACY OR COMPLETENESS OF ELECTRONIC COPIES OF THIS PLAN SHEET.

NOTE:

1. SEE Shts C-13, E-1 THRU E-4 FOR MORE INFORMATION.

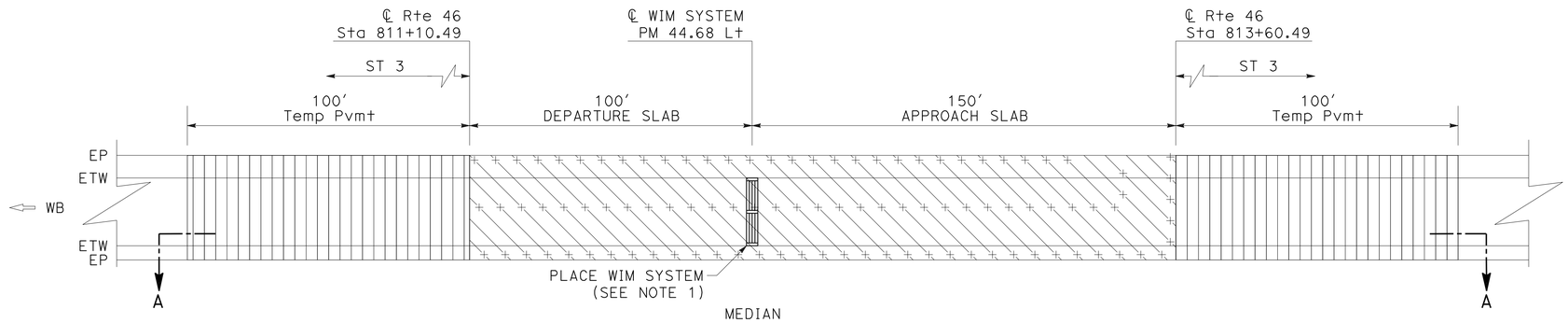

PLAN

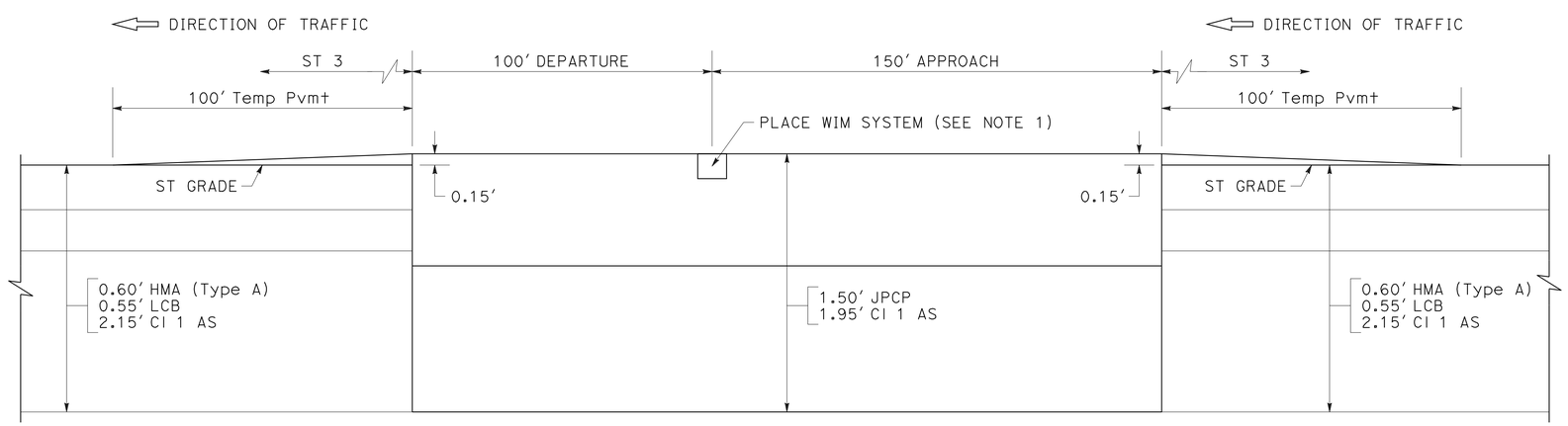

SECTION A-A

WEIGH-IN-MOTION (WIM) SENSOR APPROACH/DEPARTURE SLAB DETAIL

WB LANES PM 44.68

STAGE CONSTRUCTION DETAILS

(STAGE 1 PHASE 1)

NO SCALE **SCD-22**

STATE OF CALIFORNIA - DEPARTMENT OF TRANSPORTATION
Caltrans® 06-DESIGN

FUNCTIONAL SUPERVISOR: JACK WALKER

CALCULATED-DESIGNED BY: JOSE BAUTISTA
CHECKED BY: JOSE ARGUELLO

REVISED BY | DATE REVISED

LAST REVISION 01-13-12 | DATE PLOTTED => 16-FEB-2012 | TIME PLOTTED => 13:47

Dist	COUNTY	ROUTE	POST MILES TOTAL PROJECT	SHEET No.	TOTAL SHEETS
05	SLO	46	40.7/46.3	294	541

REGISTERED CIVIL ENGINEER DATE 11-10-11

2-13-12
PLANS APPROVAL DATE

REGISTERED PROFESSIONAL ENGINEER JOSE M. ARGUELLO No. 51321 Exp. 06-30-12 CIVIL STATE OF CALIFORNIA

THE STATE OF CALIFORNIA OR ITS OFFICERS OR AGENTS SHALL NOT BE RESPONSIBLE FOR THE ACCURACY OR COMPLETENESS OF ELECTRONIC COPIES OF THIS PLAN SHEET.

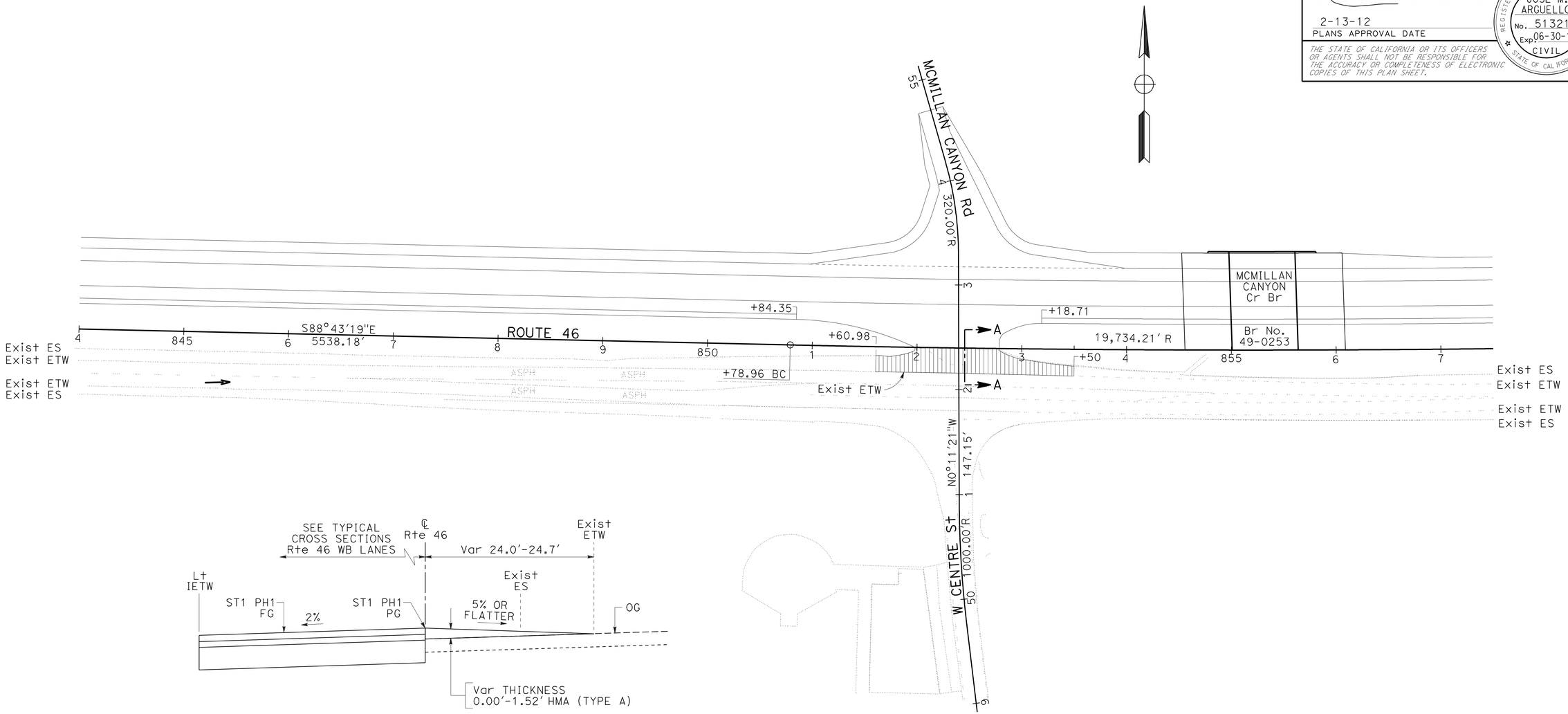

TEMPORARY HOT MIX ASPHALT PAVEMENT AT MCMILLAN CANYON Rd MEDIAN CROSSOVER (ST1 PH1)

STAGE CONSTRUCTION DETAILS (STAGE 1 PHASE 1)

NO SCALE

SCD-23

APPROVED FOR STAGE CONSTRUCTION WORK ONLY

REVISED BY	DATE REVISED

CALCULATED-DESIGNED BY	CHECKED BY
JOSE BAUTISTA	JOSE ARGUELLO

FUNCTIONAL SUPERVISOR: JACK WALKER

STATE OF CALIFORNIA - DEPARTMENT OF TRANSPORTATION

Caltrans® 06-DESIGN

LAST REVISION 11-14-11 | DATE PLOTTED => 16-FEB-2012 | TIME PLOTTED => 13:47

Dist	COUNTY	ROUTE	POST MILES TOTAL PROJECT	SHEET No.	TOTAL SHEETS
05	SLO	46	40.7/46.3	295	541

REGISTERED CIVIL ENGINEER DATE 11-10-11

2-13-12
PLANS APPROVAL DATE

REGISTERED PROFESSIONAL ENGINEER JOSE M. ARGUELLO No. 51321 Exp. 06-30-12 CIVIL STATE OF CALIFORNIA

THE STATE OF CALIFORNIA OR ITS OFFICERS OR AGENTS SHALL NOT BE RESPONSIBLE FOR THE ACCURACY OR COMPLETENESS OF ELECTRONIC COPIES OF THIS PLAN SHEET.

MEDIAN CROSSOVER

LOCATION	Beg Temp Pvmt	End Temp Pvmt
Prvt Dwy 5	Rte 46 ℄ Sta 699+25	Rte 46 ℄ Sta 701+25
Prvt Dwy 7	Rte 46 ℄ Sta 741+00	Rte 46 ℄ Sta 743+00
Prvt Dwy 8	Rte 46 ℄ Sta 795+40.78	Rte 46 ℄ Sta 797+25

* WHERE Temp HMA Pvmt IS OVER Exist Pvmt, USE Var THICKNESS HMA (TYPE A).

** WHERE Temp HMA Pvmt IS OVER NATIVE MATERIAL, USE 0.25′ HMA (TYPE A) OVER 1.50′ CL 2 AB.

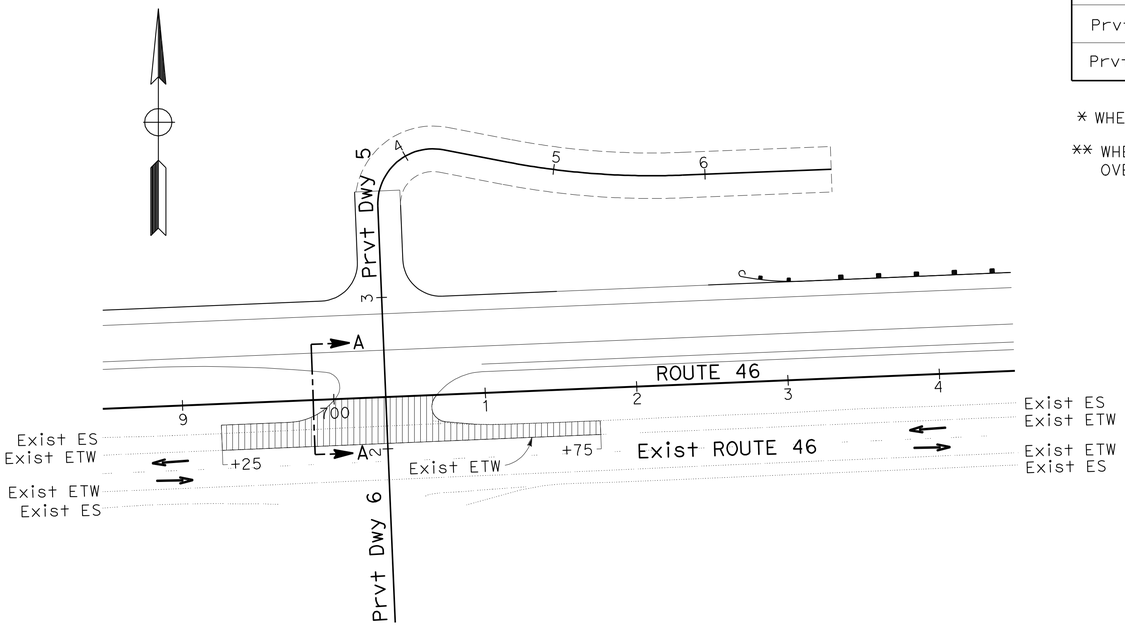

PLAN

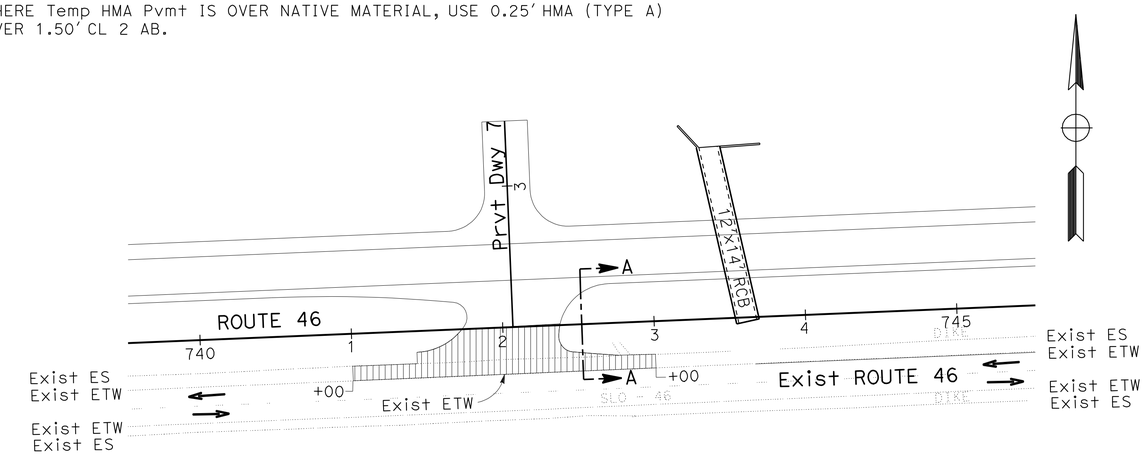

PLAN

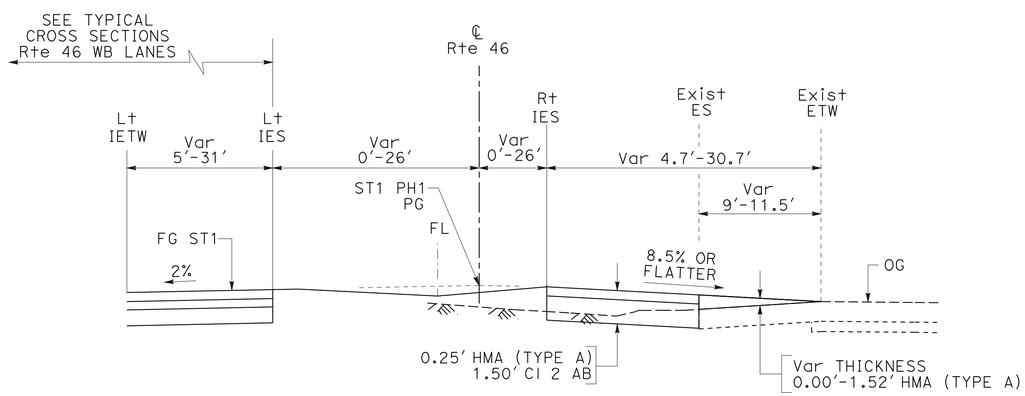

SECTION A-A

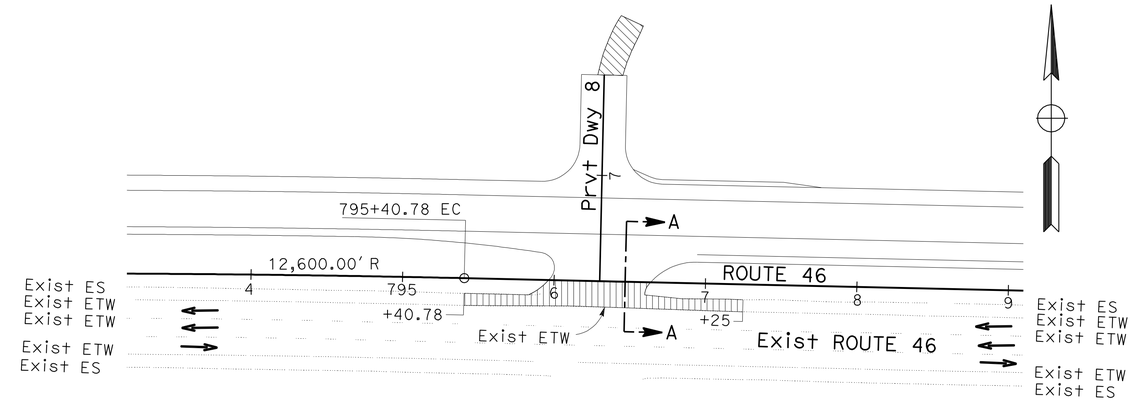

PLAN

LIMITS OF TEMPORARY HOT MIX ASPHALT PAVEMENT AT Prvt Dwy 5, 7, & 8 MEDIAN CROSSOVER (ST1 PH1)

APPROVED FOR STAGE CONSTRUCTION WORK ONLY

STAGE CONSTRUCTION DETAILS (STAGE 1 PHASE 1)

NO SCALE **SCD-24**

STATE OF CALIFORNIA - DEPARTMENT OF TRANSPORTATION
Caltrans 06-DESIGN

FUNCTIONAL SUPERVISOR: JACK WALKER
CALCULATED-DESIGNED BY: JOSE BAUTISTA
CHECKED BY: JOSE ARGUELLO
REVISED BY / DATE REVISED

LAST REVISION 11-09-11 | DATE PLOTTED => 16-FEB-2012 | TIME PLOTTED => 13:47

Dist	COUNTY	ROUTE	POST MILES TOTAL PROJECT	SHEET No.	TOTAL SHEETS
05	SLO	46	40.7/46.3	296	541

REGISTERED CIVIL ENGINEER 11-10-11 DATE

2-13-12
PLANS APPROVAL DATE

REGISTERED PROFESSIONAL ENGINEER
JOSE M. ARGUELLO
No. 51321
Exp. 06-30-12
CIVIL
STATE OF CALIFORNIA

THE STATE OF CALIFORNIA OR ITS OFFICERS OR AGENTS SHALL NOT BE RESPONSIBLE FOR THE ACCURACY OR COMPLETENESS OF SCANNED COPIES OF THIS PLAN SHEET.

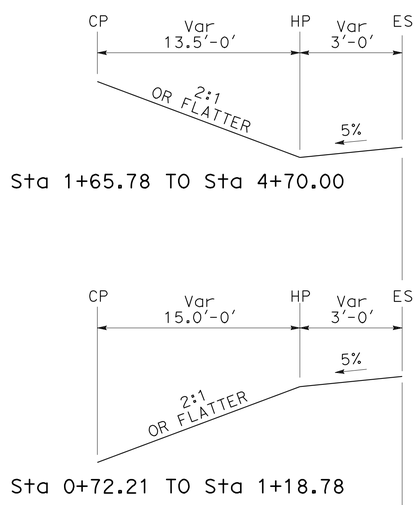

Sta 1+65.78 TO Sta 4+70.00

Sta 0+72.21 TO Sta 1+18.78

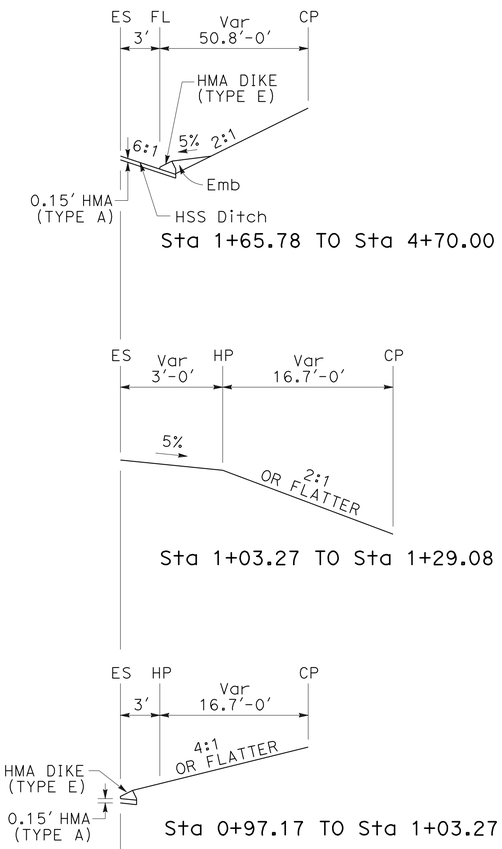

Sta 1+65.78 TO Sta 4+70.00

Sta 1+03.27 TO Sta 1+29.08

Sta 0+97.17 TO Sta 1+03.27

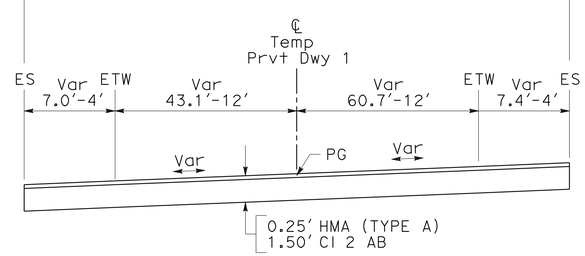

Temp Prvt Dwy 1
Sta 0+78.52 TO Sta 6+61.15

STAGE CONSTRUCTION DETAILS
(Temp Prvt Dwy 1)

NO SCALE **SCD-25**

STATE OF CALIFORNIA - DEPARTMENT OF TRANSPORTATION
Caltrans®
06-DESIGN

FUNCTIONAL SUPERVISOR: JACK WALKER
CALCULATED-DESIGNED BY: JOSE ARGUELLO
CHECKED BY: JOHN CLARKE
REVISED BY
DATE REVISED

LAST REVISION 11-09-11
DATE PLOTTED => 16-FEB-2012
TIME PLOTTED => 13:47

Dist	COUNTY	ROUTE	POST MILES TOTAL PROJECT	SHEET No.	TOTAL SHEETS
05	SLO	46	40.7/46.3	297	541

REGISTERED CIVIL ENGINEER 11-10-11 DATE

2-13-12
PLANS APPROVAL DATE

REGISTERED PROFESSIONAL ENGINEER JOSE M. ARGUELLO No. 51321 Exp. 06-30-12 CIVIL STATE OF CALIFORNIA

THE STATE OF CALIFORNIA OR ITS OFFICERS OR AGENTS SHALL NOT BE RESPONSIBLE FOR THE ACCURACY OR COMPLETENESS OF SCANNED COPIES OF THIS PLAN SHEET.

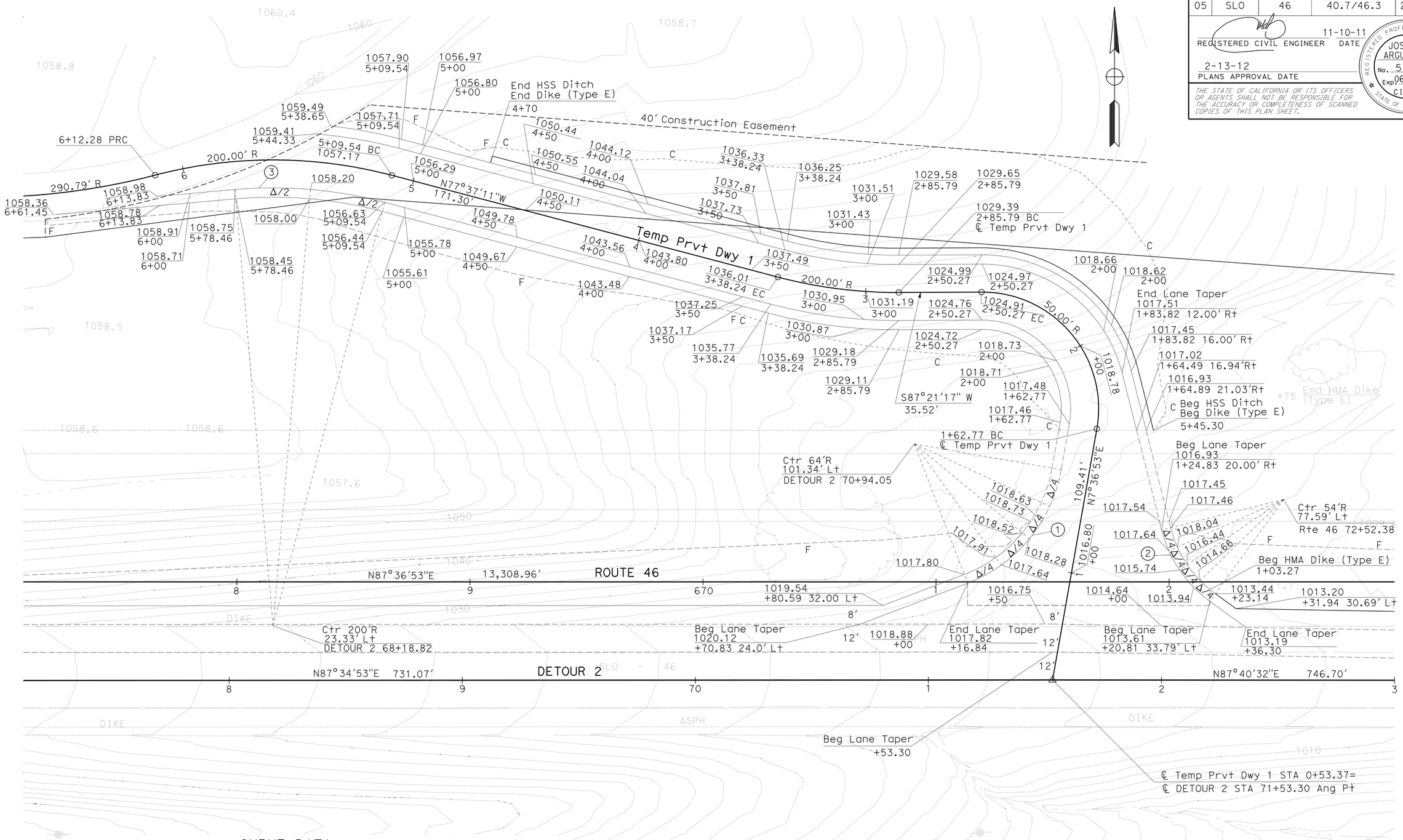

CURVE DATA

No.	R	Δ	T	L	RP	LOCATION
1	64.00′	59°06′04"	36.28′	66.02′	BC	℄ Detour 2 71+16.84 41.54′ Lt
2	54.00′	40°01′19"	19.67′	37.72′	EC	℄ Detour 2 72+20.80 33.79′ Lt
3	188.00′	19°44′33"	32.71′	64.78′	BC	℄ Temp Prvt Dwy 1 5+09.54 12.00′ Lt

STAGE CONSTRUCTION DETAILS
(Temp Prvt Dwy 1)

SCALE: 1" = 20′ **SCD-26**

APPROVED FOR STAGE CONSTRUCTION WORK ONLY

STATE OF CALIFORNIA - DEPARTMENT OF TRANSPORTATION
Caltrans 06-DESIGN

FUNCTIONAL SUPERVISOR: JACK WALKER
CALCULATED-DESIGNED BY: JOSE BAUTISTA
CHECKED BY: JOSE ARGUELLO
REVISED BY
DATE REVISED

LAST REVISION DATE PLOTTED => 16-FEB-2012
11-09-11 TIME PLOTTED => 13:47

Dist	COUNTY	ROUTE	POST MILES TOTAL PROJECT	SHEET No.	TOTAL SHEETS
05	SLO	46	40.7/46.3	298	541

REGISTERED CIVIL ENGINEER 11-10-11 DATE

2-13-12
PLANS APPROVAL DATE

REGISTERED PROFESSIONAL ENGINEER JOSE M. ARGUELLO No. 51321 Exp 06-30-12 CIVIL STATE OF CALIFORNIA

THE STATE OF CALIFORNIA OR ITS OFFICERS OR AGENTS SHALL NOT BE RESPONSIBLE FOR THE ACCURACY OR COMPLETENESS OF SCANNED COPIES OF THIS PLAN SHEET.

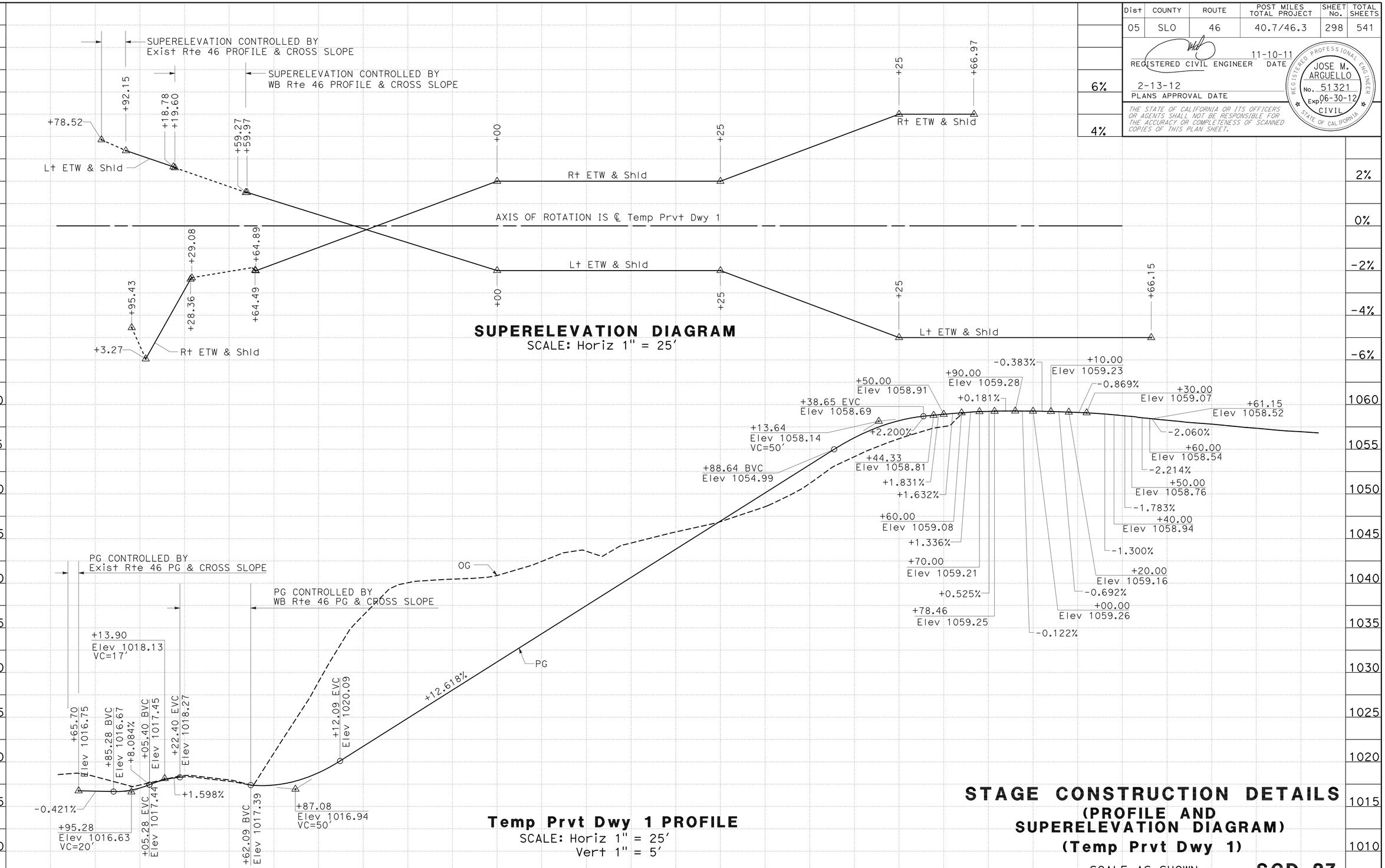

SUPERELEVATION DIAGRAM
SCALE: Horiz 1" = 25'

Temp Prvt Dwy 1 PROFILE
SCALE: Horiz 1" = 25'
Vert 1" = 5'

STATION		1	2	3	4	5	6	7	TOTAL
CY	Exc	4786							4786
	Emb	253							253

STAGE CONSTRUCTION DETAILS
(PROFILE AND SUPERELEVATION DIAGRAM)
(Temp Prvt Dwy 1)

SCALE AS SHOWN **SCD-27**

REVISED BY | DATE REVISED
JOSE BAUTISTA | JOSE ARGUELLO
CALCULATED-DESIGNED BY | CHECKED BY
FUNCTIONAL SUPERVISOR: JACK WALKER

STATE OF CALIFORNIA - DEPARTMENT OF TRANSPORTATION
Caltrans
06-DESIGN

LAST REVISION 11-09-11
DATE PLOTTED => 16-FEB-2012
TIME PLOTTED => 13:47

Dist	COUNTY	ROUTE	POST MILES TOTAL PROJECT	SHEET No.	TOTAL SHEETS
05	SLO	46	40.7/46.3	299	541

REGISTERED CIVIL ENGINEER DATE 11-10-11

2-13-12
PLANS APPROVAL DATE

REGISTERED PROFESSIONAL ENGINEER JOSE M. ARGUELLO No. 51321 Exp. 06-30-12 CIVIL STATE OF CALIFORNIA

THE STATE OF CALIFORNIA OR ITS OFFICERS OR AGENTS SHALL NOT BE RESPONSIBLE FOR THE ACCURACY OR COMPLETENESS OF ELECTRONIC COPIES OF THIS PLAN SHEET.

NOTE: FOR ACCURATE RIGHT OF WAY DATA, CONTACT RIGHT OF WAY ENGINEERING AT THE DISTRICT OFFICE.

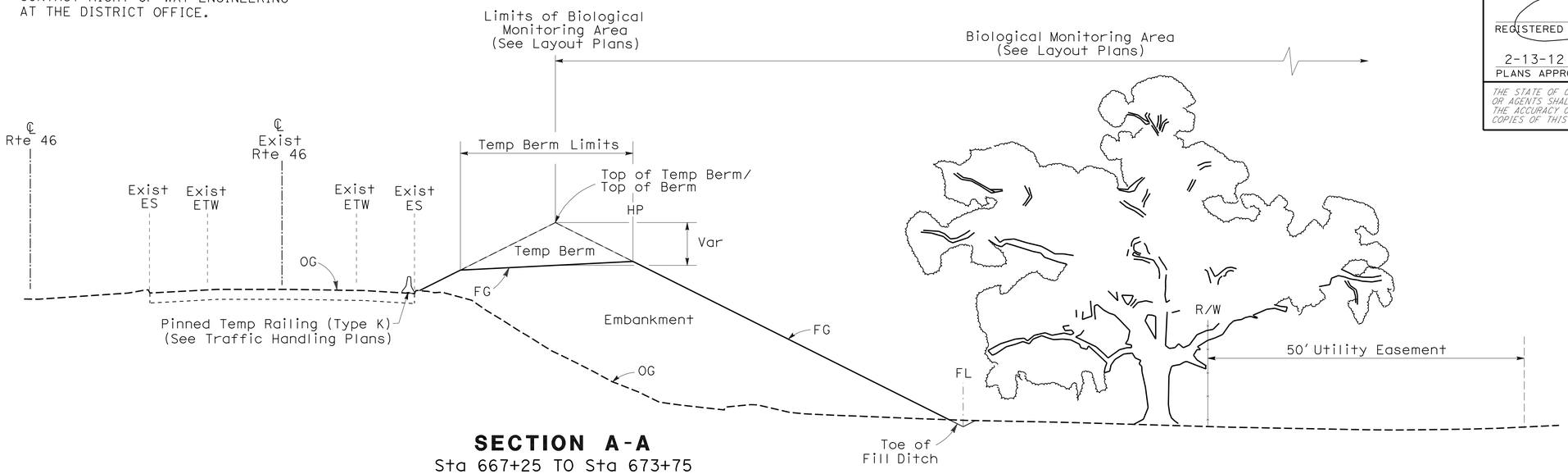

SECTION A-A
Sta 667+25 TO Sta 673+75
NO SCALE

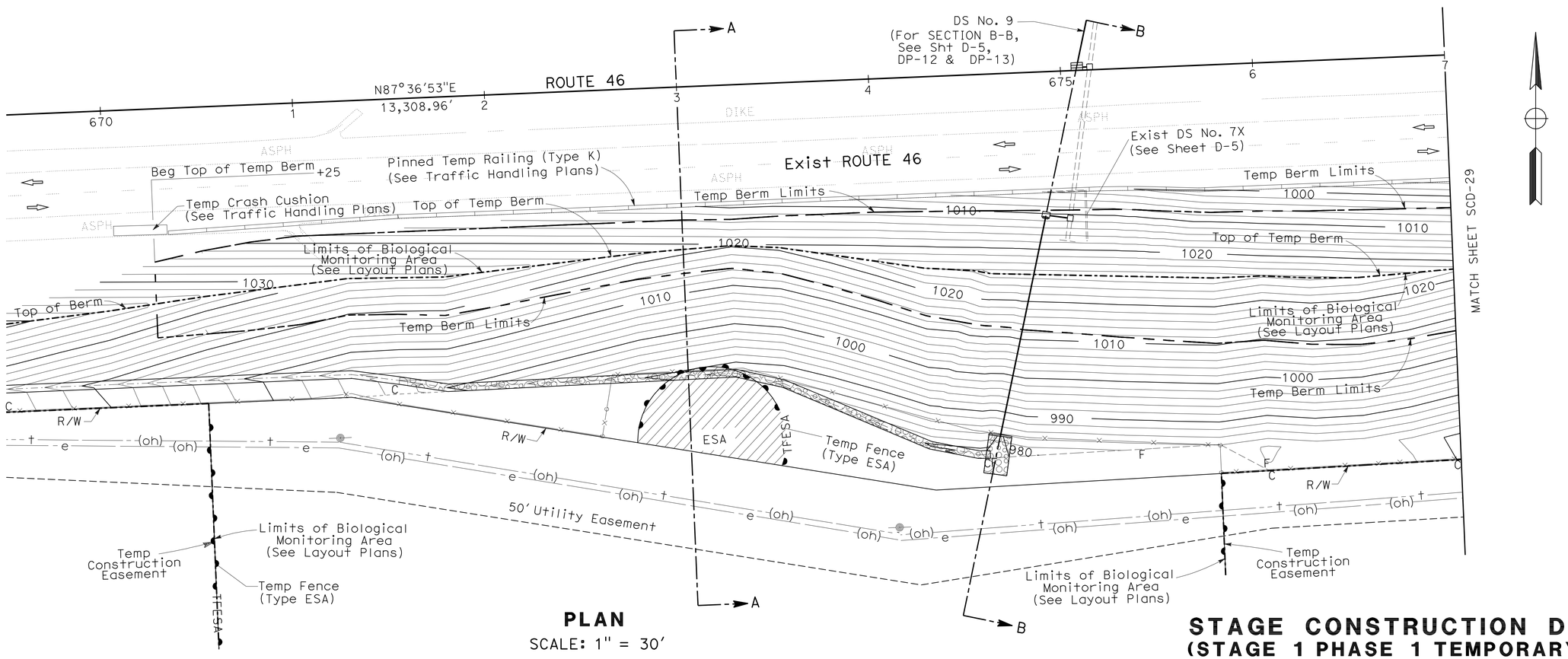

PLAN
SCALE: 1" = 30'

STAGE CONSTRUCTION DETAILS
(STAGE 1 PHASE 1 TEMPORARY BERM)
SCALE AS SHOWN **SCD-28**

APPROVED FOR STAGE CONSTRUCTION WORK ONLY

STATE OF CALIFORNIA - DEPARTMENT OF TRANSPORTATION
Caltrans 06-DESIGN

FUNCTIONAL SUPERVISOR: JACK WALKER
CALCULATED-DESIGNED BY: JOSE ARGUELLO
CHECKED BY: SUMANGALI HOODE
REVISED BY / DATE REVISED

LAST REVISION 11-09-11 | DATE PLOTTED => 16-FEB-2012 | TIME PLOTTED => 13:47

Dist	COUNTY	ROUTE	POST MILES TOTAL PROJECT	SHEET No.	TOTAL SHEETS
05	SLO	46	40.7/46.3	300	541

REGISTERED CIVIL ENGINEER DATE 11-10-11

2-13-12
PLANS APPROVAL DATE

REGISTERED PROFESSIONAL ENGINEER JOSE M. ARGUELLO No. 51321 Exp. 06-30-12 CIVIL STATE OF CALIFORNIA

THE STATE OF CALIFORNIA OR ITS OFFICERS OR AGENTS SHALL NOT BE RESPONSIBLE FOR THE ACCURACY OR COMPLETENESS OF ELECTRONIC COPIES OF THIS PLAN SHEET.

NOTE: FOR ACCURATE RIGHT OF WAY DATA, CONTACT RIGHT OF WAY ENGINEERING AT THE DISTRICT OFFICE.

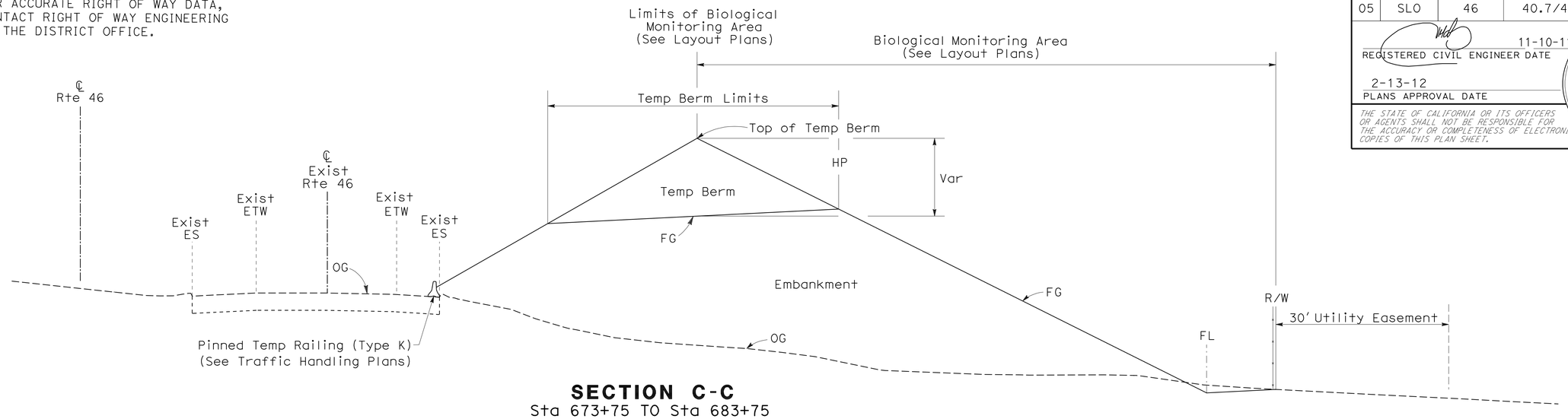

SECTION C-C

Sta 673+75 TO Sta 683+75

NO SCALE

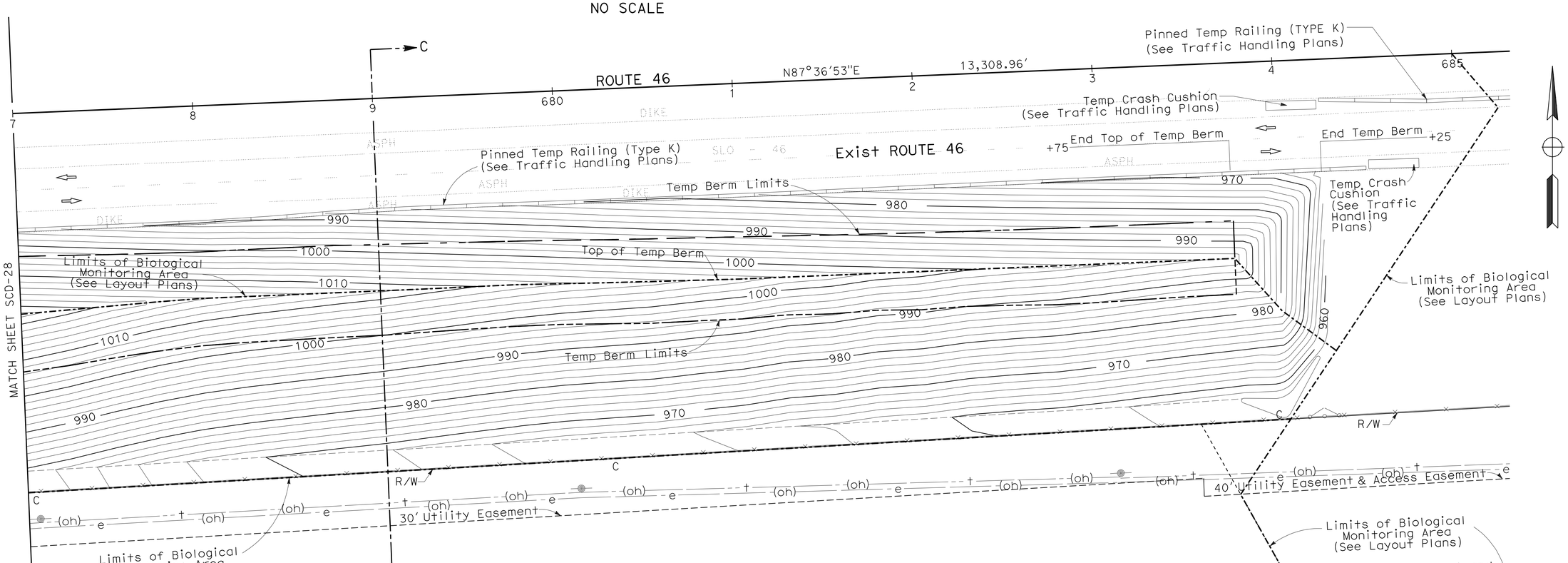

PLAN

SCALE: 1"= 30'

STAGE CONSTRUCTION DETAILS
(STAGE 1 PHASE 1 TEMPORARY BERM)

SCALE AS SHOWN **SCD-29**

APPROVED FOR STAGE CONSTRUCTION WORK ONLY

STATE OF CALIFORNIA - DEPARTMENT OF TRANSPORTATION
Caltrans 06-DESIGN

FUNCTIONAL SUPERVISOR: JACK WALKER
CALCULATED-DESIGNED BY: JOSE ARGUELLO
CHECKED BY: SUMANGALI HOODE
REVISED BY / DATE REVISED

LAST REVISION 11-09-11 | DATE PLOTTED => 16-FEB-2012 | TIME PLOTTED => 13:48