DIST.	COUNTY	ROUTE	POST MILES TOTAL PROJECT	SHEET NO.	TOTAL SHEETS
04	Ala	80	2.2	701	800

Jaswinder S Gill 5-30-12
REGISTERED ELECTRICAL ENGINEER DATE

REGISTERED PROFESSIONAL ENGINEER J. S. GILL No. 18551 Exp. 12-31-12 ELEC STATE OF CALIFORNIA

10-22-12
PLANS APPROVAL DATE

The State of California or its officers or agents shall not be responsible for the accuracy or completeness of scanned copies of this plan sheet.

BUILDING 1B FIRST FLOOR LIGHTING CONTROL SCHEDULE

ROOM NUMBER	ROOM NAME	POWER SCHEDULE: PANELBOARD: PANELBOARD NAME	PANELBOARD: CIRCUIT NO.	PANELBOARD: CIRCUIT BREAKER (A/P)	PANELBOARD: PANEL LOC. (ROOM NO.)	INTEGRATED FACILITY SWITCHBOARD: IFS NAME	IFS LOC. (ROOM NO.)	CONTROL SCHEDULE: LIGHITNG CONTROL DEVICES QUANTITY: SOC1	SOC2	OC1	OC2	OC3	S_P	S_{2D}	PEU	S_{DTS}	S_{TS}	LIGHTING CONTROL PANEL (LCP): LCP NUMBER	LCP LOCATION (RM. NO.)	SWITCHING RELAYS	DIMMING RELAYS	CONTROL ZONE NO.	LCP SCHEMATIC	LIGHTING NETWORK PANEL (LNP): LNP NAME	NETWORK HUB NAME	NETWROK HUB PORT NO.	LIGHTING SCHEDULE: LED1 (37W)	LED2 (47W)	LED3 (27W)	LED4 (27W)	LED5 (116W)	LED6 (233W)	LED7 (37W)	LED8 (3W)	INSTALLED WATTS (W)	MOUNTING	POWER PLAN REFERENCE	CONTROL PLAN REFERENCE	NOTES
128	COMPRESSOR	8PB	2	15/1	131	IFS-P	131	1																LNP-P	HPA	2		1							47	R2	EEI-3.9	EEI-3.10	
129	STORAGE	8PB	2	15/1	131	IFS-P	131	1																LNP-P	HPA	2		1							47	R2	EEI-3.9	EEI-3.10	
130	RECYCLE MATERIAL STORAGE	8PB	2	15/1	131	IFS-P	131	1																LNP-P	HPA	2		1							47	R2	EEI-3.9	EEI-3.10	
131	ELECTRICAL	8PB	2	15/1	131	IFS-P	131		1															LNP-P	HPA	2		2							94	P	EEI-3.9	EEI-3.10	
132	HALLWAY	8PB	4	15/1	131	IFS-P	131				2			1	1			LCPI33	133	SIA,SIB	DIA,DIB	ZONE1	1	LNP-P	HPA	3	7								259	R2	EEI-3.9	EEI-3.10	
133	RIGGING SECURE STORAGE	8PB	6	15/1	131	IFS-P	131					2		2	1			LCPI33	133	S2C,S2D	D2C,D2D	ZONE2	1	LNP-P	HPA	4						4			932	P	EEI-3.9	EEI-3.10	
		8PB	3	15/1	131	IFS-P	131										1																3	2	117	W	EEI-3.9		
134	PAINT MIX	8PB	6	15/1	131	IFS-P	131					1		1	1			LCPI34	134	S2C,S2D	D2C,D2D	ZONE2	1	LNP-P	HPA	5						4			932	P	EEI-3.9	EEI-3.10	
		8PB	3	15/1	131	IFS-P	131										1																4	1	151	W	EEI-3.9		
135	HALLWAY	8PB	4	15/1	131	IFS-P	131			2				1	1			LCPI34	134	SIA,SIB	DIA,DIB	ZONE1	1	LNP-P	HPA	6	4								148	R2	EEI-3.9	EEI-3.10	
136	SEW	8PB	2	15/1	131	IFS-P	131					1		1	1			LCPI37	137	SIA,SIB	DIA,DIB	ZONE1	1	LNP-P	HPB	2						4			932	P	EEI-3.9	EEI-3.10	
		8PB	5	15/1	131	IFS-P	131																											1	3	W	EEI-3.9		
137	SHOP CREW	8PB	2	15/1	131	IFS-P	131					1		2	1			LCPI37	137	S2C,S2D	D2C,D2D	ZONE2	1	LNP-P	HPB	3						4			932	P	EEI-3.9	EEI-3.10	
		8PB	5	15/1	131	IFS-P	131										1																3	2	117	W	EEI-3.9		
138,139	TOOL STORAGE, PAINT STORAGE	8PB	2	15/1	131	IFS-P	131	1	1															LNP-P	HPB	4		3							141	R2	EEI-3.9	EEI-3.10	
140,141	TOOL STORAGE, PAINT STORAGE	8PB	2	15/1	131	IFS-P	131	1	1															LNP-P	HPB	5		3							141	R2	EEI-3.9	EEI-3.10	
142	EQUIPMENT STORAGE BAYS	8BB	4,6	15/1	142	IFS-B	142					6	2	2	1			LCPI42	142	SIA,SIB,S2C,S2D	DIA,DIB,D2C,D2D	ZONE1	1	LNP-B	HBA	3						16			3728	P	EEI-3.11	EEI-3.12	
		8BB	3	15/1	142	IFS-B	142										2																4	4	160	W/P	EEI-3.11		SEE PLAN SHEETS
143	HALLWAY	8BB	8	15/1	142	IFS-B	142				3			2	1			LCPI43	142	SIA,SIB	DIA,DIB	ZONE1	2	LNP-B	HBA	4	11								407	R2	EEI-3.11	EEI-3.12	
144	HALLWAY	8MB	4	15/1	148	IFS-M	148				2		1					LCPI78	178	S2C,S2D	D2C,D2D	ZONE2	1	LNP-M	HMA	4	10								370	R1	EEI-3.13	EEI-3.14	
145	CARPENTER SHOP	8BB	2	15/1	142	IFS-B	142					2		2	1			LCPI45	145	S2C,S2D	D2C,D2D	ZONE2	1	LNP-B	HBA	5						4			932	P	EEI-3.11	EEI-3.12	
		8BB	9	15/1	142	IFS-B	142										1																3	2	117	W	EEI-3.11		
146	SECURE STORAGE	8BB	2	15/1	142	IFS-B	142					2		2	1			LCPI45	145	SIA,SIB	DIA,DIB	ZONE1	1	LNP-B	HBA	6						4			932	P	EEI-3.11	EEI-3.12	
		8BB	9	15/1	142	IFS-B	142																											2	6	W	EEI-3.11		
147	WELDING SHOP	8BB	10	15/1	142	IFS-B	142					3	1	2	1			LCPI47	147	SIB,S2C,S2D	DIB,D2C,D2D	ZONE1	2	LNP-B	HBA	7						8			1864	P	EEI-3.11	EEI-3.12	
		8BB	7	15/1	142	IFS-B	142										1																2	2	80	W	EEI-3.11		
148	MAIN ELECTRICAL	8MB	2	15/1	148	IFS-M	148	1																LNP-M	HMA	2						1			233	P	EEI-3.11	EEI-3.12	
		8MB	3	15/1	148	IFS-M	148																											1	3	W	EEI-3.11		
149	TOILET	8MB	6	15/1	148	IFS-M	148	1																			2								74	R2	EEI-3.13		
150	BAIR STORAGE	8MB	12	15/1	148	IFS-M	148					1		1	1			LCPI50	150	SIA,SIB	DIA,DIB	ZONE1	2	LNP-M	HMC	4					4				464	P	EEI-3.15	EEI-3.16	
		8MB	12	15/1	148	IFS-M	148																											1	3	W	EEI-3.15		
151	JANITOR	8MB	12	15/1	148	IFS-M	148	1																			1								37	R2	EEI-3.15		
152	WOMENS RESTROOM	8MB	12	15/1	148	IFS-M	148			1				1				LCPRI53	153	S2C,S2D	D2C,D2D	ZONE1	3	LNP-M	HMC	2	3			1					138	R2**	EEI-3.15	EEI-3.16	
153	WOMENS LOCKER	8MB	12	15/1	148	IFS-M	148			1			1					LCPRI53	153	SIA	DIA	ZONE1	3	LNP-M	HMC	2	2								74	R2	EEI-3.15	EEI-3.16	
		8MB	13	15/1	14B	IFS-M	148									1												1						27	R2	EEI-3.15		
154/155	MENS RESTROOM/LOCKER	8MB	12	15/1	148	IFS-M	148			3			1	1				LCPRI55	155	SIA,S2C,S2D	DIA,D2C,D2D	ZONE1	3	LNP-M	HMC	3	9			1					360	R2**	EEI-3.15	EEI-3.16	
156	MENS SHOWER	8MB	13	15/1	14B	IFS-M	148									2													2						54	R2	EEI-3.15		
157	HALLWAY	8MB	16	15/1	148	IFS-M	148				1							LCPI59	159	SIB	DIB	ZONE1	1	LNP-M	HMD	2	3								111	R1	EEI-3.15	EEI-3.16	
158	LOBBY	8MB	16	15/1	148	IFS-M	148				1			1				LCPI59	159	SIA	DIA	ZONE1	1	LNP-M	HMD	2	3								111	R1	EEI-3.15	EEI-3.16	
159	MONITOR SPACE	8MB	18	15/1	148	IFS-M	148			2				2				LCPI59	159	S2C,S2D	D2C,D2D	ZONE2	1	LNP-M	HMD	3		4							188	R1	EEI-3.15	EEI-3.16	
160	CREW ROOM	8MB	18	15/1	148	IFS-M	148		1															LNP-M	HMD	4		2							94	R1	EEI-3.15	EEI-3.16	
161	SUPERVISOR	8MB	18	15/1	148	IFS-M	148		1															LNP-M	HMC	7		2							94	R1	EEI-3.15	EEI-3.16	
162	ELECTRICAL SHOP	8MB	14	15/1	148	IFS-M	148					2		1	1			LCPI62	162	S2C,S2D	D2C,D2D	ZONE2	1	LNP-M	HMC	6					5				580	P	EEI-3.15	EEI-3.16	
		8MB	9	15/1	148	IFS-M	148										3															12	2	450	W*	EEI-3.15		
163	EQUIPMENT STORAGE BAY	8MB	14	15/1	148	IFS-M	148					1		1	1			LCPI62	162	SIA,SIB	DIA,DIB	ZONE1	1	LNP-M	HMC	5					4				464	P	EEI-3.15	EEI-3.16	
164A	MAP ROOM	8MB	18	15/1	148	IFS-M	148	1	1															LNP-M	HMD	5		3							141	R1	EEI-3.15	EEI-3.16	
164B	BASE	8MB	18	15/1	148	IFS-M	148		1															LNP-M	HMD	5		2							94	R1	EEI-3.15	EEI-3.16	

CALIFORNIA STATE FIRE MARSHAL APPROVED
Approval of this plan does not authorize or approve any omission or deviation from applicable regulations. Final approval is subject to field inspection. One set of approved plans shall be available on the project site at all times.
Reviewed by: JOHN E WOODS, SDSFM
Approval date: 8-22-12

LIGHTING CONTROL PANEL SCHEMATIC LEGEND:

1. *See schematic details* (1 / EEI-3.25)
2. *See schematic details* (1 / EEI-3.26)
3. *See schematic details* (2 / EEI-3.26)

FIXTURE MOUNTING TYPE:

R1 *Recessed on a suspended acoustic ceiling tiles.*

R2 *Recessed on a gypsum board ceiling.*

P *Pendant or Stem mounted, swivel type junction box on an exposed deck ceiling.*

S *Surface mount on gypsum board ceiling.*

W *Wall mounted. See mounting detail (1 / EEI-3.30) for LED7 task lighting.*

* *See Plan Note 18 on sheet EE1-3.15 for workbench light mounted on workbench's adjacent to the exterior windows.*

** *LED4 fixtures are wall mounted above the mirror.*

DESIGN	BY Jaswinder Gill	CHECKED Christine Mamaril	
DETAILS	BY Dali Zhou	CHECKED Jaswinder Gill	
QUANTITIES	BY Jaswinder Gill	CHECKED Christine Mamaril	

STATE OF CALIFORNIA
DEPARTMENT OF TRANSPORTATION

DIVISION OF ENGINEERING SERVICES
ELECTRICAL-MECHANICAL-WATER AND WASTEWATER DESIGN

BRIDGE NO. 33M5785
POST MILE 2.2

SFOBB MAINTENANCE COMPLEX
LIGHTING POWER AND CONTROL SCHEDULE 3

SHEET **EE1-3.23**

TAEMWW Imperial Rev. 7/10

ORIGINAL SCALE IN INCHES FOR REDUCED PLANS 0 1 2 3

UNIT 3596
PROJECT NUMBER & PHASE 04120006661
EA 014081

DISREGARD PRINTS BEARING EARLIER REVISION DATES → REVISION DATES (PRELIMINARY STAGE ONLY) 12/20/11 2/15/12 3/19/12 5/30/12 SHEET OF

25-OCT-2012 08:59
ee1_3.23.dgn

DIST.	COUNTY	ROUTE	POST MILES TOTAL PROJECT	SHEET NO.	TOTAL SHEETS
04	Ala	80	2.2	702	800

Jaswinder S Gill 5-30-12
REGISTERED ELECTRICAL ENGINEER DATE

REGISTERED PROFESSIONAL ENGINEER J. S. GILL No. 18551 Exp. 12-31-12 ELEC STATE OF CALIFORNIA

10-22-12
PLANS APPROVAL DATE

The State of California or its officers or agents shall not be responsible for the accuracy or completeness of scanned copies of this plan sheet.

CALIFORNIA STATE FIRE MARSHAL APPROVED
Approval of this plan does not authorize or approve any omission or deviation from applicable regulations. Final approval is subject to field inspection. One set of approved plans shall be available on the project site at all times.
Reviewed by: JOHN E WOODS, SDSFM
Approval date: 8-22-12

BUILDING 1B FIRST FLOOR LIGHTING POWER & CONTROL SCHEDULE

ROOM NUMBER	ROOM NAME	POWER SCHEDULE: PANELBOARD: PANELBOARD NAME	PANELBOARD: CIRCUIT NO.	PANELBOARD: CIRCUIT BREAKER (A/P)	PANELBOARD: PANEL LOC. (ROOM NO.)	INTEGRATED FACILITY SWITCHBOARD: IFS NAME	IFS LOC. (ROOM NO.)	CONTROL SCHEDULE: LIGHTING CONTROL DEVICES QUANTITY: SOC1	SOC2	OC1	OC2	OC3	S_D	S_{2D}	PEU	S_{DTS}	S_{TS}	LIGHTING CONTROL PANEL (LCP): LCP NUMBER	LCP LOCATION (RM. NO.)	SWITCHING RELAYS	DIMMING RELAYS	CONTROL ZONE NO.	LCP SCHEMATIC	LIGHTING NETWORK PANEL (LNP): LNP NAME	NETWORK HUB NAME	NETWROK HUB PORT NO.	LIGHTING SCHEDULE: LED1 (37W)	LED2 (47W)	LED3 (27W)	LED4 (27W)	LED5 (116W)	LED6 (233W)	LED7 (37W)	LED8 (3W)	INSTALLED WATTS (W)	MOUNTING	POWER PLAN REFERENCE	CONTROL PLAN REFERENCE	NOTES
165	LOBBY	8MB	4	15/1	148	IFS-M	148				1		1		1			LCPI78	178	S2D	D2D	ZONE2	1	LNP-M	HMB	4	4								148	RI	EEI-3.13	EEI-3.14	
166	BREAK ROOM	8MB	6	15/1	148	IFS-M	148	2																LNP-M	HMB	7		4							188	RI	EEI-3.13	EEI-3.14	
167	HALLWAY	8MB	10	15/1	148	IFS-M	148				3		3		1			LCPI75	175	S2D	D2D	ZONE2	1	LNP-M	HMA	4	6								222	RI	EEI-3.13	EEI-3.14	
168	SUPERVISOR	8MB	8	15/1	148	IFS-M	148		1															LNP-M	HMA	6		2							94	RI	EEI-3.13	EEI-3.14	
169	LEAD WORKER AREA	8MB	8	15/1	148	IFS-M	148				1			1				LCPI69	169	SIA,SIB	DIA,DIB	ZONE1	2	LNP-M	HMA	5		5							235	RI	EEI-3.13	EEI-3.14	
170,171,172	SUPERVISOR	8MB	8	15/1	148	IFS-M	148		3															LNP-M	HMA	6		6							282	RI	EEI-3.13	EEI-3.14	
173	CREW ROOM	8MB	8	15/1	148	IFS-M	148			1			1					LCPI75	175	SIA	DIA	ZONE1	1	LNP-M	HMA	3		4							188	RI	EEI-3.13	EEI-3.14	
174	CREW ROOM	8MB	8	15/1	148	IFS-M	148			1			1					LCPI75	175	SIB	DIB	ZONE1	1	LNP-M	HMA	3		4							188	RI	EEI-3.13	EEI-3.14	
175	CREW ROOM	8MB	8	15/1	148	IFS-M	148			1			1					LCPI75	175	S2C	D2C	ZONE1	1	LNP-M	HMA	3		4							188	RI	EEI-3.13	EEI-3.14	
176	COMMUNICATIONS	8MB	6	15/1	148	IFS-M	148				1			1				LCPI76	176	SIA,SIB	DIA,DIB	ZONE1	2	LNP-M	HMB	5		3							141	RI	EEI-3.13	EEI-3.14	
177	FIRE/MECHANICAL	8MB	6	15/1	148	IFS-M	148		1															LNP-M	HMB	2		2							94	R2	EEI-3.13	EEI-3.14	
178	ETTIE STORAGE	8MB	6	15/1	148	IFS-M	148				1	1		1	1			LCPI78	178	SIA,SIB	DIA,DIB	ZONE1	1	LNP-M	HMB	3		1			4				511	P*	EEI-3.13	EEI-3.14	
		8MB	5	15/1	148	IFS-M	148										3															6		222	W	EEI-3.13		
179	HALLWAY	8VB	4	15/1	192	IFS-V	192				1			2				LCPI91A	191	S2C,S2D	D2C,D2D	ZONE2	1	LNP-V	HVA	4	4								148	RI	EEI-3.13	EEI-3.14	
180	PARTS STORAGE	8VB	8	15/1	192	IFS-V	192					3		2	1			LCPI80	180	SIA,SIB	DIA,DIB	ZONE1	1	LNP-V	HVB	4					8				928	P	EEI-3.15	EEI-3.16	
		8VB	11	15/1	192	IFS-V	192																										2		6	W	EEI-3.15		
181	TIRE STORAGE	8VB	8	15/1	192	IFS-V	192					1		1	1			LCPI80	180	S2C,S2D	D2C,D2D	ZONE2	1	LNP-V	HVB	5					2				232	P	EEI-3.15	EEI-3.16	
		8VB	11	15/1	192	IFS-V	192																										1		3	W	EEI-3.15		
182	PARTS OFFICE	8VB	8	15/1	192	IFS-V	192		1															LNP-V	HVB	6		2							94	RI	EEI-3.15	EEI-3.16	
183	SUPERVISOR	8VB	6	15/1	192	IFS-V	192		1															LNP-V	HVA	3		2							94	RI	EEI-3.13	EEI-3.14	
184	CREW ROOM	8VB	6	15/1	192	IFS-V	192				1			2				LCPI91A	191	SIA,SIB	DIA,DIB	ZONE1	1	LNP-V	HVA	5		6							282	RI	EEI-3.13	EEI-3.14	
185	HALLWAY	8VB	4	15/1	192	IFS-V	192	1																LNP-V	HVA	6	1								37	R2	EEI-3.13	EEI-3.14	
186	WOMENS RESTROOM	8VB	6	15/1	192	IFS-V	192			1			1					LCPI91B	191	SIC	DIC	ZONE2	1	LNP-V	HVB	2	2								74	R2	EEI-3.13	EEI-3.14	
187	MENS RESTROOM	8VB	6	15/1	192	IFS-V	192			1				1				LCPI91B	191	SIA	DIA	ZONE1	1	LNP-V	HVB	3	3								111	R2	EEI-3.13	EEI-3.14	
188	MENS LOCKER	8VB	6	15/1	192	IFS-V	192			1								LCPI91B	191	SIB	DIB	ZONE1	1	LNP-V	HVB	3	2		1						101	R2	EEI-3.13	EEI-3.14	
189	SUPERVISOR	8VB	6	15/1	192	IFS-V	192		1															LNP-V	HVA	2		2							94	RI	EEI-3.13	EEI-3.14	
190	JANITOR	8VB	8	15/1	192	IFS-V	192	1																			1								37	R2	EEI-3.15		
191	EQUIPMENT REPAIR BAYS	8VB	12	15/1	192	IFS-V	192					6	2	2	1			LCPI91	191	SIA,SIB,S2C,S2D	DIA,DIB,D2C,D2D	ZONE1	2	LNP-V	HVC	2					12				2796	P	EEI-3.17	EEI-3.18	
		8VB	5	15/1	192	IFS-V	192									5																9	4	345	W**	EEI-3.17		
192	EQUIPMENT REPAIR AREA	8VB	16	15/1	192	IFS-V	192					2	1	1	1			LCPI92	192	SIA,SIB	DIA,DIB	ZONE1	1	LNP-V	HVC	4					4				932	P	EEI-3.17	EEI-3.18	
		8VB	5	15/1	192	IFS-V	192									2																6	1	225	W**	EEI-3.17		
193	MACHINE SHOP	8VB	18	15/1	192	IFS-V	192					2		2	1			LCPI92	192	S2C,S2D	D2C,D2D	ZONE2	1	LNP-V	HVC	5					4				932	P	EEI-3.17	EEI-3.18	
		8VB	7	15/1	192	IFS-V	192									2																7	1	262	W**	EEI-3.17		
194	UNISEX TOILET	8VB	18	15/1	192	IFS-V	192	1																			2							74	R2	EEI-3.17	EEI-3.18	
195	ROVER BAY STORAGE	8VB	16	15/1	192	IFS-V	192					2		2	1			LCPI95	195	SIA,SIB	DIA,DIB	ZONE1	1	LNP-V	HVC	6					2				466	P	EEI-3.17	EEI-3.18	
		8VB	7	15/1	192	IFS-V	192									2							1								5	3	194	W	EEI-3.17		
196	SECURE STORAGE AREA	8VB	16	15/1	192	IFS-V	192					2						LCPI95	195	S2C	D2C	ZONE2		LNP-V	HVC	7					1				233	P	EEI-3.17	EEI-3.18	
197	WORKSTATION	8VB	5	15/1	192	IFS-V	192									1																4		148	W	EEI-3.17		
198	LEED OFFICE	8VB	12	15/1	192	IFS-V	192		1															LNP-V	HVC	3		2							94	RI	EEI-3.17	EEI-3.18	
199	UTILITY	8VB	12	15/1	192	IFS-V	192	1																							1				233	P	EEI-3.17	EEI-3.18	

LIGHTING CONTROL PANEL SCHEMATIC LEGEND:

1. See schematic details (1 / EEI-3.25).
2. See schematic details (1 / EEI-3.26).
3. See schematic details (2 / EEI-3.26).

FIXTURE MOUNTING TYPE:

- R1 Recessed on a suspended acoustic ceiling tiles.
- R2 Recessed on a gypsum board ceiling.
- P Pendant or Stem mounted, swivel type junction box on an exposed deck ceiling.
- S Surface mount on gypsum board ceiling.
- W Wall mounted. See mounting detail (1 / EEI-3.30) for LED7 task lighting.

* Only LED2 shall be recessed mounted on a gypboard ceiling.

** See Plan Note 17 on sheet EE1-3.17 for workbench light mounted on workbench's adjacent to the exterior windows and Plan Note 19 on sheet EE1-3.17 for workbench lights mounted on workbench assembly.

	BY	CHECKED
DESIGN	Jaswinder Gill	Christine Mamaril
DETAILS	Dali Zhou	Jaswinder Gill
QUANTITIES	Jaswinder Gill	Christine Mamaril

STATE OF CALIFORNIA
DEPARTMENT OF TRANSPORTATION

DIVISION OF ENGINEERING SERVICES
ELECTRICAL-MECHANICAL-WATER AND WASTEWATER DESIGN

BRIDGE NO. 33M5785
POST MILE 2.2

SFOBB MAINTENANCE COMPLEX
LIGHTING POWER AND CONTROL SCHEDULE 4

SHEET **EE1-3.24**

TAEMWW Imperial Rev. 7/10

ORIGINAL SCALE IN INCHES FOR REDUCED PLANS 0 1 2 3

UNIT 3596
PROJECT NUMBER & PHASE 04120006661
EA 014081

DISREGARD PRINTS BEARING EARLIER REVISION DATES → 12/20/11 2/28/12 3/23/12 5/30/12

REVISION DATES (PRELIMINARY STAGE ONLY) SHEET OF

25-OCT-2012 08:59
ee1_3.24.dgn

DIST.	COUNTY	ROUTE	POST MILES TOTAL PROJECT	SHEET NO.	TOTAL SHEETS
04	Ala	80	2.2	703	800

REGISTERED ELECTRICAL ENGINEER — Jaswinder S Gill — 5-30-12 DATE

REGISTERED PROFESSIONAL ENGINEER — J. S. GILL — No. 18551 — Exp. 12-31-12 — ELEC — STATE OF CALIFORNIA

10-22-12
PLANS APPROVAL DATE

The State of California or its officers or agents shall not be responsible for the accuracy or completeness of scanned copies of this plan sheet.

CALIFORNIA STATE FIRE MARSHAL APPROVED

Approval of this plan does not authorize or approve any omission or deviation from applicable regulations. Final approval is subject to field inspection. One set of approved plans shall be available on the project site at all times.

Reviewed by: JOHN E WOODS, SDSFM

Approval date: 8-22-12

IFS-# See Lighting Power Plans and Lighting Power & Control Schedules for the IFS number feeding each LCP.

LNP-# See Lighting Control Plans and Lighting Power & Control Schedules for the LNP number.

See Lighting Power & Control Plans and Lighting Power & Control Schedules for the room number associated with each LCP.

H### See Lighting Control Plans and Lighting Power & Control Schedules for the hub port number.

H#### See Lighting Power Plans and Lighting Power & Control Schedules for the ungrounded circuit number feeding each LCP.

N#### See Lighting Power Plans and Lighting Power & Control Schedules for the grounded circuit neutral number feeding each LCP.

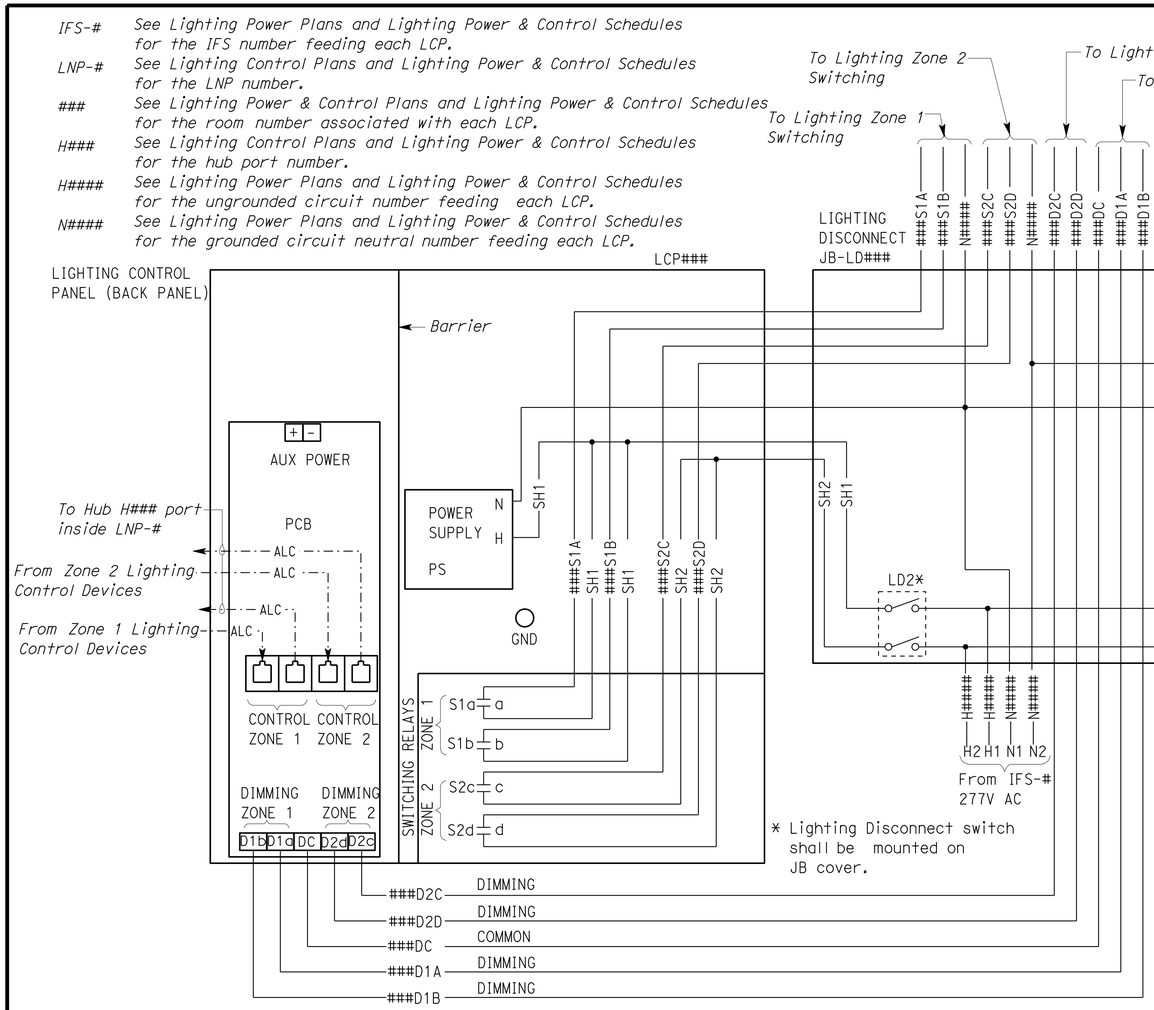

LIGHTING CONTROL PANEL 2 ZONE CONTROLS WIRING DIAGRAM (1) (2)

(PANEL COVER NOT SHOWN FOR CLARITY)

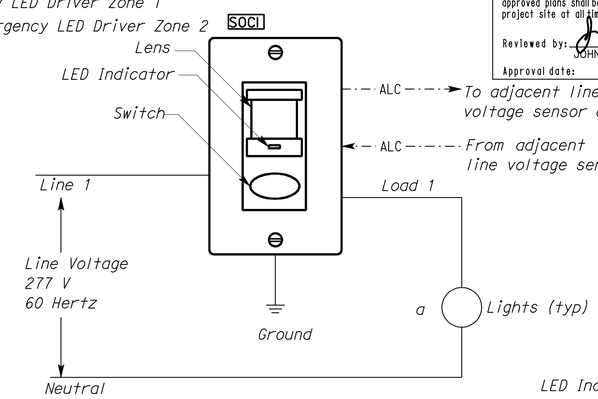

(4) LINE VOLTAGE WALL SWITCH OS-TYPE 1 WIRING DIAGRAM

Notes:

(1) *Schematic is shown with two ungrounded phase conductors feeding the Lighting disconnect junction box. Modify schematic by replacing LD2 with LD1 if only one ungrounded phase conductor is feeding the Lighting Disconnect junction box as shown on plans.*

(2) *Schematic is shown for 2 zone controls. Use the same schematic for single zone controls using two ungrounded phase conductors.*

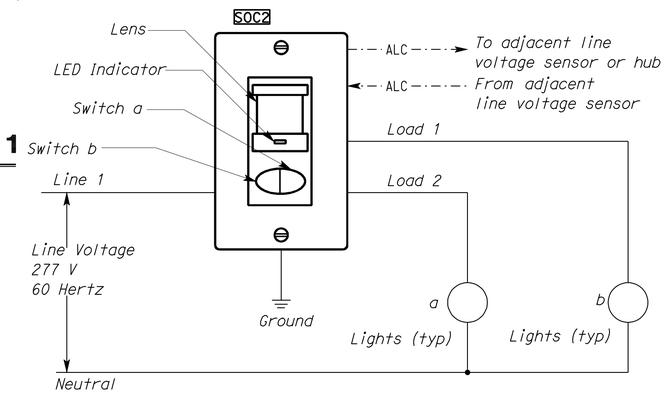

(5) LINE VOLTAGE WALL SWITCH OS-TYPE 2 WIRING DIAGRAM

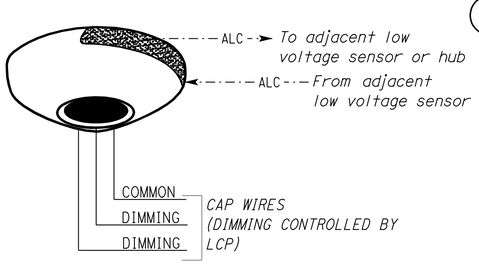

(2) LOW VOLTAGE PHOTOCELL UNIT, PEU WIRING DIAGRAM

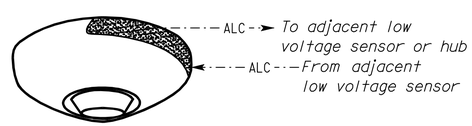

(3) LOW VOLTAGE OCCUPANCY SENSOR, OC TYPE1, TYPE 2 & TYPE 3 WIRING DIAGRAM

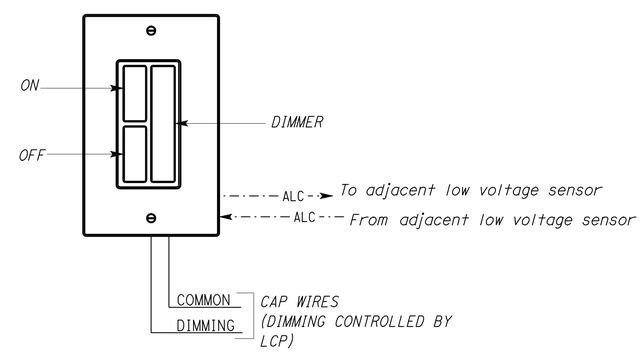

(6) LOW VOLTAGE WALL DIMMER SWITCH, S_D WIRING DIAGRAM

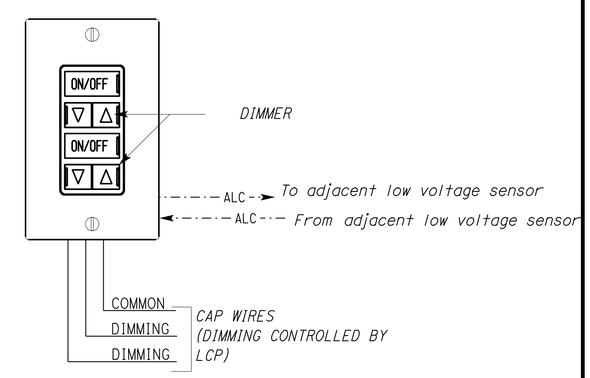

(7) LOW VOLTAGE WALL DIMMER SWITCH, S_{2D} WIRING DIAGRAM

	BY	CHECKED
DESIGN	Jaswinder Gill	Christine Mamaril
DETAILS	Jaswinder Gill/Dali Zhou	J. S. Sandhu
QUANTITIES	Jaswinder Gill	Christine Mamaril

STATE OF CALIFORNIA DEPARTMENT OF TRANSPORTATION

DIVISION OF ENGINEERING SERVICES ELECTRICAL-MECHANICAL-WATER AND WASTEWATER DESIGN

BRIDGE NO. 33M5785 — POST MILE 2.2

SFOBB MAINTENANCE COMPLEX

LIGHTING CONTROL SCHEMATICS 1

SHEET EE1-3.25

TAEMWW Imperial Rev. 7/10

ORIGINAL SCALE IN INCHES FOR REDUCED PLANS 0 1 2 3

UNIT 3596
PROJECT NUMBER & PHASE 04120006661
EA 014081

DISREGARD PRINTS BEARING EARLIER REVISION DATES → 12/20/11 2/22/12 3/23/12 5/30/12

REVISION DATES (PRELIMINARY STAGE ONLY) SHEET OF

25-OCT-2012 08:59

ee1_3.25.dgn

DIST.	COUNTY	ROUTE	POST MILES TOTAL PROJECT	SHEET NO.	TOTAL SHEETS
04	Ala	80	2.2	704	800

REGISTERED ELECTRICAL ENGINEER — 5-30-12 DATE

REGISTERED PROFESSIONAL ENGINEER — J. S. GILL — No. 18551 — Exp. 12-31-12 — ELEC — STATE OF CALIFORNIA

10-22-12
PLANS APPROVAL DATE

The State of California or its officers or agents shall not be responsible for the accuracy or completeness of scanned copies of this plan sheet.

CALIFORNIA STATE FIRE MARSHAL APPROVED
Approval of this plan does not authorize or approve any omission or deviation from applicable regulations. Final approval is subject to field inspection. One set of approved plans shall be available on the project site at all times.
Reviewed by: JOHN E WOODS, SDSFM
Approval date: 8-22-12

IFS-# See Lighting Power Plans and Lighting Power & Control Schedules for the IFS number feeding each LCP and LCPR.
LNP-# See Lighting Control Plans and Lighting Power & Control Schedules for the LNP number.
See Lighting Power & Control Plans and Lighting Power & Control Schedules for the room number associated with each LCP and LCPR.
H### See Lighting Control Plans and Lighting Power & Control Schedules for the hub port number.
H#### See Lighting Power Plans and Lighting Power & Control Schedules for the ungrounded circuit number feeding each LCP and LCPR.
N#### See Lighting Power Plans and Lighting Power & Control Schedules for the grounded circuit neutral number feeding each LCP and LCPR.

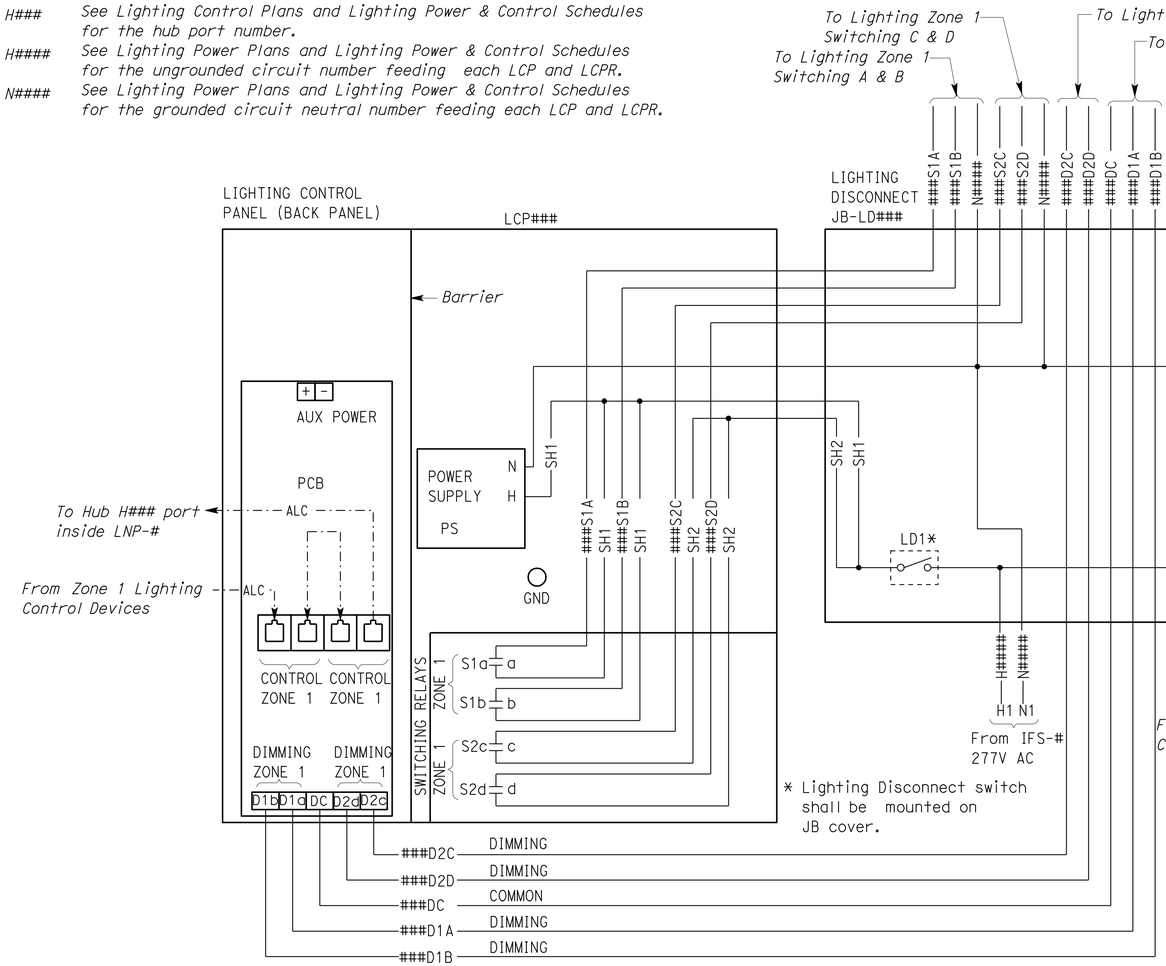

LIGHTING CONTROL PANEL
1 ZONE CONTROLS
WIRING DIAGRAM

(PANEL COVER NOT SHOWN FOR CLARITY)

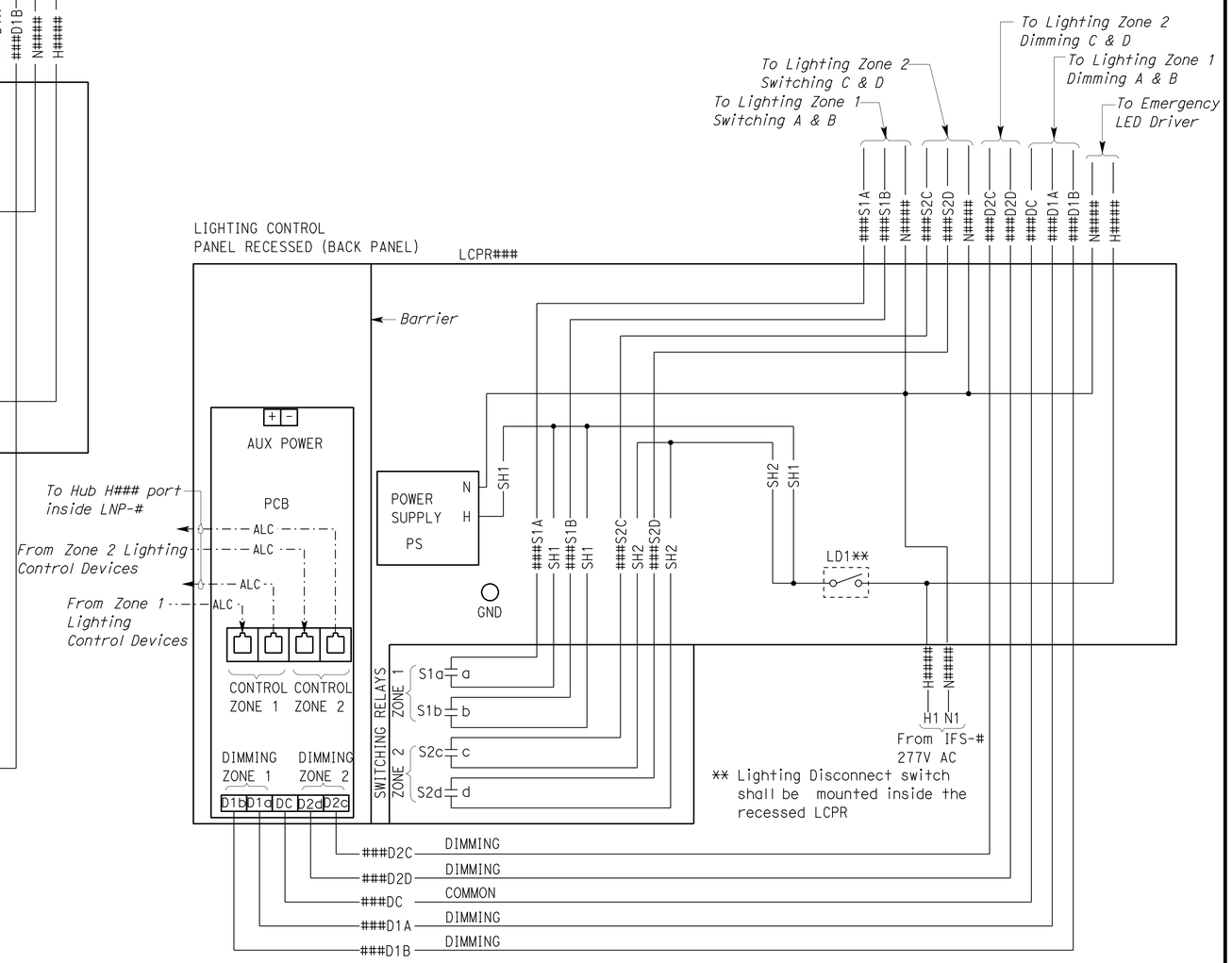

LIGHTING CONTROL PANEL RECESSED
2 ZONE CONTROLS
WIRING DIAGRAM

(HINGED RECESSED PANEL COVER NOT SHOWN FOR CLARITY)

	BY	CHECKED
DESIGN	Jaswinder Gill	Christine Mamaril
DETAILS	Jaswinder Gill/Dali Zhou	J. S. Sandhu
QUANTITIES	Jaswinder Gill	Christine Mamaril

STATE OF CALIFORNIA
DEPARTMENT OF TRANSPORTATION

DIVISION OF ENGINEERING SERVICES
ELECTRICAL-MECHANICAL-WATER AND WASTEWATER DESIGN

BRIDGE NO. 33M5785
POST MILE 2.2

SFOBB MAINTENANCE COMPLEX
LIGHTING CONTROL SCHEMATICS 2

SHEET EE1-3.26

TAEMWW Imperial Rev. 7/10

ORIGINAL SCALE IN INCHES FOR REDUCED PLANS 0 1 2 3

UNIT 3596
PROJECT NUMBER & PHASE 04120006661
EA 014081

DISREGARD PRINTS BEARING EARLIER REVISION DATES → 12/26/11 2/22/12 3/23/12 5/30/12

REVISION DATES (PRELIMINARY STAGE ONLY) SHEET OF

25-OCT-2012 08:59
ee1_3.26.dgn

DIST.	COUNTY	ROUTE	POST MILES TOTAL PROJECT	SHEET NO.	TOTAL SHEETS
04	Ala	80	2.2	705	800

REGISTERED ELECTRICAL ENGINEER — 5-30-12 DATE

REGISTERED PROFESSIONAL ENGINEER J. S. GILL No. 18551 Exp. 12-31-12 ELEC STATE OF CALIFORNIA

10-22-12
PLANS APPROVAL DATE

The State of California or its officers or agents shall not be responsible for the accuracy or completeness of scanned copies of this plan sheet.

General Notes:

A. Building exterior lights marked with "a","b","c" and "d" shall be controlled by photoelectric sensor (PES) and an astronomical time clock as part of the main hub.

B. Building exterior lights marked with "a","b" and "d" on Building IB shall have a fixture integrated motion sensor. Lights output shall be dimmed to 50% of maximum output when there is no motion detected.

C. Building exterior lights marked with "d" on Building IA shall have a fixture integrated motion sensor. Lights output shall be dimmed to 50% of maximum output when there is no motion detected.

D. Bypass capability shall be provided through lighting network control system.

E. Bridge lights marked with "a" and "b" shall be controlled by photoelectric sensor (PES) and an astronomical time clock as part of the main hub inside LNP-M.

F. Bridge lights marked with "a" and "b" shall have a fixture integrated motion sensor. Lights output shall be dimmed to 50% of maximum output when there is no motion detected.

G. For exact quantity of lights, see sheets EE0-0.3, EE0-0.4, EE1-3.19 & 1-3.20. For exact locations, see Architectural plans.

IFS-# See Building Exterior Lighting Plans for the IFS number feeding each BELCP.
LNP-# See Building Exterior Lighting Plans for the LNP number.
See Building Exterior Lighting Plans for the room number associated with each BELCP.
MH# See Building Exterior Lighting Plans for the main hub port number.
H#### See Building Exterior Lighting Plans for the ungrounded circuit number feeding each BELCP.
N#### See Building Exterior Lighting Plans for the grounded circuit neutral number feeding each BELCP.

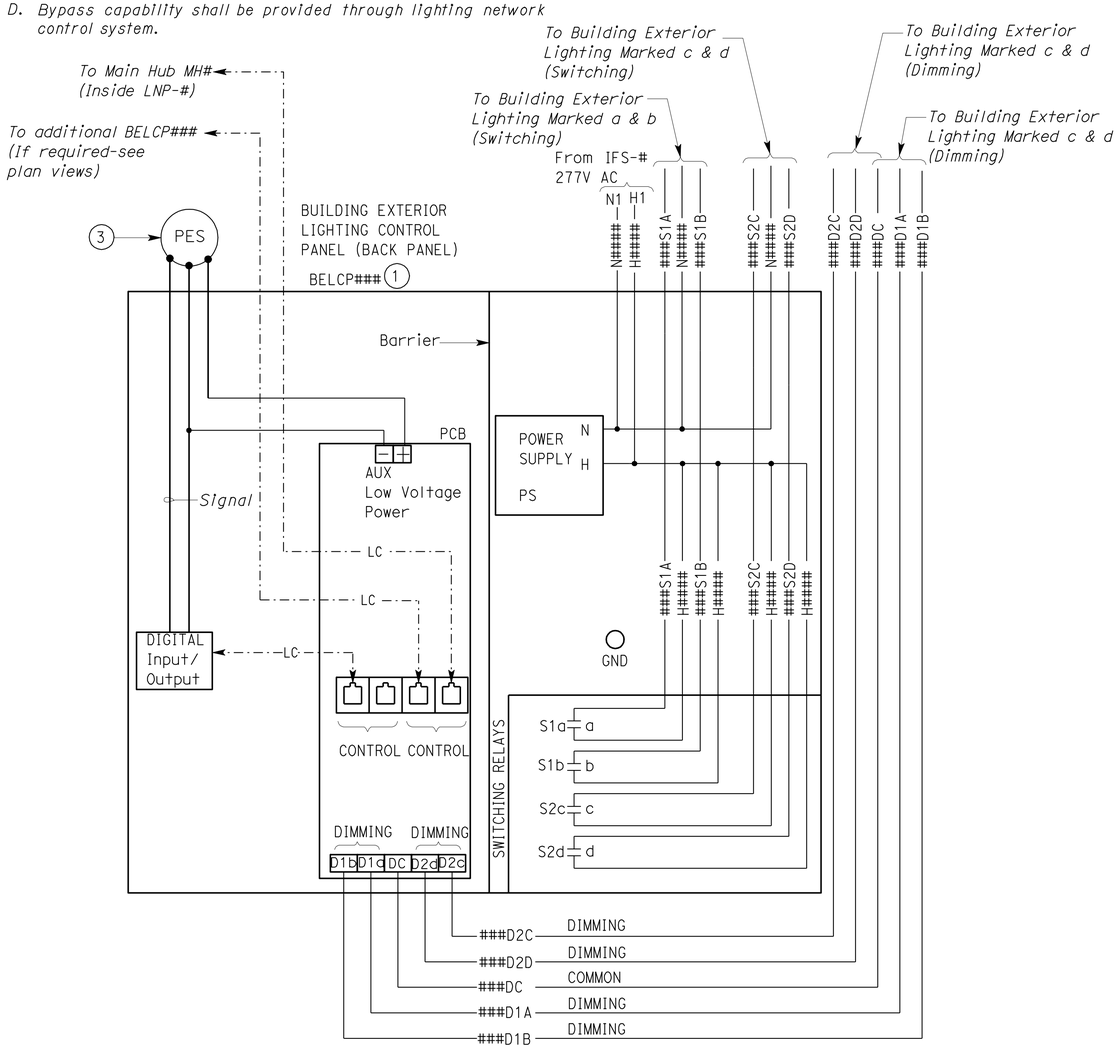

BUILDING EXTERIOR LIGHTING CONTROL PANEL WIRING DIAGRAM

(PANEL COVER NOT SHOWN FOR CLARITY)

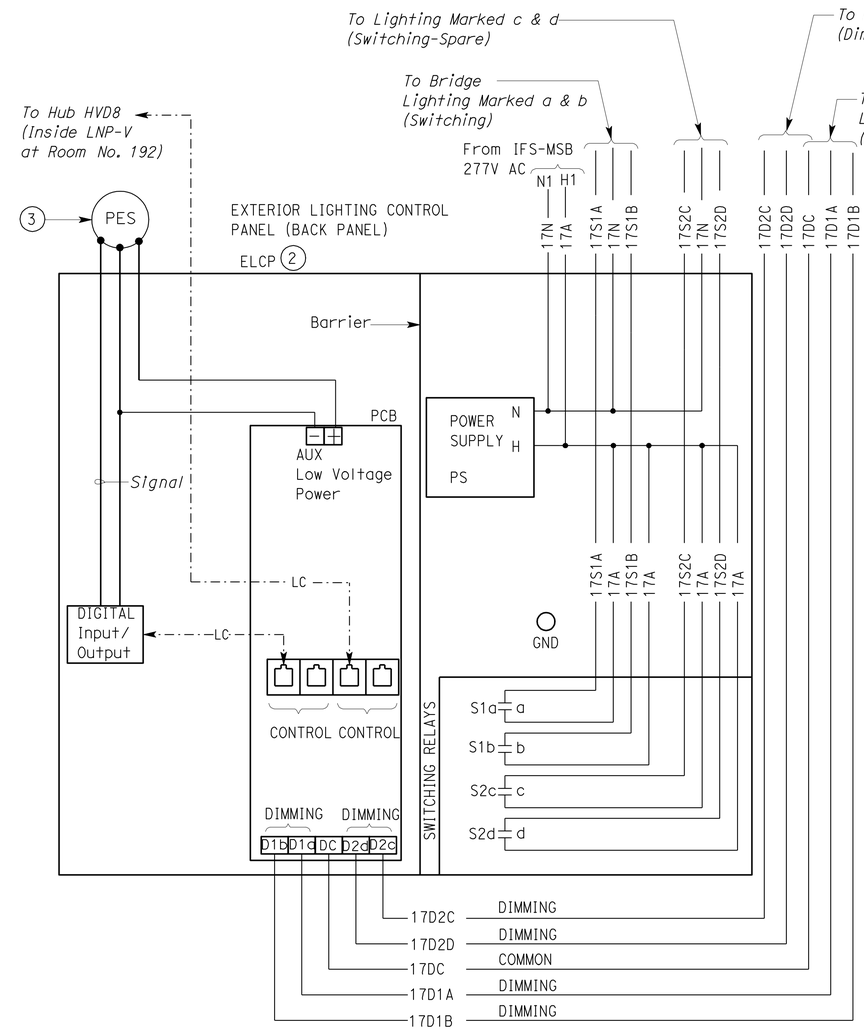

EXTERIOR LIGHTING CONTROL PANEL WIRING DIAGRAM

(NEMA 3 HINGED PANEL COVER WITH PROVISION FOR PADLOCK NOT SHOWN FOR CLARITY)

CALIFORNIA STATE FIRE MARSHAL APPROVED

Approval of this plan does not authorize or approve any omission or deviation from applicable regulations. Final approval is subject to field inspection. One set of approved plans shall be available on the project site at all times.

Reviewed by: JOHN E WOODS, SDSFM

Approval date: 8-22-12

Notes:

1. Install warning plates on the BELCP### with the following inscription:

   To de-energize the BELCP### disconnect the ungrounded circuit breaker number H#### from IFS-#.

2. Install warning plates on the ELCP with the following inscription:

   To de-energize the ELCP disconnect the ungrounded circuit breaker number 17 from IFS-MSB.

3. Low voltage PES as part of the Digital Input/Output interface kit. See sPESifications.

	BY	CHECKED
DESIGN	Jaswinder Gill	Christine Mamaril
DETAILS	Jaswinder Gill/Dali Zhou	J. S. Sandhu
QUANTITIES	Jaswinder Gill	Christine Mamaril

STATE OF CALIFORNIA DEPARTMENT OF TRANSPORTATION

DIVISION OF ENGINEERING SERVICES ELECTRICAL-MECHANICAL-WATER AND WASTEWATER DESIGN

BRIDGE NO. 33M5785 POST MILE 2.2

SFOBB MAINTENANCE COMPLEX

LIGHTING CONTROL SCHEMATICS 3

SHEET EE1-3.27

TAEMWW Imperial Rev. 7/10

ORIGINAL SCALE IN INCHES FOR REDUCED PLANS 0 1 2 3

UNIT 3596
PROJECT NUMBER & PHASE 04120006661
EA 014081

DISREGARD PRINTS BEARING EARLIER REVISION DATES → REVISION DATES (PRELIMINARY STAGE ONLY) 12/20/11 2/22/12 3/23/12 5/30/12 SHEET OF

25-OCT-2012 08:59

ee1_3.27.dgn

DIST.	COUNTY	ROUTE	POST MILES TOTAL PROJECT	SHEET NO.	TOTAL SHEETS
04	Ala	80	2.2	706	800

Jaswinder S Gill 5-30-12
REGISTERED ELECTRICAL ENGINEER DATE

REGISTERED PROFESSIONAL ENGINEER J. S. GILL No. 18551 Exp. 12-31-12 ELEC STATE OF CALIFORNIA

10-22-12
PLANS APPROVAL DATE

The State of California or its officers or agents shall not be responsible for the accuracy or completeness of scanned copies of this plan sheet.

LIGHTING FIXTURE SCHEDULE

MANUFACTURER	TYPE	LAMP (MIN. LIGHT OUTPUT)	MAX. INPUT WATTS	VOLTS	MOUNTING	DESCRIPTION
LITHONIA 2VTL2 SERIES, CREE CR22 LED SERIES OR EQUAL	LED1*	LED ENGINE	37 W	277 V	RECESSED	2'X2' LED TROFFER, 37W LED ENGINE, 3200 MINIMUM DELIVERED LUMENS AT 3500 DEGREE KELVIN AND WITH CRI OF AT LEAST 80 AND DESIGNED LIFETIME FOR 50,000 HOURS. THE FIXTURE SHALL HAVE LINEAR FACETED REFLECTOR CAVITY, SLOPED END PLATES AND ADVANCED OPTICAL FILM. THE FIXTURE SHALL BE CONSTRUCTED FROM ONE-PIECE COLD-ROLLED STEEL COATED POLYSTER, PAINTED, COMPLETE WITH A SINGLE CLEAR ACRYLIC DIFFUSER TO PROVIDE LED ENGINE CONCEALMENT AND WIDE DISTRIBUTION. AC LED ENGINE DRIVER SHALL BE UL LISTED, 277V, 50,000 HOUR DESIGN LIFE, 0-10V DIMMING, 0.9 MINIMUM POWER FACTOR, 5-YEAR WARRANTY, COMPLETE WITH INTERNAL THERMAL PROTECTION AND OVERLOAD PROTECTION. FIXTURE MOUNTING ADAPTERS AND TRIMS SHALL BE SUITABLE FOR RECESSED MOUNTING IN A GYPBOARD AND GRID-TYPE CEILINGS.
LITHONIA 2VTL4 SERIES, CREE CR24 LED SERIES, OR EQUAL	LED2 *	LED ENGINE	47 W	277 V	RECESSED, AND PENDANT	2'X4' LED TROFFER, 47W LED ENGINE, 4000 MINIMUM DELIVERED LUMENS AT 3500 DEGREE KELVIN AND WITH CRI OF AT LEAST 80 AND DESIGNED LIFETIME FOR 50,000 HOURS. THE FIXTURE SHALL HAVE LINEAR FACETED REFLECTOR CAVITY, SLOPED END PLATES AND ADVANCED OPTICAL FILM. THE FIXTURE SHALL BE CONSTRUCTED FROM ONE-PIECE COLD-ROLLED STEEL COATED POLYSTER, PAINTED, COMPLETE WITH A SINGLE CLEAR ACRYLIC DIFFUSER TO PROVIDE LED ENGINE CONCEALMENT AND WIDE DISTRIBUTION. AC LED ENGINE DRIVER SHALL BE UL LISTED, 277V, 50,000 HOUR DESIGN LIFE, 0-10V DIMMING, 0.9 MINIMUM POWER FACTOR, 5-YEAR WARRANTY, COMPLETE WITH INTERNAL THERMAL PROTECTION AND OVERLOAD PROTECTION. FIXTURE MOUNTING ADAPTERS AND TRIMS SHALL BE SUITABLE FOR RECESSED MOUNTING IN A GYPBOARD, GRID-TYPE CEILINGS AND PENDANT MOUNTS.
PHILIPS OMEGA OM6LED LITHONIA DOM6LED, OR EQUAL	LED3	LED ENGINE	27 W	277 V	RECESSED	6" RECESSED LED DOWN LIGHT, 27 W LED ENGINE, 900 MINIMUM DELIVERED LUMENS AT 3000 DEGREE KELVIN AND WITH CRI OF AT LEAST 80. THE FIXTURE MOUNTING BARS OR BRACKETS SHALL BE CONSTRUCTED FROM 16-GAUGE GALVANIZED STEEL. THE FIXTURE SHALL HAVE ONE-PIECE DIE-CAST HOUSING WITH WHITE INTERIOR DOME REFLECTOR, GALVANIZED STEEL JUNCTION BOX WITH BOTTOM-HINGED ACCESS COVERS AND SPRING LATCHES COMPLETE WITH A HIGHLY TRANSMISSIVE LENS. LED ENGINE DRIVER SHALL BE UL LISTED WET LOCATION, 277V, 50,000 HOUR DESIGN LIFE, 0-10V DIMMING, 0.9 MINIMUM POWER FACTOR, 5-YEAR WARRANTY, COMPLETE WITH INTERNAL THERMAL PROTECTION AND OVERLOAD PROTECTION. FIXTURE MOUNTING ADAPTERS AND TRIMS SHALL BE SUITABLE FOR RECESSED MOUNTING IN A GYPBOARD CEILINGS. EACH FIXTURE SHALL COME WITH EMERGENCY BATTERY BACKUP FOR 50% DELIVERED LUMENS FOR 90 MINUTES AND REMOTE TEST SWITCH.
PRUDENTIAL SNAP LED ROUND SERIES, ALBEO LED WRAP OR EQUAL	LED4	LED ENGINE	27 W	277 V	WALL MOUNT	48" LOW PROFILE WRAP STRIP LIGHT WITH EXTRUDED ACRYLIC LENS, 27 W LED ENGINE, 1500 MINIMUM DELIVERED LUMENS AT 4000 DEGREE KELVIN AND WITH CRI OF AT LEAST 80. THE FIXTURE SHALL HAVE ONE-PIECE DIE-CAST 22-GAUGE STEEL HOUSING COMPLETE WITH END PLATES, PAINTED WHITE. LED ENGINE DRIVER SHALL BE UL LISTED WET LOCATION, 277V, 50,000 HOUR DESIGN LIFE, 0-10V DIMMING, 0.9 MINIMUM POWER FACTOR, 5-YEAR WARRANTY, COMPLETE WITH INTERNAL THERMAL PROTECTION AND OVERLOAD PROTECTION.
LUSIO ESSENTIALS BAY SERIES, BETA THE EDGE SERIES, OR EQUAL	LED5	LED ENGINE	116 W	277 V	PENDANT	LED HIGH BAY, SLIM, LOW PROFILE FIXTURE, 116 W MAXIMUM REPLACEABLE LED ENGINES, TYPE 5 DISTRIBUTION, 9,000 MINIMUM DELIVERED LUMENS AT MINIMUM 5000 DEGREE KELVIN AND WITH CRI OF AT LEAST 70. THE FIXTURE SHALL BE CONSTRUCTED FROM ONE-PIECE DIE-CAST ALUMINUM AND POWDER COATED WITH CORROSION RESISTANCE FINISH COMPLETE WITH A CLEAR ACRYLIC LENS AND ALUMINUM HEAT SINKS. LED ENGINE DRIVER SHALL BE UL LISTED, 277V, 50,000 HOUR DESIGN LIFE, 0-10V DIMMING, 0.9 MINIMUM POWER FACTOR, 5-YEAR WARRANTY, COMPLETE WITH INTERNAL THERMAL PROTECTION AND OVERLOAD PROTECTION. FIXTURE MOUNTING HEIGHT SHALL BE AS SPECIFIED ON PLANS. FIXTURE PHOTOMETRICS SHALL BE TESTED IN ACCORDANCE TO IESNA LM-79.
LUSIO ESSENTIALS BAY SERIES, BETA THE EDGE SERIES, OR EQUAL	LED6	LED ENGINE	233 W	277 V	PENDANT	LED HIGH BAY, SLIM, LOW PROFILE FIXTURE, 233 W MAXIMUM REPLACEABLE LED ENGINES, TYPE 5 DISTRIBUTION, 20,000 MINIMUM DELIVERED LUMENS AT MINIMUM 5000 DEGREE KELVIN AND WITH CRI OF AT LEAST 70. THE FIXTURE SHALL BE CONSTRUCTED FROM ONE-PIECE DIE-CAST ALUMINUM AND POWDER COATED WITH CORROSION RESISTANCE FINISH COMPLETE WITH A CLEAR ACRYLIC LENS AND ALUMINUM HEAT SINKS. LED ENGINE DRIVER SHALL BE UL LISTED, 277V, 50,000 HOUR DESIGN LIFE, 0-10V DIMMING, 0.9 MINIMUM POWER FACTOR, 5-YEAR WARRANTY, COMPLETE WITH INTERNAL THERMAL PROTECTION AND OVERLOAD PROTECTION. FIXTURE MOUNTING HEIGHT SHALL BE AS SPECIFIED ON PLANS. FIXTURE PHOTOMETRICS SHALL BE TESTED IN ACCORDANCE TO IESNA LM-79.
COLUMBIA DYNAMO KL SERIES, LITHONIA AF SERIES OR EQUAL	LED7	RETROFITTED WITH TWO 17 W LED LAMPS	37 W	277 V	SURFACE	BRACKET MOUNTED INDUSTRIAL FIXTURE WITH DIE-EMBOSSED WHITE REFLECTOR, MEDIUM BI-PIN LAMP SOCKETS, WITHOUT BALLAST. RETROFIT THE FIXTURE WITH TWO 17 W LED LAMPS. THE LED LAMP SHALL BE A 4 FEET LONG, 17W LED ARRAY, 277 VOLT RATED DIRECT T8 FLUORESCENT REPLACEMENT LAMP WITH INTERNAL HEAT SINK. THE LAMP SHALL HAVE COLOR TEMPERATURE OF 5500 KELVIN AND COLOR RENDERING INDEX OF GREATER THAT 80. LAMPS SHALL BE UL CERTIFIED. THE FIXTURE SHALL BE COMPLETE WITH ENDPLATES AND WIREGAURD ATTACHED TO THE REFLECTOR.
LITHONIA ELM2 LED SERIES, OR EQUAL	LED8	LED LAMP	2 @ 1.5W	277 V	WALL MOUNT	DUAL LED LAMP HEAD, EACH LAMP HEAD SHALL HAVE A 1.5 W LED ARRAY AT 3.6 V, 80 MINIMUM DELIVERED LUMENS TO PROVIDE A MINIMUM OF 90 MINUTES OF ILLUMINATION UPON LOSS OF AC POWER. THE FIXTURE SHALL BE WHITE, COMPACT, LOW-PROFILE, ENGINEERING GRADE THERMOPLASTIC HOUSING, CORROSION PROOF COMPLETE WITH AN INTEGRATED TEST SWITCH AND VISIBLE RED PILOT LIGHT. THE FIXTURE SHALL HAVE A SEALED, MAINTENANCE-FREE NICKEL-CADMIUM BATTERY.
LITHONIA VAP LED SERIES, OR EQUAL	LED9	LED ENGINE	40 W	277 V	SURFACE/ WALL	54" LED, 40W LED ENGINE, 3000 MINIMUM DELIVERED LUMENS AT 5700 DEGREE KELVIN AND WITH CRI OF AT LEAST 80 AND DESIGNED LIFETIME FOR 50,000 HOURS. THE FIXTURE HOUSING SHALL BE CONSTRUCTED FROM ONE PIECE INJECTION-MOLDED, IMPACT-RESISTANCE, FROSTED POLYCARBONATE AND 20 GAUGE STEEL CHANNEL COMPLETE WITH A CLEAR TRANSPARENT, POLYCARBONATE LENS WITH AESTHETIC RIB DETAILS AND ASYMMETRIC OPTICAL CONTROL FILM. AC LED ENGINE DRIVER SHALL BE UL LISTED, 277V, 50,000 HOUR DESIGN LIFE, 0-10V DIMMING, 0.9 MINIMUM POWER FACTOR, 5-YEAR WARRANTY, COMPLETE WITH INTERNAL THERMAL PROTECTION AND OVERLOAD PROTECTION. FIXTURE MOUNTING ADAPTERS AND TRIMS SHALL BE SUITABLE FOR SURFACE AND WALL MOUNTING ANS WET LOCATION LISTED.

* LED1 & LED2 fixtures with emergency LED driver as shown on the plans shall have a factory installed self-contained emergency driver that works with AC LED ENGINE driver to convert fixtures with LED ENGINES into emergency lighting fixtures. The unit shall consist of a battery charger and electronic circuitry in one compact case. The driver shall consist of two field-replaceable, high temperature, maintenance-free nickel-cadmium batteries. Unit shall include a charging indicator and test switch. Emergency driver shall be able to operate the LED fixture for minimum of 90 minutes at reduced wattage of 22 watts. Unit shall be compatible with LED ENGINES, UL listed and shall be rated for 277 volt, AC.

CALIFORNIA STATE FIRE MARSHAL APPROVED
Approval of this plan does not authorize or approve any omission or deviation from applicable regulations. Final approval is subject to field inspection. One set of approved plans shall be available on the project site at all times.
Reviewed by: JOHN E WOODS, SDSFM
Approval date: 8-22-12

General Notes:

A. All fixtures shall be warranted for minimum of 5 years. Fixtures shall be capable of being switched and dimmed using a remote lighting control panel as shown on the plans and compatible with the lighting network panel.

B. For California Energy Commission Mandatory measures, see sheet EE0-0.14.

C. Fixture mounting type specified here are for reference only. Fixture mounting type will vary for each area as shown on Lighting Power and Control Schedules. See sheets EE1-3.21 to EE1-3.24 for details. Mount fixtures as required.

	BY	CHECKED
DESIGN	Jaswinder Gill	Christine Mamaril
DETAILS	Jaswinder Gill	J. S. Sandhu
QUANTITIES	Jaswinder Gill	Christine Mamaril

STATE OF CALIFORNIA
DEPARTMENT OF TRANSPORTATION

DIVISION OF ENGINEERING SERVICES
ELECTRICAL-MECHANICAL-WATER AND WASTEWATER DESIGN

BRIDGE NO. 33M5785
POST MILE 2.2

SFOBB MAINTENANCE COMPLEX
INTERIOR LIGHTING FIXTURE SCHEDULE

SHEET EE1-3.28

TAEMWW Imperial Rev. 7/10

ORIGINAL SCALE IN INCHES FOR REDUCED PLANS 0 1 2 3

UNIT 3596
PROJECT NUMBER & PHASE 04120006661
EA 014081

DISREGARD PRINTS BEARING EARLIER REVISION DATES → 12/26/11 2/27/12 3/23/12 5/30/12
REVISION DATES (PRELIMINARY STAGE ONLY) SHEET OF

25-OCT-2012 08:59
ee1_3.28.dgn

DIST.	COUNTY	ROUTE	POST MILES TOTAL PROJECT	SHEET NO.	TOTAL SHEETS
04	Ala	80	2.2	707	800

Jaswinder S Gill 5-30-12
REGISTERED ELECTRICAL ENGINEER DATE

REGISTERED PROFESSIONAL ENGINEER J. S. GILL No. 18551 Exp. 12-31-12 ELEC STATE OF CALIFORNIA

10-22-12
PLANS APPROVAL DATE

The State of California or its officers or agents shall not be responsible for the accuracy or completeness of scanned copies of this plan sheet.

CALIFORNIA STATE FIRE MARSHAL APPROVED
Approval of this plan does not authorize or approve any omission or deviation from applicable regulations. Final approval is subject to field inspection. One set of approved plans shall be available on the project site at all times.
Reviewed by: JOHN E WOODS, SDSFM
Approval date: 8-22-12

LIGHTING FIXTURE SCHEDULE

MANUFACTURER	TYPE	LAMP	MAX. INPUT WATTS	VOLTS	CONTROLS	DESCRIPTION
GARDCO P21 SERIES, BETA LED THE EDGE SERIES, OR EQUAL	LED1E	LED ARRAY	90 W	277 V	INTEGRAL MOTION SENSOR/ /FUSE.SEE NOTE 2. REMOTE PHOTOCELL.	WALL MOUNTED WITH 5" ARM OUTDOOR LED LUMINAIRE, 90 WATT LED ARRAY, TYPE FOUR MEDIUM DISTRIBUTION, FULL CUTOFF LUMINAIRE, 7000 MINIMUM DELIVERED LUMENS AT 5700 DEGREE KELVIN AND WITH CRI OF AT LEAST 70. THE FIXTURE SHALL BE SLIM LOW-PROFILE DESIGN, CONSTRUCTED FROM ONE PIECE DIE-CAST, RUGGED ALUMINUM WITH INTEGRAL, WEATHERTIGHT LED ENGINE DRIVER COMPARTMENTS AND HIGH PERFORMANCE ALUMINUM HEATSINKS. ALL EXPOSED DIE-CAST SURFACE SHALL HAVE A EPOXY PRIMER TO PROVIDE RESISTANCE TO CORROSION AND WHITE POWDER TOPCOAT. LED ENGINE DRIVER SHALL BE UL LISTED, 277V, 50,000 HOUR DESIGN LIFE, 0-10V DIMMING, 0.9 MINIMUM POWER FACTOR, 5-YEAR WARRANTY, COMPLETE WITH INTERNAL THERMAL PROTECTION AND OVERLOAD PROTECTION. FIXTURES SHALL BE UL LISTED FOR WET LOCATION AND IP66 RATED.
LITHONIA DOM6LED, GOTHAM 6" ALED, OR EQUAL	LED2E	LED ARRAY	32 W	277 V	REMOTE PHOTOCELL	6" RECESSED LED DOWN LIGHT, 32 W LED ARRAY, 1000 MINIMUM DELIVERED LUMENS AT 4000 DEGREE KELVIN AND WITH CRI OF AT LEAST 70. THE FIXTURE MOUNTING BARS OR BRACKETS SHALL BE CONSTRUCTED FROM 16-GAUGE GALVANIZED STEEL. THE FIXTURE SHALL HAVE ONE-PIECE DIE-CAST HOUSING WITH WHITE INTERIOR DOME REFLECTOR, GALVANIZED STEEL JUNCTION BOX WITH BOTTOM-HINGED ACCESS COVERS AND SPRING LATCHES COMPLETE WITH A HIGHLY TRANSMISSIVE LENS. LED ENGINE DRIVER SHALL BE UL LISTED WET LOCATION, 277V, 50,000 HOUR DESIGN LIFE, 0-10V DIMMING, 0.9 MINIMUM POWER FACTOR, 5-YEAR WARRANTY, COMPLETE WITH INTERNAL THERMAL PROTECTION AND OVERLOAD PROTECTION. FIXTURE MOUNTING ADAPTERS AND TRIMS SHALL BE SUITABLE FOR RECESSED MOUNTING IN SOFFITS ABOVE EXTERIOR DOORS.
GARDCO EMCO ELG SERIES, BETA LED PKG 304 SERIES, OR EQUAL	LED3E	LED ARRAY	110 W	277 V	INTEGRAL MOTION SENSOR/ /FUSE.SEE NOTE 2. REMOTE PHOTOCELL.	PENDANT/SURFACE MOUNTED OUTDOOR LED LUMINAIRE, 110 WATT LED ARRAY, TYPE FIVE MEDIUM DISTRIBUTION, FULL CUTOFF LUMINAIRE, 7000 MINIMUM DELIVERED LUMENS AT 5700 DEGREE KELVIN AND WITH CRI OF AT LEAST 70. THE FIXTURE SHALL BE CONSTRUCTED FROM ONE PIECE DIE-CAST, RUGGED ALUMINUM WITH INTEGRAL, WEATHERTIGHT LED ENGINE DRIVER COMPARTMENTS AND HIGH PERFORMANCE ALUMINUM HEATSINKS WITH INTEGRATED LENS. ALL EXPOSED DIE-CAST SURFACE SHALL HAVE A EPOXY PRIMER TO PROVIDE RESISTANCE TO CORROSION AND WHITE POWDER TOPCOAT. LED ENGINE DRIVER SHALL BE UL LISTED, 277V, 50,000 HOUR DESIGN LIFE, 0-10V DIMMING, 0.9 MINIMUM POWER FACTOR, 5-YEAR WARRANTY, COMPLETE WITH INTERNAL THERMAL PROTECTION AND OVERLOAD PROTECTION. FIXTURES SHALL BE UL LISTED FOR WET LOCATION AND IP66 RATED. FIXTURES SHALL BE PROVIDED WITH BIRD GUARD OR BIRD SHROUD.
GARDCO P21 SERIES, BETA LED THE EDGE SERIES, OR EQUAL	LED4E	LED ARRAY	233 W	277 V	INTEGRAL MOTION SENSOR/ PHOTOCELL/FUSE. SEE NOTE 1.	SQUARE POLE MOUNTED OUTDOOR LED LUMINAIRE, 233 WATT LED ARRAY, TYPE FOUR MEDIUM FORWARD THROW DISTRIBUTION WITH BACKLIGHT CONTROL, FULL CUTOFF LUMINAIRE, 18,000 MINIMUM DELIVERED LUMENS AT 6000 DEGREE KELVIN AND WITH CRI OF AT LEAST 70. THE FIXTURE SHALL BE SLIM, LOW PROFILE DESIGN, CONSTRUCTED FROM ONE PIECE DIE-CAST, RUGGED ALUMINUM WITH INTEGRAL, WEATHERTIGHT LED ENGINE DRIVER COMPARTMENTS AND HIGH PERFORMANCE ALUMINUM HEATSINKS. ALL EXPOSED DIE-CAST SURFACE SHALL HAVE A EPOXY PRIMER TO PROVIDE RESISTANCE TO CORROSION AND WHITE POWDER TOPCOAT. LED ENGINE DRIVER SHALL BE UL LISTED, 277V, 50,000 HOUR DESIGN LIFE, 0-10V DIMMING, 0.9 MINIMUM POWER FACTOR, 5-YEAR WARRANTY, COMPLETE WITH INTERNAL THERMAL PROTECTION AND OVERLOAD PROTECTION. FIXTURES SHALL BE UL LISTED FOR WET LOCATION AND IP66 RATED.
BETA LED THE EDGE SERIES, OR EQUAL	LED5E	LED ARRAY	90 W	277 V	INTEGRAL MOTION SENSOR/ /FUSE.SEE NOTE 2. REMOTE PHOTOCELL.	POST TOP MOUNTED OUTDOOR LED LUMINAIRE, 90 WATT LED ARRAY, TYPE FOUR MEDIUM FORWARD THROW DISTRIBUTION WITH BACKLIGHT CONTROL, FULL CUTOFF LUMINAIRE, 18,000 MINIMUM DELIVERED LUMENS AT 6000 DEGREE KELVIN AND WITH CRI OF AT LEAST 70. THE FIXTURE SHALL BE CONSTRUCTED FROM ONE PIECE DIE-CAST, RUGGED ALUMINUM WITH INTEGRAL, WEATHERTIGHT LED ENGINE DRIVER COMPARTMENTS AND HIGH PERFORMANCE ALUMINUM HEATSINKS. ALL EXPOSED DIE-CAST SURFACE SHALL HAVE A EPOXY PRIMER TO PROVIDE RESISTANCE TO CORROSION AND WHITE POWDER TOPCOAT. LED ENGINE DRIVER SHALL BE UL LISTED, 277V, 50,000 HOUR DESIGN LIFE, 0-10V DIMMING, 0.9 MINIMUM POWER FACTOR, 5-YEAR WARRANTY, COMPLETE WITH INTERNAL THERMAL PROTECTION AND OVERLOAD PROTECTION. FIXTURES SHALL BE UL LISTED FOR WET LOCATION AND IP66 RATED.
PROGRESS LIGHTING PRO-OPTICS, INDY SAW6 SERIES, OR EQUAL	LED6E	LED ARRAY	20 W	277 V	REMOTE PHOTOCELL	6" RECESSED LED WALLWASH, 20 W LED ARRAY, 1000 MINIMUM DELIVERED LUMENS AT 4000 DEGREE KELVIN AND WITH CRI OF AT LEAST 70. THE FIXTURE SHALL BE CONSTRUCTED FROM ONE PIECE DIE-CAST, 22 GAUGE NON-CORRESIVE STEEL AND COMPLETE WITH AN ADJUSTABLE INTEGRATED REFLECTOR TO AIM LIGHT OUTPUT DISTRIBUTION ON THE WALL AT DIFFERENT AIMING ANGLES. LED ENGINE DRIVER SHALL BE UL LISTED, 277V, 50,000 HOUR DESIGN LIFE, 0-10V DIMMING, 0.9 MINIMUM POWER FACTOR, 5-YEAR WARRANTY, COMPLETE WITH INTERNAL THERMAL PROTECTION AND OVERLOAD PROTECTION. FIXTURES SHALL BE UL LISTED FOR WET LOCATION.
EAGLE MOUNTAIN BURIAL SERIES, HOWELL IN-GROUND LED OR EQUAL	LED7E	LED ARRAY	20 W	277 V	REMOTE PHOTOCELL	IN-GROUND LED FLAG POLE LIGHT, 20 W LED ARRAY, 277 V, 3000 DEGREE KELVIN AND WITH CRI OF AT LEAST 70. THE FIXTURE SHALL BE CONSTRUCTED FROM COMPRESSION MOLDED FIBER REINFORCED POLYESTER COMPOSITE. THE LED ARRAY SHALL BE HOUSED WITHIN A ZINC LED BODY WITH HEAT DISSIPATING FINS. FIXTURE SHALL HAVE AN INTERNAL ANTI-SIPHON CHAMBER TO KEEP INTERNAL ELECTRICAL COMPONENTS FROM COMING INTO CONTACT WITH GROUND WATER. THE LIGHT SOURCE IS MOUNTED ON AN ADJUSTABLE YOKE TO ALLOW FOR 360 DEGREE TILT AND SHALL HAVE 15 DEGREE SPOT OPTICAL ASSEMBLY. THE FIXTURE SHALL BE COMPLETE WITH A WALKOVER LENS AND ROCK GUARD. THE LED DRIVER SHALL BE REMOTELY MOUNTED INSIDE THE ELECTRICAL ROOM AND FIXTURE SHALL BE PROVIDED WITH APPROPRIATE LENGTH CORD FROM THE MANUFACTURER.

General Notes:

A. All fixtures shall be warranted for minimum of 5 years.

B. For California Energy Commission Mandatory measures, see sheet EE0-0.14.

C. All fixtures shall be UL listed for wet location.

Notes:

(1) Integral motion sensors shall be a factory installed motion sensor on the fixture housing and uses passive infrared technology to detect motions. Motion sensor coverage shall be equal or greater than 2 mounting height diameter coverage with a 360 Degree circular pattern. Fixture shall be complete with an integrated button photocontroller capable of switching lights ON/OFF based on daylighting. Motion sensor shall dim the fixture light output by 50% when there is no motion detected.

(2) Integral motion sensors shall be a factory installed motion sensor on the fixture housing and uses passive infrared technology to detect motions. Motion sensor coverage shall be equal or greater than 2 mounting height diameter coverage with a 360 Degree circular pattern. Motion sensor shall dim the fixture light output by 50% when there is no motion detected.

	BY	CHECKED
DESIGN	Jaswinder Gill	Christine Mamaril
DETAILS	Dhali Zhou	Jaswinder Gill
QUANTITIES	Jaswinder Gill	Christine Mamaril

STATE OF CALIFORNIA DEPARTMENT OF TRANSPORTATION

DIVISION OF ENGINEERING SERVICES
ELECTRICAL-MECHANICAL-WATER AND WASTEWATER DESIGN

BRIDGE NO. 33M5785
POST MILE 2.2

SFOBB MAINTENANCE COMPLEX
EXTERIOR LIGHTING FIXTURE SCHEDULE

SHEET EE1-3.29

TAEMWW Imperial Rev. 7/10

ORIGINAL SCALE IN INCHES FOR REDUCED PLANS 0 1 2 3

UNIT 3596
PROJECT NUMBER & PHASE 04120006661
EA 014081

DISREGARD PRINTS BEARING EARLIER REVISION DATES → REVISION DATES (PRELIMINARY STAGE ONLY) 12/28/11 2/22/12 3/23/12 5/30/12 SHEET OF

25-OCT-2012 09:00
ee1_3.29.dgn

DIST.	COUNTY	ROUTE	POST MILES TOTAL PROJECT	SHEET NO.	TOTAL SHEETS
04	Ala	80	2.2	708	800

Jaswinder S Gill 5-30-12
REGISTERED ELECTRICAL ENGINEER DATE

REGISTERED PROFESSIONAL ENGINEER J. S. GILL No. 18551 Exp. 12-31-12 ELEC STATE OF CALIFORNIA

10-22-12
PLANS APPROVAL DATE

The State of California or its officers or agents shall not be responsible for the accuracy or completeness of scanned copies of this plan sheet.

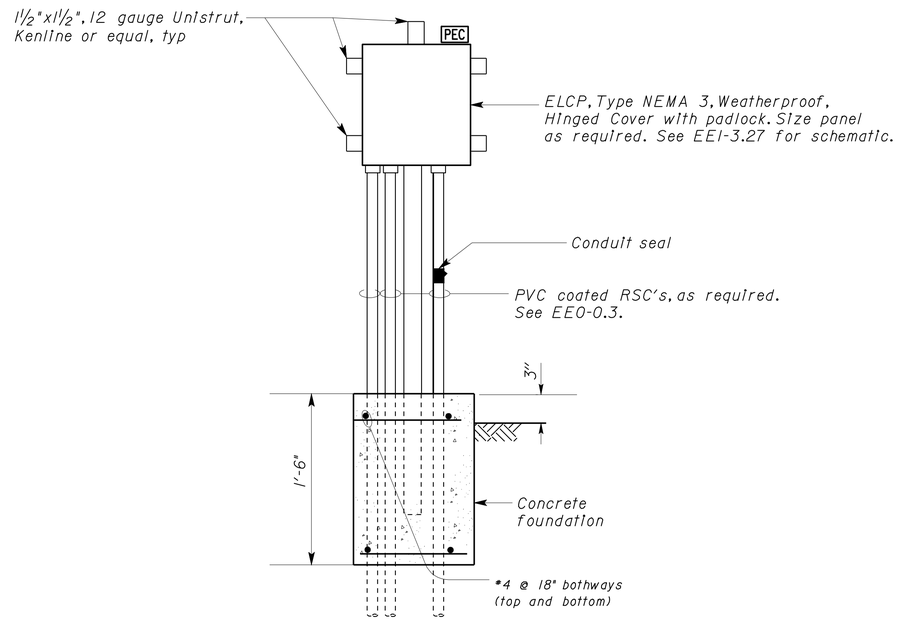

5 EXTERIOR LIGHTING CONTROL PANEL

NO SCALE

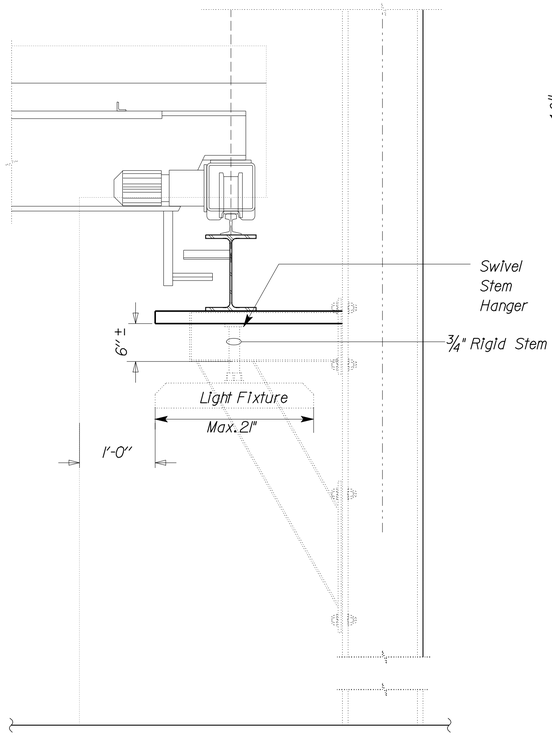

2 FIXTURE MOUNTING DETAIL

No Scale
For Welding Shop with Bridge-Crane Assembly.

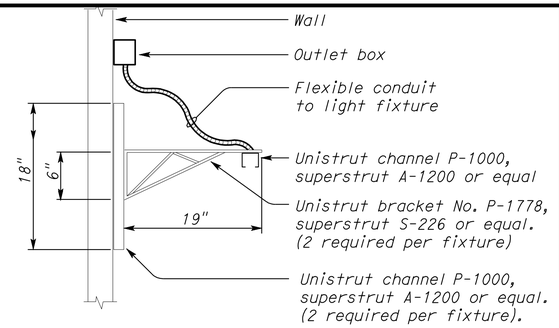

1 TYPE LED7 FIXTURE MOUNTING DETAIL

NO SCALE

(For wall mounted workbench lights)

CALIFORNIA STATE FIRE MARSHAL APPROVED

Approval of this plan does not authorize or approve any omission or deviation from applicable regulations. Final approval is subject to field inspection. One set of approved plans shall be available on the project site at all times.

Reviewed by: JOHN E WOODS, SDSFM

Approval date: 8-22-12

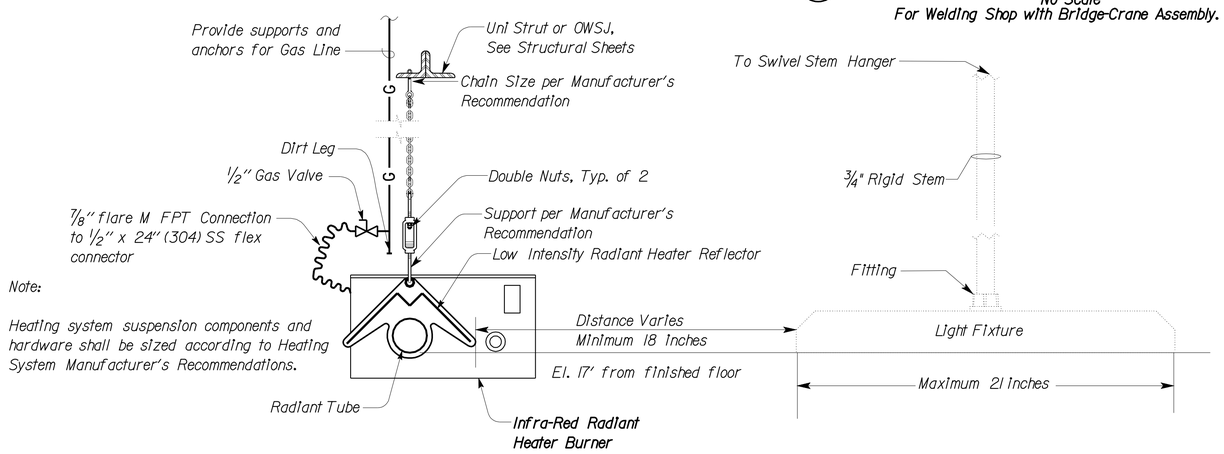

3 FIXTURE MOUNTING DETAIL

No Scale
For spaces without bridge-crane assembly.

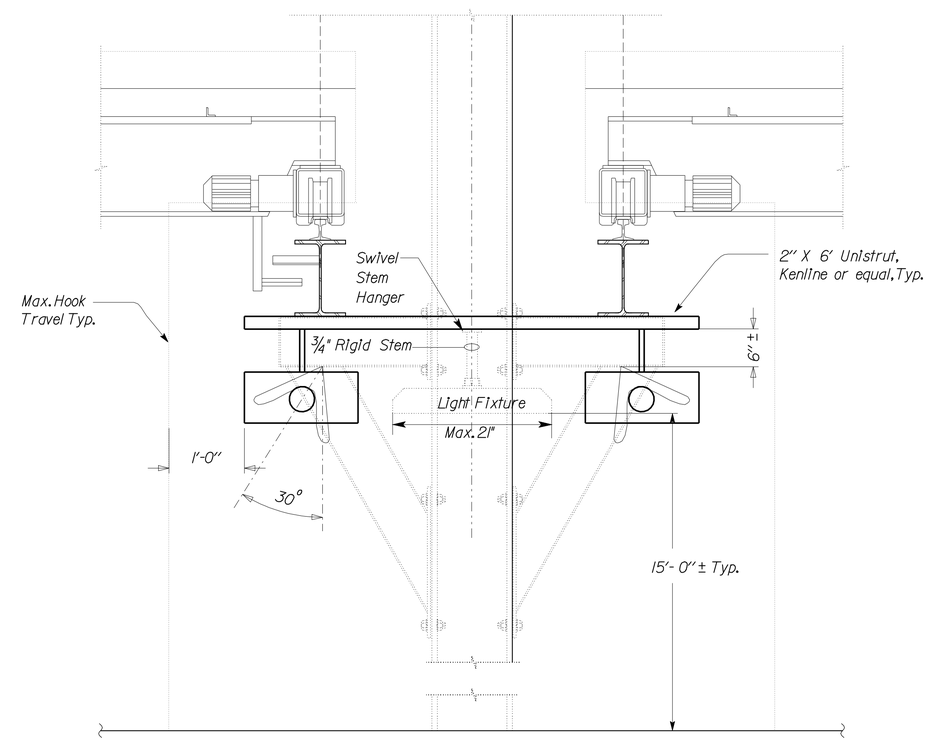

4 FIXTURE MOUNTING DETAIL

No Scale
For spaces between bays having bridge-crane assembly.

THIS DRAWING ACCURATE FOR ELECTRICAL WORK ONLY

	BY	CHECKED
DESIGN	Jaswinder Gill	Christine Mamaril
DETAILS	Dhali Zhou	Jaswinder Gill
QUANTITIES	Jaswinder Gill	Christine Mamaril

STATE OF CALIFORNIA
DEPARTMENT OF TRANSPORTATION

DIVISION OF ENGINEERING SERVICES
ELECTRICAL-MECHANICAL-WATER AND WASTEWATER DESIGN

BRIDGE NO. 33M5785
POST MILE 2.2

SFOBB MAINTENANCE COMPLEX

LIGHTING DETAILS

SHEET **EE1-3.30**

TAEMWW Imperial Rev. 7/10

ORIGINAL SCALE IN INCHES FOR REDUCED PLANS 0 1 2 3

UNIT 3596
PROJECT NUMBER & PHASE 04120006661
EA 014081

DISREGARD PRINTS BEARING EARLIER REVISION DATES → 12/20/11 2/22/12 3/23/12 5/30/12

REVISION DATES (PRELIMINARY STAGE ONLY) SHEET OF

25-OCT-2012 09:00

ee1_3.30.dgn

DIST.	COUNTY	ROUTE	POST MILES TOTAL PROJECT	SHEET NO.	TOTAL SHEETS
04	Ala	80	2.2	709	800

REGISTERED ELECTRICAL ENGINEER — 5-30-12 DATE

REGISTERED PROFESSIONAL ENGINEER J. AMIRAZODI No. 17509 Exp. 6-30-13 ELEC STATE OF CALIFORNIA

10-22-12
PLANS APPROVAL DATE

The State of California or its officers or agents shall not be responsible for the accuracy or completeness of scanned copies of this plan sheet.

CALIFORNIA STATE FIRE MARSHAL APPROVED
Approval of this plan does not authorize or approve any omission or deviation from applicable regulations. Final approval is subject to field inspection. One set of approved plans shall be available on the project site at all times.
Reviewed by: JOHN E WOODS, SDSFM
Approval date: 8-22-12

General Notes:

A. General Notes shown on this Plan sheet are applicable to all Communication System Plan sheets.

B. Unless otherwise noted or required by the serving Utility Company, all elbows and conduit risers on this sheet shall be PVC coated rigid steel conduit.

C. Communication Outlets shall consist of 2 voice and 2 data jacks. Voice cables shall be terminated on voice jacks of communication outlets using 8P8C connectors and 48 port Voice Patch Panels using 8P8C connectors (1AR1V1, 1AR1V2, 1AR1V3, 1BR1V1, 1BR1V2, 1BR1V3 or 1BR1V4) at nearest communication closet. Data cables shall be terminated on data jacks of communication outlets using 8P8C connectors and on 48 port 8P8C Data Patch Panels using 8P8C connectors (1AR1D1, 1AR1D2, 1AR1D3, 1BR1D1, 1BR1D2, 1BR1D3 or 1BR1D4) at nearest communication closet. All components shall adhere to CAT6 specifications and be terminated in compliance with TIA-568 Standards.

D. All risers for PVC conduits on this sheet shall be PVC coated RSC. Wrap joints in touch with soil with two layers of wrapping tape.

E. Telephone panels are installed only to serve as an intermediate pull point. Cable splicing shall not be accepted.

F. Within office areas and areas with finished ceiling or furred wall, conduits shall be concealed in ceiling or walls.

G. Plan data and voice cable conduit homeruns in a manner so that the total length of each cable from outlet to termination point is less than 300 feet.

H. All conduit stub ups shall be 12" above finished floor or 12" below ceiling. Provide conduit bushings on all conduits.

I. Unless otherwise noted, conduit shown shall be 1"C, with 2 data cables and 2 voice cables.

J. Not all junction boxes shown for clarity. Contractor shall provide and install adequate number of junction boxes as required, without additional cost to the State. Junction boxes shall be sized as required to accommodate number of cables inside.

K. For communication outlet face plate details, see (1 / EEI-4.11).

L. All data cables and voice cables shall be identified with label at both ends of the cable with pre-printed, heat shrinkable type marker. Each marker shall be placed at an easily accessible location somewhere between 6-12 inches from each end of the cable. The cable identification marker shall adhere to the following convention:
Data cable (blue cable) 1B-166-1A to indicates Building 1B, Room number 166 and data cable number 1 at outlet A.
Voice cable (white cable) 1B-166-1A to indicates Building 1B, Room number 166 and voice cable number 1 at outlet A.

M. Data cables certified tests utilizing industry standard instruments such as the Fluke DTX Cable Analyzer Series shall be performed and results made available to the Engineer for acceptance and verification purposes. Common tests for datacom cabling including length, wiremap, attenuation, NEXT, DC loop resistance, and return loss shall be performed. All the test data shall be tabulated and provided in printed and electronic file version. Similar industry standard test certification and reporting shall be performed for the fiber optics.

N. For patch panels, communication racks, 66 Blocks, and Communication related equipment, see Communication plan sheets.

O. For Main Communications Room 176 enlarged plan, see Detail A on EE1-4.7. For Communications Room 116 enlarged plan, see Detail A on EE1-4.8.

P. For Communication Equipment Schedule, see EE1-4.13 through EE1-4.16.

Q. For Voice and Data Cable Schedule, see EE1-4.17 through 1-4.20.

R. Submit all pertinent details to the Engineer for approval prior to installation.

S. Provide/install junction boxes as required. Junction boxes shall be sized as required to accommodate number of cables inside.

T. Underground conduits entering the building from outside and within the building shall be installed below the structural primary/intermediate grade beams. For location of structural primary/intermediate grade beams, underground conduits stub up, and penetration details through floor/beams, refer to Structural Plan sheets.

Notes:

1. (3) 3"C, each with 28 data cables and 28 voice cables
2. (2) 2½"C, each with 16 data cables and 16 voice cables.
3. (2) 3"C, each with 31 data cables and 31 voice cables.
4. -4"C, one 24 strands, MMFO cable. Terminate cable on Fiber Patch Panel 1BR2F2 in Main Communications Room 176 and on Fiber Patch Panel 1AR2F1 in Communications Room 116, using type SC connector;
   -4"C, 24 data cables. Terminate cables on UTP Patch Panel 1BR2U1 in Main Communications Room 176 and on UTP Patch Panel 1AR2U1 in Communications Room 116, using 24 port 8P8C Patch Panels, using TIA-568 wiring Standards;
   -4"C, one, 200 pair, UTP phone cable. Terminate cable on 66 Blocks 9 thru 16 in Main Communications Room 176 and on Phone Patch Panels 1AR1P1 and 1AR1P2 using 48 port 8P8C patch panels in Communications Room 116. All components will meet a minimum of CAT3 specifications. The patch panel will be terminated with USOC wiring standards.
   -(2) 4"C, MT. Stub up in Communication Rack designated spaces in Main Communications Room 176 and Communications Room 116.
5. 2"C, 4#4, 1#4G.
6. For feeder to Panel 2UA, see sheet EE1-4.7.

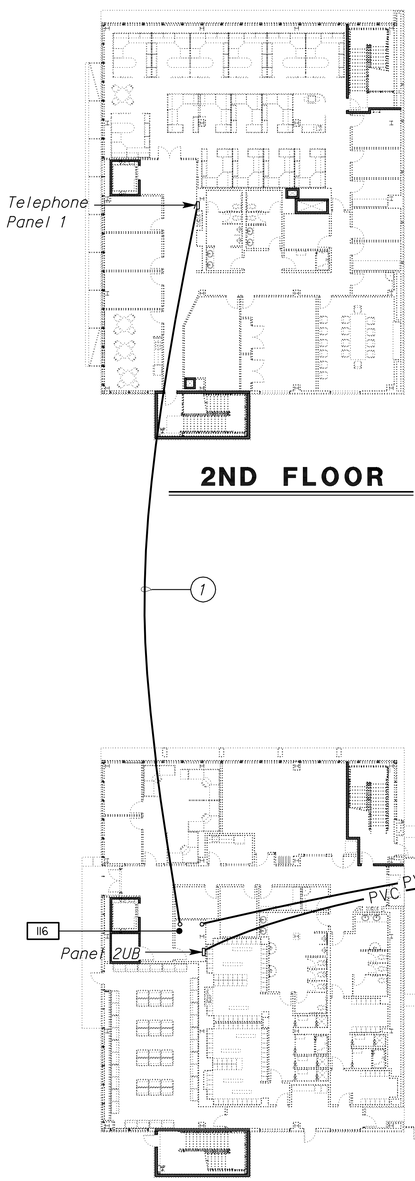

2ND FLOOR

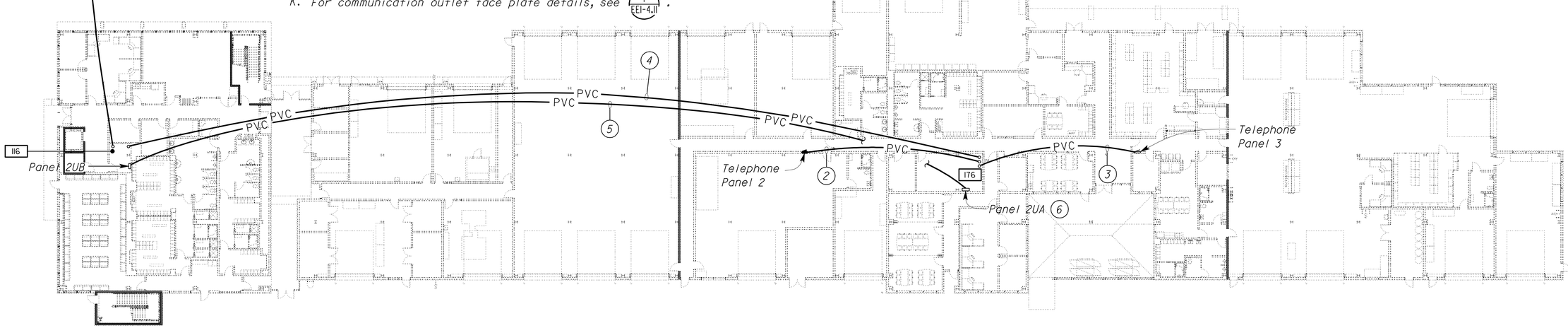

1ST FLOOR

SCALE 1" = 20'-0"

THIS DRAWING ACCURATE FOR ELECTRICAL WORK ONLY

	BY	CHECKED
DESIGN	Javid Amirazodi	J.S. Sandhu/J.R. Lacy
DETAILS	Ed D. Tapalla 10/11	Javid Amirazodi
QUANTITIES	Javid Amirazodi	J.S. Sandhu/J.R. Lacy

STATE OF CALIFORNIA DEPARTMENT OF TRANSPORTATION

DIVISION OF ENGINEERING SERVICES
ELECTRICAL-MECHANICAL-WATER AND WASTEWATER DESIGN

BRIDGE NO. 33M5785
POST MILE 2.2

SFOBB MAINTENANCE COMPLEX
COMMUNICATION FEEDER PLAN

SHEET EE1-4.1

TAEMWW Imperial Rev. 7/10

ORIGINAL SCALE IN INCHES FOR REDUCED PLANS 0 1 2 3

UNIT 3596
PROJECT NUMBER & PHASE 04120006661
EA 014081

DISREGARD PRINTS BEARING EARLIER REVISION DATES → 5/30/12
REVISION DATES (PRELIMINARY STAGE ONLY) SHEET OF

25-OCT-2012 09:00
ee1_4.01.dgn

DIST.	COUNTY	ROUTE	POST MILES TOTAL PROJECT	SHEET NO.	TOTAL SHEETS
04	Ala	80	2.2	710	800

CALIFORNIA STATE FIRE MARSHAL APPROVED

Approval of this plan does not authorize or approve any omission or deviation from applicable regulations. Final approval is subject to field inspection. One set of approved plans shall be available on the project site at all times.

Reviewed by: JOHN E WOODS, SDSFM

Approval date: 8-22-12

Javid Amirazodi 5-30-12

REGISTERED ELECTRICAL ENGINEER — DATE

REGISTERED PROFESSIONAL ENGINEER — J. AMIRAZODI — No. 17509 — Exp. 6-30-13 — ELEC — STATE OF CALIFORNIA

10-22-12

PLANS APPROVAL DATE

The State of California or its officers or agents shall not be responsible for the accuracy or completeness of scanned copies of this plan sheet.

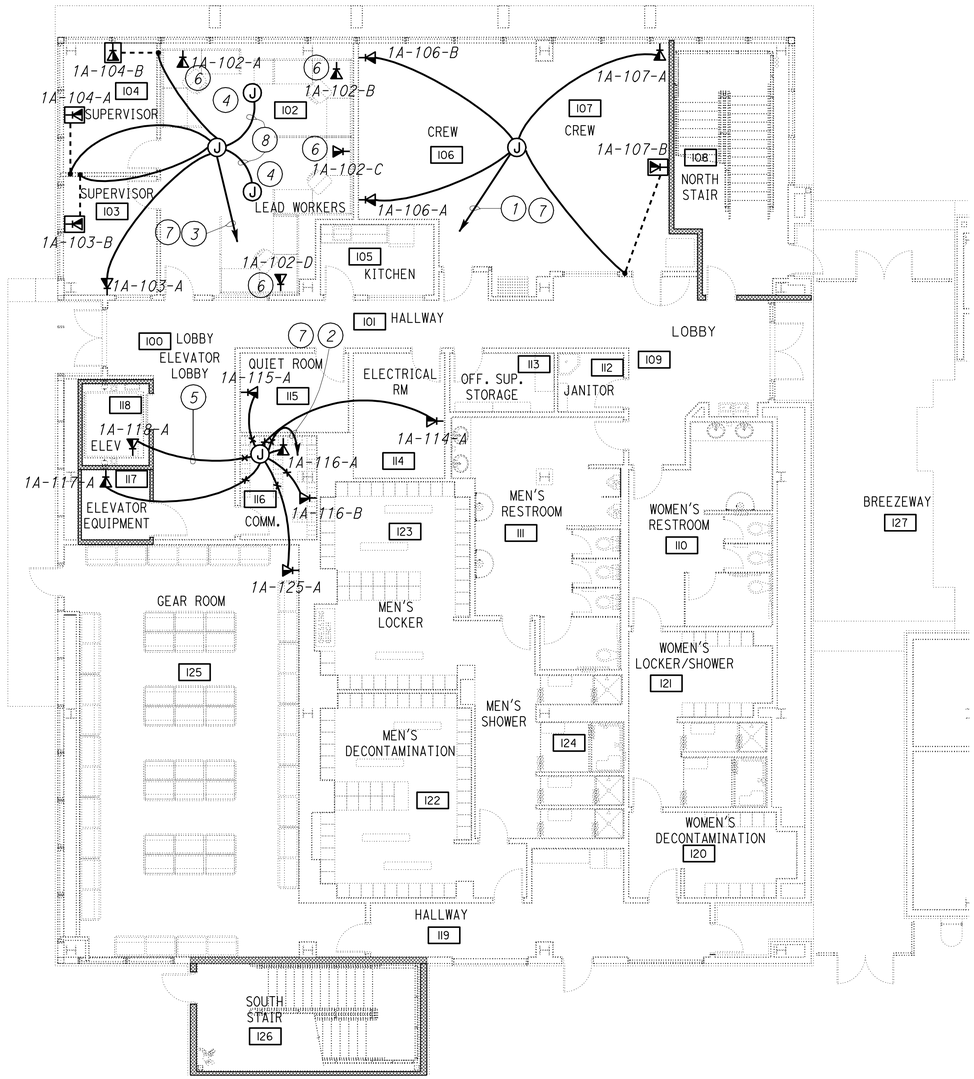

1ST FLOOR

SCALE 1/8" = 1'-0"

Notes

1. *2" C, 8 data cables, 8 voice cables.*
2. *2½" C, 14 data cables, 14 voice cables.*
3. *2½" C, 16 data cables, 16 voice cables.*
4. *Ceiling mounted junction box. Terminate 4 data cables and 4 voice cables. Provide 25 feet or more of additional length for each cable coiled inside junction box to ensure sufficient length for installation and termination to designated outlet.*
5. *Install and wire cables to elevator cab as required by enforcing authorities.*
6. *Not in this contract.*
7. *To voice and data patch panels in Communication Room 116.*
8. *1¼"C, 4 data cables, 4 voice cables.*

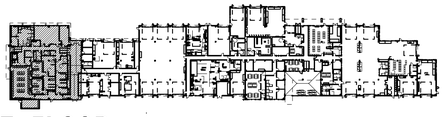

1ST FLOOR

KEY PLAN

THIS DRAWING ACCURATE FOR ELECTRICAL WORK ONLY

	BY	CHECKED
DESIGN	Javid Amirazodi	J.S. Sandhu/J.R. Lacy
DETAILS	Ed D. Tapalla/Dali Zhou	Javid Amirazodi
QUANTITIES	Javid Amirazodi	J.S. Sandhu/J.R. Lacy

STATE OF CALIFORNIA
DEPARTMENT OF TRANSPORTATION

DIVISION OF ENGINEERING SERVICES
ELECTRICAL-MECHANICAL-WATER AND WASTEWATER DESIGN

BRIDGE NO. 33M5785
POST MILE 2.2

SFOBB MAINTENANCE COMPLEX

BUILDING 1A — COMMUNICATION PLAN 1

SHEET **EE1-4.2**

TAEMWW Imperial Rev. 7/10

ORIGINAL SCALE IN INCHES FOR REDUCED PLANS 0 1 2 3

UNIT 3596
PROJECT NUMBER & PHASE 04120006661
EA 014081

DISREGARD PRINTS BEARING EARLIER REVISION DATES → 5/30/12

REVISION DATES (PRELIMINARY STAGE ONLY) SHEET OF

25-OCT-2012 09:00

ee1_4.02.dgn

DIST.	COUNTY	ROUTE	POST MILES TOTAL PROJECT	SHEET NO.	TOTAL SHEETS
04	Ala	80	2.2	711	800

Javid Amirazodi 5-30-12
REGISTERED ELECTRICAL ENGINEER DATE

REGISTERED PROFESSIONAL ENGINEER J. AMIRAZODI No. 17509 Exp. 6-30-13 ELEC STATE OF CALIFORNIA

10-22-12
PLANS APPROVAL DATE

The State of California or its officers or agents shall not be responsible for the accuracy or completeness of scanned copies of this plan sheet.

CALIFORNIA STATE FIRE MARSHAL APPROVED
Approval of this plan does not authorize or approve any omission or deviation from applicable regulations. Final approval is subject to field inspection. One set of approved plans shall be available on the project site at all times.
Reviewed by: JOHN E WOODS, SDSFM
Approval date: 8-22-12

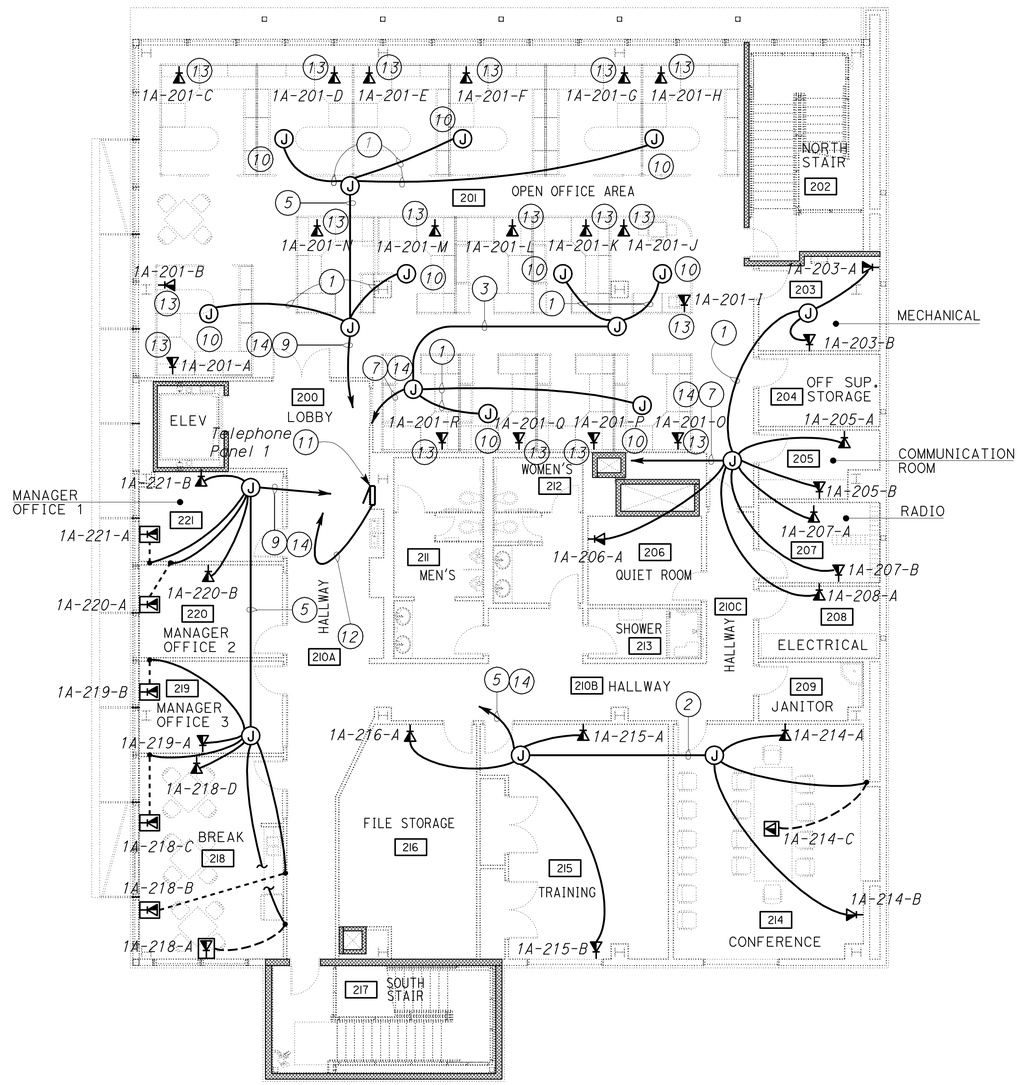

2ND FLOOR
SCALE 1/8" = 1'-0"

Notes

1. *1¼" C, 4 data cables, 4 voice cables.*
2. *1½" C, 6 data cables, 6 voice cables.*
3. *2" C, 8 data cables, 8 voice cables.*
4. *2" C, 10 data cables, 10 voice cables.*
5. *2" C, 12 data cables, 12 voice cables.*
6. *2½" C, 14 data cables, 14 voice cables.*
7. *2½" C, 16 data cables, 16 voice cables.*
8. *2½" C, 18 data cables, 18 voice cables.*
9. *2½" C, 20 data cables, 20 voice cables.*
10. *Ceiling mounted junction box. Terminate 4 data cables and 4 voice cables. Provide 25 feet or more of additional length for each cable coiled inside junction box to ensure sufficient length for installation and termination to designated outlet.*
11. *Telephone Panel 1 shall be flush mounted NEMA Type 1 enclosure with a flush hinged door and shall be 24 inches wide by 24 inches high by 6 inches deep and shall have flush locks on the door trims and with a wooden backboards.*
12. *To voice and data patch panels in Communication Room 116. For size and continuation, see EE1-4.1.*
13. *Not in this contract.*
14. *To voice and data patch panels in Communication Room 116, via Telephone Panel 1.*

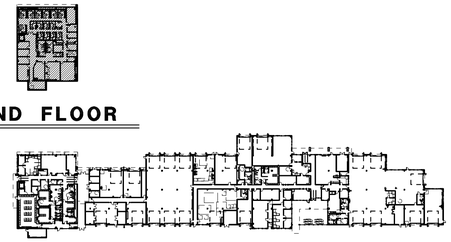

KEY PLAN

THIS DRAWING ACCURATE FOR ELECTRICAL WORK ONLY

	BY	CHECKED
DESIGN	Javid Amirazodi	J.S. Sandhu/J.R. Lacy
DETAILS	Ed D. Tapalla/Dali Zhou	Javid Amirazodi
QUANTITIES	Javid Amirazodi	J.S. Sandhu/J.R. Lacy

STATE OF CALIFORNIA
DEPARTMENT OF TRANSPORTATION

DIVISION OF ENGINEERING SERVICES
ELECTRICAL-MECHANICAL-WATER AND WASTEWATER DESIGN

BRIDGE NO. 33M5785
POST MILE 2.2

SFOBB MAINTENANCE COMPLEX
BUILDING 1A
COMMUNICATION PLAN 2

SHEET **EE1-4.3**

TAEMWW Imperial Rev. 7/10

ORIGINAL SCALE IN INCHES FOR REDUCED PLANS 0 1 2 3

UNIT 3596
PROJECT NUMBER & PHASE 04120006661
EA 014081

DISREGARD PRINTS BEARING EARLIER REVISION DATES → 5/30/12

REVISION DATES (PRELIMINARY STAGE ONLY) SHEET OF

25-OCT-2012 09:00
ee1_4.03.dgn

DIST.	COUNTY	ROUTE	POST MILES TOTAL PROJECT	SHEET NO.	TOTAL SHEETS
04	Ala	80	2.2	712	800

Javid Amirazodi 5-30-12
REGISTERED ELECTRICAL ENGINEER DATE

REGISTERED PROFESSIONAL ENGINEER J. AMIRAZODI No. 17509 Exp. 6-30-13 ELEC STATE OF CALIFORNIA

10-22-12
PLANS APPROVAL DATE

The State of California or its officers or agents shall not be responsible for the accuracy or completeness of scanned copies of this plan sheet.

CALIFORNIA STATE FIRE MARSHAL APPROVED
Approval of this plan does not authorize or approve any omission or deviation from applicable regulations. Final approval is subject to field inspection. One set of approved plans shall be available on the project site at all times.
Reviewed by: JOHN E WOODS, SDSFM
Approval date: 8-22-12

Notes

1. *1½" C, 6 data cables, 6 voice cables.*
2. *2½" C, 14 data cables, 14 voice cables.*
3. *2½" C, 18 data cables, 18 voice cables*
4. *Telephone Panel 2 shall be flush mounted NEMA Type 1 enclosure with a flush hinged door and shall be 24 inches wide by 24 inches high by 6 inches deep and shall have flush locks on the door trims and with a wooden backboards.*
5. *To voice and data patch panels in Main Communications Room 176. For size and continuation, see EE1-4.1.*
6. *To voice and data patch panels in Main Communication Room 176, via Telephone Panel 2.*

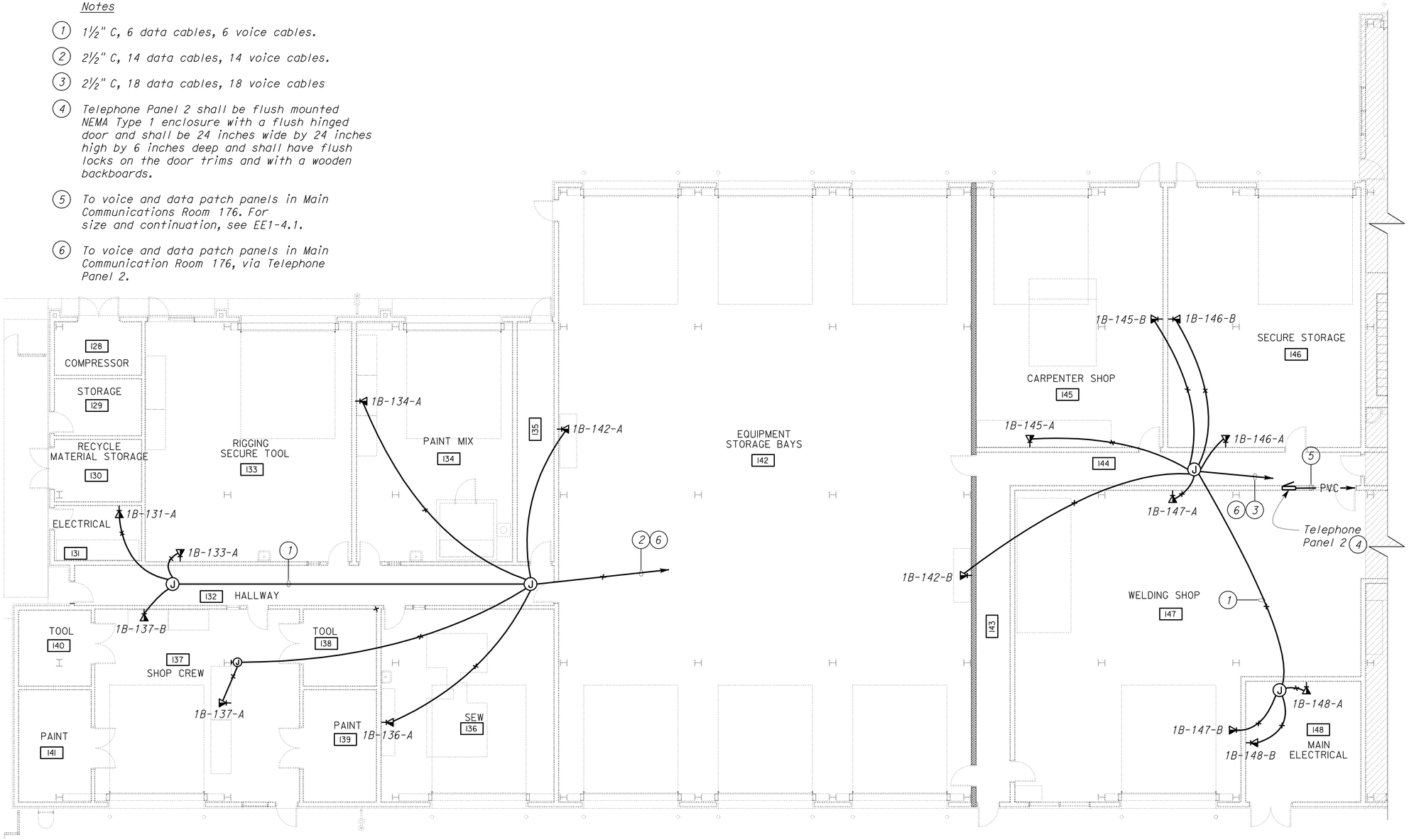

PLAN

SCALE 1/8" = 1'-0"

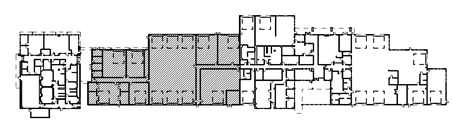

KEY PLAN

THIS DRAWING ACCURATE FOR ELECTRICAL WORK ONLY

DESIGN	BY Javid Amirazodi	CHECKED J.S. Sandhu/J.R. Lacy	
DETAILS	BY Ed D. Tapalla/Dali Zhou	CHECKED Javid Amirazodi	
QUANTITIES	BY Javid Amirazodi	CHECKED J.S. Sandhu/J.R. Lacy	

STATE OF CALIFORNIA
DEPARTMENT OF TRANSPORTATION

DIVISION OF ENGINEERING SERVICES
ELECTRICAL-MECHANICAL-WATER AND WASTEWATER DESIGN

BRIDGE NO. 33M5785
POST MILE 2.2

SFOBB MAINTENANCE COMPLEX
BUILDING 1A
COMMUNICATION PLAN 3

SHEET **EE1-4.4**

TAEMWW Imperial Rev. 7/10

ORIGINAL SCALE IN INCHES FOR REDUCED PLANS 0 1 2 3

UNIT 3596
PROJECT NUMBER & PHASE 04120006661
EA 014081

DISREGARD PRINTS BEARING EARLIER REVISION DATES → 5/30/12

REVISION DATES (PRELIMINARY STAGE ONLY) SHEET OF

25-OCT-2012 09:01
ee1_4.04.dgn

DIST.	COUNTY	ROUTE	POST MILES TOTAL PROJECT	SHEET NO.	TOTAL SHEETS
04	Ala	80	2.2	713	800

REGISTERED ELECTRICAL ENGINEER — 5-30-12 DATE

REGISTERED PROFESSIONAL ENGINEER J. AMIRAZODI No. 17509 Exp. 6-30-13 ELEC STATE OF CALIFORNIA

10-22-12
PLANS APPROVAL DATE

The State of California or its officers or agents shall not be responsible for the accuracy or completeness of scanned copies of this plan sheet.

CALIFORNIA STATE FIRE MARSHAL APPROVED
Approval of this plan does not authorize or approve any omission or deviation from applicable regulations. Final approval is subject to field inspection. One set of approved plans shall be available on the project site at all times.
Reviewed by: JOHN E WOODS, SDSFM
Approval date: 8-22-12

General Note:

SCADA and BASE racks, horizontal cable managers, vertical cable managers, 66 Blocks and other required rack equipment shall be as specified under Communication Equipment Schedule.

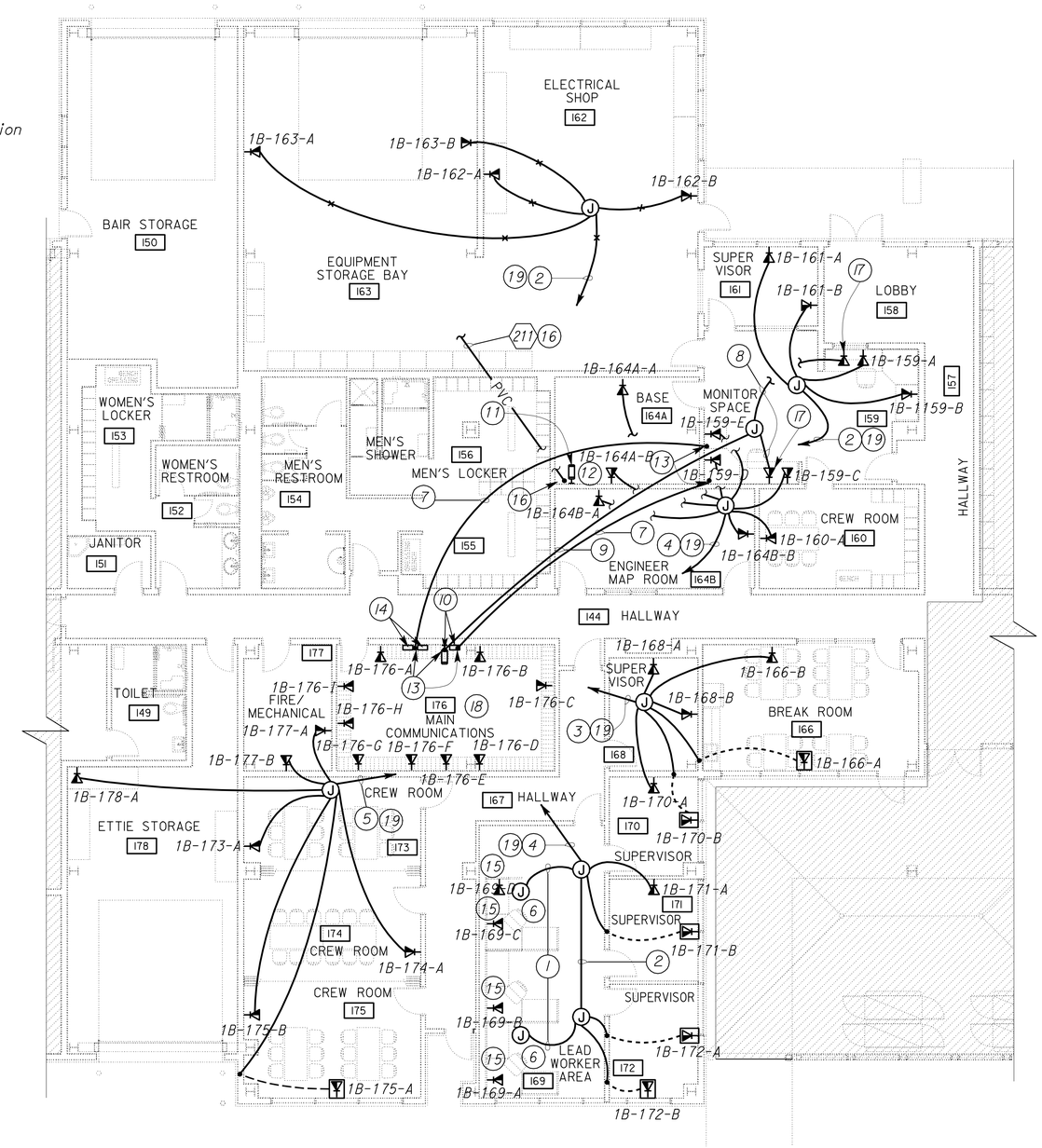

PLAN

SCALE 1/8" = 1'-0"

Notes:

1. 1¼" C, 4 data cables, 4 voice cables.
2. 2" C, 8 data cables, 8 voice cables.
3. 2" C, 12 data cables, 12 voice cables.
4. 2½" C, 16 data cables, 16 voice cables.
5. 2½" C, 14 data cables, 14 voice cables.
6. Ceiling mounted junction box. Terminate 4 data cables and 4 voice cables. Provide 25 feet of additional length for each cable coiled inside junction box.
7. 2"C, 24 pair, STP cable.
8. ¾"C, 2 data cables.
9. 1"C, 4 data cables.
10. SCADA RACK and 66 Block 39.
11. BASE Rack.
12. Designated space for BASE Rack and required overhead/underground conduit/cable system.
13. Extend and terminate conduit 12" below ceiling, and provide 20 feet additional length for each cable coiled for future use.
14. 66 Block 37 and 38.
15. Not in this contract.
16. For continuation and termination, see EE0-0.5.
17. Data outlet for SCADA system.
18. Perform the following for each communication outlet in Room 176:
    - Install 1"C, with 2 data cables and 2 voice cables up to cable ladder;
    - Route 2 data cables and 2 voice cables to voice patch panels and data patch panels and terminate as required.
19. To voice and data patch panels in Main Communications Room 176.

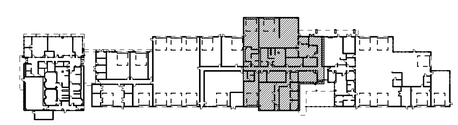

KEY PLAN

THIS DRAWING ACCURATE FOR ELECTRICAL WORK ONLY

	BY	CHECKED
DESIGN	Javid Amirazodi	J.S. Sandhu/J.R. Lacy
DETAILS	Ed D. Tapalla/Dali Zhou	Javid Amirazodi
QUANTITIES	Javid Amirazodi	J.S. Sandhu/J.R. Lacy

STATE OF CALIFORNIA DEPARTMENT OF TRANSPORTATION

DIVISION OF ENGINEERING SERVICES
ELECTRICAL-MECHANICAL-WATER AND WASTEWATER DESIGN

BRIDGE NO. 33M5785
POST MILE 2.2

SFOBB MAINTENANCE COMPLEX
BUILDING 1B — COMMUNICATION PLAN 4

SHEET **EE1-4.5**

TAEMWW Imperial Rev. 7/10

ORIGINAL SCALE IN INCHES FOR REDUCED PLANS 0 1 2 3

UNIT 3596
PROJECT NUMBER & PHASE 04120006661
EA 014081

DISREGARD PRINTS BEARING EARLIER REVISION DATES → 5/30/12

REVISION DATES (PRELIMINARY STAGE ONLY) SHEET OF

25-OCT-2012 09:01
ee1_4.05.dgn

DIST.	COUNTY	ROUTE	POST MILES TOTAL PROJECT	SHEET NO.	TOTAL SHEETS
04	Ala	80	2.2	714	800

Javid Amirazodi 5-30-12
REGISTERED ELECTRICAL ENGINEER DATE

REGISTERED PROFESSIONAL ENGINEER J. AMIRAZODI No. 17509 Exp. 6-30-13 ELEC STATE OF CALIFORNIA

10-22-12
PLANS APPROVAL DATE

The State of California or its officers or agents shall not be responsible for the accuracy or completeness of scanned copies of this plan sheet.

Notes

1. *1¼" C, 4 data cables, 4 voice cables.*
2. *1½" C, 6 data cables, 6 voice cables.*
3. *2" C, 10 data cables, 10 voice cables.*
4. *2" C, 12 data cables, 12 voice cables.*
5. *2½" C, 14 data cables, 14 voice cables.*
6. *Telephone Panel 3 shall be flush mounted NEMA Type 1 enclosure with a flush hinged door and shall be 24 inches wide by 24 inches high by 6 inches deep and shall have flush locks on the door trims and with a wooden backboards.*
7. *To voice and patch panels in Main Communications Room 176. For size and continuation, see EE1-4.1.*
8. *To voice and data patch panels in Main Communications Room 116, Via Telephone Panel 3.*

CALIFORNIA STATE FIRE MARSHAL APPROVED
Approval of this plan does not authorize or approve any omission or deviation from applicable regulations. Final approval is subject to field inspection. One set of approved plans shall be available on the project site at all times.
Reviewed by: JOHN E WOODS, SDSFM
Approval date: 8-22-12

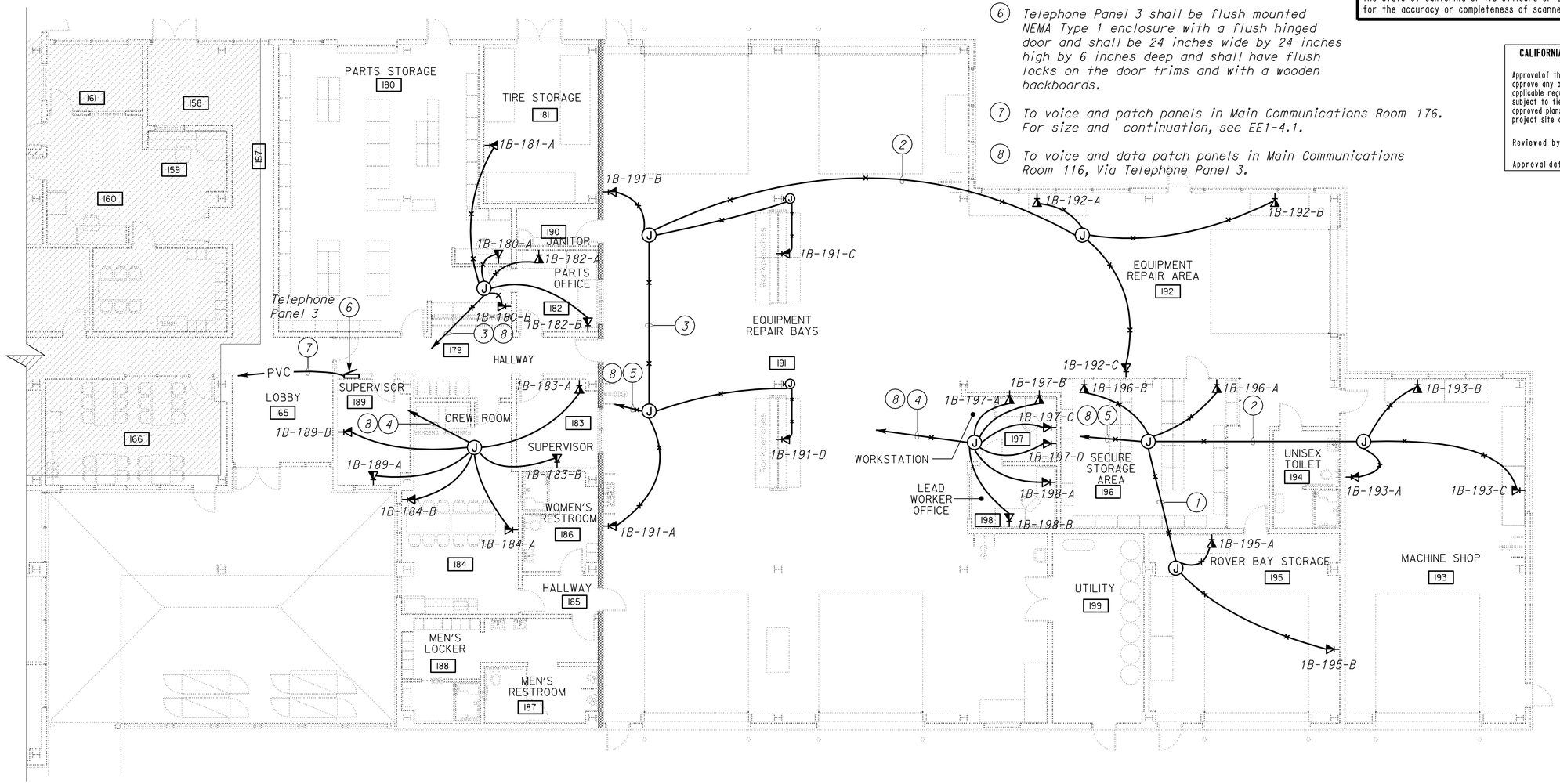

PLAN
SCALE 1/8" = 1'-0"

KEY PLAN

THIS DRAWING ACCURATE FOR ELECTRICAL WORK ONLY

	BY	CHECKED
DESIGN	Javid Amirazodi	J.S. Sandhu/J.R. Lacy
DETAILS	Ed D. Tapalla/Dali Zhou	Javid Amirazodi
QUANTITIES	Javid Amirazodi	J.S. Sandhu/J.R. Lacy

STATE OF CALIFORNIA
DEPARTMENT OF TRANSPORTATION

DIVISION OF ENGINEERING SERVICES
ELECTRICAL-MECHANICAL-WATER AND WASTEWATER DESIGN

BRIDGE NO. 33M5785
POST MILE 2.2

SFOBB MAINTENANCE COMPLEX
BUILDING 1B
COMMUNICATION PLAN 5

SHEET **EE1-4.6**

TAEMWW Imperial Rev. 7/10

ORIGINAL SCALE IN INCHES FOR REDUCED PLANS 0 1 2 3

UNIT 3596
PROJECT NUMBER & PHASE 04120006661
EA 014081

DISREGARD PRINTS BEARING EARLIER REVISION DATES → 5/30/12

REVISION DATES (PRELIMINARY STAGE ONLY) SHEET OF

25-OCT-2012 09:01
ee1_4.06.dgn

DIST.	COUNTY	ROUTE	POST MILES TOTAL PROJECT	SHEET NO.	TOTAL SHEETS
04	Ala	80	2.2	715	800

REGISTERED ELECTRICAL ENGINEER — 5-30-12 DATE

REGISTERED PROFESSIONAL ENGINEER J. AMIRAZODI No. 17509 Exp. 6-30-13 ELEC STATE OF CALIFORNIA

10-22-12
PLANS APPROVAL DATE

The State of California or its officers or agents shall not be responsible for the accuracy or completeness of scanned copies of this plan sheet.

CALIFORNIA STATE FIRE MARSHAL APPROVED
Approval of this plan does not authorize or approve any omission or deviation from applicable regulations. Final approval is subject to field inspection. One set of approved plans shall be available on the project site at all times.
Reviewed by: JOHN E WOODS, SDSFM
Approval date: 8-22-12

Notes:

1. Cable ladder.
2. ½", 2#12, 1#12G.
3. Vertical Cable Manager.
4. Designated space for Intrusion Alarm and Access Alarm Control Panels and required overhead/underground conduit/cable system. Conduit stub ups shall not be more that 2" from the interface of the walls.
5. To Fire Alarm Control Panel in Fire/Mechanical Room 177. Conduit stub ups shall not be more that 2" from the interface of the walls.
6. Designated space for Power Monitoring System and required overhead/underground conduit/cable system. Conduit stub ups shall not be more that 2" from the interface of the walls.
7. Designated space for CCTV Rack and required overhead/underground conduit/cable system. Conduit stub ups shall not be more that 2" from the interface of the walls.
8. Designated space for IT Communication Racks and required overhead/underground conduit/cable system. Conduit stub ups shall not be more that 2" from the interface of the walls.
9. Designated space for AT&T equipment and required overhead/underground conduit/cable system. Conduit stub ups shall not be more that 2" from the interface of the walls.
10. Designated space for SCADA Rack and required overhead/underground conduit/cable system. Conduit stub ups shall not be more that 2" from the interface of the walls.
11. Designated space for Bridge Electrical and required overhead/underground conduit/cable system. Conduit stub ups shall not be more that 2" from the interface of the walls.
12. For continuation, see EE0-0.5.
13. Quad outlet shall be located behind and above the rack and mounted to the side of the cable ladder. Exact location to be directed by the Engineer.
14. For UPS and Battery Storage Cabinet schematic diagram, see Detail C on EE1-4.8.
15. ¾"C, 4#12, 1#12G to Panel 2UA.
16. ¾"C, 6#12, 1#12G to Panel 2UA.
17. 2"C, 4#1/0, 1#1/0G.
18. 2"C, 4#4, 1#4G to Panel 2UB in Communications Room 116. For continuation, see EE1-4.1.
19. Provide and install wall mounting bracket for PV system data acquisition server. Install and secure server on mounting bracket. Route and terminate data and control cables to Lighting Network Workstation via power monitoring gateway and network switch as required. Provide and install required software for monitoring the system. For exact location of Lighting Network Workstation, see EE1-3.13. Terminate one TIA-485 cable to PV system data acquisition server as required. Provide and install data cable between PV system data acquisition server and data jack of nearest Communication outlet for proper operation of system.
20. 2"C, MT to Fire Alarm Control Panel in Room 177. For continuation, see EE1-6.3
21. For conduits stub up details along this wall, see ST1-147.

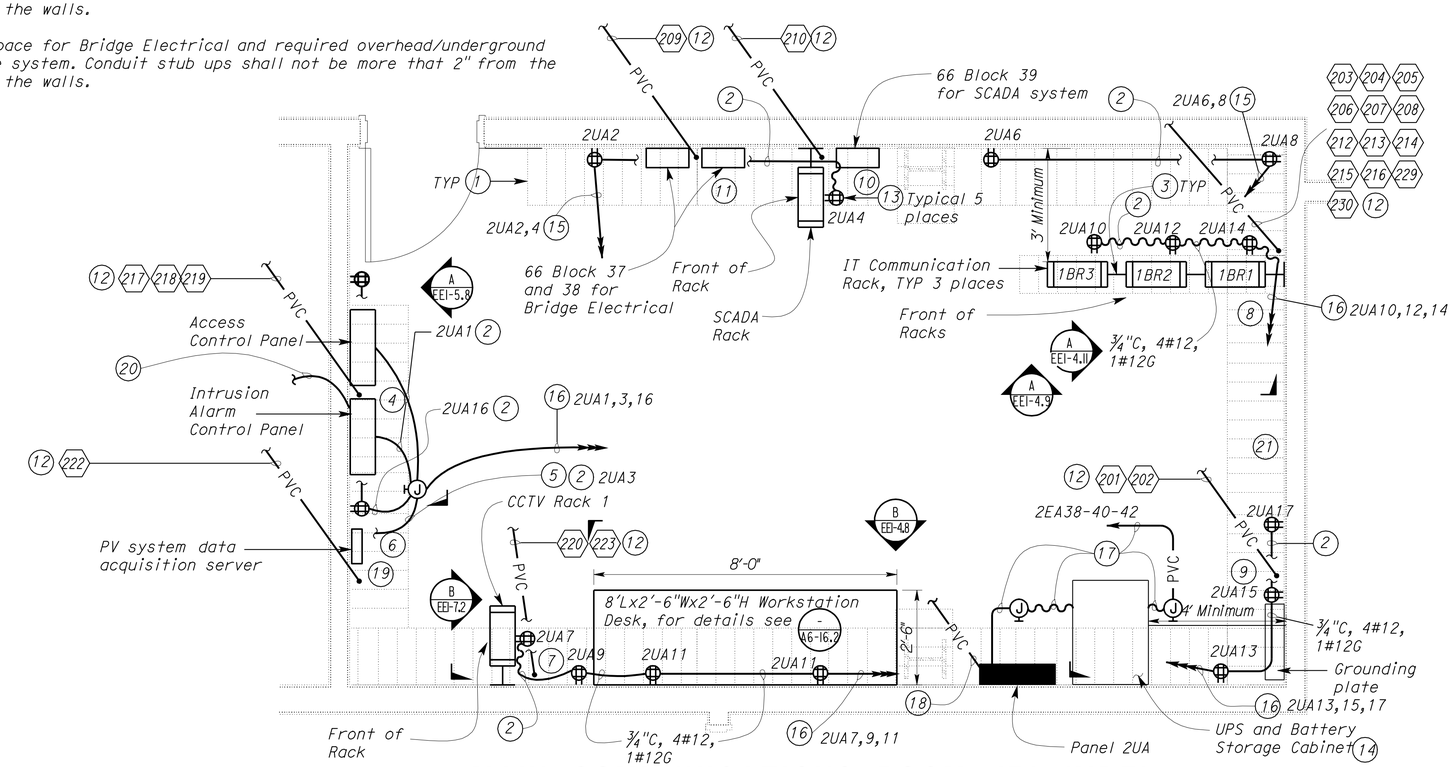

A MAIN COMMUNICATIONS ROOM 176 (MDF)

SCALE 1/2 "= 1'-0"

General Notes:

A. All data cables shall be bundled by utilizing hook and loop straps and shall be bundled in a manner to maintain a consistent pattern over the entire length of the data cables run, using D ring wire management.

B. All voice cables shall be bundled by utilizing hook and loop straps and shall be bundled in a manner to maintain a consistent pattern over the entire length of the voice cables run, using D ring wire management.

C. All conduit stub ups shall be 12" above finished floor or 12" below ceiling. Provide conduit bushings on all conduits.

D. For conduits and conductor/cable schedule, see EE0-1.11 and EE0-1.12.

E. All exposed metal parts that can accidentally become energized shall be bonded to grounding plate.

F. Ground racks to grounding plate with 1#6 copper conductor.

G. Provide and install wire mesh cable tray system and all required accessories above the IT Communication racks as directed by the Engineer.

H. Underground conduits entering the building from outside and within the building shall be installed below the structural primary/intermediate grade beams. For location of structural primary/intermediate grade beams, underground conduits stub up, and penetration details through floor/beams, refer to Structural Plan sheets.

I. Conduit stub ups shall not be more that 2" from the interface of the walls.

J. Panel 2EA is located in Electrical Room 148.

THIS DRAWING ACCURATE FOR ELECTRICAL WORK ONLY

	BY	CHECKED
DESIGN	Javid Amirazodi	J.S. Sandhu/J.R. Lacy
DETAILS	Ed D. Tapalla 10/11	Javid Amirazodi
QUANTITIES	Javid Amirazodi	J.S. Sandhu/J.R. Lacy

STATE OF CALIFORNIA DEPARTMENT OF TRANSPORTATION

DIVISION OF ENGINEERING SERVICES
ELECTRICAL-MECHANICAL-WATER AND WASTEWATER DESIGN

BRIDGE NO. 33M5785
POST MILE 2.2

SFOBB MAINTENANCE COMPLEX

COMMUNICATION DETAILS 1

SHEET **EE1-4.7**

TAEMWW Imperial Rev. 7/10

ORIGINAL SCALE IN INCHES FOR REDUCED PLANS 0 1 2 3

UNIT 3596
PROJECT NUMBER & PHASE 04120006661
EA 014081

DISREGARD PRINTS BEARING EARLIER REVISION DATES → 5/30/12

REVISION DATES (PRELIMINARY STAGE ONLY) SHEET OF

25-OCT-2012 09:01

ee1_4.07.dgn

DIST.	COUNTY	ROUTE	POST MILES TOTAL PROJECT	SHEET NO.	TOTAL SHEETS
04	Ala	80	2.2	716	800

REGISTERED ELECTRICAL ENGINEER — 5-30-12 DATE

REGISTERED PROFESSIONAL ENGINEER J. AMIRAZODI No. 17509 Exp. 6-30-13 ELEC STATE OF CALIFORNIA

10-22-12
PLANS APPROVAL DATE

The State of California or its officers or agents shall not be responsible for the accuracy or completeness of scanned copies of this plan sheet.

CALIFORNIA STATE FIRE MARSHAL APPROVED
Approval of this plan does not authorize or approve any omission or deviation from applicable regulations. Final approval is subject to field inspection. One set of approved plans shall be available on the project site at all times.
Reviewed by: JOHN E WOODS, SDSFM
Approval date: 8-22-12

Notes:

1. Cable ladder.
2. Vertical Cable Manager.
3. Designated space for CCTV Rack and required overhead/underground conduit/cable system. Conduit stub ups shall not be more that 2" from the interface of the walls.
4. Designated space for Communication Racks and required overhead/underground conduit/cable system. Conduit stub ups shall not be more that 2" from the interface of the walls.
5. ¾"C, 4#10, 1#10G.
6. 1"C, 6#10, 1#10G.
7. 2"C, 4#4, 1#4G to Panel 2UA. For exact location of Panel 2UA, see EE1-4.7
8. Quad outlet shall be located behind and above the rack and mounted to the side of the cable ladder. Exact location to be directed by the Engineer.

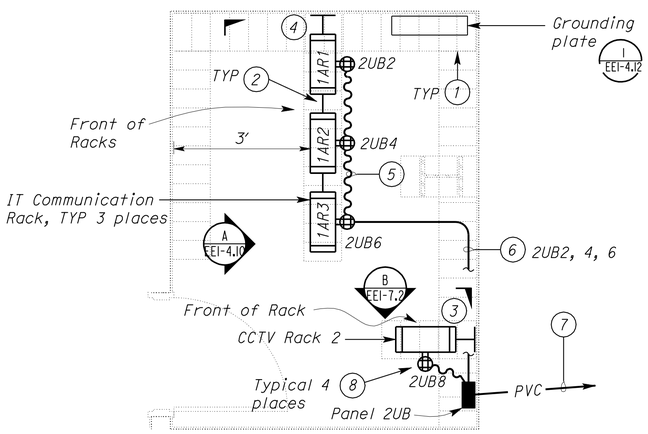

A COMMUNICATIONS ROOM 116 IDF
SCALE 1/2 "= 1'-0"

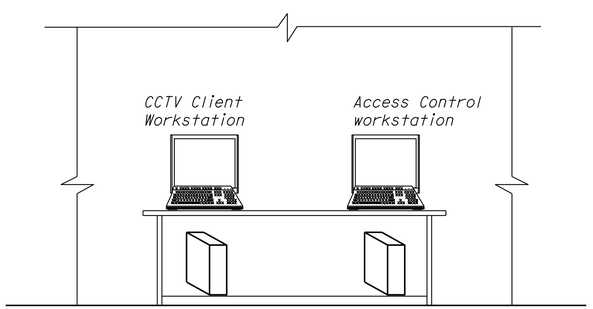

B ELEVATION
SCALE 1/2" = 1'-0"

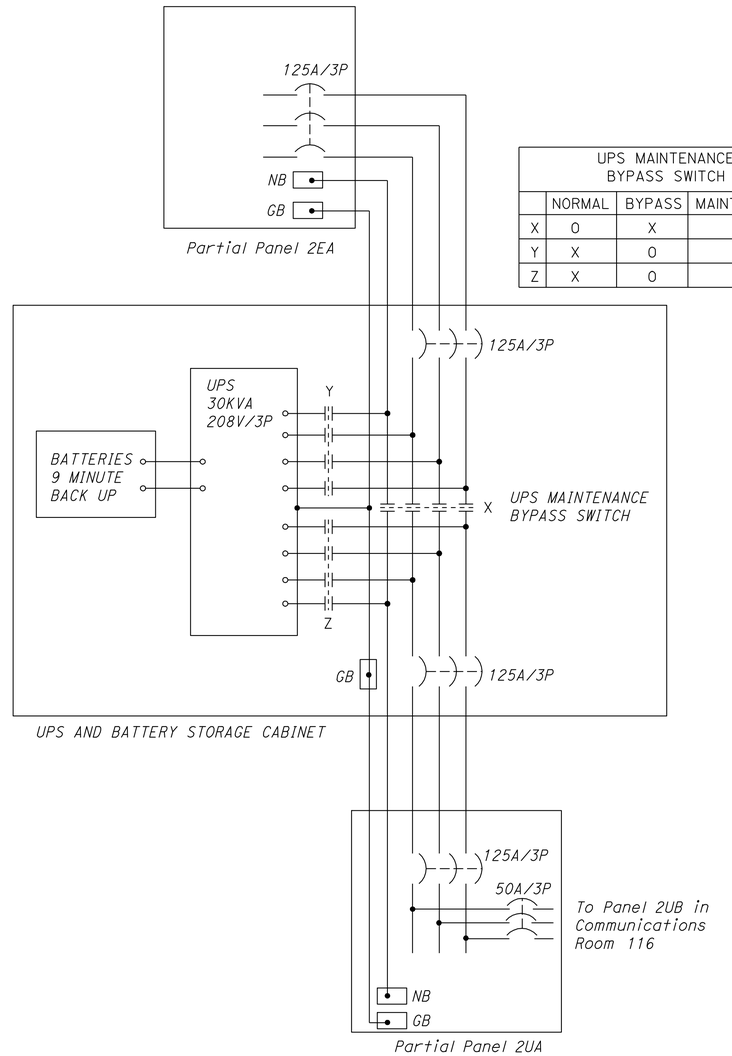

UPS MAINTENANCE BYPASS SWITCH			
	NORMAL	BYPASS	MAINTENANCE
X	O	X	X
Y	X	O	X
Z	X	O	O

C UPS AND BATTERY STORAGE CABINET SCHEMATIC DIAGRAM

General Notes:

A. All data cables shall be bundled by utilizing hook and loop straps and shall be bundled in a manner to maintain a consistent pattern over the entire length of the data cables run, using D ring wire management.

B. All voice cables shall be bundled by utilizing hook and loop straps and shall be bundled in a manner to maintain a consistent pattern over the entire length of the voice cables run, using D ring wire management.

C. All conduit stub ups shall be 12" above finished floor or 12" below ceiling. Provide conduit bushings on all conduits.

D. All exposed metal parts that can accidentally become energized shall be bonded to grounding plate.

E. Ground racks to grounding plate with 1#6 copper conductor.

F. For conduit/cables to IT Communication racks, see notes on EE1-4.11.

G. Provide and install wire mesh cable tray system and all required accessories above the IT Communication racks as directed by the Engineer.

H. Underground conduits entering the building from outside and within the building shall be installed below the structural primary/intermediate grade beams. For location of structural primary/intermediate grade beams, underground conduits stub up, and penetration details through floor/beams, refer to Structural Plan sheets.

I. Conduit stub ups shall not be more that 2" from the interface of the walls.

THIS DRAWING ACCURATE FOR ELECTRICAL WORK ONLY

	BY	CHECKED
DESIGN	Javid Amirazodi	J.S. Sandhu/J.R. Lacy
DETAILS	Ed D. Tapalla 10/11	Javid Amirazodi
QUANTITIES	Javid Amirazodi	J.S. Sandhu/J.R. Lacy

STATE OF CALIFORNIA DEPARTMENT OF TRANSPORTATION

DIVISION OF ENGINEERING SERVICES ELECTRICAL-MECHANICAL-WATER AND WASTEWATER DESIGN

BRIDGE NO. 33M5785 POST MILE 2.2

SFOBB MAINTENANCE COMPLEX

COMMUNICATION DETAILS 2

SHEET EE1-4.8

TAEMWW Imperial Rev. 7/10

ORIGINAL SCALE IN INCHES FOR REDUCED PLANS 0 1 2 3

UNIT 3596
PROJECT NUMBER & PHASE 04120006661
EA 014081

DISREGARD PRINTS BEARING EARLIER REVISION DATES → 5/30/12

REVISION DATES (PRELIMINARY STAGE ONLY) SHEET OF

25-OCT-2012 09:01

ee1_4.08.dgn

DIST.	COUNTY	ROUTE	POST MILES TOTAL PROJECT	SHEET NO.	TOTAL SHEETS
04	Ala	80	2.2	717	800

REGISTERED ELECTRICAL ENGINEER — DATE 5-30-12

REGISTERED PROFESSIONAL ENGINEER J. AMIRAZODI No. 17509 Exp. 6-30-13 ELEC STATE OF CALIFORNIA

10-22-12
PLANS APPROVAL DATE

The State of California or its officers or agents shall not be responsible for the accuracy or completeness of scanned copies of this plan sheet.

CALIFORNIA STATE FIRE MARSHAL APPROVED
Approval of this plan does not authorize or approve any omission or deviation from applicable regulations. Final approval is subject to field inspection. One set of approved plans shall be available on the project site at all times.
Reviewed by: JOHN E WOODS, SDSFM
Approval date: 8-22-12

Note:

(1) *Terminate one, 200 pair, UTP phone cable on the patch panels 1BR1P1 and 1BR1P2 using 8P8C type connectors with USOC terminations.*

General Notes:

A. *Back side of phone patch panel 1BR1P1 and 1BR1P2 ports shall be labeled by corresponding 66 Block and as directed by Caltrans' IT personnel, e.g. B1-PR1 corresponds to 66 Block 1, pair 1.*

B. *Connection between phone patch panels and voice patch panels will be performed by Caltrans' IT personnel.*

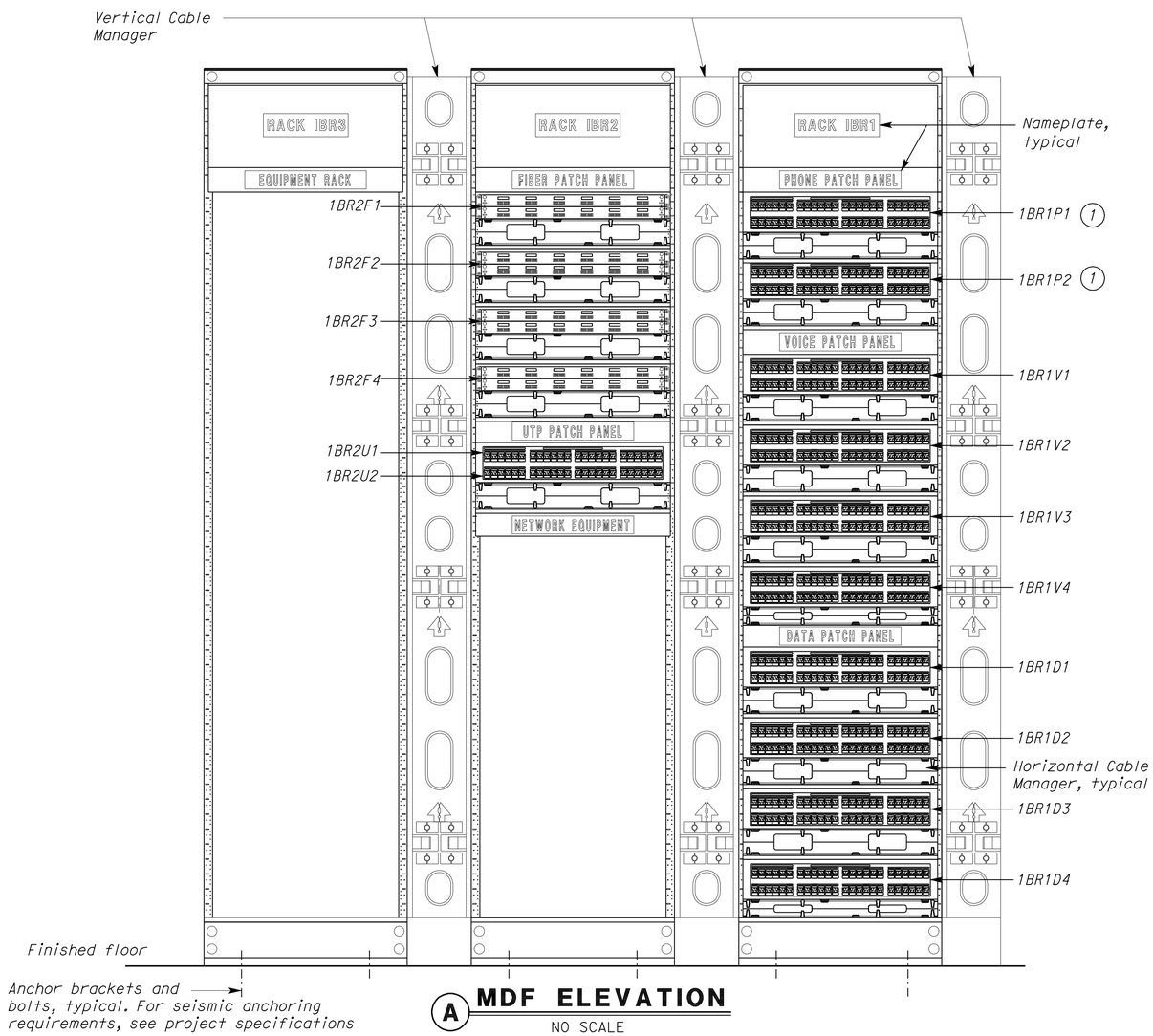

(A) MDF ELEVATION
NO SCALE

Cable ladders and wire mesh cable tray system are not shown for clarity

PATCH PANEL NAME	CABLE TERMINATION	CABLE TERMINATION AT OTHER END
1BR1P1	2-Pair per 8P8C Port with USOC terminations	66 Blocks 1 thru 4
1BR1P2	2-Pair per 8P8C Port with USOC terminations	66 Blocks 5 thru 8
1BR1V1	4-Pair per 8P8C port	Communication Outlets (V1 & V2 Jacks)
1BR1V2	4-Pair per 8P8C port	Communication Outlets (V1 & V2 Jacks)
1BR1V3	4-Pair per 8P8C port	Communication Outlets (V1 & V2 Jacks)
1BR1V4	4-Pair per 8P8C port	Communication Outlets (V1 & V2 Jacks)
1BR1D1	4-Pair per 8P8C port	Communication Outlets (D1 & D2 Jacks)
1BR1D2	4-Pair per 8P8C port	Communication Outlets (D1 & D2 Jacks)
1BR1D3	4-Pair per 8P8C port	Communication Outlets (D1 & D2 Jacks)
1BR1D4	4-Pair per 8P8C port	Communication Outlets (D1 & D2 Jacks)
1BR2F1	24 Strands FO (2 Strands per port)	To Toll Operatiion Building IT Room, See District Plans
1BR2F2	24 Strands FO (2 Strands per port)	To 1AR2F1
1BR2F3	24 Strands FO (2 Strands per port)	4 Strands FO to Fuel Log Room (12 Strands for Future Warehouse)
1BR2F4	(2) 12 Strands FO (2 Strands per port)	12 Strands FO to Oakland Substation 12 Strands FO to East Bay Substation See District Plans
1BR2U1	24 4-Pair Data Cable with TIA-568 terminations	1AR2U1
1BR2U2	24 4-Pair Data Cable with TIA-568 terminations (future)	Future Warehouse

THIS DRAWING ACCURATE FOR ELECTRICAL WORK ONLY

	BY	CHECKED
DESIGN	Javid Amirazodi	J.S. Sandhu/J.R. Lacy
DETAILS	Ed D. Tapalla 10/11	Javid Amirazodi
QUANTITIES	Javid Amirazodi	J.S. Sandhu/J.R. Lacy

STATE OF CALIFORNIA
DEPARTMENT OF TRANSPORTATION

DIVISION OF ENGINEERING SERVICES
ELECTRICAL-MECHANICAL-WATER AND WASTEWATER DESIGN

BRIDGE NO. 33M5785
POST MILE 2.2

SFOBB MAINTENANCE COMPLEX
COMMUNICATION DETAILS 3

SHEET **EE1-4.9**

TAEMWW Imperial Rev. 7/10

ORIGINAL SCALE IN INCHES FOR REDUCED PLANS 0 1 2 3

UNIT 3596
PROJECT NUMBER & PHASE 04120006661
EA 014081

DISREGARD PRINTS BEARING EARLIER REVISION DATES → 5/30/12

REVISION DATES (PRELIMINARY STAGE ONLY) SHEET OF

25-OCT-2012 09:01
ee1_4.09.dgn

DIST.	COUNTY	ROUTE	POST MILES TOTAL PROJECT	SHEET NO.	TOTAL SHEETS
04	Ala	80	2.2	718	800

REGISTERED ELECTRICAL ENGINEER — 5-30-12 DATE

REGISTERED PROFESSIONAL ENGINEER J. AMIRAZODI No. 17509 Exp. 6-30-13 ELEC STATE OF CALIFORNIA

10-22-12
PLANS APPROVAL DATE

The State of California or its officers or agents shall not be responsible for the accuracy or completeness of scanned copies of this plan sheet.

CALIFORNIA STATE FIRE MARSHAL APPROVED

Approval of this plan does not authorize or approve any omission or deviation from applicable regulations. Final approval is subject to field inspection. One set of approved plans shall be available on the project site at all times.

Reviewed by: JOHN E WOODS, SDSFM

Approval date: 8-22-12

Note:

(1) *Terminate one, 200 pair, UTP phone cable on the patch panels IAR1P1 and 1AR1P2 using 8P8C type connectors with USOC terminations.*

General Notes:

A. *Back side of phone patch panel 1AR1P1 and 1AR1P2 ports shall be labeled by corresponding 66 Block and as directed by Caltrans' IT personnel, e.g. B1-PR1 corresponds to 66 Block 1, pair 1.*

B. *Connection between phone patch panels and voice patch panels will be performed by Caltrans' IT personnel.*

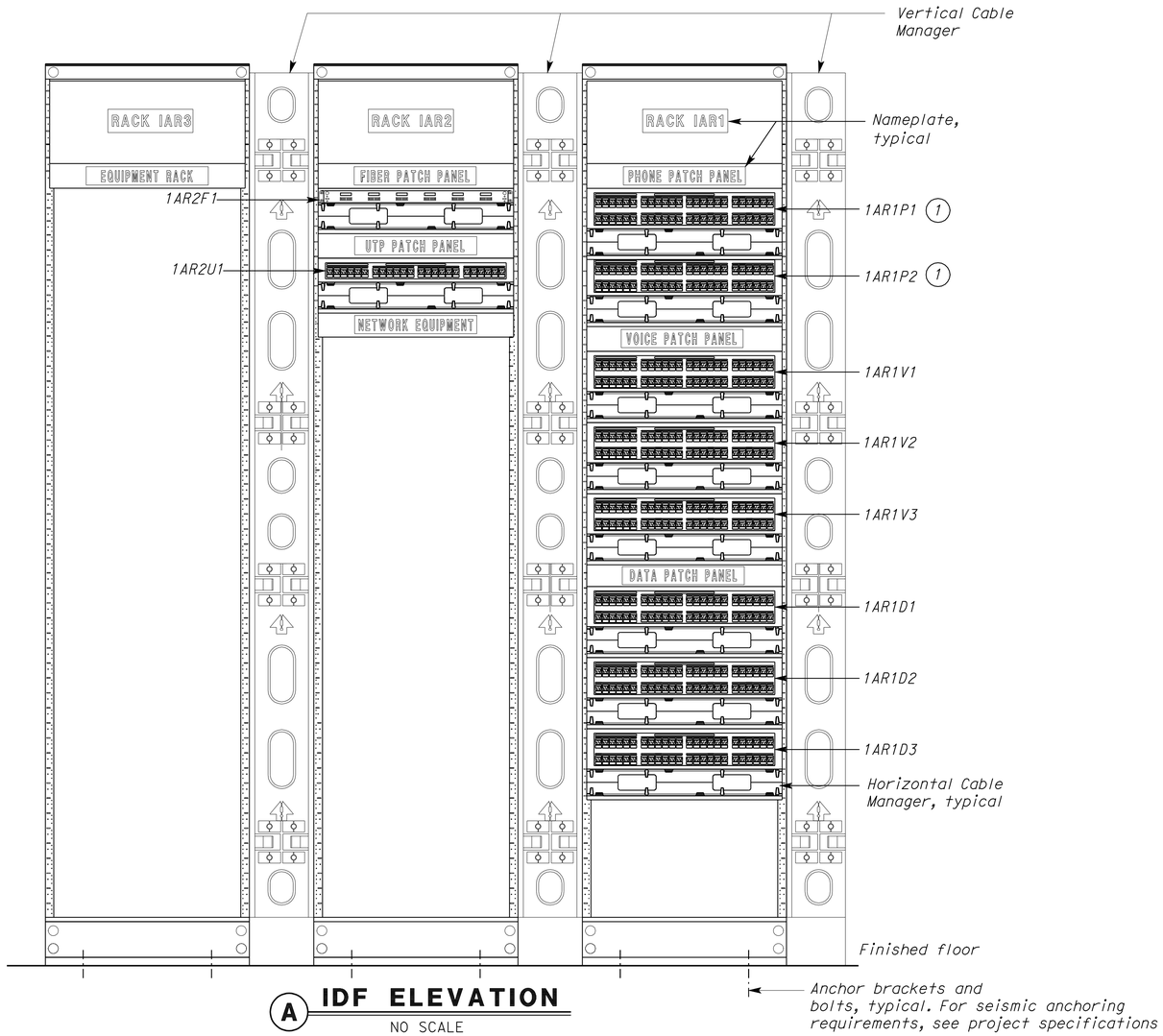

(A) IDF ELEVATION

NO SCALE

Cable ladders and wire mesh cable tray system are not shown for clarity

PATCH PANEL NAME	CABLE TERMINATION	CABLE TERMINATION AT OTHER END
1AR1P1	2-Pair per 8P8C Port with USOC terminations	66 Blocks 9 thru 12
1AR1P2	2-Pair per 8P8C Port with USOC terminations	66 Blocks 13 thru 16
1AR1V1	4-Pair per 8P8C port	Communication Outlets (V1 & V2 Jacks)
1AR1V2	4-Pair per 8P8C port	Communication Outlets (V1 & V2 Jacks)
1AR1V3	4-Pair per 8P8C port	Communication Outlets (V1 & V2 Jacks)
1AR1D1	4-Pair per 8P8C port	Communication Outlets (D1 & D2 Jacks)
1AR1D2	4-Pair per 8P8C port	Communication Outlets (D1 & D2 Jacks)
1AR1D3	4-Pair per 8P8C port	Communication Outlets (D1 & D2 Jacks)
1AR2F1	24 Strands FO (2 Strands per port)	To 1BR2F2
1AR2U1	24 4-Pair Data Cable with TIA-568 terminations	1AR2U1

THIS DRAWING ACCURATE FOR ELECTRICAL WORK ONLY

	BY	CHECKED
DESIGN	Javid Amirazodi	J.S. Sandhu/J.R. Lacy
DETAILS	Ed D. Tapalla 10/11	Javid Amirazodi
QUANTITIES	Javid Amirazodi	J.S. Sandhu/J.R. Lacy

STATE OF CALIFORNIA DEPARTMENT OF TRANSPORTATION

DIVISION OF ENGINEERING SERVICES ELECTRICAL-MECHANICAL-WATER AND WASTEWATER DESIGN

BRIDGE NO. 33M5785 POST MILE 2.2

SFOBB MAINTENANCE COMPLEX

COMMUNICATION DETAILS 4

SHEET **EE1-4.10**

TAEMWW Imperial Rev. 7/10

ORIGINAL SCALE IN INCHES FOR REDUCED PLANS 0 1 2 3

UNIT 3596
PROJECT NUMBER & PHASE 04120006661
EA 014081

DISREGARD PRINTS BEARING EARLIER REVISION DATES → 5/30/12

REVISION DATES (PRELIMINARY STAGE ONLY) SHEET OF

25-OCT-2012 09:01

ee1_4.10.dgn

DIST.	COUNTY	ROUTE	POST MILES TOTAL PROJECT	SHEET NO.	TOTAL SHEETS
04	Ala	80	2.2	719	800

REGISTERED ELECTRICAL ENGINEER — 5-30-12 DATE

REGISTERED PROFESSIONAL ENGINEER J. AMIRAZODI No. 17509 Exp. 6-30-13 ELEC STATE OF CALIFORNIA

10-22-12
PLANS APPROVAL DATE

The State of California or its officers or agents shall not be responsible for the accuracy or completeness of scanned copies of this plan sheet.

CALIFORNIA STATE FIRE MARSHAL APPROVED
Approval of this plan does not authorize or approve any omission or deviation from applicable regulations. Final approval is subject to field inspection. One set of approved plans shall be available on the project site at all times.
Reviewed by: JOHN E WOODS, SDSFM
Approval date: 8-22-12

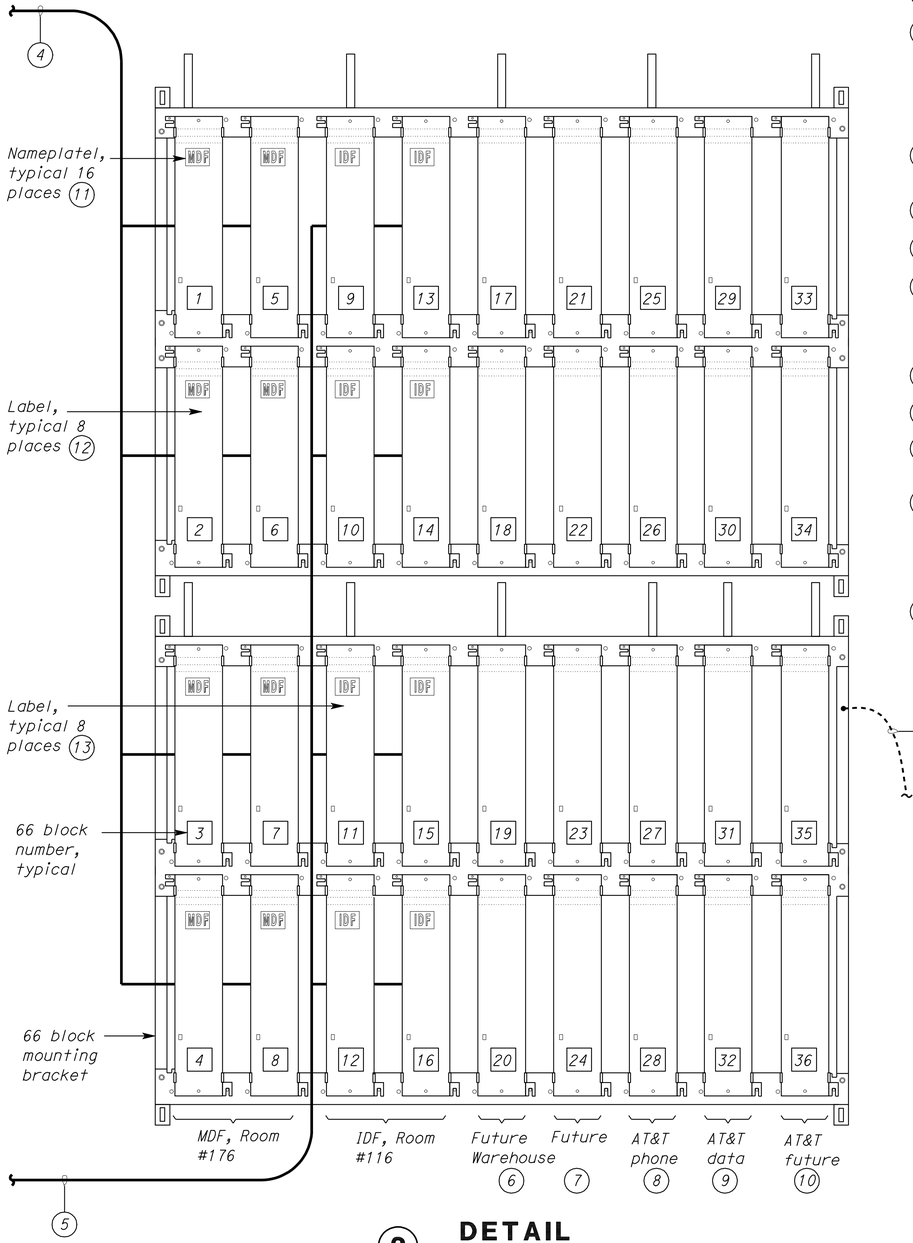

2 DETAIL
NO SCALE

Notes:

1. Dedicated fourplex outlet for AT&T communication equipment.
2. 1#4/0 bare copper grounding conductor to ground bus inside IFS-M in Main Electrical Room (room number 148). For detail, see EE0-1.10.
3. For 66 Block detail, see Detail 2 this sheet.
4. One, 200 pair, UTP phone cable. Terminate cable on the left side of the 66 Blocks 1 through 8 using 2 pair USOC type termination. Route cables to IT Communication racks inside Room 176 by supporting cables behind the mounting bracket and above the cable ladder, utilizing wire managers, hook and loop straps and D-rings to secure cables in place.
5. 4"C, one, 200 pair, UTP phone cable. Terminate cable on the left side of the 66 Blocks 9 through 16 using 2 pair USOC type termination.
6. 66 Blocks 17 through 20 shall be reserved for future Warehouse.
7. 66 Blocks 21 thru 24 shall be reserved for future use.
8. 66 Blocks 25 thru 28 shall be reserved for AT&T phone lines. Right side of these Blocks will be cross-connected to the AT&T equipment by AT&T (each pair is one voice/phone line). Cross-connect between Blocks 1 through 16 and 25 through 28 will be performed by Caltran's IT personnel.
9. 66 Blocks 29 through 32 shall be reserved for AT&T phone lines,
10. 66 Blocks 33 through 36 shall be reserved for future AT&T use.
11. Label the front hinge covers of 66 Blocks 1 through 8 as "MDF", and label the front hinge covers of 66 Blocks 9 through 16 as "IDF".
12. Label inside of the MDF 66 Blocks hinge covers with corresponding phone patch panel port numbers 1 through 96. Block 1 shall have 1-12, Block 2 shall have 13-24, block 3 shall have 25-36, block 4 shall have 37-48, block 5 shall have 49-60, block 6 shall have 61-72, block 7 shall have 73-84 and block 8 shall have 85-96.
13. Label inside of the IDF 66 Blocks hinge covers with corresponding phone patch panel port numbers 1 through 96. Block 9 shall have 1-12, Block 10 shall have 13-24, block 11 shall have 25-36, block 12 shall have 37-48, block 13 shall have 49-60, block 14 shall have 61-72, block 15 shall have 73-84 and block 16 shall have 85-96.

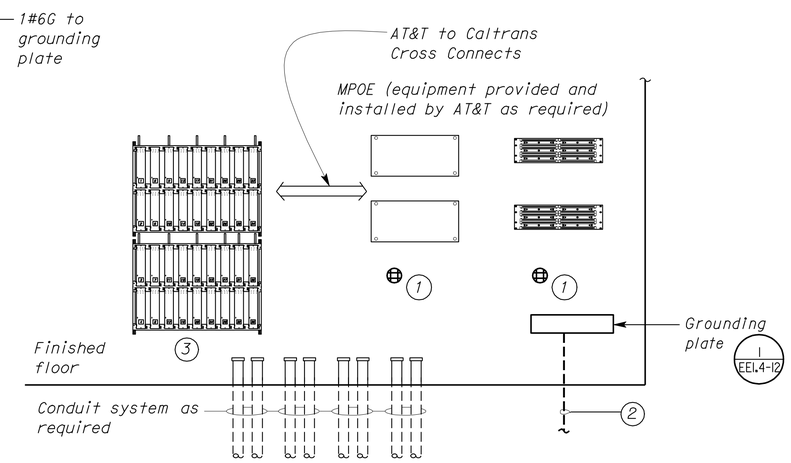

A ELEVATION
NO SCALE

General Note:

66 Block shall be assigned as follow:

- 66 Blocks 1, 2, 3 and 4 shall be terminated on the MDF Phone Patch Panel 1BR1P1, (1 to Ports 1-12, 2 to Ports 13-24, 3 to Ports 25-36, 4 to Ports 37-48).
- 66 Blocks 5, 6, 7 and 8 shall be terminated on the MDF Phone Patch Panel 1BR1P2, (5 to Ports 1-12, 6 to Ports 13-24, 7 to Ports 25-36, 8 to Ports 37-48).
- 66 Blocks 9, 10, 11 and 12 shall be terminated on the IDF Phone Patch Panel 1AR1P1, (9 to Ports 1-12, 10 to Ports 13-24, 11 to Ports 25-36, 12 to Ports 37-48).
- 66 Blocks 13, 14, 15 and 16 shall be terminated on the IDF Phone Patch Panel 1AR1P2, (13 to Ports 1-12, 4 to Ports 13-24, 15 to Ports 25-36, 16 to Ports 37-48).
- 66 Blocks 17, 18, 19 and 20 shall be reserved for the future Warehouse.
- 66 Blocks 21, 22, 23 and 24 shall be reserved for future use.
- 66 Blocks 25, 26, 27 and 28 shall be for AT&T Phone Lines.
- 66 Blocks 29, 30, 31 and 32 shall be for AT&T Data Circuits.
- 66 Blocks 33, 34, 35 and 36 shall be for AT&T future use.

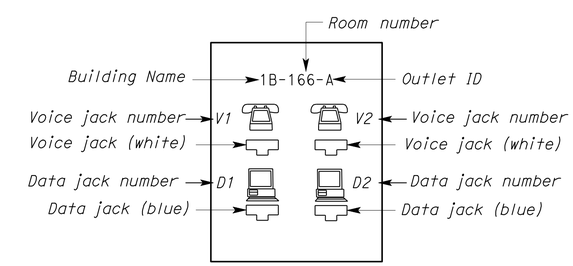

COMMUNICATION OUTLET
1 FACE PLATE DETAIL
NO SCALE

THIS DRAWING ACCURATE FOR ELECTRICAL WORK ONLY

	BY	CHECKED
DESIGN	Javid Amirazodi	J.S. Sandhu/J.R. Lacy
DETAILS	Ed D. Tapalla 10/11	Javid Amirazodi
QUANTITIES	Javid Amirazodi	J.S. Sandhu/J.R. Lacy

STATE OF CALIFORNIA DEPARTMENT OF TRANSPORTATION

DIVISION OF ENGINEERING SERVICES
ELECTRICAL-MECHANICAL-WATER AND WASTEWATER DESIGN

BRIDGE NO. 33M5785
POST MILE 2.2

SFOBB MAINTENANCE COMPLEX
COMMUNICATION DETAILS 5

SHEET **EE1-4.11**

TAEMWW Imperial Rev. 7/10

ORIGINAL SCALE IN INCHES FOR REDUCED PLANS 0 1 2 3

UNIT 3596
PROJECT NUMBER & PHASE 04120006661
EA 014081

DISREGARD PRINTS BEARING EARLIER REVISION DATES → 5/30/12

REVISION DATES (PRELIMINARY STAGE ONLY) SHEET OF

25-OCT-2012 09:02
ee1_4.11.dgn

DIST.	COUNTY	ROUTE	POST MILES TOTAL PROJECT	SHEET NO.	TOTAL SHEETS
04	Ala	80	2.2	720	800

CALIFORNIA STATE FIRE MARSHAL APPROVED
Approval of this plan does not authorize or approve any omission or deviation from applicable regulations. Final approval is subject to field inspection. One set of approved plans shall be available on the project site at all times.
Reviewed by: JOHN E WOODS, SDSFM
Approval date: 8-22-12

Javid Amirazodi 5-30-12
REGISTERED ELECTRICAL ENGINEER DATE

REGISTERED PROFESSIONAL ENGINEER J. AMIRAZODI No. 17509 Exp. 6-30-13 ELEC STATE OF CALIFORNIA

10-22-12
PLANS APPROVAL DATE

The State of California or its officers or agents shall not be responsible for the accuracy or completeness of scanned copies of this plan sheet.

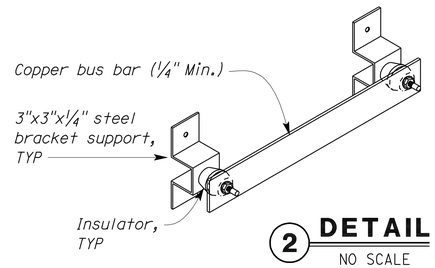

2 DETAIL
NO SCALE

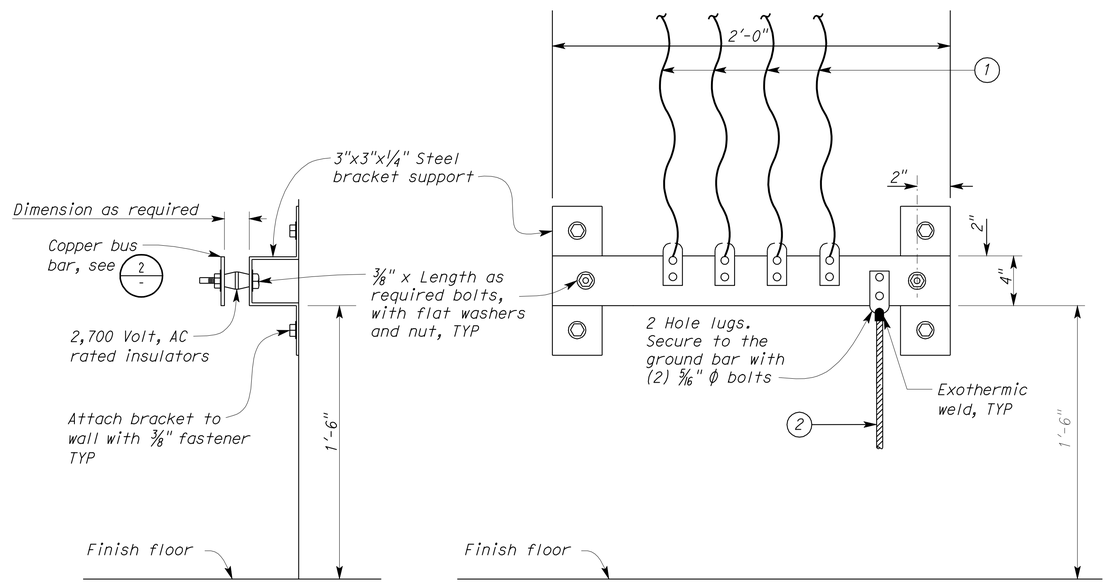

SIDE VIEW

FRONT VIEW

1 GROUNDING PLATE DETAIL
NO SCALE

Note:

1. *Equipment grounding conductor as required, TYP*
2. *#4/0 bare copper grounding conductor to building grounding system. For continuation, see EE0.1-10.*

THIS DRAWING ACCURATE FOR ELECTRICAL WORK ONLY

	BY	CHECKED
DESIGN	Javid Amirazodi	J.S. Sandhu/J.R. Lacy
DETAILS	Ed D. Tapalla 10/11	Javid Amirazodi
QUANTITIES	Javid Amirazodi	J.S. Sandhu/J.R. Lacy

STATE OF CALIFORNIA DEPARTMENT OF TRANSPORTATION

DIVISION OF ENGINEERING SERVICES
ELECTRICAL-MECHANICAL-WATER AND WASTEWATER DESIGN

BRIDGE NO. 33M5785
POST MILE 2.2

SFOBB MAINTENANCE COMPLEX
GROUNDING PLATE DETAILS

SHEET **EE1-4.12**

TAEMWW Imperial Rev. 7/10

ORIGINAL SCALE IN INCHES FOR REDUCED PLANS 0 1 2 3

UNIT 3596
PROJECT NUMBER & PHASE 04120006661
EA 014081

DISREGARD PRINTS BEARING EARLIER REVISION DATES → 5/30/12
REVISION DATES (PRELIMINARY STAGE ONLY) SHEET OF

25-OCT-2012 09:02
ee1_4.12.dgn

DIST.	COUNTY	ROUTE	POST MILES TOTAL PROJECT	SHEET NO.	TOTAL SHEETS
04	Ala	80	2.2	721	800

CALIFORNIA STATE FIRE MARSHAL APPROVED
Approval of this plan does not authorize or approve any omission or deviation from applicable regulations. Final approval is subject to field inspection. One set of approved plans shall be available on the project site at all times.
Reviewed by: JOHN E WOODS, SDSFM
Approval date: 8-22-12

Javid Amirazodi 5-30-12
REGISTERED ELECTRICAL ENGINEER DATE

REGISTERED PROFESSIONAL ENGINEER J. AMIRAZODI No. 17509 Exp. 6-30-13 ELEC STATE OF CALIFORNIA

10-22-12
PLANS APPROVAL DATE

The State of California or its officers or agents shall not be responsible for the accuracy or completeness of scanned copies of this plan sheet.

COMMUNICATION EQUIPMENT SCHEDULE-RACKS

EQUIPMENT NAME	MANUFACTURER/CATALOG NO.	QUANTITY	DESCRIPTION
IT Communication Racks	CHATSWORTH/48353-703 OR Legrand-Ortronics/OR-19-84-T2SD	6	Rack - 19" Width, 7' Height, 3" D Channel, Mounting Holes on both sides, Floor/Top mounted, Black
Rack Shelves for Monitor & Keyboard	CHATSWORTH/12487-719 OR Legrand-Ortronics/OR-60400405 & OR-KTR19-DR & OR-60400575	2	Monitor Shelf with keyboard/mouse tray for 19" rack (One each for MDF and IDF)
Rack Filler Panels-1U	CHATSWORTH/30026-701 OR Legrand-Ortronics/OR-401004788	20	Filler Panel - 19" width, 1/8" thick, 1U height, Black
Rack Filler Panels-2U	CHATSWORTH/30026-702 OR Legrand-Ortronics/OR-401004789	10	Filler Panel - 19" width, 1/8" thick, 2U height, Black
Rack Filler Panels-4U	CHATSWORTH/30026-704 OR Legrand-Ortronics/OR-401004791	6	Filler Panel - 19" width, 1/8" thick, 4U height, Black
Rack Base Dust Cover	CHATSWORTH/41050-719 OR Legrand-Ortronics/OR-DC-19B	6	Base Dust Cover for 19" Rack with 3" D Channel, Black
Rack Mounting Screws	CHATSWORTH/40605-006 OR Legrand-Ortronics/OR-60400533, quantity 1000		#12-24 Mounting Screws, Combination Pan Head, Pilot Point Mounting Screws, Black Finish
Rack Mounting Screws	CHATSWORTH/40606-001 OR Legrand-Ortronics/#12-24 screw with washer, quantity 100		#12-24 Mounting Screws with lock washer, Combination Pan Head, Pilot Point, SEMS Mounting Screws, Zinc Plated

COMMUNICATION EQUIPMENT SCHEDULE-66 BLOCKS

EQUIPMENT NAME	MANUFACTURER/CATALOG NO.	QUANTITY	DESCRIPTION
66 Mounting Bracket	CHATSWORTH/11188-701, Siemon/CC-2025-TB-DC OR Equal		66 Block Mounting Brackets, used to organize and manage 66 blocks at one convenient location, 35", Black, Mounting Bracket for 18 blocks (2 rows of 9) with U-shaped cable loops to route jumper cables between blocks
Clips	LEVITON/40067-0BC, Siemon/SA1-SS-1000 OR Equal		Bridging Clips for 66 connecting blocks
66 Block	LEVITON/40066-M50, Siemon/M1-50 OR Equal	36	66 Block - Split M-Block, 25 pair on 1 side and 25 pair on other side, uses Bridging Clips to join pairs on either side 10" H x 3 5/16" W x 1 3/16" D
Hinge Cover	LEVITON/40050-MHO, Siemon/MC4LH-9 OR Equal	36	Hinged Cover for 66 blocks, orange 10" H x 2 7/16" W x 3/4" D, Orange
Bracket for Blocks	LEVITON/40089-00D OR Siemon/S89D	36	Bracket for 66 Blocks and connector mounting

	BY	CHECKED
DESIGN	Javid Amirazodi	J.S. Sandhu/J.R. Lacy
DETAILS	Javid Amirazodi	James R. Lacy
QUANTITIES	Javid Amirazodi	J.S. Sandhu/J.R. Lacy

STATE OF CALIFORNIA
DEPARTMENT OF TRANSPORTATION

DIVISION OF ENGINEERING SERVICES
ELECTRICAL-MECHANICAL-WATER AND WASTEWATER DESIGN

BRIDGE NO. 33M5785
POST MILE 2.2

SFOBB MAINTENANCE COMPLEX
COMMUNICATION EQUIPMENT SCHEDULE 1

SHEET **EE1-4.13**

TAEMWW Imperial Rev. 7/10

ORIGINAL SCALE IN INCHES FOR REDUCED PLANS 0 1 2 3

UNIT 3596
PROJECT NUMBER & PHASE 04120006661
EA 014081

DISREGARD PRINTS BEARING EARLIER REVISION DATES → 5/30/12
REVISION DATES (PRELIMINARY STAGE ONLY) SHEET OF

25-OCT-2012 09:02
ee1_4.13.dgn

DIST.	COUNTY	ROUTE	POST MILES TOTAL PROJECT	SHEET NO.	TOTAL SHEETS
04	Ala	80	2.2	722	800

CALIFORNIA STATE FIRE MARSHAL
APPROVED
Approval of this plan does not authorize or approve any omission or deviation from applicable regulations. Final approval is subject to field inspection. One set of approved plans shall be available on the project site at all times.
Reviewed by: JOHN E WOODS, SDSFM
Approval date: 8-22-12

Javid Amirazodi 5-30-12
REGISTERED ELECTRICAL ENGINEER DATE

REGISTERED PROFESSIONAL ENGINEER
J. AMIRAZODI
No. 17509
Exp. 6-30-13
ELEC
STATE OF CALIFORNIA

10-22-12
PLANS APPROVAL DATE

The State of California or its officers or agents shall not be responsible for the accuracy or completeness of scanned copies of this plan sheet.

COMMUNICATION EQUIPMENT SCHEDULE-CABLE MANAGERS

EQUIPMENT NAME	MANUFACTURER/CATALOG NO.	QUANTITY	DESCRIPTION
Vertical Cable Manager	*CHATSWORTH/30161-703 OR Legrand-Ortronics/OR-DVMS704*	*6*	*Vertical Cable Manager, Black, for 7'H x 3"D racks, CCS Combination Cabling Section, 7' height, 3.65" width, Front=5.90" & Rear=5.35"*
Horizontal Cable Manager	*CHATSWORTH/13930-703 OR Equal*	*6*	*Single-Sided 19" x 3U Horizontal Cable Manager, (3U x 19" x 5.9")*
Horizontal Cable Manager	*CHATSWORTH/13930-702 OR Legrand-Ortronics/OR-MM6HMF2RU*	*30*	*Single-Sided 19" x 2U Horizontal Cable Manager, (2U x 19" x 5.9")*
Horizontal Cable Manager	*CHATSWORTH/13930-701 OR Legrand-Ortronics/OR-MM6HMF1RU*	*6*	*Single-Sided 19" x 1U Horizontal Cable Manager, (1U x 19" x 5.9")*
Wire Manager Bar	*CHATSWORTH/12176-701 OR Legrand-Ortronics/OR-CMBFRORU*	*As needed*	*19" Patch Panel Wire Management Bar & Strain Relief*

COMMUNICATION EQUIPMENT SCHEDULE-CABLE LADDER

EQUIPMENT NAME	MANUFACTURER/CATALOG NO.	QUANTITY	DESCRIPTION
CABLE LADDER SYSTEM	*CHATSWORTH/10250-718 OR PANDUIT/WG18BL10*	*As needed*	*Cable ladder system shall be 18-inch wide steel ladder with cross bar spaced no more than 12 inches on center which includes E-Bends, inside and outside Radius Bends, Clamps Corner Brackets, Support kits, accessories, Splice kits, Dividers, Mounting Plates, Patch Panel Racks, End Caps, threaded Rods, and all other necessary equipment for a complete installation. Install ladder at a height as directed by the Engineer. Ladder along the wall shall be supported by 18-inch wide triangular type wall bracket. Ladder that is to be supported from the ceiling shall be supported with brackets suitable for ceiling mounting. All components of the cable ladder system shall be designed in a manner to withstand the seismic access and loading they are subjected to. Provide and install wire mesh cable tray system and all required accessories above the IT Communication racks and below the cable ladder.*

	BY	CHECKED
DESIGN	Javid Amirazodi	J.S. Sandhu/J.R. Lacy
DETAILS	Javid Amirazodi	James R. Lacy
QUANTITIES	Javid Amirazodi	J.S. Sandhu/J.R. Lacy

STATE OF CALIFORNIA
DEPARTMENT OF TRANSPORTATION

DIVISION OF ENGINEERING SERVICES
ELECTRICAL-MECHANICAL-WATER AND WASTEWATER DESIGN

BRIDGE NO. 33M5785
POST MILE 2.2

SFOBB MAINTENANCE COMPLEX
COMMUNICATION EQUIPMENT SCHEDULE 2

SHEET EE1-4.14

TAEMWW Imperial Rev. 7/10

ORIGINAL SCALE IN INCHES FOR REDUCED PLANS 0 1 2 3

UNIT 3596
PROJECT NUMBER & PHASE 04120006661
EA 014081

DISREGARD PRINTS BEARING EARLIER REVISION DATES
REVISION DATES (PRELIMINARY STAGE ONLY) 5/30/12
SHEET OF

25-OCT-2012 09:02
ee1_4.14.dgn

DIST.	COUNTY	ROUTE	POST MILES TOTAL PROJECT	SHEET NO.	TOTAL SHEETS
04	Ala	80	2.2	723	800

REGISTERED ELECTRICAL ENGINEER — 5-30-12 DATE

REGISTERED PROFESSIONAL ENGINEER — J. AMIRAZODI — No. 17509 — Exp. 6-30-13 — ELEC — STATE OF CALIFORNIA

10-22-12
PLANS APPROVAL DATE

The State of California or its officers or agents shall not be responsible for the accuracy or completeness of scanned copies of this plan sheet.

CALIFORNIA STATE FIRE MARSHAL APPROVED
Approval of this plan does not authorize or approve any omission or deviation from applicable regulations. Final approval is subject to field inspection. One set of approved plans shall be available on the project site at all times.
Reviewed by: JOHN E WOODS, SDSFM
Approval date: 8-22-12

COMMUNICATION EQUIPMENT SCHEDULE-CABLES

EQUIPMENT NAME	MANUFACTURER/CATALOG NO.	DESCRIPTION
Multimode Fiber Optic Riser Cable-24 Strands	Siemon/9BB6R024L-G109A OR Belden/B9B601T	62.5/125 micron, multi-mode fiber optic cable, orange jacket, Riser, 24 strands
Multimode Fiber Optic Plenum Cable-24 Strands	Siemon/9BB6P024L-G109A OR Belden/B9B611T	62.5/125 micron, multi-mode fiber optic cable, orange jacket, Plenum, 24 strands
Multimode Fiber Optic Riser Cable-12 Strands	Siemon/9BB6R012G-G109A OR Belden/B9B042T	62.5/125 micron, multi-mode fiber optic cable, orange jacket, Riser, 12 strands
Multimode Fiber Plenum Optic Cable-12 Strands	Siemon/9BB6P012G-G109A OR Belden/B9B048T	62.5/125 micron, multi-mode fiber optic cable, orange jacket, Plenum, 12 strands
Multimode Fiber Optic Riser Cable-4 Strands	Siemon/9BB6R004C-G109A OR Belden/B9B038T	62.5/125 micron, multi-mode fiber optic cable, orange jacket, Riser, 4 strands (for Fuel Room)
Multimode Fiber Plenum Optic Cable-4 Strands	Siemon/9BB6P004C-G109A OR Belden/B9B044T	62.5/125 micron, multi-mode fiber optic cable, orange jacket, Plenum, 4 strands (for Fuel Room)
Category 6 UTP Riser Cable -Blue	Siemon/9C6R4-E3-06-RXA OR CommScope/ 7600046971071E BL 4/23 R1000	Category 6 UTP 4-Pair Riser Cable, Blue for Data
Category 6 UTP Plenum Cable -Blue	Siemon/9C6P4-E3-06-RXA OR CommScope/ 7002100812071E BL 4/23 R1000	Category 6 UTP 4-Pair Plenum Cable, Blue for Data
Category 6 UTP Riser Cable -White	Siemon/9C6R4-E3-02-RXA OR CommScope/ 7002142081071E WH 4/23 R1000	Category 6 UTP 4-Pair Riser Cable, White for Voice
Category 6 UTP Plenum Cable -White	Siemon/9C6P4-E3-02-RXA OR CommScope/ 7002100322071E WH 4/23 R1000	Category 6 UTP 4-Pair Plenum Cable, White for Voice
Category 6 UTP Riser Cable -Red	Siemon/9C6R4-E3-03-RXA OR CommScope/ 7002120201071E RD 4/23 W1000	Category 6 UTP 4-Pair Riser Cable, Red for Radio
Category 6 UTP Plenum Cable -Red	Siemon/9C6P4-E3-03-RXA OR CommScope/ 7002120121071E RD 4/23 R1000	Category 6 UTP 4-Pair Plenum Cable, Red for Radio
100 Pair non-plenum Phone Cable	Belden/24501897 OR CommScope/1068244691010A GY 100/24 R1000	100 pair, Voice & low Data circuit grade-Category 3, non-plenum, olive-gray
200 Pair non-plenum Phone Cable	Belden/24501906 OR Bertek (Graybar)/ 3NP200P24-GY-R-BER-PV	200 pair, Voice & low Data circuit grade-Category 3, non-plenum, olive-gray
100 Pair plenum Phone Cable, Category 3 minimum	Belden/24571250 OR CommScope/1068244691010A GY 100/24 R1000	100 pair, Voice & low Data circuit grade-Category 3, plenum, olive-gray
200 Pair plenum Phone Cable, Category 3 minimum	Belden/24571265 OR Superior Essex/ 3P200P24-GY-R-ESS-PP	200 pair, Voice & low Data circuit grade-Category 3, plenum olive-gray
50 Pair STP Cable	Belden/1088A OR Superior Essex/ E1BED-181B50PJ00	50 pair 18 AWG, individually and overall shielded cable, 600V Ttray cable
24 Pair STP Cable	Belden/1068A OR Superior Essex/ E1BED-181B24PJ00	24 pair 18 AWG, individually and overall shielded cable, 600V Ttray cable

	BY	CHECKED
DESIGN	Javid Amirazodi	J.S. Sandhu/J.R. Lacy
DETAILS	Dali Zhou	James R. Lacy
QUANTITIES	Javid Amirazodi	J.S. Sandhu/J.R. Lacy

STATE OF CALIFORNIA
DEPARTMENT OF TRANSPORTATION

DIVISION OF ENGINEERING SERVICES
ELECTRICAL-MECHANICAL-WATER AND WASTEWATER DESIGN

BRIDGE NO. 33M5785
POST MILE 2.2

SFOBB MAINTENANCE COMPLEX
COMMUNICATION EQUIPMENT SCHEDULE 3

SHEET **EE1-4.15**

TAEMWW Imperial Rev. 7/10

ORIGINAL SCALE IN INCHES FOR REDUCED PLANS 0 1 2 3

UNIT 3596
PROJECT NUMBER & PHASE 04120006661
EA 014081

DISREGARD PRINTS BEARING EARLIER REVISION DATES → 5/30/12
REVISION DATES (PRELIMINARY STAGE ONLY) SHEET OF

25-OCT-2012 09:02
ee1_4.15.dgn

DIST.	COUNTY	ROUTE	POST MILES TOTAL PROJECT	SHEET NO.	TOTAL SHEETS
04	Ala	80	2.2	724	800

CALIFORNIA STATE FIRE MARSHAL APPROVED
Approval of this plan does not authorize or approve any omission or deviation from applicable regulations. Final approval is subject to field inspection. One set of approved plans shall be available on the project site at all times.
Reviewed by: JOHN E WOODS, SDSFM
Approval date: 8-22-12

Javid Amirazodi 5-30-12
REGISTERED ELECTRICAL ENGINEER DATE

REGISTERED PROFESSIONAL ENGINEER J. AMIRAZODI No. 17509 Exp. 6-30-13 ELEC STATE OF CALIFORNIA

10-22-12
PLANS APPROVAL DATE

The State of California or its officers or agents shall not be responsible for the accuracy or completeness of scanned copies of this plan sheet.

COMMUNICATION EQUIPMENT SCHEDULE-FIBER PATCH PANELS ✳

EQUIPMENT NAME	MANUFACTURER/CATALOG NO.	QUANTITY	DESCRIPTION
Fiber Patch Panels	LeGrand-Ortronics/ OR-625MMC-12PD1RB	3	625 Series Pre-Loaded; Multi-mode, 6-SC duplex (12 fibers) multimode, beige adapters, phosphor-bronze alignment sleeves (1CR1F1,1DR1F1,1ER1F1)
Fiber Patch Panel	LeGrand-Ortronics/ OR-625MMC-24PD1RB	6	625 Series Pre-Loaded; Multi-mode, 1RU, 12-SC duplex (24 fibers) multimode, beige adapters, phosphor-bronze alignment sleeves (1AR2F1, 1BR2F1, 1BR2F2, 1BR2F3, 1BR2F4 and 1GR1FX)
Fiber Patch Panel	LeGrand-Ortronics/ OR-625MMC-12PD1RB	1	625 Series Pre-Loaded; Multi-mode, 6-SC duplex (12 fibers) multimode, beige adapters, phosphor-bronze alignment for Fuel Log Room (1ER1F1)

VENDOR No. 1

COMMUNICATION EQUIPMENT SCHEDULE-FIBER PATCH PANELS ✳

EQUIPMENT NAME	MANUFACTURER/CATALOG NO.	QUANTITY	DESCRIPTION
Fiber Patch Panels	Siemon/RIC3-24-01	7	24 to 96 port Rack Mount Interconnect Center, accepts (4) Quick-Pack adapter plates, 2U, black (1CR1F1,1DR1F1,1ER1F1,1GR1FX,1AR2F1,1BR2F1,1BR2F2)
Fiber Patch Panel	Siemon/RIC3-48-01	1	48 to 192 port Rack Mount Interconnect Center, accepts (8) Quick-Pack adapter plates, 3U, black (1BR2F3 and 1BR2F4)
Fiber Patch Panel	Siemon/SWIC3-M-01	1	12 to 24 Port Mini Wall Mount Interconnect Center, accepts (2) Quick-Pack adapter plates, black, for Fuel Log Room (1FR1F1)
Quick Panel Adapter	Siemon/RIC-F-SC6-01 OR Equal	28	QUICK-PACK ADAPTER PLATES, 3 duplex SC adapters (6 fibers)
Quick Panel Adapter	Siemon/RIC-F-SC8-01 OR Equal	2	QUICK-PACK ADAPTER PLATES, 4 duplex SC adapters (8 fibers)
Quick Panel Adapter	Siemon/RIC-F-BLNK-01 OR Equal	8	Blank adapter plate

VENDOR No. 2

OR EQUAL

✳ The above fiber patch panel tables describe fiber patch panels manufactured by Siemon and LeGrand-Ortronics. Contractor may choose either Siemon, LeGrand-Ortronics or equal. All fiber optic patch panels shall be by the same manufacturer.

COMMUNICATION EQUIPMENT SCHEDULE-PATCH PANELS

EQUIPMENT NAME	MANUFACTURER/CATALOG NO.	QUANTITY	DESCRIPTION
Category 6 Patch Panel- 48 Ports (Used as Voice, Data and UTP Patch Panel	LEVITON/69568-C48 OR Siemon/HD648	16	19" Rack mountable Patch Panel with 48 ports of 4-pair 8P8C that are CAT6 and TIA-568 certified, 2U Central labeling (1AR1V1,1AR1V2,1AR1V3,1AR1D1,1AR1D2,1AR1D3,1BR1V1, 1BR1V2,1BR1V3,1BR1V4,1BR1D1,1BR1D2,1BR1D3,1BR1D4,1CR1V1,1CR1D1)
Category 5E Patch Panel- 48 Ports (Used as Phone Patch Panel)	LEVITON/5G596-C48 OR Siemon/HD5-48	5	19" Rack mountable Patch Panel with 48 ports of 4-pair 8P8C that are CAT5E and TIA-568 certified, 2U Central labeling (1AR1P1,1AR1P2,1BR1P1,1BR1P2,1CR1P1)
Categort 6 Patch Panel- 24 Ports (Used as Voice, Data and UTP Patch Panel	LEVITON/69568-U24 OR Siemon/HD624	4	19" Rack mountable Patch Panel with 24 ports of 4-pair 8P8C that are CAT6 and TIA-568 certified,1U 24-Port (1AR2U1,1BR2U1,1BR2U2,1CR1U1)

	BY	CHECKED
DESIGN	Javid Amirazodi	J.S. Sandhu/J.R. Lacy
DETAILS	Javid Amirazodi	James R. Lacy
QUANTITIES	Javid Amirazodi	J.S. Sandhu/J.R. Lacy

STATE OF CALIFORNIA
DEPARTMENT OF TRANSPORTATION

DIVISION OF ENGINEERING SERVICES
ELECTRICAL-MECHANICAL-WATER AND WASTEWATER DESIGN

BRIDGE NO. 33M5785
POST MILE 2.2

SFOBB MAINTENANCE COMPLEX
COMMUNICATION EQUIPMENT SCHEDULE 4

SHEET EE1-4.16

TAEMWW Imperial Rev. 7/10

ORIGINAL SCALE IN INCHES FOR REDUCED PLANS 0 1 2 3

UNIT 3596
PROJECT NUMBER & PHASE 04120006661
EA 014081

DISREGARD PRINTS BEARING EARLIER REVISION DATES → 5/30/12
REVISION DATES (PRELIMINARY STAGE ONLY) SHEET OF

25-OCT-2012 09:02
ee1_4.16.dgn

OUTLET ID	CABLE ID	TERMINATION PORT AT PATCH PANEL	CABLE COLOR
1A-102-A	102-1A	1BR1V1-P1	WHITE
	102-2A	1BR1V1-P2	
	102-1A	1BR1D1-P1	BLUE
	102-2A	1BR1D1-P2	
1A-102-B	102-1B	1BR1V1-P3	WHITE
	102-2B	1BR1V1-P4	
	102-1B	1BR1D1-P3	BLUE
	102-2B	1BR1D1-P4	
1A-102-C	102-1C	1BR1V1-P5	WHITE
	102-2C	1BR1V1-P6	
	102-1C	1BR1D1-P5	BLUE
	102-2C	1BR1D1-P6	
1A-102-D	102-1D	1BR1V1-P7	WHITE
	102-2D	1BR1V1-P8	
	102-1D	1BR1D1-P7	BLUE
	102-2D	1BR1D1-P8	
1A-103-A	103-1A	1BR1V1-P9	WHITE
	103-2A	1BR1V1-P10	
	103-1A	1BR1D1-P9	BLUE
	103-2A	1BR1D1-P10	
1A-103-B	103-1B	1BR1V1-P11	WHITE
	103-2B	1BR1V1-P12	
	103-1B	1BR1D1-P11	BLUE
	103-2B	1BR1D1-P12	
1A-104-A	104-1A	1BR1V1-P13	WHITE
	104-2A	1BR1V1-P14	
	104-1A	1BR1D1-P13	BLUE
	104-2A	1BR1D1-P14	
1A-104-B	104-1B	1BR1V1-P15	WHITE
	104-2B	1BR1V1-P16	
	104-1B	1BR1D1-P15	BLUE
	104-2B	1BR1D1-P16	
1A-106-A	106-1A	1BR1V1-P17	WHITE
	106-2A	1BR1V1-P18	
	106-1A	1BR1D1-P17	BLUE
	106-2A	1BR1D1-P18	
1A-106-B	106-1B	1BR1V1-P19	WHITE
	106-2B	1BR1V1-P20	
	106-1B	1BR1D1-P19	BLUE
	106-2B	1BR1D1-P20	
1A-107-A	107-1A	1BR1V1-P21	WHITE
	107-2A	1BR1V1-P22	
	107-1A	1BR1D1-P21	BLUE
	107-2A	1BR1D1-P22	

OUTLET ID	CABLE ID	TERMINATION PORT AT PATCH PANEL	CABLE COLOR
1A-107-B	107-1B	1BR1V1-P23	WHITE
	107-2B	1BR1V1-P24	
	107-1B	1BR1D1-P23	BLUE
	107-2B	1BR1D1-P24	
1A-114-A	114-1A	1BR1V1-P25	WHITE
	114-2A	1BR1V1-P26	
	114-1A	1BR1D1-P25	BLUE
	114-2A	1BR1D1-P26	
1A-115-A	115-1A	1BR1V1-P27	WHITE
	115-2A	1BR1V1-P28	
	115-1A	1BR1D1-P27	BLUE
	115-2A	1BR1D1-P28	
1A-116-A	116-1A	1BR1V1-P29	WHITE
	116-2A	1BR1V1-P30	
	116-1A	1BR1D1-P29	BLUE
	116-2A	1BR1D1-P30	
1A-116-B	116-1B	1BR1V1-P31	WHITE
	116-2B	1BR1V1-P32	
	116-1B	1BR1D1-P31	BLUE
	116-2B	1BR1D1-P32	
1A-117-A	117-1A	1BR1V1-P33	WHITE
	117-2A	1BR1V1-P34	
	117-1A	1BR1D1-P33	BLUE
	117-2A	1BR1D1-P34	
1A-118-A	118-1A	1BR1V1-P35	WHITE
	118-2A	1BR1V1-P36	
	-	-	BLUE
	-	-	
1A-125-A	125-1A	1BR1V1-P37	WHITE
	125-2A	1BR1V1-P38	
	125-1A	1BR1D1-P37	BLUE
	125-2A	1BR1D1-P38	
1A-201-A	201-1A	1BR1V1-P39	WHITE
	201-2A	1BR1V1-P40	
	201-1A	1BR1D1-P39	BLUE
	201-2A	1BR1D1-P40	
1A-201-B	201-1B	1BR1V1-P41	WHITE
	201-2B	1BR1V1-P42	
	201-1B	1BR1D1-P41	BLUE
	201-2B	1BR1D1-P42	
1A-201-C	201-1C	1BR1V1-P43	WHITE
	201-2C	1BR1V1-P44	
	201-1C	1BR1D1-P43	BLUE
	201-2C	1BR1D1-P44	

OUTLET ID	CABLE ID	TERMINATION PORT AT PATCH PANEL	CABLE COLOR
1A-201-D	201-1D	1BR1V1-P45	WHITE
	201-2D	1BR1V1-P46	
	201-1D	1BR1D1-P45	BLUE
	201-2D	1BR1D1-P46	
1A-201-E	201-1E	1BR1V1-P47	WHITE
	201-2E	1BR1V1-P48	
	201-1E	1BR1D1-P47	BLUE
	201-2E	1BR1D1-P48	
1A-201-F	201-1F	1BR1V2-P1	WHITE
	201-2F	1BR1V2-P2	
	201-1F	1BR1D2-P1	BLUE
	201-2F	1BR1D2-P2	
1A-201-G	201-1G	1BR1V2-P3	WHITE
	201-2G	1BR1V2-P4	
	201-1G	1BR1D2-P3	BLUE
	201-2G	1BR1D2-P4	
1A-201-H	201-1H	1BR1V2-P5	WHITE
	201-2H	1BR1V2-P6	
	201-1H	1BR1D2-P5	BLUE
	201-2H	1BR1D2-P6	
1A-201-I	201-1I	1BR1V2-P7	WHITE
	201-2I	1BR1V2-P8	
	201-1I	1BR1D2-P7	BLUE
	201-2I	1BR1D2-P8	
1A-201-J	201-1J	1BR1V2-P9	WHITE
	201-2J	1BR1V2-P10	
	201-1J	1BR1D2-P9	BLUE
	201-2J	1BR1D2-P10	
1A-201-K	201-1K	1BR1V2-P11	WHITE
	201-2K	1BR1V2-P12	
	201-1K	1BR1D2-P11	BLUE
	201-2K	1BR1D2-P12	
1A-201-L	201-1L	1BR1V2-P13	WHITE
	201-2L	1BR1V2-P14	
	201-1L	1BR1D2-P13	BLUE
	201-2L	1BR1D2-P14	
1A-201-M	201-1M	1BR1V2-P15	WHITE
	201-2M	1BR1V2-P16	
	201-1M	1BR1D2-P15	BLUE
	201-2M	1BR1D2-P16	
1A-201-N	201-1N	1BR1V2-P17	WHITE
	201-2N	1BR1V2-P18	
	201-1N	1BR1D2-P17	BLUE
	201-2N	1BR1D2-P18	

CALIFORNIA STATE FIRE MARSHAL APPROVED

Approval of this plan does not authorize or approve any omission or deviation from applicable regulations. Final approval is subject to field inspection. One set of approved plans shall be available on the project site at all times.

Reviewed by: JOHN E WOODS, SDSFM

Approval date: 8-22-12

DIST.	COUNTY	ROUTE	POST MILES TOTAL PROJECT	SHEET NO.	TOTAL SHEETS
04	Ala	80	2.2	725	800

Javid Amirazodi 5-30-12

REGISTERED ELECTRICAL ENGINEER — DATE

REGISTERED PROFESSIONAL ENGINEER J. AMIRAZODI No. 17509 Exp. 6-30-13 ELEC STATE OF CALIFORNIA

10-22-12

PLANS APPROVAL DATE

The State of California or its officers or agents shall not be responsible for the accuracy or completeness of scanned copies of this plan sheet.

1BR1V1-P1

- PORT NUMBER
- VOICE PATCH PANEL NUMBER
- RACK NUMBER

1BR1D1-P1

- PORT NUMBER
- DATA PATCH PANEL NUMBER
- RACK NUMBER

LEGEND

	BY	CHECKED
DESIGN	Javid Amirazodi	J.S. Sandhu/J.R. Lacy
DETAILS	Dali Zhou	J. S. Sandhu
QUANTITIES	Javid Amirazodi	J.S. Sandhu/J.R. Lacy

STATE OF CALIFORNIA DEPARTMENT OF TRANSPORTATION

DIVISION OF ENGINEERING SERVICES ELECTRICAL-MECHANICAL-WATER AND WASTEWATER DESIGN

BRIDGE NO. 33M5785 POST MILE 2.2

SFOBB MAINTENANCE COMPLEX

VOICE AND DATA CABLE SCHEDULE I

SHEET EE1-4.17

TAEMWW Imperial Rev. 7/10

ORIGINAL SCALE IN INCHES FOR REDUCED PLANS 0 1 2 3

UNIT 3596

PROJECT NUMBER & PHASE 04120006661

EA 014081

DISREGARD PRINTS BEARING EARLIER REVISION DATES → 5/30/12

REVISION DATES (PRELIMINARY STAGE ONLY) SHEET OF

25-OCT-2012 09:02

ee1_4.17.dgn

OUTLET ID	CABLE ID	TERMINATION PORT AT PATCH PANEL	CABLE COLOR
1A-201-O	201-1O	1BR1V2-P19	WHITE
	201-2O	1BR1V2-P20	
	201-1O	1BR1D2-P19	BLUE
	201-2O	1BR1D2-P20	
1A-201-P	201-1P	1BR1V2-P21	WHITE
	201-2P	1BR1V2-P22	
	201-1P	1BR1D2-P21	BLUE
	201-2P	1BR1D2-P22	
1A-201-Q	201-1Q	1BR1V2-P23	WHITE
	201-2Q	1BR1V2-P24	
	201-1Q	1BR1D2-P23	BLUE
	201-2Q	1BR1D2-P24	
1A-201-R	201-1R	1BR1V2-P25	WHITE
	201-2R	1BR1V2-P26	
	201-1R	1BR1D2-P25	BLUE
	201-2R	1BR1D2-P26	
1A-203-A	203-1A	1BR1V2-P27	WHITE
	203-2A	1BR1V2-P28	
	203-1A	1BR1D2-P27	BLUE
	203-2A	1BR1D2-P28	
1A-203-B	203-1B	1BR1V2-P29	WHITE
	203-2B	1BR1V2-P30	
	203-1B	1BR1D2-P29	BLUE
	203-2B	1BR1D2-P30	
1A-205-A	205-1A	1BR1V2-P31	WHITE
	205-2A	1BR1V2-P32	
	205-1A	1BR1D2-P31	BLUE
	205-2A	1BR1D2-P32	
1A-205-B	205-1B	1BR1V2-P33	WHITE
	205-2B	1BR1V2-P34	
	205-1B	1BR1D2-P33	BLUE
	205-2B	1BR1D2-P34	
1A-206-A	206-1A	1BR1V2-P35	WHITE
	206-2A	1BR1V2-P36	
	206-1A	1BR1D2-P35	BLUE
	206-2A	1BR1D2-P36	
1A-207-A	207-1A	1BR1V2-P37	WHITE
	207-2A	1BR1V2-P38	
	207-1A	1BR1D2-P37	BLUE
	207-2A	1BR1D2-P38	
1A-207-B	207-1B	1BR1V2-P39	WHITE
	207-2B	1BR1V2-P40	
	207-1B	1BR1D2-P39	BLUE
	207-2B	1BR1D2-P40	

OUTLET ID	CABLE ID	TERMINATION PORT AT PATCH PANEL	CABLE COLOR
1A-208-A	208-1A	1BR1V2-P41	WHITE
	208-2A	1BR1V2-P42	
	208-1A	1BR1D2-P41	BLUE
	208-2A	1BR1D2-P42	
1A-214-A	214-1A	1BR1V2-P43	WHITE
	214-2A	1BR1V2-P44	
	214-1A	1BR1D2-P43	BLUE
	214-2A	1BR1D2-P44	
1A-214-B	214-1B	1BR1V2-P45	WHITE
	214-2B	1BR1V2-P46	
	214-1B	1BR1D2-P45	BLUE
	214-2B	1BR1D2-P46	
1A-214-C	214-1C	1BR1V2-P47	WHITE
	214-2C	1BR1V2-P48	
	214-1C	1BR1D2-P47	BLUE
	214-2C	1BR1D2-P48	
1A-215-A	215-1A	1BR1V3-P1	WHITE
	215-2A	1BR1V3-P2	
	215-1A	1BR1D3-P1	BLUE
	215-2A	1BR1D3-P2	
1A-215-B	215-1B	1BR1V3-P3	WHITE
	215-2B	1BR1V3-P4	
	215-1B	1BR1D3-P3	BLUE
	215-2B	1BR1D3-P4	
1A-216-A	216-1A	1BR1V3-P5	WHITE
	216-2A	1BR1V3-P6	
	216-1A	1BR1D3-P5	BLUE
	216-2A	1BR1D3-P6	
1A-218-A	218-1A	1BR1V3-P7	WHITE
	218-2A	1BR1V3-P8	
	218-1A	1BR1D3-P7	BLUE
	218-2A	1BR1D3-P8	
1A-218-B	218-1B	1BR1V3-P9	WHITE
	218-2B	1BR1V3-P10	
	218-1B	1BR1D3-P9	BLUE
	218-2B	1BR1D3-P10	
1A-218-C	218-1C	1BR1V3-P11	WHITE
	218-2C	1BR1V3-P12	
	218-1C	1BR1D3-P11	BLUE
	218-2C	1BR1D3-P12	
1A-218-D	218-1D	1BR1V3-P13	WHITE
	218-2D	1BR1V3-P14	
	218-1D	1BR1D3-P13	BLUE
	218-2D	1BR1D3-P14	

OUTLET ID	CABLE ID	TERMINATION PORT AT PATCH PANEL	CABLE COLOR
1A-219-A	219-1A	1BR1V3-P15	WHITE
	219-2A	1BR1V3-P16	
	219-1A	1BR1D3-P15	BLUE
	219-2A	1BR1D3-P16	
1A-219-B	219-1B	1BR1V3-P17	WHITE
	219-2B	1BR1V3-P18	
	219-1B	1BR1D3-P17	BLUE
	219-2B	1BR1D3-P18	
1A-220-A	220-1A	1BR1V3-P19	WHITE
	220-2A	1BR1V3-P20	
	220-1A	1BR1D3-P19	BLUE
	220-2A	1BR1D3-P20	
1A-220-B	220-1B	1BR1V3-P21	WHITE
	220-2B	1BR1V3-P22	
	220-1B	1BR1D3-P21	BLUE
	220-2B	1BR1D3-P22	
1A-221-A	221-1A	1BR1V3-P23	WHITE
	221-2A	1BR1V3-P24	
	221-1A	1BR1D3-P23	BLUE
	221-2B	1BR1D3-P24	
1A-221-B	221-1B	1BR1V3-P25	WHITE
	221-2B	1BR1V3-P26	
	221-1B	1BR1D3-P25	BLUE
	221-2B	1BR1D3-P26	

CALIFORNIA STATE FIRE MARSHAL APPROVED

Approval of this plan does not authorize or approve any omission or deviation from applicable regulations. Final approval is subject to field inspection. One set of approved plans shall be available on the project site at all times.

Reviewed by: JOHN E WOODS, SDSFM

Approval date: 8-22-12

DIST.	COUNTY	ROUTE	POST MILES TOTAL PROJECT	SHEET NO.	TOTAL SHEETS
04	Ala	80	2.2	726	800

Javid Amirazodi 5-30-12

REGISTERED ELECTRICAL ENGINEER — DATE

REGISTERED PROFESSIONAL ENGINEER J. AMIRAZODI No. 17509 Exp. 6-30-13 ELEC STATE OF CALIFORNIA

10-22-12

PLANS APPROVAL DATE

The State of California or its officers or agents shall not be responsible for the accuracy or completeness of scanned copies of this plan sheet.

DESIGN	BY Javid Amirazodi	CHECKED J.S. Sandhu/J.R. Lacy	
DETAILS	BY Dali Zhou	CHECKED J. S. Sandhu	
QUANTITIES	BY Javid Amirazodi	CHECKED J.S. Sandhu/J.R. Lacy	

STATE OF CALIFORNIA DEPARTMENT OF TRANSPORTATION

DIVISION OF ENGINEERING SERVICES
ELECTRICAL-MECHANICAL-WATER AND WASTEWATER DESIGN

BRIDGE NO. 33M5785
POST MILE 2.2

SFOBB MAINTENANCE COMPLEX

VOICE AND DATA CABLE SCHEDULE 2

SHEET **EE1-4.18**

TAEMWW Imperial Rev. 7/10

ORIGINAL SCALE IN INCHES FOR REDUCED PLANS 0 1 2 3

UNIT 3596
PROJECT NUMBER & PHASE 04120006661
EA 014081

DISREGARD PRINTS BEARING EARLIER REVISION DATES → 5/30/12

REVISION DATES (PRELIMINARY STAGE ONLY) SHEET OF

25-OCT-2012 09:02

ee1_4.18.dgn

DIST.	COUNTY	ROUTE	POST MILES TOTAL PROJECT	SHEET NO.	TOTAL SHEETS
04	Ala	80	2.2	727	800

REGISTERED ELECTRICAL ENGINEER — 5-30-12 DATE

REGISTERED PROFESSIONAL ENGINEER J. AMIRAZODI No. 17509 Exp. 6-30-13 ELEC STATE OF CALIFORNIA

10-22-12
PLANS APPROVAL DATE

The State of California or its officers or agents shall not be responsible for the accuracy or completeness of scanned copies of this plan sheet.

CALIFORNIA STATE FIRE MARSHAL APPROVED

Approval of this plan does not authorize or approve any omission or deviation from applicable regulations. Final approval is subject to field inspection. One set of approved plans shall be available on the project site at all times.

Reviewed by: JOHN E WOODS, SDSFM

Approval date: 8-22-12

OUTLET ID	CABLE ID	TERMINATION PORT AT PATCH PANEL	CABLE COLOR
1B-131-A	131-1A	1AR1V1-P1	WHITE
	131-2A	1AR1V1-P2	
	131-1A	1AR1D1-P1	BLUE
	131-2A	1AR1D1-P2	
1B-133-A	133-1A	1AR1V1-P3	WHITE
	133-2A	1AR1V1-P4	
	133-1A	1AR1D1-P3	BLUE
	133-2A	1AR1D1-P4	
1B-134-A	134-1A	1AR1V1-P5	WHITE
	134-2A	1AR1V1-P6	
	134-1A	1AR1D1-P5	BLUE
	134-2A	1AR1D1-P6	
1B-136-A	136-1A	1AR1V1-P7	WHITE
	136-2A	1AR1V1-P8	
	136-1A	1AR1D1-P7	BLUE
	136-2A	1AR1D1-P8	
1B-137-A	137-1A	1AR1V1-P9	WHITE
	137-2A	1AR1V1-P10	
	137-1A	1AR1D1-P9	BLUE
	137-2A	1AR1D1-P10	
1B-137-B	137-1B	1AR1V1-P11	WHITE
	137-2B	1AR1V1-P12	
	137-1B	1AR1D1-P11	BLUE
	137-2B	1AR1D1-P12	
1B-142-A	142-1A	1AR1V1-P13	WHITE
	142-2A	1AR1V1-P14	
	142-1A	1AR1D1-P13	BLUE
	142-2A	1AR1D1-P14	
1B-142-B	142-1B	1AR1V1-P15	WHITE
	142-2B	1AR1V1-P16	
	142-1B	1AR1D1-P15	BLUE
	142-2B	1AR1D1-P16	
1B-145-A	145-1A	1AR1V1-P17	WHITE
	145-2A	1AR1V1-P18	
	145-1A	1AR1D1-P17	BLUE
	145-2A	1AR1D1-P18	
1B-145-B	145-1B	1AR1V1-P19	WHITE
	145-2B	1AR1V1-P20	
	145-1B	1AR1D1-P19	BLUE
	145-2B	1AR1D1-P20	
1B-146-A	146-1A	1AR1V1-P21	WHITE
	146-2A	1AR1V1-P22	
	146-1A	1AR1D1-P21	BLUE
	146-2A	1AR1D1-P22	

OUTLET ID	CABLE ID	TERMINATION PORT AT PATCH PANEL	CABLE COLOR
1B-146-B	146-1B	1AR1V1-P23	WHITE
	146-2B	1AR1V1-P24	
	146-1B	1AR1D1-P23	BLUE
	146-2B	1AR1D1-P24	
1B-147-A	147-1A	1AR1V1-P25	WHITE
	147-2A	1AR1V1-P26	
	147-1A	1AR1D1-P25	BLUE
	147-2A	1AR1D1-P26	
1B-147-B	147-1B	1AR1V1-P27	WHITE
	147-2B	1AR1V1-P28	
	147-1B	1AR1D1-P27	BLUE
	147-2B	1AR1D1-P28	
1B-148-A	-	-	-
	-	-	
	148-1A	1AR1D1-P29	BLUE
	148-2A	1AR1D1-P30	
1B-148-B	148-1B	1AR1V1-P31	WHITE
	148-2B	1AR1V1-P32	
	148-1B	1AR1D1-P31	BLUE
	148-2B	1AR1D1-P32	
1B-159-A	159-1A	1AR1V1-P33	WHITE
	159-2A	1AR1V1-P34	
	159-1A	1AR1D1-P33	BLUE
	159-2A	1AR1D1-P34	
1B-159-B	159-1B	1AR1V1-P35	WHITE
	159-2B	1AR1V1-P36	
	159-1B	1AR1D1-P35	BLUE
	159-2B	1AR1D1-P36	
1B-159-C	159-1C	1AR1V1-P37	WHITE
	159-2C	1AR1V1-P38	
	159-1C	1AR1D1-P37	BLUE
	159-2C	1AR1D1-P38	
1B-159-D	159-1D	1AR1V1-P39	WHITE
	159-2D	1AR1V1-P40	
	159-1D	1AR1D1-P39	BLUE
	159-2D	1AR1D1-P40	
1B-159-E	159-1E	1AR1V1-P41	WHITE
	159-2E	1AR1V1-P42	
	159-1E	1AR1D1-P41	BLUE
	159-2E	1AR1D1-P42	
1B-160-A	160-1A	1AR1V1-P43	WHITE
	160-2A	1AR1V1-P44	
	160-1A	1AR1D1-P43	BLUE
	160-2A	1AR1D1-P44	

OUTLET ID	CABLE ID	TERMINATION PORT AT PATCH PANEL	CABLE COLOR
1B-161-A	161-1A	1AR1V1-P45	WHITE
	161-2A	1AR1V1-P46	
	161-1A	1AR1D1-P45	BLUE
	161-2A	1AR1D1-P46	
1B-161-B	161-1B	1AR1V1-P47	WHITE
	161-2B	1AR1V1-P48	
	161-1B	1AR1D1-P47	BLUE
	161-2B	1AR1D1-P48	
1B-162-A	162-1A	1AR1V2-P1	WHITE
	162-2A	1AR1V2-P2	
	162-1A	1AR1D2-P1	BLUE
	162-2A	1AR1D2-P2	
1B-162-B	162-1B	1AR1V2-P3	WHITE
	162-2B	1AR1V2-P4	
	162-1B	1AR1D2-P3	BLUE
	162-2B	1AR1D2-P4	
1B-163-A	163-1A	1AR1V2-P5	WHITE
	163-2A	1AR1V2-P6	
	163-1A	1AR1D2-P5	BLUE
	163-2A	1AR1D2-P6	
1B-163-B	163-1B	1AR1V2-P7	WHITE
	163-2B	1AR1V2-P8	
	163-1B	1AR1D2-P7	BLUE
	163-2B	1AR1D2-P8	
1B-164A-A	164A-1A	1AR1V2-P9	WHITE
	164A-2A	1AR1V2-P10	
	164A-1A	1AR1D2-P9	BLUE
	164A-2A	1AR1D2-P10	
1B-164A-B	164A-1B	1AR1V2-P11	WHITE
	164A-2B	1AR1V2-P12	
	164A-1B	1AR1D2-P11	BLUE
	164A-2B	1AR1D2-P12	
1B-164B-A	164B-1A	1AR1V2-P13	WHITE
	164B-2A	1AR1V2-P14	
	164B-1A	1AR1D2-P13	BLUE
	164B-2A	1AR1D2-P14	
1B-164B-B	164B-1B	1AR1V2-P15	WHITE
	164B-2B	1AR1V2-P16	
	164B-1B	1AR1D2-P15	BLUE
	164B-2B	1AR1D2-P16	
1B-166-A	166-1A	1AR1V2-P17	WHITE
	166-2A	1AR1V2-P18	
	166-1A	1AR1D2-P17	BLUE
	166-2A	1AR1D2-P18	

OUTLET ID	CABLE ID	TERMINATION PORT AT PATCH PANEL	CABLE COLOR
1B-166-B	166-1B	1AR1V2-P19	WHITE
	166-2B	1AR1V2-P20	
	166-1B	1AR1D2-P19	BLUE
	166-1B	1AR1D2-P20	
1B-168-A	168-1A	1AR1V2-P21	WHITE
	168-2A	1AR1V2-P22	
	168-1A	1AR1D2-P21	BLUE
	168-2A	1AR1D2-P22	
1B-168-B	168-1B	1AR1V2-P23	WHITE
	168-2B	1AR1V2-P24	
	168-1B	1AR1D2-P23	BLUE
	168-2B	1AR1D2-P24	
1B-169-A	169-1A	1AR1V2-P25	WHITE
	169-2A	1AR1V2-P26	
	169-1A	1AR1D2-P25	BLUE
	169-2A	1AR1D2-P26	
1B-169-B	169-1B	1AR1V2-P27	WHITE
	169-2B	1AR1V2-P28	
	169-1B	1AR1D2-P27	BLUE
	169-2B	1AR1D2-P28	
1B-169-C	169-1C	1AR1V2-P29	WHITE
	169-2C	1AR1V2-P30	
	169-1C	1AR1D2-P29	BLUE
	169-2C	1AR1D2-P30	
1B-169-D	169-1D	1AR1V2-P31	WHITE
	169-2D	1AR1V2-P32	
	169-1D	1AR1D2-P31	BLUE
	169-2D	1AR1D2-P32	
1B-170-A	170-1A	1AR1V2-P33	WHITE
	170-2A	1AR1V2-P34	
	170-1A	1AR1D2-P33	BLUE
	170-2A	1AR1D2-P34	
1B-170-B	170-1B	1AR1V2-P35	WHITE
	170-2B	1AR1V2-P36	
	170-1B	1AR1D2-P35	BLUE
	170-2B	1AR1D2-P36	
1B-171-A	171-1A	1AR1V2-P37	WHITE
	171-2A	1AR1V2-P38	
	171-1A	1AR1D2-P37	BLUE
	171-2A	1AR1D2-P38	
1B-171-B	171-1B	1AR1V2-P39	WHITE
	171-2B	1AR1V2-P40	
	171-1B	1AR1D2-P39	BLUE
	171-2B	1AR1D2-P40	

OUTLET ID	CABLE ID	TERMINATION PORT AT PATCH PANEL	CABLE COLOR
1B-172-A	172-1A	1AR1V2-P41	WHITE
	172-2A	1AR1V2-P42	
	172-1A	1AR1D2-P41	BLUE
	172-2A	1AR1D2-P42	
1B-172-B	172-1B	1AR1V2-P43	WHITE
	172-2B	1AR1V2-P44	
	172-1B	1AR1D2-P43	BLUE
	172-2B	1AR1D2-P44	
1B-173-A	173-1A	1AR1V2-P45	WHITE
	173-2A	1AR1V2-P46	
	173-1A	1AR1D2-P45	BLUE
	173-2A	1AR1D2-P46	
1B-174-A	174-1A	1AR1V2-P47	WHITE
	174-2A	1AR1V2-P48	
	174-1A	1AR1D2-P47	BLUE
	174-2A	1AR1D2-P48	

DESIGN	BY Javid Amirazodi	CHECKED J.S. Sandhu/J.R. Lacy	
DETAILS	BY Dali Zhou	CHECKED J. S. Sandhu	
QUANTITIES	BY Javid Amirazodi	CHECKED J.S. Sandhu/J.R. Lacy	

STATE OF CALIFORNIA
DEPARTMENT OF TRANSPORTATION

DIVISION OF ENGINEERING SERVICES
ELECTRICAL-MECHANICAL-WATER AND WASTEWATER DESIGN

BRIDGE NO. 33M5785
POST MILE 2.2

SFOBB MAINTENANCE COMPLEX

VOICE AND DATA CABLE SCHEDULE 3

SHEET **EE1-4.19**

TAEMWW Imperial Rev. 7/10

ORIGINAL SCALE IN INCHES FOR REDUCED PLANS 0 1 2 3

UNIT 3596
PROJECT NUMBER & PHASE 04120006661
EA 014081

DISREGARD PRINTS BEARING EARLIER REVISION DATES → 5/30/12

REVISION DATES (PRELIMINARY STAGE ONLY) SHEET OF

25-OCT-2012 09:02

ee1_4.19.dgn

OUTLET ID	CABLE ID	TERMINATION PORT AT PATCH PANEL	CABLE COLOR
1B-175-A	175-1A	1AR1V3-P1	WHITE
	175-2A	1AR1V3-P2	
	175-1A	1AR1D3-P1	BLUE
	175-2A	1AR1D3-P2	
1B-175-B	175-1B	1AR1V3-P3	WHITE
	175-2B	1AR1V3-P4	
	175-1B	1AR1D3-P3	BLUE
	175-2B	1AR1D3-P4	
1B-176-A	176-1A	1AR1V3-P5	WHITE
	176-2A	1AR1V3-P6	
	176-1A	1AR1D3-P5	BLUE
	176-2A	1AR1D3-P6	
1B-176-B	176-1B	1AR1V3-P7	WHITE
	176-2B	1AR1V3-P8	
	176-1B	1AR1D3-P7	BLUE
	176-2B	1AR1D3-P8	
1B-176-C	176-1C	1AR1V3-P9	WHITE
	176-2C	1AR1V3-P10	
	176-1C	1AR1D3-P9	BLUE
	176-2C	1AR1D3-P10	
1B-176-D	176-1D	1AR1V3-P11	WHITE
	176-2D	1AR1V3-P12	
	176-1D	1AR1D3-P11	BLUE
	176-2D	1AR1D3-P12	
1B-176-E	176-1E	1AR1V3-P13	WHITE
	176-2E	1AR1V3-P14	
	176-1E	1AR1D3-P13	BLUE
	176-2E	1AR1D3-P14	
1B-176-F	176-1F	1AR1V3-P15	WHITE
	176-2F	1AR1V3-P16	
	176-1F	1AR1D3-P15	BLUE
	176-2F	1AR1D3-P16	
1B-176-G	176-1G	1AR1V3-P17	WHITE
	176-2G	1AR1V3-P18	
	176-1G	1AR1D3-P17	BLUE
	176-2G	1AR1D3-P18	
1B-176-H	176-1H	1AR1V3-P19	WHITE
	176-2H	1AR1V3-P20	
	176-1H	1AR1D3-P19	BLUE
	176-2H	1AR1D3-P20	
1B-176-I	176-1I	1AR1V3-P21	WHITE
	176-2I	1AR1V3-P22	
	176-1I	1AR1D3-P21	BLUE
	176-2I	1AR1D3-P22	
1B-177-A	177-1A	1AR1V3-P23	WHITE
	177-2A	1AR1V3-P24	
	177-1A	1AR1D3-P23	BLUE
	177-2A	1AR1D3-P24	

OUTLET ID	CABLE ID	TERMINATION PORT AT PATCH PANEL	CABLE COLOR
1B-177-B	177-1B	1AR1V3-P25	WHITE
	177-2B	1AR1V3-P26	
	177-1B	1AR1D3-P25	BLUE
	177-2B	1AR1D3-P26	
1B-178-A	178-1A	1AR1V3-P27	WHITE
	178-2A	1AR1V3-P28	
	178-1A	1AR1D3-P27	BLUE
	178-2A	1AR1D3-P28	
1B-180-A	180-1A	1AR1V3-P29	WHITE
	180-2A	1AR1V3-P30	
	180-1A	1AR1D3-P29	BLUE
	180-2A	1AR1D3-P30	
1B-180-B	180-1B	1AR1V3-P31	WHITE
	180-2B	1AR1V3-P32	
	180-1B	1AR1D3-P31	BLUE
	180-2B	1AR1D3-P32	
1B-181-A	181-1A	1AR1V3-P33	WHITE
	181-2A	1AR1V3-P34	
	181-1A	1AR1D3-P33	BLUE
	181-2A	1AR1D3-P34	
1B-182-A	182-1A	1AR1V3-P35	WHITE
	182-2A	1AR1V3-P36	
	182-1A	1AR1D3-P35	BLUE
	182-2A	1AR1D3-P36	
1B-182-B	182-1B	1AR1V3-P37	WHITE
	182-2B	1AR1V3-P38	
	182-1B	1AR1D3-P37	BLUE
	182-2B	1AR1D3-P38	
1B-183-A	183-1A	1AR1V3-P39	WHITE
	183-2A	1AR1V3-P40	
	183-1A	1AR1D3-P39	BLUE
	183-2A	1AR1D3-P40	
1B-183-B	183-1B	1AR1V3-P41	WHITE
	183-2B	1AR1V3-P42	
	183-1B	1AR1D3-P41	BLUE
	183-2B	1AR1D3-P42	
1B-184-A	184-1A	1AR1V3-P43	WHITE
	184-2A	1AR1V3-P44	
	184-1A	1AR1D3-P43	BLUE
	184-2A	1AR1D3-P44	
1B-184-B	184-1B	1AR1V3-P45	WHITE
	184-2B	1AR1V3-P46	
	184-1B	1AR1D3-P45	BLUE
	184-2B	1AR1D3-P46	
1B-189-A	189-1A	1AR1V3-P47	WHITE
	189-2A	1AR1V3-P48	
	189-1A	1AR1D3-P47	BLUE
	189-2A	1AR1D3-P48	

OUTLET ID	CABLE ID	TERMINATION PORT AT PATCH PANEL	CABLE COLOR
1B-189-B	189-1B	1AR1V4-P1	WHITE
	189-2B	1AR1V4-P2	
	189-1B	1AR1D4-P1	BLUE
	189-2B	1AR1D4-P2	
1B-191-A	191-1A	1AR1V4-P3	WHITE
	191-2A	1AR1V4-P4	
	191-1A	1AR1D4-P3	BLUE
	191-2A	1AR1D4-P4	
1B-191-B	191-1B	1AR1V4-P5	WHITE
	191-2B	1AR1V4-P6	
	191-1B	1AR1D4-P5	BLUE
	191-2B	1AR1D4-P6	
1B-191-C	191-1C	1AR1V4-P7	WHITE
	191-2C	1AR1V4-P8	
	191-1C	1AR1D4-P7	BLUE
	191-2C	1AR1D4-P8	
1B-191-D	191-1D	1AR1V4-P9	WHITE
	191-2D	1AR1V4-P10	
	191-1D	1AR1D4-P9	BLUE
	191-2D	1AR1D4-P10	
1B-192-A	192-1A	1AR1V4-P11	WHITE
	192-2A	1AR1V4-P12	
	192-1A	1AR1D4-P11	BLUE
	192-2A	1AR1D4-P12	
1B-192-B	192-1B	1AR1V4-P13	WHITE
	192-2B	1AR1V4-P14	
	192-1B	1AR1D4-P13	BLUE
	192-2B	1AR1D4-P14	
1B-192-C	192-1C	1AR1V4-P15	WHITE
	192-2C	1AR1V4-P16	
	192-1C	1AR1D4-P15	BLUE
	192-2C	1AR1D4-P16	
1B-193-A	193-1A	1AR1V4-P17	WHITE
	193-2A	1AR1V4-P18	
	193-1A	1AR1D4-P17	BLUE
	193-2A	1AR1D4-P18	
1B-193-B	193-1B	1AR1V4-P19	WHITE
	193-2B	1AR1V4-P20	
	193-1B	1AR1D4-P19	BLUE
	193-2B	1AR1D4-P20	
1B-193-C	193-1C	1AR1V4-P21	WHITE
	193-2C	1AR1V4-P22	
	193-1C	1AR1D4-P21	BLUE
	193-2C	1AR1D4-P22	
1B-195-A	195-1A	1AR1V4-P23	WHITE
	195-2A	1AR1V4-P24	
	195-1A	1AR1D4-P23	BLUE
	195-2A	1AR1D4-P24	

OUTLET ID	CABLE ID	TERMINATION PORT AT PATCH PANEL	CABLE COLOR
1B-195-B	195-1B	1AR1V4-P25	WHITE
	195-2B	1AR1V4-P26	
	195-1B	1AR1D4-P25	BLUE
	195-2B	1AR1D4-P26	
1B-196-A	196-1A	1AR1V4-P27	WHITE
	196-2A	1AR1V4-P28	
	196-1A	1AR1D4-P27	BLUE
	196-2A	1AR1D4-P28	
1B-196-B	196-1B	1AR1V4-P29	WHITE
	196-2B	1AR1V4-P30	
	196-1B	1AR1D4-P29	BLUE
	196-2B	1AR1D4-P30	
1B-197-A	197-1A	1AR1V4-P31	WHITE
	197-2A	1AR1V4-P32	
	197-1A	1AR1D4-P31	BLUE
	197-2A	1AR1D4-P32	
1B-197-B	197-1B	1AR1V4-P33	WHITE
	197-2B	1AR1V4-P34	
	197-1B	1AR1D4-P33	BLUE
	197-2B	1AR1D4-P34	
1B-197-C	197-1C	1AR1V4-P35	WHITE
	197-2C	1AR1V4-P36	
	197-1C	1AR1D4-P35	BLUE
	197-2C	1AR1D4-P36	
1B-197-D	197-1D	1AR1V4-P37	WHITE
	197-2D	1AR1V4-P38	
	197-1D	1AR1D4-P37	BLUE
	197-2D	1AR1D4-P38	
1B-198-A	198-1A	1AR1V4-P39	WHITE
	198-2A	1AR1V4-P40	
	198-1A	1AR1D4-P39	BLUE
	198-2A	1AR1D4-P40	
1B-198-B	198-1B	1AR1V4-P41	WHITE
	198-2B	1AR1V4-P42	
	198-1B	1AR1D4-P41	BLUE
	198-2B	1AR1D4-P42	

DIST.	COUNTY	ROUTE	POST MILES TOTAL PROJECT	SHEET NO.	TOTAL SHEETS
04	Ala	80	2.2	728	800

Javid Amirazodi 5-30-12
REGISTERED ELECTRICAL ENGINEER DATE

REGISTERED PROFESSIONAL ENGINEER J. AMIRAZODI No. 17509 Exp. 6-30-13 ELEC STATE OF CALIFORNIA

10-22-12
PLANS APPROVAL DATE

The State of California or its officers or agents shall not be responsible for the accuracy or completeness of scanned copies of this plan sheet.

CALIFORNIA STATE FIRE MARSHAL APPROVED
Approval of this plan does not authorize or approve any omission or deviation from applicable regulations. Final approval is subject to field inspection. One set of approved plans shall be available on the project site at all times.
Reviewed by: JOHN E WOODS, SDSFM
Approval date: 8-22-12

OUTLET ID *	CABLE ID	TERMINATION PORT AT PATCH PANEL	CABLE COLOR
E-1-A	1-1A	1AR1V4-P43	WHITE
	1-1B	1AR1V4-P44	
	1-2A	1AR1D4-P43	BLUE
	1-2B	1AR1D4-P44	

* At Fuel Log Room

DESIGN	BY Javid Amirazodi	CHECKED J.S. Sandhu/J.R. Lacy	
DETAILS	BY Dali Zhou	CHECKED J. S. Sandhu	
QUANTITIES	BY Javid Amirazodi	CHECKED J.S. Sandhu/J.R. Lacy	

STATE OF CALIFORNIA
DEPARTMENT OF TRANSPORTATION

DIVISION OF ENGINEERING SERVICES
ELECTRICAL-MECHANICAL-WATER AND WASTEWATER DESIGN

BRIDGE NO. 33M5785
POST MILE 2.2

SFOBB MAINTENANCE COMPLEX
VOICE AND DATA CABLE SCHEDULE 4

SHEET **EE1-4.20**

TAEMWW Imperial Rev. 7/10

ORIGINAL SCALE IN INCHES FOR REDUCED PLANS 0 1 2 3

UNIT 3596
PROJECT NUMBER & PHASE 04120006661
EA 014081

DISREGARD PRINTS BEARING EARLIER REVISION DATES → 5/30/12
REVISION DATES (PRELIMINARY STAGE ONLY) SHEET OF

25-OCT-2012 09:03
ee1_4.20.dgn

DIST.	COUNTY	ROUTE	POST MILES TOTAL PROJECT	SHEET NO.	TOTAL SHEETS
04	Ala	80	2.2	729	800

REGISTERED ELECTRICAL ENGINEER — 5-30-12 DATE

REGISTERED PROFESSIONAL ENGINEER J. AMIRAZODI No. 17509 Exp. 6-30-13 ELEC STATE OF CALIFORNIA

10-22-12
PLANS APPROVAL DATE

The State of California or its officers or agents shall not be responsible for the accuracy or completeness of scanned copies of this plan sheet.

SYMBOL	DESCRIPTION
G	GLASS BREAK DISCRIMINATOR
C	MAGNETIC CONTACT SWITCH-PEDESTRIAN DOOR
C	MAGNETIC CONTACT SWITCH-VEHICLE DOOR
K	DIGITAL KEYPAD
R	DIGITAL CARD READER
CM	COMBINATION MOTION DETECTOR-MICROWAVE/PASSIVE INFRARED
LG	LOCK GUARD
EL	ELECTROMECHANICAL LOCK
EH	ELECTRIFIED DOOR HINGE
PD	PANIC DEVICE
EPT	ELECTRICAL POWER TRANSFER HINGE
EM	ELECTROMAGNETIC LOCK SET

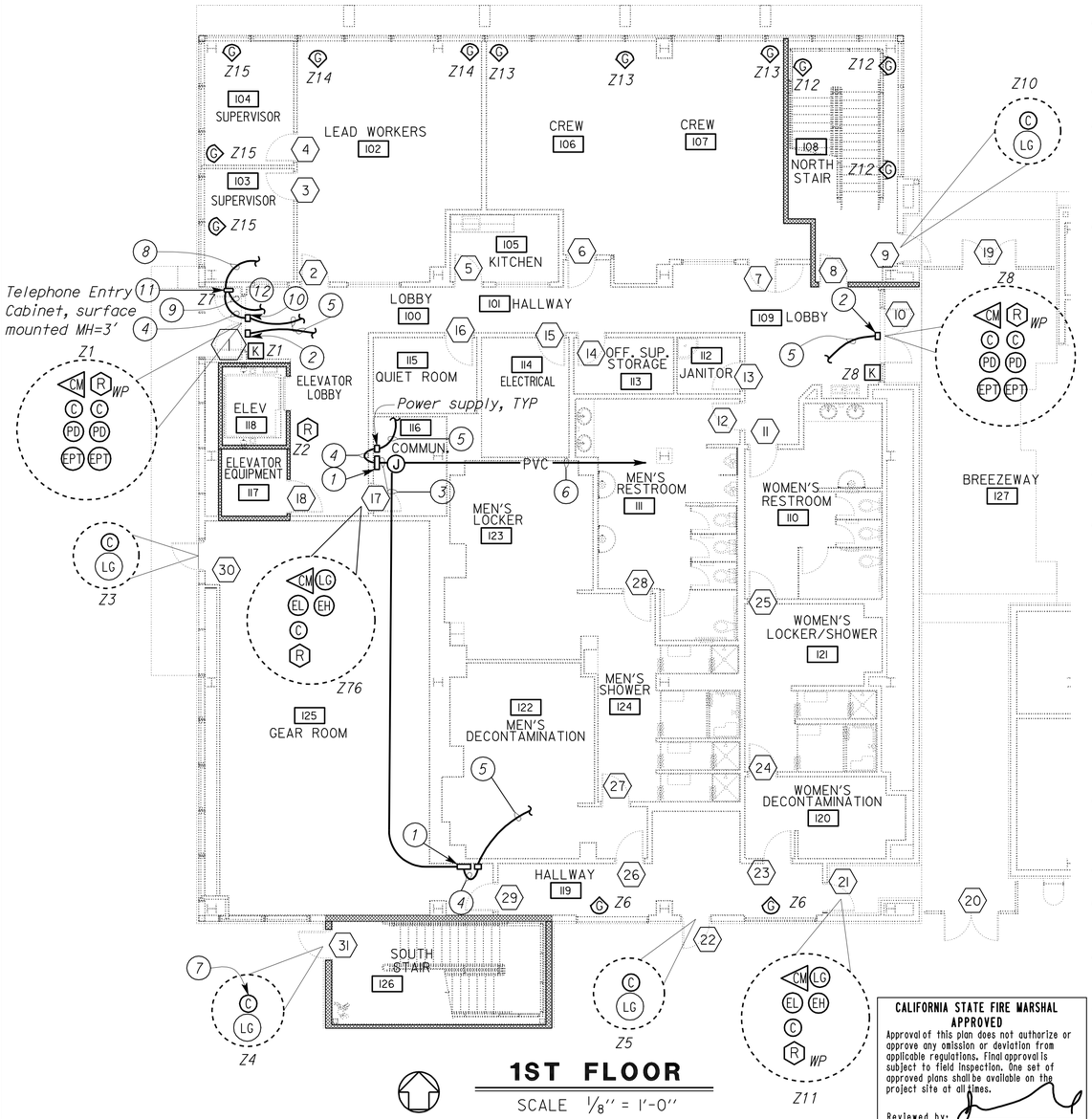

1ST FLOOR

SCALE 1/8" = 1'-0"

CALIFORNIA STATE FIRE MARSHAL APPROVED

Approval of this plan does not authorize or approve any omission or deviation from applicable regulations. Final approval is subject to field inspection. One set of approved plans shall be available on the project site at all times.

Reviewed by: JOHN E WOODS, SDSFM

Approval date: 8-22-12

General Notes:

A. The graphic symbols, their description and General Notes shown on this Plan sheet are applicable to all Intrusion Alarm and Access System Plan sheets.

B. Conduit system and conductor layout for Intrusion Alarm System and Access Control System is not shown. Submit conduit and conductor layout for approval prior to installation.

C. Unless otherwise noted, card reader shall be mounted on the adjacent wall at a convenient location near the door as directed by the Engineer and as recommended by the manufacturers.

D. All base elbows and vertical risers through concrete slab shall be PVC coated rigid steel conduit. Wrap joints in contact with soil with two layers of 20 mil thick pipe wrapping tape.

E. For locations of Intrusion Alarm Control Panel and Access Control Panel, see EE1-5.4.

F. Within office areas and areas with finished ceiling or furred wall, conduits shall be conceited in ceiling or walls.

G. All conduit stub ups shall be 12" above finished floor or 12" below ceiling. Provide conduit bushings on all conduits.

H. ⬡ with number inside represents a given door number. For door schedule, see A0-7.1, A0-7.2 and A0-7.3. ▭ with number inside represents a given room number. For room schedule, see A0-4.3.

I. Lock guards, electromechanical locks, electrified door hinges, panic devices, electromagnetic lock sets and electrical power transfer hinges are part of door finished hardware. These devices are shown on these Plan sheets and door schedule for clarity only. See "Door Hardware" specifications. Coordinate with door supplier for required number/type of power supplies and number/size of conductors that are required for complete operation of the system.

J. Contractor shall provide and install expansion modules as required. Expansion modules are not shown on Plans.

K. For Intrusion alarm and Access system zoning schedules, see EE1-5.6, EE1-5.7 and EE1-5.8.

L. The number of door controller enclosures and number of conduit homeruns to Intrusion Alarm and Access Control Panels as shown on Plans are arbitrary only. Therefore, the Contractor shall provide and install adequate number of door controller enclosures and conduit homeruns to Intrusion Alarm and Access Control Panel for proper operation of the Intrusion Alarm and Access system. Perform the following at each access card reader controller enclosure location:

- Door controller enclosures shall be installed in the attic space.
- All door controller enclosures shall be suitable for 120-volt AC and shall be complete with low voltage transformer, power supply, expansion card and other required devices;
- Supply door controller enclosures from the nearest unswitched receptacle circuit by using ½"C, 2#12, 1#12G and update affected panel directory;
- All this work and any other devices required shall be provided and installed at no additional cost to the State.

M. Contractor shall provide and install adequate number of junction boxes as required, without additional cost to the State. Junction boxes shall be sized as required to accommodate number of cables inside.

N. Submit all pertinent details to the Engineer for approval prior to installation.

O. Site access and pedestrian gates are part of Intrusion Alarm and Access System. See EE0-0.7 and EE0-0.8 for details.

P. Conduit/conductors to power supplies are not shown for clarity. conduit shall be concealed where applicable.

Q. Underground conduits entering the building from outside and within the building shall be installed below the structural primary/intermediate grade beams. For location of structural primary/intermediate grade beams, underground conduits stub up, and penetration details through floor/beams, refer to Structural Plan sheets.

R. Install power supply inside hinged cover panel, and identify each panel with proper identification. Panel Identification supplied by door hardware manufacturer shall read "POWER SUPPLY_ACCESS CONTROL SYSTEM". Panel Identification supplied by telephone entry system manufacturer shall read "POWER SUPPLY_TELEPHONE ENTRY SYSTEM". Install panels in the attic space where applicable.

Notes:

1. Door controller enclosure.
2. Power supply supplied by door hardware supplier.
3. Conduit for access and intrusion system, size as required. Provide and install access control and intrusion alarm cables as required.
4. Conduit and conductors as required.
5. Supply power from the nearest unswitched receptacle circuit by using ½"C, 2#12, 1#12G and update affected panel directory. Conduit shall be concealed where applicable.
6. Conduit for access and intrusion system to Intrusion Alarm Control Panel and Access Control Panel, size as required. Provide and install access control and intrusion alarm cables as required.
7. Surface mounted magnetic contact switch.
8. ½"C, 1#6 to grounding plate inside Communication Room 116.
9. Conduit with telephone entry system control and telephone cables to Intrusion Alarm Control Panel and Access Control Panel inside the Main Communication Room 176. Contractor may run these cable along with other intrusion and access cables to Main Communication Room 176.
10. Power supply (part of Telephone Entry System), size as required.
11. Telephone entry system shall be Linear AE-500, Select Engineered Systems TEC1 or equal and shall be integrated with the building Intrusion and Access control system.
12. Provide and install door locking devices as recommended by the telephone entry system manufacture.

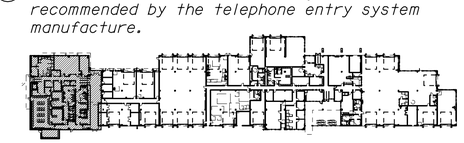

1ST FLOOR **KEY PLAN**

THIS DRAWING ACCURATE FOR ELECTRICAL WORK ONLY

	BY	CHECKED
DESIGN	Javid Amirazodi	J.S. Sandhu/J.R. Lacy
DETAILS	Ed D. Tapalla/Dali Zhou	Javid Amirazodi
QUANTITIES	Javid Amirazodi	J.S. Sandhu/J.R. Lacy

STATE OF CALIFORNIA DEPARTMENT OF TRANSPORTATION

DIVISION OF ENGINEERING SERVICES ELECTRICAL-MECHANICAL-WATER AND WASTEWATER DESIGN

BRIDGE NO. 33M5785 POST MILE 2.2

SFOBB MAINTENANCE COMPLEX

BUILDING 1A — INTRUSION ALARM AND ACCESS SYSTEM PLAN 1

SHEET **EE1-5.1**

TAEMWW Imperial Rev. 7/10

ORIGINAL SCALE IN INCHES FOR REDUCED PLANS 0 1 2 3

UNIT 3596
PROJECT NUMBER & PHASE 04120006661
EA 014081

DISREGARD PRINTS BEARING EARLIER REVISION DATES → 5/30/12

REVISION DATES (PRELIMINARY STAGE ONLY) SHEET OF

25-OCT-2012 09:03

ee1_5.01.dgn

DIST.	COUNTY	ROUTE	POST MILES TOTAL PROJECT	SHEET NO.	TOTAL SHEETS
04	Ala	80	2.2	730	800

CALIFORNIA STATE FIRE MARSHAL APPROVED

Approval of this plan does not authorize or approve any omission or deviation from applicable regulations. Final approval is subject to field inspection. One set of approved plans shall be available on the project site at all times.

Reviewed by: JOHN E WOODS, SDSFM

Approval date: 8-22-12

Javid Amirazodi 5-30-12

REGISTERED ELECTRICAL ENGINEER — DATE

REGISTERED PROFESSIONAL ENGINEER J. AMIRAZODI No. 17509 Exp. 6-30-13 ELEC STATE OF CALIFORNIA

10-22-12

PLANS APPROVAL DATE

The State of California or its officers or agents shall not be responsible for the accuracy or completeness of scanned copies of this plan sheet.

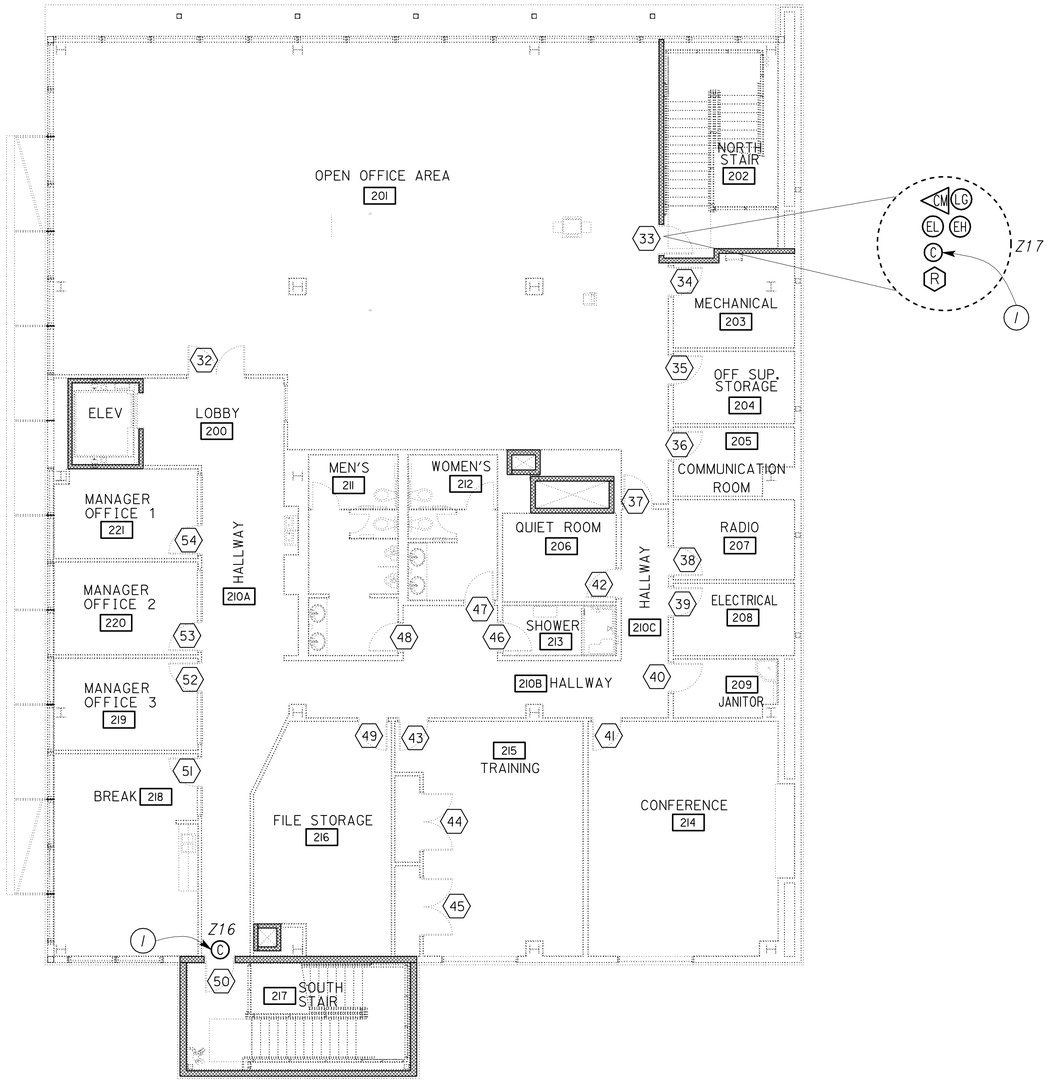

2ND FLOOR

SCALE 1/8" = 1'-0"

Note:

(1) *Surface mounted magnetic contact switch.*

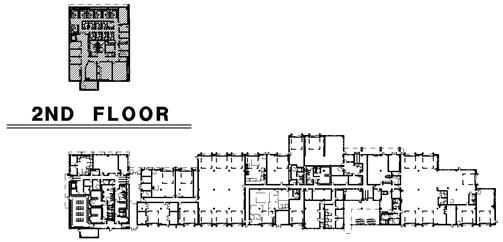

KEY PLAN

THIS DRAWING ACCURATE FOR ELECTRICAL WORK ONLY

	BY	CHECKED
DESIGN	Javid Amirazodi	J.S. Sandhu/J.R. Lacy
DETAILS	Ed D. Tapalla/Dali Zhou	Javid Amirazodi
QUANTITIES	Javid Amirazodi	J.S. Sandhu/J.R. Lacy

STATE OF CALIFORNIA DEPARTMENT OF TRANSPORTATION

DIVISION OF ENGINEERING SERVICES ELECTRICAL-MECHANICAL-WATER AND WASTEWATER DESIGN

BRIDGE NO. 33M5785

POST MILE 2.2

SFOBB MAINTENANCE COMPLEX

BUILDING 1A

INTRUSION ALARM AND ACCESS SYSTEM PLAN 2

SHEET **EE1-5.2**

TAEMWW Imperial Rev. 7/10

ORIGINAL SCALE IN INCHES FOR REDUCED PLANS 0 1 2 3

UNIT 3596

PROJECT NUMBER & PHASE 04120006661

EA 014081

DISREGARD PRINTS BEARING EARLIER REVISION DATES → 5/30/12

REVISION DATES (PRELIMINARY STAGE ONLY) SHEET OF

25-OCT-2012 09:03

ee1_5.02.dgn

DIST.	COUNTY	ROUTE	POST MILES TOTAL PROJECT	SHEET NO.	TOTAL SHEETS
04	Ala	80	2.2	731	800

Javid Amirazodi 5-30-12
REGISTERED ELECTRICAL ENGINEER DATE

REGISTERED PROFESSIONAL ENGINEER J. AMIRAZODI No. 17509 Exp. 6-30-13 ELEC STATE OF CALIFORNIA

10-22-12
PLANS APPROVAL DATE

The State of California or its officers or agents shall not be responsible for the accuracy or completeness of scanned copies of this plan sheet.

CALIFORNIA STATE FIRE MARSHAL APPROVED
Approval of this plan does not authorize or approve any omission or deviation from applicable regulations. Final approval is subject to field inspection. One set of approved plans shall be available on the project site at all times.
Reviewed by: JOHN E WOODS, SDSFM
Approval date: 8-22-12

Notes:

1. *Door controller enclosure.*
2. *Not used.*
3. *Surface mounted magnetic contact switch.*
4. *Conduit and conductors as required.*
5. *Supply power from the nearest unswitched receptacle circuit by using ½"C, 2#12, 1#12G and update affected panel directory. Conduit shall be concealed where applicable.*
6. *Conduit for access and intrusion system to Intrusion Alarm Control Panel and Access Control Panel, size as required. Provide and install access control and intrusion alarm cables as required.*

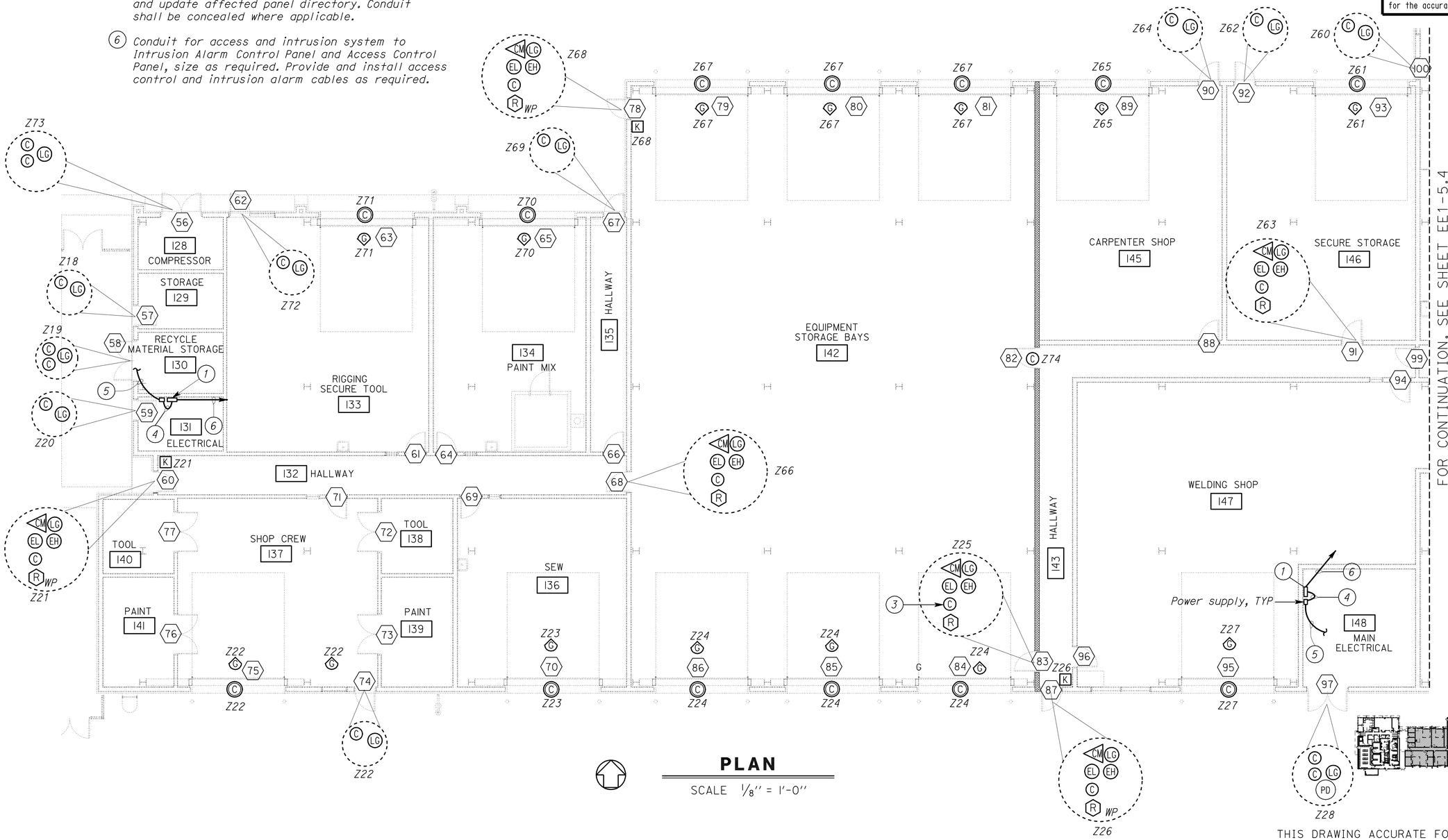

PLAN

SCALE 1/8" = 1'-0"

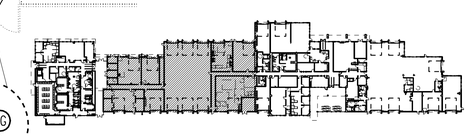

KEY PLAN

THIS DRAWING ACCURATE FOR ELECTRICAL WORK ONLY

DESIGN	BY Javid Amirazodi	CHECKED J.S. Sandhu/J.R. Lacy
DETAILS	BY Ed D. Tapalla/Dali Zhou	CHECKED Javid Amirazodi
QUANTITIES	BY Javid Amirazodi	CHECKED J.S. Sandhu/J.R. Lacy

STATE OF CALIFORNIA
DEPARTMENT OF TRANSPORTATION

DIVISION OF ENGINEERING SERVICES
ELECTRICAL-MECHANICAL-WATER AND WASTEWATER DESIGN

BRIDGE NO. 33M5785
POST MILE 2.2

SFOBB MAINTENANCE COMPLEX
BUILDING 1B
INTRUSION ALARM AND ACCESS SYSTEM PLAN 3

SHEET **EE1-5.3**

TAEMWW Imperial Rev. 7/10

ORIGINAL SCALE IN INCHES FOR REDUCED PLANS 0 1 2 3

UNIT 3596
PROJECT NUMBER & PHASE 04120006661
EA 014081

DISREGARD PRINTS BEARING EARLIER REVISION DATES → 5/30/12
REVISION DATES (PRELIMINARY STAGE ONLY) SHEET OF

25-OCT-2012 08:35
ee1_5.03.dgn

DIST.	COUNTY	ROUTE	POST MILES TOTAL PROJECT	SHEET NO.	TOTAL SHEETS
04	Ala	80	2.2	732	800

CALIFORNIA STATE FIRE MARSHAL APPROVED

Approval of this plan does not authorize or approve any omission or deviation from applicable regulations. Final approval is subject to field inspection. One set of approved plans shall be available on the project site at all times.

Reviewed by: JOHN E WOODS, SDSFM

Approval date: 8-22-12

Jaid Amirazodi 5-30-12

REGISTERED ELECTRICAL ENGINEER — DATE

REGISTERED PROFESSIONAL ENGINEER — J. AMIRAZODI — No. 17509 — Exp. 6-30-13 — ELEC — STATE OF CALIFORNIA

10-22-12

PLANS APPROVAL DATE

The State of California or its officers or agents shall not be responsible for the accuracy or completeness of scanned copies of this plan sheet.

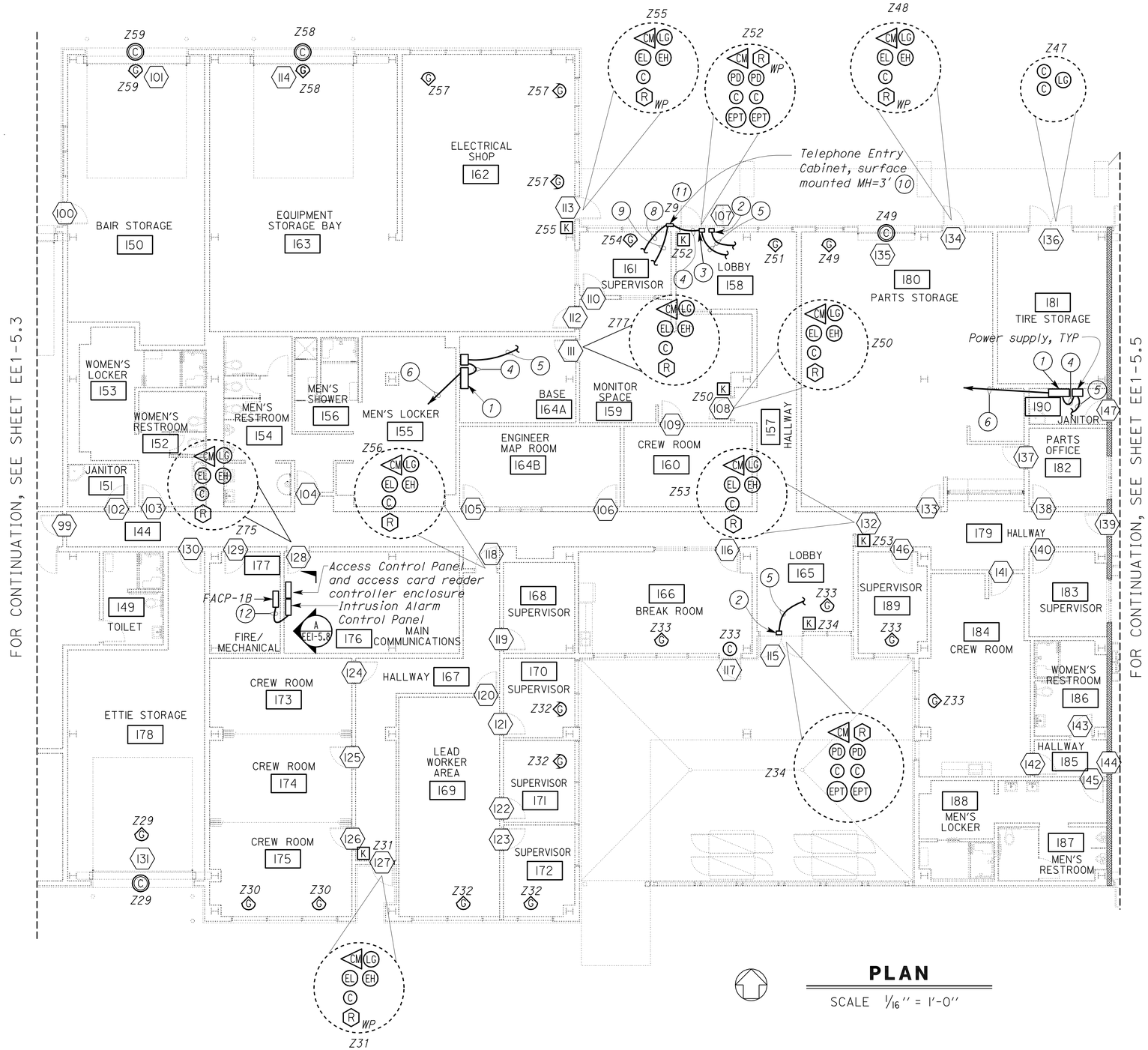

PLAN

SCALE 1/16" = 1'-0"

Notes:

1. Door controller enclosure.
2. Power supply supplied by door hardware supplier.
3. Power supply (part of Telephone Entry System), size as required.
4. Conduit and conductors as required.
5. Supply power from the nearest unswitched receptacle circuit by using ½"C, 2#12, 1#12G and update affected panel directory. Conduit shall be concealed where applicable.
6. Conduit for access and intrusion system to Intrusion Alarm Control Panel and Access Control Panel, size as required. Provide and install access control and intrusion alarm cables as required.
7. Surface mounted magnetic contact switch.
8. ½"C, 1#6 to grounding plate inside Main Communication Room 176.
9. Conduit with telephone entry system control and telephone cables to Intrusion Alarm Control Panel and Access Control Panel inside the Main Communication Room 176. Contractor may run these cable along with other intrusion and access cables to Main Communication Room 176.
10. Telephone entry system shall be Linear AE-500, Select Engineered Systems TEC1 or approved equal and shall be integrated with the building Intrusion and Access control system.
11. Provide and install door locking devices as recommended by the telephone entry system manufacture.
12. 2"C, MT.

KEY PLAN

THIS DRAWING ACCURATE FOR ELECTRICAL WORK ONLY

	BY	CHECKED
DESIGN	Javid Amirazodi	J.S. Sandhu/J.R. Lacy
DETAILS	Ed D. Tapalla/Dali Zhou	Javid Amirazodi
QUANTITIES	Javid Amirazodi	J.S. Sandhu/J.R. Lacy

STATE OF CALIFORNIA DEPARTMENT OF TRANSPORTATION

DIVISION OF ENGINEERING SERVICES ELECTRICAL-MECHANICAL-WATER AND WASTEWATER DESIGN

BRIDGE NO. 33M5785 — POST MILE 2.2

SFOBB MAINTENANCE COMPLEX

BUILDING 1B — INTRUSION ALARM AND ACCESS SYSTEM PLAN 4

SHEET **EE1-5.4**

TAEMWW Imperial Rev. 7/10

ORIGINAL SCALE IN INCHES FOR REDUCED PLANS 0 1 2 3

UNIT 3596

PROJECT NUMBER & PHASE 04120006661

EA 014081

DISREGARD PRINTS BEARING EARLIER REVISION DATES → 5/30/12

REVISION DATES (PRELIMINARY STAGE ONLY) — SHEET — OF

25-OCT-2012 09:35

ee1_5.04.dgn

DIST.	COUNTY	ROUTE	POST MILES TOTAL PROJECT	SHEET NO.	TOTAL SHEETS
04	Ala	80	2.2	733	800

CALIFORNIA STATE FIRE MARSHAL APPROVED

Approval of this plan does not authorize or approve any omission or deviation from applicable regulations. Final approval is subject to field inspection. One set of approved plans shall be available on the project site at all times.

Reviewed by: JOHN E WOODS, SDSFM

Approval date: 8-22-12

Javid Amirazodi 5-30-12

REGISTERED ELECTRICAL ENGINEER — DATE

REGISTERED PROFESSIONAL ENGINEER J. AMIRAZODI No. 17509 Exp. 6-30-13 ELEC STATE OF CALIFORNIA

10-22-12

PLANS APPROVAL DATE

The State of California or its officers or agents shall not be responsible for the accuracy or completeness of scanned copies of this plan sheet.

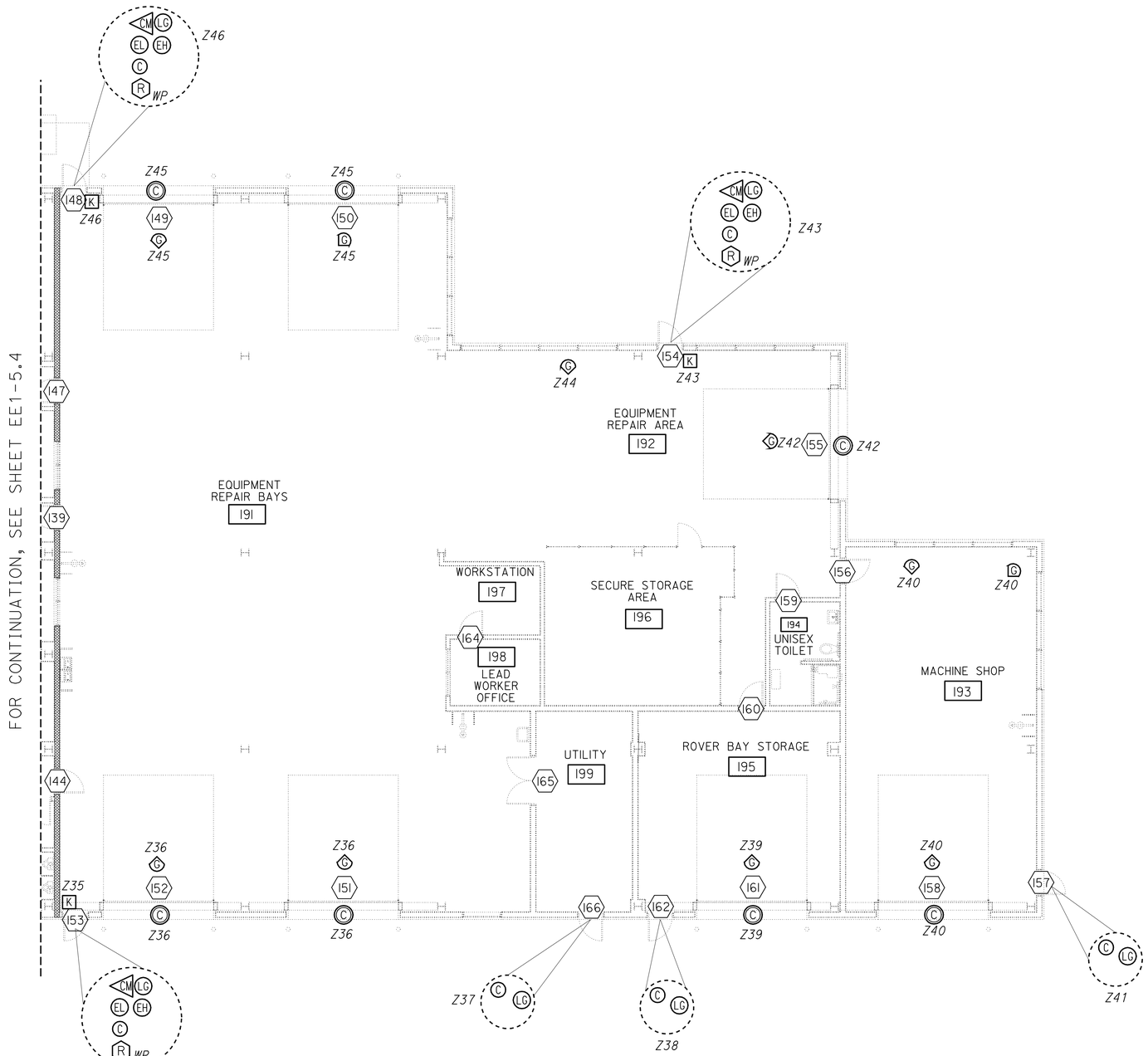

PLAN

SCALE 1/8" = 1'-0"

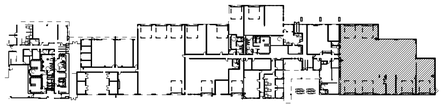

KEY PLAN

THIS DRAWING ACCURATE FOR ELECTRICAL WORK ONLY

DESIGN	BY Javid Amirazodi	CHECKED J.S. Sandhu/J.R. Lacy
DETAILS	BY Ed D. Tapalla/Dali Zhou	CHECKED Javid Amirazodi
QUANTITIES	BY Javid Amirazodi	CHECKED J.S. Sandhu/J.R. Lacy

STATE OF CALIFORNIA DEPARTMENT OF TRANSPORTATION

DIVISION OF ENGINEERING SERVICES ELECTRICAL-MECHANICAL-WATER AND WASTEWATER DESIGN

BRIDGE NO. 33M5785

POST MILE 2.2

SFOBB MAINTENANCE COMPLEX

BUILDING 1B

INTRUSION ALARM AND ACCESS SYSTEM PLAN 5

SHEET **EE1-5.5**

TAEMWW Imperial Rev. 7/10

ORIGINAL SCALE IN INCHES FOR REDUCED PLANS 0 1 2 3

UNIT 3596

PROJECT NUMBER & PHASE 04120006661

EA 014081

DISREGARD PRINTS BEARING EARLIER REVISION DATES → 5/30/12

REVISION DATES (PRELIMINARY STAGE ONLY) SHEET OF

25-OCT-2012 09:36

ee1_5.05.dgn

ZONE	LOCATION	QUANTITY	DEVICES DESCRIPTION
1	DOUBLE PEDESTRIAN ACCESS DOOR-DOOR #1	1	DIGITAL CARD READER
		2	MAGNETIC CONTACT SWITCHES-PEDESTRIAN
		2	PANIC DEVICE
		2	ELECTRICAL POWER TRANSFER HINGE
		1	COMBINATION MOTION DETECTOR
		1	DIGITAL KEYPAD DEACTIVATES ZONES: 1,2,3,4,5,6,8,10,11,12,13,13,14,15,16,17,18,19,20
2	ELEVATOR CONTROL	1	DIGITAL CARD READER-EXTENDED RANGE
3	SINGLE PEDESTRIAN ACCESS DOOR-DOOR #30	1	LOCK GUARD
		1	MAGNETIC CONTACT SWITCH-PEDESTRIAN
4	SINGLE-PEDESTRIAN ACCESS DOOR-DOOR #31	1	LOCK GUARD
		1	MAGNETIC CONTACT SWITCH-PEDESTRIAN
5	SINGLE-PEDESTRIAN ACCESS DOOR-DOOR #22	1	LOCK GUARD
		1	MAGNETIC CONTACT SWITCH-PEDESTRIAN
6	HALLWAY	2	GLASS BREAK DETECTOR
7	DOUBLE PEDESTRIAN DOOR-DOOR #1	1	TELEPHONE ENTRY SYSTEM
8	DOUBLE PEDESTRIAN ACCESS DOOR-DOOR #10	1	DIGITAL CARD READER
		2	MAGNETIC CONTACT SWITCHES-PEDESTRIAN
		2	PANIC DEVICE
		2	ELECTRICAL POWER TRANSFER HINGE
		1	COMBINATION MOTION DETECTOR
		1	DIGITAL KEYPAD DEACTIVATES ZONES: 1,2,3,4,5,6,8,10,11,12,13,13,14,15,16,17,18,19,20
9	DOUBLE PEDESTRIAN DOOR-DOOR #107	1	TELEPHONE ENTRY SYSTEM
10	SINGLE PEDESTRIAN ACCESS DOOR-DOOR #9	1	LOCK GUARD
		1	MAGNETIC CONTACT SWITCH-PEDESTRIAN
11	SINGLE PEDESTRIAN ACCESS DOOR-DOOR #21	1	DIGITAL CARD READER
		1	MAGNETIC CONTACT SWITCH-PEDESTRIAN
		1	ELECTRIFIED DOOR HINGE
		1	ELECTROMECHANICAL LOCK
		1	COMBINATION MOTION DETECTOR
		1	LOCK GUARD
12	STAIRS	3	GLASS BREAK DISCRIMINATOR
13	CREW	3	GLASS BREAK DISCRIMINATOR
14	LEAD WORKERS	2	GLASS BREAK DISCRIMINATOR
15	SUPERVISORS	3	GLASS BREAK DISCRIMINATOR
16	SINGLE PEDESTRIAN DOOR-DOOR #50	1	MAGNETIC CONTACT SWITCH-PEDESTRIAN
17	SINGLE PEDESTRIAN DOOR-DOOR #33	1	DIGITAL CARD READER
		1	MAGNETIC CONTACT SWITCH-PEDESTRIAN
		1	ELECTRIFIED DOOR HINGE
		1	ELECTROMECHANICAL LOCK
		1	COMBINATION MOTION DETECTOR
		1	LOCK GUARD
18	SINGLE PEDESTRIAN DOOR-DOOR #57	1	LOCK GUARD
		1	MAGNETIC CONTACT SWITCH-PEDESTRIAN
19	DOUBLE PEDESTRIAN DOOR-DOOR #58	1	LOCK GUARD
		2	MAGNETIC CONTACT SWITCH-PEDESTRIAN
20	SINGLE PEDESTRIAN DOOR-DOOR #59	1	LOCK GUARD
		1	MAGNETIC CONTACT SWITCH-PEDESTRIAN
21	SINGLE PEDESTRIAN DOOR-DOOR #60	1	DIGITAL CARD READER

CALIFORNIA STATE FIRE MARSHAL APPROVED

Approval of this plan does not authorize or approve any omission or deviation from applicable regulations. Final approval is subject to field inspection. One set of approved plans shall be available on the project site at all times.

Reviewed by: JOHN E WOODS, SDSFM

Approval date: 8-22-12

DIST.	COUNTY	ROUTE	POST MILES TOTAL PROJECT	SHEET NO.	TOTAL SHEETS
04	Ala	80	2.2	734	800

Javid Amirazodi 5-30-12

REGISTERED ELECTRICAL ENGINEER — DATE

REGISTERED PROFESSIONAL ENGINEER J. AMIRAZODI No. 17509 Exp. 6-30-13 ELEC STATE OF CALIFORNIA

10-22-12

PLANS APPROVAL DATE

The State of California or its officers or agents shall not be responsible for the accuracy or completeness of scanned copies of this plan sheet.

ZONE	LOCATION	QUANTITY	DEVICES DESCRIPTION
		1	MAGNETIC CONTACT SWITCH-PEDESTRIAN
		1	ELECTRIFIED DOOR HINGE
		1	ELECTROMECHANICAL LOCK
		1	COMBINATION MOTION DETECTOR
		1	LOCK GUARD
		1	DIGITAL KEYPAD DEACTIVATES ZONES:18,19,20,21,22,23,24 ,25,26,27,28,29,30,31,32,33,34,47,48,49,51,52,56 ,59,60,61,62,63,64,65,66,67,68,69,70,71,72,73,74
22	SHOP CREW	2	GLASS BREAK DISCRIMINATOR
	VEHICLE ACCESS ROLL UP DOOR-DOOR #75	1	MAGNETIC CONTACT SWITCH-VEHICLE
	SINGLE PEDESTRIAN ACCESS DOOR-DOOR #74	1	LOCK GUARD
		1	MAGNETIC CONTACT SWITCH-PEDESTRIAN
23	SEW	1	GLASS BREAK DISCRIMINATOR
	SEW-DOOR #70	1	MAGNETIC CONTACT SWITCH-VEHICLE
24	VEHICLE ACCESS ROLL UP DOOR-DOOR #84, 85, 86	3	MAGNETIC CONTACT SWITCHES-VEHICLE
	EQUIPMENT STORAGE BAYS	3	GLASS BREAK DISCRIMINATOR
25	SINGLE PEDESTRIAN DOOR-DOOR #83	1	DIGITAL CARD READER
		1	MAGNETIC CONTACT SWITCH-PEDESTRIAN
		1	ELECTRIFIED DOOR HINGE
		1	ELECTROMECHANICAL LOCK
		1	COMBINATION MOTION DETECTOR
		1	LOCK GUARD
26	SINGLE PEDESTRIAN DOOR-DOOR #87	1	DIGITAL CARD READER
		1	MAGNETIC CONTACT SWITCH-PEDESTRIAN
		1	ELECTRIFIED DOOR HINGE
		1	ELECTROMECHANICAL LOCK
		1	COMBINATION MOTION DETECTOR
		1	LOCK GUARD
		1	DIGITAL KEYPAD DEACTIVATES ZONES:18,19,20,21,22,23,24 ,25,26,27,28,29,30,31,32,33,34,47,48,49,51,52,56 ,59,60,61,62,63,64,65,66,67,68,69,70,71,72,73,74
27	WELDING SHOP	1	GLASS BREAK DISCRIMINATOR
	WELDING SHOP-DOOR #95	1	MAGNETIC CONTACT SWITCH-VEHICLE
28	DOUBLE PEDESTRIAN DOOR-DOOR #97	1	LOCK GUARD
		2	MAGNETIC CONTACT SWITCH-PEDESTRIAN
		1	PANIC DEVICE
29	VEHICLE ACCESS ROLL UP DOOR-DOOR #131	1	MAGNETIC CONTACT SWITCH-VEHICLE
	ETTIE STORAGE	1	GLASS BREAK DISCRIMINATOR
30	CREW ROOM	2	GLASS BREAK DISCRIMINATOR
31	SINGLE PEDESTRIAN DOOR-DOOR #127	1	DIGITAL CARD READER
		1	MAGNETIC CONTACT SWITCH-PEDESTRIAN
		1	ELECTRIFIED DOOR HINGE
		1	ELECTROMECHANICAL LOCK
		1	COMBINATION MOTION DETECTOR
		1	LOCK GUARD
		1	DIGITAL KEYPAD DEACTIVATES ZONES:18,19,20,21,22,23,24 ,25,26,27,28,29,30,31,32,33,34,47,48,49,51,52,56 ,59,60,61,62,63,64,65,66,67,68,69,70,71,72,73,74

	BY	CHECKED
DESIGN	Javid Amirazodi	J.S. Sandhu/J.R. Lacy
DETAILS	Dali Zhou	Javid Amirazodi
QUANTITIES	Javid Amirazodi	J.S. Sandhu/J.R. Lacy

STATE OF CALIFORNIA DEPARTMENT OF TRANSPORTATION

DIVISION OF ENGINEERING SERVICES ELECTRICAL-MECHANICAL-WATER AND WASTEWATER DESIGN

BRIDGE NO. 33M5785 POST MILE 2.2

SFOBB MAINTENANCE COMPLEX

INTRUSION ALARM AND ACCESS SYSTEM ZONING SCHEDULE 1

SHEET EE1-5.6

TAEMWW Imperial Rev. 7/10

ORIGINAL SCALE IN INCHES FOR REDUCED PLANS 0 1 2 3

UNIT 3596

PROJECT NUMBER & PHASE 04120006661

EA 014081

DISREGARD PRINTS BEARING EARLIER REVISION DATES → 5/30/12

REVISION DATES (PRELIMINARY STAGE ONLY) SHEET OF

25-OCT-2012 09:36

ee1_5.06.dgn

ZONE	LOCATION	QUANTITY	DEVICES DESCRIPTION
32	LEAD WORKER AREA	1	GLASS BREAK DISCRIMINATOR
	SUPERVISORS	3	GLASS BREAK DISCRIMINATOR
33	SINGLE PEDESTRIAN DOOR-DOOR #117	1	MAGNETIC CONTACT SWITCH-PEDESTRIAN
	BREAK ROOM, LOOBY, SUPERVISOR, CREW ROOM	4	GLASS BREAK DISCRIMINATOR
34	DOUBLE PEDESTRIAN ACCESS DOOR-DOOR #115	1	DIGITAL CARD READER
		2	MAGNETIC CONTACT SWITCH-PEDESTRIAN
		2	PANIC DEVICE
		2	ELECTRICAL POWER TRANSFER HINGE
		1	COMBINATION MOTION DETECTOR
		1	DIGITAL KEYPAD DEACTIVATES ZONES:18,19,20,21,22,23,24 ,25,26,27,28,29,30,31,32,33,34,47,48,49,51,52,56 ,59,60,61,62,63,64,65,66,67,68,69,70,71,72,73,74
35	SINGLE PEDESTRIAN DOOR-DOOR #153	1	DIGITAL CARD READER
		1	MAGNETIC CONTACT SWITCH-PEDESTRIAN
		1	ELECTRIFIED DOOR HINGE
		1	ELECTROMECHANICAL LOCK
		1	COMBINATION MOTION DETECTOR
		1	LOCK GUARD
		1	DIGITAL KEYPAD DEACTIVATES ZONES: 35,36,37,38,39,40,41, 42,43,44,45,46,53
36	VEHICLE ACCESS ROLL UP DOOR-DOORS #151, 152	2	MAGNETIC CONTACT SWITCH VEHICLE
	EQUIPMENT REPAIR BAYS	2	GLASS BREAK DISCRIMINATOR
37	SINGLE PEDESTRIAN DOOR-DOOR #166	1	MAGNETIC CONTACT SWITCH-PEDESTRIAN
		1	LOCK GUARD
38	SINGLE PEDESTRIAN DOOR-DOOR #162	1	MAGNETIC CONTACT SWITCH-PEDESTRIAN
		1	LOCK GUARD
39	VEHICLE ACCESS ROLL UP DOOR-DOOR #161	1	MAGNETIC CONTACT SWITCH-VEHICLE
		1	GLASS BREAK DISCRIMINATOR
40	VEHICLE ACCESS ROLL UP DOOR-DOOR #158	1	MAGNETIC CONTACT SWITCH-VEHICLE
	MACHINE SHOP	3	GLASS BREAK DISCRIMINATOR
41	SINGLE PEDESTRIAN DOOR-DOOR #157	1	MAGNETIC CONTACT SWITCH-PEDESTRIAN
		1	LOCK GUARD
42	VEHICLE ACCESS ROLLUP DOOR-DOOR #155	1	MAGNETIC CONTACT SWITCH-VEHICLE
	EQUIPMENR REPAIR AREA	1	GLASS BREAK DISCRIMINATOR
43	SINGLE PEDESTRIAN DOOR-DOOR #154	1	DIGITAL CARD READER
		1	MAGNETIC CONTACT SWITCH-PEDESTRIAN
		1	ELECTRIFIED DOOR HINGE
		1	ELECTROMECHANICAL LOCK
		1	COMBINATION MOTION DETECTOR
		1	LOCK GUARD
		1	DIGITAL KEYPAD DEACTIVATES ZONES: 35,36,37,38,39,40,41,42,43,44,45,46,53
44	EQUIPMENT REPAIR AREA	1	GLASS BREAK DISCRIMINATOR
45	EQUIPMENT REPAIR AREA	2	GLASS BREAK DISCRIMINATOR
	VEHICLE ACCESS ROLLUP DOOR-DOORS #149, 150	2	MAGNETIC CONTACT SWITCH-VEHICLE
46	SINGLE PEDESTRIAN DOOR-DOOR #148	1	DIGITAL CARD READER
		1	MAGNETIC CONTACT SWITCH-PEDESTRIAN
		1	ELECTRIFIED DOOR HINGE
		1	ELECTROMECHANICAL LOCK
		1	COMBINATION MOTION DETECTOR
		1	LOCK GUARD
		1	DIGITAL KEYPAD DEACTIVATES ZONES: 35,36,37,38,39,40,41,42,43,44,45,46,53
47	DOUBLE PEDESTRIAN DOOR-DOOR #136	2	MAGNETIC CONTACT SWITCH-PEDESTRIAN
		1	LOCK GUARD

CALIFORNIA STATE FIRE MARSHAL APPROVED

Approval of this plan does not authorize or approve any omission or deviation from applicable regulations. Final approval is subject to field inspection. One set of approved plans shall be available on the project site at all times.

Reviewed by: JOHN E WOODS, SDSFM

Approval date: 8-22-12

DIST.	COUNTY	ROUTE	POST MILES TOTAL PROJECT	SHEET NO.	TOTAL SHEETS
04	Ala	80	2.2	735	800

Javid Amirazodi 5-30-12

REGISTERED ELECTRICAL ENGINEER — DATE

REGISTERED PROFESSIONAL ENGINEER J. AMIRAZODI No. 17509 Exp. 6-30-13 ELEC STATE OF CALIFORNIA

10-22-12

PLANS APPROVAL DATE

The State of California or its officers or agents shall not be responsible for the accuracy or completeness of scanned copies of this plan sheet.

ZONE	LOCATION	QUANTITY	DEVICES DESCRIPTION
48	SINGLE PEDESTRIAN DOOR-DOOR #134	1	DIGITAL CARD READER
		1	MAGNETIC CONTACT SWITCH-PEDESTRIAN
		1	ELECTRIFIED DOOR HINGE
		1	ELECTROMECHANICAL LOCK
		1	COMBINATION MOTION DETECTOR
		1	LOCK GUARD
49	PARTS STORAGE	1	GLASS BREAK DISCRIMINATOR
	VEHICLE ACCESS ROLLUP DOOR-DOOR #135	1	MAGNETIC CONTACT SWITCH-VEHICLE
50	SINGLE PEDESTRIAN DOOR-DOOR #108	1	DIGITAL CARD READER
		1	MAGNETIC CONTACT SWITCH-PEDESTRIAN
		1	ELECTRIFIED DOOR HINGE
		1	ELECTROMECHANICAL LOCK
		1	COMBINATION MOTION DETECTOR
		1	LOCK GUARD
		1	DIGITAL KEYPAD DEACTIVATES ZONES: 50,51,52,54,55,57,58
51	LOBBY	1	GLASS BREAK DISCRIMINATOR
52	DOUBLE PEDESTRIAN DOOR-DOOR #107	1	DIGITAL CARD READER
		2	MAGNETIC CONTACT SWITCH-PEDESTRIAN
		2	ELECTRIC POWER TRANSFER HINGE
		2	PANIC DEVICE
		1	COMBINATION MOTION DETECTOR
		1	DIGITAL KEYPAD DEACTIVATES ZONES:18,19,20,21,22,23,24 ,25,26,27,28,29,30,31,32,33,34,47,48,49,51,52,56 ,59,60,61,62,63,64,65,66,67,68,69,70,71,72,73,74
53	SINGLE PEDESTRIAN DOOR-DOOR #132	1	DIGITAL CARD READER
		1	MAGNETIC CONTACT SWITCH-PEDESTRIAN
		1	ELECTRIFIED DOOR HINGE
		1	ELECTROMECHANICAL LOCK
		1	COMBINATION MOTION DETECTOR
		1	LOCK GUARD
		1	DIGITAL KEYPAD DEACTIVATES ZONES:35,36,37,38,39,40,41, 42,43,44,45,46,53
54	SUPERVISOR	1	GLASS BREAK DISCRIMINATOR
55	SINGLE PEDESTRIAN DOOR-DOOR #113	1	DIGITAL CARD READER
		1	MAGNETIC CONTACT SWITCH-PEDESTRIAN
		1	ELECTRIFIED DOOR HINGE
		1	ELECTROMECHANICAL LOCK
		1	LOCK GUARD
		1	COMBINATION MOTION DETECTOR
		1	DIGITAL KEYPAD DEACTIVATES ZONES:50,51,52,53 54,55,57,58
56	SINGLE PEDESTRIAN DOOR-DOOR #118	1	DIGITAL CARD READER
		1	MAGNETIC CONTACT SWITCH-PEDESTRIAN
		1	ELECTRIFIED DOOR HINGE
		1	ELECTROMECHANICAL LOCK
		1	COMBINATION MOTION DETECTOR
		1	LOCK GUARD

	BY	CHECKED
DESIGN	Javid Amirazodi	J.S. Sandhu/J.R. Lacy
DETAILS	Dali Zhou	Javid Amirazodi
QUANTITIES	Javid Amirazodi	J.S. Sandhu/J.R. Lacy

STATE OF CALIFORNIA DEPARTMENT OF TRANSPORTATION

DIVISION OF ENGINEERING SERVICES ELECTRICAL-MECHANICAL-WATER AND WASTEWATER DESIGN

BRIDGE NO. 33M5785

POST MILE 2.2

SFOBB MAINTENANCE COMPLEX

INTRUSION ALARM AND ACCESS SYSTEM ZONING SCHEDULE 2

SHEET EE1-5.7

TAEMWW Imperial Rev. 7/10

ORIGINAL SCALE IN INCHES FOR REDUCED PLANS 0 1 2 3

UNIT 3596

PROJECT NUMBER & PHASE 04120006661

EA 014081

DISREGARD PRINTS BEARING EARLIER REVISION DATES

REVISION DATES (PRELIMINARY STAGE ONLY) 5/30/12

SHEET OF

25-OCT-2012 09:36

ee1_5.07.dgn

ZONE	LOCATION	QUANTITY	DEVICES DESCRIPTION
57	ELECTRICAL SHOP	3	GLASS BREAK DISCRIMINATOR
58	VEHICLE ACCESS ROLL UP DOOR-DOOR #114	1	MAGNETIC CONTACT SWITCH-VEHICLE
	EQUIPMENT STORAGE BAY	1	GLASS BREAK DISCRIMINATOR
59	VEHICLE ACCESS ROLL-UP DOOR-DOOR #101	1	MAGNETIC CONTACT SWITCH-VEHICLE
	BAIR STORAGE	1	GLASS BREAK DISCRIMINATOR
60	SINGLE PEDESTRIAN DOOR-DOOR #100	1	MAGNETIC CONTACT SWITCH-PEDESTRIAN
		1	LOCK GUARD
61	VEHICLE ACCESS ROLL UP DOOR-DOOR #93	1	MAGNETIC CONTACT SWITCH-VEHICLE
	SECURE STORAGE	1	GLASS BREAK DISCRIMINATOR
62	SINGLE PEDESTRIAN DOOR-DOOR #92	1	MAGNETIC CONTACT SWITCH-PEDESTRIAN
		1	LOCK GUARD
63	SINGLE PEDESTRIAN DOOR-DOOR #91	1	DIGITAL CARD READER
		1	MAGNETIC CONTACT SWITCH-PEDESTRIAN
		1	ELECTRIFIED DOOR HINGE
		1	ELECTROMECHANICAL LOCK
		1	COMBINATION MOTION DETECTOR
		1	LOCK GUARD
64	SINGLE PEDESTRIAN DOOR-DOOR #90	1	MAGNETIC CONTACT SWITCH-PEDESTRIAN
		1	LOCK GUARD
65	VEHICLE ACCESS ROLL UP DOOR-DOOR #89	1	MAGNETIC CONTACT SWITCH-VEHICLE
	CARPENTER SHOP	1	GLASS BREAK DISCRIMINATOR
66	SINGLE PEDESTRIAN DOOR-DOOR #68	1	DIGITAL CARD READER
		1	MAGNETIC CONTACT SWITCH-PEDESTRIAN
		1	ELECTRIFIED DOOR HINGE
		1	ELECTROMECHANICAL LOCK
		1	COMBINATION MOTION DETECTOR
		1	LOCK GUARD
67	EQUIPMENT STORAGE BAYS	3	GLASS BREAK DISCRIMINATOR
	VEHICLE ACCESS ROLL UP DOOR-DOORS #79,80,81	3	MAGNETIC CONTACT SWITCH-VEHICLE
68	SINGLE PEDESTRIAN DOOR-DOOR #78	1	DIGITAL CARD READER
		1	MAGNETIC CONTACT SWITCH-PEDESTRIAN
		1	ELECTRIFIED DOOR HINGE
		1	ELECTROMECHANICAL LOCK
		1	COMBINATION MOTION DETECTOR
		1	LOCK GUARD
		1	DIGITAL KEYPAD DEACTIVATES ZONES:18,19,20,21,22,23,24 ,25,26,27,28,29,30,31,32,33,34,47,48,49,51,52,56 ,59,60,61,62,63,64,65,66,67,68,69,70,71,72,73,74
69	SINGLE PEDESTRIAN DOOR-DOOR #67	1	MAGNETIC CONTACT SWITCH-PEDESTRIAN
		1	LOCK GUARD
70	VEHICLE ACCESS ROLL UP DOOR-DOOR #65	1	MAGNETIC CONTACT SWITCH-VEHICLE
		1	GLASS BREAK DISCRIMINATOR
71	RIGGING SECURE TOOL	1	GLASS BREAK DISCRIMINATOR
	VEHICLE ACCESS ROLL UP-DOOR #63	1	MAGNETIC CONTACT SWITCH-VEHICLE
72	SINGLE PEDESTRIAN DOOR-DOOR #62	1	MAGNETIC CONTACT SWITCH-PEDESTRIAN
		1	LOCK GUARD
73	DOUBLE PEDESTRIAN DOOR-DOOR #56	2	MAGNETIC CONTACT SWITCH-PEDESTRIAN
		1	LOCK GUARD
74	SINGLE PEDESTRIAN DOOR-DOOR #82	1	MAGNETIC CONTACT SWITCH-PEDESTRIAN
75	SINGLE PEDESTRIAN DOOR-DOOR #128	1	DIGITAL CARD READER
		1	MAGNETIC CONTACT SWITCH-PEDESTRIAN
		1	ELECTRIFIED DOOR HINGE
		1	ELECTROMECHANICAL LOCK
		1	COMBINATION MOTION DETECTOR
		1	LOCK GUARD

NAMEPLATE SCHEDULE

ITEM No.	LETTER HEIGHT (inch)	INSCRIPTION
1	1/2	INTRUSION ALARM CONTROL PANEL
2	1/2	ACCESS CONTROL PANEL

CALIFORNIA STATE FIRE MARSHAL APPROVED

Approval of this plan does not authorize or approve any omission or deviation from applicable regulations. Final approval is subject to field inspection. One set of approved plans shall be available on the project site at all times.

Reviewed by: JOHN E WOODS, SDSFM

Approval date: 8-22-12

DIST.	COUNTY	ROUTE	POST MILES TOTAL PROJECT	SHEET NO.	TOTAL SHEETS
04	Ala	80	2.2	736	800

Javid Amirazodi 5-30-12

REGISTERED ELECTRICAL ENGINEER — DATE

REGISTERED PROFESSIONAL ENGINEER J. AMIRAZODI No. 17509 Exp. 6-30-13 ELEC STATE OF CALIFORNIA

10-22-12

PLANS APPROVAL DATE

The State of California or its officers or agents shall not be responsible for the accuracy or completeness of scanned copies of this plan sheet.

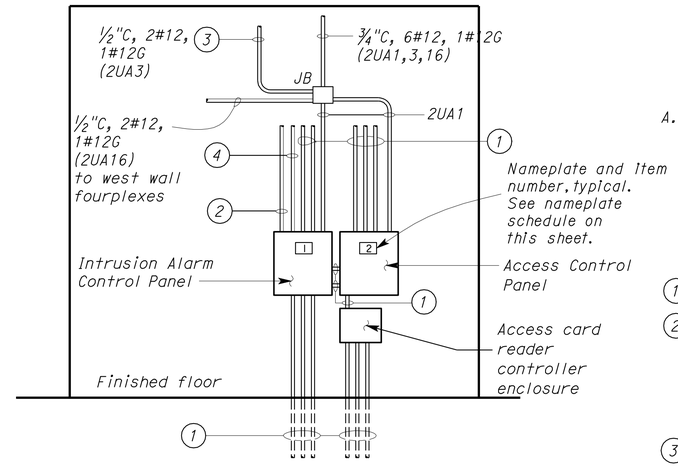

A ELEVATION

General Note:

A. For locations of Panel 2UA, see EE1-4.7.

Notes:

1. Conduit and conductor size as required.
2. 3/4"C, with 2 data cables upto cable ladder. Route one cable to Workstation desk and terminate on access control workstation as required. For location of workstation desk, see EE1-4.7. Route one data cable to communication rack and terminate as required.
3. To Fire Alarm Control Panel in Room 177. For continuation, see EE1-6.3.
4. 2"C, MT to Fire Alarm Control Panel in Room 177. For continuation, see EE1-6.3.

ZONE	LOCATION	QUANTITY	DEVICES DESCRIPTION
76	SINGLE PEDESTRIAN DOOR-DOOR #17	1	DIGITAL CARD READER
		1	MAGNETIC CONTACT SWITCH-PEDESTRIAN
		1	ELECTRIFIED DOOR HINGE
		1	ELECTROMECHANICAL LOCK
		1	COMBINATION MOTION DETECTOR
		1	LOCK GUARD
77	SINGLE PEDESTRIAN DOOR-DOOR #111	1	DIGITAL CARD READER
		1	MAGNETIC CONTACT SWITCH-PEDESTRIAN
		1	ELECTRIFIED DOOR HINGE
		1	ELECTROMECHANICAL LOCK
		1	COMBINATION MOTION DETECTOR
		1	LOCK GUARD
78	VEHICLE ACCESS GATE AND PEDESTRIAN DOOR 200-NORTH	2	GATE DIGITAL CARD READER-SITE ACCESS GATE
		1	DIGITAL CARD READER-PEDESTRIAN GATE
		3	ELECTROMAGNETIC LOCK SET
79	VEHICLE ACCESS GATE AND PEDESTRIAN DOOR 201-EAST	2	GATE DIGITAL CARD READER-SITE ACCESS GATE
		1	DIGITAL CARD READER-PEDESTRIAN GATE
		3	ELECTROMAGNETIC LOCK SET

	BY	CHECKED
DESIGN	Javid Amirazodi	J.S. Sandhu/J.R. Lacy
DETAILS	Dali Zhou	Javid Amirazodi
QUANTITIES	Javid Amirazodi	J.S. Sandhu/J.R. Lacy

STATE OF CALIFORNIA DEPARTMENT OF TRANSPORTATION

DIVISION OF ENGINEERING SERVICES ELECTRICAL-MECHANICAL-WATER AND WASTEWATER DESIGN

BRIDGE NO. 33M5785 POST MILE 2.2

SFOBB MAINTENANCE COMPLEX

INTRUSION ALARM AND ACCESS SYSTEM ZONING SCHEDULE 3

SHEET EE1-5.8

TAEMWW Imperial Rev. 7/10

ORIGINAL SCALE IN INCHES FOR REDUCED PLANS 0 1 2 3

UNIT 3596 PROJECT NUMBER & PHASE 04120006661 EA 014081

DISREGARD PRINTS BEARING EARLIER REVISION DATES → 5/30/12

REVISION DATES (PRELIMINARY STAGE ONLY) SHEET OF

25-OCT-2012 09:36

ee1_5.08.dgn

DIST.	COUNTY	ROUTE	POST MILES TOTAL PROJECT	SHEET NO.	TOTAL SHEETS
04	Ala	80	2.2	737	800

REGISTERED ELECTRICAL ENGINEER — 5-30-12 DATE

REGISTERED PROFESSIONAL ENGINEER J.S. SANDHU No. 11803 Exp. 9-30-12 ELEC STATE OF CALIFORNIA

10-22-12
PLANS APPROVAL DATE

The State of California or its officers or agents shall not be responsible for the accuracy or completeness of scanned copies of this plan sheet.

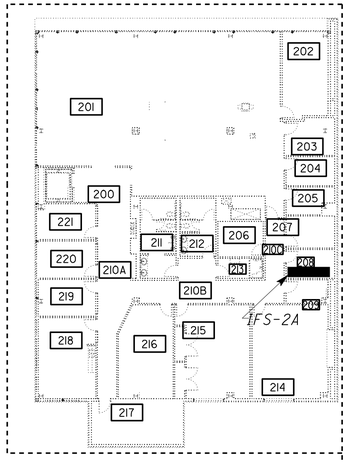

2ND FLOOR

General Notes: (All Fire Alarm Plans)

A. Conduit and conductors system for the Fire Alarm System is not shown. See Special Provisions for requirements.

B. Fire alarm shall comply with NFPA 72-2010 National Fire Alarm Code as amended by CBC, 2004 ADAAG 702, 2010 CBC Sections 907, 2010 CFC Sections 907 and 2010 CEC Article 760.

C. Installation of the Fire Alarm System shall not start up until detailed Plans and Specifications including California Fire Marshall listing numbers of each component of the system have been approved by the California State Fire Marshall.

D. Upon completion of the installation of the Fire Alarm system, a satisfactory test of the entire system shall be made in the presence of the Enforcing Agency.

E. Conduits in and routed thru areas with finished ceilings or furred wall shall be concealed. See the Architectural Finish schedules for the rooms with furred walls and finished ceilings.

F. Fire Alarm System testing shall be reported in the following format to the Engineer.

DEVICE ADDRESS	TYPE CODE LABEL	FLASH SCAN TYPE	CUSTOM LABEL	EXTENDED LABLE	PRE-ALARM SENSITIVITY	FIRE-ALARM SENSITIVITY	COOPERATIVE DETECTOR MODE	ALARM VERIFICATION PARTICIPATION	CONTROL- BY-EVENT

G. ⬡ with number inside represents a given conduit system. For conduit and conductor/cable schedule, see EE0-1.11 and EE0-1.12.

H. Where shown in the plans for fan shutdown, wire addressable relay module in series with the motor controller controls.

I. Underground conduits entering the building from outside and within the building shall be installed below the structural primary/intermediate grade beams. for location of structural primary/intermediate grade beams, underground conduits stub up, and penetration details through floor/beams, refer to structural plan sheets.

J. Detectors shall not be installed until the cleanup of all trades is completed and final as per 2010 NFPA 72 Section 17.7.1.11.

K. Before requesting final approval of the installation, the installing contractor shall furnish a written statement to the State Fire Marshal to the effect that the system has been installed in accordance with approved plans and completely tested in accordance with manufacturer's specifications and appropriate NFPA requirements. (2010 NFPA 72 Section 10.18.1.3)

L. Location of fire alarm devices are shown arbitrary only. Exact location and number of devices shall be deferred for approval by the State Fire Marshall upon submittal of shop drawings.

ACCESSIBILITY DESIGN APPROVAL STAMP DOT / DES / OTA
PROJECT ID 0412000666
Reviewed by: Y. A. WANG
Date: 07-24-12

CALIFORNIA STATE FIRE MARSHAL APPROVED
Approval of this plan does not authorize or approve any omission or deviation from applicable regulations. Final approval is subject to field inspection. One set of approved plans shall be available on the project site at all times.
Reviewed by: JOHN E WOODS, SDSFM
Approval date: 8-22-12

*APPROVAL DEFERRED TO SUBMITTAL

For work in this area, see sheets EE1-6.1 & EE1-6.5

For work in this area, see sheets EE1-6.4 & EE1-6.8.

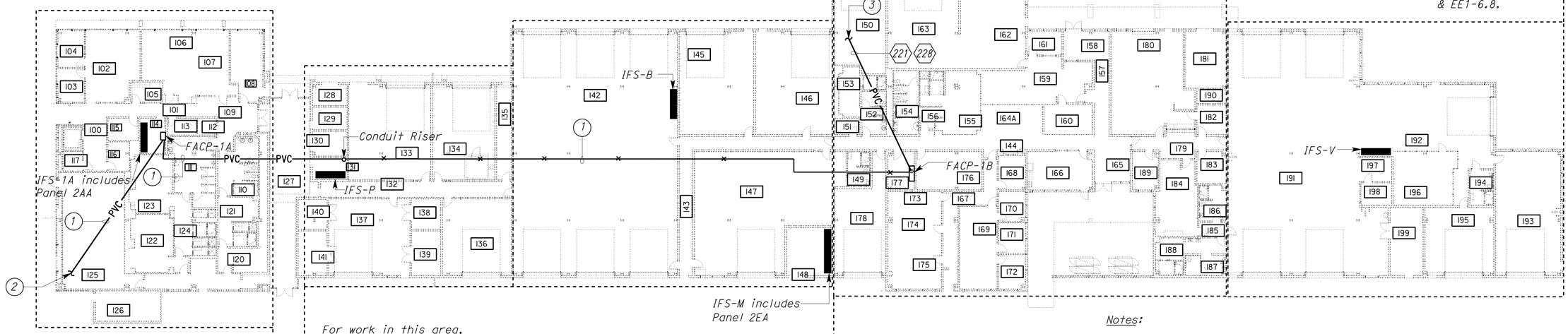

For work in this area, see sheets EE1-6.2 & EE1-6.6

For work in this area, see sheets EE1-6.1 & EE1-6.5

For work in this area, see sheets EE1-6.3 & EE1-6.7.

1ST FLOOR

SCALE 1" = 20'-0"

Notes:

1. 1"C, control conductors as required by the Fire Alarm Control Panel manufacturer.
2. For connection to Fire Department Post Indicator Valve & Detector Check Valve tamper switches, see Communication Site Plan 1 on sheet EE0-0.5.
3. To Communication Vault, see Communication Site Plan 1 on sheet EE0-0.5.

THIS DRAWING ACCURATE FOR ELECTRICAL WORK ONLY

	BY	CHECKED
DESIGN	J. S. Sandhu	Jaswinder Gill
DETAILS	Dali Zhou	J. S. Sandhu
QUANTITIES	J. S. Sandhu	Jaswinder Gill

STATE OF CALIFORNIA DEPARTMENT OF TRANSPORTATION

DIVISION OF ENGINEERING SERVICES
ELECTRICAL-MECHANICAL-WATER AND WASTEWATER DESIGN

BRIDGE NO. 33M5785
POST MILE 2.2

SFOBB MAINTENANCE COMPLEX

FIRE ALARM KEY PLAN

SHEET **EE1-6.0**

TAEMWW Imperial Rev. 7/10

ORIGINAL SCALE IN INCHES FOR REDUCED PLANS 0 1 2 3

UNIT 3596
PROJECT NUMBER & PHASE 04120006661
EA 014081

DISREGARD PRINTS BEARING EARLIER REVISION DATES →

REVISION DATES (PRELIMINARY STAGE ONLY) 1/9/12 3/23/12 5/25/12 5/30/12 7/23/12 8/20/12

SHEET OF

25-OCT-2012 09:36

ee1_6.00.dgn

DIST.	COUNTY	ROUTE	POST MILES TOTAL PROJECT	SHEET NO.	TOTAL SHEETS
04	Ala	80	2.2	738	800

Jaswinder S Sandhu 5-30-12
REGISTERED ELECTRICAL ENGINEER DATE

REGISTERED PROFESSIONAL ENGINEER J.S. SANDHU No. 11803 Exp. 9-30-12 ELEC STATE OF CALIFORNIA

10-22-12
PLANS APPROVAL DATE

The State of California or its officers or agents shall not be responsible for the accuracy or completeness of scanned copies of this plan sheet.

ACCESSIBILITY DESIGN APPROVAL STAMP DOT / DES / OTA
PROJECT ID **0412000666**
Reviewed by: Y. A. WANG
Date: 07-24-12

CALIFORNIA STATE FIRE MARSHAL APPROVED
Approval of this plan does not authorize or approve any omission or deviation from applicable regulations. Final approval is subject to field inspection. One set of approved plans shall be available on the project site at all times.
Reviewed by: JOHN E WOODS, SDSFM
Approval date: 8-22-12

General Notes:

A. *Unless otherwise noted, all power homeruns shown on this sheet are to the Panel 2AA inside IFS-1A.*

B. *For conduits to the Post Indicator Valve / Detector Check Valves, see sheet EE1-6.0.*

C. *All the fire alarm conduit system shall be homerun to the Fire Alarm Control Panel FACP-1A inside the Electrical Room No. 114.*

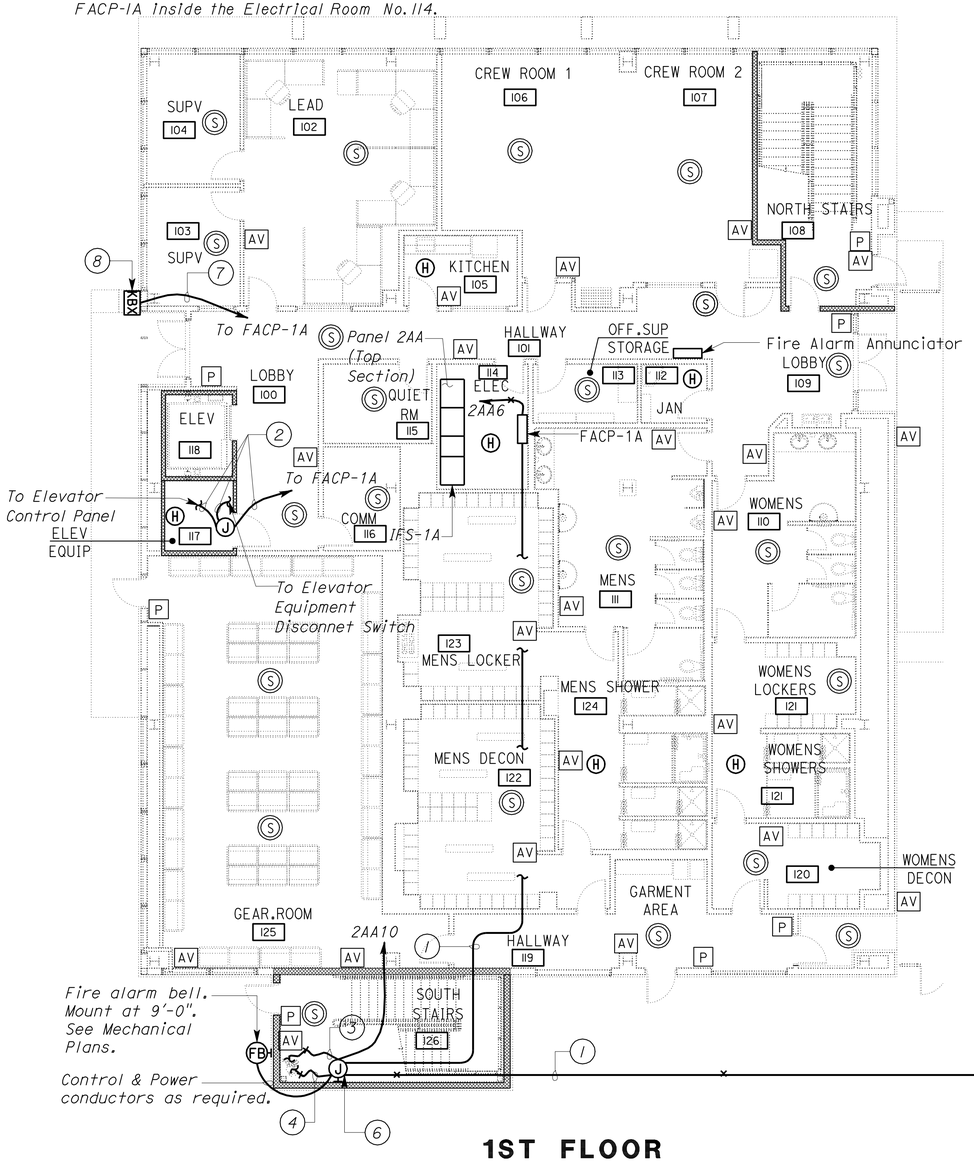

1ST FLOOR

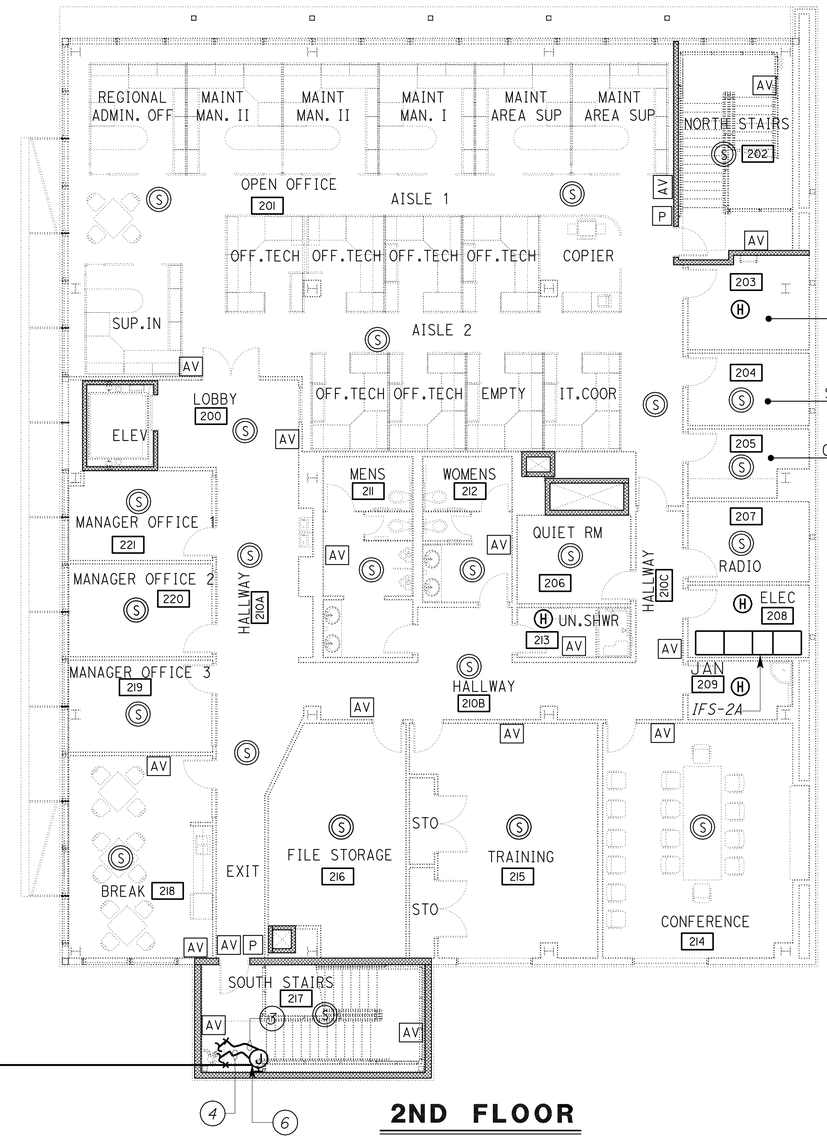

2ND FLOOR

PLAN
SCALE 1/8" = 1'-0"

Notes: *APPROVAL DEFERRED TO SUBMITTAL

1. *3/4"C, with control cables as required.*
2. *1/2"C, Control conductors as required by the Elevator Manufacturer.*
3. *To flow switch on the fire riser. Provide 1/2"C, flex, with wires and/or cable as recommended by the Fire Alarm Control Panel manufacturer. For Fire Riser details, see Mechanical plans.*
4. *To supervisory switch on the fire riser. Provide 1/2"C, flex, with wires and/or cable as recommended by the Fire Alarm Control Panel manufacturer. For Fire Riser details, see Mechanical plans.*
5. *Not used.*
6. *Junction box for supervisory switch and flow switch. Mount adjacent to the Fire Riser.*
7. *3/4"C, control cables from tamper switch inside Knox box to the Fire Alarm Control Panel-1A.*
8. *Knox box with tamper switch. Connect tamper switch to Fire Alarm Control Panel-1A.*

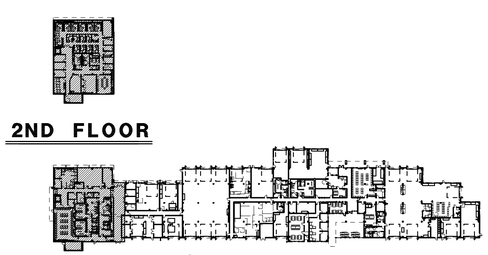

KEY PLAN

THIS DRAWING ACCURATE FOR ELECTRICAL WORK ONLY

DESIGN	BY J. S. Sandhu	CHECKED Jaswinder Gill	
DETAILS	BY Ed D. Tapalla 10/11	CHECKED J. S. Sandhu	
QUANTITIES	BY J. S. Sandhu	CHECKED Jaswinder Gill	

STATE OF CALIFORNIA DEPARTMENT OF TRANSPORTATION

DIVISION OF ENGINEERING SERVICES
ELECTRICAL-MECHANICAL-WATER AND WASTEWATER DESIGN

BRIDGE NO. 33M5785
POST MILE 2.2

SFOBB MAINTENANCE COMPLEX
BUILDING 1A
FIRE ALARM FLOOR PLAN 1

SHEET **EE1-6.1**

TAEMWW Imperial Rev. 7/10

ORIGINAL SCALE IN INCHES FOR REDUCED PLANS 0 1 2 3

UNIT 3596
PROJECT NUMBER & PHASE 04120006661
EA 014081

DISREGARD PRINTS BEARING EARLIER REVISION DATES
REVISION DATES (PRELIMINARY STAGE ONLY) 11/28/11 3/23/12 5/25/12 5/30/12 7/23/12
SHEET OF

25-OCT-2012 09:36
ee1_6.01.dgn

DIST.	COUNTY	ROUTE	POST MILES TOTAL PROJECT	SHEET NO.	TOTAL SHEETS
04	Ala	80	2.2	739	800

Jaswinder S Sandhu 5-30-12
REGISTERED ELECTRICAL ENGINEER DATE

REGISTERED PROFESSIONAL ENGINEER J.S. SANDHU No. 11803 Exp. 9-30-12 ELEC STATE OF CALIFORNIA

10-22-12
PLANS APPROVAL DATE

The State of California or its officers or agents shall not be responsible for the accuracy or completeness of scanned copies of this plan sheet.

ACCESSIBILITY DESIGN APPROVAL STAMP DOT / DES / OTA
PROJECT ID 0412000666
Reviewed by: Y. A. WANG
Date: 07-24-12

CALIFORNIA STATE FIRE MARSHAL APPROVED
Approval of this plan does not authorize or approve any omission or deviation from applicable regulations. Final approval is subject to field inspection. One set of approved plans shall be available on the project site at all times.
Reviewed by: JOHN E WOODS, SDSFM
Approval date: 8-22-12

*APPROVAL DEFERRED TO SUBMITTAL

General Notes:

A. *All the fire alarm condult system shall be homerun to the Fire Alarm Control Panel FACP-1B inside the Fire/Mechanical Room No.177.*

B. *Install heat detectors at the bottom of the Open Web Steel Joist construction. Typical for all High Bay areas.*

C. *Unless otherwise noted, all power homeruns shown on this sheet are to the Panel 2ED inside IFS-M.*

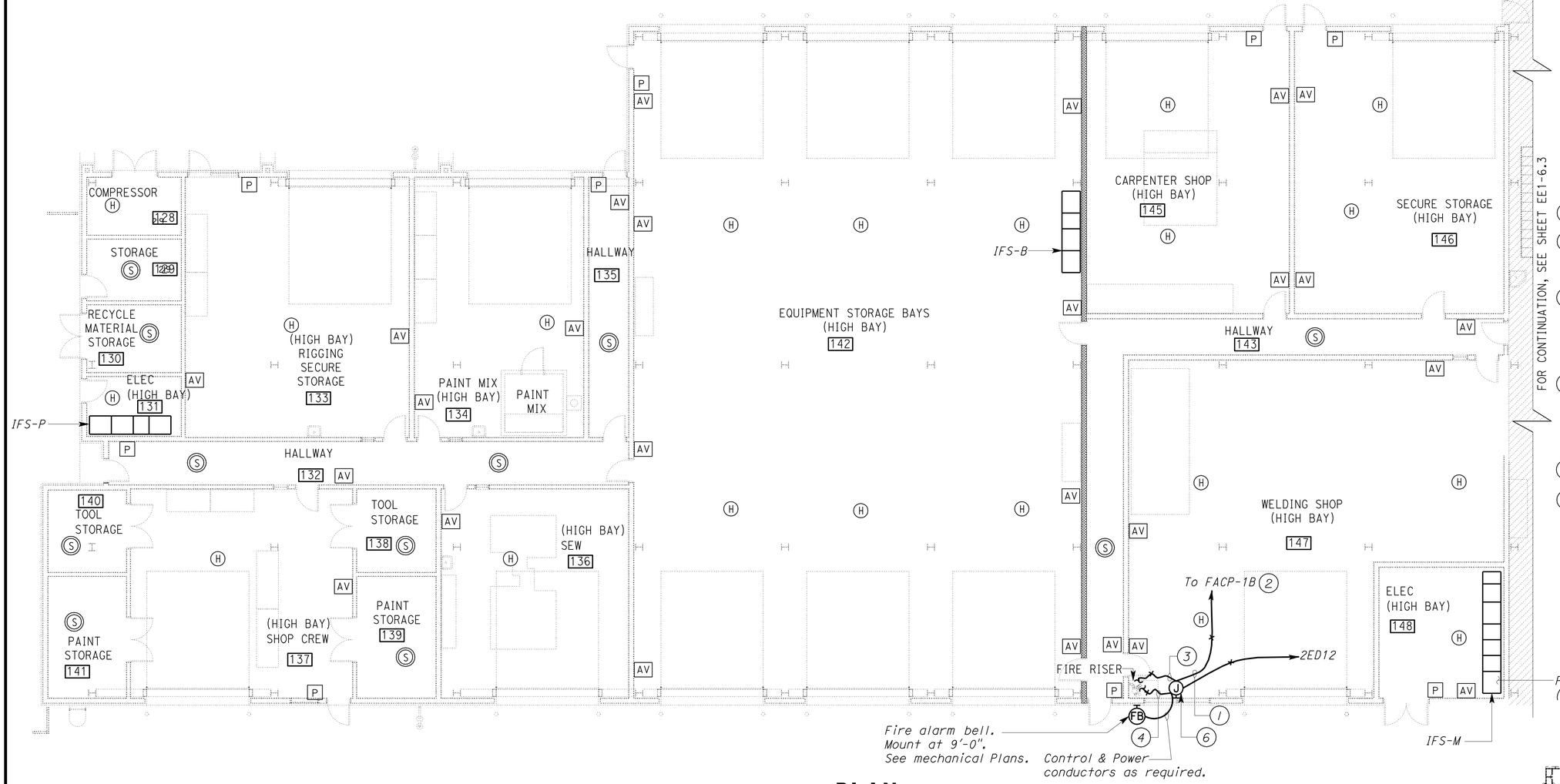

PLAN

SCALE 1/8" = 1'-0"

Notes:

1. *3/4"C, with control cables as required.*
2. *FACP-1B is located inside Fire/Mechanical Room No.177.*
3. *To flow switch on the fire riser. Provide 1/2"C, flex, with wires and/or cable as recommended by the Fire Alarm Control Panel manufacturer. For Fire Riser details, see Mechanical plans.*
4. *To supervisory switch on the fire riser. Provide 1/2"C, flex, with wires and/or cable as recommended by the Fire Alarm Control Panel manufacturer. For Fire Riser details, see Mechanical plans.*
5. *Not used.*
6. *Junction box for supervisory switch and flow switch. Mount next to the Fire Riser.*

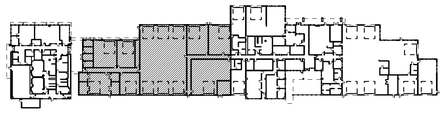

KEY PLAN

THIS DRAWING ACCURATE FOR ELECTRICAL WORK ONLY

	BY	CHECKED
DESIGN	J. S. Sandhu	Jaswinder Gill
DETAILS	Ed D. Tapalla 10/11	J. S. Sandhu
QUANTITIES	J. S. Sandhu	Jaswinder Gill

STATE OF CALIFORNIA DEPARTMENT OF TRANSPORTATION

DIVISION OF ENGINEERING SERVICES
ELECTRICAL-MECHANICAL-WATER AND WASTEWATER DESIGN

BRIDGE NO. 33M5785
POST MILE 2.2

SFOBB MAINTENANCE COMPLEX
BUILDING 1B
FIRE ALARM FLOOR PLAN 2

SHEET **EE1-6.2**

TAEMWW Imperial Rev. 7/10

ORIGINAL SCALE IN INCHES FOR REDUCED PLANS 0 1 2 3

UNIT 3596
PROJECT NUMBER & PHASE 04120006661
EA 014081

DISREGARD PRINTS BEARING EARLIER REVISION DATES → 11/28/11 3/23/12 5/25/12 5/30/12 7/23/12

REVISION DATES (PRELIMINARY STAGE ONLY) SHEET OF

25-OCT-2012 09:36
ee1_6.02.dgn

DIST.	COUNTY	ROUTE	POST MILES TOTAL PROJECT	SHEET NO.	TOTAL SHEETS
04	Ala	80	2.2	740	800

REGISTERED ELECTRICAL ENGINEER — DATE 5-30-12

REGISTERED PROFESSIONAL ENGINEER J.S. SANDHU No. 11803 Exp. 9-30-12 ELEC STATE OF CALIFORNIA

10-22-12
PLANS APPROVAL DATE

The State of California or its officers or agents shall not be responsible for the accuracy or completeness of scanned copies of this plan sheet.

ACCESSIBILITY DESIGN APPROVAL STAMP DOT / DES / OTA
PROJECT ID 0412000666
Reviewed by: Y. A. WANG
Date: 07-24-12

CALIFORNIA STATE FIRE MARSHAL APPROVED
Approval of this plan does not authorize or approve any omission or deviation from applicable regulations. Final approval is subject to field inspection. One set of approved plans shall be available on the project site at all times.
Reviewed by: JOHN E WOODS, SDSFM
Approval date: 8-22-12

*APPROVAL DEFERRED TO SUBMITTAL

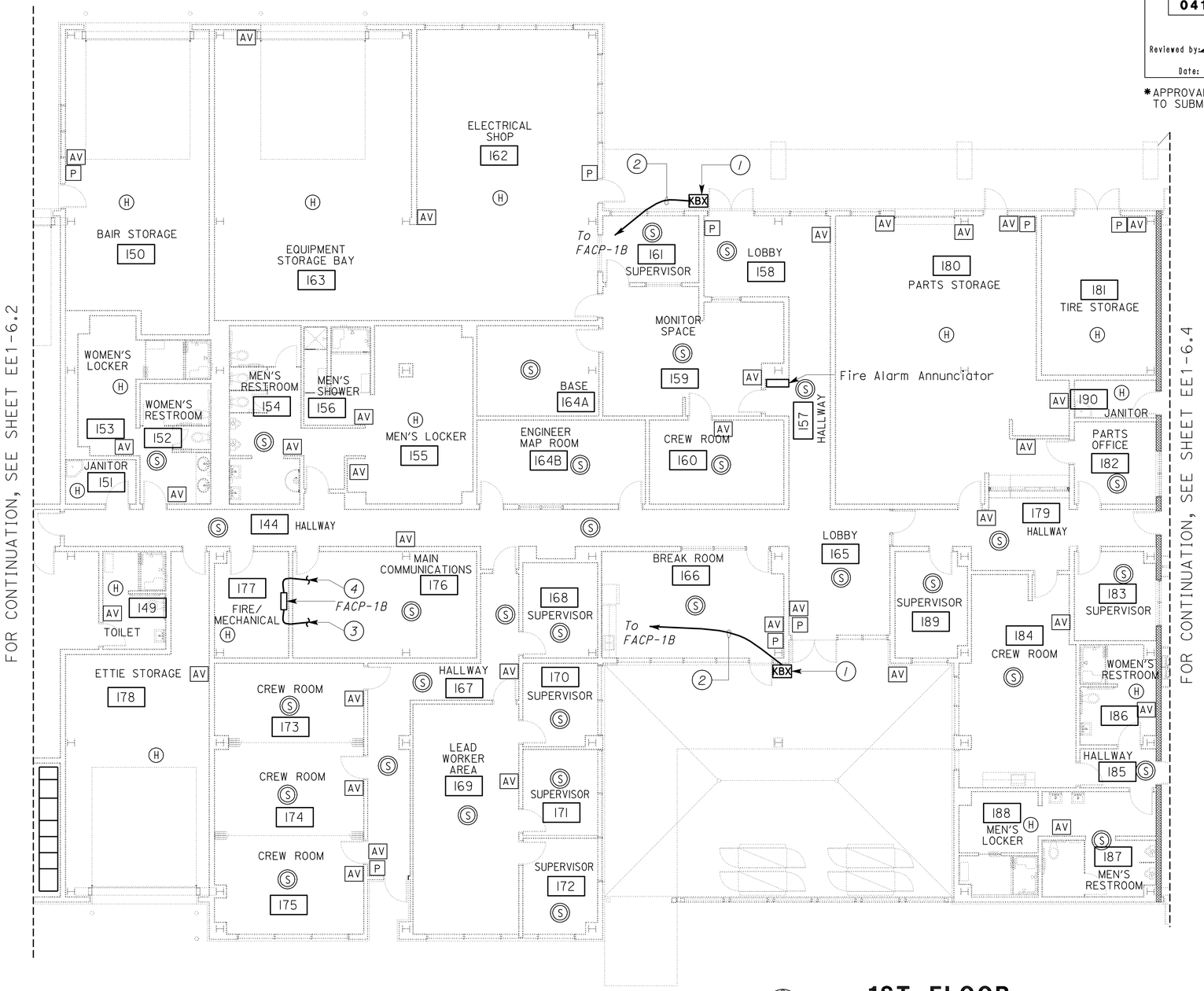

1ST FLOOR

SCALE 1/8" = 1'-0"

General Notes:

A. *All the fire alarm conduit system shall be homerun to the Fire Alarm Control Panel FACP-1B inside the Fire/Mechanical Room No. 177.*

B. *Install heat detectors at the bottom of the Open Web Steel Joist construction. Typical for all High Bay areas.*

C. *For conduits to the Post Indicator Valve / Detector Check Valves, see sheet EE1-6.0.*

Notes:

1. *Knox box with tamper switch. Connect tamper switch to Fire Alarm Control Panel-1B.*
2. *3/4"C. control cables from tamper switch inside Knox box to the Fire Alarm Control Panel-1B.*
3. *To Panel 2UA thru JB (power to FACP-1B, Ckt. no. 2UA3) inside Main Communication Room. For continuation see sheet EE1-4.7.*
4. *2"C, MT to Intrusion Alarm Control Panel inside Room No. 176. For continuation, see sheet EE1-4.7.*

KEY PLAN

THIS DRAWING ACCURATE FOR ELECTRICAL WORK ONLY

DESIGN	BY J. S. Sandhu	CHECKED Jaswinder Gill	
DETAILS	BY Ed D. Tapalla/Dali Zhou	CHECKED J. S. Sandhu	
QUANTITIES	BY J. S. Sandhu	CHECKED Jaswinder Gill	

STATE OF CALIFORNIA DEPARTMENT OF TRANSPORTATION

DIVISION OF ENGINEERING SERVICES
ELECTRICAL-MECHANICAL-WATER AND WASTEWATER DESIGN

BRIDGE NO. 33M5785
POST MILE 2.2

SFOBB MAINTENANCE COMPLEX
BUILDING 1B — FIRE ALARM FLOOR PLAN 3

SHEET **EE1-6.3**

TAEMWW Imperial Rev. 7/10

ORIGINAL SCALE IN INCHES FOR REDUCED PLANS 0 1 2 3

UNIT 3596
PROJECT NUMBER & PHASE 04120006661
EA 014081

DISREGARD PRINTS BEARING EARLIER REVISION DATES →
REVISION DATES (PRELIMINARY STAGE ONLY): 10/24/11 3/23/12 5/25/12 5/30/12 7/23/12
SHEET OF

25-OCT-2012 08:37
ee1_6.03.dgn

DIST.	COUNTY	ROUTE	POST MILES TOTAL PROJECT	SHEET NO.	TOTAL SHEETS
04	Ala	80	2.2	741	800

ACCESSIBILITY DESIGN APPROVAL STAMP
DOT / DES / OTA
PROJECT ID 0412000666
Reviewed by: Y. A. WANG
Date: 07-24-12

*APPROVAL DEFERRED TO SUBMITTAL

CALIFORNIA STATE FIRE MARSHAL APPROVED
Approval of this plan does not authorize or approve any omission or deviation from applicable regulations. Final approval is subject to field inspection. One set of approved plans shall be available on the project site at all times.
Reviewed by: JOHN E WOODS, SDSFM
Approval date: 8-22-12

Jaswinder S Sandhu 5-30-12
REGISTERED ELECTRICAL ENGINEER DATE

REGISTERED PROFESSIONAL ENGINEER J.S. SANDHU No. 11803 Exp. 9-30-12 ELEC STATE OF CALIFORNIA

10-22-12
PLANS APPROVAL DATE

The State of California or its officers or agents shall not be responsible for the accuracy or completeness of electronic copies of this plan sheet.

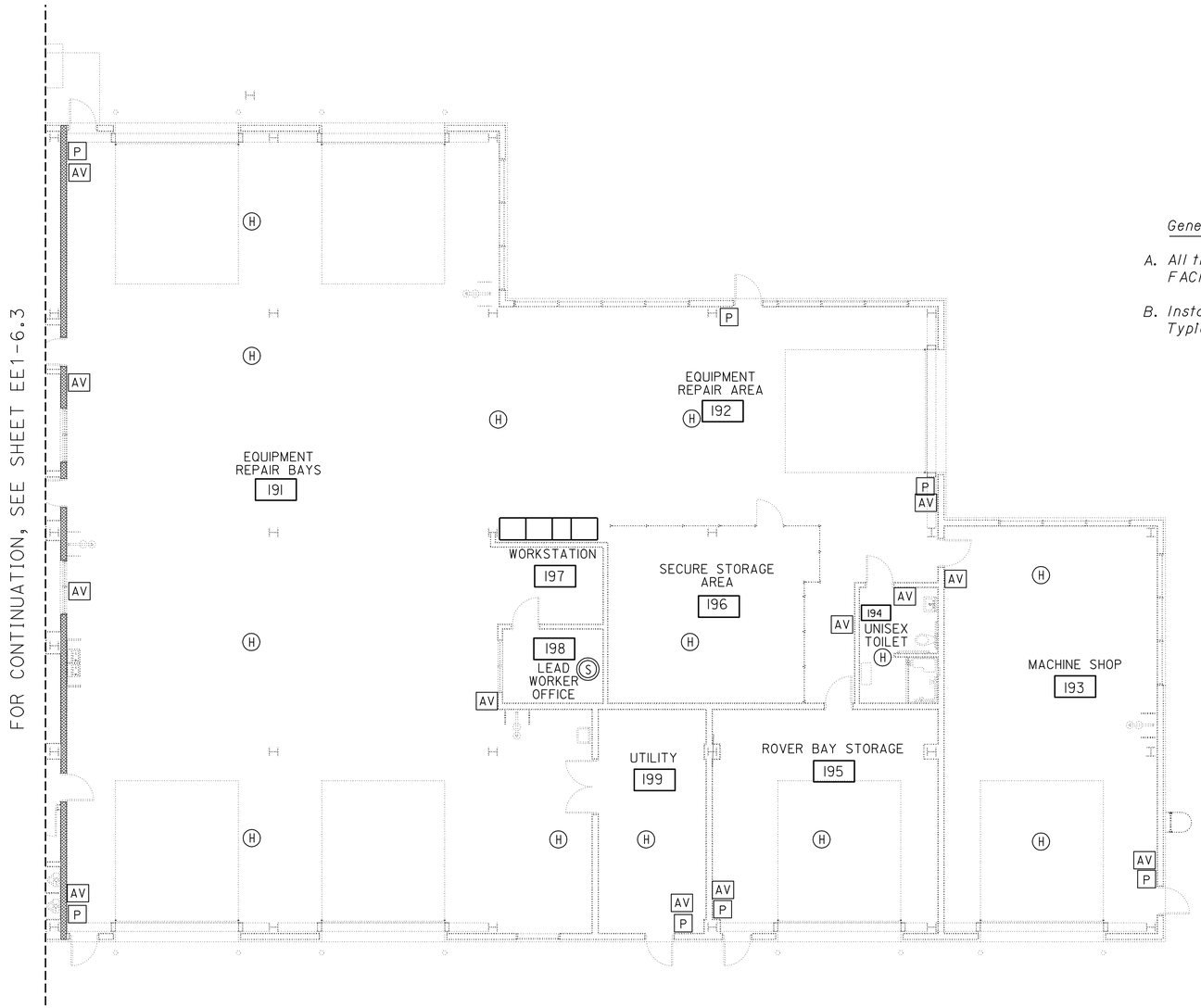

General Notes:

A. *All the fire alarm conduit system shall be homerun to the Fire Alarm Control Panel FACP-1B Inside the Fire/Mechanical Room No.177.*

B. *Install heat detectors at the bottom of the Open Web Steel Joist construction. Typical for all High Bay areas.*

1ST FLOOR

SCALE 1/8" = 1'-0"

KEY PLAN

THIS DRAWING ACCURATE FOR ELECTRICAL WORK ONLY

	BY	CHECKED
DESIGN	J. S. Sandhu	Jaswinder Gill
DETAILS	Ed D. Tapalla/Dali Zhou	J. S. Sandhu
QUANTITIES	J. S. Sandhu	Jaswinder Gill

STATE OF CALIFORNIA
DEPARTMENT OF TRANSPORTATION

DIVISION OF ENGINEERING SERVICES
ELECTRICAL-MECHANICAL-WATER AND WASTEWATER DESIGN

BRIDGE NO. 33M5785
POST MILE 2.2

SFOBB MAINTENANCE COMPLEX
BUILDING 1B
FIRE ALARM PLAN 4

SHEET **EE1-6.4**

TAEMWW Imperial Rev. 7/10

ORIGINAL SCALE IN INCHES FOR REDUCED PLANS 0 1 2 3

UNIT 3596
PROJECT NUMBER & PHASE 04120006661
EA 014081

DISREGARD PRINTS BEARING EARLIER REVISION DATES
REVISION DATES (PRELIMINARY STAGE ONLY) 10/24/11 3/23/12 5/25/12 5/30/12 7/23/12
SHEET OF

25-OCT-2012 09:37
ee1_6.04.dgn

General Notes:

A. All the homeruns on this sheet are to the Fire Alarm Control Panel FACP-1A Inside the Electrical Room No. 114.

B. A/C's and EF's are mounted on rooftop. See Mechanical plans MI-3 for exact location.

C. All A/C's, EF's and Smoke Dampers shown on this sheet are to be shutdown using Addressable Relay Module mounted adjacent to the A/C's, EF's Control Panel & Smoke Dampers upon detection of fire within the same zone and sends a signal to the FACP-1A.

D. For exact location of the EF's Control Panel, see HVAC Power plan sheets.

CALIFORNIA STATE FIRE MARSHAL APPROVED
Approval of this plan does not authorize or approve any omission or deviation from applicable regulations. Final approval is subject to field inspection. One set of approved plans shall be available on the project site at all times.
Reviewed by: JOHN E WOODS, SDSFM
Approval date: 8-22-12

DIST.	COUNTY	ROUTE	POST MILES TOTAL PROJECT	SHEET NO.	TOTAL SHEETS
04	Ala	80	2.2	742	800

REGISTERED ELECTRICAL ENGINEER — 5-30-12 DATE

REGISTERED PROFESSIONAL ENGINEER J.S. SANDHU No. 11803 Exp. 9-30-12 ELEC STATE OF CALIFORNIA

10-22-12
PLANS APPROVAL DATE

The State of California or its officers or agents shall not be responsible for the accuracy or completeness of scanned copies of this plan sheet.

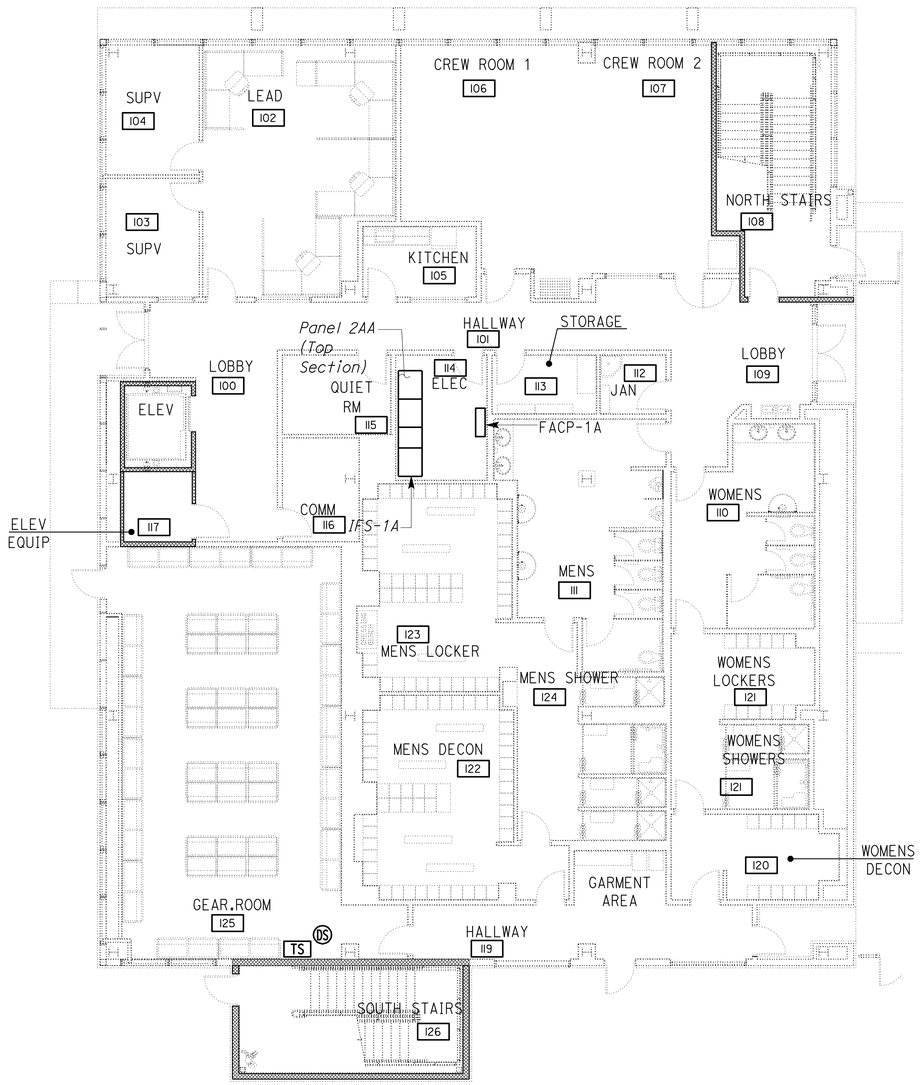

1ST FLOOR

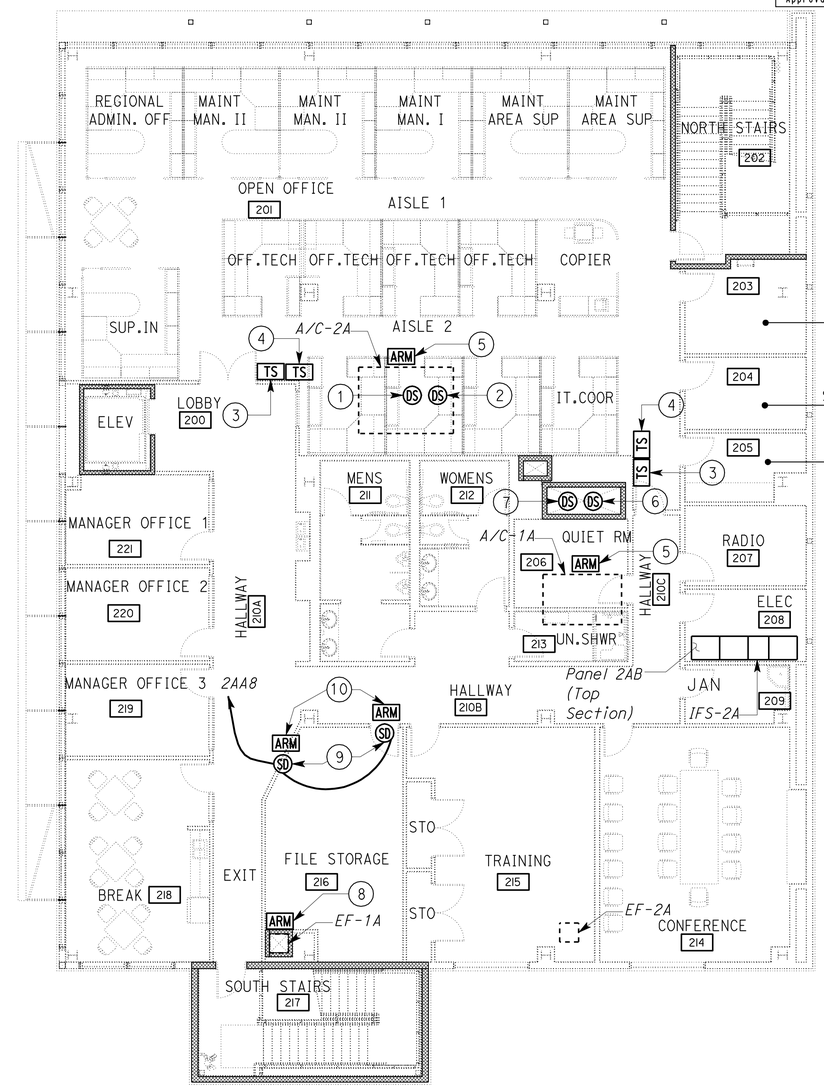

2ND FLOOR

Notes:

1. Supply air duct smoke detector. Install duct smoke detector on the supply duct at an accessible location inside the second floor attic space. See Mechanical enlarged HVAC plan on sheet MI-5 for the exact location.
2. Return air duct smoke detector. Install duct smoke detector on the return duct at an accessible location inside the second floor attic space. See Mechanical enlarged HVAC plan on sheet MI-5 for the exact location.
3. Test switch for supply air duct smoke detector. Provide nameplate on the wall adjacent to the test switch.
4. Test switch for return air duct smoke detector. Provide nameplate on the wall adjacent to the test switch.
5. Install addressable relay module adjacent to the unit supervised. Addressable relay module shall be installed inside a weatherproof enclosure.
6. Supply air duct smoke detector. Install duct smoke detector on the supply duct at an accessible location inside the first floor attic space. See Mechanical enlarged HVAC plan on sheet MI-4 for the exact location.
7. Return air duct smoke detector. Install duct smoke detector on the return duct at an accessible location inside the first floor attic space. See Mechanical enlarged HVAC plan on sheet MI-4 for the exact location.
8. Install addressable relay module adjacent to the EF Control Panel controlling the exhaust fan inside the second floor attic space at an accessible location.
9. Smoke Damper with actuator. See Mechanical HVAC plans on MI-2 for exact location.
10. Install addressable relay module adjacent to the smoke damper inside the second floor attic space at an accessible location. Upon detection of fire, smoke dampers shall close.

2ND FLOOR

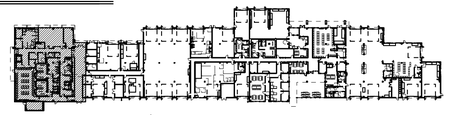

1ST FLOOR

KEY PLAN

PLAN
SCALE 1/8" = 1'-0"

THIS DRAWING ACCURATE FOR ELECTRICAL WORK ONLY

	BY	CHECKED
DESIGN	J. S. Sandhu	Jaswinder Gill
DETAILS	Ed D. Tapalla 10/11	J. S. Sandhu
QUANTITIES	J. S. Sandhu	Jaswinder Gill

STATE OF CALIFORNIA DEPARTMENT OF TRANSPORTATION

DIVISION OF ENGINEERING SERVICES
ELECTRICAL-MECHANICAL-WATER AND WASTEWATER DESIGN

BRIDGE NO. 33M5785
POST MILE 2.2

SFOBB MAINTENANCE COMPLEX
BUILDING 1A — FIRE ALARM HVAC PLAN 1

SHEET EE1-6.5

TAEMWW Imperial Rev. 7/10

ORIGINAL SCALE IN INCHES FOR REDUCED PLANS 0 1 2 3

UNIT 3596
PROJECT NUMBER & PHASE 04120006661
EA 014081

DISREGARD PRINTS BEARING EARLIER REVISION DATES
REVISION DATES (PRELIMINARY STAGE ONLY) 11/28/11 3/23/12 5/25/12 5/30/12
SHEET OF

25-OCT-2012 09:37
ee1_6.05.dgn

DIST.	COUNTY	ROUTE	POST MILES TOTAL PROJECT	SHEET NO.	TOTAL SHEETS
04	Ala	80	2.2	743	800

REGISTERED ELECTRICAL ENGINEER — DATE 5-30-12

REGISTERED PROFESSIONAL ENGINEER J.S. SANDHU No. 11803 Exp. 9-30-12 ELEC STATE OF CALIFORNIA

10-22-12
PLANS APPROVAL DATE

The State of California or its officers or agents shall not be responsible for the accuracy or completeness of scanned copies of this plan sheet.

CALIFORNIA STATE FIRE MARSHAL APPROVED
Approval of this plan does not authorize or approve any omission or deviation from applicable regulations. Final approval is subject to field inspection. One set of approved plans shall be available on the project site at all times.
Reviewed by: JOHN E WOODS, SDSFM
Approval date: 8-22-12

General Notes:

A. *All the fire alarm conduit system shall be homerun to the Fire Alarm Control Panel FACP-1B Inside the Fire/Mechanical Room No.177.*

B. *EF's are mounted on rooftop. See Mechanical plans M1-13 & M1-14 for exact location.*

C. *All EF's Motor Starters shown on this sheet are to be shutdown using Addressable Relay Module mounted adjacent to the EF's Motor Starter upon detection of fire within the same zone and sends a signal to the FACP-1B.*

D. *For exact location of the EF's Motor Starters, see HVAC Power plan sheets.*

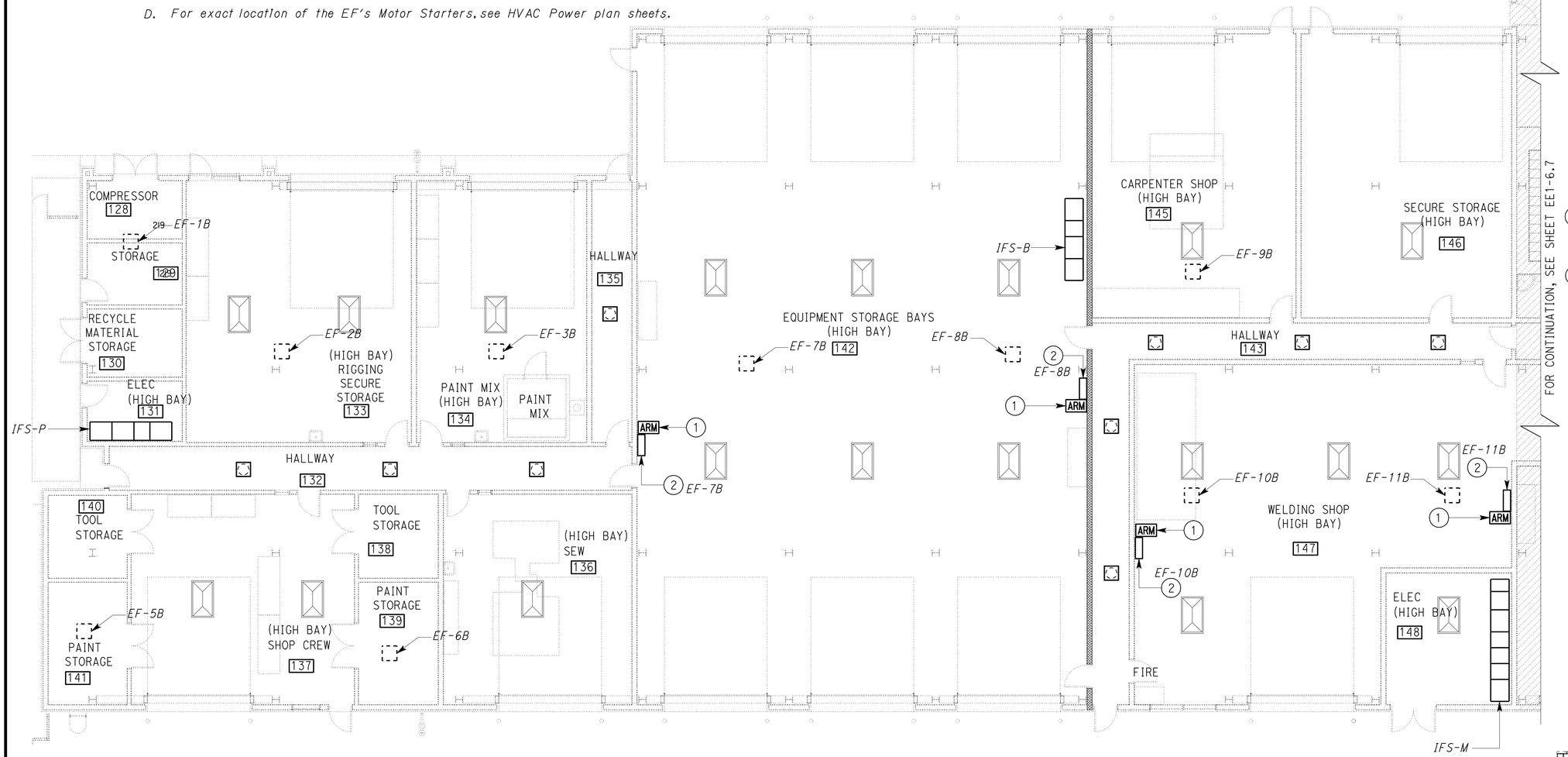

PLAN

SCALE 1/8" = 1'-0"

Notes:

1. *Install addressable relay module adjacent to the EF's Motor Starter controlling the exhaust fan.*
2. *EF Motor Starter. Device label next to the EF Motor Starter, indicates the name of the EF controlled by the motor starter.*

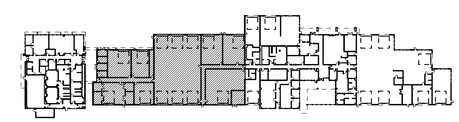

KEY PLAN

THIS DRAWING ACCURATE FOR ELECTRICAL WORK ONLY

	BY	CHECKED
DESIGN	J. S. Sandhu	Jaswinder Gill
DETAILS	Ed D. Tapalla 10/11	J. S. Sandhu
QUANTITIES	J. S. Sandhu	Jaswinder Gill

STATE OF CALIFORNIA DEPARTMENT OF TRANSPORTATION

DIVISION OF ENGINEERING SERVICES ELECTRICAL-MECHANICAL-WATER AND WASTEWATER DESIGN

BRIDGE NO. 33M5785
POST MILE 2.2

SFOBB MAINTENANCE COMPLEX
BUILDING 1B — FIRE ALARM HVAC PLAN 2

SHEET **EE1-6.6**

TAEMWW Imperial Rev. 7/10

ORIGINAL SCALE IN INCHES FOR REDUCED PLANS 0 1 2 3

UNIT 3596
PROJECT NUMBER & PHASE 04120006661
EA 014081

DISREGARD PRINTS BEARING EARLIER REVISION DATES → 11/28/11 3/23/12 5/25/12 5/30/12

REVISION DATES (PRELIMINARY STAGE ONLY) SHEET OF

ee1_6.06.dgn

25-OCT-2012 08:37

DIST.	COUNTY	ROUTE	POST MILES TOTAL PROJECT	SHEET NO.	TOTAL SHEETS
04	Ala	80	2.2	744	800

REGISTERED ELECTRICAL ENGINEER 5-30-12 DATE

REGISTERED PROFESSIONAL ENGINEER J.S. SANDHU No. 11803 Exp. 9-30-12 ELEC STATE OF CALIFORNIA

10-22-12
PLANS APPROVAL DATE

The State of California or its officers or agents shall not be responsible for the accuracy or completeness of scanned copies of this plan sheet.

CALIFORNIA STATE FIRE MARSHAL APPROVED

Approval of this plan does not authorize or approve any omission or deviation from applicable regulations. Final approval is subject to field inspection. One set of approved plans shall be available on the project site at all times.

Reviewed by: JOHN E WOODS, SDSFM

Approval date: 8-22-12

General Notes:

A. *All the fire alarm conduit system shall be homerun to the Fire Alarm Control Panel FACP-1B inside the Fire/Mechanical Room No.177.*

B. *A/C's and EF's are mounted on rooftop. See Mechanical plans M1-14 for exact location.*

C. *All A/C's shown on this sheet are to be shutdown using Addressable Relay Module mounted adjacent to the A/C's upon detection of fire within the* APPROVAL DEFERRED TO SUBMITTAL *zone and sends a signal to the FACP-1B.*

D. *For exact location of the EF's Motor Starters, see HVAC Power plan sheets.*

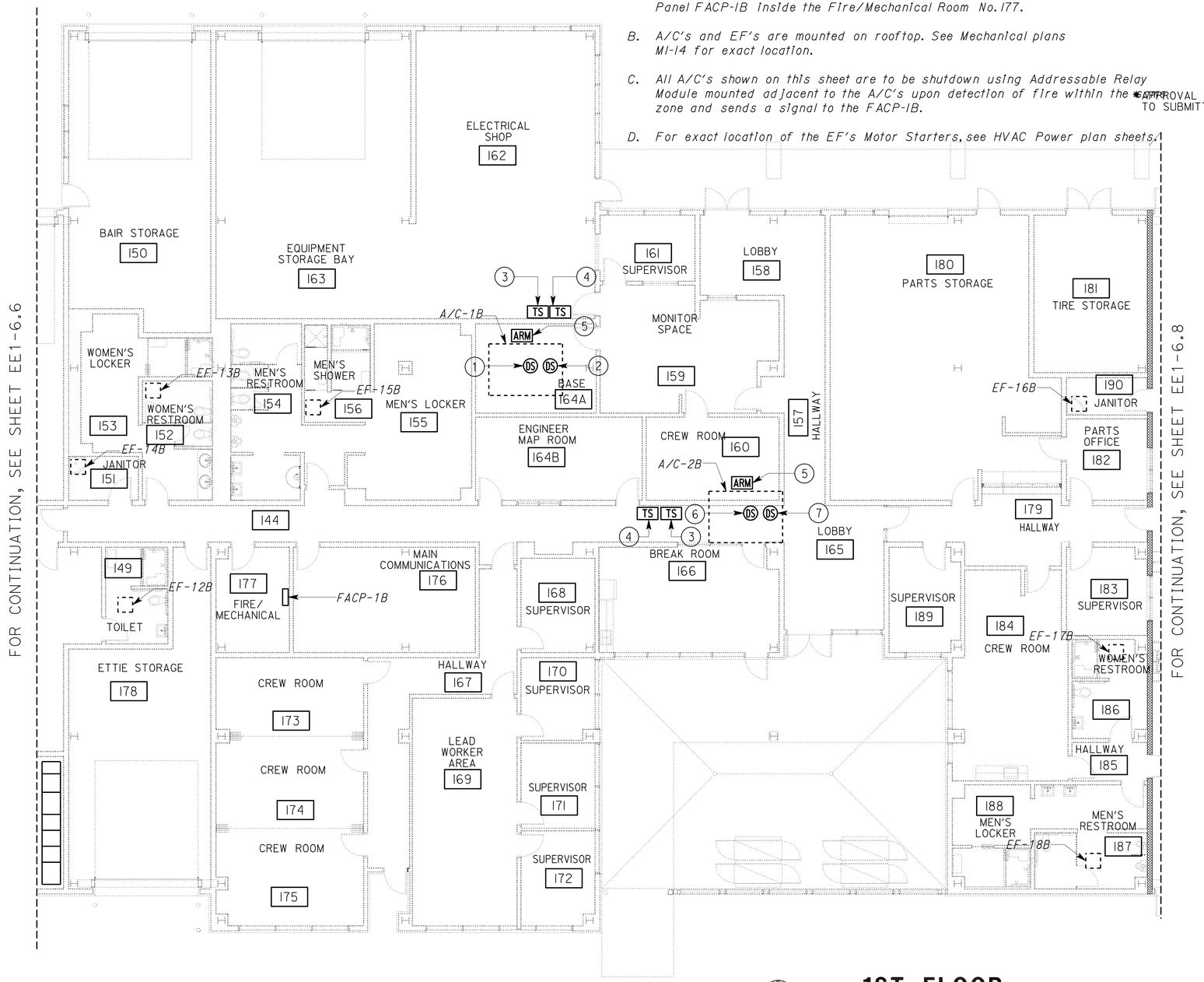

1ST FLOOR

SCALE 1/8" = 1'-0"

Notes:

1. *Supply air duct smoke detector. Install duct smoke detector on the supply duct at an accessible location inside the attic space. See Mechanical plans for the exact location.*
2. *Return air duct smoke detector. Install duct smoke detector on the return duct at an accessible location inside the attic space. See Mechanical plans for the exact location.*
3. *Test switch for supply air duct smoke detector. Provide nameplate on the wall adjacent to the test switch.*
4. *Test switch for return air duct smoke detector. Provide nameplate on the wall adjacent to the test switch.*
5. *Install addressable relay module adjacent to the unit supervised. Addressable relay module shall be installed inside a weatherproof enclosure.*
6. *Supply air duct smoke detector. Install duct smoke detector on the supply duct at an accessible location inside the attic space. See Mechanical plans for the exact location.*
7. *Return air duct smoke detector. Install duct smoke detector on the return duct at an accessible location inside the attic space. See Mechanical plans for the exact location.*

KEY PLAN

THIS DRAWING ACCURATE FOR ELECTRICAL WORK ONLY

	BY	CHECKED
DESIGN	J. S. Sandhu	Jaswinder Gill
DETAILS	Ed D. Tapalla/Dali Zhou	J. S. Sandhu
QUANTITIES	J. S. Sandhu	Jaswinder Gill

STATE OF CALIFORNIA
DEPARTMENT OF TRANSPORTATION

DIVISION OF ENGINEERING SERVICES
ELECTRICAL-MECHANICAL-WATER AND WASTEWATER DESIGN

BRIDGE NO. 33M5785
POST MILE 2.2

SFOBB MAINTENANCE COMPLEX

BUILDING 1B — FIRE ALARM HVAC PLAN 3

SHEET **EE1-6.7**

TAEMWW Imperial Rev. 7/10

ORIGINAL SCALE IN INCHES FOR REDUCED PLANS 0 1 2 3

UNIT 3596
PROJECT NUMBER & PHASE 04120006661
EA 014081

DISREGARD PRINTS BEARING EARLIER REVISION DATES → 10/24/11 3/23/12 5/25/12 5/30/12

REVISION DATES (PRELIMINARY STAGE ONLY) SHEET OF

25-OCT-2012 09:37
ee1_6.07.dgn

DIST.	COUNTY	ROUTE	POST MILES TOTAL PROJECT	SHEET NO.	TOTAL SHEETS
04	Ala	80	2.2	745	800

CALIFORNIA STATE FIRE MARSHAL APPROVED

Approval of this plan does not authorize or approve any omission or deviation from applicable regulations. Final approval is subject to field inspection. One set of approved plans shall be available on the project site at all times.

Reviewed by: JOHN E WOODS, SDSFM

Approval date: 8-22-12

Jaswinder S Sandhu 5-30-12
REGISTERED ELECTRICAL ENGINEER DATE

REGISTERED PROFESSIONAL ENGINEER J.S. SANDHU No. 11803 Exp. 9-30-12 ELEC STATE OF CALIFORNIA

10-22-12
PLANS APPROVAL DATE

The State of California or its officers or agents shall not be responsible for the accuracy or completeness of scanned copies of this plan sheet.

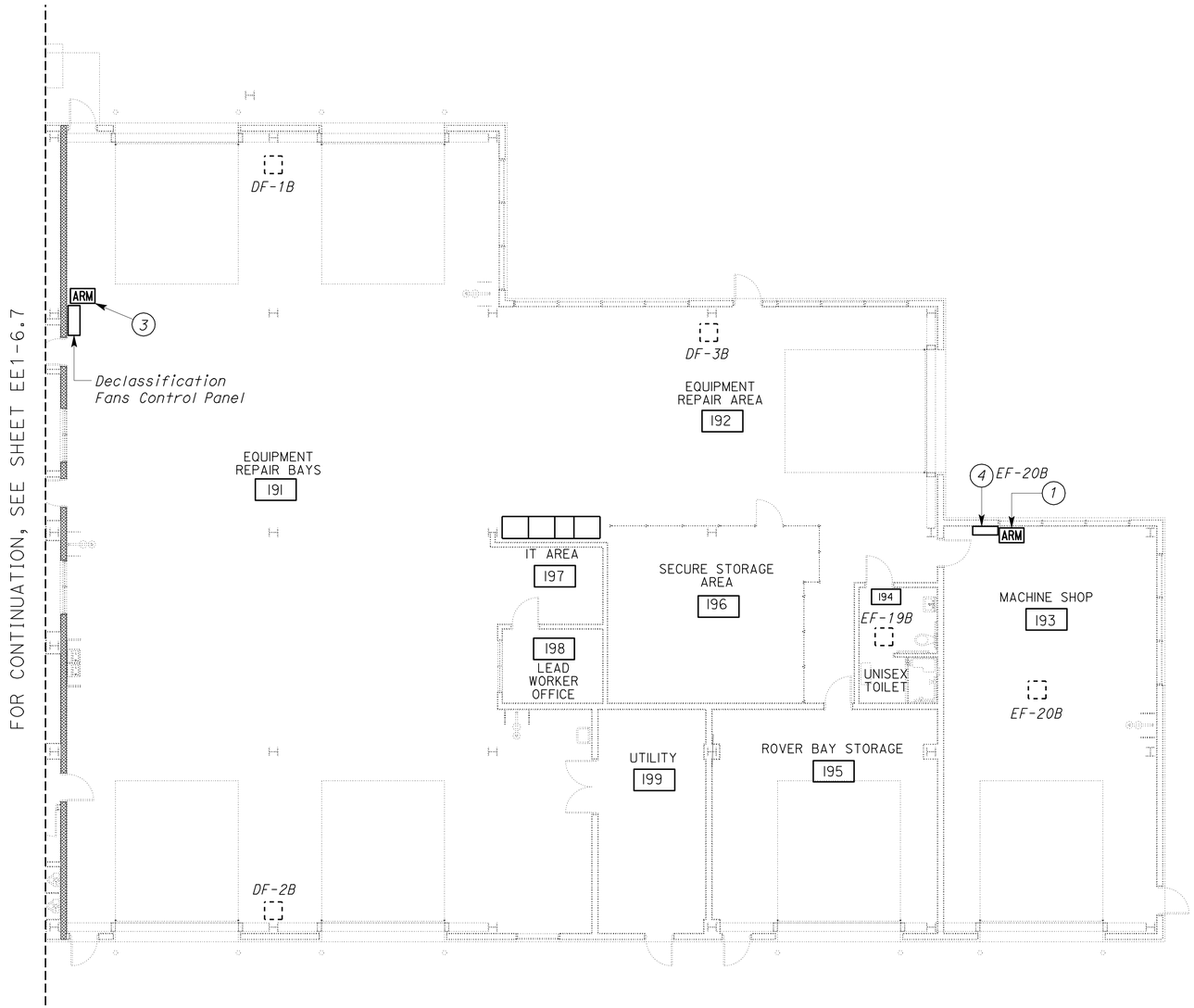

General Notes:

A. *All the fire alarm conduit system shall be homerun to the Fire Alarm Control Panel FACP-1B inside the Fire/Mechanical Room No. 177.*

B. *D/F's and EF's are mounted on rooftop. See Mechanical plans M1-15 for exact location.*

C. *All DF's and EF's shown on this sheet are to be shutdown using Addressable Relay Module mounted adjacent to the Declassification Fan Control Panel and adjacent to the EF's Motor Starters upon detection of fire within the same zone and sends a signal to the FACP-1B.*

D. *For exact location of the Declassification Fan Control Panel and EF's Motor Starters, see HVAC Power plan sheets.*

Notes:

1. *Install addressable relay module adjacent to the EF's Motor Starter controlling the exhaust fan.*
2. *Not used.*
3. *Install addressable relay module adjacent to the Declassification Fan Control Panel. See sheet EE1-9.2 for the schematic.*
4. *EF Combination motor starter. Device label next to the combination starter, indicates the name of the EF controlled by the starter.*

1ST FLOOR

SCALE 1/8" = 1'-0"

KEY PLAN

THIS DRAWING ACCURATE FOR ELECTRICAL WORK ONLY

DESIGN	BY J. S. Sandhu	CHECKED Jaswinder Gill	
DETAILS	BY Ed D. Tapalla/Dali Zhou	CHECKED J. S. Sandhu	
QUANTITIES	BY J. S. Sandhu	CHECKED Jaswinder Gill	

STATE OF CALIFORNIA DEPARTMENT OF TRANSPORTATION

DIVISION OF ENGINEERING SERVICES
ELECTRICAL-MECHANICAL-WATER AND WASTEWATER DESIGN

BRIDGE NO. 33M5785
POST MILE 2.2

SFOBB MAINTENANCE COMPLEX

BUILDING 1B — FIRE ALARM HVAC PLAN 4

SHEET **EE1-6.8**

TAEMWW Imperial Rev. 7/10

ORIGINAL SCALE IN INCHES FOR REDUCED PLANS 0 1 2 3

UNIT 3596
PROJECT NUMBER & PHASE 04120006661
EA 014081

DISREGARD PRINTS BEARING EARLIER REVISION DATES → 10/24/11 3/23/12 5/25/12 5/30/12

REVISION DATES (PRELIMINARY STAGE ONLY) SHEET OF

25-OCT-2012 09:38

ee1_6.08.dgn

DIST.	COUNTY	ROUTE	POST MILES TOTAL PROJECT	SHEET NO.	TOTAL SHEETS
04	Ala	80	2.2	746	800

Javid Amirazodi 5-30-12
REGISTERED ELECTRICAL ENGINEER DATE

REGISTERED PROFESSIONAL ENGINEER J. AMIRAZODI No. 17509 Exp. 6-30-13 ELEC STATE OF CALIFORNIA

10-22-12
PLANS APPROVAL DATE

The State of California or its officers or agents shall not be responsible for the accuracy or completeness of scanned copies of this plan sheet.

CALIFORNIA STATE FIRE MARSHAL APPROVED
Approval of this plan does not authorize or approve any omission or deviation from applicable regulations. Final approval is subject to field inspection. One set of approved plans shall be available on the project site at all times.
Reviewed by: JOHN E WOODS, SDSFM
Approval date: 8-22-12

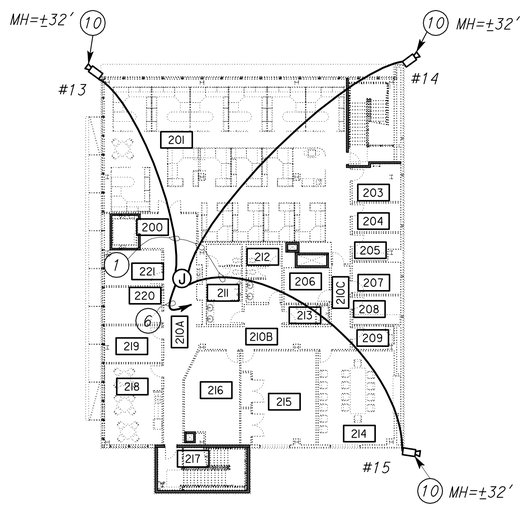

2ND FLOOR

General Notes:

A. *Unless otherwise noted, all conduit homeruns shown on this sheet shall be routed to and stub up in "CCTV designated spaces" either inside Main Communications Room 176 or Communications Room 116.*

B. *Not all junction boxes shown for clarity. Contractor shall provide and install adequate number of junction boxes as required, without additional cost to the State. Junction boxes shall be sized as required to accommodate number of cables inside.*

C. *For CCTV system block diagram, see Detail A on EE1-7.2.*

D. *Within office areas and areas with finished ceiling or furred wall, conduits shall be concealed in ceiling or walls.*

E. *All conduit stub ups shall be 12" above finished floor or 12 below ceiling. Provide conduit bushings on all conduits.*

F. *Submit all pertinent details to the Engineer for approval prior to installation.*

G. *Viewing direction of each camera shall be per Engineer in the field.*

H. *For locations of pole mounted CCTV cameras and details, see EE0-0.1, EE0.0.2, EE0-0.5 and EE0-0.6.*

I. *All base elbows and vertical risers through concrete slab shall be PVC coated rigid steel conduit. Wrap joints in contact with soil with two layers of 20 mil thick pipe wrapping tape.*

J. *All conduits terminated inside outdoor speaker outlets shall be sealed watertight.*

K. *Underground conduits entering the building from outside and within the building shall be installed below the structural primary/intermediate grade beams. For location of structural primary/intermediate grade beams, underground conduits stub up, and penetration details through floor/beams, refer to Structural Plan sheets.*

Notes:

1. *¾"C, 1 video cable.*
2. *¾"C, 1 video cable to CCTV network switch 1.*
3. *¾"C, 2 video cables to CCTV network switch 1.*
4. *1"C, 3 video cables to CCTV network switch 1.*
5. *¾"C, 2 video cables to CCTV network switch 2.*
6. *1"C, 3 video cables to CCTV network switch 2.*
7. *2"C with 1 MMFO cable between CCTV network switch 1 and CCTV network switch 2, terminate as required.*
8. *Ceiling mounted, indoor, fixed, dome camera.*
9. *Wall mounted, indoor, fixed, dome camera.*
10. *Parapet mounted, outdoor, fixed, dome camera.*

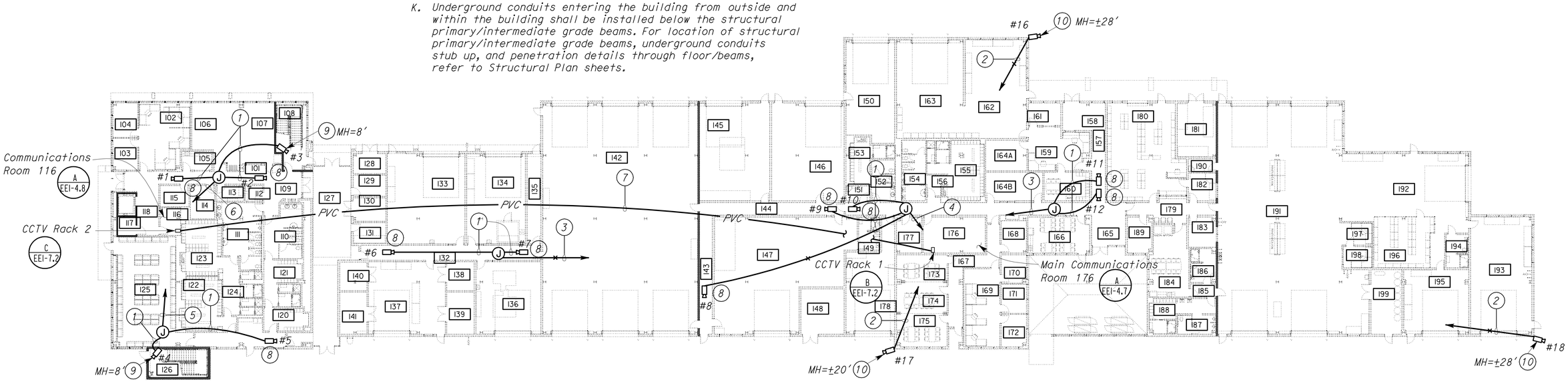

1ST FLOOR

SCALE 1" = 20′-0"

THIS DRAWING ACCURATE FOR ELECTRICAL WORK ONLY

	BY	CHECKED
DESIGN	Javid Amirazodi	J.S. Sandhu/J.R. Lacy
DETAILS	Ed D. Tapalla 10/11	Javid Amirazodi
QUANTITIES	Javid Amirazodi	J.S. Sandhu/J.R. Lacy

STATE OF CALIFORNIA
DEPARTMENT OF TRANSPORTATION

DIVISION OF ENGINEERING SERVICES
ELECTRICAL-MECHANICAL-WATER AND WASTEWATER DESIGN

BRIDGE NO. 33M5785
POST MILE 2.2

SFOBB MAINTENANCE COMPLEX
CCTV SYSTEM PLAN

SHEET **EE1-7.1**

TAEMWW Imperial Rev. 7/10

ORIGINAL SCALE IN INCHES FOR REDUCED PLANS 0 1 2 3

UNIT 3596
PROJECT NUMBER & PHASE 04120006661
EA 014081

DISREGARD PRINTS BEARING EARLIER REVISION DATES → 5/30/12
REVISION DATES (PRELIMINARY STAGE ONLY) SHEET OF

25-OCT-2012 08:38
ee1_7.01.dgn

DIST.	COUNTY	ROUTE	POST MILES TOTAL PROJECT	SHEET NO.	TOTAL SHEETS
04	Ala	80	2.2	747	800

REGISTERED ELECTRICAL ENGINEER — 5-30-12 DATE

REGISTERED PROFESSIONAL ENGINEER J. AMIRAZODI No. 17509 Exp. 6-30-13 ELEC STATE OF CALIFORNIA

10-22-12
PLANS APPROVAL DATE

The State of California or its officers or agents shall not be responsible for the accuracy or completeness of scanned copies of this plan sheet.

CALIFORNIA STATE FIRE MARSHAL APPROVED
Approval of this plan does not authorize or approve any omission or deviation from applicable regulations. Final approval is subject to field inspection. One set of approved plans shall be available on the project site at all times.
Reviewed by: JOHN E WOODS, SDSFM
Approval date: 8-22-12

General Notes:

A. The Contractor shall provide and install NEMA 4X enclosures, power supplies, fiber optic media converters, optical interfaces, pole/wall/parapet/ceiling mounted adaptors and other equipment as required by the CCTV system manufacturer's recommendation and required wiring connections for proper operation of the CCTV system, at no additional cost to the State.

B. Fiber optic cable type and its characteristics shall be per CCTV camera system recommendations.

C. Video cable shall provide Power-over-Ethernet (PoE) to cameras.

D. Submit complete CCTV system layout to the Engineer for approval, prior to installation.

E. CCTV racks, horizontal cable managers, vertical cable managers, cable ladder system and other required rack equipment shall be as specified under Communication Equipment Schedule. For Communication Equipment Schedule, see EE1-4.13 through EE1-4.15.

Notes:

1. ¾"C, 1 video cable.
2. ¾"C, 2 video cables.
3. 1"C, 3 video cables.
4. Conduit/cables between pull box to Communication Vault not shown, See EE0-0.1, EE0-0.2, EE0-0.5 and EE0-0.6 for details.
5. 2"C, 1 MMFO cable.
6. Fiber Media Converter is not shown for clarity.

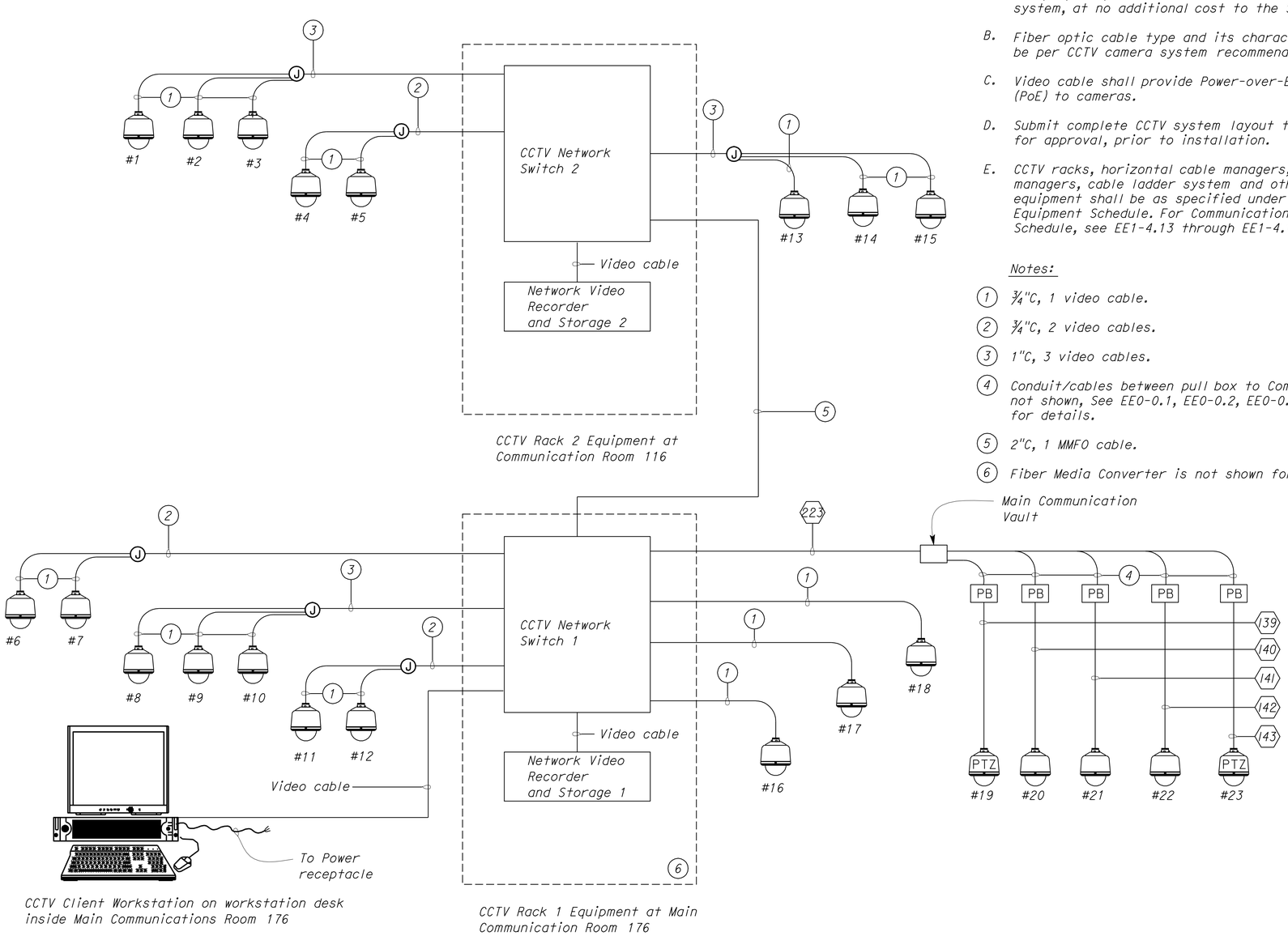

A CCTV SYSTEM BLOCK DIAGRAM

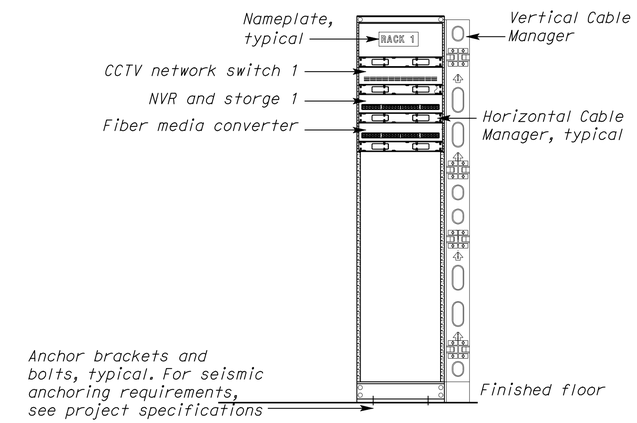

B CCTV RACK 1 DETAIL
MAIN COMMUNICATIONS ROOM 176

NO SCALE
Cable ladders are not shown for clarity

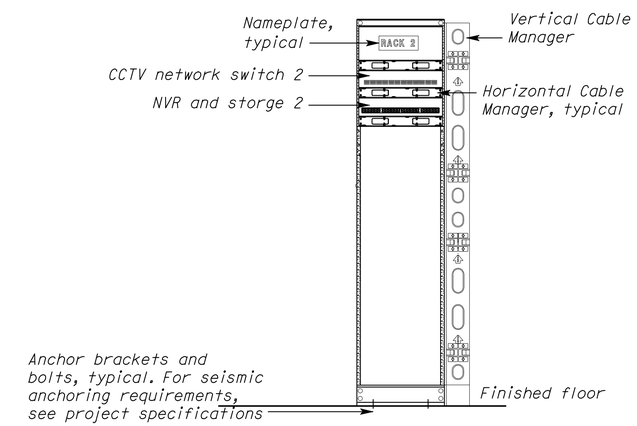

C CCTV RACK 2 DETAIL
COMMUNICATIONS ROOM 116

NO SCALE
Cable ladders are not shown for clarity

THIS DRAWING ACCURATE FOR ELECTRICAL WORK ONLY

	BY	CHECKED
DESIGN	Javid Amirazodi	J.S. Sandhu/J.R. Lacy
DETAILS	Javid Amirazodi	James R. Lacy
QUANTITIES	Javid Amirazodi	J.S. Sandhu/J.R. Lacy

STATE OF CALIFORNIA
DEPARTMENT OF TRANSPORTATION

DIVISION OF ENGINEERING SERVICES
ELECTRICAL-MECHANICAL-WATER AND WASTEWATER DESIGN

BRIDGE NO. 33M5785
POST MILE 2.2

SFOBB MAINTENANCE COMPLEX
CCTV SYSTEM BLOCK DIAGRAM AND RACK DETAILS

SHEET EE1-7.2

TAEMWW Imperial Rev. 7/10

ORIGINAL SCALE IN INCHES FOR REDUCED PLANS 0 1 2 3

UNIT 3596
PROJECT NUMBER & PHASE 04120006661
EA 014081

DISREGARD PRINTS BEARING EARLIER REVISION DATES → 5/30/12
REVISION DATES (PRELIMINARY STAGE ONLY) SHEET OF

25-OCT-2012 09:38
ee1_7.02.dgn

DIST.	COUNTY	ROUTE	POST MILES TOTAL PROJECT	SHEET NO.	TOTAL SHEETS
04	Ala	80	2.2	748	800

Javid Amirazodi 5-30-12
REGISTERED ELECTRICAL ENGINEER DATE

REGISTERED PROFESSIONAL ENGINEER J. AMIRAZODI No. 17509 Exp. 6-30-13 ELEC STATE OF CALIFORNIA

10-22-12
PLANS APPROVAL DATE

The State of California or its officers or agents shall not be responsible for the accuracy or completeness of scanned copies of this plan sheet.

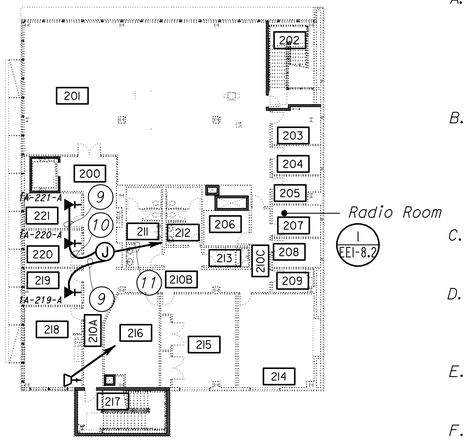

2ND FLOOR

K. All base elbows and vertical risers through concrete slab shall be PVC coated rigid steel conduit. Wrap joints in contact with soil with two layers of 20 mil thick pipe wrapping tape.

L. Unless otherwise noted, all conduit homeruns shown on this sheet shall be routed to and stub up in Radio Room 207, next to radio rack wall. All conduit stub ups shall be 12" above finished floor or 12 below ceiling. Provide conduit bushings on all conduits.

General Notes:

A. All radio cables from radio outlets shown on this plan sheet shall be routed to Radio Rack 1 in Radio Room 207 without splices. Terminate radio cables on radio patch panel and as directed by Caltrans Radio system personnel. Contractor shall provide connectors and additional equipment for proper termination

B. All speaker cables from speaker outlets shown on this plan sheet shall be routed to Radio Rack 1 in Radio Room 207 without splices. Provide 20 feet of additional length for each speaker cable inside Radio Room 207 for future termination.

C. Unless otherwise noted, all conduit shown on this plan sheet shall be ¾"C with one speaker cable.

D. All radio outlets shall be mounted at the same height as communication (telephone) outlets. For radio outlet face plate detail, see Detail 1 this sheet.

E. Outdoor speaker outlet mounting height shall be 10' and indoor speaker outlet mounting height shall be 8' above finished floor.

F. Within office areas and areas with finished ceiling or furred wall, conduits shall be concealed in ceiling or walls.

G. Not all junction boxes shown for clarity. Contractor shall provide and install adequate number of junction boxes as required, without additional cost to the State. Junction boxes shall be sized as required to accommodate number of cables inside.

H. Speaker outlets shall be 18 gauge cold rolled steel and undercoated to prevent resonance.

I. All conduit stub ups shall be 12" above finished floor or 12" below ceiling. Provide conduit bushings on all conduits.

J. Underground conduits entering the building from outside and within the building shall be installed below the structural primary/intermediate grade beams. For location of structural primary/intermediate grade beams, underground conduits stub up, and penetration details through floor/beams refer to Structural Plan sheets.

Notes:

1. 3/4 "C, 2 speaker cables.
2. 1"C, 4 speaker cables.
3. 1"C, 5 speaker cables.
4. 1 1/2 "C, 7 speaker cables.
5. 1 1/2 "C, 11 speaker cables.
6. 2"C, 13 speaker cables.
7. Not used.
8. 2"C, 15 speaker cables.
9. 3/4 "C, 2 radio cables.
10. 1"C, 4 radio cables.
11. 1"C, 6 radio cables.
12. 1 1/2 "C, 8 radio cables.
13. 2"C, 20 radio cables.
14. Route conduit exposed over Room 131 general area and then level with trellis to designated space for conduit transition in Radio Room207. See Detail A on EE1-8.2 for conduit transition designated area. Paint exposed portion of conduit over trellis to match trellis.
15. 3"C, MT, from designated space for communication racks in room 176 to designated space for radio racks in room 207.

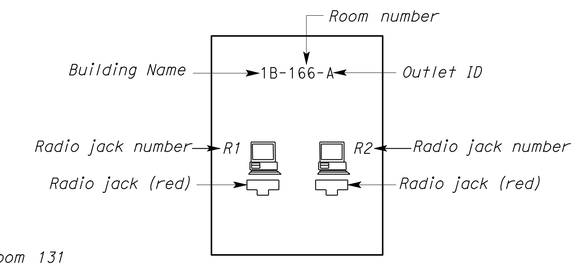

RADIO OUTLET FACE PLATE DETAIL

1

NO SCALE

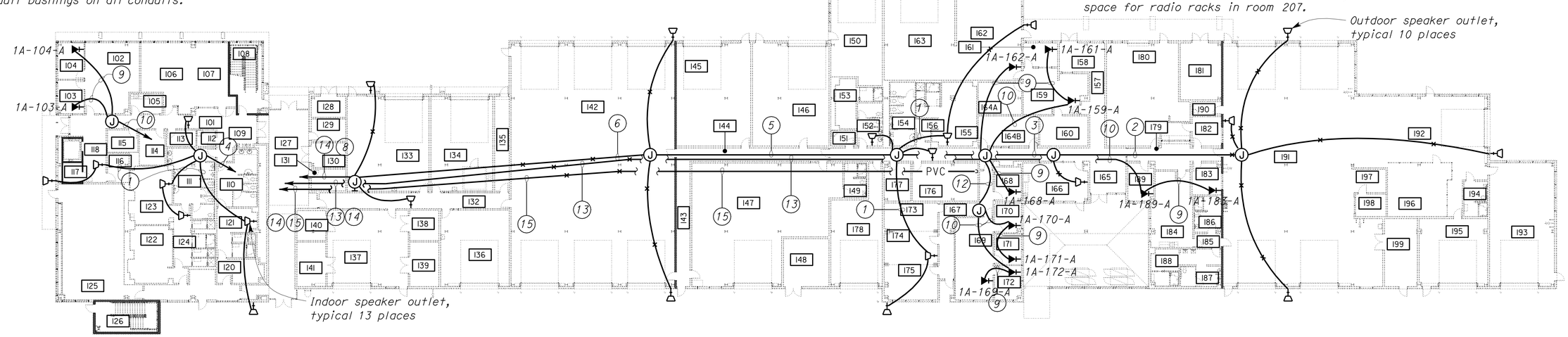

1ST FLOOR

SCALE 1" = 20'-0"

CALIFORNIA STATE FIRE MARSHAL APPROVED
Approval of this plan does not authorize or approve any omission or deviation from applicable regulations. Final approval is subject to field inspection. One set of approved plans shall be available on the project site at all times.
Reviewed by: JOHN E WOODS, SDSFM
Approval date: 8-22-12

THIS DRAWING ACCURATE FOR ELECTRICAL WORK ONLY

	BY	CHECKED
DESIGN	Javid Amirazodi	J.S. Sandhu/J.R. Lacy
DETAILS	Dali Zhou	Javid Amirazodi
QUANTITIES	Javid Amirazodi	J.S. Sandhu/J.R. Lacy

STATE OF CALIFORNIA DEPARTMENT OF TRANSPORTATION

DIVISION OF ENGINEERING SERVICES ELECTRICAL-MECHANICAL-WATER AND WASTEWATER DESIGN

BRIDGE NO. 33M5785
POST MILE 2.2

SFOBB MAINTENANCE COMPLEX

RADIO COMMUNICATION PLAN

SHEET EE1-8.1

TAEMWW Imperial Rev. 7/10

ORIGINAL SCALE IN INCHES FOR REDUCED PLANS 0 1 2 3

UNIT 3596
PROJECT NUMBER & PHASE 04120006661
EA 014081

DISREGARD PRINTS BEARING EARLIER REVISION DATES → 5/30/12

REVISION DATES (PRELIMINARY STAGE ONLY) SHEET OF

25-OCT-2012 09:38

ee1_8.01.dgn

DIST.	COUNTY	ROUTE	POST MILES TOTAL PROJECT	SHEET NO.	TOTAL SHEETS
04	Ala	80	2.2	749	800

CALIFORNIA STATE FIRE MARSHAL APPROVED
Approval of this plan does not authorize or approve any omission or deviation from applicable regulations. Final approval is subject to field inspection. One set of approved plans shall be available on the project site at all times.
Reviewed by: JOHN E WOODS, SDSFM
Approval date: 8-22-12

Javid Amirazodi 5-30-12
REGISTERED ELECTRICAL ENGINEER DATE

REGISTERED PROFESSIONAL ENGINEER J. AMIRAZODI No. 17509 Exp. 6-30-13 ELEC STATE OF CALIFORNIA

10-22-12
PLANS APPROVAL DATE

The State of California or its officers or agents shall not be responsible for the accuracy or completeness of scanned copies of this plan sheet.

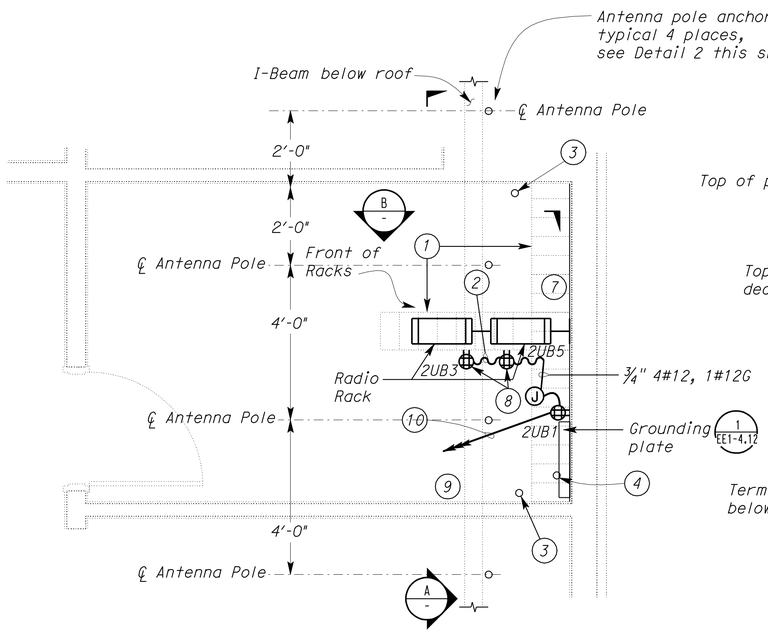

1 RADIO ROOM 207

SCALE ½" = 1'-0"

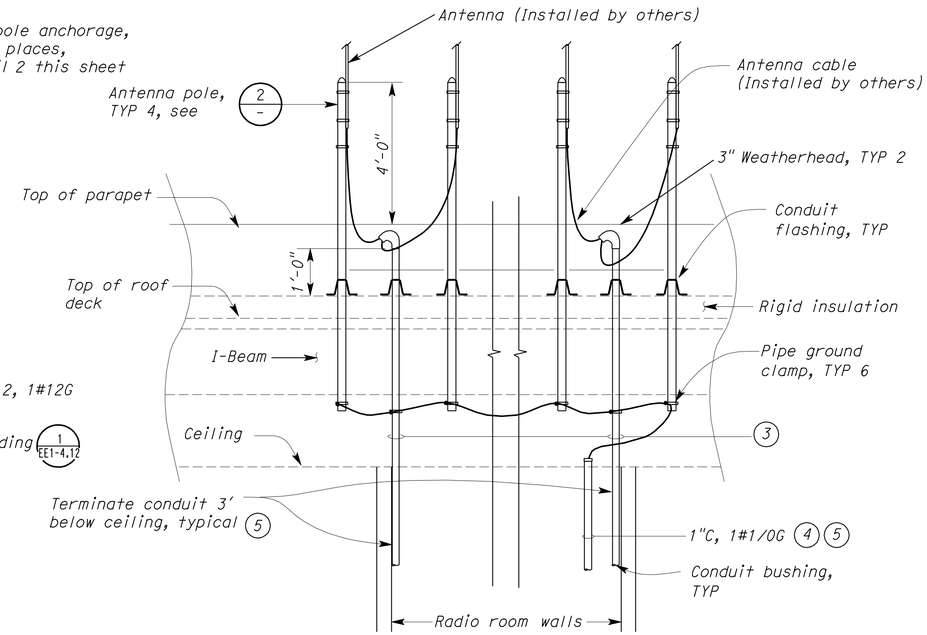

A ELEVATION

NO SCALE

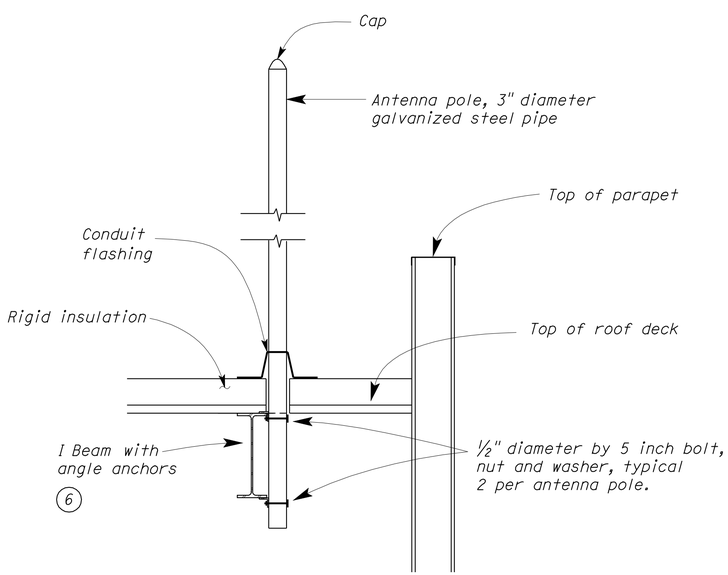

2 ANTENNA POLE ANCHORAGE

NO SCALE

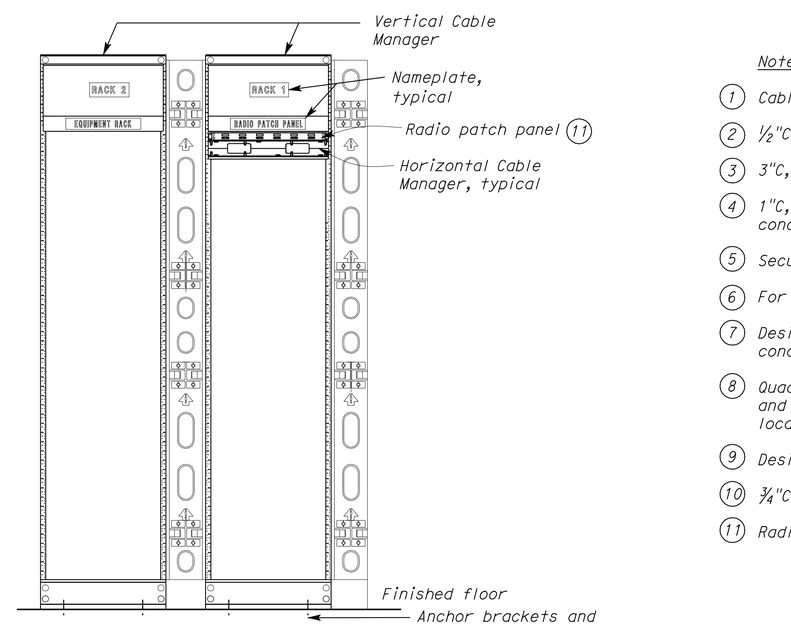

B ELEVATION

NO SCALE

Cable ladders are not shown for clarity

General Notes:

A. All radio cables shall be bundled by utilizing hook and loop straps and shall be bundled in a manner to maintain a consistent pattern over the entire length of the data cables run.

B. All speaker cables shall be bundled by utilizing hook and loop straps and shall be bundled in a manner to maintain a consistent pattern over the entire length of the speaker cables run.

C. Ground racks to grounding plate with 1#6 copper conductor.

D. All radio cables shall be identified with label at both ends of the cable with pre-printed, heat shrinkable type marker. Each marker shall be placed at an easily accessible location somewhere between 6-12 inches from each end of the cable. The cable identification marker shall adhere to the following convention:
Radio cable (red cable) 1B-166-1A to indicates Building 1B, Room number 166 and radio cable number 1 at outlet A.

E. Radio racks, horizontal cable managers, vertical cable managers, cable ladder system and other required rack equipment shall be as specified under Communication Equipment Schedule. For Communication Equipment Schedule, see EE1-4.13 through, EE1-4.15.

Notes:

1. Cable ladder.
2. ½"C, 2#12, 1#12G.
3. 3"C, MT, pull rope thru roof to weatherhead (for radio antenna cables).
4. 1"C, 1#1/0 bond to antenna poles and 3" conduits going to weatherheads. Bond conductor to grounding plate inside Radio Room.
5. Secure conduit to plywood at a minimum of two locations.
6. For additional information, see Structural plan sheets.
7. Designated space for Radio Racks and overhead/underground conduit/cable system.
8. Quad outlet shall be located behind and above the rack and mounted to the side of the cable ladder. Exact location to be directed by the Engineer.
9. Designated space for conduit transition from Building 1A to Building 1B.
10. ¾"C, 6#12, 1#12G to Panel 2UB inside Communications Room 116.
11. Radio patch panel shall be Panduit DP48688TGY, Leviton 69586-U48, or equal.

THIS DRAWING ACCURATE FOR ELECTRICAL WORK ONLY

	BY	CHECKED
DESIGN	Javid Amirazodi	J.S. Sandhu/J.R. Lacy
DETAILS	Ed D. Tapalla 10/11	Javid Amirazodi
QUANTITIES	Javid Amirazodi	J.S. Sandhu/J.R. Lacy

STATE OF CALIFORNIA DEPARTMENT OF TRANSPORTATION

DIVISION OF ENGINEERING SERVICES ELECTRICAL-MECHANICAL-WATER AND WASTEWATER DESIGN

BRIDGE NO. 33M5785
POST MILE 2.2

SFOBB MAINTENANCE COMPLEX
RADIO COMMUNICATIONS DETAILS

SHEET EE1-8.2

TAEMWW Imperial Rev. 7/10

ORIGINAL SCALE IN INCHES FOR REDUCED PLANS 0 1 2 3

UNIT 3596
PROJECT NUMBER & PHASE 04120006661
EA 014081

DISREGARD PRINTS BEARING EARLIER REVISION DATES → 5/30/12
REVISION DATES (PRELIMINARY STAGE ONLY) SHEET OF

25-OCT-2012 09:38
ee1_8.02.dgn

DIST.	COUNTY	ROUTE	POST MILES TOTAL PROJECT	SHEET NO.	TOTAL SHEETS
04	Ala	80	2.2	750	800

Catalino A. Enriquez 5-30-12
REGISTERED ELECTRICAL ENGINEER DATE

REGISTERED PROFESSIONAL ENGINEER C. ENRIQUEZ No. 16944 Exp. 6-30-13 ELEC STATE OF CALIFORNIA

10-22-12
PLANS APPROVAL DATE

The State of California or its officers or agents shall not be responsible for the accuracy or completeness of scanned copies of this plan sheet.

CALIFORNIA STATE FIRE MARSHAL APPROVED

Approval of this plan does not authorize or approve any omission or deviation from applicable regulations. Final approval is subject to field inspection. One set of approved plans shall be available on the project site at all times.

Reviewed by: JOHN E WOODS, SDSFM

Approval date: 8-22-12

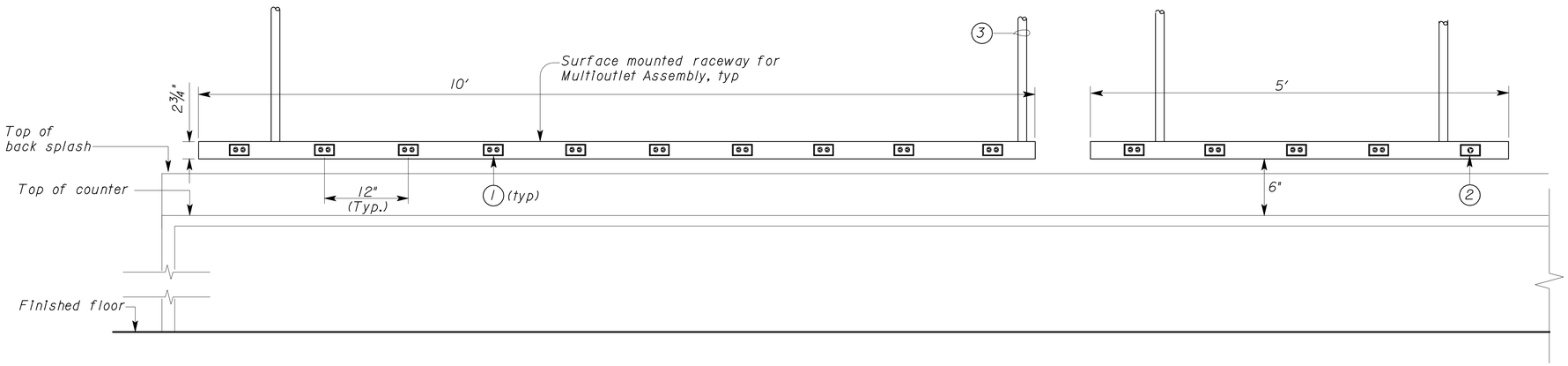

ELEVATION

NO SCALE

General Note :

For Island workbench installation, mount multi-outlet assembly on steel back.

Notes:

1. *Duplex receptacle outlet.*
2. *Single receptacle outlet*
3. *Conduit system as required see plans. Route conduit to clear window as required, typical.*

MULTI-OUTLET ASSEMBLY SCHEDULE

TYPE	NUMBER OF CIRCUITS	LENGTH	NUMBER OF DEVICES	NUMBER OF DP	NUMBER OF MIS DP	NUMBER OF SP	SEQUENCE OF DEVICES * * (LEFT TO RIGHT)
B1	TWO 120 V, 20 A EACH	10 FT	10	10	0	0	DP, DP, DP, DP, DP, DP, DP, DP, DP, DP
B2	TWO 120 V, 20 A EACH	10 FT	10	9	1	0	DP, DP, DP, DP, MIS DP, DP, DP, DP, DP, DP
B3	ONE 120 V, 20 A	5 FT	5	5	0	0	DP, DP, DP, DP, DP
B4	ONE 120 V, 20 A	5 FT	5	4	1	0	DP, DP, MIS DP, DP, DP
B5	ONE 120 V, 20 A; AND ONE 240 V, 20 A	5 FT	5	4	0	1 (240 V, NEMA L6-20R)	DP, DP, DP, DP, SP (240 V)

SP = SINGLE RECEPTACLE OUTLET (DEDICATED CIRCUIT)

** ALTERNATE POWER CONNECTION OF DUPLEX RECEPTACLES WHERE TWO 120 VOLT CIRCUITS ARE AVAILABLE.

THIS DRAWING ACCURATE FOR ELECTRICAL WORK ONLY

	BY	CHECKED
DESIGN	Catalino Enriquez	J.S.S./H.Abdelsayed
DETAILS	Catalino Enriquez	J. S. Sandhu
QUANTITIES	Catalino Enriquez	J.S.S./H.Abdelsayed

STATE OF CALIFORNIA DEPARTMENT OF TRANSPORTATION

DIVISION OF ENGINEERING SERVICES
ELECTRICAL-MECHANICAL-WATER AND WASTEWATER DESIGN

BRIDGE NO. 33M5785
POST MILE 2.2

SFOBB MAINTENANCE COMPLEX

MULTI-OUTLET ASSEMBLY DETAILS

SHEET **EE1-9.1**

TAEMWW Imperial Rev. 7/10

ORIGINAL SCALE IN INCHES FOR REDUCED PLANS 0 1 2 3

UNIT 3596
PROJECT NUMBER & PHASE 04120006661
EA 014081

DISREGARD PRINTS BEARING EARLIER REVISION DATES → 2/09/12 3/19/12 5/30/12

REVISION DATES (PRELIMINARY STAGE ONLY) SHEET OF

25-OCT-2012 09:38

ee1_9.01.dgn

DIST.	COUNTY	ROUTE	POST MILES TOTAL PROJECT	SHEET NO.	TOTAL SHEETS
04	Ala	80	2.2	751	800

Catalino A. Enriquez 5-30-12
REGISTERED ELECTRICAL ENGINEER DATE

REGISTERED PROFESSIONAL ENGINEER C. ENRIQUEZ No. 16944 Exp. 6-30-13 ELEC STATE OF CALIFORNIA

10-22-12
PLANS APPROVAL DATE

The State of California or its officers or agents shall not be responsible for the accuracy or completeness of scanned copies of this plan sheet.

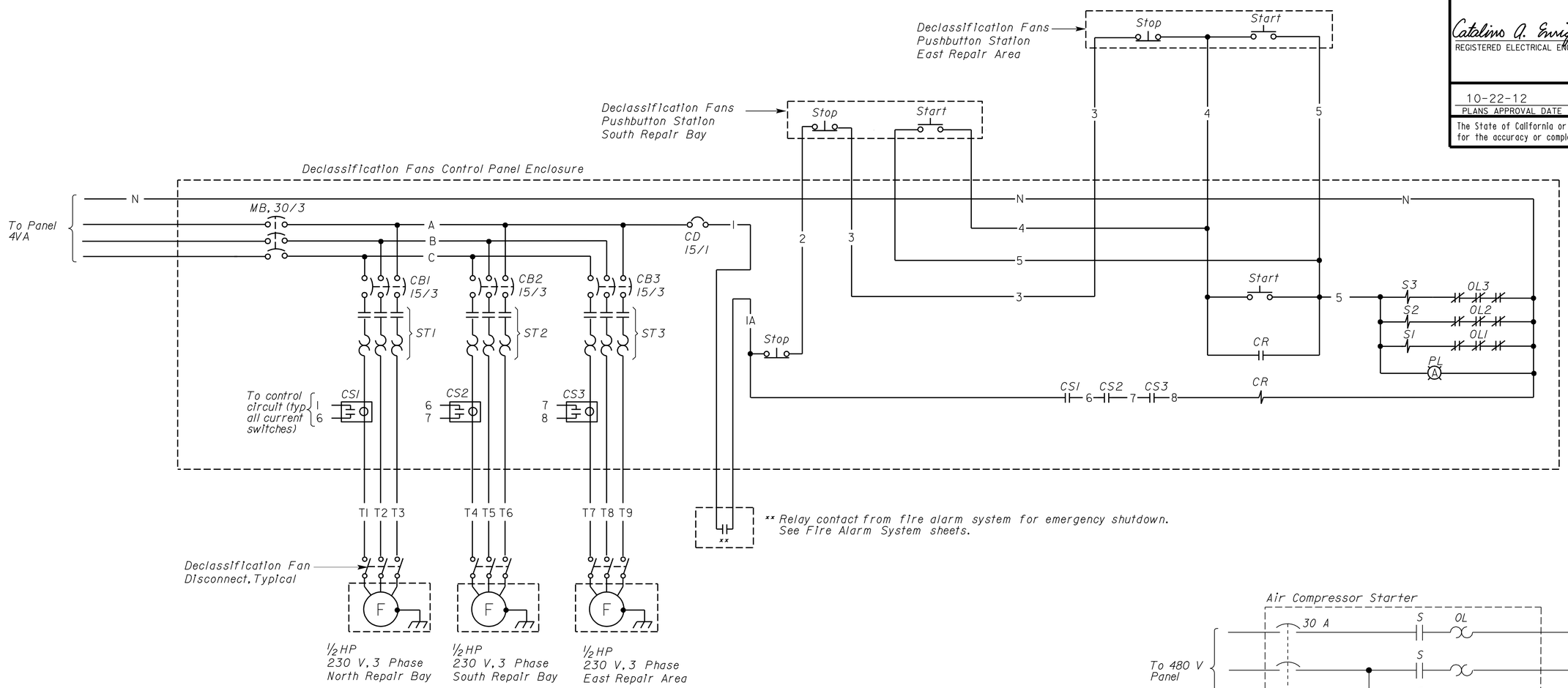

CALIFORNIA STATE FIRE MARSHAL APPROVED

Approval of this plan does not authorize or approve any omission or deviation from applicable regulations. Final approval is subject to Field Inspection. One set of approved plans shall be available on the project site at all times.

Reviewed by: JOHN E WOODS, SDSFM

Approval date: 8-22-12

1 DECLASSIFICATION FANS SCHEMATIC DIAGRAM

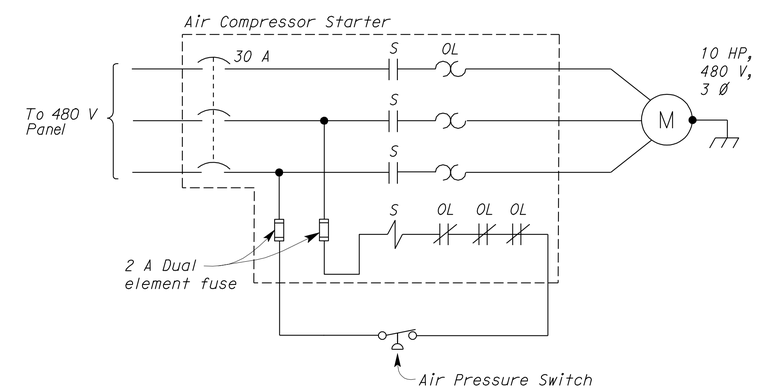

2 AIR COMPRESSOR SCHEMATIC DIAGRAM

	BY	CHECKED
DESIGN	Catalino Enriquez	J.S.S./H.Abdelsayed
DETAILS	Dali Zhou	Catalino Enriquez
QUANTITIES	Catalino Enriquez	J.S.S./H.Abdelsayed

STATE OF CALIFORNIA DEPARTMENT OF TRANSPORTATION

DIVISION OF ENGINEERING SERVICES ELECTRICAL-MECHANICAL-WATER AND WASTEWATER DESIGN

BRIDGE NO. 33M5785
POST MILE 2.2

SFOBB MAINTENANCE COMPLEX

SCHEMATIC DIAGRAM

SHEET **EE1-9.2**

TAEMWW Imperial Rev. 7/10

ORIGINAL SCALE IN INCHES FOR REDUCED PLANS 0 1 2 3

UNIT 3596
PROJECT NUMBER & PHASE 04120006661
EA 014081

DISREGARD PRINTS BEARING EARLIER REVISION DATES → 2/28/12 5/19/12 5/30/12

REVISION DATES (PRELIMINARY STAGE ONLY) SHEET OF

25-OCT-2012 09:39

ee1_9.02.dgn

DIST.	COUNTY	ROUTE	POST MILES TOTAL PROJECT	SHEET NO.	TOTAL SHEETS
04	Ala	80	2.2	752	800

REGISTERED ELECTRICAL ENGINEER — 5-30-12 DATE

REGISTERED PROFESSIONAL ENGINEER J. ABDELSAYED No. 18915 Exp. 12-31-13 ELEC STATE OF CALIFORNIA

10-22-12
PLANS APPROVAL DATE

The State of California or its officers or agents shall not be responsible for the accuracy or completeness of scanned copies of this plan sheet.

CALIFORNIA STATE FIRE MARSHAL APPROVED
Approval of this plan does not authorize or approve any omission or deviation from applicable regulations. Final approval is subject to field inspection. One set of approved plans shall be available on the project site at all times.
Reviewed by: JOHN E WOODS, SDSFM
Approval date: 8-22-12

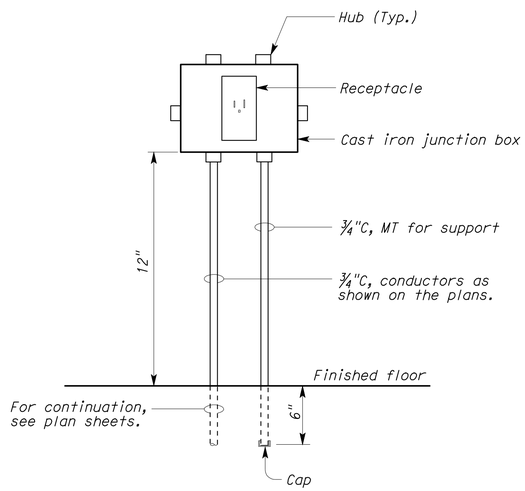

A RECEPTACLE DETAIL
NO SCALE

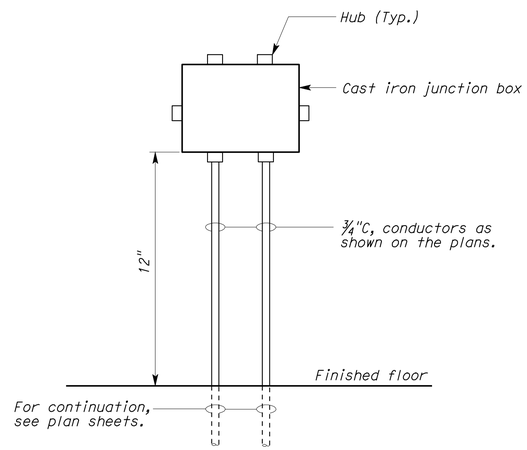

B JUNCTION BOX DETAIL
NO SCALE

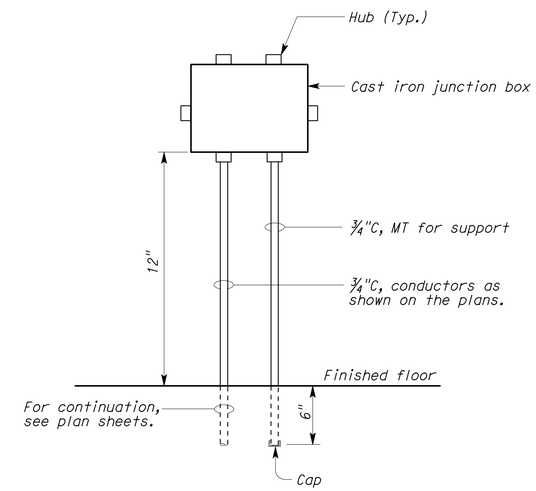

C JUNCTION BOX DETAIL
NO SCALE

THIS DRAWING ACCURATE FOR ELECTRICAL WORK ONLY

DESIGN	BY Joseph Abdelsayed	CHECKED J. S. Sandhu
DETAILS	BY Ed Tapalla/Dali Zhou	CHECKED Joseph Abdelsayed
QUANTITIES	BY Joseph Abdelsayed	CHECKED J. S. Sandhu

STATE OF CALIFORNIA DEPARTMENT OF TRANSPORTATION

DIVISION OF ENGINEERING SERVICES
ELECTRICAL-MECHANICAL-WATER AND WASTEWATER DESIGN

BRIDGE NO. 33M5785
POST MILE 2.2

SFOBB MAINTENANCE COMPLEX
ELEVATIONS AND DETAILS

SHEET **EE1-9.3**

TAEMWW Imperial Rev. 7/10

ORIGINAL SCALE IN INCHES FOR REDUCED PLANS 0 1 2 3

UNIT 3596
PROJECT NUMBER & PHASE 04120006661
EA 014081

DISREGARD PRINTS BEARING EARLIER REVISION DATES → 2/20/12 5/30/12
REVISION DATES (PRELIMINARY STAGE ONLY) SHEET OF

25-OCT-2012 09:39
ee1_9.03.dgn

DIST.	COUNTY	ROUTE	POST MILES TOTAL PROJECT	SHEET NO.	TOTAL SHEETS
04	Ala	80	2.2	753	800

REGISTERED ELECTRICAL ENGINEER — DATE 5-30-12

REGISTERED PROFESSIONAL ENGINEER C. ENRIQUEZ No. 16944 Exp. 6-30-13 ELEC STATE OF CALIFORNIA

10-22-12
PLANS APPROVAL DATE

The State of California or its officers or agents shall not be responsible for the accuracy or completeness of scanned copies of this plan sheet.

CALIFORNIA STATE FIRE MARSHAL APPROVED

Approval of this plan does not authorize or approve any omission or deviation from applicable regulations. Final approval is subject to field inspection. One set of approved plans shall be available on the project site at all times.

Reviewed by: JOHN E WOODS, SDSFM

Approval date: 8-22-12

General Note:

Neutral and ungrounded conductors are not shown.

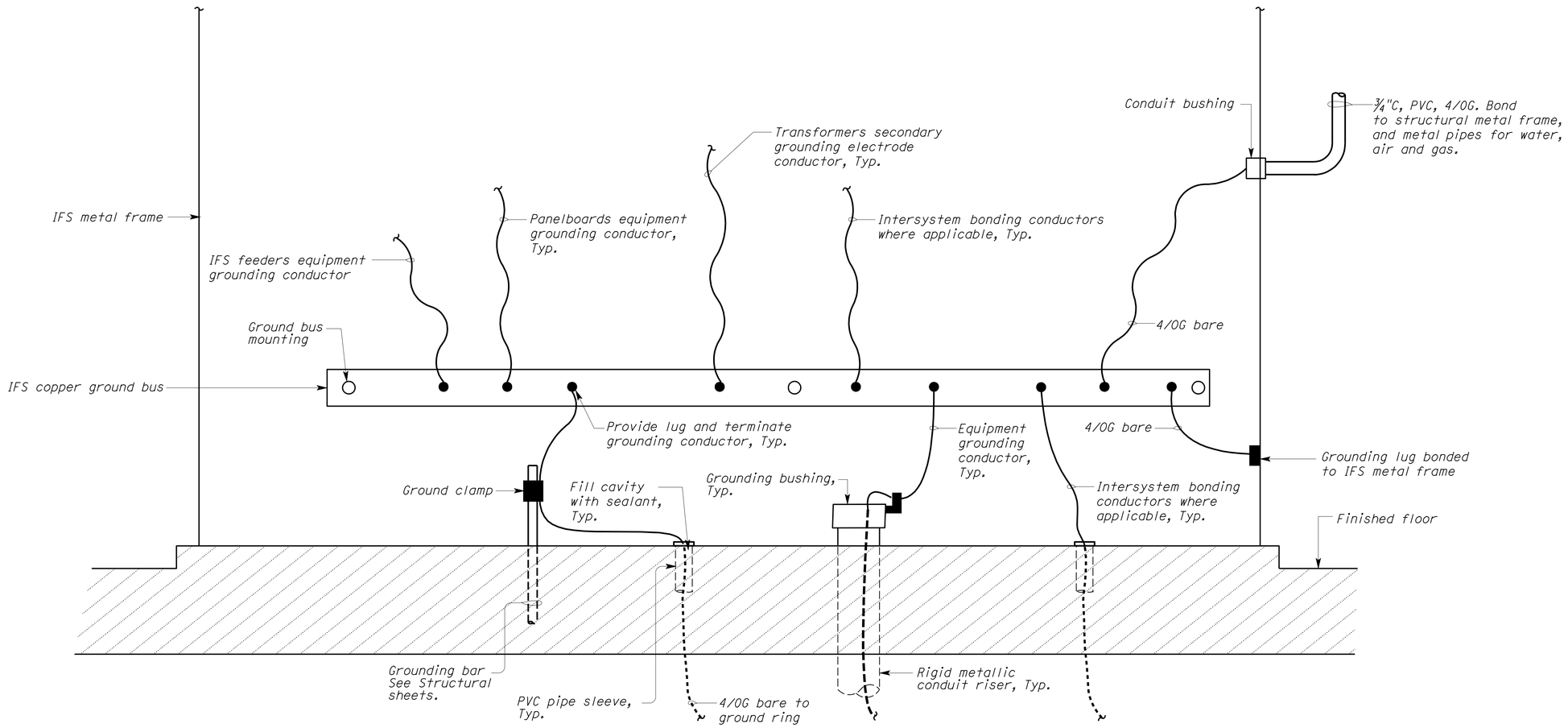

THIS DRAWING ACCURATE FOR ELECTRICAL WORK ONLY

	BY	CHECKED
DESIGN	Catalino Enriquez	J.S.S./H.Abdelsayed
DETAILS	Dali Zhou	J. S. Sandhu
QUANTITIES	Catalino Enriquez	J.S.S./H.Abdelsayed

STATE OF CALIFORNIA
DEPARTMENT OF TRANSPORTATION

DIVISION OF ENGINEERING SERVICES
ELECTRICAL-MECHANICAL-WATER AND WASTEWATER DESIGN

BRIDGE NO. 33M5785
POST MILE 2.2

SFOBB MAINTENANCE COMPLEX

TYPICAL IFS GROUNDING

SHEET **EE1-9.4**

TAEMWW Imperial Rev. 7/10

ORIGINAL SCALE IN INCHES FOR REDUCED PLANS 0 1 2 3

UNIT 3596
PROJECT NUMBER & PHASE 04120006661
EA 014081

DISREGARD PRINTS BEARING EARLIER REVISION DATES → 6/25/12 5/29/12 5/30/12

REVISION DATES (PRELIMINARY STAGE ONLY) SHEET OF

ee1_9.04.dgn

25-OCT-2012 09:39

DIST.	COUNTY	ROUTE	POST MILES TOTAL PROJECT	SHEET NO.	TOTAL SHEETS
04	Ala	80	2.2	754	800

CALIFORNIA STATE FIRE MARSHAL APPROVED
Approval of this plan does not authorize or approve any omission or deviation from applicable regulations. Final approval is subject to field inspection. One set of approved plans shall be available on the project site at all times.
Reviewed by: JOHN E WOODS, SDSFM
Approval date: 8-22-12

Catalino A. Enriquez 5-30-12
REGISTERED ELECTRICAL ENGINEER DATE

REGISTERED PROFESSIONAL ENGINEER C. ENRIQUEZ No. 16944 Exp. 6-30-13 ELEC STATE OF CALIFORNIA

10-22-12
PLANS APPROVAL DATE

The State of California or its officers or agents shall not be responsible for the accuracy or completeness of scanned copies of this plan sheet.

* NEMA Size 1

** Solid state electronic overload relay trip setting shall be adjustable between 4 to 20 amperes.

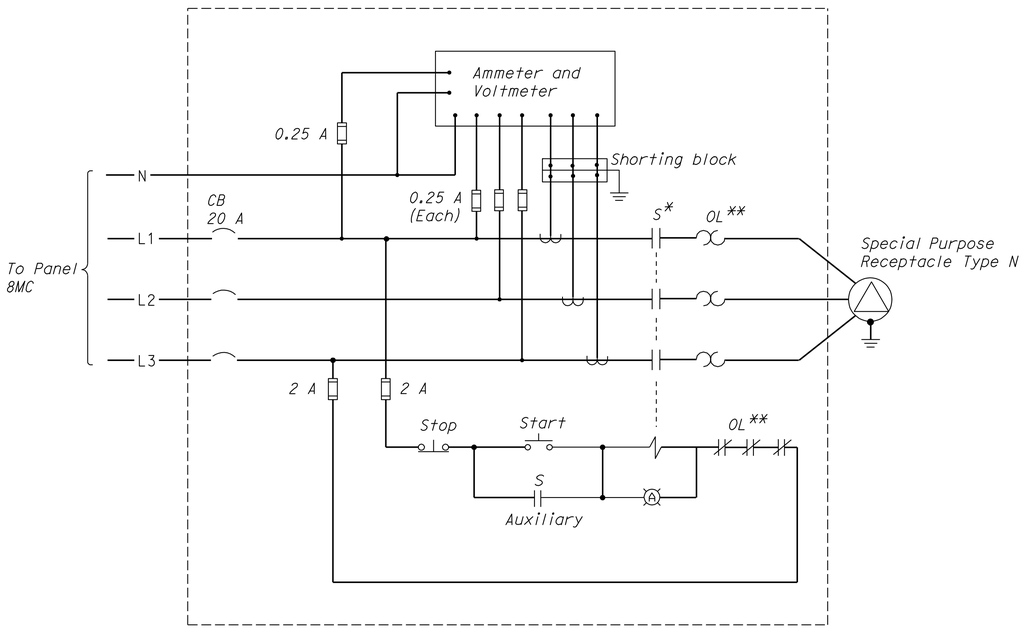

1 480-VOLT TEST MOTOR CONTROLLER

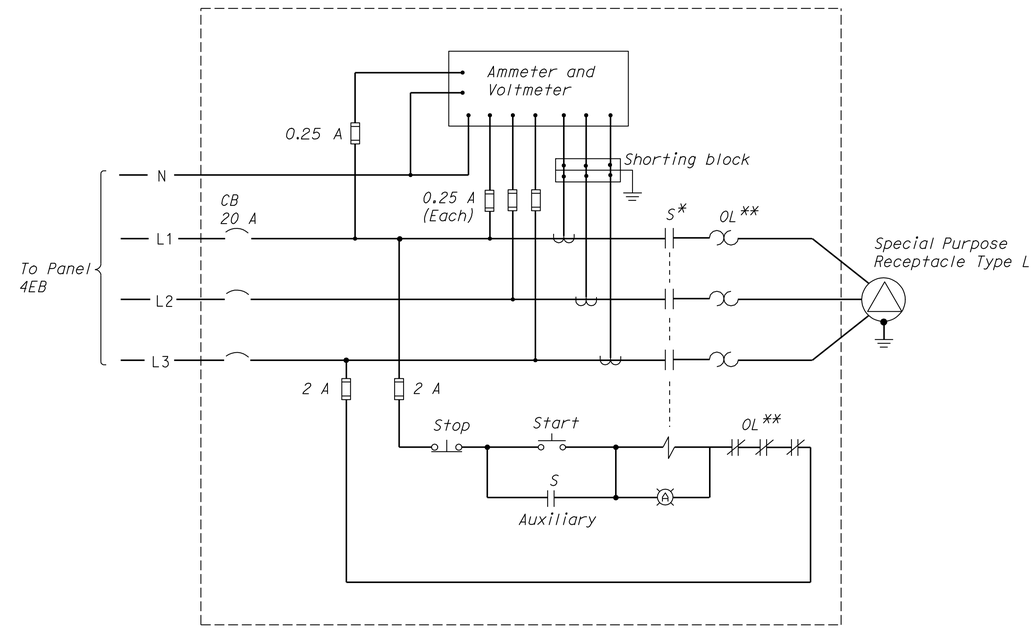

2 240-VOLT TEST MOTOR CONTROLLER

SCHEMATIC DIAGRAM

	BY	CHECKED
DESIGN	Catalino Enriquez	J.S.S./H.Abdelsayed
DETAILS	Catalino Enriquez	J. S. Sandhu
QUANTITIES	Catalino Enriquez	J.S.S./H.Abdelsayed

STATE OF CALIFORNIA
DEPARTMENT OF TRANSPORTATION

DIVISION OF ENGINEERING SERVICES
ELECTRICAL-MECHANICAL-WATER AND WASTEWATER DESIGN

BRIDGE NO. 33M5785
POST MILE 2.2

SFOBB MAINTENANCE COMPLEX
MOTOR TESTING DIAGRAM

SHEET EE1-9.5

TAEMWW Imperial Rev. 7/10

ORIGINAL SCALE IN INCHES FOR REDUCED PLANS 0 1 2 3

UNIT 3596
PROJECT NUMBER & PHASE 04120006661
EA 014081

DISREGARD PRINTS BEARING EARLIER REVISION DATES → 2/20/12 3/14/12 5/30/12

REVISION DATES (PRELIMINARY STAGE ONLY) SHEET OF

25-OCT-2012 09:39
ee1_9.05.dgn

DIST.	COUNTY	ROUTE	POST MILES TOTAL PROJECT	SHEET NO.	TOTAL SHEETS
04	Ala	80	2.2	755	800

REGISTERED ELECTRICAL ENGINEER — 5-30-12 DATE

REGISTERED PROFESSIONAL ENGINEER J. ABDELSAYED No. 18915 Exp. 12-31-13 ELEC STATE OF CALIFORNIA

10-22-12
PLANS APPROVAL DATE

The State of California or its officers or agents shall not be responsible for the accuracy or completeness of scanned copies of this plan sheet.

CALIFORNIA STATE FIRE MARSHAL APPROVED
Approval of this plan does not authorize or approve any omission or deviation from applicable regulations. Final approval is subject to field inspection. One set of approved plans shall be available on the project site at all times.
Reviewed by: JOHN E WOODS, SDSFM
Approval date: 8-22-12

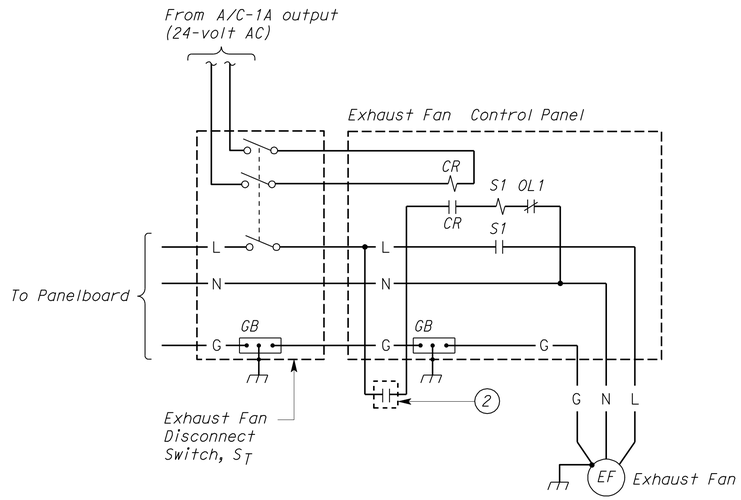

1 EXHAUST FAN CONTROL SCHEMATIC (1)

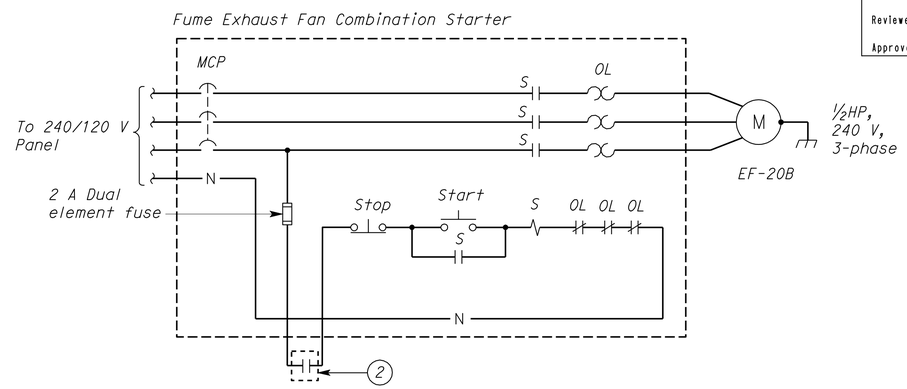

3 THREE PHASE EXHAUST FAN SCHEMATIC DIAGRAM

Notes:

(1) *Control Schematic for Exhaust Fan EF-1A and A/C-1A relay module is shown. Schematic for EF-2A and A/C-2A is similar, except EF-2A shall not have any connection to addressable relay module.*

(2) *Addressable Relay Module adjacent to Exhaust Fan Motor Starter or exhaust fan combination motor starter. For details, see Fire Alarm sheets.*

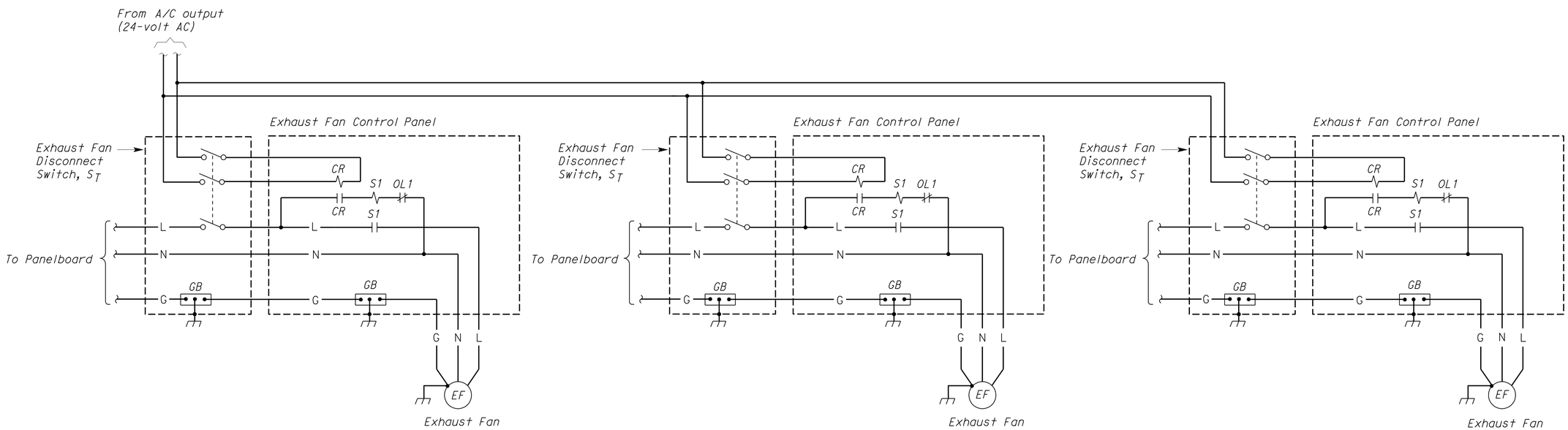

2 MULTIPLE EXHAUST FAN CONTROL

DESIGN	BY Joseph Abdelsayed	CHECKED J. S. Sandhu	
DETAILS	BY Ed Tapalla/Dali Zhou	CHECKED Joseph Abdelsayed	
QUANTITIES	BY Joseph Abdelsayed	CHECKED J. S. Sandhu	

STATE OF CALIFORNIA DEPARTMENT OF TRANSPORTATION

DIVISION OF ENGINEERING SERVICES
ELECTRICAL-MECHANICAL-WATER AND WASTEWATER DESIGN

BRIDGE NO. 33M5785
POST MILE 2.2

SFOBB MAINTENANCE COMPLEX
EXHAUST FAN CONTROL SCHEMATICS

SHEET **EE1-9.6**

TAEMWW Imperial Rev. 7/10

ORIGINAL SCALE IN INCHES FOR REDUCED PLANS 0 1 2 3

UNIT 3596
PROJECT NUMBER & PHASE 04120006661
EA 014081

DISREGARD PRINTS BEARING EARLIER REVISION DATES → 5/14/12 5/30/12
REVISION DATES (PRELIMINARY STAGE ONLY) SHEET OF

25-OCT-2012 09:39
ee1_9.06.dgn

DIST.	COUNTY	ROUTE	POST MILES TOTAL PROJECT	SHEET NO.	TOTAL SHEETS
04	Ala	80	2.2	756	800

CALIFORNIA STATE FIRE MARSHAL APPROVED
Approval of this plan does not authorize or approve any omission or deviation from applicable regulations. Final approval is subject to field inspection. One set of approved plans shall be available on the project site at all times.
Reviewed by: JOHN E WOODS, SDSFM
Approval date: 8-22-12

Catalino A. Enriquez 5-30-12
REGISTERED ELECTRICAL ENGINEER DATE

REGISTERED PROFESSIONAL ENGINEER C. ENRIQUEZ No. 16944 Exp. 6-30-13 ELEC STATE OF CALIFORNIA

10-22-12
PLANS APPROVAL DATE

The State of California or its officers or agents shall not be responsible for the accuracy or completeness of scanned copies of this plan sheet.

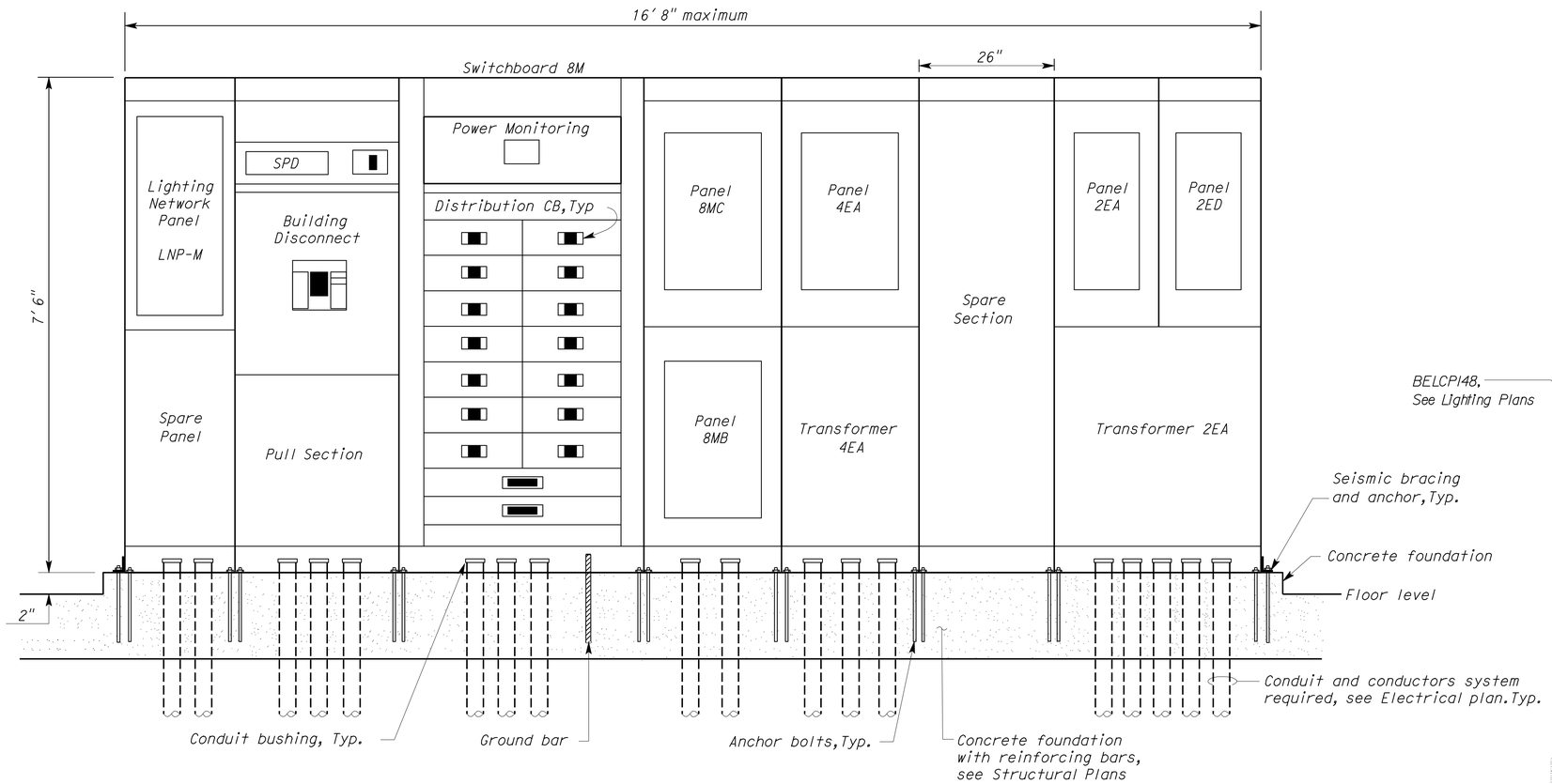

A IFS-M
NO SCALE

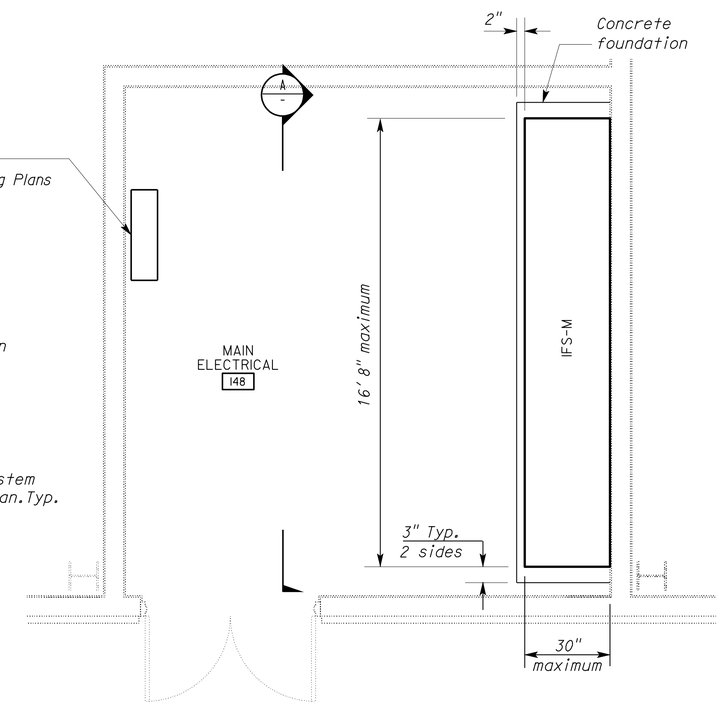

ENLARGED PLAN
NO SCALE

THIS DRAWING ACCURATE FOR ELECTRICAL WORK ONLY

	BY	CHECKED
DESIGN	Catalino Enriquez	J.S.S./H.Abdelsayed
DETAILS	Ed D. Tapalla 6/12	Catalino Enriquez
QUANTITIES	Catalino Enriquez	J.S.S./H.Abdelsayed

STATE OF CALIFORNIA
DEPARTMENT OF TRANSPORTATION

DIVISION OF ENGINEERING SERVICES
ELECTRICAL-MECHANICAL-WATER AND WASTEWATER DESIGN

BRIDGE NO. 33M5785
POST MILE 2.2

SFOBB MAINTENANCE COMPLEX
IFS-M DETAILS

SHEET EE1-9.7

TAEMWW Imperial Rev. 7/10

ORIGINAL SCALE IN INCHES FOR REDUCED PLANS 0 1 2 3

UNIT 3596
PROJECT NUMBER & PHASE 04120006661
EA 014081

DISREGARD PRINTS BEARING EARLIER REVISION DATES → 5/30/12

REVISION DATES (PRELIMINARY STAGE ONLY) SHEET OF

25-OCT-2012 09:39
ee1_9.07.dgn

DIST.	COUNTY	ROUTE	POST MILES TOTAL PROJECT	SHEET NO.	TOTAL SHEETS
04	Ala	80	2.2	757	800

REGISTERED ELECTRICAL ENGINEER — 5-30-12 DATE

REGISTERED PROFESSIONAL ENGINEER J. ABDELSAYED No. 18915 Exp. 12-31-13 ELEC STATE OF CALIFORNIA

10-22-12
PLANS APPROVAL DATE

The State of California or its officers or agents shall not be responsible for the accuracy or completeness of scanned copies of this plan sheet.

CALIFORNIA STATE FIRE MARSHAL APPROVED
Approval of this plan does not authorize or approve any omission or deviation from applicable regulations. Final approval is subject to field inspection. One set of approved plans shall be available on the project site at all times.
Reviewed by: JOHN E WOODS, SDSFM
Approval date: 8-22-12

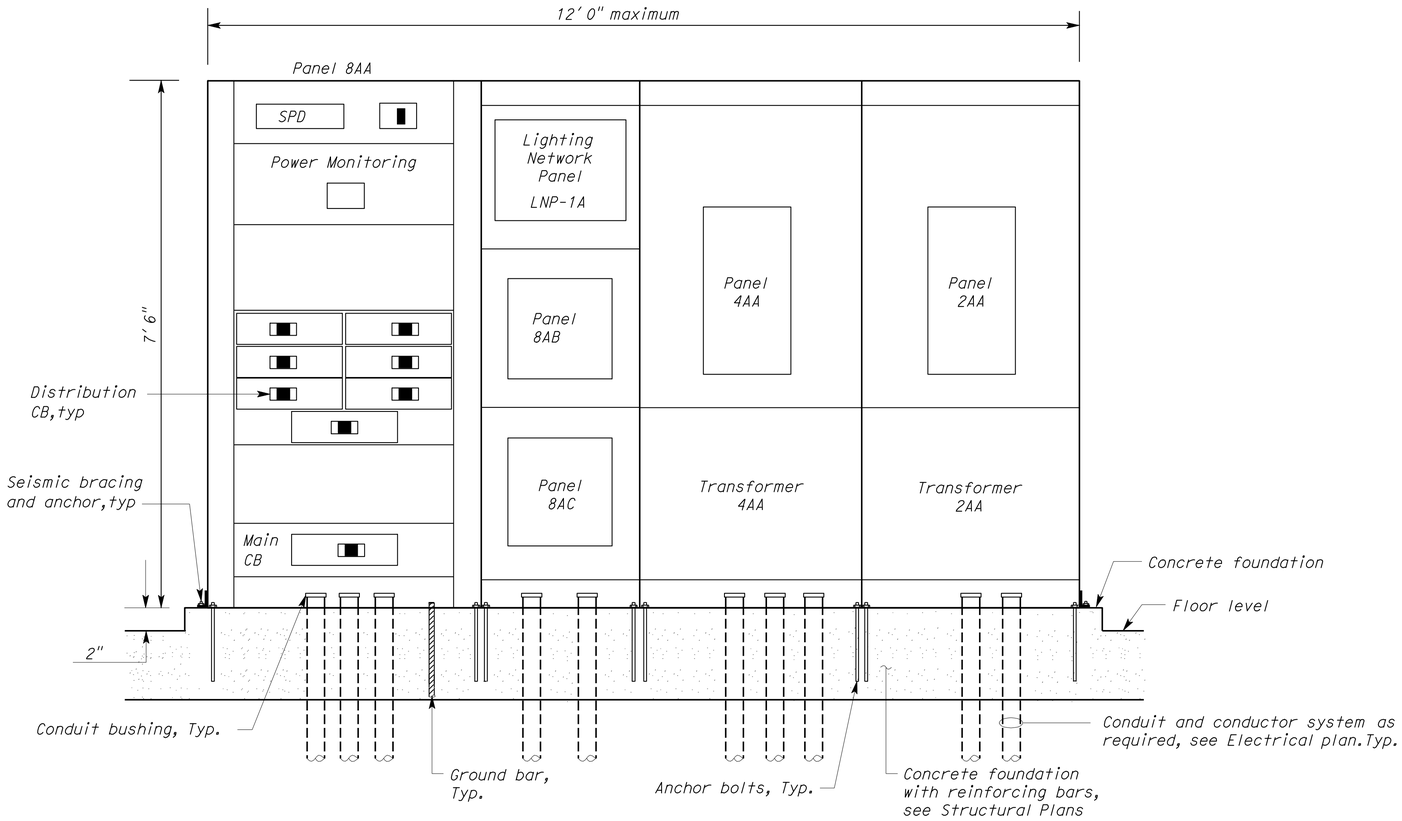

IFS-1A
NO SCALE

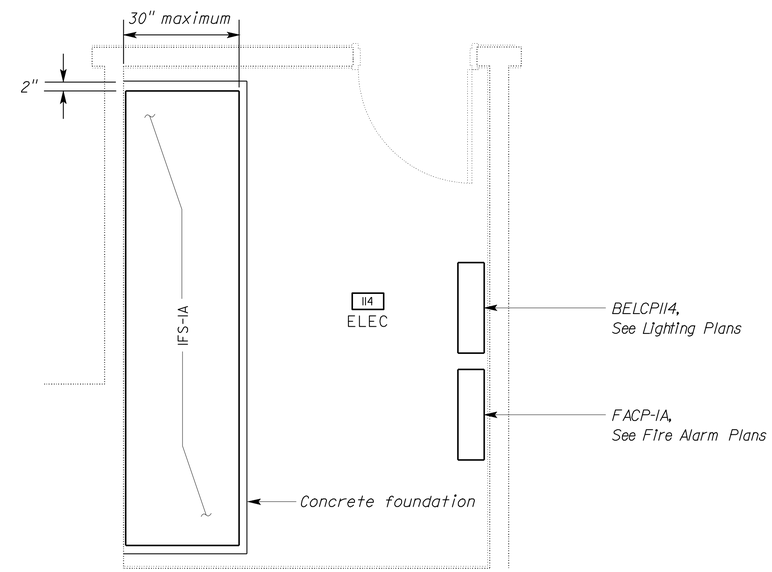

ENLARGED PLAN
NO SCALE

THIS DRAWING ACCURATE FOR ELECTRICAL WORK ONLY

	BY		CHECKED
DESIGN	Joseph Abdelsayed		J. S. Sandhu
DETAILS	Joseph Abdelsayed		J. S. Sandhu
QUANTITIES	Joseph Abdelsayed		J. S. Sandhu

STATE OF CALIFORNIA
DEPARTMENT OF TRANSPORTATION

DIVISION OF ENGINEERING SERVICES
ELECTRICAL-MECHANICAL-WATER AND WASTEWATER DESIGN

BRIDGE NO. 33M5785
POST MILE 2.2

SFOBB MAINTENANCE COMPLEX

IFS-1A DETAILS

SHEET **EE1-9.8**

TAEMWW Imperial Rev. 7/10

ORIGINAL SCALE IN INCHES FOR REDUCED PLANS 0 1 2 3

UNIT 3596
PROJECT NUMBER & PHASE 04120006661
EA 014081

DISREGARD PRINTS BEARING EARLIER REVISION DATES → 5/14/12 5/30/12

REVISION DATES (PRELIMINARY STAGE ONLY) SHEET OF

25-OCT-2012 09:39

ee1_9.08.dgn

DIST.	COUNTY	ROUTE	POST MILES TOTAL PROJECT	SHEET NO.	TOTAL SHEETS
04	Ala	80	2.2	758	800

REGISTERED ELECTRICAL ENGINEER — 5-30-12 DATE

REGISTERED PROFESSIONAL ENGINEER J. ABDELSAYED No. 18915 Exp. 12-31-13 ELEC STATE OF CALIFORNIA

10-22-12
PLANS APPROVAL DATE

The State of California or its officers or agents shall not be responsible for the accuracy or completeness of scanned copies of this plan sheet.

CALIFORNIA STATE FIRE MARSHAL APPROVED

Approval of this plan does not authorize or approve any omission or deviation from applicable regulations. Final approval is subject to field inspection. One set of approved plans shall be available on the project site at all times.

Reviewed by: JOHN E WOODS, SDSFM

Approval date: 8-22-12

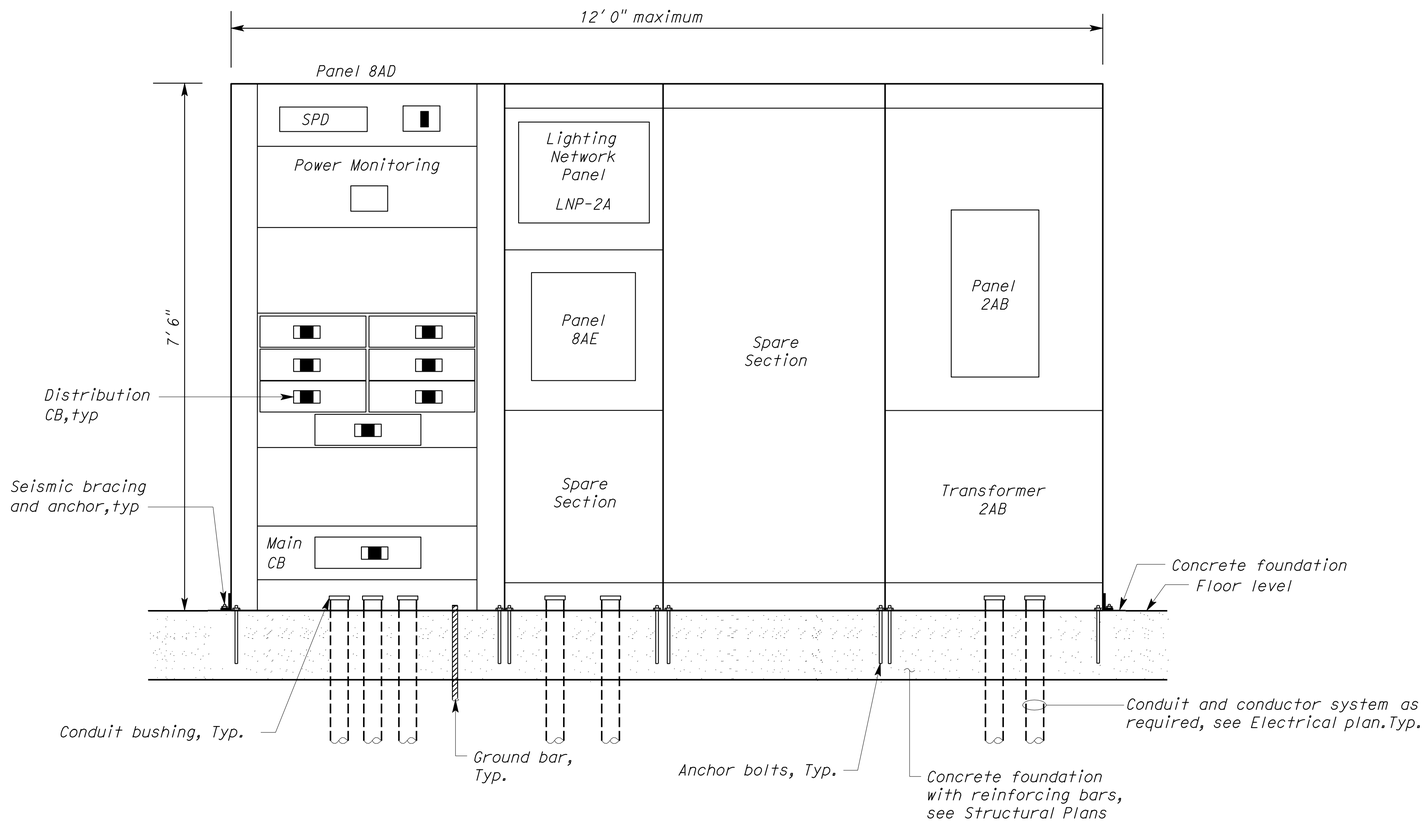

IFS-2A
NO SCALE

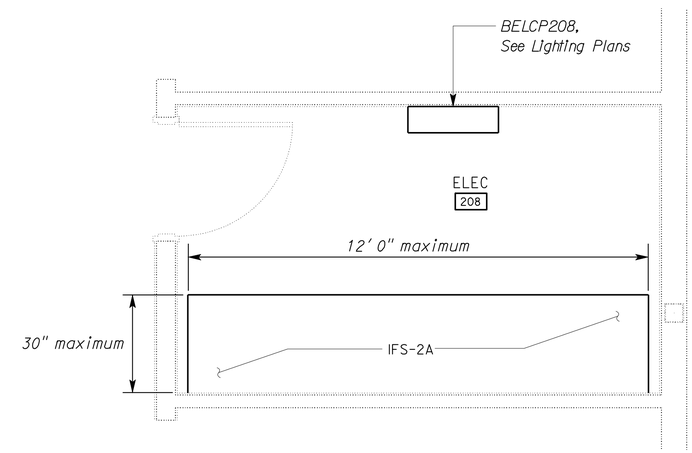

ENLARGED PLAN
NO SCALE

THIS DRAWING ACCURATE FOR ELECTRICAL WORK ONLY

	BY	CHECKED
DESIGN	Joseph Abdelsayed	J. S. Sandhu
DETAILS	Joseph Abdelsayed	J. S. Sandhu
QUANTITIES	Joseph Abdelsayed	J. S. Sandhu

STATE OF CALIFORNIA
DEPARTMENT OF TRANSPORTATION

DIVISION OF ENGINEERING SERVICES
ELECTRICAL-MECHANICAL-WATER AND WASTEWATER DESIGN

BRIDGE NO. 33M5785
POST MILE 2.2

SFOBB MAINTENANCE COMPLEX

IFS-2A DETAILS

SHEET **EE1-9.9**

TAEMWW Imperial Rev. 7/10

ORIGINAL SCALE IN INCHES FOR REDUCED PLANS 0 1 2 3

UNIT 3596
PROJECT NUMBER & PHASE 04120006661
EA 014081

DISREGARD PRINTS BEARING EARLIER REVISION DATES →

REVISION DATES (PRELIMINARY STAGE ONLY) 5/14/12 5/30/12

SHEET OF

25-OCT-2012 09:39

ee1_9.09.dgn

DIST.	COUNTY	ROUTE	POST MILES TOTAL PROJECT	SHEET NO.	TOTAL SHEETS
04	Ala	80	2.2	759	800

REGISTERED ELECTRICAL ENGINEER — 5-30-12 DATE

REGISTERED PROFESSIONAL ENGINEER J. ABDELSAYED No. 18915 Exp. 12-31-13 ELEC STATE OF CALIFORNIA

10-22-12
PLANS APPROVAL DATE

The State of California or its officers or agents shall not be responsible for the accuracy or completeness of scanned copies of this plan sheet.

CALIFORNIA STATE FIRE MARSHAL APPROVED

Approval of this plan does not authorize or approve any omission or deviation from applicable regulations. Final approval is subject to field inspection. One set of approved plans shall be available on the project site at all times.

Reviewed by: JOHN E WOODS, SDSFM

Approval date: 8-22-12

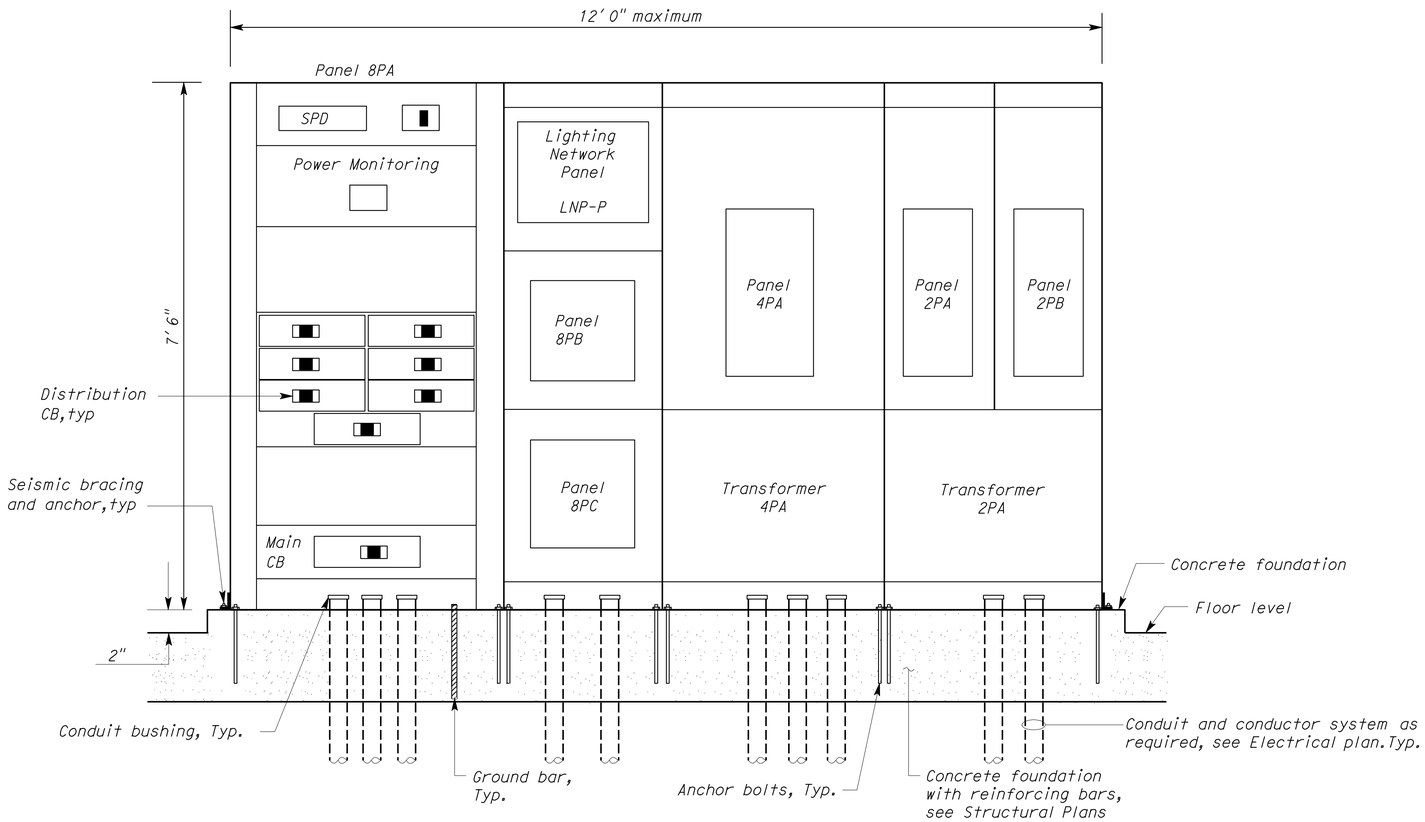

IFS-P
NO SCALE

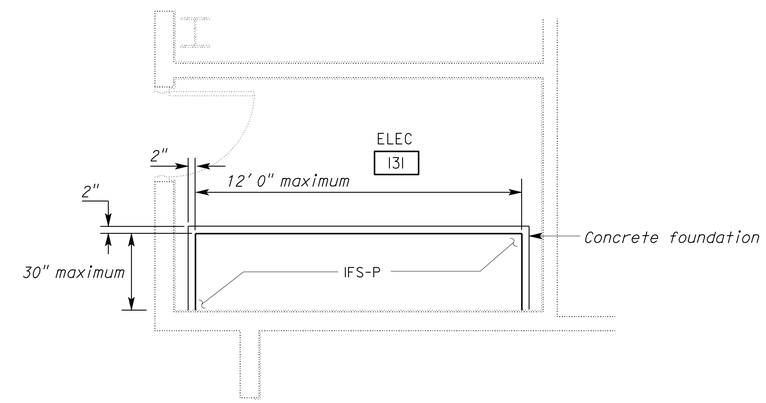

ENLARGED PLAN
NO SCALE

THIS DRAWING ACCURATE FOR ELECTRICAL WORK ONLY

	BY	CHECKED
DESIGN	Joseph Abdelsayed	J. S. Sandhu
DETAILS	Joseph Abdelsayed	J. S. Sandhu
QUANTITIES	Joseph Abdelsayed	J. S. Sandhu

STATE OF CALIFORNIA
DEPARTMENT OF TRANSPORTATION

DIVISION OF ENGINEERING SERVICES
ELECTRICAL-MECHANICAL-WATER AND WASTEWATER DESIGN

BRIDGE NO. 33M5785
POST MILE 2.2

SFOBB MAINTENANCE COMPLEX

IFS-P DETAILS

SHEET **EE1-9.10**

TAEMWW Imperial Rev. 7/10

ORIGINAL SCALE IN INCHES FOR REDUCED PLANS 0 1 2 3

UNIT 3596
PROJECT NUMBER & PHASE 04120006661
EA 014081

DISREGARD PRINTS BEARING EARLIER REVISION DATES → 5/4/12 5/30/12

REVISION DATES (PRELIMINARY STAGE ONLY) SHEET OF

25-OCT-2012 09:39

ee1_9.10.dgn

DIST.	COUNTY	ROUTE	POST MILES TOTAL PROJECT	SHEET NO.	TOTAL SHEETS
04	Ala	80	2.2	760	800

REGISTERED ELECTRICAL ENGINEER — 5-30-12 DATE

REGISTERED PROFESSIONAL ENGINEER J. ABDELSAYED No. 18915 Exp. 12-31-13 ELEC STATE OF CALIFORNIA

10-22-12
PLANS APPROVAL DATE

The State of California or its officers or agents shall not be responsible for the accuracy or completeness of scanned copies of this plan sheet.

CALIFORNIA STATE FIRE MARSHAL APPROVED
Approval of this plan does not authorize or approve any omission or deviation from applicable regulations. Final approval is subject to field inspection. One set of approved plans shall be available on the project site at all times.
Reviewed by: JOHN E WOODS, SDSFM
Approval date: 8-22-12

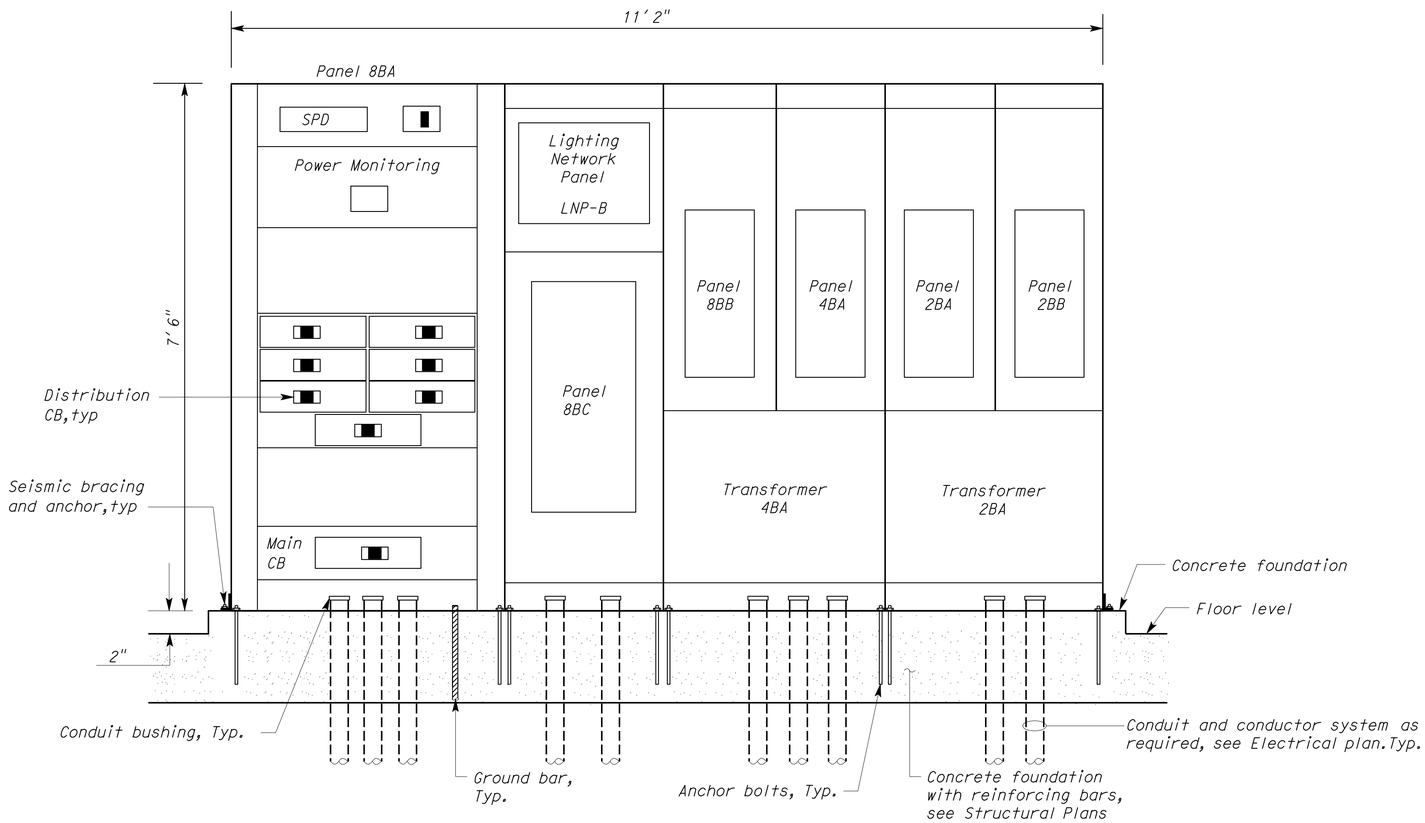

IFS-B
NO SCALE

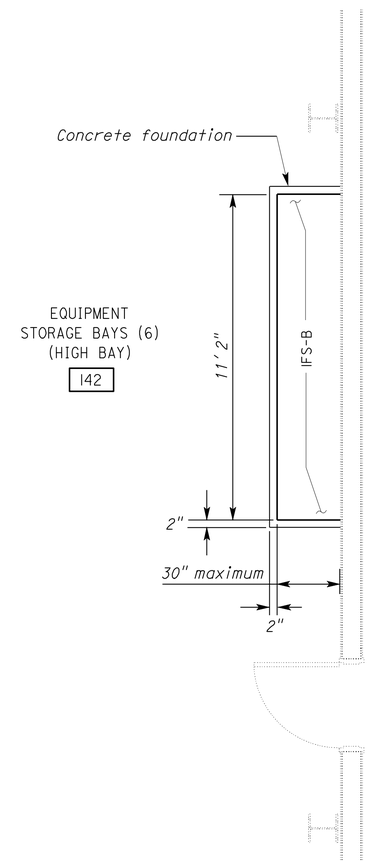

ENLARGED PLAN
NO SCALE

THIS DRAWING ACCURATE FOR ELECTRICAL WORK ONLY

	BY	CHECKED
DESIGN	Joseph Abdelsayed	J. S. Sandhu
DETAILS	Joseph Abdelsayed	J. S. Sandhu
QUANTITIES	Joseph Abdelsayed	J. S. Sandhu

STATE OF CALIFORNIA DEPARTMENT OF TRANSPORTATION

DIVISION OF ENGINEERING SERVICES
ELECTRICAL-MECHANICAL-WATER AND WASTEWATER DESIGN

BRIDGE NO. 33M5785
POST MILE 2.2

SFOBB MAINTENANCE COMPLEX

IFS-B DETAILS

SHEET **EE1-9.11**

TAEMWW Imperial Rev. 7/10

ORIGINAL SCALE IN INCHES FOR REDUCED PLANS 0 1 2 3

UNIT 3596
PROJECT NUMBER & PHASE 04120006661
EA 014081

DISREGARD PRINTS BEARING EARLIER REVISION DATES → 5/14/12 5/30/12

REVISION DATES (PRELIMINARY STAGE ONLY) SHEET OF

25-OCT-2012 09:39

ee1_9.11.dgn

DIST.	COUNTY	ROUTE	POST MILES TOTAL PROJECT	SHEET NO.	TOTAL SHEETS
04	Ala	80	2.2	761	800

REGISTERED ELECTRICAL ENGINEER — DATE 5-30-12

REGISTERED PROFESSIONAL ENGINEER C. ENRIQUEZ No. 16944 Exp. 6-30-13 ELEC STATE OF CALIFORNIA

10-22-12
PLANS APPROVAL DATE

The State of California or its officers or agents shall not be responsible for the accuracy or completeness of scanned copies of this plan sheet.

CALIFORNIA STATE FIRE MARSHAL APPROVED

Approval of this plan does not authorize or approve any omission or deviation from applicable regulations. Final approval is subject to field inspection. One set of approved plans shall be available on the project site at all times.

Reviewed by: JOHN E. WOODS, SDSFM

Approval date: 8-22-12

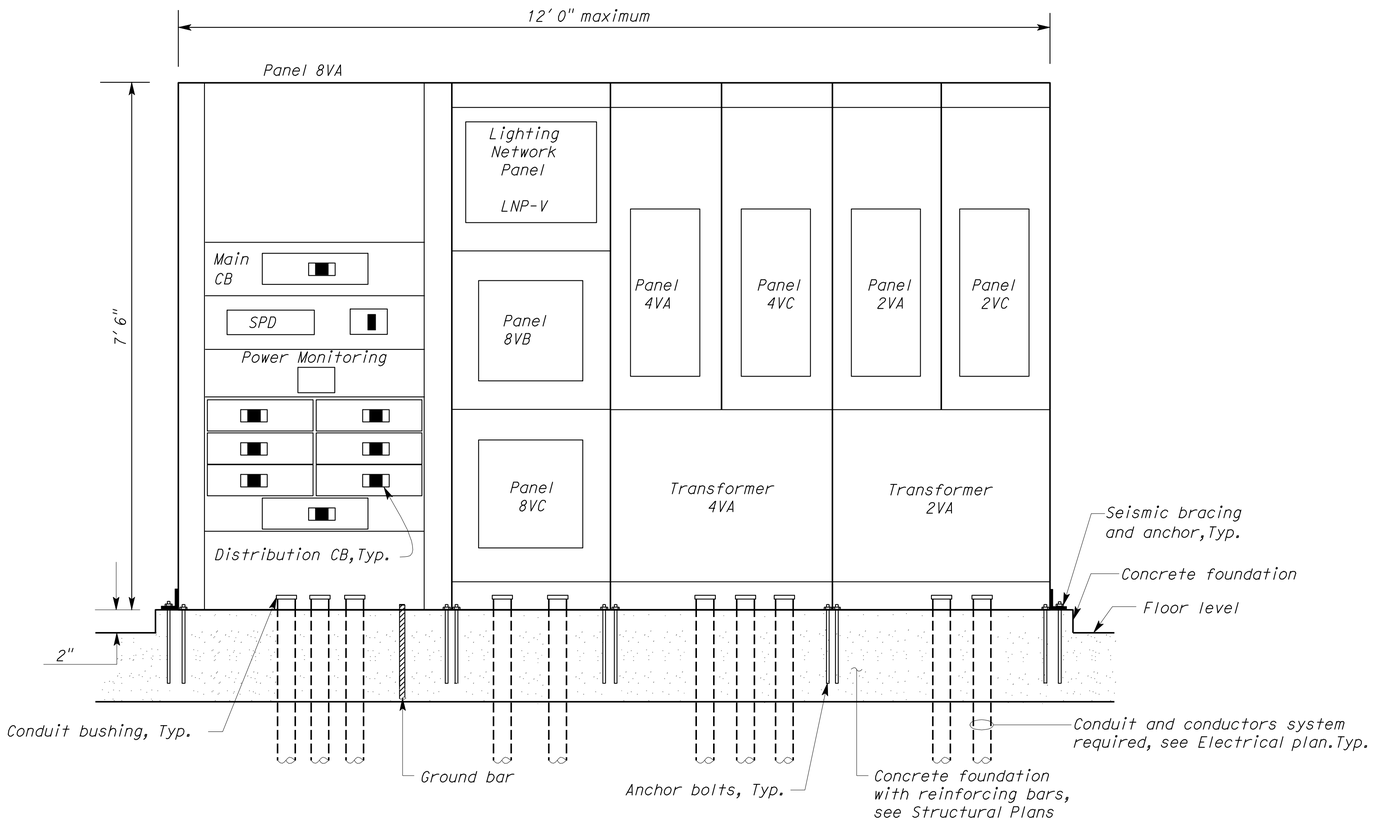

A **IFS-V**
NO SCALE

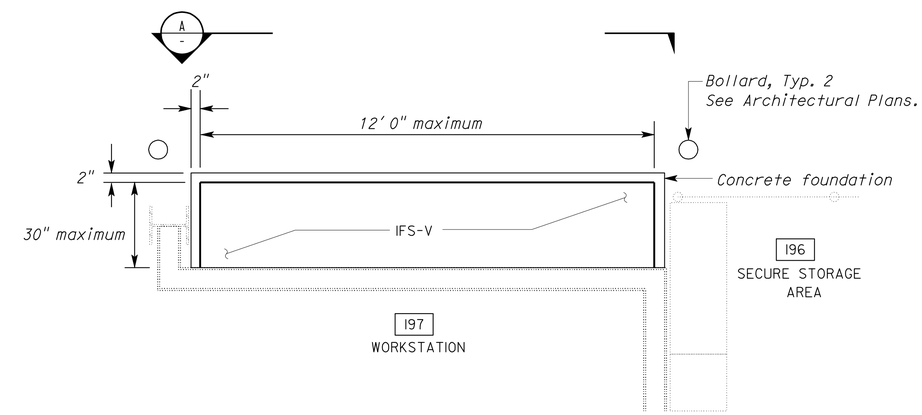

ENLARGED PLAN
NO SCALE

THIS DRAWING ACCURATE FOR ELECTRICAL WORK ONLY

	BY	CHECKED
DESIGN	Catalino Enriquez	J.S.S./H.Abdelsayed
DETAILS	Dali Zhou	Catalino Enriquez
QUANTITIES	Catalino Enriquez	J.S.S./H.Abdelsayed

STATE OF CALIFORNIA
DEPARTMENT OF TRANSPORTATION

DIVISION OF ENGINEERING SERVICES
ELECTRICAL-MECHANICAL-WATER AND WASTEWATER DESIGN

BRIDGE NO. 33M5785
POST MILE 2.2

SFOBB MAINTENANCE COMPLEX

IFS-V DETAILS

SHEET **EE1-9.12**

TAEMWW Imperial Rev. 7/10

ORIGINAL SCALE IN INCHES FOR REDUCED PLANS 0 1 2 3

UNIT 3596
PROJECT NUMBER & PHASE 04120006661
EA 014081

DISREGARD PRINTS BEARING EARLIER REVISION DATES → 5/14/12 5/30/12

REVISION DATES (PRELIMINARY STAGE ONLY) SHEET OF

25-OCT-2012 10:01

ee1_9.12.dgn

DIST.	COUNTY	ROUTE	POST MILES TOTAL PROJECT	SHEET NO.	TOTAL SHEETS
04	Ala	80	2.2	762	800

REGISTERED ELECTRICAL ENGINEER — Catalino A. Enriquez — 5-30-12 DATE

REGISTERED PROFESSIONAL ENGINEER C. ENRIQUEZ No. 16944 Exp. 6-30-13 ELEC STATE OF CALIFORNIA

10-22-12
PLANS APPROVAL DATE

The State of California or its officers or agents shall not be responsible for the accuracy or completeness of scanned copies of this plan sheet.

CALIFORNIA STATE FIRE MARSHAL APPROVED

Approval of this plan does not authorize or approve any omission or deviation from applicable regulations. Final approval is subject to field inspection. One set of approved plans shall be available on the project site at all times.

Reviewed by: JOHN E WOODS, SDSFM

Approval date: 8-22-12

General Notes:

A. *For one line power diagrams, see sheets EE0-1.1 through EE0-1.7.*

B. *For location of all panelboards and switchboards, see sheet EE1-1.1.*

C. *Provide appropriate lugs for circuit breakers as required to accommodate two set run and/or oversized conductors.*

MAIN: 1,200 AMPERE, 3 POLE CB
VOLTS: 480/277 V, 3 PH, 4W

SWITCHBOARD 8M (BOTTOM FEED)
42 KA SCCR

FEEDER SIZE: 4 SET 3"C, 4#350 KCMIL, 1#350 KCMIL G
LOCATION: IFS-M IN MAIN ELECTRICAL ROOM 148

DESCRIPTION	AMPS A	AMPS B	AMPS C	BRK	CKT	A	B	C	CKT	BRK	AMPS A	AMPS B	AMPS C	DESCRIPTION
SPARE	-			80/3	1	●			2	100/3	-			SPARE
		-			3		●		4			-		
			-		5			●	6				-	
PANEL 8MB	11			60/3	7	●			8	60/3	-			SPARE
		15			9		●		10			-		
			12		11			●	12				-	
TRANSFORMER 4EA	16			70/3	13	●			14	70/3	-			SPARE
		18			15		●		16			-		
			12		17			●	18				-	
PANEL 8MC	20			100/3	19	●			20	100/3	-			SPARE
		20			21		●		22			-		
			20		23			●	24				-	
TRANSFORMER 2EA	99			175/3	25	●			26	200/3	41			PANEL 8AD OF IFS-2A
		94			27		●		28			47		
			96		29			●	30				48	
PANEL 8AA OF IFS-IA	131			250/3	31	●			32	250/3	114			PANEL 8PA OF IFS-P
		138			33		●		34			106		
			123		35			●	36				103	
PANEL 8BA OF IFS-B	333			500/3	37	●			38	500/3	252			PANEL 8VA OF IFS-V
		369			39		●		40			244		
			309		41			●	42				254	

A	B	C	
1,017	1,051	977	TOTAL CONNECTED LOAD (AMPS PER PHASE)

	BY	CHECKED
DESIGN	Catalino Enriquez	J.S.S./H.Abdelsayed
DETAILS	Catalino Enriquez	J. S. Sandhu
QUANTITIES	Catalino Enriquez	J.S.S./H.Abdelsayed

STATE OF CALIFORNIA
DEPARTMENT OF TRANSPORTATION

DIVISION OF ENGINEERING SERVICES
ELECTRICAL-MECHANICAL-WATER AND WASTEWATER DESIGN

BRIDGE NO. 33M5785
POST MILE 2.2

SFOBB MAINTENANCE COMPLEX

PANEL SCHEDULES 1

SHEET **EE1-10.1**

TAEMWW Imperial Rev. 7/10

ORIGINAL SCALE IN INCHES FOR REDUCED PLANS 0 1 2 3

UNIT 3596
PROJECT NUMBER & PHASE 04120006661
EA 014081

DISREGARD PRINTS BEARING EARLIER REVISION DATES → 5/30/12

REVISION DATES (PRELIMINARY STAGE ONLY) SHEET OF

25-OCT-2012 10:01

ee1_10.01.dgn

DIST.	COUNTY	ROUTE	POST MILES TOTAL PROJECT	SHEET NO.	TOTAL SHEETS
04	Ala	80	2.2	763	800

CALIFORNIA STATE FIRE MARSHAL APPROVED
Approval of this plan does not authorize or approve any omission or deviation from applicable regulations. Final approval is subject to field inspection. One set of approved plans shall be available on the project site at all times.
Reviewed by: JOHN E WOODS, SDSFM
Approval date: 8-22-12

REGISTERED ELECTRICAL ENGINEER — 5-30-12 DATE

REGISTERED PROFESSIONAL ENGINEER J. ABDELSAYED No. 18915 Exp. 12-31-13 ELEC STATE OF CALIFORNIA

10-22-12
PLANS APPROVAL DATE

The State of California or its officers or agents shall not be responsible for the accuracy or completeness of scanned copies of this plan sheet.

MAIN: 250 AMPERE 3-POLE CB
VOLTS: 480/277 V, 3 PH, 4W

PANEL 8AA
42 kA SCCR

FEEDER SIZE: 3"C, 4#300 MCM AND 1#300 MCM G
LOCATION: IFS-IA IN ELECTRICAL RM 114

DESCRIPTION	AMPS A	AMPS B	AMPS C	BRK	CKT	A B C	CKT	BRK	AMPS A	AMPS B	AMPS C	DESCRIPTION
TRANSFORMER 2AA	27			125/3	1		2	30/3	-			SPARE
		25			3		4			-		
			24		5		6				-	
TRANSFORMER 4AA	30			70/3	7		8	100/3	68			PANEL 8AC
		35			9		10			68		
			25		11		12				68	
SPARE	-			50/3	13		14	100/3	-			SPARE
		-			15		16			-		
			-		17		18				-	
SPACE (FOR POWER MONITORING-TYPE I)	-			-	19		20	60/3	6			PANEL 8AB
		-			21		22			10		
			-		23		24				6	

A	B	C	
131	138	123	TOTAL CONNECTED LOAD (AMPS PER PHASE)

MAIN: 100 AMPERE MAIN LUGS
VOLTS: 480/277 V, 3 PH, 4W

PANEL 8AC
22 kA SCCR

FEEDER SIZE: 4#1 AND 1#1G
LOCATION: IFS-IA IN ELECTRICAL RM 114

DESCRIPTION	AMPS A	AMPS B	AMPS C	BRK	CKT	A B C	CKT	BRK	AMPS A	AMPS B	AMPS C	DESCRIPTION
ELEVATOR EQUIPMENT: ELEVATOR ROOM	40			100/3	1		2	30/3	12			A/C-1A: ROOFTOP
		40			3		4			12		
			40		5		6				12	
AC-2A: ROOFTOP	16			30/3	7		8	20/2	-			SPARE
		16			9		10			-		
			16		11		12				-	SPARE
SPARE	-			20/2	13		14	20/3	-			
		-			15		16			-		
SPACE			-	-	17		18	-			-	SPACE
SPACE	-			-	19		20	-	-			SPACE
SPACE		-		-	21		22	-		-		SPACE
SPACE			-	-	23		24	-			-	SPACE
SPACE	-			-	25		26	-	-			SPACE
SPACE		-		-	27		28	-		-		SPACE
SPACE			-	-	29		30	-			-	SPACE

A	B	C	
68	68	68	TOTAL CONNECTED LOAD (AMPS PER PHASE)

MAIN: 100 AMPERE MAIN LUGS
VOLTS: 480/277V, 3 PH, 4W

PANEL 8AB
22 kA SCCR

FEEDER SIZE: 4#4 AND 1#4G
LOCATION: IFS-IA IN ELECTRICAL RM 114

DESCRIPTION	AMPERES A	AMPERES B	AMPERES C	BRK	CKT	A B C	CKT	BRK	AMPERES A	AMPERES B	AMPERES C	DESCRIPTION
LNP-1A	1			15/1	1		2	15/1	2			LIGHTS RM NO. 103, 104, 112, 113, 114, 115, & 116
ELEVATOR CAR LIGHTING		1		15/1	3		4	15/1		5.5		LIGHTS RM NO. 110,111,119,120,121,122,123,124 & 125
LIGHTS MEN'S 124 & WOMENS 121 SHOWER			0.5	15/1	5		6	15/1			1	LIGHTS RM NO. 126 & 217
LIGHTS ELEVATOR EQUIP. 117 & PIT	0.5			15/1	7		8	15/1	-			SPARE
SPARE		-		15/1	9		10	15/1		-		SPARE
BELCP114			3	15/1	11		12	15/1			-	SPARE
SPARE	-			15/1	13		14	15/1	2			LIGHTS RM NO. 100, 101 & 109
SPARE		-		15/1	15		16	15/1		3.5		LIGHTS RM NO. 102, 105, 106 & 107
SPARE			-	15/1	17		18	15/1			1	LIGHTS RM NO. 108 & 202

A	B	C	
5.5	10	5.5	TOTAL CONNECTED LOAD (AMPERES PER PHASE)

DESIGN	BY Joseph Abdelsayed	CHECKED J. S. Sandhu
DETAILS	BY Ed Tapalla/Dali Zhou	CHECKED Joseph Abdelsayed
QUANTITIES	BY Joseph Abdelsayed	CHECKED J. S. Sandhu

STATE OF CALIFORNIA
DEPARTMENT OF TRANSPORTATION

DIVISION OF ENGINEERING SERVICES
ELECTRICAL-MECHANICAL-WATER AND WASTEWATER DESIGN

BRIDGE NO. 33M5785
POST MILE 2.2

SFOBB MAINTENANCE COMPLEX

PANEL SCHEDULES 2

SHEET **EE1-10.2**

TAEMWW Imperial Rev. 7/10

ORIGINAL SCALE IN INCHES FOR REDUCED PLANS 0 1 2 3

UNIT 3596
PROJECT NUMBER & PHASE 04120006661
EA 014081

DISREGARD PRINTS BEARING EARLIER REVISION DATES → 5/30/12

REVISION DATES (PRELIMINARY STAGE ONLY) SHEET OF

25-OCT-2012 10:01
ee1_10.02.dgn

DIST.	COUNTY	ROUTE	POST MILES TOTAL PROJECT	SHEET NO.	TOTAL SHEETS
04	Ala	80	2.2	764	800

REGISTERED ELECTRICAL ENGINEER — 5-30-12 DATE

REGISTERED PROFESSIONAL ENGINEER J. ABDELSAYED No. 18915 Exp. 12-31-13 ELEC STATE OF CALIFORNIA

10-22-12
PLANS APPROVAL DATE

The State of California or its officers or agents shall not be responsible for the accuracy or completeness of scanned copies of this plan sheet.

CALIFORNIA STATE FIRE MARSHAL APPROVED
Approval of this plan does not authorize or approve any omission or deviation from applicable regulations. Final approval is subject to field inspection. One set of approved plans shall be available on the project site at all times.
Reviewed by: JOHN E WOODS, SDSFM
Approval date: 8-22-12

MAIN: 125 AMPERE 3-POLE CB
VOLTS: 120/240 V, 3 PH, 4W

PANEL 4AA
22 kA SCCR

FEEDER SIZE: 4#1 AND 1#1G
LOCATION: IFS-1A IN ELECTRICAL RM 114

DESCRIPTION	AMPS A	AMPS B	AMPS C	BRK	CKT	A B C	CKT	BRK	AMPS A	AMPS B	AMPS C	DESCRIPTION
DUAL ELECTRIC VEHICLE CHARGING STATION	30			40/2	1		2	20/2	10			SPLIT SYSTEM UNIT A/C-4A
		30			3		4			10		
SPLIT SYSTEM UNIT A/C-3A			10	20/2	5		6	20/2			10	SPLIT SYSTEM UNIT A/C-5A
	10				7		8		10			
SPARE		-		20/2	9		10	40/2		30		DUAL ELECTRIC VEHICLE CHARGING STATION
			-		11		12				30	
SPARE	-			30/2	13		14	20/2	-			SPARE
		-			15		16			-		
SPACE			-	-	17		18	-			-	SPACE
SPACE	-			-	19		20	-	-			SPACE
SPACE		-		-	21		22	-		-		SPACE
SPACE			-	-	23		24	-			-	SPACE
SPACE	-			-	25		26	-	-			SPACE
SPACE		-		-	27		28	-		-		SPACE
SPACE			-	-	29		30	-			-	SPACE

A	B	C	
60	70	50	TOTAL CONNECTED LOAD (AMPS PER PHASE)

MAIN: 200 AMPERE 3 POLE CB
VOLTS: 120/208V, 3 PH, 4W

PANEL 2AA
22 kA SCCR

FEEDER SIZE: 4#4/0 AND 1#4/0G
LOCATION: IFS-1A IN ELECTRICAL RM 114

DESCRIPTION	AMPS A	AMPS B	AMPS C	BRK	CKT	A B C	CKT	BRK	AMPS A	AMPS B	AMPS C	DESCRIPTION
RECEP: MEN'S RR, LOCKER ROOM, GEAR ROOM	8			20/1	1		2	20/1	10			PRINTER
RECEP: WOMEN'S RR, LOCKER,& DECON RM		8		20/1	3		4	20/1		1		SHUNT TRIP PUSHBUTTON: ELEVATOR ROOM
RECEP: CORRIDOR,GARMENT,GEAR,MEN DECON			11	20/1	5		6+	20/1			1	FIRE ALARM CONTROL PANEL-1A
REC: SUPERVIOR ROOMS & OUTDOOR	12			20/1	7		8+	20/1	1			SMOKE DAMPERS ROOM NO. 216
MIS REC: SUPERVISOR ROOMS		9		20/1	9		10+	20/1		1		FIRE ALARM BELL
LEAD WORKER CUBICLES #1			9	20/1	11		12	20/1			1	AUTOMATIC FLUSH
LEAD WORKER CUBICLES #2	9			20/1	13		14	20/1	-			SPARE
REC: HALLWAY & ELEVATOR ROOM		12		20/1	15		16	20/1		5		REC: ROOFTOP UNITS
REC: CREW ROOM			12	20/1	17		18	20/1			-	SPARE
CREW ROOM VENDING MACHINE	10			20/1	19		20	-				SPACE
UNDERSINK GARBAGE DISPOSAL: KITCHEN		5		20/1	21		22	-		-		SPACE
REC: KITCHEN COUNTERTOP			4	20/1	23		24	-			-	SPACE
REFRIGERATOR: KITCHEN AREA	5			20/1	25		26	-	-			SPACE
REC: ELECTRICAL ROOM		5		20/1	27		28	-		-		SPACE
REC: SUP STORAGE,JANITOR,STAIR,LOBBY,OUT			12	20/1	29		30	-			-	SPACE
WATER CHILLER: LOBBY	4			20/1	31		32	-	-			SPACE
REC: COMMUNICATION ROOM - NORTH WALL		6		20/1	33		34	-		-		SPACE
REC: COMMUNICATION ROOM - WEST WALL			6	20/1	35		36	-			-	SPACE
REC: COMMUNICATION ROOM - SOUTH WALL	3			20/1	37		38	-	-			SPACE
RECEP: QUIET ROOM		6		20/1	39		40	-		-		SPACE
SPARE			-	20/1	41		42	-			-	SPACE

• CIRCUIT BREAKER SHALL BE LOCKABLE AND WITH RED COLORED HANDLE AND IDENTIFIED AS "FIRE ALARM CIRCUIT".

A	B	C	
62	58	56	TOTAL CONNECTED LOAD (AMPS PER PHASE)

	BY	CHECKED
DESIGN	Joseph Abdelsayed	J. S. Sandhu
DETAILS	Ed Tapalla/Dali Zhou	Joseph Abdelsayed
QUANTITIES	Joseph Abdelsayed	J. S. Sandhu

STATE OF CALIFORNIA
DEPARTMENT OF TRANSPORTATION

DIVISION OF ENGINEERING SERVICES
ELECTRICAL-MECHANICAL-WATER AND WASTEWATER DESIGN

BRIDGE NO. 33M5785
POST MILE 2.2

SFOBB MAINTENANCE COMPLEX

PANEL SCHEDULES 3

SHEET EE1-10.3

TAEMWW Imperial Rev. 7/10

ORIGINAL SCALE IN INCHES FOR REDUCED PLANS 0 1 2 3

UNIT 3596
PROJECT NUMBER & PHASE 04120006661
EA 014081

DISREGARD PRINTS BEARING EARLIER REVISION DATES → 5/30/12

REVISION DATES (PRELIMINARY STAGE ONLY) SHEET OF

25-OCT-2012 10:02
ee1_10.03.dgn

DIST.	COUNTY	ROUTE	POST MILES TOTAL PROJECT	SHEET NO.	TOTAL SHEETS
04	Ala	80	2.2	765	800

REGISTERED ELECTRICAL ENGINEER — 5-30-12 DATE

REGISTERED PROFESSIONAL ENGINEER J. ABDELSAYED No. 18915 Exp. 12-31-13 ELEC STATE OF CALIFORNIA

10-22-12
PLANS APPROVAL DATE

The State of California or its officers or agents shall not be responsible for the accuracy or completeness of scanned copies of this plan sheet.

CALIFORNIA STATE FIRE MARSHAL APPROVED
Approval of this plan does not authorize or approve any omission or deviation from applicable regulations. Final approval is subject to field inspection. One set of approved plans shall be available on the project site at all times.
Reviewed by: JOHN E WOODS, SDSFM
Approval date: 8-22-12

MAIN: 200 AMPERE 3-POLE CB
VOLTS: 480/277 V, 3 PH, 4W

PANEL 8AD
42 kA SCCR

FEEDER SIZE: 2½"C, 4#4/0 AND 1#4/0G
LOCATION: IFS-2A IN ELECTRICAL RM 208

DESCRIPTION	AMPS A	AMPS B	AMPS C	BRK	CKT	A B C	CKT	BRK	AMPS A	AMPS B	AMPS C	DESCRIPTION
TRANSFORMER 2AB	37			125/3	1		2	20/3	-			SPARE
		41			3		4			-		
			39		5		6				-	
SPARE	-			30/3	7		8	50/3	-			SPARE
		-			9		10			-		
			-		11		12				-	
SPACE (FOR POWER MONITORING)	-			-	13		14	60/3	4			PANEL 8AE
		-			15		16			6		
			-		17		18				9	
SPACE	-			-	19		20	-	-			SPACE
		-			21		22			-		
			-		23		24				-	

A	B	C	
41	47	48	TOTAL CONNECTED LOAD (AMPS PER PHASE)

MAIN: 60 AMPERE, MAIN LUGS
VOLTS: 480/277 V, 3 PH, 4W

PANEL 8AE
22 kA SCCR

FEEDER SIZE: 4#4 AND 1#4G
LOCATION: IFS-2A IN ELECTRICAL RM 208

DESCRIPTION	AMPERES A	AMPERES B	AMPERES C	BRK	CKT	A B C	CKT	BRK	AMPERES A	AMPERES B	AMPERES C	DESCRIPTION
LNP-2A	1			15/1	1		2	15/1	1.7			LIGHTS RM NO. 218, 219, 220 & 221
SPARE		-		15/1	3		4	15/1		4		LIGHTS RM NO. 209, 214, 215 & 216
SPARE			-	15/1	5		6	15/1			2	LIGHTS RM NO. 200,210A,210B & 210C
SHOWER 217	.1			15/1	7		8	15/1	0.9			LIGHTS RM NO. 211 & 212
SPARE		-		15/1	9		10	15/1		2		LIGHTS RM NO. 203,204,205,206,207 & 208
BELCP208			1	15/1	11		12	15/1			6	LIGHTS RM NO. 201
SPARE	-			15/1	13		14	15/1	-			SPARE
SPARE		-		15/1	15		16	15/1		-		SPARE
SPARE			-	15/1	17		18	15/1			-	SPARE

A	B	C	
3.7	6	9	TOTAL CONNECTED LOAD (AMPERES PER PHASE)

MAIN: 200 AMPERE 3 POLE CB
VOLTS: 120/208 V, 3 PH, 4W

PANEL 2AB
22 kA SCCR

FEEDER SIZE: 4#4/0 AND 1#4/0G
LOCATION: IFS-2A IN ELECTRICAL RM 208

DESCRIPTION	AMPS A	AMPS B	AMPS C	BRK	CKT	A B C	CKT	BRK	AMPS A	AMPS B	AMPS C	DESCRIPTION
RECEP: OFFICE 1 & OFFICE 2	11			20/1	1		2	20/1	6			RECEP: STORAGE
MIS RECEP: OFFICE 1 & OFFICE 2		9		20/1	3		4	20/1		10		COPIER CUBICLE
WATER CHILLER: HALLWAY			5	20/1	5		6	20/1			9	IT COOR & EMPTY CUBICLES
RECEP: OFFICE 3 & BREAK ROOM	11			20/1	7		8	20/1	9			OFFICE TECH CUBICLES #1
MIS RECEP: OFFICE 3		5		20/1	9		10	20/1		9		OFFICE TECH CUBICLES #2
UNDERSINK GARBAGE DISPOSAL			5	20/1	11		12	20/1			9	OFFICE TECH CUBICLES #3
REC: KITCHEN COUNTERTOP	3			20/1	13		14	20/1	6			REC: LOBBY
REFRIGERATOR: BREAK ROOM		5		20/1	15		16	20/1		2		HVAC SYSTEM TRANSFORMER
REC: CONFERENCE ROOM & JANITOR ROOM			9	20/1	17		18	20/1			9	RECEP: MECH ROOM, STAIRS, & HALLWAY
MIS REC: CONFERENCE ROOM	6			20/1	19		20	20/1	6			REC: NORTH IT ROOM
REC: TRAINING ROOM		9		20/1	21		22	20/1		3		REC: SOUTH IT ROOM
REC: HALLWAY			5	20/1	23		24	20/1			12	WATER HEATERS: MECHANICAL ROOM
REC: ELEC ROOM, HALLWAY, QUIET ROOM	12			20/1	25		26	20/1	1			AUTOMATIC FLUSH
REC: COMMUNICATION ROOM NORTH WALL		3		20/1	27		28	20/1		8		RECEP: FILE STORAGE
REC: COMMUNICATION ROOM EAST WALL			3	20/1	29		30	20/1			6	EXHAUST FAN 2A: ROOF
REC: COMMUNICATION ROOM SOUTH WALL	3			20/1	31		32	20/1	1			RECIRCULATION PUMPS: MECHANICAL ROOM
REC: MEN'S AND WOMEN'S RESTROOM		8		20/1	33		34	30/1		14		EXHAUST FAN 1A: ROOF
MAINT AREA SUPERVISOR CUBICLES			9	20/1	35		36	20/1			5	VENDING MACHINE
MAINTENANCE MANAGER #1 & #2 CUBICLES	9			20/1	37		38	20/1	-			SPARE
MAINT MANAGER #2 & REGION ADMIN CUBICLE		9		20/1	39		40	-		-		SPACE
SUPERVISOR CUBICLE			5	20/1	41		42	-			-	SPACE

A	B	C	
84	94	91	TOTAL CONNECTED LOAD (AMPS PER PHASE)

DESIGN	BY Joseph Abdelsayed	CHECKED J. S. Sandhu	
DETAILS	BY Ed Tapalla/Dali Zhou	CHECKED Joseph Abdelsayed	
QUANTITIES	BY Joseph Abdelsayed	CHECKED J. S. Sandhu	

STATE OF CALIFORNIA
DEPARTMENT OF TRANSPORTATION

DIVISION OF ENGINEERING SERVICES
ELECTRICAL-MECHANICAL-WATER AND WASTEWATER DESIGN

BRIDGE NO. 33M5785
POST MILE 2.2

SFOBB MAINTENANCE COMPLEX

PANEL SCHEDULES 4

SHEET EE1-10.4

TAEMWW Imperial Rev. 7/10

ORIGINAL SCALE IN INCHES FOR REDUCED PLANS 0 1 2 3

UNIT 3596
PROJECT NUMBER & PHASE 04120006661
EA 014081

DISREGARD PRINTS BEARING EARLIER REVISION DATES → 5/30/12

REVISION DATES (PRELIMINARY STAGE ONLY) SHEET OF

25-OCT-2012 10:02

ee1_10.04.dgn

DIST.	COUNTY	ROUTE	POST MILES TOTAL PROJECT	SHEET NO.	TOTAL SHEETS
04	Ala	80	2.2	766	800

REGISTERED ELECTRICAL ENGINEER — 5-30-12 DATE

REGISTERED PROFESSIONAL ENGINEER J.ABDELSAYED No. 18915 Exp. 12-31-13 ELEC STATE OF CALIFORNIA

10-22-12
PLANS APPROVAL DATE

The State of California or its officers or agents shall not be responsible for the accuracy or completeness of scanned copies of this plan sheet.

CALIFORNIA STATE FIRE MARSHAL APPROVED
Approval of this plan does not authorize or approve any omission or deviation from applicable regulations. Final approval is subject to field inspection. One set of approved plans shall be available on the project site at all times.
Reviewed by: JOHN E WOODS, SDSFM
Approval date: 8-22-12

MAIN: 250 AMPERE 3-POLE CB
VOLTS: 480/277 V, 3 PH, 4W

PANEL 8PA
42 kA SCCR

FEEDER SIZE: 3"C, 4#300 MCM AND 1#300 MCM G
LOCATION: IFS-P IN ELECTRICAL RM 131

DESCRIPTION	AMPS A	AMPS B	AMPS C	BRK	CKT	A B C	CKT	BRK	AMPS A	AMPS B	AMPS C	DESCRIPTION
TRANSFORMER 2PA	41			175/3	1		2	30/3	-			SPARE
		33			3		4			-		
			32		5		6				-	
TRANSFORMER 4PA	49			125/3	7		8	100/3	14			PANEL 8PC
		56			9		10			14		
			49		11		12				14	
SPARE	-			50/3	13		14	40/3	-			SPARE
		-			15		16			-		
			-		17		18				-	
SPACE (FOR POWER MONITORING)	-			-	19		20	60/3	10			PANEL 8PB
		-			21		22			3		
			-		23		24				8	

A	B	C	
114	106	103	TOTAL CONNECTED LOAD (AMPS PER PHASE)

MAIN: 100 AMPERE, MAIN LUGS
VOLTS: 480/277 V, 3 PH, 4W

PANEL 8PC
22 kA SCCR

FEEDER SIZE: 4#1 AND 1#1G
LOCATION: IFS-P IN ELECTRICAL RM 131

DESCRIPTION	AMPS A	AMPS B	AMPS C	BRK	CKT	A B C	CKT	BRK	AMPS A	AMPS B	AMPS C	DESCRIPTION
AIR COMPRESSOR: COMPRESSOR ROOM	14			30/3	1		2	20/3	-			SPARE
		14			3		4			-		
			14		5		6				-	
SPARE	-			20/3	7		8	20/1	-			SPARE
		-			9		10	20/1		-		SPARE
			-		11		12	-			-	SPACE
SPARE	-			20/1	13		14	-	-			SPACE
SPARE		-		20/1	15		16	-		-		SPACE
SPACE			-	-	17		18	-			-	SPACE
SPACE	-			-	19		20	-	-			SPACE
SPACE		-		-	21		22	-		-		SPACE
SPACE			-	-	23		24	-			-	SPACE
SPACE	-			-	25		26	-	-			SPACE
SPACE		-		-	27		28	-		-		SPACE
SPACE			-	-	29		30	-			-	SPACE

A	B	C	
14	14	14	TOTAL CONNECTED LOAD (AMPS PER PHASE)

MAIN: 100 AMPERE, MAIN LUGS
VOLTS: 480/277 V, 3 PH, 4W

PANEL 8PB
22 kA SCCR

FEEDER SIZE: 4#4 AND 1#4G
LOCATION: IFS-P IN ELECTRICAL RM 131

DESCRIPTION	AMPERES A	AMPERES B	AMPERES C	BRK	CKT	A B C	CKT	BRK	AMPERES A	AMPERES B	AMPERES C	DESCRIPTION
LNP-P	1			15/1	1		2	15/1	9			LIGHTS RM NO.128,129,130,131,136,137,138,139,140, & 141
EMERGENCY & WB LIGHTS RM NO. 133 & 134		1		15/1	3		4	15/1		1.5		LIGHTS RM NO. 132 & 135
EMERGENCY & WB LIGHTS RM NO. 137 & 136			0.5	15/1	5		6	15/1			7	LIGHTS RM NO. 133 & 134
SPARE	-			15/1	7		8	15/1	-			SPARE
SPARE		-		15/1	9		10	15/1		-		SPARE
SPARE			-	15/1	11		12	15/1			-	SPARE
SPARE	-			15/1	13		14	15/1	-			SPARE
SPARE		-		15/1	15		16	15/1		-		SPARE
SPARE			-	15/1	17		18	15/1			-	SPARE

A	B	C	
10	2.5	7.5	TOTAL CONNECTED LOAD (AMPERES PER PHASE)

DESIGN	BY Joseph Abdelsayed	CHECKED J. S. Sandhu	
DETAILS	BY Ed Tapalla/Dali Zhou	CHECKED Joseph Abdelsayed	
QUANTITIES	BY Joseph Abdelsayed	CHECKED J. S. Sandhu	

STATE OF CALIFORNIA
DEPARTMENT OF TRANSPORTATION

DIVISION OF ENGINEERING SERVICES
ELECTRICAL-MECHANICAL-WATER AND WASTEWATER DESIGN

BRIDGE NO. 33M5785
POST MILE 2.2

SFOBB MAINTENANCE COMPLEX

PANEL SCHEDULES 5

SHEET **EE1-10.5**

TAEMWW Imperial Rev. 7/10

ORIGINAL SCALE IN INCHES FOR REDUCED PLANS 0 1 2 3

UNIT 3596
PROJECT NUMBER & PHASE 04120006661
EA 014081

DISREGARD PRINTS BEARING EARLIER REVISION DATES → 5/30/12

REVISION DATES (PRELIMINARY STAGE ONLY) SHEET OF

25-OCT-2012 10:02

ee1_10.05.dgn

MAIN: 200 AMPERE 3 POLE CB
VOLTS: 120/240 V, 3 PH, 4W

PANEL 4PA
22 kA SCCR

FEEDER SIZE: 4#4/0 AND 1#4/0G
LOCATION: IFS-P IN ELECTRICAL RM 131

DESCRIPTION	AMPS A	AMPS B	AMPS C	BRK	CKT	A B C	CKT	BRK	AMPS A	AMPS B	AMPS C	DESCRIPTION
OVERHEAD DOOR OPERATORS: SHOP CREW & SEW ROOMS	8			20/3	1		2	20/3	8			OVERHEAD DOOR OPERATORS: PAINT MIX & RIGGING SECURE TOOL ROOMS
		8			3		4			8		
			8		5		6				8	
INSTANT WATER HEATER: PAINT MIX ROOM	27			40/2	7		8	20/2	-			SPARE
		27			9		10			-		
INSTANT WATER HEATER: SEW ROOM			27	40/2	11		12	20/2			6	DRILL PRESS: RIGGING SECURE TOOL ROOM
	27				13		14		6			
SUPPLY FAN 1B: PAINTER'S AREA HALLWAY		21		30/2	15		16	40/2		27		INSTANT WATER HEATER: RIGGING SECURE TOOL ROOM
			21		17		18				27	
SPARE	-			20/2	19		20	30/2	21			SUPPLY FAN 2B: PAINTER'S AREA HALLWAY
		-			21		22			21		
SPARE			-	30/3	23		24	20/2			-	SPARE
	-				25		26		-			
		-			27		28	-		-		SPACE
SPACE			-	-	29		30	-			-	SPACE
SPACE	-			-	31		32	-	-			SPACE
SPACE		-		-	33		34	-		-		SPACE
SPACE			-	-	35		36	-			-	SPACE
SPACE	-			-	37		38	-	-			SPACE
SPACE		-		-	39		40	-		-		SPACE
SPACE			-	-	41		42	-			-	SPACE

A	B	C	
97	112	97	TOTAL CONNECTED LOAD (AMPS PER PHASE)

MAIN: 200 AMPERE 3 POLE CB
VOLTS: 120/208 V, 3 PH, 4W

PANEL 2PA
22 kA SCCR

FEEDER SIZE: 4#4/0 AND 1#4/0G
LOCATION: IFS-P IN ELECTRICAL RM 131

DESCRIPTION	AMPS A	AMPS B	AMPS C	BRK	CKT	A B C	CKT	BRK	AMPS A	AMPS B	AMPS C	DESCRIPTION
REC: ELECTRICAL ROOM, REC. MAT. STORAGE	9			20/1	1		2	*20/1	8			MULTI-OUTLET: N. SHOP CREW ROOM
REC: STORAGE, COMPRESSOR, OUTDOOR		11		20/1	3		4	20/1		4		BENCH DRILL PRESS: N. SHOP CREW ROOM
MULTI-OUTLET: RIGGING SECURE TOOL ROOM 1			8	*20/1	5		6	20/1			12	BENCH GRINDER: N. SHOP CREW ROOM
MULTI-OUTLET: RIGGING SECURE TOOL ROOM 2	8			*20/1	7		8	*20/1	8			MULTI-OUTLET: MID. SHOP CREW ROOM 1
SPARE		-		20/2	9		10	*20/1		8		MULTI-OUTLET: MID. SHOP CREW ROOM 2
			-		11		12	20/1			5	RECEPTACLES: HALLWAY
RECEPTACLES: S. RIGGING SECURE TOOL ROOM	6			*20/1	13		14	*20/1	9			RECEPTACLES: TOOL & PAINT STORAGE
RECEPTACLES: RIGGING SECURE TOOL I-BEAMS		6		*20/1	15		16	*20/1		5		DRILL PRESS: E. SHOP CREW ROOM
RECEPTACLES: E. RIGGING SECURE TOOL ROOM			6	*20/1	17		18	*20/1			8	RECEPTACLES: N. & E. SEW ROOM
MULTI-OUTLET: PAINT MIX ROOM 1	8			*20/1	19		20	*20/1	8			MULTI-OUTLET: SEW ROOM
MULTI-OUTLET: PAINT MIX ROOM 2		8		*20/1	21		22	*20/1		3		RECEPTACLES: SEWING TABLE
PAINT SHAKER: WEST PAINT MIX ROOM			7	*20/1	23		24	20/1			4	AIR DRYER: COMPRESSOR ROOM
PAINT SHAKER: WEST PAINT MIX ROOM	7			*20/1	25		26	20/1	-			SPARE
RECEPTACLES: PAINT MIX I-BEAMS		6		*20/1	27		28	20/1		-		SPARE
RECEPTACLES: HALLWAY & E. PAINT MIX			8	*20/1	29		30	20/1			-	SPARE
PAINT SHAKER: EAST PAINT MIX ROOM	10			*20/1	31		32	-	-			SPACE
PAINT SHAKER: EAST PAINT MIX ROOM		10		*20/1	33		34	-		-		SPACE
RECEPTACLES: TOOL & PAINT STORAGE			11	*20/1	35		36	-			-	SPACE
STANDING GRINDER: SHOP CREW ROOM	7			*20/1	37		38	-	-			SPACE
DRILL PRESS: SHOP CREW ROOM		5		*20/1	39		40	-		-		SPACE
SPARE			-	20/1	41		42	-			-	SPACE

* GFCI TYPE CIRCUIT BREAKER

A	B	C	
88	67	69	TOTAL CONNECTED LOAD (AMPS PER PHASE)

CALIFORNIA STATE FIRE MARSHAL APPROVED
Approval of this plan does not authorize or approve any omission or deviation from applicable regulations. Final approval is subject to field inspection. One set of approved plans shall be available on the project site at all times.
Reviewed by: JOHN E WOODS, SDSFM
Approval date: 8-22-12

DIST.	COUNTY	ROUTE	POST MILES TOTAL PROJECT	SHEET NO.	TOTAL SHEETS
04	Ala	80	2.2	767	800

REGISTERED ELECTRICAL ENGINEER — 5-30-12 DATE

REGISTERED PROFESSIONAL ENGINEER J. ABDELSAYED No. 18915 Exp. 12-31-13 ELEC STATE OF CALIFORNIA

10-22-12
PLANS APPROVAL DATE

The State of California or its officers or agents shall not be responsible for the accuracy or completeness of scanned copies of this plan sheet.

MAIN: 200 AMPERE 3 POLE CB
VOLTS: 120/208 V, 3 PH, 4W

PANEL 2PB
22 kA SCCR

FEEDER SIZE: 4#4/0 AND 1#4/0G
LOCATION: IFS-P IN ELECTRICAL RM 131

DESCRIPTION	AMPS A	AMPS B	AMPS C	BRK	CKT	A B C	CKT	BRK	AMPS A	AMPS B	AMPS C	DESCRIPTION
EXHAUST FANS: REC MAT STOR/RIG SEC TOOL	4			20/1	1		2	20/1	-			SPARE
EXHAUST FANS: PAINT MIX ROOMS		4		20/1	3		4	20/1		-		SPARE
EXHAUST FANS: PAINT STORAGE ROOMS			4	20/1	5		6	20/1			-	SPARE
RADIANT HEATERS: PAINT MIX/RIG SEC TOOL	3			20/1	7		8	20/1	-			SPARE
RADIANT HEATERS: SHOP CREW & SEW ROOM		5		20/1	9		10	20/1		-		SPARE
SPARE			-	20/1	11		12	20/1			-	SPARE
SPARE	-			20/1	13		14	-	-			SPACE
SPARE		-		20/1	15		16	-		-		SPACE
SPARE			-	20/1	17		18	-			-	SPACE
SPARE	-			20/1	19		20	-	-			SPACE
SPARE		-		20/1	21		22	-		-		SPACE
SPACE			-	-	23		24	-			-	SPACE
SPACE	-			-	25		26	-	-			SPACE
SPACE		-		-	27		28	-		-		SPACE
SPACE			-	-	29		30	-			-	SPACE
SPACE	-			-	31		32	-	-			SPACE
SPACE		-		-	33		34	-		-		SPACE
SPACE			-	-	35		36	-			-	SPACE
SPACE	-			-	37		38	-	-			SPACE
SPACE		-		-	39		40	-		-		SPACE
SPACE			-	-	41		42	-			-	SPACE

* GFCI TYPE CIRCUIT BREAKER

A	B	C	
7	9	4	TOTAL CONNECTED LOAD (AMPS PER PHASE)

DESIGN	BY Joseph Abdelsayed	CHECKED J. S. Sandhu	
DETAILS	BY Ed Tapalla/Dali Zhou	CHECKED Joseph Abdelsayed	
QUANTITIES	BY Joseph Abdelsayed	CHECKED J. S. Sandhu	

STATE OF CALIFORNIA
DEPARTMENT OF TRANSPORTATION

DIVISION OF ENGINEERING SERVICES
ELECTRICAL-MECHANICAL-WATER AND WASTEWATER DESIGN

BRIDGE NO. 33M5785
POST MILE 2.2

SFOBB MAINTENANCE COMPLEX

PANEL SCHEDULES 6

SHEET EE1-10.6

TAEMWW Imperial Rev. 7/10

ORIGINAL SCALE IN INCHES FOR REDUCED PLANS 0 1 2 3

UNIT 3596
PROJECT NUMBER & PHASE 04120006661
EA 014081

DISREGARD PRINTS BEARING EARLIER REVISION DATES → 5/30/12

REVISION DATES (PRELIMINARY STAGE ONLY) SHEET OF

25-OCT-2012 10:02

ee1_10.06.dgn

DIST.	COUNTY	ROUTE	POST MILES TOTAL PROJECT	SHEET NO.	TOTAL SHEETS
04	Ala	80	2.2	768	800

REGISTERED ELECTRICAL ENGINEER — 5-30-12 DATE

REGISTERED PROFESSIONAL ENGINEER J. ABDELSAYED No. 18915 Exp. 12-31-13 ELEC STATE OF CALIFORNIA

10-22-12
PLANS APPROVAL DATE

The State of California or its officers or agents shall not be responsible for the accuracy or completeness of scanned copies of this plan sheet.

CALIFORNIA STATE FIRE MARSHAL APPROVED
Approval of this plan does not authorize or approve any omission or deviation from applicable regulations. Final approval is subject to field inspection. One set of approved plans shall be available on the project site at all times.
Reviewed by: JOHN E WOODS, SDSFM
Approval date: 8-22-12

MAIN: 500 AMPERE 3-POLE CB
VOLTS: 480/277 V, 3 PH, 4W

PANEL 8BA
42 kA SCCR

FEEDER SIZE: (2) 3"C, 4#300 MCM, 1#300 MCM G
LOCATION: IFS-B IN EQUIPMENT STORAGE RM 142

DESCRIPTION	AMPS A	AMPS B	AMPS C	BRK	CKT	A B C	CKT	BRK	AMPS A	AMPS B	AMPS C	DESCRIPTION
TRANSFORMER 2BA	106			175/3	1		2	30/3	-			SPARE
		103			3		4			-		
			98		5		6				-	
TRANSFORMER 4BA	27			125/3	7		8	300/3	189			PANEL 8BC
		27			9		10			223		
			18		11		12				186	
SPARE	-			50/3	13		14	40/3	-			SPARE
		-			15		16			-		
			-		17		18				-	
SPACE (FOR POWER MONITORING)	-			-	19		20	60/3	11			PANEL 8BB
		-			21		22			16		
			-		23		24				7	

A	B	C	
333	369	309	TOTAL CONNECTED LOAD (AMPS PER PHASE)

MAIN: 300 AMPERE, MAIN LUGS
VOLTS: 480/277 V, 3 PH, 4W

PANEL 8BC
22 kA SCCR

FEEDER SIZE: 4#350 MCM AND 1#350G
LOCATION: IFS-B IN EQUIPMENT STORAGE RM 142

DESCRIPTION	AMPS A	AMPS B	AMPS C	BRK	CKT	A B C	CKT	BRK	AMPS A	AMPS B	AMPS C	DESCRIPTION
WELDING MACHINE: WELDING SHOP	52			60/2	1		2	50/3	30			WELDING MACHINE: WELDING SHOP
		52			3		4			30		
GTAW WELDER: WELDING SHOP			50	60/2	5		6				30	
	50				7		8	50/2	35			WELDING MACHINE: WELDING SHOP
AIR COMPRESSOR: SECURE STORAGE		14		30/3	9		10			35		
			14		11		12	20/3			4	BRIDGE CRANES: WELDING SHOP & EQUIPMENT STORAGE BAY
	14				13		14		4			
BRIDGE CRANES: EQUIPMENT STORAGE BAYS		4		20/3	15		16			4		
			4		17		18	20/2			-	SPARE
	4				19		20		-			
SPARE		-		30/2	21		22	100/2		84		STUD WELDER: WELDING SHOP
			-		23		24				84	
SPARE	-			40/3	25		26	30/3	-			SPARE
		-			27		28			-		
			-		29		30				-	

A	B	C	
189	223	186	TOTAL CONNECTED LOAD (AMPS PER PHASE)

MAIN: 60 AMPERE, MAIN LUGS
VOLTS: 480/277 V, 3 PH, 4W

PANEL 8BB
22 kA SCCR

FEEDER SIZE: 4#4 AND 1#10G
LOCATION: IFS-B IN EQUIPMENT STORAGE RM 142

DESCRIPTION	AMPERES A	AMPERES B	AMPERES C	BRK	CKT	A B C	CKT	BRK	AMPERES A	AMPERES B	AMPERES C	DESCRIPTION
LNP-B	1			15/1	1		2	15/1	7			LIGHTS RM NO. 145 & 146
EMERGENCY & WB LIGHTS RM NO. 142		.5		15/1	3		4	15/1		7		LIGHTS RM NO. 142 MARKED "a" & "b"
SPARE			-	15/1	5		6	15/1			7	LIGHTS RM NO. 142 MARKED "c" & "d"
EMERGENCY & WB LIGHTS RM NO. 147	1			15/1	7		8	15/1	1.5			LIGHTS RM NO. 143
EMERGENCY & WB LIGHTS RM NO. 145 & 146		1.5		15/1	9		10	15/1		6.5		LIGHTS RM NO. 147
SPARE			-	15/1	11		12	15/1			-	SPARE
SPARE	-			15/1	13		14	15/1	-			SPARE
SPARE		-		15/1	15		16	15/1		-		SPARE
SPARE			-	15/1	17		18	15/1			-	SPARE

A	B	C	
10.5	15.5	7	TOTAL CONNECTED LOAD (AMPERES PER PHASE)

DESIGN	BY Joseph Abdelsayed	CHECKED J. S. Sandhu
DETAILS	BY Ed Tapalla/Dali Zhou	CHECKED Joseph Abdelsayed
QUANTITIES	BY Joseph Abdelsayed	CHECKED J. S. Sandhu

STATE OF CALIFORNIA
DEPARTMENT OF TRANSPORTATION

DIVISION OF ENGINEERING SERVICES
ELECTRICAL-MECHANICAL-WATER AND WASTEWATER DESIGN

BRIDGE NO. 33M5785
POST MILE 2.2

SFOBB MAINTENANCE COMPLEX

PANEL SCHEDULES 7

SHEET EE1-10.7

TAEMWW Imperial Rev. 7/10

ORIGINAL SCALE IN INCHES FOR REDUCED PLANS 0 1 2 3

UNIT 3596
PROJECT NUMBER & PHASE 04120006661
EA 014081

DISREGARD PRINTS BEARING EARLIER REVISION DATES → 5/30/12

REVISION DATES (PRELIMINARY STAGE ONLY) SHEET OF

25-OCT-2012 10:02

ee1_10.07.dgn

MAIN: 200 AMPERE 3-POLE CB
VOLTS: 120/240 V, 3 PH, 4W

PANEL 4BA
22 kA SCCR

FEEDER SIZE: 4#4/0 AND 1#4/0G
LOCATION: IFS-B EQUIPMENT STORAGE RM 142

DESCRIPTION	AMPS A	AMPS B	AMPS C	BRK	CKT	A B C	CKT	BRK	AMPS A	AMPS B	AMPS C	DESCRIPTION
OVERHEAD DOOR OPERATORS: NORTH EQUIPMENT STORAGE BAY	12			20/3	1		2	20/3	8			OVERHEAD DOOR OPERATORS: CARPENTER SHOP & SECURE STORAGE
		12			3		4			8		
			12		5		6				8	
OVERHEAD DOOR OPERATORS: SOUTH EQUIPMENT STORAGE BAY	12			20/3	7		8	20/3	4			OVERHEAD DOOR OPERATOR: WELDING SHOP
		12			9		10			4		
			12		11		12				4	
DUST COLLECTOR: CABINET SHOP	17			30/2	13		14	30/3	-			SPARE
		17			15		16			-		
SPARE			-	20/3	17		18				-	
	-				19		20	20/2	-			SPARE
		-			21		22			-		
SPACE			-	-	23		24	-			-	SPACE
SPACE	-			-	25		26	-	-			SPACE
SPACE		-		-	27		28	-		-		SPACE
SPACE			-	-	29		30	-			-	SPACE
SPACE	-			-	31		32	-	-			SPACE
SPACE		-		-	33		34	-		-		SPACE
SPACE			-	-	35		36	-			-	SPACE
SPACE	-			-	37		38	-	-			SPACE
SPACE		-		-	39		40	-		-		SPACE
SPACE			-	-	41		42	-			-	SPACE

A	B	C	
53	53	36	TOTAL CONNECTED LOAD (AMPS PER PHASE)

MAIN: 200 AMPERE 3 POLE CB
VOLTS: 120/208 V, 3 PH, 4W

PANEL 2BA
22 kA SCCR

FEEDER SIZE: 4#4/0 AND 1#4/0G
LOCATION: IFS-B EQUIPMENT STORAGE RM 142

DESCRIPTION	AMPS A	AMPS B	AMPS C	BRK	CKT	A B C	CKT	BRK	AMPS A	AMPS B	AMPS C	DESCRIPTION
REC: EQUIPMENT STORAGE & HALLWAY	7			*20/1	1		2	50/3	33			PLASMA CUTTER: WELDING SHOP
MULTI-OUTLET: W. EQUIPMENT STORAGE BAY		8		*20/1	3		4			33		
RECEPTACLES: EQUIPMENT STORAGE BAY			5	*20/1	5		6				33	
MULTI-OUTLET: E. EQUIPMENT STORAGE BAY	8			*20/1	7		8	20/3	14			CHOP SAW: WELDING SHOP
RECEPTACLES: HALLWAY		9		20/1	9		10			14		
RECEPTACLES: WELDING SHOP			6	*20/1	11		12				14	
METAL LATHE: WELDING SHOP	15			30/2	13		14	20/3	13			VERTICAL BAND SAW: WELDING SHOP
		15			15		16			13		
MULTI-OUTLET: WELDING SHOP			8	*20/1	17		18				13	
DRILL PRESS: CARPENTER SHOP	8			*20/1	19		20	20/2	9			BELT/DISC SANDER: CARPENTER SHOP
BENCH GRINDER: CARPENTER SHOP		8		*20/1	21		22			9		
BELT SANDER: CARPENTER SHOP			6	*20/1	23		24	30/3			16	RADIAL ARM SAW: CARPENTER SHOP
RECEPTACLES: CARPENTER SHOP	8			*20/1	25		26		16			
JOINER PLANER: CARPENTER SHOP		6		*20/1	27		28			16		
JOINER PLANER: CARPENTER SHOP			10	*20/1	29		30	20/3			10	RADIAL ARM SAW: CARPENTER SHOP
BAND SAW: CARPENTER SHOP	9			*20/1	31		32		10			
RADIAL ARM SAW: CARPENTER SHOP		6		*20/1	33		34			10		
SPARE			-	20/1	35		36	20/3			4	TABLE SAW: CARPENTER SHOP
SPARE	-			20/1	37		38		4			
SPARE		-		20/1	39		40			4		
SPACE			-	-	41		42				-	SPACE

• GFCI TYPE CIRCUIT BREAKER

A	B	C	
154	151	125	TOTAL CONNECTED LOAD (AMPS PER PHASE)

CALIFORNIA STATE FIRE MARSHAL APPROVED
Approval of this plan does not authorize or approve any omission or deviation from applicable regulations. Final approval is subject to field inspection. One set of approved plans shall be available on the project site at all times.
Reviewed by: JOHN E WOODS, SDSFM
Approval date: 8-22-12

DIST.	COUNTY	ROUTE	POST MILES TOTAL PROJECT	SHEET NO.	TOTAL SHEETS
04	Ala	80	2.2	769	800

REGISTERED ELECTRICAL ENGINEER — 5-30-12 DATE
REGISTERED PROFESSIONAL ENGINEER J. ABDELSAYED No. 18915 Exp. 12-31-13 ELEC STATE OF CALIFORNIA

10-22-12
PLANS APPROVAL DATE

The State of California or its officers or agents shall not be responsible for the accuracy or completeness of scanned copies of this plan sheet.

MAIN: 200 AMPERE 3 POLE CB
VOLTS: 120/208 V, 3 PH, 4W

PANEL 2BB
22 kA SCCR

FEEDER SIZE: 4#4/0 AND 1#4/0G
LOCATION: IFS-B EQUIPMENT STORAGE RM 142

DESCRIPTION	AMPS A	AMPS B	AMPS C	BRK	CKT	A B C	CKT	BRK	AMPS A	AMPS B	AMPS C	DESCRIPTION
REC: W. SECURE STORAGE & OUTDOOR	8			*20/1	1		2	20/3	6			GRINDER: WELDING SHOP
REC: E. SECURE STORAGE		6		*20/1	3		4			6		
DRILL PRESS: WELDING SHOP			8	20/2	5		6				6	
	8				7		8	20/2	7			BENDER: WELDING SHOP
GRINDER LIGHTS: WELDING SHOP		1		20/1	9		10			7		
BELT SANDER: WELDING SHOP			11	20/2	11		12	20/3			8	HORIZONTAL BAND SAW: WELDING SHOP
	11				13		14		8			
DRILL BIT SHARPENER: WELDING SHOP		7		*20/1	15		16			8		
IRON WORKER: WELDING SHOP			30	60/3	17		18	20/1			-	SPARE
	30				19		20	20/1	3			RADIANT HEATERS: CARPENTER/WELDING
		30			21		22	20/1		2		EXHAUST FAN: CARPENTER SHOP
EXHAUST FAN: W. WELDING SHOP			10	20/1	23		24	20/1			9	RADIANT HEATERS: EQUIP. STORAGE BAY
SPARE	-			20/1	25		26	20/1	-			SPARE
EXHAUST FAN: E. WELDING SHOP		10		20/1	27		28	20/1		9		EXHAUST FANS: EQUIPMENT STORAGE BAY
MOBILE FUME EXTRACTOR: WELDING SHOP			16	*20/1	29		30	20/1			-	SPARE
RECEP: E & W WELDING SHOP	8			*20/1	31		32	20/3	-			SPARE
SPARE		-		20/2	33		34			-		
			-		35		36				-	
SPACE	-			-	37		38	-	-			SPACE
SPACE		-		-	39		40	-		-		SPACE
SPACE			-	-	41		42	-			-	SPACE

• GFCI TYPE CIRCUIT BREAKER

A	B	C	
89	86	98	TOTAL CONNECTED LOAD (AMPS PER PHASE)

DESIGN	BY Joseph Abdelsayed	CHECKED J. S. Sandhu	
DETAILS	BY Ed Tapalla/Dali Zhou	CHECKED Joseph Abdelsayed	
QUANTITIES	BY Joseph Abdelsayed	CHECKED J. S. Sandhu	

STATE OF CALIFORNIA
DEPARTMENT OF TRANSPORTATION

DIVISION OF ENGINEERING SERVICES
ELECTRICAL-MECHANICAL-WATER AND WASTEWATER DESIGN

BRIDGE NO. 33M5785
POST MILE 2.2

SFOBB MAINTENANCE COMPLEX

PANEL SCHEDULES 8

SHEET EE1-10.8

TAEMWW Imperial Rev. 7/10

ORIGINAL SCALE IN INCHES FOR REDUCED PLANS 0 1 2 3

UNIT 3596
PROJECT NUMBER & PHASE 04120006661
EA 014081

DISREGARD PRINTS BEARING EARLIER REVISION DATES → 5/30/12
REVISION DATES (PRELIMINARY STAGE ONLY) SHEET OF

25-OCT-2012 10:02
ee1_10.08.dgn

DIST.	COUNTY	ROUTE	POST MILES TOTAL PROJECT	SHEET NO.	TOTAL SHEETS
04	Ala	80	2.2	770	800

CALIFORNIA STATE FIRE MARSHAL APPROVED
Approval of this plan does not authorize or approve any omission or deviation from applicable regulations. Final approval is subject to field inspection. One set of approved plans shall be available on the project site at all times.
Reviewed by: JOHN E WOODS, SDSFM
Approval date: 8-22-12

Catalino A. Enriquez 5-30-12
REGISTERED ELECTRICAL ENGINEER DATE

REGISTERED PROFESSIONAL ENGINEER C. ENRIQUEZ No. 16944 Exp. 6-30-13 ELEC STATE OF CALIFORNIA

10-22-12
PLANS APPROVAL DATE

The State of California or its officers or agents shall not be responsible for the accuracy or completeness of scanned copies of this plan sheet.

General Notes:

A. *For one line power diagrams, see sheets EE0-1.1 through EE0-1.7.*

B. *For location of all panelboards and switchboards, see sheet EE1-1.1.*

C. *Provide appropriate lugs for circuit breakers as required to accommodate two set run and/or oversized conductors.*

MAIN: 60 AMPERE, MAIN LUGS ONLY
VOLTS: 277/480 V, 3 PH, 4W

PANEL 8MB (TOP FEED)
25KA SCCR

FEEDER SIZE: 4#1, 1#6G
LOCATION: IFS-M IN MAIN ELECTRICAL ROOM 148

DESCRIPTION	AMPERES A	AMPERES B	AMPERES C	BRK	CKT	A B C	CKT	BRK	AMPERES A	AMPERES B	AMPERES C	DESCRIPTION
LNP-M	1			15/1	1		2	15/1	0.8			LIGHTS RM NO. 148
EMERGENCY LIGHTS RM NO. 148		0.5		15/1	3		4	15/1		2		LIGHTS RM NO. 144 & 165
WORK BENCH LIGHTS ROOM NO. 178			1	15/1	5		6	15/1			4	LIGHTS RM NO. 149, 166, 176, 177 & 178
SPARE	1			15/1	7		8	15/1	4			LIGHTS RM NO. 168,169,170,171,172,173,174,175
EMERGENCY & WB LIGHTS RM NO. 162		1.5		15/1	9		10	15/1		1		LIGHTS RM NO. 167
SPARE			1	15/1	11		12	15/1			3.6	LIGHTS RM NO. 150, 151, 152, 153, 154 & 155
MENS/WOMEN SHOWER STALLS (RM NO. 153 & 156)	0.2			15/1	13		14	15/1	4			LIGHTS RM NO. 162 & 163
BELCP148		9		15/1	15		16	15/1		1		LIGHTS RM NO. 157 & 158
SPARE				15/1	17		18	15/1			2	LIGHTS RM NO. 161, 159, 160, 164A & 164B

A	B	C	
11	15	12	TOTAL CONNECTED LOAD (AMPERES PER PHASE)

MAIN: 100 AMPERE, MAIN LUGS ONLY
VOLTS: 277/480 V, 3 PH, 4W

PANEL 8MC (TOP FEED)
25KA SCCR

FEEDER SIZE: 4#1, 1#6G
LOCATION: IFS-M IN MAIN ELECTRICAL ROOM 148

DESCRIPTION	AMPS A	AMPS B	AMPS C	BRK	CKT	A B C	CKT	BRK	AMPS A	AMPS B	AMPS C	DESCRIPTION
HVAC ROOFTOP UNIT (AC-2B)- BUILDING IB SOUTH OFFICE AREA	9			25/3	1		2	20/3	2			480 V MOTOR CONTROLLER- ELECTRICAL SHOP (RM # 162)
		9			3		4			2		
			9		5		6				2	
HVAC ROOFTOP UNIT (AC-1B)- BUILDING IB NORTH OFFICE AREA	9			25/3	7		8	20/1	-			SPARE
		9			9		10	20/1		-		SPARE
			9		11		12	15/2			-	SPARE
SPARE	-			20/1	13		14		-			
SPARE		-		20/1	15		16	20/2		-		SPARE
SPARE			-	20/1	17		18				-	
SPARE	-			15/3	19		20	15/3	-			SPARE
		-			21		22			-		
			-		23		24				-	
SPARE	-			20/3	25		26	15/3	-			SPARE
		-			27		28			-		
			-		29		30				-	
SPARE	-			20/3	31		32	20/3	-			SPARE
		-			33		34			-		
			-		35		36				-	
SPARE	-			30/3	37		38	40/3	-			SPARE
		-			39		40			-		
			-		41		42				-	

A	B	C	
20	20	20	TOTAL CONNECTED LOAD (AMPS PER PHASE)

DESIGN	BY Catalino Enriquez	CHECKED J.S.S./H.Abdelsayed	
DETAILS	BY Catalino Enriquez	CHECKED J.S.S./H.Abdelsayed	
QUANTITIES	BY Catalino Enriquez	CHECKED J.S.S./H.Abdelsayed	

STATE OF CALIFORNIA
DEPARTMENT OF TRANSPORTATION

DIVISION OF ENGINEERING SERVICES
ELECTRICAL-MECHANICAL-WATER AND WASTEWATER DESIGN

BRIDGE NO. 33M5785
POST MILE 2.2

SFOBB MAINTENANCE COMPLEX

PANEL SCHEDULES 9

SHEET **EE1-10.9**

TAEMWW Imperial Rev. 7/10

ORIGINAL SCALE IN INCHES FOR REDUCED PLANS 0 1 2 3

UNIT 3596
PROJECT NUMBER & PHASE 04120006661
EA 014081

DISREGARD PRINTS BEARING EARLIER REVISION DATES → 11/29/11 4/23/12 5/19/12 5/30/12

REVISION DATES (PRELIMINARY STAGE ONLY) SHEET OF

25-OCT-2012 10:02

ee1_10.09.dgn

MAIN: 200 AMPERE 3-POLE CB
VOLTS: 120/208 V, 3 PH, 4W

PANEL 2EA (BOTTOM FEED)
22KA SCCR

FEEDER SIZE: 2 SET 4#3/0 AND 1 SET 1#2/0G
LOCATION: IFS-M IN MAIN ELECTRICAL ROOM 148

DESCRIPTION	AMPS A	AMPS B	AMPS C	BRK	CKT	CKT	BRK	AMPS A	AMPS B	AMPS C	DESCRIPTION
GRINDER- WELDING SHOP RM 147	13			30/1	1	2	20/1				SPARE
ROOFTOP OUTLETS- BUILDING 1B OFFICE AREA		4.5		20/1	3	4	20/1				SPARE
ROOFTOP OUTLET- A/C 3B OUTDOOR			1.5	20/1	5	6	20/1				SPARE
SPARE	-			20/1	7	8	20/1				SPARE
SPARE		-		20/1	9	10	20/1				SPARE
SPARE			-	20/1	11	12	20/1			-	SPARE
SPARE	-			20/1	13	14	20/1	-			SPARE
SPARE		-		20/1	15	16	20/1		-		SPARE
SPARE			-	20/1	17	18	20/1			-	SPARE
SPARE	-			20/1	19	20	20/1	-			SPARE
SPARE		-		20/1	21	22	20/1		-		SPARE
SPARE			-	20/1	23	24	20/1			-	SPARE
SPARE	-			20/1	25	26	100/3	64			PANEL 2EB IN ELECTRICAL SHOP 162
SPARE		-		20/1	27	28			66		
SPARE			-	20/1	29	30				70	
SPACE	-			-	31	32	-	-			SPACE
SPACE		-		-	33	34	-		-		SPACE
SPACE			-	-	35	36	-			-	SPACE
SPACE	-			-	37	38	125/3	70			UPS- MAIN COMMUNICATION ROOM 176
SPACE		-		-	39	40			70		
SPACE			-	-	41	42				70	

A	B	C	
147	139	143	TOTAL CONNECTED LOAD (AMPS PER PHASE)

MAIN: 200 AMPERE 3-POLE CB
VOLTS: 120/208 V, 3 PH, 4W

PANEL 2ED (BOTTOM FEED)
22KA SCCR

FEEDER SIZE: 2 SET 4#3/0 AND 1 SET 1#2/0G
LOCATION: IFS-M IN MAIN ELECTRICAL ROOM 148

DESCRIPTION	AMPS A	AMPS B	AMPS C	BRK	CKT	CKT	BRK	AMPS A	AMPS B	AMPS C	DESCRIPTION
MULTIOUTLET- NORTH ETTIE STORAGE 178	7.5			*20/1	1	2	20/1*	8			OUTLET- ELECTRODE OVEN N. WELDING SHOP 147
MULTIOUTLET- EAST ETTIE STORAGE 178		7.5		*20/1	3	4	20/1*		8		OUTLET- ELECTRODE OVEN E. WELDING SHOP 147
MULTIOUTLET- WEST ETTIE STORAGE 178			7.5	*20/1	5	6	20/1*			5	OUTLET- ICE MAKER ETTIE STORAGE 178
SPARE	-			20/1	7	8	20/1	9			OUTLETS- MAIN ELECTRICAL ROOM 148
OUTLETS- ETTIE STORAGE 178		7.5		*20/1	9	10	20/1		-		SPARE
OUTLETS- ETTIE STORAGE 178			7.5	*20/1	11	12	20/1#			1	BELL- FIRE ALARM SYSTEM
SPARE	-			20/1	13	14	20/1	-			SPARE
SPARE		-		20/1	15	16	20/1		-		SPARE
SPARE			-	20/1	17	18	20/1			-	SPARE
SPARE	-			20/1	19	20	20/1	-			SPARE
SPARE		-		20/1	21	22	20/1		-		SPARE
SPARE			-	20/1	23	24	20/1			-	SPARE
SPARE	-			20/1	25	26	20/1	-			SPARE
SPARE		-		20/1	27	28	20/1		-		SPARE
SPARE			-	20/1	29	30	20/1			-	SPARE
SPARE	-			20/1	31	32	20/1	-			SPARE
SPARE		-		20/1	33	34	20/1		-		SPARE
SPARE			-	20/1	35	36	20/1			-	SPARE
SPARE	-			20/1	37	38	100/3	55			PANEL 2EC IN HALLWAY 167
SPARE		-		20/1	39	40			53		
SPARE			-	20/1	41	42				57	

A	B	C	
80	76	78	TOTAL CONNECTED LOAD (AMPS PER PHASE)

CALIFORNIA STATE FIRE MARSHAL APPROVED
Approval of this plan does not authorize or approve any omission or deviation from applicable regulations. Final approval is subject to field inspection. One set of approved plans shall be available on the project site at all times.
Reviewed by: JOHN E WOODS, SDSFM
Approval date: 8-22-12

DIST.	COUNTY	ROUTE	POST MILES TOTAL PROJECT	SHEET NO.	TOTAL SHEETS
04	Ala	80	2.2	771	800

Catalino A. Enriquez 5-30-12
REGISTERED ELECTRICAL ENGINEER DATE

REGISTERED PROFESSIONAL ENGINEER C. ENRIQUEZ No. 16944 Exp. 6-30-13 ELEC STATE OF CALIFORNIA

10-22-12
PLANS APPROVAL DATE

The State of California or its officers or agents shall not be responsible for the accuracy or completeness of scanned copies of this plan sheet.

CIRCUIT BREAKER SHALL LOCKABLE AND WITH RED COLORED HANDLE AND IDENTIFIED AS "FIRE ALARM CIRCUIT".

* INSTALL GFCI TYPE CIRCUIT BREAKER WITH 5 MILLI-AMPERE GROUND FAULT PROTECTION.

MAIN: 125 AMPERE 3 POLE CB
VOLTS: 120/240 V, 3 PH, 4W

PANEL 4EA (BOTTOM FEED)
22 KA SCCR

FEEDER SIZE: 4#1/0, 1#4G
LOCATION: IFS-M IN MAIN ELECTRICAL ROOM 148

DESCRIPTION	AMPS A	AMPS B	AMPS C	BRK	CKT	CKT	BRK	AMPS A	AMPS B	AMPS C	DESCRIPTION
HVAC AC-3B (SPLIT TYPE)- MAIN COMMUNICATION ROOM ROOF AREA	12			25/2	1	2	15/3	3.2			OVERHEAD DOOR OPERATOR- ETTIE STORAGE ROOM 178
		12			3	4			3.2		
SPARE			-	20/2	5	6				3.2	
	-				7	8	20/3	6			SPECIAL PURPOSE RECEPTACLE- ETTIE STORAGE ROOM 178
SPARE		-		20/2	9	10			6		
			-		11	12				6	
SPARE	-			20/2	13	14	15/3	-			SPARE
		-			15	16			-		
SPARE			-	20/3	17	18				-	
	-				19	20	20/3	-			SPARE
		-			21	22			-		
SPARE			-	20/3	23	24				-	
	-				25	26	20/3	-			SPARE
		-			27	28			-		
SPARE			-	20/2	29	30				-	
	-				31	32	20/3	-			SPARE
SPARE		-		20/2	33	34			-		
			-		35	36				-	
SPARE	-			20/3	37	38	60/3	10			PANEL 4EB IN ELECTRICAL SHOP 162
		-			39	40			13		
			-		41	42				13	

A	B	C	
32	35	23	TOTAL CONNECTED LOAD (AMPS PER PHASE)

General Notes:

A. For one line power diagrams, see sheets EE0-1.1 through EE0-1.7.

B. For location of all panelboards and switchboards, see sheet EE1-1.1.

C. Provide appropriate lugs for circuit breakers as required to accommodate two set run and/or oversized conductors.

THIS DRAWING ACCURATE FOR ELECTRICAL WORK ONLY

	BY	CHECKED
DESIGN	Catalino Enriquez	J.S.S./H.Abdelsayed
DETAILS	Catalino Enriquez	J.S.S./H.Abdelsayed
QUANTITIES	Catalino Enriquez	J.S.S./H.Abdelsayed

STATE OF CALIFORNIA
DEPARTMENT OF TRANSPORTATION

DIVISION OF ENGINEERING SERVICES
ELECTRICAL-MECHANICAL-WATER AND WASTEWATER DESIGN

BRIDGE NO. 33M5785
POST MILE 2.2

SFOBB MAINTENANCE COMPLEX

PANEL SCHEDULES 10

SHEET **EE1-10.10**

TAEMWW Imperial Rev. 7/10

ORIGINAL SCALE IN INCHES FOR REDUCED PLANS 0 1 2 3

UNIT 3596
PROJECT NUMBER & PHASE 04120006661
EA 014081

DISREGARD PRINTS BEARING EARLIER REVISION DATES → 12/14/12 4/24/12 5/19/12 5/30/12

REVISION DATES (PRELIMINARY STAGE ONLY) SHEET OF

25-OCT-2012 10:02

ee1_10.10.dgn

DIST.	COUNTY	ROUTE	POST MILES TOTAL PROJECT	SHEET NO.	TOTAL SHEETS
04	Ala	80	2.2	772	800

REGISTERED ELECTRICAL ENGINEER — Catalino A. Enriquez — 5-30-12 DATE

REGISTERED PROFESSIONAL ENGINEER C. ENRIQUEZ No. 16944 Exp. 6-30-13 ELEC STATE OF CALIFORNIA

10-22-12
PLANS APPROVAL DATE

The State of California or its officers or agents shall not be responsible for the accuracy or completeness of scanned copies of this plan sheet.

CALIFORNIA STATE FIRE MARSHAL APPROVED
Approval of this plan does not authorize or approve any omission or deviation from applicable regulations. Final approval is subject to field inspection. One set of approved plans shall be available on the project site at all times.
Reviewed by: JOHN E WOODS, SDSFM
Approval date: 8-22-12

MAIN: 100 AMPERE 3-POLE CB
VOLTS: 120/208 V, 3 PH, 4W

PANEL 2EB (BOTTOM FEED)
22 KA SCCR

FEEDER SIZE: 2"C, 4#2/0, 1#6G
LOCATION: ELECTRICAL SHOP 162

DESCRIPTION	AMPS A	AMPS B	AMPS C	BRK	CKT	A B C	CKT	BRK	AMPS A	AMPS B	AMPS C	DESCRIPTION
OUTLETS-WOMEN RESTROOM 152	9			20/1	1		2	20/1	6			MIS OUTLETS-ELECTRICAL SUPERVISOR
OUTLETS-BAIR STORAGE		9		* 20/1	3		4	20/1*		4.5		OUTLETS-ELECTRICAL SHOP
OUTLETS-BAIR STORAGE			7.5	* 20/1	5		6	20/1*			7.5	OUTLETS-EQUIPMENT STORAGE BAY 163
SPARE	-			20/1	7		8	20/1	7.5			OUTLETS-MEN RESTROOM 154 AND 155
MIS OUTLETS-MONITOR SPACE		6		20/1	9		10	20/1*		12		OUTLETS-SOUTHEAST ELECTRICAL SHOP
OUTLETS-MONITOR SPACE			7.5	20/1	11		12	20/1			9	OUTLETS- ELECTRICAL SUPERVISOR
ATTIC JB-OUTLETS MONITOR SPACE	4.5			20/1	13		14	20/1	7.5			OUTLETS-ELECTRICAL CREW ROOM
SPARE		-		20/1	15		16	20/1		7.5		OUTLETS-ELECTRICAL CREW ROOM
ATTIC JB-MIS OUTLETS MONITOR SPACE			4.5	20/1	17		18	20/1*			7.5	MULTI OUTLETS-EAST ELECTRICAL SHOP
OUTLETS-ENGINEER/MAP ROOM	7.5			20/1	19		20	20/1*	7.5			MULTI OUTLETS-NORTHWEST ELECTRICAL SHOP
MIS OUTLETS-ENGINEER/MAP ROOM		9		20/1	21		22	20/1*		7.5		MULTI OUTLETS-NORTHEAST ELECTRICAL SHOP
MIS OUTLETS-BASE ROOM			7.5	20/1	23		24	20/1*			7.5	MULTI OUTLETS-SOUTHWEST ELECTRICAL SHOP
OUTLETS-BASE ROOM	6			20/1	25		26	20/1*	6			MULTI OUTLETS-WEST ELECTRICAL SHOP
RADIANT HEATER- ELECTRICAL SHOP		2		20/1	27		28	20/1		2		24-VOLT TRANSFORMER- HVAC ZONE DAMPERS
EXHAUST FANS EF-14B AND EF-15B			6	20/1	29		30	20/1			5	OUTLET-ICE MACHINE
24-VOLT TRANSFORMER-ELECTRONIC FAUCET	2			15/1	31		32	20/1	-			SPARE
EXHAUST FAN EF-13B- WOMEN RESTROOM 152		6		20/1	33		34	20/1		-		SPARE
SPARE			-	20/1	35		36	20/1			-	SPARE
SPARE	-			20/1	37		38	20/1	-			SPARE
SPARE		-		20/1	39		40	20/1		-		SPARE
SPARE			-	20/1	41		42	20/1			-	SPARE

A	B	C	
64	66	70	TOTAL CONNECTED LOAD (AMPS PER PHASE)

MAIN: 60 AMPERE 3-POLE CB
VOLTS: 120/240 V, 3 PHASE, 4 WIRE

PANEL 4EB (BOTTOM FEED)
22 KA SCCR

FEEDER SIZE: 2"C, 4#1, 1#6G
LOCATION: ELECTRICAL SHOP 162

DESCRIPTION	AMPS A	AMPS B	AMPS C	BRK	CKT	A B C	CKT	BRK	AMPS A	AMPS B	AMPS C	DESCRIPTION
OVERHEAD DOOR OPERATORS- BAIR AND EQUIPMENT STORAGE	6.4			15/3	1		2	20/3	3			MOTOR CONTROLLER- ELECTRICAL SHOP
		6.4			3		4			3		
			6.4		5		6				3	
SPARE	-			15/3	7		8	20/3	-			SPARE
		-			9		10			-		
			-		11		12				-	
SPARE	-			20/3	13		14	20/3	-			SPARE
		-			15		16			-		
			-		17		18				-	
SPARE	-			20/2	19		20	20/2	-			SPARE
		-			21		22			-		
SPARE			-	20/2	23		24	20/2	-		-	SPARE
	-				25		26					
SPARE		-		20/2	27		28	20/2		3		SP IN MULTIOUTLET- BENCH GRINDER AT ELECTRICAL SHOP
			-		29		30				3	

A	B	C	
10	13	13	TOTAL CONNECTED LOAD (AMPS PER PHASE)

* *Install GFCI type circuit breaker with 5 milliampere ground fault protection.*

MAIN: 100 AMPERE 3 POLE CB
VOLTS: 120/208 V, 3 PH, 4W

PANEL 2EC (BOTTOM FEED)
22 KA SCCR

FEEDER SIZE: 2"C, 4#2/0, 1#6G
LOCATION: HALLWAY 167 (FLUSH MOUNTED)

DESCRIPTION	AMPS A	AMPS B	AMPS C	BRK	CKT	A B C	CKT	BRK	AMPS A	AMPS B	AMPS C	DESCRIPTION
MIS OUTLETS-CREW/LEAD OFFICE	9			20/1	1		2	20/1	9			OUTLETS-COMMUNICATION ROOM
OUTLETS-CREW ROOM		10.5		20/1	3		4	20/1		9		OUTLETS-COMMUNICATION/MECHANICAL ROOM
OUTLETS-CREW/LEAD OFFICE			10.5	20/1	5		6	20/1*			7.5	OUTLETS-CREW ROOM FLOOR
ATTIC JB-NORTH MIS OUTLETS LEAD OFFICE	4.5			20/1	7		8	20/1*	7.5			OUTLETS-CREW ROOM FLOOR
ATTIC JB-NORTH OUTLETS LEAD OFFICE		4.5		20/1	9		10	20/1		9		OUTLETS-NORTH SUPERVISOR OFFICES
ATTIC JB-SOUTH MIS OUTLETS LEAD OFFICE			4.5	20/1	11		12	20/1			9	MIS OUTLETS-NORTH SUPERVISOR OFFICES
ATTIC JB-SOUTH OUTLETS LEAD OFFICE	4.5			20/1	13		14	20/1	7.5			OUTLETS-SOUTH SUPERVISOR OFFICES
OUTLET-COUNTERTOP BREAK ROOM		3		*20/1	15		16	20/1		9		MIS OUTLETS-SOUTH SUPERVISOR OFFICES
OUTLET-REFRIGERATOR BREAK ROOM			4	20/1	17		18	20/1*			10.5	OUTLETS- SUPERVISOR OFFICES FLOOR
OUTLETS-WASTE DISPOSER BREAK ROOM	5			20/1	19		20	20/1*	7.5			MIS OUTLETS-SUPERVISOR OFFICES FLOOR
OUTLETS-BREAK ROOM		6		20/1	21		22	20/1		-		SPARE
OUTLETS-VENDING MACHINE BREAK ROOM			3	*20/1	23		24	20/1			5	OUTLET- WATER COOLER HALLWAY #144
SPARE	-			*20/1	25		26	20/1	-			SPARE
SPARE		-		*20/1	27		28	15/1		2		EXHAUST FAN EF-12B: TOILET ROOM 149
ZONE DAMPERS-SUPERVISOR, CREW, BREAKROOM			1	15/1	29		30	15/1			2	HOT WATER CIRCULATING PUMP-MECH RM 177
SPARE	-			20/1	31		32	20/1	-			SPARE
SPARE		-		20/1	33		34	20/1		-		SPARE
SPARE			-	20/1	35		36	20/1			-	SPARE
SPARE	-			20/1	37		38	20/1	-			SPARE
SPARE		-		20/1	39		40	20/1		-		SPARE
SPARE			-	20/1	41		42	20/1			-	SPARE

A	B	C	
55	53	57	TOTAL CONNECTED LOAD (AMPS PER PHASE)

General Notes:

A. *For one line power diagrams, see sheets EE0-1.1 through EE0-1.7.*

B. *For location of all panelboards and switchboards, see sheet EE1-1.1.*

C. *Provide appropriate lugs for circuit breakers as required to accommodate two set run and/or oversized conductors.*

	BY	CHECKED
DESIGN	Catalino Enriquez	J.S.S./H.Abdelsayed
DETAILS	Catalino Enriquez	J.S.S./H.Abdelsayed
QUANTITIES	Catalino Enriquez	J.S.S./H.Abdelsayed

STATE OF CALIFORNIA
DEPARTMENT OF TRANSPORTATION

DIVISION OF ENGINEERING SERVICES
ELECTRICAL-MECHANICAL-WATER AND WASTEWATER DESIGN

BRIDGE NO. 33M5785
POST MILE 2.2

SFOBB MAINTENANCE COMPLEX

PANEL SCHEDULES 11

SHEET EE1-10.11

TAEMWW Imperial Rev. 7/10

ORIGINAL SCALE IN INCHES FOR REDUCED PLANS 0 1 2 3

UNIT 3596
PROJECT NUMBER & PHASE 04120006661
EA 014081

DISREGARD PRINTS BEARING EARLIER REVISION DATES → 12/24/12 4/24/12 5/19/12 5/30/12

REVISION DATES (PRELIMINARY STAGE ONLY) SHEET OF

25-OCT-2012 10:02

ee1_10.11.dgn

DIST.	COUNTY	ROUTE	POST MILES TOTAL PROJECT	SHEET NO.	TOTAL SHEETS
04	Ala	80	2.2	773	800

CALIFORNIA STATE FIRE MARSHAL APPROVED
Approval of this plan does not authorize or approve any omission or deviation from applicable regulations. Final approval is subject to field inspection. One set of approved plans shall be available on the project site at all times.
Reviewed by: JOHN E WOODS, SDSFM
Approval date: 8-22-12

Catalino A. Enriquez 5-30-12
REGISTERED ELECTRICAL ENGINEER DATE

REGISTERED PROFESSIONAL ENGINEER C. ENRIQUEZ No. 16944 Exp. 6-30-13 ELEC STATE OF CALIFORNIA

10-22-12
PLANS APPROVAL DATE

The State of California or its officers or agents shall not be responsible for the accuracy or completeness of scanned copies of this plan sheet.

MAIN: 500 AMPERE 3-POLE CB
VOLTS: 277/480 V, 3 PH, 4W

PANEL 8VA (TOP FEED)
42 KA SCCR

FEEDER SIZE: 2 SET OF 3"C, 4#350 KCMIL, 1#350 KCMIL G
LOCATION: IFS-V IN EQUIPMENT REPAIR AREA 192

DESCRIPTION	AMPS A	AMPS B	AMPS C	BRK	CKT	A B C	CKT	BRK	AMPS A	AMPS B	AMPS C	DESCRIPTION
TRANSFORMER 2VA	67			175/3	1		2	100/3	-			SPARE
		64			3		4			-		
			64		5		6				-	
TRANSFORMER 4VA	89			175/3	7		8	150/3	88			PANEL 8VC
		84			9		10			88		
			82		11		12				88	
SPARE	-			60/3	13		14	40/3	-			SPARE
		-			15		16			-		
			-		17		18				-	
SPACE (FOR METERING DEVICE)	-			-	19		20	60/3	8			PANEL 8VB
		-			21		22			8		
			-		23		24				20	

A	B	C	
252	244	254	TOTAL CONNECTED LOAD (AMPS PER PHASE)

General Notes:

A. For one line power diagrams, see sheets EE0-1.1 through EE0-1.7.

B. For location of all panelboards and switchboards, see sheet EE1-1.1.

C. Provide appropriate lugs for circuit breakers as required to accommodate two set run and/or oversized conductors.

MAIN: 225 AMPERE, MAIN LUGS ONLY
VOLTS: 277/480 V, 3 PH, 4W

PANEL 8VC (BOTTOM FEED)
22 KA SCCR

FEEDER SIZE: 4#4/0, 1#4G
LOCATION: IFS-V IN EQUIPMENT REPAIR AREA 192

DESCRIPTION	AMPS A	AMPS B	AMPS C	BRK	CKT	A B C	CKT	BRK	AMPS A	AMPS B	AMPS C	DESCRIPTION
OVERHEAD CRANES-WEST REPAIR BAY	4			30/3	1		2	30/3	4			OVERHEAD CRANES-EAST REPAIR AREA & WELD BAY
		4			3		4			4		
			4		5		6				4	
WELDING OUTLETS-NORTH & SOUTH REPAIR BAY	22			30/3	7		8	30/3	22			WELDING OUTLETS-MID & EAST REPAIR AREA
		22			9		10			22		
			22		11		12				22	
WELDING OUTLETS-WELD BAY	22			30/3	13		14	30/3	14			AIR COMPRESSOR-UTILITY ROOM
		22			15		16			14		
			22		17		18				14	
SPARE	-			30/3	19		20	20/3	-			SPARE
		-			21		22			-		
			-		23		24				-	
SPARE	-			20/1	25		26	20/1	-			SPARE
SPARE		-		20/1	27		28	20/1		-		SPARE
SPARE			-	20/1	29		30	20/1			-	SPARE

A	B	C	
88	88	88	TOTAL CONNECTED LOAD (AMPS PER PHASE)

MAIN: 100 AMPERE, MAIN LUGS ONLY
VOLTS: 277/480 V, 3 PH, 4W

PANEL 8VB (BOTTOM FEED)
22 KA SCCR

FEEDER SIZE: 4#1, 1#6G
LOCATION: IFS-V IN EQUIPMENT REPAIR AREA 192

DESCRIPTION	AMPS A	AMPS B	AMPS C	BRK	CKT	A B C	CKT	BRK	AMPS A	AMPS B	AMPS C	DESCRIPTION
LNP-V	1			15/1	1		2	15/1	-			SPARE
EMERGECY LIGHTS 192,193,195		1		15/1	3		4	15/1		1		LIGHTS 179 & 185
EMERGECY & WB LIGHTS 191,192 & 197			2	15/1	5		6	15/1			3	LIGHTS 183, 184, 186, 187, 188 & 189
EMERGECY & WB LIGHTS 193 & 195	1.6			15/1	7		8	15/1	4.7			LIGHTS 180, 181, 182, 190
SPARE		-		15/1	9		10	15/1		-		SPARE
EMERGENCY LIGHTS 180,181			1	15/1	11		12	15/1			10.4	LIGHTS ROOM NO. 191 & 198
SPARE	-			15/1	13		14	15/1	-			SPARE
SPARE		-		15/1	15		16	15/1		5.8		LIGHTS ROOOM NO. 192, 195 & 196
SPARE			-	15/1	17		18	15/1			3.6	LIGHT 193, 194

A	B	C	
8	8	20	TOTAL CONNECTED LOAD (AMPS PER PHASE)

DESIGN	BY Catalino Enriquez	CHECKED J.S.S./H.Abdelsayed	
DETAILS	BY Catalino Enriquez	CHECKED J.S.S./H.Abdelsayed	
QUANTITIES	BY Catalino Enriquez	CHECKED J.S.S./H.Abdelsayed	

STATE OF CALIFORNIA
DEPARTMENT OF TRANSPORTATION

DIVISION OF ENGINEERING SERVICES
ELECTRICAL-MECHANICAL-WATER AND WASTEWATER DESIGN

BRIDGE NO. 33M5785
POST MILE 2.2

SFOBB MAINTENANCE COMPLEX

PANEL SCHEDULES 12

SHEET **EE1-10.12**

TAEMWW Imperial Rev. 7/10

ORIGINAL SCALE IN INCHES FOR REDUCED PLANS 0 1 2 3

UNIT 3596
PROJECT NUMBER & PHASE 04120006661
EA 014081

DISREGARD PRINTS BEARING EARLIER REVISION DATES → 12/14/12 5/28/12 5/30/12

REVISION DATES (PRELIMINARY STAGE ONLY) SHEET OF

25-OCT-2012 10:02
ee1_10.12.dgn

DIST.	COUNTY	ROUTE	POST MILES TOTAL PROJECT	SHEET NO.	TOTAL SHEETS
04	Ala	80	2.2	774	800

CALIFORNIA STATE FIRE MARSHAL APPROVED
Approval of this plan does not authorize or approve any omission or deviation from applicable regulations. Final approval is subject to field inspection. One set of approved plans shall be available on the project site at all times.
Reviewed by: JOHN E WOODS, SDSFM
Approval date: 8-22-12

Catalino A. Enriquez 5-30-12
REGISTERED ELECTRICAL ENGINEER DATE

REGISTERED PROFESSIONAL ENGINEER C. ENRIQUEZ No. 16944 Exp. 6-30-13 ELEC STATE OF CALIFORNIA

10-22-12
PLANS APPROVAL DATE

The State of California or its officers or agents shall not be responsible for the accuracy or completeness of scanned copies of this plan sheet.

General Notes:

A. For one line power diagrams, see sheets EE0-1.1 through EE0-1.7.

B. For location of all panelboards and switchboards, see sheet EE1-1.1.

C. Provide appropriate lugs for circuit breakers as required to accommodate two set run and/or oversized conductors.

** Install GFCI type circuit breaker with 5 milliampere ground fault protection.*

MAIN: 175 AMPERE 3 POLE CB
VOLTS: 120/240 V, 3 PH, 4W

PANEL 4VA (BOTTOM FEED)
22 KA SCCR

FEEDER SIZE: 2 SET 4#3/0 AND 1SET 1#2/0G
LOCATION: IFS-V IN EQUIPMENT REPAIR AREA 192

DESCRIPTION	AMPS A	AMPS B	AMPS C	BRK	CKT	A B C	CKT	BRK	AMPS A	AMPS B	AMPS C	DESCRIPTION
OVERHEAD DOOR OPERATORS-NORTH REPAIR BAY	6.4			15/3	1		2	15/3	6.4			OVERHEAD DOOR OPERATORS-SOUTH REPAIR BAY
		6.4			3		4			6.4		
			6.4		5		6				6.4	
OVERHEAD DOOR OPERATORS-ROVER BAY STORAGE AND WELD BAY	6.4			15/3	7		8	15/3	3.2			OVERHEAD DOOR OPERATORS-EAST REPAIR BAY
		6.4			9		10			3.2		
			6.4		11		12				3.2	
SPECIAL PURPOSE RECEPTACLE (20 A)- NORTH REPAIR BAY	3			20/2	13		14	20/2	6			SPECIAL PURPOSE RECEPTACLES- ROVER BAY STORAGE & WELD BAY
		3			15		16			6		
SPECIAL PURPOSE RECEPTACLE (20 A)- SOUTH REPAIR BAY			3	20/2	17		18	100/3			48	VEHICLE LIFT OUTLET-WEST REPAIR BAYS
	3				19		20		48			
SPECIAL PURPOSE RECEPTACLE (20 A)- EAST REPAIR BAY		3		20/2	21		22			48		
			3		23		24				6.5	
VEHICLE ENGINE EXHAUST FANS-REPAIR BAYS	13			30/3	25		26	30/3	6.5			DECLASSIFICATION FANS-REPAIR BAYS
		13			27		28			6.5		
			13		29		30	30/2			-	SPARE
SPARE	-			15/3	31		32		-			
		-			33		34	20/2		-		SPARE
			-		35		36				-	
SPARE	-			20/3	37		38	20/3	-			SPARE
		-			39		40			-		
			-		41		42				-	

A	B	C	
102	102	96	TOTAL CONNECTED LOAD (AMPS PER PHASE)

MAIN: 175 AMPERE 3 POLE CB
VOLTS: 120/240 V, 3 PH, 4W

PANEL 4VC (BOTTOM FEED)
22 KA SCCR

FEEDER SIZE: 2 SET 4#3/0 AND 1SET 1#2/0G
LOCATION: IFS-V IN EQUIPMENT REPAIR AREA 192

DESCRIPTION	AMPS A	AMPS B	AMPS C	BRK	CKT	A B C	CKT	BRK	AMPS A	AMPS B	AMPS C	DESCRIPTION
SPARE	-			20/3	1		2	100/3	48			VEHICLE LIFT OUTLET-EAST REPAIR BAYS
		-			3		4			48		
			-		5		6				48	
CUT-OFF SAW #V05 -WELD BAY	7.7			20/2	7		8	15/3	2.2			FUME EXHAUST FAN-WELD BAY
		7.7			9		10			2.2		
A/C 4B HVAC UNIT- REPAIR BAY OFFICE 198 AND ROOFTOP			11	20/2	11		12				2.2	
	11				13		14	15/3	6.4			OVERHEAD COILING DOOR & COILING GRILLE OPERATORS- PARTS STORAGE 180
SPARE		-		15/2	15		16			6.4		
			-		17		18				6.4	
SPARE	-			20/2	19		20	15/3	-			SPARE
		-			21		22			-		
SPARE			-	20/2	23		24				-	
	-				25		26	20/3	-			SPARE
SPARE		-		20/2	27		28			-		
			-		29		30				-	
SPARE	-			20/2	31		32	20/3	-			SPARE
		-			33		34			-		
SPARE			-	20/2	35		36				-	
	-				37		38	30/3	-			SPARE
SPARE		-		20/2	39		40			-		
			-		41		42				-	

A	B	C	
76	65	68	TOTAL CONNECTED LOAD (AMPS PER PHASE)

DESIGN	BY Catalino Enriquez	CHECKED J.S.S./H.Abdelsayed	
DETAILS	BY Catalino Enriquez	CHECKED J.S.S./H.Abdelsayed	
QUANTITIES	BY Catalino Enriquez	CHECKED J.S.S./H.Abdelsayed	

STATE OF CALIFORNIA
DEPARTMENT OF TRANSPORTATION

DIVISION OF ENGINEERING SERVICES
ELECTRICAL-MECHANICAL-WATER AND WASTEWATER DESIGN

BRIDGE NO. 33M5785
POST MILE 2.2

SFOBB MAINTENANCE COMPLEX

PANEL SCHEDULES 13

SHEET **EE1-10.13**

TAEMWW Imperial Rev. 7/10

ORIGINAL SCALE IN INCHES FOR REDUCED PLANS 0 1 2 3

UNIT 3596
PROJECT NUMBER & PHASE 04120006661
EA 014081

DISREGARD PRINTS BEARING EARLIER REVISION DATES
REVISION DATES (PRELIMINARY STAGE ONLY) 12/14/12 5/28/12 5/30/12
SHEET OF

25-OCT-2012 10:02
ee1_10.13.dgn

DIST.	COUNTY	ROUTE	POST MILES TOTAL PROJECT	SHEET NO.	TOTAL SHEETS
04	Ala	80	2.2	775	800

REGISTERED ELECTRICAL ENGINEER — DATE 5-30-12

REGISTERED PROFESSIONAL ENGINEER C. ENRIQUEZ No. 16944 Exp. 6-30-13 ELEC STATE OF CALIFORNIA

10-22-12
PLANS APPROVAL DATE

The State of California or its officers or agents shall not be responsible for the accuracy or completeness of scanned copies of this plan sheet.

MAIN: 200 AMPERE 3 POLE CB
VOLTS: 120/208 V, 3 PH, 4W

PANEL 2VA (BOTTOM FEED)
22KA SCCR

FEEDER SIZE: 2 SET4#3/0 AND 1 SET 1#2/0G
LOCATION: IFS-V IN EQUIPMENT REPAIR AREA 192

DESCRIPTION	AMPS A	AMPS B	AMPS C	BRK	CKT	CKT	BRK	AMPS A	AMPS B	AMPS C	DESCRIPTION
OUTLETS-NORTH WALL REPAIR BAY	9			20/1*	1	2	20/1*	7.5			OUTLETS-WEST WALL REPAIR BAY
OUTLETS-NORTH WALL REPAIR BAY		9		20/1*	3	4	20/1*		6		OUTLETS-WEST WALL REPAIR BAY
MULTIOUTLET-NORTHEAST WALL REPAIR BAY			7.5	20/1*	5	6	20/1*			3	OUTLET-WEST WATER COOLER
MULTIOUTLET-NORTHWEST ISLAND WORK BENCH	7.5			20/1*	7	8	20/1*	6			OUTLETS-SOUTH WALL REPAIR BAY
MULTIOUTLET-NORTHWEST ISLAND WORK BENCH		7.5		20/1*	9	10	20/1*		7.5		OUTLETS-SOUTH WALL REPAIR BAY
MULTIOUTLET-NORTHEAST ISLAND WORK BENCH			7.5	20/1*	11	12	20/1*			7.5	MULTIOUTLET-SOUTHEAST ISLAND WORK BENCH
MULTIOUTLET-NORTHEAST ISLAND WORK BENCH	7.5			20/1*	13	14	20/1*	7.5			MULTIOUTLET-NORTHEAST WALL REPAIR BAY
MULTIOUTLET-SOUTHWEST ISLAND WORK BENCH		7.5		20/1*	15	16	20/1*		7.5		MULTIOUTLET-NORTHEAST WALL REPAIR BAY
MULTIOUTLET-SOUTHWEST ISLAND WORK BENCH			7.5	20/1*	17	18	20/1*			7.5	MULTIOUTLET-SOUTHEAST ISLAND WORK BENCH
MIS OUTLET-LEAD OFFICE	7.5			20/1	19	20	20/1*	7.5			MULTIOUTLET-NORTHWEST MACHINE SHOP
OUTLETS-LEAD OFFICE		7.5		20/1	21	22	20/1*		7.5		MULTIOUTLET-NORTH MACHINE SHOP
OUTLETS-IT AREA			6	20/1	23	24	20/1*			7.5	MULTIOUTLET-EAST WALL REPAIR BAY
OUTLETS-UNISEX TOILET	7.5			20/1*	25	26	20/1*	7.5			MULTIOUTLET-EAST PARTS WASH
OUTLETS-ROVER BAY STORAGE		7.5		20/1*	27	28	20/1*		7.5		MULTIOUTLET-NORTHEAST MACHINE SHOP
OUTLETS-ROVER BAY STORAGE			7.5	20/1*	29	30	20/1*			9	OUTLETS- MACHINE SHOP
MULTIOUTLET-NORTH ROVER BAY STORAGE	7.5			20/1*	31	32	20/1*	9			OUTLETS- MACHINE SHOP
MULTIOUTLET-NORTHWEST ROVER BAY STORAGE		7.5		20/1*	33	34	20/1*		7.5		MULTIOUTLET-SOUTH PARTS WASH
MULTIOUTLET-SOUTHWEST ROVER BAY STORAGE			7.5	20/1*	35	36	20/1*			7.5	MULTIOUTLET-SOUTHEAST MACHINE SHOP
PANEL 2VB	45			100/3	37	38	20/1	-			SPARE
		43			39	40	20/1		-		SPARE
			39		41	42	20/1			-	SPARE

A	B	C	
137	133	125	TOTAL CONNECTED LOAD (AMPS PER PHASE)

General Notes:

A. *For one line power diagrams, see sheets EE0-1.1 through EE0-1.7.*

B. *For location of all panelboards and switchboards, see sheet EE1-1.1.*

C. *Provide appropriate lugs for circuit breakers as required to accommodate two set run and/or oversized conductors.*

* *Install GFCI type circuit breaker with 5 milliampere ground fault protection.*

CALIFORNIA STATE FIRE MARSHAL APPROVED
Approval of this plan does not authorize or approve any omission or deviation from applicable regulations. Final approval is subject to field inspection. One set of approved plans shall be available on the project site at all times.
Reviewed by: JOHN E WOODS, SDSFM
Approval date: 8-22-12

MAIN: 100 AMPERE 3 POLE CB
VOLTS: 120/208 V, 3 PH, 4W

PANEL 2VB (TOP FEED)
22KA SCCR

FEEDER SIZE: 2"C, 4#1/0 AND 1#6G
LOCATION: CREW ROOM 184 (FLUSH MOUNTED)

DESCRIPTION	AMPS A	AMPS B	AMPS C	BRK	CKT	CKT	BRK	AMPS A	AMPS B	AMPS C	DESCRIPTION
MIS OUTLETS-SUPERVISOR INT OFFICE	4.5			20/1	1	2	20/1*	7.5			OUTLETS-WOMEN RESTROOM 186
OUTLETS-SUPERVISOR INT OFFICE		10.5		20/1	3	4	20/1		-		SPARE
SPARE			-	20/1	5	6	20/1			6	OUTLETS-SUPERVISOR OFFICE
OUTLETS-COUNTERTOP CREW ROOM	3			*20/1	7	8	20/1*	3			OUTLETS-VENDING MACHINE
SPARE		-		20/1	9	10	20/1*		7.5		OUTLETS-MEN RESTROOM 187
OUTLET-REFRIGERATOR			4	20/1	11	12	20/1*			3	OUTLETS-VENDING MACHINE
OUTLET-WASTE DISPOSER	5			20/1	13	14	20/1	10.5			OUTLETS-SOUTH PARTS STORAGE
OUTLETS-PARTS/TIRE STORAGE		12		20/1	15	16	20/1		10.5		OUTLETS-PARTS OFFICE
OUTLETS-PARTS/TIRE STORAGE			10.5	20/1	17	18	20/1			9	MIS OUTLETS-PARTS OFFICE
SPARE	-			20/1	19	20	20/1	6			MIS OUTLETS-SUPERVISOR OFFICE
SPARE		-		20/1	21	22	20/1		2		EXHAUST FAN- JANITOR ROOM 190
SPARE			-	20/1	23	24	20/1			5.8	EXHAUST FAN- RESTROOM 187
SPARE	-			*20/1	25	26	20/1	5			EXHAUST FAN & ELEC FAUCET-RESTRM 186
SPARE		-		*20/1	27	28	20/1		-		SPARE
SPARE			-	*20/1	29	30	20/1			-	SPARE
SPARE	-			20/1	31	32	20/1	-			SPARE
SPARE		-		20/1	33	34	20/1		-		SPARE
SPARE			-	20/1	35	36	20/1			-	SPARE
SPARE	-			20/1	37	38	20/1	-			SPARE
SPARE		-		20/1	39	40	20/1		-		SPARE
SPARE			-	20/1	41	42	20/1			-	

A	B	C	
45	43	39	TOTAL CONNECTED LOAD (AMPS PER PHASE)

MAIN: 200 AMPERE 3 POLE CB
VOLTS: 120/208 V, 3 PH, 4W

PANEL 2VC (BOTTOM FEED)
22KA SCCR

FEEDER SIZE: 2 SET4#3/0 AND 1 SET 1#2/0G
LOCATION: IFS-V IN EQUIPMENT REPAIR AREA 192

DESCRIPTION	AMPS A	AMPS B	AMPS C	BRK	CKT	CKT	BRK	AMPS A	AMPS B	AMPS C	DESCRIPTION
DRILL PRESS # V01-WELD BAY	11.5			20/1	1	2	20/1	4.5			AIR DRYER-UTILITY ROOM
LATHE #V07-REPAIR AREA		12		20/1	3	4	20/1		1.5		OUTLET- REPAIR BAY ROOFTOP
LIGHT REEL OUTLETS			4.5	*20/1	5	6	20/1			10	RADIANT HEATERS-REPAIR BAY
SPARE	-			20/1	7	8	20/1	-			SPARE
SPARE		-		20/1	9	10	20/1		-		SPARE
OUTLETS-MOBILE FUME EXTRACTOR AT ROOM 193			7	*20/1	11	12	20/1			-	SPARE
SPARE	-			20/1	13	14	20/1*	-			SPARE
SPARE		-		20/1	15	16	20/1*		-		SPARE
SPARE			-	20/1	17	18	20/1*			-	SPARE
SPARE	-			20/1	19	20	20/1	-			SPARE
SPARE		-		20/1	21	22	20/1		-		SPARE
SPARE			-	20/1	23	24	20/1			-	SPARE
SPARE	-			20/1	25	26	20/1	-			SPARE
SPARE		-		20/1	27	28	20/1		-		SPARE
SPARE			-	20/1	29	30	20/1			-	SPARE
SPARE	-			20/1	31	32	20/1	-			SPARE
SPARE		-		20/1	33	34	20/1		-		SPARE
SPARE			-	20/1	35	36	20/1			-	SPARE
SPARE	-			20/1	37	38	20/1	-			SPARE
SPARE		-		20/1	39	40	20/1		-		SPARE
SPARE			-	20/1	41	42	20/1			-	SPARE

A	B	C	
16	14	22	TOTAL CONNECTED LOAD (AMPS PER PHASE)

THIS DRAWING ACCURATE FOR ELECTRICAL WORK ONLY

	BY	CHECKED
DESIGN	Catalino Enriquez	J.S.S./H.Abdelsayed
DETAILS	Catalino Enriquez	J.S.S./H.Abdelsayed
QUANTITIES	Catalino Enriquez	J.S.S./H.Abdelsayed

STATE OF CALIFORNIA
DEPARTMENT OF TRANSPORTATION

DIVISION OF ENGINEERING SERVICES
ELECTRICAL-MECHANICAL-WATER AND WASTEWATER DESIGN

BRIDGE NO. 33M5785
POST MILE 2.2

SFOBB MAINTENANCE COMPLEX

PANEL SCHEDULES 14

SHEET **EE1-10.14**

TAEMWW Imperial Rev. 7/10

ORIGINAL SCALE IN INCHES FOR REDUCED PLANS 0 1 2 3

UNIT 3596
PROJECT NUMBER & PHASE 04120006661
EA 014081

DISREGARD PRINTS BEARING EARLIER REVISION DATES → 12/14/12 5/28/12 5/30/12

REVISION DATES (PRELIMINARY STAGE ONLY) SHEET OF

25-OCT-2012 10:02
ee1_10.14.dgn

DIST.	COUNTY	ROUTE	POST MILES TOTAL PROJECT	SHEET NO.	TOTAL SHEETS
04	Ala	80	2.2	776	800

REGISTERED ELECTRICAL ENGINEER — 5-30-12 DATE

REGISTERED PROFESSIONAL ENGINEER J. AMIRAZODI No. 17509 Exp. 6-30-13 ELEC STATE OF CALIFORNIA

10-22-12
PLANS APPROVAL DATE

The State of California or its officers or agents shall not be responsible for the accuracy or completeness of scanned copies of this plan sheet.

CALIFORNIA STATE FIRE MARSHAL APPROVED
Approval of this plan does not authorize or approve any omission or deviation from applicable regulations. Final approval is subject to field inspection. One set of approved plans shall be available on the project site at all times.
Reviewed by: JOHN E WOODS, SDSFM
Approval date: 8-22-12

MAIN: 50A/3P CIRCUIT BREAKER
VOLTS: 208/120 V, THREE-PHASE, FOUR-WIRE

PANEL 2UB (TOP FEED)
22K SCCR

FEEDER SIZE: 4#4, 1#4G
LOCATION: COMMUNICATIONS ROOM 116

DESCRIPTION	AMPERES A	AMPERES B	AMPERES C	BRK	CKT	CKT	BRK	AMPERES A	AMPERES B	AMPERES C	DESCRIPTION
EAST WALL FOURPLEX (ROOM 207)	6			20/1	1	2	20/1	12			IDF1 RACK 1 FOURPLEX (ROOM 116)
RADIO RACK 1 FOURPLEX (ROOM 207)		12		20/1	3	4	20/1		12		IDF1 RACK 2 FOURPLEX (ROOM 116)
RADIO RACK 2 FOURPLEX (ROOM 207)			12	20/1	5	6	20/1			12	IDF1 RACK 3 FOURPLEX (ROOM 116)
SPARE	-			20/1	7	8	20/1	12			CCTV RACK 2 FOURPLEX (ROOM 116)
SPARE		-		20/1	9	10	20/2		-		SPARE
SPARE			-	20/1	11	12				-	
SPACE	-			-	13	14	-	-			SPACE
↓		-		-	15	16	-		-		↓
			-	-	17	18	-			-	
↓	-			-	19	20	-	-			↓

A	B	C	
30	24	24	TOTAL CONNECTED LOAD (AMPERES PER PHASE)

MAIN: 125A/3P CIRCUIT BREAKER
VOLTS: 208/120 V, THREE-PHASE, FOUR-WIRE

PANEL 2UA (BOTTOM FEED)
22K SCCR

FEEDER SIZE: 4#1/0, 1#1/0G
LOCATION: MAIN COMMUNICATIONS ROOM 176

DESCRIPTION	AMPERES A	AMPERES B	AMPERES C	BRK	CKT	CKT	BRK	AMPERES A	AMPERES B	AMPERES C	DESCRIPTION
INTRUSION AND ACCESS CONTROL PANEL	5			20/1	1	2	20/1	3			LIGHTING NETWORK COMPUTER
FIRE ALARM CONTROL PANEL *		5		20/1	3	4	20/1		12		SCADA RACK FOURPLEX
SPARE			-	20/1	5	6	20/1			6	NORTH WALL FOURPLEX
CCTV RACK 1 FOURPLEX	12			20/1	7	8	20/1	6			NORTH WALL FOURPLEX
SOUTH WALL FOURPLEX		6		20/1	9	10	20/1		12		MDF RACK 1 FOURPLEX
WORKSTATION DESK FOURPLEX			6	20/1	11	12	20/1			12	MDF RACK 2 FOURPLEX
SOUTH WALL FOURPLEX	6			20/1	13	14	20/1	12			MDF RACK 3 FOURPLEX
AT&T EQUIPMENT		5		20/1	15	16	20/1		4		WEST WALL FOURPLEX
AT&T EQUIPMENT			5	20/1	17	18	20/1			-	SPARE
SPARE	-			20/1	19	20	20/1	-			SPARE
SPARE		-		20/2	21	22	-		-		SPACE
			-		23	24	-			-	
PANEL 2UB	30			50/3	25	26	-	-			
		24			27	28	-		-		
			24		29	30	-			-	↓

* CIRCUIT BREAKER SHALL LOCKABLE AND WITH RED COLORED HANDLE AND IDENTIFIED AS "FIRE ALARM CIRCUIT".

A	B	C	
74	68	53	TOTAL CONNECTED LOAD (AMPERES PER PHASE)

	BY	CHECKED
DESIGN	Javid Amirazodi	J.S. Sandhu/J.R. Lacy
DETAILS	Javid Amirazodi	James R. Lacy
QUANTITIES	Javid Amirazodi	J.S. Sandhu/J.R. Lacy

ORIGINAL SCALE IN INCHES FOR REDUCED PLANS 0 1 2 3

STATE OF CALIFORNIA
DEPARTMENT OF TRANSPORTATION

DIVISION OF ENGINEERING SERVICES
ELECTRICAL-MECHANICAL-WATER AND WASTEWATER DESIGN

UNIT 3596
PROJECT NUMBER & PHASE 04120006661
EA 014081

BRIDGE NO. 33M5785
POST MILE 2.2

SFOBB MAINTENANCE COMPLEX

PANEL SCHEDULES 15

SHEET **EE1-10.15**

DISREGARD PRINTS BEARING EARLIER REVISION DATES → 5/30/12
REVISION DATES (PRELIMINARY STAGE ONLY) SHEET OF

TAEMWW Imperial Rev. 7/10

25-OCT-2012 10:02
ee1_10.15.dgn

DIST.	COUNTY	ROUTE	POST MILES TOTAL PROJECT	SHEET NO.	TOTAL SHEETS
04	Ala	80	2.2	777	800

CALIFORNIA STATE FIRE MARSHAL APPROVED
Approval of this plan does not authorize or approve any omission or deviation from applicable regulations. Final approval is subject to field inspection. One set of approved plans shall be available on the project site at all times.
Reviewed by: JOHN E WOODS, SDSFM
Approval date: 8-22-12

REGISTERED ELECTRICAL ENGINEER — 5-30-12 DATE

REGISTERED PROFESSIONAL ENGINEER J. ABDELSAYED No. 18915 Exp. 12-31-13 ELEC STATE OF CALIFORNIA

10-22-12
PLANS APPROVAL DATE

The State of California or its officers or agents shall not be responsible for the accuracy or completeness of scanned copies of this plan sheet.

ELECTRICAL EQUIPMENT FOR HVAC SYSTEMS SCHEDULE

EQUIPMENT DATA			ELECTRICAL CONNECTION DATA			
DEVICE NAME	UNIT CONTROLLED	ROOM NUMBER	POLE	VOLTAGE/PHASE	AMPERE RATING	DESCRIPTION
INDOOR A/C UNIT DISCONNECT SWITCH	INDOOR A/C UNIT 3A, 4A, 5A	116, 117, 207	3	240/1	-	1.5 HP, MANUAL MOTOR STARTING SWITCH
OUTDOOR A/C UNIT DISCONNECT SWITCH	OUTDOOR A/C UNIT 3A, 4A, 5A	ROOFTOP-BLDG 1A	2	240/1	-	2 HP, MANUAL MOTOR STARTER , NEMA 4X ENCLOSURE
EXHAUST FAN DISCONNECT SWITCH	EXHAUST FAN EF-2B, EF-3B, EF-4B, EF-5B, EF-6B, EF-9B	133, 134, 139, 141, 145, PAINT MIX BOOTH	1	120/1	-	0.5 HP, MANUAL MOTOR STARTING SWITCH , NEMA 1 ENCLOSURE
EXHAUST FAN DISCONNECT SWITCH	EXHAUST FAN EF-7B, EF-8B, EF-10B, EF-11B	142 (2), 147 (2)	1	120/1	-	0.5 HP, MANUAL MOTOR STARTING SWITCH NEMA 1 ENCLOSURE
EXHAUST FAN MOTOR STARTER	EXHAUST FAN EF-7B, EF-8B, EF-10B, EF-11B	142 (2), 147 (2)	1	120/1	-	0.5 HP, NEMA SIZE 0, EXHAUST FAN MOTOR STARTER, NEMA 1 ENCLOSURE
EXHAUST FAN DISCONNECT SWITCH	EXHAUST FAN EF-1A, EF-2A	2ND FLOOR ATTIC SPACE, BUILDING 1A	3	240/3	-	0.75 HP, MANUAL MOTOR STARTING SWITCH NEMA 1 ENCLOSURE
EXHAUST FAN CONTROL PANEL	EXHAUST FAN EF-1A, EF-2A	2ND FLOOR ATTIC SPACE, BUILDING 1A	1	120/1	-	0.75 HP, NEMA SIZE 0, EXHAUST FAN CONTROL PANEL, NEMA 1 ENCLOSURE
SUPPLY FAN DISCONNECT SWITCH	SUPPLY FAN SF-1B & SF-2B	132, 135 (ATTIC SPACE)	2	240/1	30	NON-FUSIBLE DISCONNECT, NEMA 1 ENCLOSURE
RADIANT HEATER TIMER SWITCH	RADIANT HEATERS	133,134,136, 137,142,145,147	1	120/1	20	MECHANICAL TIMER SWITCH

ELECTRICAL EQUIPMENT DISCONNECT SWITCH SCHEDULE

DEVICE NAME	ROOM NUMBER	POLE	VOLTAGE/PHASE	AMPERE RATING	DESCRIPTION
DRILL PRESS DISCONNECT SWITCH	133, 147	2	240/1	30	NON-FUSIBLE, NEMA 1 ENCLOSURE
GRINDER DISCONNECT SWITCH	147	3	240/3	30	NON-FUSIBLE, NEMA 1 ENCLOSURE
RADIAL ARM SAW DISCONNECT SWITCH	145 (2)	3	240/3	30	NON-FUSIBLE, NEMA 1 ENCLOSURE
OVERHEAD CRANE DISCONNECT SWITCH	142 (3), 147	3	600/3	30	NON-FUSIBLE, NEMA 1 ENCLOSURE
DUST COLLECTOR DISCONNECT SWITCH	145	2	240/1	_	2 HP, MANUAL MOTOR STARTER, NEMA 1 ENCLOSURE
OVERHEAD DOOR OPERATOR DISCONNECT SWITCH	133,134,136,137,142(6),145,146,147	3	240/3	30	NON-FUSIBLE, NEMA 1 ENCLOSURE

DIST.	COUNTY	ROUTE	POST MILES TOTAL PROJECT	SHEET NO.	TOTAL SHEETS
04	Ala	80	2.2	778	800

REGISTERED ELECTRICAL ENGINEER — Catalino A. Enriquez — 5-30-12 DATE

REGISTERED PROFESSIONAL ENGINEER C. ENRIQUEZ No. 16944 Exp. 6-30-13 ELEC STATE OF CALIFORNIA

10-22-12
PLANS APPROVAL DATE

The State of California or its officers or agents shall not be responsible for the accuracy or completeness of scanned copies of this plan sheet.

CALIFORNIA STATE FIRE MARSHAL APPROVED
Approval of this plan does not authorize or approve any omission or deviation from applicable regulations. Final approval is subject to field inspection. One set of approved plans shall be available on the project site at all times.
Reviewed by: JOHN E WOODS, SDSFM
Approval date: 8-22-12

SPECIAL PURPOSE RECEPTACLES SCHEDULE

TYPE	DESCRIPTION	VOLTAGE RATING	AMPERE	POLARITY WIRES	CONNECTION (VOTAGE/PHASE)	COLOR	FUNCTION (IDENTIFYING NAME ON PLANS)
A	SWITCH RATED RECEPTACLE AND DISCONNECT SWITCH	480	60	2P PLUS G	480/SINGLE PHASE	BLUE WITH RED GASKET	WELDING RECEPTACLE
B	SWITCH RATED RECEPTACLE AND DISCONNECT SWITCH	480	60	3P PLUS G	480/3 PHASE	BLUE WITH RED GASKET	WELDING RECEPTACLE
C	SWITCH RATED RECEPTACLE AND DISCONNECT SWITCH	480	100	2P PLUS G	480/SINGLE PHASE	BLUE WITH RED GASKET	WELDING RECEPTACLE
D	SWITCH RATED RECEPTACLE AND DISCONNECT SWITCH	480	30	3P PLUS G	480/3 PHASE	BLUE WITH RED GASKET	WELDING RECEPTACLE
E	SWITCH RATED RECEPTACLE AND DISCONNECT SWITCH	208	60	3P PLUS G	208/3 PHASE	BLACK WITH BLUE GASKET	SPECIAL PURPOSE RECEPTACLE 208 V
F	SWITCH RATED RECEPTACLE AND DISCONNECT SWITCH	208	30	3P PLUS G	208/SINGLE PHASE	BLACK WITH BLUE GASKET	SPECIAL PURPOSE RECEPTACLE 208 V
G	SWITCH RATED RECEPTACLE AND DISCONNECT SWITCH	208	20	2P PLUS G	208/3 PHASE	BLACK WITH BLUE GASKET	SPECIAL PURPOSE RECEPTACLE 208 V
H	NEMA L6-20R TWIST LOCK RECEPTACLE	250	20	2P/3W	208/SINGLE PHASE	BLACK	SINGLE PHASE SPECIAL PURPOSE RECEPTACLE
I	NEMA L5-30R TWIST LOCK RECEPTACLE	125	30	2P/3W	120/SINGLE PHASE	IVORY	SINGLE PHASE SPECIAL PURPOSE RECEPTACLE
J	NEMA 6-20R STRAIGHT BLADE RECEPTACLE	250	20	2P/3W	240/SINGLE PHASE	GRAY	SINGLE PHASE SPECIAL PURPOSE RECEPTACLE
K	NEMA 6-15R STRAIGHT BLADE RECEPTACLE	250	15	2P/3W	240/SINGLE PHASE	GRAY	SINGLE PHASE SPECIAL PURPOSE RECEPTACLE
L	SWITCH RATED RECEPTACLE AND DISCONNECT SWITCH	240	20	3P PLUS G	240/3 PHASE	BLACK WITH ORANGE GASKET	SPECIAL PURPOSE RECEPTACLE 240 V
M	NEMA L5-20R TWIST LOCK RECEPTACLE	125	20	2P/3W	120/SINGLE PHASE	IVORY	REEL LIGHT RECEPTACLE
N	SWITCH RATED RECEPTACLE AND DISCONNECT SWITCH	480	20	3P PLUS G	480/3 PHASE	BLUE WITH RED GASKET	SPECIAL PURPOSE RECEPTACLE 480 V
P	SWITCH RATED RECEPTACLE AND DISCONNECT SWITCH	240	100	3P PLUS G	240/3 PHASE	BLACK WITH ORANGE GASKET	VEHICLE LIFT RECEPTACLE

ELECTRICAL EQUIPMENT SCHEDULE

DEVICE NAME	CONTROLLED UNIT	LOCATION	ELECTRICAL DATA			
			AMPERE RATING	VOLTAGE/PHASE	POLE	DESCRIPTION
OVERHEAD DOOR OPERATOR DISCONNECT SWITCH	OVERHEAD DOOR OPERATOR	HIGH BAYS	30	240/3	3	NON-FUSIBLE DISCONNECT SWITCH, NEMA 12 ENCLOSURE, FUSES SIZED TO SUIT FURNISHED DOOR OPERATOR
OVERHEAD CRANE DISCONNECT SWITCH	BRIDGE CRANE	ROOM 191, 192, 193	30	480/3	3	CIRCUIT BREAKER IN SURFACE MOUNTED NEMA 12 ENCLOSURE, PROVISION OF PADLOCKING HANDLE IN OFF POSITION, 14,000 A SCCR
VEHICLE ENGINE EXHAUST FAN DISCONNECT SWITCH	VEHICLE ENGINE EXHAUST FAN AND HOSE REEL ASSEMBLY	ROOM 191, 192	30	240/3	3	FUSIBLE DISCONNECT SWITCH, NEMA 12 ENCLOSURE, FUSES SIZED TO SUIT FURNISHED FAN AND HOSE REEL ASSEMBLY
DECLASSIFICATION FAN DISCONNECT SWITCH	DECLASSIFICATION FAN	ROOFTOP- ROOM 191, 192	30	240/3	3	NON-FUSIBLE DISCONNECT SWITCH, NEMA 4X STAINLESS STEEL ENCLOSURE
CUT-OFF SAW MANUAL MOTOR STARTER	HABERLE CUT-OFF SAW	ROOM 193	-	240/1	2	MANUAL MOTOR STARTER WITH OVERLOAD IN NEMA 12 ENCLOSURE, 2 HP RATED
FUME EXHAUST FAN COMBINATION MOTOR STARTER	EF-20B WELDING FUME EXHAUST FAN	ROOM 193	*	240/3	3	EXHAUST FAN COMBINATION MOTOR STARTER, NEMA SIZE 0, NEMA 1 ENCLOSURE
A/C INDOOR UNIT DISCONNECT SWITCH	A/C INDOOR UNIT (SPLIT SYSTEM)	ROOM 176, 198	-	240/1	3	MANUAL MOTOR STARTING SWITCH, NEMA M-0, NEMA 1 ENCLOSURE
A/C OUTDOOR UNIT DISCONNECT SWITCH	A/C OUTDOOR UNIT (SPLIT SYSTEM)	ROOFTOP- ROOM 176, 198	-	240/1	2	MANUAL MOTOR STARTING SWITCH, NEMA M-1, NEMA 4X STAINLESS STEEL ENCLOSURE
EXHAUST FAN DISCONNECT SWITCH	EXHAUST FAN	ROOM 150, 163, 191	-	240/3	3	MANUAL MOTOR STARTING SWITCH, NEMA M-1, NEMA 12 ENCLOSURE
EXHAUST FAN CONTROL PANEL	EXHAUST FAN	ROOM 150, 163, 191	-	120/1	1	EXHAUST FAN CONTROL PANEL, NEMA 0
OVERHEAD COILING DOOR OPERATOR DISCONNECT SWITCH	OVERHEAD COILING DOOR	ROOM 180	30	240/3	3	FUSIBLE DISCONNECT SWITCH, NEMA 12 ENCLOSURE, FUSES SIZED TO SUIT DOOR FURNISHED
OVERHEAD COILING GRILLE OPERATOR DISCONNECT SWITCH	OVERHEAD COILING GRILLE	ROOM 180	30	240/3	3	FUSIBLE DISCONNECT SWITCH, NEMA 12 ENCLOSURE, FUSES SIZED TO SUIT GRILLE FURNISHED

* MCP TO SUIT UNIT FURNISHED

	BY	CHECKED
DESIGN	Catalino Enriquez	J.S.S./H.Abdelsayed
DETAILS	Dali Zhou	Catalino Enriquez
QUANTITIES	Catalino Enriquez	J.S.S./H.Abdelsayed

STATE OF CALIFORNIA DEPARTMENT OF TRANSPORTATION

DIVISION OF ENGINEERING SERVICES
ELECTRICAL-MECHANICAL-WATER AND WASTEWATER DESIGN

BRIDGE NO. 33M5785
POST MILE 2.2

SFOBB MAINTENANCE COMPLEX

EQUIPMENT SCHEDULE 2

SHEET **EE1-10.17**

TAEMWW Imperial Rev. 7/10

ORIGINAL SCALE IN INCHES FOR REDUCED PLANS 0 1 2 3

UNIT 3596
PROJECT NUMBER & PHASE 04120006661
EA 014081

DISREGARD PRINTS BEARING EARLIER REVISION DATES → 4/25/12 5/15/12 5/30/12

REVISION DATES (PRELIMINARY STAGE ONLY) SHEET OF

25-OCT-2012 10:03
ee1_10.17.dgn

DIST.	COUNTY	ROUTE	POST MILES TOTAL PROJECT	SHEET NO.	TOTAL SHEETS
04	Ala	80	2.2	779	800

APPLICABLE CODES
2010 California Building Code (CBC) Title 24, Part 2 CCR
2010 California Electrical Code (CEC) Title 24, Part 3 CCR
2010 California Fire Code (CEC) Title 24, Part 9 CCR

CALIFORNIA STATE FIRE MARSHAL APPROVED
Approval of this plan does not authorize or approve any omission or deviation from applicable regulations. Final approval is subject to field inspection. One set of approved plans shall be available on the project site at all times.
Reviewed by: JOHN E WOODS, SDSFM
Approval date: 8-22-12

Jaswinder S Sandhu 5-30-12
REGISTERED ELECTRICAL ENGINEER DATE

REGISTERED PROFESSIONAL ENGINEER J.S. SANDHU No. 11803 Exp. 9-30-12 ELEC STATE OF CALIFORNIA

10-22-12
PLANS APPROVAL DATE

The State of California or its officers or agents shall not be responsible for the accuracy or completeness of scanned copies of this plan sheet.

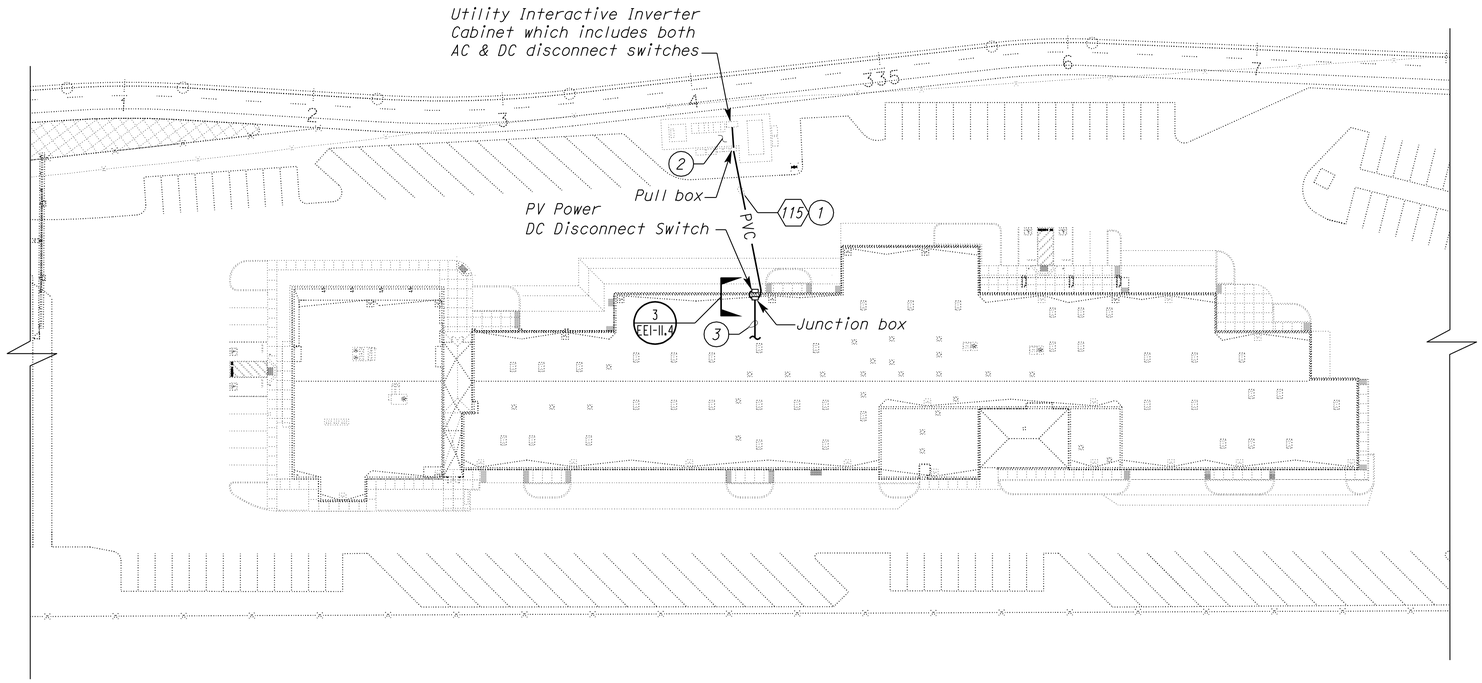

PARTIAL SITE PLAN
SCALE 1" = 40'-0"

General Notes:

A. The Contractor shall verify true north prior to installation of photovoltaic system.

B. All AC/DC feeder conductors and equipment grounding conductors shall be sized to meet or exceed the following:

- Total net voltage drop of the photovoltaic system from photovoltaic source to the existing Switchboard shall not exceed 2%.
- Upon occurrence of any kind of fault at any point in the system, over current protective devices shall trip within ½ cycle.

C. Not all electrical/mechanical equipment and conduit systems are shown. See project plans for additional information.

D. Location of all equipment and conduit systems as shown are approximate only. Contractor shall verify the exact location of all equipment and conduit systems in the field where required.

E. For Photovoltaic System Single Line Diagram, see sheet EE1-11.2.

F. For clarity, Data Acquisition Server system, and PV Service AC Disconnect switch are not shown on this plan sheet.

G. For building data information, see Architecture plans.

H. Underground conduits entering the building from outside and within the building shall be installed below the structural primary/intermediate grade beams. for location of structural primary/intermediate grade beams, underground conduits stub up, and penetration details through floor/beams, refer to structural plan sheets.

Notes:

1. For conduit and conductors sizes, see plan sheet EE0-1.12.
2. See plan sheet EE0-1.8 for conduits run and locations of PV system equipment.
3. 3"C, 4#4/0 & 1#4/0G to junction box on the building roof.

THIS DRAWING ACCURATE FOR ELECTRICAL WORK ONLY

	BY	CHECKED
DESIGN	J. S. Sandhu	Tommy F. Lee
DETAILS	Ed D. Tapalla/Dali Zhou	J. S. Sandhu
QUANTITIES	J. S. Sandhu	Tommy F. Lee

STATE OF CALIFORNIA
DEPARTMENT OF TRANSPORTATION

DIVISION OF ENGINEERING SERVICES
ELECTRICAL-MECHANICAL-WATER AND WASTEWATER DESIGN

BRIDGE NO. 33M5785
POST MILE 2.2

SFOBB MAINTENANCE COMPLEX
PARTIAL SITE PLAN

SHEET **EE1-11.1**

TAEMWW Imperial Rev. 7/10

ORIGINAL SCALE IN INCHES FOR REDUCED PLANS 0 1 2 3

UNIT 3596
PROJECT NUMBER & PHASE 04120006661
EA 014081

DISREGARD PRINTS BEARING EARLIER REVISION DATES → 4/26/12 4/26/12 5/30/12

REVISION DATES (PRELIMINARY STAGE ONLY) SHEET OF

25-OCT-2012 10:03
ee1_11.01.dgn

DIST.	COUNTY	ROUTE	POST MILES TOTAL PROJECT	SHEET NO.	TOTAL SHEETS
04	Ala	80	2.2	780	800

REGISTERED ELECTRICAL ENGINEER 5-30-12 DATE

REGISTERED PROFESSIONAL ENGINEER J.S. SANDHU No. 11803 Exp. 9-30-12 ELEC STATE OF CALIFORNIA

10-22-12
PLANS APPROVAL DATE

The State of California or its officers or agents shall not be responsible for the accuracy or completeness of scanned copies of this plan sheet.

CALIFORNIA STATE FIRE MARSHAL APPROVED
Approval of this plan does not authorize or approve any omission or deviation from applicable regulations. Final approval is subject to field inspection. One set of approved plans shall be available on the project site at all times.
Reviewed by: JOHN E WOODS, SDSFM
Approval date: 8-22-12

Photovoltaic Module

PV modules shall be minimum 300 (STC) watt, polycrystalline silicon cell type module with interconnection connectors rated for 90°C. PV modules shall be UL 1703 listed with a maximum system voltage of 600 VDC. PV module manufacturer shall be one of those manufacturers listed as eligible California Solar Initiative (CSI) PV module manufacturer.

Photovoltaic Array Circuit Combiner Box

PV array circuit combiner box shall be factory assembled, 600 VDC rated combiner box with fuse for all PV input circuits, two isolated DC bus bars, ground bus bar, all enclosed inside NEMA 3R lockable hinged cover enclosure. The combiner box shall be UL 1741 listed.

PV array circuit combiner box shall have the following components:
- DIN Rail mounted touch safe fuse holders with fuse rated for 600 VDC.
- Positive DC bus bar, Negative DC bus bar and ground bus bar.
- DIN rail mounted Grid-Tie surge arrestor: The surge arrestor shall be Type 1 heavy duty surge protector and rated to withstand 40 kA (8/20 micro second) induced transient surge type and compatible to use with grounded PV arrays.
- Plastic shield guards to enclose DC buses from all sides.

Data Acquisition Server System

Data acquisition system shall be in NEMA 3R enclosure and shall consists following equipment:
- main and I/O processors,
- 32MB RAM and 16MB flash
- 2x16 character LCD
- LAN/modem communications
- Protocols:Modbus/RTU, Modbus/TCP, TCP/IP
- Serial port with TIA485 Modbus
- Inputs with multiple modes: voltage, current, resistance, pulse and status
- 120 VAC input
- Approved for California Solar Initiative (CSI) data monitoring/reporting system

Utility Interactive Control Cabinet

Utility Interactive Inverter cabinet shall be outdoor type, factory assembled system consisting of the following equipment:
- NEMA 3R Enclosure.
- 100 kW/100 kVA, 480/277 V, 3-phase, 4-wire at a power factor of 0.99 or greater.
- Fused Sub-array Combiner with minimum of 4 array inputs for positive DC, negative DC, and DC ground bus bars. Positive array inputs fuse size to match loading.
- Built-in DC and AC disconnect switches size to match loading.
- Integrated output isolation type transformer.
- Ground Fault Protection.
- Integrated AC and DC Surge Protections.
- Integrated AC and DC contactors.
- Pre-charge circuit.
- Current and potential transformers
- Human Machine Interface (HMI). AC/DC Inverter's HMI shall be equipped with LCD and keypad displaying main menu. HMI main menu shall display system monitoring, status and faults and operation. Monitoring menu shall display system status, metering, daily, weekly and monthly energy production. Status and faults menu shall display status messages, system output, and number of faults. Operation menu shall display control and settings.
- Communication Gateway with datalogging and communications for remote monitoring system with internet connectivity (TCP/IP).
- Sub-array monitoring for detailed array performance monitoring of each array inside sub-array combiner of the Utility-Interactive Inverter cabinet
- AC Ground bus bars.

Enclosure shall be NEMA 3R, 14-Gauge, and powder-coated standard factory finish steel enclosure. All screws, latches, hinge pins and similar hardware shall be stainless steel. HMI, AC and DC disconnect switches, and equipment rating labels shall be mounted on the exterior door. Exterior door shall have interlock switch and be lockable with a padlock. The cabinet shall have MEV13 rated filtered, top entry forced air cooling system with one fan, sloped roof, and shall be suitable for seismic zone 4 compliance.

DC/AC Inverter shall be rated at maximum continuous output power of 100 kW (100 kVA) with input operating voltage range between 315 to 600 VDC and maximum DC input current of 331 A. Inverter shall be capable of operating at ambient temperature range (Full power) of -4°F to +122°F. DC/AC Inverter manufacturer shall be one of those manufacturers listed as eligible California Solar Initiative (CSI) DC/AC Inverter manufacturer.

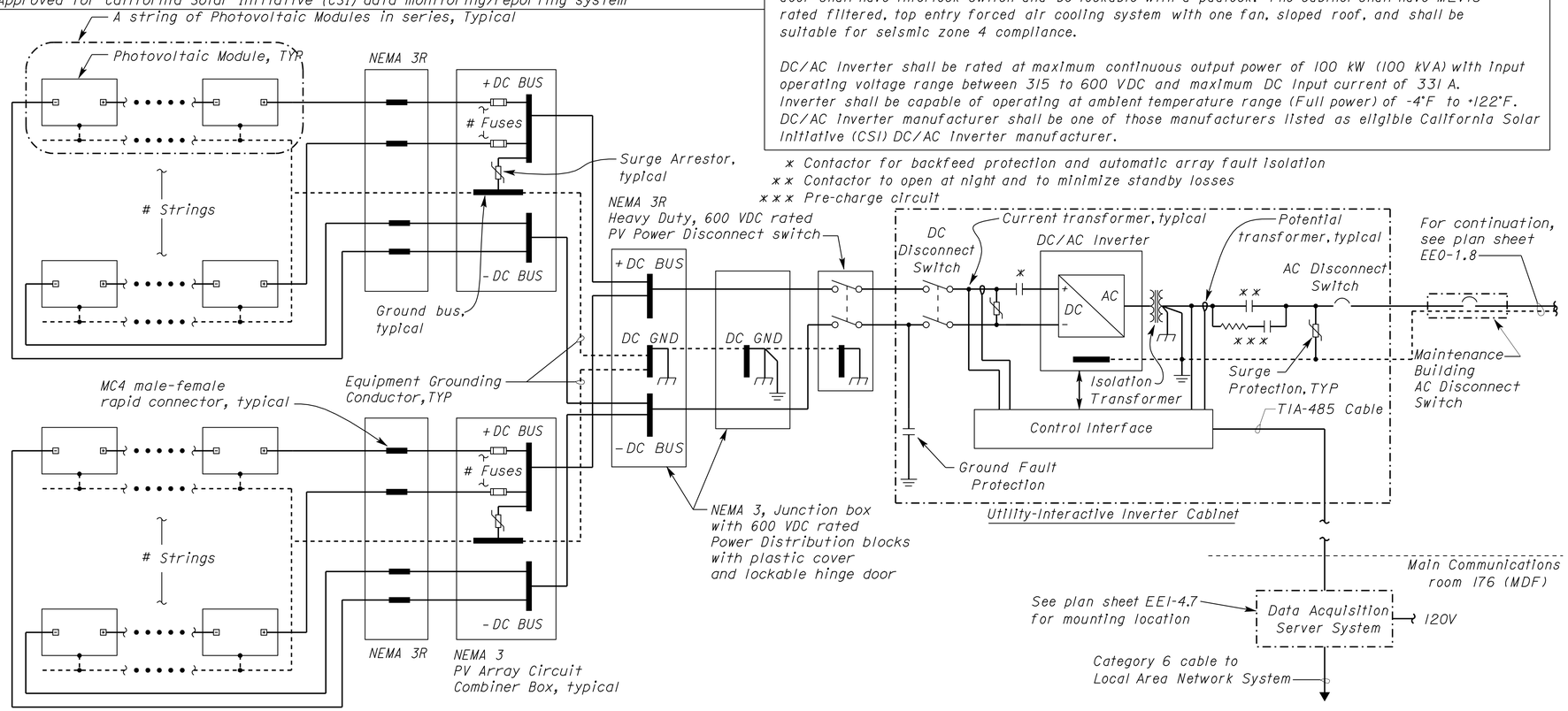

Photovoltaic modules on the building roof

(For clarity, 2 combiner boxes shown. However, contractor may install as many combiner boxes as required for this project)

PHOTOVOLTAIC SYSTEM

General Notes:

A. Provide and install all necessary warning labels/markings per Article 690 of California Electrical Code (CEC) and the State Fire Marshal's guideline for solar PV installation.

B. Solar PV Installation shall comply with the latest guideline from California Department of Forestry & Fire Protection, Office of the State Fire Marshal and latest Program Handbook from California Solar Initiative (CSI).

Photovoltaic System Requirements

Photovoltaic System complete design and installation details inclusive of all Engineering calculations shall be signed by a Professional Engineer of the respective field (both Electrical and Civil Engineering) in the State of California shall be submitted for approval by the Contractor. The PV design shall meet or exceed the following requirements;

1) Total designed installed capacity of photovoltaic system at the building shall be minimum of 130 kW.
Number of PV module per string shall be arranged in a manner to meet or exceed the following:
- Maximum system voltage based on lowest expected ambient temperature at the site (Voc maximum on coldest day) shall be no less than 1% below the inverter's maximum input DC voltage range.
- Maximum system power voltage based on average high ambient temperature at the site (Vmp on warmest day) shall be 20% greater than the inverter's minimum input DC voltage range.

2) Photovoltaic system module row spacing shall be designed to prevent shading from adjacent module.

3) All wiring except at module interconnection shall be concealed inside conduit system.

4) Photovoltaic system modules structural support system shall be designed to withstand wind forces of 85-mile per hour.

5) Photovoltaic system wiring and protective devices shall meet or exceed the requirements of all applicable codes.

6) PV Array Circuit Combiner Boxes locations as shown are arbitrary only. Contractor shall install the combiner boxes at locations that best suit the photovoltaic system strings layout.

7) PV modules installed on different slopes and/or orientation shall not be part of the same string except PV modules installed on flat roof.

THIS DRAWING ACCURATE FOR ELECTRICAL WORK ONLY

	BY	CHECKED
DESIGN	J. S. Sandhu	Tommy F. Lee
DETAILS	Ed D. Tapalla/Dali Zhou	J. S. Sandhu
QUANTITIES	J. S. Sandhu	Tommy F. Lee

STATE OF CALIFORNIA DEPARTMENT OF TRANSPORTATION

DIVISION OF ENGINEERING SERVICES
ELECTRICAL-MECHANICAL-WATER AND WASTEWATER DESIGN

BRIDGE NO. 33M5785
POST MILE 2.2

SFOBB MAINTENANCE COMPLEX
SINGLE LINE DIAGRAM
GRID-TIED PHOTOVOLTAIC SYSTEM

SHEET **EE1-11.2**

TAEMWW Imperial Rev. 7/10

ORIGINAL SCALE IN INCHES FOR REDUCED PLANS 0 1 2 3

UNIT 3596
PROJECT NUMBER & PHASE 04120006661
EA 014081

DISREGARD PRINTS BEARING EARLIER REVISION DATES
REVISION DATES (PRELIMINARY STAGE ONLY) 4/26/12 4/27/12 5/30/12
SHEET OF

25-OCT-2012 10:03
ee1_11.02.dgn

DIST.	COUNTY	ROUTE	POST MILES TOTAL PROJECT	SHEET NO.	TOTAL SHEETS
04	Ala	80	2.2	781	800

REGISTERED ELECTRICAL ENGINEER 5-30-12 DATE

REGISTERED PROFESSIONAL ENGINEER J.S. SANDHU No. 11803 Exp. 9-30-12 ELEC STATE OF CALIFORNIA

10-22-12
PLANS APPROVAL DATE

The State of California or its officers or agents shall not be responsible for the accuracy or completeness of scanned copies of this plan sheet.

CALIFORNIA STATE FIRE MARSHAL APPROVED
Approval of this plan does not authorize or approve any omission or deviation from applicable regulations. Final approval is subject to field inspection. One set of approved plans shall be available on the project site at all times.
Reviewed by: JOHN E WOODS, SDSFM
Approval date: 8-22-12

General Notes:

A. Provide and install approved conduit support on top of the roof to support conduit system and junction boxes. Conduit support shall be one-piece and non metallic type. For conduit support details, see Detail 1 on sheet EE1-11.4.

B. All exposed conduits shall be galvanized rigid steel, with minimum size ¾".

C. Size conduits to allow for 50% additional future capacity.

D. No DC wiring except at the module connector shall be exposed.

E Use type CGB connectors at conductor/cable terminations at junction boxes.

F. DC conduit/conductors between photovoltaic modules and photovoltaic Array Circuit Combiner Boxes are not shown.

G. Install photovoltaic panels on a self-ballasting type racking system. Photovoltaic panels shall be installed facing due south as shown with a tilt of 15° angle. For self-ballasted PV panel detail, see Detail 2 on sheet EE1-11.4.

H. Provide and install necessary warning labels/markings per Article 690 of California Electrical Code (CEC) and the State Fire Marshal's guideline for solar photovoltaic installation.

I. Install MC4 male-female rapid connectors to connect USE/USE-2 conductors and PV strings positive and negative terminals. No splicing inbetween the connectors and combiner boxes.

J. Arrange photovoltaic panels so that the panels, skylights, and exhaust vents do not interfere with each other.

Notes:

(1) 3"C, 4#4/0, 1#4/0G to junction box inside the building. For continuation, see Detail 3 on sheet EE1-11.4.

(2) To photovoltaic array circuit combiner boxes. Install size and number of combiner boxes as required to suit locations of photovoltaic panel installation.

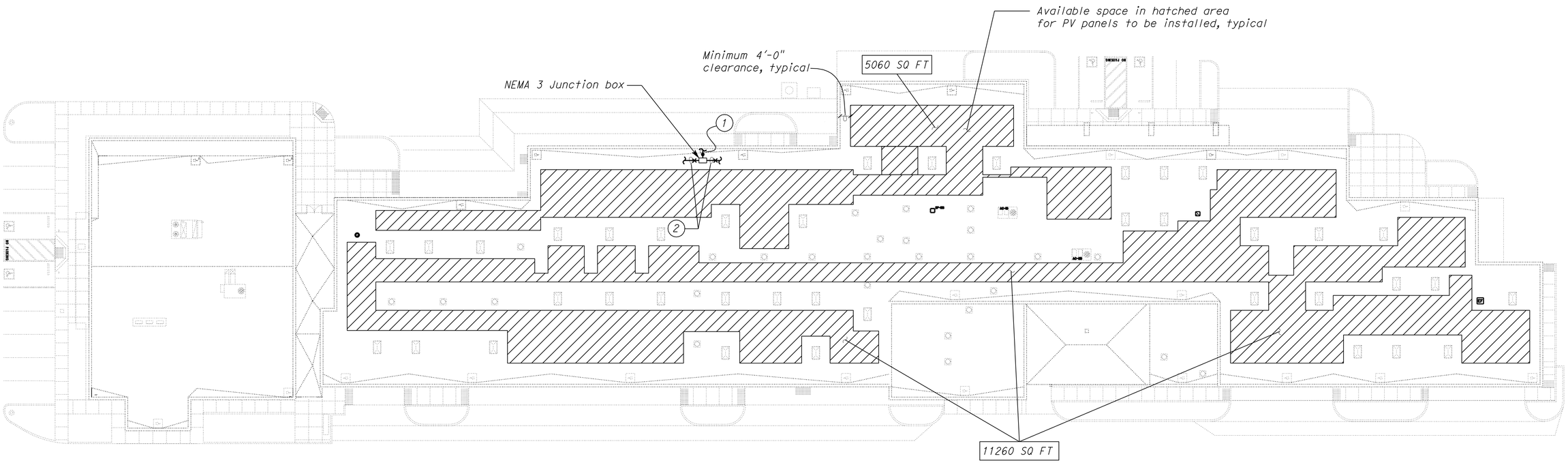

PARTIAL SITE PLAN
SCALE 1" = 20'-0"

THIS DRAWING ACCURATE FOR ELECTRICAL WORK ONLY

	BY	CHECKED
DESIGN	J. S. Sandhu	Tommy F. Lee
DETAILS	Ed D. Tapalla/Dali Zhou	J. S. Sandhu
QUANTITIES	J. S. Sandhu	Tommy F. Lee

STATE OF CALIFORNIA DEPARTMENT OF TRANSPORTATION

DIVISION OF ENGINEERING SERVICES ELECTRICAL-MECHANICAL-WATER AND WASTEWATER DESIGN

BRIDGE NO. 33M5785
POST MILE 2.2

SFOBB MAINTENANCE COMPLEX

ROOF PLAN

SHEET **EE1-11.3**

TAEMWW Imperial Rev. 7/10

ORIGINAL SCALE IN INCHES FOR REDUCED PLANS 0 1 2 3

UNIT 3596
PROJECT NUMBER & PHASE 04120006661
EA 014081

DISREGARD PRINTS BEARING EARLIER REVISION DATES → 4/26/12 4/27/12 5/30/12 5/30/12

REVISION DATES (PRELIMINARY STAGE ONLY) SHEET OF

25-OCT-2012 10:03

ee1_11.03.dgn

DIST.	COUNTY	ROUTE	POST MILES TOTAL PROJECT	SHEET NO.	TOTAL SHEETS
04	Ala	80	2.2	782	800

REGISTERED ELECTRICAL ENGINEER 5-30-12 DATE

REGISTERED PROFESSIONAL ENGINEER J.S. SANDHU No. 11803 Exp. 9-30-12 ELEC STATE OF CALIFORNIA

10-22-12
PLANS APPROVAL DATE

The State of California or its officers or agents shall not be responsible for the accuracy or completeness of scanned copies of this plan sheet.

CALIFORNIA STATE FIRE MARSHAL APPROVED
Approval of this plan does not authorize or approve any omission or deviation from applicable regulations. Final approval is subject to field inspection. One set of approved plans shall be available on the project site at all times.
Reviewed by: JOHN E WOODS, SDSFM
Approval date: 8-22-12

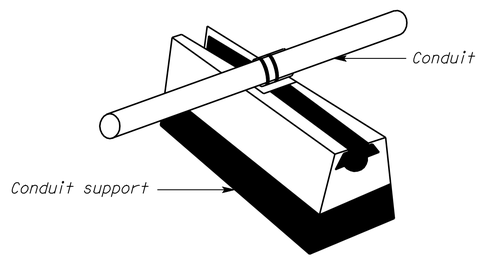

1 ROOF MOUNTED CONDUIT SUPPORT
NO SCALE

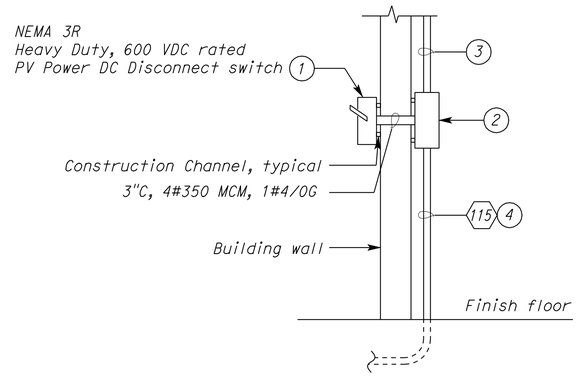

3 WIRING DIAGRAM
NO SCALE

Notes:

1. Install PV Power DC disconnect switch on the exterior of the building.
2. Install suitably sized screw cover junction box at a height that is suitable for installing and connecting this junction box to the PV Power DC disconnect switch outside. Splice #4/0 AWG to 350 MCM conductors inside the junction box.
3. Install 3"C, 4#4/0 & 1#4/0G from this to junction box on the roof.
4. For conduit and conductors sizes, see plan sheet EE0-1.12.

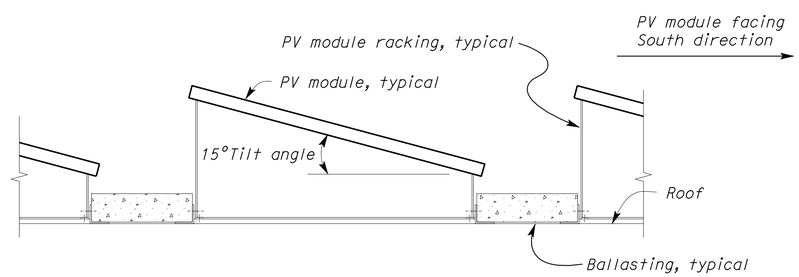

2 SELF-BALLASTED PANEL DETAIL
NO SCALE

THIS DRAWING ACCURATE FOR ELECTRICAL WORK ONLY

DESIGN	BY J. S. Sandhu	CHECKED Tommy F. Lee	
DETAILS	BY Ed D. Tapalla/Dali Zhou	CHECKED J. S. Sandhu	
QUANTITIES	BY J. S. Sandhu	CHECKED Tommy F. Lee	

STATE OF CALIFORNIA DEPARTMENT OF TRANSPORTATION

DIVISION OF ENGINEERING SERVICES
ELECTRICAL-MECHANICAL-WATER AND WASTEWATER DESIGN

BRIDGE NO. 33M5785
POST MILE 2.2

SFOBB MAINTENANCE COMPLEX
DETAILS

SHEET **EE1-11.4**

TAEMWW Imperial Rev. 7/10

ORIGINAL SCALE IN INCHES FOR REDUCED PLANS 0 1 2 3

UNIT 3596
PROJECT NUMBER & PHASE 04120006661
EA 014081

DISREGARD PRINTS BEARING EARLIER REVISION DATES
REVISION DATES (PRELIMINARY STAGE ONLY) 1/9/12 4/23/12 5/18/12 5/30/12
SHEET OF

25-OCT-2012 10:03
ee1_11.04.dgn

DIST.	COUNTY	ROUTE	POST MILES TOTAL PROJECT	SHEET NO.	TOTAL SHEETS
04	Ala	80	2.2	783	800

REGISTERED ELECTRICAL ENGINEER 5-30-12 DATE

REGISTERED PROFESSIONAL ENGINEER J.S. SANDHU No. 11803 Exp. 9-30-12 ELEC STATE OF CALIFORNIA

10-22-12
PLANS APPROVAL DATE

The State of California or its officers or agents shall not be responsible for the accuracy or completeness of scanned copies of this plan sheet.

CALIFORNIA STATE FIRE MARSHAL APPROVED

Approval of this plan does not authorize or approve any omission or deviation from applicable regulations. Final approval is subject to field inspection. One set of approved plans shall be available on the project site at all times.

Reviewed by: JOHN E WOODS, SDSFM

Approval date: 8-22-12

General Notes:

A. All conduits inside Fuel Log room shall be rigid steel conduit.

B. For exact location of Fuel Tanks, Submersible Pumps, Gasoline Fuel Dispenser and Diesel Fuel Dispensers, see Mechanical Plans.

C. Location of all conduit system for the fuel system as shown is arbitrary only. Exact location of conduit system depends on equipment installed. Prior to conduit system installation for fuel system, Contractor shall submit the actual conduit system layout to the Engineer for approval.

D. All exposed conduit system inside Fuel Log room shall be installed at least 2 feet above finished floor.

E. Coordinate with fuel tank and dispenser manufacturer for location of stub-up conduits.

F. All work at the Fuel Island and inside the Fuel Log room shall comply with all the Provisions of NEC Article 514, "Motor Fuel Dispensing and Service Station" conduits.

G. All underground/underslab conduits for the fuel island system components shall be PVC coated rigid steel conduit.

H. All above ground conduits for the fuel island system components shall be rigid steel conduit.

I. All underground conduits to be ¾ inch minimum.

J. Contractor has the option to install ½ inch minimum for above ground conduits only.

K. All conduits to be sized required for the number of conductors/ cables enclosed inside it.

L. Provisions for reduction in conduit fill shall be made by taking into account allowances for conduit seals.

M. All sensors and 4-conductors cable to be compatible with equipment it is connected to and as recommended by the manufacturer of the equipment.

N. For Panel 2WA Panel Schedule, see sheet EE4-5.

Notes:

(1) ¾"C, 1 LDS cable to gutter below Leak Detection and Tank Level Monitoring panel.

(2) 1"C, 1 TLS, 1 LDS cables to gutter below Leak Detection and Tank Level Monitoring panel.

(3) 1"C, 2 TLS, 2 LDS cables to gutter below Leak Detection and Tank Level Monitoring panel.

(4) ¾"C, 3#12,1#12G (Dispenser and submersible pump power).

(5) ¾"C, One 4-conductor shielded cable.

(6) 1"C, 8#12, 1#12G.

(7) ¾"C, 5#12, 1#12G (From junction box in Storage Tank to Generator Bio-Diesel 5 Supply Pump Control Box).

(8) All conduit terminating inside fuel dispensers sump shall have conduit seals.

(9) All conduits terminating inside Fuel Control Terminal shall have conduit seals, see Elevation on sheet EE2-3.

(10) ¾"C, two 4-conductor shielded cables (From Fuel Control Terminal to the junction box on the 2'x2' plywood board).

(11) For Panel 2WB Panel Schedule, see sheet EE2-4.

(12) ¾"C, 2#12 and 1#12G to panel 2WB circuit 14.

(13) For continuation and termination, see Note 3 on sheet EE0-0.2.

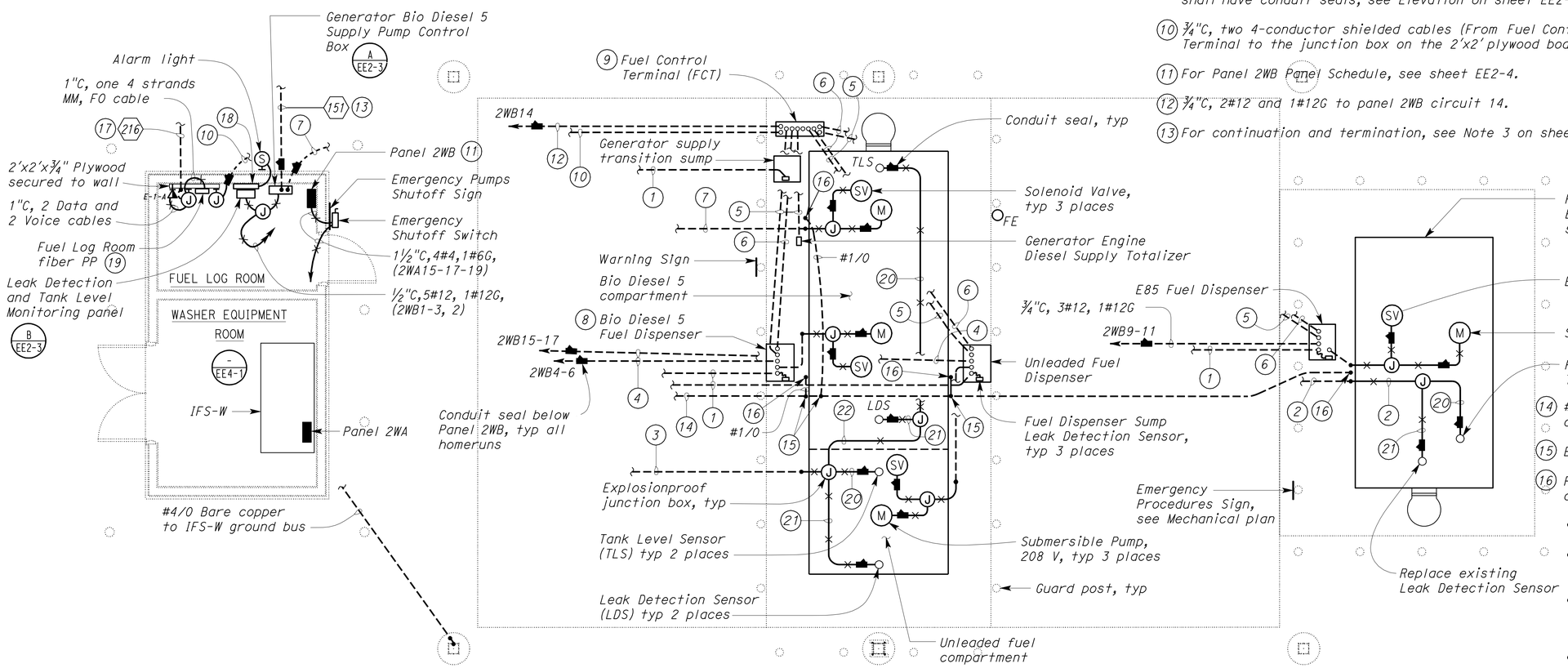

PLAN

SCALE ¼" = 1'-0"

(14) #1/0 Bare copper to IFS-W, stub #1/0 inside IFS-W and bond to the ground bus.

(15) Exothermically weld #1/0 to bare copper.

(16) Fuel Dispensers ground rod. Perform the following at the fuel dispensers:

- Install ground rod at a convenient location.
- Stub out #1/0 via PVC sleeve and bond to the ground rod.
- Bond all fuel dispensers fuel supply and return lines to the ground rod by utilizing U-bolt type ground clamp.
- For location of fuel piping, see Mechanical plans.

(17) For continuation, see EE0-0.6.

(18) 4"x4" Gutter. For underground conduit system, see Elevation "B" on sheet EE2-1.2.

(19) Terminate 4 strands MM, FO cable on Fuel Log Room fiber PP, using type SC connectors

(20) ¾"C, 1 TLS.

(21) ¾"C, 1 LDS.

(22) ¾"C, 1 TLS, 1LDS

THIS DRAWING ACCURATE FOR ELECTRICAL WORK ONLY

	BY	CHECKED
DESIGN	J. S. Sandhu	C. H. Mamaril
DETAILS	Ed D. Tapalla 3/12	J. S. Sandhu
QUANTITIES	J. S. Sandhu	C. H. Mamaril

STATE OF CALIFORNIA DEPARTMENT OF TRANSPORTATION

DIVISION OF ENGINEERING SERVICES ELECTRICAL-MECHANICAL-WATER AND WASTEWATER DESIGN

BRIDGE NO. 33M5785 POST MILE 2.2

SFOBB MAINTENANCE COMPLEX

FUEL ISLAND — ELECTRICAL PLAN

SHEET **EE2-1**

TAEMWW Imperial Rev. 7/10

ORIGINAL SCALE IN INCHES FOR REDUCED PLANS 0 1 2 3

UNIT 3596
PROJECT NUMBER & PHASE 04120006661
EA 014081

DISREGARD PRINTS BEARING EARLIER REVISION DATES → 3/23/12 5/9/12 5/17/12 5/25/12 5/30/12 8/20/12

REVISION DATES (PRELIMINARY STAGE ONLY) SHEET OF

25-OCT-2012 10:03

ee2_01.dgn

DIST.	COUNTY	ROUTE	POST MILES TOTAL PROJECT	SHEET NO.	TOTAL SHEETS
04	Ala	80	2.2	784	800

REGISTERED ELECTRICAL ENGINEER — 5-30-12 DATE

REGISTERED PROFESSIONAL ENGINEER J.S. SANDHU No. 11803 Exp. 9-30-12 ELEC STATE OF CALIFORNIA

10-22-12
PLANS APPROVAL DATE

The State of California or its officers or agents shall not be responsible for the accuracy or completeness of scanned copies of this plan sheet.

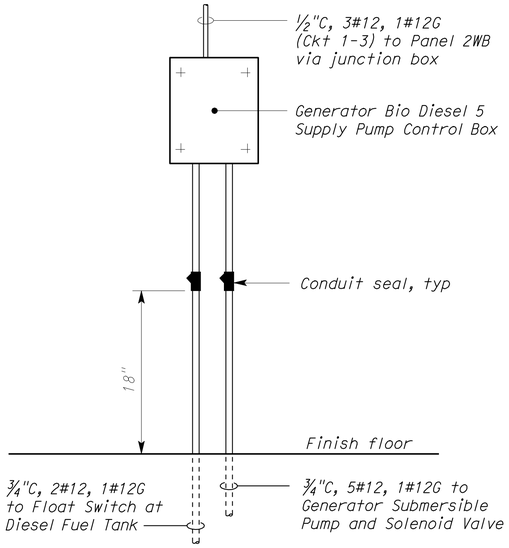

A ELEVATION
NO SCALE

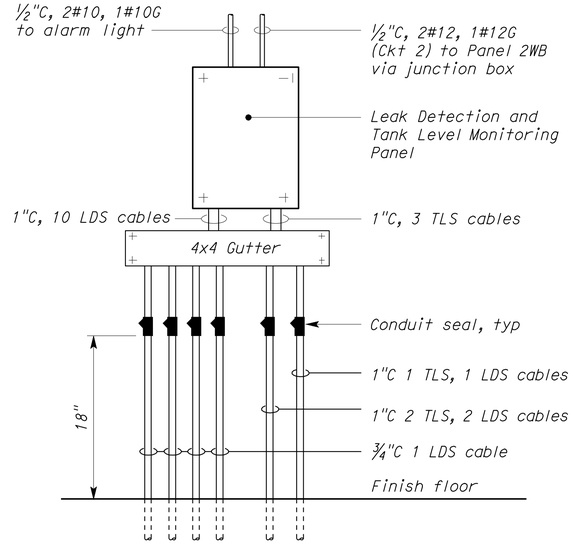

B ELEVATION
NO SCALE

Notes:

1. For number and size of conduits and conductors to and from Island Conduit Receptacle, see sheet EE2-1.
2. Install conduit seal in conduit run and extend conduit to allow for termination on conduit termination plate at top of the Island Conduit Receptacle.
3. Conduit connections from ground rod to metal piping of Gasoline and Diesel Fuel Dispensers and Panel 2WB are not shown for clarity. See sheet EE2-1 for conduit and conductor sizes.

General Note:

A. Not all electrical components and/or interconnections are shown inside the Dispenser unit. Perform all work as required for the complete installation of the Dispenser system.

ACCESSIBILITY DESIGN APPROVAL STAMP
DOT / DES / OTA
PROJECT ID 0412000666
Reviewed by: Y. A. WANG
Date: 07-24-12

CALIFORNIA STATE FIRE MARSHAL APPROVED
Approval of this plan does not authorize or approve any omission or deviation from applicable regulations. Final approval is subject to field inspection. One set of approved plans shall be available on the project site at all times.
Reviewed by: JOHN E WOODS, SDSFM
Approval date: 8-22-12

*APPROVAL DEFERRED TO SUBMITTAL

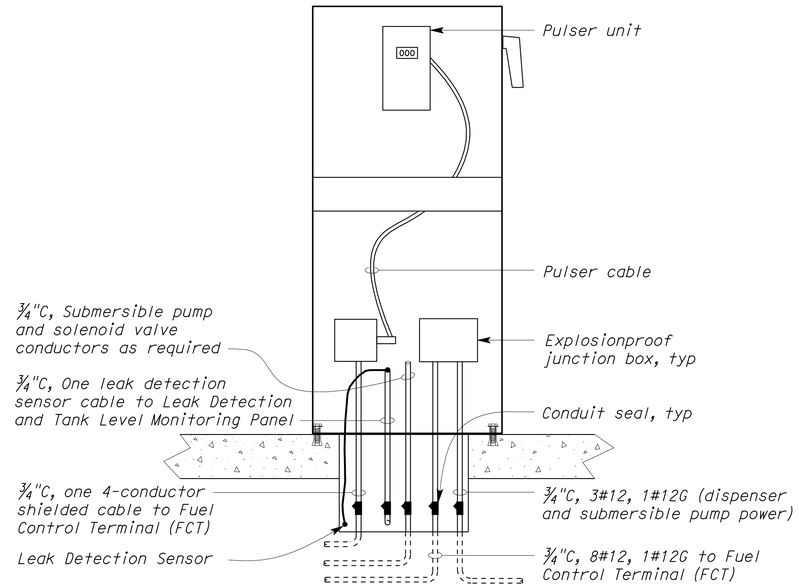

1 TYPICAL SINGLE DISPENSER DETAIL
NO SCALE

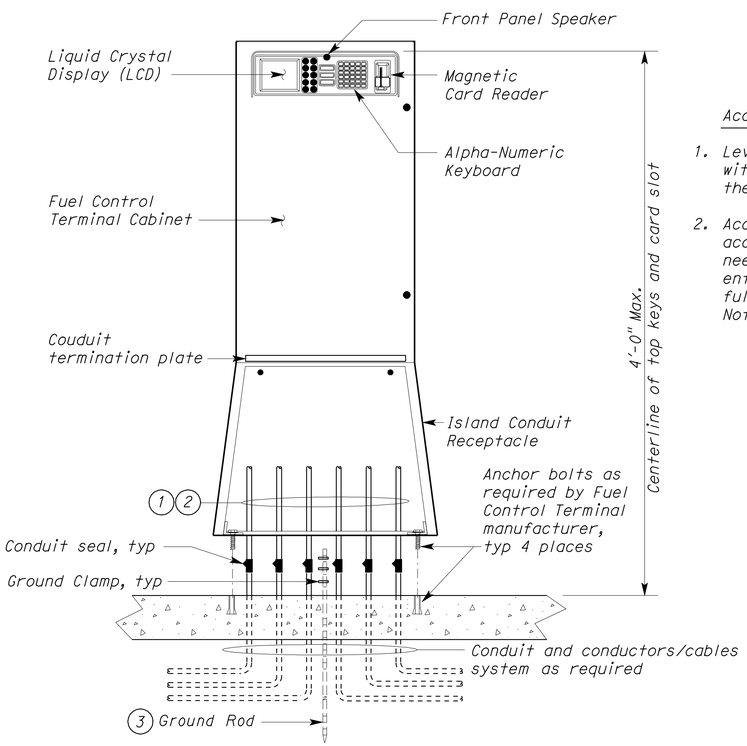

Accessibility Notes:

1. Level area in front of FCT shall be within 10 inches in plan view of the face of the control.
2. Accessible level area and accessible route of travel to FCT need not be identified as the entire site shall be graded to be fully accessible. See Accessiblity Note 1 on sheet A0-2.5.

2 FUEL CONTROL TERMINAL DETAIL
NO SCALE

THIS DRAWING ACCURATE FOR ELECTRICAL WORK ONLY

	BY	CHECKED
DESIGN	J. S. Sandhu	C.H.Mamaril
DETAILS	Ed D. Tapalla 3/12	J. S. Sandhu
QUANTITIES	J. S. Sandhu	C.H.Mamaril

STATE OF CALIFORNIA
DEPARTMENT OF TRANSPORTATION

DIVISION OF ENGINEERING SERVICES
ELECTRICAL-MECHANICAL-WATER AND WASTEWATER DESIGN

BRIDGE NO. 33M5785
POST MILE 2.2

SFOBB MAINTENANCE COMPLEX
FUEL ISLAND — DETAILS 1

SHEET EE2-3

TAEMWW Imperial Rev. 7/10

ORIGINAL SCALE IN INCHES FOR REDUCED PLANS 0 1 2 3

UNIT 3596
PROJECT NUMBER & PHASE 04120006661
EA 014081

DISREGARD PRINTS BEARING EARLIER REVISION DATES →
REVISION DATES (PRELIMINARY STAGE ONLY) 3/23/12 5/8/12 5/25/12 5/30/12 7/23/12 8/20/12
SHEET OF

25-OCT-2012 10:03
ee2_03.dgn

DIST.	COUNTY	ROUTE	POST MILES TOTAL PROJECT	SHEET NO.	TOTAL SHEETS
04	Ala	80	2.2	785	800

REGISTERED ELECTRICAL ENGINEER 5-30-12 DATE

REGISTERED PROFESSIONAL ENGINEER J.S. SANDHU No. 11803 Exp. 9-30-12 ELEC STATE OF CALIFORNIA

10-22-12
PLANS APPROVAL DATE

The State of California or its officers or agents shall not be responsible for the accuracy or completeness of scanned copies of this plan sheet.

CALIFORNIA STATE FIRE MARSHAL APPROVED

Approval of this plan does not authorize or approve any omission or deviation from applicable regulations. Final approval is subject to field inspection. One set of approved plans shall be available on the project site at all times.

Reviewed by: JOHN E WOODS, SDSFM

Approval date: 8-22-12

MAIN: 60 AMPERE 3-POLE CB
VOLTS: 120/208 V, 3 PH, 4W

PANEL 2WB (TOP FEED)
22 KA SCCR

FEEDER SIZE: 1½"C,4#4,1#6G
LOCATION: FUEL LOG ROOM

DESCRIPTION	AMPERES A	AMPERES B	AMPERES C	BRK	CKT	A B C	CKT	BRK	AMPERES A	AMPERES B	AMPERES C	DESCRIPTION
GENERATOR SUPPLY PUMP	7			* 20/2	1		2	20/1	2			TANK LEAK DETECTION PANEL
		7			3		4	* 20/2		7		BIO DIESEL DISPENSER PUMP
			-		5N		6				7	
SPARE	-			20/1	7		8N		-			
E85 FUEL DISPENSER PUMP		7		* 20/2	9		10	20/1		-		SPARE
			7		11		12				-	
	-				13N		14	* 20/1	5			FUEL CONTROL TERMINAL
GASOLINE DISPENSER PUMP		7		* 20/2	15		16N			-		
			7		17		18				-	SPACE
	-				19N		20		-			
SPACE		-			21		22			-		
SPACE			-		23		24				-	

* INDICATES SWITCH NEUTRAL CIRCUIT BREAKER

14	28	21	TOTAL CONNECTED LOAD (AMPERES PER PHASE)

PANEL SCHEDULE

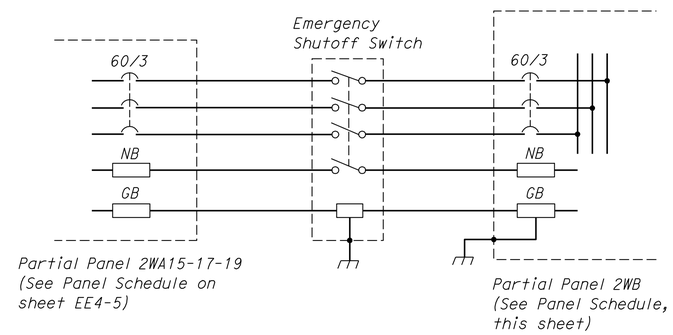

POWER SCHEMATIC
DISPENSER POWER SUPPLY

DESIGN	BY J. S. Sandhu	CHECKED C.H.Mamaril	
DETAILS	BY Ed D. Tapalla 3/12	CHECKED J. S. Sandhu	
QUANTITIES	BY J. S. Sandhu	CHECKED C.H.Mamaril	

STATE OF CALIFORNIA
DEPARTMENT OF TRANSPORTATION

DIVISION OF ENGINEERING SERVICES
ELECTRICAL-MECHANICAL-WATER AND WASTEWATER DESIGN

BRIDGE NO. 33M5785
POST MILE 2.2

SFOBB MAINTENANCE COMPLEX
FUEL ISLAND
DETAILS 2

SHEET EE2-4

TAEMWW Imperial Rev. 7/10

ORIGINAL SCALE IN INCHES FOR REDUCED PLANS 0 1 2 3

UNIT 3596
PROJECT NUMBER & PHASE 04120006661
EA 014081

DISREGARD PRINTS BEARING EARLIER REVISION DATES
REVISION DATES (PRELIMINARY STAGE ONLY) 3/28/12 5/8/12 5/17/12 5/25/12 5/30/12
SHEET OF

ee2_04.dgn

25-OCT-2012 10:03

DIST.	COUNTY	ROUTE	POST MILES TOTAL PROJECT	SHEET NO.	TOTAL SHEETS
04	Ala	80	2.2	786	800

CALIFORNIA STATE FIRE MARSHAL APPROVED

Approval of this plan does not authorize or approve any omission or deviation from applicable regulations. Final approval is subject to field inspection. One set of approved plans shall be available on the project site at all times.

Reviewed by: JOHN E WOODS, SDSFM

Approval date: 8-22-12

Catalino A. Enriquez 5-30-12
REGISTERED ELECTRICAL ENGINEER DATE

REGISTERED PROFESSIONAL ENGINEER C. ENRIQUEZ No. 16944 Exp. 6-30-13 ELEC STATE OF CALIFORNIA

10-22-12
PLANS APPROVAL DATE

The State of California or its officers or agents shall not be responsible for the accuracy or completeness of scanned copies of this plan sheet.

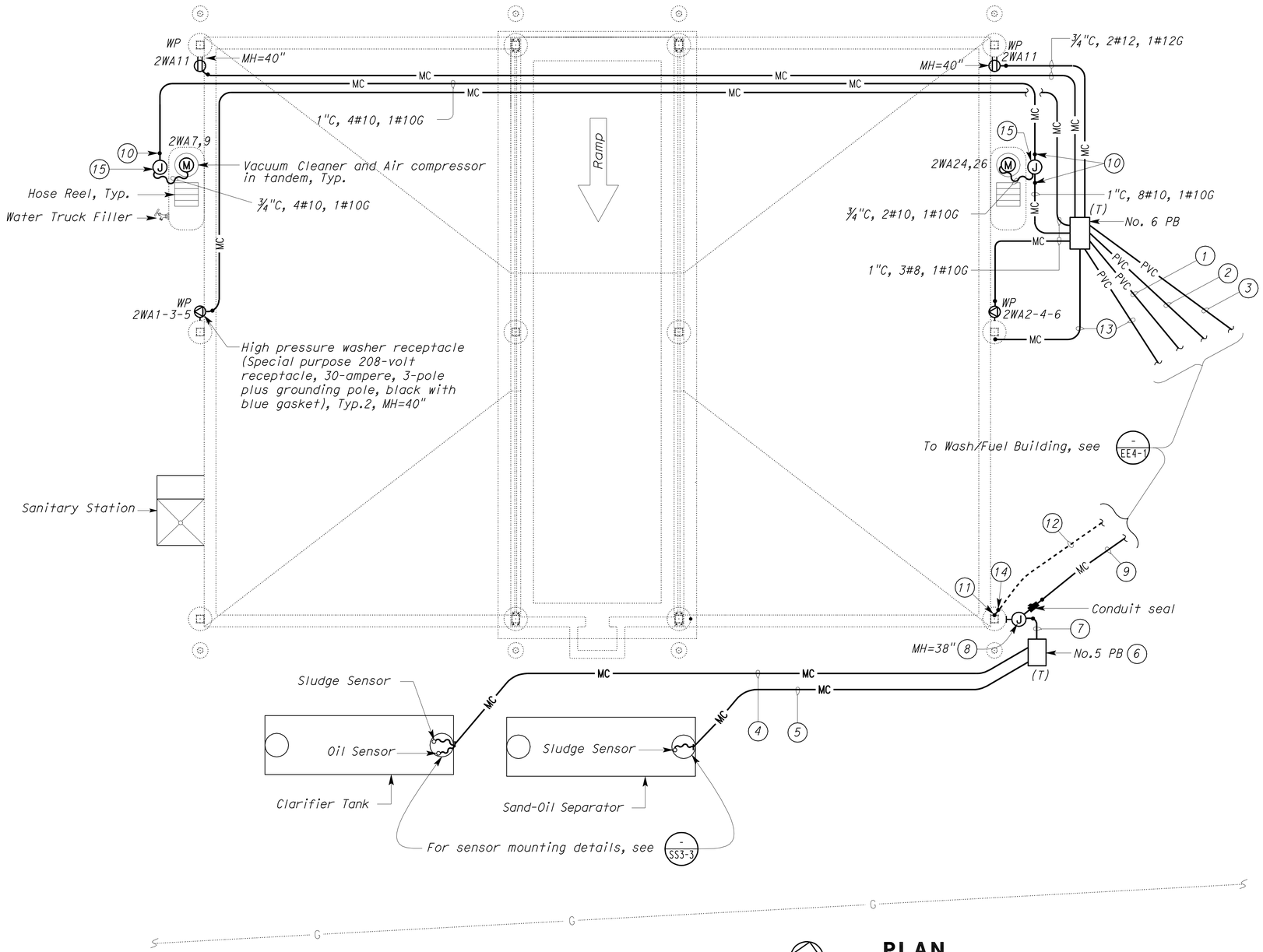

PLAN

SCALE 1" = 5'-0"

General Notes:

A. All metal conduit shown, both above and below ground shall be PVC coated rigid steel conduit.

B. Locations of vacuum cleaners, sand-oil separator, and clarifier tank as shown are arbitrary only. See Wastewater Plan sheets "SS" for exact locations.

Notes:

1. 1½"C, 6#8 (high pressure washer receptacles), 1#10G to Panel 2WA.
2. 1"C, 4#10 (vacuum cleaners), 4#10 (air compressors), 2#10 (120 volt outlets), 1#10G to Panel 2WA.
3. 1½"C, pull rope to distribution section at IFS-W.
4. 1½"C, 2 sensor cables (sludge and oil). Install grounding type bushing on both ends of conduit.
5. 1½"C, sensor cable (sludge). Install grounding type bushing on both ends of conduit.
6. Mark pull box cover "SENSORS". Sensor cables shall run continuously without splices inside the pull box. Provide two feet slack of sensor cables inside the pull box. Bond metal pull box cover to grounding system.
7. 1½"C,MC,3 sensor cables. Install grounding type bushing on both ends of conduit.
8. NEMA 4X, stainless steel, 10-inch x 10-inch x 6-inch junction box. Label junction box "SENSORS". Install terminal blocks inside junction box as recommended by the sensors manufacturer.
9. 1½"C, 3 sensor cables to sludge and oil sensor control panel. Install grounding type bushing on both ends of conduit.
10. Stub up conduit adjacent and to suit vacuum cleaner/air compresor unit furnished.
11. Exothermically bond grounding electrode conductor to metal column. Connection point shall be accessible for future inspection.
12. 1#4/0 bare copper grounding electrode conductor. Bury grounding electrode conductor 3 feet below finished grade.
13. Lighting conduit and conductors. See Lighting Plan for details.
14. Stub out 1#4/0 bare copper thru PVC pipe sleeve near the canopy column and fill cavity around conductor with sealant.
15. Weatherproof type junction box. Maximum mounting height shall be 18 inches.

THIS DRAWING ACCURATE FOR ELECTRICAL WORK ONLY

	BY	CHECKED
DESIGN	Catalino Enriquez	J.S.S./H.Abdelsayed
DETAILS	Ed Tapalla/Dali Zhou	Catalino Enriquez
QUANTITIES	Catalino Enriquez	J.S.S./H.Abdelsayed

STATE OF CALIFORNIA DEPARTMENT OF TRANSPORTATION

DIVISION OF ENGINEERING SERVICES
ELECTRICAL-MECHANICAL-WATER AND WASTEWATER DESIGN

BRIDGE NO. 33M5785
POST MILE 2.2

SFOBB MAINTENANCE COMPLEX
WASHRACK — POWER PLAN

SHEET **EE3-1**

TAEMWW Imperial Rev. 7/10

ORIGINAL SCALE IN INCHES FOR REDUCED PLANS 0 1 2 3

UNIT 3596
PROJECT NUMBER & PHASE 04120006661
EA 014081

DISREGARD PRINTS BEARING EARLIER REVISION DATES → 3/19/12 3/26/12 5/29/12 5/30/12

REVISION DATES (PRELIMINARY STAGE ONLY) SHEET OF

25-OCT-2012 10:03

ee3_01.dgn

DIST.	COUNTY	ROUTE	POST MILES TOTAL PROJECT	SHEET NO.	TOTAL SHEETS
04	Ala	80	2.2	787	800

CALIFORNIA STATE FIRE MARSHAL APPROVED
Approval of this plan does not authorize or approve any omission or deviation from applicable regulations. Final approval is subject to field inspection. One set of approved plans shall be available on the project site at all times.
Reviewed by: JOHN E WOODS, SDSFM
Approval date: 8-22-12

Jaswinder S Gill 5-30-12
REGISTERED ELECTRICAL ENGINEER DATE

REGISTERED PROFESSIONAL ENGINEER J. S. GILL No. 18551 Exp. 12-31-12 ELEC STATE OF CALIFORNIA

10-22-12
PLANS APPROVAL DATE

The State of California or its officers or agents shall not be responsible for the accuracy or completeness of scanned copies of this plan sheet.

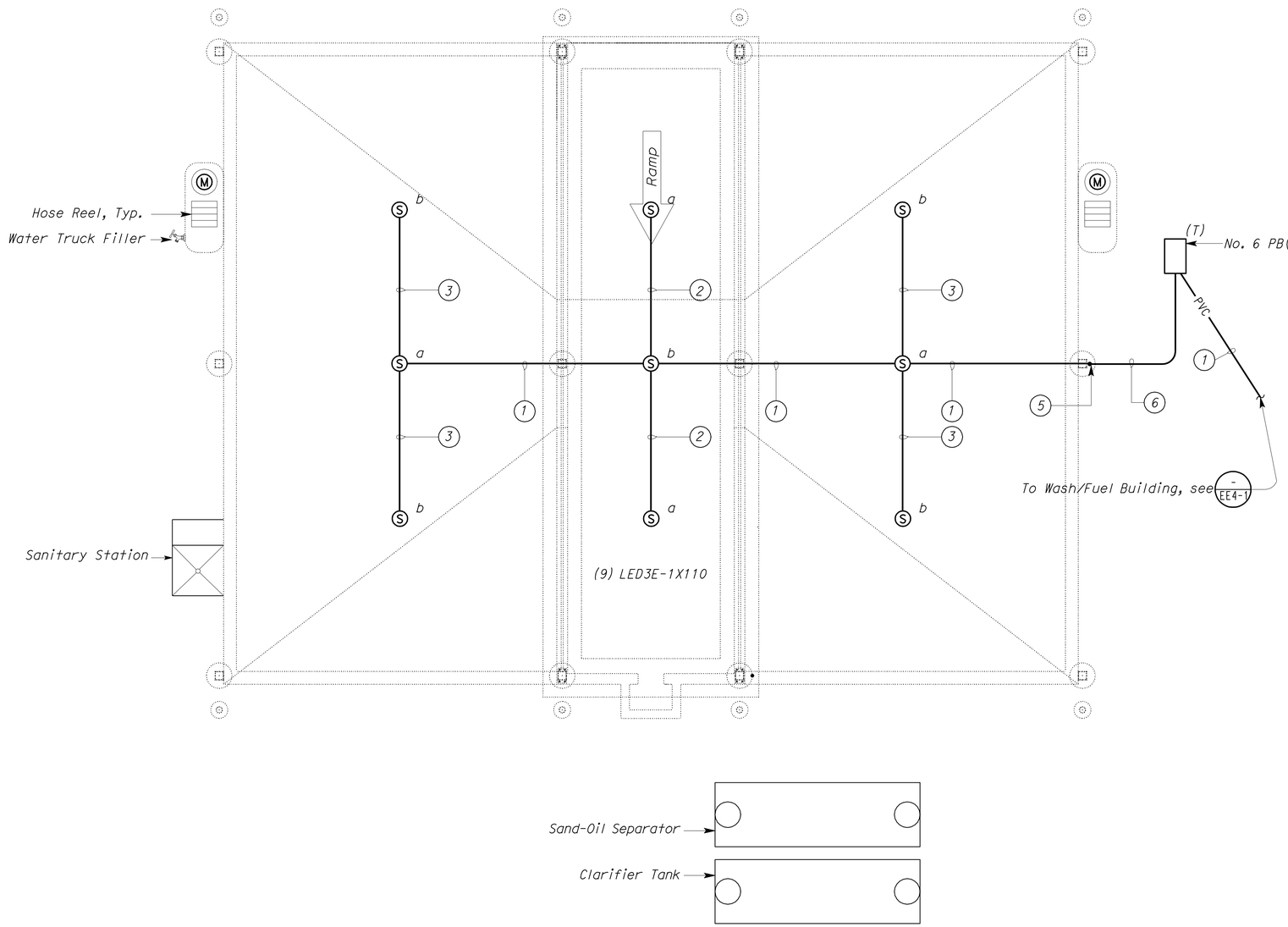

PLAN
SCALE 1" = 5'-0"

General Notes:

A. *A lower case letter adjacent to the lighting fixture graphic symbol denotes that fixture is controlled by a similarly marked switching relays located inside the Canopy Lighting Control Panel (CLCP). For details, see CLCP schematic on sheet EE4-2.*

B. *All underground / underslab conduit shall be PVC coated rigid steel conduit.*

C. *For Exterior Lighting fixture schedule, see sheet EE1-3.29.*

Notes:

1. *1"C, 3#12, 3#14,1#12G. Conductor numbers are N2, 2S1A, 2S1B, 2D1A, 2D1B & DC.*
2. *¾"C, 2#12, 2#14,1#12G. Conductor numbers are N2, 2S1A, 2D1A & DC.*
3. *¾"C, 2#12, 2#14,1#12G. Conductor numbers are N2, 2S1B, 2D1B & DC.*
4. *Pull box repeated here for clarity. See sheet EE4-1 for details.*
5. *See Detail 7 on sheet EE3-07 for conduit stub up at the columns.*
6. *1"C, PVC coated RSC, 3#12, 3#14,1#12G. Conductor numbers are N2, 2S1A, 2S1B, 2D1A, 2D1B & DC.*

THIS DRAWING ACCURATE FOR ELECTRICAL WORK ONLY

	BY	CHECKED
DESIGN	Jaswinder Gill	Christine Mamaril
DETAILS	Ed D. Tapalla/Dali Zhou	Jaswinder Gill
QUANTITIES	Jaswinder Gill	Christine Mamaril

STATE OF CALIFORNIA
DEPARTMENT OF TRANSPORTATION

DIVISION OF ENGINEERING SERVICES
ELECTRICAL-MECHANICAL-WATER AND WASTEWATER DESIGN

BRIDGE NO. 33M5785
POST MILE 2.2

SFOBB MAINTENANCE COMPLEX
WASHRACK
LIGHTING PLAN

SHEET **EE3-2**

TAEMWW Imperial Rev. 7/10

ORIGINAL SCALE IN INCHES FOR REDUCED PLANS 0 1 2 3

UNIT 3596
PROJECT NUMBER & PHASE 04120006661
EA 014081

DISREGARD PRINTS BEARING EARLIER REVISION DATES
REVISION DATES (PRELIMINARY STAGE ONLY) 3/19/12 3/23/12 5/30/12
SHEET OF

25-OCT-2012 10:04
ee3_02.dgn

DIST.	COUNTY	ROUTE	POST MILES TOTAL PROJECT	SHEET NO.	TOTAL SHEETS
04	Ala	80	2.2	788	800

CALIFORNIA STATE FIRE MARSHAL APPROVED

Approval of this plan does not authorize or approve any omission or deviation from applicable regulations. Final approval is subject to field inspection. One set of approved plans shall be available on the project site at all times.

Reviewed by: JOHN E WOODS, SDSFM

Approval date: 8-22-12

Catalino A. Enriquez 5-30-12
REGISTERED ELECTRICAL ENGINEER DATE

REGISTERED PROFESSIONAL ENGINEER C. ENRIQUEZ No. 16944 Exp. 6-30-13 ELEC STATE OF CALIFORNIA

10-22-12
PLANS APPROVAL DATE

The State of California or its officers or agents shall not be responsible for the accuracy or completeness of scanned copies of this plan sheet.

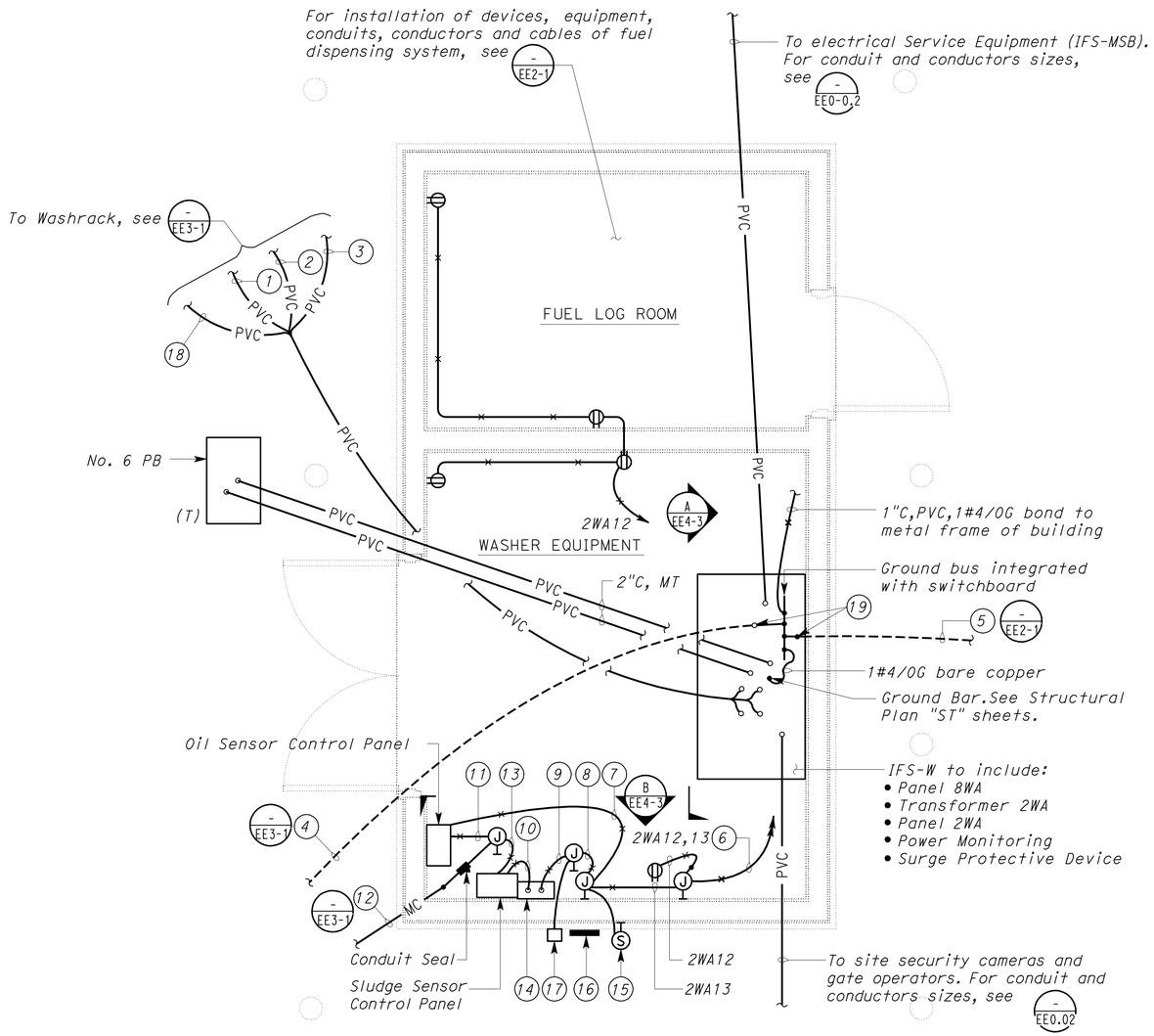

PLAN

SCALE 1/2" = 1'-0"

Notes:

1. 1½"C, 6#8 (high pressure washer receptacles), 1#10G to wash rack via pull box.
2. 1"C, 4#10 (vacuum cleaners), 4#10 (air compressors), 2#10 (120 volt outlets), 1#10G to wash rack via pull box.
3. 1½"C, pull rope to pull box adjacent to wash rack.
4. 1#4/0 bare copper grounding electrode conductor bonded to metal column of wash rack canopy. Bury grounding electrode conductor 3 feet below finished grade.
5. 1#4/0 bare copper grounding electrode conductor bonded to metal structure and reinforcement bar in concrete slab at fuel island. Bury grounding electrode conductor 3 feet below finished grade.
6. ½"C, 4#12, 1#12G.
7. ¾"C, 2#14 (power-oil sensor control panel), 2#14 (alarm-oil sensor control panel), 1#14G.
8. 1"C, 2#14 (power), 2#14 (alarm-oil sensor control panel), 2#14 (alarm light), 1#14G.
9. 1"C, 2#14 (power), 2#14 (alarm-oil sensor control panel), 2#14 (alarm light), 2#14 (alarm test push button), 1#14G.
10. ¾"C, 2#14 (power-sludge sensor control panel), 2#14 (alarm-sludge sensor control panel), 1#14G.
11. 1"C, oil sensor cable, 1#12G bare copper. Install grounding type bushing on both ends of conduit.
12. 1½"C, Type 2 conduit, oil sensor cable, 2 sludge sensor cables, 1#12G bare copper. Install grounding type bushing on both ends of conduit.
13. 1"C, 2 sludge sensor cables, 1#12G bare copper. Install grounding type bushing on both ends of conduit.
14. Electrical gutter.
15. Alarm light. Mount alarm light fixture at 7 feet and 6 inches from finished grade. For alarm schematic diagram, see detail No.1 on sheet EE4-3.
16. Warning sign. Mount warning sign below and adjacent to alarm light. Aluminum sign shall have ¾ inch black letters on white background and shall read as:

    HIGH OIL OR SLUDGE BUILD UP INSIDE
    WASH RACK UNDERGROUND TANKS
    WHEN ALARM LIGHT IS ACTIVATED.
    CHECK CONTROLLERS INSIDE.
17. Alarm test push button. Mount alarm test push button on the wall at 46-inch from finished grade. Alarm test push button shall be housed inside a 6x6x4 (inch) NEMA 3R stainless steel enclosure with hinged cover. Label enclosure with "ALARM TEST".
18. Lighting conduit and conductors. See Lighting Plan for details.
19. Stub out 1#4/0 bare copper thru PVC pipe sleeve and fill cavity around conductor with sealant.

THIS DRAWING ACCURATE FOR ELECTRICAL WORK ONLY

	BY	CHECKED
DESIGN	Catalino Enriquez	J.S.S./H.Abdelsayed
DETAILS	Ed Tapalla/Dali Zhou	Catalino Enriquez
QUANTITIES	Catalino Enriquez	J.S.S./H.Abdelsayed

STATE OF CALIFORNIA DEPARTMENT OF TRANSPORTATION

DIVISION OF ENGINEERING SERVICES
ELECTRICAL-MECHANICAL-WATER AND WASTEWATER DESIGN

BRIDGE NO. 33M5785
POST MILE 2.2

SFOBB MAINTENANCE COMPLEX

WASH/FUEL BUILDING

POWER PLAN

SHEET **EE4-1**

TAEMWW Imperial Rev. 7/10

ORIGINAL SCALE IN INCHES FOR REDUCED PLANS 0 1 2 3

UNIT 3596
PROJECT NUMBER & PHASE 04120006661
EA 014081

DISREGARD PRINTS BEARING EARLIER REVISION DATES → 3/16/12 5/28/12 5/30/12

REVISION DATES (PRELIMINARY STAGE ONLY) SHEET OF

25-OCT-2012 10:04

ee4_01.dgn

DIST.	COUNTY	ROUTE	POST MILES TOTAL PROJECT	SHEET NO.	TOTAL SHEETS
04	Ala	80	2.2	789	800

Jaswinder S Gill 5-30-12
REGISTERED ELECTRICAL ENGINEER DATE

REGISTERED PROFESSIONAL ENGINEER J. S. GILL No. 18551 Exp. 12-31-12 ELEC STATE OF CALIFORNIA

10-22-12
PLANS APPROVAL DATE

The State of California or its officers or agents shall not be responsible for the accuracy or completeness of scanned copies of this plan sheet.

General Note:

A. For Interior Lighting Fixture Schedule, see sheet EE1-3.28.

Notes:

1. Power conduits are repeated here for clarity only. See sheet EE4-1 for details and continuation.
2. 1"C, 3#12, 3#14,1#12G. Conductor numbers are N2, 2S1A, 2S1B, 2D1A, 2D1B & DC.
3. For continuation see sheet EE3-1.
4. 1"C, PVC coated RSC, MT.
5. No. 5 pull box.
6. Install warning plates on the CLCP with the following inscription:

   To de-energize the CLCP disconnect the circuit breakers numbers 2 and 4 from IFS-W.
7. Install conduit seal at 18" from finished grade under the CLCP.

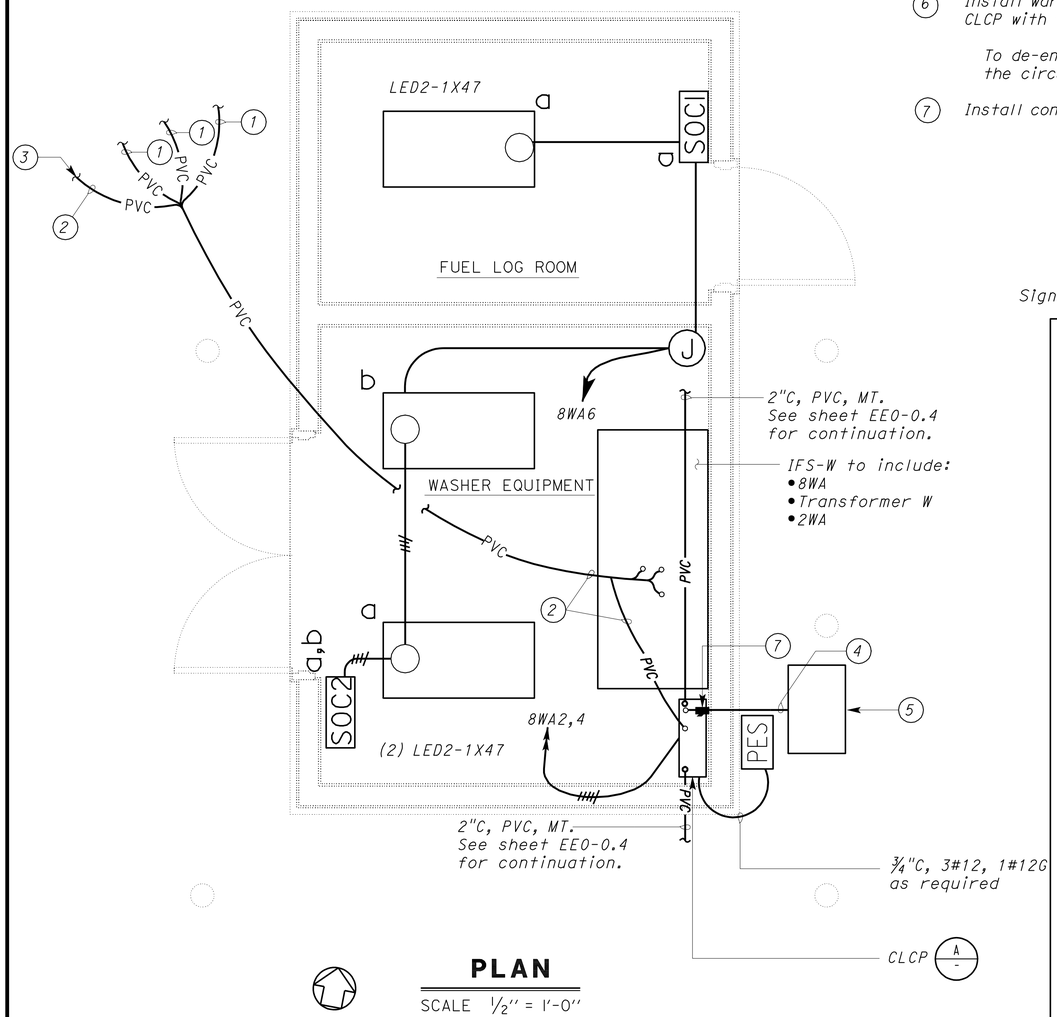

PLAN

SCALE 1/2" = 1'-0"

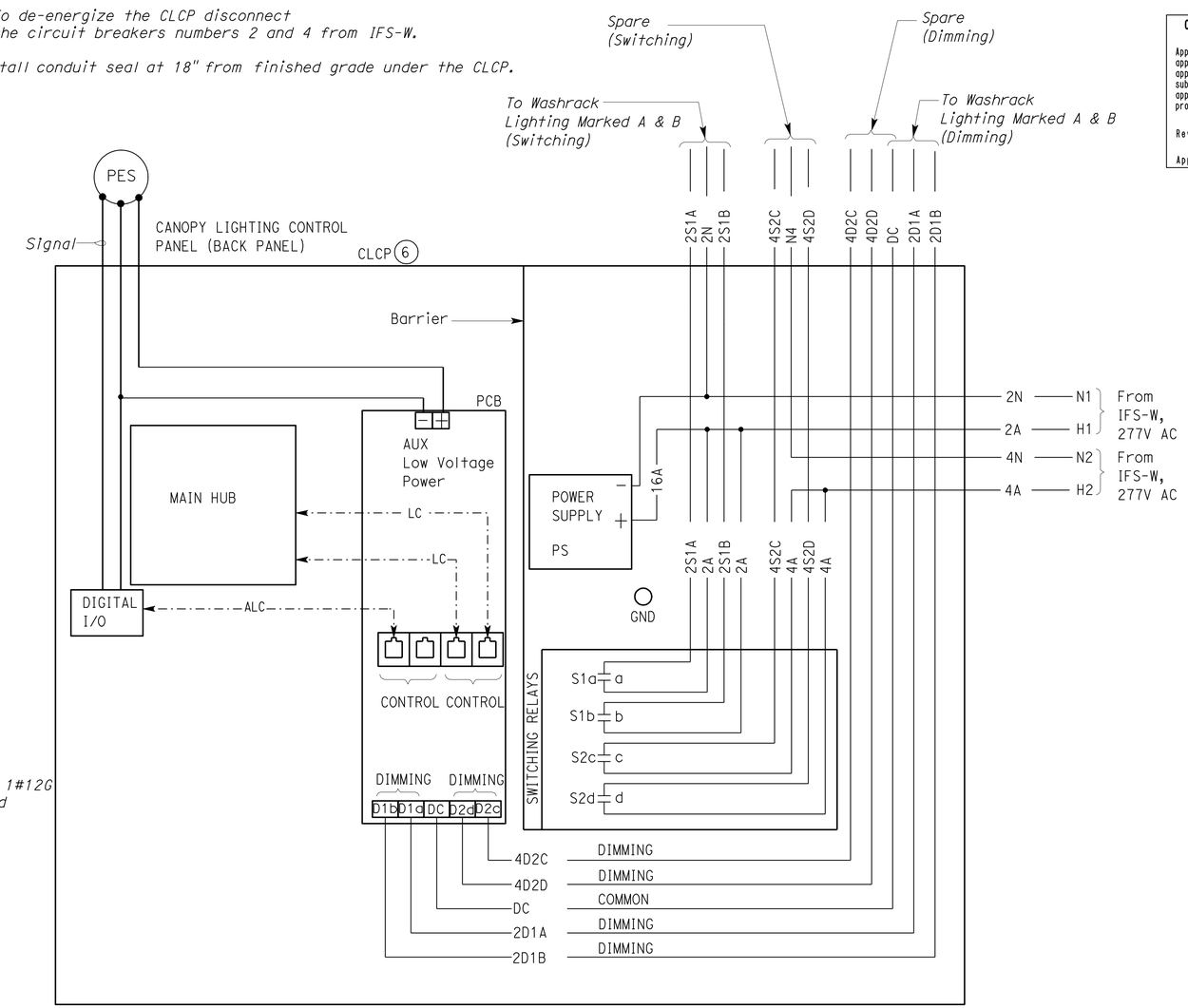

CALIFORNIA STATE FIRE MARSHAL APPROVED

Approval of this plan does not authorize or approve any omission or deviation from applicable regulations. Final approval is subject to field inspection. One set of approved plans shall be available on the project site at all times.

Reviewed by: JOHN E WOODS, SDSFM

Approval date: 8-22-12

A CANOPY LIGHTING CONTROL PANEL WIRING DIAGRAM

(EXTERIOR HINGED PANEL COVER NOT SHOWN FOR CLARITY)

THIS DRAWING ACCURATE FOR ELECTRICAL WORK ONLY

	BY	CHECKED
DESIGN	Jaswinder Gill	Christine Mamaril
DETAILS	Ed D. Tapalla/Dali Zhou	Jaswinder Gill
QUANTITIES	Jaswinder Gill	Christine Mamaril

STATE OF CALIFORNIA DEPARTMENT OF TRANSPORTATION

DIVISION OF ENGINEERING SERVICES ELECTRICAL-MECHANICAL-WATER AND WASTEWATER DESIGN

BRIDGE NO. 33M5785 POST MILE 2.2

SFOBB MAINTENANCE COMPLEX

WASH/FUEL BUILDING

LIGHTING PLANS

SHEET EE4-2

TAEMWW Imperial Rev. 7/10

ORIGINAL SCALE IN INCHES FOR REDUCED PLANS 0 1 2 3

UNIT 3596
PROJECT NUMBER & PHASE 04120006661
EA 014081

DISREGARD PRINTS BEARING EARLIER REVISION DATES 3/16/12 3/23/12 5/30/12

REVISION DATES (PRELIMINARY STAGE ONLY) SHEET OF

25-OCT-2012 10:04

ee4_02.dgn

DIST.	COUNTY	ROUTE	POST MILES TOTAL PROJECT	SHEET NO.	TOTAL SHEETS
04	Ala	80	2.2	790	800

CALIFORNIA STATE FIRE MARSHAL APPROVED
Approval of this plan does not authorize or approve any omission or deviation from applicable regulations. Final approval is subject to field inspection. One set of approved plans shall be available on the project site at all times.
Reviewed by: JOHN E WOODS, SDSFM
Approval date: 8-22-12

Catalino A. Enriquez 5-30-12
REGISTERED ELECTRICAL ENGINEER DATE

REGISTERED PROFESSIONAL ENGINEER C. ENRIQUEZ No. 16944 Exp. 6-30-13 ELEC STATE OF CALIFORNIA

10-22-12
PLANS APPROVAL DATE

The State of California or its officers or agents shall not be responsible for the accuracy or completeness of scanned copies of this plan sheet.

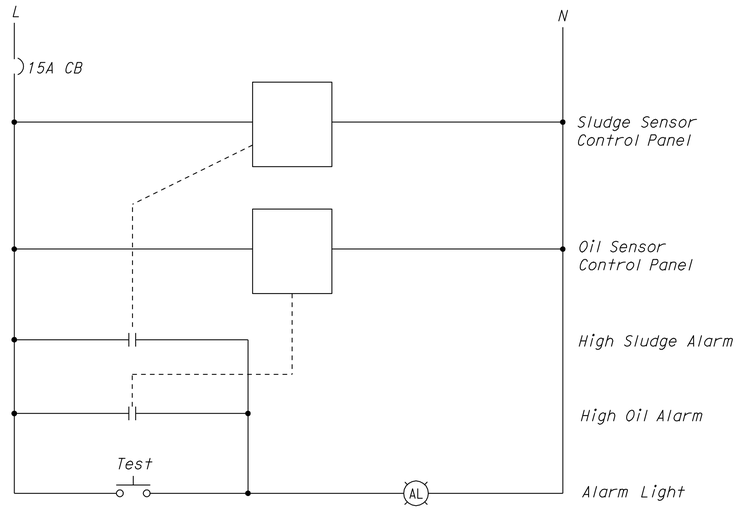

SLUDGE & OIL SENSING SYSTEM CONTROL SCHEMATIC
(1)

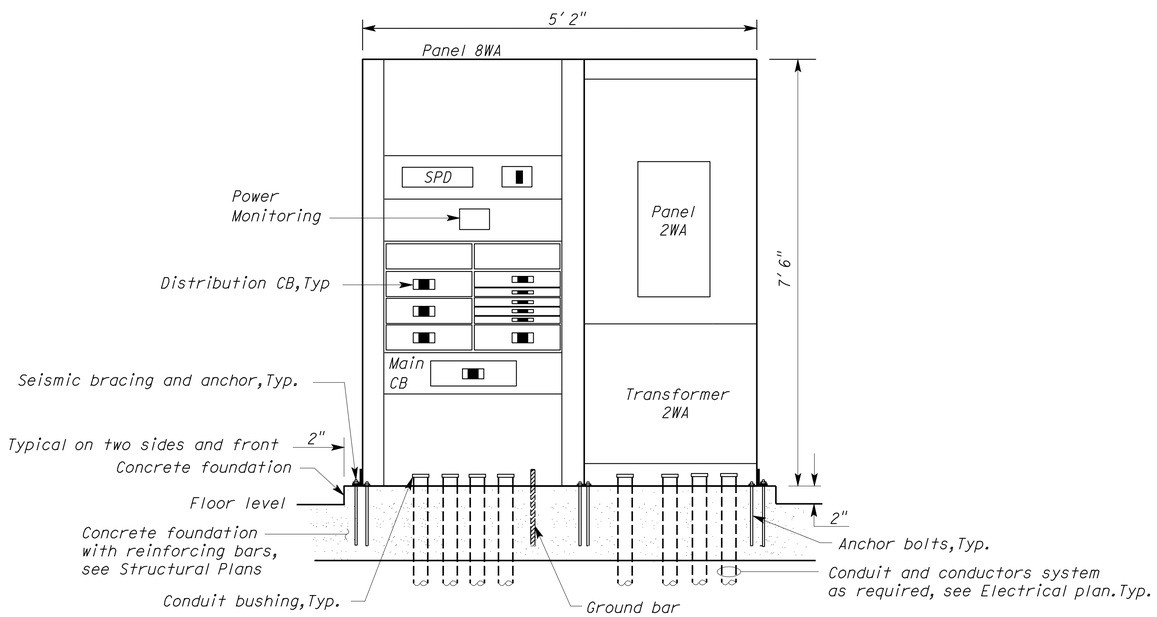

IFS-W
(A)
NO SCALE

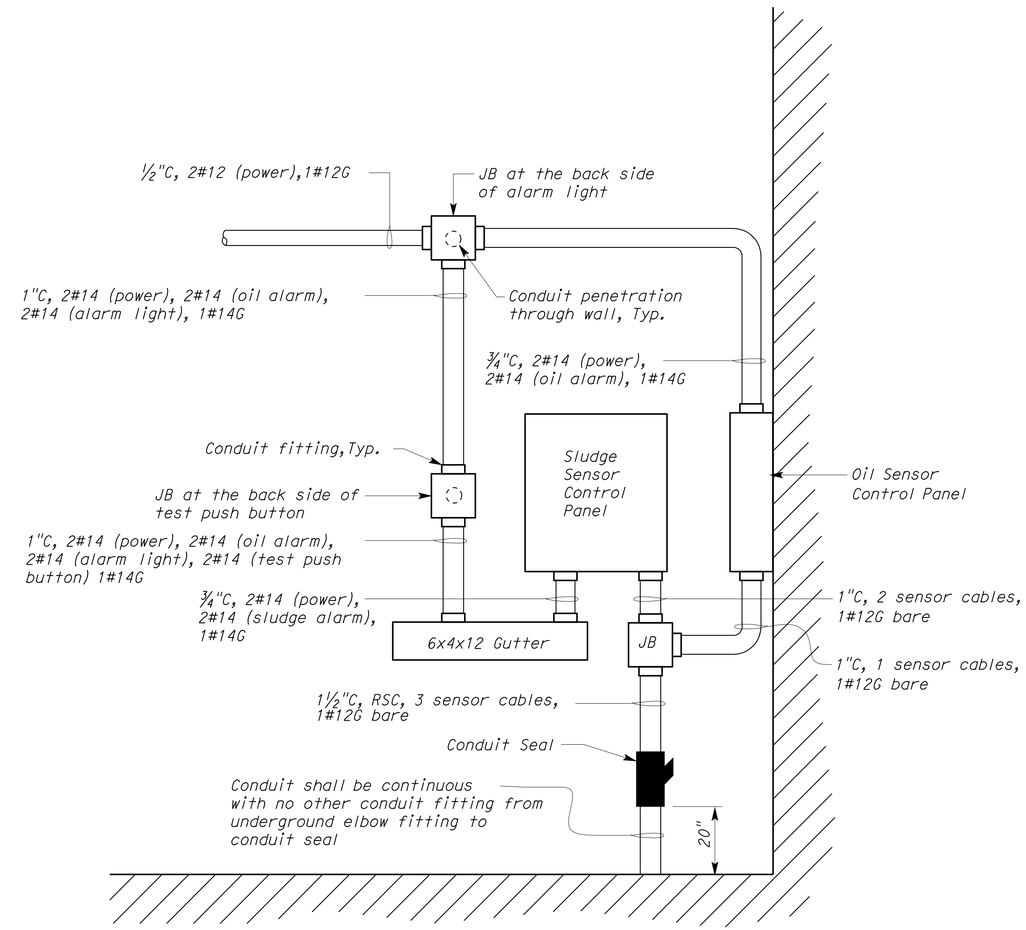

ELEVATION
(B)
NO SCALE

THIS DRAWING ACCURATE FOR ELECTRICAL WORK ONLY

DESIGN	BY Catalino Enriquez	CHECKED J.S.S./H.Abdelsayed	
DETAILS	BY Dali Zhou	CHECKED Catalino Enriquez	
QUANTITIES	BY Catalino Enriquez	CHECKED J.S.S./H.Abdelsayed	

STATE OF CALIFORNIA
DEPARTMENT OF TRANSPORTATION

DIVISION OF ENGINEERING SERVICES
ELECTRICAL-MECHANICAL-WATER AND WASTEWATER DESIGN

BRIDGE NO. 33M5785
POST MILE 2.2

SFOBB MAINTENANCE COMPLEX
WASH/FUEL BUILDING
DETAILS

SHEET EE4-3

TAEMWW Imperial Rev. 7/10

ORIGINAL SCALE IN INCHES FOR REDUCED PLANS 0 1 2 3

UNIT 3596
PROJECT NUMBER & PHASE 04120006661
EA 014081

DISREGARD PRINTS BEARING EARLIER REVISION DATES → 3/29/12 5/29/12 5/30/12

REVISION DATES (PRELIMINARY STAGE ONLY) SHEET OF

25-OCT-2012 10:04
ee4_03.dgn

DIST.	COUNTY	ROUTE	POST MILES TOTAL PROJECT	SHEET NO.	TOTAL SHEETS
04	Ala	80	2.2	791	800

REGISTERED ELECTRICAL ENGINEER — Catalino A. Enriquez — 5-30-12 DATE

REGISTERED PROFESSIONAL ENGINEER C. ENRIQUEZ No. 16944 Exp. 6-30-13 ELEC STATE OF CALIFORNIA

10-22-12
PLANS APPROVAL DATE

The State of California or its officers or agents shall not be responsible for the accuracy or completeness of scanned copies of this plan sheet.

CALIFORNIA STATE FIRE MARSHAL APPROVED
Approval of this plan does not authorize or approve any omission or deviation from applicable regulations. Final approval is subject to field inspection. One set of approved plans shall be available on the project site at all times.
Reviewed by: JOHN E WOODS, SDSFM
Approval date: 8-22-12

General Note:

For IFS grounding details, see sheet EE1-9.4.

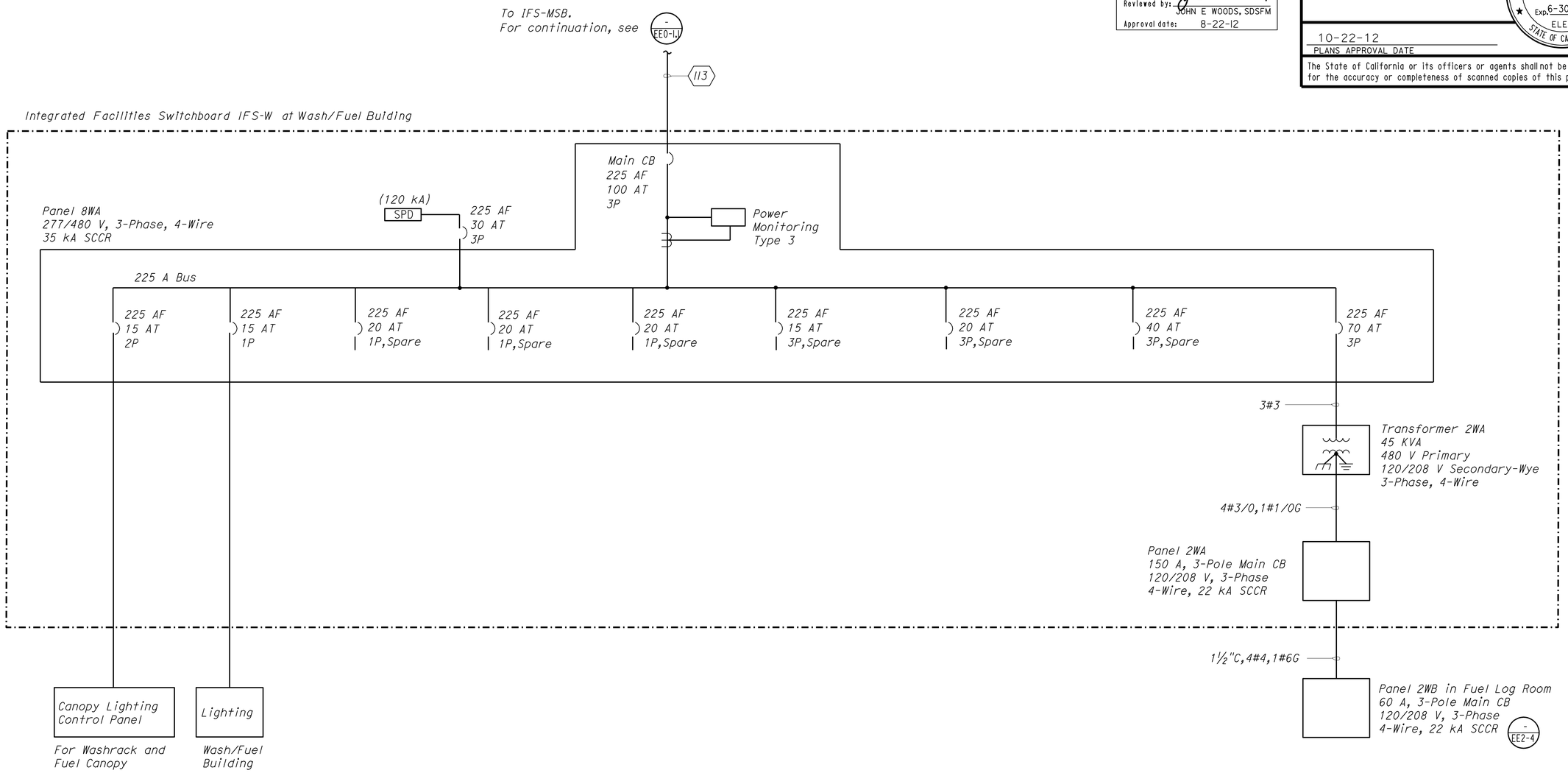

INTEGRATED FACILITIES SWITCHBOARD (IFS)-W

	BY	CHECKED
DESIGN	Catalino Enriquez	J.S.S./H.Abdelsayed
DETAILS	Dali Zhou	Catalino Enriquez
QUANTITIES	Catalino Enriquez	J.S.S./H.Abdelsayed

STATE OF CALIFORNIA
DEPARTMENT OF TRANSPORTATION

DIVISION OF ENGINEERING SERVICES
ELECTRICAL-MECHANICAL-WATER AND WASTEWATER DESIGN

BRIDGE NO. 33M5785
POST MILE 2.2

SFOBB MAINTENANCE COMPLEX
WASH/FUEL BUILDING
SINGLE LINE DIAGRAM

SHEET **EE4-4**

TAEMWW Imperial Rev. 7/10

ORIGINAL SCALE IN INCHES FOR REDUCED PLANS 0 1 2 3

UNIT 3596
PROJECT NUMBER & PHASE 04120006661
EA 014081

DISREGARD PRINTS BEARING EARLIER REVISION DATES → 3/16/12 5/28/12 5/30/12

REVISION DATES (PRELIMINARY STAGE ONLY) SHEET OF

25-OCT-2012 10:04
ee4_04.dgn

DIST.	COUNTY	ROUTE	POST MILES TOTAL PROJECT	SHEET NO.	TOTAL SHEETS
04	Ala	80	2.2	792	800

CALIFORNIA STATE FIRE MARSHAL APPROVED
Approval of this plan does not authorize or approve any omission or deviation from applicable regulations. Final approval is subject to field inspection. One set of approved plans shall be available on the project site at all times.
Reviewed by: JOHN E WOODS, SDSFM
Approval date: 8-22-12

Catalino A. Enriquez 5-30-12
REGISTERED ELECTRICAL ENGINEER DATE

REGISTERED PROFESSIONAL ENGINEER C. ENRIQUEZ No. 16944 Exp. 6-30-13 ELEC STATE OF CALIFORNIA

10-22-12
PLANS APPROVAL DATE

The State of California or its officers or agents shall not be responsible for the accuracy or completeness of scanned copies of this plan sheet.

General Notes:

A. *For one line power diagram, see sheet EE4-4.*

B. *Provide appropriate lugs for circuit breakers as required to accommodate two set run and/or oversized conductors.*

MAIN: 100 AMPERE 3-POLE CB
VOLTS: 277/480 V, 3 PH, 4W

PANEL 8WA** (BOTTOM FEED)
35 KA SCCR

FEEDER SIZE: 4"C, 4#250 KCMIL, 1#250 KCMIL G
LOCATION: IFS-W IN WASH/FUEL BUILDING

DESCRIPTION	AMPS A	AMPS B	AMPS C	BRK	CKT	A B C	CKT	BRK	AMPS A	AMPS B	AMPS C	DESCRIPTION
TRANSFORMER 2WA	40			70/3	1		2	15/2	4			LIGHTING CONTROL PANEL
		40			3		4			4		
			40		5		6	15/1			1	LIGHTING- WASH/FUEL BUILDING
SPARE	-			15/3	7		8	20/1	-			SPARE
		-			9		10	20/1		-		SPARE
			-		11		12	20/1			-	SPARE
SPARE	-			20/3	13		14	40/3	-			SPARE
		-			15		16			-		
			-		17		18				-	
SPACE			-	-	19		20	-			-	SPACE
		-			21		22			-		
	-				23		24		-			

A	B	C	
44	44	41	TOTAL CONNECTED LOAD (AMPS PER PHASE)

MAIN: 150 AMPERE, 3 POLE CB
VOLTS: 120/208 V, 3 PH, 4 WIRE

PANEL 2WA** (BOTTOM FEED)
22 KA SCCR

FEEDER SIZE: 4#3/0 AND 1#1/0G
LOCATION: IFS-W IN WASH/FUEL BUILDING

DESCRIPTION	AMPERES A	AMPERES B	AMPERES C	BRK	CKT	A B C	CKT	BRK	AMPERES A	AMPERES B	AMPERES C	DESCRIPTION
HIGH PRESSURE WASHER OUTLET -WEST WASH RACK	17			30/3	1		2	30/3	17			HIGH PRESSURE WASHER OUTLET -EAST WASH RACK
		17			3		4			17		
			17		5		6				17	
VACUUM CLEANER (120V) AND AIR COMPRESSOR (120V)-WEST WASHRACK	12			20/2	7		8	20/1	4			SECURITY CAMERAS-EAST SITE
		12			9		10	20/1		-		SPARE
OUTLETS-WASHRACK			3	*20/1	11		12	*20/1			7.5	OUTLETS-WASH/FUEL BUILDING
OIL AND SLUDGE CONTROL PANEL	2			15/1	13		14	20/1	-			SPARE
PANEL 2WB (IN FUEL LOG ROOM)		28		60/3	15		16	20/2		8		GATE OPERATOR A-EAST SITE ENTRANCE
			21		17		18				8	
	14				19		20	20/2	8			GATE OPERATOR B-EAST SITE ENTRANCE
SPARE		-		20/1	21		22			8		
SPARE			-	20/1	23		24	20/2			12	VACUUM CLEANER (120V) AND AIR COMPRESSOR (120V)-EAST WASHRACK
SPARE	-			*20/1	25		26		12			
SPARE		-		*20/1	27		28	20/1		-		SPARE
SPARE			-	*20/1	29		30	20/1			-	SPARE
SPARE	-			20/1	31		32	20/1	-			SPARE
SPARE		-		20/1	33		34	20/1		-		SPARE
SPARE			-	20/1	35		36	20/1			-	SPARE
SPARE	-			20/1	37		38	20/1	-			SPARE
SPARE		-		20/1	39		40	20/1		-		SPARE
SPARE			-	20/1	41		42	20/1			-	SPARE

A	B	C	
86	90	86	TOTAL CONNECTED LOAD (AMPERES PER PHASE)

* INSTALL GFCI TYPE CIRCUIT BREAKER WITH 5 MILLIAMPERE PROTECTION

** INSTALL PROVISIONS FOR PADLOCKING CIRCUIT BREAKERS IN OFF POSITION

	BY	CHECKED
DESIGN	Catalino Enriquez	J.S.S./H.Abdelsayed
DETAILS	Dali Zhou	Catalino Enriquez
QUANTITIES	Catalino Enriquez	J.S.S./H.Abdelsayed

STATE OF CALIFORNIA
DEPARTMENT OF TRANSPORTATION

DIVISION OF ENGINEERING SERVICES
ELECTRICAL-MECHANICAL-WATER AND WASTEWATER DESIGN

BRIDGE NO. 33M5785
POST MILE 2.2

SFOBB MAINTENANCE COMPLEX
WASH/FUEL BUILDING
PANEL SCHEDULE

SHEET **EE4-5**

TAEMWW Imperial Rev. 7/10

ORIGINAL SCALE IN INCHES FOR REDUCED PLANS 0 1 2 3

UNIT 3596
PROJECT NUMBER & PHASE 04120006661
EA 014081

DISREGARD PRINTS BEARING EARLIER REVISION DATES → 3/29/12 5/29/12 5/30/12

REVISION DATES (PRELIMINARY STAGE ONLY) SHEET OF

25-OCT-2012 10:04
ee4_05.dgn

DIST.	COUNTY	ROUTE	POST MILES TOTAL PROJECT	SHEET NO.	TOTAL SHEETS
04	Ala	80	2.2	793	800

REGISTERED CIVIL ENGINEER — 05/31/2012 DATE

REGISTERED PROFESSIONAL ENGINEER — JEROME R. MARCOTTE — No. C 36844 — Exp. 06/30/12 — CIVIL — STATE OF CALIFORNIA

10-22-12
PLANS APPROVAL DATE

The State of California or its officers or agents shall not be responsible for the accuracy or completeness of scanned copies of this plan sheet.

CALIFORNIA STATE FIRE MARSHAL APPROVED
Approval of this plan does not authorize or approve any omission or deviation from applicable regulations. Final approval is subject to field inspection. One set of approved plans shall be available on the project site at all times.
Reviewed by: JOHN E WOODS, SDSFM
Approval date: 8-22-12

ABBREVIATIONS

AB	AGGREGATE BASE
AC	ASPHALT CONCRETE
B	BUNG
BLDG	BUILDING
C	CONDUIT
C-C	CENTER TO CENTER
CFS	CUBIC FEET PER SECOND
CI	CAST IRON
CL	CHAIN LINK
CMP	CORRUGATED METAL PIPE
CONC	CONCRETE
COTF	CLEANOUT TO FLOOR
COTG	CLEANOUT TO GRADE
CPLG	COUPLING
CUFT	CUBIC FEET
D	DRAIN
DBH	DIAMETER AT BREAST HEIGHT
DI	DRAIN INLET
DIA	DIAMETER
DP	DRAIN PIPE
E	ELECTRICAL
(E)	EXISTING
EA	EACH
EL	ELEVATION
EP	EDGE OF PAVEMENT
EQ	EQUAL
FOB	FACE OF BUILDING
FF	FINISH FLOOR
FG	FINISH GRADE
FL	FLOW LINE
FM	FORCE MAIN
FOC	FACE OF CONCRETE
FS	FLOW SWITCH
FT	FEET
GA	GAUGE
GAC	GRANULAR ACTIVATED CARBON
GAL	GALLON
GPM	GALLONS PER MINUTE
GSP	GALVANIZED STEEL PIPE
GV	GATE VALVE
GS	GOVERNMENT SERVICE LINE
H	HEIGHT
HP	HOSE FAUCET
HF	HORSEPOWER
HZ	HERTZ
ID	INSIDE DIAMETER
IE	INVERT ELEVATION (IN FEET)
JB	JUNCTION BOX
kW	KILOWATT
LB	POUND
LS	LANDSCAPE IRRIGATION
LT	LEFT
MAX	MAXIMUM
MBV	MOTORIZED BALL VALVE
MH	MANHOLE
MIN	MINIMUM
N	NORTH
NB	NORTHBOUND
NIC	NOT IN CONTRACT
NO	NUMBER
OC	ON CENTER
OD	OUTSIDE DIAMETER
OG	ORIGINAL GROUND
PCC	PORTLAND CEMENT CONCRETE
PH	PHASE
PRV	PRESSURE REDUCING VALVE
PVC	POLYVINYL CHLORIDE
R	RADIUS
RCP	REINFORCED CONCRETE PIPE
RIM	RIM ELEVATION
rpm	REVOLUTIONS PER MINUTE
RPBP	REDUCED PRESSURE BACKFLOW PREVENTER
RPU	RECYCLE PROCESS UNIT
RT	RIGHT
RW	RECYCLED WATER
S	SLOPE
SCH	SCHEDULE
SD	STORM DRAIN
SP	SEWAGE PIPE
SSMH	SANITARY SEWER MANHOLE
STA	STATION
STD	STANDARD
TBM	TEMPORARY BENCH MARK
TOC	TOP OF CONCRETE
TOT	TOTAL
TYP	TYPICAL
VAC	VOLTS AC
VP	VENT PIPE
W	WATER
W/O	WITHOUT
WP	WATER PIPE
WSP	WELDED STEEL PIPE

LEGEND

X	FENCE
	SURFACE DRAINAGE
	ABANDON
S	SANITARY SEWER
D	DRAIN
V	VENT
E	ELECTRICAL
W	WATER
RW	RECYCLED WATER
7 / SS-5	DETAIL / SHEET NUMBER
99.00	NEW GRADE IN FEET
X (100.00)	EXISTING SPOT GRADE IN FEET
	SURFACE DRAINAGE
	ABANDON
	COTG
	ASSUMED BENCHMARK ELEVATION
Ø	DIAMETER
	SECTION / ELEVATION LETTER / SHEET NUMBER

THRUST BLOCK BEARING AREA (SQ. FT.)

Type of Fitting		90° Bend	45° Bend	11 1/4° or 22 1/2° Bend	Tee or Dead End	Tee w/ Plug	Cross w/ Plug
Size of Pipe	4"	2	1	1	2	2	2
	6"	4	4	2	4	4	4
	8"	7	4	2	5	7	7
	10"	12	6	3	8	12	12
	12"	16	10	5	12	16	16
	14"	20	12	6	14	20	20
	16"	27	15	8	18	27	27
	18"	45	25	13	32	45	45
	24"	65	35	18	46	65	65

Type of Fitting	90° Bend	45° Bend	11 1/4° or 22 1/2° Bend	Tee or Dead end	Cross w/plug	Tee w/plug
Typical Installation	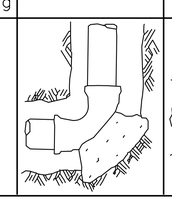	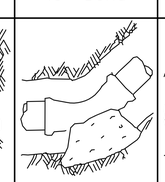	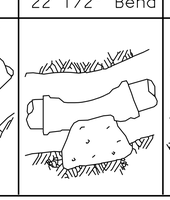	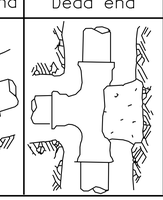	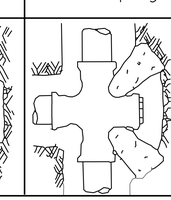	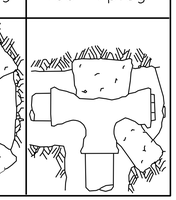

GENERAL WORK NOTES

1. The Contractor shall verify all controlling field dimensions and conditions before ordering or fabricating any materials.
2. The Contractor shall verify exact location of all underground facilities and utilities prior to start of construction.
3. No 90 degree bends allowed on drain or sewer pipe. Where 90 degree bends are shown, use two 45 degree bends.

PIPE FITTINGS AND VALVES

	STUB OUT
	ELBOW, TURNED DOWN
	FLEXIBLE JOINT
	REDUCER, CONCENTRIC
	REDUCER, ECCENTRIC
	PRESSURE GAUGE
	UNION
	UNION, INSULATING
	VALVE, BALL
	VALVE, CHECK

	BY	CHECKED
DESIGN	Andy Quan	J. Marcotte
DETAILS	Andy Quan	J. Marcotte
QUANTITIES	Andy Quan	J. Marcotte

STATE OF CALIFORNIA
DEPARTMENT OF TRANSPORTATION

DIVISION OF ENGINEERING SERVICES
ELECTRICAL-MECHANICAL-WATER AND WASTEWATER DESIGN

BRIDGE NO. 33M5785
POST MILE 2.2

SFOBB MAINTENANCE COMPLEX

NOTES, LEGEND, AND ABBREVIATIONS

SHEET SS3-0

TAEMWW Imperial Rev. 7/10

ORIGINAL SCALE IN INCHES FOR REDUCED PLANS 0 1 2 3

UNIT 3616
PROJECT NUMBER & PHASE 04120006661
EA 014081

DISREGARD PRINTS BEARING EARLIER REVISION DATES → REVISION DATES (PRELIMINARY STAGE ONLY) 10-17-11 04-03-12 05-31-12 SHEET OF

25-OCT-2012 10:04
ss3_0.dgn

DIST.	COUNTY	ROUTE	POST MILES TOTAL PROJECT	SHEET NO.	TOTAL SHEETS
04	Ala	80	2.2	794	800

REGISTERED CIVIL ENGINEER — 05/31/2012 DATE

REGISTERED PROFESSIONAL ENGINEER — JEROME R. MARCOTTE — No. C 36844 — Exp. 06/30/12 — CIVIL — STATE OF CALIFORNIA

10-22-12
PLANS APPROVAL DATE

The State of California or its officers or agents shall not be responsible for the accuracy or completeness of scanned copies of this plan sheet.

CALIFORNIA STATE FIRE MARSHAL APPROVED

Approval of this plan does not authorize or approve any omission or deviation from applicable regulations. Final approval is subject to field inspection. One set of approved plans shall be available on the project site at all times.

Reviewed by: JOHN E WOODS, SDSFM

Approval date: 8-22-12

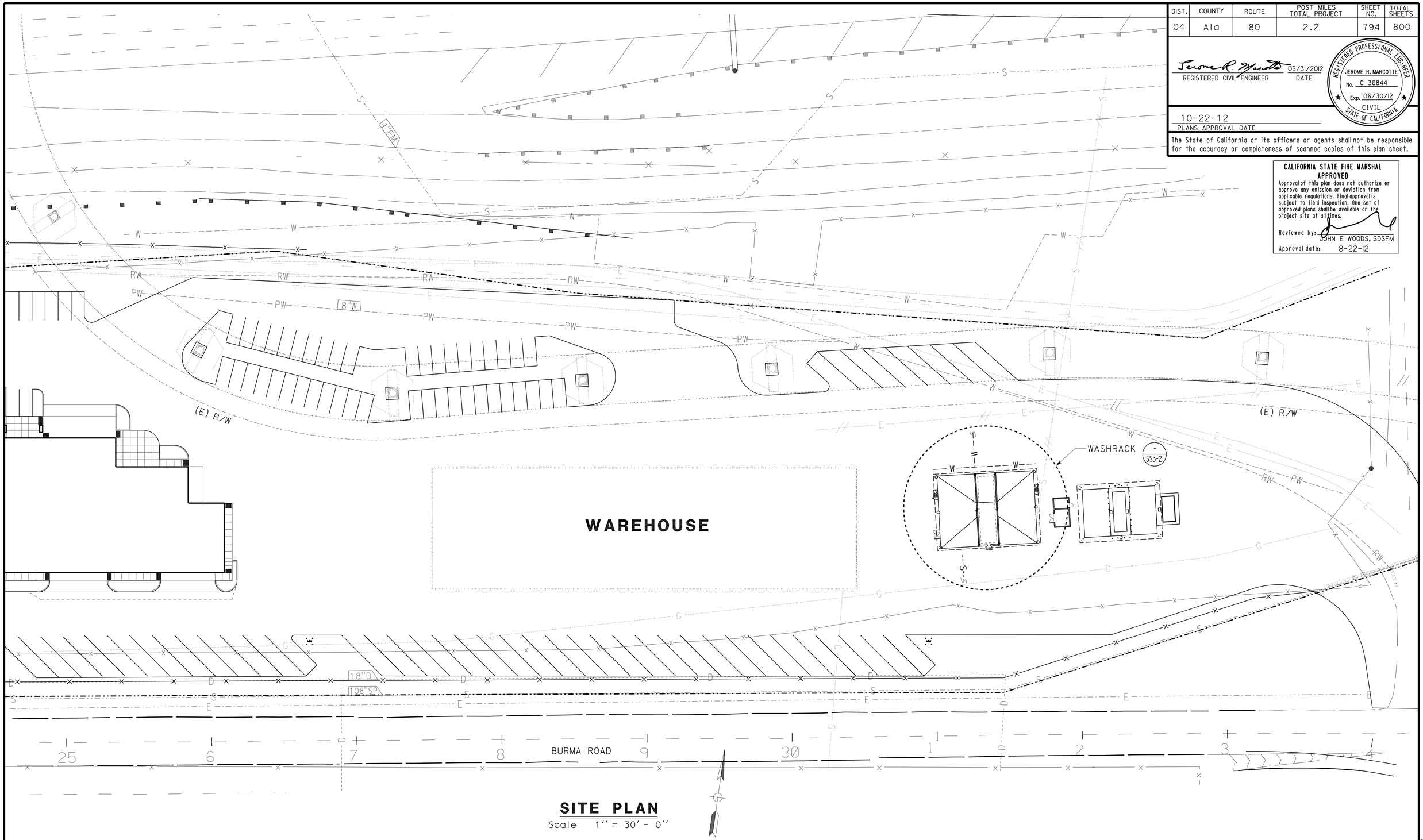

SITE PLAN

Scale 1'' = 30' - 0''

DESIGN SUPERVISOR	DESIGN	BY Andy Quan	CHECKED J. Marcotte
DESIGN ENGINEER	DETAILS	BY Andy Quan	CHECKED J. Marcotte
	QUANTITIES	BY Andy Quan	CHECKED J. Marcotte

STATE OF CALIFORNIA
DEPARTMENT OF TRANSPORTATION

DIVISION OF ENGINEERING SERVICES
ELECTRICAL-MECHANICAL-WATER AND WASTEWATER DESIGN

BRIDGE NO. 33M5785
POST MILE 2.2

SFOBB MAINTENANCE COMPLEX

SITE PLAN

SHEET **SS3-1**

TAEMWW Imperial Rev. 7/10

ORIGINAL SCALE IN INCHES FOR REDUCED PLANS 0 1 2 3

UNIT 3616
PROJECT NUMBER & PHASE 04120006661
EA 014081

DISREGARD PRINTS BEARING EARLIER REVISION DATES →

REVISION DATES (PRELIMINARY STAGE ONLY) 10-17-11 01-23-12 05-31-12 SHEET OF

25-OCT-2012 10:04

ss3_1.dgn

DIST.	COUNTY	ROUTE	POST MILES TOTAL PROJECT	SHEET NO.	TOTAL SHEETS
04	Ala	80	2.2	795	800

REGISTERED CIVIL ENGINEER — 05/31/2012 DATE

REGISTERED PROFESSIONAL ENGINEER — JEROME R. MARCOTTE — No. C 36844 — Exp. 06/30/12 — CIVIL — STATE OF CALIFORNIA

10-22-12
PLANS APPROVAL DATE

The State of California or its officers or agents shall not be responsible for the accuracy or completeness of scanned copies of this plan sheet.

CALIFORNIA STATE FIRE MARSHAL APPROVED
Approval of this plan does not authorize or approve any omission or deviation from applicable regulations. Final approval is subject to field inspection. One set of approved plans shall be available on the project site at all times.
Reviewed by: JOHN E WOODS, SDSFM
Approval date: 8-22-12

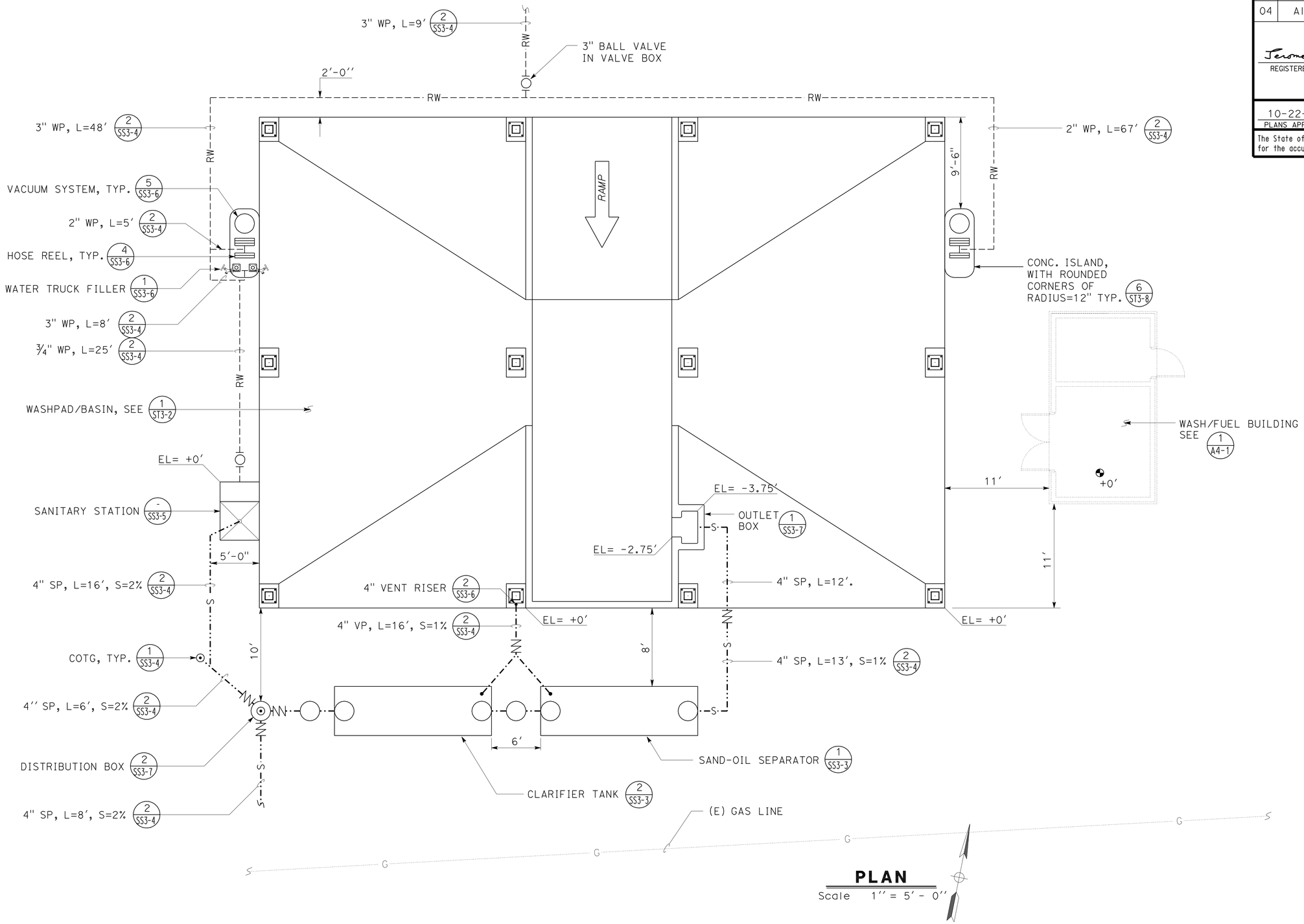

PLAN
Scale 1′′ = 5′ - 0′′

	BY	CHECKED
DESIGN	Andy Quan	J. Marcotte
DETAILS	Andy Quan	J. Marcotte
QUANTITIES	Andy Quan	J. Marcotte

STATE OF CALIFORNIA
DEPARTMENT OF TRANSPORTATION

DIVISION OF ENGINEERING SERVICES
ELECTRICAL-MECHANICAL-WATER AND WASTEWATER DESIGN

BRIDGE NO. 33M5785
POST MILE 2.2

SFOBB MAINTENANCE COMPLEX
WASHRACK DETAILS

SHEET **SS3-2**

TAEMWW Imperial Rev. 7/10

ORIGINAL SCALE IN INCHES FOR REDUCED PLANS 0 1 2 3

UNIT 3616
PROJECT NUMBER & PHASE 04120006661
EA 014081

DISREGARD PRINTS BEARING EARLIER REVISION DATES → 07-08-11 02-23-12 05-10-12 05-31-12

REVISION DATES (PRELIMINARY STAGE ONLY) SHEET OF

25-OCT-2012 10:04
ss3_2.dgn

DIST.	COUNTY	ROUTE	POST MILES TOTAL PROJECT	SHEET NO.	TOTAL SHEETS
04	Ala	80	2.2	796	800

REGISTERED CIVIL ENGINEER — 05/31/2012 DATE

REGISTERED PROFESSIONAL ENGINEER — JEROME R. MARCOTTE — No. C 36844 — Exp. 06/30/12 — CIVIL — STATE OF CALIFORNIA

10-22-12
PLANS APPROVAL DATE

The State of California or its officers or agents shall not be responsible for the accuracy or completeness of scanned copies of this plan sheet.

CALIFORNIA STATE FIRE MARSHAL APPROVED

Approval of this plan does not authorize or approve any omission or deviation from applicable regulations. Final approval is subject to field inspection. One set of approved plans shall be available on the project site at all times.

Reviewed by: JOHN E WOODS, SDSFM

Approval date: 8-22-12

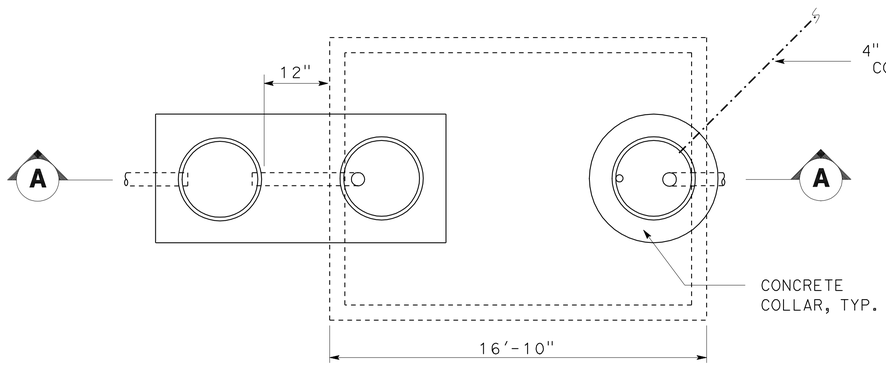

PLAN

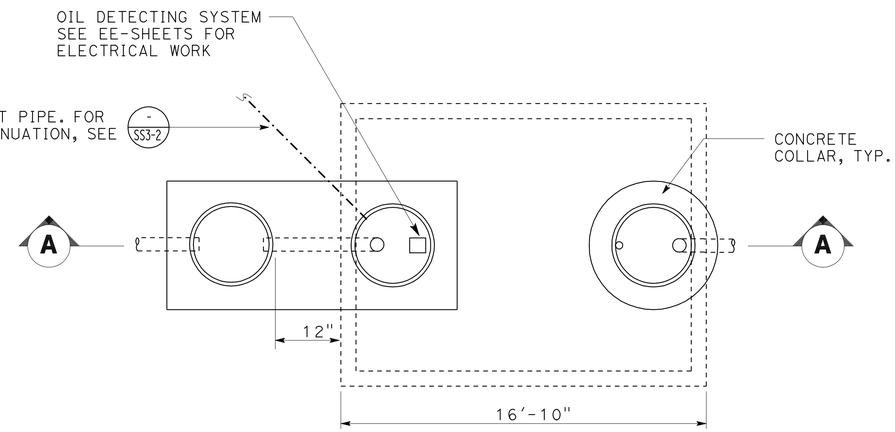

PLAN

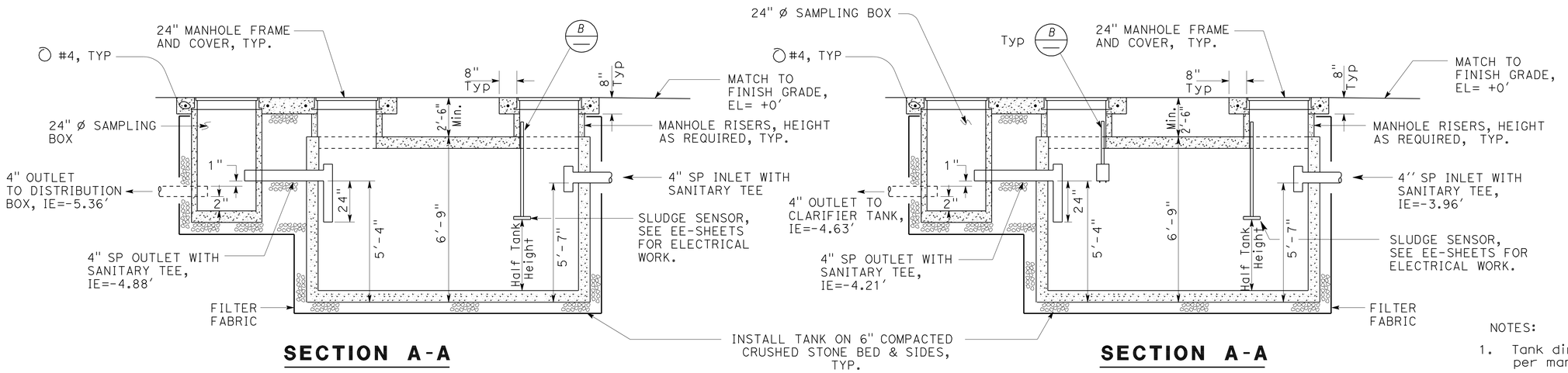

SECTION A-A

SECTION A-A

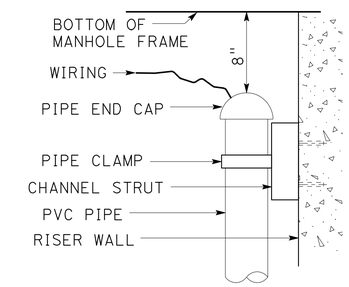

B DETAIL
NO SCALE

2 3,000 GALLON CLARIFIER TANK
NO SCALE

1 3,000 GALLON SAND-OIL SEPARATOR
NO SCALE

NOTES:

1. Tank dimensions are nominal and per manufacturer.
2. Alarm panel of the oil-detecting and sludge-detecting systems to be located at the wash/fuel building. See EE-sheets for electrical work.
3. Contractor to verify underground conduits before commencing excavation. Relocate conduits as necessary for proper installation of tanks.

	BY	CHECKED
DESIGN	Andy Quan	J. Marcotte
DETAILS	Andy Quan	J. Marcotte
QUANTITIES	Andy Quan	J. Marcotte

STATE OF CALIFORNIA
DEPARTMENT OF TRANSPORTATION

DIVISION OF ENGINEERING SERVICES
ELECTRICAL-MECHANICAL-WATER AND WASTEWATER DESIGN

BRIDGE NO. 33M5785
POST MILE 2.2

SFOBB MAINTENANCE COMPLEX
SAND-OIL SEPARATOR & CLARIFIER TANK

SHEET SS3-3

TAEMWW Imperial Rev. 7/10

ORIGINAL SCALE IN INCHES FOR REDUCED PLANS 0 1 2 3

UNIT 3616
PROJECT NUMBER & PHASE 04120006661
EA 014081

DISREGARD PRINTS BEARING EARLIER REVISION DATES
REVISION DATES (PRELIMINARY STAGE ONLY) 10-17-11 02-23-12 04-03-12 05-10-12 05-31-12
SHEET OF

25-OCT-2012 10:04
ss3_3.dgn

DIST.	COUNTY	ROUTE	POST MILES TOTAL PROJECT	SHEET NO.	TOTAL SHEETS
04	Ala	80	2.2	797	800

REGISTERED CIVIL ENGINEER — 05/31/2012 DATE

REGISTERED PROFESSIONAL ENGINEER — JEROME R. MARCOTTE No. C 36844 Exp. 06/30/12 CIVIL STATE OF CALIFORNIA

10-22-12
PLANS APPROVAL DATE

The State of California or its officers or agents shall not be responsible for the accuracy or completeness of scanned copies of this plan sheet.

CALIFORNIA STATE FIRE MARSHAL APPROVED
Approval of this plan does not authorize or approve any omission or deviation from applicable regulations. Final approval is subject to field inspection. One set of approved plans shall be available on the project site at all times.
Reviewed by: JOHN E WOODS, SDSFM
Approval date: 8-22-12

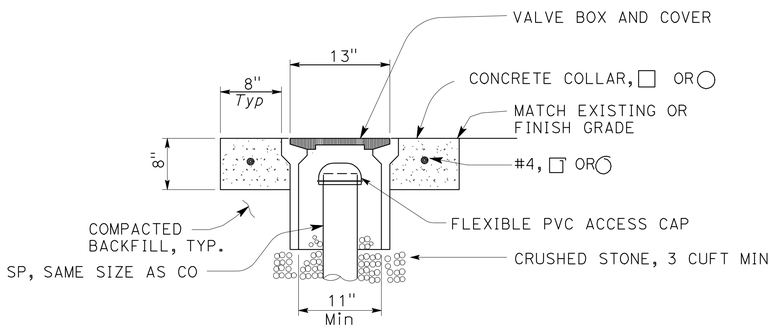

A COTG ACCESS BOX

NO SCALE

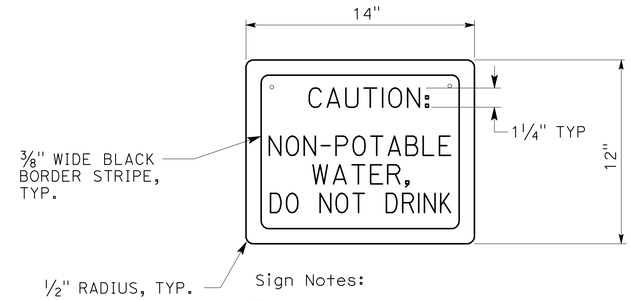

Sign Notes:

(A) All letters shall be black on yellow background.

(B) Lettering and background must be Type II Reflective Sheeting. Sign must be finished with protective film overlay.

(C) Attach sign to hose reel pipe.

4 NON-POTABLE WATER SIGN

NO SCALE

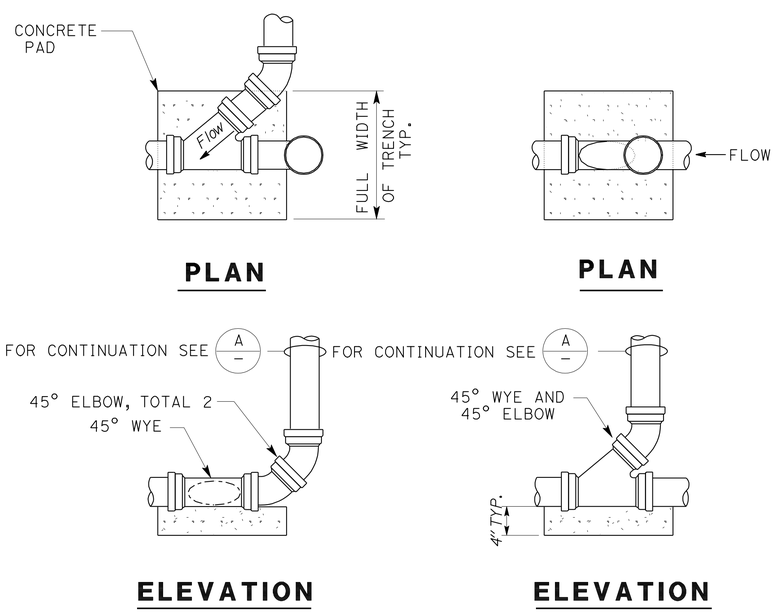

1 CLEANOUT TO GRADE

NO SCALE

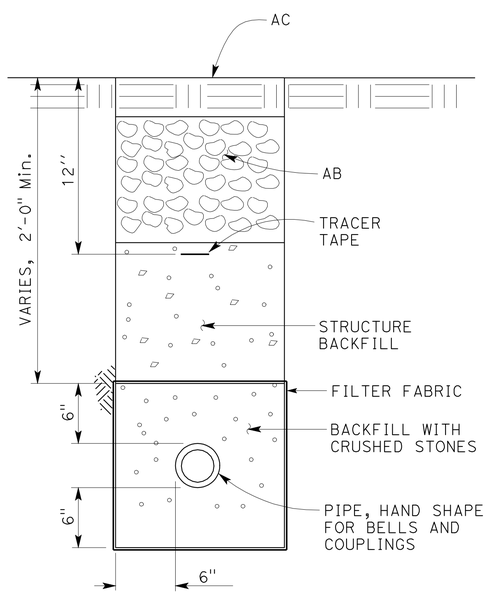

2 WATER / SEWAGE / VENT PIPE

NO SCALE

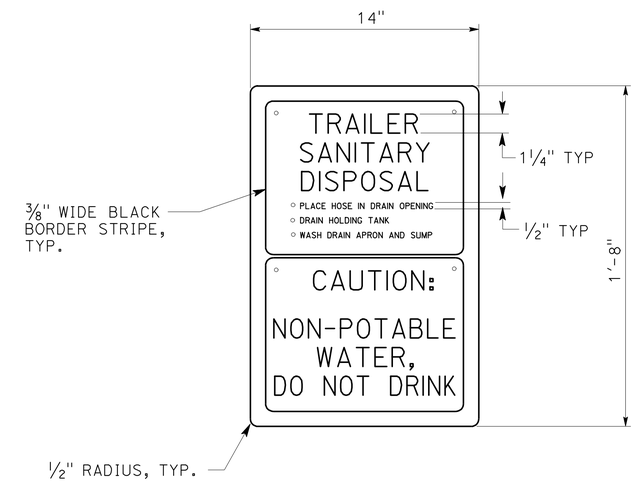

Sign Notes:

(A) All letters shall be black on yellow background.

(B) Lettering and background must be Type II Reflective Sheeting. Sign must be finished with protective film overlay.

(C) Attach sign to vent pipe.

3 SANITARY STATION SIGN

NO SCALE

	BY	CHECKED
DESIGN	Andy Quan	J. Marcotte
DETAILS	Andy Quan	J. Marcotte
QUANTITIES	Andy Quan	J. Marcotte

STATE OF CALIFORNIA DEPARTMENT OF TRANSPORTATION

DIVISION OF ENGINEERING SERVICES
ELECTRICAL-MECHANICAL-WATER AND WASTEWATER DESIGN

BRIDGE NO. 33M5785
POST MILE 2.2

SFOBB MAINTENANCE COMPLEX

DETAILS

SHEET SS3-4

TAEMWW Imperial Rev. 7/10

ORIGINAL SCALE IN INCHES FOR REDUCED PLANS 0 1 2 3

UNIT 3616
PROJECT NUMBER & PHASE 04120006661
EA 014081

DISREGARD PRINTS BEARING EARLIER REVISION DATES → 10-24-11 05-10-12 05-31-12

REVISION DATES (PRELIMINARY STAGE ONLY) SHEET OF

25-OCT-2012 10:04
ss3_4.dgn

DIST.	COUNTY	ROUTE	POST MILES TOTAL PROJECT	SHEET NO.	TOTAL SHEETS
04	Ala	80	2.2	798	800

REGISTERED CIVIL ENGINEER — 05/31/2012 DATE

REGISTERED PROFESSIONAL ENGINEER — JEROME R. MARCOTTE — No. C 36844 — Exp. 06/30/12 — CIVIL — STATE OF CALIFORNIA

10-22-12
PLANS APPROVAL DATE

The State of California or its officers or agents shall not be responsible for the accuracy or completeness of scanned copies of this plan sheet.

CALIFORNIA STATE FIRE MARSHAL APPROVED
Approval of this plan does not authorize or approve any omission or deviation from applicable regulations. Final approval is subject to field inspection. One set of approved plans shall be available on the project site at all times.
Reviewed by: JOHN E WOODS, SDSFM
Approval date: 8-22-12

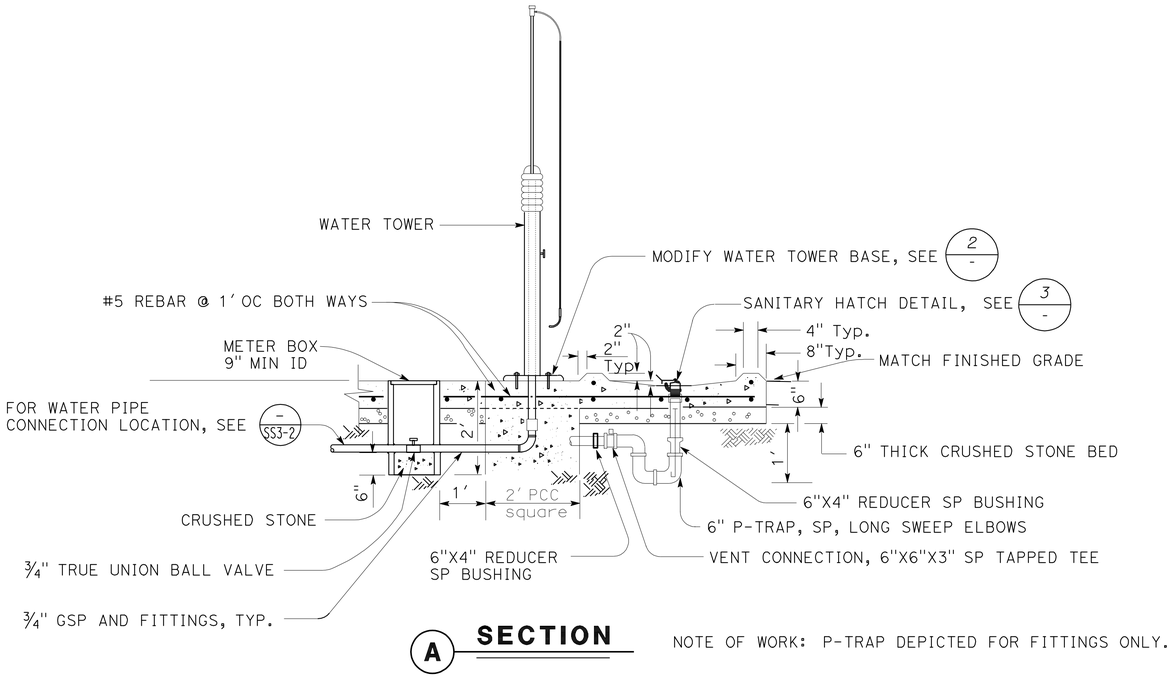

A SECTION

NOTE OF WORK: P-TRAP DEPICTED FOR FITTINGS ONLY.

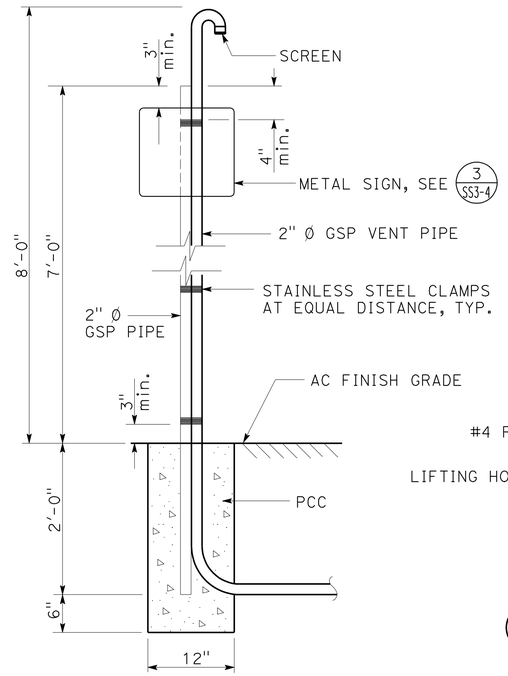

4 METAL POST AND VENT PIPE ATTACHMENT

NO SCALE

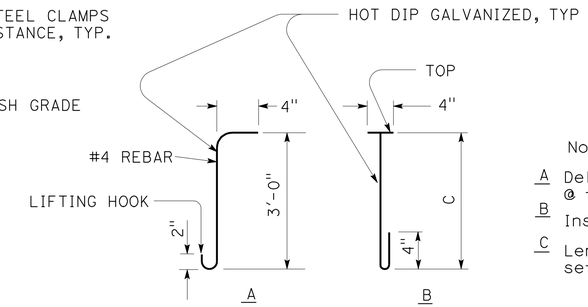

Note of work:

A Deliver to Engineer lift hook @ the jobsite.

B Install in sanitary station

C Length to be set in field, set top 6" below hatch opening

B LIFTING / TRASH HOOK

NO SCALE

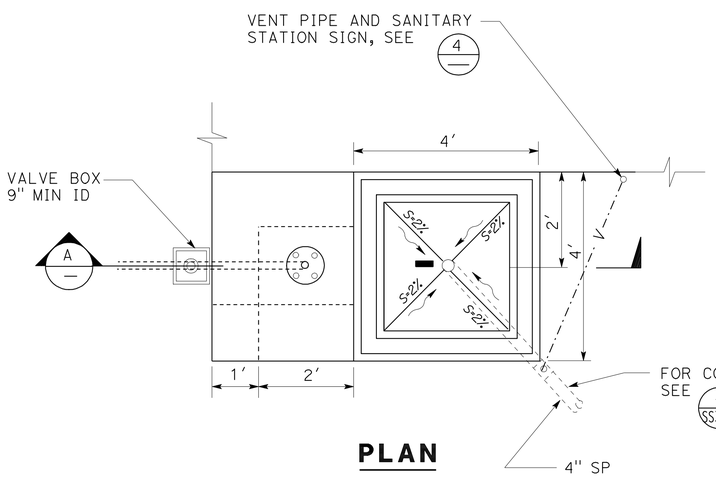

PLAN

1 SANITARY STATION

NO SCALE

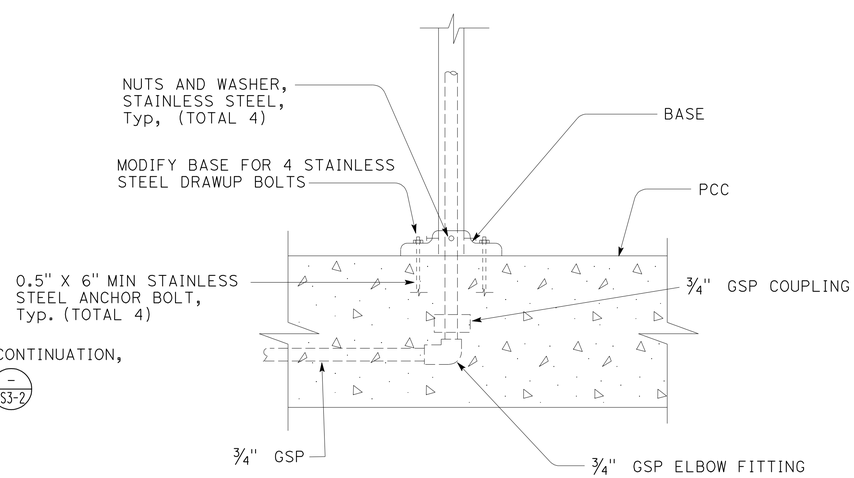

2 WATER TOWER BASE

NO SCALE

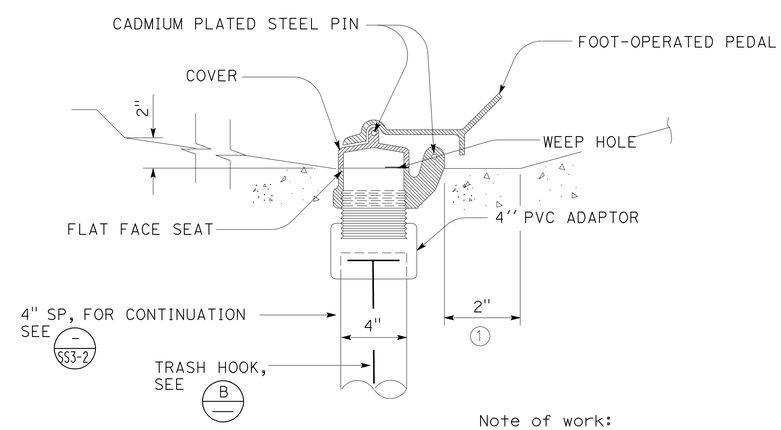

Note of work:

1 Provide for full opening of sanitary hatch @ concrete pour.

3 SANITARY HATCH

NO SCALE

	BY	CHECKED
DESIGN	Andy Quan	J. Marcotte
DETAILS	Andy Quan	J. Marcotte
QUANTITIES	Andy Quan	J. Marcotte

STATE OF CALIFORNIA DEPARTMENT OF TRANSPORTATION

DIVISION OF ENGINEERING SERVICES
ELECTRICAL-MECHANICAL-WATER AND WASTEWATER DESIGN

BRIDGE NO. 33M5785
POST MILE 2.2

SFOBB MAINTENANCE COMPLEX

SANITARY STATION DETAILS

SHEET **SS3-5**

TAEMWW Imperial Rev. 7/10

ORIGINAL SCALE IN INCHES FOR REDUCED PLANS 0 1 2 3

UNIT 3616
PROJECT NUMBER & PHASE 04120006661
EA 014081

DISREGARD PRINTS BEARING EARLIER REVISION DATES → 01-25-11 05-31-12

REVISION DATES (PRELIMINARY STAGE ONLY) SHEET OF

25-OCT-2012 10:04

ss3_5.dgn

DIST.	COUNTY	ROUTE	POST MILES TOTAL PROJECT	SHEET NO.	TOTAL SHEETS
04	Ala	80	2.2	799	800

REGISTERED CIVIL ENGINEER — 05/31/2012 DATE

REGISTERED PROFESSIONAL ENGINEER — JEROME R. MARCOTTE — No. C 36844 — Exp. 06/30/12 — CIVIL — STATE OF CALIFORNIA

10-22-12
PLANS APPROVAL DATE

The State of California or its officers or agents shall not be responsible for the accuracy or completeness of scanned copies of this plan sheet.

CALIFORNIA STATE FIRE MARSHAL APPROVED
Approval of this plan does not authorize or approve any omission or deviation from applicable regulations. Final approval is subject to field inspection. One set of approved plans shall be available on the project site at all times.
Reviewed by: JOHN E WOODS, SDSFM
Approval date: 8-22-12

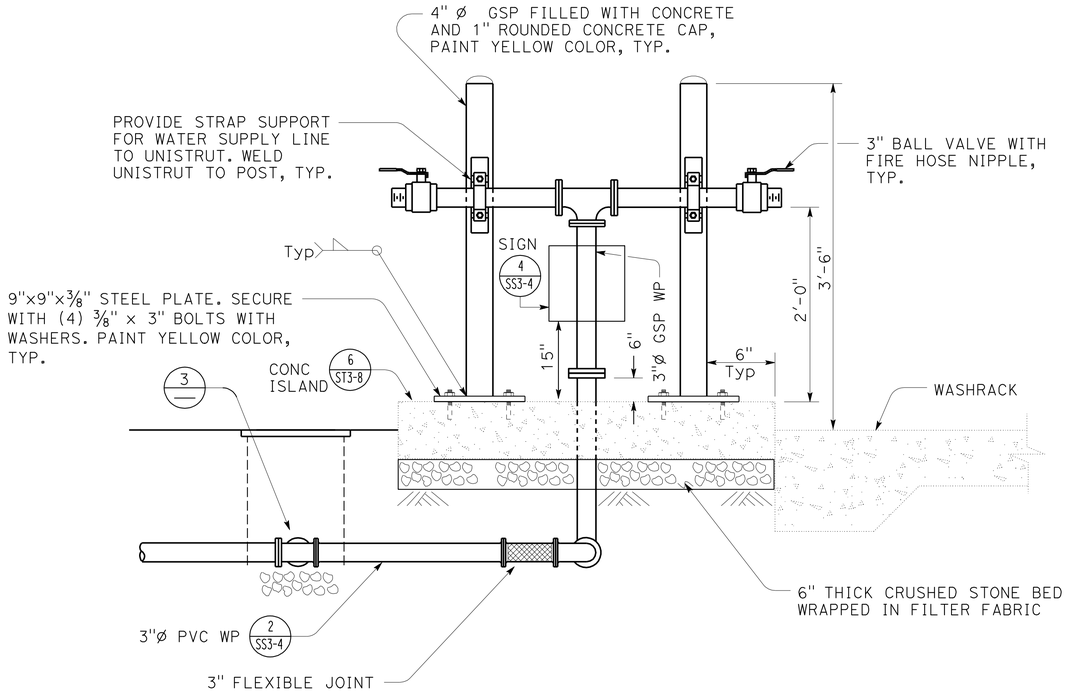

1 WATER TRUCK FILLER
NO SCALE

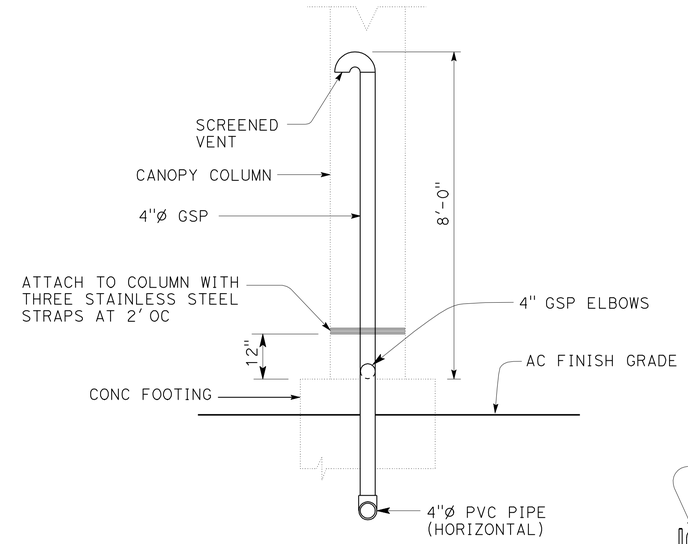

2 VENT RISER
NO SCALE

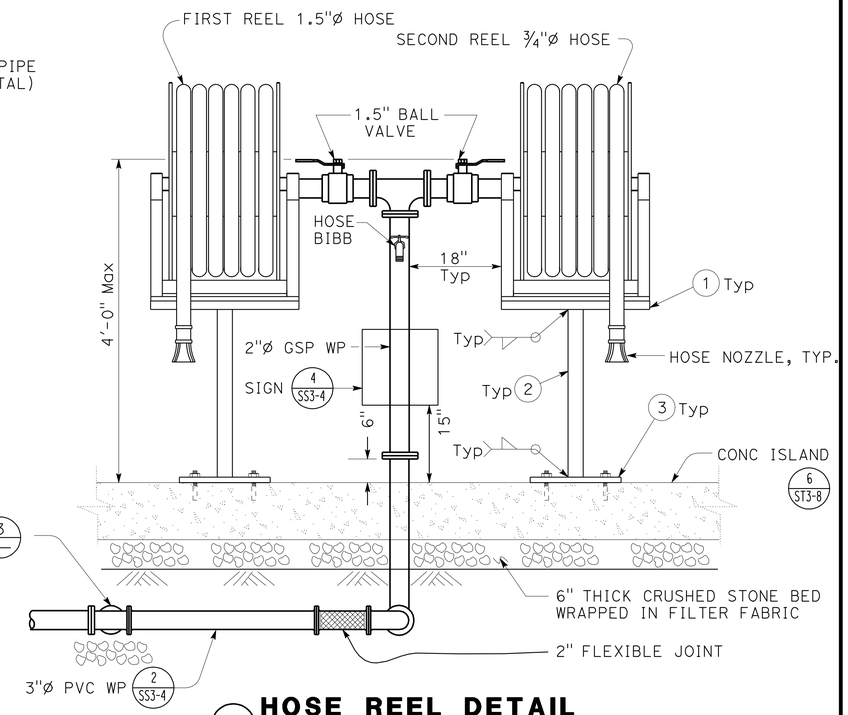

4 HOSE REEL DETAIL
NO SCALE

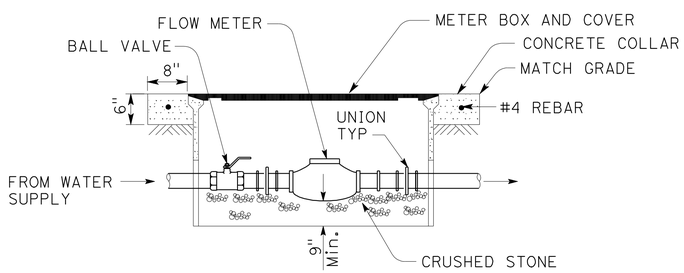

3 FLOW METER
NO SCALE

NOTE:
MIN. 9" CLEARANCE ON ALL SIDES

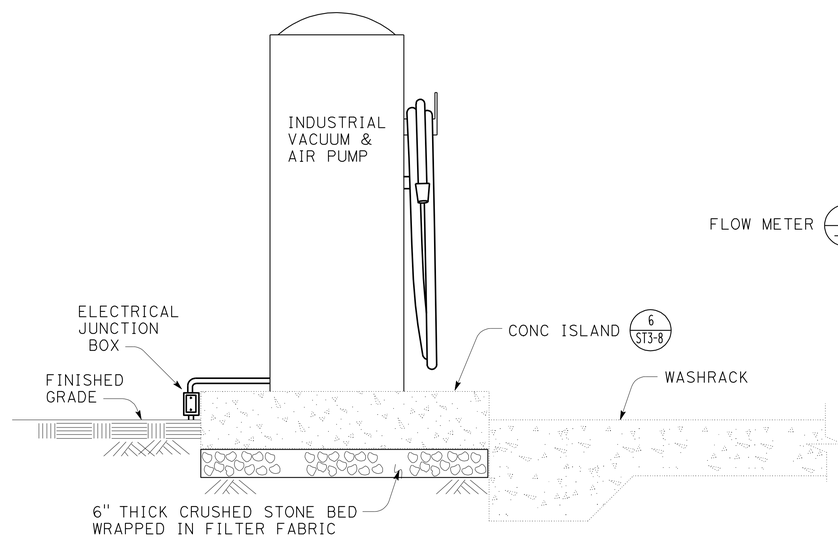

5 VACUUM FOUNDATION DETAIL
NO SCALE

Fabrication Notes:

1. 3/8" steel plate, size per template from reel manufacturer.
2. 3" square steel tube.
3. 9"x9"x3/8" steel plate. Secure with (4) 3/8" x 3" bolts with washers, paint color to match equipment bldg.

DESIGN	BY Andy Quan	CHECKED J. Marcotte	
DETAILS	BY Andy Quan	CHECKED J. Marcotte	
QUANTITIES	BY Andy Quan	CHECKED J. Marcotte	

STATE OF CALIFORNIA
DEPARTMENT OF TRANSPORTATION

DIVISION OF ENGINEERING SERVICES
ELECTRICAL-MECHANICAL-WATER AND WASTEWATER DESIGN

BRIDGE NO. 33M5785
POST MILE 2.2

SFOBB MAINTENANCE COMPLEX

DETAILS

SHEET SS3-6

TAEMWW Imperial Rev. 7/10

ORIGINAL SCALE IN INCHES FOR REDUCED PLANS 0 1 2 3

UNIT 3616
PROJECT NUMBER & PHASE 04120006661
EA 014081

DISREGARD PRINTS BEARING EARLIER REVISION DATES → REVISION DATES (PRELIMINARY STAGE ONLY) 02-03-12 04-03-12 05-10-12 05-31-12

SHEET OF

25-OCT-2012 10:05

ss3_6.dgn

DIST.	COUNTY	ROUTE	POST MILES TOTAL PROJECT	SHEET NO.	TOTAL SHEETS
04	Ala	80	2.2	800	800

REGISTERED CIVIL ENGINEER — 05/31/2012 DATE

REGISTERED PROFESSIONAL ENGINEER — JEROME R. MARCOTTE — No. C 36844 — Exp. 06/30/12 — CIVIL — STATE OF CALIFORNIA

10-22-12
PLANS APPROVAL DATE

The State of California or its officers or agents shall not be responsible for the accuracy or completeness of scanned copies of this plan sheet.

CALIFORNIA STATE FIRE MARSHAL APPROVED

Approval of this plan does not authorize or approve any omission or deviation from applicable regulations. Final approval is subject to field inspection. One set of approved plans shall be available on the project site at all times.

Reviewed by: JOHN E WOODS, SDSFM

Approval date: 8-22-12

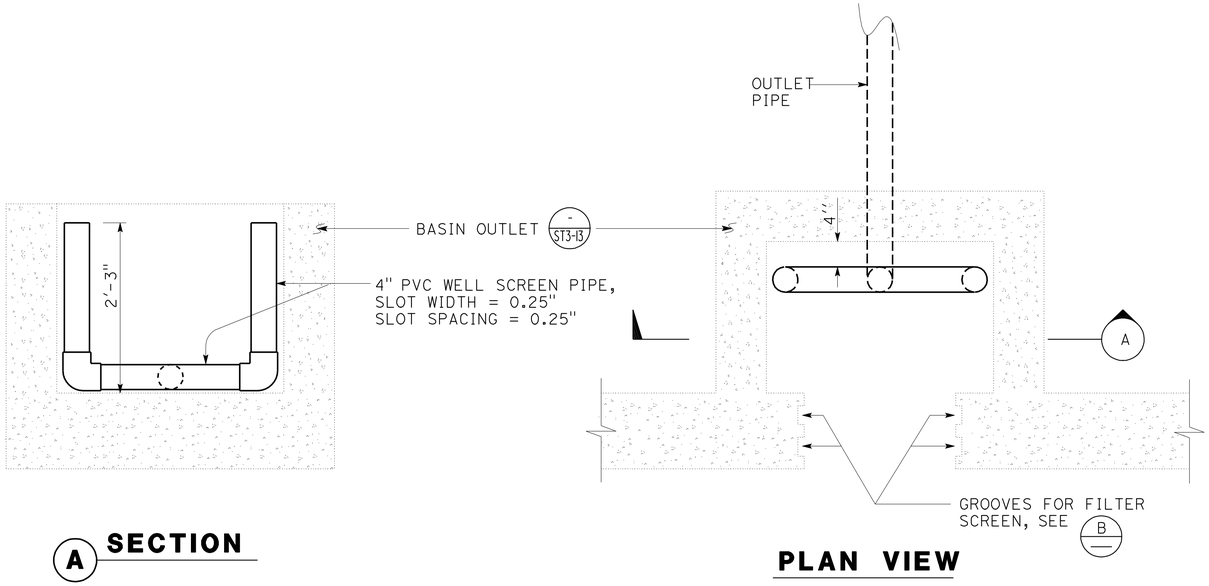

A SECTION

PLAN VIEW

1 OUTLET BOX PIPE DETAILS

NO SCALE

SITE	"A"	"B"	"C"	"D"
RINSE STATION	6'	-2.44'	-5.36'	-5.5'
OFFICE BLDGS	8'	-5.83'	-5.83'	-7.12'

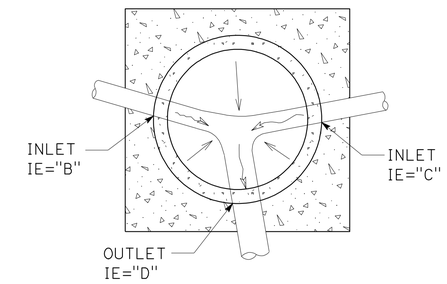

C SECTION

NO SCALE

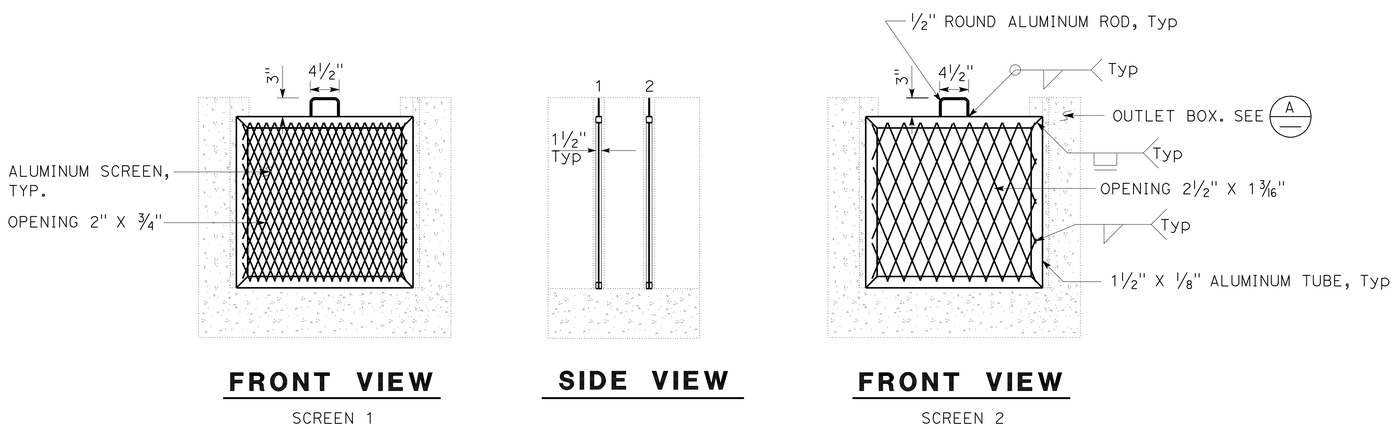

FRONT VIEW

SCREEN 1

SIDE VIEW

FRONT VIEW

SCREEN 2

B FILTER SCREEN

NO SCALE

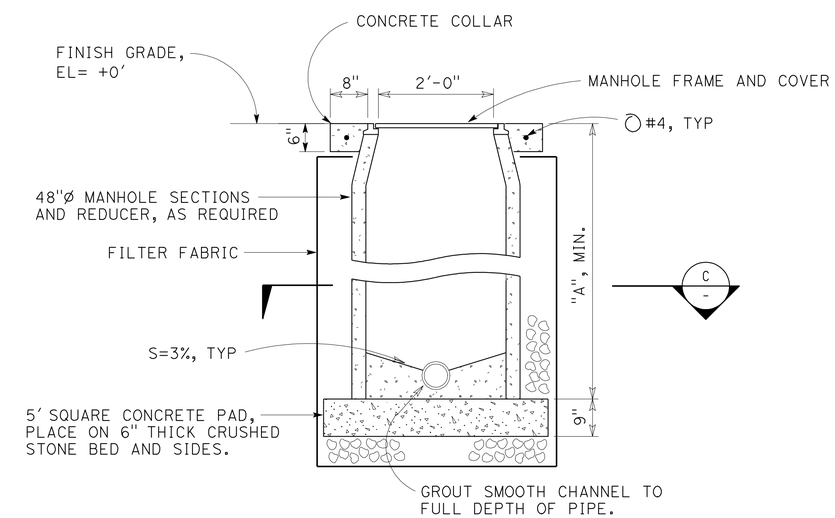

2 DISTRIBUTION BOX

NO SCALE

DESIGN	BY Andy Quan	CHECKED J. Marcotte	
DETAILS	BY Andy Quan	CHECKED J. Marcotte	
QUANTITIES	BY Andy Quan	CHECKED J. Marcotte	

STATE OF CALIFORNIA
DEPARTMENT OF TRANSPORTATION

DIVISION OF ENGINEERING SERVICES
ELECTRICAL-MECHANICAL-WATER AND WASTEWATER DESIGN

BRIDGE NO. 33M5785
POST MILE 2.2

SFOBB MAINTENANCE COMPLEX

DETAILS

SHEET **SS3-7**

TAEMWW Imperial Rev. 7/10

ORIGINAL SCALE IN INCHES FOR REDUCED PLANS 0 1 2 3

UNIT 3616
PROJECT NUMBER & PHASE 04120006661
EA 014081

DISREGARD PRINTS BEARING EARLIER REVISION DATES → 04-03-12 05-10-12 05-31-12

REVISION DATES (PRELIMINARY STAGE ONLY) SHEET OF

25-OCT-2012 10:05

ss3_7.dgn