Dist	COUNTY	ROUTE	KILOMETER POST TOTAL PROJECT	SHEET No.	TOTAL SHEETS
04	SF	80	12.6/13.9	201	821

REGISTERED CIVIL ENGINEER 10/31/11 DATE

2-21-12
PLANS APPROVAL DATE

REGISTERED PROFESSIONAL ENGINEER Mark Grodzki No. 65594 Exp. 09/30/13 CIVIL STATE OF CALIFORNIA

THE STATE OF CALIFORNIA OR ITS OFFICERS OR AGENTS SHALL NOT BE RESPONSIBLE FOR THE ACCURACY OR COMPLETENESS OF ELECTRONIC COPIES OF THIS PLAN SHEET.

PB AMERICAS, Inc.
303 Second St., Suite 700N
San Francisco, CA 94107-1317

Caltrans Metric

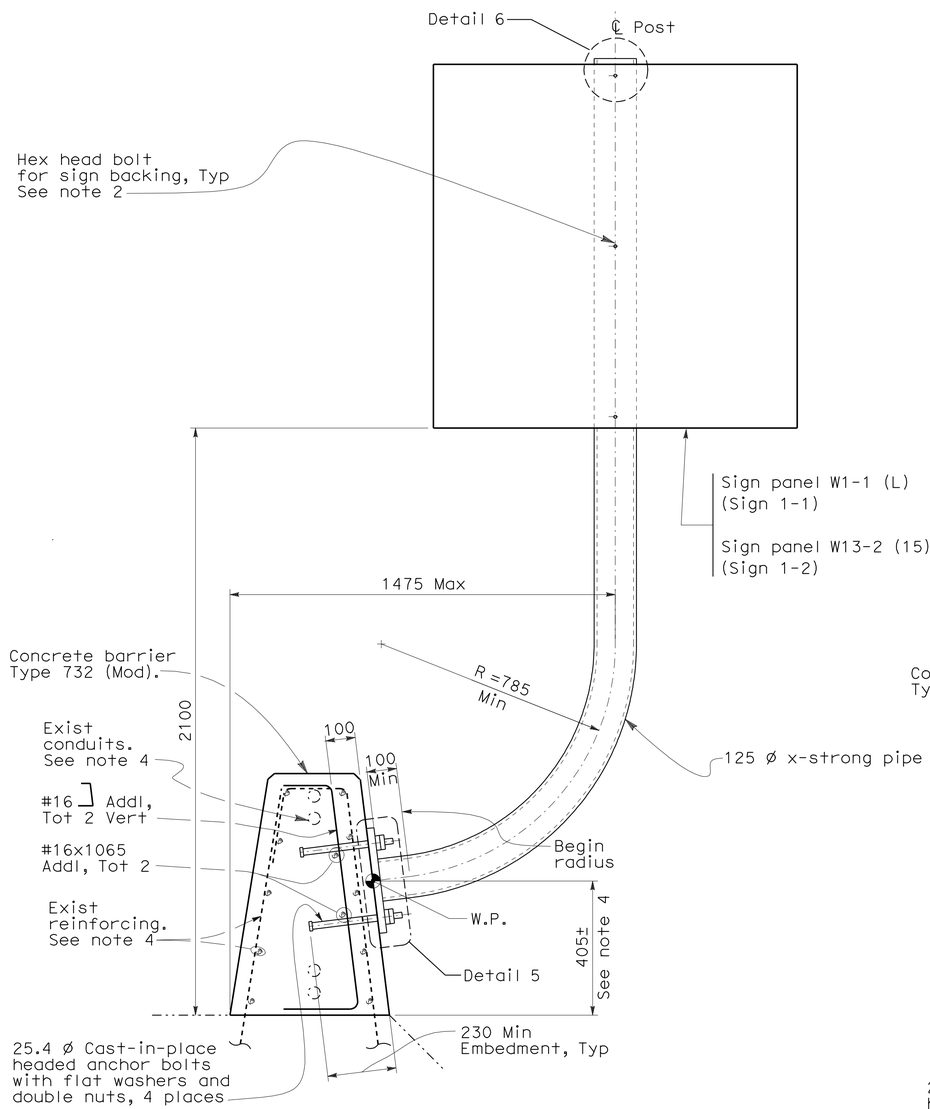

ELEVATION
SIGNS 1-1 AND 1-2

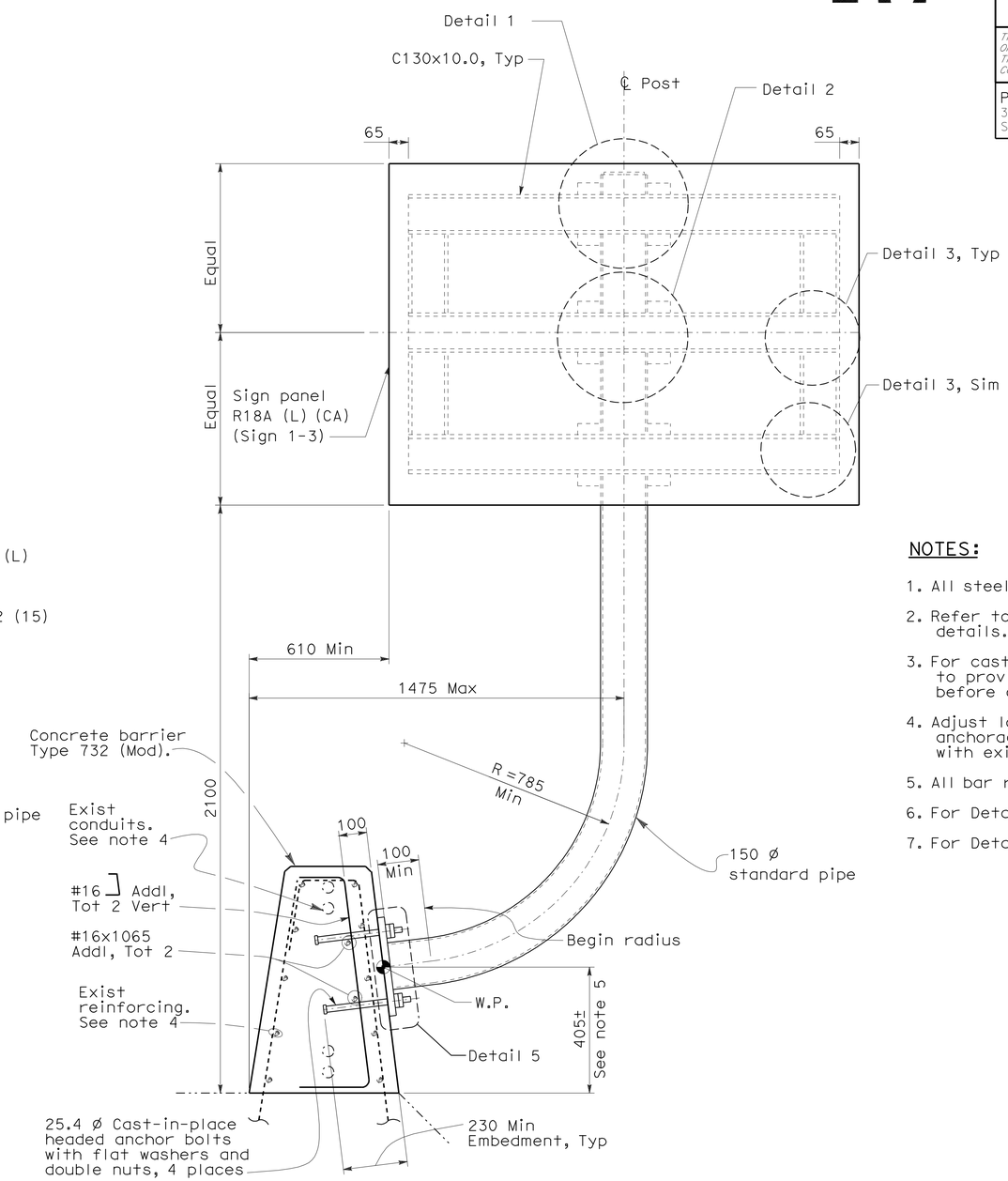

ELEVATION
SIGN 1-3

NOTES:

1. All steel to be galvanized.
2. Refer to Standard Plan RS-2 for sign backing details.
3. For cast-in-place anchor bolts, contractor to provide anchor bolt layout and template before anchor bolts are placed.
4. Adjust location of sign support anchorage as required to not interfere with existing conduits and reinforcing.
5. All bar reinforcing steel to be epoxy coated.
6. For Detail 1 thru Detail 3, see sheet SD-7.
7. For Detail 4 thru 6, see sheet SD-8.

ALL DIMENSIONS ARE IN
MILLIMETERS UNLESS OTHERWISE SHOWN

SIGN DETAILS
METAL (BARRIER MOUNTED SIGNS)

NO SCALE

SD-3

REVISED BY	DATE REVISED

CALCULATED-DESIGNED BY: M. GRODZKI
CHECKED BY: B. NADELL
CONSULTANT FUNCTIONAL SUPERVISOR: BOB ZANDIPOUR

STATE OF CALIFORNIA - DEPARTMENT OF TRANSPORTATION
Caltrans

LAST REVISION 00-00-00
DATE PLOTTED => 25-FEB-2012
TIME PLOTTED => 09:04

Dist	COUNTY	ROUTE	KILOMETER POST TOTAL PROJECT	SHEET No.	TOTAL SHEETS
04	SF	80	12.6/13.9	202	821

REGISTERED CIVIL ENGINEER 02/03/12 DATE

2-21-12
PLANS APPROVAL DATE

REGISTERED PROFESSIONAL ENGINEER Mark Grodzki No. 65594 Exp. 09/30/13 CIVIL STATE OF CALIFORNIA

THE STATE OF CALIFORNIA OR ITS OFFICERS OR AGENTS SHALL NOT BE RESPONSIBLE FOR THE ACCURACY OR COMPLETENESS OF ELECTRONIC COPIES OF THIS PLAN SHEET.

PB AMERICAS, Inc.
303 Second St., Suite 700N
San Francisco, CA 94107-1317

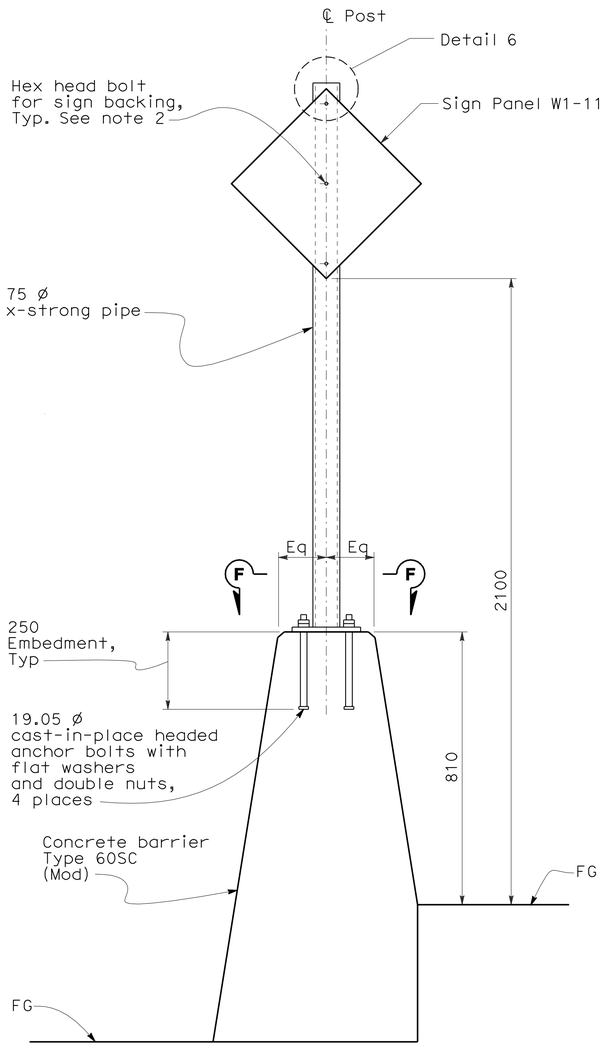

ELEVATION SIGN 2-9

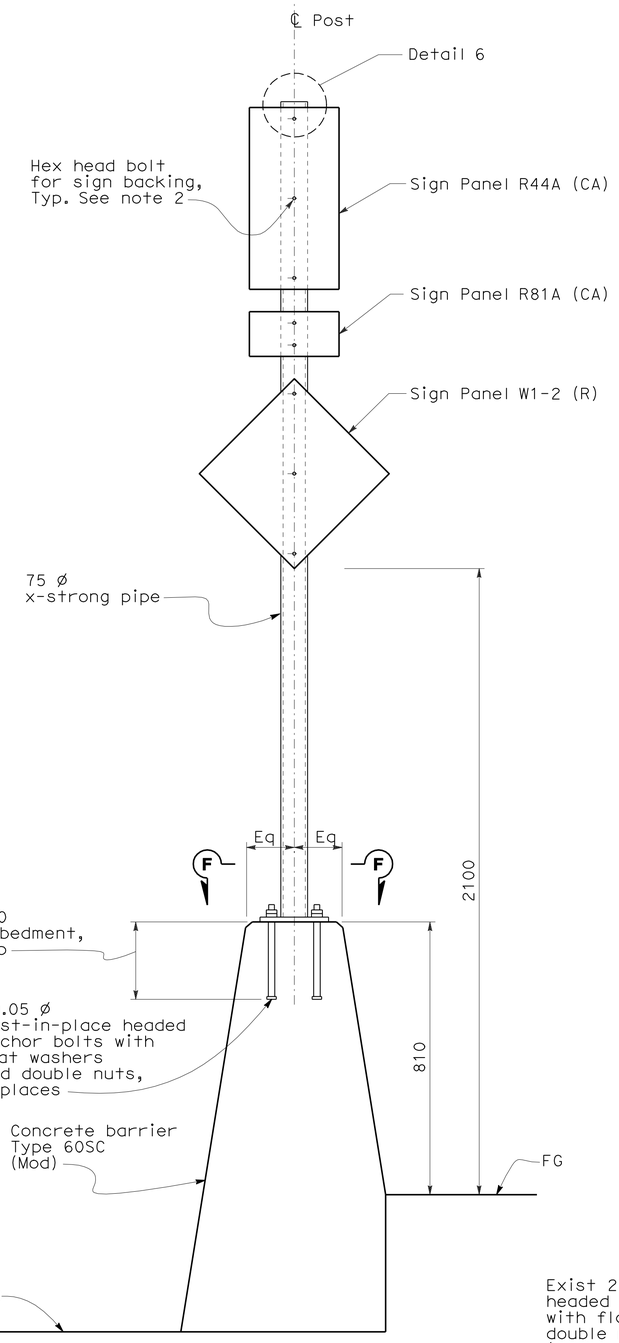

ELEVATION SIGN 2-10

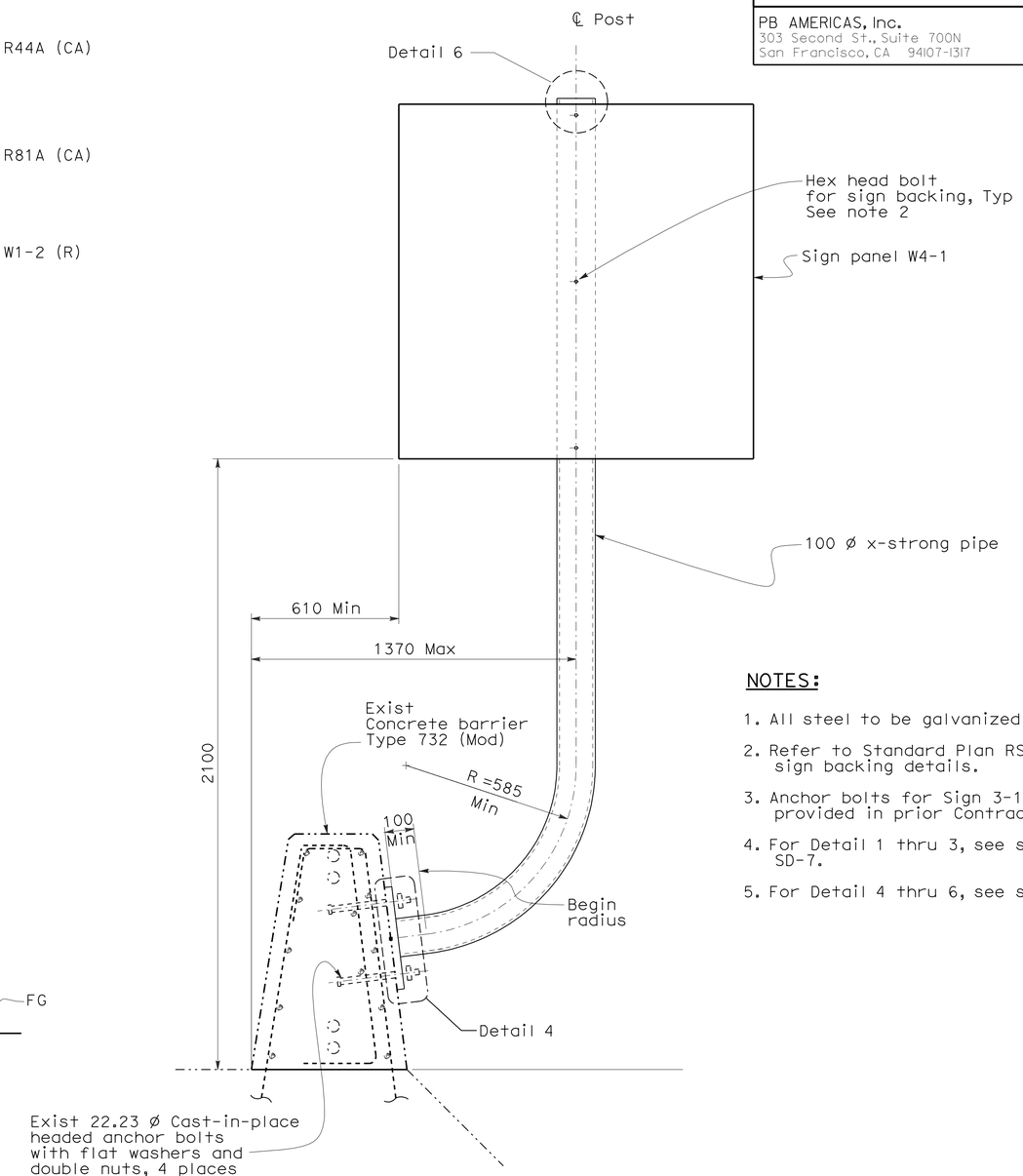

ELEVATION SIGN 3-1

NOTES:

1. All steel to be galvanized.
2. Refer to Standard Plan RS-2 for sign backing details.
3. Anchor bolts for Sign 3-1 to be provided in prior Contract.
4. For Detail 1 thru 3, see sheet SD-7.
5. For Detail 4 thru 6, see sheet SD-8.

ALL DIMENSIONS ARE IN MILLIMETERS UNLESS OTHERWISE SHOWN

SIGN DETAILS METAL (BARRIER MOUNTED SIGNS)

NO SCALE

SD-4

STATE OF CALIFORNIA - DEPARTMENT OF TRANSPORTATION
Caltrans

CONSULTANT FUNCTIONAL SUPERVISOR: BOB ZANDIPOUR
CALCULATED-DESIGNED BY: M. GRODZKI
CHECKED BY: B. NADELL
REVISED BY
DATE REVISED

LAST REVISION 00-00-00
DATE PLOTTED => 25-FEB-2012
TIME PLOTTED => 09:04

Dist	COUNTY	ROUTE	KILOMETER POST TOTAL PROJECT	SHEET No.	TOTAL SHEETS
04	SF	80	12.6/13.9	203	821

REGISTERED CIVIL ENGINEER 02/03/12 DATE

2-21-12
PLANS APPROVAL DATE

REGISTERED PROFESSIONAL ENGINEER Mark Grodzki No. 65594 Exp. 09/30/13 CIVIL STATE OF CALIFORNIA

THE STATE OF CALIFORNIA OR ITS OFFICERS OR AGENTS SHALL NOT BE RESPONSIBLE FOR THE ACCURACY OR COMPLETENESS OF ELECTRONIC COPIES OF THIS PLAN SHEET.

PB AMERICAS, Inc.
303 Second St., Suite 700N
San Francisco, CA 94107-1317

Caltrans Metric

NOTES:

1. All steel to be galvanized.
2. Refer to Standard Plan RS-2 for sign backing details.
3. For Detail 1 thru 3, see sheet SD-7.
4. For Detail 4 thru 6, see sheet SD-8.

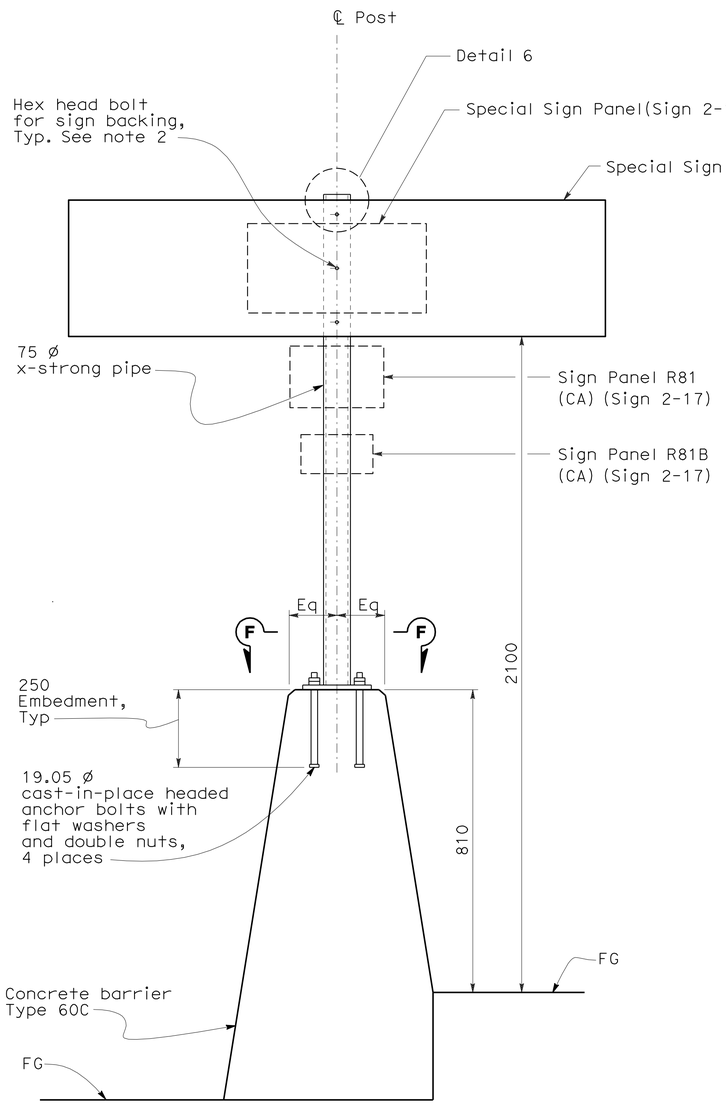

ELEVATION
SIGN 2-8 AND 2-17

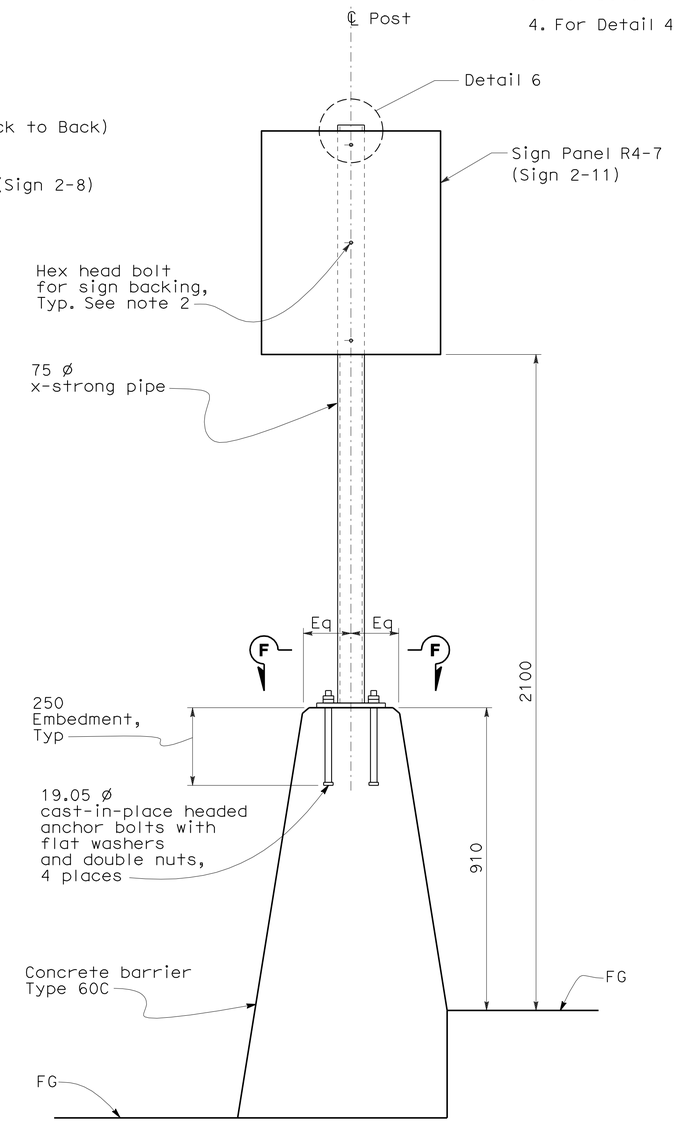

ELEVATION
SIGN 2-11

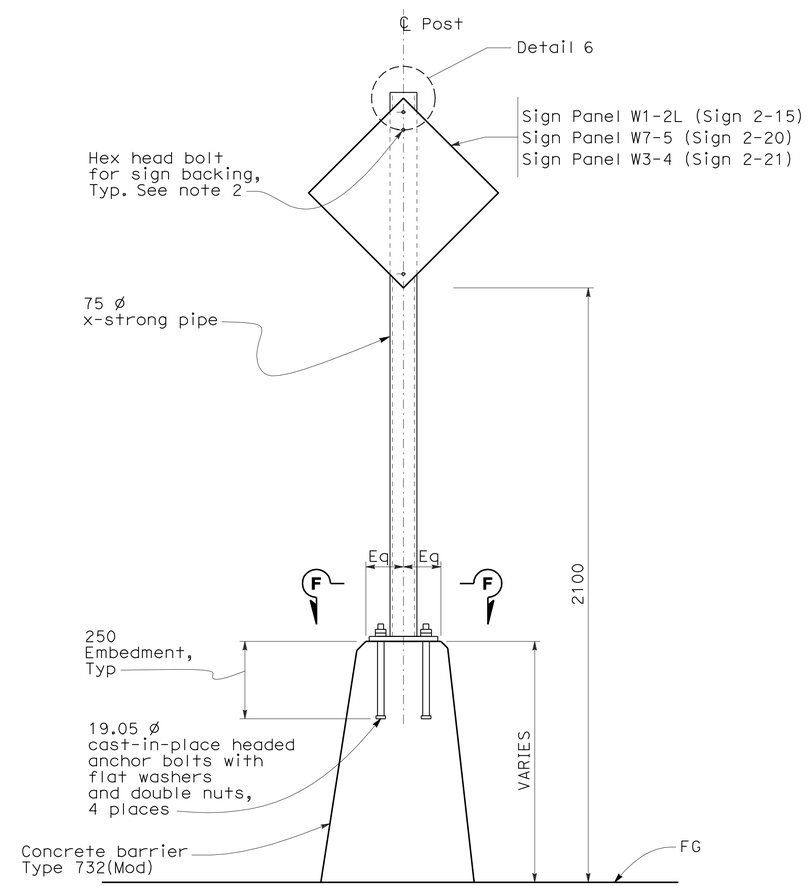

ELEVATION
SIGN 2-15, 2-20 AND 2-21

ALL DIMENSIONS ARE IN MILLIMETERS UNLESS OTHERWISE SHOWN

SIGN DETAILS
METAL (BARRIER MOUNTED SIGNS)

NO SCALE

SD-5

STATE OF CALIFORNIA - DEPARTMENT OF TRANSPORTATION
Caltrans

CONSULTANT FUNCTIONAL SUPERVISOR: BOB ZANDIPOUR
CALCULATED-DESIGNED BY: M. GRODZKI
CHECKED BY: B. NADELL
REVISED BY
DATE REVISED

LAST REVISION 00-00-00
DATE PLOTTED => 25-FEB-2012
TIME PLOTTED => 09:04

Dist	COUNTY	ROUTE	KILOMETER POST TOTAL PROJECT	SHEET No.	TOTAL SHEETS
04	SF	80	12.6/13.9	204	821

REGISTERED CIVIL ENGINEER 10/31/11 DATE

2-21-12
PLANS APPROVAL DATE

REGISTERED PROFESSIONAL ENGINEER Mark Grodzki No. 65594 Exp. 09/30/13 CIVIL STATE OF CALIFORNIA

THE STATE OF CALIFORNIA OR ITS OFFICERS OR AGENTS SHALL NOT BE RESPONSIBLE FOR THE ACCURACY OR COMPLETENESS OF ELECTRONIC COPIES OF THIS PLAN SHEET.

PB AMERICAS, Inc.
303 Second St., Suite 700N
San Francisco, CA 94107-1317

Caltrans Metric

NOTES:

1. All steel to be galvanized.
2. Refer to Standard Plans RS-2 and RS-4 for sign backing details.
3. For cast-in-place anchor bolts, contractor to provide anchor bolt layout and template before anchor bolts are placed.
4. All bar reinforcing steel to be epoxy coated.
5. For Detail 1 thru 3, see sheet SD-7.
6. For Section F-F, Detail 4, Detail 6, and Detail 7, see sheet SD-8.

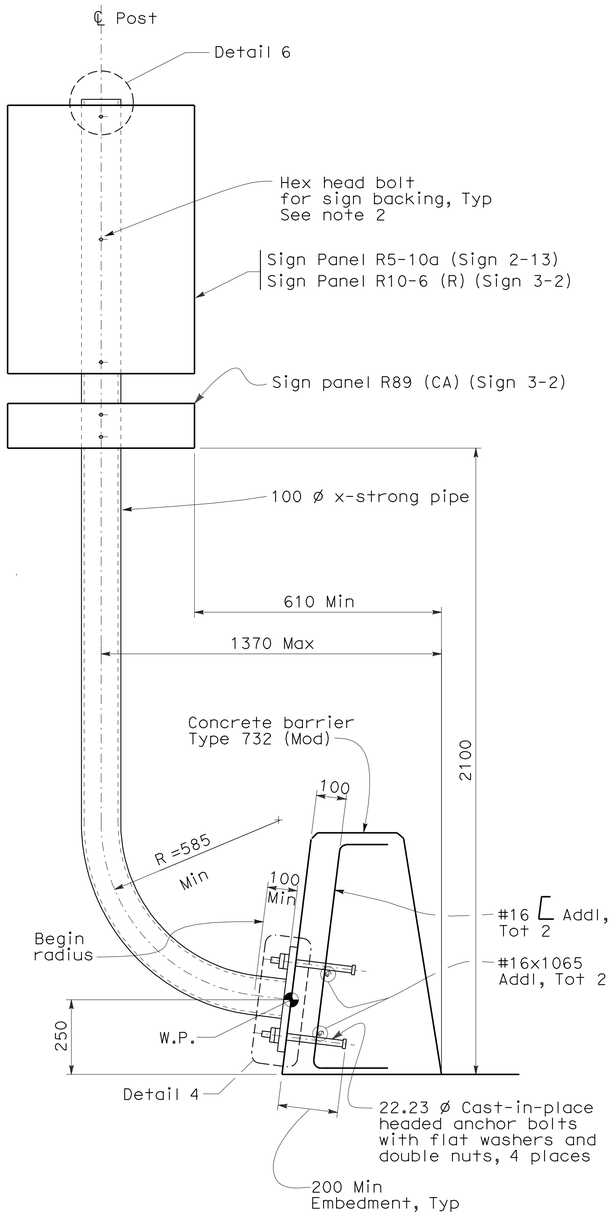

ELEVATION
SIGN 2-13 AND 3-2

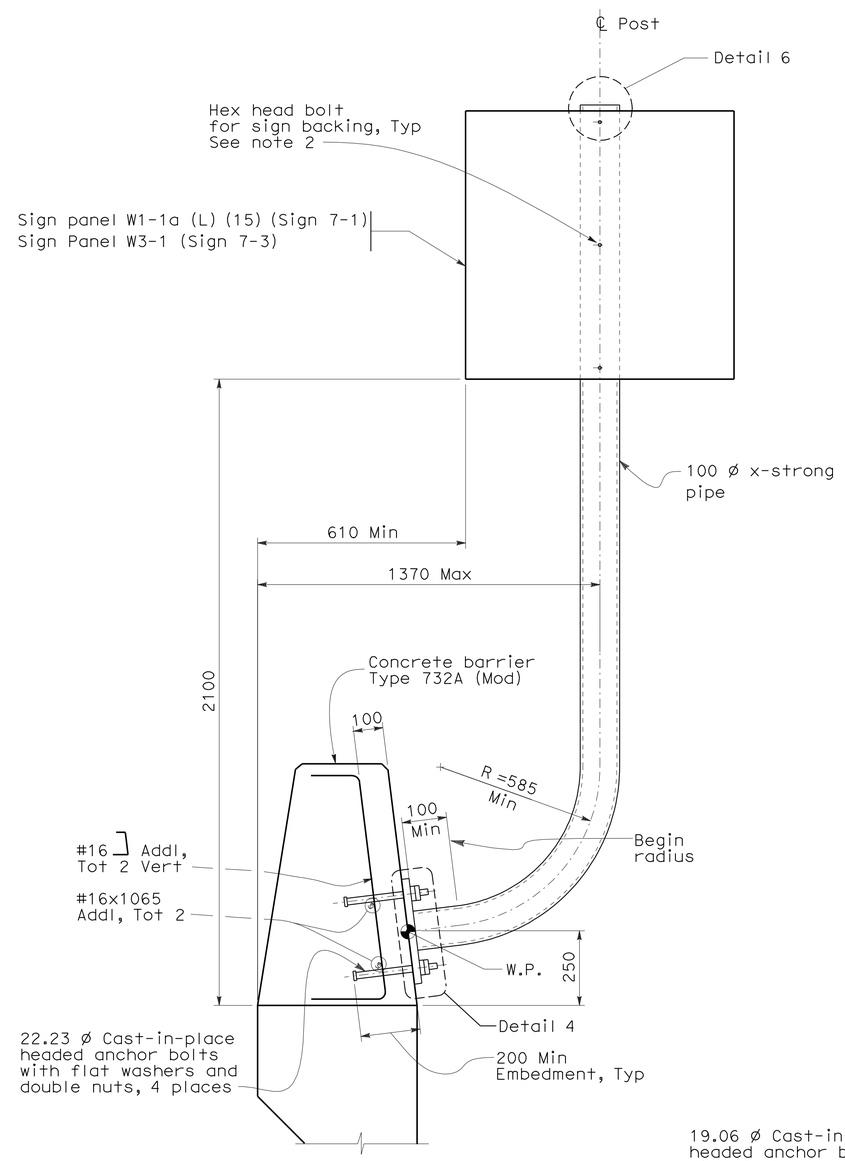

ELEVATION
SIGN 7-1 AND 7-3

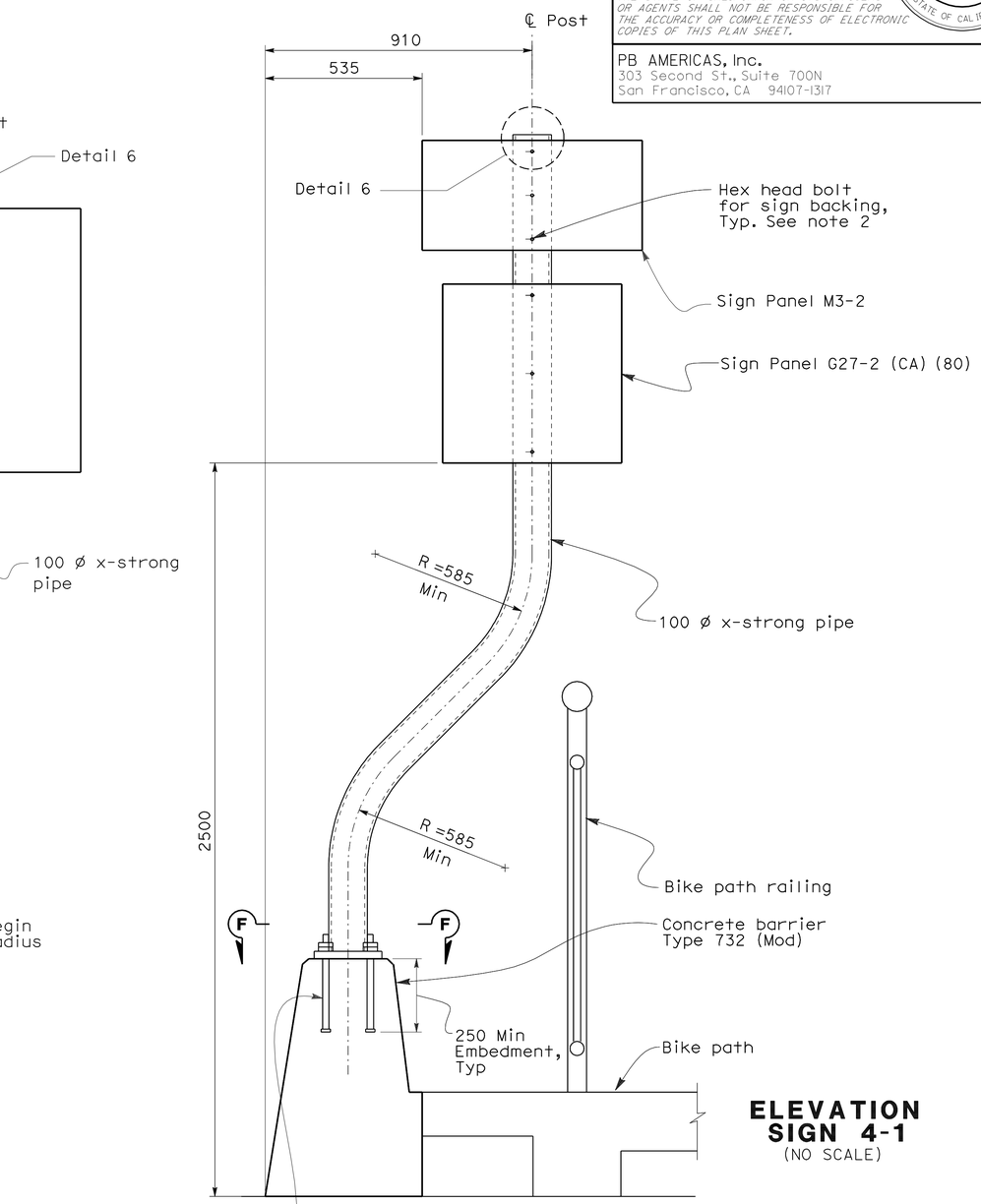

ELEVATION
SIGN 4-1
(NO SCALE)

ALL DIMENSIONS ARE IN MILLIMETERS UNLESS OTHERWISE SHOWN

SIGN DETAILS
METAL (BARRIER MOUNTED SIGNS)

NO SCALE

SD-6

STATE OF CALIFORNIA - DEPARTMENT OF TRANSPORTATION
Caltrans

CONSULTANT FUNCTIONAL SUPERVISOR: BOB ZANDIPOUR
CALCULATED-DESIGNED BY: M. GRODZKI
CHECKED BY: B. NADELL
REVISED BY / DATE REVISED

LAST REVISION 00-00-00 | DATE PLOTTED => 25-FEB-2012 | TIME PLOTTED => 09:04

Dist	COUNTY	ROUTE	KILOMETER POST TOTAL PROJECT	SHEET No.	TOTAL SHEETS
04	SF	80	12.6/13.9	205	821

REGISTERED CIVIL ENGINEER 10/31/11 DATE

2-21-12
PLANS APPROVAL DATE

REGISTERED PROFESSIONAL ENGINEER Mark Grodzki No. 65594 Exp. 09/30/13 CIVIL STATE OF CALIFORNIA

THE STATE OF CALIFORNIA OR ITS OFFICERS OR AGENTS SHALL NOT BE RESPONSIBLE FOR THE ACCURACY OR COMPLETENESS OF ELECTRONIC COPIES OF THIS PLAN SHEET.

PB AMERICAS, Inc.
303 Second St., Suite 700N
San Francisco, CA 94107-1317

Caltrans Metric

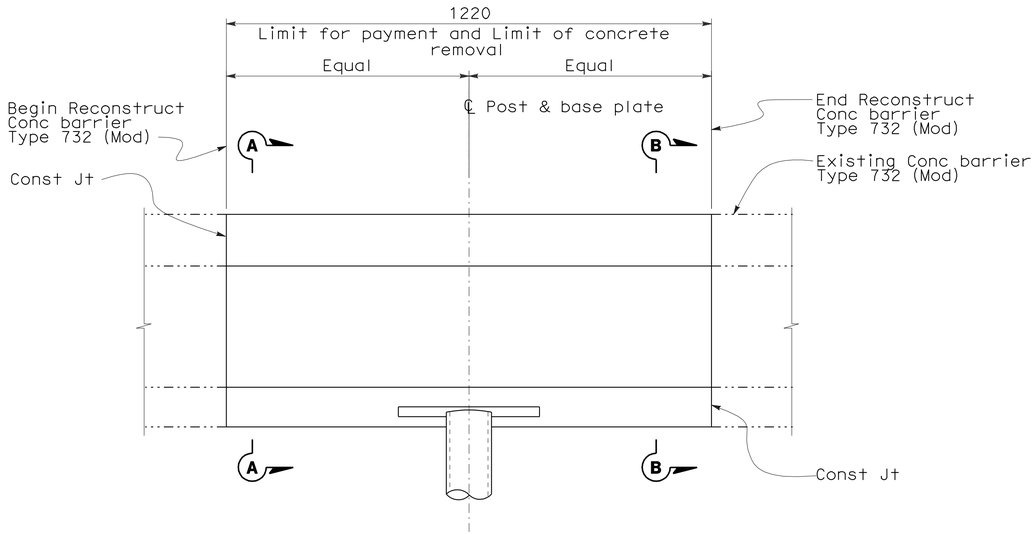

PLAN

RECONSTRUCT CONCRETE BARRIER TYPE 732 (MOD)

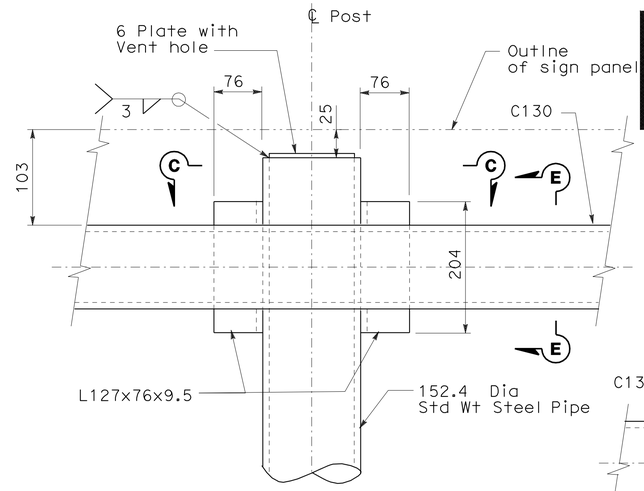

DETAIL 1

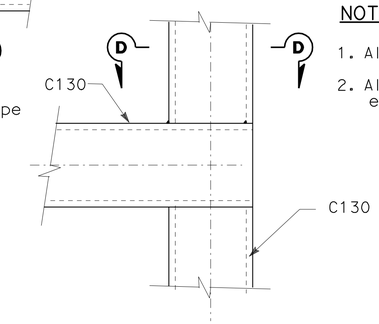

DETAIL 3

NOTES:

1. All steel to be galvanized.
2. All bar reinforcing steel to be epoxy coated.

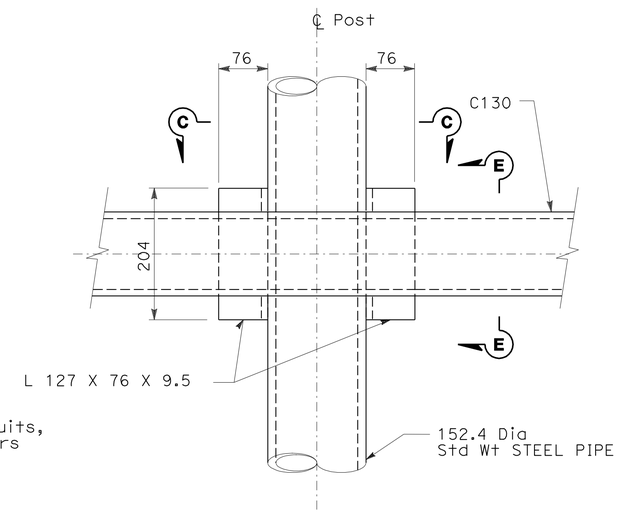

DETAIL 2

NO SCALE

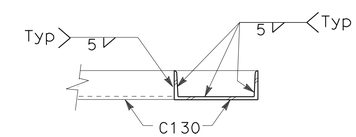

SECTION D-D

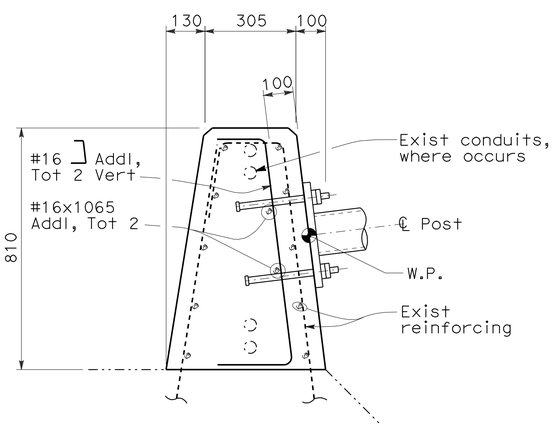

RECONSTRUCT CONCRETE BARRIER TYPE 732 (Mod)

SECTION A-A

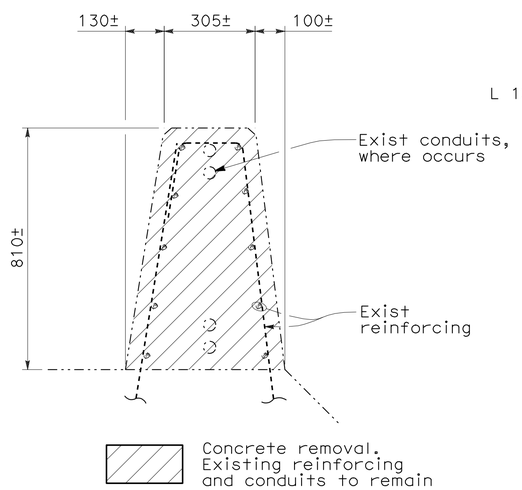

RECONSTRUCT CONCRETE BARRIER TYPE 732 (Mod)

SECTION B-B

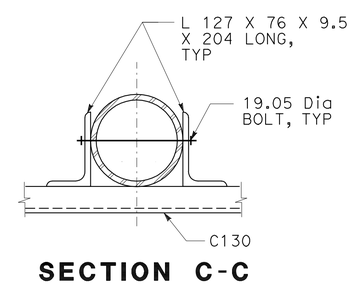

SECTION C-C

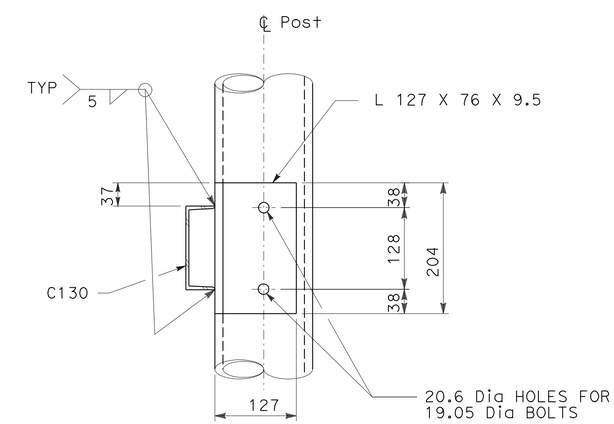

SECTION E-E

ALL DIMENSIONS ARE IN MILLIMETERS UNLESS OTHERWISE SHOWN

SIGN DETAILS
METAL (BARRIER MOUNTED SIGNS)

NO SCALE

SD-7

STATE OF CALIFORNIA - DEPARTMENT OF TRANSPORTATION
Caltrans

CONSULTANT FUNCTIONAL SUPERVISOR: BOB ZANDIPOUR
CALCULATED-DESIGNED BY: M. GRODZKI
CHECKED BY: B. NADELL
REVISED BY
DATE REVISED

LAST REVISION 00-00-00
DATE PLOTTED => 25-FEB-2012
TIME PLOTTED => 09:04

Dist	COUNTY	ROUTE	KILOMETER POST TOTAL PROJECT	SHEET No.	TOTAL SHEETS
04	SF	80	12.6/13.9	206	821

REGISTERED CIVIL ENGINEER 10/31/11 DATE

2-21-12
PLANS APPROVAL DATE

REGISTERED PROFESSIONAL ENGINEER Mark Grodzki No. 65594 Exp. 09/30/13 CIVIL STATE OF CALIFORNIA

THE STATE OF CALIFORNIA OR ITS OFFICERS OR AGENTS SHALL NOT BE RESPONSIBLE FOR THE ACCURACY OR COMPLETENESS OF ELECTRONIC COPIES OF THIS PLAN SHEET.

PB AMERICAS, Inc.
303 Second St., Suite 700N
San Francisco, CA 94107-1317

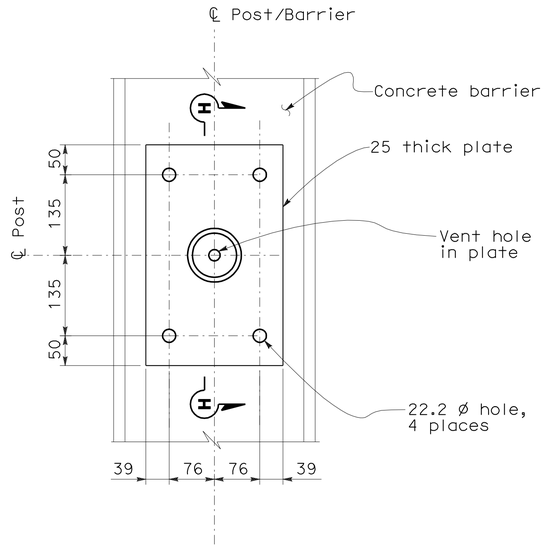

BASE PLATE AT SIGNS 2-8, 2-9, 2-10, 2-11, 2-15 AND 4-1

SECTION F-F

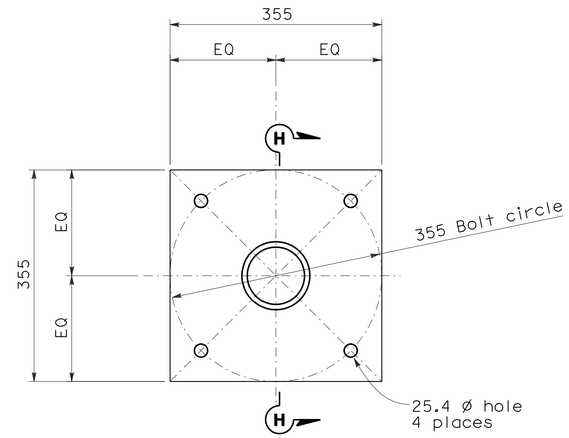

BASE PLATE AT SIGNS 2-13, 3-1, 3-2, 7-1 and 7-3

DETAIL 4

NOTES:

1. All steel to be galvanized.

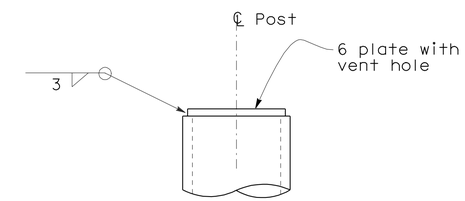

DETAIL 6

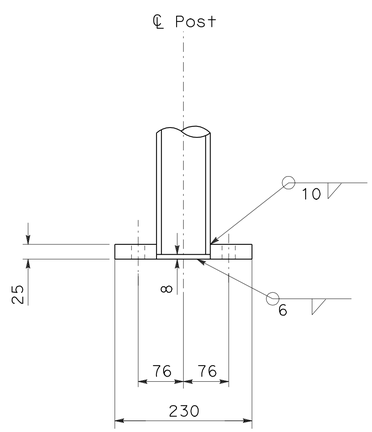

SECTION H-H

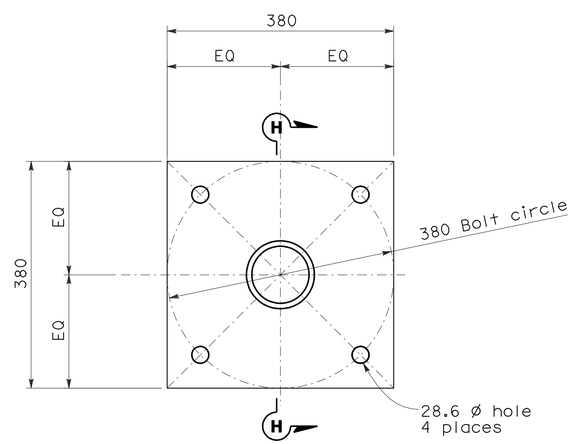

BASE PLATE AT SIGNS 1-1, 1-2, AND 1-3

DETAIL 5

ALL DIMENSIONS ARE IN MILLIMETERS UNLESS OTHERWISE SHOWN

SIGN DETAILS
METAL (BARRIER MOUNTED SIGNS)

NO SCALE

SD-8

STATE OF CALIFORNIA - DEPARTMENT OF TRANSPORTATION
Caltrans

CONSULTANT FUNCTIONAL SUPERVISOR: BOB ZANDIPOUR
CALCULATED-DESIGNED BY: M. GRODZKI
CHECKED BY: B. NADELL
REVISED BY
DATE REVISED

LAST REVISION 00-00-00
DATE PLOTTED => 25-FEB-2012
TIME PLOTTED => 09:04

Dist	COUNTY	ROUTE	KILOMETER POST TOTAL PROJECT	SHEET No.	TOTAL SHEETS
04	SF	80	12.6/13.9	207	821

Caltrans Metric

REGISTERED CIVIL ENGINEER 02/03/12 DATE

2-21-12
PLANS APPROVAL DATE

REGISTERED PROFESSIONAL ENGINEER Mark Grodzki No. 65594 Exp. 09/30/13 CIVIL STATE OF CALIFORNIA

THE STATE OF CALIFORNIA OR ITS OFFICERS OR AGENTS SHALL NOT BE RESPONSIBLE FOR THE ACCURACY OR COMPLETENESS OF ELECTRONIC COPIES OF THIS PLAN SHEET.

PB AMERICAS, Inc.
303 Second St., Suite 700N
San Francisco, CA 94107-1317

ROADSIDE SIGNS

SHEET No.	SIGN No.	SIGN CODE	PANEL SIZE	POST SIZE AND LENGTH				INSTALL ROADSIDE SIGN				REMOVE ROADSIDE SIGN		RELOCATE ROADSIDE SIGN	RESET ROADSIDE SIGN	REMARKS
				89mm x 89mm	89mm x 140mm	140mm x 140mm	140mm x 184mm	ONE POST	TWO POST	SSBM		WOOD POST	SSBM			
			mm x mm	m				EA			KG	EA		EA	EA	
S-1	1-1	W1-1(L)	1200 x 1200								146					
S-1	1-2	W13-2 (15)	1200 x 1500								155					
S-1	1-3	R18A (L) (CA)	1676 x 1219								218					
S-1	1-4	R5-1	900 x 900		5.18			1								
		R5-1a	900 x 600													
S-1	1-5	R1-1	750 x 750		4.88			1								
		R3-1	600 x 600													
S-1	1-6	R3-5 (R)	750 x 900	4.10				1								
S-1	1-7	R3-5 (L)	750 x 900		4.95			1								
		R6-1 (L)	900 x 300													
S-1	1-8	R1-1	750 x 750	3.95				1								
S-1	1-9	W14-2	750 x 750		5.40			1								
		R101 (CA)	600 x 750													
S-1	1-10	SPECIAL	914 x 685	3.89				1								
S-2	2-1	SPECIAL A	1200 x 800					1								
S-2	2-2	R5-10C	600 x 300	3.50				1								
S-2	2-3	W4-10(CA) (15)	1200 x 1200					1								
S-2	2-4	R5-1	900 x 900			5.50		1								
		R5-1a	900 x 600													
		R6-1 (R)	900 x 300													
S-2	2-5	SPECIAL	1219 x 914												1	
S-2	2-6	R5-1	900 x 900			5.18		1								
		R5-1a	900 x 600													
S-2	2-7	D3-1	1200 x 152		4.43			1								
		R1-1	750 x 750													
S-2	2-8	D1-1	1800 x 457								49					ATTACH TO SIGN POST 2-17 (BACK TO BACK)
		M3-2	533 x 229													
		G27-2 (CA) (80)	533 x 457													
S-2	2-9	R81 (CA)	305 X 203								60					
		R81B (CA)	203 x 127													
		W1-2 (L)	750 x 750													
S-2	2-10	W1-2 (R)	750 x 750								42					
		R44A (CA)	305 x 610													
		R81A (CA)	305 x 127													
S-2	2-11	R4-7	600 x 750								54					
S-2	2-12	SPECIAL C	1200 x 1035			6.61			1							
		SPECIAL D	1200 x 760													
		M3-2	533 x 229													
		G27-2 (CA) (80)	533 x 457													
		M6-2 (MOD)	533 x 381													
SUBTOTAL THIS SHEET								13	1	0	724	0	0	0	1	

SIGN QUANTITIES

SQ-1

REVISED BY | DATE REVISED

M. GRODZKI | B. NADELL

CALCULATED-DESIGNED BY | CHECKED BY

CONSULTANT FUNCTIONAL SUPERVISOR

BOB ZANDIPOUR

STATE OF CALIFORNIA - DEPARTMENT OF TRANSPORTATION

Caltrans

LAST REVISION 00-00-00 | DATE PLOTTED => 25-FEB-2012 | TIME PLOTTED => 09:04

Dist	COUNTY	ROUTE	KILOMETER POST TOTAL PROJECT	SHEET No.	TOTAL SHEETS
04	SF	80	12.6/13.9	208	821

REGISTERED CIVIL ENGINEER 02/03/12 DATE

2-21-12
PLANS APPROVAL DATE

REGISTERED PROFESSIONAL ENGINEER Mark Grodzki No. 65594 Exp. 09/30/13 CIVIL STATE OF CALIFORNIA

THE STATE OF CALIFORNIA OR ITS OFFICERS OR AGENTS SHALL NOT BE RESPONSIBLE FOR THE ACCURACY OR COMPLETENESS OF ELECTRONIC COPIES OF THIS PLAN SHEET.

PB AMERICAS, Inc.
303 Second St., Suite 700N
San Francisco, CA 94107-1317

Caltrans Metric

ROADSIDE SIGNS

SHEET No.	SIGN No.	SIGN CODE	PANEL SIZE	POST SIZE AND LENGTH				INSTALL ROADSIDE SIGN				REMOVE ROADSIDE SIGN		RELOCATE ROADSIDE SIGN	RESET ROADSIDE SIGN	REMARKS
				89mm x 89mm	89mm x 140mm	140mm x 140mm	140mm x 184mm	ONE POST	TWO POST	SSBM	METAL BARRIER MOUNTED	WOOD POST	SSBM			
			mm x mm	m				EA			KG	EA		EA	EA	
S-2	2-13	R5-10a	750 x 900								101					
S-2	2-14	R2-1 (25)	600 X 750		4.73											
		R26 (S) (CA)	305 X 457													
S-2	2-15	W1-2 (L)	750 x 750								60					
S-2	2-16	E5-1	1372 x 1219					1								
S-2	2-17	SPECIAL B	600 x 300								60					ATTACH TO SIGN POST 2-8 (BACK TO BACK)
		R81 (CA)	305 x 203													
		R81B (CA)	203 x 127													
S-2	2-18	SPECIAL B	600 x 300	3.50				1								ATTACH TO SIGN POST 2-22 (BACK TO BACK)
S-2	2-19	R5-8	750 x 600	3.80				1								
S-2	2-20	W7-5	750 x 750								60					
S-2	2-21	W3-4	750 x 750								60					
S-2	2-22	R81 (CA)	305 x 203	3.50				1								ATTACH TO SIGN POST 2-18 (BACK TO BACK)
		R81A (CA)	203 x 127													
S-2	2-23	D9-6	460 x 460	3.50				1								
S-2	2-24	M3-2	533 x 229		4.69			1								
		G27-2 (CA) (80)	533 x 457													
S-3	3-1	W4-1	1200 x 1200								108					
S-3	3-2	R10-6 (R)	600 x 900								107					
		R89 (CA)	610 x 152													
S-4	4-1	M3-2	533 x 229								112					
		G27-2 (CA) (80)	533 x 457													
S-5	5-1	R1-2	900 x 900 x 900	4.47				1								
S-5	5-2	SPECIAL	5000 x 1200											1		
S-5	5-3	R1-1	750 x 750	4.10				1								
S-5	5-4	SPECIAL	1219 x 914											1		
S-5	5-5	SPECIAL	1219 x 610											1		
S-5	5-6	R1-1	750 x 750	4.10				1								
S-5	5-7	R2-1 (20)	600 x 750											1		
S-5	5-8	R5-1	900 x 900									1				
S-5	5-9	SPECIAL F	900 x 900		5.55			1								
		R2-1 (5)	600 x 750													
S-5	5-10	R3-6	750 x 900							1						
S-5	5-11	SPECIAL	1219 x 610											1		
		SPECIAL	1219 x 610													
S-5	5-12	SPECIAL												1		SEE SPECIFICATIONS
S-5	5-13	R1-1	750 x 750											1		
S-5	5-14	R10-6 (L)	600 x 900	4.10												
S-5	5-15	R10-6 (L)	600 x 900	4.10				1								
S-5	5-16	R1-2	900 x 900 x 900	4.10												
S-5	5-17	W5-3 (MOD)	900 x 900			6.01										
		W14-2	750 x 750													
S-5	5-18	SPECIAL												1		
S-5	5-19	SPECIAL												1		
S-5	5-20	W2-6	750 x 750		5.04			1								
		W16-12p	600 x 450													
SUBTOTAL THIS SHEET								12	0	1	668	1	0	9	0	

SIGN QUANTITIES

SQ-2

STATE OF CALIFORNIA - DEPARTMENT OF TRANSPORTATION
Caltrans

CONSULTANT FUNCTIONAL SUPERVISOR: BOB ZANDIPOUR
CALCULATED-DESIGNED BY: M. GRODZKI
CHECKED BY: B. NADELL
REVISED BY / DATE REVISED

LAST REVISION 00-00-00 | DATE PLOTTED => 25-FEB-2012 | TIME PLOTTED => 09:05

Dist	COUNTY	ROUTE	KILOMETER POST TOTAL PROJECT	SHEET No.	TOTAL SHEETS
04	SF	80	12.6/13.9	209	821

Caltrans Metric

REGISTERED CIVIL ENGINEER 02/03/12 DATE

2-21-12
PLANS APPROVAL DATE

REGISTERED PROFESSIONAL ENGINEER Mark Grodzki No. 65594 Exp. 09/30/13 CIVIL STATE OF CALIFORNIA

THE STATE OF CALIFORNIA OR ITS OFFICERS OR AGENTS SHALL NOT BE RESPONSIBLE FOR THE ACCURACY OR COMPLETENESS OF ELECTRONIC COPIES OF THIS PLAN SHEET.

PB AMERICAS, Inc.
303 Second St., Suite 700N
San Francisco, CA 94107-1317

ROADSIDE SIGNS

SHEET No.	SIGN No.	SIGN CODE	PANEL SIZE	POST SIZE AND LENGTH				INSTALL ROADSIDE SIGN				REMOVE ROADSIDE SIGN		RELOCATE ROADSIDE SIGN	RESET ROADSIDE SIGN	REMARKS
				89mm x 89mm	89mm x 140mm	140mm x 140mm	140mm x 184mm	ONE POST	TWO POST	SSBM	METAL BARRIER MOUNTED	WOOD POST	SSBM			
			mm x mm	m				EA			KG	EA		EA	EA	
S-5	5-21	R1-2	900 x 900 x 900													
S-5	5-22	W2-6	750 x 750		5.04			1								
		W16-12p	600 x 450													
S-5	5-23	R1-1	750 x 750	4.10				1								
S-5	5-24	SPECIAL	750 x 900													ATTACH TO SIGN POST 5-25 (BACK TO BACK)
S-5	5-25	R5-1a	900 x 600			4.73		1								
		SPECIAL K	750 x 600													
S-5	5-26	SPECIAL G	900 x 900		5.25			1								
		SPECIAL H	600 x 450													
S-5	5-27	SPECIAL J	900 x 900		4.91			1								
S-6	6-1	W8-3	900 x 900		3.48			1								
S-6	6-2	R1-2	900 x 900 x 900	2.72				1								
S-6	6-3	W2-6	750 x 750		5.04			1								
		W16-12p	600 x 450													
S-7	7-1	W1-1a (L) (15)	900 x 900								104					
S-7	7-2	W12-2p (TBD)	2100 x 600							1						
S-7	7-3	W3-1	900 x 900								104					
S-7	7-4	W12-2p (TBD)	2100 x 600							1						
S-7	7-5	W12-2p (TBD)	2100 x 600							1						
S-7	7-6	OM-3R MARKER	300 x 900	1.00				1								
S-7	7-7	R1-1	750 x 750	3.95				1								
S-7	7-8	OM-3R MARKER	300 x 900	1.00				1								
S-7	7-9	W12-2p (TBD)	2100 x 600							1						
S-7	7-10	W4-10(CA) (15)	1200 x 1200		4.70			1								
		W3-4	750 x 750													
S-7	7-11	SPECIAL	1219 x 914		4.41			1								
S-7	7-12	SPECIAL	1219 x 914		4.41			1								
SUBTOTAL THIS SHEET								14	0	4	208	0	0	0	0	
PROJECT TOTAL								39	1	5	1,600	1	0	9	1	

SIGN QUANTITIES

SQ-3

REVISED BY | DATE REVISED

M. GRODZKI | B. NADELL

CALCULATED-DESIGNED BY | CHECKED BY

CONSULTANT FUNCTIONAL SUPERVISOR: BOB ZANDIPOUR

STATE OF CALIFORNIA - DEPARTMENT OF TRANSPORTATION

Caltrans

LAST REVISION 00-00-00 | DATE PLOTTED => 25-FEB-2012 | TIME PLOTTED => 09:05

Dist	COUNTY	ROUTE	KILOMETER POST TOTAL PROJECT	SHEET No.	TOTAL SHEETS
04	SF	80	12.6/13.9	210	821

Mark Grodzki 02/03/12
REGISTERED CIVIL ENGINEER DATE

2-21-12
PLANS APPROVAL DATE

REGISTERED PROFESSIONAL ENGINEER Mark Grodzki No. 65594 Exp. 09/30/13 CIVIL STATE OF CALIFORNIA

THE STATE OF CALIFORNIA OR ITS OFFICERS OR AGENTS SHALL NOT BE RESPONSIBLE FOR THE ACCURACY OR COMPLETENESS OF ELECTRONIC COPIES OF THIS PLAN SHEET.

PB AMERICAS, Inc.
303 Second St., Suite 700N
San Francisco, CA 94107-1317

Caltrans Metric

ROADSIDE SIGNS

SHEET No.	SIGN No.	SIGN CODE	PANEL SIZE (mm x mm)	SIGN AREA (m2)	SINGLE FACED	DOUBLE FACED	BACKGROUND SHEETING COLOR	BACKGROUND RETROREFLECTIVE ASTM TYPE	LEGEND SHEETING COLOR	LEGEND RETROREFLECTIVE ASTM TYPE	PROTECTIVE FILM STANDARD	PROTECTIVE FILM PREMIUM	ROADSIDE SIGNS SINGLE SHEET FRAMED ALUMINUM 1.6 mm (m2)	FRAMED ALUMINUM 2.0 mm (m2)	UNFRAMED ALUMINUM 1.6 mm (m2)	UNFRAMED ALUMINUM 2.0 mm (m2)	DESCRIPTION (REMARKS)
S-1	1-1	W1-1(L)	1200 x 1200	1.44	X		YELLOW	IX	BLACK	IX		X				1.44	EXIT WITH ARROW
S-1	1-2	W13-2 (15)	1200 x 1500	1.80	X		YELLOW	IX	BLACK	IX		X				1.80	ADVISORY EXIT SPEED 20 MPH
S-1	1-3	R18A (L) (CA)	1676 x 1219	2.04	X		WHITE	IX	BLACK	IX		X	2.04				LEFT LANE MUST EXIT
S-1	1-4	R5-1	900 x 900	0.81	X		RED	IX	WHITE	IX		X			0.81		DO NOT ENTER
		R5-1a	900 x 600	0.54	X		RED	IX	WHITE	IX		X			0.54		WRONG WAY
		R6-1 (R)	900 x 300	0.27	X		WHITE	IX	BLACK	IX		X			0.27		ONE WAY
S-1	1-5	R1-1	750 x 750	0.56	X		RED	IX	WHITE	IX		X			0.56		STOP
		R3-1	600 x 600	0.36	X		WHITE	IX	BLACK	IX		X			0.36		NO RIGHT TURN
S-1	1-6	R3-5 (R)	750 x 900	0.68	X		WHITE	IX	BLACK	IX		X			0.68		MANDATORY MOVEMENT LANE CONTROL (RIGHT TURN)
S-1	1-7	R3-5 (L)	750 x 900	0.68	X		WHITE	IX	BLACK	IX		X			0.68		MANDATORY MOVEMENT LANE CONTROL (LEFT TURN)
		R6-1 (L)	900 x 300	0.27	X		WHITE	IX	BLACK	IX		X			0.27		ONE WAY
S-1	1-8	R1-1	750 x 750	0.56	X		RED	IX	WHTE	IX		X			0.56		STOP
S-1	1-9	W14-2	750 x 750	0.56	X		YELLOW	IX	BLACK	IX		X			0.56		NO OUTLET
		R101 (CA)	600 x 750	0.45	X		WHITE	IX	BLACK	IX		X			0.45		PRIVATE PROPERTY
S-1	1-10	SPECIAL	914 x 685	0.63	X		WHITE	IX	BLACK	IX		X			0.63		UNITED STATES COAST GUARD ACCESS ONLY
S-2	2-1	SPECIAL A	1200 x 1500	1.80	X		YELLOW	IX	BLACK	IX		X				1.80	ADVISORY EXIT SPEED 15 MPH WITH ARROW
S-2	2-2	R5-10C	600 x 300	0.18	X		WHITE	IX	BLACK	IX		X			0.18		PEDESTRIANS PROHIBITED
		R6-1 (L)	900 x 300	0.27	X		WHITE	IX	BLACK	IX		X			0.27		ONE WAY
S-2	2-3	W4-10(CA) (15)	1200 x 1200	1.44	X		YELLOW	IX	BLACK	IX		X				1.44	ADVISORY EXIT SPEED 15 MPH WITH ARROW
S-2	2-4	R5-1	900 x 900	0.81	X		RED	IX	WHITE	IX		X			0.81		DO NOT ENTER
		R5-1a	900 x 600	0.54	X		RED	IX	WHITE	IX		X			0.34		WRONG WAY
		R6-1 (R)	900 x 300	0.27	X		WHITE	IX	BLACK	IX		X			0.27		ONE WAY
S-2	2-5	SPECIAL	1219 x 914	1.11	X												UNITED STATES COAST GUARD WITH ARROW (FIELD VERIFY)
S-2	2-6	R5-1	900 x 900	0.81	X		RED	IX	WHITE	IX		X			0.81		DO NOT ENTER
		R5-1a	900 x 600	0.54	X		RED	IX	WHITE	IX		X			0.54		WRONG WAY
S-2	2-7	D3-1	1200 x 152	0.18		X	GREEN	IX	WHITE	IX		X				0.18	HILLCREST RD
		R1-1	750 x 750	0.56	X		RED	IX	WHITE	IX		X			0.56		STOP
S-2	2-8	D1-1	1800 x 457	0.82	X		GREEN	IX	WHITE	IX		X	0.82				OAKLAND
		M3-2	533 x 229	0.12	X		BLUE	IX	WHITE	IX		X			0.12		EAST
		G27-2 (CA) (80)	533 x 457	0.24	X		BLUE & RED	III	WHITE	III		X			0.24		INTERSTATE 80 CALIFORNIA
S-2	2-9	R81 (CA)	305 X 203	0.06	X		WHITE	IX	BLACK	IX		X			0.06		BIKE LANE
		R81B (CA)	203 x 127	0.03	X		WHITE	IX	BLACK	IX		X			0.03		END
		W1-2 (L)	750 x 750	0.56	X		YELLOW	IX	BLACK	IX		X			0.56		CURVE
S-2	2-10	R44A (CA)	305 x 610	0.19	X		WHITE	IX	BLACK	IX		X			0.19		BIKE PATH/ NO MOTOR VEHICLES OR MOTORIZED BICYCLES
		R81A (CA)	305 x 127	0.04	X		WHITE	IX	BLACK	IX		X			0.04		BEGIN
		W1-2 (R)	750 x 750	0.56	X		YELLOW	IX	BLACK	IX		X			0.56		CURVE
S-2	2-11	R4-7	600 x 750	0.45	X		WHITE	IX	BLACK	IX		X			0.45		KEEP RIGHT
											SUBTOTAL		2.86	0	12.4	6.66	

SIGN PANEL SUMMARY

SQ-4

STATE OF CALIFORNIA - DEPARTMENT OF TRANSPORTATION
Caltrans

CONSULTANT FUNCTIONAL SUPERVISOR: BOB ZANDIPOUR
CALCULATED-DESIGNED BY: M. GRODZKI
CHECKED BY: B. NADELL
REVISED BY
DATE REVISED

LAST REVISION 00-00-00
DATE PLOTTED => 25-FEB-2012
TIME PLOTTED => 10:36

Dist	COUNTY	ROUTE	KILOMETER POST TOTAL PROJECT	SHEET No.	TOTAL SHEETS
04	SF	80	12.6/13.9	211	821

REGISTERED CIVIL ENGINEER 02/03/12 DATE

2-21-12
PLANS APPROVAL DATE

REGISTERED PROFESSIONAL ENGINEER Mark Grodzki No. 65594 Exp. 09/30/13 CIVIL STATE OF CALIFORNIA

THE STATE OF CALIFORNIA OR ITS OFFICERS OR AGENTS SHALL NOT BE RESPONSIBLE FOR THE ACCURACY OR COMPLETENESS OF ELECTRONIC COPIES OF THIS PLAN SHEET.

PB AMERICAS, Inc.
303 Second St., Suite 700N
San Francisco, CA 94107-1317

Caltrans Metric

ROADSIDE SIGNS

SHEET No.	SIGN No.	SIGN CODE	PANEL SIZE mm x mm	SIGN AREA m2	SINGLE FACED	DOUBLE FACED	BACKGROUND SHEETING COLOR	BACKGROUND RETROREFLECTIVE ASTM TYPE	LEGEND SHEETING COLOR	LEGEND RETROREFLECTIVE ASTM TYPE	PROTECTIVE FILM STANDARD	PROTECTIVE FILM PREMIUM	ROADSIDE SIGNS SINGLE SHEET FRAMED ALUMINUM 1.6 mm (m2)	FRAMED ALUMINUM 2.0 mm (m2)	UNFRAMED ALUMINUM 1.6 mm (m2)	UNFRAMED ALUMINUM 2.0 mm (m2)	DESCRIPTION (REMARKS)
S-2	2-12	SPECIAL C	1200 x 1035	1.24	X		GREEN	IX	WHITE	IX		X				1.24	TOLL CROSSING ENTRANCE
		SPECIAL D	1200 x 760	0.91	X		GREEN	IX	WHITE	IX		X				0.91	FREE DIRECTION
		M3-2	533 x 229	0.12	X		BLUE	IX	WHITE	IX		X			0.12		EAST
		G27-2 (CA) (80)	533 x 457	0.24	X		BLUE & RED	III	WHITE	III		X			0.24		INTERSTATE 80 CALIFORNIA
		M6-2 (MOD)	533 x 381	0.20	X		BLUE	IX	WHITE	IX		X			0.20		RIGHT ARROW DOWN
S-2	2-13	R5-10a	750 x 900	0.68	X		WHITE	IX	BLACK	IX		X			0.68		PEDESTRIANS BICYCLES MOTOR DRIVEN CYCLES PROHIBITED
S-2	2-14	R2-1 (25)	600 X 750	0.45	X		WHITE	IX	BLACK	IX		X			0.45		SPEED LIMIT 25 MPH
		R26 (S) (CA)	305 X 457	0.14	X		WHITE	IX	RED	II	X				0.14		NO STOPPING ANYTIME
S-2	2-15	W1-2 (L)	750 x 750	0.56	X		YELLOW	IX	BLACK	IX		X			0.56		CURVE
S-2	2-16	E5-1	1372 x 1219	1.67	X		GREEN	IX	WHITE	IX		X			1.67		EXIT WITH ARROW
S-2	2-17	SPECIAL B	600 x 300	0.18	X		WHITE	IX	BLACK	IX		X			0.18		WALK BICYCLES
		R81 (CA)	305 x 203	0.06	X		WHITE	IX	BLACK	IX		X					BIKE LANE
		R81B (CA)	203 x 127	0.03	X		WHITE	IX	BLACK	IX		X					END
S-2	2-18	SPECIAL B	600 x 300	0.18	X		WHITE	IX	BLACK	IX		X			0.18		WALK BICYCLES
S-2	2-19	R5-8	750 x 600	0.45	X		WHITE	IX	BLACK	IX		X			0.45		MOTOR-DRIVEN CYCLES PROHIBITED
S-2	2-20	W7-5	750 x 750	0.56	X		YELLOW	IX	BLACK	IX		X			0.56		HILL (BICYCLE)
S-2	2-21	W3-4	750 x 750	0.56	X		YELLOW	IX	BLACK	IX		X			0.56		BE PREPARED TO STOP
S-2	2-22	R81 (CA)	305 x 203	0.06	X		WHITE	IX	BLACK	IX		X			0.06		BIKE LANE
		R81A (CA)	203 x 127	0.03	X		WHITE	IX	BLACK	IX		X			0.03		BEGIN
S-2	2-23	D9-6	460 x 460	0.21	X		BLUE	IX	WHITE	IX		X			0.21		HANDICAPPED ACCESSIBLE
S-2	2-24	M3-2	533 x 229	0.12	X		BLUE	IX	WHITE	IX		X			0.12		EAST
		G27-2 (CA) (80)	533 x 457	0.24	X		BLUE & RED	III	WHITE	III		X			0.24		INTERSTATE 80 CALIFORNIA
S-3	3-1	W4-1	1200 x 1200	1.44	X		YELLOW	IX	BLACK	IX		X				1.44	MERGE
S-3	3-2	R10-6 (R)	600 x 900	0.54	X		WHITE	IX	BLACK	IX		X			0.54		STOP HERE ON RED
		R89 (CA)	610 x 152	0.09	X		WHITE	IX	BLACK	IX		X			0.09		1 CAR PER GREEN
S-4	4-1	M3-2	533 x 229	0.12	X		BLUE	IX	WHITE	IX		X			0.12		EAST
		G27-2 (CA) (80)	533 x 457	0.24	X		BLUE & RED	III	WHITE	III		X			0.24		INTERSTATE 80 CALIFORNIA
S-5	5-1	R1-2	900 x 900 x 900	0.35	X		WHITE & RED	IX	RED	IX		X			0.35		YIELD
S-5	5-2	SPECIAL	5000 x 1200	6.00			WHITE		BLACK								UNITED STATES COAST GUARD (FIELD VERIFY)
S-5	5-3	R1-1	750 x 750	0.56	X		RED	IX	WHITE	IX		X			0.56		STOP
S-5	5-4	SPECIAL	1219 x 914	1.11													UNITED STATES COAST GUARD WITH ARROW (FIELD VERIFY)
S-5	5-5	SPECIAL	1219 x 610	0.74			RED		WHITE								DIM LIGHTS FOR SENTRY (FIELD VERIFY)
S-5	5-6	R1-1	750 x 750	0.56	X		RED	IX	WHITE	IX		X			0.56		STOP
S-5	5-7	R2-1 (20)	600 x 750	0.45			WHITE		BLACK								SPEED LIMIT 20 MPH (FIELD VERIFY)
S-5	5-8	R5-1	900 x 900	0.81			RED		WHITE								DO NOT ENTER (FIELD VERIFY)
S-5	5-9	SPECIAL F	900 x 900	0.81	X		YELLOW	IX	BLACK	IX		X			0.81		CHECK POINT AHEAD
		R2-1 (5)	600 x 750	0.45	X		WHITE	IX	BLACK	IX		X			0.45		SPEED LIMIT 5 MPH
S-5	5-10	R3-6	750 x 900	0.68	X		WHITE	IX	BLACK	IX		X			0.68		OPTIONAL MOVEMENT LANE CONTROL
S-5	5-11	SPECIAL	1219 x 610	0.74			RED		WHITE								APPROACHING MILITARY CHECK POINT (FIELD VERIFY)
S-5		SPECIAL	1219 x 610	0.74			RED		WHITE								DIM LIGHTS FOR SENTRY (FIELD VERIFY)
S-5	5-12	SPECIAL					GREEN		WHITE								U.S COAST GUARD WELCOMES YOU COMMANDING (FIELD VERIFY)
S-5	5-13	R1-1	750 x 750	0.56			RED		WHITE								STOP (FIELD VERIFY)
S-5	5-14	R10-6 (L)	600 x 900	0.54	X		WHITE	IX	BLACK	IX		X			0.54		STOP HERE ON RED
											SUBTOTAL		0	0	11.59	3.59	

SIGN PANEL SUMMARY

SQ-5

STATE OF CALIFORNIA - DEPARTMENT OF TRANSPORTATION
Caltrans

CONSULTANT FUNCTIONAL SUPERVISOR: BOB ZANDIPOUR
CALCULATED-DESIGNED BY: M. GRODZKI
CHECKED BY: B. NADELL
REVISED BY / DATE REVISED

LAST REVISION 00-00-00 DATE PLOTTED => 25-FEB-2012 TIME PLOTTED => 10:36

Dist	COUNTY	ROUTE	KILOMETER POST TOTAL PROJECT	SHEET No.	TOTAL SHEETS
04	SF	80	12.6/13.9	212	821

REGISTERED CIVIL ENGINEER 02/03/12 DATE

2-21-12
PLANS APPROVAL DATE

REGISTERED PROFESSIONAL ENGINEER Mark Grodzki No. 65594 Exp. 09/30/13 CIVIL STATE OF CALIFORNIA

THE STATE OF CALIFORNIA OR ITS OFFICERS OR AGENTS SHALL NOT BE RESPONSIBLE FOR THE ACCURACY OR COMPLETENESS OF ELECTRONIC COPIES OF THIS PLAN SHEET.

PB AMERICAS, Inc.
303 Second St., Suite 700N
San Francisco, CA 94107-1317

ROADSIDE SIGNS

SHEET No.	SIGN No.	SIGN CODE	PANEL SIZE	SIGN AREA	SINGLE FACED	DOUBLE FACED	BACKGROUND		LEGEND		PROTECTIVE FILM		ROADSIDE SIGNS				DESCRIPTION (REMARKS)
													SINGLE SHEET				
													FRAMED ALUMINUM		UNFRAMED ALUMINUM		
							SHEETING COLOR	RETROREFLECTIVE ASTM TYPE	SHEETING COLOR	RETROREFLECTIVE ASTM TYPE	STANDARD	PREMIUM	1.6 mm	2.0 mm	1.6 mm	2.0 mm	
			mm x mm	m2									m2				
S-5	5-15	R10-6 (L)	600 x 900	0.54	X		WHITE	IX	BLACK	IX		X			0.54		STOP HERE ON RED
S-5	5-16	R1-2	900 x 900 x 900	0.35	X		WHITE & RED	IX	RED	IX		X			0.35		YIELD
S-5	5-17	W5-3 (MOD)	900 x 900	0.81	X		YELLOW	IX	BLACK	IX		X			0.81		ONE LANE ROAD
		W14-2	750 x 750	0.56	X		YELLOW	IX	BLACK	IX		X			0.56		NO OUTLET
S-5	5-18	SPECIAL					WHITE		BLACK								STATE PROPERTY/NO DUMPING/NO PARKING/NO TRESPASSING (FIELD VERIFY)
S-5	5-19	SPECIAL					WHITE		BLACK								STATE PROPERTY/NO DUMPING/NO PARKING/NO TRESPASSING (FIELD VERIFY)
S-5	5-20	W2-6	750 x 750	0.56	X		YELLOW	IX	BLACK	IX		X			0.56		CIRCULAR INTERSECTION
		W16-12p	600 x 450	0.27	X		YELLOW	IX	BLACK	IX		X			0.27		TRAFFIC CIRCLE
S-5	5-21	R1-2	900 x 900 x 900	0.35	X		WHITE & RED	IX	RED	IX		X			0.35		YIELD
S-5	5-22	W2-6	750 x 750	0.56	X		YELLOW	IX	BLACK	IX		X			0.56		CIRCULAR INTERSECTION
		W16-12p	600 x 450	0.27	X		YELLOW	IX	BLACK	IX		X			0.27		TRAFFIC CIRCLE
S-5	5-23	R1-1	750 x 750	0.56	X		RED	IX	WHITE	IX		X			0.56		STOP
S-5	5-24	SPECIAL I	900 x 1050	0.95	X		WHITE & RED	IX	RED & WHITE	IX		X			0.95		WARNING SEVERE TIRE DAMAGE DO NOT BACKUP
S-5	5-25	R5-1a	900 x 600	0.54	X		RED	IX	WHITE	IX		X			0.54		WRONG WAY
		SPECIAL K	900 x 450	0.41	X		RED	IX	WHITE	IX		X			0.41		SEVERE TIRE DAMGE
S-5	5-26	SPECIAL G	900 x 900	0.81	X		YELLOW	IX	BLACK	IX		X			0.81		ACTIVE BARRIER
		SPECIAL H	450 x 450	0.20	X		YELLOW	IX	BLACK	IX		X			0.20		100 FEET
S-5	5-27	SPECIAL J	900 x 900	0.81	X		YELLOW	IX	BLACK	IX		X			0.81		BARRIER ACTIVATED WHEN FLASHING
S-6	6-1	W8-3	900 x 900	0.81	X		YELLOW	IX	BLACK	IX		X			0.81		PAVEMENT ENDS
S-6	6-2	R1-2	900 x 900 x 900	0.35	X		WHITE & RED	IX	RED	IX		X			0.35		YIELD
S-6	6-3	W2-6	750 x 750	0.56	X		YELLOW	IX	BLACK	IX		X			0.56		CIRCULAR INTERSECTION
		W16-12p	600 x 450	0.27	X		YELLOW	IX	BLACK	IX		X			0.27		TRAFFIC CIRCLE
S-7	7-1	W1-1a (L) (15)	900 x 900	0.81	X		YELLOW	IX	BLACK	IX		X			0.81		LEFT TURN/ADVISORY SPEED 15 MPH
S-7	7-2	W12-2p (TBD)	2100 x 600	1.26	X		YELLOW	IX	BLACK	IX		X			1.26		RECTANGULAR SHAPE LOW CLEARANCE
S-7	7-3	W3-1	900 x 900	0.81	X		YELLOW	IX	BLACK	IX		X			0.81		STOP AHEAD
S-7	7-4	W12-2p (TBD)	2100 x 600	1.26	X		YELLOW	IX	BLACK	IX		X			1.26		RECTANGULAR SHAPE LOW CLEARANCE
S-7	7-5	W12-2p (TBD)	2100 x 600	1.26	X		YELLOW	IX	BLACK	IX		X			1.26		RECTANGULAR SHAPE LOW CLEARANCE
S-7	7-6	OM-3R MARKER	300 x 900	0.27	X		YELLOW	IX	BLACK	IX		X			0.27		TYPE P (CA) RIGHT OBJECT MARKER
S-7	7-7	R1-1	750 x 750	0.56	X		RED	IX	WHITE	IX		X			0.56		STOP
S-7	7-8	OM-3R MARKER	300 x 900	0.27	X		YELLOW	IX	BLACK	IX		X			0.27		TYPE P (CA) RIGHT OBJECT MARKER
S-7	7-9	W12-2p (TBD)	2100 x 600	1.26	X		YELLOW	IX	BLACK	IX		X			1.26		RECTANGULAR SHAPE LOW CLEARANCE
S-7	7-10	W4-10(CA) (15)	1200 x 1200	1.44	X		YELLOW	IX	BLACK	IX		X				1.44	ADVISORY EXIT SPEED 15 MPH WITH ARROW
		W3-4	750 x 750	0.56	X		YELLOW	IX	BLACK	IX		X			0.56		BE PREPARED TO STOP
S-7	7-11	SPECIAL	1219 x 914	1.11													UNITED STATES COAST GUARD WITH ARROW
S-7	7-12	SPECIAL	1219 x 914	1.11													UNITED STATES COAST GUARD WITH ARROW
												SUBTOTAL	0	0	18.86	1.44	
												SUBTOTAL FROM SQ-4	2.86	0	12.40	6.66	
												SUBTOTAL FROM SQ-5	0	0	11.59	3.59	
												TOTAL	2.86	0	42.85	11.69	

SIGN PANEL SUMMARY
SQ-6

REVISED BY	DATE REVISED

CALCULATED-DESIGNED BY	CHECKED BY
M. GRODZKI	B. NADELL

CONSULTANT FUNCTIONAL SUPERVISOR: BOB ZANDIPOUR

STATE OF CALIFORNIA - DEPARTMENT OF TRANSPORTATION
Caltrans

LAST REVISION 00-00-00 | DATE PLOTTED => 25-FEB-2012 | TIME PLOTTED => 10:36

Dist	COUNTY	ROUTE	KILOMETER POST TOTAL PROJECT	SHEET No.	TOTAL SHEETS
04	SF	80	12.6/13.9	213	821

Prashant Jalvi 11-2-11
REGISTERED CIVIL ENGINEER DATE

2-21-12
PLANS APPROVAL DATE

REGISTERED PROFESSIONAL ENGINEER Prashant Jalvi No. 77542 Exp. 06-30-13 CIVIL STATE OF CALIFORNIA

THE STATE OF CALIFORNIA OR ITS OFFICERS OR AGENTS SHALL NOT BE RESPONSIBLE FOR THE ACCURACY OR COMPLETENESS OF ELECTRONIC COPIES OF THIS PLAN SHEET.

Caltrans Metric

ROADWAY QUANTITIES

SHEET No.	STATION LIMITS	HMA (TYPE A)	CL 3 AB	CL 4 AS	CONCRETE PAVEMENT	MINOR CONCRETE (MISCELLANEOUS CONSTRUCTION) **	FURNISH POLYESTER CONCRETE OVERLAY	PLACE POLYESTER CONCRETE OVERLAY	HMA DIKE (TYPE A)	SEAL PAVEMENT JOINT
		TONN	m3					m2	m	
L-2	E 49.59.25 TO 51+17.50						67	3362		47
L-7	CG 9+43.13 TO 13+50.93	3679	3361	1298	24	163				
L-7	CG1 10+94.08 TO 12.47.86	1017	925	246		11				
C-5	SG 10+00.00 TO 11+70.50	510	234	199		73				
L-2	H 49.71.99 TO 50+90.00	165								
L-2	R4 50+59.68 TO 51+53.63	538	347	45		9				
L-2	WW 80+04.00 TO 81+18.14	496	366	20		13				
L-8	TF3 1+17.50 TO 3+94.17	312	283	224						
C-15	TF3A 2+24.40 TO 2+88.57	23	121	96						
	SUBTOTAL FROM SHEET SCQ-1	97	59	121					48	
	FROM STRUCTURE PLANS						65	2980		
	TOTAL	6837	5696	2249	24	*	132	6342	48	47

* SEE SHEET Q-3 FOR TOTAL QUANTITY
** MINOR CONCRETE (MISCELLANEOUS CONSTRUCTION)
QUANTITY SHOWN ON Q-1 INCLUDES SIDEWALK AND CURB RAMP

COLD PLANE AC PAVEMENT (60 mm Max)

SHEET No.	STATION LIMITS	LOCATIONS	45 mm	60 mm
			m2	
L-7	CG 9+41.31 TO 13+50.93	Lt, Rt	199	
L-2	H 49+71.99 TO 51+17.50	Lt, Rt		1168
SUBTOTAL			199	1168
TOTAL			1367	

EARTHWORK QUANTITIES

SHEET No.	STATION LIMITS	LOCATIONS	ROADWAY EXCAVATION	EMBANKMENT: EMBANKMENT [N]	EMBANKMENT: TOPSOIL [N]	EMBANKMENT: GEOSYNTHETIC REINFORCED EMBANKMENT (GRE): EMBANKMENT (N)	EMBANKMENT: GEOSYNTHETIC REINFORCED EMBANKMENT (GRE): GEOSYNTHETIC REINFORCEMENT	EMBANKMENT: EMBANKMENT CONFINEMENT SYSTEM: EMBANKMENT CONFINEMENT SYSTEM	EMBANKMENT: EMBANKMENT CONFINEMENT SYSTEM: GEOSYNTHETIC REINFORCEMENT [N]
			m3	m3	m3	m3	m2	m3	m2
L-2	E 49.59.25 TO 51+17.50	Rt, Lt	75	2849					
L-7	CG 9+43.131 TO 13+50.93	Rt, Lt	9373	3645	205				
C-28 & R-7	CG 9+43.131 TO 13+50.93	Lt				1083	2603		
L-7	CG1 10+94.08 TO 12.47.86	Rt, Lt	1465	339					
C-3	SG 10+00.00 TO 11+70.50	Rt, Lt	6662	2791					
C-25	SG 10+95.700 TO 11+22.000	Rt, Lt				2169	4675		
C-26	SG 11+28.803 TO 11+51.428	Rt	76			76	183		
C-27 & 28	SG 10+37.152 TO 11+26.494	Rt, Lt	14471		2217			9145	20759
L-2	H 49.71.99 TO 50+90.00	Rt, Lt	63	23					
C-27 & 28	H 49.71.99 TO 50+90.00	Lt	128		86			128	183
L-2	R1 50+90.00 TO 51+15.40	Rt, Lt	102	147					
L-2	R4 50+59.68 TO 51+53.63	Rt, Lt	1326	1032					
L-2	WW 80+04.00 TO 81+18.14	Rt, Lt	2008	4619					
C-3	BP 30+00.00 TO 31+50.72	Rt, Lt	74	24					
L-8	TF3 1+17.50 TO 3+94.17	Rt, Lt	1673	100					
C-9	TF3A 2+24.40 TO 2+88.57	Rt, Lt	0	170					
	SUBTOTAL FROM SHEET SCQ-1		214						
TOTAL			37710	15739	2508	3328	7461	9273	20942

[N] NOT A SEPARATE PAY ITEM, FOR INFORMATION ONLY

REMOVE EPOXY AC SURFACING (20 mm Max)

SHEET No.	STATION LIMITS	LOCATIONS	m2
L-2	E 49.250 TO 51+17.497	Lt, Rt	3362
	TOTAL		3362

HAZARDOUS MATERIAL EXCAVATION QUANTITIES

SHEET No.	LOCATIONS	ROADWAY EXCAVATION (TYPE H)
		m3
C-42	SG 10+00.00 TO 11+70.50	572
C-43	CG 9+41.31 TO 13+50.93	581
C-44	TF3 1+17.50 TO 3+80.00	535
	TOTAL	1688

SUMMARY OF QUANTITIES

Q-1

STATE OF CALIFORNIA - DEPARTMENT OF TRANSPORTATION
Caltrans DESIGN
FUNCTIONAL SUPERVISOR: BOB ZANDIPOUR
CALCULATED-DESIGNED BY: PRASHANT JALVI
CHECKED BY: AMANDO VITO
REVISED BY: PJ
DATE REVISED: 11-1-11

LAST REVISION 02-07-12 | DATE PLOTTED => 28-FEB-2012 | TIME PLOTTED => 14:41

Dist	COUNTY	ROUTE	KILOMETER POST TOTAL PROJECT	SHEET No.	TOTAL SHEETS
04	SF	80	12.6/13.9	214	821

Brian M Wood 11-1-11
REGISTERED CIVIL ENGINEER DATE

2-21-12
PLANS APPROVAL DATE

REGISTERED PROFESSIONAL ENGINEER Brian M. Wood No. 76969 Exp. 12-31-12 CIVIL STATE OF CALIFORNIA

THE STATE OF CALIFORNIA OR ITS OFFICERS OR AGENTS SHALL NOT BE RESPONSIBLE FOR THE ACCURACY OR COMPLETENESS OF ELECTRONIC COPIES OF THIS PLAN SHEET.

Caltrans Metric

METAL BEAM GUARD RAILING

SHEET No.	LOCATIONS		REMOVE MBGR	MBGR	ALTERNATIVE FLARED TERMINAL SYSTEM
			m	m	EA
C-32	H 49+69.433 TO 49+86.774	L†	18		
C-32	SG 10+15.226 TO 10+75.236	R†,L†	65		
C-33	CG 9+37.039 TO 11+20.623	L†	110		
C-2	H 49+68.303 TO 49+69.433	R†		5	
C-7	CG 12+15.754 TO 12+25.915	R†,L†		35.0	2
C-7	CG 12+14.729 TO 12+59.415	R†		58.0	2
TOTAL			193	98.0	4

CONCRETE BARRIERS

SHEET No.	LOCATION		CONCRETE BARRIER (TYPE 60)	CONCRETE BARRIER TYPE 732 (Mod)	CONCRETE BARRIER (TYPE 60s)	CONCRETE BARRIER (TYPE 60sc)	CONCRETE BARRIER TYPE 60 (Mod)	REMOVE CONCRETE BARRIER (TYPE K)
			m					
L-1	W 50+18.241 TO 51+27.262	R†						140
C-32	WW 80+08.555 TO 80+26.893	L†						40
C-32	E 50+23.409 TO 51+17.447	R†						350
C-32	R4 50+95.357 TO H 50+71.352	R†,L†						135
C-33	CG 10+22.135 TO 11+23.811	R†,LT						111
C-33	CG1 11+02.474 TO 11+76.262	L†						134
C-1	W 50+19.348 TO WW 81+18.413	R†,L†			60.0			
C-2	R4 51+29.687 TO 51+44.095	L†			14.5			
C-2	R4 50+99.105 TO 51+20.250	L†			22.0			
C-2	E 50+22.863 TO R4 50+79.985	R†	56.7					
C-2	R1 50+97.615 TO SG 10+09.493	R†,L†				29.1		
C-2	R4 50+99.105 TO E 51+17.497	R†,L†		19				
C-3	SG 10+17.116 TO 10+15.405	R†		9				
C-3	SG 11+49.500 TO 11+51.483	R†		3				
SUBTOTAL			56.7	31	96.5	29.1		910
FROM R-SHEETS				10				
FROM STRUCTURE PLANS				730			45	
TOTAL			56.7	771	96.5	29.1	45	910

IRRIGATION CROSSOVERS

LOCATION		SIDE		CONDUIT TYPE (3)	(N) WATER LINE CROSSOVER	(N) SPRINKLER CONTROL CROSSOVER
LINE	STATION	R†	L†	SIZE (mm) DN 200		
				LENGTH (m)	SIZE (mm) DN	SIZE (mm) DN
WW	80+72	X	X	23	75	50
TF3	2+10	X	X	5	75	50
TF3A	2+37	X	X	5	75	50
R4, BP	51+12, 30+10	X	X	72	75	50
SG	11+52	X	X	21	75	50
CG	9+93	X		28	75	50
CG	10+85	X		28	75	50
CG2	11+28	X	X	10	75	50
CG1	11+10	X	X	19	75	50
CG	11+53	X	X	27	75	50
CG	11+86	X		10	75	50
CG1	12+12	X	X	22	75	50
CG	12+39	X	X	18	75	50
CG	13+25	X		20	75	50
CG	13+31		X	20	75	50
TOTAL				328		

(N) - NOT A SEPARATE PAY ITEM FOR INFORMATION ONLY
DN - DIAMETER NOMINAL
X - DENOTES REQUIREMENT

CONDUIT TYPE
(APPLICABLE WHEN CIRCLED BELOW AND SHOWN UNDER THE 'CONDUIT TYPE' COLUMN HEADING

1 BITUMINOUS COATED CORRUGATED STEEL PIPE (1.626 mm THICK)
2 CORRUGATED STEEL PIPE (1.626 mm THICK)
(3) CORRUGATED HIGH DENSITY POLYTHENE PIPE
4 ALTERNATIVE CONDUIT

IRRIGATION SLEEVE

LOCATION		SIDE		SCH. 40 SIZE (150mm) DN LENGTH (m)
LINE	STATION	R†	L†	
WW	81+18	X		5
BP	31+49	X	X	8
SG1	20+63		X	8
BP	30+73		X	10
BP	30+15		X	5
CG	11+98		X	3
W	52+69		X	5
W	52+69	X		4
W	52+90	X	X	4
	TOTAL			52

SUMMARY OF QUANTITIES

Q-2

BW	11-1-11	REVISED BY	DATE REVISED
BRIAN WOOD	AMANDO VITO	CALCULATED-DESIGNED BY	CHECKED BY
FUNCTIONAL SUPERVISOR	BOB ZANDIPOUR		

STATE OF CALIFORNIA - DEPARTMENT OF TRANSPORTATION
Caltrans DESIGN

LAST REVISION 02-08-12 | DATE PLOTTED => 25-FEB-2012 | TIME PLOTTED => 10:36

Dist	COUNTY	ROUTE	KILOMETER POST TOTAL PROJECT	SHEET No.	TOTAL SHEETS
04	SF	80	12.6/13.9	215	821

Brian M Wood 11-1-11
REGISTERED CIVIL ENGINEER DATE

2-21-12
PLANS APPROVAL DATE

REGISTERED PROFESSIONAL ENGINEER Brian M. Wood No. 76969 Exp. 12-31-12 CIVIL STATE OF CALIFORNIA

THE STATE OF CALIFORNIA OR ITS OFFICERS OR AGENTS SHALL NOT BE RESPONSIBLE FOR THE ACCURACY OR COMPLETENESS OF ELECTRONIC COPIES OF THIS PLAN SHEET.

Caltrans Metric

MINOR CONCRETE (MISCELLANEOUS CONSTRUCTION)

SHEET No.	LOCATIONS		CONCRETE CURB A1-150	A2-150	A1-200	A2-200	TRANSITION	D-150	DRIVEWAY
			m3						
C-1	WW 80+04.004 TO 80+74.553	L+	6.6						
C-1	WW 80+04.295 TO 81+18.413	R+,L+	7.4						
L-7	CG 9+41.380 TO 9+65.835	R+	1.9						
C-2	R4 50+79.985 TO H 50+75.646	R+,L+	3.8						
C-3,4	SG 10+09.203 TO BP 31+49.350	L+		23.4					
C-3	SG 11+51.483 TO 11+64.528	R+		2.2					
C-3	SG1 20+29.701 TO 20+32.221	R+			0.2				
C-3	SG 11+22.963 TO 11+25.268	L+			0.2				
C-6,7,12	CG 11+74.161 TO 12+06.608	R+		5.9					
C-7	SG 12+06.608 TO 12+13.208	R+					1.6		
C-7	SG 12+13.208 TO 12+60.455	R+				9.2			
C-7	SG 12+60.455 TO 12+70.307	R+					1.6		
C-7,8	SG 12+70.307 TO 13+02.328	R+		5.0					
L-7 & C-5,6,12	CG 9+29.016 TO 11+62.194	R+		32.9					
C-12	CG 11+55.575 TO 11+62.194	R+	1.3						
C-5,6,12	CG 9+89.499 TO 11+55.575	R+		20.6					
C-5,6	CG 10+30.786 TO 11+27.568	R+		7.8					
C-5	CG1 10+88.273 TO 10+90.600	L+	1.4						
C-6,7,8,10	CG1 11+30.098 TO CG 13+50.925	L+	15.5						
C-6,12	CG 11+53.976 TO 11+74.161	R+	3.3						
C-6,7,11	CG2 11+30.777 TO CG 12+51.951	R+,L+				40.9			
C-10	CG 10+92.185 TO CG2 11+25.774	R+,L+		7.6					
C-8	CG 13+02.328 TO TF3 1+26.266	R+	0.8						
C-8	TF3 1+26.125 TO CG 13+50.925	R+,L+	3.3						
C-8	CG 13+17.229 TO 13+26.251	R+,L+	1.8						
C-8	CG 13+13.998 TO 13+29.451	R+,L+						7.8	
C-1	WW 80+77.500 TO 80+80.000	R+,L+	0.4						
C-7	CG 12+67.958 TO 13+83.908	L+	2.2						
C-6	CG 11+58.990 TO 11+84.271	R+			9.5				
C-7,8	CG 12+93.009 TO 13+04.377	R+	1.8						
C-13	W 52+59.096 TO 52+75.158	R+,L+	3.2						
C-13	W 52+64.408 TO 52+75.929	L+	1.5						
C-13	W 52+61.740 TO 52+70.227	L+	2.5						
C-13	W 52+66.075 TO 52+71.738	R+,L+	1.4						
C-6	CG 11+87.822	R+							1.2
			60.1	105.4	9.9	50.1	3.2	7.8	1.2
SUBTOTAL			237.7						
SUBTOTAL FROM SHEET Q-1			269.0						
SUBTOTAL FROM DQ SHEETS			66						
TOTAL			572.7						

MINOR CONCRETE (MINOR STRUCTURE)

LOCATIONS	m^3
SUBTOTAL FROM DQ - SHEETS	67.25
SUBTOTAL FROM UQ - SHEETS	131.00
TOTAL	198.25

CURB RAMP DETECTABLE WARNING SURFACE

SHEET No.	LOCATIONS		CURB RAMP CASE	WIDTH [N]	DETECTABLE WARNING SURFACE [N]
				m	m2
C-1	WW 81+17.813	R+	C	1.20	1.2
C-4	SG1 20+64.355	L+	A	1.50	1.3
C-4	SG 11+59.428	R+	G	1.50	1.3
C-4	BP 31+49.350	R+,L+	F	5.22	4.4
C-6	CG 11+54.835	R+	C	2.00	1.1
C-6	CG 11+48.674	R+	A	1.22	2.0
C-7	CG 12+82.968	R+	C	1.50	1.5
C-12	CG 11+63.607	R+	A	1.22	1.1
C-12	CG 11+70.775	R+	A	1.22	1.1
				TOTAL	15.0

[N] NOT A SEPARATE PAY ITEM, FOR INFORMATION ONLY

BOLLARDS AND REMOVABLE BOLLARDS

SHEET No.	LOCATIONS		BOLLARDS	REMOVABLE BOLLARDS
			EA	
C-2	BP 30+16.690	R+		1
C-10	CG1 11+12.365	L+		2
C-6	CG 11+86.619	R+		3
C-7	CG1 12+25.130	L+		6
C-10	CG1 10+87.212	L+	4	
C-11	CG1 11+23.833	L+	4	
TOTAL			8	12

SUMMARY OF QUANTITIES

Q-3

STATE OF CALIFORNIA - DEPARTMENT OF TRANSPORTATION
Caltrans DESIGN

FUNCTIONAL SUPERVISOR BOB ZANDIPOUR
CALCULATED-DESIGNED BY BRIAN WOOD
CHECKED BY AMANDO VITO
REVISED BY BW
DATE REVISED 11-1-11

LAST REVISION 02-07-12
DATE PLOTTED => 25-FEB-2012
TIME PLOTTED => 10:36

Dist	COUNTY	ROUTE	KILOMETER POST TOTAL PROJECT	SHEET No.	TOTAL SHEETS
04	SF	80	12.6/13.9	216	821

Brian M Wood 11-1-11
REGISTERED CIVIL ENGINEER DATE

2-21-12
PLANS APPROVAL DATE

REGISTERED PROFESSIONAL ENGINEER Brian M. Wood No. 76969 Exp. 12-31-12 CIVIL STATE OF CALIFORNIA

THE STATE OF CALIFORNIA OR ITS OFFICERS OR AGENTS SHALL NOT BE RESPONSIBLE FOR THE ACCURACY OR COMPLETENESS OF ELECTRONIC COPIES OF THIS PLAN SHEET.

Caltrans Metric

CANTILEVER SWING GATES

SHEET No.	LOCATION		WIDTH [N]	TYPE	CANTILEVER SWING GATES	RECONSTRUCT CANTILEVER SWING GATE
			m		EA	EA
C-21	CG 12+89.992	R+,L+	5.8	CHAIN LINK	3	
C-22	WW 80+82.156	R+,L+	3.8	METAL	2	
C-23	H 50+43.723	R+	4.6	METAL	1	1
TOTAL					6	1

[N] NOT A SEPARATE PAY ITEM, FOR INFORMATION ONLY

FENCES AND GATES

SHEET No.	LOCATION		REMOVE CHAIN LINK FENCE	FENCE						GATES				
				TYPE METAL	TYPE CL-1.8	TYPE CL-1.2, BLACK VINYL CLAD	TYPE CL-3.6, BLACK VINYL CLAD	TYPE CL-2.4, BLACK VINYL CLAD, w/ EXT ARM	TYPE CL-1.8 BLACK VINYL CLAD, w/ EXT ARM	1.5 m, TYPE METAL	2.4 m, TYPE CL-1.8	2.4 m x 3.0 m TYPE CL-3.6, BLACK VINYL CLAD	3.6 m, TYPE CL-2.4, BLACK VINYL CLAD, w/ EXT ARM	2.4 m, TYPE CL-2.4, BLACK VINYL CLAD, w/ EXT ARM
			m							EA				
C-32	WW 80+28.613 TO 80+35.708	R+,L+	8											
C-32	WW 80+20.000 TO 80+68.200	R+	128											
C-32	SG 10+04.902 TO 10+16.084	R+,L+	25											
C-32	SG 10+27.690 TO 10+66.100	R+	66											
C-32	SG 11+62.901 TO 11+65.112	R+,L+	30											
C-32	H 50+87.612 TO R4 51+33.319	R+,L+	45											
C-32	H 50+78.036 TO 50+78.442	L+	22											
C-33	CG 9+96.866 TO 10+03.233	L+	15											
C-33	CG 10+03.373 TO 12+29.171	R+,L+	215											
C-33	CG 12+19.162 TO 12+22.258	R+	19											
C-18,22	WW 80+04.927 TO H 80+78.819	R+, L+		15.4				114.6	40.5	1				
C-18,23	H 50+42.871 TO SG 10+25.704	R+		24.3						1				
C-18,19	SG 10+25.704 TO CG1 10+56.993	R+,L+						170.0						
C-19	CG1 10+85.808 TO CG 12+32.631	R+,L+						243.7					1	1
C-18,19	SG 11+51.482 TO 11+70.390	R+			97.5						4			
C-19	CG 11+57.328 TO 11+84.003	R+					97.3					1		
C-19	CG 9+29.090 TO 9+90.822	R+				68.1								
C-19	CG 10+83.000 TO 11+50.103	R+				65.1								
	TOTAL		573	39.7	97.5	133.2	97.3	528.3	40.5	2	4	1	1	1

SUMMARY OF QUANTITIES

Q-4

STATE OF CALIFORNIA - DEPARTMENT OF TRANSPORTATION
Caltrans DESIGN

FUNCTIONAL SUPERVISOR: BOB ZANDIPOUR
CALCULATED-DESIGNED BY: BRIAN WOOD
CHECKED BY: AMANDO VITO
REVISED BY: BW
DATE REVISED: 11-1-11

LAST REVISION 02-07-12
DATE PLOTTED => 25-FEB-2012
TIME PLOTTED => 10:36

Dist	COUNTY	ROUTE	KILOMETER POST TOTAL PROJECT	SHEET No.	TOTAL SHEETS
04	SF	80	12.6/13.9	217	821

Brian M Wood 11-1-11
REGISTERED CIVIL ENGINEER DATE

2-21-12
PLANS APPROVAL DATE

REGISTERED PROFESSIONAL ENGINEER Brian M. Wood No. 76969 Exp. 12-31-12 CIVIL STATE OF CALIFORNIA

THE STATE OF CALIFORNIA OR ITS OFFICERS OR AGENTS SHALL NOT BE RESPONSIBLE FOR THE ACCURACY OR COMPLETENESS OF ELECTRONIC COPIES OF THIS PLAN SHEET.

Caltrans Metric

UNDERDRAIN QUANTITIES

SHEET No.	LOCATIONS		50 mm NON-PERFORATED PLASTIC PIPE	100 mm NON-PERFORATED PLASTIC PIPE	200 mm NON-PERFORATED PLASTIC PIPE	200 mm PERFORATED PLASTIC PIPE	FILTER FABRIC [N]	PERMEABLE MATERIAL [N]	200 mm PLASTIC PIPE RISER [N]
			m				m2	m3	EA
C-30	SG 10+37.152 TO 11+26.494	R†			118	361	1444	271	14
C-31	E 50+21.769	R†	17	32					
	TOTAL		17	32	118	361	1444	271	14

[N] NOT A SEPARATE PAY ITEM, FOR INFORMATION ONLY

PIPE HANDRAILING

SHEET No.	LOCATION		PIPE HANDRAILING
			m
C-24	BP 30+16.170 TO 31+39.241	L†	119
C-24	BP 30+13.472 TO 30+13.670	L†	2.5
C-24	BP 31+41.125 TO 31+40.009	R†	20
C-24	BP 31+38.475 TO 31+39.543	R†	22
R-2	CG 9+90.000	R†	10
	TOTAL		173.5

BIKEPATH RAILING

SHEET No.	LOCATION		BIKEPATH RAILING
			m
C-48	BP 30+16.683 TO 31+38.966	R†	134
	FROM STRUCTURE PLANS		755
	TOTAL		889

MISCELLANEOUS ITEMS

SHEET No.	LOCATIONS		IN-GROUND TRAFFIC SPIKES	BENCHES	DIRECTIONAL SIGN	TRASH RECEPTACLE	RECONSTRUCT PEDESTRIAN TURNSTILE
			m	EA			
C-7	CG1 12+25.130	R†,L†	4.3				
C-2	BP 30+07.324	L†		1			
C-2	BP 30+09.941	L†		1			
C-2	BP 30+13.356	L†			1		
C-4	BP 30+11.877	L†				1	
C-7	CG 12+80.002	R†					1
	TOTAL		4.3	2	1	1	1

ALTERNATIVE CRASH CUSHION

SHEET No.	LOCATION		CRASH CUSHION MODULE
			EA
C-15	R4 50+00.658	L†	1
C-16	R1 50+99.527	R†,L†	1
C-17	SG 11+22.859	L†	2
	TOTAL		4

SUMMARY OF QUANTITIES

Q-5

STATE OF CALIFORNIA - DEPARTMENT OF TRANSPORTATION
Caltrans DESIGN

FUNCTIONAL SUPERVISOR: BOB ZANDIPOUR
CALCULATED-DESIGNED BY: BRIAN WOOD
CHECKED BY: AMANDO VITO
REVISED BY: BW
DATE REVISED: 11-1-11

LAST REVISION 02-07-12
DATE PLOTTED => 25-FEB-2012
TIME PLOTTED => 10:37

Dist	COUNTY	ROUTE	KILOMETER POST TOTAL PROJECT	SHEET No.	TOTAL SHEETS
04	SF	80	12.6/13.9	218	821

Brian M Wood 11-1-11
REGISTERED CIVIL ENGINEER DATE

2-21-12
PLANS APPROVAL DATE

REGISTERED PROFESSIONAL ENGINEER Brian M. Wood No. 76969 Exp. 12-31-12 CIVIL STATE OF CALIFORNIA

THE STATE OF CALIFORNIA OR ITS OFFICERS OR AGENTS SHALL NOT BE RESPONSIBLE FOR THE ACCURACY OR COMPLETENESS OF ELECTRONIC COPIES OF THIS PLAN SHEET.

Caltrans Metric

REMOVE CONCRETE

SHEET No.	LOCATIONS		RETAINING WALL	SLOPE PAVING	Conc DRAINAGE DITCH	Conc BASKETBALL COURT	Conc STAIRS
			m3				
C-32,33	SG 10+77.856 TO 11+27.759	R†		96			
C-32	WW 80+04.000 TO 80+35.567	R†,LT		66			
C-32	WW 80+04.000 TO 80+25.850	R†,L†		24			
C-33	CG 11+44.732 TO 11+66.272	R†	14				
C-33	CG 12+01.397 TO 12+29.511	L†	16				
C-33	CG 12+31.139 TO 12+36.135	L†	4				
C-33	CG 9+95.000 TO 10+25.000	L†	5				
C-33	CG 11+60.000 TO 11+90.000	R†				35	
C-33	CG 10+42.414 TO 11+17.903	R†			53		
C-32	H 50+77.329	L†					2
C-33	CG 73+19.404	L†					3
C-33	CG 9+86.929	R†					3
SUBTOTAL			39	186	53	35	8
SUBTOTAL FROM UQ-1			40				
TOTAL			361				

REMOVE BASE AND SURFACING

SHEET No.	LOCATION		REMOVE BASE & SURFACING
			m3
C-32	WW 80+44.089 TO 80+77.418	R†	87
C-33	CG 11+11.501 TO 11+65.338	L†	148
C-33	CG 12+05.452 TO 12+83.401	R†	185
TOTAL			420

MISCELLANEOUS REMOVAL AND SALVAGE QUANTITIES

SHEET No.	LOCATIONS		REMOVE SOIL NAIL WALL (PORTION)	REMOVE SOLDIER PILE WALL	REMOVE FENCE	REMOVE CRASH CUSHION (SAND FILLED)	REMOVE CRASH CUSHION	SALVAGE BASKETBALL HOOP	SALVAGE WOODEN GATE	REMOVE GATE	REMOVE METAL STAIRS
			m			EA					
L-1	W 50+19.630 TO 50+42.200	R†	23								
L-1	W 50+42.200 TO 50+71.280	R†		28							
C-33	CG 9+85.818 TO 11+07.797	R†		76							
C-33	H 50+42.873 TO SG 10+27.690	R†			30						
C-33	R4 51+09.090	R†				1					
C-33	CG 11+76.262 TO CG 11+76.262	L†					2				
C-33	CG 11+75.000	R†						1			
C-32	H 50+42.000	R†							1		
C-32	H 50+83.084	L†								1	
C-33	CG 10+03.482	R†,L†								2	
C-33	CG 12+25.638	R†,L†								2	
C-32	WW 80+60.000	R†								1	
C-33	CG 9+86.929	R†									1
TOTAL			23	104	30	1	2	1	1	6	1

SUMMARY OF QUANTITIES

Q-6

REVISED BY	DATE REVISED
BW	11-1-11

BRIAN WOOD
AMANDO VITO
CALCULATED-DESIGNED BY
CHECKED BY
FUNCTIONAL SUPERVISOR
BOB ZANDIPOUR

STATE OF CALIFORNIA - DEPARTMENT OF TRANSPORTATION
Caltrans
DESIGN

LAST REVISION 02-09-12 DATE PLOTTED => 25-FEB-2012 TIME PLOTTED => 10:37

Dist	COUNTY	ROUTE	KILOMETER POST TOTAL PROJECT	SHEET No.	TOTAL SHEETS
04	SF	80	12.6/13.9	219	821

REGISTERED CIVIL ENGINEER 11-2-11 DATE

2-21-12
PLANS APPROVAL DATE

REGISTERED PROFESSIONAL ENGINEER Prashant Jalvi No. 77542 Exp. 06-30-13 CIVIL STATE OF CALIFORNIA

THE STATE OF CALIFORNIA OR ITS OFFICERS OR AGENTS SHALL NOT BE RESPONSIBLE FOR THE ACCURACY OR COMPLETENESS OF ELECTRONIC COPIES OF THIS PLAN SHEET.

Caltrans Metric

NOTE:

SEE STRUCTURE PLANS FOR ADDITIONAL RETAINING WALLS

LEGEND

STANDARD PLAN SHEET No.

DETAIL No.

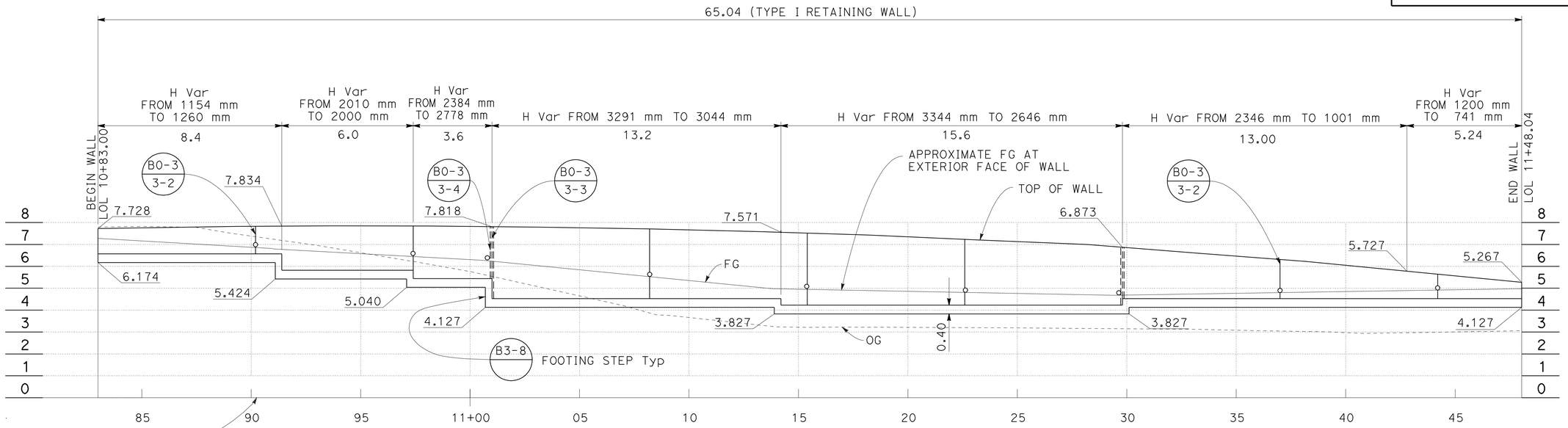

ELEVATION

RETAINING WALL No. 8

SCALE: HORIZ 1:100
VERT 1:100

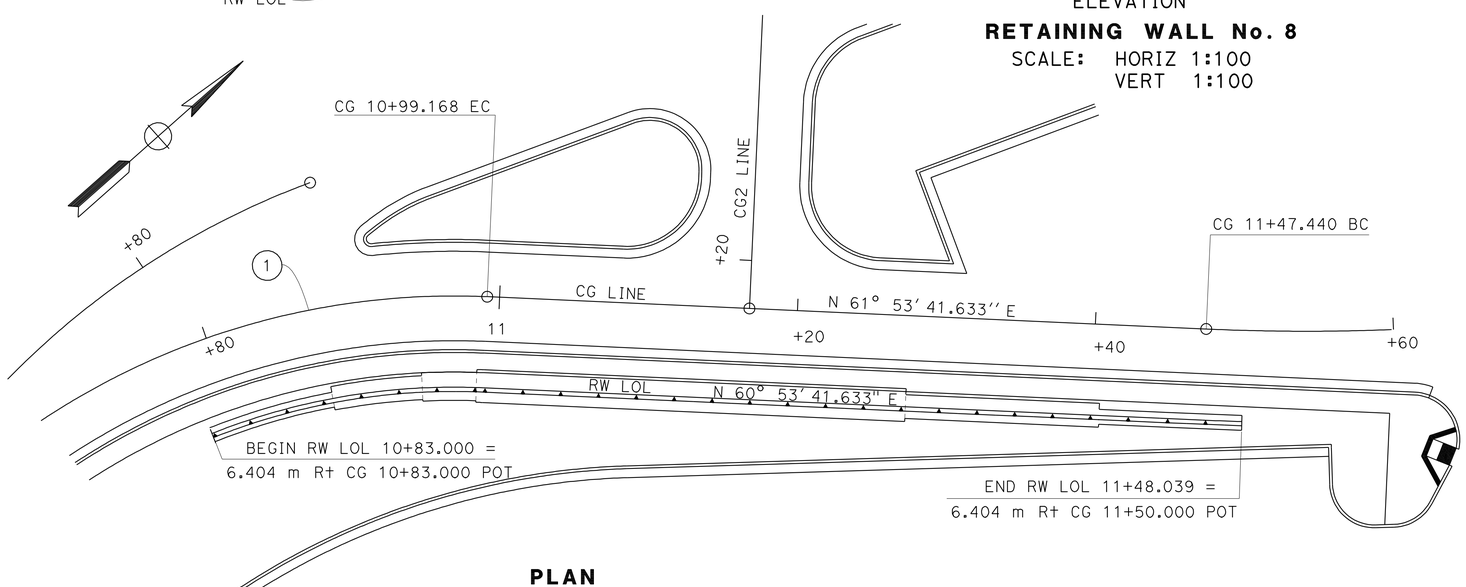

PLAN

SCALE 1:200

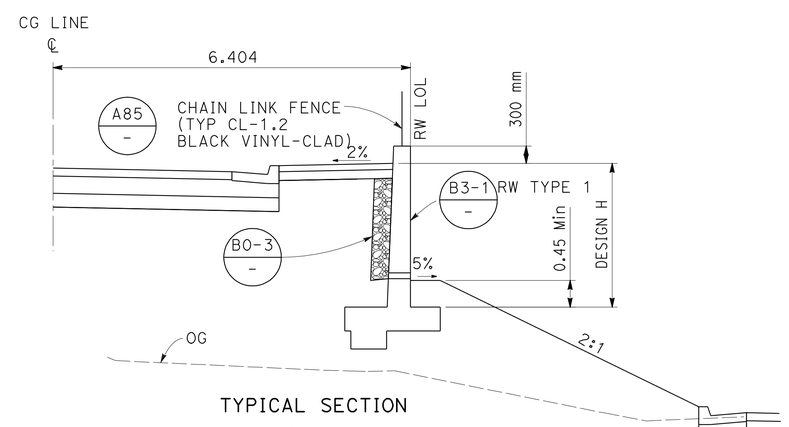

TYPICAL SECTION

RETAINING WALL No. 8

NO SCALE

ALL DIMENSIONS ARE IN METERS UNLESS OTHERWISE SHOWN

CURVE DATA

No.	R	Δ	T	L	N-COORDINATE	E-COORDINATE
1	50	33° 45′ 55.98″	29.755	53.680		

RETAINING WALL PLAN

RETAINING WALL No. 8

SCALE AS SHOWN

R-1

REVISED BY	DATE REVISED
PJ	11-1-11

CALCULATED-DESIGNED BY: PRASHANT JALVI
CHECKED BY: AMANDO VITO
FUNCTIONAL SUPERVISOR: BOB ZANDIPOUR

STATE OF CALIFORNIA - DEPARTMENT OF TRANSPORTATION
Caltrans
DESIGN

LAST REVISION 11-03-11 DATE PLOTTED => 25-FEB-2012 TIME PLOTTED => 10:37

Dist	COUNTY	ROUTE	KILOMETER POST TOTAL PROJECT	SHEET No.	TOTAL SHEETS
04	SF	80	12.6/13.9	220	821

Amando R. Vito 11-03-11
REGISTERED CIVIL ENGINEER DATE

2-21-12
PLANS APPROVAL DATE

REGISTERED PROFESSIONAL ENGINEER Amando R. Vito No. 60914 Exp. 12-31-12 CIVIL STATE OF CALIFORNIA

THE STATE OF CALIFORNIA OR ITS OFFICERS OR AGENTS SHALL NOT BE RESPONSIBLE FOR THE ACCURACY OR COMPLETENESS OF ELECTRONIC COPIES OF THIS PLAN SHEET.

Caltrans Metric

LEGEND

STANDARD PLAN SHEET No.

DETAIL No.

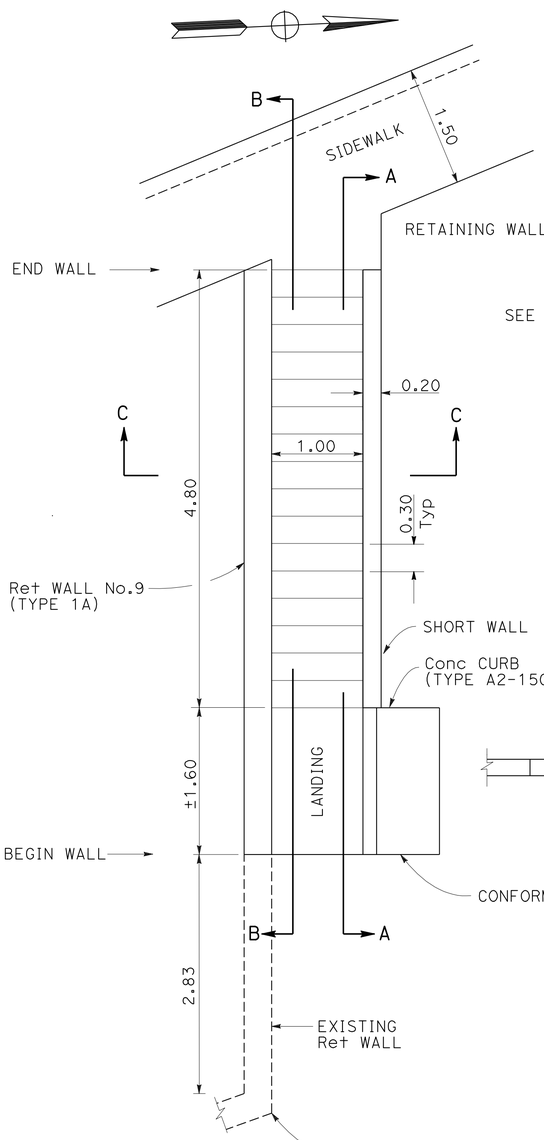

ACCESS STAIR PLAN

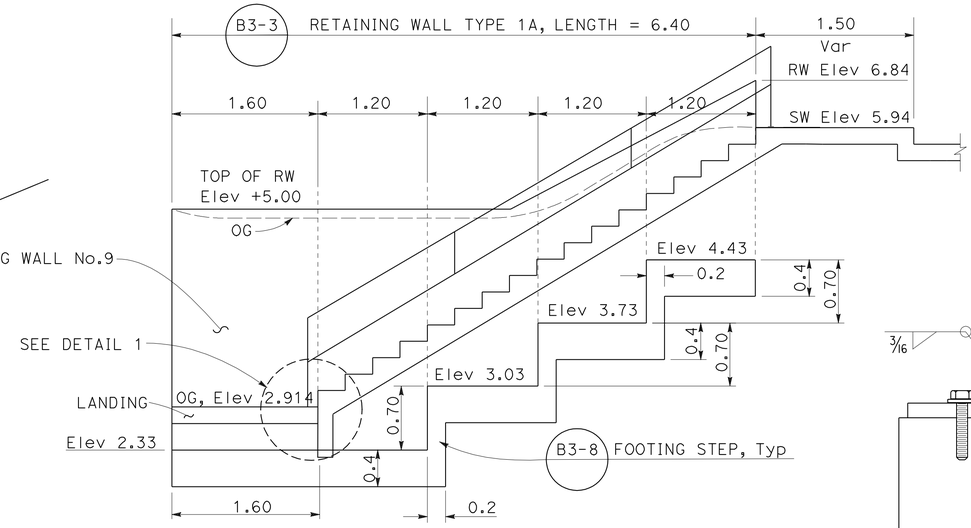

SECTION B-B

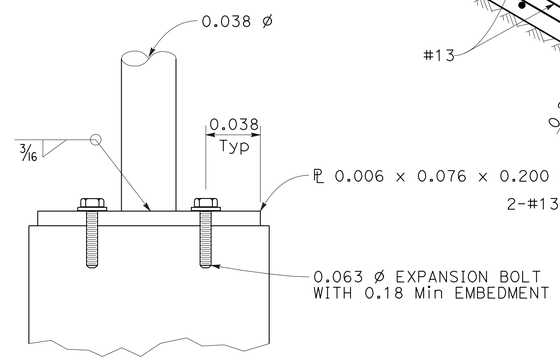

HANDRAIL BASE CONNECTOR

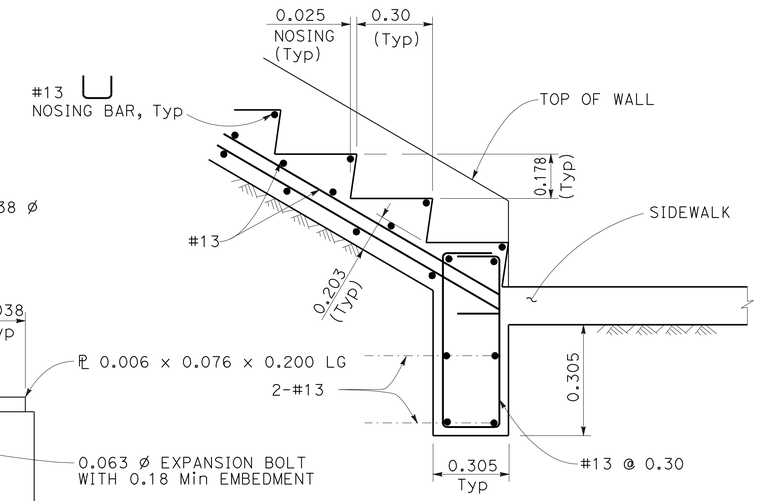

DETAIL 1

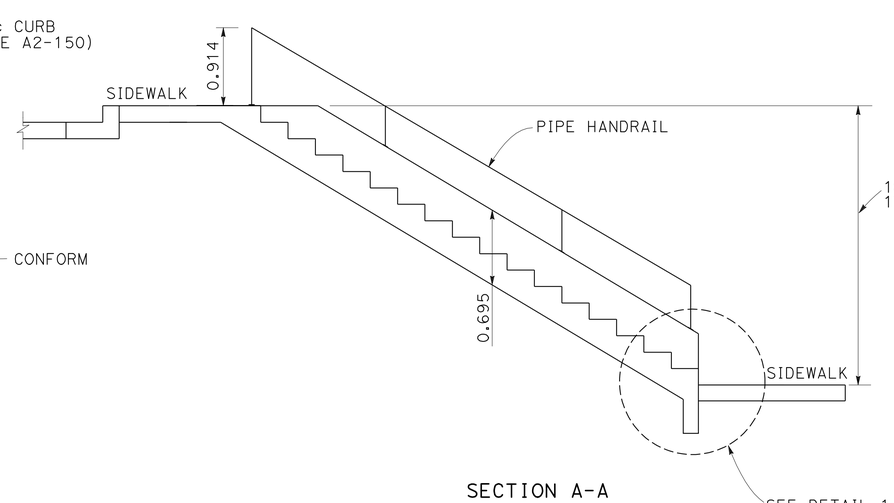

SECTION A-A

ACCESS STAIR PROFILE

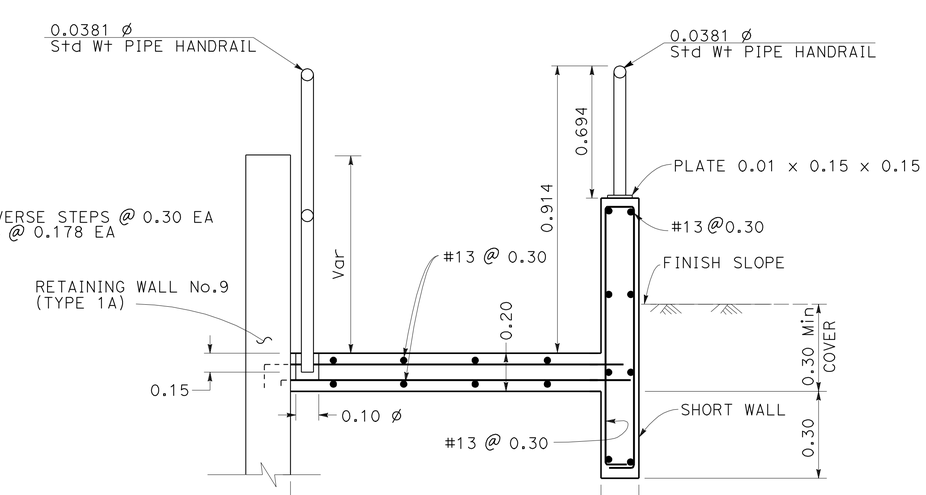

SECTION C-C

ALL DIMENSIONS ARE IN METERS UNLESS OTHERWISE SHOWN

RETAINING WALL PLAN

RETAINING WALL No. 9 & ACCESS STAIRS

SCALE AS SHOWN

R-2

FUNCTIONAL SUPERVISOR	CALCULATED-DESIGNED BY	RODERICK MURRAY	REVISED BY	AV
BOB ZANDIPOUR	CHECKED BY	AMANDO VITO	DATE REVISED	11-1-11

STATE OF CALIFORNIA - DEPARTMENT OF TRANSPORTATION
Caltrans DESIGN

LAST REVISION 11-07-11 | DATE PLOTTED => 25-FEB-2012 | TIME PLOTTED => 10:37

Dist	COUNTY	ROUTE	KILOMETER POST TOTAL PROJECT	SHEET No.	TOTAL SHEETS
04	SF	80	12.6/13.9	221	821

REGISTERED CIVIL ENGINEER 11-1-11 DATE

2-21-12
PLANS APPROVAL DATE

REGISTERED PROFESSIONAL ENGINEER Brian M. Wood No. 76969 Exp. 12-31-12 CIVIL STATE OF CALIFORNIA

THE STATE OF CALIFORNIA OR ITS OFFICERS OR AGENTS SHALL NOT BE RESPONSIBLE FOR THE ACCURACY OR COMPLETENESS OF ELECTRONIC COPIES OF THIS PLAN SHEET.

Caltrans Metric

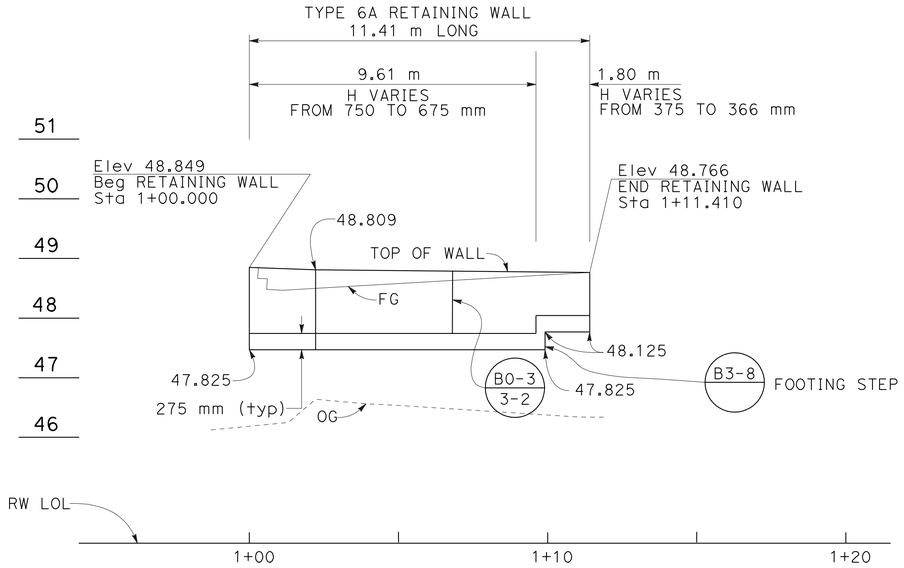

ELEVATION

SCALE Vert: 1:50
Horiz: 1:100

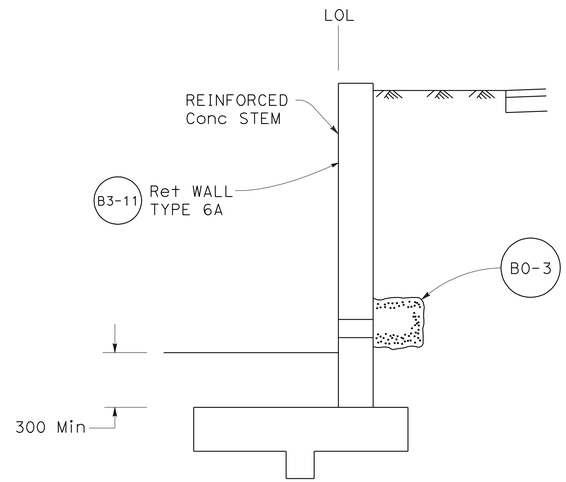

TYPICAL SECTION

NO SCALE

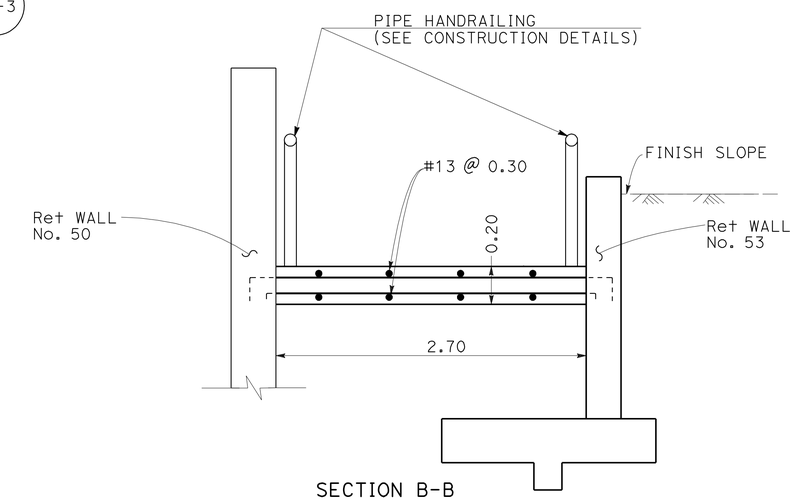

SECTION B-B

NO SCALE

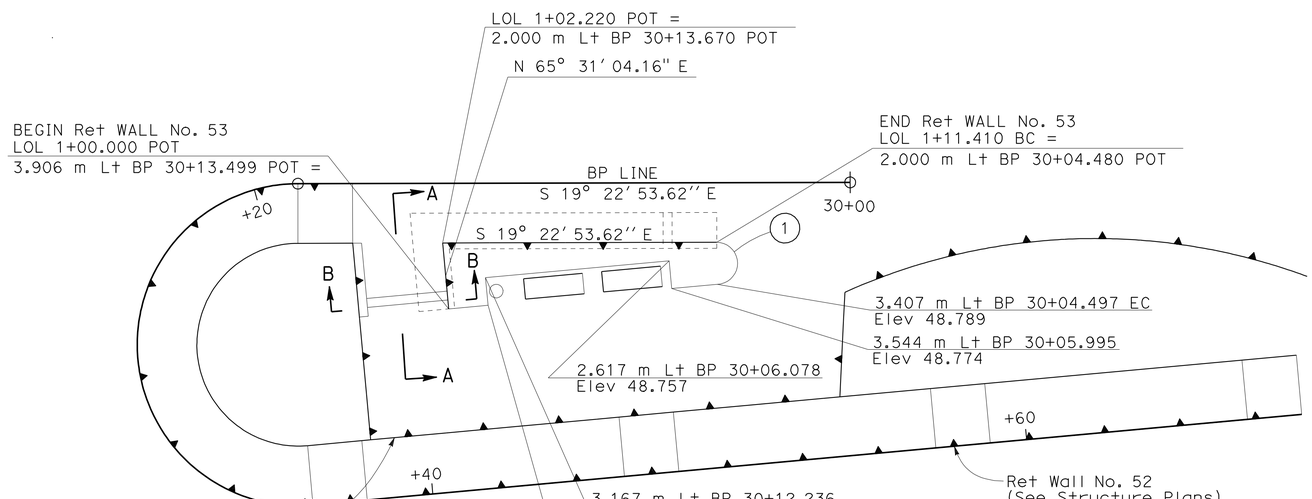

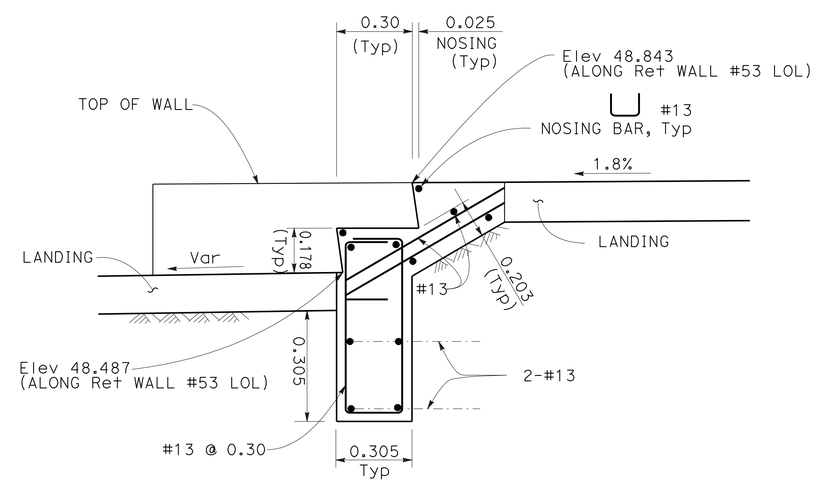

SECTION A-A

NO SCALE

CURVE DATA

No.	R	Δ	T	L
1	0.705	178°00′22″	40.442	2.186

PLAN
RETAINING WALL No. 53
SCALE 1:100

ALL DIMENSIONS ARE IN
METERS UNLESS OTHERWISE SHOWN

RETAINING WALL PLAN

RETAINING WALL No. 53 AND STAIR

SCALE AS SHOWN

R-3

BW	11-1-11	REVISED BY / DATE REVISED
BRIAN WOOD	AMANDO VITO	CALCULATED-DESIGNED BY / CHECKED BY
BOB ZANDIPOUR		FUNCTIONAL SUPERVISOR

STATE OF CALIFORNIA - DEPARTMENT OF TRANSPORTATION
Caltrans
DESIGN

LAST REVISION 11-07-11
DATE PLOTTED => 25-FEB-2012
TIME PLOTTED => 10:37

Dist	COUNTY	ROUTE	KILOMETER POST TOTAL PROJECT	SHEET No.	TOTAL SHEETS
04	SF	80	12.6/13.9	222	821

REGISTERED CIVIL ENGINEER 11/8/11 DATE

2-21-12
PLANS APPROVAL DATE

REGISTERED PROFESSIONAL ENGINEER A. L. ELY No. 18880 Exp. 6-30-13 CIVIL STATE OF CALIFORNIA

THE STATE OF CALIFORNIA OR ITS OFFICERS OR AGENTS SHALL NOT BE RESPONSIBLE FOR THE ACCURACY OR COMPLETENESS OF ELECTRONIC COPIES OF THIS PLAN SHEET.

T.Y. LIN / MOFFATT & NICHOL
TWO HARRISON STREET, SUITE 500
SAN FRANCISCO, CA 94105

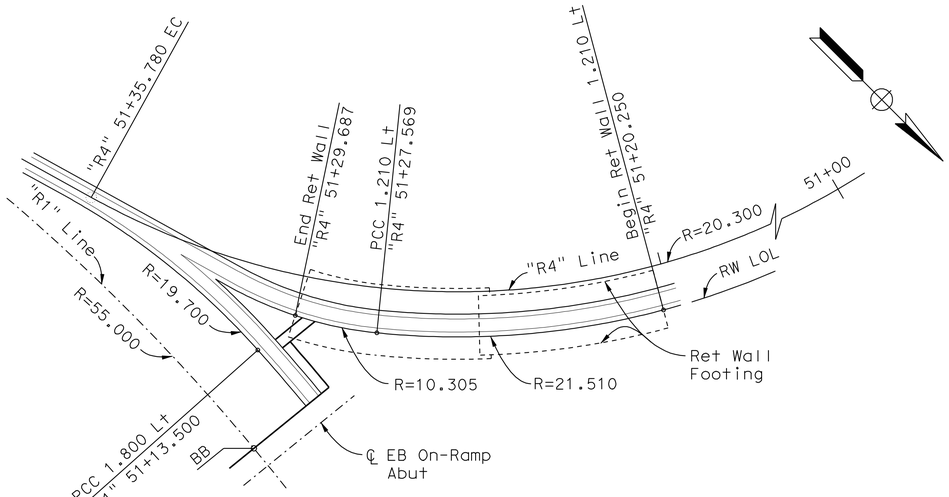

PLAN
1:80

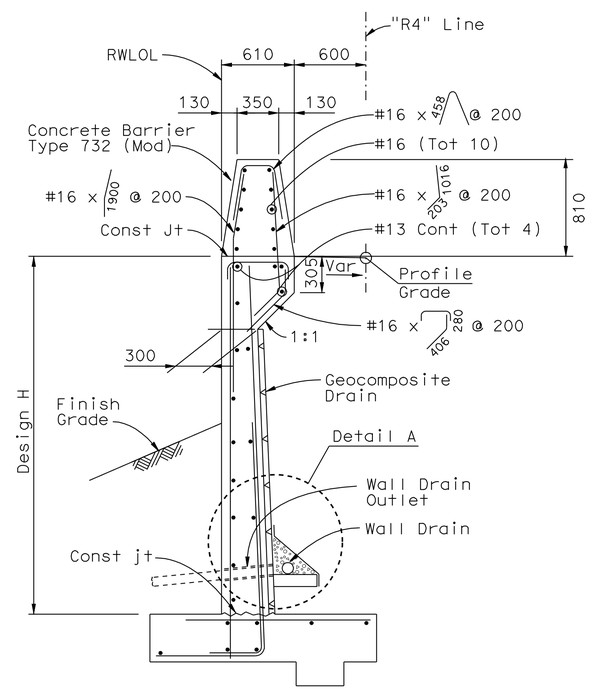

Note: For details not shown, see B3-1, B3-8 & B11-55

TYPICAL SECTION
(Dimensions in millimeters)
1:25

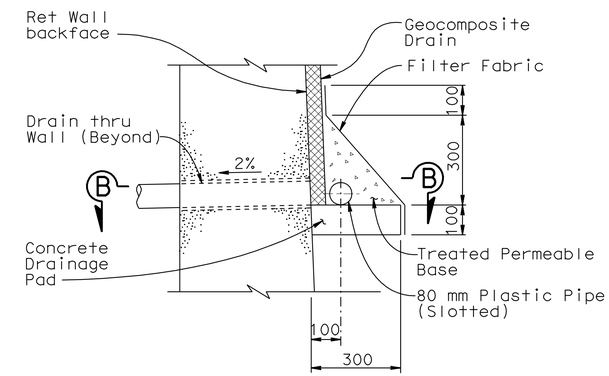

DETAIL A
(Dimensions in millimeters)
No Scale

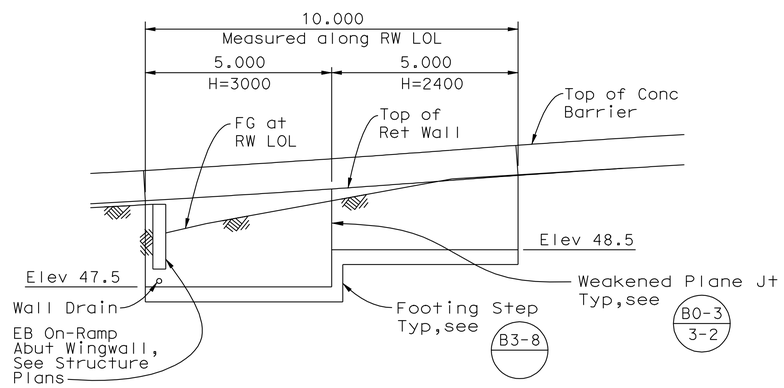

ELEVATION
1:80

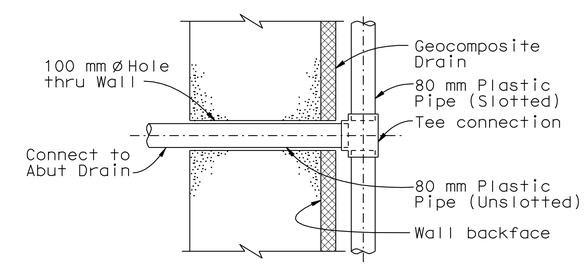

SECTION B-B
(Dimensions in millimeters)
No Scale

APPROXIMATE QUANTITIES - RET WALL 54

Structure excavation (Retaining Wall)..... 56 m^3
Structure backfill (Retaining Wall)..... 46 m^3
Structural concrete, Retaining Wall..... 16 m^3
Bar Reinforcing Steel (Retaining Wall).....565 kg
Concrete Barrier (Type 732 Mod)..... 10 m

ALL DIMENSIONS ARE IN METERS UNLESS OTHERWISE SHOWN

RETAINING WALL No.54

SCALE AS SHOWN

R-4

STATE OF CALIFORNIA - DEPARTMENT OF TRANSPORTATION
Caltrans

CONSULTANT FUNCTIONAL SUPERVISOR: BOB ZANDIPOUR
CALCULATED-DESIGNED BY: T. LEE
CHECKED BY: A. ELY
REVISED BY / DATE REVISED

LAST REVISION 06-16-08
DATE PLOTTED => 25-FEB-2012
TIME PLOTTED => 10:37

Dist	COUNTY	ROUTE	KILOMETER POST TOTAL PROJECT	SHEET No.	TOTAL SHEETS
04	SF	80	12.6/13.9	223	821

Brian M Wood 11-1-11
REGISTERED CIVIL ENGINEER DATE

2-21-12
PLANS APPROVAL DATE

REGISTERED PROFESSIONAL ENGINEER Brian M. Wood No. 76969 Exp. 12-31-12 CIVIL STATE OF CALIFORNIA

THE STATE OF CALIFORNIA OR ITS OFFICERS OR AGENTS SHALL NOT BE RESPONSIBLE FOR THE ACCURACY OR COMPLETENESS OF ELECTRONIC COPIES OF THIS PLAN SHEET.

Caltrans Metric

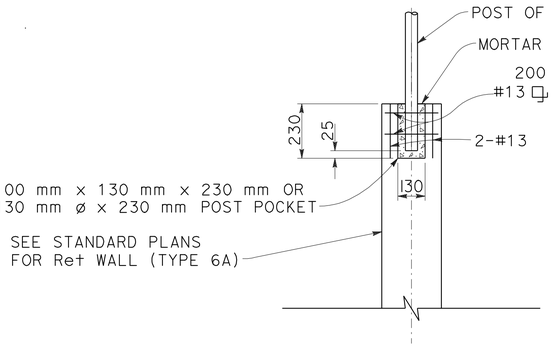

DETAIL A
NO SCALE

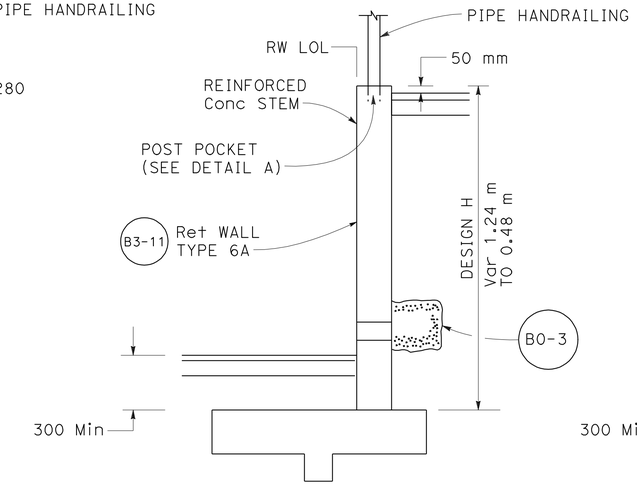

SECTION A-A
NO SCALE

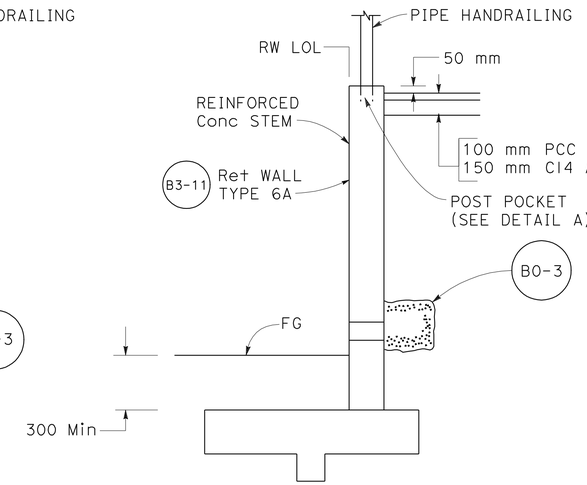

SECTION B-B
NO SCALE

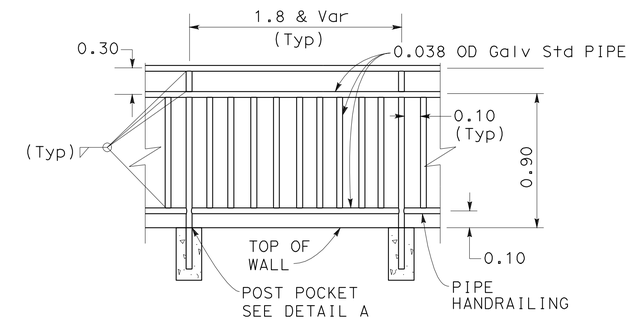

PIPE HANDRAILING
DETAIL

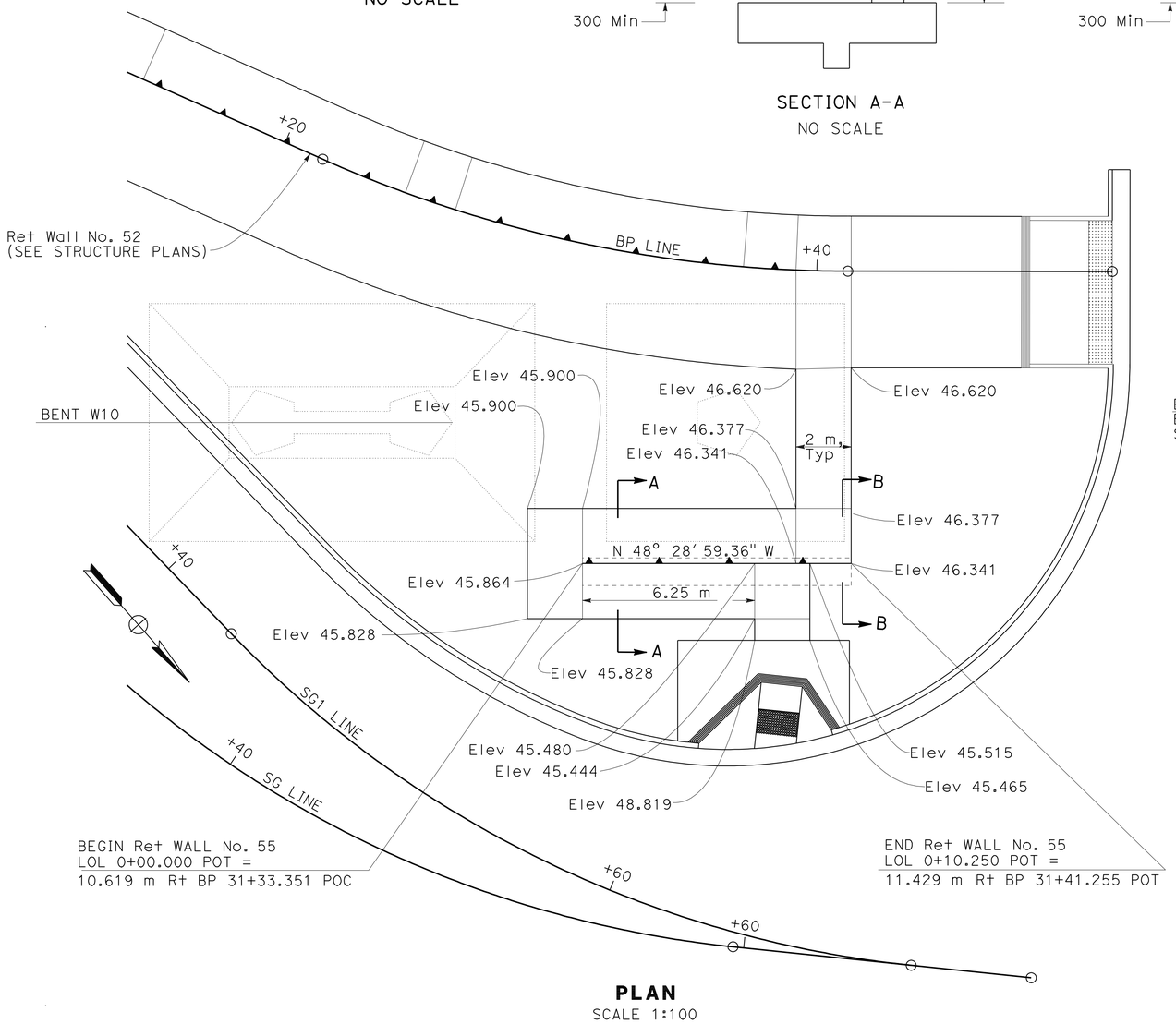

PLAN
SCALE 1:100

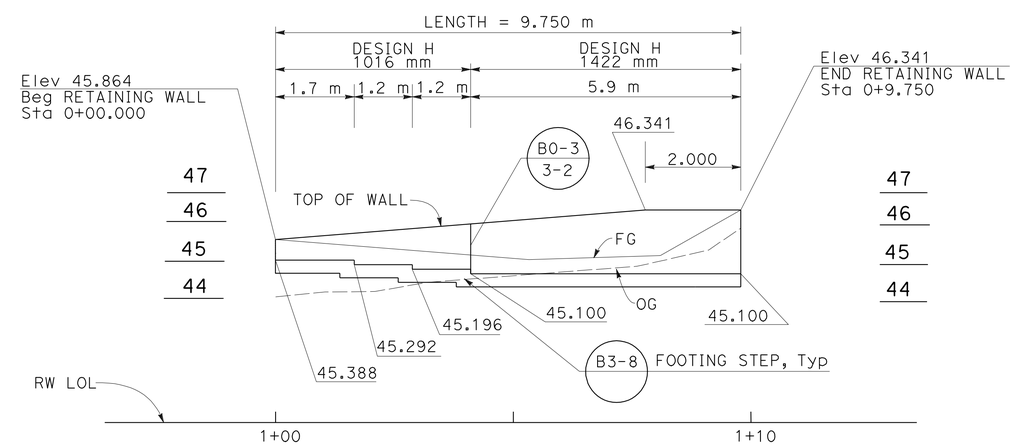

ELEVATION
SCALE Vert 1:50
Horiz 1:50

LEGEND
STANDARD PLAN SHEET No.
DETAIL No.

ALL DIMENSIONS ARE IN
METERS UNLESS OTHERWISE SHOWN

RETAINING WALL PLAN
RETAINING WALL No. 55
SCALE AS SHOWN

R-5

REVISED BY	DATE REVISED
BW	11-1-11

BRIAN WOOD — CALCULATED-DESIGNED BY
AMANDO VITO — CHECKED BY
BOB ZANDIPOUR — FUNCTIONAL SUPERVISOR

STATE OF CALIFORNIA - DEPARTMENT OF TRANSPORTATION
Caltrans
DESIGN

LAST REVISION 02-08-12 | DATE PLOTTED => 25-FEB-2012 | TIME PLOTTED => 10:37

Dist	COUNTY	ROUTE	KILOMETER POST TOTAL PROJECT	SHEET No.	TOTAL SHEETS
04	SF	80	12.6/13.9	224	821

Mike Kapuskar 10-24-11
REGISTERED CIVIL ENGINEER DATE

2-21-12
PLANS APPROVAL DATE

REGISTERED PROFESSIONAL ENGINEER MIKE KAPUSKAR NO. GE 2564 EXP. 12-31-12 GEOTECHNICAL STATE OF CALIFORNIA

THE STATE OF CALIFORNIA OR ITS OFFICERS OR AGENTS SHALL NOT BE RESPONSIBLE FOR THE ACCURACY OR COMPLETENESS OF ELECTRONIC COPIES OF THIS PLAN SHEET.

EARTH MECHANICS, Inc.
7750 Pardee Lane, Suite 120
Oakland, CA 94621

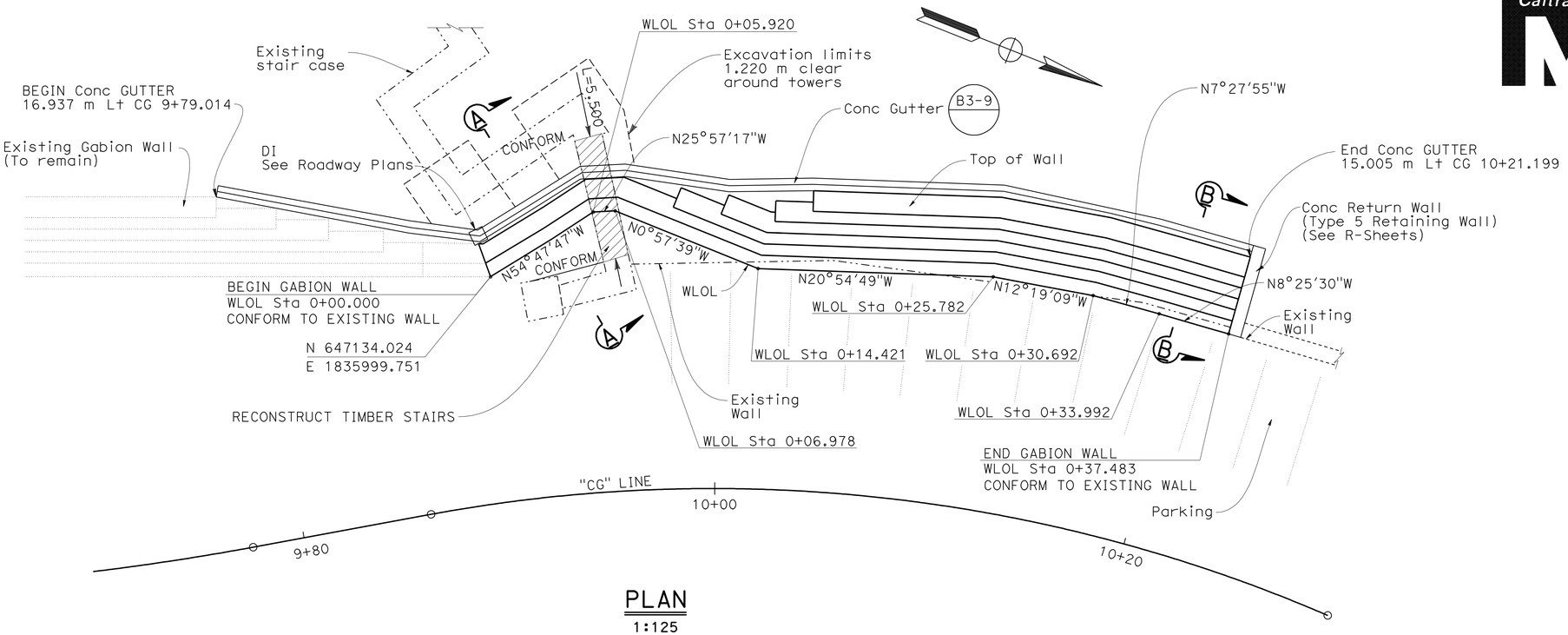

PLAN
1:125

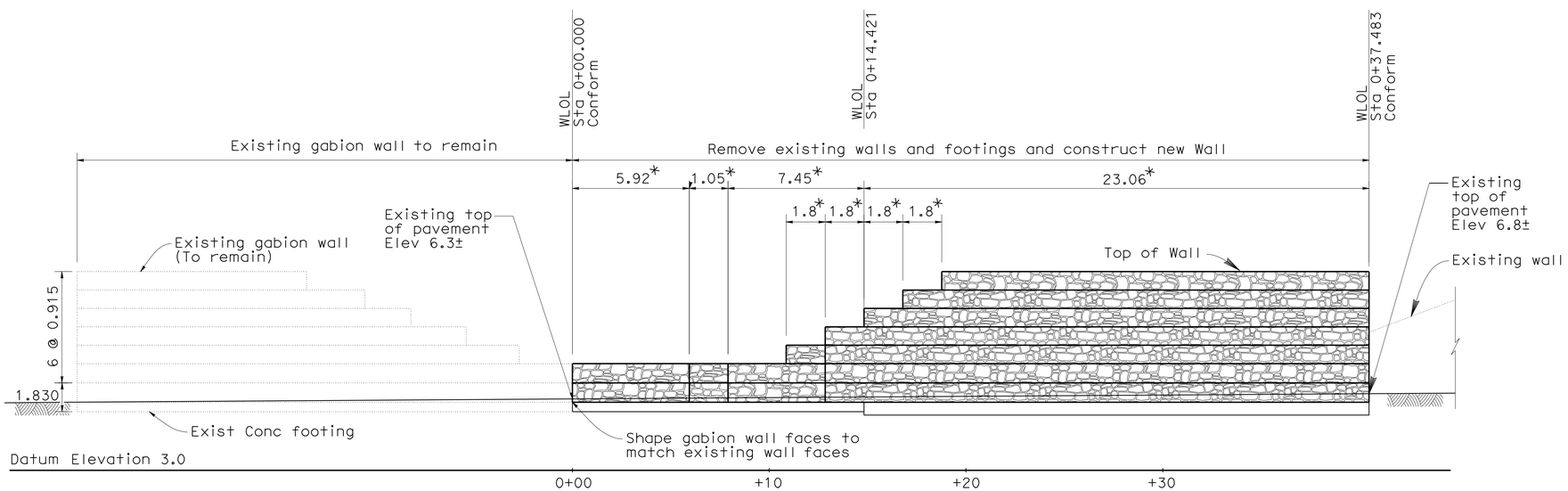

DEVELOPED ELEVATION
1:125

Note:

* Measured along WLOL, to be verified by Engineer in the field

Notes:
1. For Sections A-A and B-B, see "Wall Details No. 1" sheet.
2. The contractor shall verify all controlling field dimensions before ordering or fabricating any material.

Legend:
(For sheets R-6 and R-7 only)

Reconstruction Limits

ALL DIMENSIONS ARE IN METERS UNLESS OTHERWISE SHOWN

RETAINING WALL PLAN
GABION WALL
SCALE AS SHOWN

R-6

REVISED BY	DATE REVISED
AK	5-20-11

CALCULATED-DESIGNED BY: A. KORKOS
CHECKED BY: P. ESPINOSA
CONSULTANT FUNCTIONAL SUPERVISOR: BOB ZANDIPOUR

STATE OF CALIFORNIA - DEPARTMENT OF TRANSPORTATION
Caltrans

LAST REVISION 10-30-11
DATE PLOTTED => 25-FEB-2012
TIME PLOTTED => 10:37

Notes:
1. Construct Gabion Wall to conform with existing. As-built plans are available as Information Handout.
2. Provide connection between Geogrid reinforcement and gabion per Manufacturer's specifications of Geosynthetic Reinforced Embankment

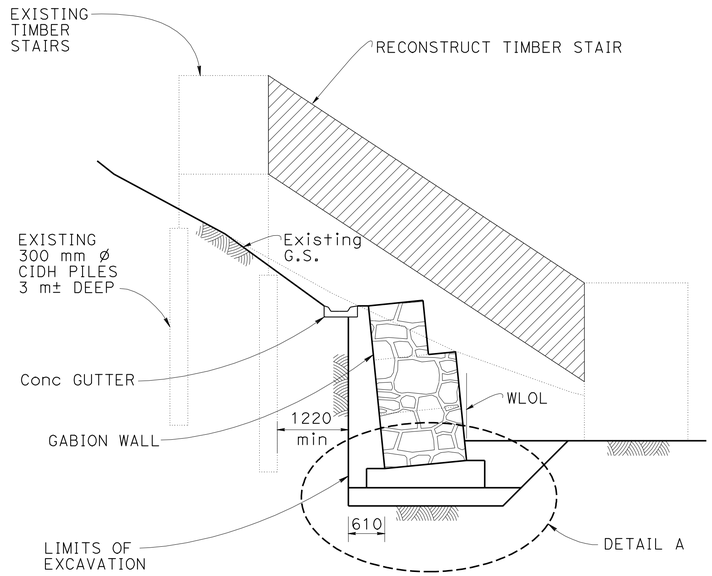

SECTION A-A

Sta 0+0.000 to 0+08.100
SCALE 1:50

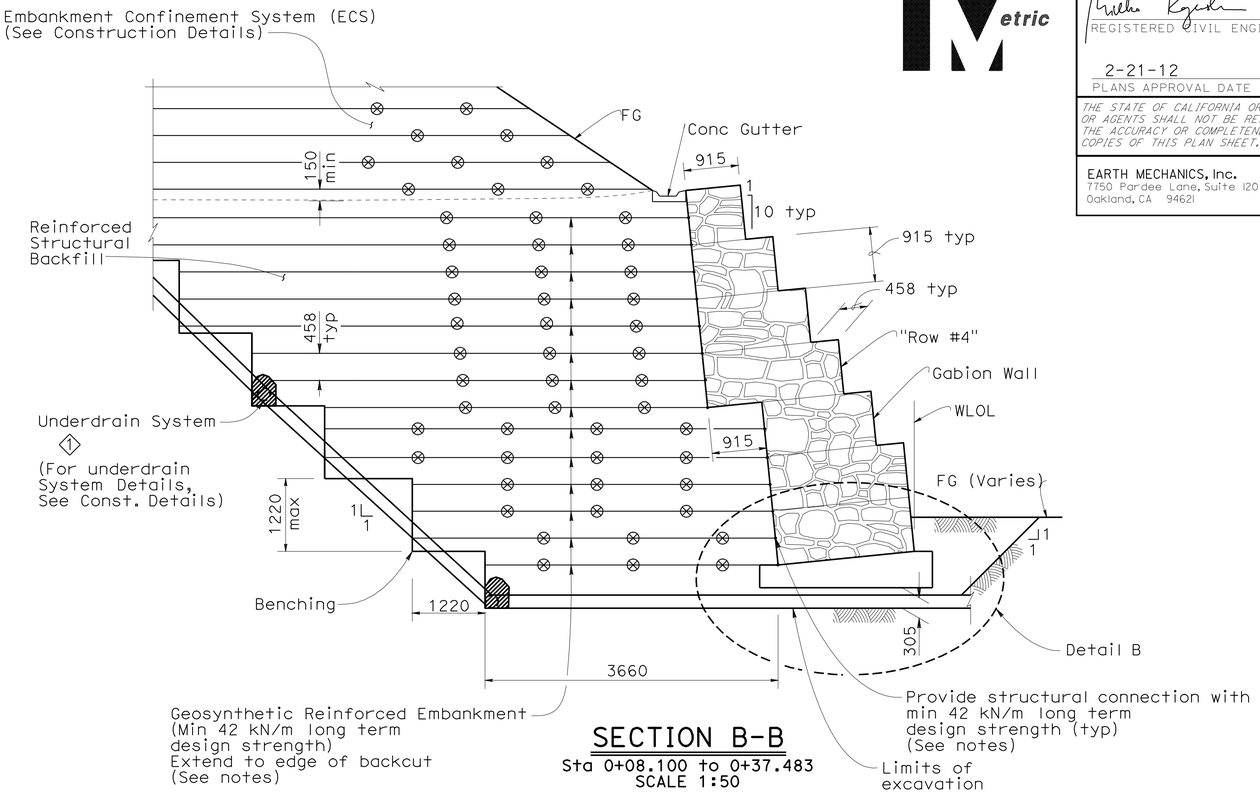

SECTION B-B

Sta 0+08.100 to 0+37.483
SCALE 1:50

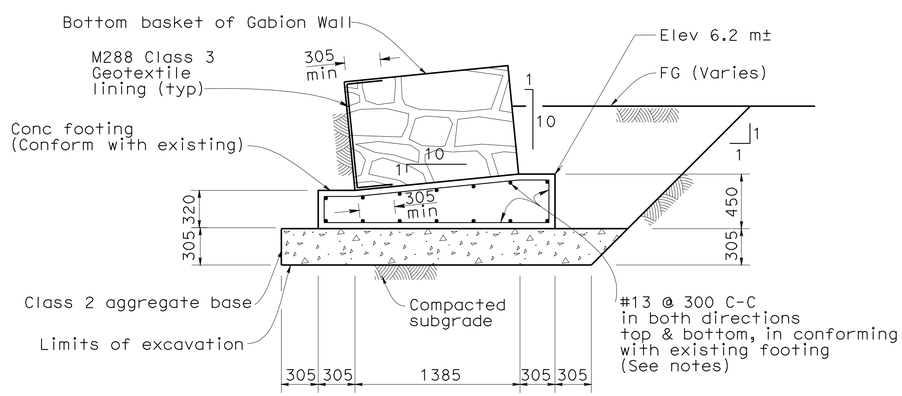

WALL FOUNDATION DETAIL A

SCALE 1:25

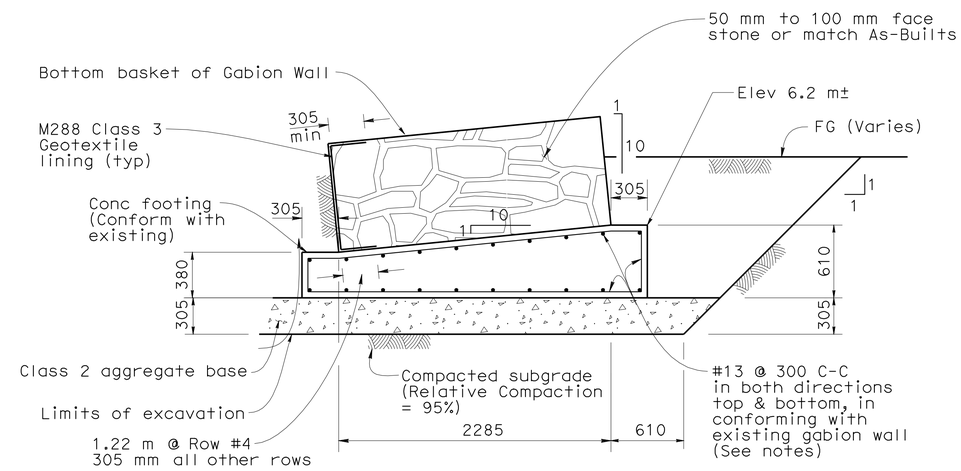

WALL FOUNDATION DETAIL B

SCALE 1:25

ALL DIMENSIONS ARE IN MILLIMETERS UNLESS OTHERWISE SHOWN

RETAINING WALL PLAN

GABION WALL - WALL DETAILS No. 1

SCALE AS SHOWN

R-7

Dist	COUNTY	ROUTE	KILOMETER POST TOTAL PROJECT	SHEET No.	TOTAL SHEETS
04	SF	80	12.6/13.9	225	821

REGISTERED CIVIL ENGINEER 10-24-11 DATE

2-21-12
PLANS APPROVAL DATE

REGISTERED PROFESSIONAL ENGINEER MIKE KAPUSKAR NO. GE 2564 EXP. 12-31-12 GEOTECHNICAL STATE OF CALIFORNIA

THE STATE OF CALIFORNIA OR ITS OFFICERS OR AGENTS SHALL NOT BE RESPONSIBLE FOR THE ACCURACY OR COMPLETENESS OF ELECTRONIC COPIES OF THIS PLAN SHEET.

EARTH MECHANICS, Inc.
7750 Pardee Lane, Suite 120
Oakland, CA 94621

REVISED BY	DATE REVISED
AK	5-20-11

CALCULATED-DESIGNED BY: A. KORKOS
CHECKED BY: P. ESPINOSA
CONSULTANT FUNCTIONAL SUPERVISOR: BOB ZANDIPOUR

STATE OF CALIFORNIA - DEPARTMENT OF TRANSPORTATION
Caltrans

LAST REVISION 10-10-11
DATE PLOTTED => 14-MAR-2012
TIME PLOTTED => 13:59

Dist	COUNTY	ROUTE	KILOMETER POST TOTAL PROJECT	SHEET No.	TOTAL SHEETS
04	SF	80	12.6/13.9	226	821

Brian M Wood 11-1-11
REGISTERED CIVIL ENGINEER DATE

2-21-12
PLANS APPROVAL DATE

REGISTERED PROFESSIONAL ENGINEER Brian M. Wood No. 76969 Exp. 12-31-12 CIVIL STATE OF CALIFORNIA

THE STATE OF CALIFORNIA OR ITS OFFICERS OR AGENTS SHALL NOT BE RESPONSIBLE FOR THE ACCURACY OR COMPLETENESS OF ELECTRONIC COPIES OF THIS PLAN SHEET.

Caltrans Metric

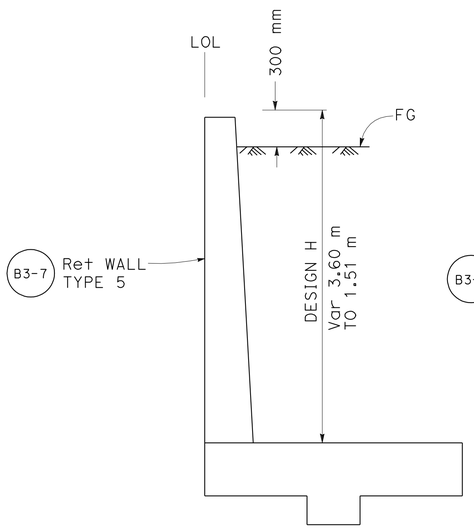

TYPICAL SECTION
Sta 0+00.00 to 0+02.65
NO SCALE

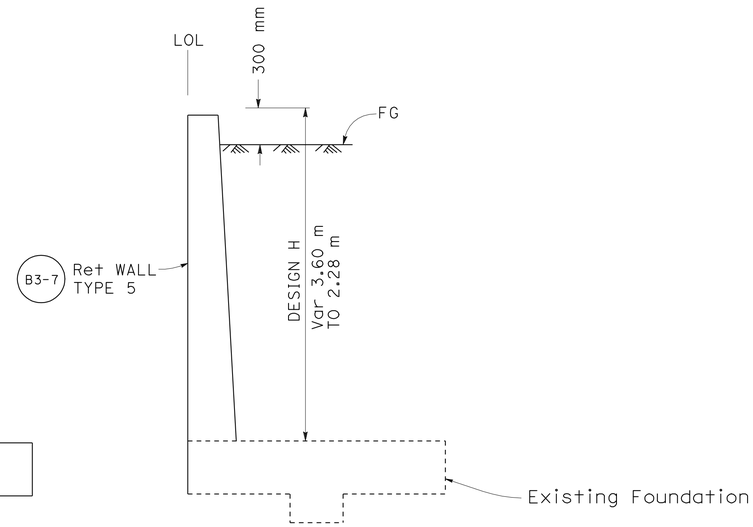

TYPICAL SECTION
Sta 0+02.65 to 0+03.83
NO SCALE

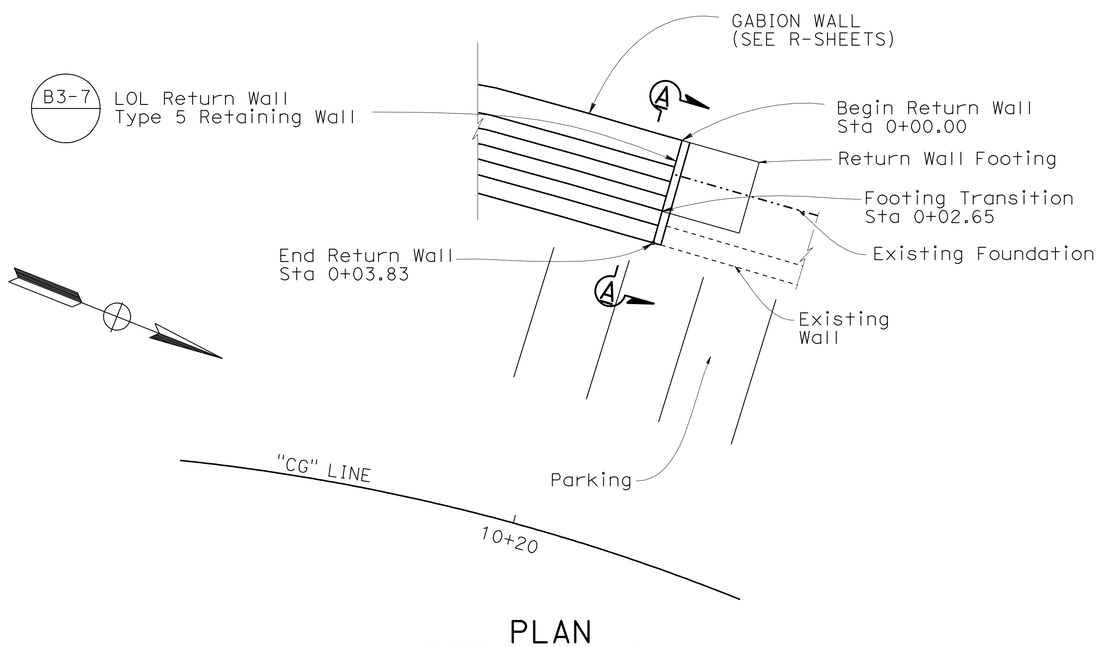

PLAN
RETURN WALL
(TYPE 5 Ret WALL)
NO SCALE

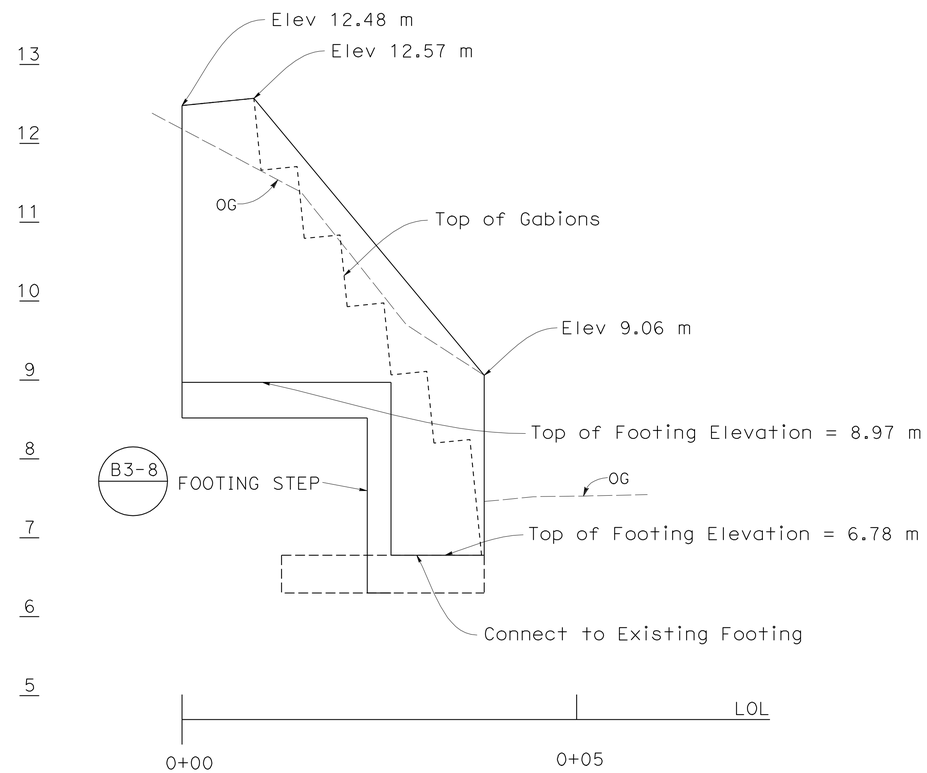

SECTION A-A
No Scale

ALL DIMENSIONS ARE IN
METERS UNLESS OTHERWISE SHOWN

RETAINING WALL PLAN
GABION WALL - RETURN WALL
(TYPE 5 RETAINING WALL)

SCALE AS SHOWN

R-8

BW	11-1-11	REVISED BY	DATE REVISED
BRIAN WOOD	AMANDO VITO	CALCULATED-DESIGNED BY	CHECKED BY
FUNCTIONAL SUPERVISOR	BOB ZANDIPOUR		

STATE OF CALIFORNIA - DEPARTMENT OF TRANSPORTATION
Caltrans
DESIGN

LAST REVISION 11-04-11 DATE PLOTTED => 25-FEB-2012 TIME PLOTTED => 10:38

Dist	COUNTY	ROUTE	KILOMETER POST TOTAL PROJECT	SHEET No.	TOTAL SHEETS
04	SF	80	12.6/13.9	227	821

Brian M Wood 11-1-11
REGISTERED CIVIL ENGINEER DATE

2-21-12
PLANS APPROVAL DATE

REGISTERED PROFESSIONAL ENGINEER Brian M. Wood No. 76969 Exp. 12-31-12 CIVIL STATE OF CALIFORNIA

THE STATE OF CALIFORNIA OR ITS OFFICERS OR AGENTS SHALL NOT BE RESPONSIBLE FOR THE ACCURACY OR COMPLETENESS OF ELECTRONIC COPIES OF THIS PLAN SHEET.

Caltrans Metric

RETAINING WALL QUANTITIES

RETAINING WALL	STRUCTURE EXCAVATION (RETAINING WALL)	STRUCTURE BACKFILL (RETAINING WALL)	STRUCTURE CONCRETE (RETAINING WALL)	BAR REINFORCEMENT STEEL (RETAINING WALL)	GABIONS	CL 2 AB	MINOR CONCRETE (GUTTER)
	m3		m3	kg	m3		m
No. 8 (TYPE 1 Ret WALL)	152	54	99	39250			
No. 9 AND ACCESS STAIR (TYPE 1A Ret WALL)	70	56	9	410			
No. 53 AND STAIR (TYPE 6 Ret WALL)		17	8	2625			
No. 54	56	46	16	565			
No. 55 (TYPE 6 Ret WALL)	8	13	6	2100			
GABION WALL	464		57	22515	322	68	52
RETURN WALL (TYPE 5 Ret WALL)	55		10	3950			
SUBTOTAL	805	186	205	71415	322	68	52
FROM STRUCTURE PLANS	1732	1270	692	55000			115
TOTAL	2537	1456	897	126415	322	68	167

STATE OF CALIFORNIA - DEPARTMENT OF TRANSPORTATION
Caltrans DESIGN

FUNCTIONAL SUPERVISOR: BOB ZANDIPOUR
CALCULATED-DESIGNED BY: BRIAN WOOD
CHECKED BY: AMANDO VITO
REVISED BY: BW
DATE REVISED: 11-1-11

RETAINING WALL QUANTITIES

R-9

LAST REVISION 11-04-11
DATE PLOTTED => 25-FEB-2012
TIME PLOTTED => 10:38

Dist	COUNTY	ROUTE	KILOMETER POST TOTAL PROJECT	SHEET No.	TOTAL SHEETS
04	SF	80	12.6/13.9	228	821

Caltrans Metric

Lorena Wong
LICENSED LANDSCAPE ARCHITECT

2-21-12
PLANS APPROVAL DATE

LICENSED LANDSCAPE ARCHITECT
LORENA WONG No. 3304
Lorena Wong
Signature
5-31-13
Renewal Date
10-4-11
Date
STATE OF CALIFORNIA

THE STATE OF CALIFORNIA OR ITS OFFICERS OR AGENTS SHALL NOT BE RESPONSIBLE FOR THE ACCURACY OR COMPLETENESS OF ELECTRONIC COPIES OF THIS PLAN SHEET.

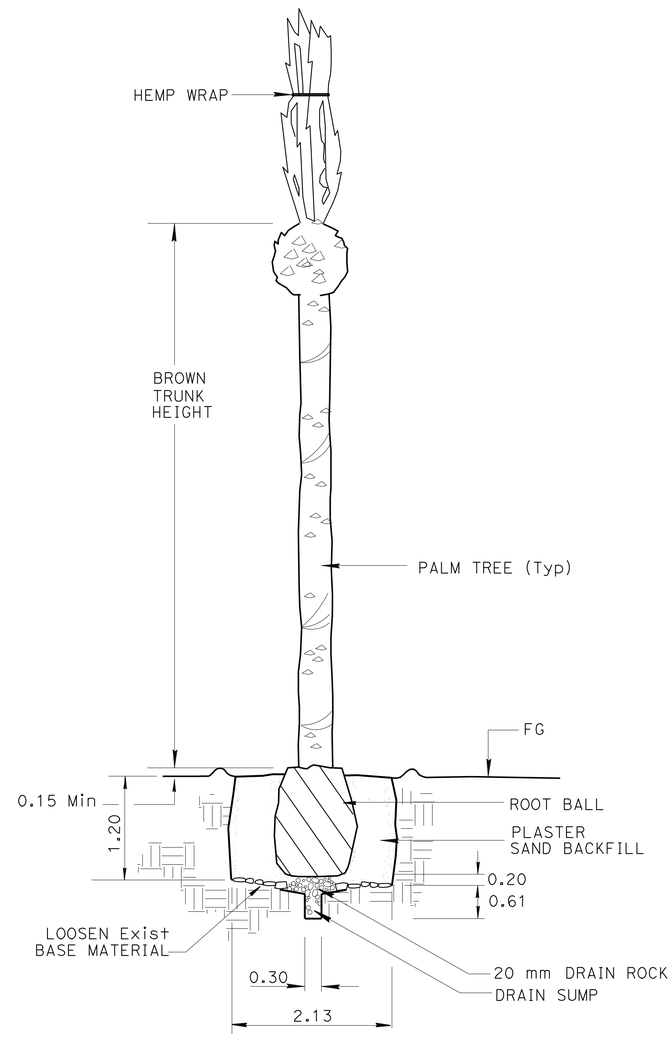

SECTION

TRANSPLANT PALM TREE

ALL DIMENSIONS ARE IN METERS UNLESS OTHERWISE SHOWN

LANDSCAPE DETAIL

NO SCALE

LD-1

CALCULATED-DESIGNED BY	REBECCA J DEVERS
CHECKED BY	FELIX ONUKWUGHA
REVISED BY	RD
DATE REVISED	10/19/11
SENIOR LANDSCAPE ARCHITECT	LORENA WONG

STATE OF CALIFORNIA - DEPARTMENT OF TRANSPORTATION
Caltrans LANDSCAPE ARCHITECTURE

LAST REVISION 11/04/11 | DATE PLOTTED => 25-FEB-2012 | TIME PLOTTED => 10:38

Dist	COUNTY	ROUTE	KILOMETER POST TOTAL PROJECT	SHEET No.	TOTAL SHEETS
04	SF	80	12.6/13.9	229	821

Syn Yee Chin 02/16/12
REGISTERED ELECTRICAL ENGINEER

2-21-12
PLANS APPROVAL DATE

REGISTERED PROFESSIONAL ENGINEER SYN YEE CHIN No. 18186 Exp. 09/30/2013 ELECTRICAL STATE OF CALIFORNIA

THE STATE OF CALIFORNIA OR ITS OFFICERS OR AGENTS SHALL NOT BE RESPONSIBLE FOR THE ACCURACY OR COMPLETENESS OF ELECTRONIC COPIES OF THIS PLAN SHEET.

PB AMERICAS, Inc.
303 Second St., Suite 700N
San Francisco, CA 94107-1317

Caltrans Metric

DRAWING TITLE	DRAWING NO.
ELECTRICAL SHEET INDEX	E-1
ELECTRICAL SYMBOLS	E-2
ELECTRICAL SYMBOLS AND ABBREVIATIONS	E-3
ELECTRICAL NOTES AND ABBREVIATIONS	E-4
ELECTRICAL KEY MAP	E-5
UNDERGROUND (GROUND INTERFACE)	E-6
DETAILS UNDERGROUND (FOUNDATION GROUNDING)	E-7
YBI TRANSITION STRUCTURES ROADWAY WESTBOUND (LIGHTING AND ELECTRICAL SYSTEMS)	E-8
YBI TRANSITION STRUCTURES ROADWAY WESTBOUND (LIGHTING AND ELECTRICAL SYSTEMS)	E-9
DETAILS YBI TRANSITION STRUCTURES ROADWAY WESTBOUND (LIGHT POLE CONDUIT LOCATIONS)	E-10
DETAILS YBI TRANSITION STRUCTURES ROADWAY WESTBOUND (BARRIER CONDUIT STUB-OUT DETAILS)	E-11
DETAILS YBI TRANSITION STRUCTURES ROADWAY WESTBOUND (480 V ROADWAY LIGHTING WIRING DIAGRAM)	E-12
DETAILS YBI TRANSITION STRUCTURES ROADWAY WESTBOUND (PULL BOX, LIGHT POLE AND FIXTURE SCHEDULES)	E-13
YBI TRANSITION STRUCTURES ROADWAY AND GIRDER EASTBOUND (LIGHTING AND ELECTRICAL SYSTEMS)	E-14 THRU E-21
DETAILS YBI TRANSITION STRUCTURES ROADWAY AND GIRDER EASTBOUND (TOS CONTROLLER CABINET PAD LAYOUT WITH CONDUIT LOCATIONS)	E-22
DETAILS YBI TRANSITION STRUCTURES ROADWAY AND GIRDER EASTBOUND (CONDUIT DETAILS)	E-23
DETAILS YBI TRANSITION STRUCTURES ROADWAY AND GIRDER EASTBOUND (TYPICAL BIKE PATH SECTIONS AND DETAILS)	E-24 THRU E-26
DETAILS YBI TRANSITION STRUCTURES ROADWAY AND GIRDER EASTBOUND (BIKE PATH RAILING LIGHTING)	E-27
DETAILS YBI TRANSITION STRUCTURES ROADWAY AND GIRDER EASTBOUND (BIKE PATH LANDING LIGHTING ASSEMBLY)	E-28
DETAILS YBI TRANSITION STRUCTURES ROADWAY AND GIRDER EASTBOUND (ROADWAY LIGHTING POLE AND ANCHORAGE)	E-29
DETAILS YBI TRANSITION STRUCTURES ROADWAY AND GIRDER EASTBOUND (TYPICAL LIGHT PIPE CONDUIT SECTIONS AND DETAILS)	E-30
DETAILS YBI TRANSITION STRUCTURES ROADWAY AND GIRDER EASTBOUND (TYPICAL LIGHT PIPE INSTALLATION 1)	E-31
DETAILS YBI TRANSITION STRUCTURES ROADWAY AND GIRDER EASTBOUND (TYPICAL LIGHT PIPE INSTALLATION 2)	E-32
DETAILS YBI TRANSITION STRUCTURES ROADWAY AND GIRDER EASTBOUND (TYPICAL LIGHT PIPE INSTALLATION 3)	E-33
DETAILS YBI TRANSITION STRUCTURES ROADWAY AND GIRDER EASTBOUND (CALL BOX AT ROADWAY, SECTIONS AND DETAILS)	E-34
DETAILS YBI TRANSITION STRUCTURES ROADWAY AND GIRDER EASTBOUND (CALL BOX AT BIKE PATH AND BELVEDERE: SECTIONS AND DETAILS)	E-35
DETAILS YBI TRANSITION STRUCTURES ROADWAY AND GIRDER EASTBOUND (TYPICAL CALL BOX SECTIONS AND DETAILS)	E-36
DETAILS YBI TRANSITION STRUCTURES ROADWAY AND GIRDER EASTBOUND (BELVEDERE LIGHT POST)	E-37
DETAILS YBI TRANSITION STRUCTURES ROADWAY AND GIRDER EASTBOUND (BENT W8R)	E-38
DETAILS YBI TRANSITION STRUCTURES ROADWAY AND GIRDER EASTBOUND (PLATFORM #1E ARRANGEMENT PLAN)	E-39
DETAILS YBI TRANSITION STRUCTURES ROADWAY AND GIRDER EASTBOUND (BENT W5R)	E-40
DETAILS YBI TRANSITION STRUCTURES ROADWAY AND GIRDER EASTBOUND (480 V RAMP POLE LIGHTING WIRING DIAGRAM)	E-41
DETAILS YBI TRANSITION STRUCTURES ROADWAY AND GIRDER EASTBOUND (480 V LIGHT PIPE WIRING DIAGRAM)	E-42
DETAILS YBI TRANSITION STRUCTURES ROADWAY AND GIRDER EASTBOUND (120 V BIKE PATH LIGHTING WIRING DIAGRAM)	E-43 THRU E-45
DETAILS YBI TRANSITION STRUCTURES ROADWAY AND GIRDER EASTBOUND (PULL BOX, LIGHT PIPE, LIGHT POLE AND FIXTURE SCHEDULES)	E-46
DETAILS YBI TRANSITION STRUCTURES ROADWAY AND GIRDER EASTBOUND (PANEL LP-217 SCHEDULE)	E-47
CALL BOX SYSTEM YBI TRANSITION STRUCTURES ROADWAY WESTBOUND (CALL BOX LOCATIONS)	E-48
CALL BOX SYSTEM YBI TRANSITION STRUCTURES ROADWAY AND GIRDER EASTBOUND (CALL BOX LOCATIONS)	E-49
DETAILS CALL BOX SYSTEM (CALL BOX WIRING DIAGRAM)	E-50
DETAILS CALL BOX SYSTEM (CALL BOX WIRING DIAGRAM)	E-51
DETAILS CALL BOX SYSTEM (CALL BOX SCHEDULES)	E-52
TRAFFIC OPERATIONS SYSTEM (FIELD ELEMENT LOCATIONS)	E-53
DETAILS TRAFFIC OPERATIONS SYSTEM (RAMP METER SYSTEM INSTALLATION)	E-54
DETAILS TRAFFIC OPERATIONS SYSTEM (RAMP METER CONTROLLER CONFIGURATION AND SYSTEM BLOCK DIAGRAM)	E-55
DETAILS TRAFFIC OPERATIONS SYSTEM (TYPICAL FIBER OPTIC SPLICE)	E-56
DETAILS TRAFFIC OPERATIONS SYSTEM (FIBER OPTIC TERMINATIONS FOR EASTBOUND)	E-57
REMOVING AND SALVAGING ELECTRICAL DEVICES WEST TIE-IN DEMOLITION (BENT 38 TO BENT 48)	E-58
REMOVING AND SALVAGING ELECTRICAL DEVICES SOUTH-SOUTH DETOUR VIADUCT DEMOLITION (BENT 48 TO BENT 52)	E-59
REMOVING AND SALVAGING ELECTRICAL DEVICES EAST TIE-IN DEMOLITION (BENT 52 TO PIER E1)	E-60
REMOVING AND SALVAGING ELECTRICAL DEVICES CANTILEVER DEMOLITION PIER E1 TO PIER E4	E-61
CABLE AND CIRCUIT SCHEDULE	E-62 THRU E-68
CONDUIT AND TRAY SCHEDULE TBI TRANSITION STRUCTURES ROADWAY WB	E-69 THRU E-71
CONDUIT AND TRAY SCHEDULE YBI TRANSITION STRUCTURES ROADWAY AND GIRDER EB	E-72 THRU E-92

ELECTRICAL SHEET INDEX

E-1

STATE OF CALIFORNIA - DEPARTMENT OF TRANSPORTATION
Caltrans

CONSULTANT FUNCTIONAL SUPERVISOR: BOB ZANDIPOUR
CALCULATED-DESIGNED BY: REUBEN BUENVIAJE
CHECKED BY: J. HALIM, T. WU, W. BECK
REVISED BY
DATE REVISED

LAST REVISION 02-16-12
DATE PLOTTED => 25-FEB-2012
TIME PLOTTED => 09:51

Dist	COUNTY	ROUTE	KILOMETER POST TOTAL PROJECT	SHEET No.	TOTAL SHEETS
04	SF	80	12.6/13.9	230	821

Syn Yee Chin 10/31/11
REGISTERED ELECTRICAL ENGINEER

2-21-12
PLANS APPROVAL DATE

REGISTERED PROFESSIONAL ENGINEER SYN YEE CHIN No. 18186 Exp. 09/30/2013 ELECTRICAL STATE OF CALIFORNIA

THE STATE OF CALIFORNIA OR ITS OFFICERS OR AGENTS SHALL NOT BE RESPONSIBLE FOR THE ACCURACY OR COMPLETENESS OF ELECTRONIC COPIES OF THIS PLAN SHEET.

PB AMERICAS, Inc.
303 Second St., Suite 700N
San Francisco, CA 94107-1317

Caltrans Metric

SYMBOLS

(See ES-1A, ES-1B and ES-1C for Additional Standard Symbols)

LAYOUT PLAN

- Barrier Pull Box, for type and size, see Pull Box Schedule
- PB-2A / PB-2A — Pull Box, Junction Box or Conduit Fitting PB-2A denotes type, see Pull Box Schedule
- A — Equipment or Material Designation A=Sequential description
- 1 — Sheet Notes, applicable only to the Drawing 1=Sequential number
- 1 — Project Notes, Applicable for all Drawings 1=sequential number
- Electrical Equipment or Indicated on Plan Drawings
- Pole Mounted Lighting Fixture- See Lighting Pole Schedule for Type and Quantity
- Bike Path Lighting Fixture
- R — Red Flashing Beacon
- Compact Fluorescent Lighting Fixture, Ceiling Mounted
- Compact Fluorescent Lighting Fixture Wall Mounted
- Soffit Lighting Fixture
- G — Navigation Channel Marker Light - Green Color
- R — Navigation Pier Marker Light - Red Color
- A1 A2 — Aviation Lighting
- F — Fog Detector
- F — Fog Horn
- Pole Flood Light
- Single gang Receptacle, 125 V, 20 A with threaded hub cover flush to face of barrier
- GFCI WP — Duplex Receptacle, 125 V, 20 A MH=450 mm above floor unless noted GFCI=Ground Fault Circuit Interrupter WP=Weatherproof
- $a WP — Single Pole Switch, 120/277 V, 20 A a - indicates Fixtures controlled WP - Weatherproof Cover MH - 1400 mm unless noted
- $3a WP — Three-way switch, 120/277 V, 20 A a - indicates Fixtures controlled WP - indicates Weatherproof Cover MH - 1400 mm unless noted
- $4a WP — Four-way switch, 120/277 V, 20 A a - indicates Fixtures controlled WP - indicates Weatherproof Cover MH - 1400 mm unless noted
- 30 A — Disconnect Switch 30A-Frame size
- Conduit turned up
- Conduit turned down
- Conduit or Cable run, exposed
- Conduit run concealed in wall, concrete barrier, slab or routed underground duct bank
- Combination Expansion - Deflection fittings
- Flexible Conduit
- CT — Cable Tray
- Cable Tray
- Cables or Conduit down to Equipment (see plan for conduit number)

X XXX and X AXX — New conduit and cable tray run shown bold. See conduit and cable tray schedule.

X XXX and X AXX — Existing conduit and cable tray run shown screened. May be use to route new cable. See conduit and cable tray schedule.

- End of Conduit with Bushing
- Call Box, State-furnished
- Ground Bare Copper Wire, Stranded
- Cable To Cable Exothermic Type Ground Connections
- Cable Ground Connection to Equipment, Compression Type
- Cable with Pigtail Ground Connections (see plan for length)
- Ground rod

TRAFFIC OPERATIONS SYSTEMS (TOS)

- CCTV Camera (Mounted at Lighting Pole)
- Changeable Message Sign
- Preformed Loops
- Microwave Vehicle Detection Sensor (Mounted at Lighting Pole)
- Ramp Meter Signal

SINGLE LINE DIAGRAM

200/5 MRCT 3 — MM — SSPP — 67 / 67N
Microprocessor protective relay
MM = Metering Module
SSPP = Solid State Protective Package
67,67N = Directional Overcurrent Relay
MRCT = Multi Ratio Current Transformer
200/5 = Current Amp/Ratio
3 = Quantity

1200 A / 500 MVA — 52 — N.C.(or N.O.) 52-11N
Vacuum Circuit Breaker, (Drawout Type)
1200 A = Rating
500 MVA = Nominal Interrupting Class
52 11N = Assigned Breaker Number
N.C. = Normally Closed
N.O. = Normally Open

600-800 A / 42000 — 52S-1 E.O. — 800/5 3 — L,S,G
Air Circuit Breaker (Drawout Type)
600-800 A = Rating
42000 = Interrupting Current
E.O. = Electrically Operated
52S-1 = Assigned breaker Number
800/5 = Current Transformer Setting
3 = Quantity
Solid state Trip Device
L = Long Time Delay
S = Short Time Pick up/Delay
G = Ground Fault pick up/Delay

750 kVA 12.47 kV 480 V
Transformer, Distribution, Dry Type
12.47 kV = Delta Primary
480 V = Wye Secondary
750 kVA = Size

MCP — 2 or 30 A
Combination Motor Starter, Drawout Type
MCP = Motor Circuit Protector
2 = Starter NEMA Size
30 A = Contactor Rating

30 A
Safety Switch,
30 A = Frame Size

3
Rotating Motor
3 = kW Rating

50 AT / 100 AF
Molded Case Circuit Breaker, Drawout Type
50 AT = Trip Rating
150 AF = Frame Size

Package Equipment or Panelboard

12 kV-120 V
Potential Transformer
Connected Open Delta

800/5 3
Current Transformer
800/5 = Current AMP/Ratio
3 = Quantity

- Stress Relief Cable Connection
- or — Fuse

ELECTRICAL/CONNECTION DIAGRAMS

- Bk W — Signal Cable with Shield
- M or — Relay, Mechanical
  M = Motor
  C = Contactor
  42 = Running Circuit Breaker
  X or Y = Auxiliary
  R = Industrial
  TD = Time Delay
  PEC = Photo Electric Control
- OL — Motor Starter Overload Relay Thermal Bimetallic Element (OL-Overload)
- ON/OFF Switch
- DC Batteries
- AC/DC Inverter (Battery Charger/Rectifier)
- End Resistor and Capacitor
- Photoelectric Sensor
- 6 7 — Communication Cable Noise Suppressor
- Terminal Block
- OO — Duplex Receptacle
- Cabinet Fluorescent Light

DEVICE NUMBER DEFINITIONS

27B	12.47 kV Bus Undervoltage Relay
27D	DC Undervoltage Relay
27F	Feeder Undervoltage Relay
27UV	480 V Bus Undervoltage Relay
42	Running Circuit Breaker
43/R	Manual Transfer / Remote
43/L	Manual Transfer / Local
49	Thermal Relay
50	Instantaneous Overcurrent Relay
51	AC Time Overcurrent Relay
51/51N	Phase and Ground Fault Time Overcurrent Relay
52	AC Circuit Breaker
67	AC Directional Overcurrent Relay
67N	AC Directional Ground Overcurrent Relay
86	Lock-Out Relay
88	Auxiliary Motor

ELECTRICAL SYMBOLS

E-2

STATE OF CALIFORNIA - DEPARTMENT OF TRANSPORTATION
Caltrans

CONSULTANT FUNCTIONAL SUPERVISOR: BOB ZANDIPOUR
CALCULATED-DESIGNED BY: REUBEN BUENVIAJE
CHECKED BY: J. HALIM, T. WU, W. BECK
REVISED BY / DATE REVISED

LAST REVISION 00-00-00
DATE PLOTTED => 25-FEB-2012
TIME PLOTTED => 10:14

Dist	COUNTY	ROUTE	KILOMETER POST TOTAL PROJECT	SHEET No.	TOTAL SHEETS
04	SF	80	12.6/13.9	231	821

Syn Yee Chin 10/31/11
REGISTERED ELECTRICAL ENGINEER

2-21-12
PLANS APPROVAL DATE

REGISTERED PROFESSIONAL ENGINEER SYN YEE CHIN No. 18186 Exp. 09/30/2013 ELECTRICAL STATE OF CALIFORNIA

THE STATE OF CALIFORNIA OR ITS OFFICERS OR AGENTS SHALL NOT BE RESPONSIBLE FOR THE ACCURACY OR COMPLETENESS OF ELECTRONIC COPIES OF THIS PLAN SHEET.

PB AMERICAS, Inc.
303 Second St., Suite 700N
San Francisco, CA 94107-1317

Caltrans Metric

ELEMENTARY/CONNECTION DIAGRAMS (Continuation)

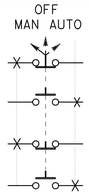

Selector Switch
3 Position, DPDT

Indicating Light
G = Green
R = Red
W = White
B = Blue

Heater

TSH — Thermostat
Closes on decreasing temperature

TD-1 — Normally open contact with time delay closing (TDC) feature
TDC=2sec

Pressure Switch

480 V LVCC, Conductor Terminal Point

480 V and 12.47 kV Switchgear, Conductor Terminal Point

Remote Terminal Unit, Conductor Terminal Point

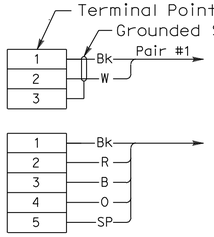

Low Level Signal Wiring Designation, For Ckt. No. and Cable Size, See Drawing
Bk = Black, W = White

Control Cable Wiring Designation, For Ckt. No. and Cable Size, See Drawing
Bk = Black, R = Red, B = Blue, O = Orange, Sp = Spare

3/C (3#2 + #6G)	Multi-Conductor Cable Designation
3#500 kcmil + #1/0 G	Single Conductor Cables Designation
1 Pair #16 SHLD	Single Pair Shielded Cable Designation
1-6 Pairs #18 SHLD	Multi-Pairs Shielded Cable Designation

LIGHTING POLE IDENTIFICATION

1 0 0 1 - 1 ← Roadway Ltg Pole
- 1: Assigned sequential Ltg pole number
- 1 0 0 1: Assigned sequential Ltg. pole number (same as circuit number)

1 2 E - 1 ← Belvedere Ltg Pole
- 1: Assigned sequential Belvedere Ltg pole number
- 1 2 E: Assigned Structures Belvedere number

480 V LIGHTING CIRCUIT IDENTIFICATION

S - 1 0 0 1
- 1: Assigned sequential circuit number
- 0 0: Location
  - 1-Westbound
  - 2-Eastbound
- S: Lighting Type
  - S-Safety Lighting
  - A-Aesthetic Lighting

PANEL IDENTIFICATION

UP - 1 0 1
- 1: Assigned sequential panel number
- 0: Location
  - 1-Westbound
  - 2-Eastbound
- UP: Equipment
  - UP-Utility panel
  - LP-Lighting panel

120 V CIRCUIT IDENTIFICATION

UP1 0 1 - 1
- 1: Panel circuit breaker number
- UP1 0 1: Assigned panel identification

CABLE IDENTIFICATION (See circuit and conduit/cable tray schedules)

S-1001-1A — Cable identification shown on circuit schedule only

S-1 0 0 1-1 A
- A: Assigned sequential cable number
- S-1 0 0 1: Same as circuit number

1 3 9 5 A
- A: Assigned parallel feeder cable
- 1 3 9 5: Same as circuit number

1 3 1 0 - 1
- 1: Assigned sequential cable number
- 1 3 1 0: Same as circuit number

UP 0 0 1-3 A
- A: Assigned sequential cable number
- UP 0 0 1-3: Same as circuit number

LP 0 0 1-1 A
- A: Assigned sequential cable number
- LP 0 0 1-1: Same as circuit number

2 5 0 6 - 1 1 A
- 1 A: Assigned sequential cable number
- 2 5 0 6: Same as sequential circuit number

CONDUIT RUN IDENTIFICATION

1 / 001
- 1: Location
  - 0-Underground Plan
  - 1, 4 and 6-Westbound Plan
  - 2, 5 and 7-Eastbound Plan
  - 8-Navigation Plan
  - 9-Seismic Plan
  - 3-Suspension Cable Plan
  - X-Utility Tunnel Plan
- 001: Assigned Sequential Number

1001 ← Conduit
1T10 ← Cable Tray
WIREWAY 9E ← Wireway
} Shown on Conduit/Cable Tray Schedule only

CABLE TRAY RUN IDENTIFICATION

1 / T10
- 1: Location
  - 1-Westbound
  - 2-Eastbound
- T10: Assigned Sequential CableTray Number
  - 10 to 19 - 15 kV (Medium Voltage)
  - 20 to 39 - 600 V (Power and Control)
  - 40 to 49 - TOS/Communication (TOS fiber and communication)
  - 50 to 59 - Non-Caltrans Utilities
- T - Cable Tray

TOS ELEMENT IDENTIFICATION

CMS - E 0 2
- 2: Assigned sequential element number
- E: Location/Direction
  - W-Westbound
  - E-Eastbound
- CMS: Element Type
  - CCTV-Closed Circuit Television Camera
  - CMS-Changeable Message Sign
  - MVDS-Microwave Vehicle Detection Sensor
  - PL-Preformed Loops

STRONG MOTION DETECTION IDENTIFICATION

S2 ← Strong Motion Sensor
20 - 1
- 1: Sensor Enclosure No.
  - Recorder number
- 20: Assigned sensor number

FIXTURE CALL OUT

1021-16 / *243-01 ← Light Pole Identification
*243-01 denotes existing Light Pole

S-1021 ← 480 V Ltg Circuit

ABBREVIATIONS

SEE ES-1A AND ES-1B FOR ADDITIONAL ABBREVIATIONS

A, AMP	Ampere
AC	Alternating Current
AF	Ampere Frame Rating
AH	Ampere Hour
AT	Ampere Trip Rating
AUX	Auxiliary
BKR	Breaker
C	Contact or Canduit or Circuit Breaker
CB	Call Box
COM	Communication
CON	Control
Cont'd	Continued
CPT	Control Power Transformer
CUB	Cubicle
CU	Copper
DPDT	Double Pole Double Throw
DC	Direct Current
DISC, Disc	Disconnect
(E), Exist	Existing
Eq	Equal
FSK	Frequency shift key
G, GND, Gnd	Ground
GPS	Global Positioning System
GRS	Galvanized Rigid Steel
HID	High Intensity Discharge
HV	High Voltage
HZ, Hz	Hertz
IND, Ind	Indication
IPS	Iron Pipe Size
JB	Junction Box
kAIC	Kilo Amperes Interrupting Capacity
kcmil	Kilo Circular Mil
kV	Kilovolt
kW	Kilowatt
kVA	KiloVolt Ampere
LP	Lighting Panel
LTS, Lts	Lights
LVCC	Low Voltage Control Center
MH	Mounting Height or Manhole
MVA	Mega Volt Ampere
NAP	Navigation Lighting Relay Cabinet
NIC	Not in Contract
NOS	Numbers
PH	Phase
PTSS	Power Transfer Selector Sw.
PWR	Power
RMS	Root Mean Square
RGS	Rigid Galvanized Steel
PLC	Programmable Logic Controller
RTU	Remote Terminal Unit
SCADA, Scada	Supervisory Control And Data Acquisition
SFOBB	San Francisco Oakland Bay Bridge
SG	System Ground
Shld, SHLD	Shield
SMD	Strong Motion Detection
Spa	Space
SSC	Seismic Sensor Cable
SWGR, Swgr	Switchgear
SW	Switch
TEL	Telephone
TB	Terminal Box
Term	Terminal
TSH	Temperature Switch, Thermostat
TOC	Top of Concrete
TOS	Traffic Operations System
Tr	Triad
UNO, UON	Unless Otherwise Noted
UP	Utility Panel
UV	Undervoltage
V	Volt
VAC	Volts Alternating Current
VCB	Vacuum Circuit Breaker
VDC	Volts Direct Current
VM	Voltmeter
VS	Voltmeter Switch
W	Wire
WP	Weatherproof
YBI	Yerba Buena Island

ELECTRICAL SYMBOLS AND ABBREVIATIONS

E-3

STATE OF CALIFORNIA - DEPARTMENT OF TRANSPORTATION
Caltrans
CONSULTANT FUNCTIONAL SUPERVISOR: BOB ZANDIPOUR
CALCULATED-DESIGNED BY: REUBEN BUENVIAJE
CHECKED BY: J. HALIM, T. WU, W. BECK
REVISED BY / DATE REVISED

LAST REVISION 00-00-00
DATE PLOTTED => 25-FEB-2012
TIME PLOTTED => 09:52

TRAFFIC OPERATIONS SYSTEMS (TOS)

AVO	Analog Video Output
CCR	Camera Control Receiver
CCU	Camera Control Unit
CIA	Controller Interface Assembly
COMM	Communication
FDU	Fiber Distribution Unit
F/O	Fiber Optic
FODM	Fiber Optic Data Modem
FDC	Fiber Optic Drop Cable
FPC	Fiber Optic Pigtail Cable
FSC	Fiber Splice Closure
FTC	Fiber Optic Trunkline Cable
IF	Input File
MVDS	Microwave Vehicle Detection Sensor
PDA	Power Distribution Assembly
PL	Preformed Loop Detection Station
SCA	Serial Cable Assembly
SMFO	Single Mode Fiber Optic
TB	Terminal Box
TSC	Trunkline Splice Cabinet
TVCP	CCTV Camera Control Power Cable
TVC	CCTV Camera Control Cable
TVL	CCTV Camera Video Cable
TVP	CCTV Power Conductors
VTDD	Video Transmitter Duplex Data

PROJECT NOTES

1. 27C, 2#12 + #12G
2. 27C, 2#10 + #10G
3. 27C, 4#10 + #10G
4. 27C, 3#10 + #10G
5. 27C, (Flexible Conduit) 2#12 + #12G
6. 27C, (Flexible Conduit) 2#10 + #10G
7. 41C, 2-6 pairs #18, IS/OA
8. 78C, 1-50 Pairs #18, IS/OA
9. 27C, 3/C#6 + G
10. 21C, 1-2 Pairs #18 (for Call Box Signal)
11. 21C, 2#12 + #12G (for Call Box Power)
12. 21C, 2 cables of 1-2 Pairs #18 (for Call Box Signal)
13. 78C, 3#2 + #6G and 2#10 (for CMS Power)
14. 78C, Harness #4 and Harness #5 (for CMS Signal)
15. 41C, Cable type TVP and TVCP (for CCTV Power)
16. 41C, Cable type TVC and TVL (for CCTV Control Signal)
18. 78C, Cable type MVDS DLC(for MVDS Signal)
20. 78C, Cable type 10 DLC (for Preformed Loop Signal)
21. 27C, (Flexible Conduit) 6#10 + #10G
22. 27C, (Flexible Conduit) 3#10 + #10G
23. 27C, 7#10 + #10G
24. 27C, 6#10 + #10G
25. 27C, 7#10 + #10G

PROJECT NOTES (Continuation)

26. 41C, 3#6 + #8G
27. 41C, 3#8 + #10G
28. 21C, (PVC Coated) 2#10 + #10G
29. 21C, (PVC Coated) 2#12 + #12G (for Call Box Power)
30. 500 kcmil Bare Copper Wire
31. 250 kcmil Bare Copper Wire
32. #4/0 Bare Copper Wire
33. #2 Bare Copper Wire
34. 41C, 3#6 + #8G, 3#8 + #10G
35. 41C, 4#8 + #10G
36. 21C, (PVC Coated) 1-2 Pairs #18 individually shielded pair with overall shield (For Call Box Signal)
37. 3/C#10, Metal Clad Type Cable with PVC overall jacket
38. 1-2 Pairs #18, Shielded Pairs and O/A Shield Metal Clad Type Cable, Liquid-tight
39. 4/C#12, Metal Clad Type Cable with PVC overall jacket
40. 78C, Cable Type A Fiber Optic
41. 21C, (Flexible Conduit) 2#10 + #10G
42. 27C, 2#12 + #12G, 2#10 + #10G
43. 21C, (liquidtight flex metal conduit) 2#12 + #12G

GENERAL NOTES

1. All conduit routing is diagrammatic. Pull box locations shall be located as shown on plan drawings. The Contractor shall provide additional pull boxes as required. Exact locations of equipment and devices may be adjusted depending on field conditions or by the Engineer.
2. Minimum size of conduits shall be 21 mm. Exposed conduits shall be PVC coated galvanized rigid steel, and conduits located inside girder shall be galvanized rigid steel.
3. Conduit fittings for 78 mm conduits and larger shall have a 610 mm minimum bending radius.
4. All conduits, including spares, shall be provided with pull wires prior to cable installations.
5. All equipment and devices shall be provided with nameplate tags per drawings.
6. All feeders and branch circuits shall be provided with ground wire.
7. The Contractor shall label all conductors and cables per wiring diagrams.
8. Call boxes are State-furnished. The Contractor shall install and terminate conductors per wiring diagram.

Caltrans Metric

Dist	COUNTY	ROUTE	KILOMETER POST TOTAL PROJECT	SHEET No.	TOTAL SHEETS
04	SF	80	12.6/13.9	232	821

Syn Yee Chin 10/31/11
REGISTERED ELECTRICAL ENGINEER

2-21-12
PLANS APPROVAL DATE

REGISTERED PROFESSIONAL ENGINEER SYN YEE CHIN No. 18186 Exp. 09/30/2013 ELECTRICAL STATE OF CALIFORNIA

THE STATE OF CALIFORNIA OR ITS OFFICERS OR AGENTS SHALL NOT BE RESPONSIBLE FOR THE ACCURACY OR COMPLETENESS OF ELECTRONIC COPIES OF THIS PLAN SHEET.

PB AMERICAS, Inc.
303 Second St., Suite 700N
San Francisco, CA 94107-1317

REVISED BY | DATE REVISED
REUBEN BUENVIAJE
J. HALIM, T. WU, W. BECK
CALCULATED-DESIGNED BY | CHECKED BY
CONSULTANT FUNCTIONAL SUPERVISOR
BOB ZANDIPOUR
STATE OF CALIFORNIA - DEPARTMENT OF TRANSPORTATION
Caltrans

ELECTRICAL NOTES AND ABBREVIATIONS

E-4

LAST REVISION 00-00-00 | DATE PLOTTED => 25-FEB-2012 | TIME PLOTTED => 09:52

Dist	COUNTY	ROUTE	KILOMETER POST TOTAL PROJECT	SHEET No.	TOTAL SHEETS
04	SF	80	12.6/13.9	233	821

Caltrans Metric

Syn Yee Chin 10/31/11
REGISTERED ELECTRICAL ENGINEER

2-21-12
PLANS APPROVAL DATE

REGISTERED PROFESSIONAL ENGINEER
SYN YEE CHIN
No. 18186
Exp. 09/30/2013
ELECTRICAL
STATE OF CALIFORNIA

THE STATE OF CALIFORNIA OR ITS OFFICERS OR AGENTS SHALL NOT BE RESPONSIBLE FOR THE ACCURACY OR COMPLETENESS OF ELECTRONIC COPIES OF THIS PLAN SHEET.

PB AMERICAS, Inc.
303 Second St., Suite 700N
San Francisco, CA 94107-1317

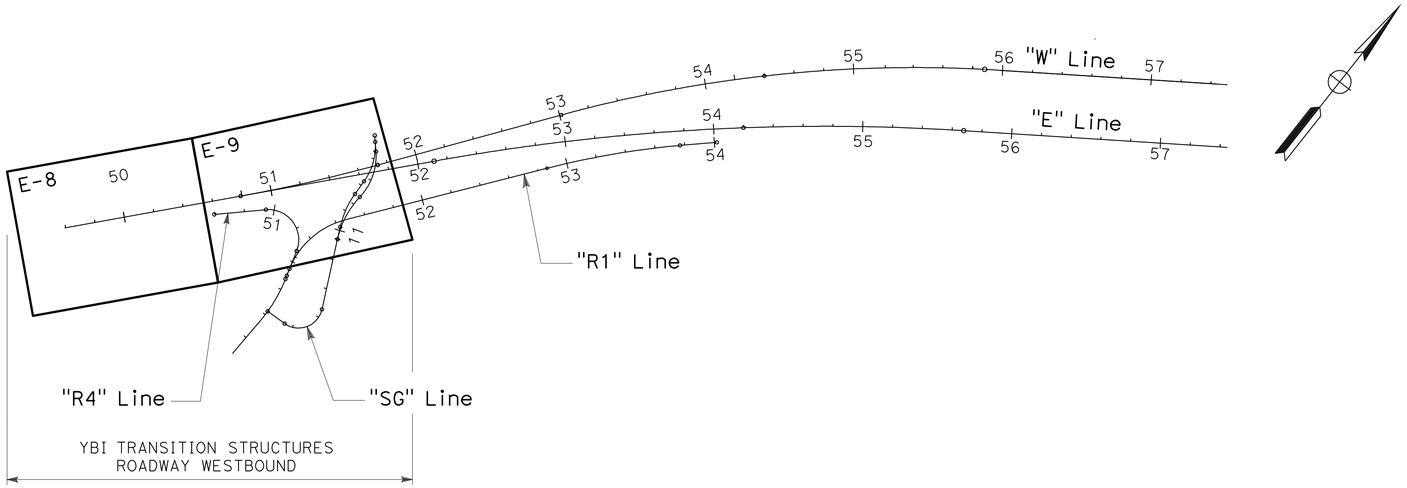

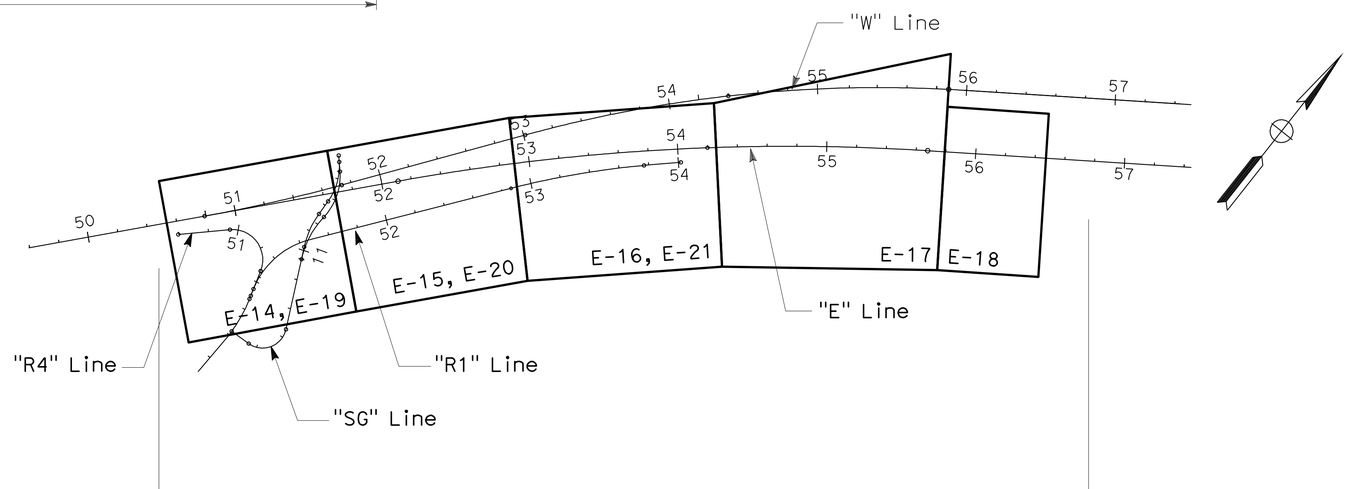

ALL DIMENSIONS ARE IN
METERS UNLESS OTHERWISE SHOWN

ELECTRICAL KEY MAP

NO SCALE

E-5

THIS PLAN ACCURATE FOR ELECTRICAL WORK ONLY.

STATE OF CALIFORNIA - DEPARTMENT OF TRANSPORTATION
Caltrans

CONSULTANT FUNCTIONAL SUPERVISOR: BOB ZANDIPOUR
CALCULATED-DESIGNED BY: REUBEN BUENVIAJE
CHECKED BY: J. HALIM, T. WU, W. BECK
REVISED BY
DATE REVISED

LAST REVISION 00-00-00
DATE PLOTTED => 28-FEB-2012
TIME PLOTTED => 09:41

Dist	COUNTY	ROUTE	KILOMETER POST TOTAL PROJECT	SHEET No.	TOTAL SHEETS
04	SF	80	12.6/13.9	234	821

Syn Yee Chin 10/31/11
REGISTERED ELECTRICAL ENGINEER

2-21-12
PLANS APPROVAL DATE

REGISTERED PROFESSIONAL ENGINEER
SYN YEE CHIN
No. 18186
Exp. 09/30/2013
ELECTRICAL
STATE OF CALIFORNIA

THE STATE OF CALIFORNIA OR ITS OFFICERS OR AGENTS SHALL NOT BE RESPONSIBLE FOR THE ACCURACY OR COMPLETENESS OF ELECTRONIC COPIES OF THIS PLAN SHEET.

PB AMERICAS, Inc.
303 Second St., Suite 700N
San Francisco, CA 94107-1317

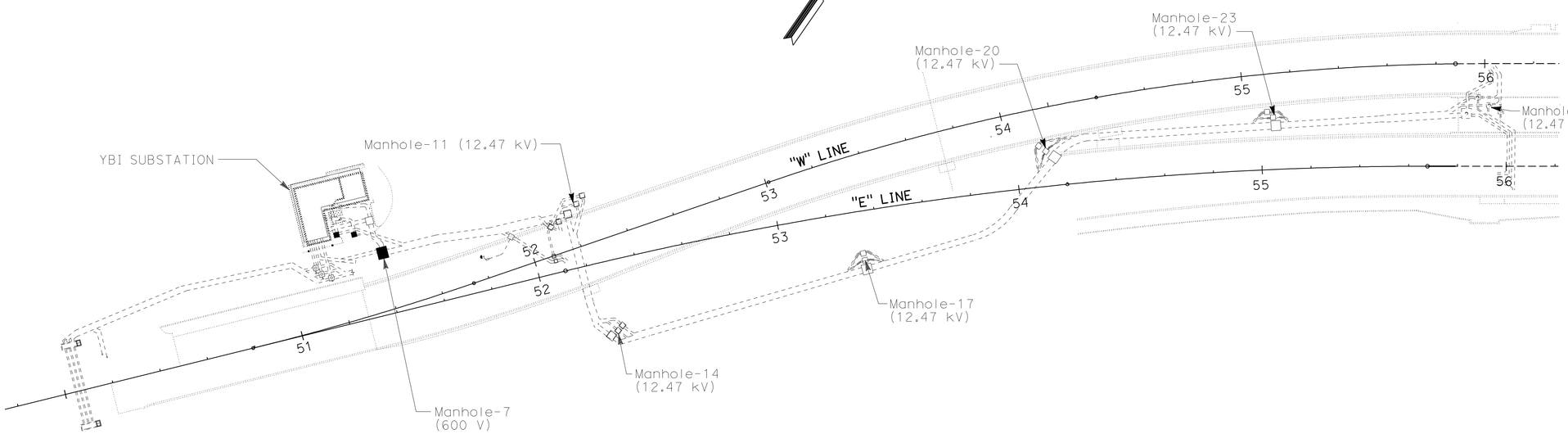

NOTES:

1. Only the grounding to Bent W10 foundations as noted is within the scope of this contract. The rest is not part of this contract.

SHEET NOTES:

(1) Two #4/0 bare copper grounding conductors shall be exothermically welded to the 500 kcmil bare copper system grounding conductor and continued to the foundations of the bent columns. For details of the foundation grounding, see sheet E-7.

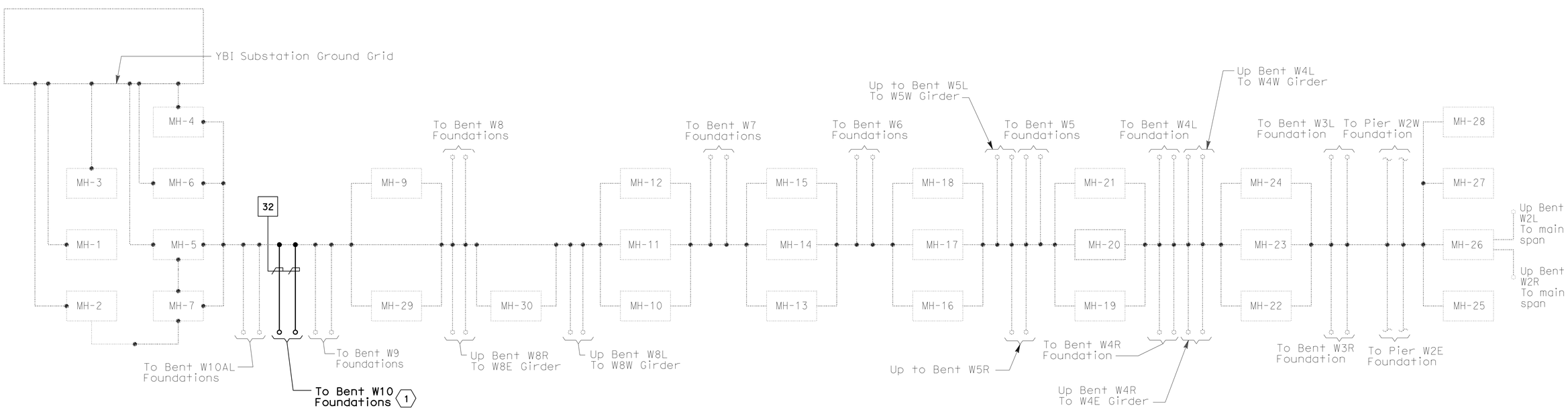

ALL DIMENSIONS ARE IN METERS UNLESS OTHERWISE SHOWN

UNDERGROUND (GROUND INTERFACE)

SCALE 1:1000

E-6

THIS PLAN ACCURATE FOR ELECTRICAL WORK ONLY.

STATE OF CALIFORNIA - DEPARTMENT OF TRANSPORTATION
Caltrans

CONSULTANT FUNCTIONAL SUPERVISOR: BOB ZANDIPOUR
CALCULATED-DESIGNED BY: REUBEN BUENVIAJE
CHECKED BY: J. HALIM, T. WU, W. BECK
REVISED BY
DATE REVISED

LAST REVISION 00-00-00
DATE PLOTTED => 25-FEB-2012
TIME PLOTTED => 09:52

Dist	COUNTY	ROUTE	KILOMETER POST TOTAL PROJECT	SHEET No.	TOTAL SHEETS
04	SF	80	12.6/13.9	235	821

Caltrans Metric

Syn Yee Chin 10/31/11
REGISTERED ELECTRICAL ENGINEER

2-21-12
PLANS APPROVAL DATE

REGISTERED PROFESSIONAL ENGINEER
SYN YEE CHIN
No. 18186
Exp. 09/30/2013
ELECTRICAL
STATE OF CALIFORNIA

THE STATE OF CALIFORNIA OR ITS OFFICERS OR AGENTS SHALL NOT BE RESPONSIBLE FOR THE ACCURACY OR COMPLETENESS OF ELECTRONIC COPIES OF THIS PLAN SHEET.

PB AMERICAS, Inc.
303 Second St., Suite 700N
San Francisco, CA 94107-1317

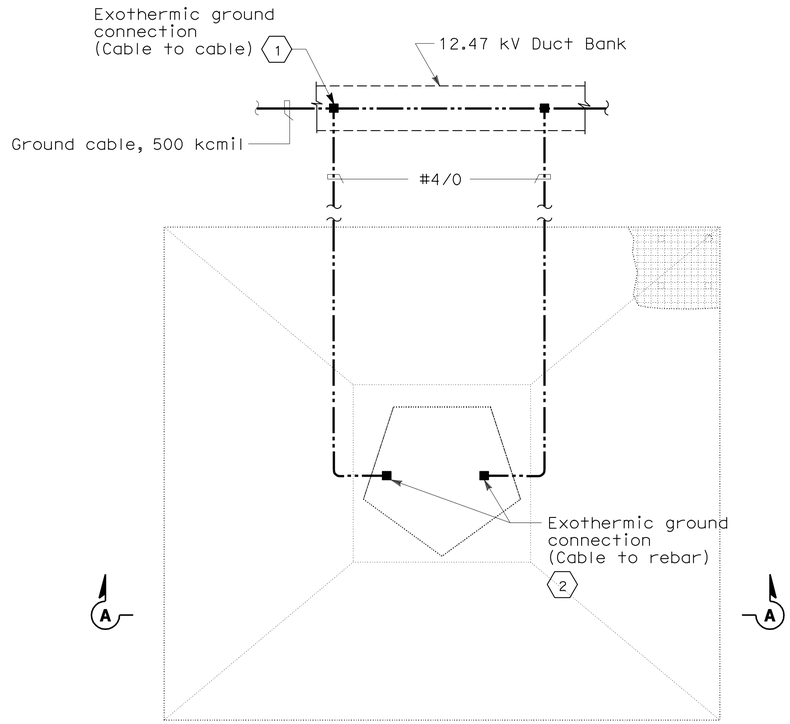

PIER COLUMN FOUNDATION GROUNDING PLAN
(BENT W10)

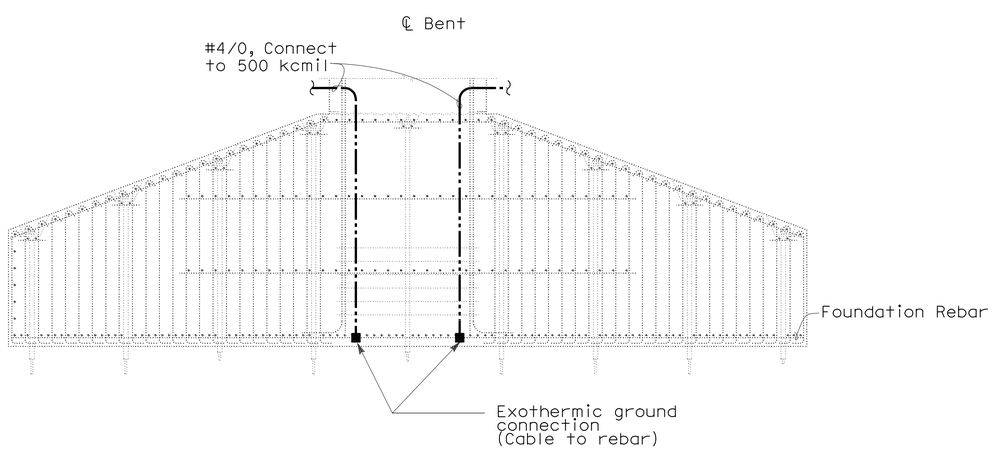

SECTION A-A

NOTES:

1. References:
   - For grounding interface, see sheet E-6.
2. Ground conductor shall be protected from damage when exposed outside the structures. Route ground cable in liquidtight metal conduit (LFMC) for protection.

SHEET NOTES:

1. Exothermic weld connection to ground cable.
2. Exothermic weld connection to rebar in foundation.

ALL DIMENSIONS ARE IN MILLIMETERS UNLESS OTHERWISE SHOWN

DETAILS
UNDERGROUND (FOUNDATION GROUNDING)
NO SCALE

E-7

THIS PLAN ACCURATE FOR ELECTRICAL WORK ONLY.

STATE OF CALIFORNIA - DEPARTMENT OF TRANSPORTATION
Caltrans

CONSULTANT FUNCTIONAL SUPERVISOR: BOB ZANDIPOUR
CALCULATED-DESIGNED BY: REUBEN BUENVIAJE
CHECKED BY: J. HALIM, T. WU, W. BECK
REVISED BY
DATE REVISED

LAST REVISION 00-00-00
DATE PLOTTED => 25-FEB-2012
TIME PLOTTED => 09:52

Dist	COUNTY	ROUTE	KILOMETER POST TOTAL PROJECT	SHEET No.	TOTAL SHEETS
04	SF	80	12.6/13.9	236	821

Syn Yee Chin 02/16/12
REGISTERED ELECTRICAL ENGINEER

2-21-12
PLANS APPROVAL DATE

REGISTERED PROFESSIONAL ENGINEER SYN YEE CHIN No. 18186 Exp. 09/30/2013 ELECTRICAL STATE OF CALIFORNIA

THE STATE OF CALIFORNIA OR ITS OFFICERS OR AGENTS SHALL NOT BE RESPONSIBLE FOR THE ACCURACY OR COMPLETENESS OF ELECTRONIC COPIES OF THIS PLAN SHEET.

PB AMERICAS, Inc.
303 Second St., Suite 700N
San Francisco, CA 94107-1317

Caltrans Metric

NOTES:

1. References:
   - For typical details and locations of conduit connections to light poles, see sheet E-10.
   - For pull box and roadway lighting schedule, see sheet E-13.
   - For 480 V roadway lighting wiring diagram, see sheet E-12.
   - Refer to conduit and tray schedules, cable and circuit schedules starting at drawing E-62.
2. Unless shown in bold, everything else is not part of this Contract.
3. The Contractor shall inspect, verify, install, assemble, and wire State-furnished light poles and fixtures.

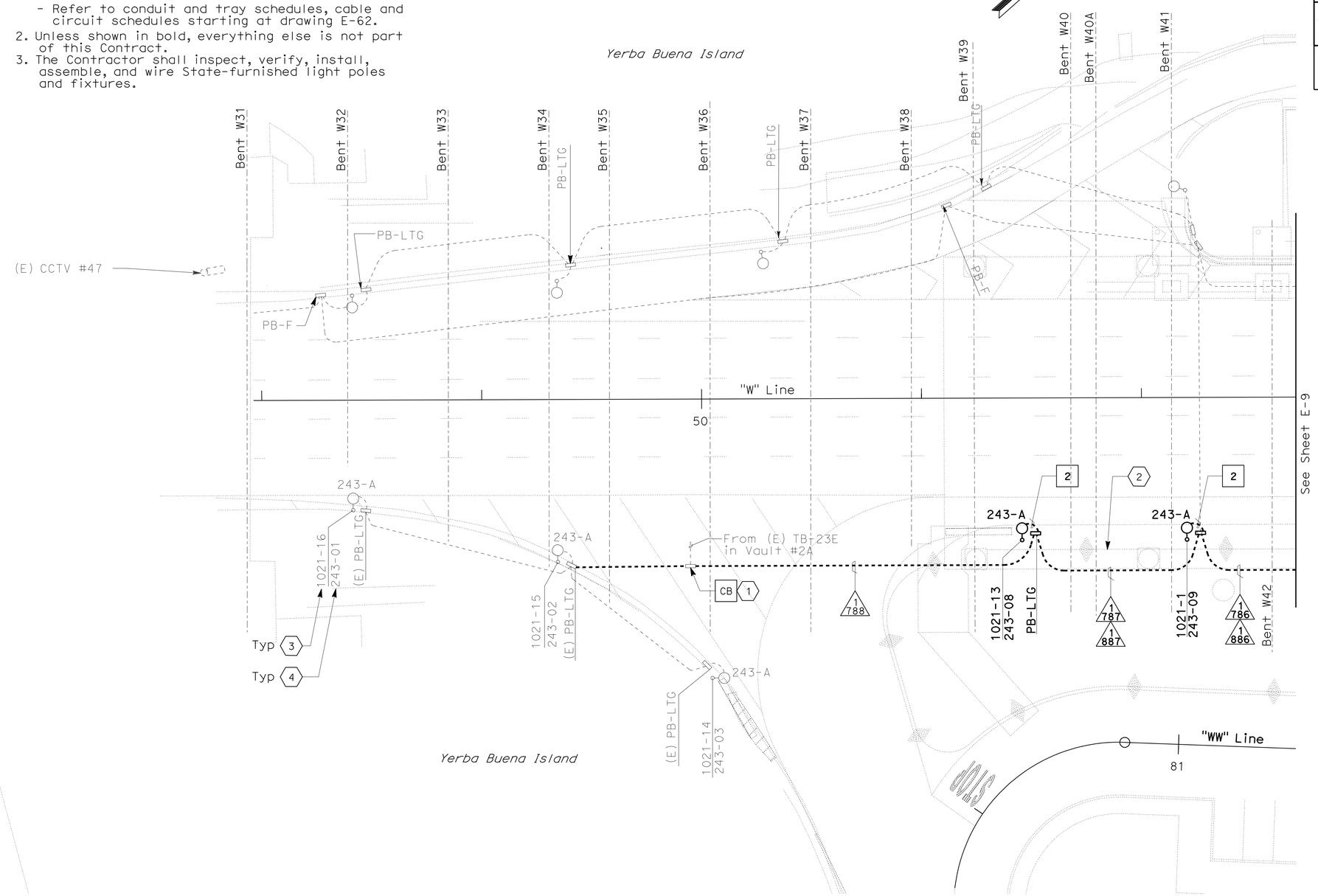

SHEET NOTES:

1. Splice new conductors to existing circuit #243-A inside (E) ceiling mounted pull box below deck.
2. Concrete bridge barrier installed in this Contract, refer to Structural drawings for details.
3. Pole #1021 series are previously assigned pole numbers.
4. Current pole number.

CONDUIT PLAN

YBI TRANSITION STRUCTURES ROADWAY WESTBOUND (LIGHTING AND ELECTRICAL SYSTEMS)

SCALE: 1:200

E-8

THIS PLAN ACCURATE FOR ELECTRICAL WORK ONLY.

ALL DIMENSIONS ARE IN METERS UNLESS OTHERWISE SHOWN

STATE OF CALIFORNIA - DEPARTMENT OF TRANSPORTATION
Caltrans

CONSULTANT FUNCTIONAL SUPERVISOR: BOB ZANDIPOUR
CALCULATED-DESIGNED BY: REUBEN BUENVIAJE
CHECKED BY: J. HALIM, T. WU, W. BECK
REVISED BY / DATE REVISED

LAST REVISION 02-16-12
DATE PLOTTED => 25-FEB-2012
TIME PLOTTED => 09:52

Dist	COUNTY	ROUTE	KILOMETER POST TOTAL PROJECT	SHEET No.	TOTAL SHEETS
04	SF	80	12.6/13.9	237	821

Syn Yee Chin 02/16/12
REGISTERED ELECTRICAL ENGINEER

2-21-12
PLANS APPROVAL DATE

REGISTERED PROFESSIONAL ENGINEER
SYN YEE CHIN
No. 18186
Exp. 09/30/2013
ELECTRICAL
STATE OF CALIFORNIA

THE STATE OF CALIFORNIA OR ITS OFFICERS OR AGENTS SHALL NOT BE RESPONSIBLE FOR THE ACCURACY OR COMPLETENESS OF ELECTRONIC COPIES OF THIS PLAN SHEET.

PB AMERICAS, Inc.
303 Second St., Suite 700N
San Francisco, CA 94107-1317

Caltrans Metric

NOTES:

1. References:
   - For typical details and locations of conduit connections to light poles, see sheet E-10.
   - For pull box and roadway lighting schedule, see sheet E-13.
   - For 480 V roadway lighting wiring diagram, see sheet E-12.
   - Refer to conduit and tray schedules, cable and circuit schedules starting at drawing E-62.
2. Unless shown in bold, everything else is not part of this Contract.
3. The Contractor shall inspect, verify, install, assemble, and wire State-furnished light poles and fixtures.

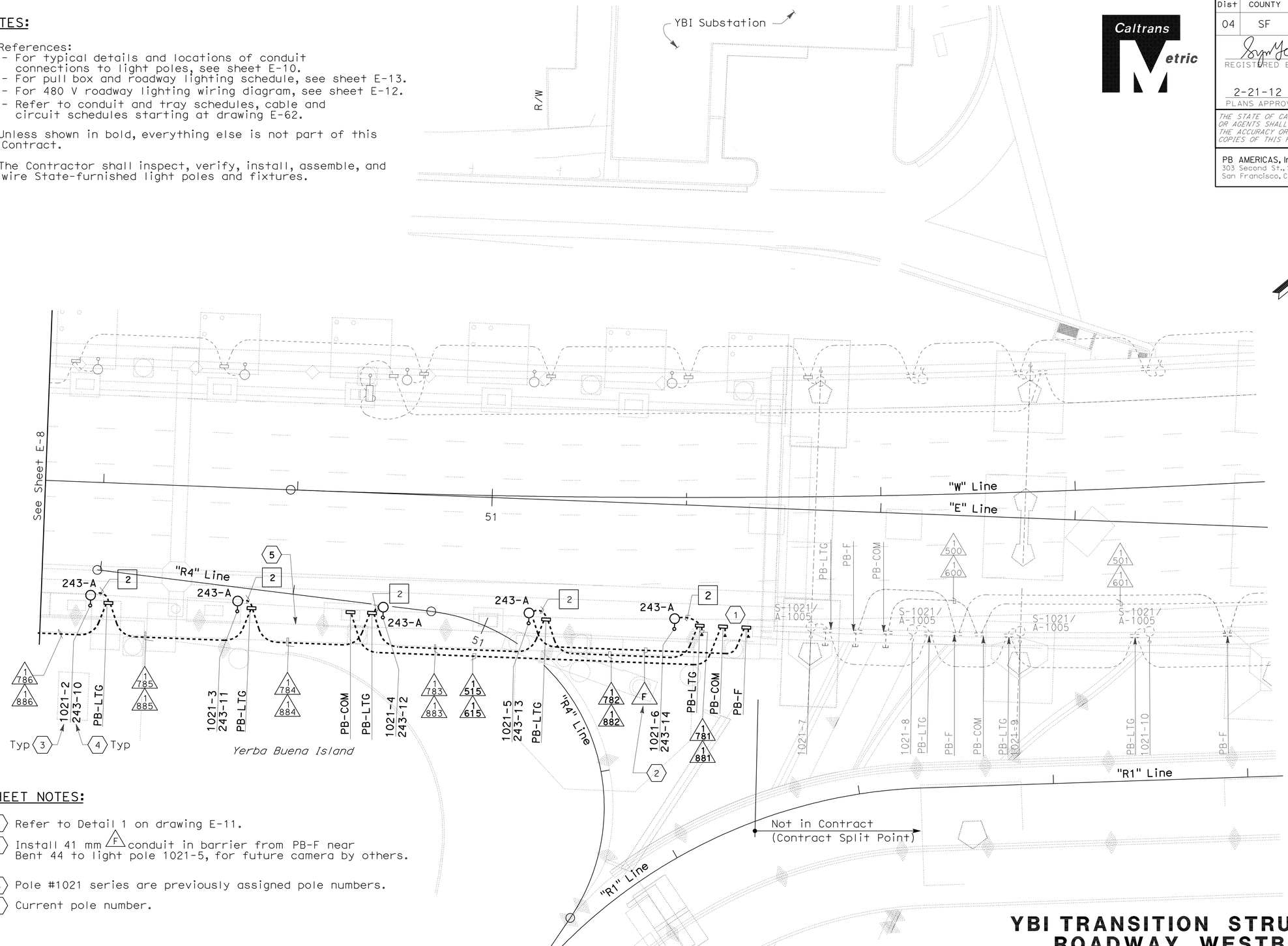

SHEET NOTES:

1. Refer to Detail 1 on drawing E-11.
2. Install 41 mm (F) conduit in barrier from PB-F near Bent 44 to light pole 1021-5, for future camera by others.
3. Pole #1021 series are previously assigned pole numbers.
4. Current pole number.

YBI TRANSITION STRUCTURES
ROADWAY WESTBOUND
(LIGHTING AND ELECTRICAL SYSTEMS)

SCALE: 1:200

CONDUIT PLAN

THIS PLAN ACCURATE FOR ELECTRICAL WORK ONLY.

ALL DIMENSIONS ARE IN METERS UNLESS OTHERWISE SHOWN

E-9

STATE OF CALIFORNIA - DEPARTMENT OF TRANSPORTATION
Caltrans

CONSULTANT FUNCTIONAL SUPERVISOR: BOB ZANDIPOUR
CALCULATED-DESIGNED BY: REUBEN BUENVIAJE
CHECKED BY: J. HALIM, T. WU, W. BECK
REVISED BY
DATE REVISED

LAST REVISION 02-16-12
DATE PLOTTED => 25-FEB-2012
TIME PLOTTED => 09:52

Dist	COUNTY	ROUTE	KILOMETER POST TOTAL PROJECT	SHEET No.	TOTAL SHEETS
04	SF	80	12.6/13.9	238	821

Caltrans Metric

Syn Yee Chin 10/31/11
REGISTERED ELECTRICAL ENGINEER

2-21-12
PLANS APPROVAL DATE

REGISTERED PROFESSIONAL ENGINEER
SYN YEE CHIN
No. 18186
Exp. 09/30/2013
ELECTRICAL
STATE OF CALIFORNIA

THE STATE OF CALIFORNIA OR ITS OFFICERS OR AGENTS SHALL NOT BE RESPONSIBLE FOR THE ACCURACY OR COMPLETENESS OF ELECTRONIC COPIES OF THIS PLAN SHEET.

PB AMERICAS, Inc.
303 Second St., Suite 700N
San Francisco, CA 94107-1317

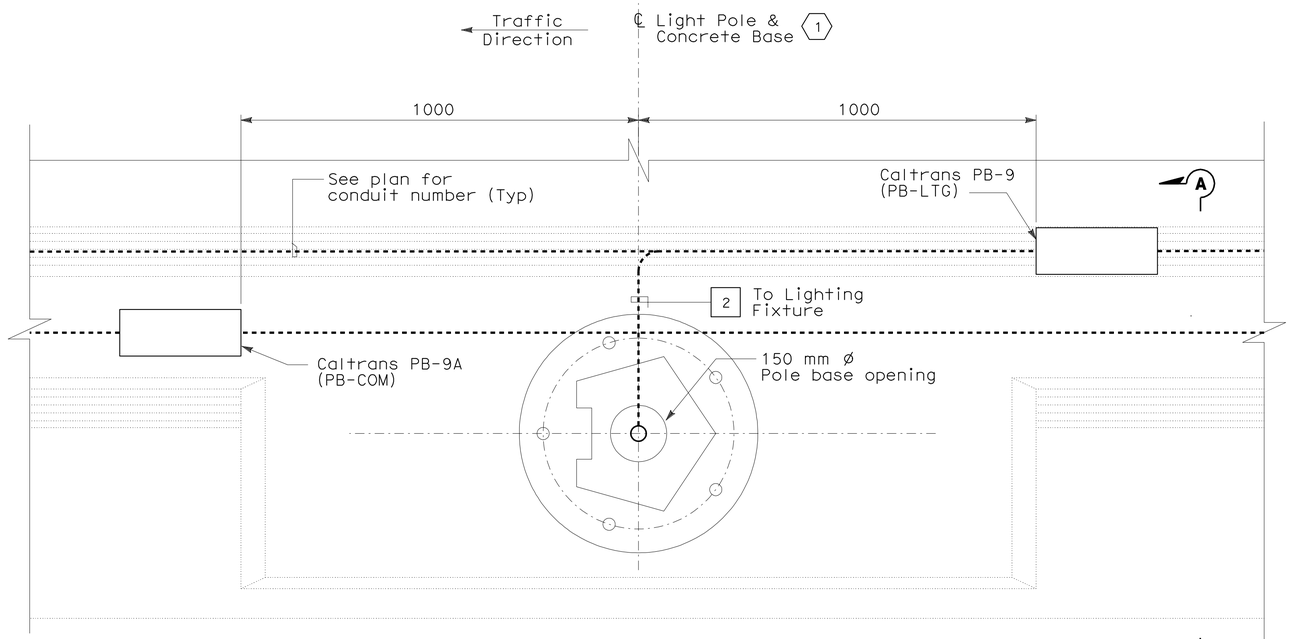

PLAN
CONDUIT STUB UP FOR ROADWAY LIGHTING ON A CONCRETE BASE (TYPICAL)

NOTES:

1. References:
   - For pull box and roadway light poles and fixture schedule, see sheet E-13.

SHEET NOTES:

1. For Roadway light pole foundation, refer to Structural drawings.
2. Bond grounding bushing to ground lug located on interior of light pole with #6 AWG bare copper wire.
3. Refer to plan layout on drawings E-8 and E-9 for approximate conduit stub-up and pull box locations in barrier.

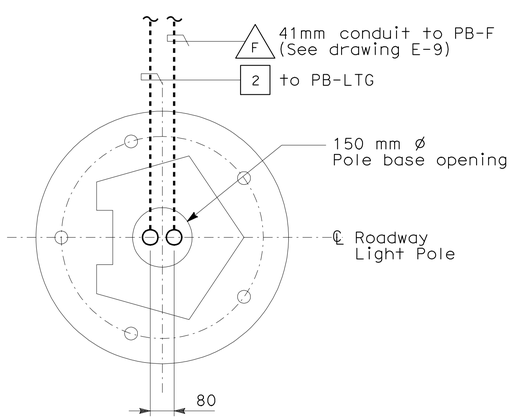

PLAN
(FOR ROADWAY LIGHT POLE 1021-5)

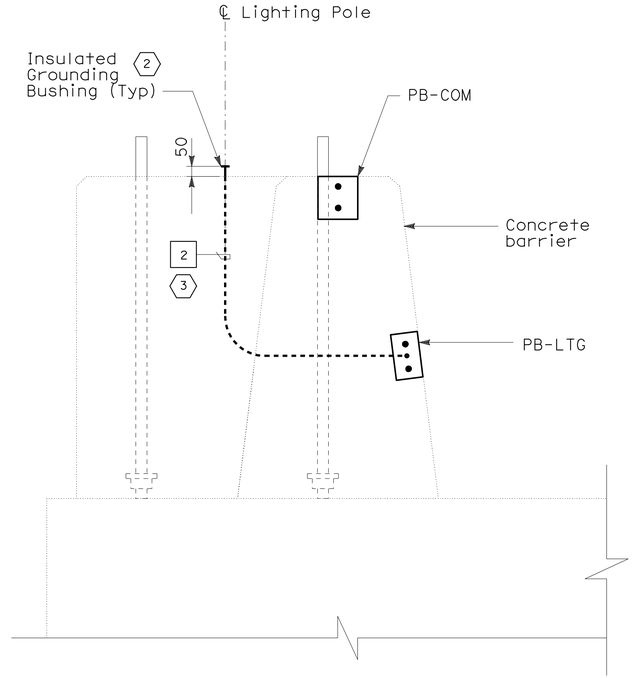

SECTION A-A
CONDUIT TO PULL BOXES INSIDE CONCRETE BARRIER

ALL DIMENSIONS ARE IN MILLIMETERS UNLESS OTHERWISE SHOWN

DETAILS
YBI TRANSITION STRUCTURES ROADWAY WESTBOUND (LIGHT POLE CONDUIT LOCATIONS)
NO SCALE

E-10

THIS PLAN ACCURATE FOR ELECTRICAL WORK ONLY.

REVISED BY	
DATE REVISED	
REUBEN BUENVIAJE	
J. HALIM, T. WU, W. BECK	
CALCULATED-DESIGNED BY	
CHECKED BY	
CONSULTANT FUNCTIONAL SUPERVISOR	BOB ZANDIPOUR

STATE OF CALIFORNIA - DEPARTMENT OF TRANSPORTATION
Caltrans

LAST REVISION 00-00-00
DATE PLOTTED => 25-FEB-2012
TIME PLOTTED => 09:52

Dist	COUNTY	ROUTE	KILOMETER POST TOTAL PROJECT	SHEET No.	TOTAL SHEETS
04	SF	80	12.6/13.9	239	821

Caltrans Metric

Syn Yee Chin 02/16/12
REGISTERED ELECTRICAL ENGINEER

2-21-12
PLANS APPROVAL DATE

REGISTERED PROFESSIONAL ENGINEER
SYN YEE CHIN
No. 18186
Exp. 09/30/2013
ELECTRICAL
STATE OF CALIFORNIA

THE STATE OF CALIFORNIA OR ITS OFFICERS OR AGENTS SHALL NOT BE RESPONSIBLE FOR THE ACCURACY OR COMPLETENESS OF ELECTRONIC COPIES OF THIS PLAN SHEET.

PB AMERICAS, Inc.
303 Second St., Suite 700N
San Francisco, CA 94107-1317

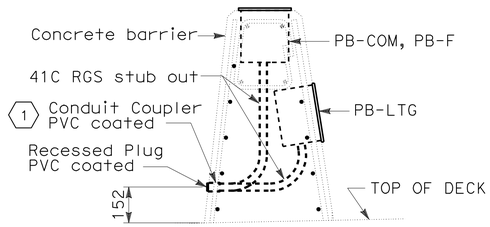

DETAIL 1
NO SCALE

NOTES:

1. References:
   - For pull box schedule, see sheet E-13.
2. For pull box installation, refer to RSP ES-9C and ES-9D unless noted otherwise.

SHEET NOTES:

1. The Contractor shall stub out conduits at the non-roadway side of the barrier with coupler flush to the barrier face wall and shall include a plug for each conduit.

DETAILS
YBI TRANSITION STRUCTURES ROADWAY WESTBOUND (BARRIER CONDUIT STUB-OUT DETAILS)
SCALE AS NOTED

E-11

THIS PLAN ACCURATE FOR ELECTRICAL WORK ONLY.

ALL DIMENSIONS ARE IN MILLIMETERS UNLESS OTHERWISE SHOWN

REVISED BY	DATE REVISED

CALCULATED-DESIGNED BY: REUBEN BUENVIAJE
CHECKED BY: J. HALIM, T. WU, W. BECK
CONSULTANT FUNCTIONAL SUPERVISOR: BOB ZANDIPOUR

STATE OF CALIFORNIA - DEPARTMENT OF TRANSPORTATION
Caltrans

LAST REVISION 02-16-12 | DATE PLOTTED => 25-FEB-2012 | TIME PLOTTED => 09:53

Dist	COUNTY	ROUTE	KILOMETER POST TOTAL PROJECT	SHEET No.	TOTAL SHEETS
04	SF	80	12.6/13.9	240	821

Caltrans Metric

Syn Yee Chin 02/16/12
REGISTERED ELECTRICAL ENGINEER

2-21-12
PLANS APPROVAL DATE

REGISTERED PROFESSIONAL ENGINEER
SYN YEE CHIN
No. 18186
Exp. 09/30/2013
ELECTRICAL
STATE OF CALIFORNIA

THE STATE OF CALIFORNIA OR ITS OFFICERS OR AGENTS SHALL NOT BE RESPONSIBLE FOR THE ACCURACY OR COMPLETENESS OF ELECTRONIC COPIES OF THIS PLAN SHEET.

PB AMERICAS, Inc.
303 Second St., Suite 700N
San Francisco, CA 94107-1317

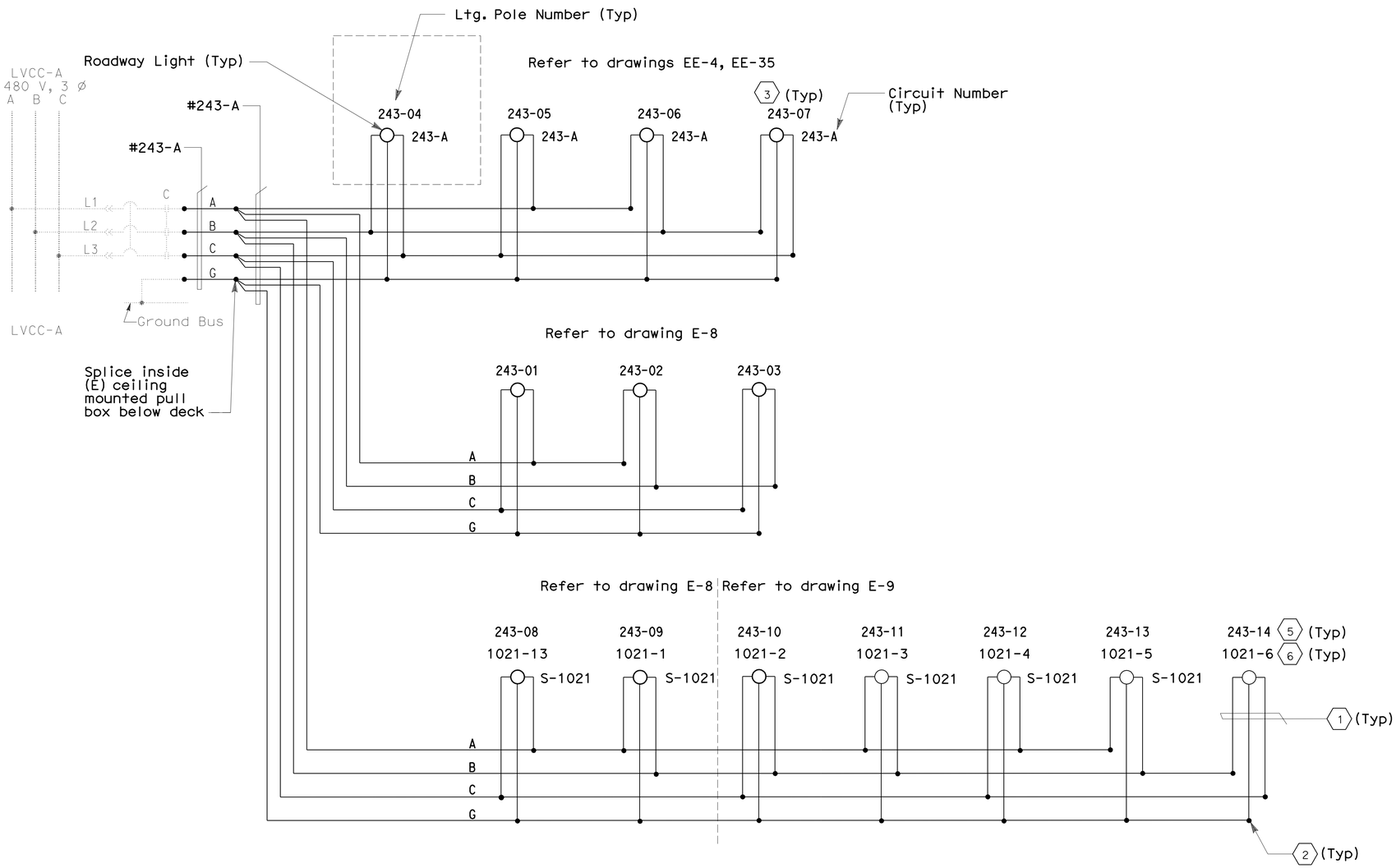

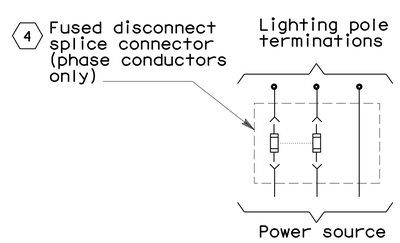

DETAIL-1
(TYP. FOR EACH LTG. POLE)

NOTES:

1. References:
   - For pull box, light pole, and light fixture schedules, see sheet E-13.
   - Refer to conduit and tray schedules, cable and circuit schedules starting at drawing E-62.
2. Unless shown in bold, everything else is not part of this Contract.

SHEET NOTES:

1. 3#10 AWG single conductors, see Detail 1.
2. Conductors spliced inside pull box PB-LTG.
3. Lighting fixtures are State-furnished.
4. For type and size of in-line fusing, see Caltrans Standard Plans. Locate in-line fusing inside terminal box at the base of each roadway lighting pole.
5. Current pole number.
6. Previously assigned pole numbers.

DETAILS
YBI TRANSITION STRUCTURES ROADWAY WESTBOUND (480 V ROADWAY LIGHTING WIRING DIAGRAM)
NO SCALE

E-12

THIS PLAN ACCURATE FOR ELECTRICAL WORK ONLY.

STATE OF CALIFORNIA - DEPARTMENT OF TRANSPORTATION
Caltrans

CONSULTANT FUNCTIONAL SUPERVISOR: BOB ZANDIPOUR
CALCULATED-DESIGNED BY: REUBEN BUENVIAJE
CHECKED BY: J. HALIM, T. WU, W. BECK
REVISED BY
DATE REVISED

LAST REVISION 02-16-12
DATE PLOTTED => 25-FEB-2012
TIME PLOTTED => 09:53

Dist	COUNTY	ROUTE	KILOMETER POST TOTAL PROJECT	SHEET No.	TOTAL SHEETS
04	SF	80	12.6/13.9	241	821

Syn Yee Chin 10/31/11
REGISTERED ELECTRICAL ENGINEER

2-21-12
PLANS APPROVAL DATE

REGISTERED PROFESSIONAL ENGINEER SYN YEE CHIN No. 18186 Exp. 09/30/2013 ELECTRICAL STATE OF CALIFORNIA

THE STATE OF CALIFORNIA OR ITS OFFICERS OR AGENTS SHALL NOT BE RESPONSIBLE FOR THE ACCURACY OR COMPLETENESS OF ELECTRONIC COPIES OF THIS PLAN SHEET.

PB AMERICAS, Inc.
303 Second St., Suite 700N
San Francisco, CA 94107-1317

PULL BOX SCHEDULE

Location	Type	Pull Box size	Enclosure Type	Nameplate Pull Box Cover	Remarks
Roadway Barrier	PB-Com	-	-	Communication	Caltrans standard RSP ES-9C (PB-9A)
Roadway Barrier	PB-LTG	-	-	600 V - Electrical	Caltrans standard RSP ES-9C (PB-9)

ROADWAY LIGHT POLE AND FIXTURE SCHEDULE

Circuit Number	Pole Number	Location		Mounting Height (m)	LTG Fixture Type (State Furnished)	Remarks (Mounting Provisions)
		Station	Roadway side			
S-1021	1021-1	50+44.1	South	7	Furnished by Caltrans	Pole mounted
S-1021	1021-2	50+59.1	South	7	Furnished by Caltrans	Pole mounted
S-1021	1021-3	50+74.1	South	7	Furnished by Caltrans	Pole mounted
S-1021	1021-4	50+89.1	South	7	Furnished by Caltrans	Pole mounted
S-1021	1021-5	51+04.1	South	7	Furnished by Caltrans	Pole mounted
S-1021	1021-6	51+19.1	South	7	Furnished by Caltrans	Pole mounted
S-1021	1021-13	50+29.1	South	7	Furnished by Caltrans	Pole mounted
S-1021	1021-14	50+01	South	7	Furnished by Caltrans	Pole mounted
S-1021	1021-15	49+86.92	South	7	Furnished by Caltrans	Pole mounted
S-1021	1021-16	49+68.31	South	7	Furnished by Caltrans	Pole mounted

1

NOTES:

1. Unless shown in bold, everything else is not part of this Contract.

SHEET NOTES:

1 Existing light poles to remain, but reconnect to new circuit (S-1021). Refer to E-8.

THIS PLAN ACCURATE FOR ELECTRICAL WORK ONLY.

DETAILS
YBI TRANSITION STRUCTURESROADWAY WESTBOUND (PULL BOX, LIGHT POLE AND FIXTURE SCHEDULES)
NO SCALE

E-13

STATE OF CALIFORNIA - DEPARTMENT OF TRANSPORTATION
Caltrans

CONSULTANT FUNCTIONAL SUPERVISOR: BOB ZANDIPOUR
CALCULATED-DESIGNED BY: REUBEN BUENVIAJE
CHECKED BY: J. HALIM, T. WU, W. BECK
REVISED BY
DATE REVISED

LAST REVISION 00-00-00
DATE PLOTTED => 25-FEB-2012
TIME PLOTTED => 09:53

Dist	COUNTY	ROUTE	KILOMETER POST TOTAL PROJECT	SHEET No.	TOTAL SHEETS
04	SF	80	12.6/13.9	242	821

Syn Yee Chin 02/16/12
REGISTERED ELECTRICAL ENGINEER

2-21-12
PLANS APPROVAL DATE

REGISTERED PROFESSIONAL ENGINEER SYN YEE CHIN No. 18186 Exp. 09/30/2013 ELECTRICAL STATE OF CALIFORNIA

THE STATE OF CALIFORNIA OR ITS OFFICERS OR AGENTS SHALL NOT BE RESPONSIBLE FOR THE ACCURACY OR COMPLETENESS OF ELECTRONIC COPIES OF THIS PLAN SHEET.

PB AMERICAS, Inc.
303 Second St., Suite 700N
San Francisco, CA 94107-1317

Caltrans Metric

NOTES:

1. References:
   - Refer to drawing E-46 for pull box, light pole, and light fixture schedules.
   - Refer to conduit and tray schedules, cable and circuit schedule starting at drawing E-62.
   - For panel LP-217, see sheet E-47.
   - For call box wiring diagram refer to drawings E-50 and E-51.
   - For call box detail, location and schedule, see sheets E-34, E-35, E-36, E-49 and E-52.
   - For conduit routing inside barriers and pole bases, see sheet E-23.
   - For 480 V roadway lighting wiring diagram, see sheet E-41.
   - For 120 V bike path lighting wiring diagram, see sheets E-43 thru E-45.
   - For ramp meter system location, details and block diagram, see sheets E-53 thru E-55.
2. Unless shown in bold, everything else is not part of this Contract.
3. The Contractor shall inspect, verify, install, assemble, and wire State-furnished light poles and fixtures.

SHEET NOTES:

(1) For railing post locations, refer to YBI EB on-ramp Structural drawings.

(2) For bike path lighting locations, refer to YBI EB on-ramp Structural drawings.

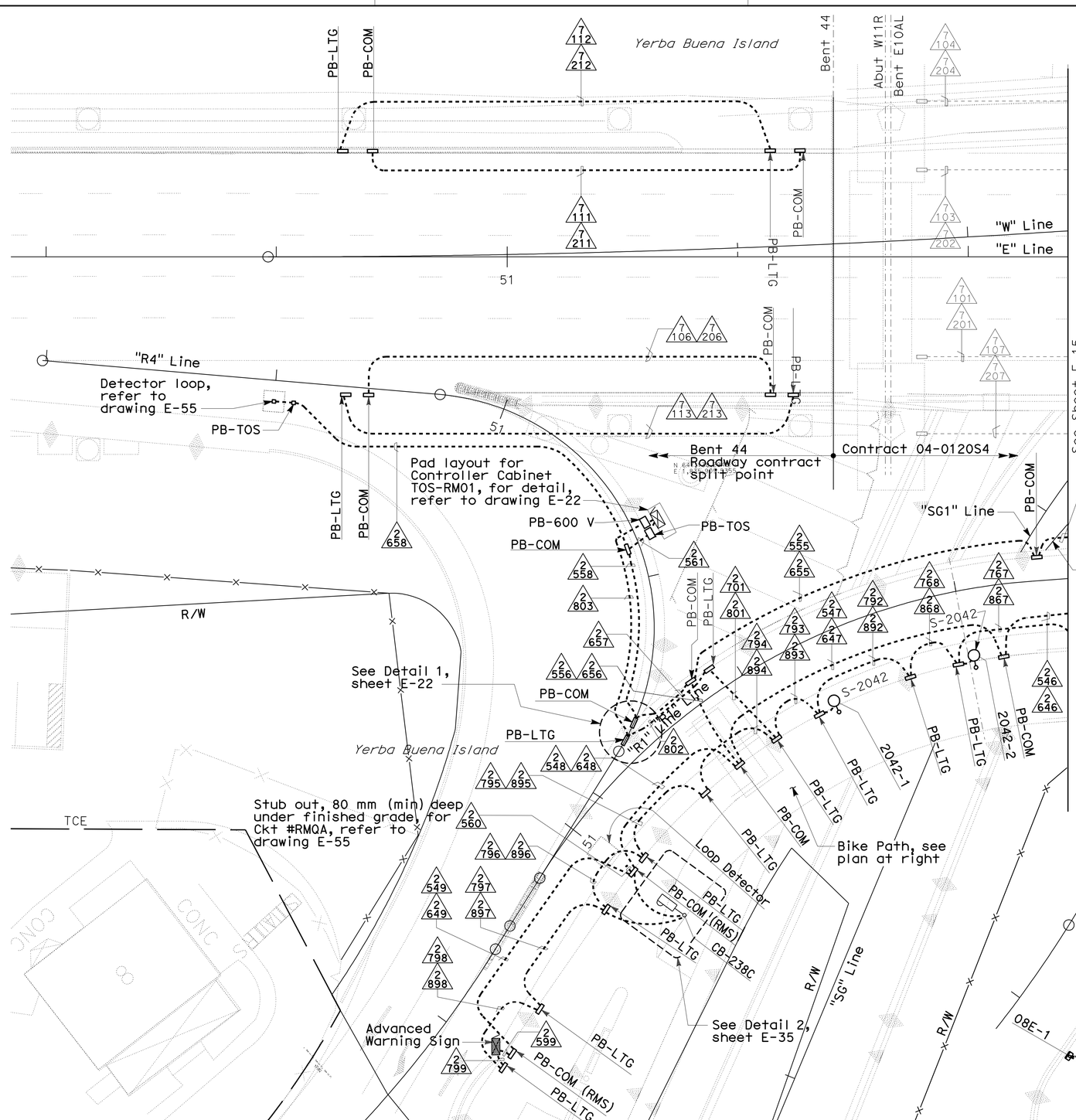

CONDUIT PLAN - ROADWAY

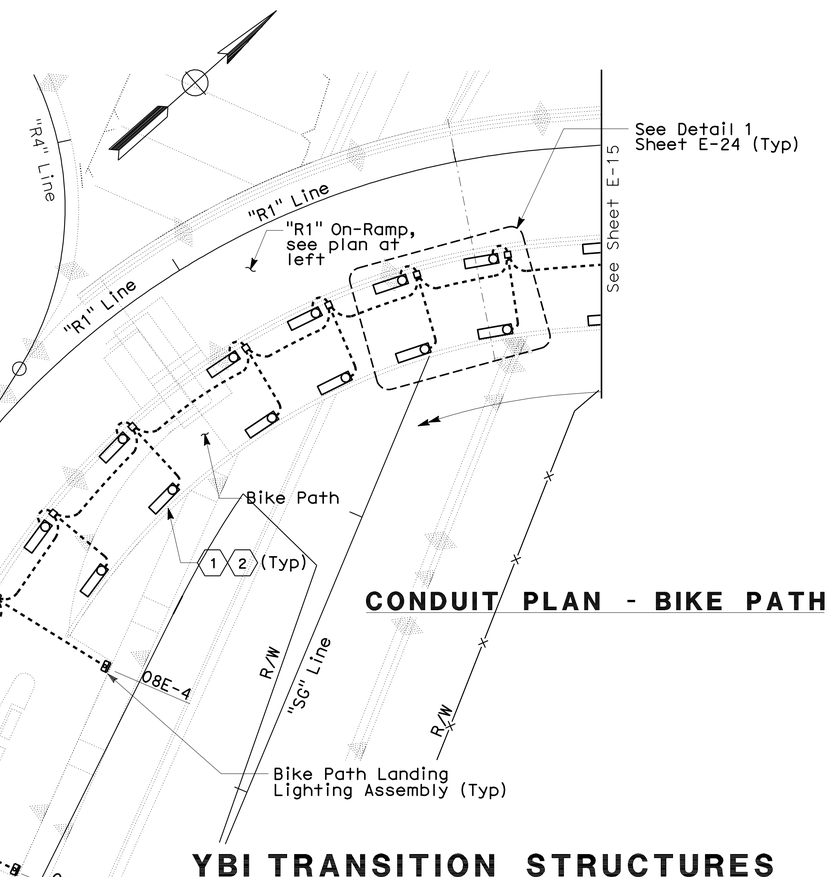

CONDUIT PLAN - BIKE PATH

YBI TRANSITION STRUCTURES ROADWAY AND GIRDER EASTBOUND (LIGHTING AND ELECTRICAL SYSTEMS)

SCALE: 1:200

THIS PLAN ACCURATE FOR ELECTRICAL WORK ONLY.

ALL DIMENSIONS ARE IN METERS UNLESS OTHERWISE SHOWN

E-14

REUBEN BUENVIAJE — REVISED BY — DATE REVISED
J. HALIM, T. WU, W. BECK — CALCULATED-DESIGNED BY — CHECKED BY
BOB ZANDIPOUR — CONSULTANT FUNCTIONAL SUPERVISOR

STATE OF CALIFORNIA - DEPARTMENT OF TRANSPORTATION
Caltrans

LAST REVISION 02-16-12 | DATE PLOTTED => 25-FEB-2012 | TIME PLOTTED => 09:53

Dist	COUNTY	ROUTE	KILOMETER POST TOTAL PROJECT	SHEET No.	TOTAL SHEETS
04	SF	80	12.6/13.9	243	821

Syn Yee Chin 02/16/12
REGISTERED ELECTRICAL ENGINEER

2-21-12
PLANS APPROVAL DATE

REGISTERED PROFESSIONAL ENGINEER SYN YEE CHIN No. 18186 Exp. 09/30/2013 ELECTRICAL STATE OF CALIFORNIA

THE STATE OF CALIFORNIA OR ITS OFFICERS OR AGENTS SHALL NOT BE RESPONSIBLE FOR THE ACCURACY OR COMPLETENESS OF ELECTRONIC COPIES OF THIS PLAN SHEET.

PB AMERICAS, Inc.
303 Second St., Suite 700N
San Francisco, CA 94107-1317

Caltrans Metric

NOTES:

1. References:
   - Refer to drawing E-46 for pull box, light pole, and light fixture schedules.
   - For call box detail, locations and schedule, see sheets E-34, E-35, E-36, E-49 and E-52.
   - For call box wiring diagram, refer to drawings E-50 and E-51.
   - For panel LP-217 schedule, see sheet E-47.
   - For conduit routing inside barriers and pole bases, see sheet E-23.
   - For 480 V roadway lighting wiring diagram, refer to sheet E-42.
   - For 120 V bike path lighting wiring diagram, see sheets E-43, E-44 and E-45.
   - For ramp meter system location, details and block diagram, see sheets E-53 thru E-55.
   - Refer to conduit and tray schedules, cable and circuit schedules starting at sheet E-62.
2. Unless shown in bold, everything else is not part of this Contract.
3. The Contractor shall inspect, verify, install, assemble, and wire State-furnished light poles and fixtures.

SHEET NOTES:

(1) For bike path lighting location, refer to YBI EB on-ramp Structural drawings.

(2) At hinges W8B and W6RB, stub-out 41C RGS conduit between barrier and bike path railing, and connect to 41C flex metal PVC coated conduit. Coil flex conduit across the hinge to provide for seismic displacement. Refer to Structural plans for displacement requirements. See Detail 2, E-23.

(3) Extend Circuits S-2042-2 and UP202-12 across Hinge W6RB and splice in PB-LTG.

(4) Extend Circuit 2169 across Hinge W6RB to CB-239C.

(5) Extend Bike Path lighting circuits across hinge W8B and W6EB (In flex 41C metal PVC coated conduit) and splice in pull box.

(6) Stub out 41C RGS conduit and connect to 41C flex metal PVC coated conduit. Provide flex conduit slack for seismic displacement. Refer to Detail 2 on drawing E-23 and structural plans.

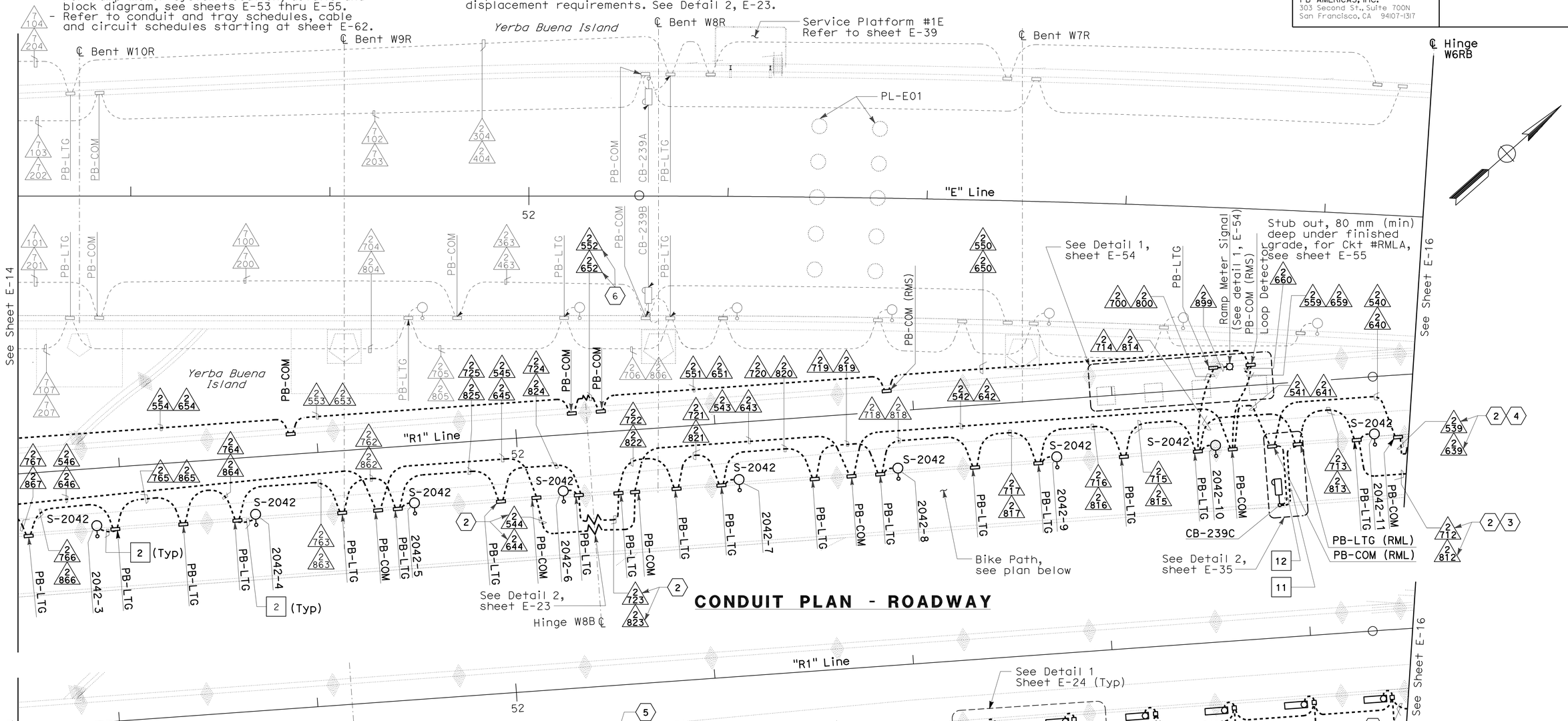

CONDUIT PLAN - ROADWAY

CONDUIT PLAN - BIKE PATH

YBI TRANSITION STRUCTURES ROADWAY EASTBOUND (LIGHTING AND ELECTRICAL SYSTEMS)

SCALE: 1:200

THIS PLAN ACCURATE FOR ELECTRICAL WORK ONLY.

ALL DIMENSIONS ARE IN METERS UNLESS OTHERWISE SHOWN

E-15

REUBEN BUENVIAJE
J. HALIM, T. WU, W. BECK
BOB ZANDIPOUR
CONSULTANT FUNCTIONAL SUPERVISOR
CALCULATED-DESIGNED BY
CHECKED BY
REVISED BY
DATE REVISED

STATE OF CALIFORNIA - DEPARTMENT OF TRANSPORTATION
Caltrans

LAST REVISION 02-16-12
DATE PLOTTED => 25-FEB-2012
TIME PLOTTED => 0953

Dist	COUNTY	ROUTE	KILOMETER POST TOTAL PROJECT	SHEET No.	TOTAL SHEETS
04	SF	80	12.6/13.9	244	821

Syn Yee Chin 02/16/12
REGISTERED ELECTRICAL ENGINEER

2-21-12
PLANS APPROVAL DATE

REGISTERED PROFESSIONAL ENGINEER SYN YEE CHIN No. 18186 Exp. 09/30/2013 ELECTRICAL STATE OF CALIFORNIA

THE STATE OF CALIFORNIA OR ITS OFFICERS OR AGENTS SHALL NOT BE RESPONSIBLE FOR THE ACCURACY OR COMPLETENESS OF ELECTRONIC COPIES OF THIS PLAN SHEET.

PB AMERICAS, Inc.
303 Second St., Suite 700N
San Francisco, CA 94107-1317

Caltrans Metric

NOTES:

1. References:
   - For pull box and light fixture schedules, see sheet E-46.
   - For 120 V bike path lighting wiring diagrams, see sheets E-43, E-44 and E-45.
2. Refer to conduit and tray schedules, cable and circuit schedules starting at drawing E-62.
3. Unless shown in bold, everything else is not part of this Contract.

SHEET NOTES:

1. Stub-out conduits from pull box for connections to 41C flex metal PVC coated conduit.
2. All bike path conduits shown are existing unless otherwise noted. The Contractor to pull cable and terminate circuits to bike path lighting fixtures.
3. The Contractor to route cables/circuits in existing conduit.
4. Splice circuits A-2009-2, A-2010-2, UP202-12 and UP202-8 in PB-LTG.
5. Pull new circuit 2169 from CB-240B to CB-239C and terminate cable inside installed call box.
6. Splice circuits LP217-1,3,5 and LP 217-2,4,6 inside PB-LTG.
7. Splice circuit LP218-1,3,5 inside PB-LTG.
8. Splice circuit S-2042-1 to S-2042-2 inside PB-LTG.
9. Splice circuit A-2009-1 to A-2009-2 and A-2010-1 to A-2010-2 in PB-LTG.

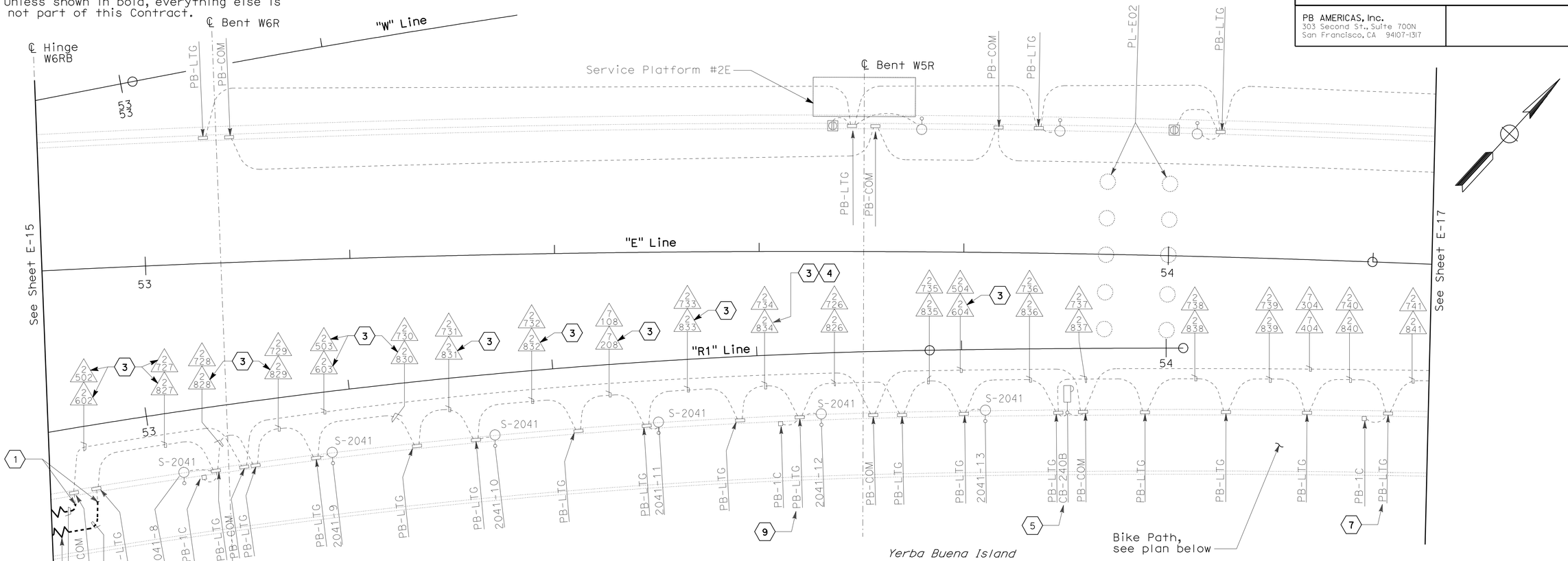

CONDUIT PLAN-ROADWAY

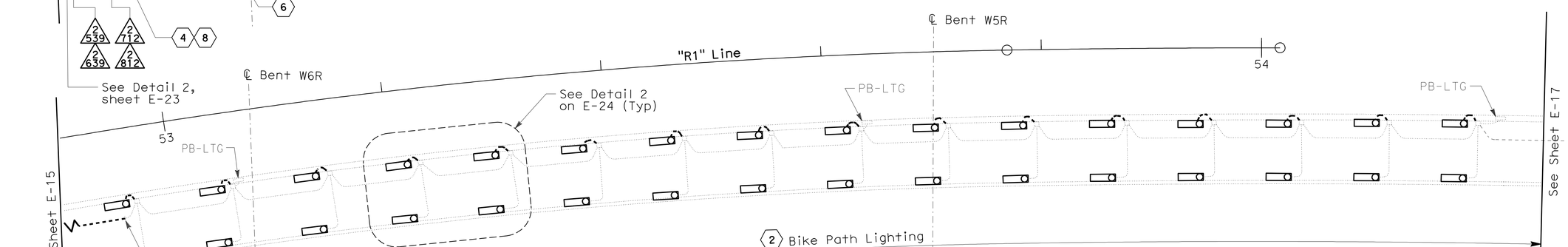

CONDUIT PLAN-BIKE PATH

YBI TRANSITION STRUCTURES
ROADWAY EASTBOUND
(LIGHTING AND ELECTRICAL SYSTEMS)

SCALE: 1:200

E-16

THIS PLAN ACCURATE FOR ELECTRICAL WORK ONLY.

ALL DIMENSIONS ARE IN METERS UNLESS OTHERWISE SHOWN

REVISED BY	DATE REVISED

REUBEN BUENVIAJE
J. HALIM, T. WU, W. BECK

CALCULATED-DESIGNED BY
CHECKED BY

CONSULTANT FUNCTIONAL SUPERVISOR
BOB ZANDIPOUR

STATE OF CALIFORNIA - DEPARTMENT OF TRANSPORTATION
Caltrans

LAST REVISION 02-16-12
DATE PLOTTED => 25-FEB-2012
TIME PLOTTED => 09:53

Dist	COUNTY	ROUTE	KILOMETER POST TOTAL PROJECT	SHEET No.	TOTAL SHEETS
04	SF	80	12.6/13.9	245	821

Syn Yee Chin 10/31/11
REGISTERED ELECTRICAL ENGINEER

2-21-12
PLANS APPROVAL DATE

REGISTERED PROFESSIONAL ENGINEER
SYN YEE CHIN
No. 18186
Exp. 09/30/2013
ELECTRICAL
STATE OF CALIFORNIA

THE STATE OF CALIFORNIA OR ITS OFFICERS OR AGENTS SHALL NOT BE RESPONSIBLE FOR THE ACCURACY OR COMPLETENESS OF ELECTRONIC COPIES OF THIS PLAN SHEET.

PB AMERICAS, Inc.
303 Second St., Suite 700N
San Francisco, CA 94107-1317

Caltrans Metric

NOTES:

1. References:
   - For pull box and light fixture schedules, see sheet E-46.
   - For 120 V bike path lighting wiring diagram, see sheet E-44.
2. Refer to conduit and tray schedules, cable and circuit schedules starting at drawing E-62.
3. Unless shown in bold, everything else is not part of this Contract.

SHEET NOTES:

1. Extend and pull 4#8 + #10G to PB-1C.
2. For railing post location, refer to YBI EB on-ramp Structural sheets.
3. For bike path lighting location, refer to YBI EB on-ramp Structural sheets.
4. The Contractor to connect conduit to existing stub-out.
5. Splice circuit LP218-2,4,6 inside PB-LTG.

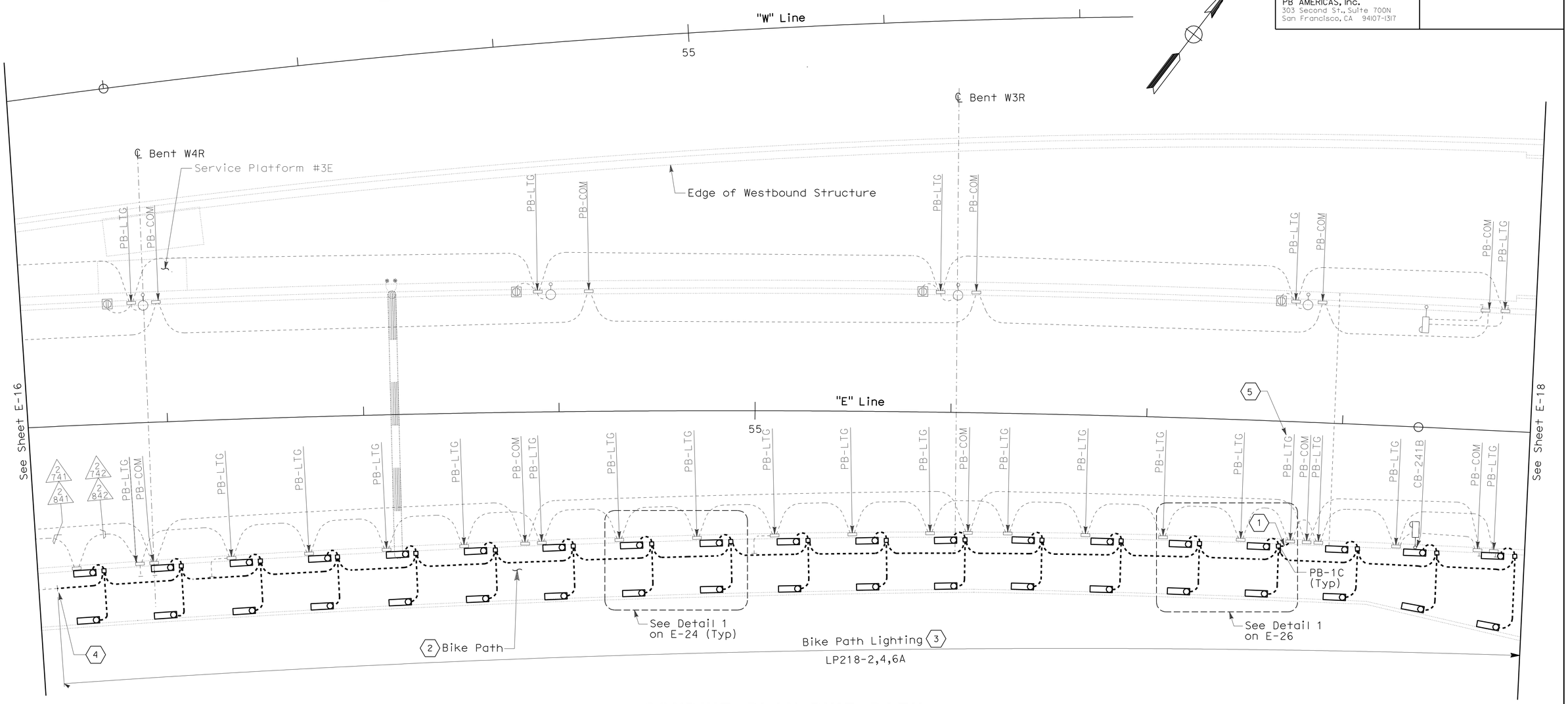

CONDUIT PLAN-BIKE PATH

ALL DIMENSIONS ARE IN METERS UNLESS OTHERWISE SHOWN

YBI TRANSITION STRUCTURES ROADWAY AND GIRDER EASTBOUND (LIGHTING AND ELECTRICAL SYSTEMS)

SCALE 1:200

THIS PLAN ACCURATE FOR ELECTRICAL WORK ONLY.

E-17

REVISED BY	DATE REVISED

REUBEN BUENVIAJE
J. HALIM, T. WU, W. BECK
CALCULATED-DESIGNED BY
CHECKED BY
CONSULTANT FUNCTIONAL SUPERVISOR
BOB ZANDIPOUR

STATE OF CALIFORNIA - DEPARTMENT OF TRANSPORTATION
Caltrans

LAST REVISION 00-00-00 | DATE PLOTTED => 27-FEB-2012 | TIME PLOTTED => 08:05

Dist	COUNTY	ROUTE	KILOMETER POST TOTAL PROJECT	SHEET No.	TOTAL SHEETS
04	SF	80	12.6/13.9	246	821

Caltrans Metric

Syn Yee Chin 02/16/12
REGISTERED ELECTRICAL ENGINEER

2-21-12
PLANS APPROVAL DATE

REGISTERED PROFESSIONAL ENGINEER SYN YEE CHIN No. 18186 Exp. 09/30/2013 ELECTRICAL STATE OF CALIFORNIA

THE STATE OF CALIFORNIA OR ITS OFFICERS OR AGENTS SHALL NOT BE RESPONSIBLE FOR THE ACCURACY OR COMPLETENESS OF ELECTRONIC COPIES OF THIS PLAN SHEET.

PB AMERICAS, Inc.
303 Second St., Suite 700N
San Francisco, CA 94107-1317

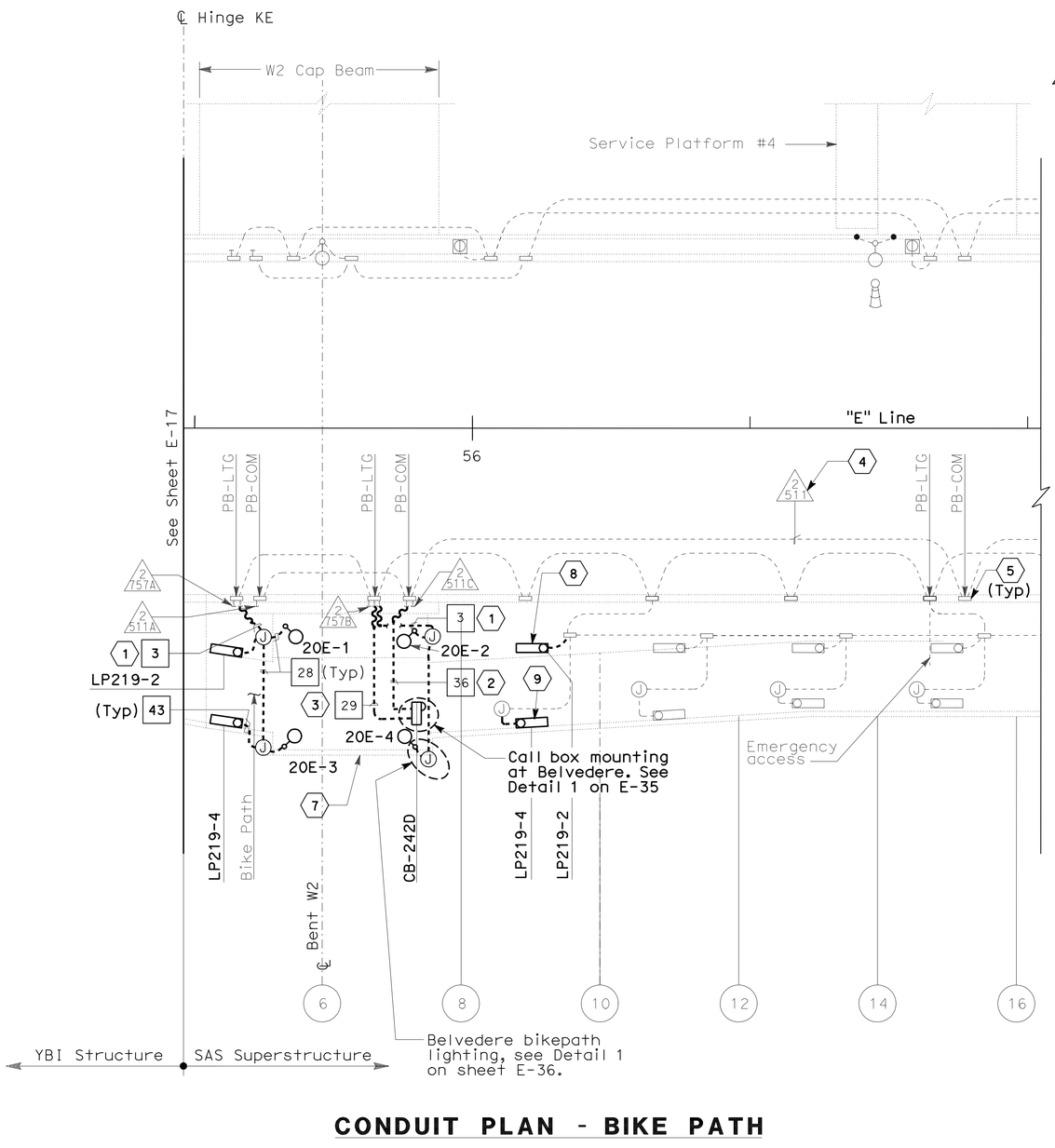

CONDUIT PLAN - BIKE PATH

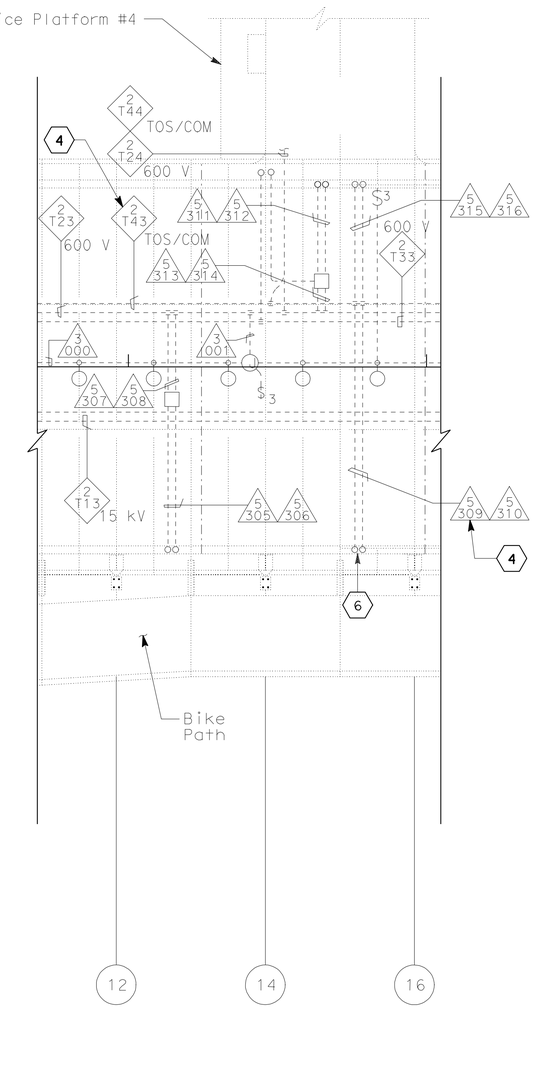

PARTIAL CONDUIT AND CABLE TRAY PLAN - GIRDER

NOTES:

1. References
   - For bike path lighting, see Detail 1, sheet E-25.
   - For bike path railing lighting fixture wiring diagram, see sheet E-45.
   - Refer to drawings E-35 and E-36 for call box details.
   - For call box wiring diagram, refer to drawings E-50 and E-51.
2. Refer to conduit and tray schedules, cable and circuit schedules starting at drawing E-62.
3. Unless shown in bold, everything else is not part of this contract.
4. The Contractor shall install all electrical bike path components shown bold west of PP-9, which are State-furnished.
5. The Contractor shall inspect, verify, assemble, install, and wire State-furnished Belvedere light poles and fixtures.

SHEET NOTES:

1. Connect liquidtight flexible conduit to stubbed out conduit at PB-LTG. Splice conductors and pull existing circuit LP219-2A and LP219-4A to bike path lighting.
2. Connect liquidtight flexible conduit to stubbed out conduit at PB-COM. Pull existing coiled cable inside cable tray at PP15 (Circuit 2155) to CB-242D. Terminate cable inside installed call box.
3. Connect liquidtight flexible conduit to stubbed out conduit at PB-LTG. Splice conductors and pull existing circuit UP205-6A from PB-LTG to CB-242D.
4. The Contractor to route cables/circuits in existing conduit.
5. Conduit from barrier pull box down into Girder Box, see partial conduit and cable tray plan - girder this sheet.
6. Conduit up to PB-LTG located in barrier, see bike path conduit plan this sheet.
7. Partial bike path structure installed this contract. Refer to Structural plans for details.
8. Splice existing circuit LP219-2A and pull 2#12 + #12G to bike path lighting.
9. Splice existing circuit LP219-4A and pull 2#12 + #12G to bike path lighting.

YBI TRANSITION STRUCTURES ROADWAY AND GIRDER EASTBOUND (LIGHTING AND ELECTRICAL SYSTEMS)

SCALE: 1:200

E-18

REVISED BY	DATE REVISED

REUBEN BUENVIAJE
J. HALIM, T. WU, W. BECK

CALCULATED-DESIGNED BY
CHECKED BY

CONSULTANT FUNCTIONAL SUPERVISOR
BOB ZANDIPOUR

STATE OF CALIFORNIA - DEPARTMENT OF TRANSPORTATION
Caltrans

LAST REVISION 02-16-12
DATE PLOTTED => 25-FEB-2012
TIME PLOTTED => 09:53

THIS PLAN ACCURATE FOR ELECTRICAL WORK ONLY.

ALL DIMENSIONS ARE IN METERS UNLESS OTHERWISE SHOWN

Dist	COUNTY	ROUTE	KILOMETER POST TOTAL PROJECT	SHEET No.	TOTAL SHEETS
04	SF	80	12.6/13.9	247	821

Syn Yee Chin 10/31/11
REGISTERED ELECTRICAL ENGINEER

2-21-12
PLANS APPROVAL DATE

REGISTERED PROFESSIONAL ENGINEER
SYN YEE CHIN
No. 18186
Exp. 09/30/2013
ELECTRICAL
STATE OF CALIFORNIA

THE STATE OF CALIFORNIA OR ITS OFFICERS OR AGENTS SHALL NOT BE RESPONSIBLE FOR THE ACCURACY OR COMPLETENESS OF ELECTRONIC COPIES OF THIS PLAN SHEET.

PB AMERICAS, Inc.
303 Second St., Suite 700N
San Francisco, CA 94107-1317

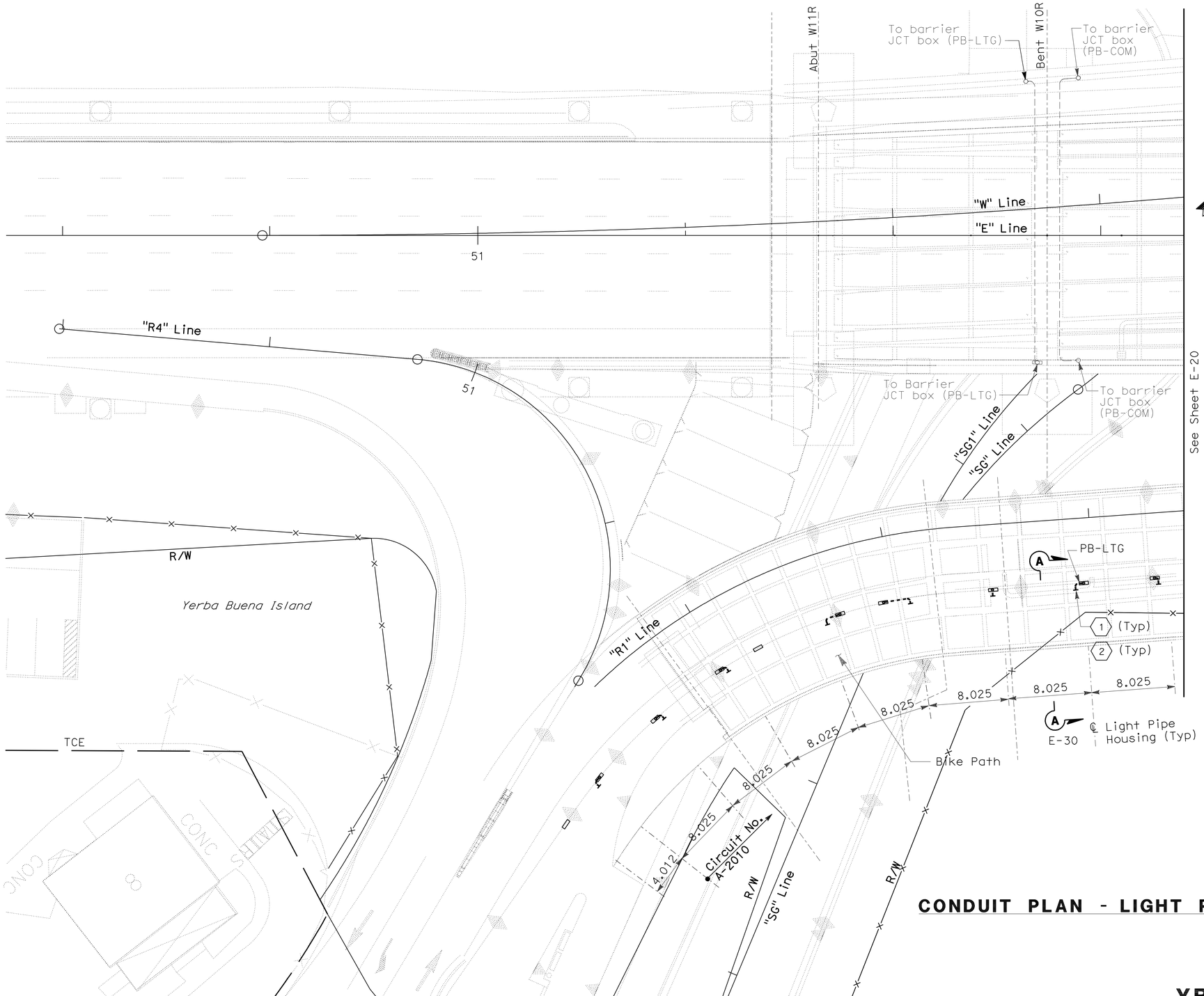

NOTES:

1. For conduits located in barrier, see sheet E-14.
2. Unless shown in bold, everything else is not part of this Contract.
3. References:
   - Refer to drawing E-46 for Light Pipe Schedule.

SHEET NOTES:

(1) Provide cap at end of conduit.

(2) For 480 V Light Pipe Wiring diagram, see sheet E-42.

CONDUIT PLAN - LIGHT PIPE

ALL DIMENSIONS ARE IN METERS UNLESS OTHERWISE SHOWN

YBI TRANSITION STRUCTURES ROADWAY AND GIRDER EASTBOUND
(LIGHTING AND ELECTRICAL SYSTEMS)

SCALE 1:200

E-19

THIS PLAN ACCURATE FOR ELECTRICAL WORK ONLY.

STATE OF CALIFORNIA - DEPARTMENT OF TRANSPORTATION
Caltrans

CONSULTANT FUNCTIONAL SUPERVISOR: BOB ZANDIPOUR
CALCULATED-DESIGNED BY: J. HALIM, T. WU, W. BECK
CHECKED BY: REUBEN BUENVIAJE
REVISED BY
DATE REVISED

LAST REVISION 00-00-00
DATE PLOTTED => 27-FEB-2012
TIME PLOTTED => 06:14

Dist	COUNTY	ROUTE	KILOMETER POST TOTAL PROJECT	SHEET No.	TOTAL SHEETS
04	SF	80	12.6/13.9	248	821

Syn Yee Chin 10/31/11
REGISTERED ELECTRICAL ENGINEER

2-21-12
PLANS APPROVAL DATE

REGISTERED PROFESSIONAL ENGINEER
SYN YEE CHIN
No. 18186
Exp. 09/30/2013
ELECTRICAL
STATE OF CALIFORNIA

THE STATE OF CALIFORNIA OR ITS OFFICERS OR AGENTS SHALL NOT BE RESPONSIBLE FOR THE ACCURACY OR COMPLETENESS OF ELECTRONIC COPIES OF THIS PLAN SHEET.

PB AMERICAS, Inc.
303 Second St., Suite 700N
San Francisco, CA 94107-1317

Caltrans Metric

NOTES:

1. For conduits located in barrier, see sheet E-15.
2. Unless shown in bold, everything else is not part of this Contract.
3. References:
   - Refer to drawing E-46 for Light Pipe Schedule.

SHEET NOTES:

(1) Provide cap at end of conduit.

(2) For 480 V light pipe wiring diagram, see sheet E-42.

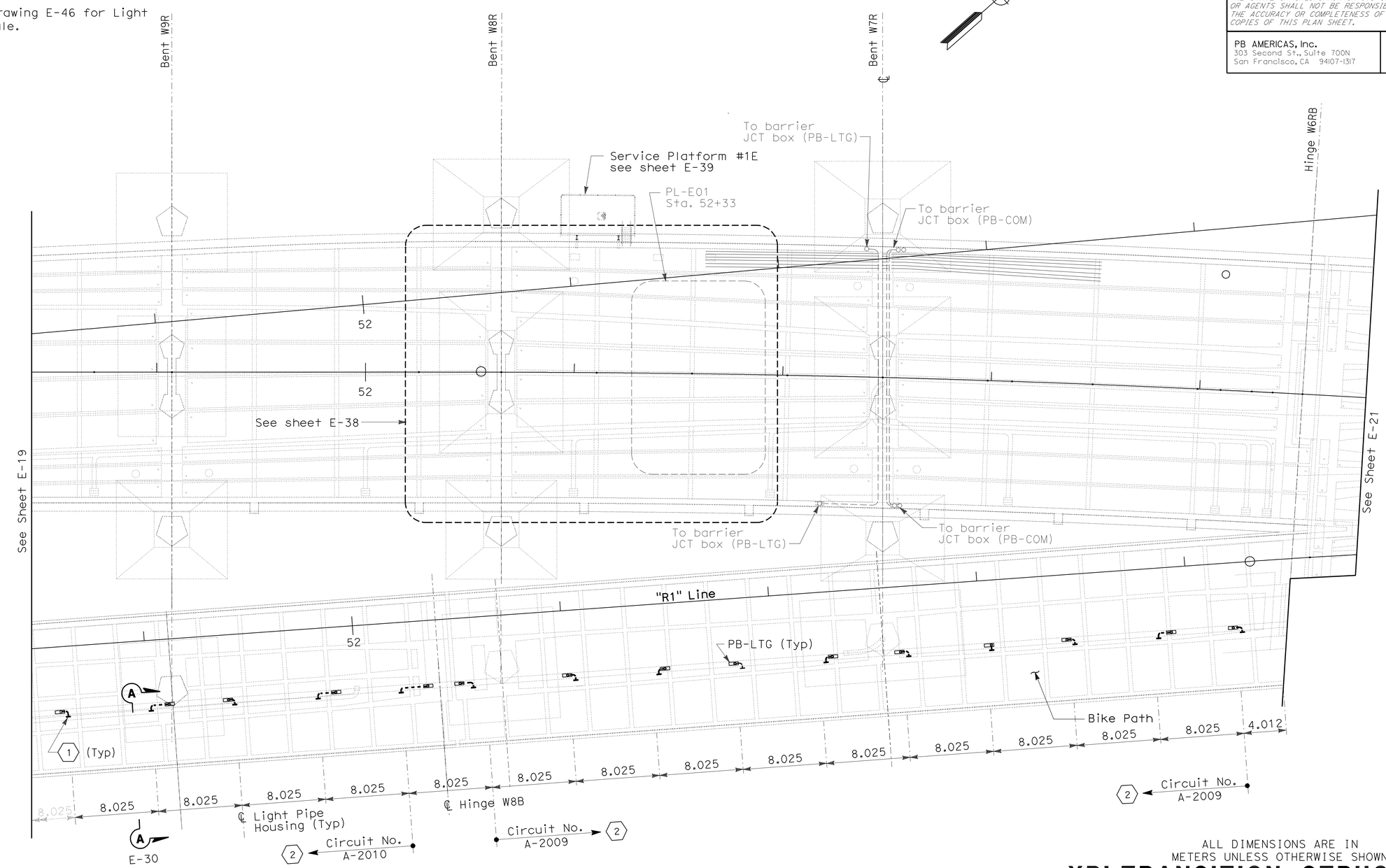

ALL DIMENSIONS ARE IN METERS UNLESS OTHERWISE SHOWN

CONDUIT PLAN - LIGHT PIPE

YBI TRANSITION STRUCTURES ROADWAY AND GIRDER EASTBOUND (LIGHTING AND ELECTRICAL SYSTEMS)

SCALE 1:200

E-20

THIS PLAN ACCURATE FOR ELECTRICAL WORK ONLY.

STATE OF CALIFORNIA - DEPARTMENT OF TRANSPORTATION
Caltrans

CONSULTANT FUNCTIONAL SUPERVISOR: BOB ZANDIPOUR
CALCULATED-DESIGNED BY: REUBEN BUENVIAJE
CHECKED BY: J. HALIM, T. WU, W. BECK
REVISED BY / DATE REVISED

LAST REVISION 00-00-00
DATE PLOTTED => 26-FEB-2012
TIME PLOTTED => 09:54

Dist	COUNTY	ROUTE	KILOMETER POST TOTAL PROJECT	SHEET No.	TOTAL SHEETS
04	SF	80	12.6/13.9	249	821

Syn Yee Chin 10/31/11
REGISTERED ELECTRICAL ENGINEER

2-21-12
PLANS APPROVAL DATE

REGISTERED PROFESSIONAL ENGINEER
SYN YEE CHIN
No. 18186
Exp. 09/30/2013
ELECTRICAL
STATE OF CALIFORNIA

THE STATE OF CALIFORNIA OR ITS OFFICERS OR AGENTS SHALL NOT BE RESPONSIBLE FOR THE ACCURACY OR COMPLETENESS OF ELECTRONIC COPIES OF THIS PLAN SHEET.

PB AMERICAS, Inc.
303 Second St., Suite 700N
San Francisco, CA 94107-1317

Caltrans Metric

NOTES:

1. For conduits located in the barrier, see sheet E-16.
2. Everything shown on this plan is existing. This plan is provided as reference for location of Service Platform #2E.

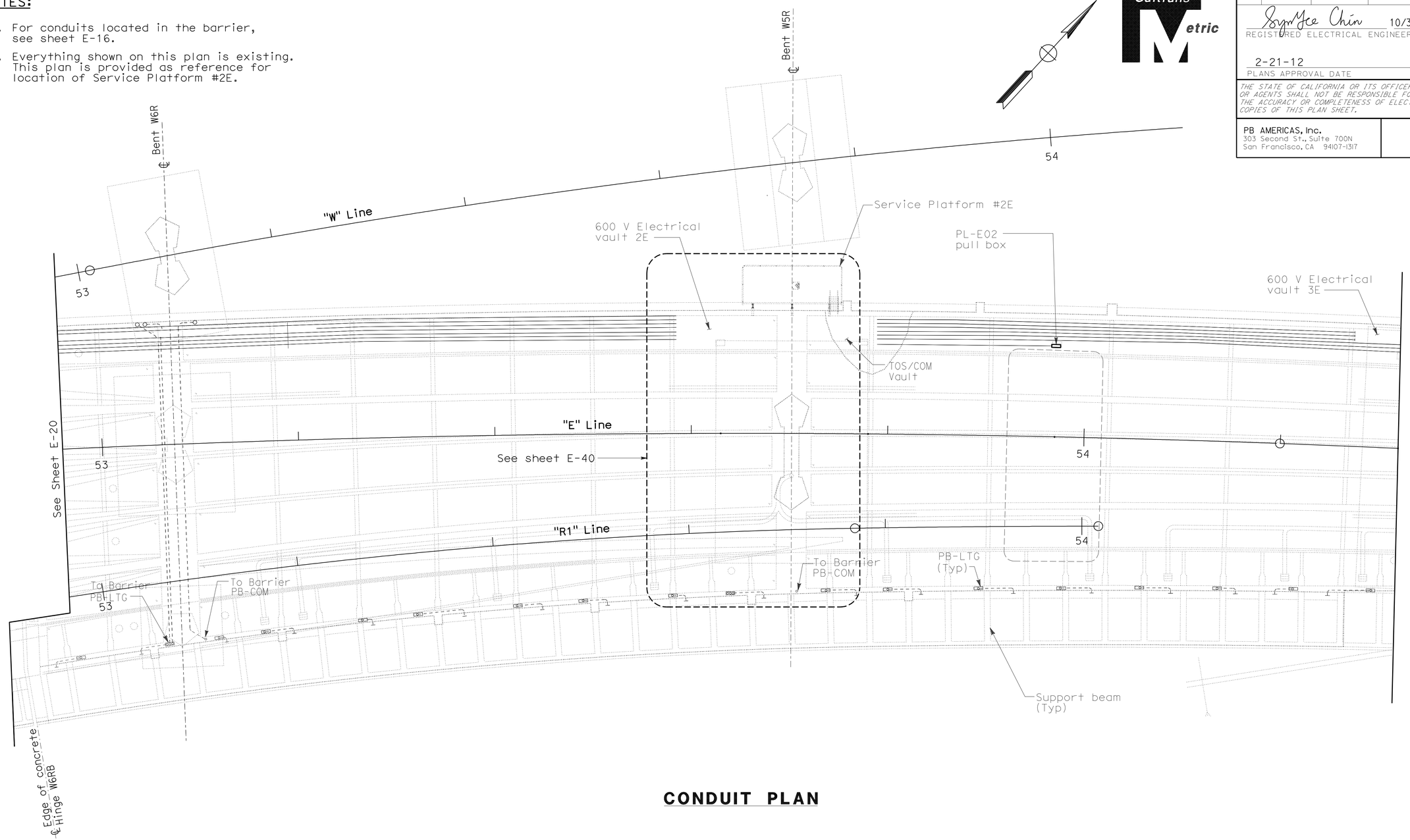

CONDUIT PLAN

ALL DIMENSIONS ARE IN METERS UNLESS OTHERWISE SHOWN

YBI TRANSITION STRUCTURES ROADWAY AND GIRDER EASTBOUND (LIGHTING AND ELECTRICAL SYSTEMS)

SCALE 1:200

E-21

THIS PLAN ACCURATE FOR ELECTRICAL WORK ONLY.

STATE OF CALIFORNIA - DEPARTMENT OF TRANSPORTATION
Caltrans

CONSULTANT FUNCTIONAL SUPERVISOR: BOB ZANDIPOUR
CALCULATED-DESIGNED BY: REUBEN BUENVIAJE
CHECKED BY: J. HALIM, T. WU, W. BECK
REVISED BY
DATE REVISED

LAST REVISION 00-00-00
DATE PLOTTED => 25-FEB-2012
TIME PLOTTED => 09:54

Dist	COUNTY	ROUTE	KILOMETER POST TOTAL PROJECT	SHEET No.	TOTAL SHEETS
04	SF	80	12.6/13.9	250	821

Caltrans Metric

Syn Yee Chin 10/31/11
REGISTERED ELECTRICAL ENGINEER

2-21-12
PLANS APPROVAL DATE

REGISTERED PROFESSIONAL ENGINEER
SYN YEE CHIN
No. 18186
Exp. 09/30/2013
ELECTRICAL
STATE OF CALIFORNIA

THE STATE OF CALIFORNIA OR ITS OFFICERS OR AGENTS SHALL NOT BE RESPONSIBLE FOR THE ACCURACY OR COMPLETENESS OF ELECTRONIC COPIES OF THIS PLAN SHEET.

PB AMERICAS, Inc.
303 Second St., Suite 700N
San Francisco, CA 94107-1317

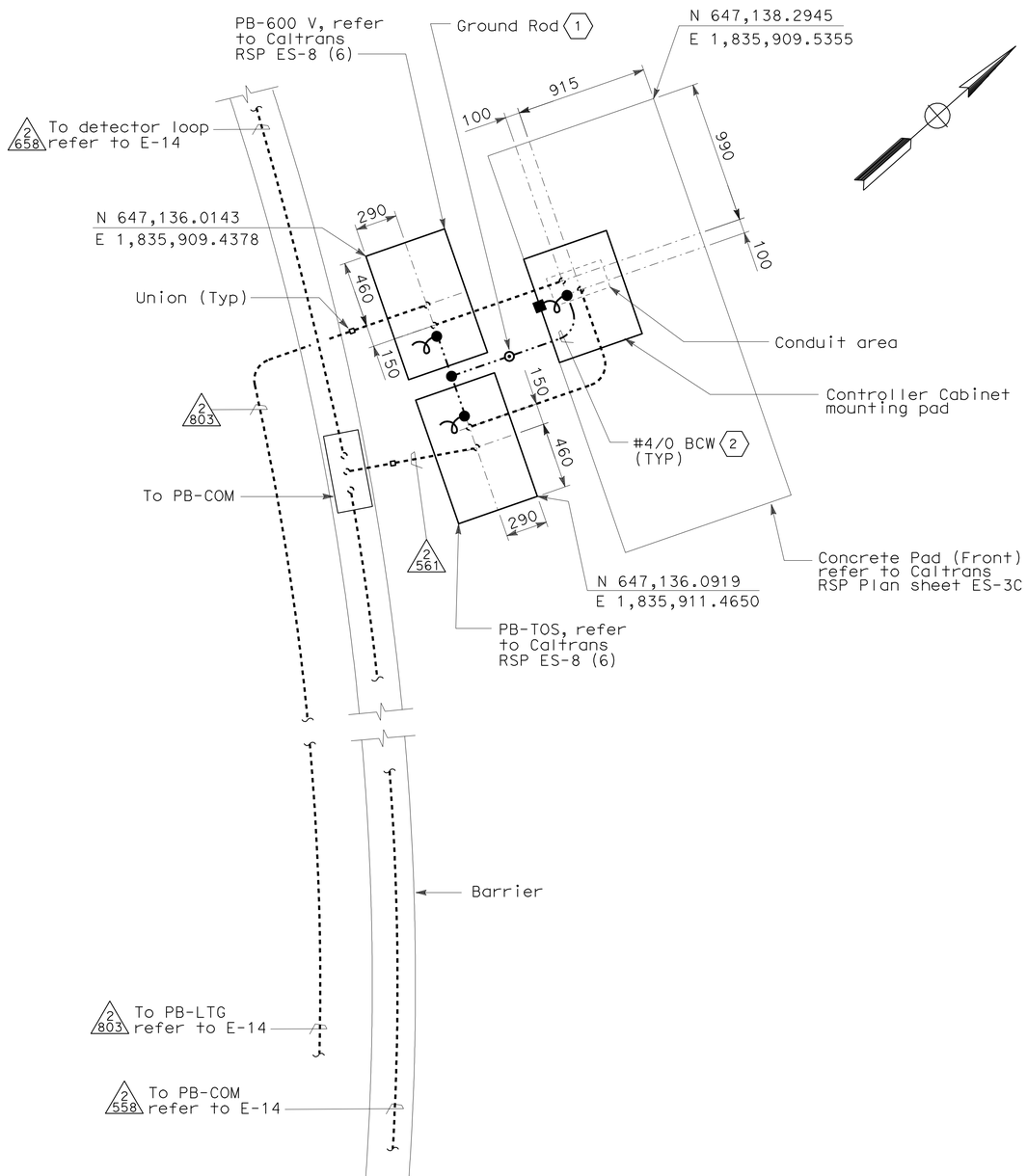

TOS CONTROLLER CABINET PAD LAYOUT

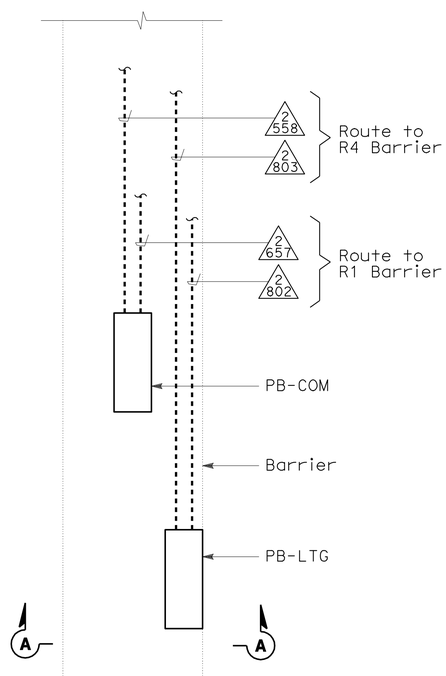

DETAIL 1

CONDUIT ROUTING INSIDE CONCRETE BARRIER

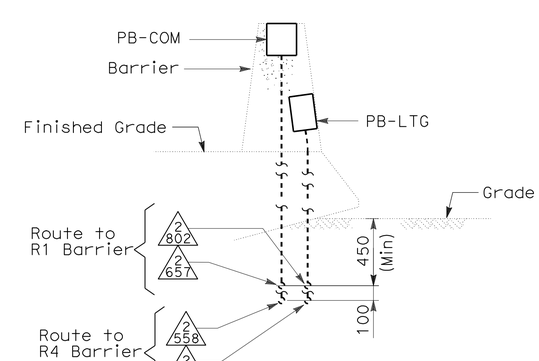

SECTION A-A

NOTE:

1. References:
   - For pull box schedule, see sheet E-46.

SHEET NOTES:

(1) Ground rod shall be 3 meter in length Steel reinforced, copper clad, 19 mm diameter.

(2) All ground pigtails to equipment shall be a #4/0 AWG Bare, copper ground conductor unless otherwise indicated.

ALL DIMENSIONS ARE IN MILLIMETERS UNLESS OTHERWISE SHOWN

DETAILS

YBI TRANSITION STRUCTURES ROADWAY AND GIRDER EASTBOUND (TOS CONTROLLER CABINET PAD LAYOUT WITH CONDUIT LOCATIONS)

NO SCALE

E-22

THIS PLAN ACCURATE FOR ELECTRICAL WORK ONLY.

REVISED BY	DATE REVISED

CALCULATED-DESIGNED BY: REUBEN BUENVIAJE
CHECKED BY: J. HALIM, T. WU, W. BECK

CONSULTANT FUNCTIONAL SUPERVISOR: BOB ZANDIPOUR

STATE OF CALIFORNIA - DEPARTMENT OF TRANSPORTATION
Caltrans

LAST REVISION 00-00-00 | DATE PLOTTED => 25-FEB-2012 | TIME PLOTTED => 10:59

Dist	COUNTY	ROUTE	KILOMETER POST TOTAL PROJECT	SHEET No.	TOTAL SHEETS
04	SF	80	12.6/13.9	251	821

Caltrans Metric

Syn Yee Chin 02/16/12
REGISTERED ELECTRICAL ENGINEER

2-21-12
PLANS APPROVAL DATE

REGISTERED PROFESSIONAL ENGINEER SYN YEE CHIN No. 18186 Exp. 09/30/2013 ELECTRICAL STATE OF CALIFORNIA

THE STATE OF CALIFORNIA OR ITS OFFICERS OR AGENTS SHALL NOT BE RESPONSIBLE FOR THE ACCURACY OR COMPLETENESS OF ELECTRONIC COPIES OF THIS PLAN SHEET.

PB AMERICAS, Inc.
303 Second St., Suite 700N
San Francisco, CA 94107-1317

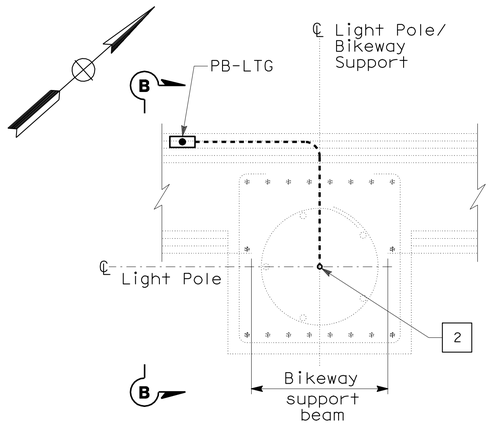

DETAIL 1
(E-14 and E-15)
CONDUIT STUB UP FOR RAMP LIGHTING

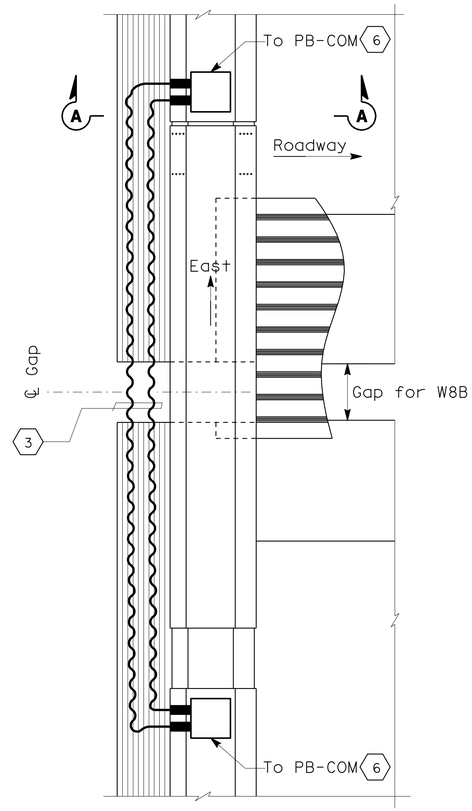

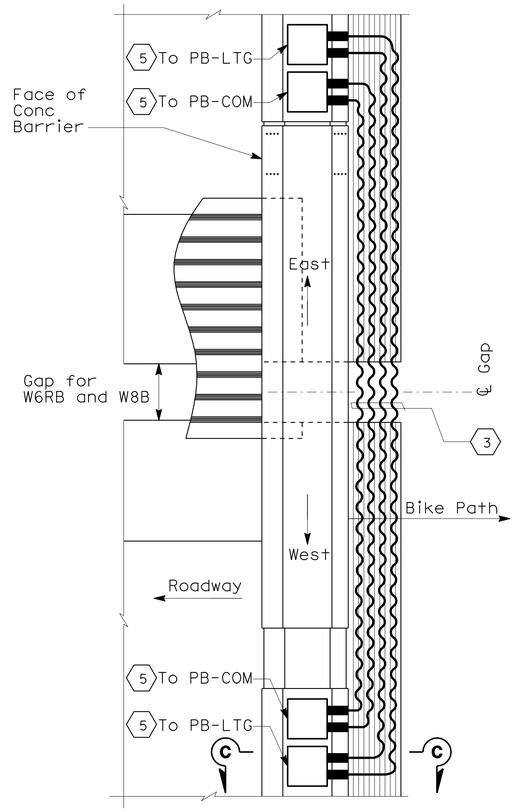

DETAIL 2
NOT TO SCALE

NOTES:

1. References:
   - For lighting poles, and pull box schedules, see sheets E-46.
   - For concrete foundation lighting pole mounting, see Structural plans.
2. For PB-LTG and PB-COM location plan, see sheet E-14 thru E-18.

SHEET NOTES:

1. Bond grounding bushing to ground lug at pole with #6 AWG bare copper wire.
2. Refer to plan layout on drawings E-14 and E-15 for approximate conduit stub-up and pull box locations in barrier. The Contractor shall verify dimension and locate PB-LTG/COM with sufficient distance to accommodate required clearance for the modular joint.
3. Provide a minimum 1250 mm of flexible conduit slack to accommodate seismic expansion, refer to structural plans.
4. Connect PVC coated liquidtight flexible metal conduit to conduit coupler.
5. Refer to Section A-A and Section C-C. Align (4) stub-outs on the side of concrete barrier in 2 by 2 arrangement.
6. Align stub-outs side by side on the side of concrete barrier.

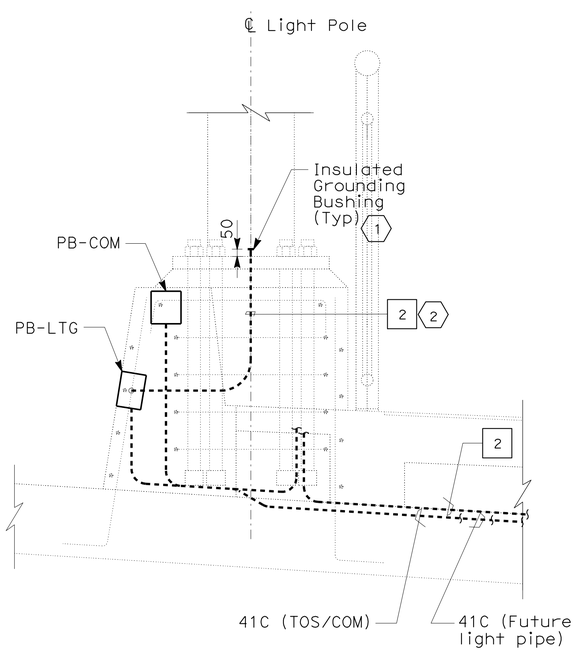

SECTION B-B
BIKE PATH

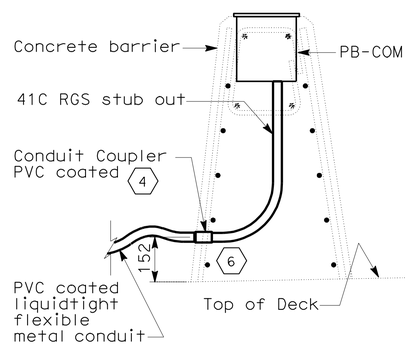

2 SECTION A-A
NO SCALE
Typical for PB-COM
in concrete barrier.
(Shown for 1 conduit; there shall be
2 conduits at Hinge W8B Roadway
Deck North Barrier)

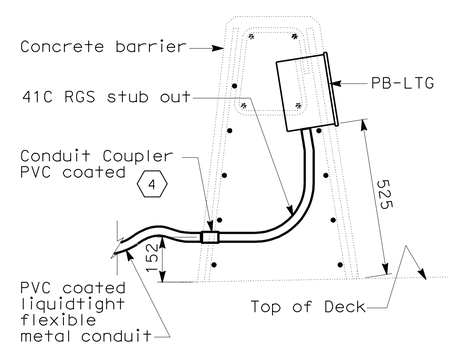

2 SECTION C-C
NO SCALE
Typical for PB-LTG
in concrete barrier.
(Shown for 1 conduit; there shall be
2 conduits to PB-COM and 2 conduits
to PB-LTG crossing Hinges W6RB and
W8B along the concrete barrier adjacent
to the bike path railing.)

DETAILS
YBI TRANSITION STRUCTURES
ROADWAY AND GIRDER EASTBOUND
(CONDUIT DETAILS)
NO SCALE

E-23

THIS PLAN ACCURATE FOR ELECTRICAL WORK ONLY.

ALL DIMENSIONS ARE IN MILLIMETERS UNLESS OTHERWISE SHOWN

REVISED BY | DATE REVISED
REUBEN BUENVIAJE
J. HALIM, T. WU, W. BECK
CALCULATED-DESIGNED BY
CHECKED BY
CONSULTANT FUNCTIONAL SUPERVISOR
BOB ZANDIPOUR
STATE OF CALIFORNIA - DEPARTMENT OF TRANSPORTATION
Caltrans

LAST REVISION 02-16-12 | DATE PLOTTED => 25-FEB-2012 | TIME PLOTTED => 10:50

Dist	COUNTY	ROUTE	KILOMETER POST TOTAL PROJECT	SHEET No.	TOTAL SHEETS
04	SF	80	12.6/13.9	252	821

Caltrans Metric

Syn Yee Chin 10/31/11
REGISTERED ELECTRICAL ENGINEER

2-21-12
PLANS APPROVAL DATE

REGISTERED PROFESSIONAL ENGINEER
SYN YEE CHIN
No. 18186
Exp. 09/30/2013
ELECTRICAL
STATE OF CALIFORNIA

THE STATE OF CALIFORNIA OR ITS OFFICERS OR AGENTS SHALL NOT BE RESPONSIBLE FOR THE ACCURACY OR COMPLETENESS OF ELECTRONIC COPIES OF THIS PLAN SHEET.

PB AMERICAS, Inc.
303 Second St., Suite 700N
San Francisco, CA 94107-1317

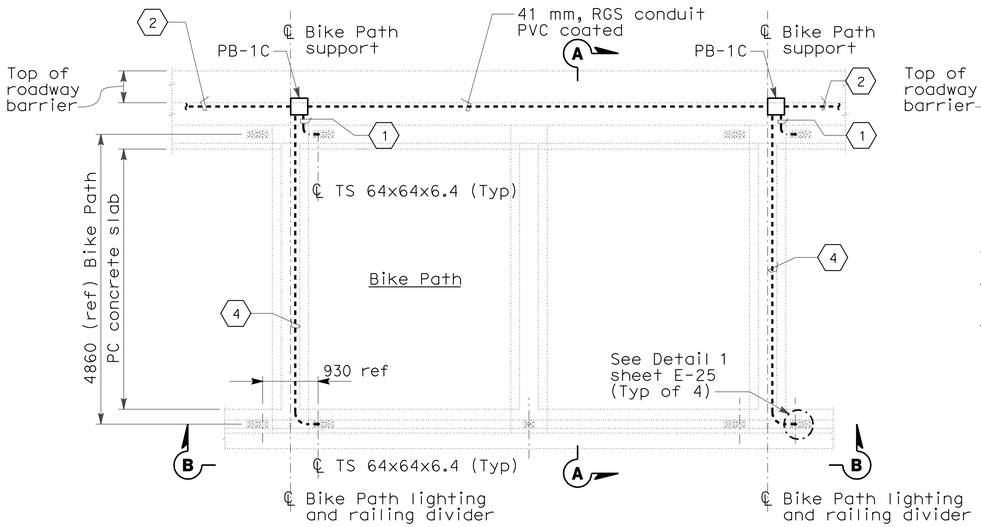

TYPICAL BIKE PATH LIGHTING - DETAIL 1

TYPICAL CONDUIT ARRANGEMENT (SEE SHEETS E-14, E-15, & E-17)
NO SCALE

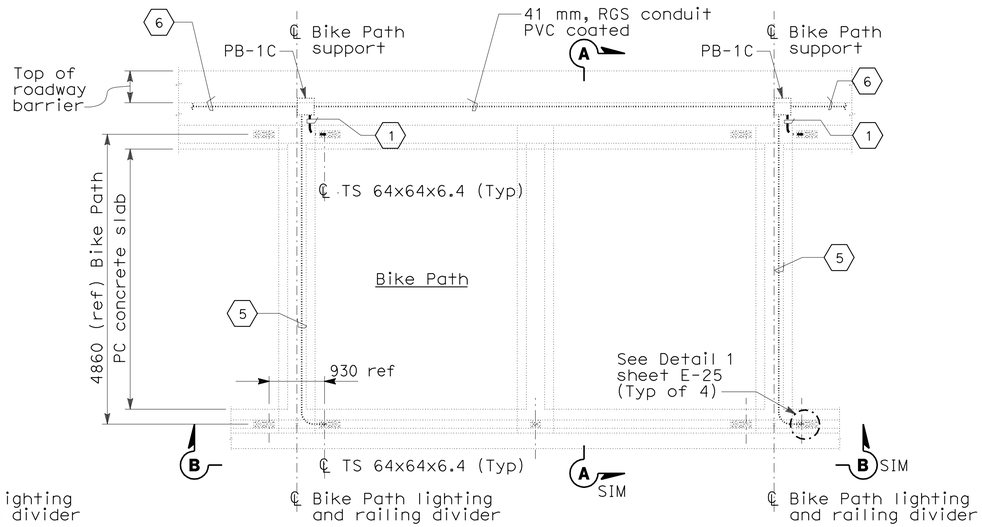

TYPICAL BIKE PATH LIGHTING - DETAIL 2

TYPICAL CONDUIT ARRANGEMENT (SEE SHEET E-16)
NO SCALE

NOTES:

1. All exposed conduits and fittings installed between the Roadway and the Bike Path shall be PVC coated galvanized steel.
2. For locations of PB-LTG and PB-COM at the Roadway concrete/steel barrier, see sheets E-14 and E-15.
3. References:
   - For pull box schedule, see sheet E-46.
   - For railing details refer to Structural sheets, Bike Path railing Details.
4. (*) Dimension to be provided by Structural.
5. Unless shown in bold, everything else is not part of this Contract.

SHEET NOTES:

1. 21C, Flexible metallic conduit with 2#12 + #12G.
2. 41C, RGS PVC coated, continued to the next PB-1C. See sheets E-14 and E-15.
3. For connection and mounting details, see sheet E-25.
4. 21C, RGS Conduit with 2#12 + #12G.
5. Route new cable 2#12 + #12G in existing conduit.
6. Route new cable 4#8 + #10G in existing conduit.

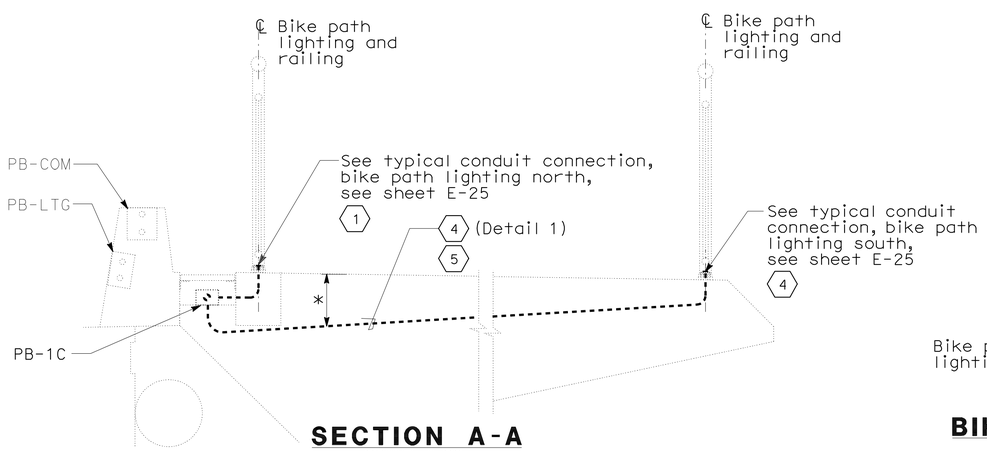

SECTION A-A

SCALE: 1:20

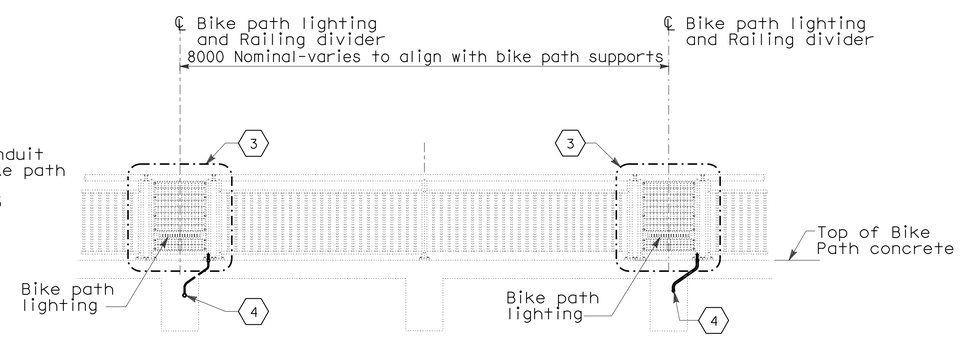

BIKE PATH RAILING - TYPICAL ELEVATION B-B

SCALE: 1:40

ALL DIMENSIONS ARE IN MILLIMETERS UNLESS OTHERWISE SHOWN

DETAILS

YBI TRANSITION STRUCTURES ROADWAY AND GIRDER EASTBOUND (TYPICAL BIKE PATH SECTIONS AND DETAILS)

SCALE AS SHOWN

E-24

THIS PLAN ACCURATE FOR ELECTRICAL WORK ONLY.

STATE OF CALIFORNIA - DEPARTMENT OF TRANSPORTATION
Caltrans

CONSULTANT FUNCTIONAL SUPERVISOR: BOB ZANDIPOUR
CALCULATED-DESIGNED BY: REUBEN BUENVIAJE
CHECKED BY: J. HALIM, T. WU, W. BECK
REVISED BY
DATE REVISED

LAST REVISION 00-00-00
DATE PLOTTED => 25-FEB-2012
TIME PLOTTED => 10:50

Dist	COUNTY	ROUTE	KILOMETER POST TOTAL PROJECT	SHEET No.	TOTAL SHEETS
04	SF	80	12.6/13.9	253	821

Caltrans Metric

Syn Yee Chin 10/31/11
REGISTERED ELECTRICAL ENGINEER

2-21-12
PLANS APPROVAL DATE

REGISTERED PROFESSIONAL ENGINEER
SYN YEE CHIN
No. 18186
Exp. 09/30/2013
ELECTRICAL
STATE OF CALIFORNIA

THE STATE OF CALIFORNIA OR ITS OFFICERS OR AGENTS SHALL NOT BE RESPONSIBLE FOR THE ACCURACY OR COMPLETENESS OF ELECTRONIC COPIES OF THIS PLAN SHEET.

PB AMERICAS, Inc.
303 Second St., Suite 700N
San Francisco, CA 94107-1317

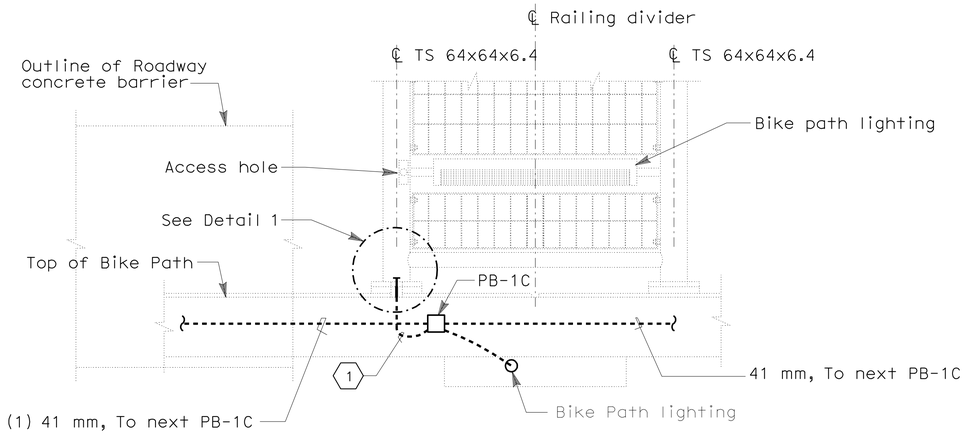

TYPICAL BIKE PATH LIGHTING - NORTH
(TYPICAL CONDUIT CONNECTIONS)

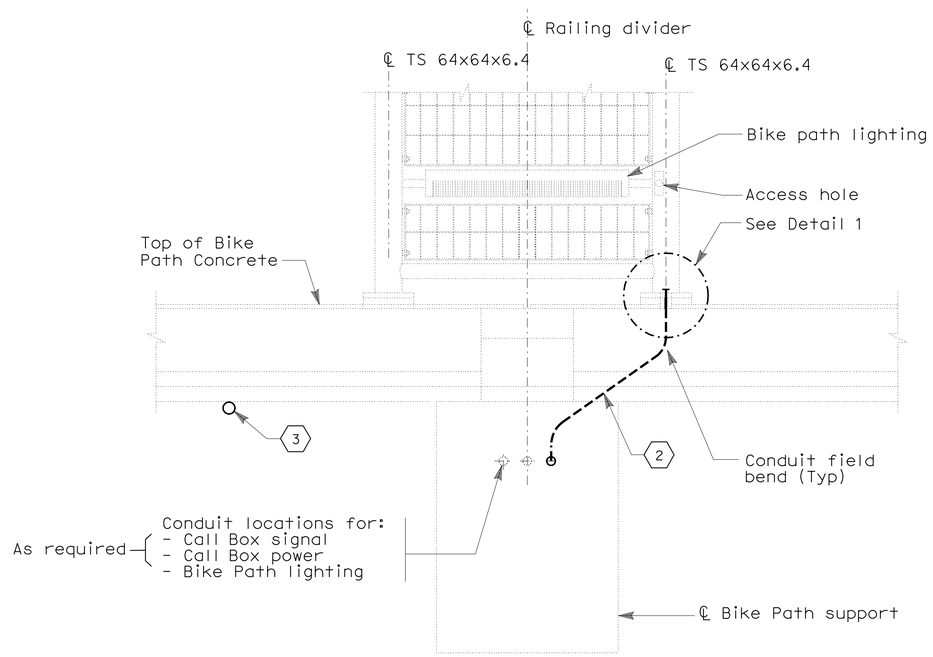

TYPICAL BIKE PATH LIGHTING - SOUTH
(TYPICAL CONDUIT CONNECTIONS)

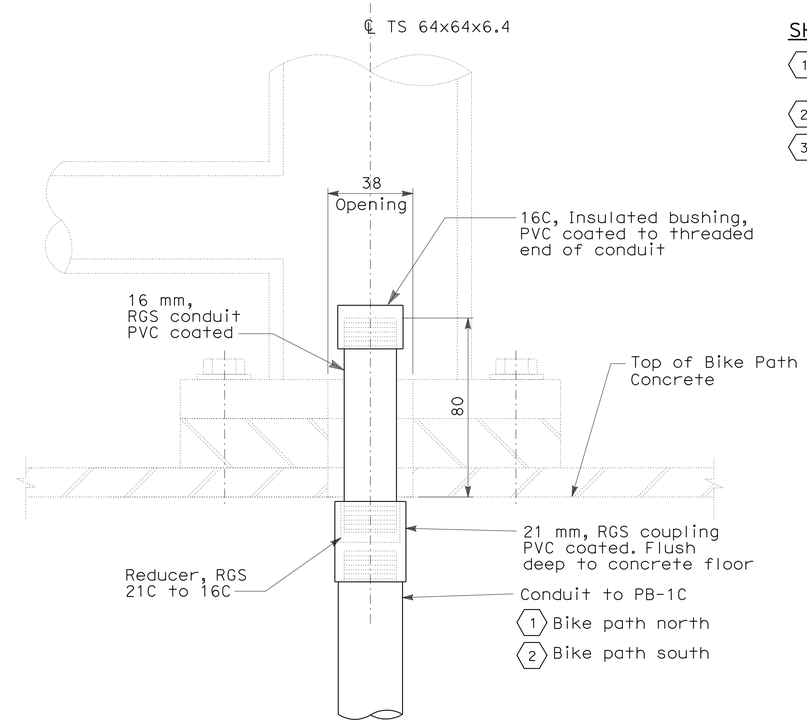

TYPICAL - DETAIL 1

NOTES:

1. All exposed conduits and fittings installed between the Roadway and the Bike Path shall be PVC coated galvanized steel.
2. For locations of PB-LTG and PB-COM at the Roadway concrete/steel barrier, see sheets E-14 thru E-18.

SHEET NOTES:

1. 21C, Flexible metallic conduit with 2#12 + 12G.
2. 21C, RGS conduit with 2#12 + 12G.
3. 21C RGS PVC coated conduit stub-out from PB-LTG for future light pipes. Refer to drawings E-19 and E-20 for approximate locations.

ALL DIMENSIONS ARE IN MILLIMETERS UNLESS OTHERWISE SHOWN

DETAILS
YBI TRANSITION STRUCTURES
ROADWAY AND GIRDER EASTBOUND
(TYPICAL BIKE PATH SECTIONS AND DETAILS)

NO SCALE

E-25

THIS PLAN ACCURATE FOR ELECTRICAL WORK ONLY.

REVISED BY	DATE REVISED
REUBEN BUENVIAJE	
J. HALIM, T. WU, W. BECK	
CALCULATED-DESIGNED BY	
CHECKED BY	
CONSULTANT FUNCTIONAL SUPERVISOR	
BOB ZANDIPOUR	

STATE OF CALIFORNIA - DEPARTMENT OF TRANSPORTATION
Caltrans

LAST REVISION 00-00-00 | DATE PLOTTED => 25-FEB-2012 | TIME PLOTTED => 10:50

Dist	COUNTY	ROUTE	KILOMETER POST TOTAL PROJECT	SHEET No.	TOTAL SHEETS
04	SF	80	12.6/13.9	254	821

Caltrans Metric

Syn Yee Chin 10/31/11
REGISTERED ELECTRICAL ENGINEER

2-21-12
PLANS APPROVAL DATE

REGISTERED PROFESSIONAL ENGINEER SYN YEE CHIN No. 18186 Exp. 09/30/2013 ELECTRICAL STATE OF CALIFORNIA

THE STATE OF CALIFORNIA OR ITS OFFICERS OR AGENTS SHALL NOT BE RESPONSIBLE FOR THE ACCURACY OR COMPLETENESS OF ELECTRONIC COPIES OF THIS PLAN SHEET.

PB AMERICAS, Inc.
303 Second St., Suite 700N
San Francisco, CA 94107-1317

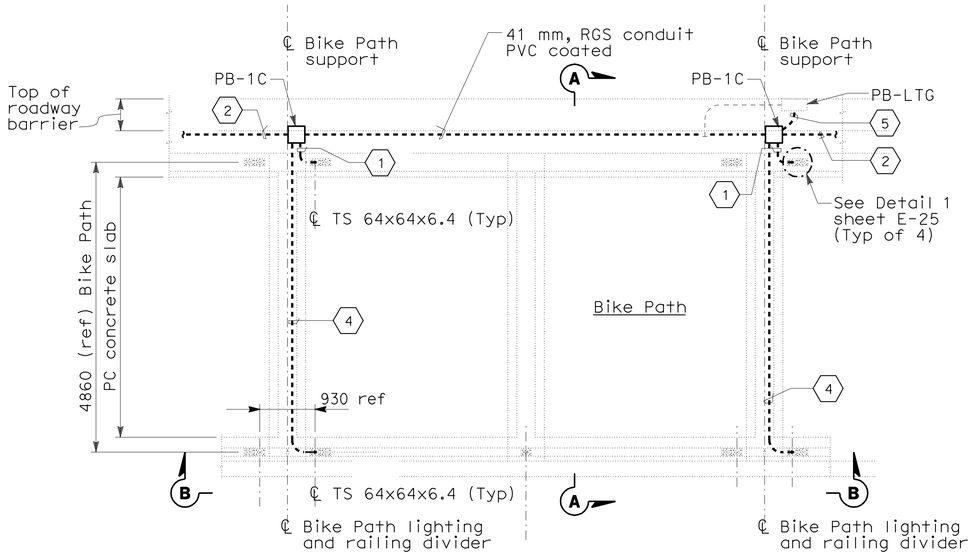

BIKE PATH LIGHTING - DETAIL 1

TYPICAL CONDUIT ARRANGEMENT (SEE SHEET E-17)
NO SCALE

NOTES:

1. All exposed conduits and fittings installed between the Roadway and the Bike Path shall be PVC coated galvanized steel.
2. For locations of PB-LTG and PB-COM at the Roadway concrete/steel barrier, see sheet E-17.
3. References:
   - For pull box schedule, see sheet E-46.
   - For railing details refer to Structural sheets, Bike Path railing Details.
4. (*) Dimension to be provided by Structural.
5. Unless shown in bold, everything else is not part of this Contract.

SHEET NOTES:

(1) 21C, Flexible metallic conduit with 2#12 + #12G.

(2) 41C, RGS PVC coated, continued to the next PB-1C. See sheet E-17.

(3) For connection and mounting details, see sheet E-25.

(4) 21C, RGS Conduit with 2#12 + #12G.

(5) Extend and terminate 41C to PB-1C, For location, see sheets E-17.

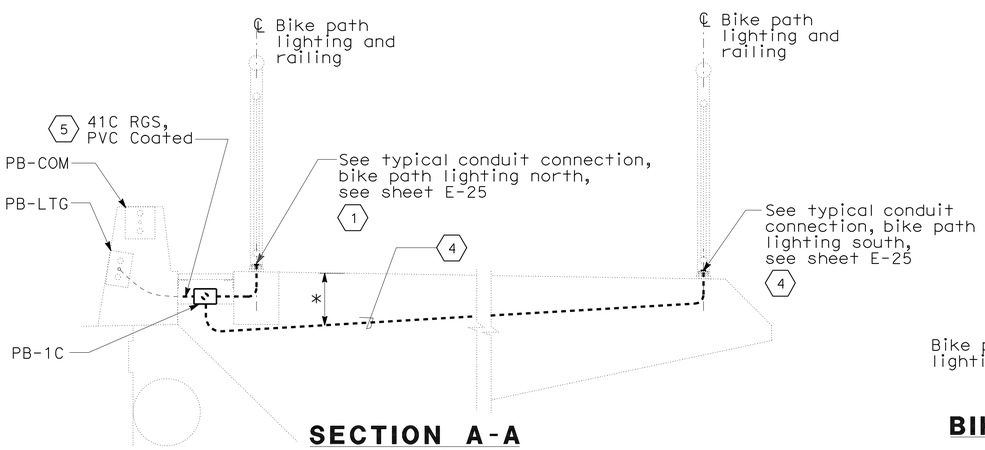

SECTION A-A

SCALE: 1:20

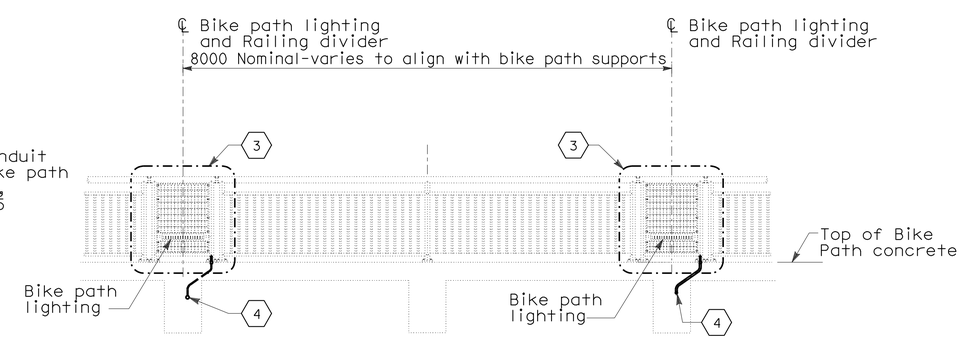

BIKE PATH RAILING - TYPICAL ELEVATION B-B

SCALE: 1:40

ALL DIMENSIONS ARE IN MILLIMETERS UNLESS OTHERWISE SHOWN

DETAILS

YBI TRANSITION STRUCTURES ROADWAY AND GIRDER EASTBOUND (TYPICAL BIKE PATH SECTIONS AND DETAILS)

SCALE AS SHOWN

E-26

THIS PLAN ACCURATE FOR ELECTRICAL WORK ONLY.

STATE OF CALIFORNIA - DEPARTMENT OF TRANSPORTATION
Caltrans

CONSULTANT FUNCTIONAL SUPERVISOR: BOB ZANDIPOUR
CALCULATED-DESIGNED BY: REUBEN BUENVIAJE
CHECKED BY: J. HALIM, T. WU, W. BECK
REVISED BY / DATE REVISED

LAST REVISION 00-00-00
DATE PLOTTED => 27-FEB-2012
TIME PLOTTED => 12:33

Dist	COUNTY	ROUTE	KILOMETER POST TOTAL PROJECT	SHEET No.	TOTAL SHEETS
04	SF	80	12.6/13.9	255	821

Caltrans Metric

REGISTERED ELECTRICAL ENGINEER — DATE 11/8/11

2-21-12
PLANS APPROVAL DATE

REGISTERED PROFESSIONAL ENGINEER — T. W. SPARKS — No. E16039 — Exp. 9-30-13 — ELECTRICAL — STATE OF CALIFORNIA

THE STATE OF CALIFORNIA OR ITS OFFICERS OR AGENTS SHALL NOT BE RESPONSIBLE FOR THE ACCURACY OR COMPLETENESS OF ELECTRONIC COPIES OF THIS PLAN SHEET.

T.Y. LIN / MOFFATT & NICHOL
TWO HARRISON STREET, SUITE 500
SAN FRANCISCO, CA 94105

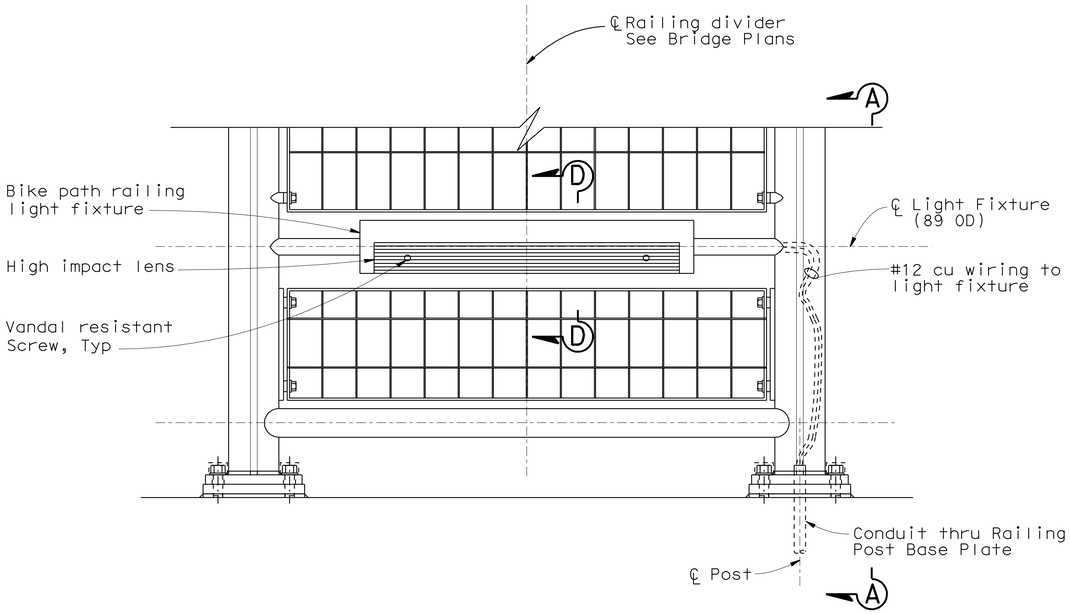

ELEVATION
1:5

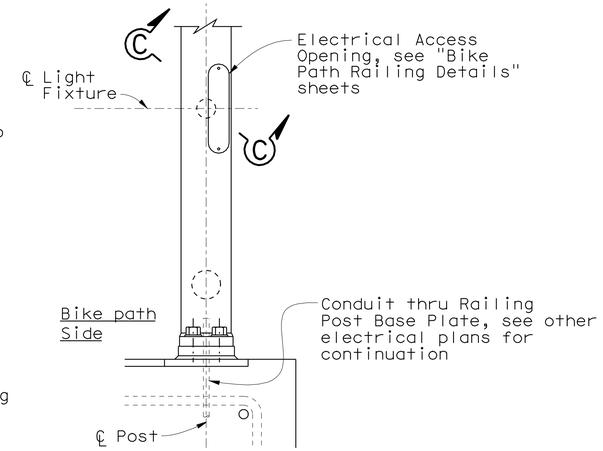

SECTION A-A
1:5

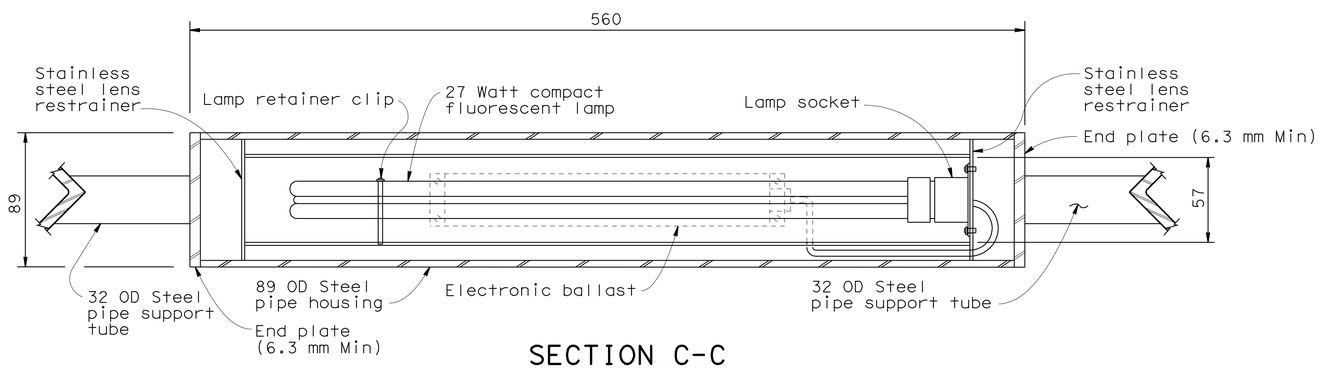

SECTION C-C
1:2

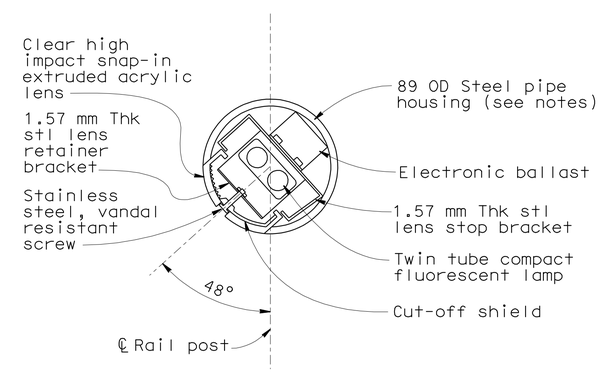

SECTION D-D
1:2

NOTES:

1. All metal (except stainless steel) parts of railing light assembly shall be coated.
2. Refer to structural plans for railing details.
3. Light fixtures shall be parallel to top of bike path.
4. Light fixture support tube shall be welded to vertical posts.
5. All exposed welds shall be ground smooth.

ALL DIMENSIONS ARE IN
MILLIMETERS UNLESS OTHERWISE SHOWN.

DETAILS

YBI TRANSITION STRUCTURES
ROADWAY AND GIRDER EASTBOUND
(BIKE PATH RAILING LIGHTING)

SCALE AS NOTED

E-27

REVISED BY	DATE REVISED
JNB	3/17/11
JNB	5/16/08
JNB	1/31/08

CALCULATED-DESIGNED BY: GAM
CHECKED BY: TYL
CONSULTANT FUNCTIONAL SUPERVISOR: BOB ZANDIPOUR

STATE OF CALIFORNIA - DEPARTMENT OF TRANSPORTATION
Caltrans

LAST REVISION 05-19-08 | DATE PLOTTED => 25-FEB-2012 | TIME PLOTTED => 10:51

Dist	COUNTY	ROUTE	KILOMETER POST TOTAL PROJECT	SHEET No.	TOTAL SHEETS
04	SF	80	12.6/13.9	256	821

REGISTERED ELECTRICAL ENGINEER 11/8/11 DATE

2-21-12
PLANS APPROVAL DATE

REGISTERED PROFESSIONAL ENGINEER T.W. SPARKS No. E16039 Exp. 9-30-13 ELECTRICAL STATE OF CALIFORNIA

THE STATE OF CALIFORNIA OR ITS OFFICERS OR AGENTS SHALL NOT BE RESPONSIBLE FOR THE ACCURACY OR COMPLETENESS OF ELECTRONIC COPIES OF THIS PLAN SHEET.

T.Y. LIN / MOFFATT & NICHOL
TWO HARRISON STREET, SUITE 500
SAN FRANCISCO, CA 94105

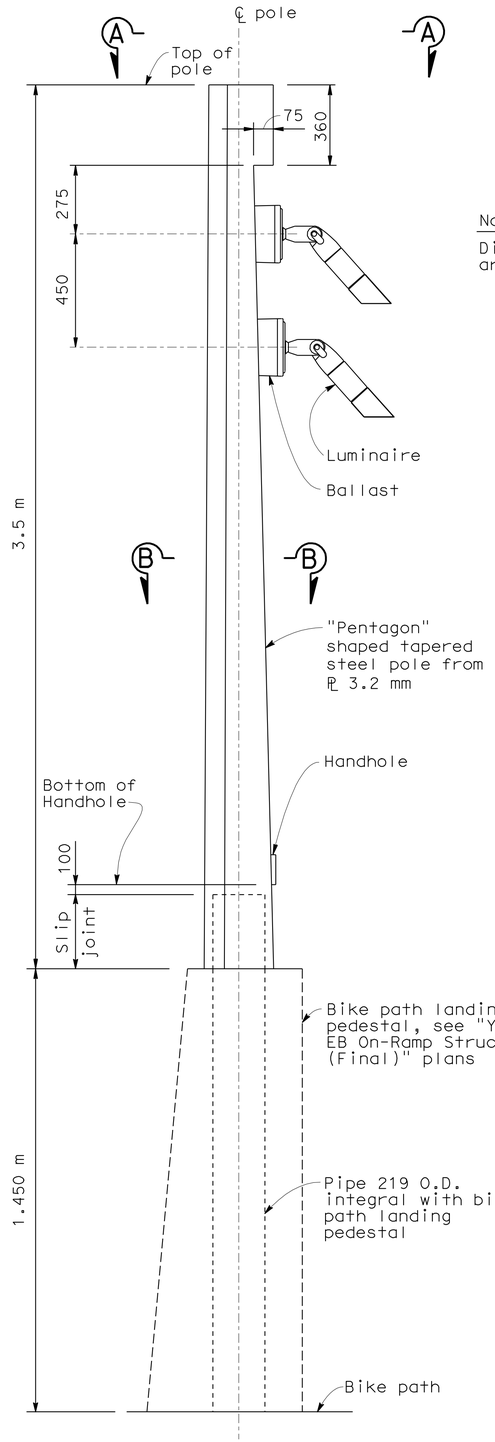

ELEVATION
POLE DETAIL
Not to scale

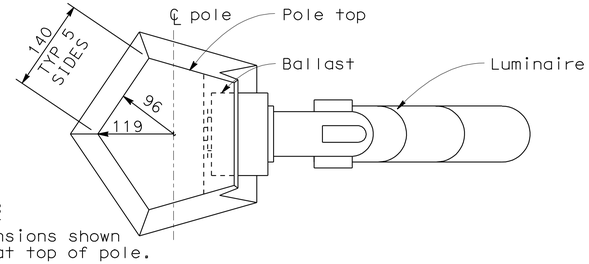

Note:
Dimensions shown are at top of pole.

SECTION A-A
Not to scale

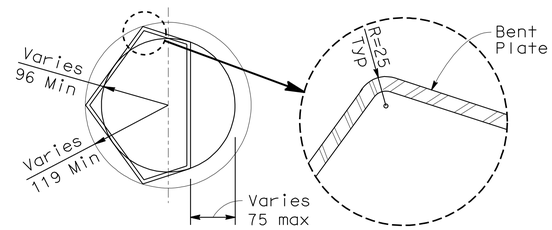

SECTION B-B
Not to scale

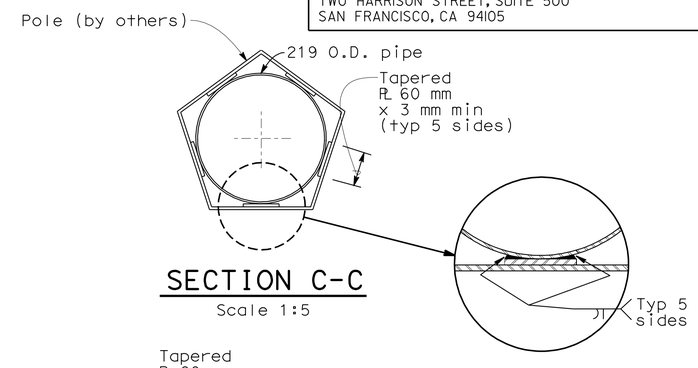

SECTION C-C
Scale 1:5

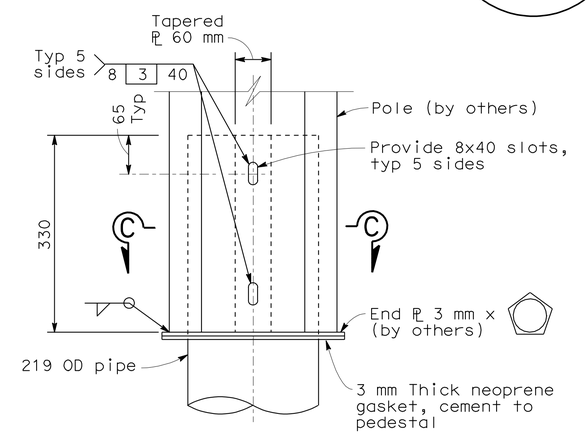

SLIP JOINT DETAIL
Scale 1:5

Note: Luminaires and pole (incl pole bottom end plate) to be furnished by others and installed by Contractor.

ALL DIMENSIONS ARE IN MILLIMETERS UNLESS OTHERWISE SHOWN.

DETAILS
YBI TRANSITION STRUCTURES ROADWAY AND GIRDER EASTBOUND (BIKE PATH LANDING LIGHTING ASSEMBLY)
SCALE AS NOTED

E-28

STATE OF CALIFORNIA - DEPARTMENT OF TRANSPORTATION
Caltrans

CONSULTANT FUNCTIONAL SUPERVISOR: BOB ZANDIPOUR
CALCULATED-DESIGNED BY: GAM
CHECKED BY: TYL
REVISED BY
DATE REVISED

LAST REVISION 00-00-00
DATE PLOTTED => 25-FEB-2012
TIME PLOTTED => 10:59

Dist	COUNTY	ROUTE	KILOMETER POST TOTAL PROJECT	SHEET No.	TOTAL SHEETS
04	SF	80	12.6/13.9	257	821

Caltrans Metric

REGISTERED ELECTRICAL ENGINEER — DATE 11/8/11

2-21-12
PLANS APPROVAL DATE

REGISTERED PROFESSIONAL ENGINEER — T.W. SPARKS — No. E16039 — Exp. 9-30-13 — ELECTRICAL — STATE OF CALIFORNIA

THE STATE OF CALIFORNIA OR ITS OFFICERS OR AGENTS SHALL NOT BE RESPONSIBLE FOR THE ACCURACY OR COMPLETENESS OF ELECTRONIC COPIES OF THIS PLAN SHEET.

T.Y. LIN / MOFFATT & NICHOL
TWO HARRISON STREET, SUITE 500
SAN FRANCISCO, CA 94105

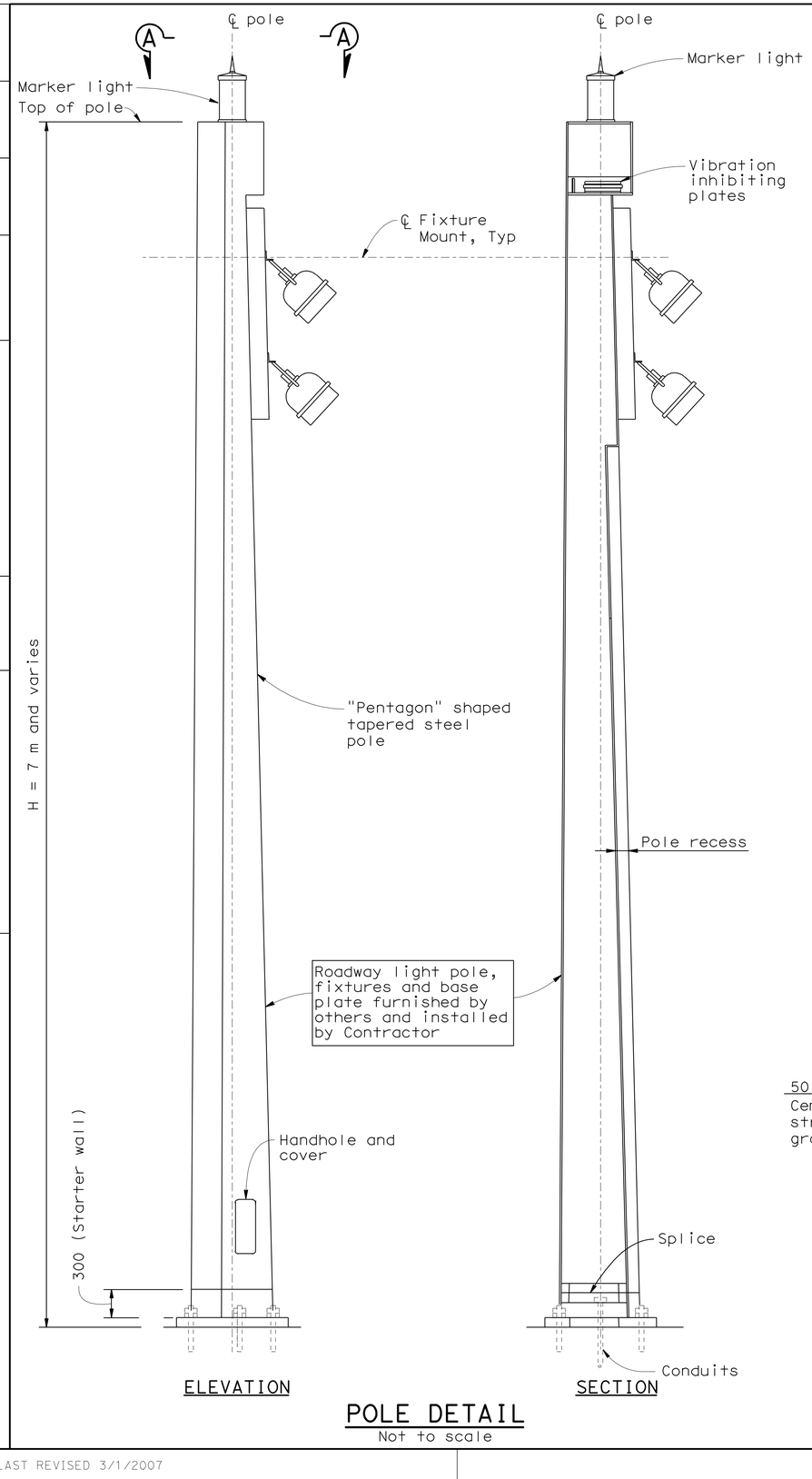

ELEVATION

SECTION

POLE DETAIL
Not to scale

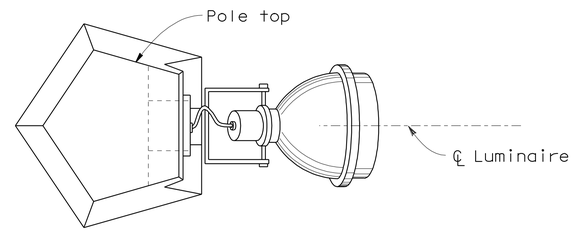

SECTION A-A
Not to scale

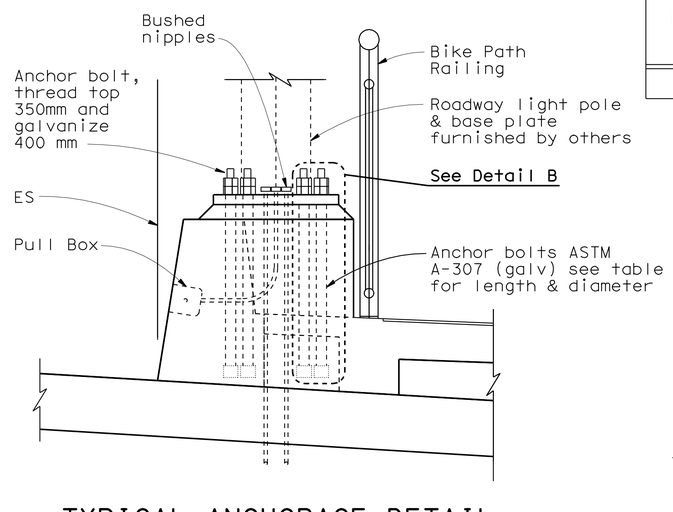

TYPICAL ANCHORAGE DETAIL AT BIKE PATH
Not to scale

POLE HEIGHT "H"	ANCHORAGE		
	ANCHOR BOLT CIRCLE RADIUS= R(mm)	BASE PLATE DIA(mm) x THICKNESS (mm)	ANCHOR BOLTS NUMBER(EA) x DIA(mm) x LENGTH(mm)
7 m	240	600 x 38	5-28 x 1000

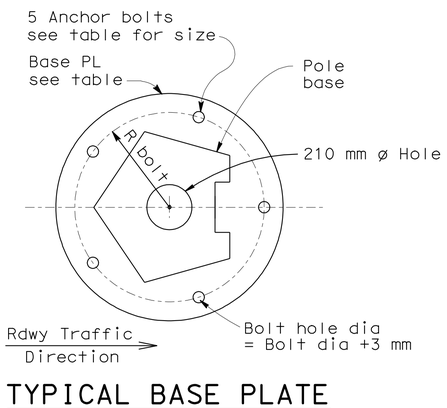

TYPICAL BASE PLATE
Not to scale

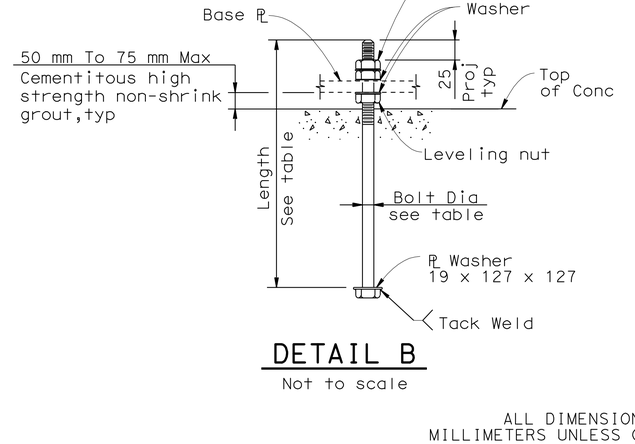

DETAIL B
Not to scale

Note:

Contractor to furnish and install anchor bolts, leveling nuts, double heavy hex nuts and washers. Furnish and install temporary removable timber template (to match permanent baseplate) on concrete anchorage and provide temporary protection to exposed bolt threads prior to installing roadway light pole.

ALL DIMENSIONS ARE IN MILLIMETERS UNLESS OTHERWISE SHOWN.

DETAILS
YBI TRANSITION STRUCTURES ROADWAY AND GIRDER EASTBOUND (ROADWAY LIGHTING POLE AND ANCHORAGE)
NO SCALE

E-29

GAM	TYL	JNB	3/17/11
CALCULATED-DESIGNED BY	CHECKED BY	REVISED BY	DATE REVISED

CONSULTANT FUNCTIONAL SUPERVISOR: BOB ZANDIPOUR

STATE OF CALIFORNIA - DEPARTMENT OF TRANSPORTATION — Caltrans

LAST REVISION 00-00-00 | DATE PLOTTED => 25-FEB-2012 | TIME PLOTTED => 10:51

Dist	COUNTY	ROUTE	KILOMETER POST TOTAL PROJECT	SHEET No.	TOTAL SHEETS
04	SF	80	12.6/13.9	258	821

Caltrans Metric

Syn Yee Chin 10/31/11
REGISTERED ELECTRICAL ENGINEER

2-21-12
PLANS APPROVAL DATE

REGISTERED PROFESSIONAL ENGINEER
SYN YEE CHIN
No. 18186
Exp. 09/30/2013
ELECTRICAL
STATE OF CALIFORNIA

THE STATE OF CALIFORNIA OR ITS OFFICERS OR AGENTS SHALL NOT BE RESPONSIBLE FOR THE ACCURACY OR COMPLETENESS OF ELECTRONIC COPIES OF THIS PLAN SHEET.

PB AMERICAS, Inc.
303 Second St., Suite 700N
San Francisco, CA 94107-1317

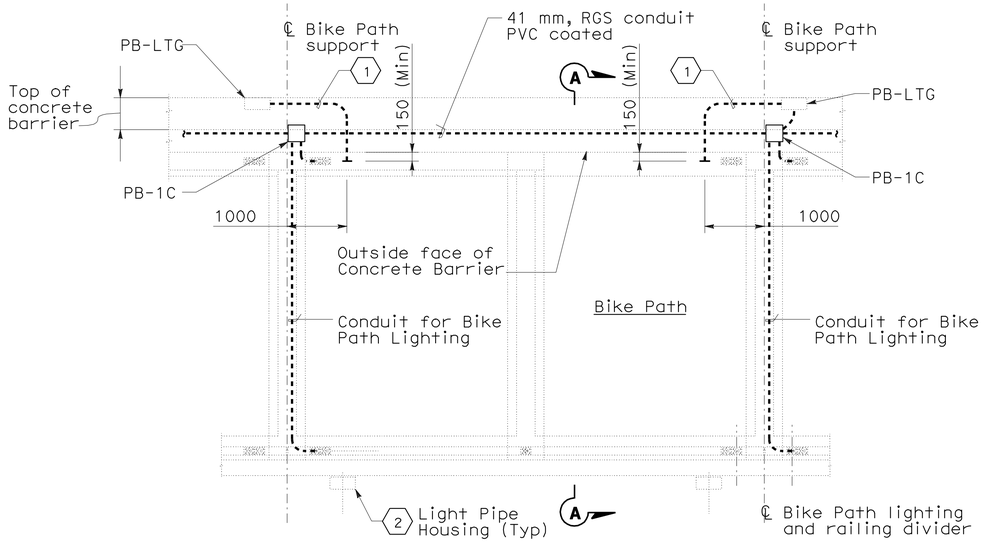

TYPICAL LIGHT PIPE CONDUIT PLAN

NO SCALE

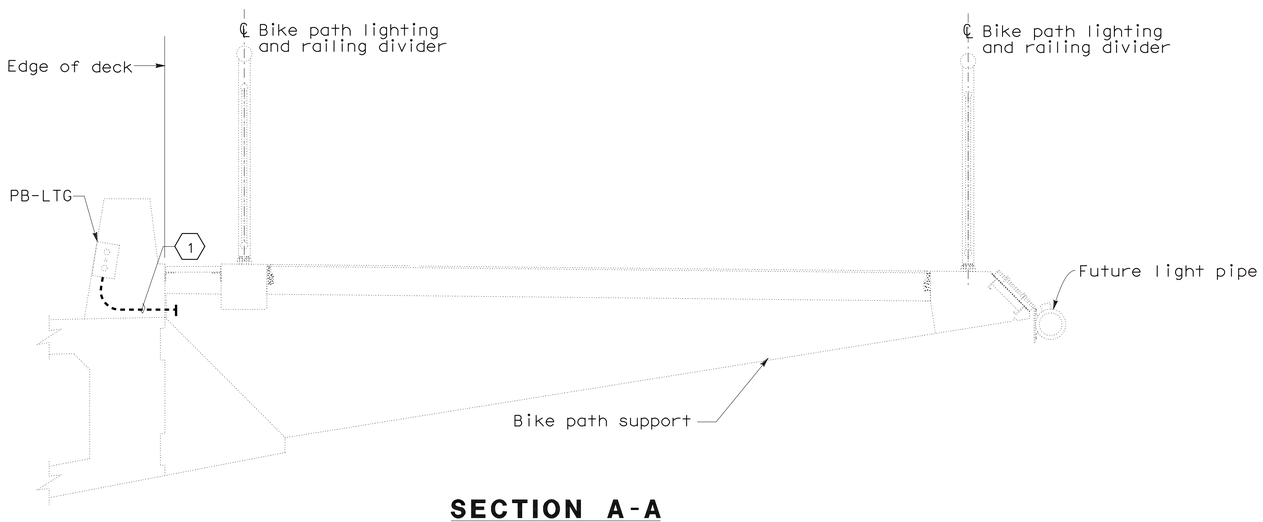

SECTION A-A

SCALE 1:20

NOTES:

1. All exposed conduits and fittings installed between the Roadway and the Bike Path shall be PVC coated galvanized steel.
2. For locations of PB-LTG and PB-COM at the Roadway concrete barrier, see sheets E-14 thru E-18.
3. References:
   - For pull box schedule, see sheet E-46.
   - For light pipe wiring diagram, see sheet E-42.
4. Unless shown in bold, everything else is not part of this Contract.

SHEET NOTES:

(1) Install 21C, RGS conduit from PB-LTG box to outside face of concrete barrier. Cap end of conduit for future use.

(2) For approximate location of the future light pipe housing, see sheet E-19 and E-20.

ALL DIMENSIONS ARE IN MILLIMETERS UNLESS OTHERWISE SHOWN

DETAILS

YBI TRANSITION STRUCTURES ROADWAY AND GIRDER EASTBOUND (TYPICAL LIGHT PIPE CONDUIT SECTIONS AND DETAILS)

SCALE AS SHOWN

E-30

THIS PLAN ACCURATE FOR ELECTRICAL WORK ONLY.

REVISED BY	DATE REVISED

CALCULATED-DESIGNED BY: REUBEN BUENVIAJE
CHECKED BY: J. HALIM, T. WU, W. BECK
CONSULTANT FUNCTIONAL SUPERVISOR: BOB ZANDIPOUR

STATE OF CALIFORNIA - DEPARTMENT OF TRANSPORTATION
Caltrans

LAST REVISION 00-00-00
DATE PLOTTED => 25-FEB-2012
TIME PLOTTED => 10:51

Dist	COUNTY	ROUTE	KILOMETER POST TOTAL PROJECT	SHEET No.	TOTAL SHEETS
04	SF	80	12.6/13.9	259	821

REGISTERED ELECTRICAL ENGINEER 11/8/11 DATE

2-21-12
PLANS APPROVAL DATE

REGISTERED PROFESSIONAL ENGINEER T. W. SPARKS No. E16039 Exp. 9-30-13 ELECTRICAL STATE OF CALIFORNIA

THE STATE OF CALIFORNIA OR ITS OFFICERS OR AGENTS SHALL NOT BE RESPONSIBLE FOR THE ACCURACY OR COMPLETENESS OF ELECTRONIC COPIES OF THIS PLAN SHEET.

T.Y. LIN / MOFFATT & NICHOL
TWO HARRISON STREET, SUITE 500
SAN FRANCISCO, CA 94105

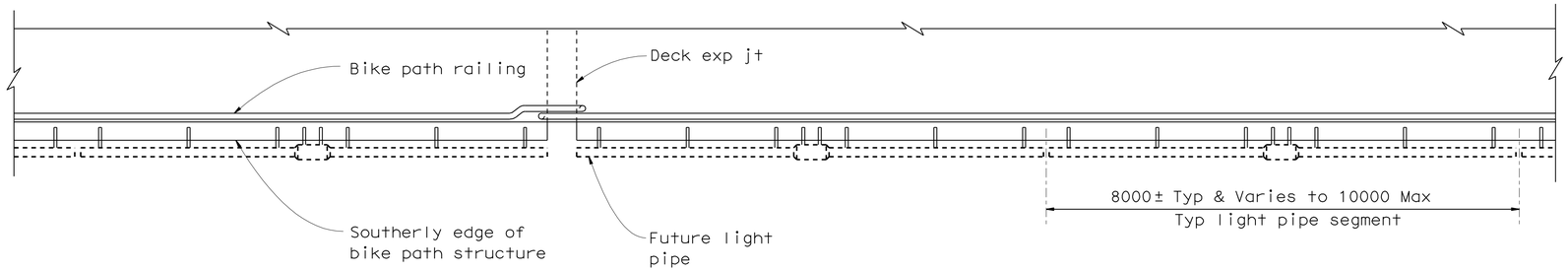

PARTIAL PLAN AT SOUTH SIDE OF STRUCTURE

1:50

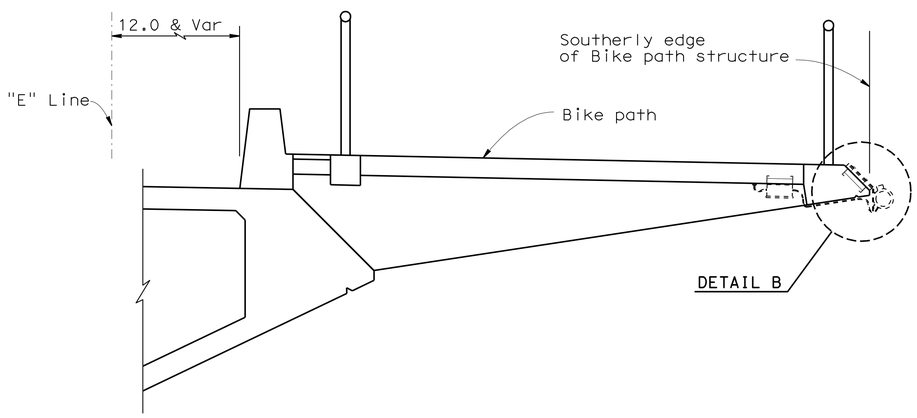

TYPICAL SECTION AT YBI TRANSITION STRUCTURE

(Similar at YBI EB On-Ramp Structure)

1:30

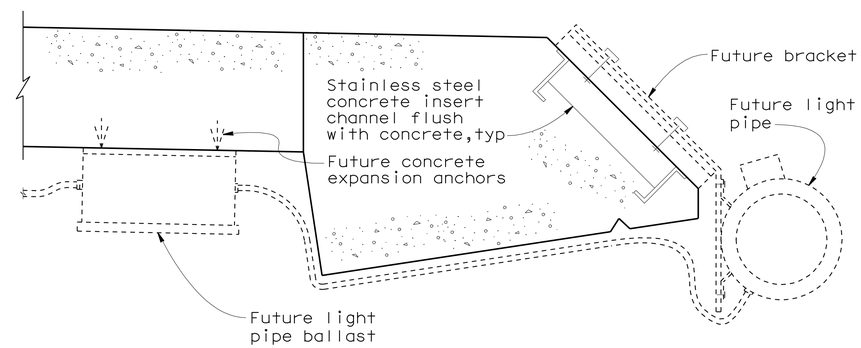

DETAIL B

No Scale

ALL DIMENSIONS ARE IN MILLIMETERS UNLESS OTHERWISE SHOWN.

DETAILS

YBI TRANSITION STRUCTURES ROADWAY AND GIRDER EASTBOUND (TYPICAL LIGHT PIPE INSTALLATION 1)

SCALE AS NOTED

E-31

REVISED BY	DATE REVISED
JNB	3/17/11
JNB	1/31/08

CALCULATED-DESIGNED BY: GAM
CHECKED BY: TYL

CONSULTANT FUNCTIONAL SUPERVISOR: BOB ZANDIPOUR

STATE OF CALIFORNIA - DEPARTMENT OF TRANSPORTATION
Caltrans

LAST REVISION 00-00-00 | DATE PLOTTED => 25-FEB-2012 | TIME PLOTTED => 10:51

Dist	COUNTY	ROUTE	KILOMETER POST TOTAL PROJECT	SHEET No.	TOTAL SHEETS
04	SF	80	12.6/13.9	260	821

REGISTERED ELECTRICAL ENGINEER 11/8/11 DATE

2-21-12
PLANS APPROVAL DATE

REGISTERED PROFESSIONAL ENGINEER T. W. SPARKS No. E16039 Exp. 9-30-13 ELECTRICAL STATE OF CALIFORNIA

THE STATE OF CALIFORNIA OR ITS OFFICERS OR AGENTS SHALL NOT BE RESPONSIBLE FOR THE ACCURACY OR COMPLETENESS OF ELECTRONIC COPIES OF THIS PLAN SHEET.

T.Y. LIN / MOFFATT & NICHOL
TWO HARRISON STREET, SUITE 500
SAN FRANCISCO, CA 94105

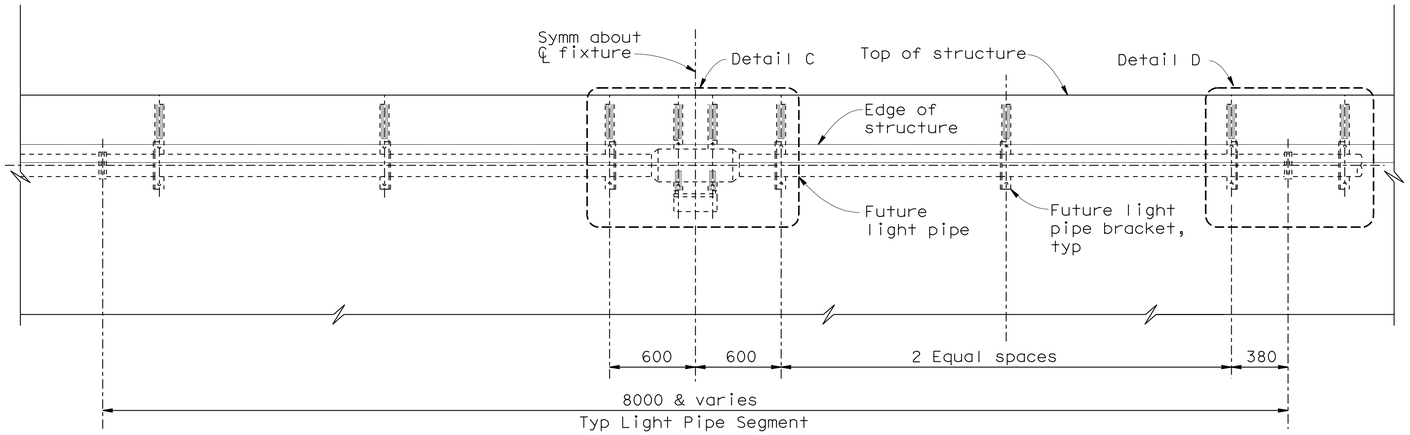

ELEVATION - TYPICAL LIGHT PIPE FIXTURE

1:20

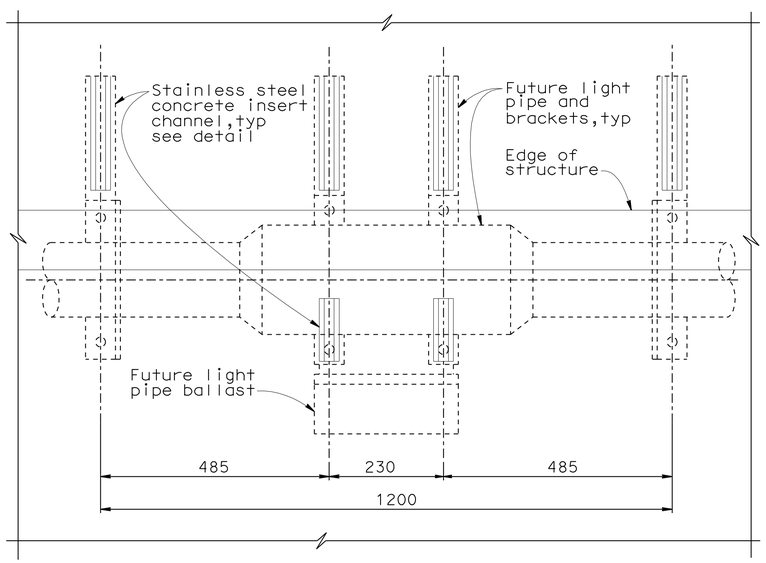

DETAIL C

No Scale

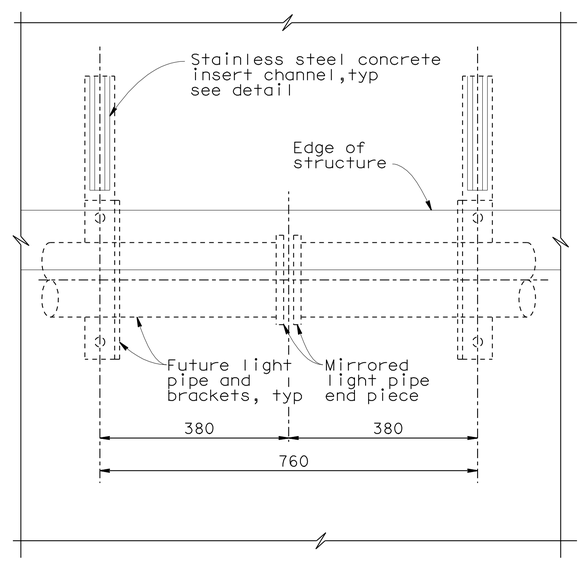

DETAIL D

No Scale

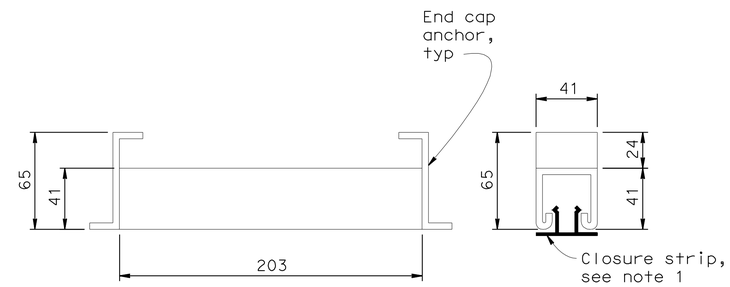

END VIEW

CONCRETE INSERT CHANNEL DETAIL

1:2

NOTE:

1. Install full length, stainless steel closure strips at all concrete insert channels to cover channels until future light pipe is installed.

DETAILS

YBI TRANSITION STRUCTURES
ROADWAY AND GIRDER EASTBOUND
(TYPICAL LIGHT PIPE INSTALLATION 2)

SCALE AS NOTED

ALL DIMENSIONS ARE IN MILLIMETERS UNLESS OTHERWISE SHOWN.

E-32

REVISED BY	DATE REVISED
JNB	3/17/11
JNB	1/31/08

CALCULATED-DESIGNED BY: GAM
CHECKED BY: TYL

CONSULTANT FUNCTIONAL SUPERVISOR: BOB ZANDIPOUR

STATE OF CALIFORNIA - DEPARTMENT OF TRANSPORTATION
Caltrans

LAST REVISION 00-00-00
DATE PLOTTED => 25-FEB-2012
TIME PLOTTED => 10:51

Dist	COUNTY	ROUTE	KILOMETER POST TOTAL PROJECT	SHEET No.	TOTAL SHEETS
04	SF	80	12.6/13.9	261	821

REGISTERED ELECTRICAL ENGINEER 11/8/11 DATE

2-21-12
PLANS APPROVAL DATE

REGISTERED PROFESSIONAL ENGINEER T. W. SPARKS No. E16039 Exp. 9-30-13 ELECTRICAL STATE OF CALIFORNIA

THE STATE OF CALIFORNIA OR ITS OFFICERS OR AGENTS SHALL NOT BE RESPONSIBLE FOR THE ACCURACY OR COMPLETENESS OF ELECTRONIC COPIES OF THIS PLAN SHEET.

T.Y. LIN / MOFFATT & NICHOL
TWO HARRISON STREET, SUITE 500
SAN FRANCISCO, CA 94105

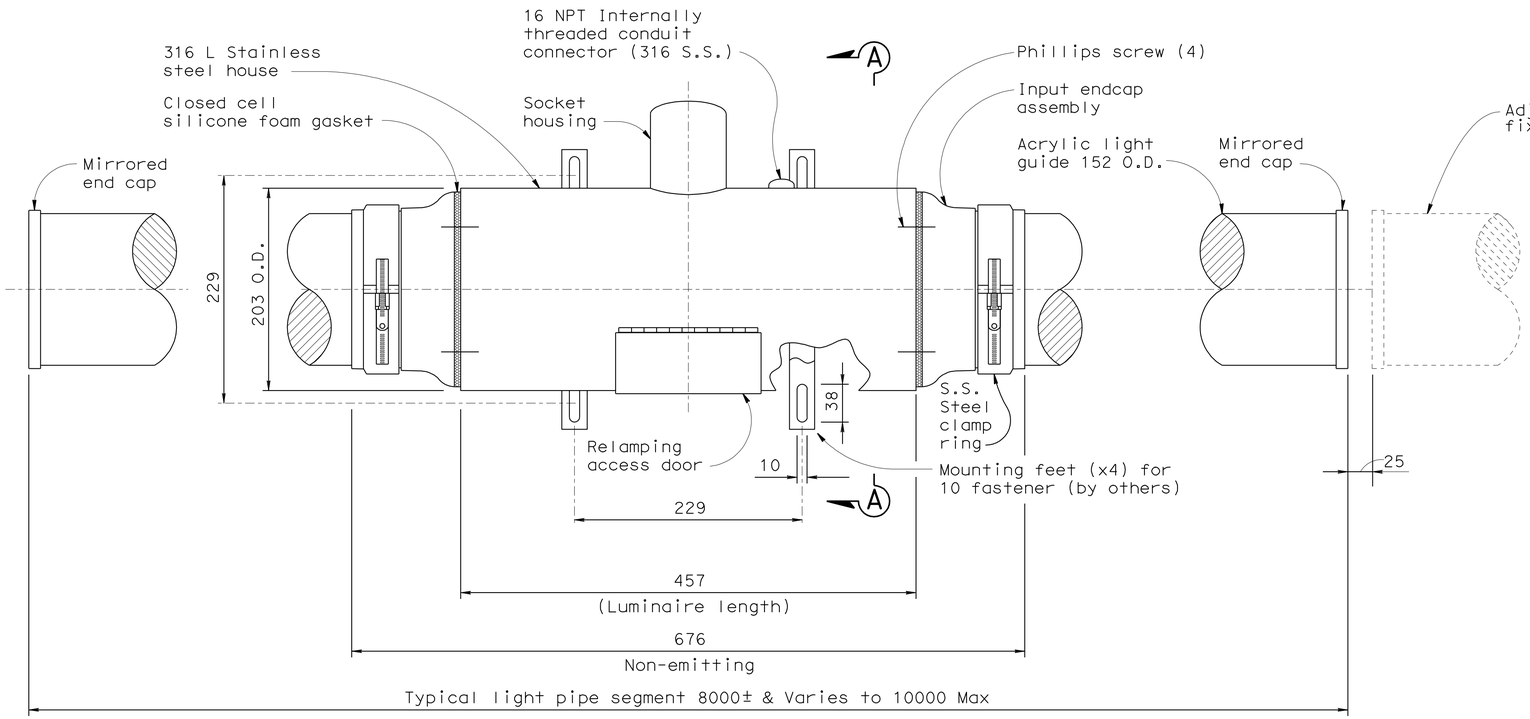

FIXTURE DETAIL

N.I.C. (Future) for reference only

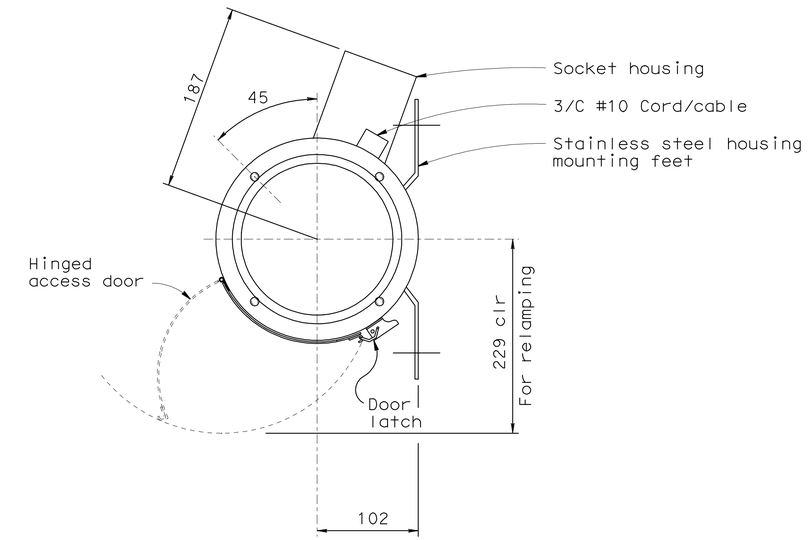

SECTION A-A

N.I.C. (Future) for reference only

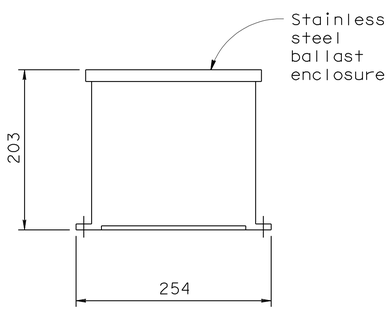

REMOTE BALLAST ELEVATION

N.I.C. (Future) for reference only

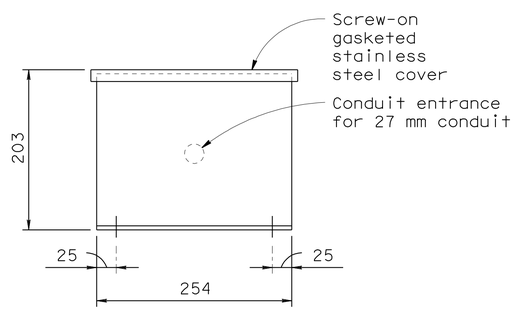

BALLAST END VIEW

N.I.C. (Future) for reference only

NOTES:

1. Lamp shall be ED-28 metal halide pulse start, 400 watt.
2. Socket: 5 kv rated porcelain mogul based C/W high temp. (200°C) U.L. listed.

ALL DIMENSIONS ARE IN MILLIMETERS UNLESS OTHERWISE SHOWN.

DETAILS

YBI TRANSITION STRUCTURES ROADWAY AND GIRDER EASTBOUND (TYPICAL LIGHT PIPE INSTALLATION 3)

SCALE AS NOTED

E-33

REVISED BY	DATE REVISED
JNB	3/17/11
JNB	1/31/08

GAM TYL

CALCULATED-DESIGNED BY
CHECKED BY

CONSULTANT FUNCTIONAL SUPERVISOR
BOB ZANDIPOUR

STATE OF CALIFORNIA - DEPARTMENT OF TRANSPORTATION
Caltrans

LAST REVISION 00-00-00 DATE PLOTTED => 25-FEB-2012 TIME PLOTTED => 10:51

Dist	COUNTY	ROUTE	KILOMETER POST TOTAL PROJECT	SHEET No.	TOTAL SHEETS
04	SF	80	12.6/13.9	262	821

Caltrans Metric

Syn Yee Chin 10/31/11
REGISTERED ELECTRICAL ENGINEER

2-21-12
PLANS APPROVAL DATE

REGISTERED PROFESSIONAL ENGINEER SYN YEE CHIN No. 18186 Exp. 09/30/2013 ELECTRICAL STATE OF CALIFORNIA

THE STATE OF CALIFORNIA OR ITS OFFICERS OR AGENTS SHALL NOT BE RESPONSIBLE FOR THE ACCURACY OR COMPLETENESS OF ELECTRONIC COPIES OF THIS PLAN SHEET.

PB AMERICAS, Inc.
303 Second St., Suite 700N
San Francisco, CA 94107-1317

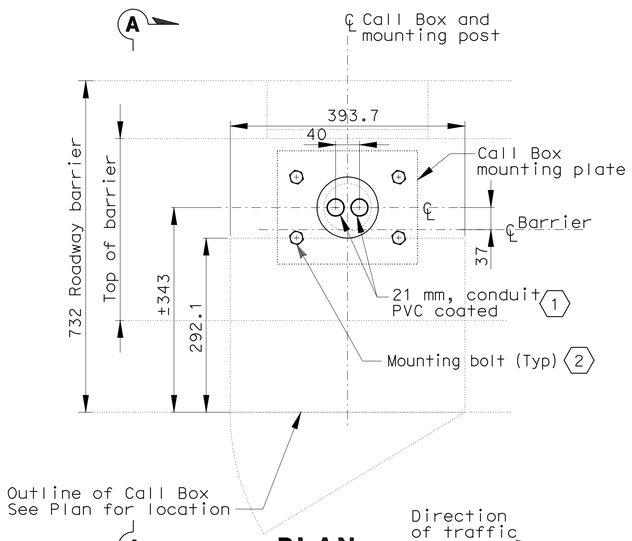

PLAN
(CONDUIT STUB-UP AND MOUNTING OF CALL BOX AT BARRIER)
SCALE 1:4

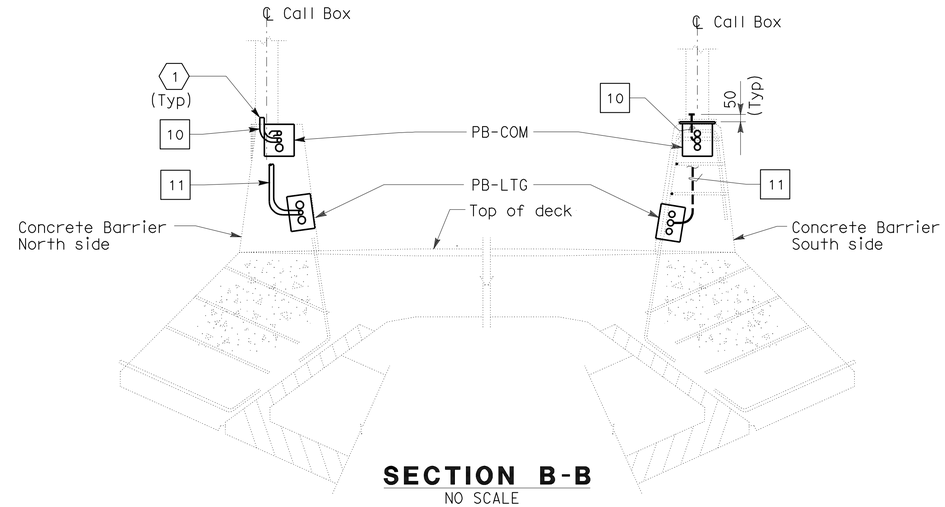

SECTION B-B
NO SCALE

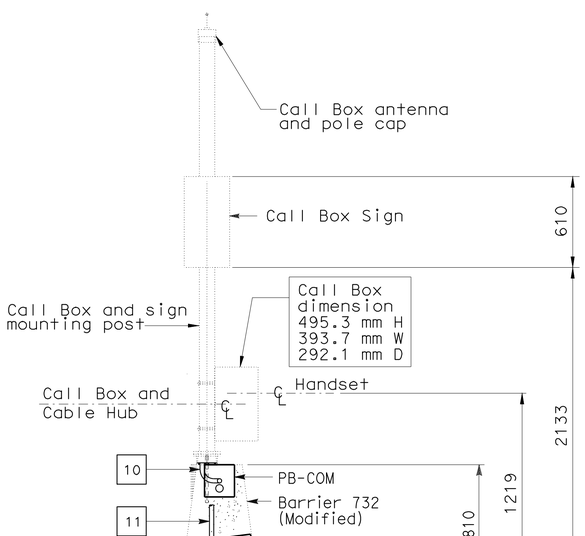

SECTION A-A
SCALE 1:20

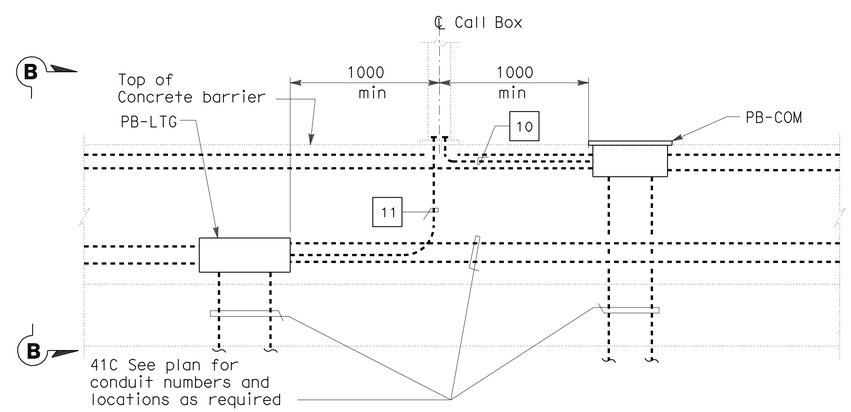

LONGITUDINAL SECTION
(TYPICAL CONDUIT ROUTING INSIDE CONCRETE BARRIER)
NO SCALE

NOTES:

1. REFERENCES:
   - For pull box schedule, see sheet E-46.
   - For call box location, see sheets E-14 & E-49.
   - For call box schedule, see sheet E-52.
   - For call box wiring diagram, see sheet E-51.
2. Call box installation by others. The Contractor shall pull and terminate cable inside installed call boxes.
3. All conduit connections shall be watertight.
4. Provide approximately 5 m of pigtails for power and TOS conductors for termination to the call box. Seal each conductor end to prevent water from entering the insulation. Pigtails shall be coiled and protected from damage. Provide weatherproof covers for the pigtails and call box supports. Terminate power and signal cable after call box installation by others.

SHEET NOTES:

(1) Bond grounding to call box ground lug with #6 bare copper wire.

(2) (4) 19.05 Dia. HSB (ASTM A325) 180 mm concrete embedment and 130 mm bolt projection from top of concrete.

ALL DIMENSIONS ARE IN MILLIMETERS UNLESS OTHERWISE SHOWN

DETAILS
YBI TRANSITION STRUCTURES
ROADWAY AND GIRDER EASTBOUND
(CALL BOX AT ROADWAY, SECTIONS AND DETAILS)

SCALE AS SHOWN

E-34

THIS PLAN ACCURATE FOR ELECTRICAL WORK ONLY.

STATE OF CALIFORNIA - DEPARTMENT OF TRANSPORTATION
Caltrans

CONSULTANT FUNCTIONAL SUPERVISOR: BOB ZANDIPOUR
CALCULATED-DESIGNED BY: REUBEN BUENVIAJE
CHECKED BY: J. HALIM, T. WU, W. BECK
REVISED BY / DATE REVISED

LAST REVISION 00-00-00
DATE PLOTTED => 25-FEB-2012
TIME PLOTTED => 10:52

Dist	COUNTY	ROUTE	KILOMETER POST TOTAL PROJECT	SHEET No.	TOTAL SHEETS
04	SF	80	12.6/13.9	263	821

Syn Yee Chin 10/31/11
REGISTERED ELECTRICAL ENGINEER

2-21-12
PLANS APPROVAL DATE

REGISTERED PROFESSIONAL ENGINEER
SYN YEE CHIN
No. 18186
Exp. 09/30/2013
ELECTRICAL
STATE OF CALIFORNIA

THE STATE OF CALIFORNIA OR ITS OFFICERS OR AGENTS SHALL NOT BE RESPONSIBLE FOR THE ACCURACY OR COMPLETENESS OF ELECTRONIC COPIES OF THIS PLAN SHEET.

PB AMERICAS, Inc.
303 Second St., Suite 700N
San Francisco, CA 94107-1317

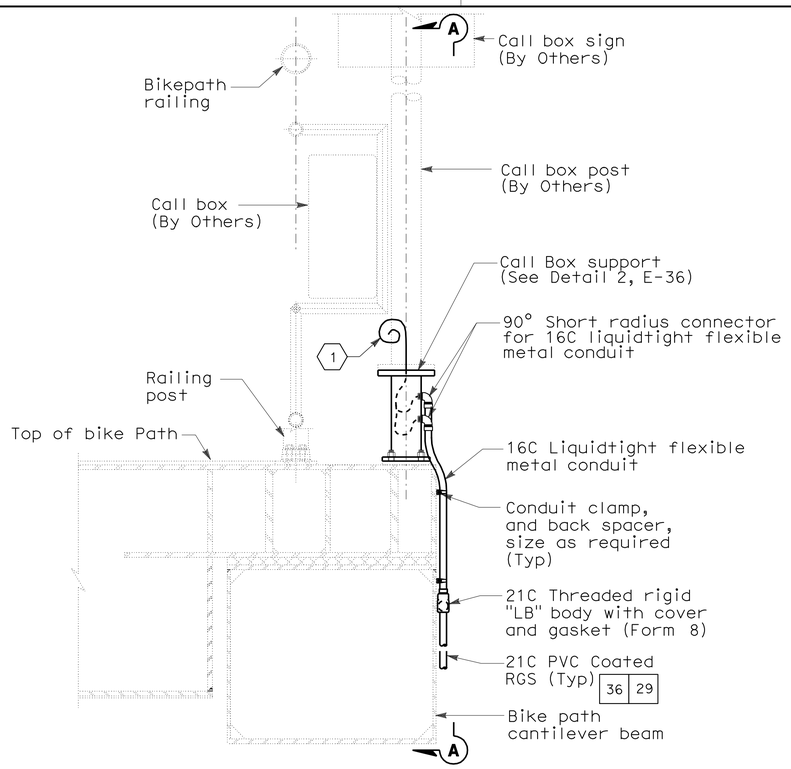

DETAIL 1 - ELEVATION

CALL BOX AT BELVEDERE (SEE SHEET E-18)
SCALE 1:10

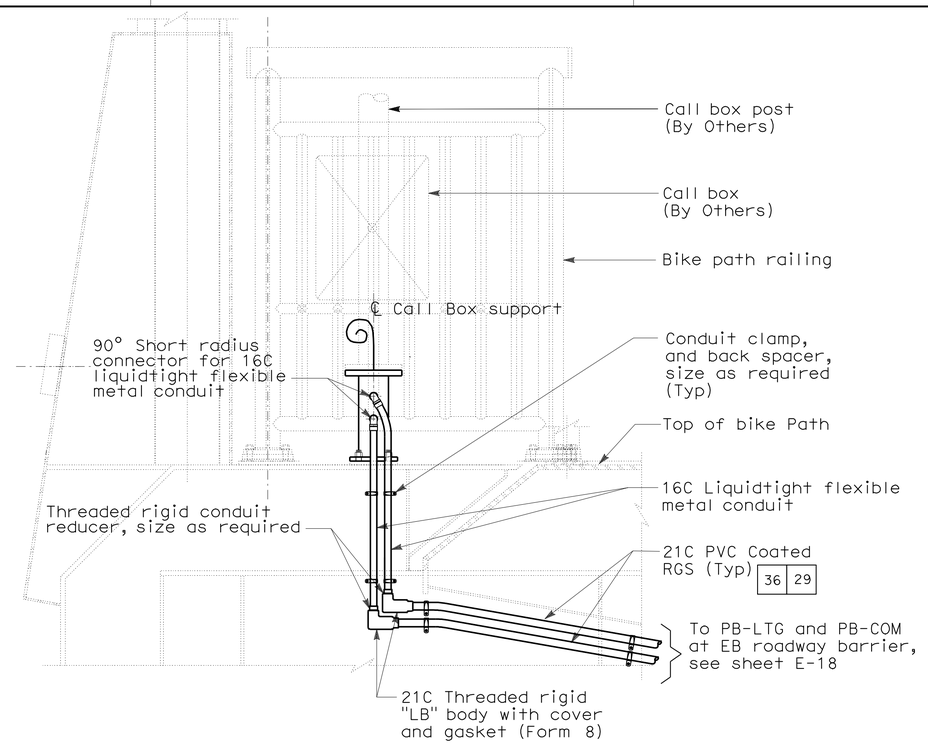

SECTION A-A

SCALE 1:10

NOTES:

1. REFERENCES:
   - For call box schedule, see Sheet E-52.
   - For call box wiring diagram, see sheet E-51.
   - For call box location at Belvedere, see sheet E-18.
   - For call box location at bike path, see sheet E-14 & E-15.
   - All conduit connections shall be watertight.
2. Call box installation by others. The Contractor shall pull and terminate cable inside installed call boxes.

SHEET NOTES:

(1) Provide approximately 5 m of pigtails for power and TOS conductors for termination to the call box. Seal each conductor end to prevent water from entering the insulation. Pigtails shall be coiled and protected from damage. Provide weatherproof covers for the pigtails and call box supports. Terminate power and signal cable after call box installation by others.

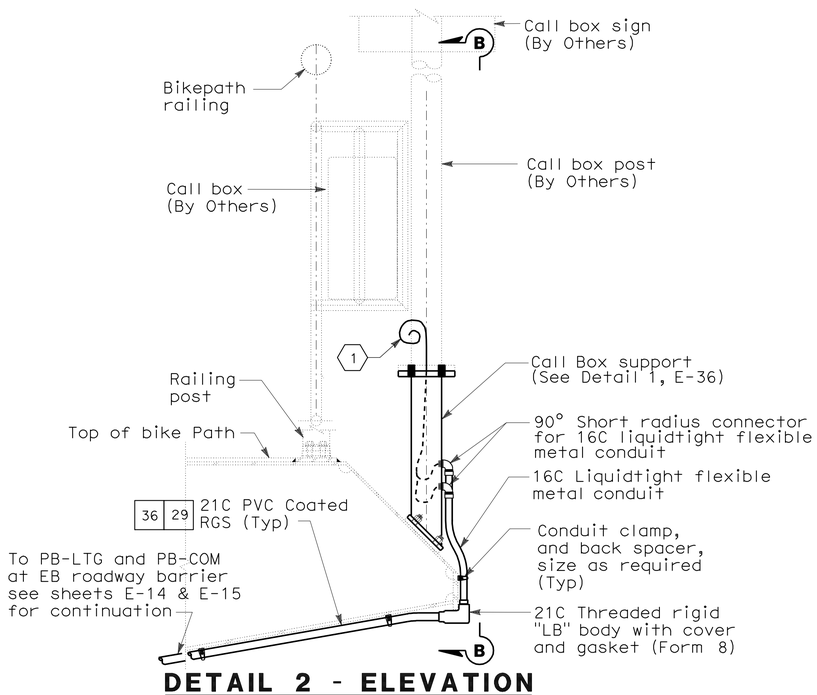

DETAIL 2 - ELEVATION

CALL BOX AT BIKE PATH (SEE E-14 & E-15)
SCALE 1:10

THIS PLAN ACCURATE FOR ELECTRICAL WORK ONLY.

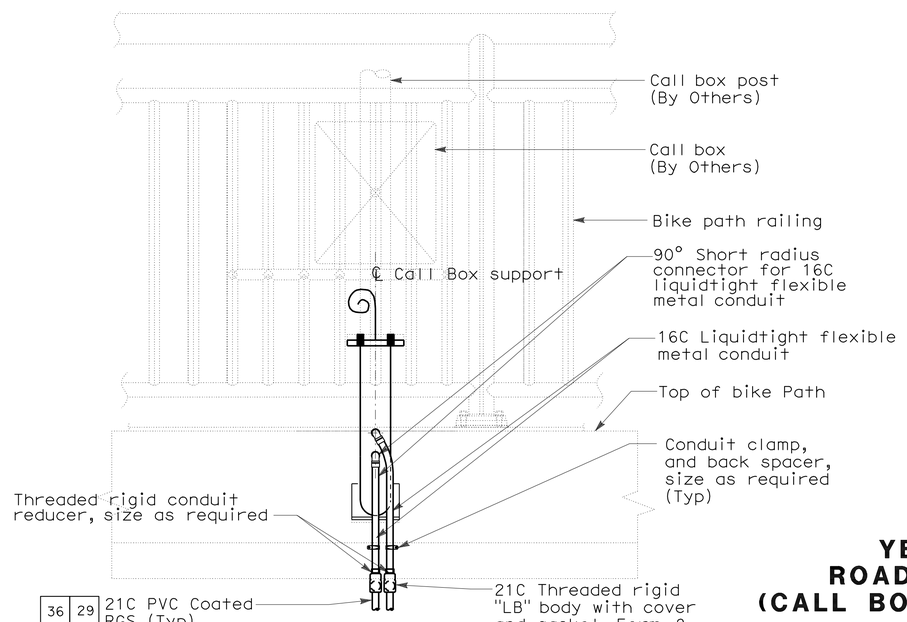

SECTION B-B

SCALE 1:10

ALL DIMENSIONS ARE IN
MILLIMETERS UNLESS OTHERWISE SHOWN

DETAILS
YBI TRANSITION STRUCTURES
ROADWAY AND GIRDER EASTBOUND
(CALL BOX AT BIKE PATH AND BELVEDERE: SECTIONS AND DETAILS)

SCALE AS SHOWN

E-35

STATE OF CALIFORNIA - DEPARTMENT OF TRANSPORTATION
Caltrans

CONSULTANT FUNCTIONAL SUPERVISOR: BOB ZANDIPOUR
CALCULATED-DESIGNED BY: REUBEN BUENVIAJE
CHECKED BY: J. HALIM, T. WU, W. BECK
REVISED BY
DATE REVISED

LAST REVISION 00-00-00
DATE PLOTTED => 25-FEB-2012
TIME PLOTTED => 0:52

Dist	COUNTY	ROUTE	KILOMETER POST TOTAL PROJECT	SHEET No.	TOTAL SHEETS
04	SF	80	12.6/13.9	264	821

Syn Yee Chin 10/31/11
REGISTERED ELECTRICAL ENGINEER

2-21-12
PLANS APPROVAL DATE

REGISTERED PROFESSIONAL ENGINEER
SYN YEE CHIN
No. 18186
Exp. 09/30/2013
ELECTRICAL
STATE OF CALIFORNIA

THE STATE OF CALIFORNIA OR ITS OFFICERS OR AGENTS SHALL NOT BE RESPONSIBLE FOR THE ACCURACY OR COMPLETENESS OF ELECTRONIC COPIES OF THIS PLAN SHEET.

PB AMERICAS, Inc.
303 Second St., Suite 700N
San Francisco, CA 94107-1317

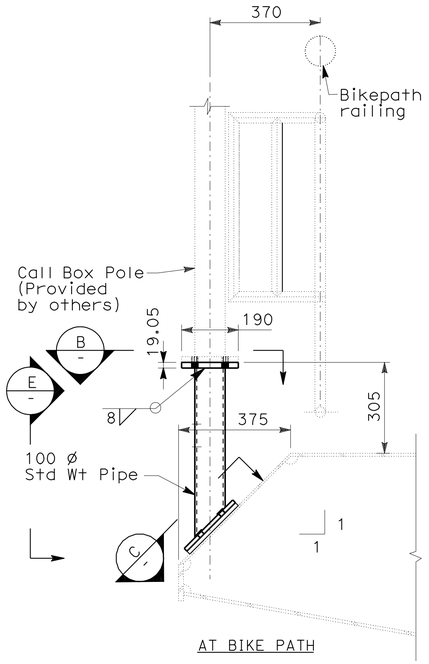

AT BIKE PATH

DETAIL 1
SCALE: 1:10
NOTE 5

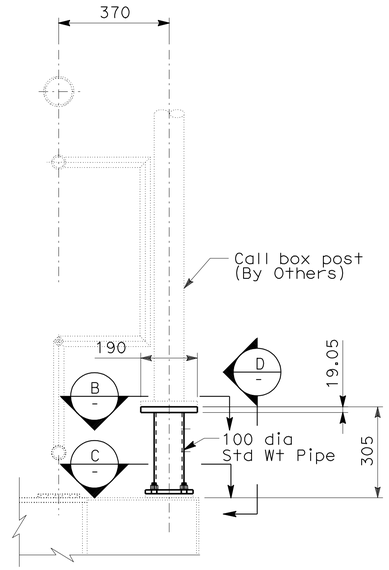

AT BELVEDERE

DETAIL 2
SCALE: 1:10
NOTE 5

NOTE:

1. For call box locations refer to drawings E-14, E-15, E-18 and E-49.

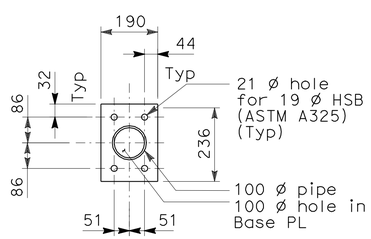

SECTION B
SCALE: 1:10

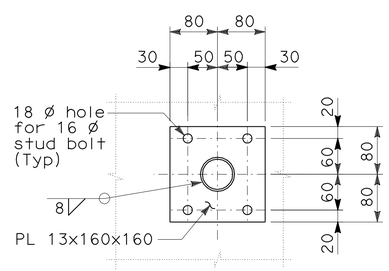

SECTION C
SCALE: 1:5

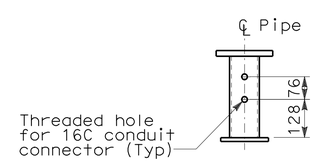

SECTION D
SCALE: 1:10

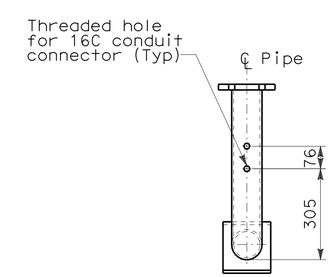

SECTION E
SCALE: 1:10

ALL DIMENSIONS ARE IN MILLIMETERS UNLESS OTHERWISE SHOWN

DETAILS
YBI TRANSITION STRUCTURES
ROADWAY AND GIRDER EASTBOUND
(TYPICAL CALL BOX SECTIONS AND DETAILS)

SCALE AS SHOWN

E-36

THIS PLAN ACCURATE FOR ELECTRICAL WORK ONLY.

REVISED BY	DATE REVISED

REUBEN BUENVIAJE
J. HALIM, T. WU, W. BECK
CALCULATED-DESIGNED BY
CHECKED BY
CONSULTANT FUNCTIONAL SUPERVISOR
BOB ZANDIPOUR

STATE OF CALIFORNIA - DEPARTMENT OF TRANSPORTATION
Caltrans

LAST REVISION 00-00-00
DATE PLOTTED => 25-FEB-2012
TIME PLOTTED => 10:52

Dist	COUNTY	ROUTE	KILOMETER POST TOTAL PROJECT	SHEET No.	TOTAL SHEETS
04	SF	80	12.6/13.9	265	821

Syn Yee Chin 10/31/11
REGISTERED ELECTRICAL ENGINEER

2-21-12
PLANS APPROVAL DATE

REGISTERED PROFESSIONAL ENGINEER
SYN YEE CHIN
No. 18186
Exp. 09/30/2013
ELECTRICAL
STATE OF CALIFORNIA

THE STATE OF CALIFORNIA OR ITS OFFICERS OR AGENTS SHALL NOT BE RESPONSIBLE FOR THE ACCURACY OR COMPLETENESS OF ELECTRONIC COPIES OF THIS PLAN SHEET.

PB AMERICAS, Inc.
303 Second St., Suite 700N
San Francisco, CA 94107-1317

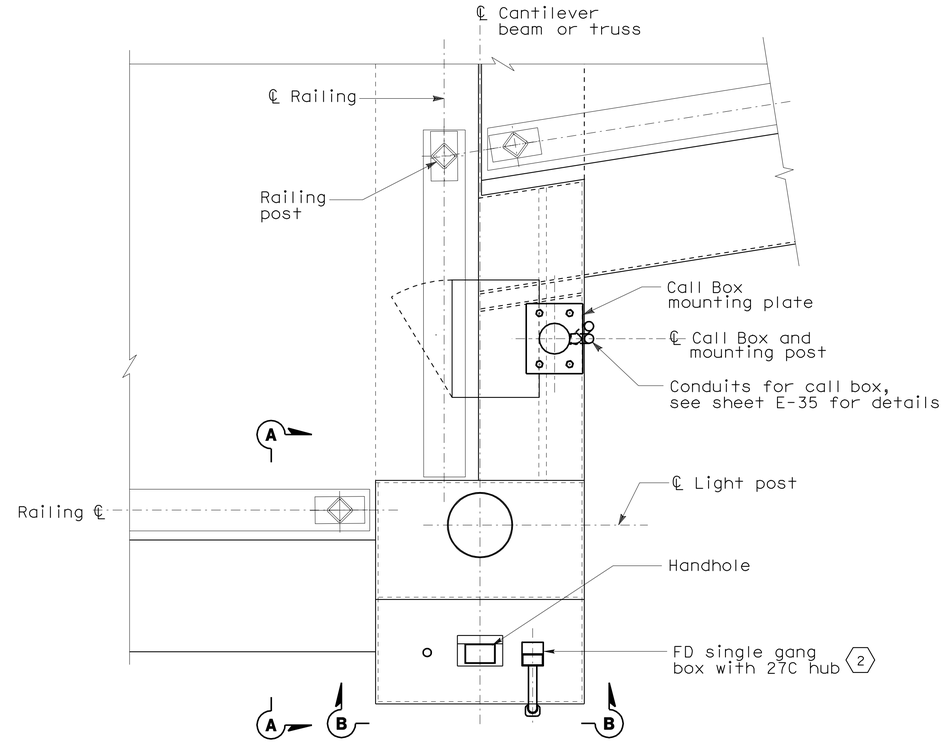

DETAIL 1 - PLAN

BELVEDERE LIGHT POST AT SOUTH SIDE OF BIKE PATH

SHEET NOTES:

1. Use threaded plug to cover spare hole for future use.
2. The Contractor to ensure box installation is watertight.
3. Provide approximately 7 m of pigtails for power conductors for termination to the belvedere light. Seal each conductor end to prevent water from entering the insulation. Pigtails shall be coiled and protected from damage and placed inside belvedere light post housing.

NOTES:

1. For location of bike path light fixtures and belvedere lights, see sheets E-18.
2. All conduit connections shall be watertight.
3. The Contractor shall inspect, verify, assemble, install and wire State-furnished Belvedere light posts and fixtures to completion.

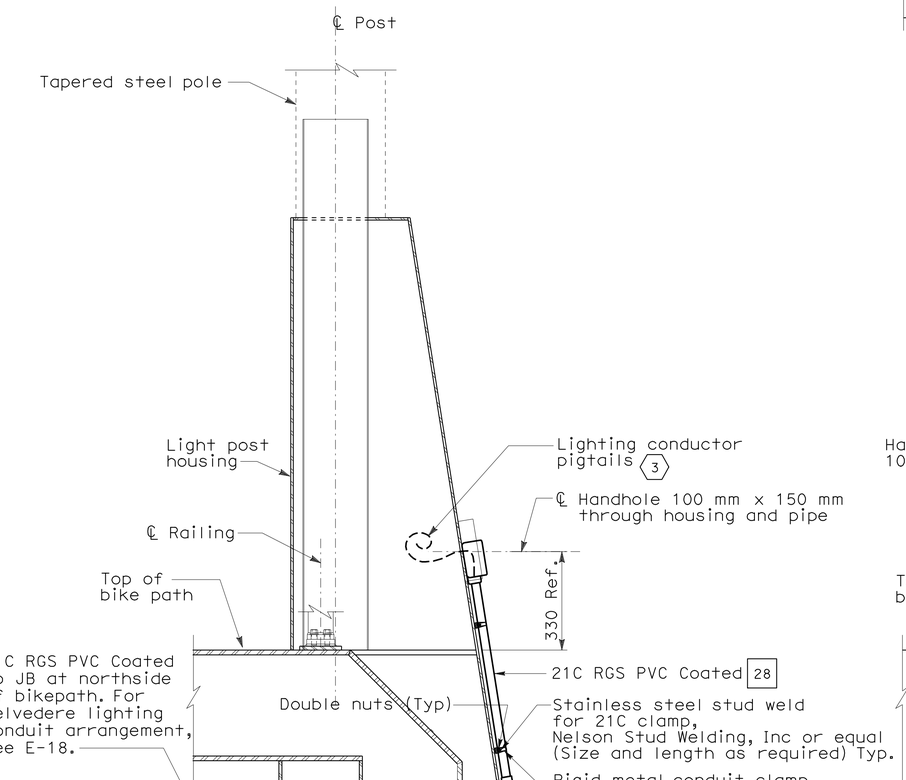

SECTION A-A

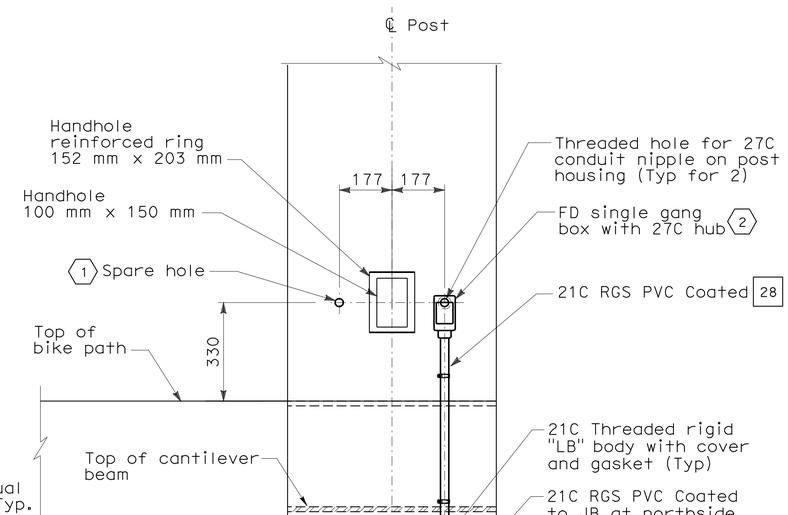

SECTION B-B

THIS PLAN ACCURATE FOR ELECTRICAL WORK ONLY.

ALL DIMENSIONS ARE IN MILLIMETERS UNLESS OTHERWISE SHOWN

DETAILS
YBI TRANSITION STRUCTURES ROADWAY AND GIRDER EASTBOUND (BELVEDERE LIGHT POST)

SCALE 1:10

E-37

STATE OF CALIFORNIA - DEPARTMENT OF TRANSPORTATION
Caltrans

CONSULTANT FUNCTIONAL SUPERVISOR: BOB ZANDIPOUR
CALCULATED-DESIGNED BY: REUBEN BUENVIAJE
CHECKED BY: J. HALIM, T. WU, W. BECK
REVISED BY
DATE REVISED

LAST REVISION 00-00-00
DATE PLOTTED => 25-FEB-2012
TIME PLOTTED => 10:52

Dist	COUNTY	ROUTE	KILOMETER POST TOTAL PROJECT	SHEET No.	TOTAL SHEETS
04	SF	80	12.6/13.9	266	821

Caltrans Metric

Syn Yee Chin 10/31/11
REGISTERED ELECTRICAL ENGINEER

2-21-12
PLANS APPROVAL DATE

REGISTERED PROFESSIONAL ENGINEER
SYN YEE CHIN
No. 18186
Exp. 09/30/2013
ELECTRICAL
STATE OF CALIFORNIA

THE STATE OF CALIFORNIA OR ITS OFFICERS OR AGENTS SHALL NOT BE RESPONSIBLE FOR THE ACCURACY OR COMPLETENESS OF ELECTRONIC COPIES OF THIS PLAN SHEET.

PB AMERICAS, Inc.
303 Second St., Suite 700N
San Francisco, CA 94107-1317

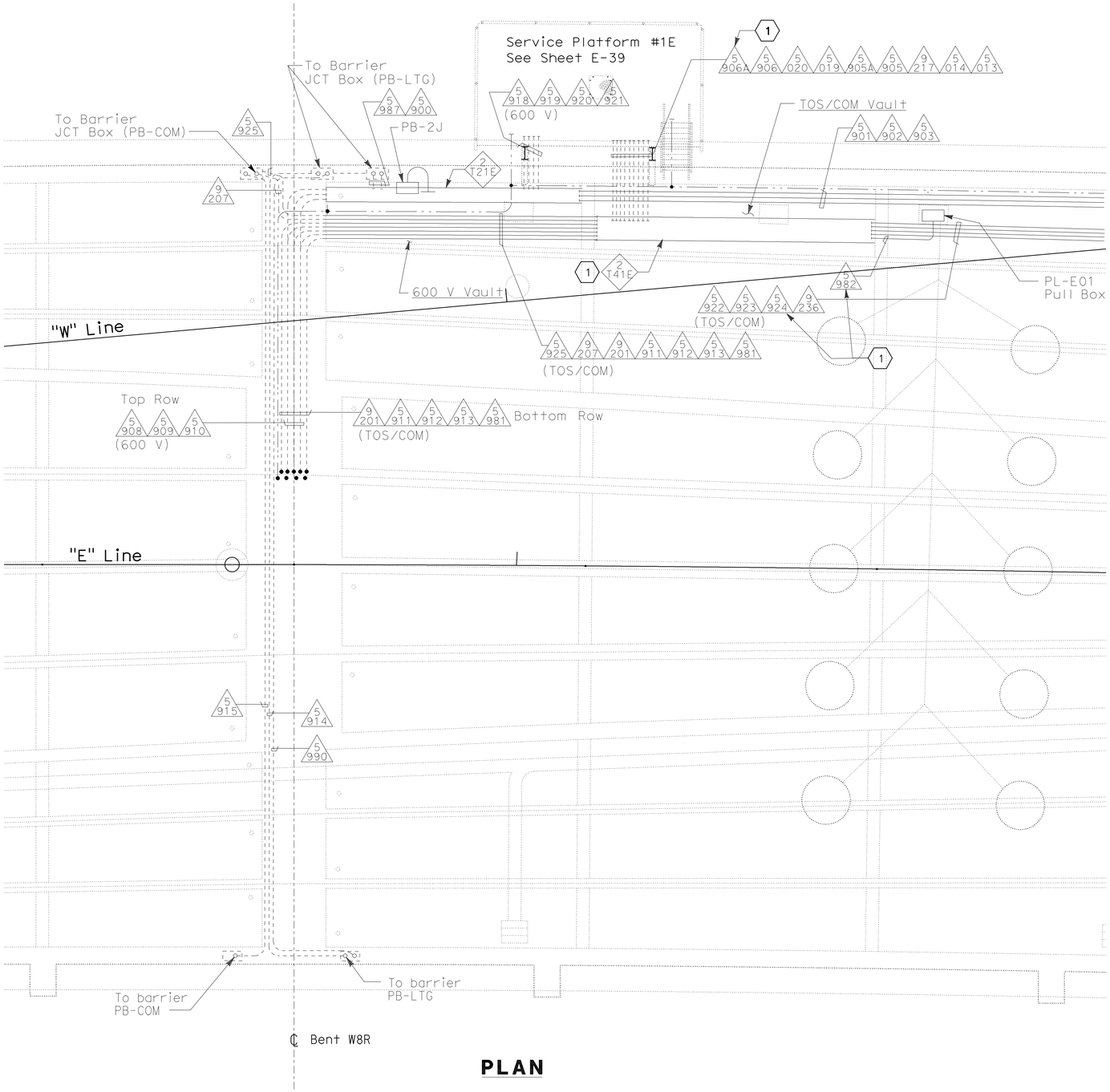

PLAN

NOTES:

1. Refer to conduit and tray schedules, cable and circuit schedules starting at drawing E-62.
2. All equipment and conduits shown are existing.

SHEET NOTES:

(1) The Contractor to route cables/circuits in existing conduits and pull boxes, from service platform splice cabinet TOS-01ES to Ramp Controler Cabinet TOS-RM01.

ALL DIMENSIONS ARE IN METERS UNLESS OTHERWISE SHOWN

DETAILS
YBI TRANSITION STRUCTURES ROADWAY AND GIRDER EASTBOUND (BENT W8R)

SCALE 1:75

E-38

THIS PLAN ACCURATE FOR ELECTRICAL WORK ONLY.

STATE OF CALIFORNIA - DEPARTMENT OF TRANSPORTATION
Caltrans

CONSULTANT FUNCTIONAL SUPERVISOR: BOB ZANDIPOUR
CALCULATED-DESIGNED BY: REUBEN BUENVIAJE
CHECKED BY: J. HALIM, T. WU, W. BECK
REVISED BY
DATE REVISED

LAST REVISION 00-00-00 | DATE PLOTTED => 25-FEB-2012 | TIME PLOTTED => 10:52

Dist	COUNTY	ROUTE	KILOMETER POST TOTAL PROJECT	SHEET No.	TOTAL SHEETS
04	SF	80	12.6/13.9	267	821

Syn Yee Chin 10/31/11
REGISTERED ELECTRICAL ENGINEER

2-21-12
PLANS APPROVAL DATE

REGISTERED PROFESSIONAL ENGINEER SYN YEE CHIN No. 18186 Exp. 09/30/2013 ELECTRICAL STATE OF CALIFORNIA

THE STATE OF CALIFORNIA OR ITS OFFICERS OR AGENTS SHALL NOT BE RESPONSIBLE FOR THE ACCURACY OR COMPLETENESS OF ELECTRONIC COPIES OF THIS PLAN SHEET.

PB AMERICAS, Inc.
303 Second St., Suite 700N
San Francisco, CA 94107-1317

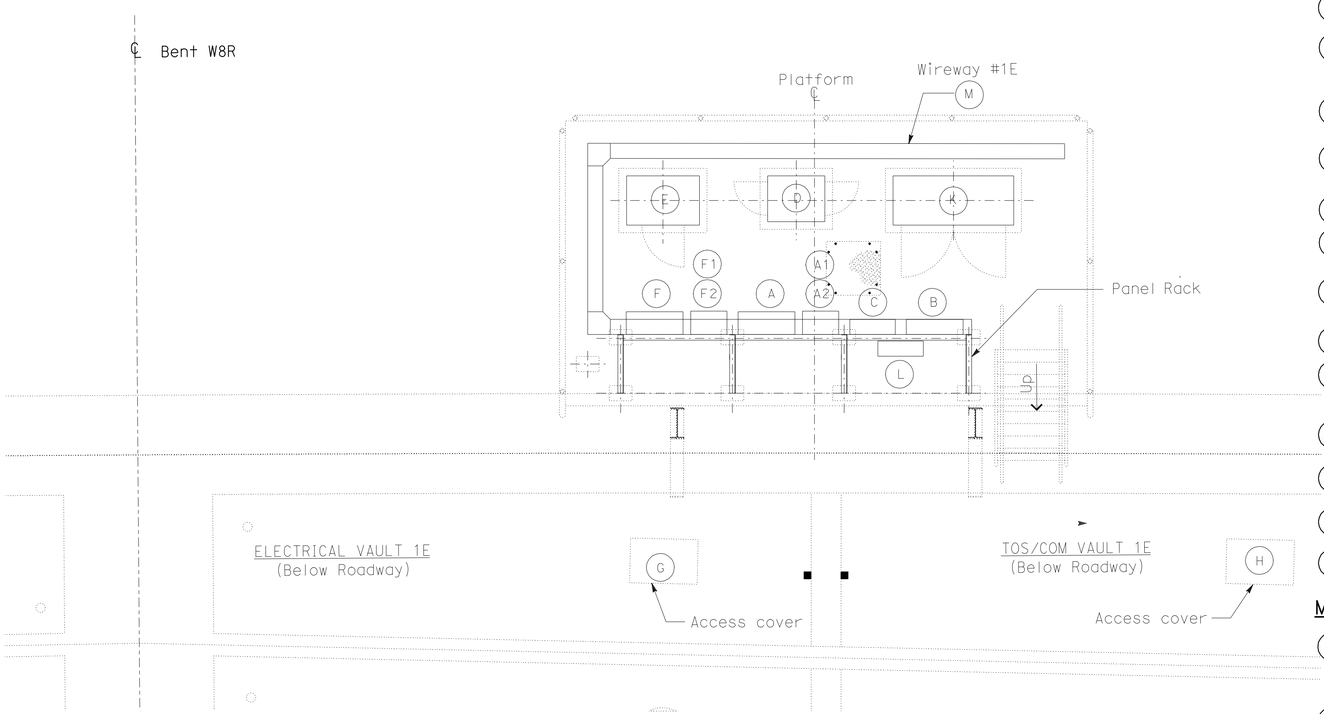

SERVICE PLATFORM #1E EQUIPMENT ARRANGEMENT PLAN

SCALE 1:40

EQUIPMENT SCHEDULE:

- (A) Utility Panel UP-201, 100 A 208/120 V, 3 Phase, 4 Wires (PB-8A).
- (A1) 15 kVA Transformer, 3 Phase, 4 Wires 480 V-208/120 V, 60 HZ. (Nema 4x) Size: 375 H x 232 W x 311 D.
- (A2) Enclosed molded case circuit braker Size: 495 H x 232 W x 124 D.
- (B) Scada Communication Terminal Box #COM-01E (PB-7B).
- (C) Telephone Terminal Box No. TEL-01E (PB-7C).
- (D) Controller Cabinet No. TOS-01EA Size: 1625 H x 615 W x 768 D.
- (E) TOS Splice Cabinet TOS-01ES Size: 1400 H x 980 W x 660 D.
- (F) Lighting Panel LP-216, 100 A 208/120 V, 3 Phase, 4 Wires (PB-8A).
- (F1) 15 kVA Transformer, 3 Phase, 4 Wires 480 V-208/120 V, 60 HZ. (Nema 4x) Size: 375 H x 485 W x 311 D.
- (F2) Enclosed molded case circuit breaker Size: 495 H x 232 W x 124 D.
- (K) Strong Motion Recorder No. 1 Size: 1900 H x 1620 W x 660 D.
- (L) PB-2B mounted on panel rack.
- (M) 600 V Wireway #1E, (Nema 4X) 203 H x 203 W.

MISCELLANEOUS:

- (G) Deck utility access opening and cover. Engraving "Electrical Vault 1E". Refer to Structures plan sheets, misc. superstructure Details No. 2".
- (H) Deck utility access opening and cover. Engraving "TOS/COM 1E". Refer to Structures plan sheets, misc. superstructure Details No. 2".

NOTES:

1. Refer to conduit and tray schedules, cable and circuit schedules starting at drawing E-62.
2. All equipment and conduits shown are existing.

SHEET NOTES:

(1) The Contractor to route cable/circuits in existing conduit and pull box, from service platform TOS splice cabinet TOS-01ES to Ramp Controler Cabinet TOS-RM01.

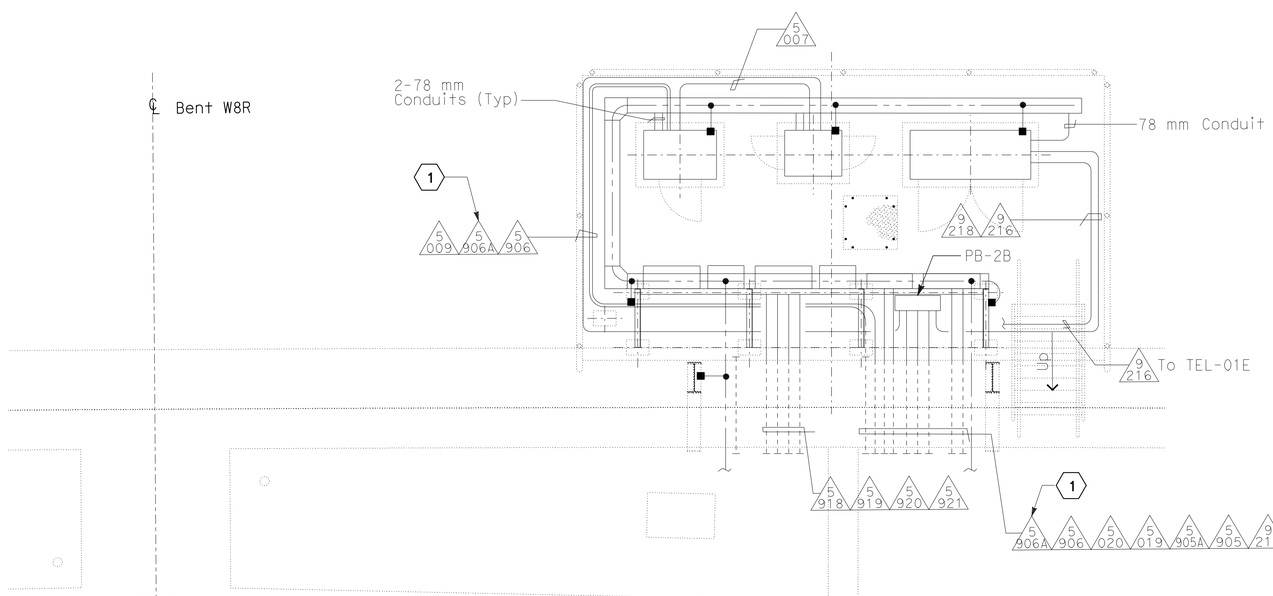

CONDUIT AND GROUNDING PLAN - EB

SCALE 1:40

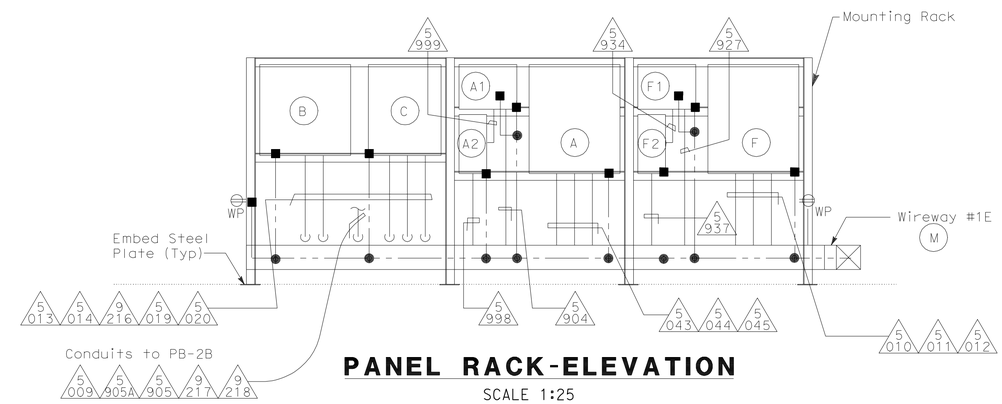

PANEL RACK-ELEVATION

SCALE 1:25

DETAILS

YBI TRANSITION STRUCTURES ROADWAY AND GIRDER EASTBOUND (PLATFORM 1E ARRANGEMENT PLAN)

SCALE AS SHOWN

E-39

THIS PLAN ACCURATE FOR ELECTRICAL WORK ONLY.

ALL DIMENSIONS ARE IN MILLIMETERS UNLESS OTHERWISE SHOWN

STATE OF CALIFORNIA - DEPARTMENT OF TRANSPORTATION
Caltrans

CONSULTANT FUNCTIONAL SUPERVISOR: BOB ZANDIPOUR
CALCULATED-DESIGNED BY: REUBEN BUENVIAJE
CHECKED BY: J. HALIM, T. WU, W. BECK
REVISED BY
DATE REVISED

LAST REVISION 00-00-00
DATE PLOTTED => 25-FEB-2012
TIME PLOTTED => 10:52

Dist	COUNTY	ROUTE	KILOMETER POST TOTAL PROJECT	SHEET No.	TOTAL SHEETS
04	SF	80	12.6/13.9	268	821

Syn Yee Chin 10/31/11
REGISTERED ELECTRICAL ENGINEER

2-21-12
PLANS APPROVAL DATE

REGISTERED PROFESSIONAL ENGINEER
SYN YEE CHIN
No. 18186
Exp. 09/30/2013
ELECTRICAL
STATE OF CALIFORNIA

THE STATE OF CALIFORNIA OR ITS OFFICERS OR AGENTS SHALL NOT BE RESPONSIBLE FOR THE ACCURACY OR COMPLETENESS OF ELECTRONIC COPIES OF THIS PLAN SHEET.

PB AMERICAS, Inc.
303 Second St., Suite 700N
San Francisco, CA 94107-1317

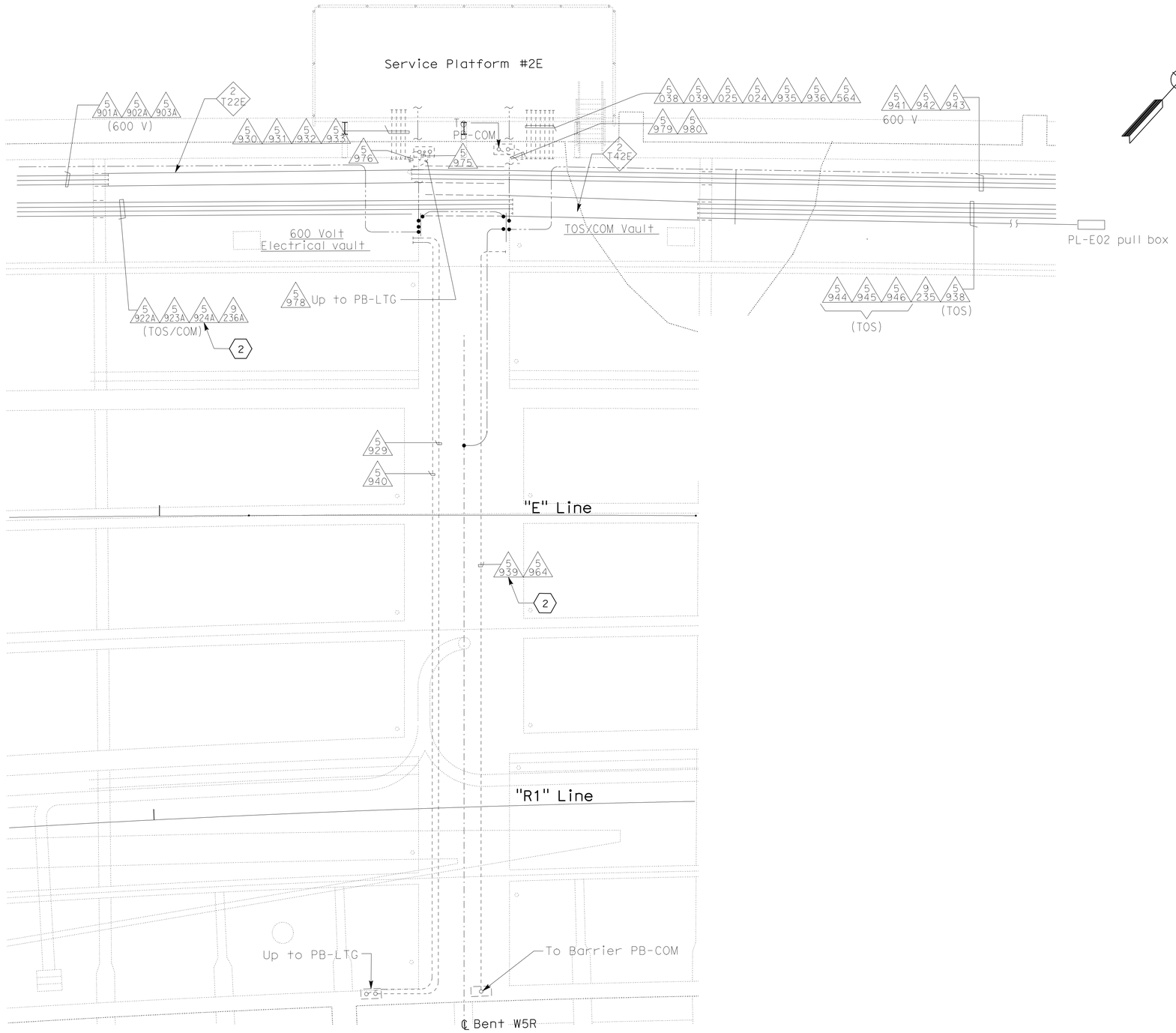

PLAN (1)

NOTE:

1. Refer to conduit and tray schedules, cable and circuit schedules starting at drawing E-62.

SHEET NOTES:

(1) All equipment and conduits shown are existing.

(2) The Contractor to route cable/circuits in existing conduit and pull box.

ALL DIMENSIONS ARE IN METERS UNLESS OTHERWISE SHOWN

DETAILS
YBI TRANSITION STRUCTURES ROADWAY AND GIRDER EASTBOUND (BENT W5R)
SCALE 1:75

E-40

THIS PLAN ACCURATE FOR ELECTRICAL WORK ONLY.

STATE OF CALIFORNIA - DEPARTMENT OF TRANSPORTATION
Caltrans

CONSULTANT FUNCTIONAL SUPERVISOR: BOB ZANDIPOUR
CALCULATED-DESIGNED BY: REUBEN BUENVIAJE
CHECKED BY: J. HALIM, T. WU, W. BECK
REVISED BY
DATE REVISED

LAST REVISION 00-00-00
DATE PLOTTED => 25-FEB-2012
TIME PLOTTED => 10:59

Dist	COUNTY	ROUTE	KILOMETER POST TOTAL PROJECT	SHEET No.	TOTAL SHEETS
04	SF	80	12.6/13.9	269	821

Caltrans Metric

Syn Yee Chin 10/31/11
REGISTERED ELECTRICAL ENGINEER

2-21-12
PLANS APPROVAL DATE

REGISTERED PROFESSIONAL ENGINEER
SYN YEE CHIN
No. 18186
Exp. 09/30/2013
ELECTRICAL
STATE OF CALIFORNIA

THE STATE OF CALIFORNIA OR ITS OFFICERS OR AGENTS SHALL NOT BE RESPONSIBLE FOR THE ACCURACY OR COMPLETENESS OF ELECTRONIC COPIES OF THIS PLAN SHEET.

PB AMERICAS, Inc.
303 Second St., Suite 700N
San Francisco, CA 94107-1317

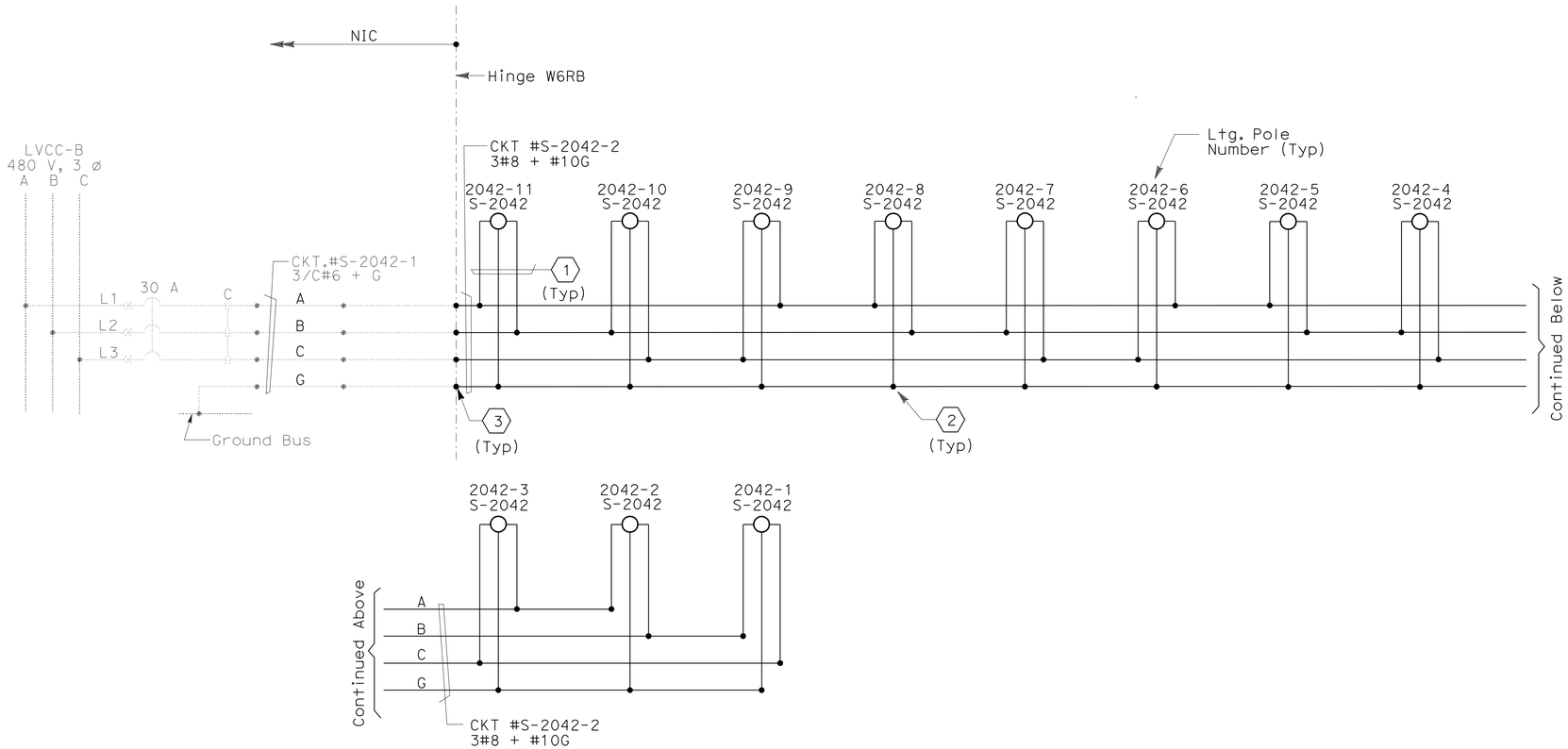

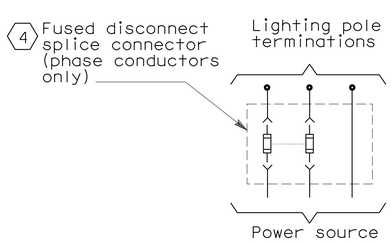

DETAIL-1
(TYPICAL FOR EACH LTG POLE)

NOTES:

1. References:
   - For pull box and roadway lighting schedules, see sheet E-46.
   - For roadway plan, see sheets E-14 and E-15.
   - Refer to conduit and tray schedules, cable and circuit schedules starting at drawing E-62.
2. Unless shown in bold, everything else is not part of this Contract.

SHEET NOTES:

1. 3#10 AWG single conductors, see Detail 1.
2. Conductors spliced inside PB-LTG.
3. Splice to existing conductors in PB-LTG.
4. For type and size of in-line fusing, see Caltrans Standard Plans. Locate fusing inside terminal box at base of each roadway lighting pole.

DETAILS
YBI TRANSITION STRUCTURES
ROADWAY AND GIRDER EASTBOUND
(480 V RAMP POLE LIGHTING WIRING DIAGRAM)
NO SCALE

E-41

THIS PLAN ACCURATE FOR ELECTRICAL WORK ONLY.

REVISED BY	DATE REVISED

REUBEN BUENVIAJE
J. HALIM, T. WU, W. BECK
CALCULATED-DESIGNED BY
CHECKED BY
CONSULTANT FUNCTIONAL SUPERVISOR
BOB ZANDIPOUR

STATE OF CALIFORNIA - DEPARTMENT OF TRANSPORTATION
Caltrans

LAST REVISION 00-00-00
DATE PLOTTED => 25-FEB-2012
TIME PLOTTED => 10:53

Dist	COUNTY	ROUTE	KILOMETER POST TOTAL PROJECT	SHEET No.	TOTAL SHEETS
04	SF	80	12.6/13.9	270	821

Caltrans Metric

Syn Yee Chin 10/31/11
REGISTERED ELECTRICAL ENGINEER

2-21-12
PLANS APPROVAL DATE

REGISTERED PROFESSIONAL ENGINEER SYN YEE CHIN No. 18186 Exp. 09/30/2013 ELECTRICAL STATE OF CALIFORNIA

THE STATE OF CALIFORNIA OR ITS OFFICERS OR AGENTS SHALL NOT BE RESPONSIBLE FOR THE ACCURACY OR COMPLETENESS OF ELECTRONIC COPIES OF THIS PLAN SHEET.

PB AMERICAS, Inc.
303 Second St., Suite 700N
San Francisco, CA 94107-1317

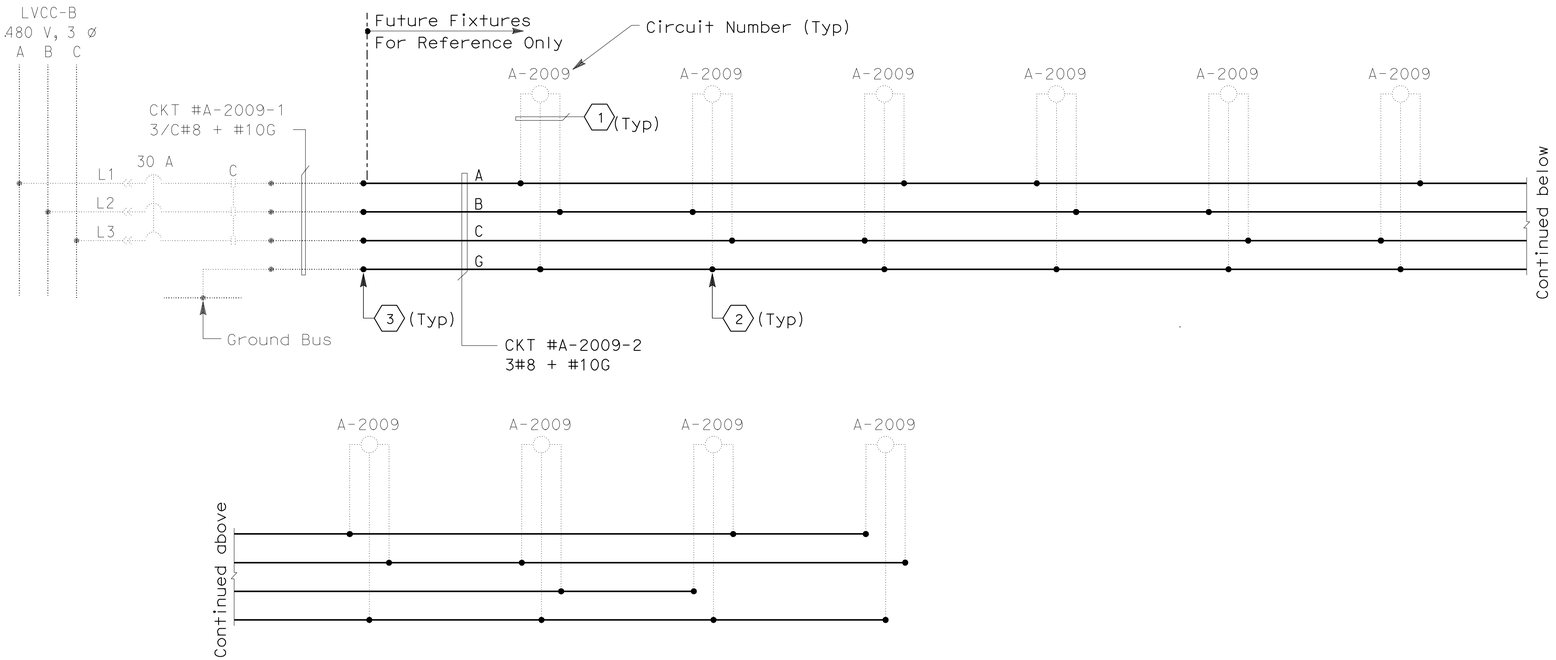

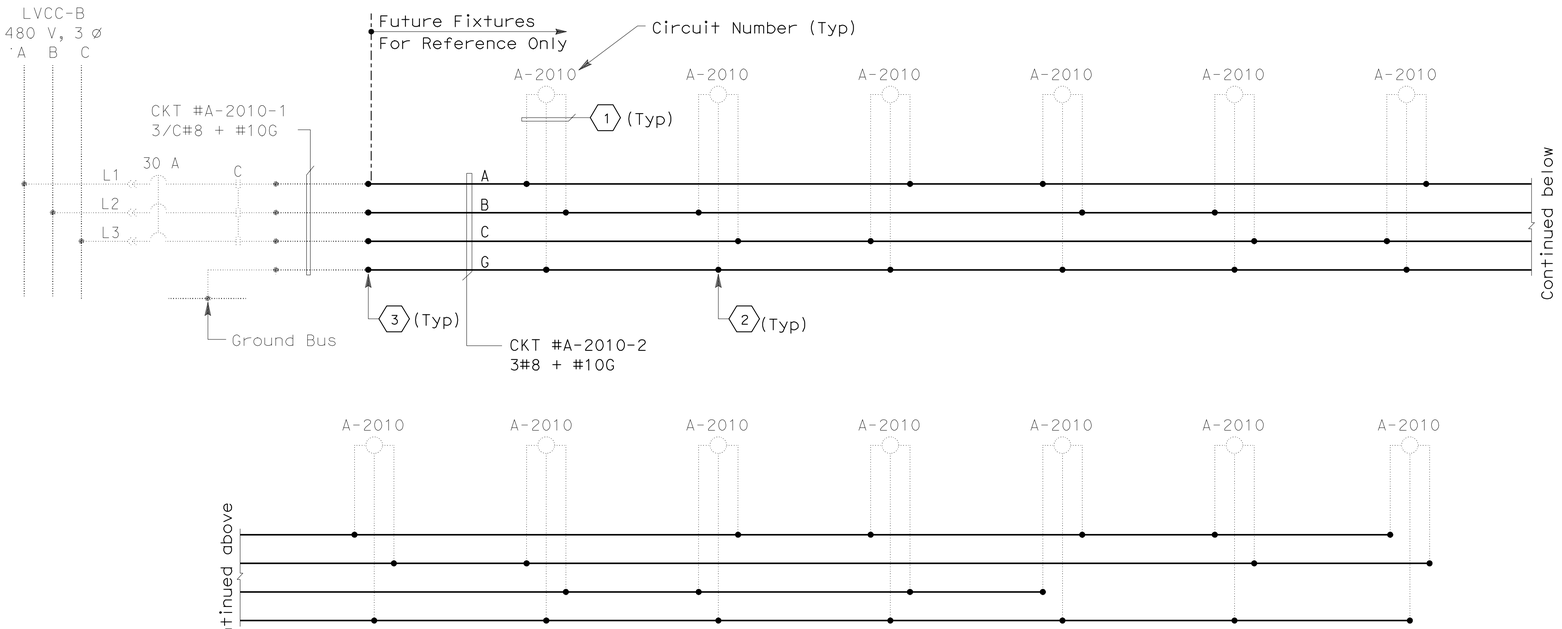

NOTES:

1. References:
   - For pull box and light pipe schedules, see sheet E-46.
   - Refer to conduit and tray schedules, cable and circuit schedules starting at drawing E-62.
   - For approximate location of future light pipe housing, refer to drawings E-19 and E-20.
2. Unless shown in bold, everything else is not part of this Contract.

SHEET NOTES:

(1) 3#10 AWG single conductors.

(2) Conductors to be spliced inside PB-LTG by others in the future.

(3) Splice to existing conductors in PB-LTG.

DETAILS
YBI TRANSITION STRUCTURES ROADWAY AND GIRDER EASTBOUND (480 V LIGHT PIPE WIRING DIAGRAM)
NO SCALE

E-42

THIS PLAN ACCURATE FOR ELECTRICAL WORK ONLY.

STATE OF CALIFORNIA - DEPARTMENT OF TRANSPORTATION
Caltrans

CONSULTANT FUNCTIONAL SUPERVISOR: BOB ZANDIPOUR
CALCULATED-DESIGNED BY: REUBEN BUENVIAJE
CHECKED BY: J. HALIM, T. WU, W. BECK
REVISED BY
DATE REVISED

LAST REVISION 00-00-00
DATE PLOTTED => 25-FEB-2012
TIME PLOTTED => 10:53

Dist	COUNTY	ROUTE	KILOMETER POST TOTAL PROJECT	SHEET No.	TOTAL SHEETS
04	SF	80	12.6/13.9	271	821

Caltrans Metric

Syn Yee Chin 10/31/11
REGISTERED ELECTRICAL ENGINEER

2-21-12
PLANS APPROVAL DATE

REGISTERED PROFESSIONAL ENGINEER
SYN YEE CHIN
No. 18186
Exp. 09/30/2013
ELECTRICAL
STATE OF CALIFORNIA

THE STATE OF CALIFORNIA OR ITS OFFICERS OR AGENTS SHALL NOT BE RESPONSIBLE FOR THE ACCURACY OR COMPLETENESS OF ELECTRONIC COPIES OF THIS PLAN SHEET.

PB AMERICAS, Inc.
303 Second St., Suite 700N
San Francisco, CA 94107-1317

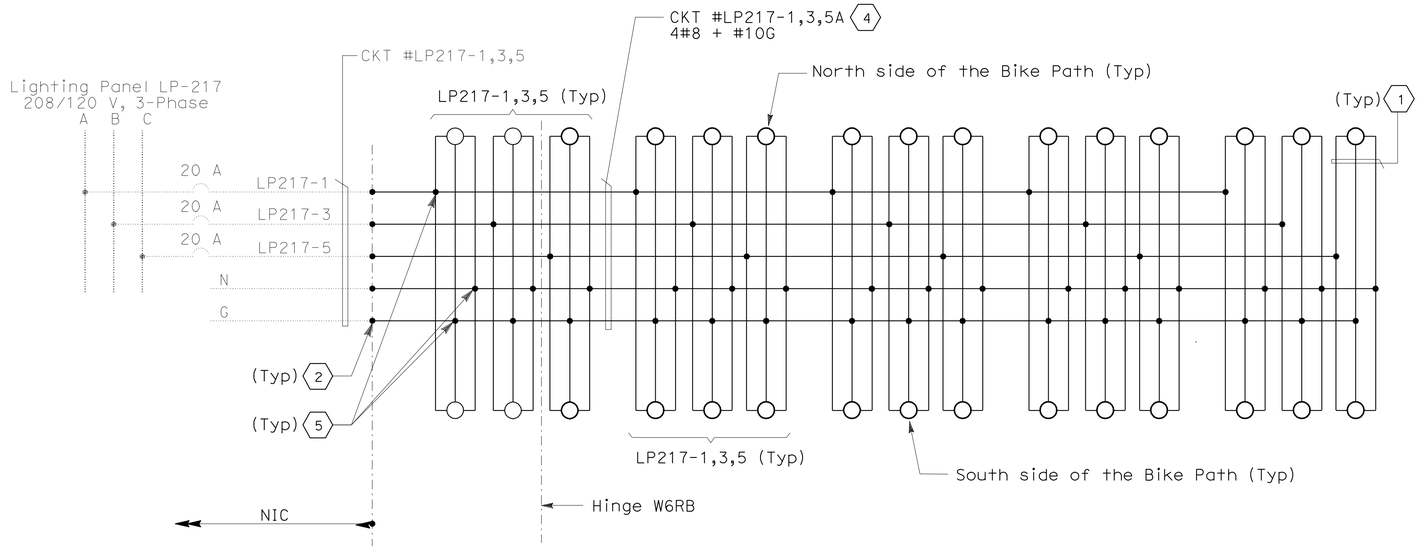

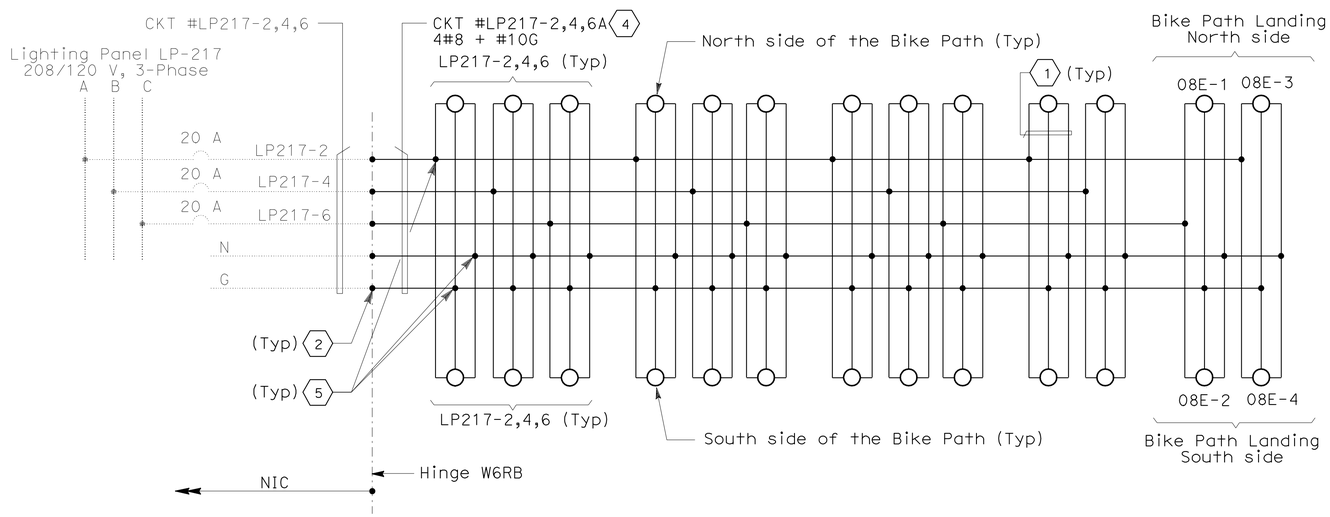

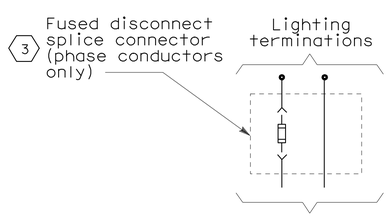

DETAIL-1
(TYP. FOR EACH BIKE PATH LIGHTING)

NOTES:

1. References:
   - Refer to conduit and tray schedules, cable and circuit schedules starting at drawing E-62.
   - For lighting fixtures locations, see sheets E-14, E-15 and E-16.
   - Refer to drawing E-46 for pull box and light fixture schedules.
2. Unless shown in bold, everything else is not part of this Contract.

SHEET NOTES:

1. 3#12 AWG single conductors.
2. Splice to existing conductors inside PB-LTG located next to bike path.
3. For type and size of in line fusing, see Caltrans Standard plans. Locate fusing inside bike path lighting housing.
4. 4#8 + 1#10 GND, single conductors.
5. Conductors spliced inside PB-1C located next to bike path.

DETAILS
YBI TRANSITION STRUCTURES
ROADWAY AND GIRDER EASTBOUND
(120 V BIKE PATH LIGHTING WIRING DIAGRAM)
NO SCALE

E-43

THIS PLAN ACCURATE FOR ELECTRICAL WORK ONLY.

STATE OF CALIFORNIA - DEPARTMENT OF TRANSPORTATION
Caltrans

CONSULTANT FUNCTIONAL SUPERVISOR: BOB ZANDIPOUR
CALCULATED-DESIGNED BY: REUBEN BUENVIAJE
CHECKED BY: J. HALIM, T. WU, W. BECK
REVISED BY
DATE REVISED

LAST REVISION 00-00-00
DATE PLOTTED => 25-FEB-2012
TIME PLOTTED => 11:13

Dist	COUNTY	ROUTE	KILOMETER POST TOTAL PROJECT	SHEET No.	TOTAL SHEETS
04	SF	80	12.6/13.9	272	821

Caltrans Metric

Syn Yee Chin 10/31/11
REGISTERED ELECTRICAL ENGINEER

2-21-12
PLANS APPROVAL DATE

REGISTERED PROFESSIONAL ENGINEER
SYN YEE CHIN
No. 18186
Exp. 09/30/2013
ELECTRICAL
STATE OF CALIFORNIA

THE STATE OF CALIFORNIA OR ITS OFFICERS OR AGENTS SHALL NOT BE RESPONSIBLE FOR THE ACCURACY OR COMPLETENESS OF ELECTRONIC COPIES OF THIS PLAN SHEET.

PB AMERICAS, Inc.
303 Second St., Suite 700N
San Francisco, CA 94107-1317

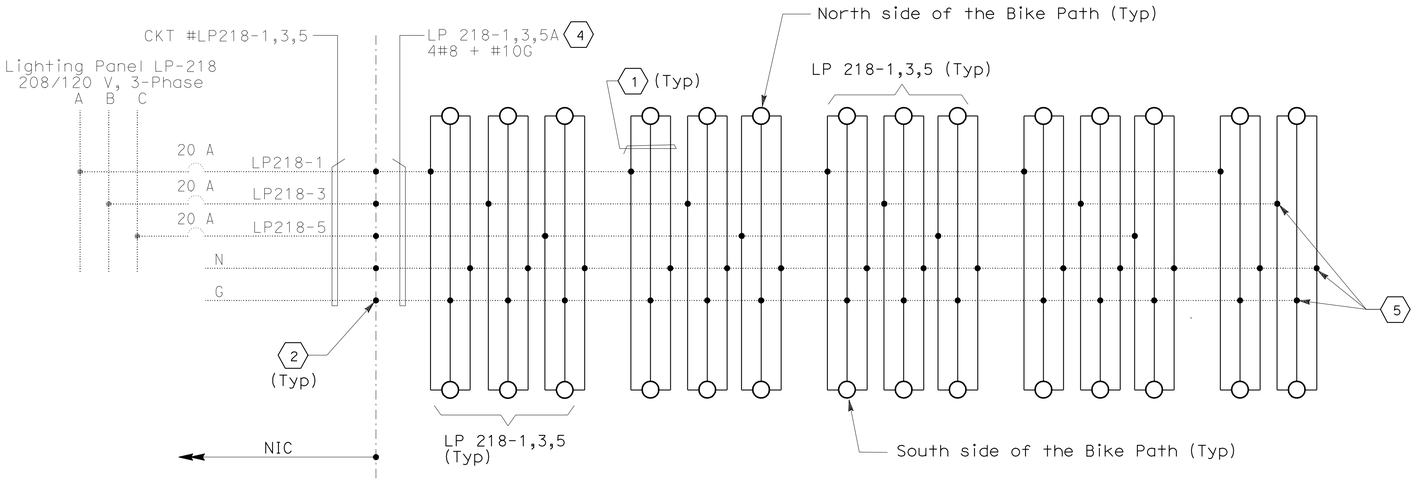

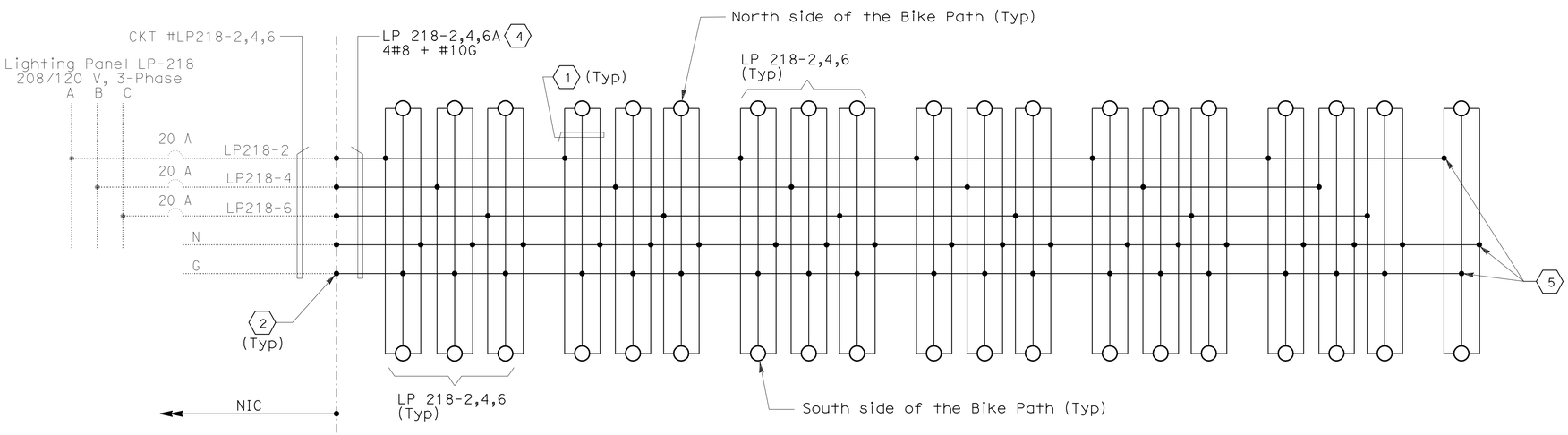

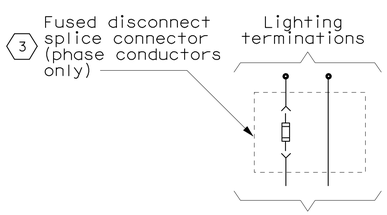

DETAIL 1
(TYP. FOR EACH BIKE PATH LIGHTING)

NOTES:

1. References:
   - Refer to conduit and tray schedules, cable and circuit schedules starting at drawing E-62.
   - For lighting fixtures locations, see sheets E-16 and E-17.
   - Refer to drawing E-46 for pull box and light fixture schedules.
2. Unless shown in bold, everything else is not part of this Contract.

SHEET NOTES:

1. 3#12 AWG single conductors.
2. Splice to existing conductors inside PB-LTG located next to bike path.
3. For type and size of in line fusing, see Caltrans Standard plans. Locate fusing inside bike path lighting housing.
4. 4#8 + 1#10 GND, single conductors.
5. Conductors spliced inside PB-1C located next to bike path.

DETAILS
YBI TRANSITION STRUCTURES
ROADWAY AND GIRDER EASTBOUND
(120 V BIKE PATH LIGHTING WIRING DIAGRAM)
NO SCALE

E-44

THIS PLAN ACCURATE FOR ELECTRICAL WORK ONLY.

STATE OF CALIFORNIA - DEPARTMENT OF TRANSPORTATION
Caltrans

CONSULTANT FUNCTIONAL SUPERVISOR: BOB ZANDIPOUR
CALCULATED-DESIGNED BY: REUBEN BUENVIAJE
CHECKED BY: J. HALIM, T. WU, W. BECK
REVISED BY
DATE REVISED

LAST REVISION 00-00-00
DATE PLOTTED => 25-FEB-2012
TIME PLOTTED => 11:13

Dist	COUNTY	ROUTE	KILOMETER POST TOTAL PROJECT	SHEET No.	TOTAL SHEETS
04	SF	80	12.6/13.9	273	821

Syn Yee Chin 10/31/11
REGISTERED ELECTRICAL ENGINEER

2-21-12
PLANS APPROVAL DATE

REGISTERED PROFESSIONAL ENGINEER SYN YEE CHIN No. 18186 Exp. 09/30/2013 ELECTRICAL STATE OF CALIFORNIA

THE STATE OF CALIFORNIA OR ITS OFFICERS OR AGENTS SHALL NOT BE RESPONSIBLE FOR THE ACCURACY OR COMPLETENESS OF ELECTRONIC COPIES OF THIS PLAN SHEET.

PB AMERICAS, Inc.
303 Second St., Suite 700N
San Francisco, CA 94107-1317

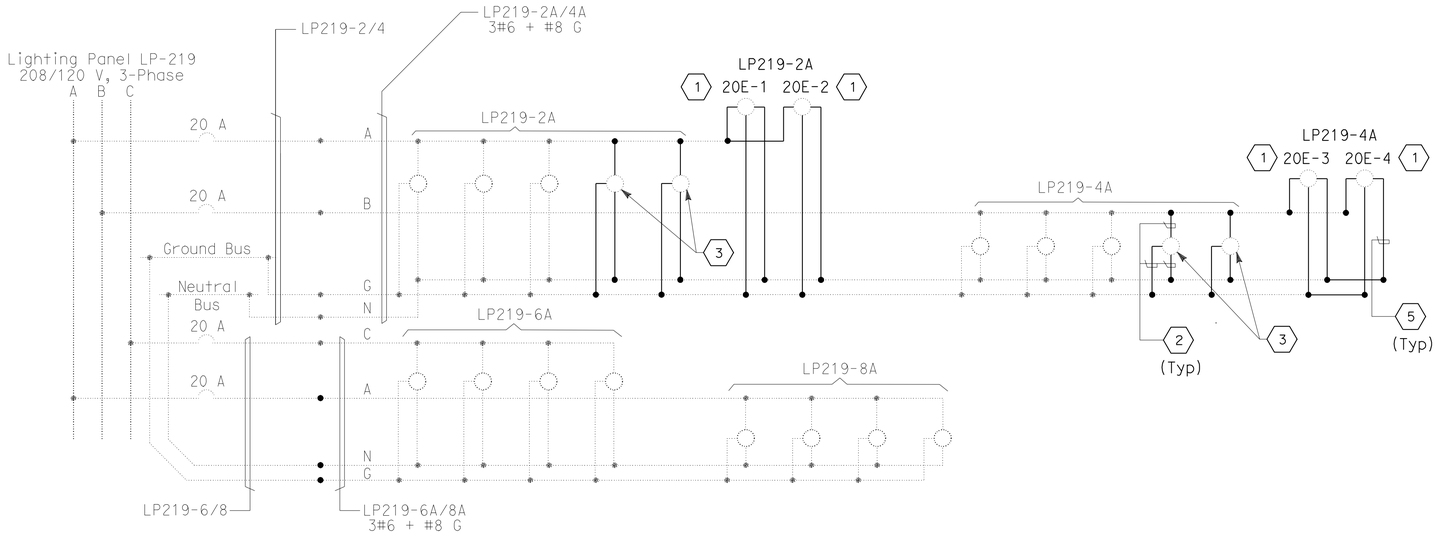

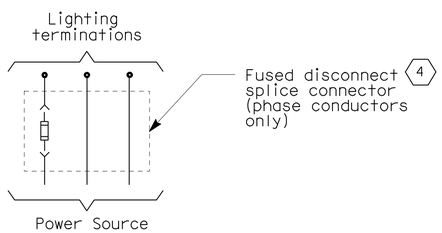

DETAIL-1
(TYP. FOR EACH BIKE PATH LIGHTING)

NOTES:

1. References:
   - Refer to conduit and tray schedules, cable and circuit schedules starting at drawing E-62.
   - For lighting fixtures locations, see sheet E-18.
   - Refer to drawing E-46 for pull box and light fixture schedules.
2. Unless shown in bold, everything else is not part of this Contract.

SHEET NOTES:

1. The Contractor shall wire and connect Belvedere light fixtures.
2. #12 AWG, single conductor.
3. The Contractor shall install bike path lighting State-furnished.
4. For type and size of in line fusing, see Caltrans Standard plans. Locate fusing inside bike path lighting housing.
5. #10 AWG, single conductor.

DETAILS
YBI TRANSITION STRUCTURES
ROADWAY AND GIRDER EASTBOUND
120 V BIKE PATH LIGHTING WIRING DIAGRAMS

NO SCALE

E-45

THIS PLAN ACCURATE FOR ELECTRICAL WORK ONLY.

REVISED BY | DATE REVISED
REUBEN BUENVIAJE
J. HALIM, T. WU, W. BECK
CALCULATED-DESIGNED BY
CHECKED BY
CONSULTANT FUNCTIONAL SUPERVISOR
BOB ZANDIPOUR
STATE OF CALIFORNIA - DEPARTMENT OF TRANSPORTATION
Caltrans

LAST REVISION 00-00-00 | DATE PLOTTED => 25-FEB-2012 | TIME PLOTTED => 11:13

Dist	COUNTY	ROUTE	KILOMETER POST TOTAL PROJECT	SHEET No.	TOTAL SHEETS
04	SF	80	12.6/13.9	274	821

Syn Yee Chin 10/31/11
REGISTERED ELECTRICAL ENGINEER

2-21-12
PLANS APPROVAL DATE

REGISTERED PROFESSIONAL ENGINEER SYN YEE CHIN No. 18186 Exp. 09/30/2013 ELECTRICAL STATE OF CALIFORNIA

THE STATE OF CALIFORNIA OR ITS OFFICERS OR AGENTS SHALL NOT BE RESPONSIBLE FOR THE ACCURACY OR COMPLETENESS OF ELECTRONIC COPIES OF THIS PLAN SHEET.

PB AMERICAS, Inc.
303 Second St., Suite 700N
San Francisco, CA 94107-1317

LIGHT PIPE SCHEDULE

Circuit Number	Location: Reference	Location: Bikepath side	Mounting	Ltg. Fixture Type	Number/ Wattage	Remarks
A-2009	E-20	South	Bracket Mtd.	YAL	1-400 W	with Remote Ballast
A-2009	E-20	South	Bracket Mtd.	YAL	1-400 W	with Remote Ballast
A-2009	E-20	South	Bracket Mtd.	YAL	1-400 W	with Remote Ballast
A-2009	E-20	South	Bracket Mtd.	YAL	1-400 W	with Remote Ballast
A-2009	E-20	South	Bracket Mtd.	YAL	1-400 W	with Remote Ballast
A-2009	E-20	South	Bracket Mtd.	YAL	1-400 W	with Remote Ballast
A-2009	E-20	South	Bracket Mtd.	YAL	1-400 W	with Remote Ballast
A-2009	E-20	South	Bracket Mtd.	YAL	1-400 W	with Remote Ballast
A-2009	E-20	South	Bracket Mtd.	YAL	1-400 W	with Remote Ballast
A-2009	E-20	South	Bracket Mtd.	YAL	1-400 W	with Remote Ballast
A-2010	E-20	South	Bracket Mtd.	YAL	1-400 W	with Remote Ballast
A-2010	E-20	South	Bracket Mtd.	YAL	1-400 W	with Remote Ballast
A-2010	E-20	South	Bracket Mtd.	YAL	1-400 W	with Remote Ballast
A-2010	E-20	South	Bracket Mtd.	YAL	1-400 W	with Remote Ballast
A-2010	E-20	South	Bracket Mtd.	YAL	1-400 W	with Remote Ballast
A-2010	E-19	South	Bracket Mtd.	YAL	1-400 W	with Remote Ballast
A-2010	E-19	South	Bracket Mtd.	YAL	1-400 W	with Remote Ballast
A-2010	E-19	South	Bracket Mtd.	YAL	1-400 W	with Remote Ballast
A-2010	E-19	South	Bracket Mtd.	YAL	1-400 W	with Remote Ballast
A-2010	E-19	South	Bracket Mtd.	YAL	1-400 W	with Remote Ballast
A-2010	E-19	South	Bracket Mtd.	YAL	1-400 W	with Remote Ballast
A-2010	E-19	South	Bracket Mtd.	YAL	1-400 W	with Remote Ballast
A-2010	E-19	South	Bracket Mtd.	YAL	1-400 W	with Remote Ballast

(1)

BIKE PATH FIXTURE SCHEDULE

Location	Mounting	Lighting Fixture Type	Number/ Wattage	Remarks
Bike Path Structure	Bike Path Railing	YSB	1-40 W	Compact Fluorescent

BIKE PATH LANDING POLE AND FIXTURE SCHEDULE

Circuit Number	Pole Number	Location	Ltg. Fixture Type (State Furnished)	Remarks (Mounting Provisions)
LP217-6	08E-1	Landing	Furnished by Caltrans	Pole Mounted
LP217-6	08E-2	Landing	Furnished by Caltrans	Pole Mounted
LP217-2	08E-3	Landing	Furnished by Caltrans	Pole Mounted
LP217-2	08E-4	Landing	Furnished by Caltrans	Pole Mounted

NOTES:

1. References:
   - For roadway lighting and electrical systems, see sheets E-14 thru E-18.
   - For 480 V ramp pole lighting wiring diagram, see sheet E-41.
   - For 480 V light pipe wiring diagram, see sheet E-42.
   - For 120 V bike path lighting wiring diagram, see sheets E-43, E-44 & E-45.
2. Light pipe lighting fixture type YAL are not supplied under this contract.

SHEET NOTES:

(1) Light pipe shown for reference only. Circuit provision for future use, refer to wiring diagram sheet E-42.

PULL BOX SCHEDULE

Location	Type	Pull Box size	Enclosure Type	Nameplate Pull Box Cover	Remarks
Roadway Barrier	PB-COM	——	——	Communication	Caltrans standard RSP ES-9C (PB-9A)
Roadway Barrier	PB-LTG	——	——	600 V - Electrical	Caltrans standard RSP ES-9C (PB-9)
Bike Path	PB-1C	152 L x 203 W x 102 D	NEMA 4X	600 V - Electrical	
Eastbound off Ramp	PB-TOS	——	——	Ramp Meter	Caltrans standard RSP ES-8 (6)
Eastbound off Ramp	PB-600V	——	——	600 V - Electrical	Caltrans standard RSP ES-8 (6)

RAMP LIGHT POLE AND FIXTURE SCHEDULE

Circuit Number	Pole Number	Location: Station	Location: Roadway side	Mounting Height (M)	Ltg. Fixture Type (State Furnished)	Remarks (Mounting Provisions)
S-2042	2042-1	51+26.2	Ramp	7	Furnished by Caltrans	Pole mounted
S-2042	2042-2	51+40.5	Ramp	7	Furnished by Caltrans	Pole mounted
S-2042	2042-3	51+57.3	Ramp	7	Furnished by Caltrans	Pole mounted
S-2042	2042-4	51+73.3	Ramp	7	Furnished by Caltrans	Pole mounted
S-2042	2042-5	51+89.3	Ramp	7	Furnished by Caltrans	Pole mounted
S-2042	2042-6	52+05.3	Ramp	7	Furnished by Caltrans	Pole mounted
S-2042	2042-7	52+22.0	Ramp	7	Furnished by Caltrans	Pole mounted
S-2042	2042-8	52+38.0	Ramp	7	Furnished by Caltrans	Pole mounted
S-2042	2042-9	52+54.0	Ramp	7	Furnished by Caltrans	Pole mounted
S-2042	2042-10	52+70.0	Ramp	7	Furnished by Caltrans	Pole mounted
S-2042	2042-11	52+86.0	Ramp	7	Furnished by Caltrans	Pole mounted

THIS PLAN ACCURATE FOR ELECTRICAL WORK ONLY.

DETAILS
YBI TRANSITION STRUCTURES ROADWAY AND GIRDER EASTBOUND (PULL BOX, LIGHT PIPE, LIGHT POLE AND FIXTURE SCHEDULES)

NO SCALE

E-46

STATE OF CALIFORNIA - DEPARTMENT OF TRANSPORTATION
Caltrans

CONSULTANT FUNCTIONAL SUPERVISOR: BOB ZANDIPOUR
CALCULATED-DESIGNED BY: REUBEN BUENVIAJE
CHECKED BY: J. HALIM, T. WU, W. BECK
REVISED BY / DATE REVISED

LAST REVISION 00-00-00
DATE PLOTTED => 25-FEB-2012
TIME PLOTTED => 11:13

Dist	COUNTY	ROUTE	KILOMETER POST TOTAL PROJECT	SHEET No.	TOTAL SHEETS
04	SF	80	12.6/13.9	275	821

Caltrans Metric

Syn Yee Chin 10/31/11
REGISTERED ELECTRICAL ENGINEER

2-21-12
PLANS APPROVAL DATE

REGISTERED PROFESSIONAL ENGINEER
SYN YEE CHIN
No. 18186
Exp. 09/30/2013
ELECTRICAL
STATE OF CALIFORNIA

THE STATE OF CALIFORNIA OR ITS OFFICERS OR AGENTS SHALL NOT BE RESPONSIBLE FOR THE ACCURACY OR COMPLETENESS OF ELECTRONIC COPIES OF THIS PLAN SHEET.

PB AMERICAS, Inc.
303 Second St., Suite 700N
San Francisco, CA 94107-1317

LIGHTING PANEL LP-217 (CKT.#2101)

Location: TRANSITION STRUCTURE SERVICE PLATFORM #2E

LOAD DESCRIPTION	LTG	CB		CB	LTG	LOAD DESCRIPTION
Bike Lane LTG on Ramp (10)	590	20/1	1 A 2	20/1	**618**	Bike Lane LTG (8) **Bike Path Landing (2)**
Bike Lane LTG on Ramp (10)	590	20/1	3 B 4	20/1	**472**	Bike Lane LTG **(8)**
Bike Lane LTG on Ramp (10)	590	20/1	5 C 6	20/1	**500**	Bike Lane LTG (6) **Bike Path Landing (2)**
Spare		20/1	7 A 8	20/1		Spare
		20/1	9 B 10	20/1		
		20/1	11 C 12	20/1		
TOTAL VA	1770				**1590**	TOTAL VA

LOAD SUMMARY (INCLUDES .90PF) (VA)

Lighting (At 100%): **3360**
Gen Use (1st 10 kVA AT 100% Plus 50% of remainder):

TOTAL kVA: **3.360**

BALANCE (kVA)

Phase A - **1.208**
Phase B - **1.062**
Phase C - **1.090**

VOLTAGE: 208/120 V
PHASE/WIRES: 3-Phase, 4-WIRE
BUS RATING: 100 A
MAIN: 60 A
MOUNTING: Surface in Fiberglass Encl.
K.A.I.C.: 10

NOTES:

1. Circuits shown bold are partially pulled in this Contract. Terminations of conductors on breakers by others. The Contractor shall verify that an up-to-date and accurate panel schedule is attached on every panel board.

DETAILS
YBI TRANSITION STRUCTURES ROADWAY AND GIRDER EASTBOUND (PANEL LP-217 SCHEDULE)
NO SCALE

E-47

THIS PLAN ACCURATE FOR ELECTRICAL WORK ONLY.

STATE OF CALIFORNIA - DEPARTMENT OF TRANSPORTATION
Caltrans

CONSULTANT FUNCTIONAL SUPERVISOR: BOB ZANDIPOUR
CALCULATED-DESIGNED BY: REUBEN BUENVIAJE
CHECKED BY: J. HALIM, T. WU, W. BECK
REVISED BY
DATE REVISED

LAST REVISION 00-00-00
DATE PLOTTED => 27-FEB-2012
TIME PLOTTED => 08:10

Dist	COUNTY	ROUTE	KILOMETER POST TOTAL PROJECT	SHEET No.	TOTAL SHEETS
04	SF	80	12.6/13.9	276	821

Caltrans Metric

Syn Yee Chin 02/16/12
REGISTERED ELECTRICAL ENGINEER

2-21-12
PLANS APPROVAL DATE

REGISTERED PROFESSIONAL ENGINEER
SYN YEE CHIN
No. 18186
Exp. 09/30/2013
ELECTRICAL
STATE OF CALIFORNIA

THE STATE OF CALIFORNIA OR ITS OFFICERS OR AGENTS SHALL NOT BE RESPONSIBLE FOR THE ACCURACY OR COMPLETENESS OF ELECTRONIC COPIES OF THIS PLAN SHEET.

PB AMERICAS, Inc.
303 Second St., Suite 700N
San Francisco, CA 94107-1317

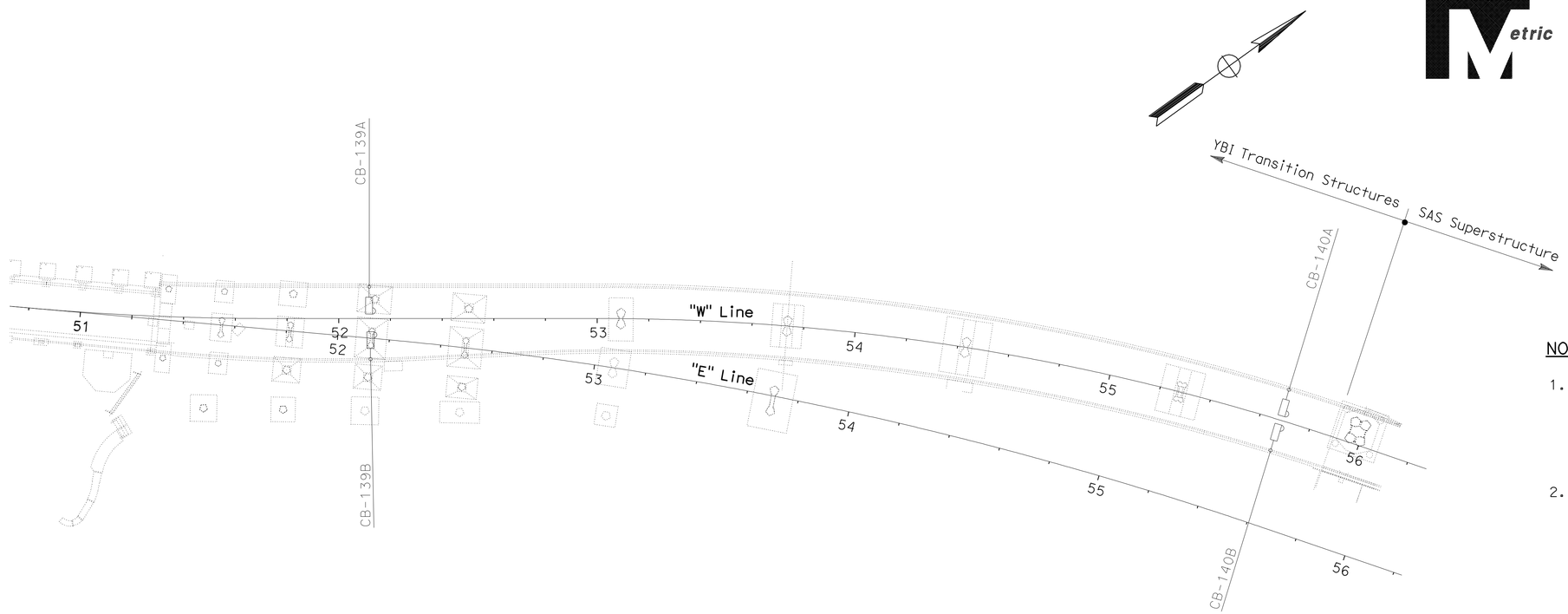

PLAN

NOTES:

1. References:
   - For Call Box Schedule-Westbound, see sheet E-52.
   - For YBI Transition Structures Roadway Westbound, Lighting and Electrical Systems, see sheets E-8 and E-9.
2. This drawing is for reference only.

CALL BOX SYSTEM
YBI TRANSITION STRUCTURES ROADWAY WESTBOUND
(CALL BOX LOCATIONS)

SCALE: 1:1000

E-48

THIS PLAN ACCURATE FOR ELECTRICAL WORK ONLY.

ALL DIMENSIONS ARE IN METERS UNLESS OTHERWISE SHOWN

REVISED BY	DATE REVISED

CALCULATED-DESIGNED BY: REUBEN BUENVIAJE
CHECKED BY: J. HALIM, T. WU, W. BECK
CONSULTANT FUNCTIONAL SUPERVISOR: BOB ZANDIPOUR

STATE OF CALIFORNIA - DEPARTMENT OF TRANSPORTATION
Caltrans

LAST REVISION 02-16-12
DATE PLOTTED => 25-FEB-2012
TIME PLOTTED => 11:13

Dist	COUNTY	ROUTE	KILOMETER POST TOTAL PROJECT	SHEET No.	TOTAL SHEETS
04	SF	80	12.6/13.9	277	821

Syn Yee Chin 02/16/12
REGISTERED ELECTRICAL ENGINEER

2-21-12
PLANS APPROVAL DATE

REGISTERED PROFESSIONAL ENGINEER
SYN YEE CHIN
No. 18186
Exp. 09/30/2013
ELECTRICAL
STATE OF CALIFORNIA

THE STATE OF CALIFORNIA OR ITS OFFICERS OR AGENTS SHALL NOT BE RESPONSIBLE FOR THE ACCURACY OR COMPLETENESS OF ELECTRONIC COPIES OF THIS PLAN SHEET.

PB AMERICAS, Inc.
303 Second St., Suite 700N
San Francisco, CA 94107-1317

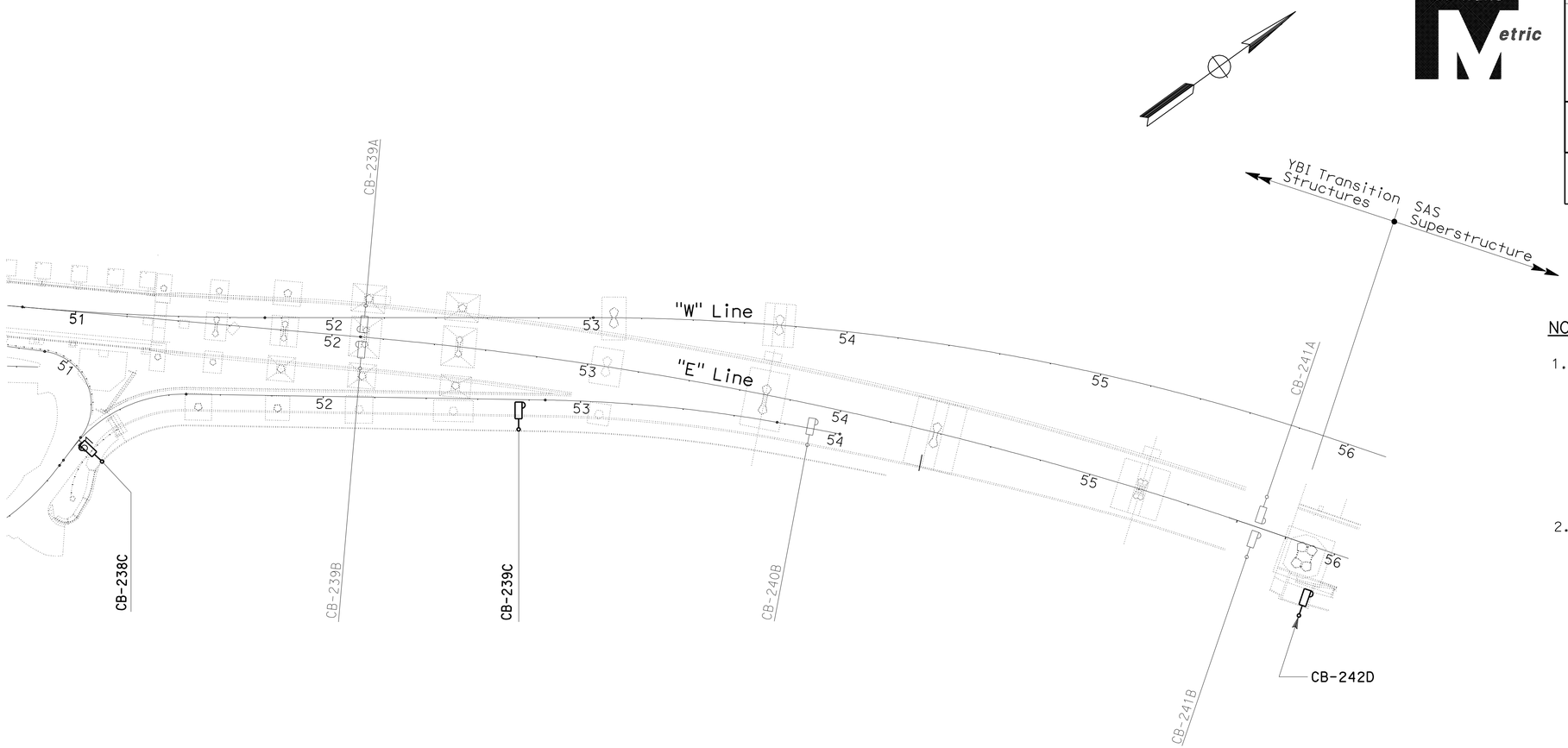

PLAN

NOTES:

1. References:
   - For Call Box Schedule-Eastbound, see sheet E-52.
   - For YBI Transition Structures Roadway and Girder Eastbound, Lighting and Electrical Systems, see sheets E-14 thru E-18.
   - Call box installation by others. The Contractor shall pull and terminate cables inside installed call boxes.
2. Unless shown in bold, everything else is not part of this Contract.

CALL BOX SYSTEM
YBI TRANSITION STRUCTURES ROADWAY AND GIRDER EASTBOUND (CALL BOX LOCATIONS)

SCALE: 1:1000

E-49

THIS PLAN ACCURATE FOR ELECTRICAL WORK ONLY.

ALL DIMENSIONS ARE IN METERS UNLESS OTHERWISE SHOWN

STATE OF CALIFORNIA - DEPARTMENT OF TRANSPORTATION
Caltrans

CONSULTANT FUNCTIONAL SUPERVISOR: BOB ZANDIPOUR
CALCULATED-DESIGNED BY: REUBEN BUENVIAJE
CHECKED BY: J. HALIM, T. WU, W. BECK
REVISED BY
DATE REVISED

LAST REVISION 02-16-12
DATE PLOTTED => 25-FEB-2012
TIME PLOTTED => 11:13

Dist	COUNTY	ROUTE	KILOMETER POST TOTAL PROJECT	SHEET No.	TOTAL SHEETS
04	SF	80	12.6/13.9	278	821

Caltrans Metric

Syn Yee Chin 02/16/12
REGISTERED ELECTRICAL ENGINEER

2-21-12
PLANS APPROVAL DATE

REGISTERED PROFESSIONAL ENGINEER SYN YEE CHIN No. 18186 Exp. 09/30/2013 ELECTRICAL STATE OF CALIFORNIA

THE STATE OF CALIFORNIA OR ITS OFFICERS OR AGENTS SHALL NOT BE RESPONSIBLE FOR THE ACCURACY OR COMPLETENESS OF ELECTRONIC COPIES OF THIS PLAN SHEET.

PB AMERICAS, Inc.
303 Second St., Suite 700N
San Francisco, CA 94107-1317

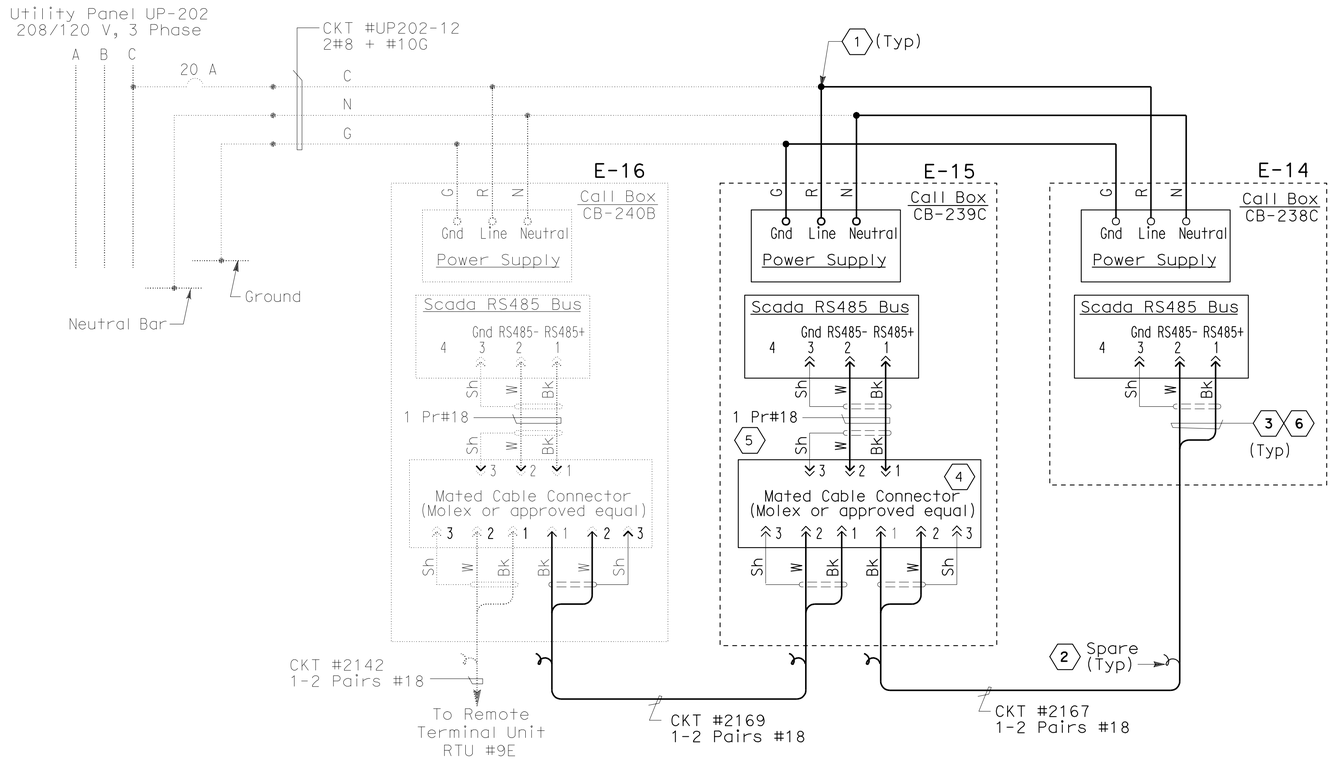

YBI TRANSITION STRUCTURES EASTBOUND

NOTES:

1. References:
   - For Call box schedule - Eastbound, see sheet E-52.
   - Refer to conduit and tray schedules, cable and circuit schedules starting at drawing E-62.
2. Unless shown in bold, everything else is not part of this Contract.

SHEET NOTES:

1. Conductors spliced inside PB-LTG.
2. Coil and tape end of spare cable inside PB-COM.
3. Terminate conductor with mated male connector.
4. Provide cable and conductor connectors. Locate connectors inside Call Box enclosure.
5. Field cable, 1 pr #18, shielded. Terminate cables with mated male connectors.
6. The Contractor shall install resistor approximately equal to the impedance (Zo) of the twisted pair #1 at the extreme ends of each multidrop network.

DETAILS
CALL BOX SYSTEM
(CALL BOX WIRING DIAGRAM)
NO SCALE

E-50

THIS PLAN ACCURATE FOR ELECTRICAL WORK ONLY.

REVISED BY | DATE REVISED
REUBEN BUENVIAJE
ELLERY LUCAS
CALCULATED-DESIGNED BY
CHECKED BY
CONSULTANT FUNCTIONAL SUPERVISOR
BOB ZANDIPOUR
STATE OF CALIFORNIA - DEPARTMENT OF TRANSPORTATION
Caltrans

LAST REVISION 02-16-12 | DATE PLOTTED => 25-FEB-2012 | TIME PLOTTED => 11:14

Dist	COUNTY	ROUTE	KILOMETER POST TOTAL PROJECT	SHEET No.	TOTAL SHEETS
04	SF	80	12.6/13.9	279	821

Syn Yee Chin 02/16/12
REGISTERED ELECTRICAL ENGINEER

2-21-12
PLANS APPROVAL DATE

REGISTERED PROFESSIONAL ENGINEER SYN YEE CHIN No. 18186 Exp. 09/30/2013 ELECTRICAL STATE OF CALIFORNIA

THE STATE OF CALIFORNIA OR ITS OFFICERS OR AGENTS SHALL NOT BE RESPONSIBLE FOR THE ACCURACY OR COMPLETENESS OF ELECTRONIC COPIES OF THIS PLAN SHEET.

PB AMERICAS, Inc.
303 Second St., Suite 700N
San Francisco, CA 94107-1317

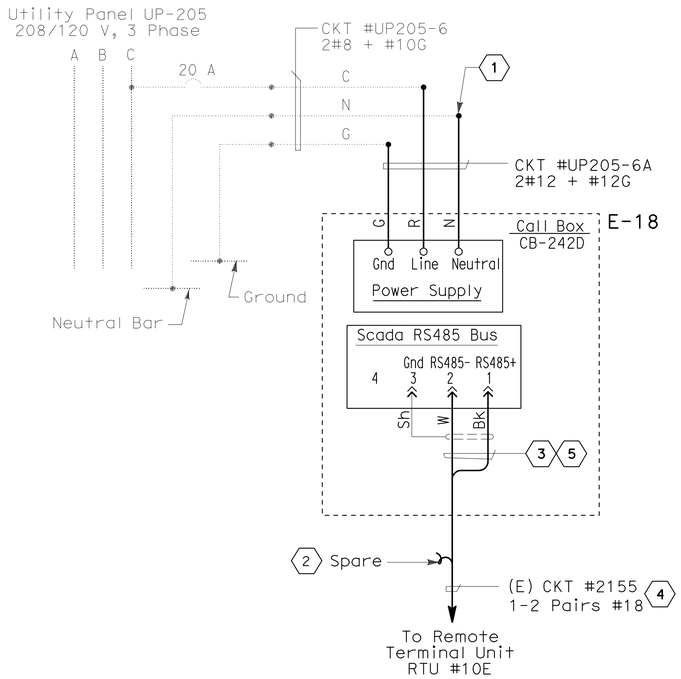

SAS SUPERSTRUCTURE EASTBOUND

NOTES:

1. References:
   - For Call box schedule - Eastbound, see sheet E-52.
   - Refer to conduit and tray schedules, cable and circuit schedules starting at drawing E-62.
2. Unless shown in bold, everything else is not part of this Contract.

SHEET NOTES:

1. Conductors spliced inside PB-LTG.
2. Coil and tape end of spare cable inside PB-COM.
3. Terminate conductor with mated male connector.
4. Existing cable coiled on the cable tray. The Contractor shall terminate the cable in the call box in this Contract.
5. The Contractor shall install resistor approximately equal to the impedance (Zo) of the twisted pair #1 at the extreme ends of each multidrop network.

DETAILS
CALL BOX SYSTEM
(CALL BOX WIRING DIAGRAM)
NO SCALE

THIS PLAN ACCURATE FOR ELECTRICAL WORK ONLY.

YBI TRANSITION STRUCTURES EASTBOUND

E-51

REVISED BY | DATE REVISED
REUBEN BUENVIAJE | ELLERY LUCAS
CALCULATED-DESIGNED BY | CHECKED BY
CONSULTANT FUNCTIONAL SUPERVISOR
BOB ZANDIPOUR
STATE OF CALIFORNIA - DEPARTMENT OF TRANSPORTATION
Caltrans

LAST REVISION 02-16-12 | DATE PLOTTED => 25-FEB-2012 | TIME PLOTTED => 11:14

Dist	COUNTY	ROUTE	KILOMETER POST TOTAL PROJECT	SHEET No.	TOTAL SHEETS
04	SF	80	12.6/13.9	280	821

Caltrans Metric

Syn Yee Chin 02/16/12
REGISTERED ELECTRICAL ENGINEER

2-21-12
PLANS APPROVAL DATE

REGISTERED PROFESSIONAL ENGINEER
SYN YEE CHIN
No. 18186
Exp. 09/30/2013
ELECTRICAL
STATE OF CALIFORNIA

THE STATE OF CALIFORNIA OR ITS OFFICERS OR AGENTS SHALL NOT BE RESPONSIBLE FOR THE ACCURACY OR COMPLETENESS OF ELECTRONIC COPIES OF THIS PLAN SHEET.

PB AMERICAS, Inc.
303 Second St., Suite 700N
San Francisco, CA 94107-1317

CALL BOX SCHEDULE - WESTBOUND

Call Box Number	Station Number	Mounting Type	Location: Roadway Location	RTU Connection	Remarks
TRANSITION STRUCTURE					
CB-139A	52 + 12	Concrete Barrier	Westbound North	RTU #9W	
CB-139B	52 + 12	Concrete Barrier	Westbound South	RTU #9W	

CALL BOX SCHEDULE - EASTBOUND

Call Box Number	Station Number	Mounting Type	Location: Roadway Side	RTU Connection	Remarks
TRANSITION AND ON-RAMP STRUCTURES					
CB-238C	**51 + 00**	**Bike Path Railing**	**On-Ramp Bike Path**	**RTU #9E**	**E-14, E-49**
CB-239A	52 + 12	Concrete Barrier	Eastbound North	RTU #9E	
CB-239B	52 + 12	Concrete Barrier	Eastbound South	RTU #9E	
CB-239C	**52 + 76**	**Bike Path Railing**	**On-Ramp Bike Path**	**RTU #9E**	**E-15, E-49**
CB-240B	53 + 90	Concrete Barrier	Eastbound South	RTU #9E	

CALL BOX SCHEDULE - EASTBOUND

Call Box Number	Station Number	Mounting Type	Location: Roadway Side	RTU Connection	Remarks
SAS SUPERSTRUCTURE					
CB-242D	**55 + 96**	**Bike Path Railing**	**Bike Path**	**RTU #10E**	**E-18, E-49**

NOTES:

1. Call boxes are State-furnished.
2. Call box installation by others. The Contractor shall pull and terminate cable inside installed call boxes.
3. Unless shown in bold, everything else is not part of this Contract.

DETAILS
CALL BOX SYSTEM
(CALL BOX SCHEDULES)
NO SCALE

E-52

THIS PLAN ACCURATE FOR ELECTRICAL WORK ONLY.

REVISED BY | DATE REVISED
REUBEN BUENVIAJE
J. HALIM, T. WU, W. BECK
CALCULATED-DESIGNED BY
CHECKED BY
CONSULTANT FUNCTIONAL SUPERVISOR
BOB ZANDIPOUR
STATE OF CALIFORNIA - DEPARTMENT OF TRANSPORTATION
Caltrans

LAST REVISION 02-16-12 | DATE PLOTTED => 25-FEB-2012 | TIME PLOTTED => 11:14

Dist	COUNTY	ROUTE	POST MILES TOTAL PROJECT	SHEET No.	TOTAL SHEETS
04	SF	80	12.6/13.9	281	821

REGISTERED ELECTRICAL ENGINEER 10/31/11

2-21-12
PLANS APPROVAL DATE

REGISTERED PROFESSIONAL ENGINEER PARVIZ BOOZARPOUR No. 12735 Exp. 9-30-12 ELECT STATE OF CALIFORNIA

THE STATE OF CALIFORNIA OR ITS OFFICERS OR AGENTS SHALL NOT BE RESPONSIBLE FOR THE ACCURACY OR COMPLETENESS OF ELECTRONIC COPIES OF THIS PLAN SHEET.

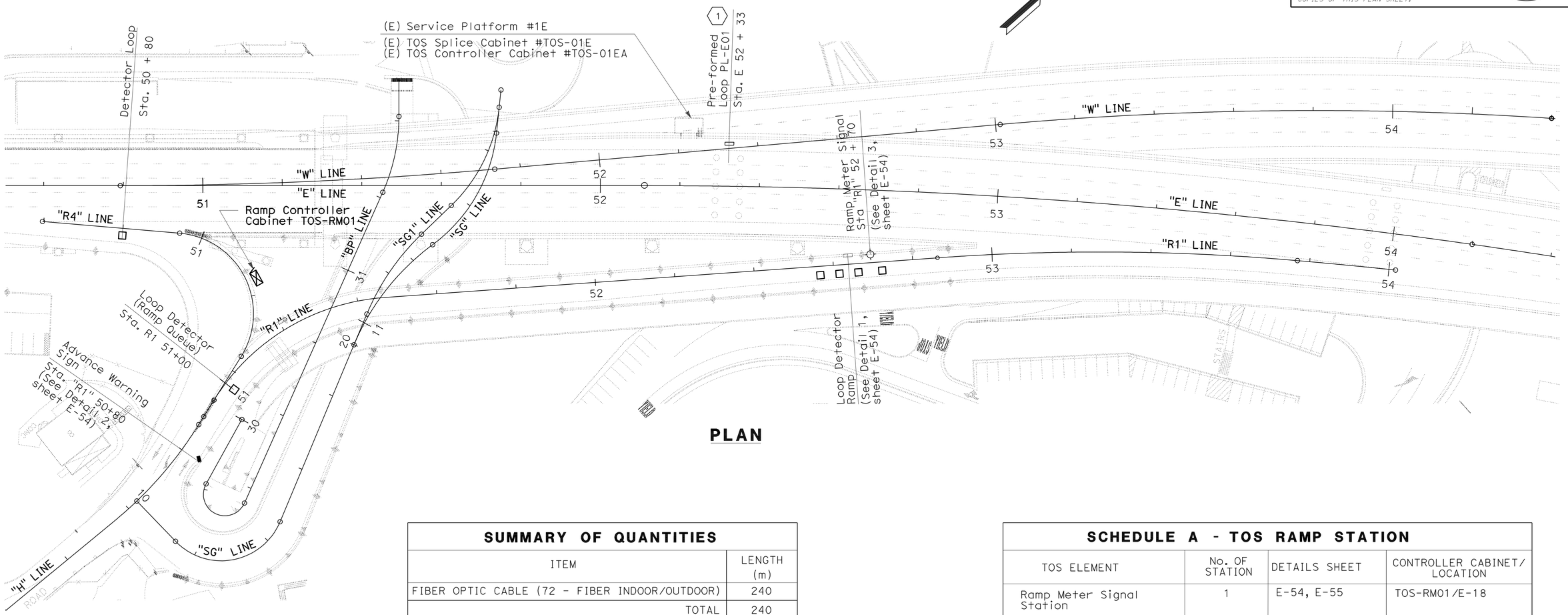

PLAN

SUMMARY OF QUANTITIES	
ITEM	LENGTH (m)
FIBER OPTIC CABLE (72 - FIBER INDOOR/OUTDOOR)	240
TOTAL	240

NOTES:

1. All fiber optic cable shall be terminated in fiber distribution unit (FDU). All fiber strands shall have an ST connector on FDU.
2. The FDU-E located on TOS-A04 inside the new Administration building shall have the termination capacity of 72 fibers. FDU in each TOS cabinet shall have the termination capacity of 12 fibers. Location of the new Administration building is not shown.
3. The Contractor shall supply same number of fiber patch cords matching the termination capacity of each FDU.
4. Cable slack at each fiber splice closure shall be 9 meters minimum. Cable slack in each TOS cabinet shall be 3 meters.
5. Each fiber cable sections shall be labeled per special specifications. In addition, each fiber link circuit number as shown on the plans shall be labeled at each end of fiber sections.
6. TOS installation includes cable installation from each TOS element to corresponding controller cabinet and all communications cable terminations inside controller cabinets. For controller cabinet locations for corresponding TOS elements, refer to detail sheets listed in Schedule A.
7. Fiber optic cables routed inside 41 mm conduit shall be provided with high density polyethylene (HDPE) 1-12.70 mm diameter smoothwall innerduct.

SHEET NOTES:

(1) Field device installed on previous contract (Field cables routed to TOS Controler Cabinet #TOS-01EA shall be be wired under this contract).

SCHEDULE A - TOS RAMP STATION			
TOS ELEMENT	No. OF STATION	DETAILS SHEET	CONTROLLER CABINET/ LOCATION
Ramp Meter Signal Station	1	E-54, E-55	TOS-RM01/E-18
Loop Ramp Detector Station (PL)	1	E-54, E-55	TOS-RM01/E-19
Loop Detector (Ramp Queue)	1	E-54, E-55	TOS-RM01/E-18
Advance Warning Signal Station	1	E-54, E-55	TOS-RM01/E-18
(E) Preformed Loop Detector Staion	1	-	TOS-01EA/E-27, E-28
Detector Loop Type A (Count Loop)	1	Caltrans Standard Plans ES-5B	TOS-RM01/E18

ALL DIMENSIONS ARE IN METERS UNLESS OTHERWISE SHOWN

TRAFFIC OPERATIONS SYSTEM (FIELD ELEMENT LOCATIONS)

SCALE 1:500

E-53

THIS PLAN ACCURATE FOR ELECTRICAL WORK ONLY.

STATE OF CALIFORNIA - DEPARTMENT OF TRANSPORTATION
Caltrans
ELECTRICAL
FUNCTIONAL SUPERVISOR: BEHZAD GOLEMOHAMMADI
CALCULATED-DESIGNED BY: PARVIZ BOOZARPOUR
CHECKED BY: ELLERY LUCAS
REVISED BY
DATE REVISED

RELATIVE BORDER SCALE IS IN MILLIMETERS 0 20 40 60 80

DGN FILE => 40120tua053.dgn
USERNAME => s121614

CU 04251
EA 0120T1

LAST REVISION 10-31-11
DATE PLOTTED => 01-MAR-2012
TIME PLOTTED => 10:33

Dist	COUNTY	ROUTE	POST MILES TOTAL PROJECT	SHEET No.	TOTAL SHEETS
04	SF	80	12.6/13.9	282	821

REGISTERED ELECTRICAL ENGINEER 10/31/11

2-21-12
PLANS APPROVAL DATE

REGISTERED PROFESSIONAL ENGINEER PARVIZ BOOZARPOUR No. 12735 Exp. 9-30-12 ELECT STATE OF CALIFORNIA

THE STATE OF CALIFORNIA OR ITS OFFICERS OR AGENTS SHALL NOT BE RESPONSIBLE FOR THE ACCURACY OR COMPLETENESS OF ELECTRONIC COPIES OF THIS PLAN SHEET.

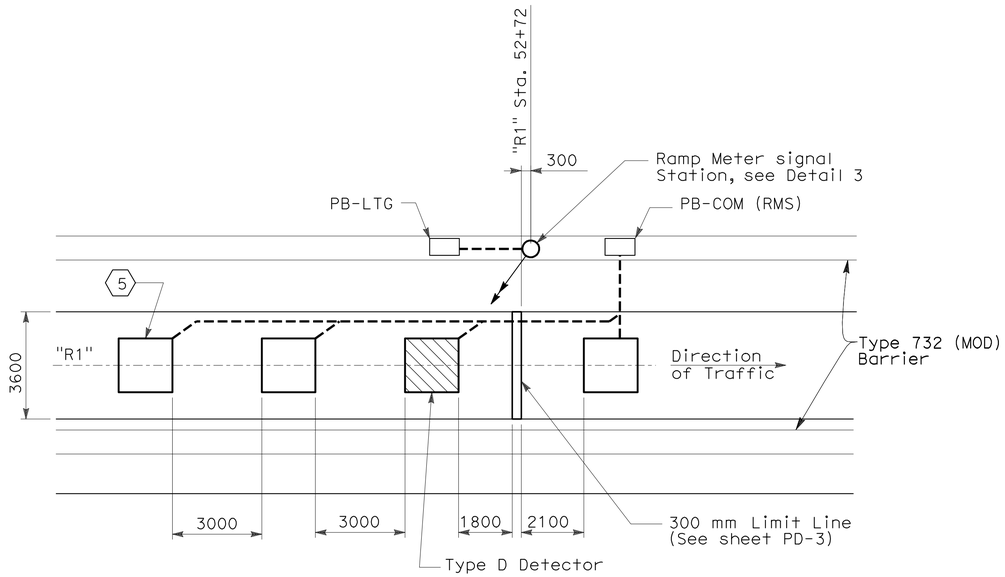

DETAIL 1
LOOP DETECTOR

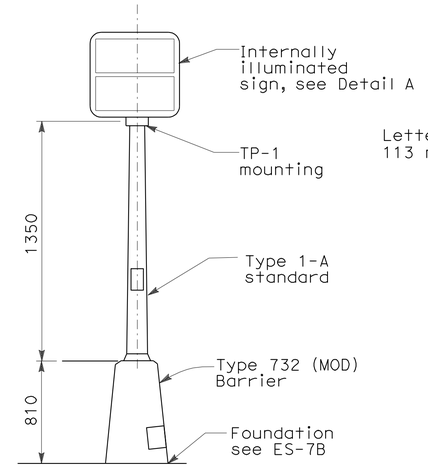

DETAIL 2
ADVANCE WARNING SIGN

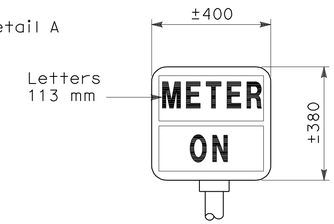

DETAIL A
(ES-4B)

NOTES:

1. For ramp meter location, see sheet E-53.

SHEET NOTES:

1. Type 1B signal standard.
2. 3-section, 300 mm signal head (red, yellow, green) 300 mm full circle visors. Use type TV-2-T bracket mounting.
3. 3-section, 200 mm signal head (red, yellow, green), 200 mm full circle visors. Use type SV-1-T bracket mounting on side of standard away from ramp traffic.
4. Backplate.
5. Center Detector Loops in lanes (typ).

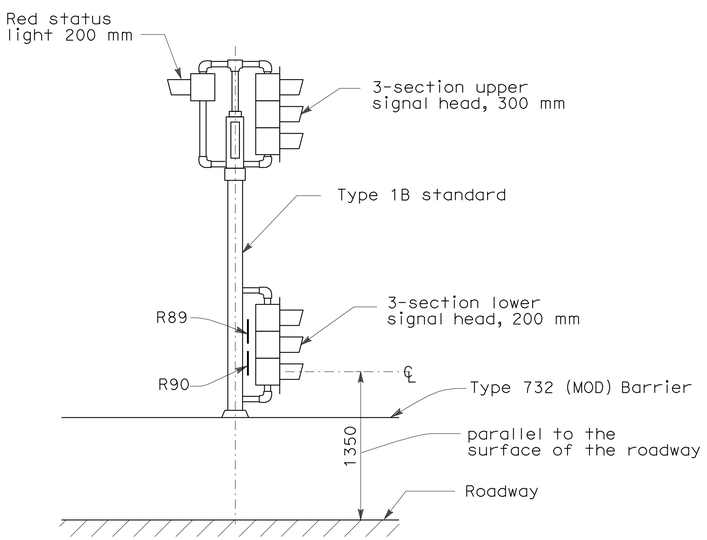

SIDE VIEW

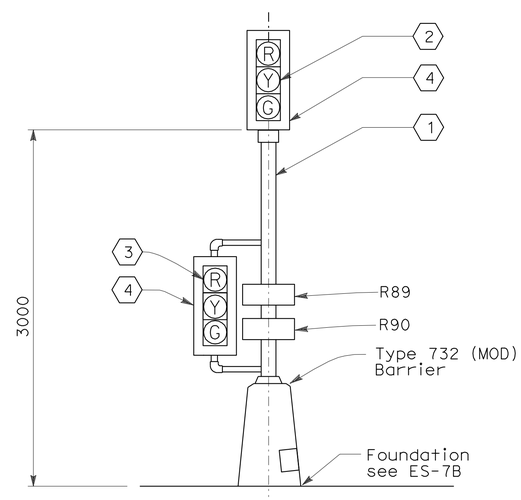

FRONT VIEW

DETAIL 3
RAMP METER SIGNAL

ALL DIMENSIONS ARE IN MILLIMETERS UNLESS OTHERWISE SHOWN

DETAILS
TRAFFIC OPERATIONS SYSTEM (RAMP METER SYSTEM INSTALLATION)

NO SCALE

E-54

THIS PLAN ACCURATE FOR ELECTRICAL WORK ONLY.

STATE OF CALIFORNIA - DEPARTMENT OF TRANSPORTATION
Caltrans
ELECTRICAL

FUNCTIONAL SUPERVISOR: BEHZAD GOLEMOHAMMADI
CALCULATED-DESIGNED BY: PARVIZ BOOZARPOUR
CHECKED BY: ELLERY LUCAS
REVISED BY / DATE REVISED

LAST REVISION 10-31-11
DATE PLOTTED => 25-FEB-2012
TIME PLOTTED => 11:14

RELATIVE BORDER SCALE IS IN MILLIMETERS 0 20 40 60 80
DGN FILE => 40120tua054.dgn
USERNAME => s119571
CU 04251
EA 0120T1

Dist	COUNTY	ROUTE	POST MILES TOTAL PROJECT	SHEET No.	TOTAL SHEETS
04	SF	80	12.6/13.9	283	821

REGISTERED ELECTRICAL ENGINEER 10/31/11

2-21-12
PLANS APPROVAL DATE

REGISTERED PROFESSIONAL ENGINEER PARVIZ BOOZARPOUR No. 12735 Exp. 9-30-12 ELECT STATE OF CALIFORNIA

THE STATE OF CALIFORNIA OR ITS OFFICERS OR AGENTS SHALL NOT BE RESPONSIBLE FOR THE ACCURACY OR COMPLETENESS OF ELECTRONIC COPIES OF THIS PLAN SHEET.

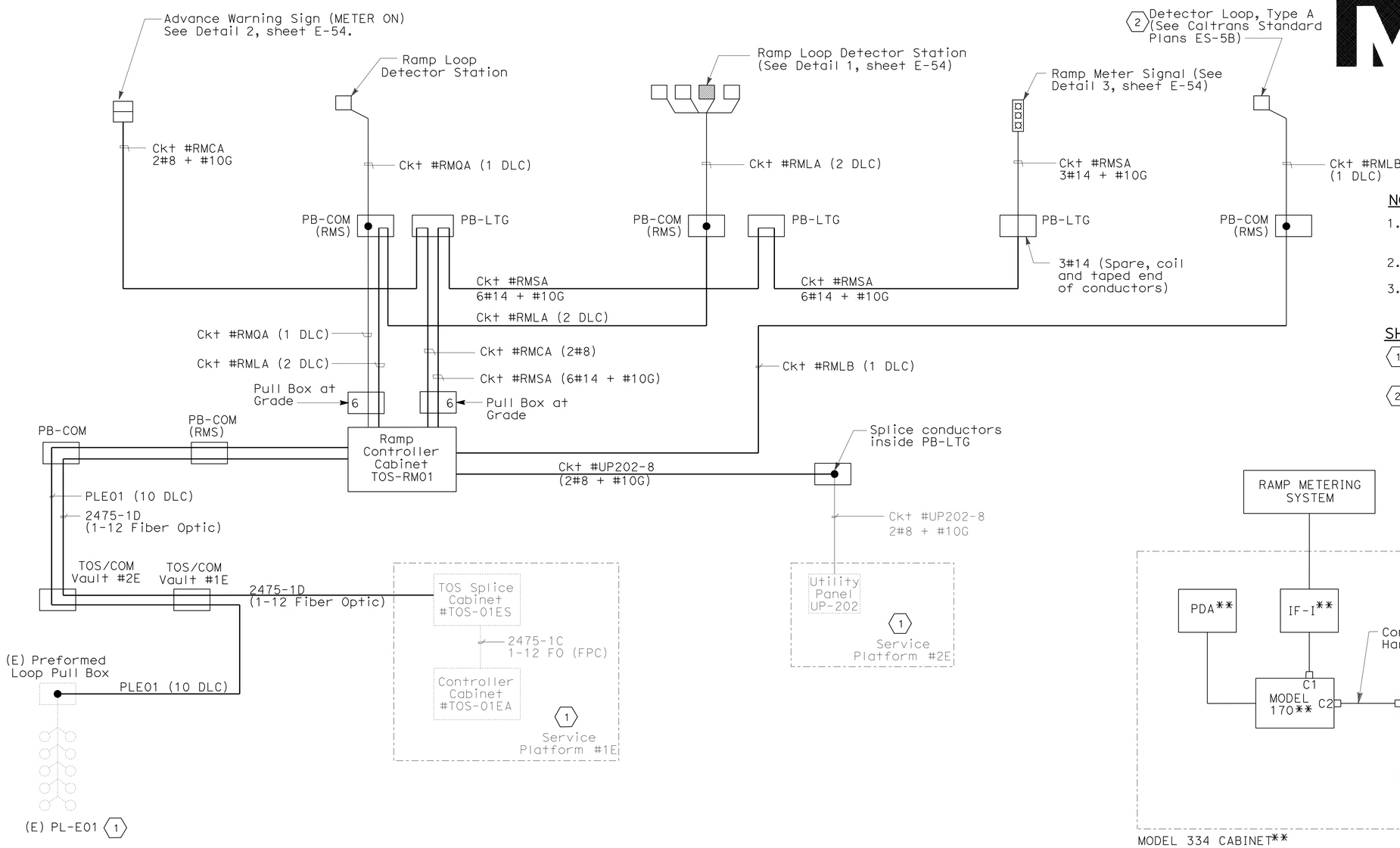

RAMP METERING SYSTEM BLOCK DIAGRAM

NOTES:

1. For fiber optic terminations for eastbound, see sheet E-57.
2. (**) State-furnished.
3. Unless shown in bold, everything else is shown was not part of this Contract.

SHEET NOTES:

(1) Installed on YBI-1, located on the Eastbound Bridge Structure.

(2) The Detector (Count) Loop is located on the Eastbound off ramp, sta. "R4" 50 + 80, see sheet E-14.

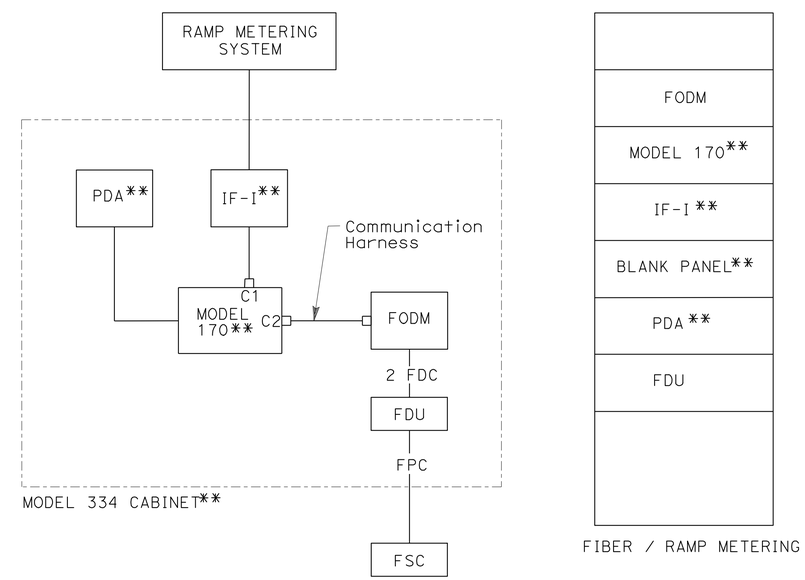

RAMP METERING SYSTEM CONTROLLER CONFIGURATION

DETAILS
TRAFFIC OPERATIONS SYSTEM (RAMP METER CONTROLLER CONFIGURATION AND SYSTEM BLOCK DIAGRAM)

NO SCALE

E-55

THIS PLAN ACCURATE FOR ELECTRICAL WORK ONLY.

RELATIVE BORDER SCALE IS IN MILLIMETERS 0 20 40 60 80

DGN FILE => 40120tua055.dgn
USERNAME => s121614

CU 04251 | EA 0120T1

LAST REVISION 10-31-11 | DATE PLOTTED => 27-FEB-2012 | TIME PLOTTED => 08:13

STATE OF CALIFORNIA - DEPARTMENT OF TRANSPORTATION
Caltrans
ELECTRICAL

FUNCTIONAL SUPERVISOR: BEHZAD GOLEMOHAMMADI
CALCULATED-DESIGNED BY: PARVIZ BOOZARPOUR
CHECKED BY: ELLERY LUCAS
REVISED BY
DATE REVISED

Dist	COUNTY	ROUTE	POST MILES TOTAL PROJECT	SHEET No.	TOTAL SHEETS
04	SF	80	12.6/13.9	284	821

REGISTERED ELECTRICAL ENGINEER 10/31/11

2-21-12
PLANS APPROVAL DATE

REGISTERED PROFESSIONAL ENGINEER M.P. Lee No. 13435 Exp. 9-30-12 ELECT STATE OF CALIFORNIA

THE STATE OF CALIFORNIA OR ITS OFFICERS OR AGENTS SHALL NOT BE RESPONSIBLE FOR THE ACCURACY OR COMPLETENESS OF ELECTRONIC COPIES OF THIS PLAN SHEET.

Caltrans Metric

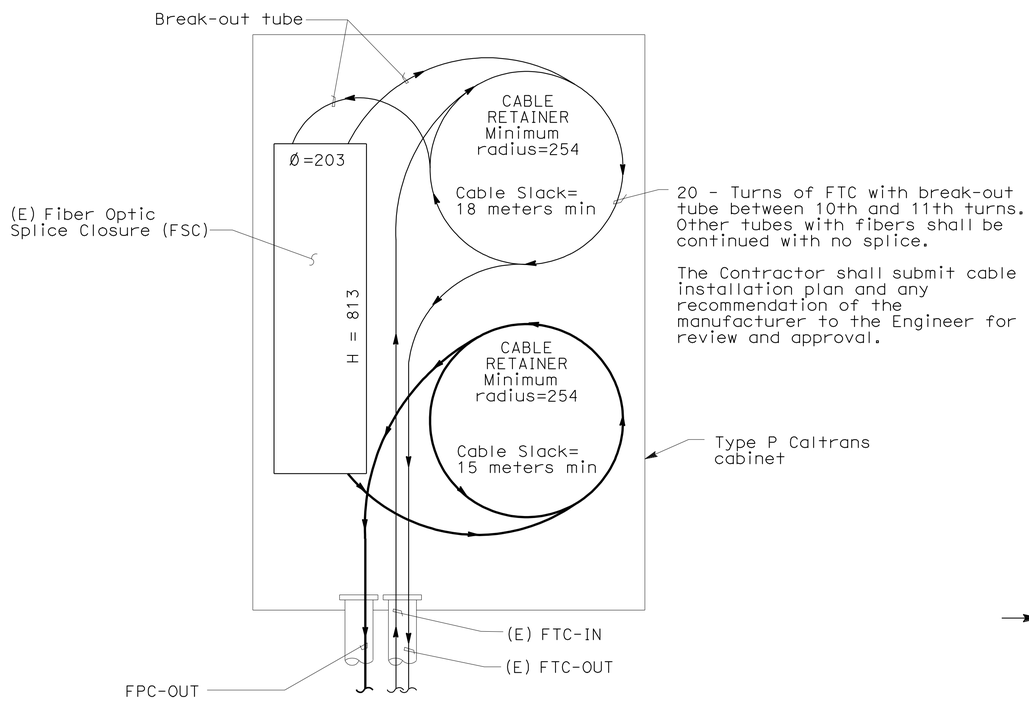

FIBER SPLICE INSIDE SPLICE TOS CABINET

(AT SERVICE PLATFORM)

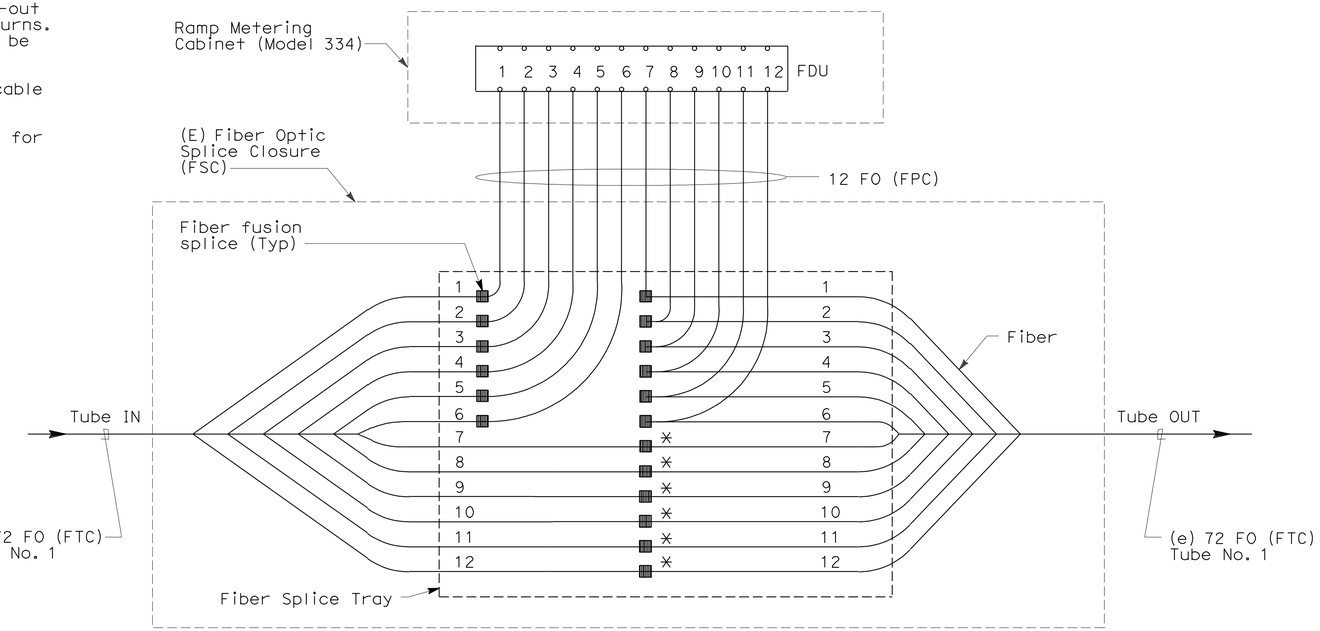

* THE CONTRACTOR MAY ELECT TO NOT CUT FIBER TO MINIMIZE SPLICES.

FIBER OPTIC SPLICE CLOSURE DETAIL (TYPICAL EACH TUBE)

DETAILS
TRAFFIC OPERATIONS SYSTEM (TYPICAL FIBER OPTIC SPLICE)

NO SCALE

FOR NOTES, ABBREVIATIONS AND LEGEND, SEE SHEETS E-2 AND E-4

THIS PLAN ACCURATE FOR ELECTRICAL WORK ONLY.

E-56

STATE OF CALIFORNIA - DEPARTMENT OF TRANSPORTATION
Caltrans ELECTRICAL

FUNCTIONAL SUPERVISOR: BEHZAD GOLEMOHAMMADI
CALCULATED-DESIGNED BY: MICHAEL P. LEE
CHECKED BY: ELLERY LUCAS
REVISED BY / DATE REVISED

RELATIVE BORDER SCALE IS IN MILLIMETERS 0 20 40 60 80

DGN FILE => 40120tua056.dgn
USERNAME => s121614

CU 04251 | EA 0120T1

LAST REVISION 00-00-00 | DATE PLOTTED => 27-FEB-2012 | TIME PLOTTED => 08:15

Dist	COUNTY	ROUTE	POST MILES TOTAL PROJECT	SHEET No.	TOTAL SHEETS
04	SF	80	12.6/13.9	285	821

REGISTERED ELECTRICAL ENGINEER 10/31/11

2-21-12
PLANS APPROVAL DATE

REGISTERED PROFESSIONAL ENGINEER M.P. Lee No. 13435 Exp. 9-30-12 ELECT STATE OF CALIFORNIA

THE STATE OF CALIFORNIA OR ITS OFFICERS OR AGENTS SHALL NOT BE RESPONSIBLE FOR THE ACCURACY OR COMPLETENESS OF ELECTRONIC COPIES OF THIS PLAN SHEET.

Caltrans Metric

		YBI-SUB TOS-Y04 (FDU)	01EA 01E E 52.16	RM01 01E R1 51.80	02EA 02E E 53.70	03EA 03E E 54.38	04EA 04E E 56.29	CCTV-E01A 06EA 06E E 58.10	07EA 07E E 59.54	09EA 09E E 63.08	10EA 10E E 64.62	11EA 11E E 66.15	12EA 12E E 67.75	13EA 13E E 69.36	CCTV-E02 13EB 13E E 69.36	15EA 15E E 72.55	16EA 16E E 74.16	17EA 17E E 75.75	18EA 18E E 77.36	CCTV-E04 20EA 20E E 80.24	21EA 21E E 81.43	CCTV-E03 22EA 22E E 83.75	23EA 23E E 85.24	SFOBB-HUB ADMIN BLDG TOS-A04 (FDU)	EQ ID cabinet ID FSC ID cabinet station
Tube 1	Fiber																								
	1	X	X X				X X				X X				X X				X X				X X	X	Circuit 1
	2	X	X X				X X				X X				X X				X X				X X	X	Circuit 1
	3	X	X X				X X				X X				X X				X X				X X	X	Circuit 2
	4	X	X X				X X				X X				X X				X X				X X	X	Circuit 2
	5	X	X X				X X				X X				X X				X X				X X	X	Circuit 3
	6	X	X X				X X				X X				X X				X X				X X	X	Circuit 3
	7	X													X X									X	SPARE
	8	X													X X									X	
	9	X													X X									X	
	10	X													X X									X	
	11	X													X X									X	
	12	X													X X									X	
Tube 2	13	X		X X				X X				X X				X X				X X				X	Circuit 4
	14	X		X X				X X				X X				X X				X X				X	Circuit 4
	15	X		X X				X X				X X				X X				X X				X	Circuit 5
	16	X		X X				X X				X X				X X				X X				X	Circuit 5
	17	X		X X				X X				X X				X X				X X				X	Circuit 6
	18	X		X X				X X				X X				X X				X X				X	Circuit 6
	19	X																						X	SPARE
	20	X																						X	
	21	X																						X	
	22	X																						X	
	23	X																						X	
	24	X																						X	
Tube 3	25	X			X X				X X				X X				X X				X X			X	Circuit 7
	26	X			X X				X X				X X				X X				X X			X	Circuit 7
	27	X			X X				X X				X X				X X				X X			X	Circuit 8
	28	X			X X				X X				X X				X X				X X			X	Circuit 8
	29	X			X X				X X				X X				X X				X X			X	Circuit 9
	30	X			X X				X X				X X				X X				X X			X	Circuit 9
	31	X																						X	SPARE
	32	X																						X	
	33	X																						X	
	34	X																						X	
	35	X																						X	
	36	X																						X	
Tube 4	37	X				X X				X X				X X				X X				X X		X	Circuit 10
	38	X				X X				X X				X X				X X				X X		X	Circuit 10
	39	X				X X				X X				X X				X X				X X		X	Circuit 11
	40	X				X X				X X				X X				X X				X X		X	Circuit 11
	41	X				X X				X X				X X				X X				X X		X	Circuit 12
	42	X				X X				X X				X X				X X				X X		X	Circuit 12
	43	X																						X	SPARE
	44	X																						X	
	45	X																						X	
	46	X																						X	
	47	X																						X	
	48	X																						X	
Tube 5	49~60	X																						X	SPARES (NOTE 1)
Tube 6	61~72	X																						X	SPARES (NOTE 1)

FIBER OPTIC TERMINATIONS - EASTBOUND

NOTES:

1. Spares. Terminate each fiber on FDU.
2. Drawing is for information only.
3. "X" means terminated fiber with connector.

FOR NOTES, ABBREVIATIONS AND LEGEND, SEE SHEETS E-2 AND E-4

THIS PLAN ACCURATE FOR ELECTRICAL WORK ONLY.

DETAILS
TRAFFIC OPERATIONS SYSTEM (FIBER OPTIC TERMINATIONS FOR EASTBOUND)

E-57

REVISED BY | DATE REVISED

MICHAEL P. LEE | ELLERY LUCAS

CALCULATED-DESIGNED BY | CHECKED BY

FUNCTIONAL SUPERVISOR: BEHZAD GOLEMOHAMMADI

STATE OF CALIFORNIA - DEPARTMENT OF TRANSPORTATION

Caltrans ELECTRICAL

LAST REVISION 00-00-00 | DATE PLOTTED => 25-FEB-2012 | TIME PLOTTED => 11:15

RELATIVE BORDER SCALE IS IN MILLIMETERS 0 20 40 60 80

DGN FILE => 40120tua057.dgn
USERNAME => s119571

CU 04251 | EA 0120T1

Dist	COUNTY	ROUTE	KILOMETER POST TOTAL PROJECT	SHEET No.	TOTAL SHEETS
04	SF	80	12.6/13.9	286	821

Syn Yee Chin 10/31/11
REGISTERED ELECTRICAL ENGINEER

2-21-12
PLANS APPROVAL DATE

REGISTERED PROFESSIONAL ENGINEER
SYN YEE CHIN
No. 18186
Exp. 09/30/2013
ELECTRICAL
STATE OF CALIFORNIA

THE STATE OF CALIFORNIA OR ITS OFFICERS OR AGENTS SHALL NOT BE RESPONSIBLE FOR THE ACCURACY OR COMPLETENESS OF ELECTRONIC COPIES OF THIS PLAN SHEET.

PB AMERICAS, Inc.
303 Second St., Suite 700N
San Francisco, CA 94107-1317

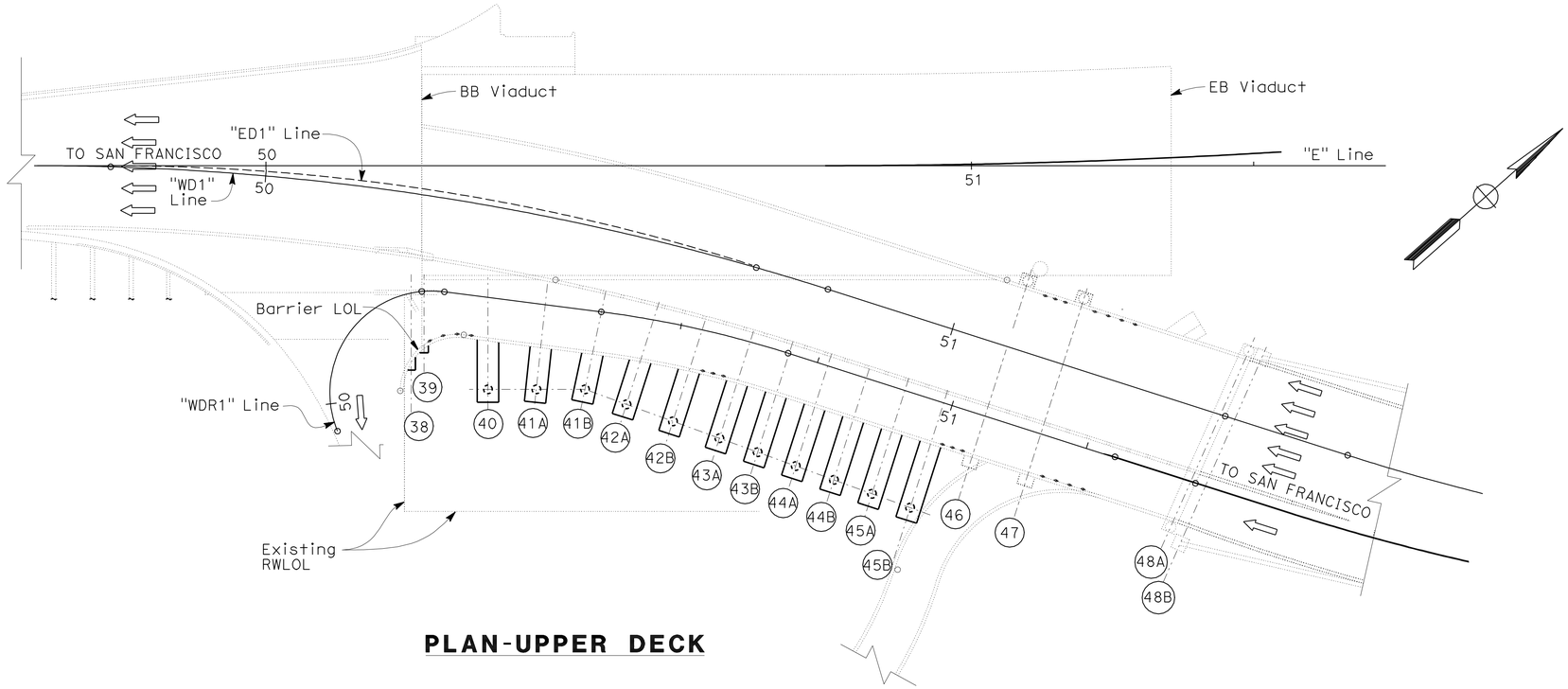

PLAN-UPPER DECK

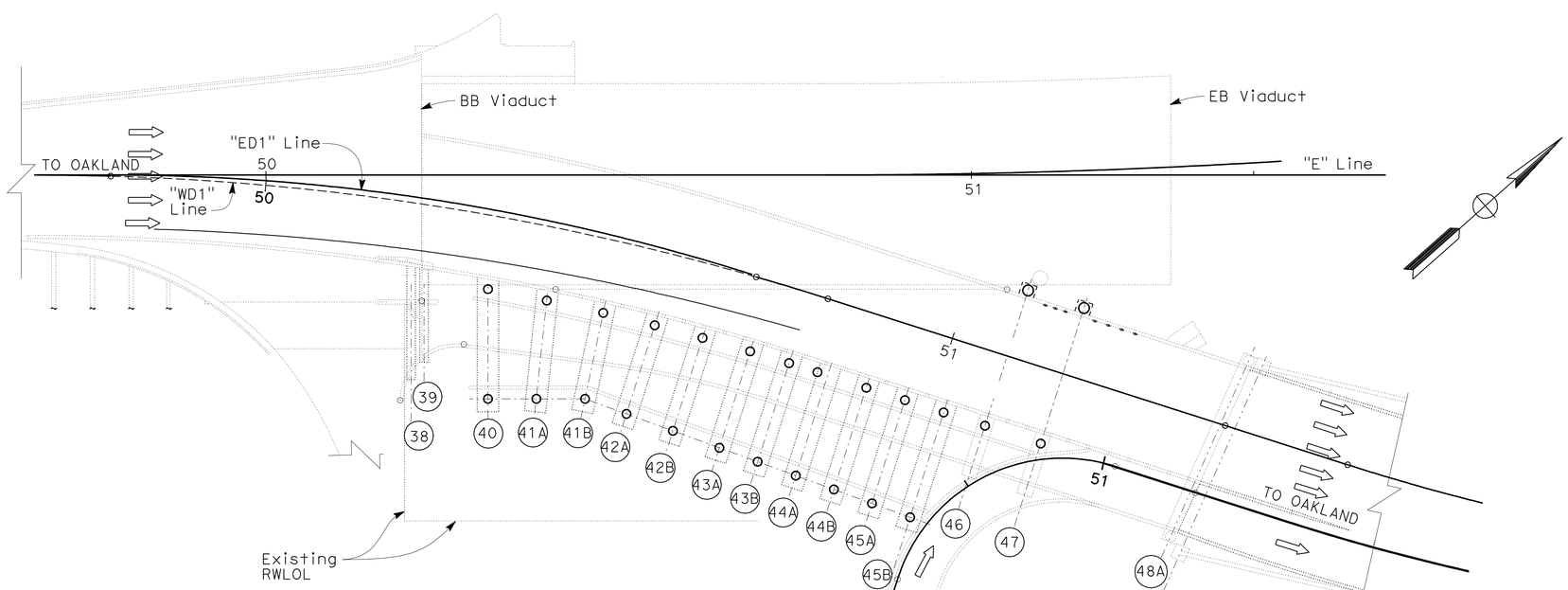

PLAN-LOWER DECK

NOTES:

1. The Contractor shall coordinate with Caltrans and verify that all power feeding the old bridge has been disconnected by others at various substations and switchgears prior to any work.
2. Remove and salvage the following devices that are not in use on the old bridge per Caltrans directions and return to Caltrans:

   Aircraft beacons
   Fog bells
   Decorative light fixtures
   Pier light fixtures
   Navigation LED light fixtures
   Seismographic devices

3. The Contractor shall safely remove and dispose of all remaining equipment, devices, and components per State, environmental regulations and Caltrans directions.
4. The Contractor shall be responsible for loading, delivery, unloading of all removed and salvaged items to Caltrans designated location per Caltrans instructions.

ALL DIMENSIONS ARE IN METERS UNLESS OTHERWISE SHOWN

REMOVING AND SALVAGING ELECTRICAL DEVICES
WEST TIE-IN DEMOLITION
(BENT 38 TO BENT 48)

SCALE 1:400

THIS PLAN ACCURATE FOR ELECTRICAL WORK ONLY.

E-58

REVISED BY	DATE REVISED

SYN YEE CHIN — CALCULATED-DESIGNED BY
BRADY NADELL — CHECKED BY
BOB ZANDIPOUR — CONSULTANT FUNCTIONAL SUPERVISOR

STATE OF CALIFORNIA - DEPARTMENT OF TRANSPORTATION
Caltrans

LAST REVISION 00-00-00
DATE PLOTTED => 27-FEB-2012
TIME PLOTTED => 08:20

Dist	COUNTY	ROUTE	KILOMETER POST TOTAL PROJECT	SHEET No.	TOTAL SHEETS
04	SF	80	12.6/13.9	287	821

Caltrans Metric

Syn Yee Chin 10/31/11
REGISTERED ELECTRICAL ENGINEER

2-21-12
PLANS APPROVAL DATE

REGISTERED PROFESSIONAL ENGINEER
SYN YEE CHIN
No. 18186
Exp. 09/30/2013
ELECTRICAL
STATE OF CALIFORNIA

THE STATE OF CALIFORNIA OR ITS OFFICERS OR AGENTS SHALL NOT BE RESPONSIBLE FOR THE ACCURACY OR COMPLETENESS OF ELECTRONIC COPIES OF THIS PLAN SHEET.

PB AMERICAS, Inc.
303 Second St., Suite 700N
San Francisco, CA 94107-1317

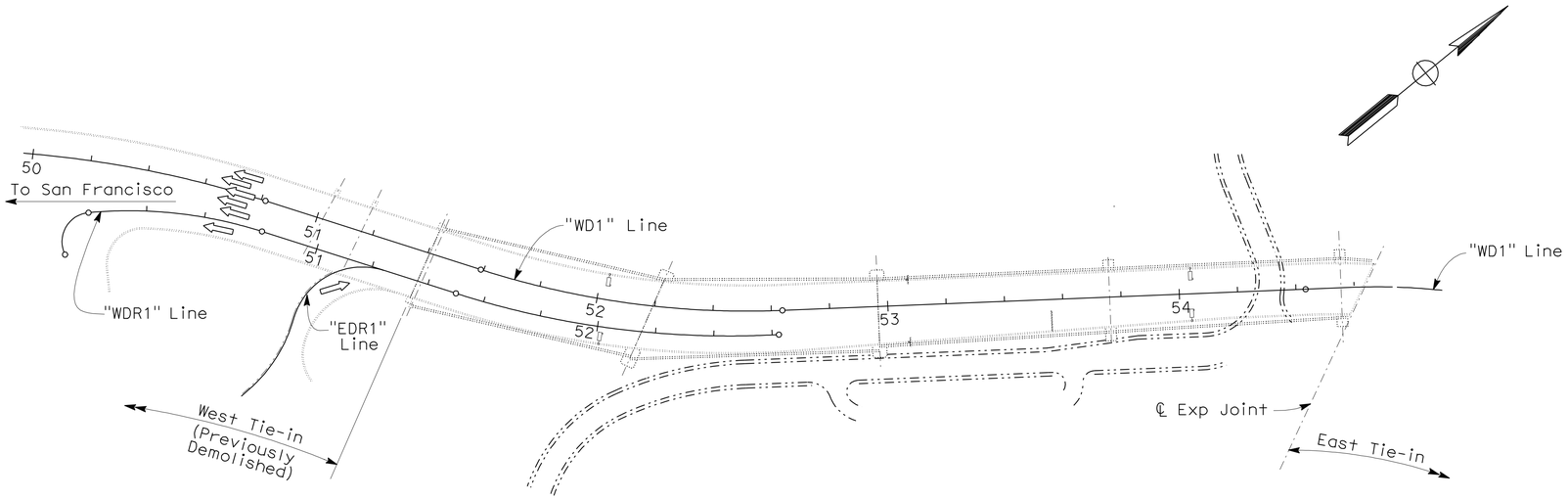

PLAN-UPPER DECK

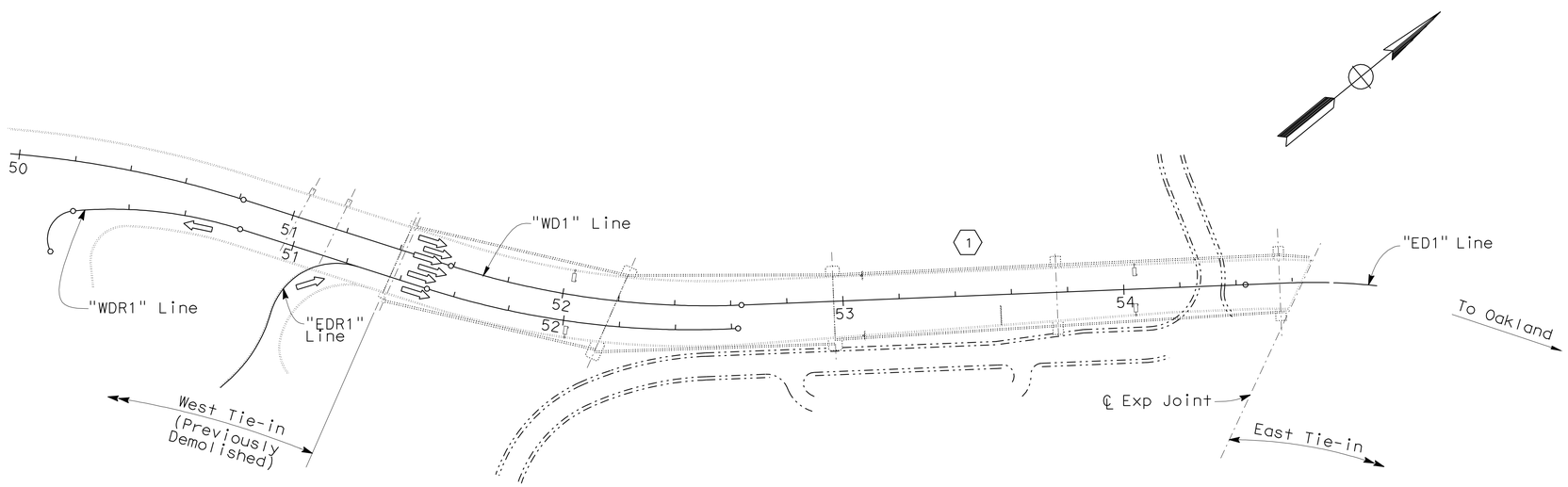

PLAN-LOWER DECK

SHEET NOTES:

(1) Remove and salvage construction camera(s) and return to Caltrans.

NOTES:

1. The Contractor shall coordinate with Caltrans and verify that all power feeding the old bridge has been disconnected by others at various substations and switchgears prior to any work.
2. Remove and salvage the following devices that are not in use on the old bridge per Caltrans directions and return to Caltrans:

   Aircraft beacons
   Fog bells
   Decorative light fixtures
   Pier light fixtures
   Navigation LED light fixtures
   Seismographic devices

3. The Contractor shall safely remove and dispose of all remaining equipment, devices, and components per State, environmental regulations and Caltrans directions.
4. The Contractor shall be responsible for loading, delivery, unloading of all removed and salvaged items to Caltrans designated location per Caltrans instructions.

ALL DIMENSIONS ARE IN METERS UNLESS OTHERWISE SHOWN

REMOVING AND SALVAGING ELECTRICAL DEVICES
SOUTH-SOUTH DETOUR VIADUCT DEMOLITION
(BENT 48 TO BENT 52)

SCALE 1:1000

E-59

THIS PLAN ACCURATE FOR ELECTRICAL WORK ONLY.

REVISED BY	DATE REVISED

CALCULATED-DESIGNED BY: SYN YEE CHIN
CHECKED BY: BRADY NADELL
CONSULTANT FUNCTIONAL SUPERVISOR: BOB ZANDIPOUR

STATE OF CALIFORNIA - DEPARTMENT OF TRANSPORTATION
Caltrans

LAST REVISION 00-00-00
DATE PLOTTED => 28-FEB-2012
TIME PLOTTED => 09:41

Dist	COUNTY	ROUTE	KILOMETER POST TOTAL PROJECT	SHEET No.	TOTAL SHEETS
04	SF	80	12.6/13.9	288	821

Syn Yee Chin 10/31/11
REGISTERED ELECTRICAL ENGINEER

2-21-12
PLANS APPROVAL DATE

REGISTERED PROFESSIONAL ENGINEER
SYN YEE CHIN
No. 18186
Exp. 09/30/2013
ELECTRICAL
STATE OF CALIFORNIA

THE STATE OF CALIFORNIA OR ITS OFFICERS OR AGENTS SHALL NOT BE RESPONSIBLE FOR THE ACCURACY OR COMPLETENESS OF ELECTRONIC COPIES OF THIS PLAN SHEET.

PB AMERICAS, Inc.
303 Second St., Suite 700N
San Francisco, CA 94107-1317

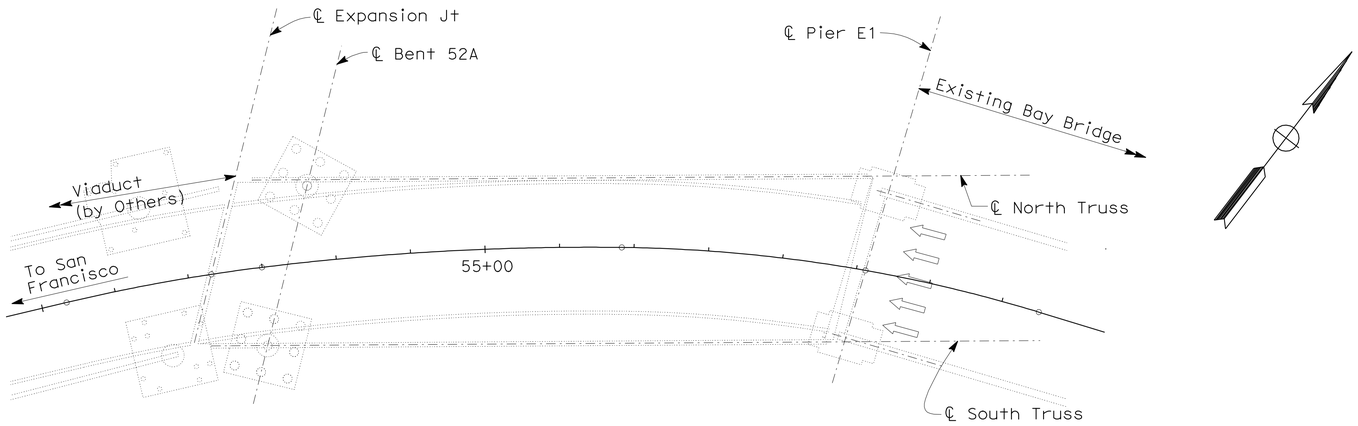

PLAN-UPPER DECK

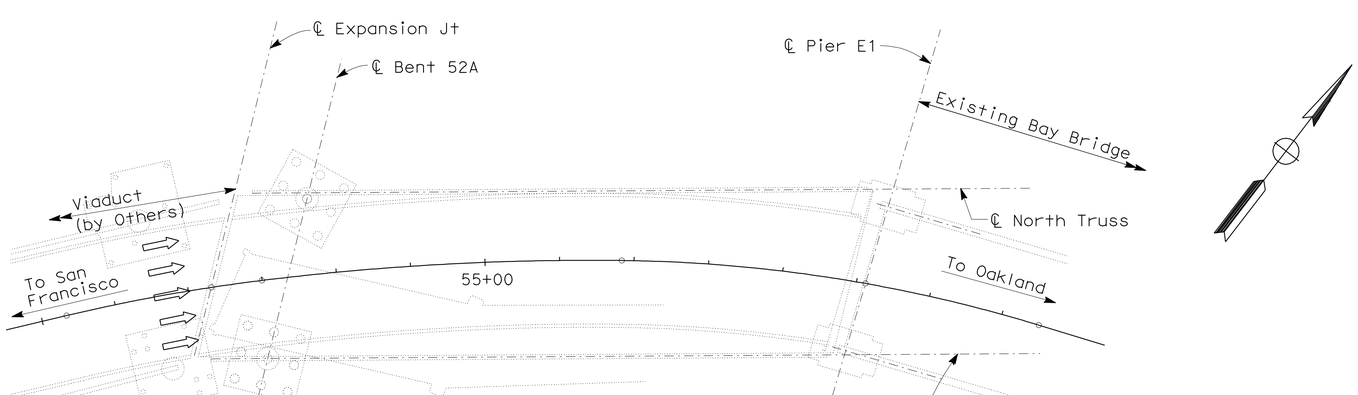

PLAN-LOWER DECK

NOTES:

1. The Contractor shall coordinate with Caltrans and verify that all power feeding the old bridge has been disconnected by others at various substations and switchgears prior to any work.

2. Remove and salvage the following devices that are not in use on the old bridge per Caltrans directions and return to Caltrans:

   Aircraft beacons
   Fog bells
   Decorative light fixtures
   Pier light fixtures
   Navigation LED light fixtures
   Seismographic devices

3. The Contractor shall safely remove and dispose of all remaining equipment, devices, and components per State, environmental regulations and Caltrans directions.

4. The Contractor shall be responsible for loading, delivery, unloading of all removed and salvaged items to Caltrans designated location per Caltrans instructions.

ALL DIMENSIONS ARE IN
METERS UNLESS OTHERWISE SHOWN

REMOVING AND SALVAGING ELECTRICAL DEVICES
EAST TIE-IN DEMOLITION
(BENT 52 TO PIER E1)

SCALE 1:400

E-60

THIS PLAN ACCURATE FOR ELECTRICAL WORK ONLY.

REVISED BY	DATE REVISED

SYN YEE CHIN — CALCULATED-DESIGNED BY
BRADY NADELL — CHECKED BY
BOB ZANDIPOUR — CONSULTANT FUNCTIONAL SUPERVISOR

STATE OF CALIFORNIA - DEPARTMENT OF TRANSPORTATION
Caltrans

LAST REVISION 00-00-00 | DATE PLOTTED => 28-FEB-2012 | TIME PLOTTED => 09:42

Dist	COUNTY	ROUTE	KILOMETER POST TOTAL PROJECT	SHEET No.	TOTAL SHEETS
04	SF	80	12.6/13.9	289	821

Syn Yee Chin 10/31/11
REGISTERED ELECTRICAL ENGINEER

2-21-12
PLANS APPROVAL DATE

REGISTERED PROFESSIONAL ENGINEER
SYN YEE CHIN
No. 18186
Exp. 09/30/2013
ELECTRICAL
STATE OF CALIFORNIA

THE STATE OF CALIFORNIA OR ITS OFFICERS OR AGENTS SHALL NOT BE RESPONSIBLE FOR THE ACCURACY OR COMPLETENESS OF ELECTRONIC COPIES OF THIS PLAN SHEET.

PB AMERICAS, Inc.
303 Second St., Suite 700N
San Francisco, CA 94107-1317

Caltrans Metric

SHEET NOTES:

1. Remove and salvage fog detector(s) and return to Caltrans.
2. Remove and salvage fog horn(s) and return to Caltrans.
3. Remove and salvage construction camera(s) in this area and return to Caltrans.

PLAN-UPPER DECK

PLAN-LOWER DECK

NOTES:

1. The Contractor shall coordinate with Caltrans and verify that all power feeding the old bridge has been disconnected by others at various substations and switchgears prior to any work.
2. Remove and salvage the following devices that are not in use on the old bridge per Caltrans directions and return to Caltrans:

   Aircraft beacons
   Fog bells
   Decorative light fixtures
   Pier light fixtures
   Navigation LED light fixtures
   Seismographic devices
   Overhead changeable message sign panels

3. The Contractor shall safely remove and dispose of all remaining equipment, devices, and components per State, environmental regulations and Caltrans directions in the area shown.
4. The Contractor shall be responsible for loading, delivery, unloading of all removed and salvaged items to Caltrans designated location per Caltrans instructions.

ALL DIMENSIONS ARE IN METERS UNLESS OTHERWISE SHOWN

REMOVING AND SALVAGING ELECTRICAL DEVICES
CANTILEVER DEMOLITION
(PIER E1 TO PIER E4)

SCALE 1:1200

E-61

THIS PLAN ACCURATE FOR ELECTRICAL WORK ONLY.

REVISED BY	SYN YEE CHIN
DATE REVISED	BRADY NADELL
CALCULATED-DESIGNED BY	
CHECKED BY	
CONSULTANT FUNCTIONAL SUPERVISOR	BOB ZANDIPOUR

STATE OF CALIFORNIA - DEPARTMENT OF TRANSPORTATION
Caltrans

LAST REVISION 00-00-00 | DATE PLOTTED => 28-FEB-2012 | TIME PLOTTED => 09:42

Dist	COUNTY	ROUTE	KILOMETER POST TOTAL PROJECT	SHEET No.	TOTAL SHEETS
04	SF	80	12.6/13.9	290	821

Caltrans Metric

Syn Yee Chin 10/31/11
REGISTERED ELECTRICAL ENGINEER

2-21-12
PLANS APPROVAL DATE

REGISTERED PROFESSIONAL ENGINEER SYN YEE CHIN No. 18186 Exp. 09/30/2013 ELECTRICAL STATE OF CALIFORNIA

THE STATE OF CALIFORNIA OR ITS OFFICERS OR AGENTS SHALL NOT BE RESPONSIBLE FOR THE ACCURACY OR COMPLETENESS OF ELECTRONIC COPIES OF THIS PLAN SHEET.

PB AMERICAS, Inc.
303 Second St., Suite 700N
San Francisco, CA 94107-1317

Cable/Ckt #: 1138 **Reference:** E-50
Function: Low Level Signal **Conductor Type:** 1 - 2 pair, shielded #18 with IS/OA, 600 V, PVC jacket
From: (E) Call Box CB-139B **To:** Call Box CB-138B
Remarks:
Description Of Changes:

Route	Conduit No.	Route	Conduit No.	Route	Conduit No.	Route	Conduit No.
1	FIELD	2	1515	3	1500	4	1501
5	FIELD						

Cable/Ckt #: 2140 **Reference:** E-51
Function: Low Level Signal **Conductor Type:** 1 - 2 pair, shielded #18 with IS/OA, 600 V, PVC jacket
From: (E) Call Box CB-239A **To:** Call Box CB-238A
Remarks:
Description Of Changes:

Route	Conduit No.	Route	Conduit No.	Route	Conduit No.	Route	Conduit No.
1	FIELD	2	7102	3	7103	4	7111
5	FIELD						

Cable/Ckt #: 2155 **Reference:** E-51
Function: Low Level Signal **Conductor Type:** 1 - 2 pair, shielded #18 with IS/OA, 600 V, PVC jacket
From: (E) 2T43 **To:** Call Box CB-242D
Remarks: Cable is existing and coiled in TOS/COM cable tray, 2T43. The Contractor shall pull and terminate cable into CB-242D.
Description Of Changes:

Route	Conduit No.	Route	Conduit No.	Route	Conduit No.	Route	Conduit No.
1	FIELD	2	5309	3	2511	4	FIELD

Cable/Ckt #: 2167 **Reference:** E-51
Function: Low Level Signal **Conductor Type:** 1 - 2 pair, shielded #18 with IS/OA, 600 V, PVC jacket
From: Call Box CB-239C **To:** Call Box CB-238C
Remarks:
Description Of Changes:

Route	Conduit No.	Route	Conduit No.	Route	Conduit No.	Route	Conduit No.
1	FIELD	2	2641	3	2642	4	2643
5	2644	6	2645	7	2646	8	2647
9	2648	10	FIELD				

Cable/Ckt #: 2168 **Reference:** E-51
Function: Low Level Signal **Conductor Type:** 1 - 2 pair, shielded #18 with IS/OA, 600 V, PVC
From: (E) Call Box CB-239B **To:** Call Box CB-238B
Remarks:
Description Of

Route	Conduit No.	Route	Conduit No.	Route	Conduit No.	Route	Conduit No.
1	FIELD	2	2363	3	7100	4	7101
5	7106	6	FIELD				

Cable/Ckt #: 2169 **Reference:** E-51
Function: Low Level Signal **Conductor Type:** 1 - 2 pair, shielded #18 with IS/OA, 600 V, PVC
From: (E) Call Box CB-240B **To:** Call Box CB-239C
Remarks:
Description Of

Route	Conduit No.	Route	Conduit No.	Route	Conduit No.	Route	Conduit No.
1	FIELD	2	2604	3	2603	4	2602
5	2639	6	2640	7	FIELD		

Cable/Ckt #: 2475-1D **Reference:** E-55
Function: TOS Data Com **Conductor Type:** 12 Fiber, single mode fiber optic cable
From: Splice Cabinet #TOS-01ES **To:** Ramp Controller Cabinet #TOS-RM01
Remarks:
Description Of

Route	Conduit No.	Route	Conduit No.	Route	Conduit No.	Route	Conduit No.
1	5906A	2	TC Vault #1E	3	2T41E	4	5924
5	PB-2E	6	5924A	7	TC Vault #2E	8	5939
9	2603	10	2602	11	2639	12	2640
13	2641	14	2659	15	2650	16	2651
17	2652	18	2653	19	2654	20	2655
21	2657	22	2558	23	2561	24	FIELD

CABLE AND CIRCUIT SCHEDULE

E-62

THIS PLAN ACCURATE FOR ELECTRICAL WORK ONLY.

REVISED BY	DATE REVISED
R. BUENVIAJE/J. HALIM	DAVID OTO/THOMAS WU

CALCULATED-DESIGNED BY / CHECKED BY

CONSULTANT FUNCTIONAL SUPERVISOR: BOB ZANDIPOUR

STATE OF CALIFORNIA - DEPARTMENT OF TRANSPORTATION
Caltrans

LAST REVISION 00-00-00 | DATE PLOTTED => 25-FEB-2012 | TIME PLOTTED => 11:15

Dist	COUNTY	ROUTE	KILOMETER POST TOTAL PROJECT	SHEET No.	TOTAL SHEETS
04	SF	80	12.6/13.9	291	821

Caltrans Metric

Syn Yee Chin 10/31/11
REGISTERED ELECTRICAL ENGINEER

2-21-12
PLANS APPROVAL DATE

REGISTERED PROFESSIONAL ENGINEER SYN YEE CHIN No. 18186 Exp. 09/30/2013 ELECTRICAL STATE OF CALIFORNIA

THE STATE OF CALIFORNIA OR ITS OFFICERS OR AGENTS SHALL NOT BE RESPONSIBLE FOR THE ACCURACY OR COMPLETENESS OF ELECTRONIC COPIES OF THIS PLAN SHEET.

PB AMERICAS, Inc.
303 Second St., Suite 700N
San Francisco, CA 94107-1317

Cable/Ckt #: A-2009-2 **Reference:** E-42
Function: 480 V Light Pipe **Conductor Type:** 3 + 1 Gnd, #8, #10, 600 V, RHH/RHW insulation
From: PB-LTG **To:** PB-LTG
Remarks:
Description Of Changes:

Route	Conduit No.	Route	Conduit No.	Route	Conduit No.	Route	Conduit No.
1	2834	2	2833	3	7208	4	2832
5	2831	6	2830	7	2829	8	2828
9	2827	10	2712	11	2713	12	2714
13	2715	14	2716	15	2717	16	2718
17	2719	18	2720	19	2721	20	2722

Cable/Ckt #: A-2010-2 **Reference:** E-42
Function: 480 V Light Pipe **Conductor Type:** 3 + 1 Gnd, #8, #10, 600 V, RHH/RHW insulation
From: PB-LTG **To:** PB-LTG
Remarks:
Description Of Changes:

Route	Conduit No.	Route	Conduit No.	Route	Conduit No.	Route	Conduit No.
1	2834	2	2833	3	7208	4	2832
5	2831	6	2830	7	2829	8	2828
9	2827	10	2712	11	2713	12	2714
13	2715	14	2716	15	2717	16	2718
17	2719	18	2720	19	2721	20	2722
21	2723	22	2724	23	2725	24	2762
25	2763	26	2764	27	2765	28	2766
29	2767	30	2768	31	2792	32	2793
33	2794	34	2795				

Cable/Ckt #: LP217-1 **Reference:** E-43
Function: 120 V Bike Path Lighting **Conductor Type:** 2 + 1 Gnd, #12, #12, 600 V, RHH/RHW insulation
From: PB-1C **To:** Bike Path Light
Remarks:
Description Of Changes:

Route	Conduit No.	Route	Conduit No.	Route	Conduit No.	Route	Conduit No.
1	FIELD						

Cable/Ckt #: LP217-1,3,5A **Reference:** E-15, E-16, E-43
Function: 120 V Bike Path Lighting **Conductor Type:** 4 + 1 Gnd, #8, #10, 600 V, RHH/RHW insulation
From: PB-LTG **To:** PB-1C
Remarks: Splice to existing circuit, LP217-1,3,5 , in PB-LTG at contract split point.
Description Of Changes:

Route	Conduit No.	Route	Conduit No.	Route	Conduit No.	Route	Conduit No.
1	FIELD						

Cable/Ckt #: LP217-2 **Reference:** E-43
Function: 120 V Bike Path Lighting **Conductor Type:** 2 + 1 Gnd, #12, #12, 600 V, RHH/RHW insulation
From: PB-1C **To:** Bike Path Light
Remarks:
Description Of Changes:

Route	Conduit No.	Route	Conduit No.	Route	Conduit No.	Route	Conduit No.
1	FIELD						

Cable/Ckt #: LP217-2,4,6A **Reference:** E-14, E-15, E-43
Function: 120 V Bike Path Lighting **Conductor Type:** 4 + 1 Gnd, #8, #10, 600 V, RHH/RHW insulation
From: PB-LTG **To:** PB-1C
Remarks: Splice to existing circuit, LP217-2,4,6 , in PB-LTG at contract split point.
Description Of Changes:

Route	Conduit No.	Route	Conduit No.	Route	Conduit No.	Route	Conduit No.
1	FIELD						

Cable/Ckt #: LP217-3 **Reference:** E-43
Function: 120 V Bike Path Lighting **Conductor Type:** 2 + 1 Gnd, #12, #12, 600 V, RHH/RHW insulation
From: PB-1C **To:** Bike Path Light
Remarks:
Description Of Changes:

Route	Conduit No.	Route	Conduit No.	Route	Conduit No.	Route	Conduit No.
1	FIELD						

CABLE AND CIRCUIT SCHEDULE

E-63

THIS PLAN ACCURATE FOR ELECTRICAL WORK ONLY.

STATE OF CALIFORNIA - DEPARTMENT OF TRANSPORTATION
Caltrans
CONSULTANT FUNCTIONAL SUPERVISOR: BOB ZANDIPOUR
CALCULATED-DESIGNED BY: R. BUENVIAJE/J. HALIM
CHECKED BY: DAVID OTO/THOMAS WU
REVISED BY
DATE REVISED

LAST REVISION 00-00-00 | DATE PLOTTED => 25-FEB-2012 | TIME PLOTTED => 11:15

Dist	COUNTY	ROUTE	KILOMETER POST TOTAL PROJECT	SHEET No.	TOTAL SHEETS
04	SF	80	12.6/13.9	292	821

Caltrans Metric

Syn Yee Chin 10/31/11
REGISTERED ELECTRICAL ENGINEER

2-21-12
PLANS APPROVAL DATE

REGISTERED PROFESSIONAL ENGINEER SYN YEE CHIN No. 18186 Exp. 09/30/2013 ELECTRICAL STATE OF CALIFORNIA

THE STATE OF CALIFORNIA OR ITS OFFICERS OR AGENTS SHALL NOT BE RESPONSIBLE FOR THE ACCURACY OR COMPLETENESS OF ELECTRONIC COPIES OF THIS PLAN SHEET.

PB AMERICAS, Inc.
303 Second St., Suite 700N
San Francisco, CA 94107-1317

Cable/Ckt #:	LP217-4	Reference:	E-43
Function:	120 V Bike Path Lighting	Conductor Type:	2 + 1 Gnd, #12, #12, 600 V, RHH/RHW insulation
From:	PB-1C	To:	Bike Path Light
Remarks:			
Description Of Changes:			

Route	Conduit No.	Route	Conduit No.	Route	Conduit No.	Route	Conduit No.
1	FIELD						

Cable/Ckt #:	LP217-5	Reference:	E-43
Function:	120 V Bike Path Lighting	Conductor Type:	2 + 1 Gnd, #12, #12, 600 V, RHH/RHW insulation
From:	PB-1C	To:	Bike Path Light
Remarks:			
Description Of Changes:			

Route	Conduit No.	Route	Conduit No.	Route	Conduit No.	Route	Conduit No.
1	FIELD						

Cable/Ckt #:	LP217-6	Reference:	E-43
Function:	120 V Bike Path Lighting	Conductor Type:	2 + 1 Gnd, #12, #12, 600 V, RHH/RHW insulation
From:	PB-1C	To:	Bike Path Light
Remarks:			
Description Of Changes:			

Route	Conduit No.	Route	Conduit No.	Route	Conduit No.	Route	Conduit No.
1	FIELD						

Cable/Ckt #:	LP218-1	Reference:	E-44
Function:	120 V Bike Path Lighting	Conductor Type:	2 + 1 Gnd, #12, #12, 600 V, RHH/RHW insulation
From:	PB-1C	To:	Bike Path Light
Remarks:			
Description Of Changes:			

Route	Conduit No.	Route	Conduit No.	Route	Conduit No.	Route	Conduit No.
1	FIELD						

Cable/Ckt #:	LP218-1,3,5A	Reference:	E-16, E-44
Function:	120 V Bike Path Lighting	Conductor Type:	4 + 1 Gnd, #8, #10, 600 V, RHH/RHW insulation
From:	PB-LTG	To:	PB-1C
Remarks:	Splice to existing circuit, LP218-1,3,5 , in PB-LTG at contract split point.		
Description Of Changes:			

Route	Conduit No.	Route	Conduit No.	Route	Conduit No.	Route	Conduit No.
1	FIELD						

Cable/Ckt #:	LP218-2	Reference:	E-44
Function:	120 V Bike Path Lighting	Conductor Type:	2 + 1 Gnd, #12, #12, 600 V, RHH/RHW insulation
From:	PB-1C	To:	Bike Path Light
Remarks:			
Description Of Changes:			

Route	Conduit No.	Route	Conduit No.	Route	Conduit No.	Route	Conduit No.
1	FIELD						

Cable/Ckt #:	LP218-2,4,6A	Reference:	E-17, E-44
Function:	120 V Bike Path Lighting	Conductor Type:	4 + 1 Gnd, #8, #10, 600 V, RHH/RHW insulation
From:	PB-LTG	To:	PB-1C
Remarks:	Splice to existing circuit, LP218-2,4,6 , in PB-LTG at contract split point.		
Description Of Changes:			

Route	Conduit No.	Route	Conduit No.	Route	Conduit No.	Route	Conduit No.
1	FIELD						

Cable/Ckt #:	LP218-3	Reference:	E-44
Function:	120 V Bike Path Lighting	Conductor Type:	2 + 1 Gnd, #12, #12, 600 V, RHH/RHW insulation
From:	PB-1C	To:	Bike Path Light
Remarks:			
Description Of Changes:			

Route	Conduit No.	Route	Conduit No.	Route	Conduit No.	Route	Conduit No.
1	FIELD						

CABLE AND CIRCUIT SCHEDULE

E-64

THIS PLAN ACCURATE FOR ELECTRICAL WORK ONLY.

REVISED BY	DATE REVISED

CALCULATED-DESIGNED BY: R. BUENVIAJE/J. HALIM
CHECKED BY: DAVID OTO/THOMAS WU

CONSULTANT FUNCTIONAL SUPERVISOR: BOB ZANDIPOUR

STATE OF CALIFORNIA - DEPARTMENT OF TRANSPORTATION
Caltrans

DATE PLOTTED => 25-FEB-2012
TIME PLOTTED => 11:02
LAST REVISION 00-00-00

Dist	COUNTY	ROUTE	KILOMETER POST TOTAL PROJECT	SHEET No.	TOTAL SHEETS
04	SF	80	12.6/13.9	293	821

Caltrans Metric

Syn Yee Chin 10/31/11
REGISTERED ELECTRICAL ENGINEER

2-21-12
PLANS APPROVAL DATE

REGISTERED PROFESSIONAL ENGINEER SYN YEE CHIN No. 18186 Exp. 09/30/2013 ELECTRICAL STATE OF CALIFORNIA

THE STATE OF CALIFORNIA OR ITS OFFICERS OR AGENTS SHALL NOT BE RESPONSIBLE FOR THE ACCURACY OR COMPLETENESS OF ELECTRONIC COPIES OF THIS PLAN SHEET.

PB AMERICAS, Inc.
303 Second St., Suite 700N
San Francisco, CA 94107-1317

Cable/Ckt #: LP218-4 | Reference: E-44
Function: 120 V Bike Path Lighting | Conductor Type: 2 + 1 Gnd, #12, #12, 600 V, RHH/RHW insulation
From: PB-1C | To: Bike Path Light
Remarks:
Description Of Changes:

Route	Conduit No.	Route	Conduit No.	Route	Conduit No.	Route	Conduit No.
1	FIELD						

Cable/Ckt #: LP218-5 | Reference: E-44
Function: 120 V Bike Path Lighting | Conductor Type: 2 + 1 Gnd, #12, #12, 600 V, RHH/RHW insulation
From: PB-1C | To: Bike Path Light
Remarks:
Description Of Changes:

Route	Conduit No.	Route	Conduit No.	Route	Conduit No.	Route	Conduit No.
1	FIELD						

Cable/Ckt #: LP218-6 | Reference: E-44
Function: 120 V Bike Path Lighting | Conductor Type: 2 + 1 Gnd, #12, #12, 600 V, RHH/RHW insulation
From: PB-1C | To: Bike Path Light
Remarks:
Description Of Changes:

Route	Conduit No.	Route	Conduit No.	Route	Conduit No.	Route	Conduit No.
1	FIELD						

Cable/Ckt #: LP219-2A | Reference: E-45
Function: 120 V Bike Path Lighting | Conductor Type: 2 + 1 Gnd, #10, #10, 600 V, RHH/RHW insulation
From: PB-1C | To: Bike Path Light
Remarks:
Description Of Changes:

Route	Conduit No.	Route	Conduit No.	Route	Conduit No.	Route	Conduit No.
1	FIELD						

Cable/Ckt #: LP219-2A/4A | Reference: E-45
Function: 120 V Bike Path Lighting | Conductor Type: 4 + 1 Gnd, #10, #10, 600 V, RHH/RHW insulation
From: PB-LTG | To: PB-1C
Remarks: Extend circuit previously installed in SAS contract.
Description Of Changes:

Route	Conduit No.	Route	Conduit No.	Route	Conduit No.	Route	Conduit No.
1	FIELD						

Cable/Ckt #: LP219-4A | Reference: E-45
Function: 120 V Bike Path Lighting | Conductor Type: 2 + 1 Gnd, #10, #10, 600 V, RHH/RHW insulation
From: PB-1C | To: Bike Path Light
Remarks:
Description Of Changes:

Route	Conduit No.	Route	Conduit No.	Route	Conduit No.	Route	Conduit No.
1	FIELD						

Cable/Ckt #: PLE01 | Reference: E-55
Function: Low Level Signal | Conductor Type: 10 DLC
From: Ramp Controller Cabinet #TOS-RM01 | To: PL-E01 at Sta 52+33
Remarks:
Description Of Changes:

Route	Conduit No.	Route	Conduit No.	Route	Conduit No.	Route	Conduit No.
1	FIELD	2	2561	3	2558	4	2657
5	2555	6	2554	7	2553	8	2552
9	2551	10	2550	11	2559	12	2541
13	2540	14	2539	15	2502	16	2503
17	5939	18	TC Vault #2E	19	5924A	20	PB-2E
21	5924	22	TC Vault #1E	23	5982		

CABLE AND CIRCUIT SCHEDULE

E-65

THIS PLAN ACCURATE FOR ELECTRICAL WORK ONLY.

REVISED BY	DATE REVISED
R. BUENVIAJE/J. HALIM	DAVID OTO/THOMAS WU

CALCULATED-DESIGNED BY / CHECKED BY

CONSULTANT FUNCTIONAL SUPERVISOR: BOB ZANDIPOUR

STATE OF CALIFORNIA - DEPARTMENT OF TRANSPORTATION
Caltrans

LAST REVISION 00-00-00 | DATE PLOTTED => 25-FEB-2012 | TIME PLOTTED => 11:02

Dist	COUNTY	ROUTE	KILOMETER POST TOTAL PROJECT	SHEET No.	TOTAL SHEETS
04	SF	80	12.6/13.9	294	821

Caltrans Metric

Syn Yee Chin 02/16/12
REGISTERED ELECTRICAL ENGINEER

2-21-12
PLANS APPROVAL DATE

REGISTERED PROFESSIONAL ENGINEER SYN YEE CHIN No. 18186 Exp. 09/30/2013 ELECTRICAL STATE OF CALIFORNIA

THE STATE OF CALIFORNIA OR ITS OFFICERS OR AGENTS SHALL NOT BE RESPONSIBLE FOR THE ACCURACY OR COMPLETENESS OF ELECTRONIC COPIES OF THIS PLAN SHEET.

PB AMERICAS, Inc.
303 Second St., Suite 700N
San Francisco, CA 94107-1317

Cable/Ckt #: RMCA
Reference: E-55
Function: 120 V Power
Conductor Type: 2 + 1 Gnd, #8, #10, 600 V, RHH/RHW insulation
From: Ramp Controller Cabinet #TOS-RM01
To: Advanced Warning Sign (Meter ON)
Remarks:
Description Of Changes:

Route	Conduit No.	Route	Conduit No.	Route	Conduit No.	Route	Conduit No.
1	FIELD	2	2803	3	2802	4	2801
5	2894	6	2895	7	2896	8	2897
9	2898	10	2799				

Cable/Ckt #: RMLA
Reference: E-55
Function: TOS Data Com
Conductor Type: 2 DLC
From: Ramp Controller Cabinet #TOS-RM01
To: Ramp Loop Detector
Remarks:
Description Of Changes:

Route	Conduit No.	Route	Conduit No.	Route	Conduit No.	Route	Conduit No.
1	FIELD	2	2561	3	2558	4	2657
5	2555	6	2554	7	2553	8	2552
9	2551	10	2550	11	2660	12	FIELD

Cable/Ckt #: RMLB
Reference: E-55
Function: TOS Data Com
Conductor Type: 1 DLC
From: Ramp Controller Cabinet #TOS-RM01
To: Detector Loop, Type A
Remarks:
Description Of Changes:

Route	Conduit No.	Route	Conduit No.	Route	Conduit No.	Route	Conduit No.
1	FIELD	2	2561	3	2658	4	FIELD

Cable/Ckt #: RMQA
Reference: E-55
Function: TOS Data Com
Conductor Type: 1 DLC
From: Ramp Controller Cabinet #TOS-RM01
To: Loop Detector (Ramp Queue)
Remarks:
Description Of Changes:

Route	Conduit No.	Route	Conduit No.	Route	Conduit No.	Route	Conduit No.
1	FIELD	2	2561	3	2558	4	2657
5	2556	6	2548	7	2560	8	FIELD

Cable/Ckt #: RMSA
Reference: E-55
Function: 120 V Power
Conductor Type: 6 + 1 Gnd, #14, #10, 600 V, RHH/RHW insulation
From: Ramp Controller Cabinet #TOS-RM01
To: Ramp Meter Signal
Remarks:
Description Of Changes:

Route	Conduit No.	Route	Conduit No.	Route	Conduit No.	Route	Conduit No.
1	FIELD	2	2803	3	2802	4	2801
5	2893	6	2892	7	2868	8	2867
9	2866	10	2865	11	2864	12	2863
13	2862	14	2825	15	2824	16	2823
17	2822	18	2821	19	2820	20	2819
21	2818	22	2817	23	2816	24	2815
25	2800	26	2899				

CABLE AND CIRCUIT SCHEDULE

THIS PLAN ACCURATE FOR ELECTRICAL WORK ONLY.

E-66

REVISED BY | DATE REVISED
R. BUENVIAJE/J. HALIM | DAVID OTO/THOMAS WU
CALCULATED-DESIGNED BY | CHECKED BY
CONSULTANT FUNCTIONAL SUPERVISOR
BOB ZANDIPOUR
STATE OF CALIFORNIA - DEPARTMENT OF TRANSPORTATION
Caltrans

LAST REVISION 02-16-12 | DATE PLOTTED => 25-FEB-2012 | TIME PLOTTED => 11:02

Dist	COUNTY	ROUTE	KILOMETER POST TOTAL PROJECT	SHEET No.	TOTAL SHEETS
04	SF	80	12.6/13.9	295	821

Caltrans Metric

Syn Yee Chin 02/16/12
REGISTERED ELECTRICAL ENGINEER

2-21-12
PLANS APPROVAL DATE

REGISTERED PROFESSIONAL ENGINEER
SYN YEE CHIN
No. 18186
Exp. 09/30/2013
ELECTRICAL
STATE OF CALIFORNIA

THE STATE OF CALIFORNIA OR ITS OFFICERS OR AGENTS SHALL NOT BE RESPONSIBLE FOR THE ACCURACY OR COMPLETENESS OF ELECTRONIC COPIES OF THIS PLAN SHEET.

PB AMERICAS, Inc.
303 Second St., Suite 700N
San Francisco, CA 94107-1317

Cable/Ckt #: S-2042 **Reference:** E-41
Function: 480 V Pole Lighting **Conductor Type:** 2 + 1 Gnd, #10, #10, 600 V, RHH/RHW insulation
From: PB-LTG **To:** Roadway Lighting Fixtures
Remarks: For Light Poles 2042-1 to 2042-11
Description Of Changes:

Route	Conduit No.	Route	Conduit No.	Route	Conduit No.	Route	Conduit No.
1	FIELD						

Cable/Ckt #: S-2042-2 **Reference:** E-41
Function: 480 V Pole Lighting **Conductor Type:** 3 + 1 Gnd, #8, #10, 600 V, RHH/RHW insulation
From: PB-LTG **To:** PB-LTG
Remarks: Splice to existing circuit, S-2042-1, in PB-LTG at Hinge W6RB contract split point.
Description Of Changes:

Route	Conduit No.	Route	Conduit No.	Route	Conduit No.	Route	Conduit No.
1	2712	2	2713	3	2714	4	2715
5	2716	6	2717	7	2718	8	2719
9	2720	10	2721	11	2722	12	2723
13	2724	14	2725	15	2762	16	2763
17	2764	18	2765	19	2766	20	2767
21	2768	22	2792				

Cable/Ckt #: UP202-12 **Reference:** E-51
Function: 120 V Call Box Power **Conductor Type:** 2 + 1 Gnd, #8, #10, 600 V, RHH/RHW insulation
From: PB-LTG **To:** Call Box CB-238C, CB-239C
Remarks: Extend circuit previously installed in YBI-1 contract to CB-238C, and CB-239C.
Description Of Changes:

Route	Conduit No.	Route	Conduit No.	Route	Conduit No.	Route	Conduit No.
1	2812	2	2813	3	FIELD	4	2814
5	2815	6	2816	7	2817	8	2818
9	2819	10	2820	11	2821	12	2822
13	2823	14	2824	15	2825	16	2862
17	2863	18	2864	19	2865	20	2866
21	2867	22	2868	23	2892	24	2893
25	2894	26	2895	27	2896	28	FIELD

CABLE AND CIRCUIT SCHEDULE

THIS PLAN ACCURATE FOR ELECTRICAL WORK ONLY.

E-67

REVISED BY | DATE REVISED
R. BUENVIAJE/J. HALIM | DAVID OTO/THOMAS WU
CALCULATED-DESIGNED BY | CHECKED BY
CONSULTANT FUNCTIONAL SUPERVISOR
BOB ZANDIPOUR
STATE OF CALIFORNIA - DEPARTMENT OF TRANSPORTATION
Caltrans

LAST REVISION 02-16-12 | DATE PLOTTED => 25-FEB-2012 | TIME PLOTTED => 11:02

Dist	COUNTY	ROUTE	KILOMETER POST TOTAL PROJECT	SHEET No.	TOTAL SHEETS
04	SF	80	12.6/13.9	296	821

Caltrans Metric

Syn Yee Chin 02/16/12
REGISTERED ELECTRICAL ENGINEER

2-21-12
PLANS APPROVAL DATE

REGISTERED PROFESSIONAL ENGINEER
SYN YEE CHIN
No. 18186
Exp. 09/30/2013
ELECTRICAL
STATE OF CALIFORNIA

THE STATE OF CALIFORNIA OR ITS OFFICERS OR AGENTS SHALL NOT BE RESPONSIBLE FOR THE ACCURACY OR COMPLETENESS OF ELECTRONIC COPIES OF THIS PLAN SHEET.

PB AMERICAS, Inc.
303 Second St., Suite 700N
San Francisco, CA 94107-1317

Cable/Ckt #: UP202-8
Reference: E-55
Function: 120 V Power
Conductor Type: 2 + 1 Gnd, #8, #10, 600 V, RHH/RHW insulation
From: PB-LTG
To: Ramp Controller Cabinet #TOS-RM01
Remarks: Extend circuit previously installed in YBI-1 contract.
Description Of Changes:

Route	Conduit No.	Route	Conduit No.	Route	Conduit No.	Route	Conduit No.
1	2834	2	2833	3	7208	4	2832
5	2831	6	2830	7	2829	8	2828
9	2827	10	2812	11	2813	12	2814
13	2815	14	2816	15	2817	16	2818
17	2819	18	2820	19	2821	20	2822
21	2823	22	2824	23	2825	24	2862
25	2863	26	2864	27	2865	28	2866
29	2867	30	2868	31	2892	32	2893
33	2701	34	2802	35	2803	36	FIELD

Cable/Ckt #: UP205-6A
Reference: E-51
Function: 120 V Power
Conductor Type: 2 + 1 Gnd, #12, #12, 600 V, RHH/RHW insulation
From: PB-LTG
To: Call Box CB-242D
Remarks: Splice to existing circuit, UP205-6, in PB-LTG.
Description Of Changes:

Route	Conduit No.	Route	Conduit No.	Route	Conduit No.	Route	Conduit No.
1	FIELD						

CABLE AND CIRCUIT SCHEDULE

E-68

THIS PLAN ACCURATE FOR ELECTRICAL WORK ONLY.

REVISED BY | DATE REVISED
CALCULATED-DESIGNED BY: R. BUENVIAJE/J. HALIM
CHECKED BY: DAVID OTO/THOMAS WU
CONSULTANT FUNCTIONAL SUPERVISOR: BOB ZANDIPOUR
STATE OF CALIFORNIA - DEPARTMENT OF TRANSPORTATION
Caltrans

LAST REVISION 02-16-12
DATE PLOTTED => 25-FEB-2012
TIME PLOTTED => 11:02

Dist	COUNTY	ROUTE	KILOMETER POST TOTAL PROJECT	SHEET No.	TOTAL SHEETS
04	SF	80	12.6/13.9	297	821

Caltrans Metric

Syn Yee Chin 02/16/12
REGISTERED ELECTRICAL ENGINEER

2-21-12
PLANS APPROVAL DATE

REGISTERED PROFESSIONAL ENGINEER SYN YEE CHIN No. 18186 Exp. 09/30/2013 ELECTRICAL STATE OF CALIFORNIA

THE STATE OF CALIFORNIA OR ITS OFFICERS OR AGENTS SHALL NOT BE RESPONSIBLE FOR THE ACCURACY OR COMPLETENESS OF ELECTRONIC COPIES OF THIS PLAN SHEET.

PB AMERICAS, Inc.
303 Second St., Suite 700N
San Francisco, CA 94107-1317

Conduit/Tray No:	1515	Reference:	E-9
Size:	41	Type:	RGS conduit
From:	PB-COM	To:	PB-COM
Total Fill (mm2):	0.00	Remarks:	New conduit. Add new pull rope.
Allowable Fill (mm2):	708.28		
Description of Changes:			

Included Cable No.	Conductor Type	Area (mm2)
Pull Rope	Soft-Fiber Polyester	0.00

Conduit/Tray No:	1615	Reference:	E-9
Size:	41	Type:	RGS conduit
From:	PB-COM	To:	PB-COM
Total Fill (mm2):	0.00	Remarks:	New conduit. Add new pull rope.
Allowable Fill (mm2):	534.55		
Description of Changes:			

Included Cable No.	Conductor Type	Area (mm2)
Pull Rope	Soft-Fiber Polyester	0.00

Conduit/Tray No:	1781	Reference:	E-9
Size:	41	Type:	RGS conduit
From:	PB-LTG	To:	PB-LTG
Total Fill (mm2):	0.00	Remarks:	New conduit. Add new pull rope.
Allowable Fill (mm2):	534.55		
Description of Changes:			

Included Cable No.	Conductor Type	Area (mm2)
Pull Rope	Soft-Fiber Polyester	0.00

Conduit/Tray No:	1782	Reference:	E-9
Size:	41	Type:	RGS conduit
From:	PB-LTG	To:	PB-LTG
Total Fill (mm2):	133.19	Remarks:	
Allowable Fill (mm2):	534.55		
Description of Changes:			

Included Cable No.	Conductor Type	Area (mm2)
Pull Rope	Soft-Fiber Polyester	0.00
243-A	3 + 1 Gnd, #8, #10, 600 V, RHH/RHW insulation	133.19

Conduit/Tray No:	1783	Reference:	E-9
Size:	41	Type:	RGS conduit
From:	PB-LTG	To:	PB-LTG
Total Fill (mm2):	133.19	Remarks:	
Allowable Fill (mm2):	534.55		
Description of Changes:			

Included Cable No.	Conductor Type	Area (mm2)
Pull Rope	Soft-Fiber Polyester	0.00
243-A	3 + 1 Gnd, #8, #10, 600 V, RHH/RHW insulation	133.19

Conduit/Tray No:	1784	Reference:	E-9
Size:	41	Type:	RGS conduit
From:	PB-LTG	To:	PB-LTG
Total Fill (mm2):	133.19	Remarks:	
Allowable Fill (mm2):	534.55		
Description of Changes:			

Included Cable No.	Conductor Type	Area (mm2)
Pull Rope	Soft-Fiber Polyester	0.00
243-A	3 + 1 Gnd, #8, #10, 600 V, RHH/RHW insulation	133.19

CONDUIT AND TRAY SCHEDULE
YBI TRANSITION STRUCTURES ROADWAY WB

E-69

THIS PLAN ACCURATE FOR ELECTRICAL WORK ONLY.

STATE OF CALIFORNIA - DEPARTMENT OF TRANSPORTATION
Caltrans

CONSULTANT FUNCTIONAL SUPERVISOR: BOB ZANDIPOUR
CALCULATED-DESIGNED BY: R. BUENVIAJE/J. HALIM
CHECKED BY: DAVID OTO/THOMAS WU
REVISED BY
DATE REVISED

LAST REVISION 02-16-12
DATE PLOTTED => 25-FEB-2012
TIME PLOTTED => 11:03

Dist	COUNTY	ROUTE	KILOMETER POST TOTAL PROJECT	SHEET No.	TOTAL SHEETS
04	SF	80	12.6/13.9	298	821

Caltrans Metric

Syn Yee Chin 02/16/12
REGISTERED ELECTRICAL ENGINEER

2-21-12
PLANS APPROVAL DATE

REGISTERED PROFESSIONAL ENGINEER SYN YEE CHIN No. 18186 Exp. 09/30/2013 ELECTRICAL STATE OF CALIFORNIA

THE STATE OF CALIFORNIA OR ITS OFFICERS OR AGENTS SHALL NOT BE RESPONSIBLE FOR THE ACCURACY OR COMPLETENESS OF ELECTRONIC COPIES OF THIS PLAN SHEET.

PB AMERICAS, Inc.
303 Second St., Suite 700N
San Francisco, CA 94107-1317

Conduit/Tray No:	1785
Reference:	E-9
Size:	41
Type:	RGS conduit
From:	PB-LTG
To:	PB-LTG
Total Fill (mm2):	133.19
Remarks:	
Allowable Fill (mm2):	534.55
Description of Changes:	

Included Cable No.	Conductor Type	Area (mm2)
Pull Rope	Soft-Fiber Polyester	0.00
243-A	3 + 1 Gnd, #8, #10, 600 V, RHH/RHW insulation	133.19

Conduit/Tray No:	1786
Reference:	E-8, E-9
Size:	41
Type:	RGS conduit
From:	PB-LTG
To:	PB-LTG
Total Fill (mm2):	133.19
Remarks:	
Allowable Fill (mm2):	534.55
Description of Changes:	

Included Cable No.	Conductor Type	Area (mm2)
Pull Rope	Soft-Fiber Polyester	0.00
243-A	3 + 1 Gnd, #8, #10, 600 V, RHH/RHW insulation	133.19

Conduit/Tray No:	1787
Reference:	E-8
Size:	41
Type:	RGS conduit
From:	PB-LTG
To:	PB-LTG
Total Fill (mm2):	133.19
Remarks:	
Allowable Fill (mm2):	534.55
Description of Changes:	

Included Cable No.	Conductor Type	Area (mm2)
Pull Rope	Soft-Fiber Polyester	0.00
243-A	3 + 1 Gnd, #8, #10, 600 V, RHH/RHW insulation	133.19

Conduit/Tray No:	1788
Reference:	E-8
Size:	41
Type:	RGS conduit
From:	(E) TB-23E
To:	PB-LTG
Total Fill (mm2):	133.19
Remarks:	
Allowable Fill (mm2):	534.55
Description of Changes:	

Included Cable No.	Conductor Type	Area (mm2)
Pull Rope	Soft-Fiber Polyester	0.00
243-A	3 + 1 Gnd, #8, #10, 600 V, RHH/RHW insulation	133.19

Conduit/Tray No:	1881
Reference:	E-9
Size:	41
Type:	RGS conduit
From:	PB-LTG
To:	PB-LTG
Total Fill (mm2):	0.00
Remarks:	New conduit. Add new pull rope.
Allowable Fill (mm2):	534.55
Description of Changes:	

Included Cable No.	Conductor Type	Area (mm2)
Pull Rope	Soft-Fiber Polyester	0.00

Conduit/Tray No:	1882
Reference:	E-9
Size:	41
Type:	RGS conduit
From:	PB-LTG
To:	PB-LTG
Total Fill (mm2):	0.00
Remarks:	
Allowable Fill (mm2):	534.55
Description of Changes:	

Included Cable No.	Conductor Type	Area (mm2)
Pull Rope	Soft-Fiber Polyester	0.00

Conduit/Tray No:	1883
Reference:	E-9
Size:	41
Type:	RGS conduit
From:	PB-LTG
To:	PB-LTG
Total Fill (mm2):	0.00
Remarks:	
Allowable Fill (mm2):	534.55
Description of Changes:	

Included Cable No.	Conductor Type	Area (mm2)
Pull Rope	Soft-Fiber Polyester	0.00

Conduit/Tray No:	1884
Reference:	E-9
Size:	41
Type:	RGS conduit
From:	PB-LTG
To:	PB-LTG
Total Fill (mm2):	0.00
Remarks:	
Allowable Fill (mm2):	534.55
Description of Changes:	

Included Cable No.	Conductor Type	Area (mm2)
Pull Rope	Soft-Fiber Polyester	0.00

CONDUIT AND TRAY SCHEDULE
YBI TRANSITION STRUCTURES ROADWAY WB

THIS PLAN ACCURATE FOR ELECTRICAL WORK ONLY.

E-70

REVISED BY	DATE REVISED
R. BUENVIAJE/J. HALIM	DAVID OTO/THOMAS WU

CALCULATED-DESIGNED BY / CHECKED BY

CONSULTANT FUNCTIONAL SUPERVISOR: BOB ZANDIPOUR

STATE OF CALIFORNIA - DEPARTMENT OF TRANSPORTATION
Caltrans

LAST REVISION 02-16-12 | DATE PLOTTED => 25-FEB-2012 | TIME PLOTTED => 11:03

Dist	COUNTY	ROUTE	KILOMETER POST TOTAL PROJECT	SHEET No.	TOTAL SHEETS
04	SF	80	12.6/13.9	299	821

Caltrans Metric

Syn Yee Chin 02/16/12
REGISTERED ELECTRICAL ENGINEER

2-21-12
PLANS APPROVAL DATE

REGISTERED PROFESSIONAL ENGINEER
SYN YEE CHIN
No. 18186
Exp. 09/30/2013
ELECTRICAL
STATE OF CALIFORNIA

THE STATE OF CALIFORNIA OR ITS OFFICERS OR AGENTS SHALL NOT BE RESPONSIBLE FOR THE ACCURACY OR COMPLETENESS OF ELECTRONIC COPIES OF THIS PLAN SHEET.

PB AMERICAS, Inc.
303 Second St., Suite 700N
San Francisco, CA 94107-1317

Conduit/Tray No:	1885
Reference:	E-9
Size:	41
Type:	RGS conduit
From:	PB-LTG
To:	PB-LTG
Total Fill (mm2):	0.00
Remarks:	
Allowable Fill (mm2):	534.55
Description of Changes:	

Included Cable No.	Conductor Type	Area (mm2)
Pull Rope	Soft-Fiber Polyester	0.00

Conduit/Tray No:	1886
Reference:	E-8, E-9
Size:	41
Type:	RGS conduit
From:	PB-LTG
To:	PB-LTG
Total Fill (mm2):	0.00
Remarks:	
Allowable Fill (mm2):	534.55
Description of Changes:	

Included Cable No.	Conductor Type	Area (mm2)
Pull Rope	Soft-Fiber Polyester	0.00

Conduit/Tray No:	1887
Reference:	E-8
Size:	41
Type:	RGS conduit
From:	PB-LTG
To:	PB-LTG
Total Fill (mm2):	0.00
Remarks:	
Allowable Fill (mm2):	534.55
Description of Changes:	

Included Cable No.	Conductor Type	Area (mm2)
Pull Rope	Soft-Fiber Polyester	0.00

CONDUIT AND TRAY SCHEDULE
YBI TRANSITION STRUCTURES ROADWAY WB

THIS PLAN ACCURATE FOR ELECTRICAL WORK ONLY.

E-71

REVISED BY	
DATE REVISED	
CALCULATED-DESIGNED BY	R. BUENVIAJE/J. HALIM
CHECKED BY	DAVID OTO/THOMAS WU
CONSULTANT FUNCTIONAL SUPERVISOR	BOB ZANDIPOUR

STATE OF CALIFORNIA - DEPARTMENT OF TRANSPORTATION
Caltrans

LAST REVISION 02-16-12
DATE PLOTTED => 25-FEB-2012
TIME PLOTTED => 11:03

Dist	COUNTY	ROUTE	KILOMETER POST TOTAL PROJECT	SHEET No.	TOTAL SHEETS
04	SF	80	12.6/13.9	300	821

Caltrans Metric

Syn Yee Chin 02/16/12
REGISTERED ELECTRICAL ENGINEER

2-21-12
PLANS APPROVAL DATE

REGISTERED PROFESSIONAL ENGINEER SYN YEE CHIN No. 18186 Exp. 09/30/2013 ELECTRICAL STATE OF CALIFORNIA

THE STATE OF CALIFORNIA OR ITS OFFICERS OR AGENTS SHALL NOT BE RESPONSIBLE FOR THE ACCURACY OR COMPLETENESS OF ELECTRONIC COPIES OF THIS PLAN SHEET.

PB AMERICAS, Inc.
303 Second St., Suite 700N
San Francisco, CA 94107-1317

Conduit/Tray No:	2363
Reference:	E-15
Size:	41
Type:	RGS conduit
From:	PB-COM
To:	PB-COM
Total Fill (mm2):	0.00
Remarks:	Add new pull rope.
Allowable Fill (mm2):	708.28
Description of Changes:	

Included Cable No.	Conductor Type	Area (mm2)
Pull Rope	Soft-Fiber Polyester	0.00

Conduit/Tray No:	2502
Reference:	E-16
Size:	41
Type:	RGS conduit
From:	PB-COM
To:	PB-COM
Total Fill (mm2):	316.24
Remarks:	Existing conduit, add new cable(s) and pull rope.
Allowable Fill (mm2):	708.28
Description of Changes:	

Included Cable No.	Conductor Type	Area (mm2)
PLE01	10 DLC	316.24
Pull Rope	Soft-Fiber Polyester	0.00

Conduit/Tray No:	2503
Reference:	E-16
Size:	41
Type:	RGS conduit
From:	PB-COM
To:	PB-COM
Total Fill (mm2):	316.24
Remarks:	Existing conduit, add new cable(s) and pull rope.
Allowable Fill (mm2):	708.28
Description of Changes:	

Included Cable No.	Conductor Type	Area (mm2)
PLE01	10 DLC	316.24
Pull Rope	Soft-Fiber Polyester	0.00

Conduit/Tray No:	2511
Reference:	E-18
Size:	41
Type:	RGS-PVC coated conduit
From:	PB-COM
To:	PB-COM
Total Fill (mm2):	98.10
Remarks:	Existing conduit, add new cable(s) and pull rope.
Allowable Fill (mm2):	702.80
Description of Changes:	

Included Cable No.	Conductor Type	Area (mm2)
2155	1 - 2 pair, shielded #18 with IS/OA, 600 V, PVC jacket	98.10
Pull Rope	Soft-Fiber Polyester	0.00

Conduit/Tray No:	2539
Reference:	E-15, E-16
Size:	41
Type:	Liquidtight flex metal and RGS conduit
From:	PB-COM
To:	PB-COM
Total Fill (mm2):	316.24
Remarks:	
Allowable Fill (mm2):	677.23
Description of Changes:	

Included Cable No.	Conductor Type	Area (mm2)
PLE01	10 DLC	316.24
Pull Rope	Soft-Fiber Polyester	0.00

Conduit/Tray No:	2540
Reference:	E-15
Size:	41
Type:	RGS conduit
From:	PB-COM
To:	PB-COM
Total Fill (mm2):	316.24
Remarks:	
Allowable Fill (mm2):	708.28
Description of Changes:	

Included Cable No.	Conductor Type	Area (mm2)
PLE01	10 DLC	316.24
Pull Rope	Soft-Fiber Polyester	0.00

Conduit/Tray No:	2541
Reference:	E-15
Size:	41
Type:	RGS conduit
From:	PB-COM
To:	PB-COM
Total Fill (mm2):	316.24
Remarks:	
Allowable Fill (mm2):	708.28
Description of Changes:	

Included Cable No.	Conductor Type	Area (mm2)
PLE01	10 DLC	316.24
Pull Rope	Soft-Fiber Polyester	0.00

Conduit/Tray No:	2542
Reference:	E-15
Size:	41
Type:	RGS conduit
From:	PB-COM
To:	PB-COM
Total Fill (mm2):	0.00
Remarks:	
Allowable Fill (mm2):	534.55
Description of Changes:	

Included Cable No.	Conductor Type	Area (mm2)
Pull Rope	Soft-Fiber Polyester	0.00

CONDUIT AND TRAY SCHEDULE
YBI TRANSITION STRUCTURES ROADWAY AND GIRDER EB

THIS PLAN ACCURATE FOR ELECTRICAL WORK ONLY.

E-72

REVISED BY	DATE REVISED
R. BUENVIAJE/J. HALIM	DAVID OTO/THOMAS WU

CALCULATED-DESIGNED BY / CHECKED BY

CONSULTANT FUNCTIONAL SUPERVISOR: BOB ZANDIPOUR

STATE OF CALIFORNIA - DEPARTMENT OF TRANSPORTATION
Caltrans

LAST REVISION 02-16-12 | DATE PLOTTED => 25-FEB-2012 | TIME PLOTTED => 11:03