| Dist | COUNTY | ROUTE | KILOMETER POST TOTAL PROJECT | SHEET No. | TOTAL SHEETS |
|---|---|---|---|---|---|
| 04 | SF | 80 | 12.7/13.2 | 111 | 806 |

REGISTERED CIVIL ENGINEER 3-05-08 DATE

6-23-08
PLANS APPROVAL DATE

REGISTERED PROFESSIONAL ENGINEER T.T. Lai No. 63630 Exp. 9-30-08 CIVIL STATE OF CALIFORNIA

*THE STATE OF CALIFORNIA OR ITS OFFICERS OR AGENTS SHALL NOT BE RESPONSIBLE FOR THE ACCURACY OR COMPLETENESS OF ELECTRONIC COPIES OF THIS PLAN SHEET.*

Caltrans Metric

6

## CONCRETE BARRIERS

| SHEET No. | LOCATION | | CONCRETE BARRIER (TYPE K) | CONCRETE BARRIER TYPE 732 (MOD) | REMOVE CONCRETE BARRIER (TYPE K) | MODIFY CONCRETE BARRIER TYPE 732 (MOD) |
|---|---|---|---|---|---|---|
| | | | m | | | |
| L-1 | W 50+05.000 TO 50+45.000 | L+ | | | 40 | |
| L-1 | W 50+21.000 TO 51+00.000 | L+, R+ | | | 90 | |
| L-1 | W 49+60.000 TO 50+25.000 | R+ | | | 65 | |
| L-1 | W 50+00.000 TO 50+25.000 | R+ | | | 25 | |
| L-1 | W 50+18.000 TO 50+98.000 | R+ | 116 | | | |
| L-1 | W 50+24.000 TO 50+30.000 | R+ | | | 19 | |
| L-3 | E 49+60.000 TO 51+17.495 | L+ | | 158 | | |
| L-3 | E 50+00.000 TO 51+17.495 | L+ | | | 118 | |
| L-3 | E 51+22.104 TO 51+32.210 | L+ | | 10 | 10 | |
| L-3 | E 51+17.495 TO 51+32.210 | R+ | | 15 | | |
| L-3 | E 50+98.000 TO 51+32.210 | R+ | | | 34 | |
| L-3 | E 49+60.000 TO 51+00.000 | L+ | | | 143 | |
| L-3 | E 50+26.000 TO 50+99.000 | R+ | 72 | | | |
| L-4 | E 52+95.000 TO 53+06.000 | R+ | 12 | | | |
| L-4 | E 53+05.000 TO 53+10.000 | R+ | 6 | | | |
| L-4 | E 54+18.000 TO 54+23.000 | R+ | 6 | | | |
| L-5 | E 54+27.150 TO 55+92.000 | R+ | 165 | | | |
| C-2 | T7 50+58.000 TO 50+87.000 | L+, R+ | | | 33 | |
| C-2 | T7 50+60.000 TO 50+78.000 | R+ | | | 21 | |
| C-2 | T7 50+53.000 TO 51+14.000 | L+ | 60 | | | |
| C-2 | T7 50+52.000 TO 51+21.000 | R+ | 66 | | | |
| R-6 | SG 11+16.000 TO 11+45.000 | R+ | | 32 | | |
| SUBTOTAL | | | 503 | 215 | 598 | |
| FROM STRUCTURE PLANS | | L+, R+ | | 1603 | | |
| FROM STRUCTURE PLANS (W 49+56.2 TO 50+22.0) | | L+ | | | | 67 |
| TOTAL | | | 503 | 1818 | 598 | 67 |

## REMOVE CONCRETE

| SHEET No. | LOCATIONS | | CONCRETE DUCT BANK | CURB & GUTTER | CELL TOWER FOUNDATION |
|---|---|---|---|---|---|
| | | | m3 | | |
| X-1 | E 51+17.497 TO 51+32.010 | R+ | 23 | | |
| C-1 | MR 0+80.000 TO 1+74.940 | L+, R+ | | 18 | |
| C-1 | MR 1+15.000 TO 1+23.000 | L+ | | | 13 |
| SUBTOTAL | | | 23 | 18 | 13 |
| TOTAL | | | 54 | | |

## CRASH CUSHION MODULE, SAND FILLED

| SHEET No. | LOCATION | | CRASH CUSHION MODULE |
|---|---|---|---|
| | | | EA |
| L-5 | E 54+27.150 | R+ | 14 |
| TOTAL | | | 14 |

## MINOR CONCRETE (MINOR STRUCTURE)

| SHEET No. | LOCATIONS | m3 |
|---|---|---|
| DQ-2 | DRAINAGE FACILITY | 58 |
| UQ-1 | UNDERGROUND UTILITY ENCASEMENT | 40 |
| TOTAL | | 98 |

## IRRIGATION CROSSOVERS

| LOCATION | | SIDE | | CONDUIT TYPE (3) | (N) WATER LINE CROSSOVER | (N) SPRINKLER CONTROL CROSSOVER |
|---|---|---|---|---|---|---|
| LINE | STATION | R+ | L+ | SIZE (mm) DN 200 | | |
| | | | | LENGTH (m) | SIZE (mm) DN | SIZE (mm) DN |
| MR | 0+44 | X | X | 9.0 | 75 | 50 |
| MR | 0+90 | X | X | 25.0 | 75 | 50 |
| MR | 0+96 | X | | 16.0 | 75 | 50 |
| MR | 1+45 | X | X | 10.0 | 75 | 50 |
| MR | 1+74 | X | X | 8.0 | 75 | 50 |
| TOTAL | | | | 68.0 | | |

(N) - NOT A SEPARATE PAY ITEM FOR INFORMATION ONLY
DN - DIAMETER NOMINAL
X - DENOTES REQUIREMENT

CONDUIT TYPE
(APPLICABLE WHEN CIRCLED BELOW AND SHOWN UNDER THE 'CONDUIT TYPE' COLUMN HEADING

1 BITUMINOUS COATED CORRUGATED STEEL PIPE (1.626 mm THICK)
2 CORRUGATED STEEL PIPE (1.626 mm THICK)
(3) CORRUGATED HIGH DENSITY POLYTHENE PIPE
4 ALTERNATIVE CONDUIT

## MINOR CONCRETE (MISCELLANEOUS CONSTRUCTION)

| SHEET No. | LOCATIONS | Conc VALLEY GUTTER | Conc CURB A2-150 | Conc CURB B2-100 | Std GUTTER DEPRESSION |
|---|---|---|---|---|---|
| | | m3 | | | |
| C-1 | L+ MR 0+80.00 TO 0+92.53 | 2.8 | | | |
| C-1 | L+ & R+ MR 1+25.00 TO 1+74.945 | | 18 | | |
| C-1 | R+ MR 1+25.00 TO 1+74.945 | | | 7 | |
| - | SUBTOTAL | 27.8 | | | |
| DQ-2 | DRAINAGE FACILITY | | | | 2.36 |
| TOTAL | | 30.16 | | | |

6 REVISED PER ADDENDUM No. 6 DATED AUGUST 27, 2009

# SUMMARY OF QUANTITIES

Q-2

STATE OF CALIFORNIA - DEPARTMENT OF TRANSPORTATION
Caltrans DESIGN

FUNCTIONAL SUPERVISOR: BOB ZANDIPOUR
CALCULATED-DESIGNED BY: TRINH LAI
CHECKED BY: BOB ZANDIPOUR
REVISED BY: TL
DATE REVISED: 10/07

LAST REVISION 05-20-08
DATE PLOTTED => 26-AUG-2009
TIME PLOTTED => 05:18

| Dist | COUNTY | ROUTE | KILOMETER POST TOTAL PROJECT | SHEET No. | TOTAL SHEETS |
|---|---|---|---|---|---|
| 04 | SF | 80 | 12.7/13.2 | 293 | 806 |

REGISTERED ELECTRICAL ENGINEER — DATE 3/4/08

6-23-08
PLANS APPROVAL DATE

REGISTERED PROFESSIONAL ENGINEER T. W. SPARKS No. E16039 Exp. 9-30-09 ELECTRICAL STATE OF CALIFORNIA

*THE STATE OF CALIFORNIA OR ITS OFFICERS OR AGENTS SHALL NOT BE RESPONSIBLE FOR THE ACCURACY OR COMPLETENESS OF ELECTRONIC COPIES OF THIS PLAN SHEET.*

T.Y. LIN / MOFFATT & NICHOL
TWO HARRISON STREET, SUITE 500
SAN FRANCISCO, CA 94105

Caltrans Metric

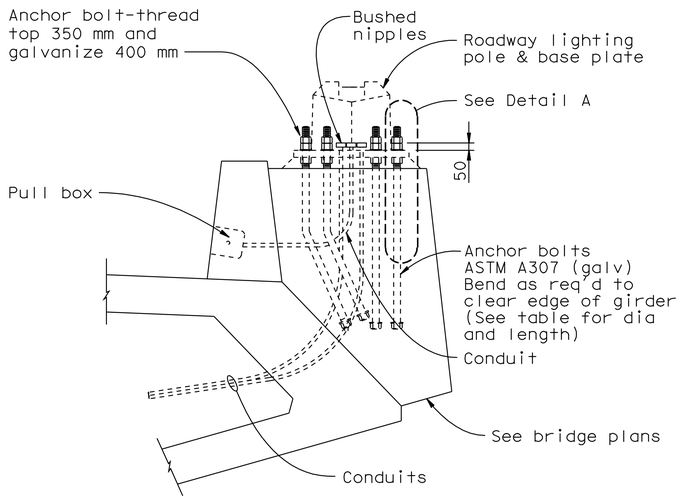


## TYPICAL ANCHORAGE DETAIL AT YBI TRANSITION STRUCTURES

** Note: Anchor bolt length at original Viaduct structure is less than shown in table, see "Light Pole Foundation Details" sheet in "YBI Viaduct Structure Modifications" plan set.

| POLE HEIGHT "H" | ANCHORAGE: ANCHOR BOLT CIRCLE RADIUS= R(mm) | BASE PLATE DIA(mm) x THICKNESS (mm) | ANCHOR BOLTS NUMBER(EA) x DIA(mm) x LENGTH(mm) | |
|---|---|---|---|---|
| 7 m | 240 | 600 x 38 | 5-28 x 1000 | ** |
| 10 m | 275 | 700 x 45 | 5-32 x 1100 | |
| 12 m | 320 | 790 x 48 | 5-38 x 1200 | |
| 15 m | 360 | 915 x 48 | 5-45 x 1200 | |
| 17.5 m | 380 | 1015 x 51 | 5-51 x 1400 | |
| 20 m | 420 | 1150 x 60 | 5-57 x 1500 | |

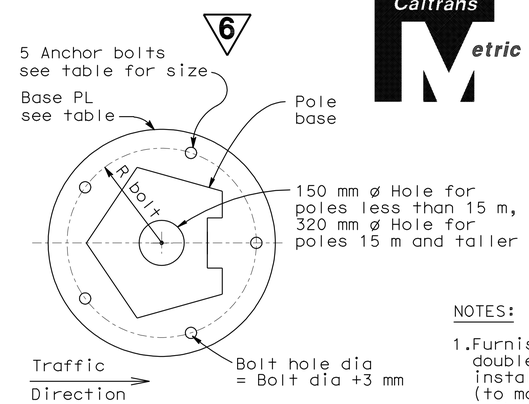


## TYPICAL BASE PLATE

Not to scale

NOTES:

1. Furnish and install anchor bolts, leveling nuts, double heavy hex nuts and washers. Furnish and install temporary removable steel template (to match permanent baseplate) on concrete anchorage. Provide temporary protection to exposed bolt threads.
2. Refer to Bridge Plans and "Light Pole Foundation Details" sheet in "YBI Viaduct Structure Modifications" plan set for reinforcement in concrete foundation.

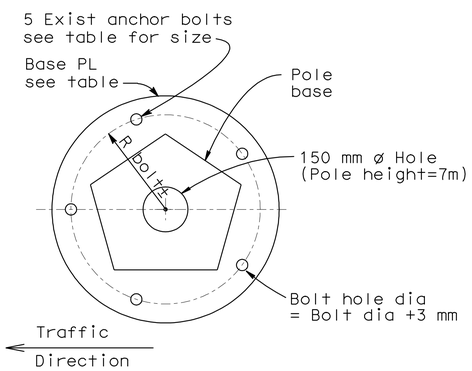


## BASE PLATE AT VIADUCT REPLACEMENT STRUCTURE

Not to scale

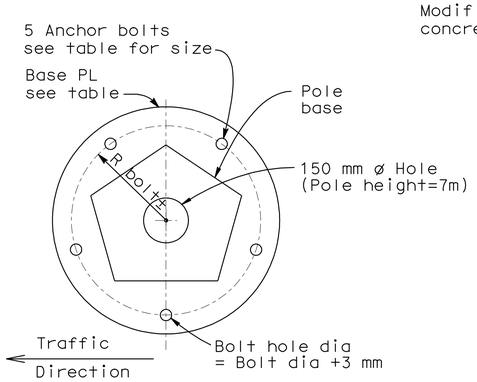


## BASE PLATE AT ORIGINAL VIADUCT STRUCTURE

Not to scale

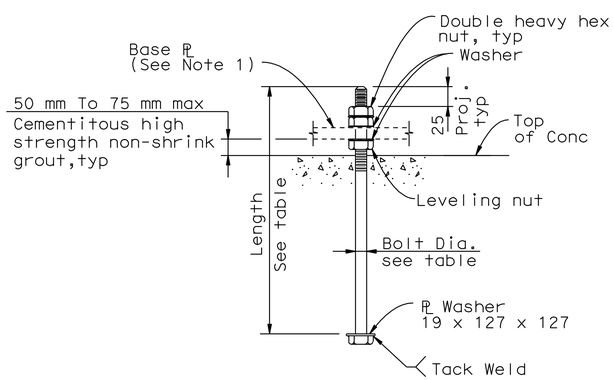


## DETAIL A

Not to scale

# DETAILS
## ROADWAY LIGHTING POLE ANCHORAGE

NO SCALE

6 **REVISED PER ADDENDUM No. 6 DATED AUGUST 27, 2009**

ALL DIMENSIONS ARE IN MILLIMETERS UNLESS OTHERWISE SHOWN.

**E-174**

YBI STRUCTURES × March 3, 2008 ×

STATE OF CALIFORNIA - DEPARTMENT OF TRANSPORTATION — Caltrans

CONSULTANT FUNCTIONAL SUPERVISOR: BOB ZANDIPOUR

CALCULATED-DESIGNED BY: GAM — REVISED BY: JNB
CHECKED BY: TYL — DATE REVISED: 1/31/08

LAST REVISION 03-04-08 — DATE PLOTTED => 26-AUG-2009 — TIME PLOTTED => 05:18

| DIST. | COUNTY | ROUTE | KILOMETER POST TOTAL PROJECT | SHEET NO. | TOTAL SHEETS |
|---|---|---|---|---|---|
| 04 | SF | 80 | 12.7/13.2 | 790A | 806 |

Caltrans Metric

REGISTERED ENGINEER - CIVIL

6-23-08

PLANS APPROVAL DATE

REGISTERED PROFESSIONAL ENGINEER A.L. ELY No. 18880 Exp. 6-30-11 CIVIL STATE OF CALIFORNIA

The State of California or its officers or agents shall not be responsible for the accuracy or completeness of electronic copies of this plan sheet.

T.Y. LIN / MOFFATT & NICHOL
TWO HARRISON STREET
SAN FRANCISCO, CA 94105

To get to the Caltrans web site, go to: http://www.dot.ca.gov

6

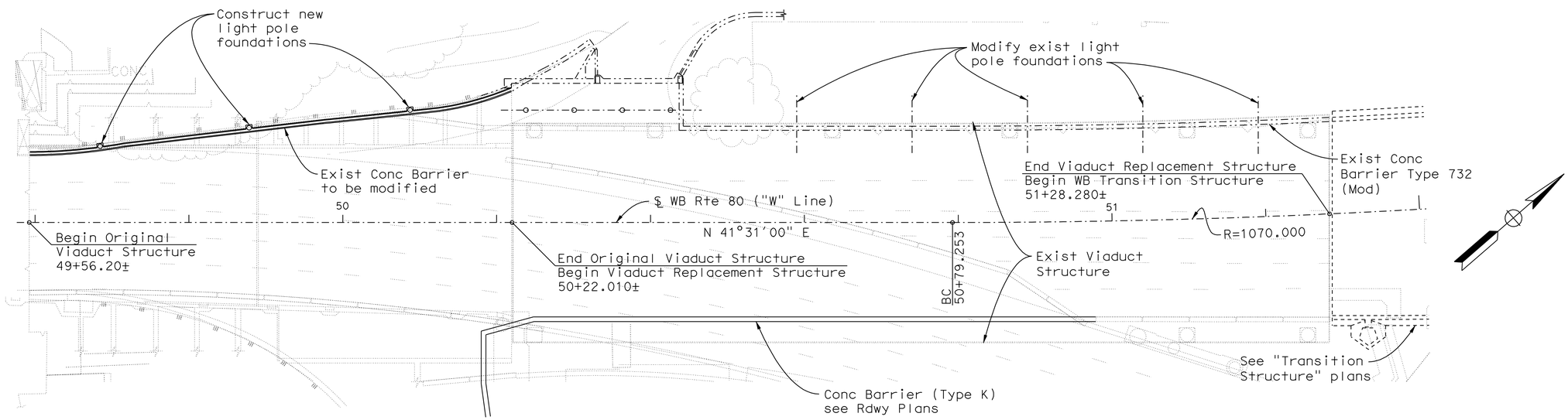


PLAN
1:300

INDEX TO BRIDGE PLANS:

1. GENERAL PLAN
2. CONCRETE BARRIER TYPE 732 (MOD)
3. LIGHT POLE FOUNDATION DETAILS

6 **ADDED PER ADDENDUM No. 6 DATED AUGUST 27, 2009**

ALL DIMENSIONS ARE IN METERS UNLESS OTHERWISE SHOWN

SAN FRANCISCO OAKLAND BAY BRIDGE
EAST SPAN SEISMIC SAFETY PROJECT

YBI VIADUCT STRUCTURE MODIFICATIONS

GENERAL PLAN

DESIGN OVERSIGHT
JUAN F. CARPIO
SIGN OFF DATE

| | BY | CHECKED |
|---|---|---|
| DESIGN | Birdy | Lee |
| DETAILS | Samson | Lee |
| QUANTITIES | | |

PREPARED FOR THE STATE OF CALIFORNIA DEPARTMENT OF TRANSPORTATION

Jal Birdy
PROJECT ENGINEER

BRIDGE NO. 34-0006
KILOMETER POST 12.8

CU 04251
EA 0120S1

DISREGARD PRINTS BEARING EARLIER REVISION DATES

REVISION DATES (PRELIMINARY STAGE ONLY) 7/14/09

SHEET 1 OF 3

Rev. Date: 5-18-98

ORIGINAL SCALE IN MILLIMETERS FOR REDUCED PLANS 0 10 20 30 40 50 60 70 80 90 100

FILE => gen-plan.add

July 14, 2009

USERNAME => friernard DATE PLOTTED => 26-AUG-2009 TIME PLOTTED => 05:19

| DIST. | COUNTY | ROUTE | KILOMETER POST TOTAL PROJECT | SHEET NO. | TOTAL SHEETS |
|---|---|---|---|---|---|
| 04 | SF | 80 | 12.7/13.2 | 790B | 806 |

Caltrans Metric

REGISTERED ENGINEER - CIVIL

6-23-08
PLANS APPROVAL DATE

REGISTERED PROFESSIONAL ENGINEER A.L. ELY No. 18880 Exp. 6-30-11 CIVIL STATE OF CALIFORNIA

The State of California or its officers or agents shall not be responsible for the accuracy or completeness of electronic copies of this plan sheet.

T.Y. LIN / MOFFATT & NICHOL
TWO HARRISON STREET
SAN FRANCISCO, CA 94105

To get to the Caltrans web site, go to: http://www.dot.ca.gov

6

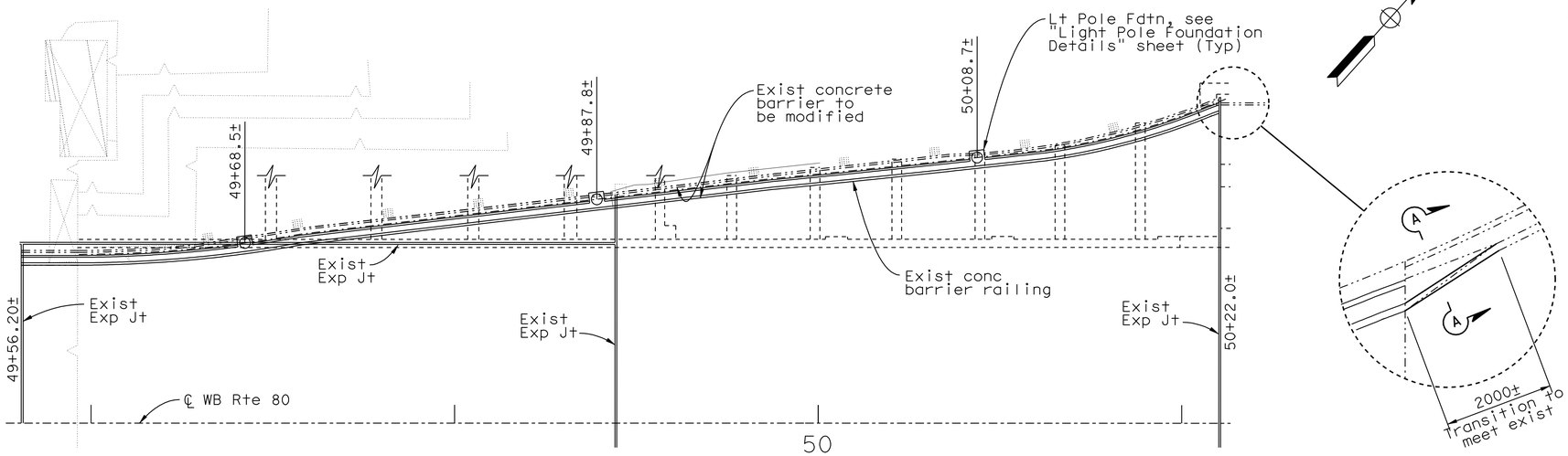


## PLAN
1:150

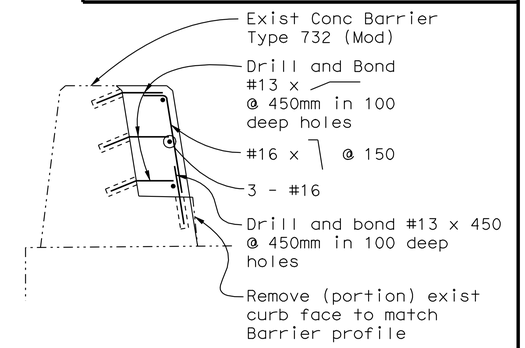


## SECTION A-A
No Scale

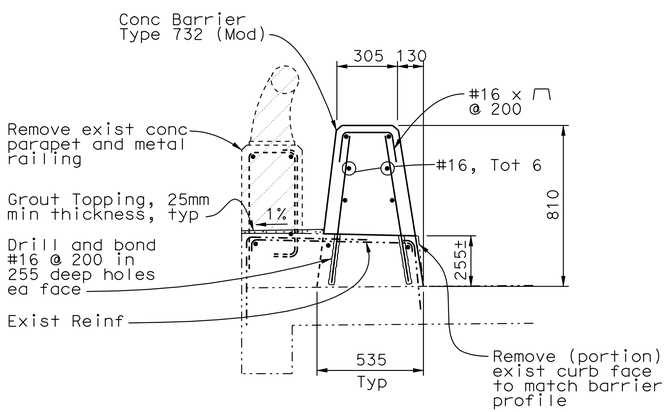


## TYPICAL SECTION STA 49+56.2± TO 49+92.5±
1:15

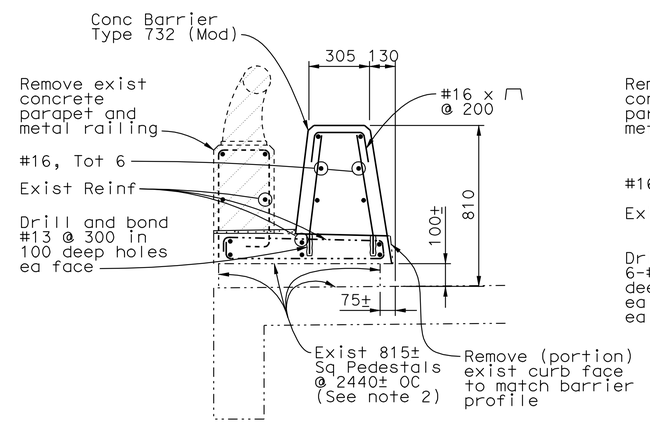


## SECTION BETWEEN PEDESTALS

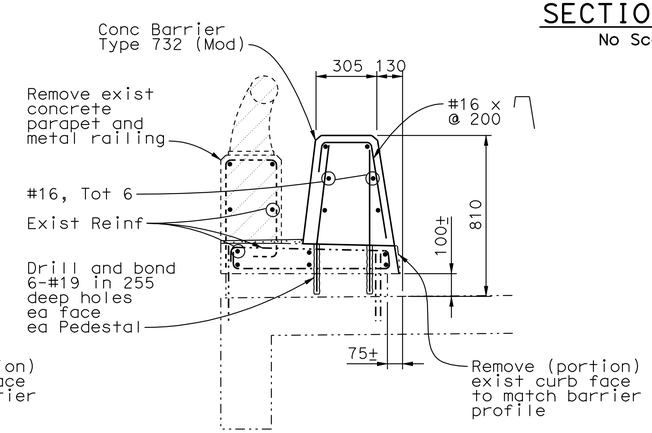


## SECTION AT PEDESTAL

## TYPICAL SECTIONS STA 49+92.5± TO 50+22.0±
1:15

Notes:

1. For details not shown see Std Plan B11-55. For details at Light Pole Fdtn, see "Light Pole Foundation Details" sheet.
2. Exist scuppers 1625 mm± x 100 mm± provided between existing pedestals.

6 **ADDED PER ADDENDUM No. 6 DATED AUGUST 27, 2009**

ALL DIMENSIONS ARE IN MILLIMETERS UNLESS OTHERWISE SHOWN

SAN FRANCISCO OAKLAND BAY BRIDGE
EAST SPAN SEISMIC SAFETY PROJECT

YBI VIADUCT STRUCTURE MODIFICATIONS

CONCRETE BARRIER TYPE 732 (MOD)

DESIGN OVERSIGHT
JUAN F. CARPIO
SIGN OFF DATE

Rev. Date: 5-18-98

| | BY | CHECKED |
|---|---|---|
| DESIGN | Birdy | Lee |
| DETAILS | Samson | Lee |
| QUANTITIES | | |

PREPARED FOR THE STATE OF CALIFORNIA DEPARTMENT OF TRANSPORTATION

Jal Birdy
PROJECT ENGINEER

BRIDGE NO. 34-0006
KILOMETER POST 12.8

CU 04251
EA 0120S1

ORIGINAL SCALE IN MILLIMETERS FOR REDUCED PLANS 0 10 20 30 40 50 60 70 80 90 100

DISREGARD PRINTS BEARING EARLIER REVISION DATES 7/14/09

REVISION DATES (PRELIMINARY STAGE ONLY)

SHEET 2 OF 3

FILE => conc-barrier-mod.add

July 14, 2009

USERNAME => trlenard DATE PLOTTED => 26-AUG-2009 TIME PLOTTED => 05:19

| DIST. | COUNTY | ROUTE | KILOMETER POST TOTAL PROJECT | SHEET NO. | TOTAL SHEETS |
|---|---|---|---|---|---|
| 04 | SF | 80 | 12.7/13.2 | 790C | 806 |

Caltrans Metric

REGISTERED ENGINEER - CIVIL

6-23-08

PLANS APPROVAL DATE

REGISTERED PROFESSIONAL ENGINEER A.L. ELY No. 18880 Exp. 6-30-11 CIVIL STATE OF CALIFORNIA

The State of California or its officers or agents shall not be responsible for the accuracy or completeness of electronic copies of this plan sheet.

T.Y. LIN / MOFFATT & NICHOL
TWO HARRISON STREET
SAN FRANCISCO, CA 94105

To get to the Caltrans web site, go to: http://www.dot.ca.gov

6

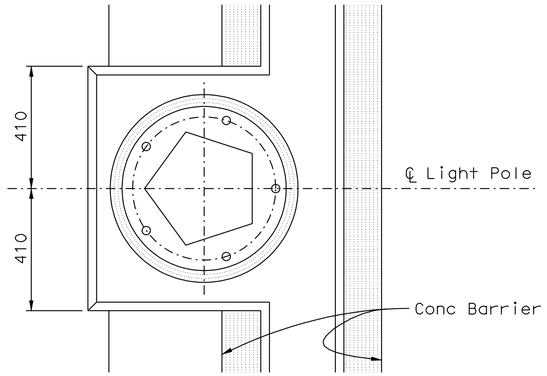


PLAN

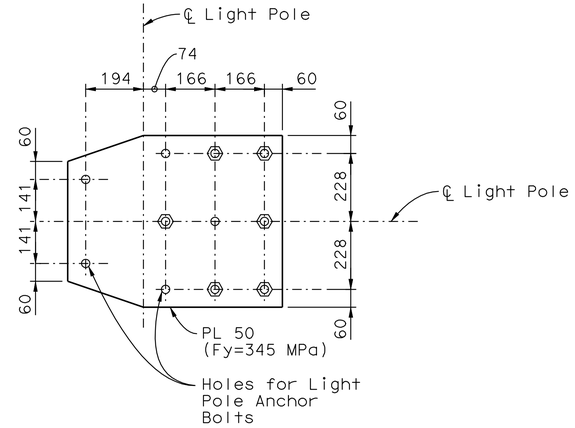


TRANSFER PLATE

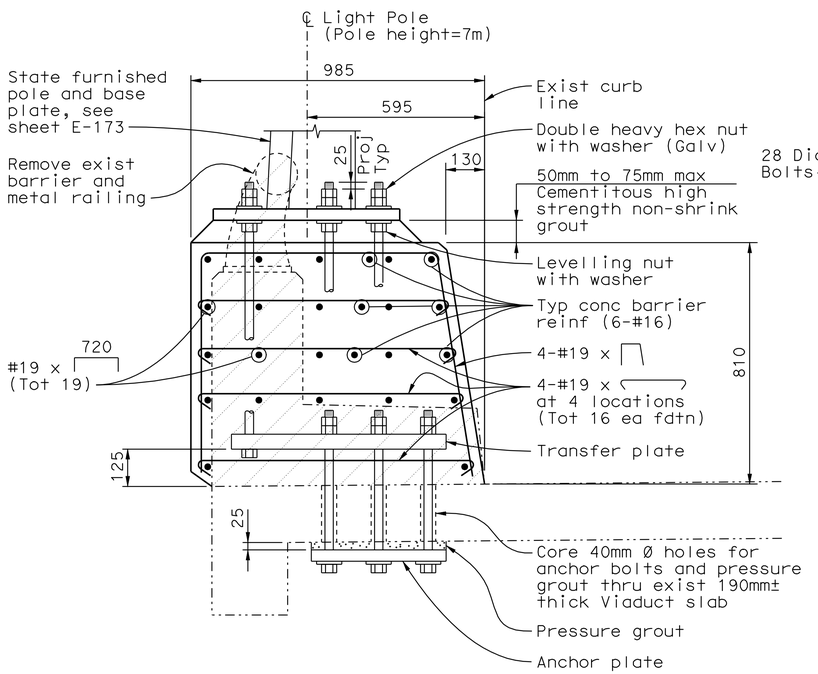


ELEVATION

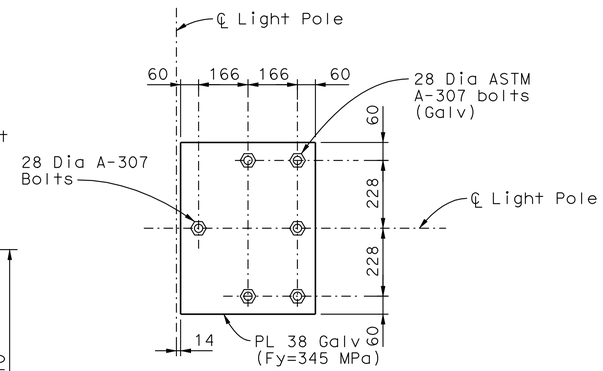


ANCHOR PLATE

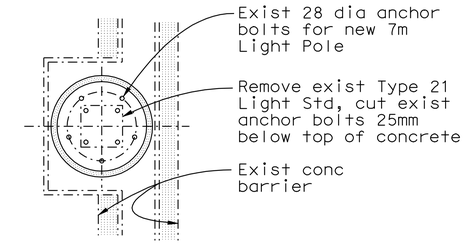


PLAN

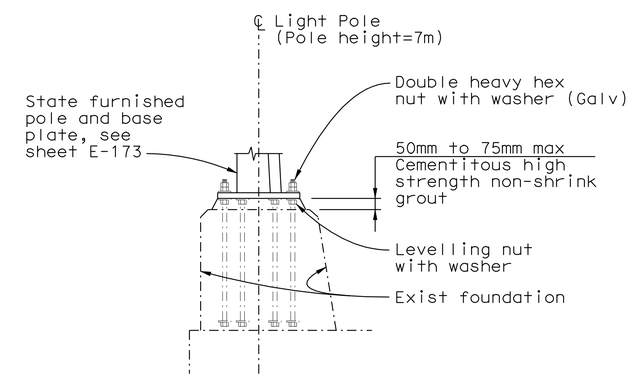


SECTION

## MODIFY EXISTING LIGHT POLE FOUNDATION AT VIADUCT REPLACEMENT STRUCTURE

(Light pole installation required at 5 locations along north side of Viaduct)

1:20

## LIGHT POLE FOUNDATION AT ORIGINAL VIADUCT STRUCTURE

(Required at 3 locations along north side of Viaduct)

1:10

6 **ADDED PER ADDENDUM No. 6 DATED AUGUST 27, 2009**

ALL DIMENSIONS ARE IN MILLIMETERS UNLESS OTHERWISE SHOWN

DESIGN OVERSIGHT
JUAN F. CARPIO
SIGN OFF DATE

| | BY | CHECKED |
|---|---|---|
| DESIGN | Birdy | Lee |
| DETAILS | Samson | Lee |
| QUANTITIES | | |

PREPARED FOR THE STATE OF CALIFORNIA DEPARTMENT OF TRANSPORTATION

Jal Birdy
PROJECT ENGINEER

BRIDGE NO. 34-0006
KILOMETER POST 12.8

SAN FRANCISCO OAKLAND BAY BRIDGE
EAST SPAN SEISMIC SAFETY PROJECT

YBI VIADUCT STRUCTURE MODIFICATIONS

LIGHT POLE FOUNDATION DETAILS

Rev. Date: 5-18-98

ORIGINAL SCALE IN MILLIMETERS FOR REDUCED PLANS 0 10 20 30 40 50 60 70 80 90 100

CU 04251
EA 0120S1

DISREGARD PRINTS BEARING EARLIER REVISION DATES

REVISION DATES (PRELIMINARY STAGE ONLY) 7/14/09

SHEET 3 OF 3

FILE => light-pole-fdn-det.add

July 14, 2009

USERNAME => trienard DATE PLOTTED => 26-AUG-2009 TIME PLOTTED => 05:19