Dist	COUNTY	ROUTE	POST MILES TOTAL PROJECT	SHEET No.	TOTAL SHEETS
02	Sha,Sis	5	Var	1	98

STATE OF CALIFORNIA

DEPARTMENT OF TRANSPORTATION

ACNHP-000C(397)E

PROJECT PLANS FOR CONSTRUCTION ON

STATE HIGHWAY

IN SHASTA AND SISKIYOU COUNTIES AT VARIOUS LOCATIONS

TO BE SUPPLEMENTED BY STANDARD PLANS DATED 2010

INDEX OF PLANS

SHEET No.	DESCRIPTION
1	TITLE AND LOCATION MAP
2-3	TYPICAL CROSS SECTIONS
4-16	LAYOUTS
17-24	CONSTRUCTION DETAILS
25-26	DRAINAGE DETAILS
27	CONSTRUCTION AREA SIGNS
28-29	STAGE CONSTRUCTION AND TRAFFIC HANDLING PLANS
30	TRAFFIC HANDLING PLAN
31-34	DETOUR PLAN
35-42	PAVEMENT DELINEATION PLAN
43	PAVEMENT DELINEATION QUANTITIES
44-45	SUMMARY OF QUANTITIES
46-49	ELECTRICAL PLANS
50-79	REVISED STANDARD PLANS

STRUCTURE PLANS

80-98 SHASTA BRIDGE PREVENTATIVE MAINTENANCE

THE STANDARD PLANS LIST APPLICABLE TO THIS CONTRACT IS INCLUDED IN THE NOTICE TO BIDDERS AND SPECIAL PROVISIONS BOOK.

LOCATIONS OF CONSTRUCTION

No.	COUNTY	ROUTE	PM	BRIDGE No.	BRIDGE NAME
1	Sha	5	R13.95	06-0124	HARTNELL AVENUE OC
2	Sha	5	R16.15	06-0101	HILLTOP DRIVE OC
3	Sha	5	R19.40	06-0155	OASIS ROAD OC
4	Sha	5	R21.00	06-0161	PINE GROVE OC
5	Sha	5	R22.41	06-0015	UNION SCHOOL Rd OC
6	Sha	5	R24.08	06-0154	MOUNTAIN GATE OC
7	Sha	5	R26.04	06-0162	FAWNDALE OC
8	Sha	5	R29.32	06-0130R	TURNTABLE BAY ROAD OC
9	Sha	5	R36.83	06-0160	GILMAN Rd OC
10	Sha	5	R39.05	06-0158	ANTLER SUMMIT OC
11	Sha	5	53.3	06-0179	GIBSON Rd OC
12	Sis	5	2.92	02-0097	SISKIYOU AVENUE OC
13	Sis	5	R62.92	02-0172	DITCH CREEK Rd OC
14	Sis	5	R65.52	02-0173	BAILEY HILL Rd OC

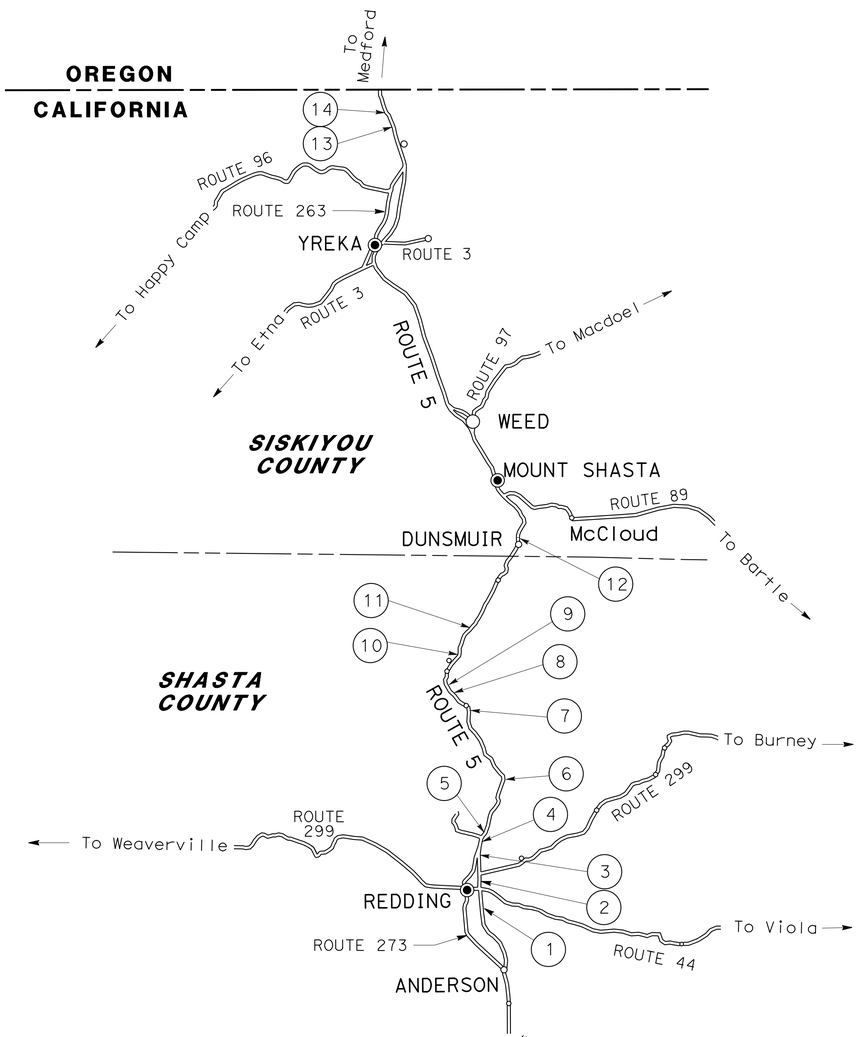

NO SCALE

LOCATION MAP

Robert Weber 01-30-15
PROJECT ENGINEER DATE
REGISTERED CIVIL ENGINEER

January 30, 2015
PLANS APPROVAL DATE

REGISTERED PROFESSIONAL ENGINEER ROBERT WEBER No. C62511 Exp. 9/30/15 CIVIL STATE OF CALIFORNIA

THE STATE OF CALIFORNIA OR ITS OFFICERS OR AGENTS SHALL NOT BE RESPONSIBLE FOR THE ACCURACY OR COMPLETENESS OF SCANNED COPIES OF THIS PLAN SHEET.

THE CONTRACTOR SHALL POSSESS THE CLASS (OR CLASSES) OF LICENSE AS SPECIFIED IN THE "NOTICE TO BIDDERS."

CONTRACT No.	02-4F6104
PROJECT ID	0213000013

PROJECT MANAGER ERIC AKANA
DESIGN ENGINEER STEVE TOPAL

P:\proj1\02\4F610_plans\pse\24f610ab001.dgn

LAST REVISION 02-12-15 DATE PLOTTED => 25-FEB-2015 TIME PLOTTED => 07:50

Dist	COUNTY	ROUTE	POST MILES TOTAL PROJECT	SHEET No.	TOTAL SHEETS
02	Sha,Sis	5	Var	2	98

Robert Weber 01-30-15
REGISTERED CIVIL ENGINEER DATE

01-30-15
PLANS APPROVAL DATE

REGISTERED PROFESSIONAL ENGINEER ROBERT WEBER No. C62511 Exp. 09-30-15 CIVIL STATE OF CALIFORNIA

THE STATE OF CALIFORNIA OR ITS OFFICERS OR AGENTS SHALL NOT BE RESPONSIBLE FOR THE ACCURACY OR COMPLETENESS OF SCANNED COPIES OF THIS PLAN SHEET.

NOTES:

1. DIMENSIONS OF THE PAVEMENT STRUCTURES (STRUCTURAL SECTIONS) ARE SUBJECT TO TOLERANCES SPECIFIED IN THE STANDARD SPECIFICATIONS.

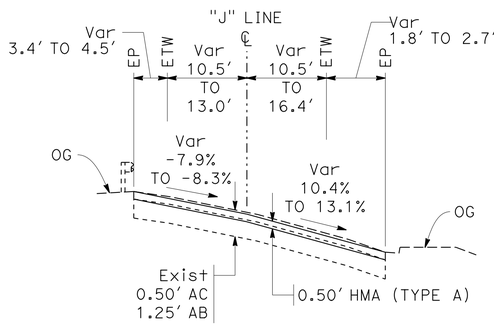

HILLTOP DRIVE
"J" 6+38.50 TO 7+38.50

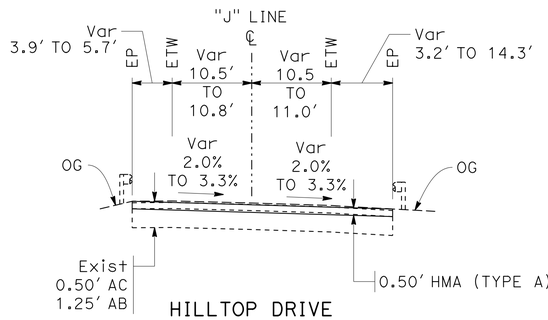

HILLTOP DRIVE
"J" 3+00.00 TO 4+00.00

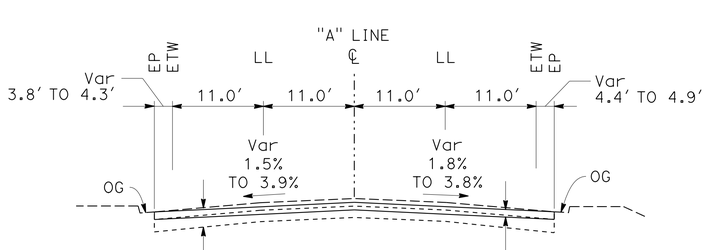

HARTNELL AVENUE
"A" 11+30.00 TO 12+30.00

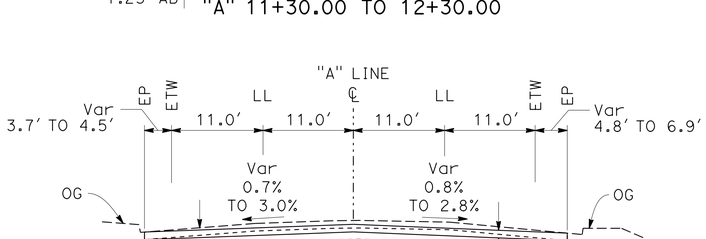

HARTNELL AVENUE
"A" 7+85.44 TO 8+85.44

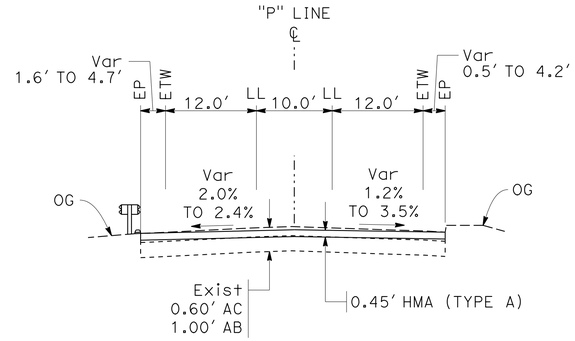

PINE GROVE AVENUE
"P" 11+00.00 TO 12+00.00

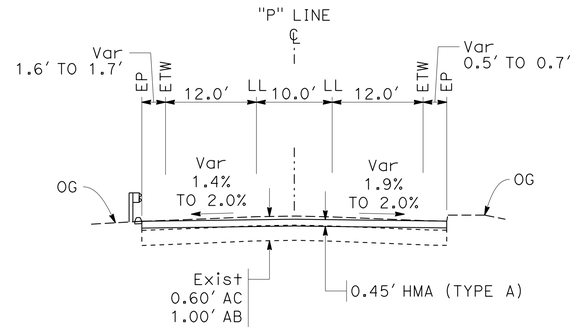

PINE GROVE AVENUE
"P" 8+00.00 TO 9+00.00

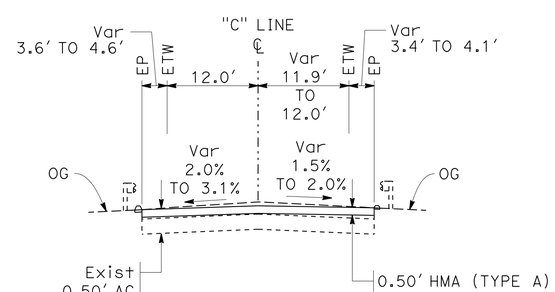

OASIS ROAD
"C" 11+00.00 TO 12+00.00

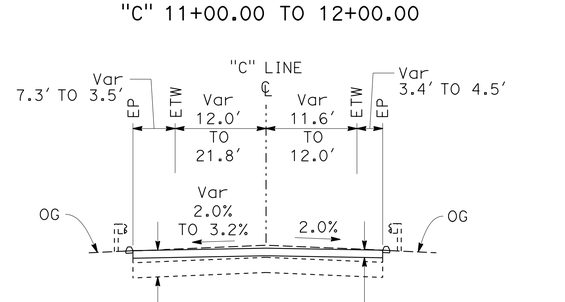

OASIS ROAD
"C" 8+00.00 TO 9+00.00

PAVEMENT CLIMATE REGIONS	LOCATION
INLAND VALLEY	1, 2, 3, 4, 5, 6, 7
LOW MOUNTAIN	8, 9, 10
HIGH MOUNTAIN	12
HIGH DESERT	13, 14

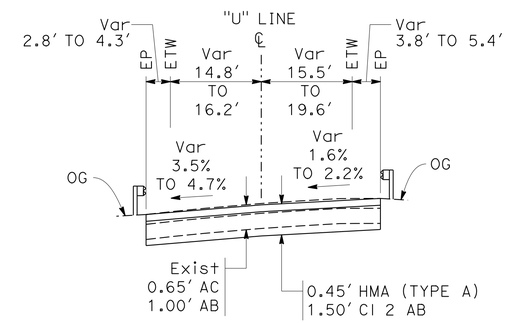

UNION SCHOOL ROAD
"U" 18+45.13 TO 19+45.13

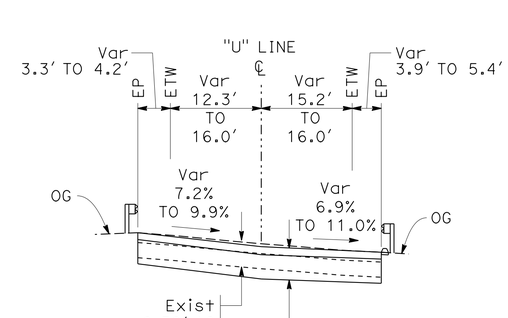

UNION SCHOOL ROAD
"U" 15+10.83 TO 16+10.83

TYPICAL CROSS SECTIONS

NO SCALE

X-1

REVISED BY | DATE REVISED
DAN BROWN | ROBERT WEBER
CALCULATED-DESIGNED BY | CHECKED BY
FUNCTIONAL SUPERVISOR: STEVE TOPAL

STATE OF CALIFORNIA - DEPARTMENT OF TRANSPORTATION
Caltrans®
DESIGN

P:\proj1\02\4F610_plans\pse\24f610ca001.dgn

LAST REVISION 12-10-14 | DATE PLOTTED => 25-FEB-2015 | TIME PLOTTED => 07:50

Dist	COUNTY	ROUTE	POST MILES TOTAL PROJECT	SHEET No.	TOTAL SHEETS
02	Sha,Sis	5	Var	3	98

Robert Weber 01-30-15
REGISTERED CIVIL ENGINEER DATE

01-30-15
PLANS APPROVAL DATE

REGISTERED PROFESSIONAL ENGINEER ROBERT WEBER No. C62511 Exp. 09-30-15 CIVIL STATE OF CALIFORNIA

THE STATE OF CALIFORNIA OR ITS OFFICERS OR AGENTS SHALL NOT BE RESPONSIBLE FOR THE ACCURACY OR COMPLETENESS OF SCANNED COPIES OF THIS PLAN SHEET.

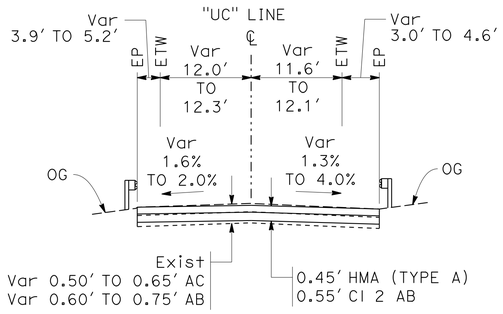

TURNTABLE BAY ROAD
"UC" 2+67.25 TO 3+53.42
"UC" 5+14.83 TO 5+98.00

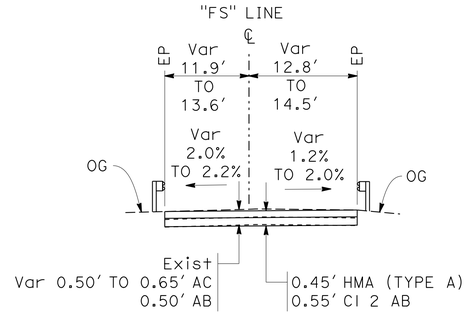

ANTLER SUMMIT
"FA" 41+01.76 TO 42+01.76

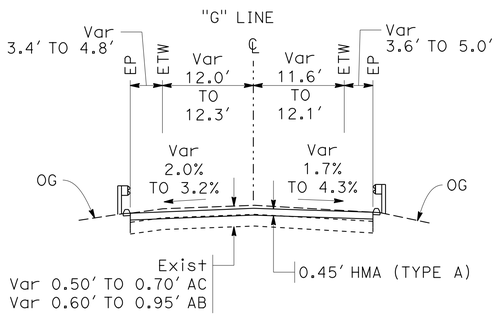

MOUNTIAN GATE
"G" 8+25.00 TO 9+00.00
"G" 11+00.00 TO 12+00.00

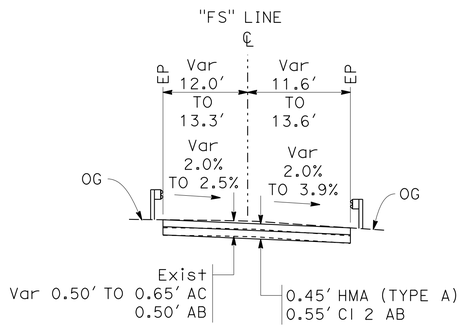

ANTLER SUMMIT
"FS" 38+07.37 TO 39+07.37

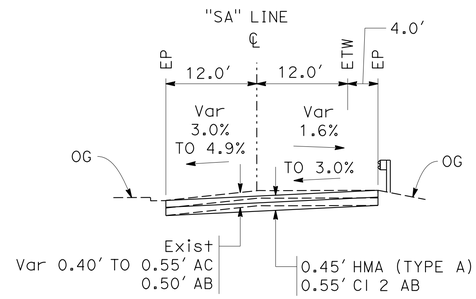

SISKIYOU AVENUE
"SA" 16+65.60 TO 17+65.60

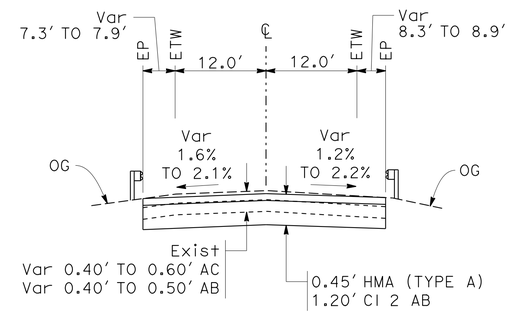

DITCH CREEK ROAD
"D" 12+28.04 TO 13+28.64
"D" 15+76.04 TO 16+76.04

BAILEY HILL ROAD
"L"7+52.93 TO 8+52.93
"L" 10+72.77 TO 11+72.77

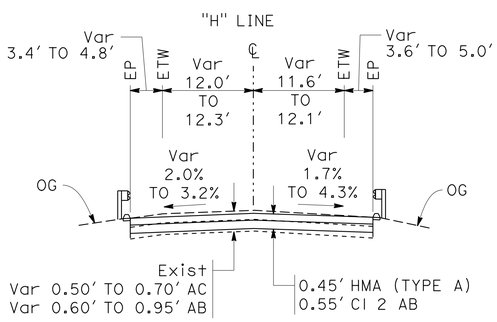

FAWNDALE
"H" 8+57.98 TO 9+07.98
"H" 10+97.03 TO 11+97.03

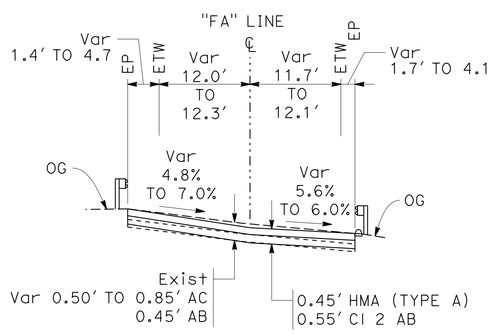

GILMAN ROAD
"FA" 7+82.63 TO 8+82.63
"FA" 10+88.00 TO 11+88.00

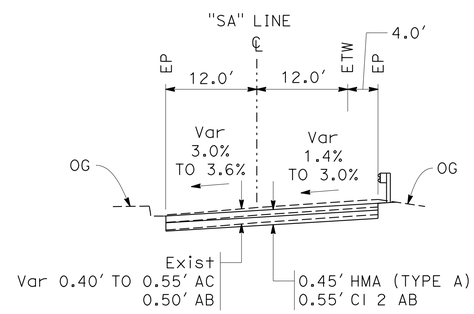

SISKIYOU AVENUE
"SA" 13+16.06 TO 14+16.06

TYPICAL CROSS SECTIONS

NO SCALE

X-2

REVISED BY	DATE REVISED
DAN BROWN	ROBERT WEBER

CALCULATED-DESIGNED BY	CHECKED BY

FUNCTIONAL SUPERVISOR: STEVE TOPAL

STATE OF CALIFORNIA - DEPARTMENT OF TRANSPORTATION
Caltrans
DESIGN

P:\proj1\02\4F610_plans\pse\24f610ca002.dgn

LAST REVISION 12-29-14 | DATE PLOTTED => 25-FEB-2015 | TIME PLOTTED => 07:50

Dist	COUNTY	ROUTE	POST MILES TOTAL PROJECT	SHEET No.	TOTAL SHEETS
02	Sha,Sis	5	Var	4	98

Robert Weber 01-30-15
REGISTERED CIVIL ENGINEER DATE

01-30-15
PLANS APPROVAL DATE

REGISTERED PROFESSIONAL ENGINEER ROBERT WEBER No. C62511 Exp. 09-30-15 CIVIL STATE OF CALIFORNIA

THE STATE OF CALIFORNIA OR ITS OFFICERS OR AGENTS SHALL NOT BE RESPONSIBLE FOR THE ACCURACY OR COMPLETENESS OF SCANNED COPIES OF THIS PLAN SHEET.

NOTES:

1. FOR ACCURATE RIGHT OF WAY DATA, CONTACT RIGHT OF WAY ENGINEERING AT THE DISTRICT OFFICE.
2. CONFORMS TO MATCH EXISTING PAVEMENT AT BEGINNING AND END.

LEGEND:

- CONFORM
- CPAC HMA (TYPE A)
- PLACE HMA (Misc AREA)
- RSP

ABBREVIATIONS:

AFTS	ALTERNATIVE FLARED TERMINAL SYSTEM
AITS	ALTERNATIVE IN-LINE TERMINAL SYSTEM
CPAC	COLD PLANE ASPHALT CONCRETE PAVEMENT
OSD	OVERSIDE DRAIN
TBM	TEMPORARY BENCH MARK
TRWB	TRANSITION RAILING (TYPE WB SPECIAL)
TRLS	TRANSITION RAILING (LOW SPEED)

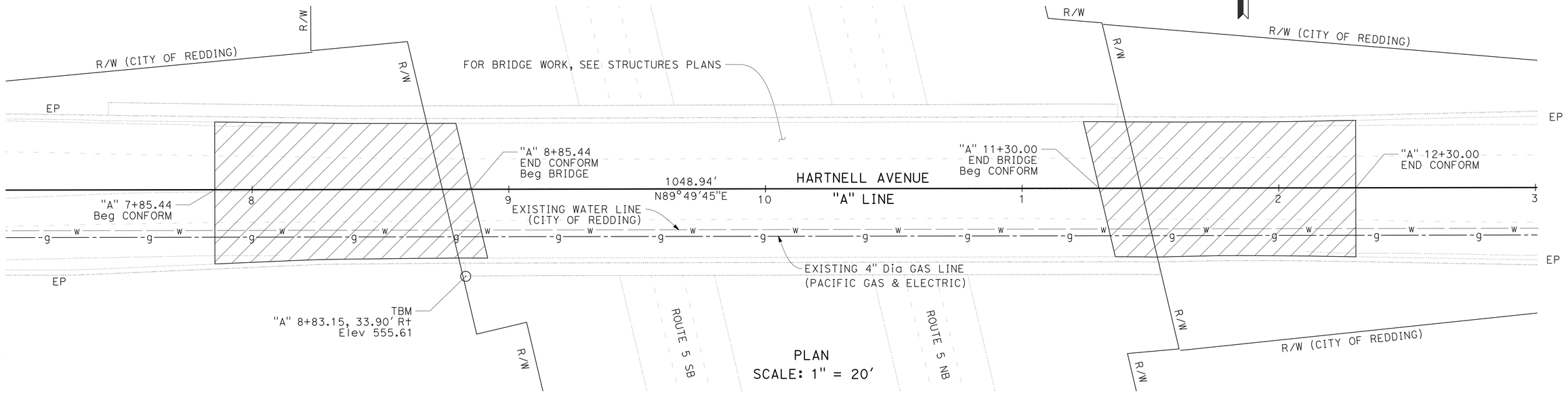

PLAN
SCALE: 1" = 20'

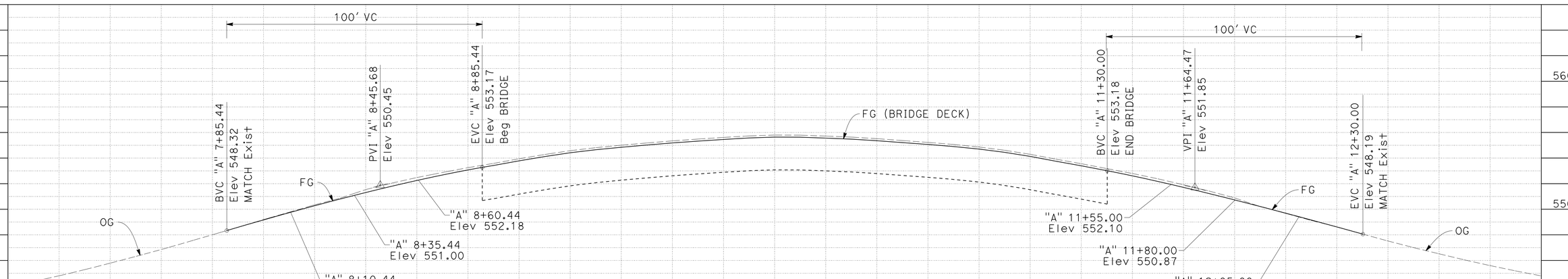

PROFILE
"A" LINE
HARTNELL AVENUE OVERCROSSING
Br No. 06-0124, Sha, ROUTE 5, PM R13.95
SCALE: 1" = 20' Horiz
1" = 4' Vert

LAYOUT
SCALE: AS SHOWN **L-1**

STATION	8+00	9+00	10+00	11+00	12+00	TOTAL
CY Exc						
CY Emb						

REVISED BY | DATE REVISED
DAN BROWN | ROBERT WEBER
CALCULATED-DESIGNED BY | CHECKED BY
FUNCTIONAL SUPERVISOR: STEVE TOPAL

STATE OF CALIFORNIA - DEPARTMENT OF TRANSPORTATION
Caltrans
DESIGN

P:\proj1\02\4F610_plans\pse\24f610ea001.dgn

LAST REVISION 12-29-14 | DATE PLOTTED => 25-FEB-2015 | TIME PLOTTED => 07:50

Dist	COUNTY	ROUTE	POST MILES TOTAL PROJECT	SHEET No.	TOTAL SHEETS
02	Sha,Sis	5	Var	5	98

Robert Weber 01-30-15
REGISTERED CIVIL ENGINEER DATE

01-30-15
PLANS APPROVAL DATE

REGISTERED PROFESSIONAL ENGINEER ROBERT WEBER No. C62511 Exp. 09-30-15 CIVIL STATE OF CALIFORNIA

THE STATE OF CALIFORNIA OR ITS OFFICERS OR AGENTS SHALL NOT BE RESPONSIBLE FOR THE ACCURACY OR COMPLETENESS OF SCANNED COPIES OF THIS PLAN SHEET.

NOTES:

1. FOR ACCURATE RIGHT OF WAY DATA, CONTACT RIGHT OF WAY ENGINEERING AT THE DISTRICT OFFICE.

CURVE DATA

No.	R	Δ	T	L
1	495′	90°37′04"	500.37′	782.88′

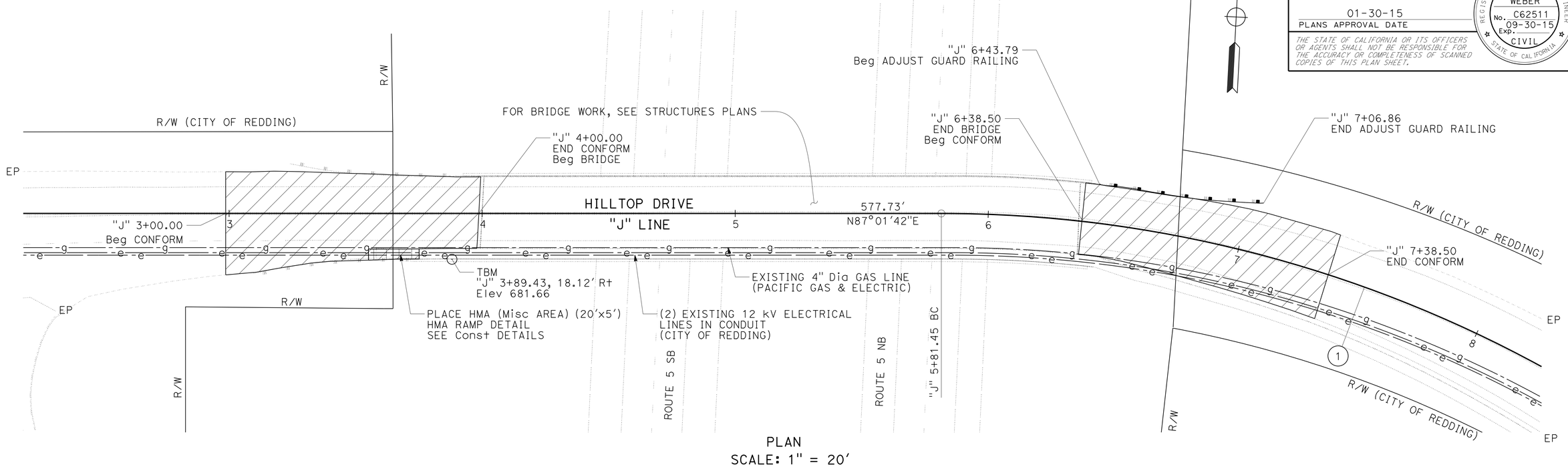

PLAN
SCALE: 1" = 20′

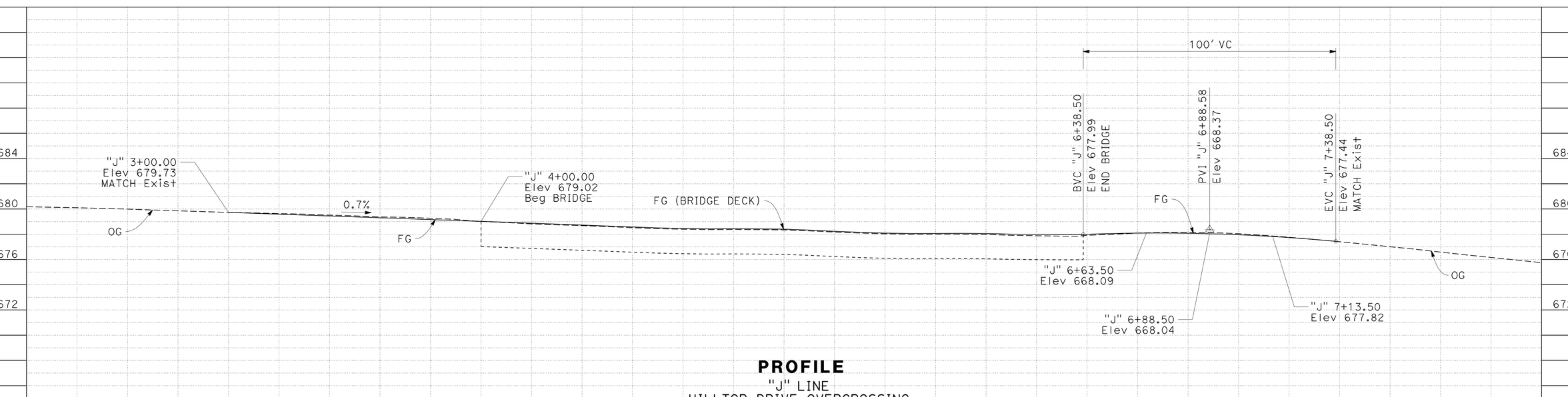

PROFILE
"J" LINE
HILLTOP DRIVE OVERCROSSING
Br No. 06-0101, Sha, ROUTE 5, PM R16.15
SCALE: 1" = 20′ Horiz
1" = 4′ Vert

LAYOUT
SCALE: AS SHOWN **L-2**

STATION	3+00	4+00	5+00	6+00	7+00	8+00	TOTAL
CY Exc							
CY Emb							

REVISED BY | DATE REVISED
DAN BROWN | ROBERT WEBER
CALCULATED-DESIGNED BY | CHECKED BY
FUNCTIONAL SUPERVISOR: STEVE TOPAL

STATE OF CALIFORNIA - DEPARTMENT OF TRANSPORTATION
Caltrans DESIGN

P:\proj1\02\4F610_plans\pse\24f610ea002.dgn

LAST REVISION 12-29-14 | DATE PLOTTED => 25-FEB-2015 | TIME PLOTTED => 07:50

Dist	COUNTY	ROUTE	POST MILES TOTAL PROJECT	SHEET No.	TOTAL SHEETS
02	Sha,Sis	5	Var	6	98

Robert Weber 01-30-15
REGISTERED CIVIL ENGINEER DATE

01-30-15
PLANS APPROVAL DATE

REGISTERED PROFESSIONAL ENGINEER ROBERT WEBER No. C62511 Exp. 09-30-15 CIVIL STATE OF CALIFORNIA

THE STATE OF CALIFORNIA OR ITS OFFICERS OR AGENTS SHALL NOT BE RESPONSIBLE FOR THE ACCURACY OR COMPLETENESS OF SCANNED COPIES OF THIS PLAN SHEET.

NOTES:

1. FOR ACCURATE RIGHT OF WAY DATA, CONTACT RIGHT OF WAY ENGINEERING AT THE DISTRICT OFFICE.
2. EXISTING UTILITY FACILITES ARE NOT SHOWN ON THESE PLANS.

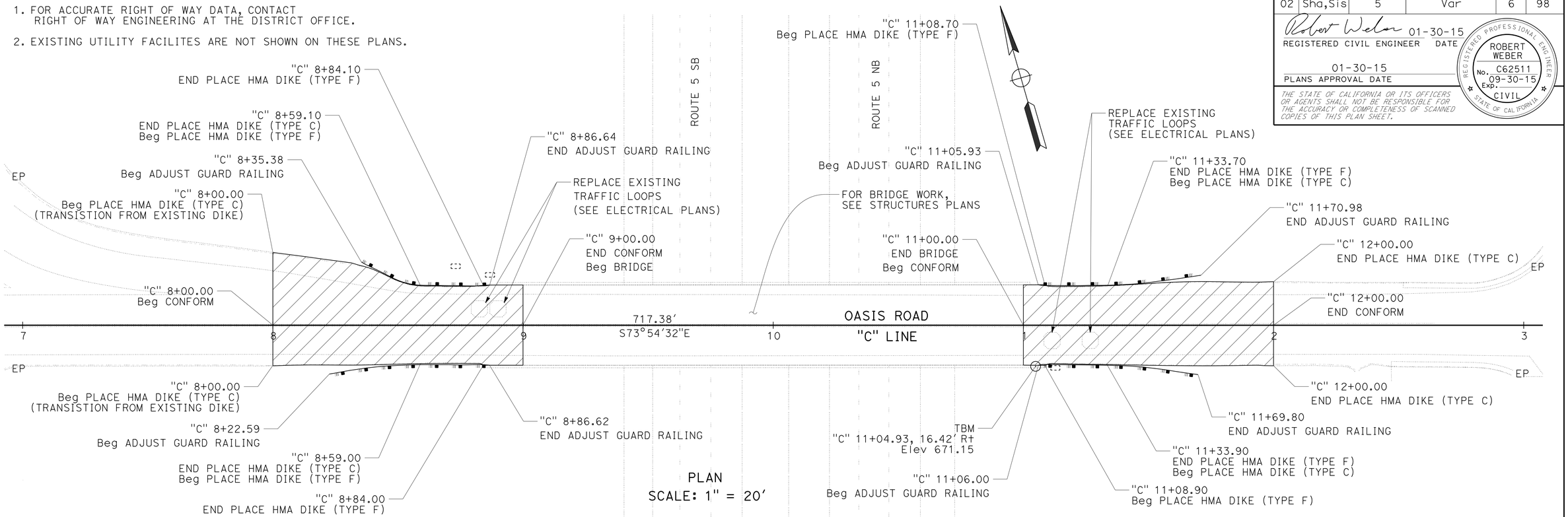

PLAN
SCALE: 1" = 20'

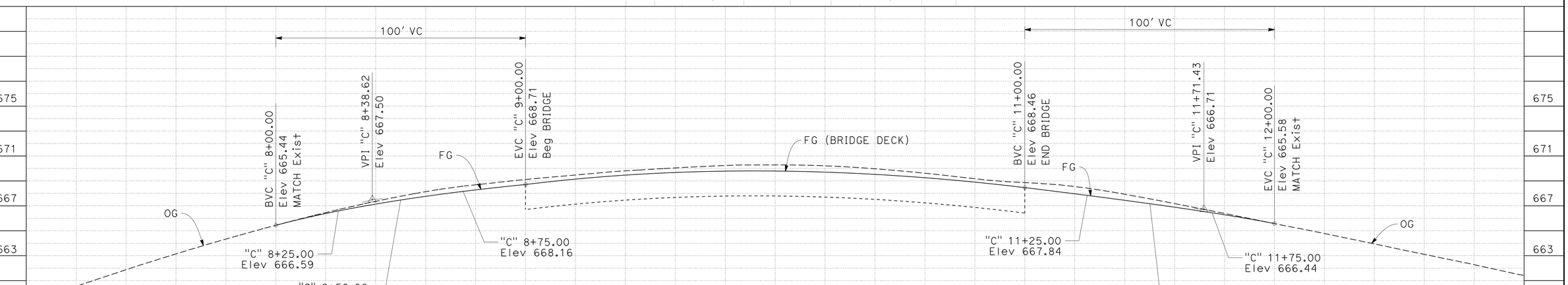

PROFILE
"C" LINE
OASIS ROAD OVERCROSSING
Br No. 06-0155, Sha, ROUTE 5, PM R19.40

LAYOUT
SCALE: AS SHOWN **L-3**

STATION	8+00	9+00	10+00	11+00	12+00	TOTAL
CY Exc						
CY Emb						

REVISED BY | DATE REVISED
DAN BROWN | ROBERT WEBER
CALCULATED-DESIGNED BY | CHECKED BY
FUNCTIONAL SUPERVISOR: STEVE TOPAL

STATE OF CALIFORNIA - DEPARTMENT OF TRANSPORTATION
Caltrans DESIGN

P:\proj1\02\4F610_plans\pse\24f610ea003.dgn

LAST REVISION 08-01-14 | DATE PLOTTED => 25-FEB-2015 | TIME PLOTTED => 07:50

Dist	COUNTY	ROUTE	POST MILES TOTAL PROJECT	SHEET No.	TOTAL SHEETS
02	Sha,Sis	5	Var	7	98

Robert Weber 01-30-15
REGISTERED CIVIL ENGINEER DATE

01-30-15
PLANS APPROVAL DATE

REGISTERED PROFESSIONAL ENGINEER ROBERT WEBER No. C62511 Exp. 09-30-15 CIVIL STATE OF CALIFORNIA

THE STATE OF CALIFORNIA OR ITS OFFICERS OR AGENTS SHALL NOT BE RESPONSIBLE FOR THE ACCURACY OR COMPLETENESS OF SCANNED COPIES OF THIS PLAN SHEET.

NOTES:

1. FOR ACCURATE RIGHT OF WAY DATA, CONTACT RIGHT OF WAY ENGINEERING AT THE DISTRICT OFFICE.
2. ADJUST FLUME DOWNDRAIN TO FLOWLINE.
3. EXISTING UTILITY FACILITES ARE NOT SHOWN ON THESE PLANS.

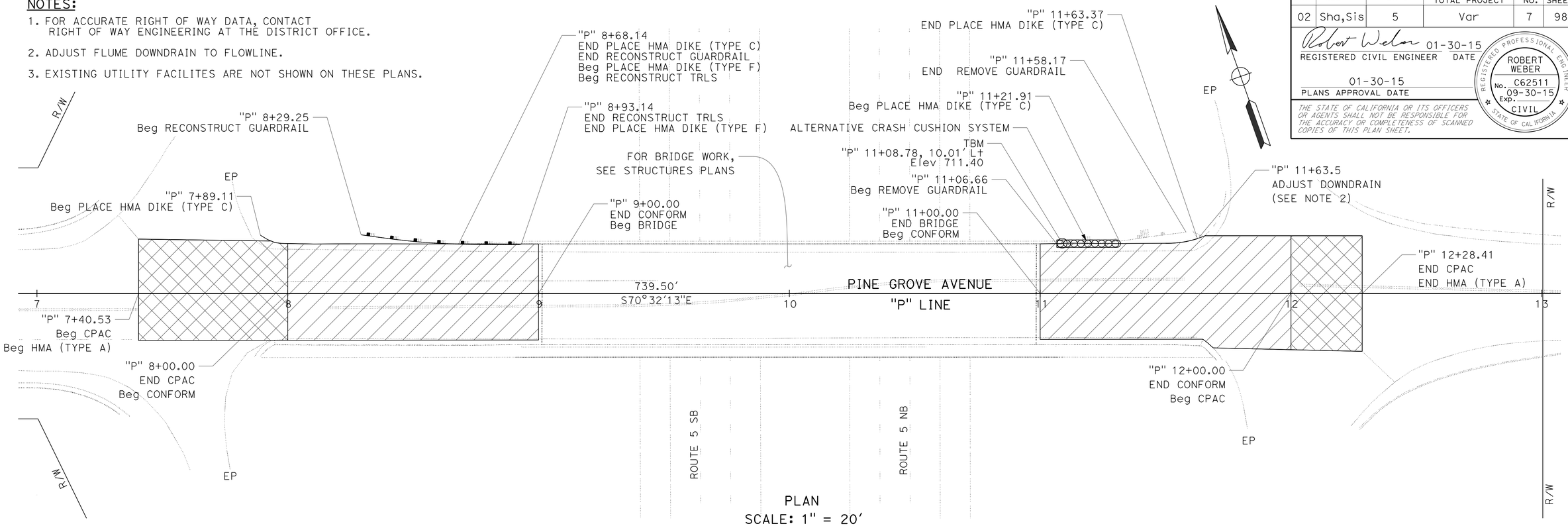

PLAN
SCALE: 1" = 20'

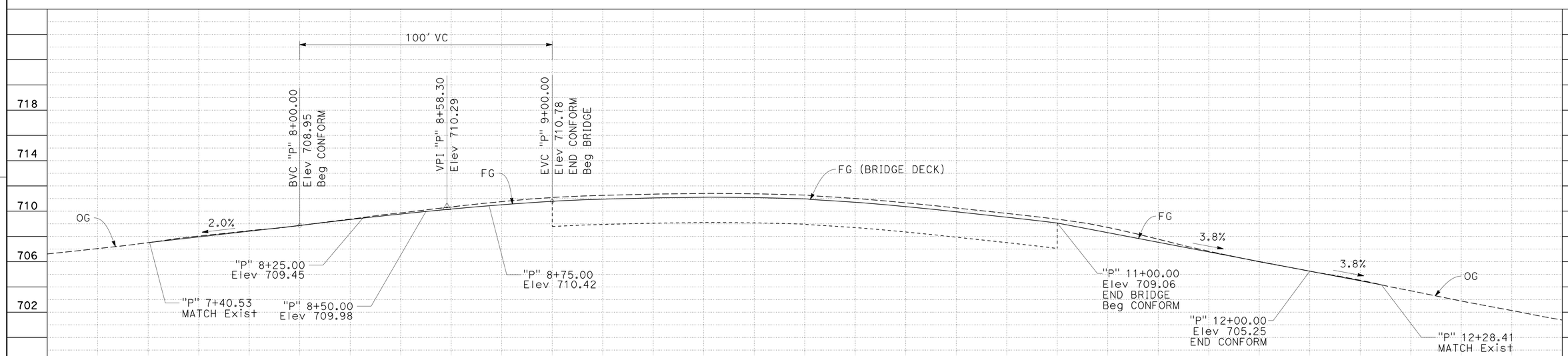

PROFILE
"P" LINE
PINE GROVE OVERCROSSING
Br No. 06-0161, Sha, ROUTE 5, PM R21.00
SCALE: 1" = 20' Horiz
1" = 4' Vert

LAYOUT
SCALE: AS SHOWN **L-4**

STATION	8+00	9+00	10+00	11+00	12+00	TOTAL
CY Exc						
CY Emb						

REVISED BY | DATE REVISED
DAN BROWN | ROBERT WEBER
CALCULATED-DESIGNED BY | CHECKED BY
FUNCTIONAL SUPERVISOR: STEVE TOPAL

STATE OF CALIFORNIA - DEPARTMENT OF TRANSPORTATION
Caltrans
DESIGN

P:\proj1\02\4F610_plans\pse\24f610ea004.dgn

LAST REVISION 09-05-14 | DATE PLOTTED => 25-FEB-2015 | TIME PLOTTED => 07:50

Dist	COUNTY	ROUTE	POST MILES TOTAL PROJECT	SHEET No.	TOTAL SHEETS
02	Sha,Sis	5	Var	8	98

Robert Weber 01-30-15
REGISTERED CIVIL ENGINEER DATE

01-30-15
PLANS APPROVAL DATE

REGISTERED PROFESSIONAL ENGINEER ROBERT WEBER No. C62511 Exp. 09-30-15 CIVIL STATE OF CALIFORNIA

THE STATE OF CALIFORNIA OR ITS OFFICERS OR AGENTS SHALL NOT BE RESPONSIBLE FOR THE ACCURACY OR COMPLETENESS OF SCANNED COPIES OF THIS PLAN SHEET.

NOTES:

1. FOR ACCURATE RIGHT OF WAY DATA, CONTACT RIGHT OF WAY ENGINEERING AT THE DISTRICT OFFICE.
2. EXISTING UTILITY FACILITES ARE NOT SHOWN ON THESE PLANS.

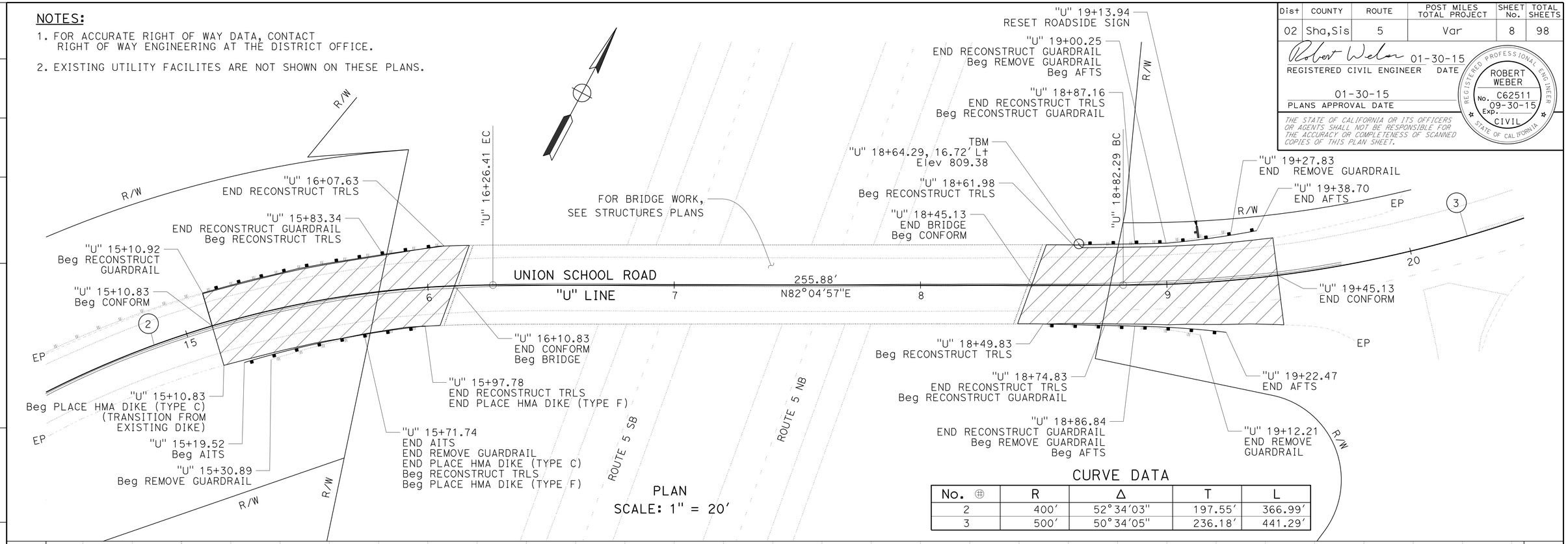

PLAN
SCALE: 1" = 20'

CURVE DATA

No. ⊕	R	Δ	T	L
2	400'	52°34'03"	197.55'	366.99'
3	500'	50°34'05"	236.18'	441.29'

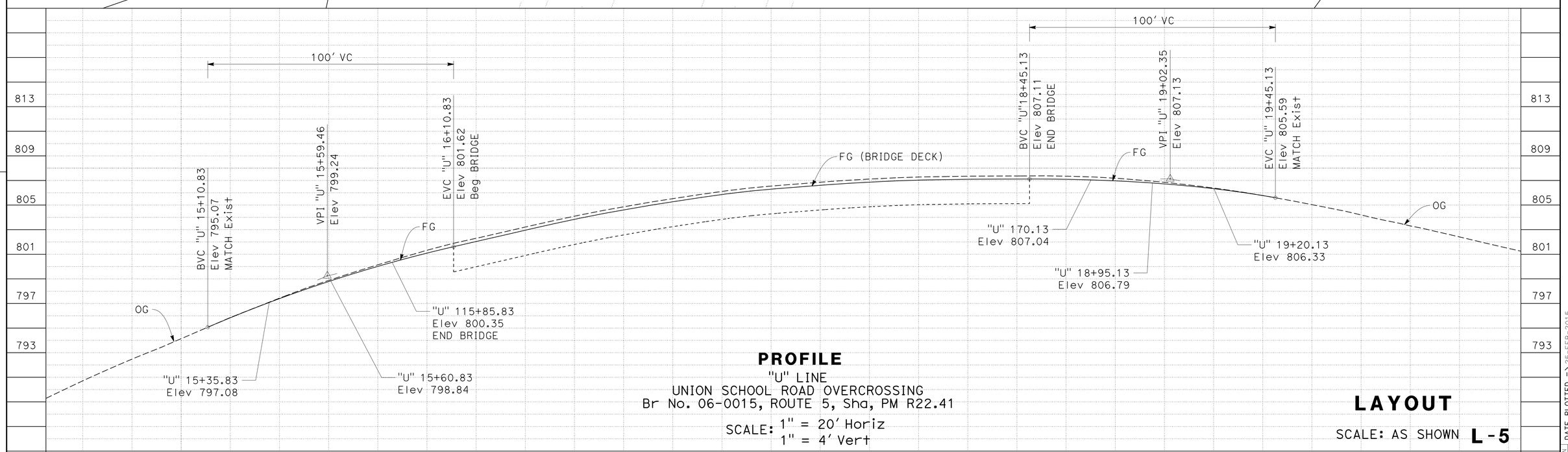

PROFILE

"U" LINE
UNION SCHOOL ROAD OVERCROSSING
Br No. 06-0015, ROUTE 5, Sha, PM R22.41

SCALE: 1" = 20' Horiz
1" = 4' Vert

LAYOUT

SCALE: AS SHOWN **L-5**

REVISED BY	DATE REVISED
DAN BROWN	ROBERT WEBER

CALCULATED-DESIGNED BY | CHECKED BY

FUNCTIONAL SUPERVISOR: STEVE TOPAL

STATE OF CALIFORNIA - DEPARTMENT OF TRANSPORTATION
Caltrans
DESIGN

P:\proj1\02\4F610_plans\pse\24f610ea005.dgn

LAST REVISION 12-29-14 | DATE PLOTTED => 25-FEB-2015 | TIME PLOTTED => 07:50

Dist	COUNTY	ROUTE	POST MILES TOTAL PROJECT	SHEET No.	TOTAL SHEETS
02	Sha,Sis	5	Var	9	98

Robert Weber 01-30-15
REGISTERED CIVIL ENGINEER DATE

01-30-15
PLANS APPROVAL DATE

REGISTERED PROFESSIONAL ENGINEER ROBERT WEBER No. C62511 Exp. 09-30-15 CIVIL STATE OF CALIFORNIA

THE STATE OF CALIFORNIA OR ITS OFFICERS OR AGENTS SHALL NOT BE RESPONSIBLE FOR THE ACCURACY OR COMPLETENESS OF SCANNED COPIES OF THIS PLAN SHEET.

NOTES:

1. FOR ACCURATE RIGHT OF WAY DATA, CONTACT RIGHT OF WAY ENGINEERING AT THE DISTRICT OFFICE.
2. ADJUST FLUME DOWNDRAIN TO FLOWLINE.
3. EXISTING UTILITY FACILITES ARE NOT SHOWN ON THESE PLANS.

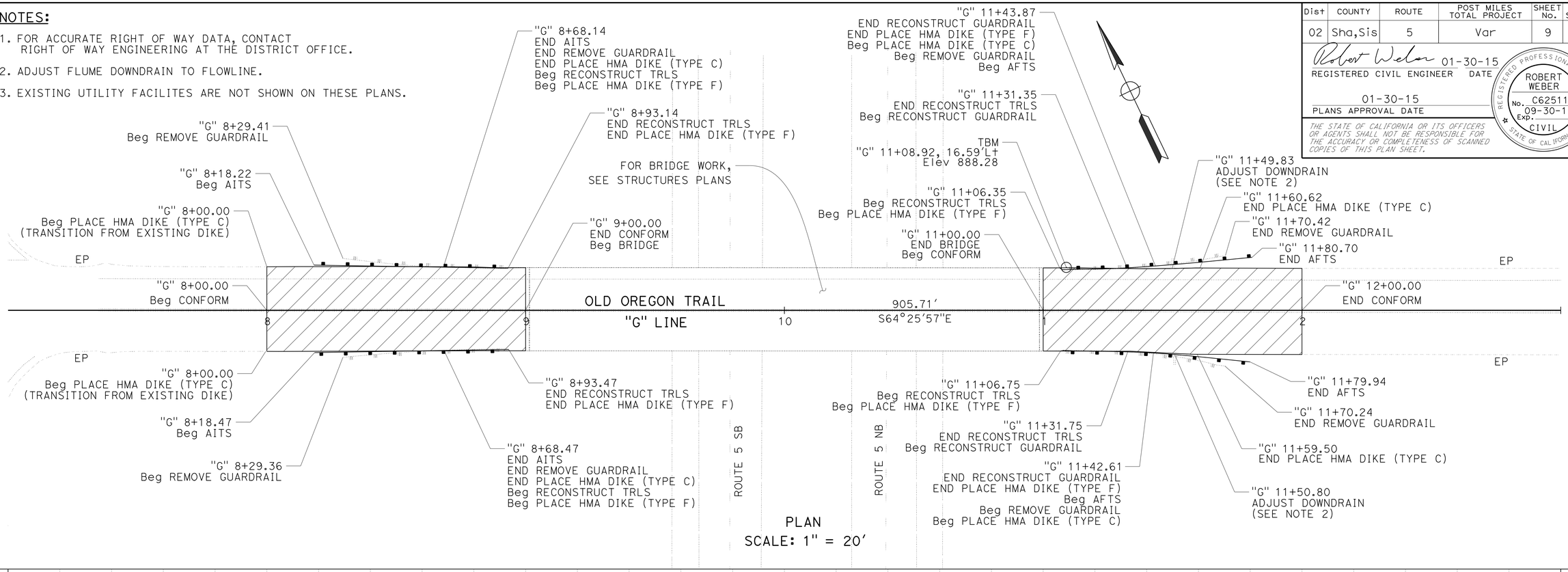

PLAN
SCALE: 1" = 20'

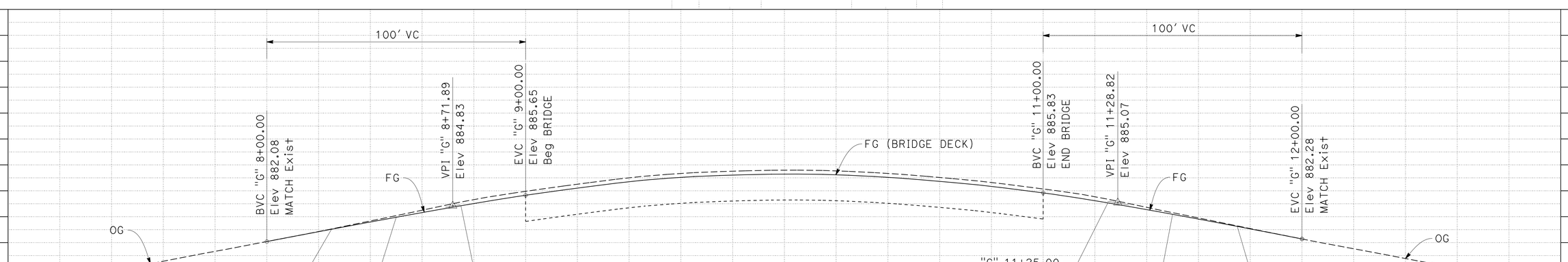

PROFILE
"G" LINE
MOUNTAIN GATE OVERCROSSING
Br No. 06-0154, Sha, ROUTE 5, PM R24.08
SCALE: 1" = 20' Horiz
1" = 4' Vert

LAYOUT
SCALE: AS SHOWN **L-6**

STATION		8+00	9+00	10+00	11+00	12+00	TOTAL
CY	Exc						
	Emb						

STATE OF CALIFORNIA - DEPARTMENT OF TRANSPORTATION
Caltrans DESIGN
FUNCTIONAL SUPERVISOR: STEVE TOPAL
CALCULATED-DESIGNED BY: DAN BROWN
CHECKED BY: ROBERT WEBER
REVISED BY / DATE REVISED

P:\proj1\02\4F610_plans\pse\24f610ea006.dgn

LAST REVISION 09-05-14
DATE PLOTTED => 25-FEB-2015
TIME PLOTTED => 07:50

Dist	COUNTY	ROUTE	POST MILES TOTAL PROJECT	SHEET No.	TOTAL SHEETS
02	Sha,Sis	5	Var	10	98

Robert Weber 01-30-15
REGISTERED CIVIL ENGINEER DATE

01-30-15
PLANS APPROVAL DATE

REGISTERED PROFESSIONAL ENGINEER ROBERT WEBER No. C62511 Exp. 09-30-15 CIVIL STATE OF CALIFORNIA

THE STATE OF CALIFORNIA OR ITS OFFICERS OR AGENTS SHALL NOT BE RESPONSIBLE FOR THE ACCURACY OR COMPLETENESS OF SCANNED COPIES OF THIS PLAN SHEET.

NOTES:

1. FOR ACCURATE RIGHT OF WAY DATA, CONTACT RIGHT OF WAY ENGINEERING AT THE DISTRICT OFFICE.
2. EXISTING UTILITY FACILITES ARE NOT SHOWN ON THESE PLANS.

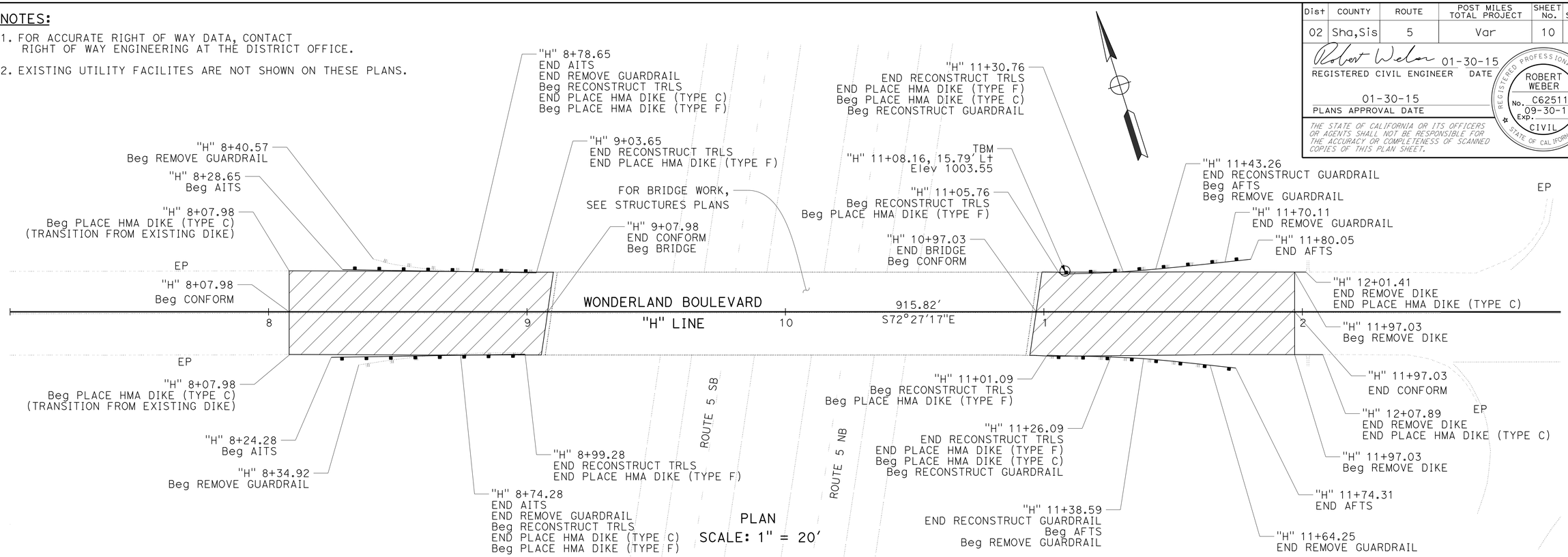

PROFILE
"H" LINE
FAWNDALE OVERCROSSING
Br No. 06-0162, Sha, ROUTE 5, PM R26.04
SCALE: 1" = 20' Horiz
1" = 4' Vert

LAYOUT
SCALE: AS SHOWN **L-7**

REVISED BY	DATE REVISED
DAN BROWN	ROBERT WEBER
CALCULATED-DESIGNED BY	CHECKED BY
FUNCTIONAL SUPERVISOR	STEVE TOPAL

STATE OF CALIFORNIA - DEPARTMENT OF TRANSPORTATION
Caltrans
DESIGN

P:\proj1\02\4F610_plans\pse\24f610ea007.dgn

LAST REVISION 12-29-14
DATE PLOTTED => 25-FEB-2015
TIME PLOTTED => 07:50

Dist	COUNTY	ROUTE	POST MILES TOTAL PROJECT	SHEET No.	TOTAL SHEETS
02	Sha,Sis	5	Var	11	98

Robert Weber 01-30-15
REGISTERED CIVIL ENGINEER DATE

01-30-15
PLANS APPROVAL DATE

REGISTERED PROFESSIONAL ENGINEER ROBERT WEBER No. C62511 Exp. 09-30-15 CIVIL STATE OF CALIFORNIA

THE STATE OF CALIFORNIA OR ITS OFFICERS OR AGENTS SHALL NOT BE RESPONSIBLE FOR THE ACCURACY OR COMPLETENESS OF SCANNED COPIES OF THIS PLAN SHEET.

NOTES:

1. FOR ACCURATE RIGHT OF WAY DATA, CONTACT RIGHT OF WAY ENGINEERING AT THE DISTRICT OFFICE.
2. ADJUST DOWNDRAIN TO FLOWLINE.
3. EXISTING UTILITY FACILITES ARE NOT SHOWN ON THESE PLANS.

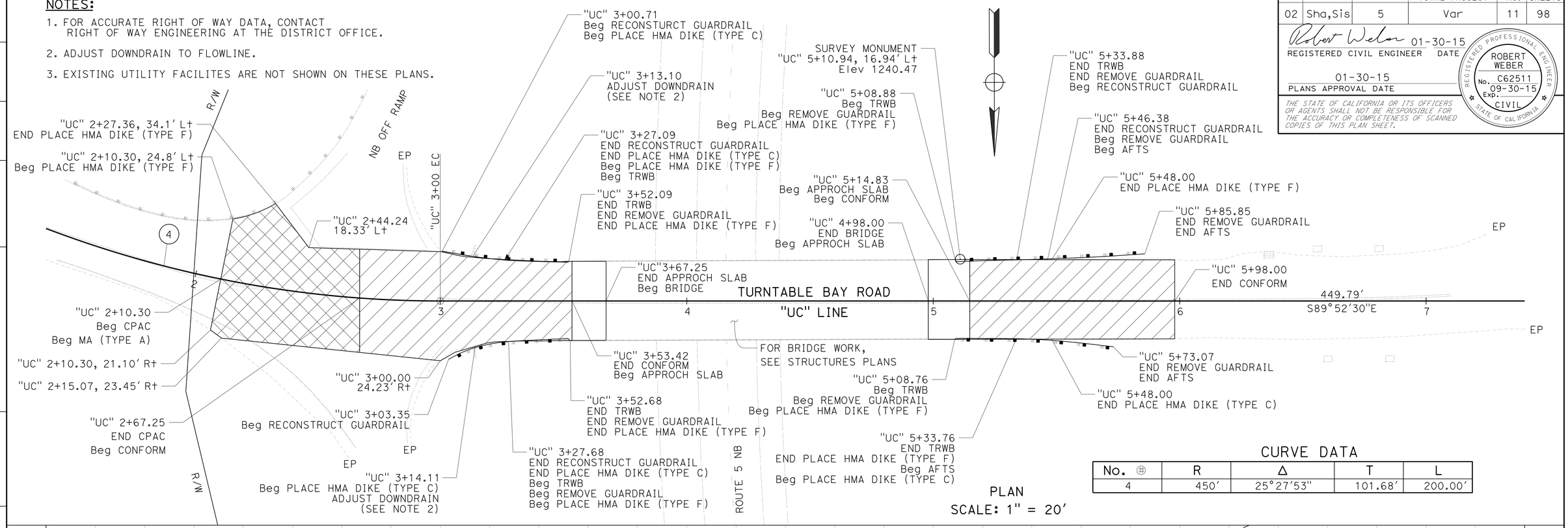

PLAN
SCALE: 1" = 20'

CURVE DATA

No. ⊕	R	Δ	T	L
4	450'	25°27'53"	101.68'	200.00'

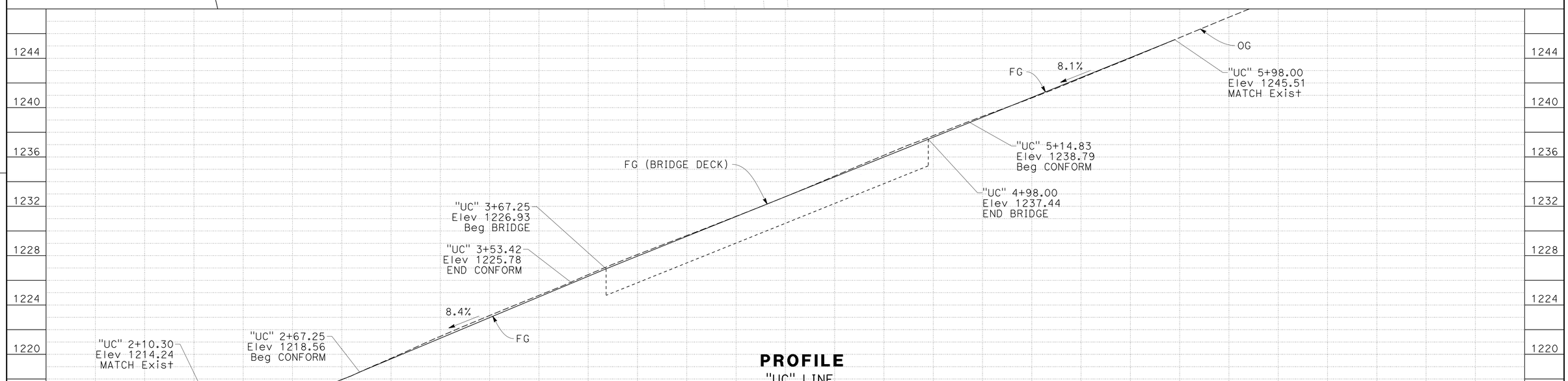

PROFILE

"UC" LINE
TURNTABLE BAY ROAD OVERCROSSING
Br No. 06-0124, Sha, ROUTE 5, PM R29.32

SCALE: 1" = 20' Horiz
1" = 4' Vert

LAYOUT

SCALE: AS SHOWN **L-8**

REVISED BY	DATE REVISED
DAN BROWN	ROBERT WEBER

CALCULATED-DESIGNED BY
CHECKED BY
FUNCTIONAL SUPERVISOR: STEVE TOPAL

STATE OF CALIFORNIA - DEPARTMENT OF TRANSPORTATION
Caltrans
DESIGN

P:\proj1\02\4F610_plans\pse\24f610ea008.dgn

LAST REVISION 12-29-14
DATE PLOTTED => 25-FEB-2015
TIME PLOTTED => 07:50

Dist	COUNTY	ROUTE	POST MILES TOTAL PROJECT	SHEET No.	TOTAL SHEETS
02	Sha,Sis	5	Var	12	98

Robert Weber 01-30-15
REGISTERED CIVIL ENGINEER DATE

01-30-15
PLANS APPROVAL DATE

REGISTERED PROFESSIONAL ENGINEER ROBERT WEBER No. C62511 Exp. 09-30-15 CIVIL STATE OF CALIFORNIA

THE STATE OF CALIFORNIA OR ITS OFFICERS OR AGENTS SHALL NOT BE RESPONSIBLE FOR THE ACCURACY OR COMPLETENESS OF SCANNED COPIES OF THIS PLAN SHEET.

NOTES:

1. FOR ACCURATE RIGHT OF WAY DATA, CONTACT RIGHT OF WAY ENGINEERING AT THE DISTRICT OFFICE.
2. EXISTING UTILITY FACILITES ARE NOT SHOWN ON THESE PLANS.

CURVE DATA

No. ⊕	R	Δ	T	L
5	550′	60°56′00″	323.54′	584.92′

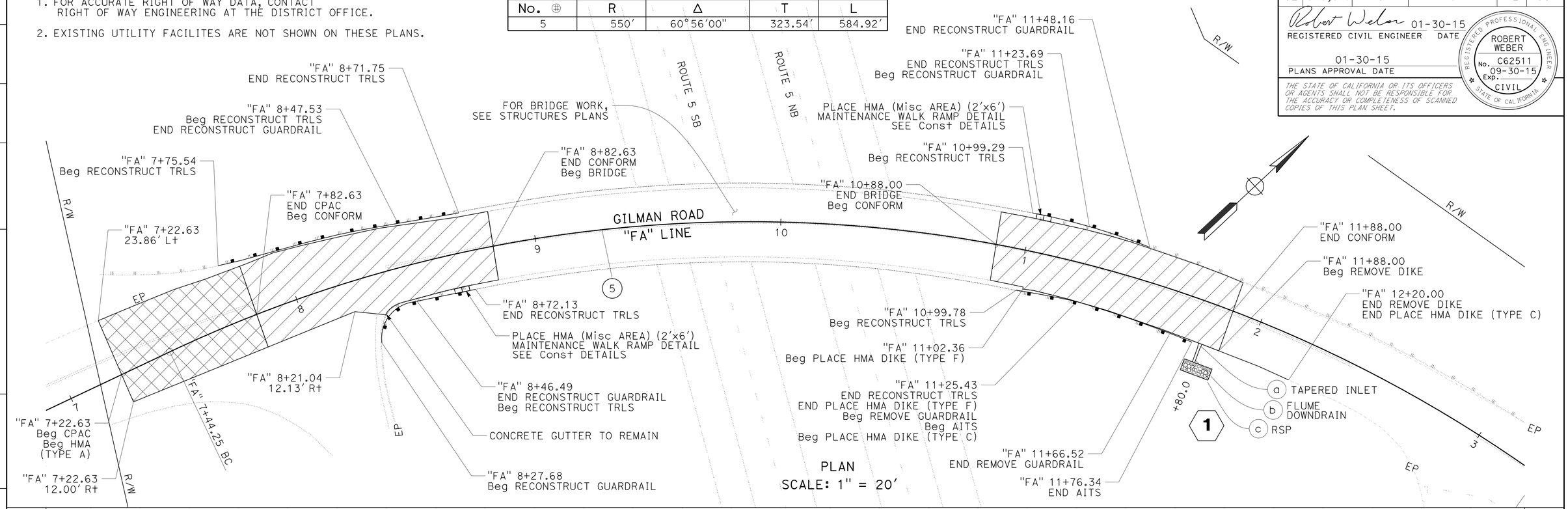

PLAN
SCALE: 1" = 20′

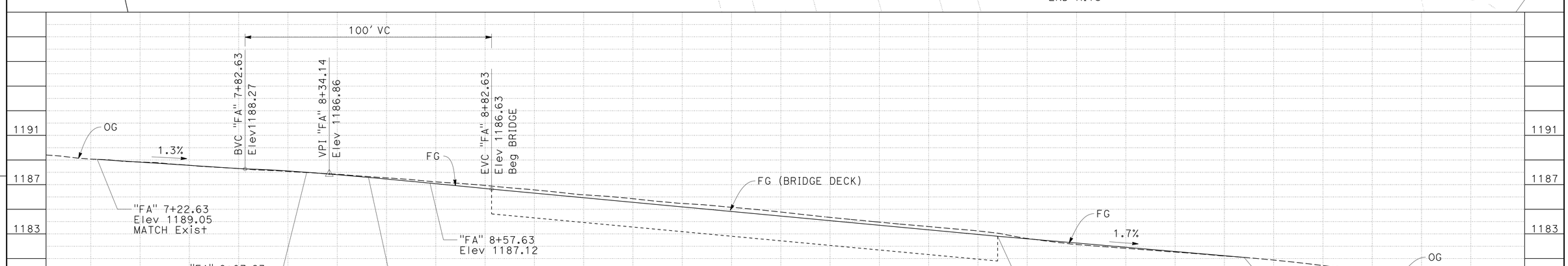

PROFILE
"FA" LINE
GILMAN ROAD OVERCROSSING
Br No. 06-0160, Sha, ROUTE 5, PM R36.83
SCALE: 1" = 20′ Horiz
1" = 4′ Vert

LAYOUT
SCALE: AS SHOWN **L-9**

STATION	8+00	9+00	10+00	11+00	12+00	TOTAL
CY Exc						
CY Emb						

STATE OF CALIFORNIA - DEPARTMENT OF TRANSPORTATION
Caltrans
DESIGN
FUNCTIONAL SUPERVISOR: STEVE TOPAL
CALCULATED-DESIGNED BY: DAN BROWN
CHECKED BY: ROBERT WEBER
REVISED BY
DATE REVISED
P:\proj\02\4F610_plans\pse\24f610ea009.dgn
LAST REVISION 12-29-14
DATE PLOTTED => 25-FEB-2015
TIME PLOTTED => 07:50

Dist	COUNTY	ROUTE	POST MILES TOTAL PROJECT	SHEET No.	TOTAL SHEETS
02	Sha,Sis	5	Var	13	98

Robert Weber 01-30-15
REGISTERED CIVIL ENGINEER DATE

01-30-15
PLANS APPROVAL DATE

REGISTERED PROFESSIONAL ENGINEER ROBERT WEBER No. C62511 Exp. 09-30-15 CIVIL STATE OF CALIFORNIA

THE STATE OF CALIFORNIA OR ITS OFFICERS OR AGENTS SHALL NOT BE RESPONSIBLE FOR THE ACCURACY OR COMPLETENESS OF SCANNED COPIES OF THIS PLAN SHEET.

NOTES:

1. FOR ACCURATE RIGHT OF WAY DATA, CONTACT RIGHT OF WAY ENGINEERING AT THE DISTRICT OFFICE

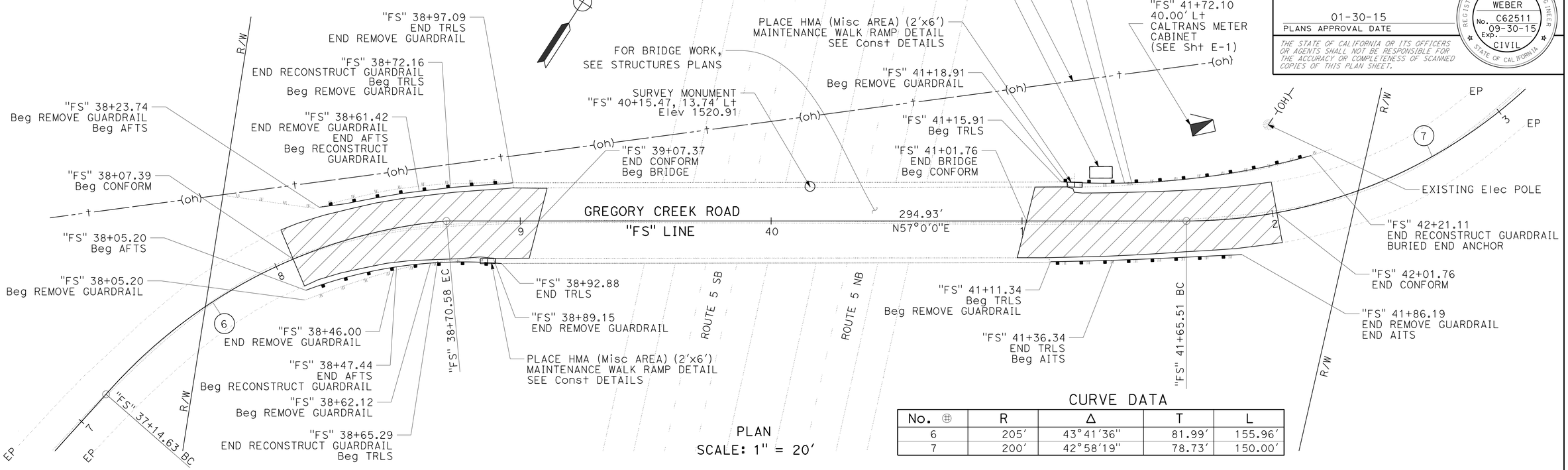

PLAN
SCALE: 1" = 20'

CURVE DATA

No. ⊕	R	Δ	T	L
6	205'	43°41'36"	81.99'	155.96'
7	200'	42°58'19"	78.73'	150.00'

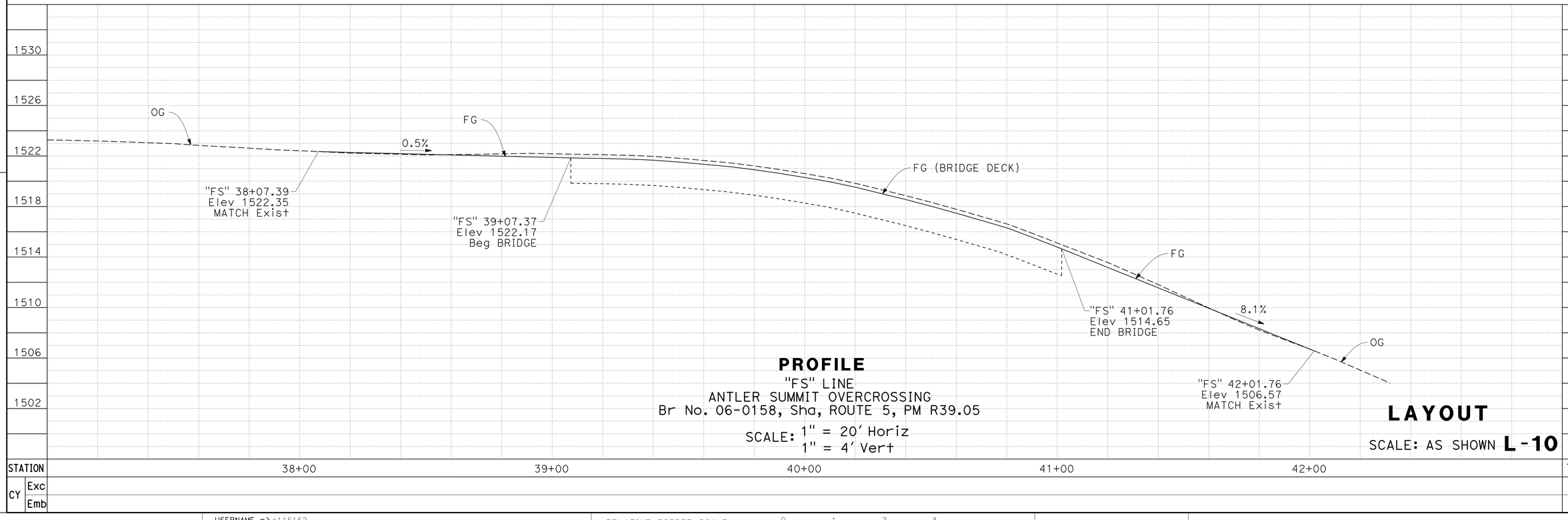

PROFILE
"FS" LINE
ANTLER SUMMIT OVERCROSSING
Br No. 06-0158, Sha, ROUTE 5, PM R39.05
SCALE: 1" = 20' Horiz
1" = 4' Vert

LAYOUT
SCALE: AS SHOWN **L-10**

REVISED BY | DATE REVISED
DAN BROWN | ROBERT WEBER
CALCULATED-DESIGNED BY | CHECKED BY
FUNCTIONAL SUPERVISOR: STEVE TOPAL

STATE OF CALIFORNIA - DEPARTMENT OF TRANSPORTATION
Caltrans
DESIGN

P:\proj1\02\4f610_plans\pse\24f610ea010.dgn

LAST REVISION 09-08-14 | DATE PLOTTED => 25-FEB-2015 | TIME PLOTTED => 07:50

BORDER LAST REVISED 7/2/2010 | USERNAME => s115152 | DGN FILE => 24f610ea010.dgn | RELATIVE BORDER SCALE IS IN INCHES 0 1 2 3 | UNIT 0319 | PROJECT NUMBER & PHASE 02-1300-0013-1 | EA 02-4F6101

Dist	COUNTY	ROUTE	POST MILES TOTAL PROJECT	SHEET No.	TOTAL SHEETS
02	Sha,Sis	5	Var	14	98

Robert Weber 01-30-15
REGISTERED CIVIL ENGINEER DATE

01-30-15
PLANS APPROVAL DATE

REGISTERED PROFESSIONAL ENGINEER ROBERT WEBER No. C62511 Exp. 09-30-15 CIVIL STATE OF CALIFORNIA

THE STATE OF CALIFORNIA OR ITS OFFICERS OR AGENTS SHALL NOT BE RESPONSIBLE FOR THE ACCURACY OR COMPLETENESS OF SCANNED COPIES OF THIS PLAN SHEET.

NOTES:

1. FOR ACCURATE RIGHT OF WAY DATA, CONTACT RIGHT OF WAY ENGINEERING AT THE DISTRICT OFFICE

CURVE DATA

No. ⊕	R	Δ	T	L
8	75′	195°14′14"	560.71′	255.56′
9	75′	69°29′59"	52.03′	90.98′

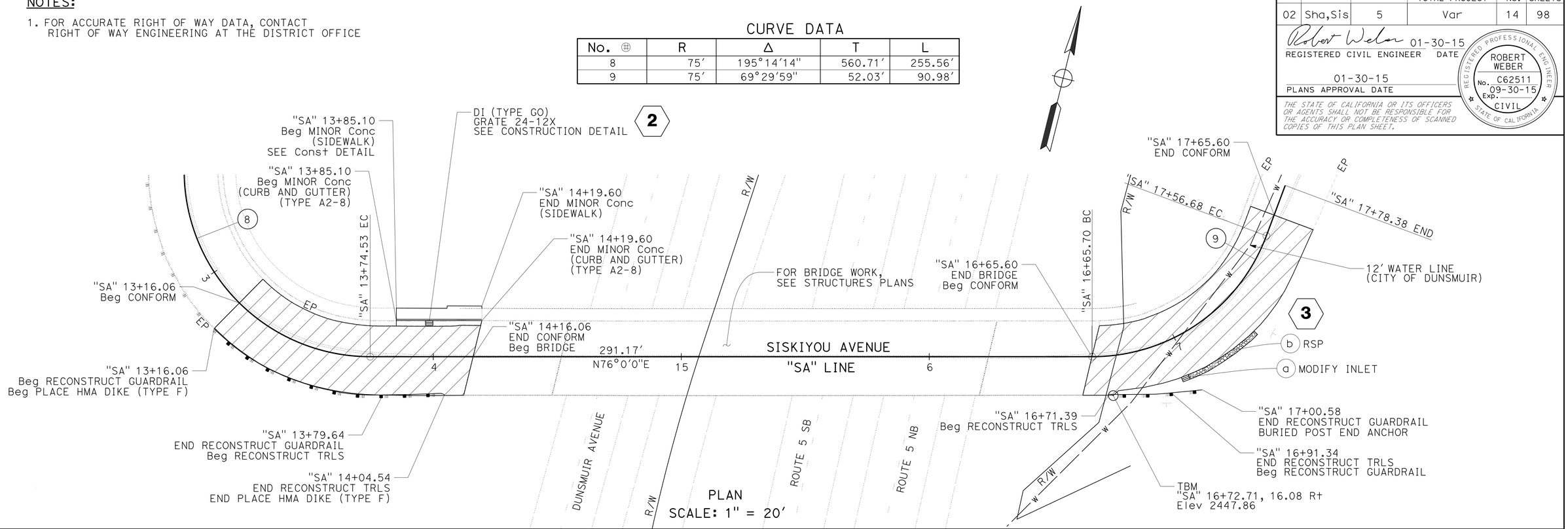

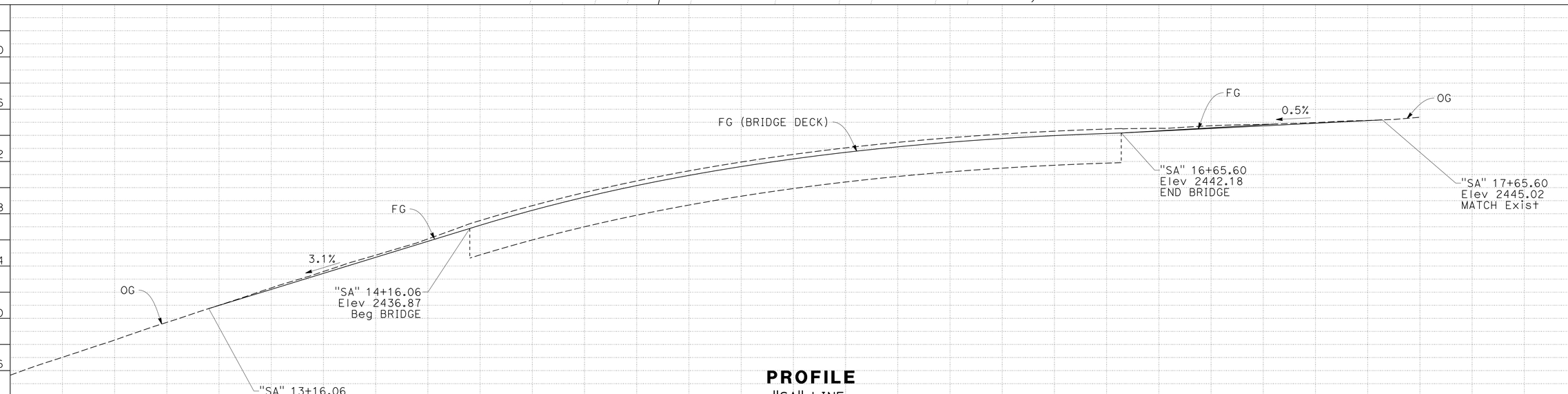

PROFILE
"SA" LINE
SISKIYOU AVENUE OVERCROSSING
Br No. 02-0097, ROUTE 5, Sis, PM 2.92
SCALE: 1" = 20′ Horiz
1" = 4′ Vert

LAYOUT
SCALE: AS SHOWN **L-11**

REVISED BY | DATE REVISED
DAN BROWN | ROBERT WEBER
CALCULATED-DESIGNED BY | CHECKED BY
FUNCTIONAL SUPERVISOR: STEVE TOPAL

STATE OF CALIFORNIA - DEPARTMENT OF TRANSPORTATION
Caltrans® **DESIGN**

P:\proj1\02\4f610_plans\pse\24f610ea011.dgn

LAST REVISION 12-29-14 | DATE PLOTTED => 25-FEB-2015 | TIME PLOTTED => 07:50

Dist	COUNTY	ROUTE	POST MILES TOTAL PROJECT	SHEET No.	TOTAL SHEETS
02	Sha,Sis	5	Var	15	98

Robert Weber 01-30-15
REGISTERED CIVIL ENGINEER DATE

01-30-15
PLANS APPROVAL DATE

REGISTERED PROFESSIONAL ENGINEER ROBERT WEBER No. C62511 Exp. 09-30-15 CIVIL STATE OF CALIFORNIA

THE STATE OF CALIFORNIA OR ITS OFFICERS OR AGENTS SHALL NOT BE RESPONSIBLE FOR THE ACCURACY OR COMPLETENESS OF SCANNED COPIES OF THIS PLAN SHEET.

NOTES:

1. FOR ACCURATE RIGHT OF WAY DATA, CONTACT RIGHT OF WAY ENGINEERING AT THE DISTRICT OFFICE.
2. EXISTING UTILITY FACILITES ARE NOT SHOWN ON THESE PLANS.

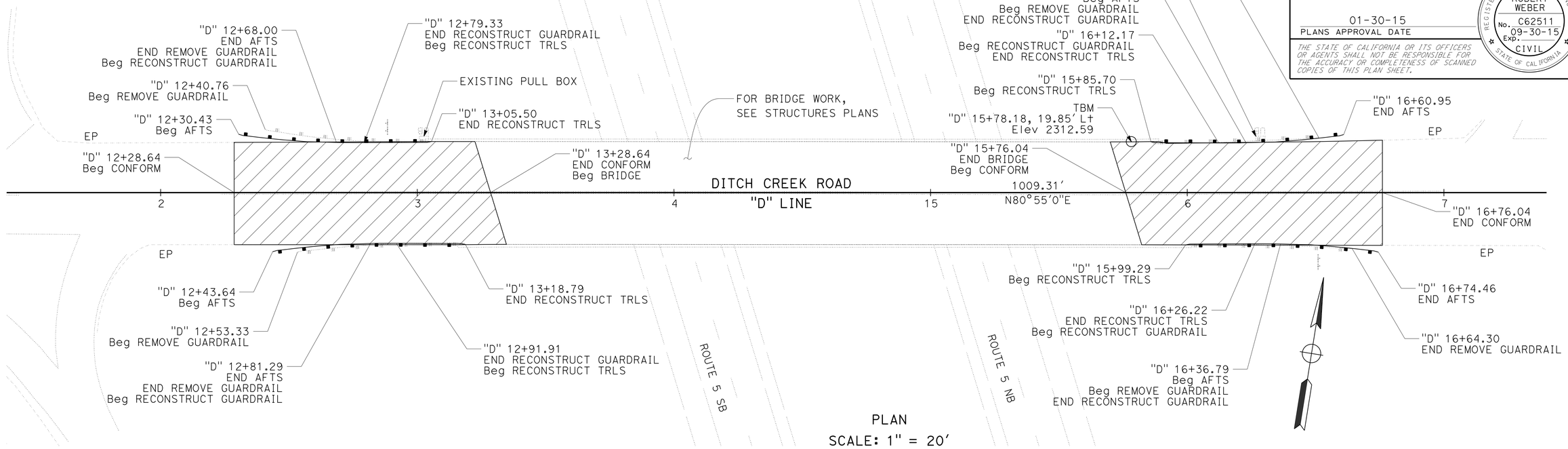

PLAN
SCALE: 1" = 20'

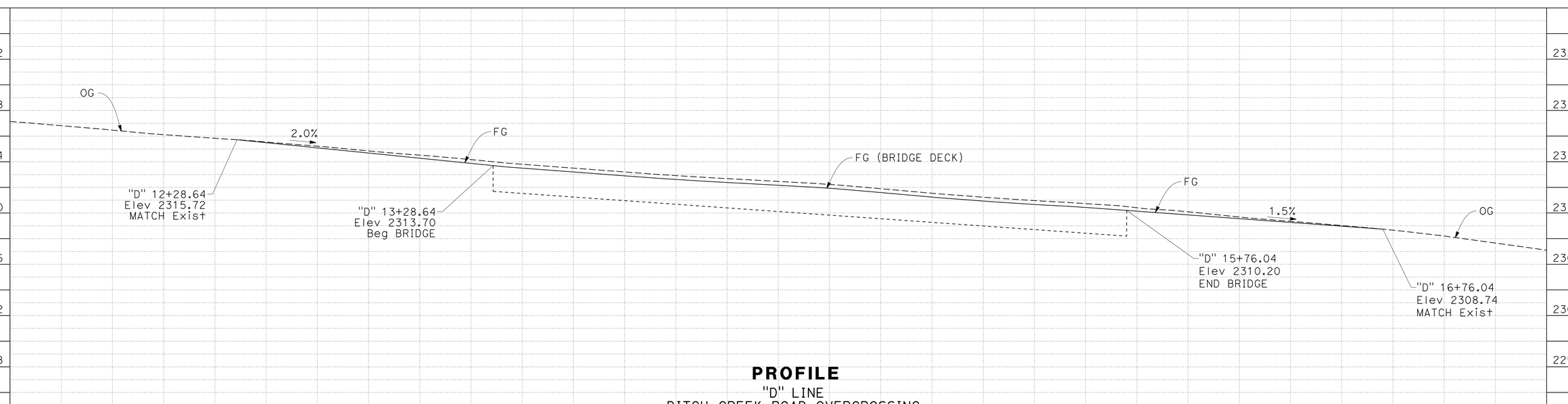

PROFILE
"D" LINE
DITCH CREEK ROAD OVERCROSSING
Br No. 02-0172, ROUTE 5, Sis, PM R62.92
SCALE: 1" = 20' Horiz
1" = 4' Vert

LAYOUT
SCALE: AS SHOWN **L-12**

REVISED BY	DATE REVISED

CALCULATED-DESIGNED BY	CHECKED BY
DAN BROWN	ROBERT WEBER

FUNCTIONAL SUPERVISOR: STEVE TOPAL

STATE OF CALIFORNIA - DEPARTMENT OF TRANSPORTATION
Caltrans® **DESIGN**

P:\proj1\02\4F610_plans\pse\24f610ea012.dgn

LAST REVISION 09-08-14
DATE PLOTTED => 25-FEB-2015
TIME PLOTTED => 07:50

Dist	COUNTY	ROUTE	POST MILES TOTAL PROJECT	SHEET No.	TOTAL SHEETS
02	Sha,Sis	5	Var	16	98

Robert Weber 01-30-15
REGISTERED CIVIL ENGINEER DATE

01-30-15
PLANS APPROVAL DATE

REGISTERED PROFESSIONAL ENGINEER ROBERT WEBER No. C62511 Exp. 09-30-15 CIVIL STATE OF CALIFORNIA

THE STATE OF CALIFORNIA OR ITS OFFICERS OR AGENTS SHALL NOT BE RESPONSIBLE FOR THE ACCURACY OR COMPLETENESS OF SCANNED COPIES OF THIS PLAN SHEET.

NOTES:

1. FOR ACCURATE RIGHT OF WAY DATA, CONTACT RIGHT OF WAY ENGINEERING AT THE DISTRICT OFFICE.

3. EXISTING UTILITY FACILITES ARE NOT SHOWN ON THESE PLANS.

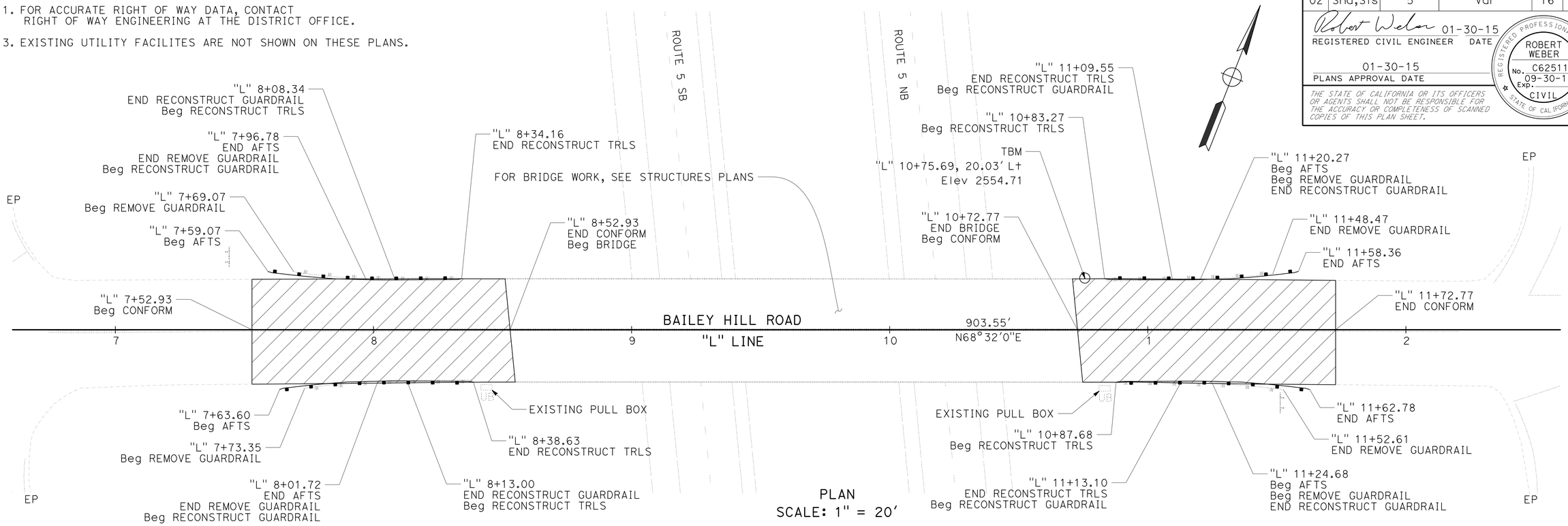

PLAN
SCALE: 1" = 20'

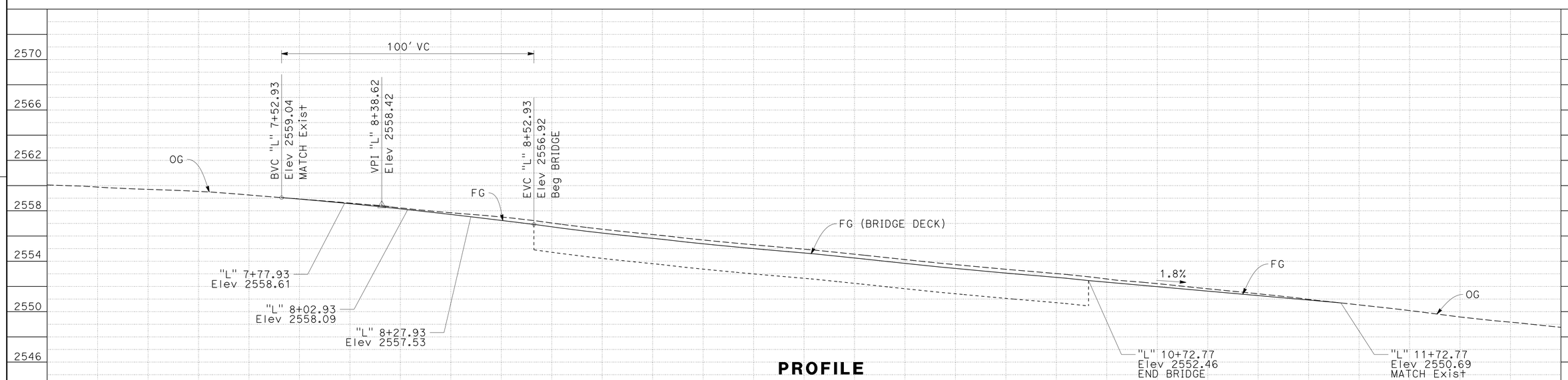

PROFILE
"L" LINE
BAILEY HILL ROAD OVERCROSSING
Br No. 02-0173, ROUTE 5, Sis, PM R65.52
SCALE: 1" = 20' Horiz
1" = 4' Vert

LAYOUT
SCALE: AS SHOWN

L-13

STATION	7+00	8+00	9+00	10+00	11+00	12+00	TOTAL
CY Exc							
CY Emb							

REVISED BY | DATE REVISED
DAN BROWN | ROBERT WEBER
CALCULATED-DESIGNED BY | CHECKED BY
FUNCTIONAL SUPERVISOR: STEVE TOPAL

STATE OF CALIFORNIA - DEPARTMENT OF TRANSPORTATION
Caltrans
DESIGN

P:\proj1\02\4f610_plans\pse\24f610ea013.dgn

LAST REVISION 12-29-14
DATE PLOTTED => 25-FEB-2015
TIME PLOTTED => 07:50

Dist	COUNTY	ROUTE	POST MILES TOTAL PROJECT	SHEET No.	TOTAL SHEETS
02	Sha,Sis	5	Var	17	98

Robert Weber 01-30-15
REGISTERED CIVIL ENGINEER DATE

01-30-15
PLANS APPROVAL DATE

REGISTERED PROFESSIONAL ENGINEER ROBERT WEBER No. C62511 Exp. 09-30-15 CIVIL STATE OF CALIFORNIA

THE STATE OF CALIFORNIA OR ITS OFFICERS OR AGENTS SHALL NOT BE RESPONSIBLE FOR THE ACCURACY OR COMPLETENESS OF SCANNED COPIES OF THIS PLAN SHEET.

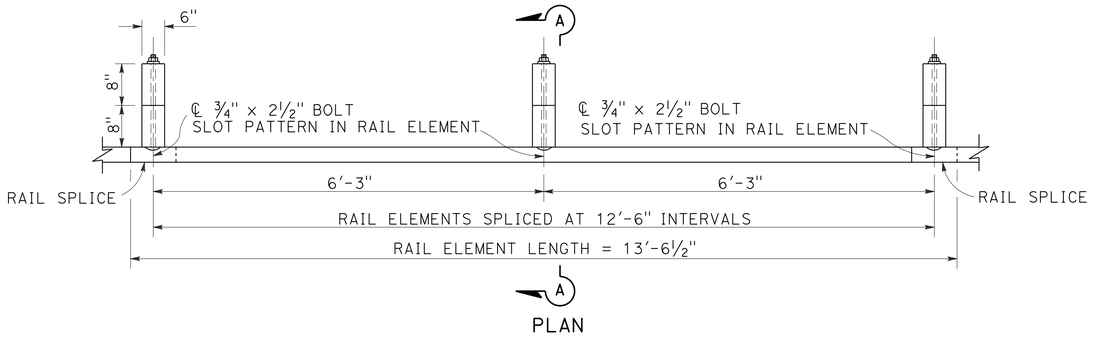

PLAN

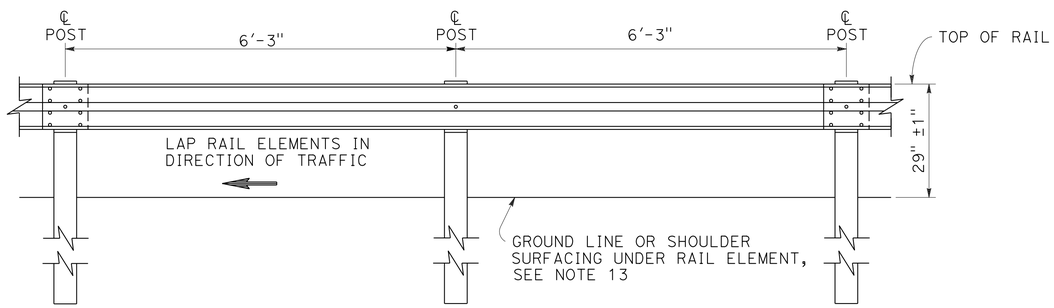

ELEVATION

METAL BEAM GUARD RAILING WITH WOOD POST AND BLOCKS

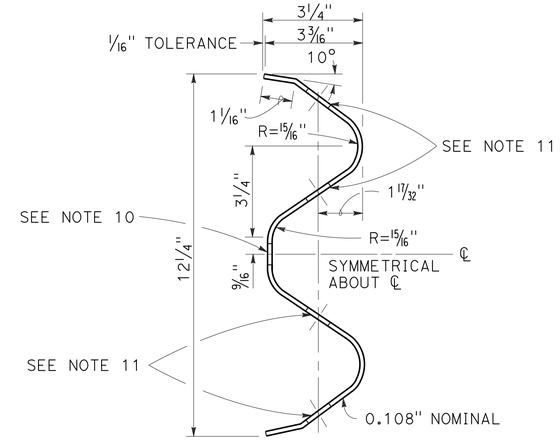

SECTION THRU RAIL ELEMENT

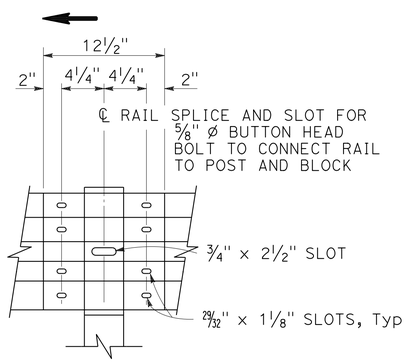

ELEVATION

RAIL ELEMENT SPLICE DETAIL

A) CONNECT THE OVER LAPPED END OF THE RAIL ELEMENTS WITH ⅝" ø X 1 ⅜" BUTTON HEAD OVAL SHOULDER SPLICE BOLTS INSERTED INTO THE 13⁄16" X 1 ⅛" SLOTS AND BOLTED TOGETHER WITH ⅝" ø RECESSED HEX NUTS. RECESS OF HEX NUT POINTS TOWARD RAIL ELEMENT. A TOTAL OF 8 BOLTS AND NUTS ARE TO BE USED AT EACH RAIL SPLICE CONNECTION.

B) THE ENDS OF THE RAIL ELEMENTS ARE TO BE OVERLAPPED IN THE DIRECTION OF TRAFFIC (SEE DETAILS).

C) WHERE END CAP IS TO BE ATTACHED TO THE END OF A RAIL ELEMENT, A TOTAL OF 4 OF THE ABOVE DESCRIBED SPLICE BOLTS AND NUTS ARE TO BE USED.

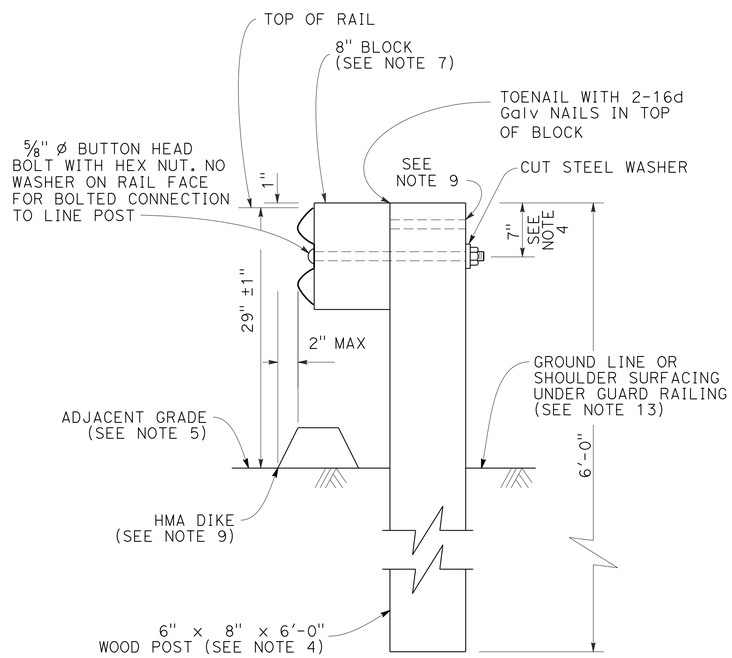

SECTION A-A

TYPICAL WOOD LINE POST INSTALLATION

SEE NOTE 5

NOTES:

1. THE MIDWEST GUARDRAIL SYSTEM (MGS) DETAILS SHOWN IN THE REVISED STANDARD PLANS APPLY TO BOTH MBGR AND MGS.
2. FOR DETAILS OF STANDARD HARDWARE USED TO CONSTRUCT MBGR, SEE REVISED STANDARD PLAN RSP A77M1.
3. FOR DETAILS OF WOOD POSTS AND WOOD BLOCKS USED TO CONSTRUCT MBGR, SEE REVISED STANDARD PLAN RSP A77N1.
4. FOR ADDITONAL INSTALLATION DETAILS SEE SHEET C-2.
5. MBGR POST SPACING TO BE 6'-3'' CENTER TO CENTER, EXCEPT AS OTHERWISE NOTED.
6. A SINGLE LINE POST POST MAY BE OFFSET UP TO 12" FROM THE BACK OF THE ELEMENT.
7. FOR MBGR TYPICAL LAYOUTS SEE THE RSP A77Q SERIES OF THE REVISED STANDARD PLANS AS ADAPTED TO MBGR.
8. PLACE TYPE F DIKE UNDER MBGR AND UP TO 2" BEYOND FACE OF ELEMENT, AT WHICH POINT TYPE C DIKE IS TO BE USED. FOR HOT MIX ASPHALT DIKE DETAILS SEE REVISED STANDARD PLAN RSP A87B.
9. SLOTTED HOLE FOR BOLTED CONNECTION OF RAIL ELEMENT TO BLOCK AND POST, "SEE SECTION THRU RAIL ELEMENT".
10. SLOTTED HOLES FOR SPLICE BOLTS TO OVERLAP ENDS OF RAIL ELEMENT, "SEE SECTION THRU RAIL ELEMENT".
11. ADDITONAL HOLE IN UPPERMOST PORTION OF LINE POST IS FOR POTENTIAL FUTURE ADJUSTMENTS OF RAILING HEIGHT. SEE REVISED STANDARD PLAN RSP A77N1.
12. INSTALL POSTS IN SOIL.

CONSTRUCTION DETAILS METAL BEAM GUARD RAILING STANDARD RAILING SECTION (WOOD POST WITH WOOD BLOCK)

NO SCALE

C-1

REVISED BY | DATE REVISED
DWIGHT WINTERLIN | ROBERT WEBER
CALCULATED-DESIGNED BY | CHECKED BY
FUNCTIONAL SUPERVISOR: STEVE TOPAL

STATE OF CALIFORNIA - DEPARTMENT OF TRANSPORTATION
Caltrans® DESIGN

P:\proj1\02\4F610_plans\pse\24f610ga001.dgn

LAST REVISION 09-06-14 | DATE PLOTTED => 25-FEB-2015 | TIME PLOTTED => 07:50

Dist	COUNTY	ROUTE	POST MILES TOTAL PROJECT	SHEET No.	TOTAL SHEETS
02	Sha,Sis	5	Var	18	98

Robert Weber 01-30-15
REGISTERED CIVIL ENGINEER DATE

01-30-15
PLANS APPROVAL DATE

REGISTERED PROFESSIONAL ENGINEER ROBERT WEBER No. C62511 Exp. 09-30-15 CIVIL STATE OF CALIFORNIA

THE STATE OF CALIFORNIA OR ITS OFFICERS OR AGENTS SHALL NOT BE RESPONSIBLE FOR THE ACCURACY OR COMPLETENESS OF SCANNED COPIES OF THIS PLAN SHEET.

NOTES:

1. MAXIMUM 10:1 SLOPE IN FRONT OF GUARDRAIL.
2. WHEN THERE IS A BREAK POINT IN FRONT OF GUARDRAIL BETWEEN 4' AND 8', THE HEIGHT WILL BE DETERMINED BY THE ENGINEER.
3. FOR 8' POST USE W6 X 15 STEEL OR 10" x 10" WOOD POST.
4. BLOCKS MUST HAVE MEANS TO RESIST ROTATION OTHER THAN THROUGH BOLT.
5. PLACE "RUB RAIL" (GUARDRAIL ELEMENT) ATTACHED DIRECTLY TO POST WHEN HEIGHT OF GUARDRAIL EXCEEDS 32" ABOVE FINISH GRADE UNDER LOWER FACE OF RAIL.

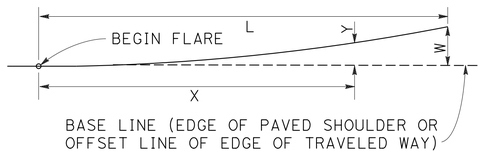

$$Y = \frac{WX^2}{L^2}$$

Y = OFFSET FROM BASE LINE
W = MAXIMUM OFFSET
X = DISTANCE ALONG BASE LINE
L = LENGTH OF FLARE

PARABOLIC FLARE OFFSETS

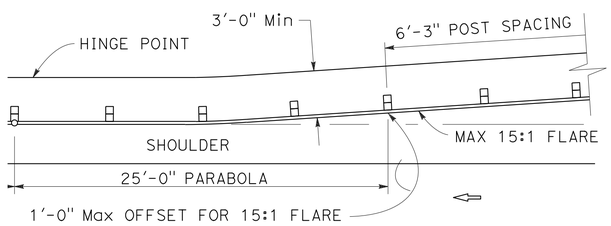

GUARDRAIL WITH FLARED ALIGNMENT

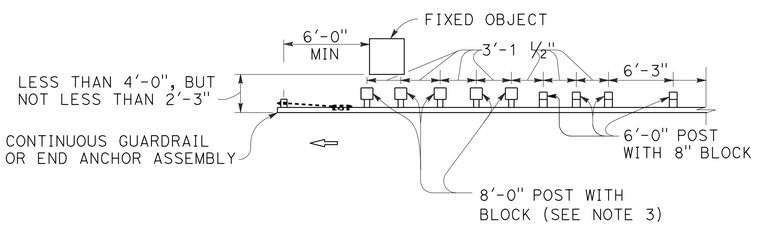

NOTE A:

FOR A SERIES OF FIXED OBJECTS (BRIDGE COLUMNS, OVERHEAD SIGN SUPPORTS, ETC.) ADDITIONAL 8'-0" POST WITH BLOCKS AT 3'-1 1/2" CENTER TO CENTER SPACING ARE TO BE USED BETWEEN FIXED OBJECTS.

STRENGTHENED RAILING SECTIONS FOR FIXED OBJECT

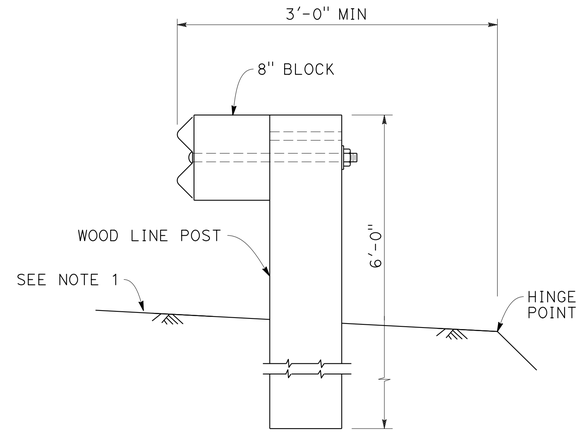

TYPICAL ROADWAY INSTALLATION

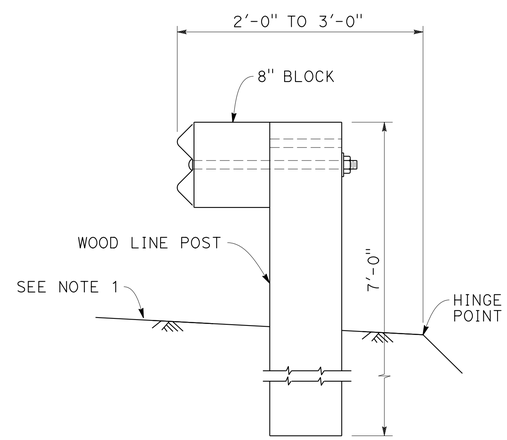

NARROW ROADWAY INSTALLATION

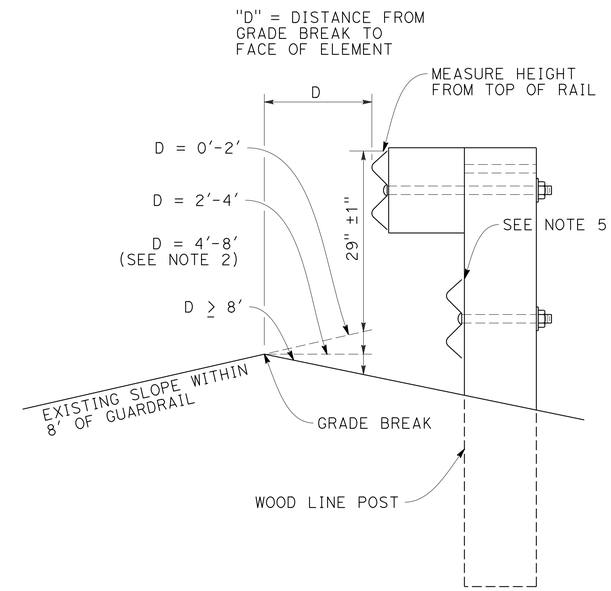

INSTALLATION NEAR GRADE BREAK

WHEN THERE IS A GRADE BREAK IN FRONT OF THE GUARDRAIL, MEASURE HEIGHT OF GUARDRAIL FROM PROJECTION OF PAVEMENT PLANE AS SHOWN, TO COMPENSATE FOR TRAJECTORY OF ERRANT VEHICLE.

POST EMBEDMENT

CONSTRUCTON DETAILS
METAL BEAM GUARD RAILING
INSTALLATION DETAILS

NO SCALE

C-2

REVISED BY	DATE REVISED
DWIGHT WINTERLIN	ROBERT WEBER
CALCULATED-DESIGNED BY	CHECKED BY
FUNCTIONAL SUPERVISOR	STEVE TOPAL

STATE OF CALIFORNIA - DEPARTMENT OF TRANSPORTATION
Caltrans® DESIGN

P:\proj1\02\4F610_plans\pse\24f610ga002.dgn

LAST REVISION 09-06-14 | DATE PLOTTED => 25-FEB-2015 | TIME PLOTTED => 07:50

Dist	COUNTY	ROUTE	POST MILES TOTAL PROJECT	SHEET No.	TOTAL SHEETS
02	Sha,Sis	5	Var	19	98

Robert Weber 01-30-15
REGISTERED CIVIL ENGINEER DATE

01-30-15
PLANS APPROVAL DATE

REGISTERED PROFESSIONAL ENGINEER ROBERT WEBER No. C62511 Exp. 09-30-15 CIVIL STATE OF CALIFORNIA

THE STATE OF CALIFORNIA OR ITS OFFICERS OR AGENTS SHALL NOT BE RESPONSIBLE FOR THE ACCURACY OR COMPLETENESS OF SCANNED COPIES OF THIS PLAN SHEET.

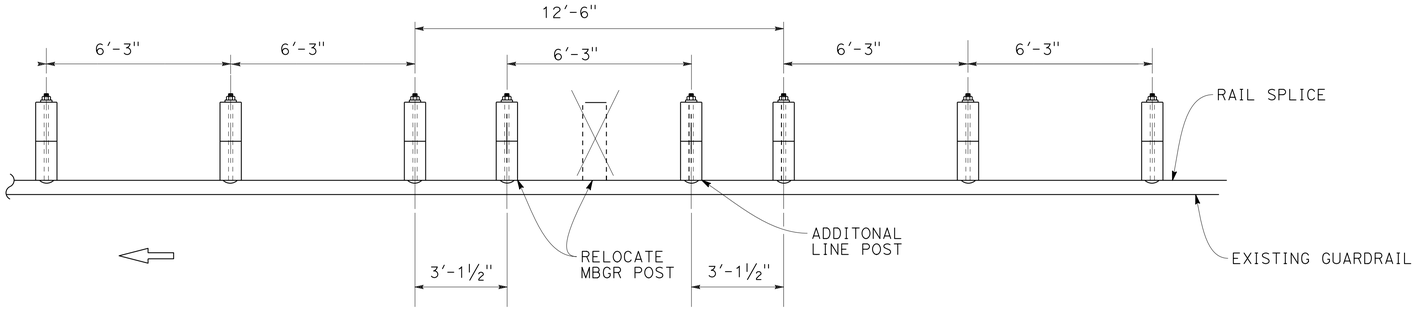

CASE 1

ONE POST CONFLICT, MOVE THE POST AND ADD ONE POST
NO NESTED RAIL REQUIRED

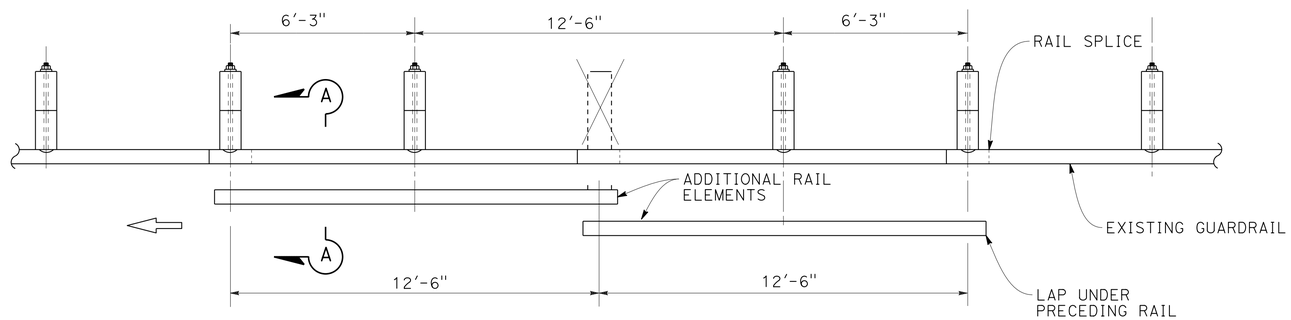

CASE 2

ONE POST OMITTED AT JUNCTIN OF TWO ELEMENTS
NEST TWO LENGTHS OF RAIL AS REQUIRED

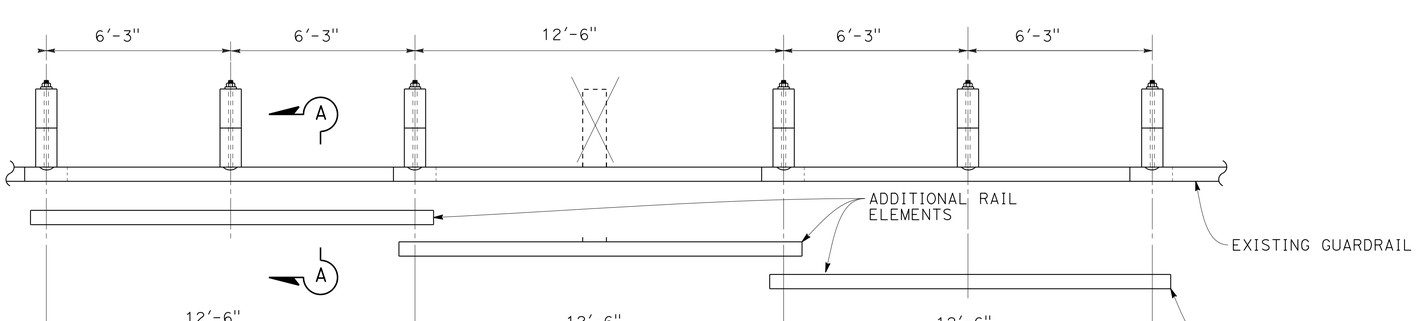

CASE 3

ONE POST OMITTED AT CENTER OF ELEMENT
NEST THREE LENGTHS OF RAIL AS REQUIRED
ONE ADDITIONAL POST MAY BE OMITTED SEE NOTE 3

LONG SPAN NESTED GUARD RAILING

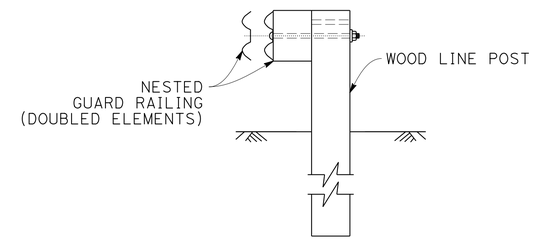

SECTION A-A

TYPICAL RAILING OVERLAP INSTALLATION AT POST

NOTES:

1. NEST ALL RAILS AT EXISTING RAIL LAPS.
2. WHEN A POST IS REMOVED AND THE RAIL ELEMENTS ARE NESTED, THE NESTED ELEMENTS MUST BE SUPPORTED BY A MIMIMUM OF 2 POSTS ON EACH SIDE OF THE MISSING POST, OTERWISE ADD ADDITIONAL LENGTH OF NESTED ELEMENTS.
3. A SECOND, ADJACENT POST MAY BE OMITTED USING CASE 3, IF THE NESTED RAIL ELEMENTS ARE SUPPORTED BY A MIMIMUM OF 2 POSTS ON EACH SIDE OF THE MISSING POSTS. THE TWO-POST OPTION IS NOT SHOWN.

CONSTRUCTION DETAILS
METAL BEAM GUARD RAILING
OMIT POST OPTIONS

NO SCALE

C-3

REVISED BY | DATE REVISED
DWIGHT WINTERLIN | ROBERT WEBER
CALCULATED-DESIGNED BY | CHECKED BY
FUNCTIONAL SUPERVISOR: STEVE TOPAL
STATE OF CALIFORNIA - DEPARTMENT OF TRANSPORTATION
Caltrans DESIGN
P:\proj1\02\4F610_plans\pse\24f610ga003.dgn

LAST REVISION 09-07-14 | DATE PLOTTED => 25-FEB-2015 | TIME PLOTTED => 07:50

Dist	COUNTY	ROUTE	POST MILES TOTAL PROJECT	SHEET No.	TOTAL SHEETS
02	Sha,Sis	5	Var	20	98

Robert Weber 01-30-15
REGISTERED CIVIL ENGINEER DATE

01-30-15
PLANS APPROVAL DATE

REGISTERED PROFESSIONAL ENGINEER ROBERT WEBER No. C62511 Exp. 09-30-15 CIVIL STATE OF CALIFORNIA

THE STATE OF CALIFORNIA OR ITS OFFICERS OR AGENTS SHALL NOT BE RESPONSIBLE FOR THE ACCURACY OR COMPLETENESS OF SCANNED COPIES OF THIS PLAN SHEET.

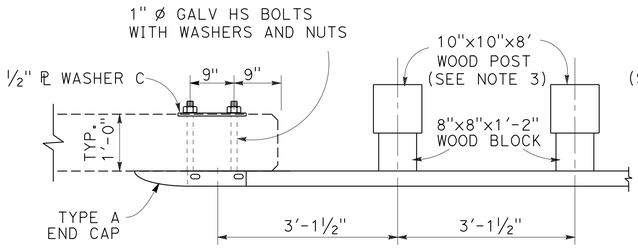

PLAN

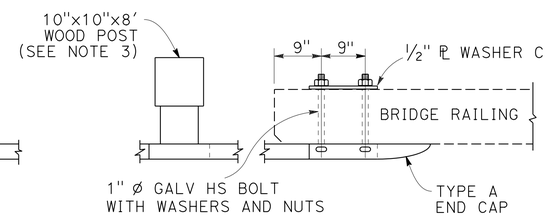

PLAN

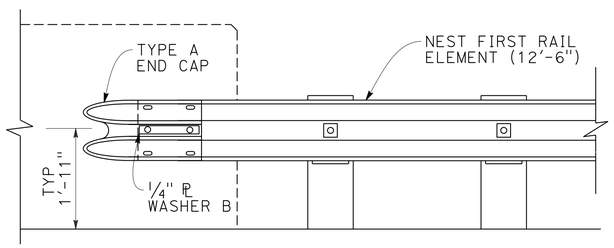

ELEVATION

CONNECTION DETAIL A

SEE NOTE 1

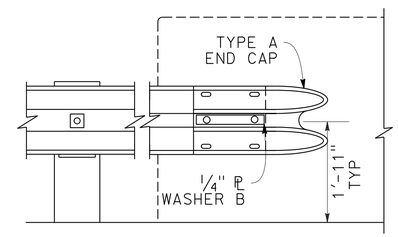

ELEVATION

CONNECTION DETAIL B

SEE NOTE 2

NOTES:

1. CONNECTION DETAILS "A" IS TO BE USED AT THE TRAFFIC APPROACH END OF BRIDGE RAIL.
2. CONNECTION DETAIL "B" IS TO BE USED AT THE TRAFFIC DEPARTURE END OF BRIDGE RAIL.
3. W6 x 15 STEEL POSTS AND WOOD BLOCKS MAY BE SUBSTITUTED FOR 10 x 10" WOOD POSTS AND BLOCKS.
4. PLACE SQUARE WASHERS ON FACE OF RAIL ELEMENTS AT ALL 10" x 10" WOOD POSTS AND W6 x 15 STEEL POSTS

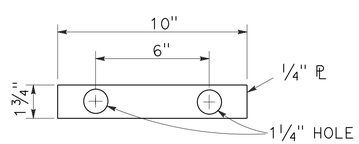

PLATE WASHER A

FOR FACE OF GUARD RAIL (DETAIL C)

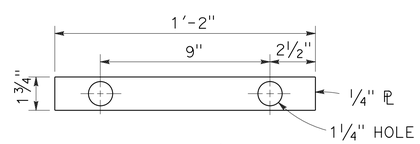

PLATE WASHER B

FOR FACE OF GUARD RAIL (DETAILS A & B)

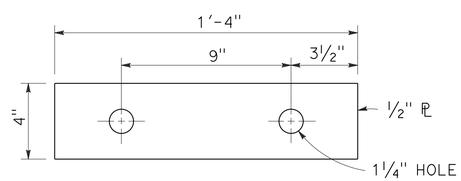

PLATE WASHER C

FOR BACKSIDE OF BRIDGE RAILING

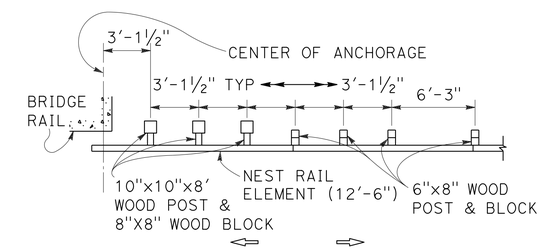

WOOD POST LAYOUT

CONSTRUCTION DETAILS TRANSITION RAILING (LOW SPEED)

NO SCALE

C-4

REVISED BY | DATE REVISED
DWIGHT WINTERLIN | ROBERT WEBER
CALCULATED-DESIGNED BY | CHECKED BY
FUNCTIONAL SUPERVISOR: STEVE TOPAL
STATE OF CALIFORNIA - DEPARTMENT OF TRANSPORTATION
Caltrans DESIGN
P:\proj1\02\4F610_plans\pse\24f610ga004.dgn

LAST REVISION 09-09-14 | DATE PLOTTED => 25-FEB-2015 | TIME PLOTTED => 07:50

Dist	COUNTY	ROUTE	POST MILES TOTAL PROJECT	SHEET No.	TOTAL SHEETS
02	Sha,Sis	5	Var	21	98

Robert Weber 01-30-15
REGISTERED CIVIL ENGINEER DATE

01-30-15
PLANS APPROVAL DATE

REGISTERED PROFESSIONAL ENGINEER ROBERT WEBER No. C62511 Exp. 09-30-15 CIVIL STATE OF CALIFORNIA

THE STATE OF CALIFORNIA OR ITS OFFICERS OR AGENTS SHALL NOT BE RESPONSIBLE FOR THE ACCURACY OR COMPLETENESS OF SCANNED COPIES OF THIS PLAN SHEET.

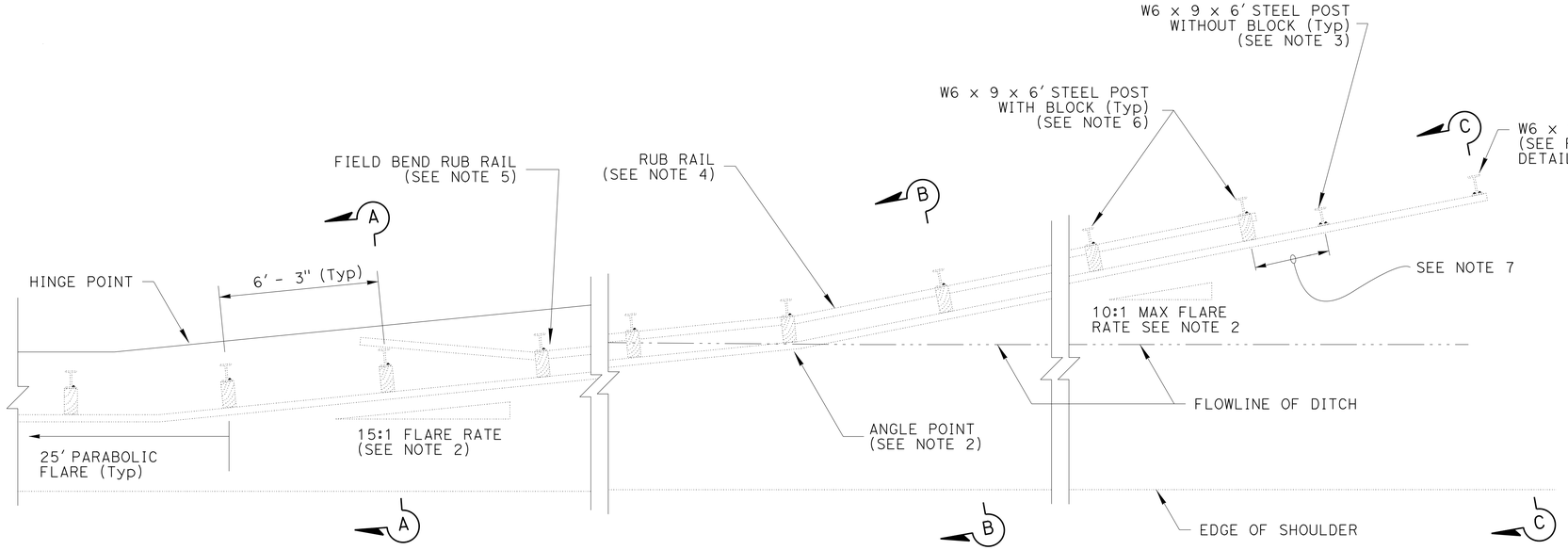

PLAN

NOTES:

1. PROFILE OF THE GUARDRAIL SHOULD FOLLOW THE PROFILE GRADE OF THE SHOULDER AND BE NO LOWER THAN 10% OF THE OFFSET FROM THE SHOULDER TO THE RAIL. SEE SECTION B-B AND SECTION C-C.
2. MAXIMUM FLARE RATE OF GUARDRAIL FROM THE SHOULDER TO THE FLOWLINE IS 15:1. FLARE RATE CAN BE INCREASED TO 10:1 (Max) AFTER CROSSING THE DITCH FLOWLINE.
3. PLACE NO BLOCKS ON POSTS WHERE BLOCKS WOULD BE IN CONTACT WITH SOIL.
4. USE STANDARD GUARDRAIL ELEMENTS WITHOUT BLOCKS FOR RUB RAIL.
5. PLACE RUB RAIL WHERE THE HEIGHT OF THE GUARDRAIL EXCEEDS 32" ABOVE THE GROUND DIRECTLY BELOW THE GUARDRAIL.
6. CONTINUE RUB RAIL UNTIL TOP OF RUB RAIL IS FULLY BURIED IN THE BACKSLOPE.
7. POST SPACING AND ELEMENT SPLICES SHOWN FOR MGS. MAINTAIN 6'-3" SPACING AND SPLICE ELEMENTS AT POSTS FOR GUARDRAIL.
8. THE BURIED POST END ANCHOR SHOULD BE INSTALLED IN A NON-TRAVERSABLE SLOPE.

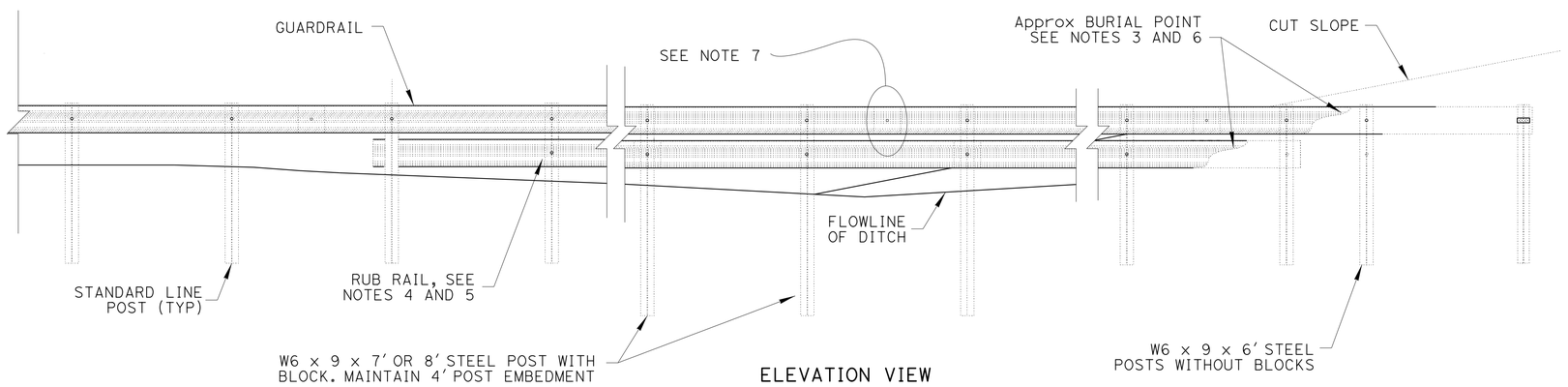

ELEVATION VIEW
(PROFILE ALONG RAIL)

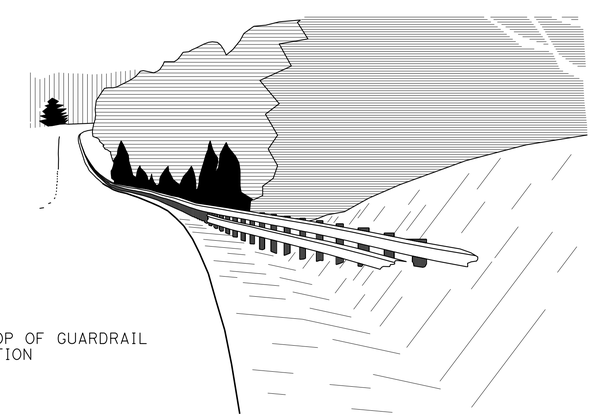

PERSPECTIVE

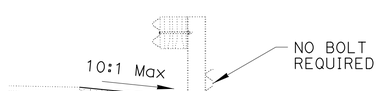

SECTION A-A

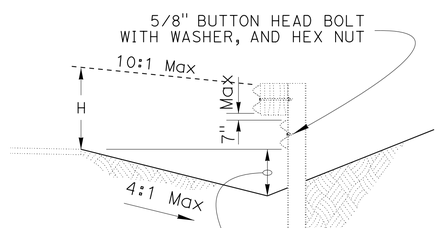

SECTION B-B

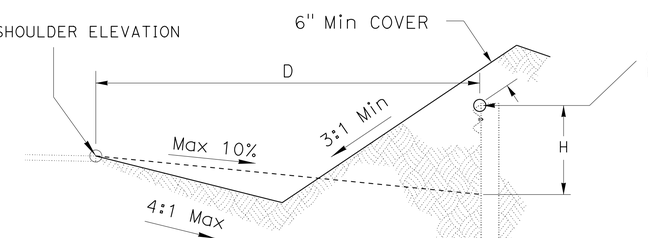

SEE NOTE 1
G = S + H - (10% x D)Max
H = 31" (MGS)
H = 29" (MBGR)

SECTION C-C

CONSTRUCTON DETAILS GUARDRAIL MODIFIED BURIED POST END ANCHOR

NO SCALE

C-5

REVISED BY	DATE REVISED

DWIGHT WINTERLIN — ROBERT WEBER

CALCULATED-DESIGNED BY — CHECKED BY

FUNCTIONAL SUPERVISOR — STEVE TOPAL

STATE OF CALIFORNIA - DEPARTMENT OF TRANSPORTATION — DESIGN

Caltrans

P:\proj1\02\4F610_plans\pse\24f610ga005.dgn

LAST REVISION 02-03-15 | DATE PLOTTED => 25-FEB-2015 | TIME PLOTTED => 07:50

Dist	COUNTY	ROUTE	POST MILES TOTAL PROJECT	SHEET No.	TOTAL SHEETS
02	Sha,Sis	5	Var	22	98

REGISTERED CIVIL ENGINEER 01-30-15 DATE

01-30-15
PLANS APPROVAL DATE

REGISTERED PROFESSIONAL ENGINEER ROBERT WEBER No. C62511 Exp. 09-30-15 CIVIL STATE OF CALIFORNIA

THE STATE OF CALIFORNIA OR ITS OFFICERS OR AGENTS SHALL NOT BE RESPONSIBLE FOR THE ACCURACY OR COMPLETENESS OF SCANNED COPIES OF THIS PLAN SHEET.

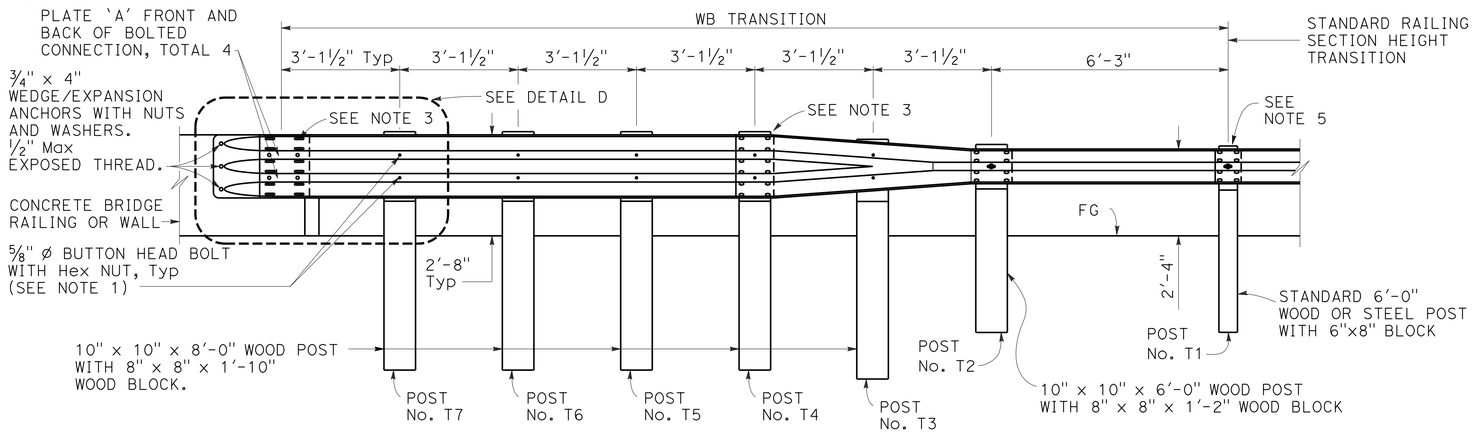

ELEVATION

LEGEND

(A) NESTED THRIE BEAM ELEMENTS (ONE 12 Ga ELEMENT NESTED OVER ONE 10 Ga ELEMENT).

(B) ONE 10 Ga "W" BEAM TO THRIE BEAM ELEMENT.

(C) ONE 12 Ga THRIE BEAM ELEMENT.

(D) ONE 10 Ga "W" BEAM RAIL ELEMENT (7'-3½" LENGTH)

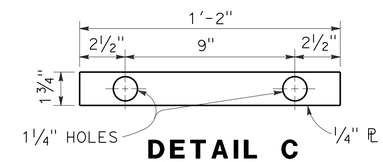

DETAIL C
PLATE A

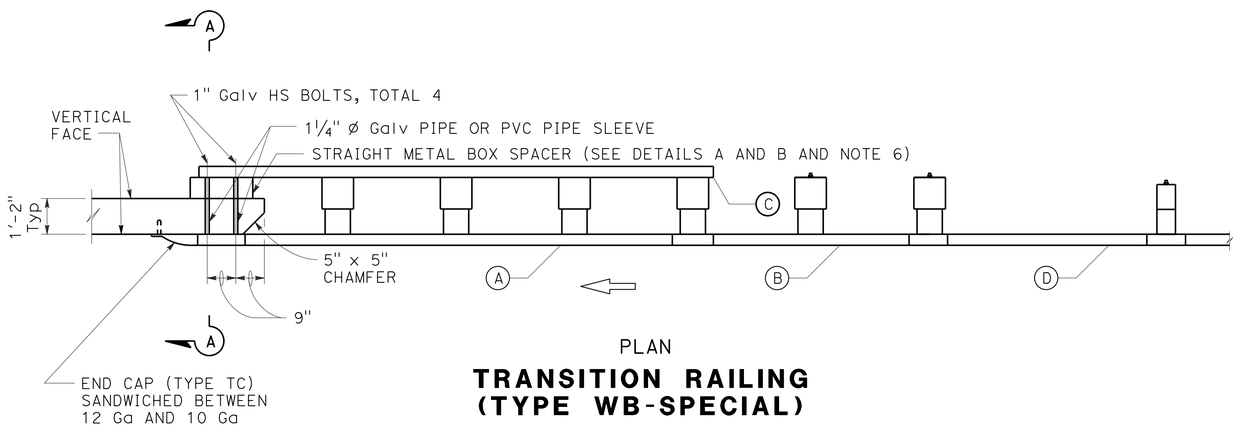

PLAN

TRANSITION RAILING
(TYPE WB-SPECIAL)

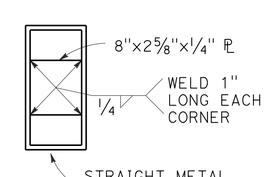

DETAIL B

NOTES:

1. USE ⅝" Ø BUTTON HEAD BOLTS AND HEX NUTS FOR CONNECTIONS TO POSTS. NO WASHER ON RAIL FACE FOR BOLTED CONNECTIONS TO POST.
2. THE NESTED RAIL ELEMENTS, END CAP, AND 'W' BEAM TO THRIE BEAM ELEMENT MAY BE SPLICED TOGETHER PRIOR TO BOLTING THE ELEMENTS TO THE WOOD POST AND CONCRETE BARRIER OR RAILING.
3. EXTERIOR SPLICE BOLT HOLES FOR RAIL ELEMENT SPLICES AT POST NO. T4 AND THE CONNECTION TO THE CONCRETE BARRIER OR RAILING SHALL BE THE STANDARD 13/16" X 1 ⅛" SLOT SIZE. INTERIOR SPLICE BOLT HOLES AT THESE LOCATIONS MAY BE INCREASED UP TO 1 ¼" ×. ONLY THE TOP 4 AND THE BOTTOM 4 SPLICE BOLTS WITH WASHERS AND NUTS ARE REQUIRED FOR RAIL SPLICES AT POST NO. T4 AND THE CONNECTION TO THE CONCRETE BARRIER OR RAILING.
4. THE TOP ELEVATION OF POSTS NO. T2 THROUGH NO. T7 SHALL NOT PROJECT MORE THAN 1" ABOVE THE TOP ELEVATION OF THE RAIL ELEMENT.
5. THE GUARDRAIL CONNECTED TO TRANSITION RAILING (TYPE WB) WILL BE A STANDARD RAILING SECTION OF METAL BEAM GUARGUARD RAILINGH HEIGHT TRANSITION RATIO OF 120:1
6. THE DEPTH OF THE METAL BOX SPACER VARIES FROM THE 5 ⅛" TO 1 ½" AND IS DEPENDENT ON THE WIDTH OF THE CONCRETE RAILING OR WALL. THE COMBINED DIMENSION FOR THE DEPTH OF THE METAL BOX SPACER PLUS THE WIDTH OF RAILING OR WALL SHOULD BE 17 ⅛".
7. END CAP MAY BE INSTALLED OVER 12 Ga AND 10 Ga THRIE BEAM ELEMENTS WHERE TRANSITION RAILING IS INSTALLED ON THE DEPARTURE END OF BRIDGE RAILING. SEE STANDARD PLAN A78C1 FOR TYPE TC END CAP.

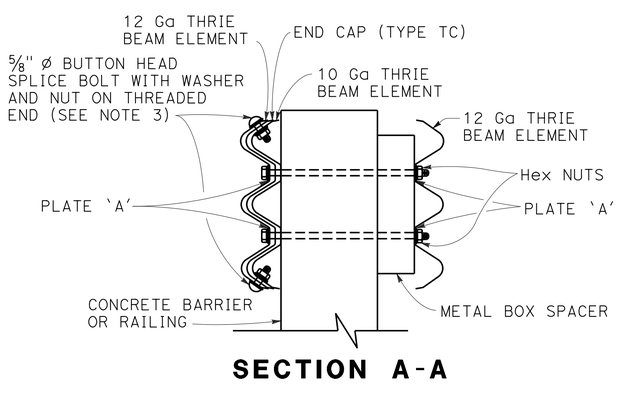

SECTION A-A

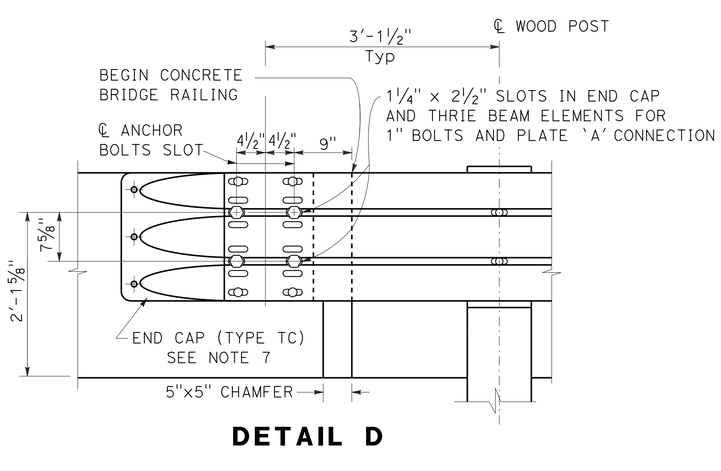

DETAIL D

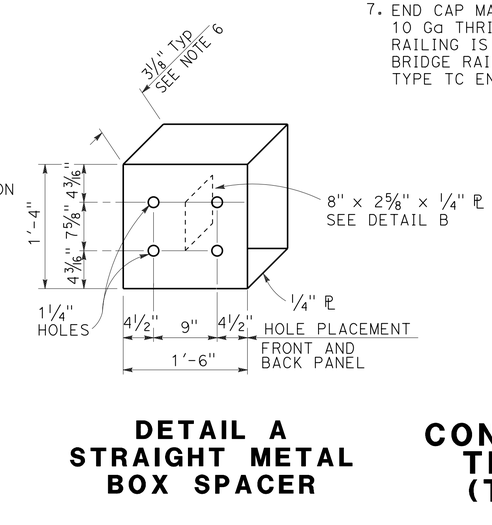

DETAIL A
STRAIGHT METAL BOX SPACER

CONSTRUCTION DETAILS TRANSITION RAILING (TYPE WB-SPECIAL)

NO SCALE

C-6

DWIGHT WINTERLIN | ROBERT WEBER | STEVE TOPAL | REVISED BY | DATE REVISED | CALCULATED-DESIGNED BY | CHECKED BY | FUNCTIONAL SUPERVISOR

STATE OF CALIFORNIA - DEPARTMENT OF TRANSPORTATION
Caltrans® **DESIGN**

P:\proj1\02\4F610_plans\pse\24f610ga006.dgn

LAST REVISION 12-29-14 | DATE PLOTTED => 25-FEB-2015 | TIME PLOTTED => 07:51

Dist	COUNTY	ROUTE	POST MILES TOTAL PROJECT	SHEET No.	TOTAL SHEETS
02	Sha,Sis	5	Var	23	98

Robert Weber 01-30-15
REGISTERED CIVIL ENGINEER DATE

01-30-15
PLANS APPROVAL DATE

REGISTERED PROFESSIONAL ENGINEER ROBERT WEBER No. C62511 Exp. 09-30-15 CIVIL STATE OF CALIFORNIA

THE STATE OF CALIFORNIA OR ITS OFFICERS OR AGENTS SHALL NOT BE RESPONSIBLE FOR THE ACCURACY OR COMPLETENESS OF SCANNED COPIES OF THIS PLAN SHEET.

NOTES:

1. PLACE #4 BARS AT 12" C-C EACH WAY AS SHOWN.
2. PLACE #4 BARS AT 12" C-C EACH WAY AND HOOK INTO SIDEWALK AS SHOWN. LAP 40 DIAMETERS INTO SIDEWALK MAT.
3. EMBED SIDEWALK FOOTING A DISTANCE EQUAL TO HEIGHT OF FOOTING ABOVE GRADE.

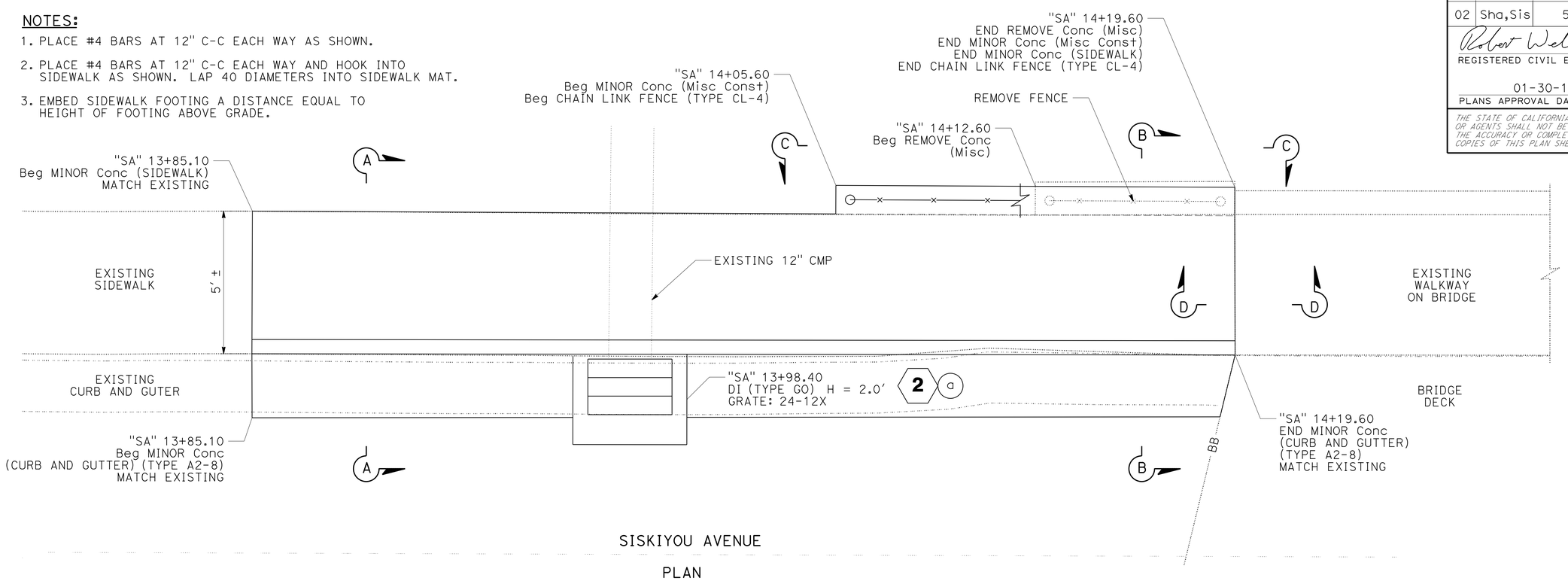

PLAN

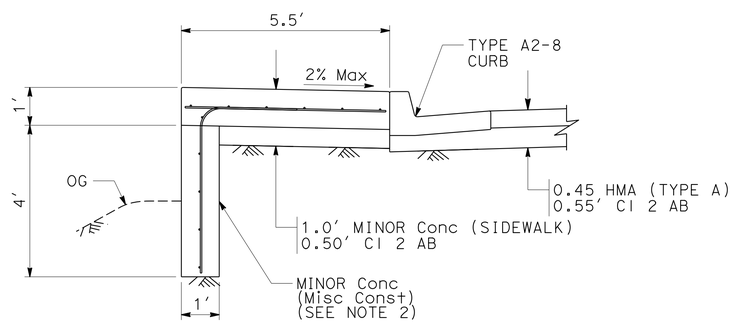

SECTION B-B

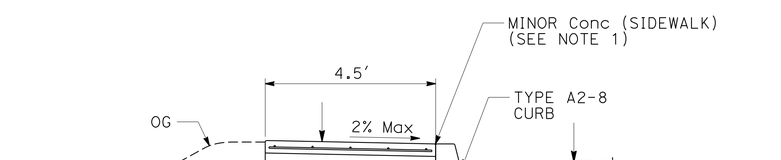

SECTION A-A

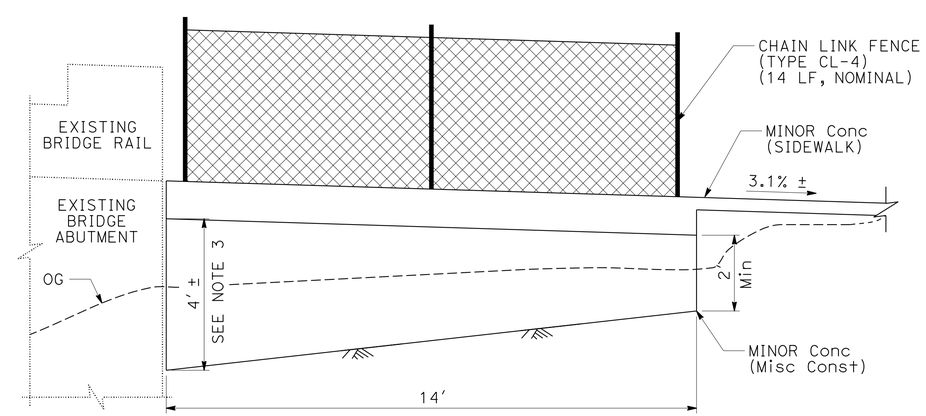

ELEVATION VIEW C-C

CONSTRUCTON DETAILS
SISKIYOU AVENUE SIDEWALK

SCALE: 1" = 2'

C-7

REVISED BY | DATE REVISED
ROBERT WEBER | STEVE TOPAL
CALCULATED-DESIGNED BY | CHECKED BY
FUNCTIONAL SUPERVISOR | STEVE TOPAL

STATE OF CALIFORNIA - DEPARTMENT OF TRANSPORTATION
Caltrans® DESIGN

P:\proj1\02\4F610_plans\pse\24f610ga007.dgn

LAST REVISION 09-10-14 | DATE PLOTTED => 25-FEB-2015 | TIME PLOTTED => 07:51

Dist	COUNTY	ROUTE	POST MILES TOTAL PROJECT	SHEET No.	TOTAL SHEETS
02	Sha,Sis	5	Var	24	98

Robert Weber 01-30-15
REGISTERED CIVIL ENGINEER DATE

01-30-15
PLANS APPROVAL DATE

REGISTERED PROFESSIONAL ENGINEER ROBERT WEBER No. C62511 Exp. 09-30-15 CIVIL STATE OF CALIFORNIA

THE STATE OF CALIFORNIA OR ITS OFFICERS OR AGENTS SHALL NOT BE RESPONSIBLE FOR THE ACCURACY OR COMPLETENESS OF SCANNED COPIES OF THIS PLAN SHEET.

NOTES:

1. EXISTING GUARDRAIL IS NOT SHOWN ON THIS SHEET
2. EXCAVATE ALONG BOTH SIDES OF EACH CONFORM TO PREPARE FOR PLACEMENT OF SHOULDER BACKING, AS DIRECTED BY THE ENGINEER
3. PLACE SHOULDER BACKING ALONG ENTIRE LENGTH OF EACH CONFORM, AS DIRECTED BY THE ENGINEER
4. GRIND EXISTING SURFACES TO ACCOMODATE A MINIMUM TAPER THICKNESS OF 0.10′ WHEN EITHER:
   A. HMA MATERIAL SUCH AS RUBBERIZED, POLYMER MODIFIED OR OPEN GRADED IS UNSUITABLE FOR RAKING TO A MAXIMUM 0.02′ THICKNESS AT THE CONFORM.
   B. TEMPORARY TAPER WILL BE IN PLACE FOR MORE THAN 14 DAYS.
5. PERMANENT SURFACE MAY BE EXISTING OR NEW PAVEMENT.
6. ROADWAY SURFACE IS THE TOP OF EXISTING SURFACE OR THE TOP OF THE PLANED SURFACE.
7. FOR TEMPORARY TAPERS ON BRIDGE DECKS AND APPROACH SLABS, CONSTRUCT TEMPORARY TAPERS WITH POLYESTER CONCRETE.
8. IF AUTHORIZED, YOU MAY USE ALTERNATIVE MATERIALS OR METHODS TO PRODUCE THE REQUIRED TAPER.

LEGEND:

HMA MATERIAL (TEMPORARY TAPER) (SEE NOTE 4)

IF NECESSARY, COLD PLANE ASPHALT CONCRETE PAVEMENT AND PLACE HMA MATERIAL (SEE NOTE 1)

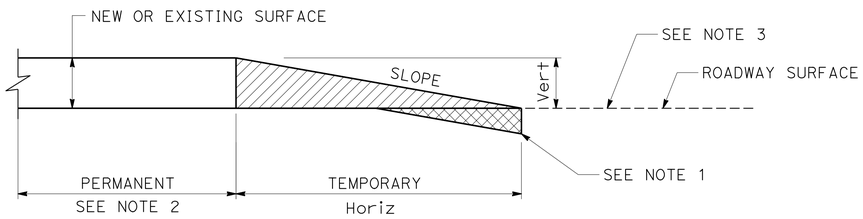

Vert	SLOPE RATIO Horiz/Vert
0-0.10′	70:1
GREATER THAN 0.10′	160:1

TYPICAL PAVING CONFORM
FOR TEMPORARY CONSTRUCTION TAPERS

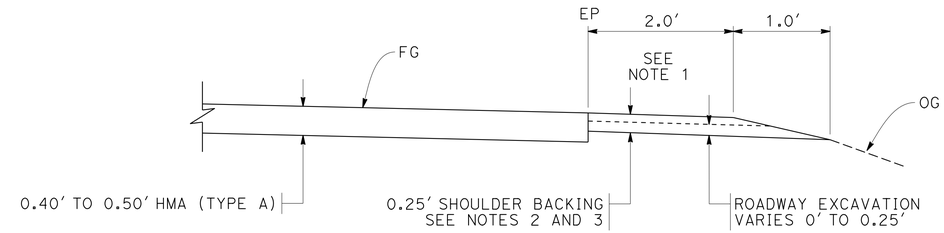

SHOULDER BACKING DETAIL (Typ)

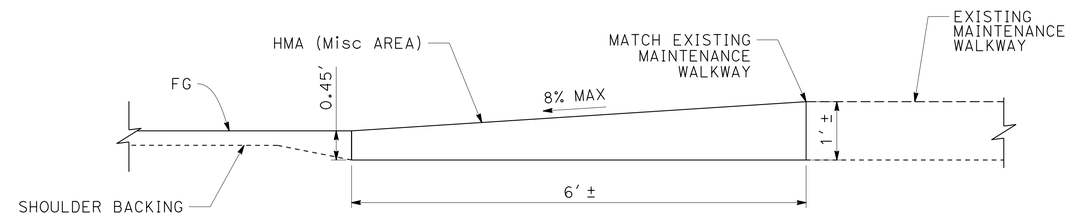

MAINTENANCE WALKWAY RAMP DETAIL
GILMAN ROAD OVERCROSSING
ANTLER SUMMIT OVERCROSING

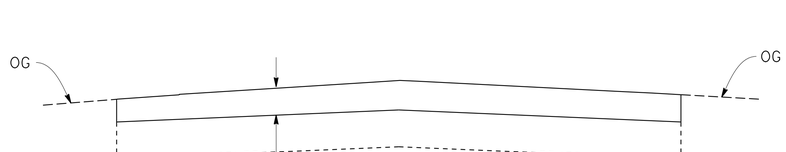

COLD PLANE ASPHALT CONCRETE PAVEMENT
TYPICAL DETAIL

PINE GROVE AVENUE OVERCROSSING
TURNTABLE BAY ROAD OVERCROSSING
GILMAN ROAD OVERCROSSING

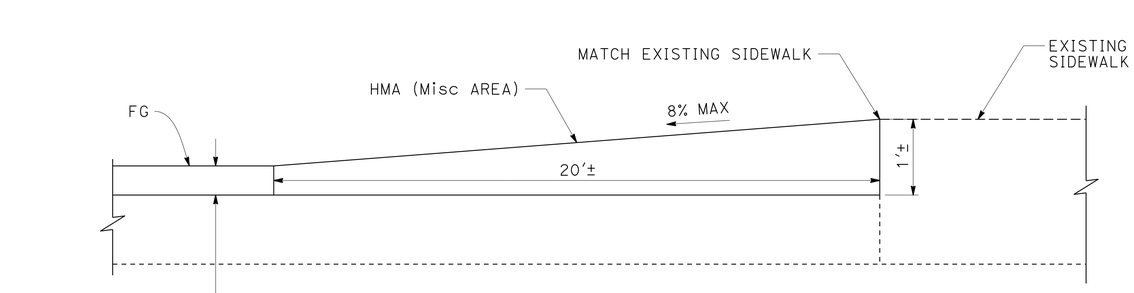

SIDEWALK RAMP DETAIL
HILLTOP DRIVE

CONSTRUCTON DETAILS

NO SCALE

C-8

REVISED BY | DATE REVISED
DAN BROWN | ROBERT WEBER
CALCULATED-DESIGNED BY | CHECKED BY
FUNCTIONAL SUPERVISOR: STEVE TOPAL
STATE OF CALIFORNIA - DEPARTMENT OF TRANSPORTATION
Caltrans® DESIGN
P:\proj1\02\4F610_plans\pse\24f610ga008.dgn

LAST REVISION | DATE PLOTTED => 25-FEB-2015 | TIME PLOTTED => 07:51
12-29-14

Dist	COUNTY	ROUTE	POST MILES TOTAL PROJECT	SHEET No.	TOTAL SHEETS
02	Sha,Sis	5	Var	25	98

Robert Weber 01-30-15
REGISTERED CIVIL ENGINEER DATE

01-30-15
PLANS APPROVAL DATE

REGISTERED PROFESSIONAL ENGINEER
ROBERT WEBER
No. C62511
Exp. 09-30-15
CIVIL
STATE OF CALIFORNIA

THE STATE OF CALIFORNIA OR ITS OFFICERS OR AGENTS SHALL NOT BE RESPONSIBLE FOR THE ACCURACY OR COMPLETENESS OF SCANNED COPIES OF THIS PLAN SHEET.

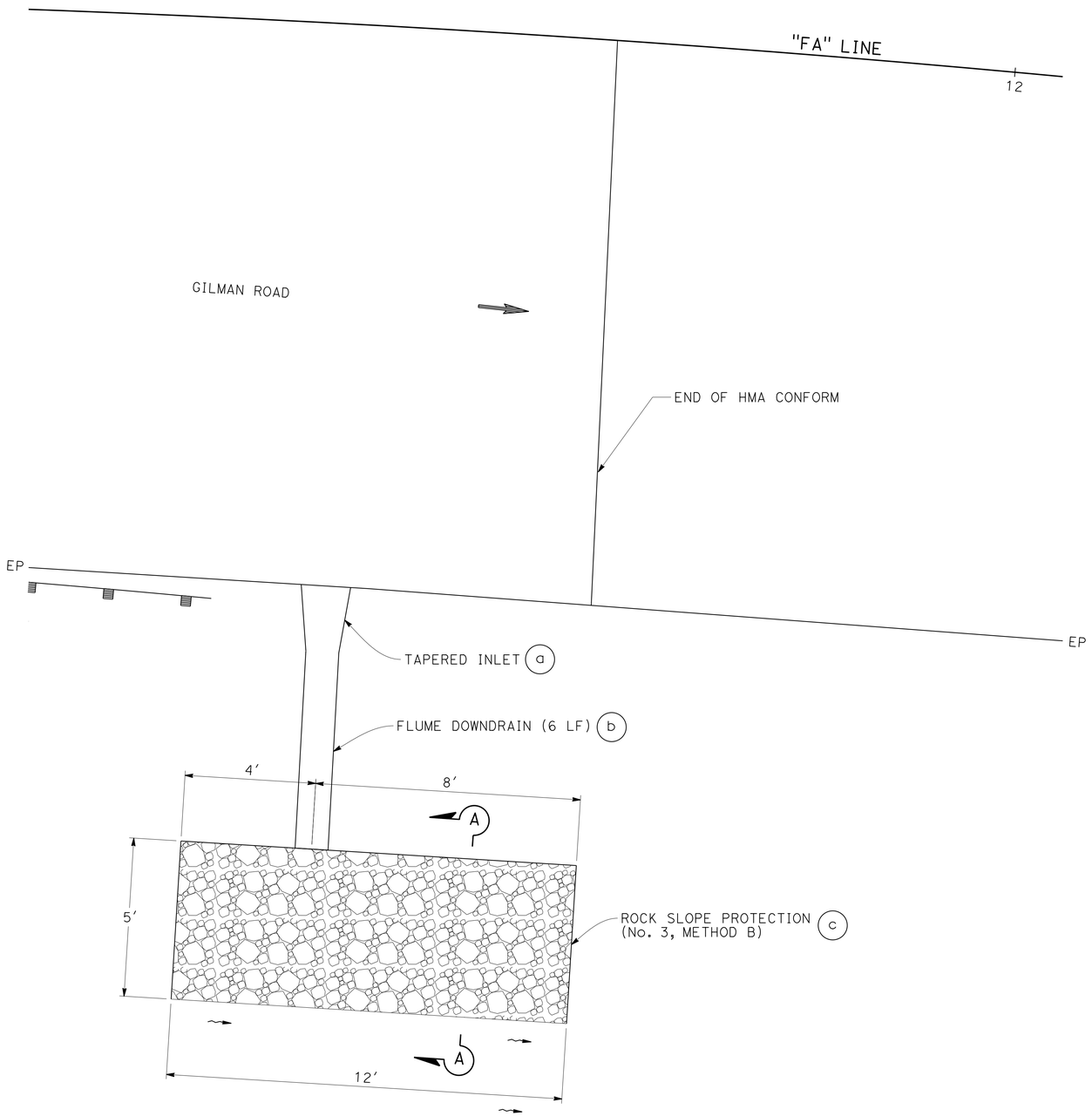

PLAN
SCALE: 1" = 2′

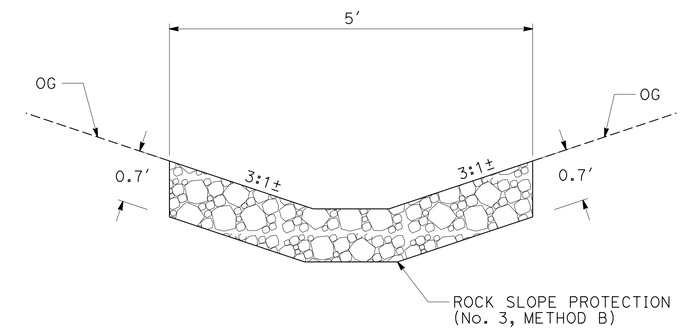

SECTION A-A
SCALE: 1" = 1′

DRAINAGE SYSTEM (1)

"FA" 11+80

DRAINAGE DETAILS

SCALE: AS SHOWN

DD-1

REVISED BY	DATE REVISED

CALCULATED-DESIGNED BY	CHECKED BY
RUSSELL FLOOD	ROBERT WEBER

FUNCTIONAL SUPERVISOR: STEVE TOPAL

STATE OF CALIFORNIA - DEPARTMENT OF TRANSPORTATION
Caltrans
DESIGN

P:\proj1\02\4F610_plans\pse\24f610ic001.dgn

LAST REVISION 09-10-14
DATE PLOTTED => 25-FEB-2015
TIME PLOTTED => 07:51

Dist	COUNTY	ROUTE	POST MILES TOTAL PROJECT	SHEET No.	TOTAL SHEETS
02	Sha,Sis	5	Var	26	98

Robert Weber 01-30-15
REGISTERED CIVIL ENGINEER DATE

01-30-15
PLANS APPROVAL DATE

REGISTERED PROFESSIONAL ENGINEER ROBERT WEBER No. C62511 Exp. 09-30-15 CIVIL STATE OF CALIFORNIA

THE STATE OF CALIFORNIA OR ITS OFFICERS OR AGENTS SHALL NOT BE RESPONSIBLE FOR THE ACCURACY OR COMPLETENESS OF SCANNED COPIES OF THIS PLAN SHEET.

NOTE:

1. DRILL AND BOND 4 EACH, 5/8" GALVANIZED THREADED RODS 6" INTO SIDEWALLS OF EXISTING DI. FASTEN GRATE USING 4" X 4" SQUARE WASHERS, STANDARD CUT WASHERS AND NUTS. CUT RODS 1/4" ABOVE TOP OF NUTS.

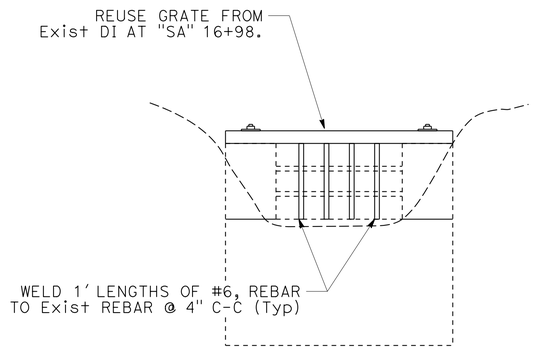

DETAIL A
SCALE: 1" = 1'

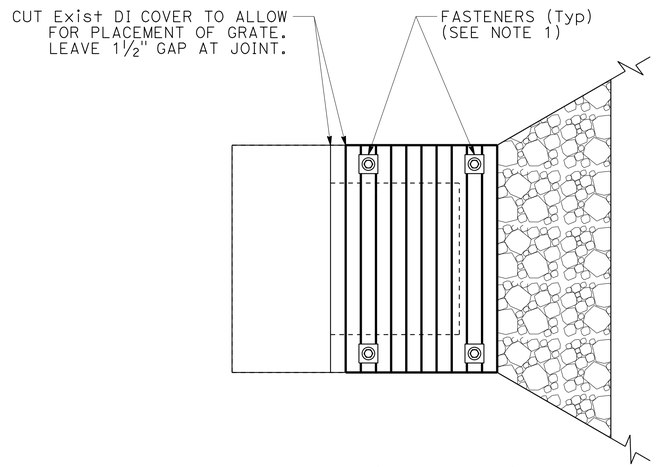

DETAIL B
SCALE: 1" = 1'

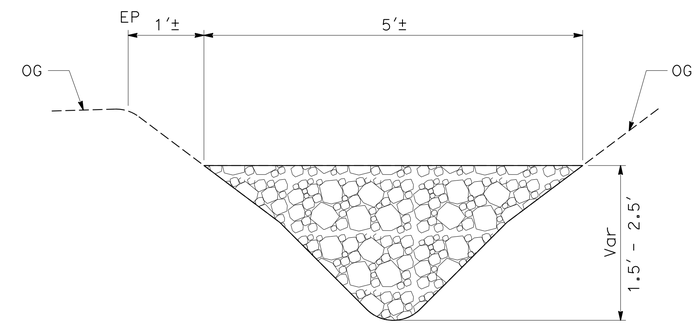

SECTION A-A
SCALE: 1" = 1'

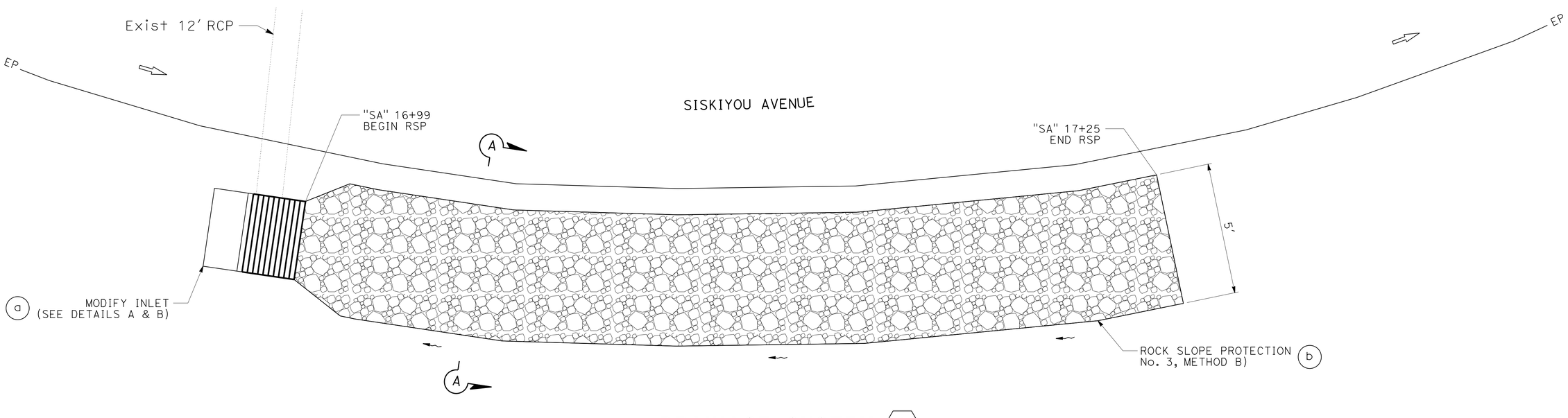

DRAINAGE SYSTEM 3
"SA" 16+99
SCALE: 1' = 2'

DRAINAGE DETAILS
SCALE: AS SHOWN

DD-2

REVISED BY	DATE REVISED
ROBERT WEBER	RUSSELL FLOOD
CALCULATED-DESIGNED BY	CHECKED BY
FUNCTIONAL SUPERVISOR	STEVE TOPAL

STATE OF CALIFORNIA - DEPARTMENT OF TRANSPORTATION
Caltrans
DESIGN

P:\proj1\02\4F610_plans\pse\24f610ic002.dgn

LAST REVISION 09-11-14 | DATE PLOTTED => 25-FEB-2015 | TIME PLOTTED => 07:51

Dist	COUNTY	ROUTE	POST MILES TOTAL PROJECT	SHEET No.	TOTAL SHEETS
02	Sha,Sis	5	Var	27	98

Robert Weber 01-30-15
REGISTERED CIVIL ENGINEER DATE

01-30-15
PLANS APPROVAL DATE

REGISTERED PROFESSIONAL ENGINEER ROBERT WEBER No. C62511 Exp. 09-30-15 CIVIL STATE OF CALIFORNIA

THE STATE OF CALIFORNIA OR ITS OFFICERS OR AGENTS SHALL NOT BE RESPONSIBLE FOR THE ACCURACY OR COMPLETENESS OF SCANNED COPIES OF THIS PLAN SHEET.

NOTE:

1. EXACT LOCATION OF SIGNS TO BE DETERMINED BY THE ENGINEER.

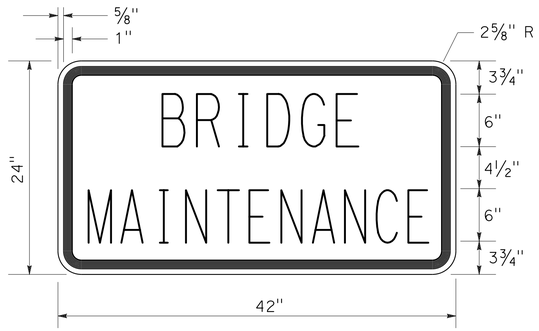

C23B(CA) SIGN PANEL DETAIL

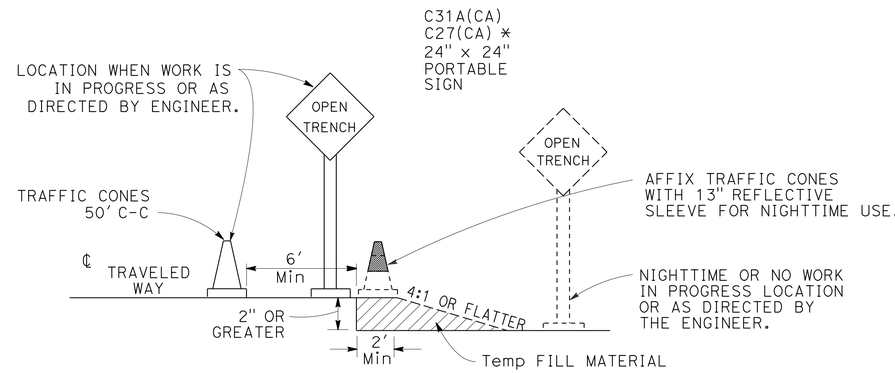

OPEN TRENCH SIGNING AND MARKING

* PLACE AT 250' INTERVALS THROUGH THE OPEN TRENCH AREA-ALTERNATE C27(CA) (OPEN TRENCH) AND C31A(CA) (NO SHOULDER) SIGNS

CONSTRUCTION AREA SIGNS (STATIONARY MOUNTED)

TYPE	CODE	PANEL SIZE	SIGN MESSAGE	No. AND SIZE OF POSTS
A	W20-1	48" x 48"	ROAD WORK AHEAD	1-4" x 6"
	C23B(CA)	42" X 24"	BRIDGE MAINTENANCE	
B	G20-2	36" x 18"	END ROAD WORK	1-4" x 4"

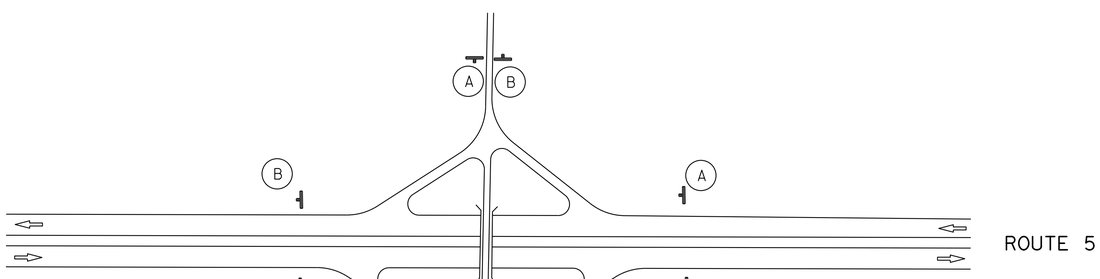

TYPICAL CONSTRUCTION AREA SIGN LOCATIONS

CONSTRUCTION AREA SIGN LOCATIONS

BRIDGE No.	BRIDGE NAME	COUNTY	POSTMILE	TYPE A	TYPE B	REMARKS
06-0124	HARTNELL AVENUE OC	SHA	R13.95	2	2	NO RAMPS
06-0101	HILLTOP DRIVE OC	SHA	R16.15	2	2	NO RAMPS
06-0155	OASIS ROAD OC	SHA	R19.40	4	4	
06-0161	PINE GROVE OC	SHA	R21.00	4	4	
06-0015	UNION SCHOOL ROAD OC	SHA	R22.41	2	2	NO RAMPS
06-0154	MOUNTAIN GATE OC	SHA	R24.08	4	4	
06-0162	FAWNDALE OC	SHA	R26.04	4	4	
06-0130R	TURNTABLE BAY OC	SHA	R29.32	4	4	
06-0160	GILMAN ROAD OC	SHA	R36.83	3	3	NO SB ON/NB OFF RAMPS
06-0158	ANTLER SUMMIT OC	SHA	R39.05	2	2	NO RAMPS
06-0179	GIBSON ROAD OC	SHA	53.3	4	4	
02-0097	SISKIYOU AVENUE OC	SIS	2.92	2	2	NO RAMPS
02-0172	DITCH CREEK ROAD OC	SIS	R62.92	4	4	
02-0173	BAILEY HILL ROAD OC	SIS	R65.52	4	4	
	SUBTOTAL			45	45	
	TOTAL			90		

CONSTRUCTION AREA SIGNS

NO SCALE

CS-1

REVISED BY | DATE REVISED
RUSSELL FLOOD | ROBERT WEBER
CALCULATED-DESIGNED BY | CHECKED BY
FUNCTIONAL SUPERVISOR: STEVE TOPAL

STATE OF CALIFORNIA - DEPARTMENT OF TRANSPORTATION
Caltrans DESIGN

P:\proj1\02\4F610_plans\pse\24f6101a001.dgn

LAST REVISION 08-26-14 | DATE PLOTTED => 25-FEB-2015 | TIME PLOTTED => 07:51

Dist	COUNTY	ROUTE	POST MILES TOTAL PROJECT	SHEET No.	TOTAL SHEETS
02	Sha,Sis	5	Var	28	98

REGISTERED CIVIL ENGINEER 01-30-15 DATE

PLANS APPROVAL DATE 01-30-15

REGISTERED PROFESSIONAL ENGINEER ROBERT WEBER No. C62511 Exp. 09-30-15 CIVIL STATE OF CALIFORNIA

THE STATE OF CALIFORNIA OR ITS OFFICERS OR AGENTS SHALL NOT BE RESPONSIBLE FOR THE ACCURACY OR COMPLETENESS OF SCANNED COPIES OF THIS PLAN SHEET.

NOTES:

1. EXACT LOCATION OF ALL SIGNS TO BE DETERMINED BY THE ENGINEER.
2. SEE STANDARD PLAN TRAFFIC CONTROL SYSTEM SHEETS FOR ADVANCE WARNING SIGNS AND TYPICAL SIGNING FOR REDUCED SPEED ZONE.

LEGEND:

- WORK AREA
- TEMPORARY RAILING (TYPE K)
- ALTERNATIVE TEMPORARY CRASH CUSHION
- TEMPORARY MARKER (TYPE P) (CA)
- CHANNELIZER (SURFACE MOUNTED)
- TEMPORARY PAVEMENT MARKING (TAPE) TYPE VI ARROW
- # TEMPORARY TRAFFIC STRIPE (TAPE) DETAIL NUMBER
- TYPE III BARRICADE, 3 PER LANE

ABBREVIATIONS:

BT	BEGIN REMOVE THERMOPLASTIC TRAFFIC STRIPE (WATER BLASTING)
ET	END REMOVE THERMOPLASTIC TRAFFIC STRIPE (WATER BLASTING)
CH25, X'	CHANNELIZER (SURFACE MOUNTED) AT 25' (Max) SPACING, X' LENGTH
TK	TEMPORARY RAILING (TYPE K)
TCC	TEMPORARY CRASH CUSHION SYSTEM

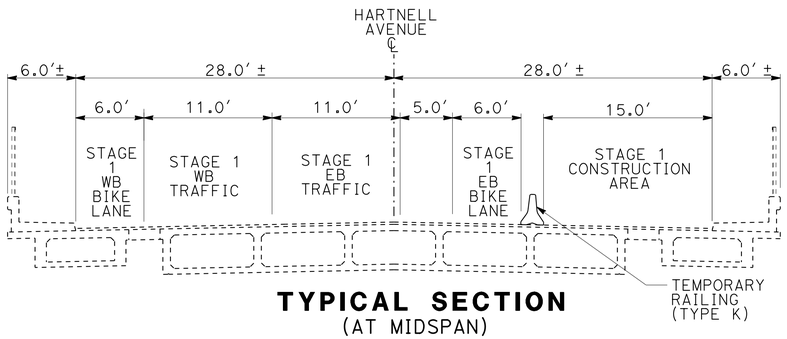

TYPICAL SECTION
(AT MIDSPAN)

STAGE 1 TRAFFIC HANDLING

PLACE CONSTRUCTION AREA SIGNS
REMOVE EXISTING TRAFFIC STRIPE
PLACE TEMPORARY TRAFFIC STRIPE
PLACE CHANNELIZER (SURFACE MOUNTED)
PLACE TEMPORARY RAILING (TYPE K)
CLOSE LANES & SHIFT TRAFFIC

STAGE 1 CONSTRUCTION

DECK REPAIR (SOUTH)

CONSTRUCTION AREA SIGNS (PORTABLE SIGNS)

SIGN No.	CODE	PANEL SIZE	SIGN MESSAGE	No. OF SIGNS
A	R9-11	24" x 12"	"SIDEWALK CLOSED AHEAD" → "CROSS HERE"	1
B	R9-11	24" x 12"	"SIDEWALK CLOSED AHEAD" ← "CROSS HERE"	1
C	R9-9	30" x 18"	"SIDEWALK" "CLOSED"	3
D	W1-4L	48" x 48"		1
	R9-9	24" x 24"	20 MPH	1
E	W1-4R	48" x 48"		1
	R9-9	24" x 24"	20 MPH	1

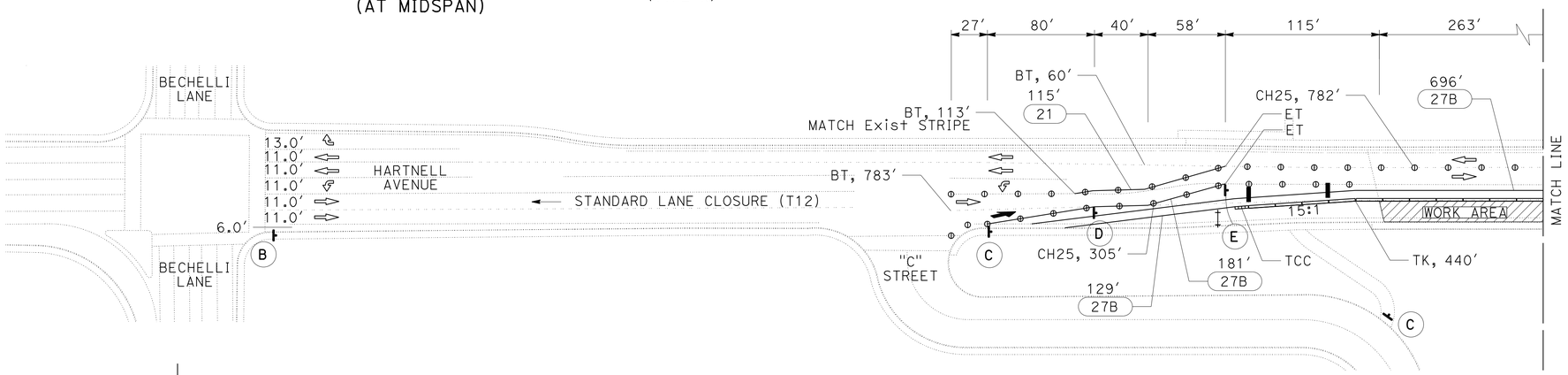

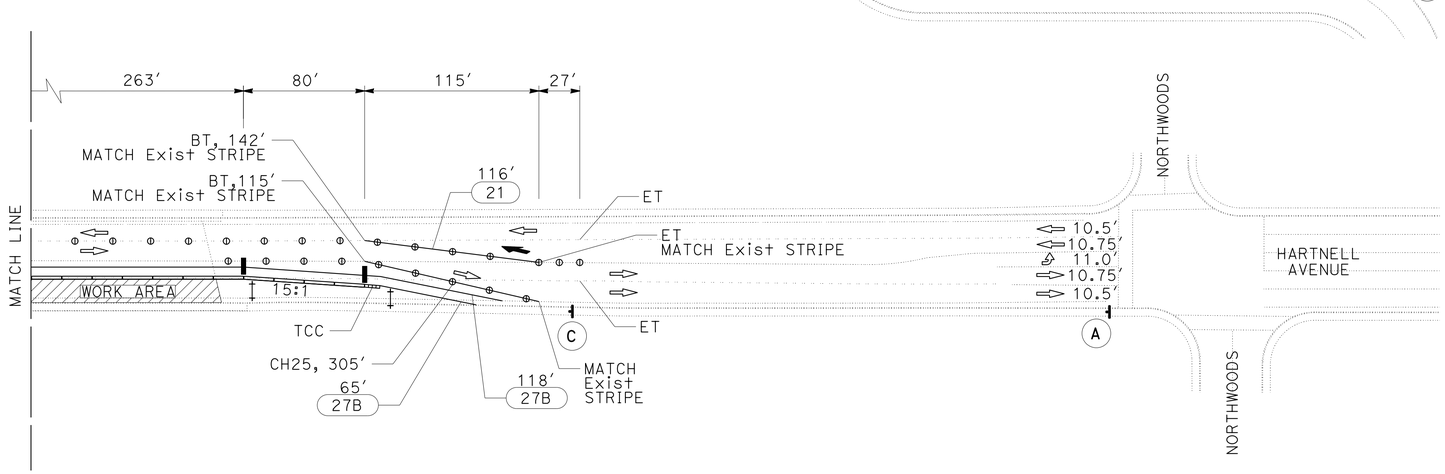

APPROVED FOR STAGE CONSTRUCTION AND TRAFFIC HANDLING WORK ONLY

STAGE 1
HARTNELL AVENUE
STAGE CONSTRUCTION AND TRAFFIC HANDLING PLAN

NO SCALE

SC-1

REVISED BY	DATE REVISED

CALCULATED-DESIGNED BY: DAN BROWN
CHECKED BY: ROBERT WEBER
FUNCTIONAL SUPERVISOR: STEVE TOPAL

STATE OF CALIFORNIA - DEPARTMENT OF TRANSPORTATION
Caltrans
DESIGN

P:\proj1\02\4F610_plans\pse\24f610ma001.dgn

LAST REVISION 08-28-14
DATE PLOTTED => 25-FEB-2015
TIME PLOTTED => 07:51

Dist	COUNTY	ROUTE	POST MILES TOTAL PROJECT	SHEET No.	TOTAL SHEETS
02	Sha,Sis	5	Var	29	98

Robert Weber 01-30-15
REGISTERED CIVIL ENGINEER DATE

01-30-15
PLANS APPROVAL DATE

REGISTERED PROFESSIONAL ENGINEER ROBERT WEBER No. C62511 Exp. 09-30-15 CIVIL STATE OF CALIFORNIA

THE STATE OF CALIFORNIA OR ITS OFFICERS OR AGENTS SHALL NOT BE RESPONSIBLE FOR THE ACCURACY OR COMPLETENESS OF SCANNED COPIES OF THIS PLAN SHEET.

NOTES:

1. EXACT LOCATION OF ALL SIGNS TO BE DETERMINED BY THE ENGINEER.
2. SEE STANDARD PLAN TRAFFIC CONTROL SYSTEM SHEETS FOR ADVANCE WARNING SIGNS AND TYPICAL SIGNING FOR REDUCED SPEED ZONE.

STAGE 2 TRAFFIC HANDLING

PLACE CONSTRUCTION AREA SIGNS
REMOVE EXISTING TRAFFIC STRIPE
PLACE TEMPORARY TRAFFIC STRIPE
PLACE CHANNELIZER (SURFACE MOUNTED)
PLACE TEMPORARY RAILING (TYPE K)
CLOSE LANES & SHIFT TRAFFIC

STAGE 2 CONSTRUCTION

DECK REPAIR (NORTH)

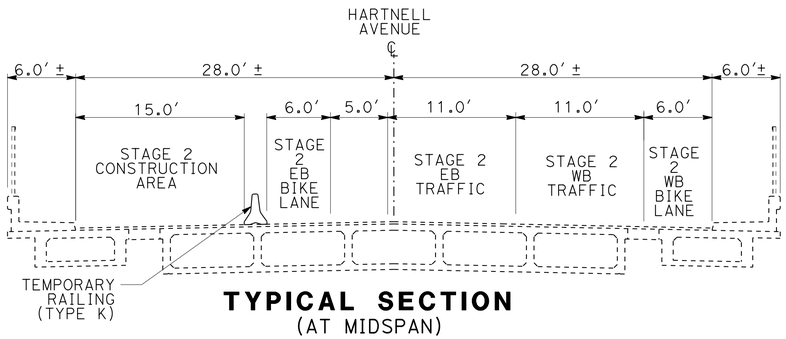

TYPICAL SECTION
(AT MIDSPAN)

STAGE CONSTRUCTION QUANTITIES

SHEET	STAGE	TEMPORARY TRAFFIC STRIPE (TAPE) DETAIL 5	DETAIL 21	DETAIL 27B	TEMPORARY PAVEMENT MARKING (TAPE)	CHANNELIZER (SURFACE MOUNTED)	TEMPORARY RAILING (TYPE K)	TEMPORARY CRASH CUSHION SYSTEM	REMOVE THERMOPLASTIC TRAFFIC STRIPE (WATER BLASTING)
		LF	LF	LF	SQFT	EA	LF	EA	LF
SC-1	1		231	1189	84	56	440	2	1213
SC-2	2	93	793	1339	84	36	440	2	
SUBTOTAL		93	1024	2528					
TOTAL		3645			168	92	880	4	1213

CONSTRUCTION AREA SIGNS (PORTABLE SIGNS)

SIGN No.	CODE	PANEL SIZE	SIGN MESSAGE	No. OF SIGNS
A	R9-11	24" x 12"	"SIDEWALK CLOSED AHEAD" → "CROSS HERE"	1
B	R9-11	24" x 12"	"SIDEWALK CLOSED AHEAD" ← "CROSS HERE"	1
C	R9-9	30" x 18"	"SIDEWALK" "CLOSED"	2
D	W1-4L	48" x 48"		1
	R9-9	24" x 24"	20 MPH	1
E	W1-4R	48" x 48"		1
	R9-9	24" x 24"	20 MPH	1

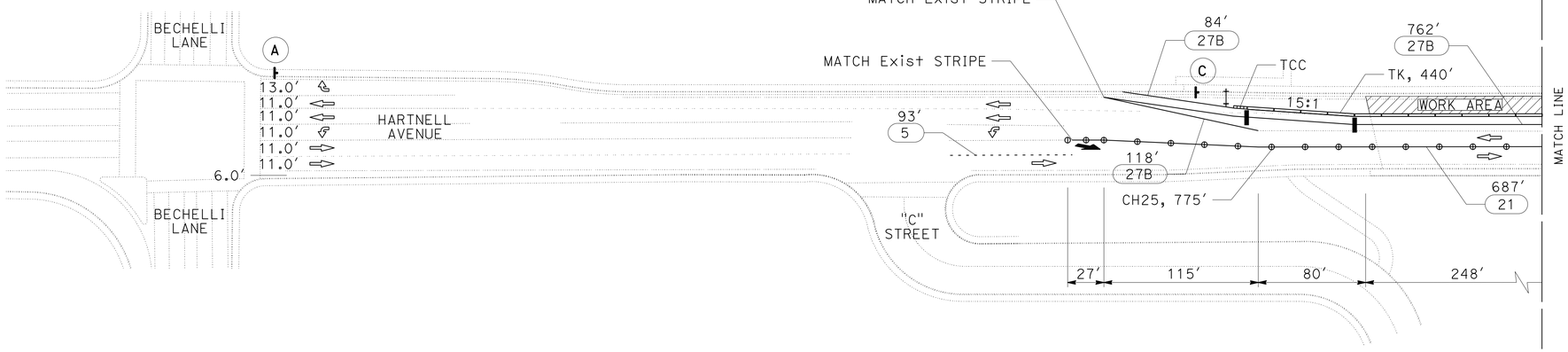

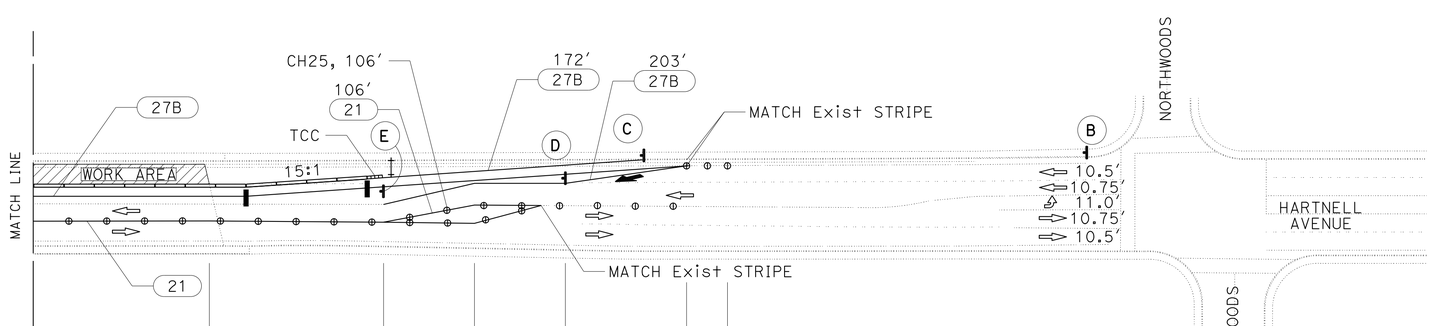

STAGE 2
HARTNELL AVENUE

STAGE CONSTRUCTION AND TRAFFIC HANDLING PLAN

NO SCALE

SC-2

APPROVED FOR STAGE CONSTRUCTION AND TRAFFIC HANDLING WORK ONLY

REVISED BY | DATE REVISED
DAN BROWN | ROBERT WEBER
CALCULATED-DESIGNED BY | CHECKED BY
FUNCTIONAL SUPERVISOR: STEVE TOPAL
STATE OF CALIFORNIA - DEPARTMENT OF TRANSPORTATION
Caltrans® DESIGN
P:\proj1\02\4F610_plans\pse\24f610ma002.dgn

LAST REVISION 08-28-14 | DATE PLOTTED => 25-FEB-2015 | TIME PLOTTED => 07:51

Dist	COUNTY	ROUTE	POST MILES TOTAL PROJECT	SHEET No.	TOTAL SHEETS
02	Sha,Sis	5	Var	30	98

Robert Weber 01-30-15
REGISTERED CIVIL ENGINEER DATE

01-30-15
PLANS APPROVAL DATE

REGISTERED PROFESSIONAL ENGINEER ROBERT WEBER No. C62511 Exp. 09-30-15 CIVIL STATE OF CALIFORNIA

THE STATE OF CALIFORNIA OR ITS OFFICERS OR AGENTS SHALL NOT BE RESPONSIBLE FOR THE ACCURACY OR COMPLETENESS OF SCANNED COPIES OF THIS PLAN SHEET.

NOTE:

1. ROAD CLOSED C2(CA) SIGN TO BE INSTALLED NEAR CENTER OF ROAD ON A TYPE III BARRICADE.

LEGEND:

BARRICADE

TRAFFIC CONE

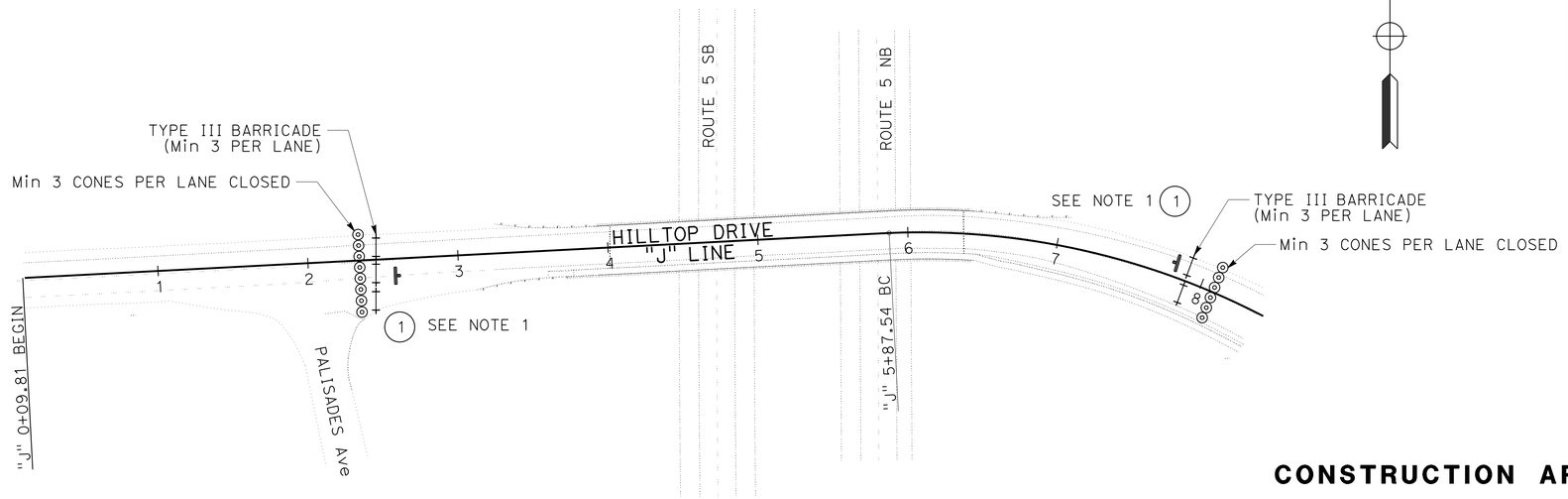

CLOSURE OF HILLTOP DRIVE OC

CONSTRUCTION AREA SIGNS (PORTABLE)

LOCATION	SIGN TYPE ○	SIGN CODE	MESSAGE	PANEL SIZE	No. OF SIGNS
HILLTOP DRIVE	1	C2(CA)	ROAD CLOSED	36" x 24"	2
TURNTABLE BAY ROAD	1	C2(CA)	ROAD CLOSED	36" x 24"	2
				TOTAL	4

TYPE III BARRICADE

LOCATION	No. OF BARRICADES
	EA
HILLTOP DRIVE	12
TURNTABLE BAY ROAD	12
TOTAL	24

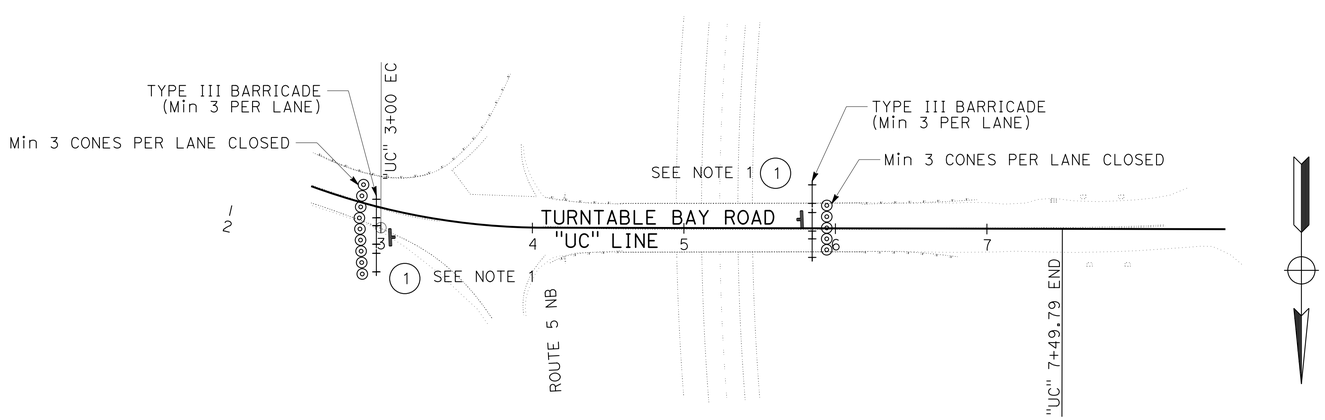

CLOSURE OF TURNTABLE BAY ROAD OC

TRAFFIC HANDLING PLAN

SCALE: 1" = 50'

TH-1

REVISED BY | DATE REVISED

RUSSELL FLOOD | ROBERT WEBER

CALCULATED-DESIGNED BY | CHECKED BY

FUNCTIONAL SUPERVISOR: STEVE TOPAL

STATE OF CALIFORNIA - DEPARTMENT OF TRANSPORTATION

Caltrans® DESIGN

P:\proj1\02\4F610_plans\pse\24f610md001.dgn

LAST REVISION 12-22-14 | DATE PLOTTED => 25-FEB-2015 | TIME PLOTTED => 07:51

Dist	COUNTY	ROUTE	POST MILES TOTAL PROJECT	SHEET No.	TOTAL SHEETS
02	Sha,Sis	5	Var	31	98

Robert Weber 01-30-15
REGISTERED CIVIL ENGINEER DATE

01-30-15
PLANS APPROVAL DATE

REGISTERED PROFESSIONAL ENGINEER ROBERT WEBER No. C62511 Exp. 09-30-15 CIVIL STATE OF CALIFORNIA

THE STATE OF CALIFORNIA OR ITS OFFICERS OR AGENTS SHALL NOT BE RESPONSIBLE FOR THE ACCURACY OR COMPLETENESS OF SCANNED COPIES OF THIS PLAN SHEET.

NOTES:

1. EXACT LOCATION OF SIGNS TO BE DETERMINED BY THE ENGINEER.

CONSTRUCTION AREA SIGNS (PORTABLE)

SIGN TYPE ○	SIGN CODE	MESSAGE	PANEL SIZE	No. OF SIGNS
1	M4-10(R†)	DETOUR (R† ARROW)	48" x 18"	1
	G7-1(CA) SPECIAL	HILLTOP Dr	48" x 18"	
2	M4-10(L†)	DETOUR (L† ARROW)	48" x 18"	3
	G7-1(CA) SPECIAL	HILLTOP Dr	48" x 18"	
3	SC3(CA)	DETOUR (UP ARROW)	48" x 18"	5
	G7-1(CA) SPECIAL	HILLTOP Dr	48" x 18"	
4	M4-8a	END DETOUR	24" x 18"	1
		TOTAL		10

LEGEND:

XXX ROADWAY CLOSURE

PORTABLE CHANGEABLE MESSAGE SIGN (PCMS)

DETOUR ROUTE

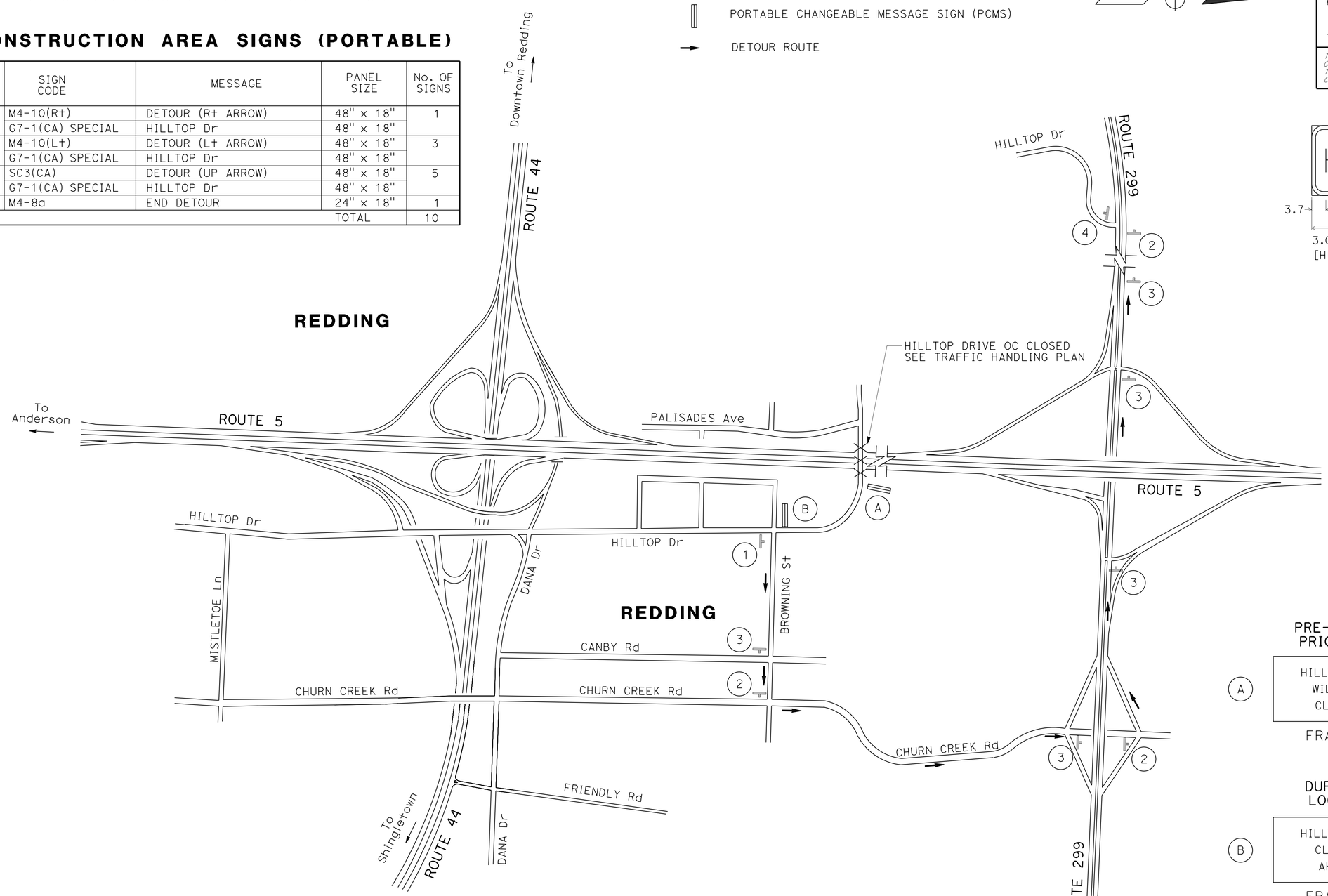

3.0" RADIUS, 1.0" BORDER, BLACK ON ORANGE;
[HILLTOP Dr] D;

SIGN DETAIL

G7-1(CA) SPECIAL

PCMS MESSAGES

PRE-CLOSURE: PLACE PCMS 7 DAYS PRIOR TO CLOSURE AND ACTIVATE

	FRAME 1	FRAME 2
A	HILLTOP Dr WILL BE CLOSED	DAY DATE X PM - Y AM

DURING CLOSURE: MOVE PCMS TO LOCATION SHOWN AND ACTIVATE

	FRAME 1	FRAME 2
B	HILLTOP Dr CLOSED AHEAD	FOLLOW DETOUR

DETOUR FOR CLOSURE OF HILLTOP DRIVE OC

(FOR WESTBOUND TRAFFIC)

APPROVED FOR DETOUR WORK ONLY

DETOUR PLAN

NO SCALE **DE-1**

REVISED BY | DATE REVISED
RUSSELL FLOOD | ROBERT WEBER
CALCULATED-DESIGNED BY | CHECKED BY
FUNCTIONAL SUPERVISOR | STEVE TOPAL

STATE OF CALIFORNIA - DEPARTMENT OF TRANSPORTATION
Caltrans® DESIGN

P:\proj1\02\4F610_plans\pse\24f610mg001.dgn

LAST REVISION 08-28-14 | DATE PLOTTED => 25-FEB-2015 | TIME PLOTTED => 07:51

BORDER LAST REVISED 7/2/2010 | USERNAME => s115152 | DGN FILE => 24f610mg001.dgn | RELATIVE BORDER SCALE IS IN INCHES 0 1 2 3 | UNIT 0319 | PROJECT NUMBER & PHASE 02-1300-0013-1 | EA 02-4F6101

Dist	COUNTY	ROUTE	POST MILES TOTAL PROJECT	SHEET No.	TOTAL SHEETS
02	Sha,Sis	5	Var	32	98

Robert Weber 01-30-15
REGISTERED CIVIL ENGINEER DATE

01-30-15
PLANS APPROVAL DATE

REGISTERED PROFESSIONAL ENGINEER ROBERT WEBER No. C62511 Exp. 09-30-15 CIVIL STATE OF CALIFORNIA

THE STATE OF CALIFORNIA OR ITS OFFICERS OR AGENTS SHALL NOT BE RESPONSIBLE FOR THE ACCURACY OR COMPLETENESS OF SCANNED COPIES OF THIS PLAN SHEET.

NOTES:

1. EXACT LOCATION OF SIGNS TO BE DETERMINED BY THE ENGINEER.

CONSTRUCTION AREA SIGNS (PORTABLE)

SIGN TYPE ○	SIGN CODE	MESSAGE	PANEL SIZE	No. OF SIGNS
1	M4-10(Rt)	DETOUR (Rt ARROW)	48" x 18"	3
	G7-1(CA) SPECIAL	HILLTOP Dr	48" x 18"	
3	SC3(CA)	DETOUR (UP ARROW)	48" x 18"	3
	G7-1(CA) SPECIAL	HILLTOP Dr	48" x 18"	
4	M4-8a	END DETOUR	24" x 18"	1
			TOTAL	7

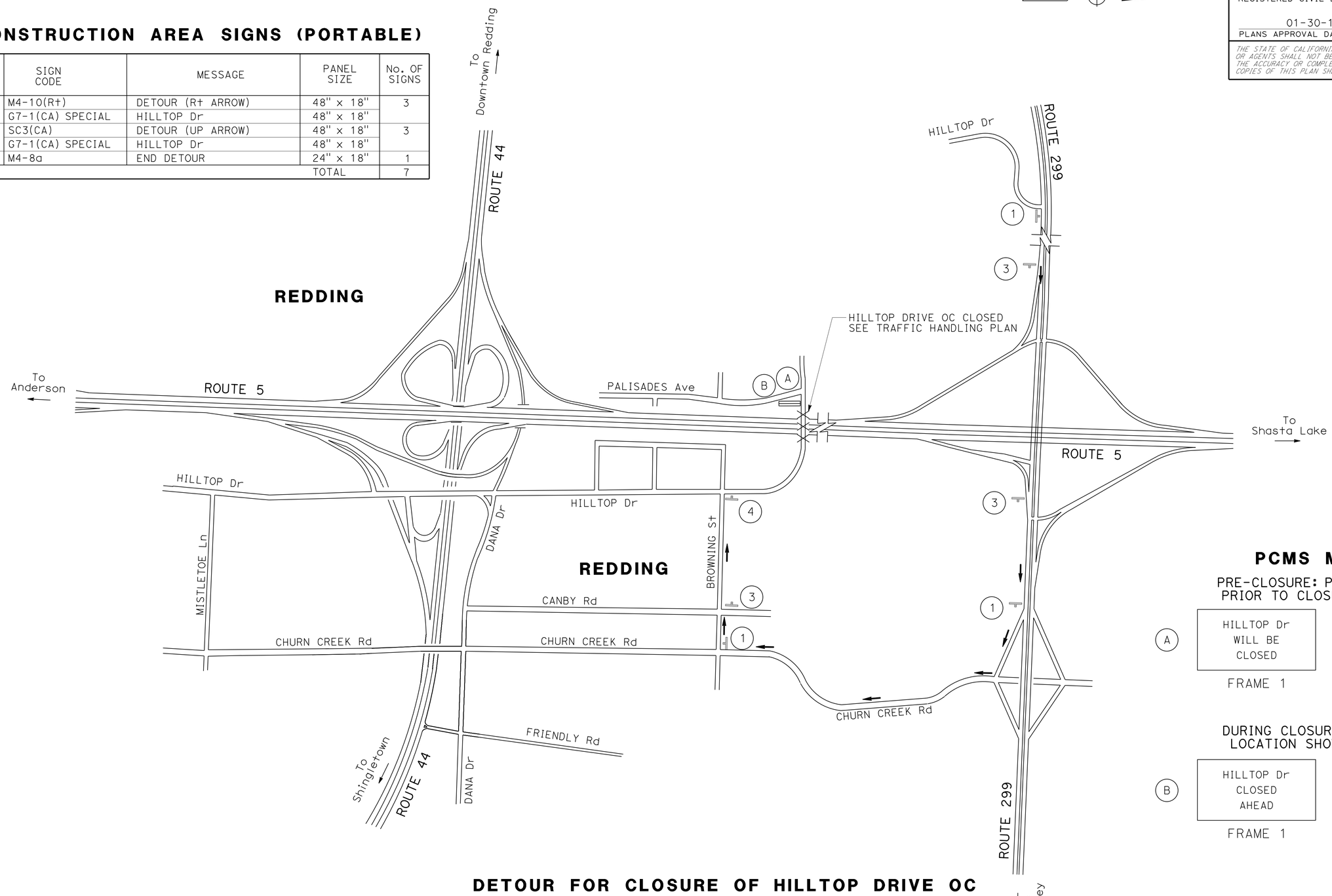

PCMS MESSAGES

PRE-CLOSURE: PLACE PCMS 7 DAYS PRIOR TO CLOSURE AND ACTIVATE

	FRAME 1	FRAME 2
A	HILLTOP Dr WILL BE CLOSED	DAY DATE X PM - Y AM

DURING CLOSURE: LEAVE PCMS AT LOCATION SHOWN AND ACTIVATE

	FRAME 1	FRAME 2
B	HILLTOP Dr CLOSED AHEAD	FOLLOW DETOUR

DETOUR FOR CLOSURE OF HILLTOP DRIVE OC

(FOR EASTBOUND TRAFFIC)

APPROVED FOR DETOUR WORK ONLY

DETOUR PLAN

NO SCALE **DE-2**

REVISED BY | DATE REVISED
RUSSELL FLOOD | ROBERT WEBER
CALCULATED-DESIGNED BY | CHECKED BY
FUNCTIONAL SUPERVISOR: STEVE TOPAL

STATE OF CALIFORNIA - DEPARTMENT OF TRANSPORTATION
Caltrans® DESIGN

P:\proj1\02\4F610_plans\pse\24f610mg002.dgn

LAST REVISION 08-28-14 | DATE PLOTTED => 25-FEB-2015 | TIME PLOTTED => 07:51

Dist	COUNTY	ROUTE	POST MILES TOTAL PROJECT	SHEET No.	TOTAL SHEETS
02	Sha,Sis	5	Var	33	98

Robert Weber 01-30-15
REGISTERED CIVIL ENGINEER DATE

01-30-15
PLANS APPROVAL DATE

REGISTERED PROFESSIONAL ENGINEER ROBERT WEBER No. C62511 Exp. 09-30-15 CIVIL STATE OF CALIFORNIA

THE STATE OF CALIFORNIA OR ITS OFFICERS OR AGENTS SHALL NOT BE RESPONSIBLE FOR THE ACCURACY OR COMPLETENESS OF SCANNED COPIES OF THIS PLAN SHEET.

NOTES:

1. EXACT LOCATION OF SIGNS TO BE DETERMINED BY THE ENGINEER

CONSTRUCTION AREA SIGNS (PORTABLE)

SIGN TYPE ○	SIGN CODE	MESSAGE	PANEL SIZE	No. OF SIGNS
1*	SC6-4(CA) SPECIAL	ROAD CLOSED (DATE-DATE)	48" x 60"	1
2	M4-10(R†)	DETOUR (R† ARROW)	48" x 18"	2
	G27-2(5)(CA)	INTERSTATE 5	24" x 24"	
	M3-3	SOUTH	26" x 12"	
3	SC3(CA)	DETOUR (UP ARROW)	48" x 18"	3
	G27-2(5)(CA)	INTERSTATE 5	24" x 24"	
	M3-3	SOUTH	24" x 12"	
4	M4-10(L†)	DETOUR (L† ARROW)	48" x 18"	2
	G27-2(5)(CA)	INTERSTATE 5	24" x 24"	
	M3-3	SOUTH	24" x 12"	
5	M4-8a	END DETOUR	24" x 18"	1
			TOTAL:	9

* PLACE SIGN SEVEN DAYS PRIOR TO ROAD CLOSURE.

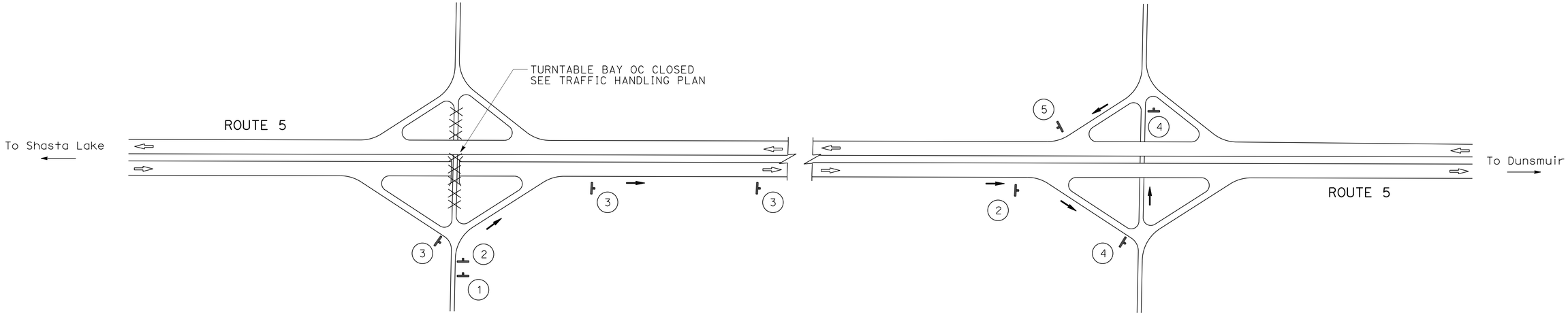

TURNTABLE BAY ROAD OC
PM R29.32

O'BRIEN UC
PM R32.06

DETOUR FOR CLOSURE OF TURNTABLE BAY ROAD OC

APPROVED FOR DETOUR WORK ONLY

DETOUR PLAN

NO SCALE **DE-3**

STATE OF CALIFORNIA - DEPARTMENT OF TRANSPORTATION
Caltrans® **DESIGN**

FUNCTIONAL SUPERVISOR: STEVE TOPAL
CALCULATED-DESIGNED BY: ROBERT WEBER
CHECKED BY:
REVISED BY:
DATE REVISED:

P:\proj1\02\4F610_plans\pse\24f610mg003.dgn

LAST REVISION 08-28-14
DATE PLOTTED => 25-FEB-2015
TIME PLOTTED => 07:51

Dist	COUNTY	ROUTE	POST MILES TOTAL PROJECT	SHEET No.	TOTAL SHEETS
02	Sha,Sis	5	Var	34	98

Robert Weber 01-30-15
REGISTERED CIVIL ENGINEER DATE

01-30-15
PLANS APPROVAL DATE

REGISTERED PROFESSIONAL ENGINEER ROBERT WEBER No. C62511 Exp. 09-30-15 CIVIL STATE OF CALIFORNIA

THE STATE OF CALIFORNIA OR ITS OFFICERS OR AGENTS SHALL NOT BE RESPONSIBLE FOR THE ACCURACY OR COMPLETENESS OF SCANNED COPIES OF THIS PLAN SHEET.

NOTES:

1. EXACT LOCATION OF SIGNS TO BE DETERMINED BY THE ENGINEER.
2. OVERLAY "RAMP CLOSED" WITH "ROAD CLOSED"

CONSTRUCTION AREA SIGNS (PORTABLE)

SIGN TYPE ◯	SIGN CODE	MESSAGE	PANEL SIZE	No. OF SIGNS
1*	SC6-4(CA) SPECIAL	ROAD CLOSED (DATE-TIME)	48" x 60"	1
2	M4-10(R+)	DETOUR (R+ ARROW)	48" x 18"	3
	G7-1(CA) SPECIAL	TURNTABLE BAY	66" x 18"	
3	SC3(CA)	DETOUR (UP ARROW)	48" x 18"	5
	G7-1(CA) SPECIAL	TURNTABLE BAY	66" x 18"	
4	M4-10(L+)	DETOUR (L+ ARROW)	48" x 18"	2
	G7-1(CA) SPECIAL	TURNTABLE BAY	66" x 18"	
5	M4-8a	END DETOUR	24" x 18"	1
			TOTAL	12

* PLACE SIGN SEVEN DAYS PRIOR TO ROAD CLOSURE.
SEE NOTE 2.

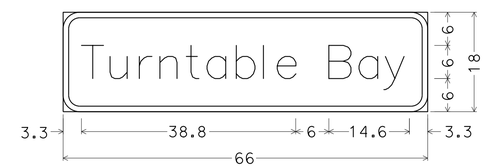

3.0" RADIUS, 1.0" BORDER, BLACK ON ORANGE;
[TURNTABLE BAY] D;

SIGN DETAIL

G7-1(CA) SPECIAL

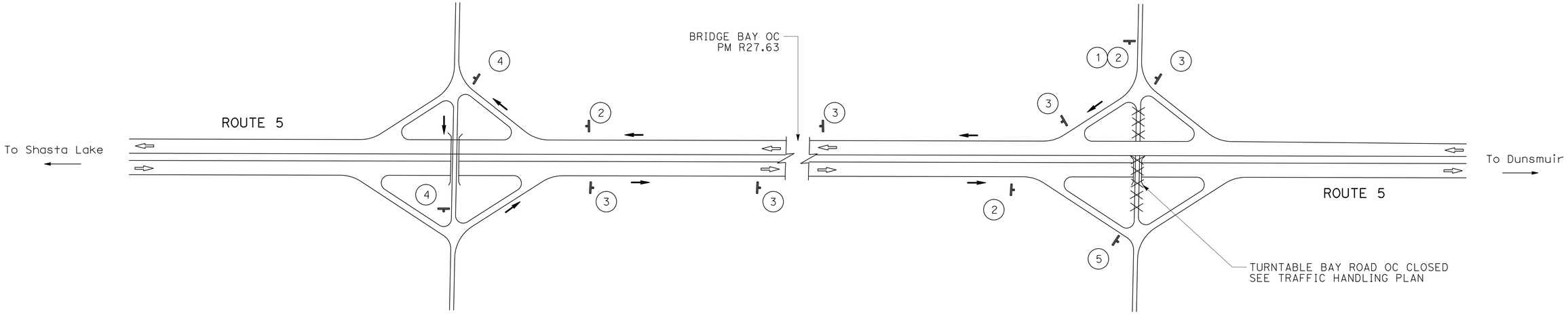

FAWNDALE OC

PM R26.04

TURNTABLE BAY ROAD OC

PM R29.32

DETOUR FOR CLOSURE OF TURNTABLE BAY ROAD OC

APPROVED FOR DETOUR WORK ONLY

DETOUR PLAN

NO SCALE **DE-4**

REVISED BY | DATE REVISED
RUSSELL FLOOD | ROBERT WEBER
CALCULATED-DESIGNED BY | CHECKED BY
FUNCTIONAL SUPERVISOR: STEVE TOPAL
STATE OF CALIFORNIA - DEPARTMENT OF TRANSPORTATION
Caltrans® DESIGN
P:\proj1\02\4F610_plans\pse\24f610mg004.dgn

LAST REVISION 08-28-14 | DATE PLOTTED => 25-FEB-2015 | TIME PLOTTED => 07:51

BORDER LAST REVISED 7/2/2010 | USERNAME => s115152 | DGN FILE => 24f610mg004.dgn | RELATIVE BORDER SCALE IS IN INCHES 0 1 2 3 | UNIT 0319 | PROJECT NUMBER & PHASE 02-1300-0013-1 | EA 02-4F6101

Dist	COUNTY	ROUTE	POST MILES TOTAL PROJECT	SHEET No.	TOTAL SHEETS
02	Sha,Sis	5	Var	35	98

Robert Weber 01-30-15
REGISTERED CIVIL ENGINEER DATE

01-30-15
PLANS APPROVAL DATE

REGISTERED PROFESSIONAL ENGINEER
ROBERT WEBER
No. C62511
Exp. 09-30-15
CIVIL
STATE OF CALIFORNIA

THE STATE OF CALIFORNIA OR ITS OFFICERS OR AGENTS SHALL NOT BE RESPONSIBLE FOR THE ACCURACY OR COMPLETENESS OF SCANNED COPIES OF THIS PLAN SHEET.

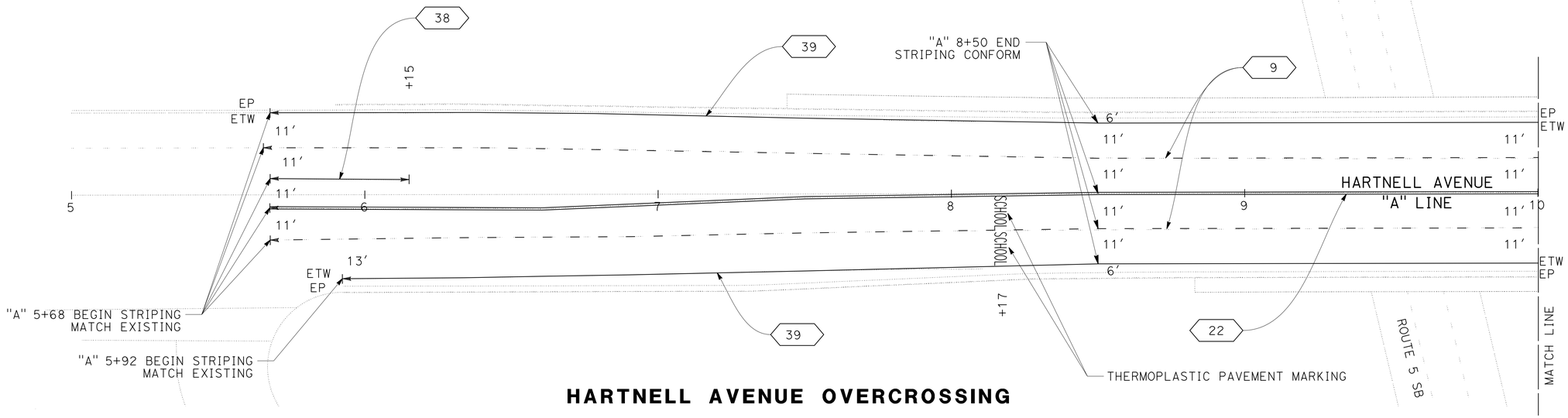

HARTNELL AVENUE OVERCROSSING

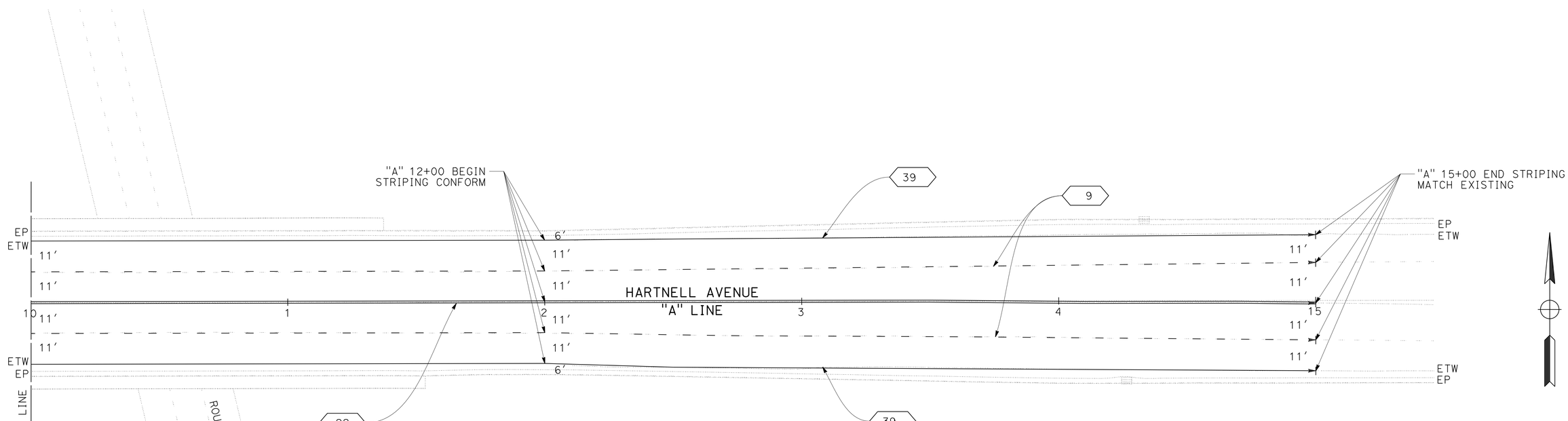

HARTNELL AVENUE OVERCROSSING

APPROVED FOR PAVEMENT DELINEATION WORK ONLY

PAVEMENT DELINEATION PLAN

SCALE: 1" = 20′

PD-1

REVISED BY	DATE REVISED
RUSSELL FLOOD	ROBERT WEBER
CALCULATED-DESIGNED BY	CHECKED BY
FUNCTIONAL SUPERVISOR	STEVE TOPAL

STATE OF CALIFORNIA - DEPARTMENT OF TRANSPORTATION
Caltrans
DESIGN

P:\proj1\02\4F610_plans\pse\24f610na001.dgn

LAST REVISION 08-29-14
DATE PLOTTED => 25-FEB-2015
TIME PLOTTED => 07:51

Dist	COUNTY	ROUTE	POST MILES TOTAL PROJECT	SHEET No.	TOTAL SHEETS
02	Sha,Sis	5	Var	36	98

Robert Weber 01-30-15
REGISTERED CIVIL ENGINEER DATE

01-30-15
PLANS APPROVAL DATE

REGISTERED PROFESSIONAL ENGINEER
ROBERT WEBER
No. C62511
Exp. 09-30-15
CIVIL
STATE OF CALIFORNIA

THE STATE OF CALIFORNIA OR ITS OFFICERS OR AGENTS SHALL NOT BE RESPONSIBLE FOR THE ACCURACY OR COMPLETENESS OF SCANNED COPIES OF THIS PLAN SHEET.

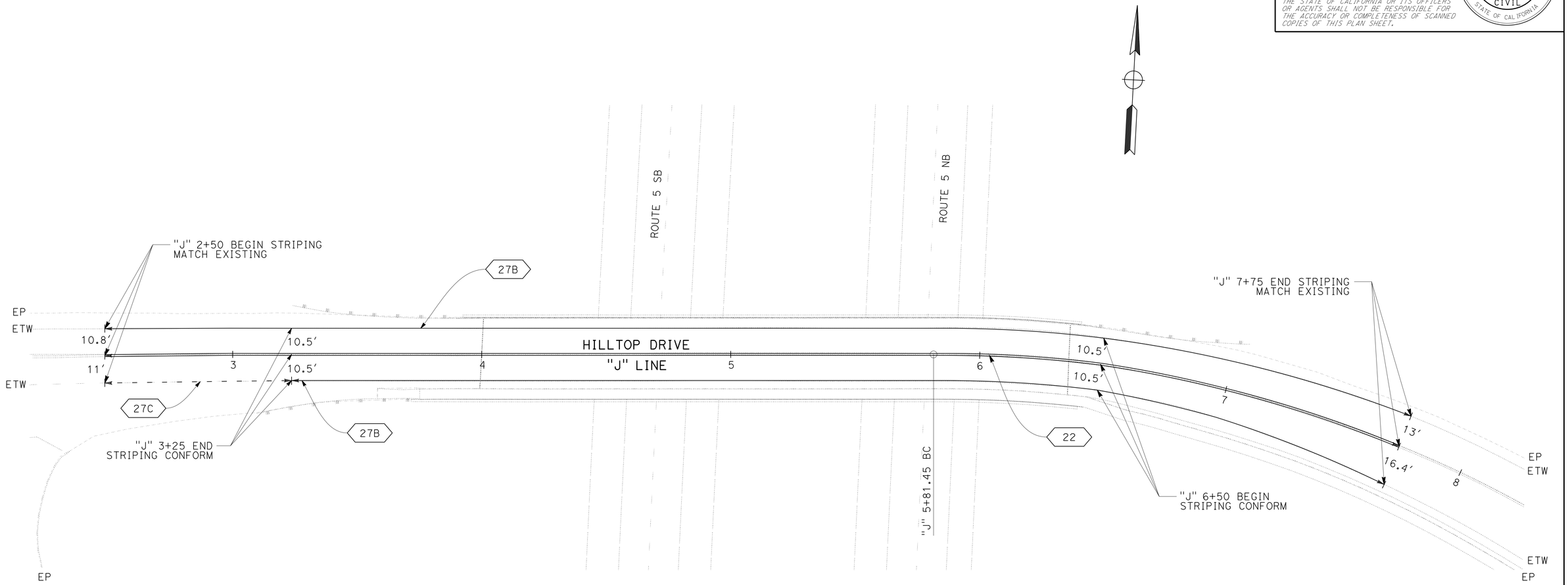

HILLTOP DRIVE OVERCROSSING

PAVEMENT DELINEATION PLAN

SCALE: 1" = 20′

PD-2

APPROVED FOR PAVEMENT DELINEATION WORK ONLY

REVISED BY	DATE REVISED

CALCULATED-DESIGNED BY	CHECKED BY
RUSSELL FLOOD	ROBERT WEBER

FUNCTIONAL SUPERVISOR: STEVE TOPAL

STATE OF CALIFORNIA - DEPARTMENT OF TRANSPORTATION
Caltrans
DESIGN

P:\proj1\02\4F610_plans\pse\24f610na002.dgn

LAST REVISION 08-28-14 | DATE PLOTTED => 25-FEB-2015 | TIME PLOTTED => 07:51

Dist	COUNTY	ROUTE	POST MILES TOTAL PROJECT	SHEET No.	TOTAL SHEETS
02	Sha,Sis	5	Var	37	98

Robert Weber 01-30-15
REGISTERED CIVIL ENGINEER DATE

01-30-15
PLANS APPROVAL DATE

REGISTERED PROFESSIONAL ENGINEER ROBERT WEBER No. C62511 Exp. 09-30-15 CIVIL STATE OF CALIFORNIA

THE STATE OF CALIFORNIA OR ITS OFFICERS OR AGENTS SHALL NOT BE RESPONSIBLE FOR THE ACCURACY OR COMPLETENESS OF SCANNED COPIES OF THIS PLAN SHEET.

LEGEND:

TYPE III ARROW

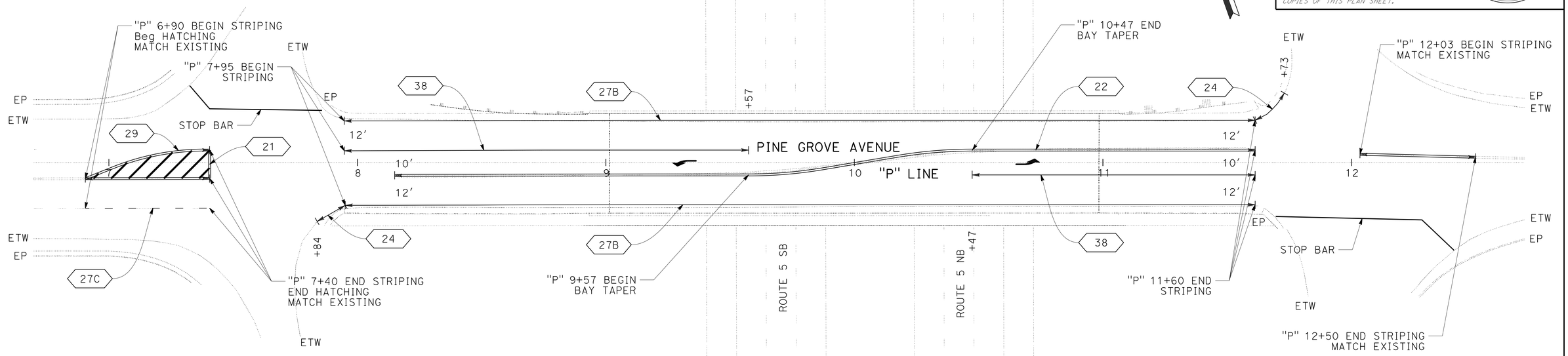

PINE GROVE OVERCROSSING

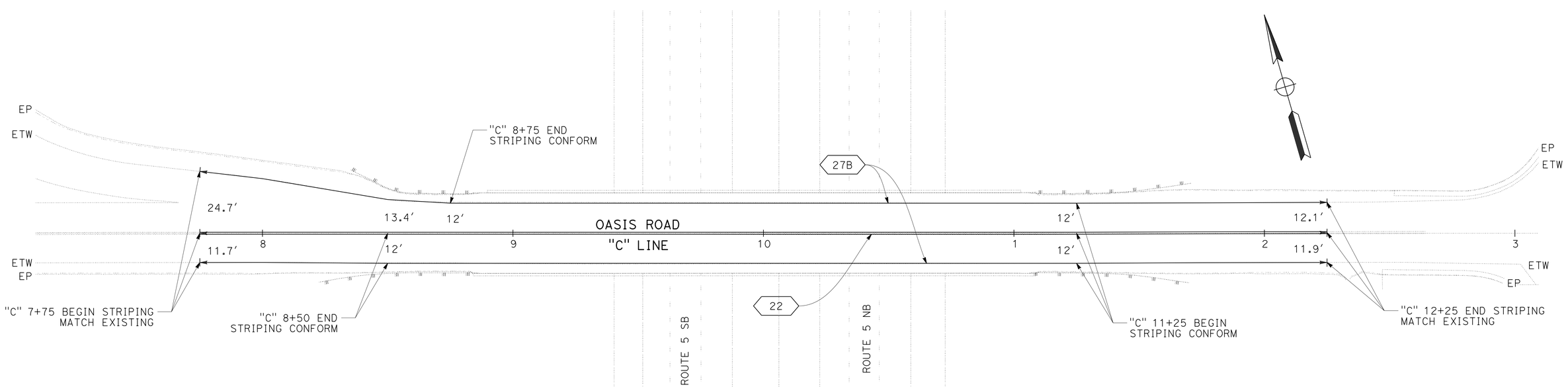

OASIS ROAD OVERCROSSING

APPROVED FOR PAVEMENT DELINEATION WORK ONLY

PAVEMENT DELINEATION PLAN

SCALE: 1" = 20′

PD-3

REVISED BY	DATE REVISED

RUSSELL FLOOD — ROBERT WEBER

CALCULATED-DESIGNED BY — CHECKED BY

FUNCTIONAL SUPERVISOR: STEVE TOPAL

STATE OF CALIFORNIA - DEPARTMENT OF TRANSPORTATION

Caltrans® DESIGN

P:\proj1\02\4F610_plans\pse\24f610na003.dgn

LAST REVISION 09-03-14 | DATE PLOTTED => 25-FEB-2015 | TIME PLOTTED => 07:51

BORDER LAST REVISED 7/2/2010 | USERNAME => s115152 | DGN FILE => 24f610na003.dgn | RELATIVE BORDER SCALE IS IN INCHES 0 1 2 3 | UNIT 0319 | PROJECT NUMBER & PHASE 02-1300-0013-1 | EA 02-4F6101

Dist	COUNTY	ROUTE	POST MILES TOTAL PROJECT	SHEET No.	TOTAL SHEETS
02	Sha,Sis	5	Var	38	98

Robert Weber 01-30-15
REGISTERED CIVIL ENGINEER DATE

01-30-15
PLANS APPROVAL DATE

REGISTERED PROFESSIONAL ENGINEER ROBERT WEBER No. C62511 Exp. 09-30-15 CIVIL STATE OF CALIFORNIA

THE STATE OF CALIFORNIA OR ITS OFFICERS OR AGENTS SHALL NOT BE RESPONSIBLE FOR THE ACCURACY OR COMPLETENESS OF SCANNED COPIES OF THIS PLAN SHEET.

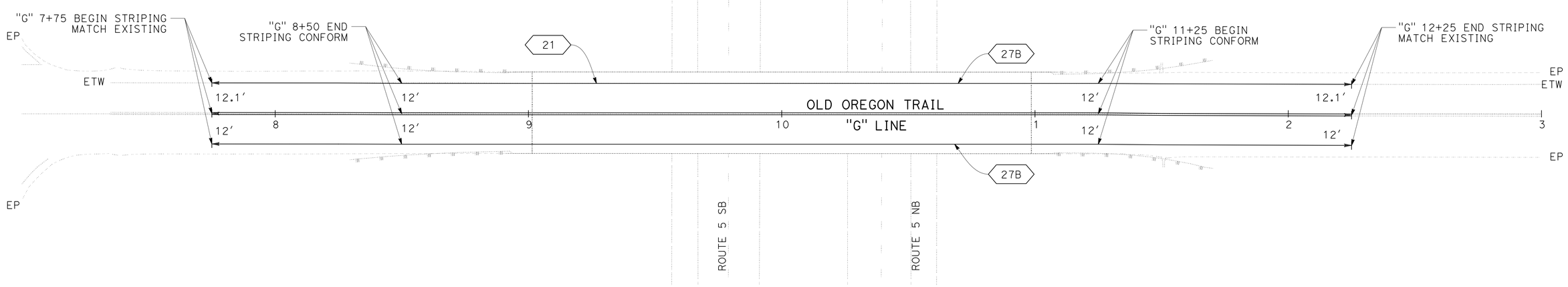

MOUNTAIN GATE OVERCROSSING

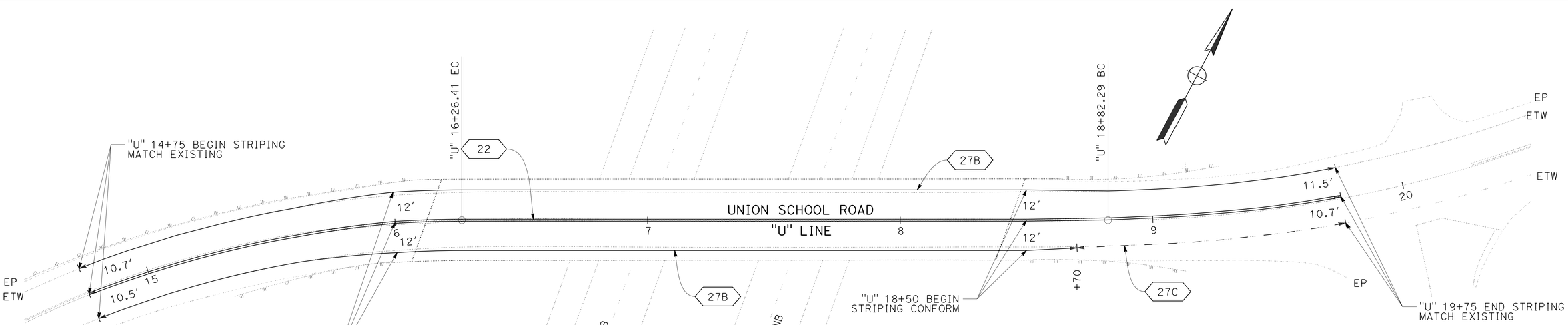

UNION SCHOOL OVERCROSSING

APPROVED FOR PAVEMENT DELINEATION WORK ONLY

PAVEMENT DELINEATION PLAN

SCALE: 1" = 20′

PD-4

REVISED BY	DATE REVISED

RUSSELL FLOOD — ROBERT WEBER
CALCULATED-DESIGNED BY — CHECKED BY
FUNCTIONAL SUPERVISOR — STEVE TOPAL

STATE OF CALIFORNIA - DEPARTMENT OF TRANSPORTATION
Caltrans® DESIGN

P:\proj1\02\4F610_plans\pse\24f610na004.dgn

LAST REVISION 09-02-14 — DATE PLOTTED => 25-FEB-2015 — TIME PLOTTED => 07:51

Dist	COUNTY	ROUTE	POST MILES TOTAL PROJECT	SHEET No.	TOTAL SHEETS
02	Sha,Sis	5	Var	39	98

Robert Weber 01-30-15
REGISTERED CIVIL ENGINEER DATE

01-30-15
PLANS APPROVAL DATE

REGISTERED PROFESSIONAL ENGINEER ROBERT WEBER No. C62511 Exp. 09-30-15 CIVIL STATE OF CALIFORNIA

THE STATE OF CALIFORNIA OR ITS OFFICERS OR AGENTS SHALL NOT BE RESPONSIBLE FOR THE ACCURACY OR COMPLETENESS OF SCANNED COPIES OF THIS PLAN SHEET.

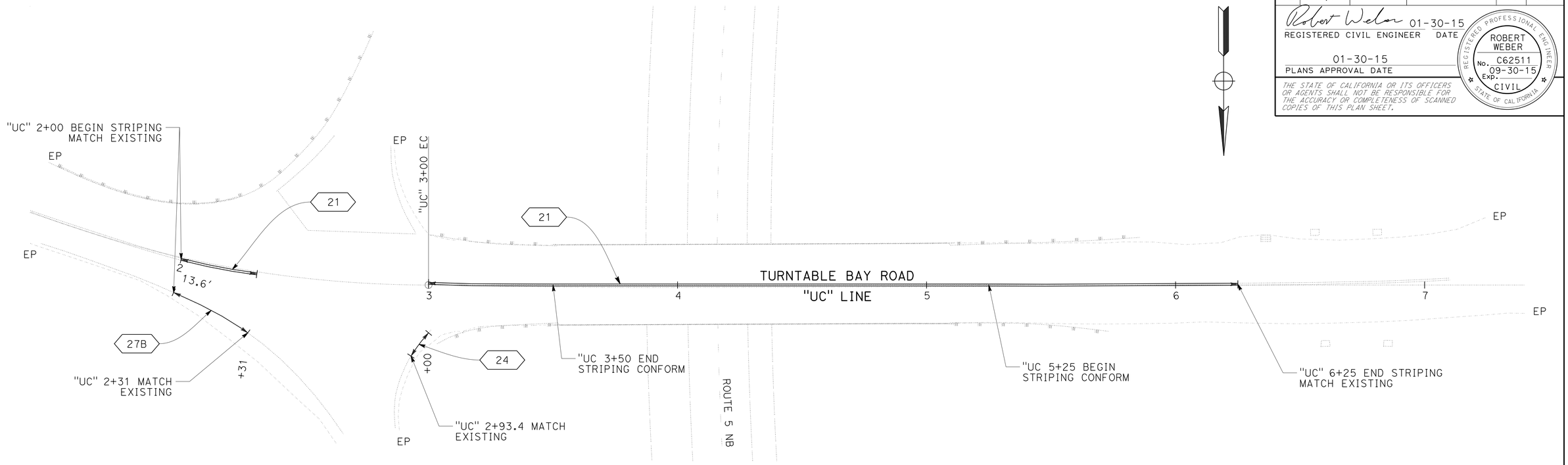

TURNTABLE BAY ROAD OVERCROSSING

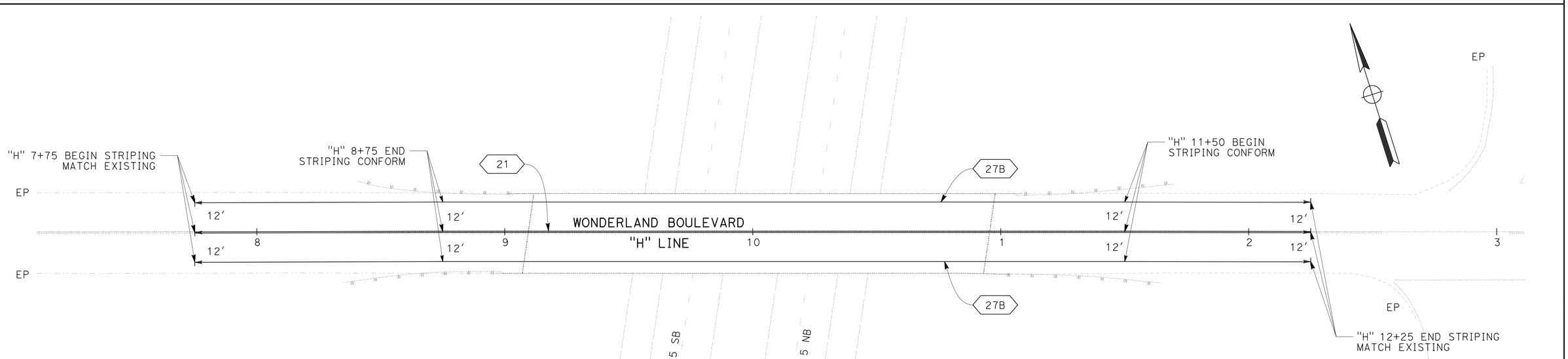

FAWNDALE OVERCROSSING

APPROVED FOR PAVEMENT DELINEATION WORK ONLY

PAVEMENT DELINEATION PLAN

SCALE: 1" = 20'

PD-5

REVISED BY | DATE REVISED
RUSSELL FLOOD | ROBERT WEBER
CALCULATED-DESIGNED BY | CHECKED BY
FUNCTIONAL SUPERVISOR | STEVE TOPAL

STATE OF CALIFORNIA - DEPARTMENT OF TRANSPORTATION
Caltrans
DESIGN

P:\proj1\02\4F610_plans\pse\24f610na005.dgn

LAST REVISION 12-29-14
DATE PLOTTED => 25-FEB-2015
TIME PLOTTED => 07:51

Dist	COUNTY	ROUTE	POST MILES TOTAL PROJECT	SHEET No.	TOTAL SHEETS
02	Sha,Sis	5	Var	40	98

Robert Weber 01-30-15
REGISTERED CIVIL ENGINEER DATE

01-30-15
PLANS APPROVAL DATE

REGISTERED PROFESSIONAL ENGINEER ROBERT WEBER No. C62511 Exp. 09-30-15 CIVIL STATE OF CALIFORNIA

THE STATE OF CALIFORNIA OR ITS OFFICERS OR AGENTS SHALL NOT BE RESPONSIBLE FOR THE ACCURACY OR COMPLETENESS OF SCANNED COPIES OF THIS PLAN SHEET.

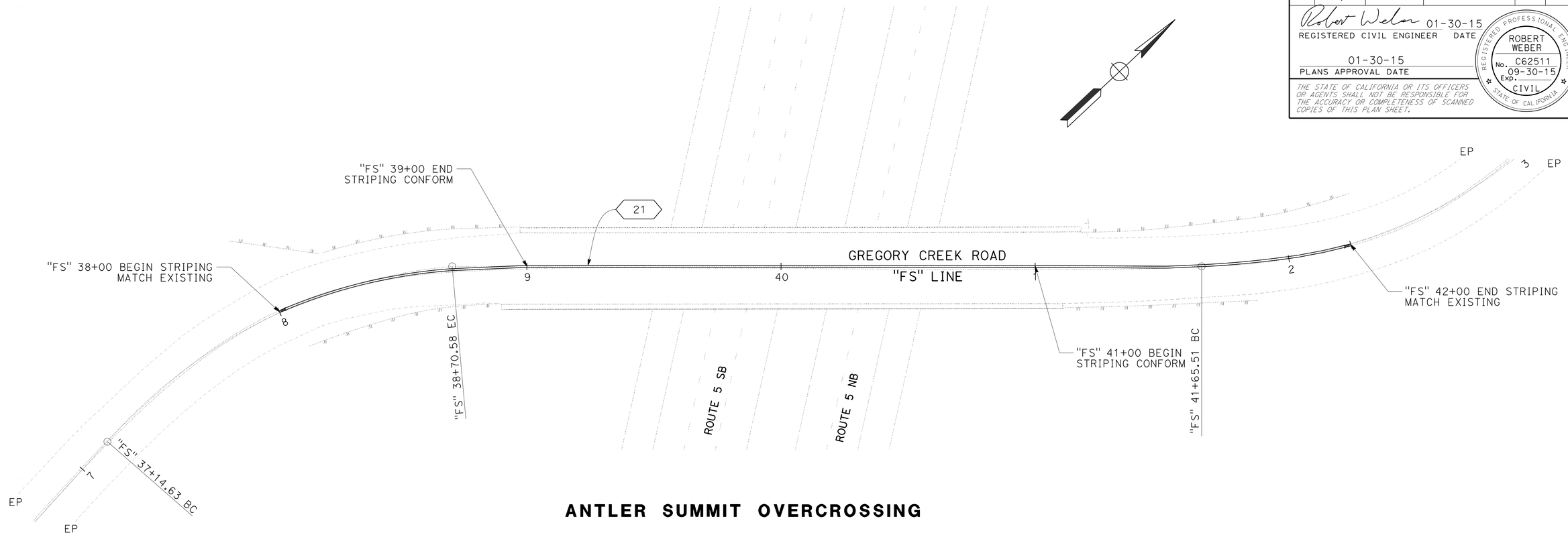

ANTLER SUMMIT OVERCROSSING

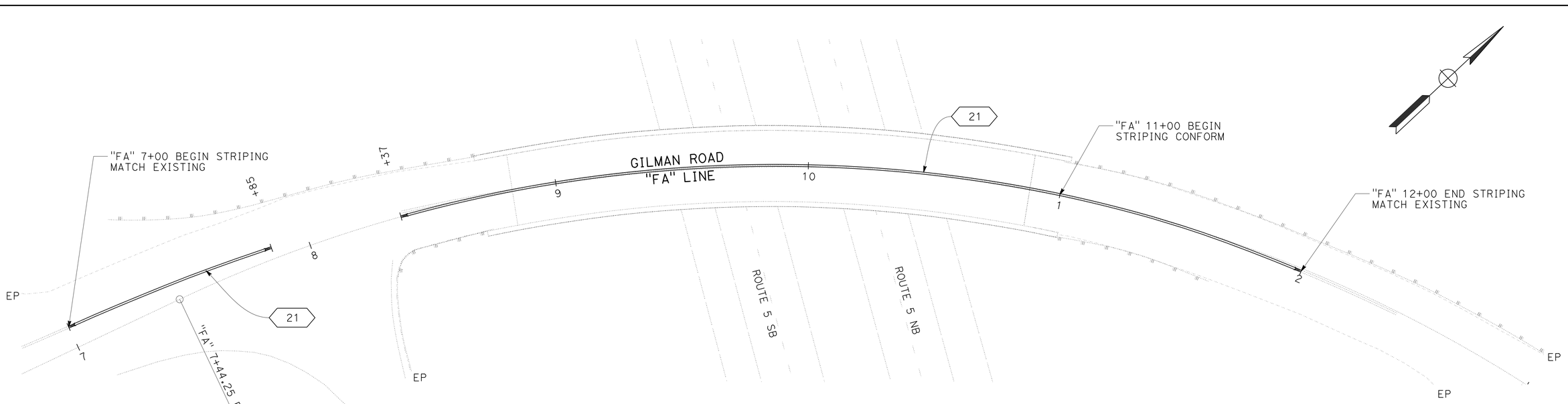

GILMAN ROAD OVERCROSSING

APPROVED FOR PAVEMENT DELINEATION WORK ONLY

PAVEMENT DELINEATION PLAN

SCALE: 1" = 20'

PD-6

REVISED BY	DATE REVISED

CALCULATED-DESIGNED BY	CHECKED BY
RUSSELL FLOOD	ROBERT WEBER

FUNCTIONAL SUPERVISOR: STEVE TOPAL

STATE OF CALIFORNIA - DEPARTMENT OF TRANSPORTATION
Caltrans® DESIGN

P:\proj1\02\4F610_plans\pse\24f610na006.dgn

LAST REVISION 09-02-14 | DATE PLOTTED => 25-FEB-2015 | TIME PLOTTED => 07:51

Dist	COUNTY	ROUTE	POST MILES TOTAL PROJECT	SHEET No.	TOTAL SHEETS
02	Sha,Sis	5	Var	41	98

Robert Weber 01-30-15
REGISTERED CIVIL ENGINEER DATE

01-30-15
PLANS APPROVAL DATE

REGISTERED PROFESSIONAL ENGINEER ROBERT WEBER No. C62511 Exp. 09-30-15 CIVIL STATE OF CALIFORNIA

THE STATE OF CALIFORNIA OR ITS OFFICERS OR AGENTS SHALL NOT BE RESPONSIBLE FOR THE ACCURACY OR COMPLETENESS OF SCANNED COPIES OF THIS PLAN SHEET.

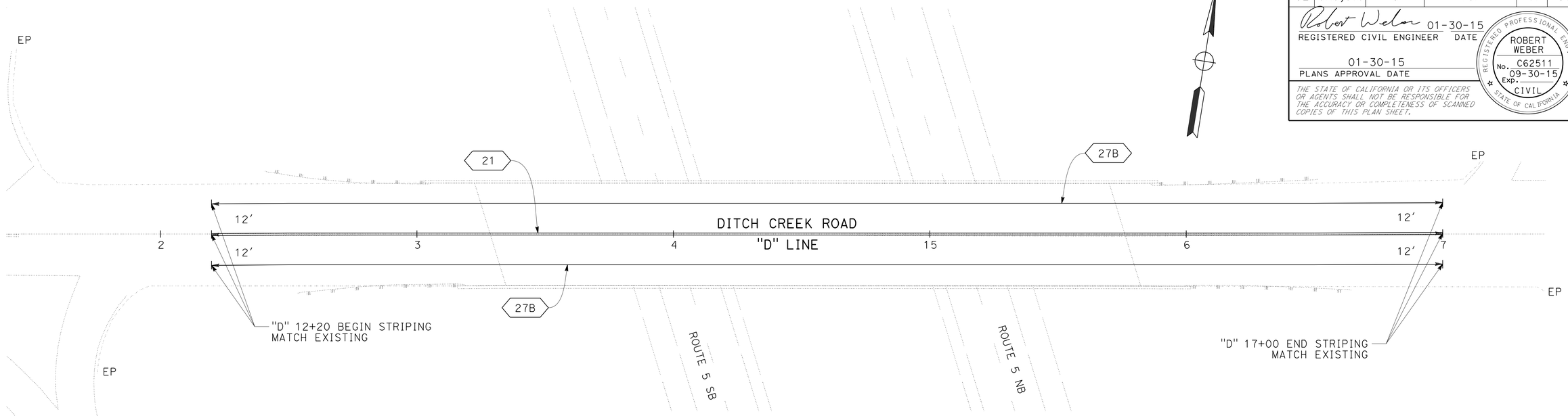

DITCH CREEK ROAD OVERCROSSING

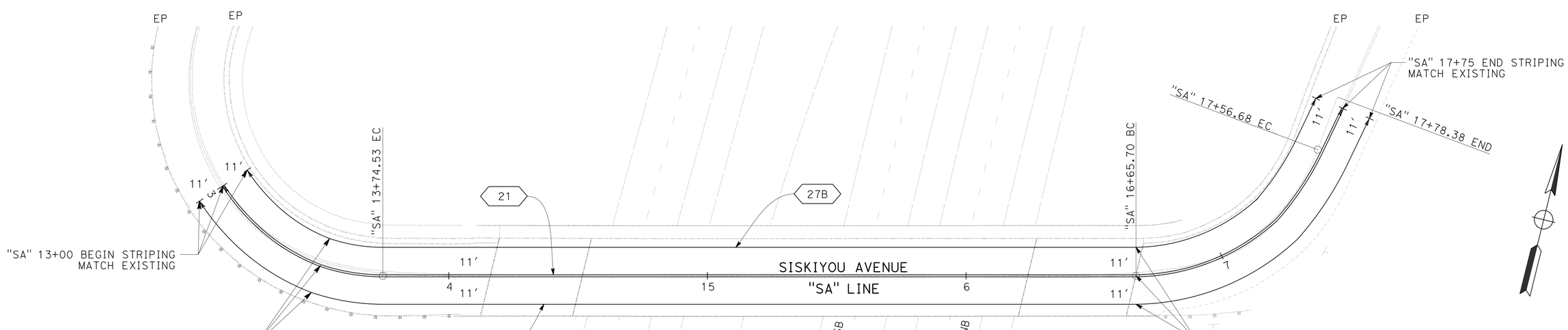

SISKIYOU AVENUE OVERCROSSING

PAVEMENT DELINEATION PLAN

SCALE: 1" = 20′

PD-7

APPROVED FOR PAVEMENT DELINEATION WORK ONLY

REVISED BY | DATE REVISED
RUSSELL FLOOD | ROBERT WEBER
CALCULATED-DESIGNED BY | CHECKED BY
FUNCTIONAL SUPERVISOR: STEVE TOPAL

STATE OF CALIFORNIA - DEPARTMENT OF TRANSPORTATION
Caltrans® DESIGN

P:\proj1\02\4F610_plans\pse\24f610na007.dgn

LAST REVISION 08-29-14 | DATE PLOTTED => 25-FEB-2015 | TIME PLOTTED => 07:51

Dist	COUNTY	ROUTE	POST MILES TOTAL PROJECT	SHEET No.	TOTAL SHEETS
02	Sha,Sis	5	Var	42	98

Robert Weber 01-30-15
REGISTERED CIVIL ENGINEER DATE

01-30-15
PLANS APPROVAL DATE

REGISTERED PROFESSIONAL ENGINEER
ROBERT WEBER
No. C62511
Exp. 09-30-15
CIVIL
STATE OF CALIFORNIA

THE STATE OF CALIFORNIA OR ITS OFFICERS OR AGENTS SHALL NOT BE RESPONSIBLE FOR THE ACCURACY OR COMPLETENESS OF SCANNED COPIES OF THIS PLAN SHEET.

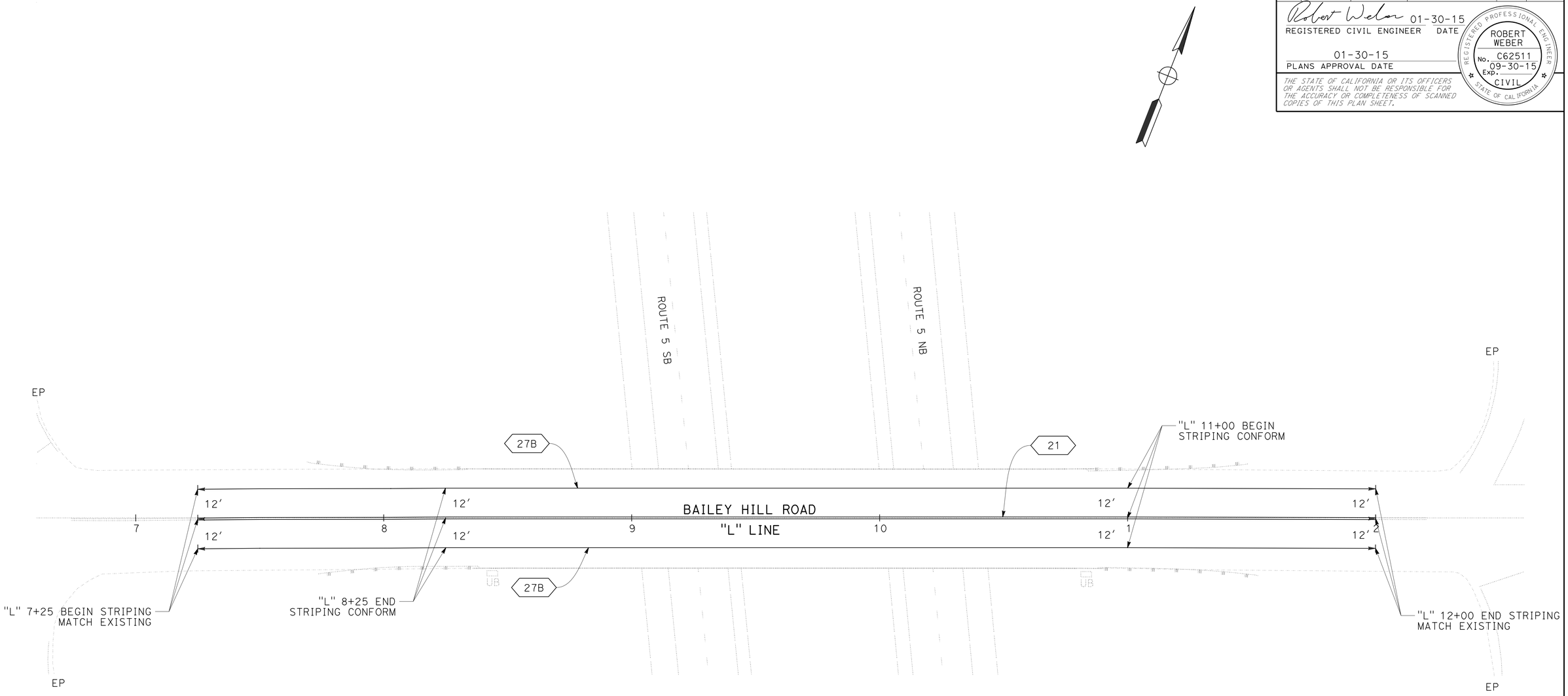

BAILEY HILL OVERCROSSING

PAVEMENT DELINEATION PLAN

SCALE: 1" = 20'

PD-8

APPROVED FOR PAVEMENT DELINEATION WORK ONLY

REVISED BY	DATE REVISED

CALCULATED-DESIGNED BY	RUSSELL FLOOD
CHECKED BY	ROBERT WEBER
FUNCTIONAL SUPERVISOR	STEVE TOPAL

STATE OF CALIFORNIA - DEPARTMENT OF TRANSPORTATION
Caltrans
DESIGN

P:\proj1\02\4F610_plans\pse\24f610na008.dgn

LAST REVISION 08-29-14 | DATE PLOTTED => 25-FEB-2015 | TIME PLOTTED => 07:51

Dist	COUNTY	ROUTE	POST MILES TOTAL PROJECT	SHEET No.	TOTAL SHEETS
02	Sha,Sis	5	Var	43	98

Robert Weber 01-30-15
REGISTERED CIVIL ENGINEER DATE

01-30-15
PLANS APPROVAL DATE

REGISTERED PROFESSIONAL ENGINEER ROBERT WEBER No. C62511 Exp. 09-30-15 CIVIL STATE OF CALIFORNIA

THE STATE OF CALIFORNIA OR ITS OFFICERS OR AGENTS SHALL NOT BE RESPONSIBLE FOR THE ACCURACY OR COMPLETENESS OF SCANNED COPIES OF THIS PLAN SHEET.

NOTE:

1. (N) - NOT A SEPARATE PAY ITEM, FOR INFORMATION ONLY

THERMOPLASTIC PAVEMENT MARKING

BRIDGE No.	BRIDGE NAME	COUNTY	POSTMILE	PLACE (N)	PLACE WHITE	PLACE YELLOW	REMARKS
				EA	SQFT	SQFT	
06-0124	HARTNELL AVENUE OC	Sha	R13.95	2		70	SCHOOL
06-0161	PINE GROVE OC	Sha	R21.00	2	84		TYPE III (L) ARROW
					75		HATCHING
				1	58		STOP BAR (SB OFF)
				1	58		STOP BAR (NB OFF)
SUBTOTAL					275	70	
TOTAL					345		

TRAFFIC STRIPES AND PAVEMENT MARKERS

BRIDGE No.	BRIDGE NAME	COUNTY	POSTMILE	THERMOPLASTIC TRAFFIC STRIPE (SPRAYABLE) DETAIL 9	DETAIL 21	DETAIL 22	DETAIL 24	DETAIL 27B	DETAIL 27C	DETAIL 29	DETAIL 38	DETAIL 39	PAVEMENT MARKER (RETRO-REFLECTIVE) TYPE D	TYPE G
				LF	LF	LF	LF	LF	LF	LF	LF	LF	EA	EA
06-0124	HARTNELL AVENUE OC	Sha	R13.95	1867		933					38	1841	80	43
06-0101	HILLTOP DRIVE OC	Sha	R16.15			525		974	75				46	
06-0155	OASIS ROAD OC	Sha	R19.40			450		901					40	
06-0161	PINE GROVE OC	Sha	R21.00		11	347	29	749	50	50	277		31	13
06-0015	UNION SCHOOL ROAD OC	Sha	R22.41			500		893	107				44	
06-0154	MOUNTAIN GATE OC	Sha	R24.08		450			900						
06-0162	FAWNDALE OC	Sha	R26.04		450			900						
06-0130R	TURNTABLE BAY ROAD OC	Sha	R29.32		442		12	34						
06-0160	GILMAN ROAD OC	Sha	R36.83		436									
06-0158	ANTLER SUMMIT OC	Sha	R39.05		425									
02-0097	SISKIYOU AVENUE OC	Sis	2.92		475			952						
02-0172	DITCH CREEK ROAD OC	Sis	R62.92		480			960						
02-0173	BAILEY HILL ROAD OC	Sis	R65.52		475			950						
	SUBTOTAL			1867	3644	2755	41	8213	232	50	315	1841	241	56
	TOTAL			18,958									297	

PAVEMENT DELINEATION QUANTITIES

PDQ-1

REVISED BY | DATE REVISED
RUSSELL FLOOD | ROBERT WEBER
CALCULATED-DESIGNED BY | CHECKED BY
FUNCTIONAL SUPERVISOR: STEVE TOPAL

STATE OF CALIFORNIA - DEPARTMENT OF TRANSPORTATION
Caltrans DESIGN

P:\proj1\02\4F610_plans\pse\24f610nc001.dgn

LAST REVISION 02-12-15 | DATE PLOTTED => 25-FEB-2015 | TIME PLOTTED => 07:51

Dist	COUNTY	ROUTE	POST MILES TOTAL PROJECT	SHEET No.	TOTAL SHEETS
02	Sha,Sis	5	Var	44	98

Robert Weber 01-30-15
REGISTERED CIVIL ENGINEER DATE

01-30-15
PLANS APPROVAL DATE

REGISTERED PROFESSIONAL ENGINEER ROBERT WEBER No. C62511 Exp. 09-30-15 CIVIL STATE OF CALIFORNIA

THE STATE OF CALIFORNIA OR ITS OFFICERS OR AGENTS SHALL NOT BE RESPONSIBLE FOR THE ACCURACY OR COMPLETENESS OF SCANNED COPIES OF THIS PLAN SHEET.

NOTE:

1. (N) - NOT A SEPARATE PAY ITEM, FOR INFORMATION ONLY

ROADWAY QUANTITIES

BRIDGE No.	BRIDGE NAME	COUNTY	POSTMILE	(N) CONFORM AREA	COLD PLANE ASPHALT CONCRETE PAVEMENT	REMOVE CONCRETE (CURB, GUTTER AND SIDEWALK) (LF)	REMOVE CONCRETE (MISCELLANEOUS) (CY)	ROADWAY EXCAVATION	SHOULDER BACKING	CLASS 2 AGGREGATE BASE (CY)	HOT MIX ASPHALT (TYPE A)	TACK COAT	PLACE HOT MIX ASPHALT (Misc AREA)	MINOR CONCRETE (Misc CONSTRUCTION)	MINOR CONCRETE (CURB AND GUTTER)	MINOR CONCRETE (SIDEWALK)
				SQFT	SQYD	LF	CY	CY	TON	CY	TON	TON	SQYD	CY	CY	CY
06-0124	HARTNELL AVENUE OC	Sha	R13.95	10579				259			423	0.25				
06-0101	HILLTOP DRIVE OC	Sha	R16.15	6522				122	14		265	0.16	11.1			
06-0155	OASIS ROAD OC	Sha	R19.40	6873				224	20		275	0.16				
06-0161	PINE GROVE OC	Sha	R21.00	7902	408			212	8		417	0.27				
06-0015	UNION SCHOOL ROAD OC	Sha	R22.41	6289				513	20	349	226	0.15				
06-0154	MOUNTAIN GATE OC	Sha	R24.08	6525				182	20		235	0.15				
06-0162	FAWNDALE OC	Sha	R26.04	6456				311	20	132	232	0.15				
06-0130R	TURNTABLE BAY ROAD OC	Sha	R29.32	5946	293			317	15	121	309	0.14				
06-0160	GILMAN ROAD OC	Sha	R36.83	6077	239			280	15	124	296	0.19	3.0			
06-0158	ANTLER SUMMIT OC	Sha	R39.05	5084				242	20	104	183	0.12	3.0			
02-0097	SISKIYOU AVENUE OC	Sis	2.92	5597		34.5	0.7	275	5	114	201	0.13		1.3	1.9	4.0
02-0172	DITCH CREEK ROAD OC	Sis	R62.92	8008				576	20	356	288	0.19				
02-0173	BAILEY HILL ROAD OC FROM HMA DIKE (Q-2)	Sis	R65.52	8064				580	20	358	290 &	0.19				
	TOTAL				940	34.5	0.7	4093	197	1658	3648	2.25	17.1	1.3	1.9	4.0

DRAINAGE QUANTITIES

DRAINAGE SYSTEM No.	DRAINAGE UNIT	REMOVE INLET	MODIFY INLET	MINOR CONCRETE (MINOR STRUCTURE)	FLUME DOWNDRAIN	TAPERED INLET	ROCK SLOPE PROTECTION (BACKING No.3, METHOD B) (TON)	MISCELLANEOUS IRON AND STEEL	DESCRIPTION	STATION	BRIDGE NAME
		EA	EA	CY	LF	EA	TON	LB			
1	a					1			TAPERED INLET	"FA" 11+80	GILMAN ROAD OC
	b				6				FLUME DOWNDRAIN		
	c						2.8		ROCK LINED DITCH		
2	a			1.2				239	GO DI WITH 24-12X GRATE	"SA" 13+99	SISKIYOU AVENUE OC
	b	1							REMOVE INLET		
3	a		1						24-9 GRATE WITH RETENTION STRAP	"SA" 17+00	SISKIYOU AVENUE OC
	b						11.3		ROCK LINED DITCH		
TOTAL		1	1	1.2	6	1	14.1	239			

WATER POLLUTION CONTROL

	TEMPORARY DRAINAGE INLET PROTECTION	TEMPORARY FIBER ROLL
	EA	LF
TOTAL	10	400

SUMMARY OF QUANTITIES

Q-1

REVISED BY | DATE REVISED
RUSSELL FLOOD | ROBERT WEBER
CALCULATED-DESIGNED BY | CHECKED BY
FUNCTIONAL SUPERVISOR: STEVE TOPAL
STATE OF CALIFORNIA - DEPARTMENT OF TRANSPORTATION
Caltrans DESIGN
P:\proj1\02\4F610_plans\pse\24f610pa001.dgn

LAST REVISION 02-12-15 | DATE PLOTTED => 25-FEB-2015 | TIME PLOTTED => 07:51

Dist	COUNTY	ROUTE	POST MILES TOTAL PROJECT	SHEET No.	TOTAL SHEETS
02	Sha,Sis	5	Var	45	98

Robert Weber 01-30-15
REGISTERED CIVIL ENGINEER DATE

01-30-15
PLANS APPROVAL DATE

REGISTERED PROFESSIONAL ENGINEER ROBERT WEBER No. C62511 Exp. 09-30-15 CIVIL STATE OF CALIFORNIA

THE STATE OF CALIFORNIA OR ITS OFFICERS OR AGENTS SHALL NOT BE RESPONSIBLE FOR THE ACCURACY OR COMPLETENESS OF SCANNED COPIES OF THIS PLAN SHEET.

NOTE:

1. (N) - NOT A SEPARATE PAY ITEM, FOR INFORMATION ONLY

METAL BEAM GUARD RAILING AND HOT MIX ASPHALT DIKE QUANTITIES

BRIDGE No.	BRIDGE NAME	COUNTY	POSTMILE	QUADRANT	TREATED WOOD WASTE	REMOVE CHAIN LINK FENCE	REMOVE GUARDRAIL	REMOVE ASPHALT CONCRETE DIKE	RECONSTRUCT GUARDRAIL	RECONSTRUCT TRANSITION RAILING (LOW SPEED)	RESET ROADSIDE SIGN	ADJUST DOWNDRAIN	ADJUST GUARDRAIL	PLACE HOT MIX ASPHALT DIKE (TYPE C)	PLACE HOT MIX ASPHALT DIKE (TYPE F)	HOT MIX ASPHALT * (TYPE A)	CHAIN LINK FENCE (TYPE CL-4)	TRANSITION RAILING (LOW SPEED)	TRANSITION RAILING (TYPE WB SPECIAL)	ALTERNATIVE IN-LINE TERMINAL SYSTEM	ALTERNATIVE FLARED TERMINAL SYSTEM	ALTERNATIVE CRASH CUSHION SYSTEM	(N) BURIED POST END ANCHOR
					LB	LF	LF	LF	LF	EA	EA	EA	LF	LF	LF	TON	LF	EA	EA	EA	EA	EA	EA
06-0101	HILLTOP DRIVE OC	Sha	R16.15	NE									70										
06-0155	OASIS ROAD OC	Sha	R19.40	NW									60		60.5	0.4							
				SW									70	34	25	0.3							
				NE									70	16.3	25	0.2							
				SE									70	25	16.1	0.2							
06-0161	PINE GROVE OC	Sha	R21.00	NW	177.5				37.5	1				79.8	25	0.5							
				NE	150.2		50					1		41.2		0.2						1	
06-0015	UNION SCHOOL ROAD OC	Sha	R22.41	NW	150.2				75	1													
				SW	177.5		37.5			1				75	25	0.5				1			
				NE	177.5		25		12.5	1	1										1		
				SE	177.5		25		12.5	1											1		
06-0154	MOUNTAIN GATE OC	Sha	R24.08	NW	177.5		37.5			1				68.2	25	0.4				1			
				SW	177.5		37.5			1				68.5	25	0.4				1			
				NE	177.5		25		12.5	1		1		16.8	37.5	0.3					1		
				SE	177.5		25		12.5	1		1		16.9	37.5	0.3					1		
06-0162	FAWNDALE OC	Sha	R26.04	NW	177.5		37.5	42.2		1				70.7	25	0.4				1			
				SW	177.5		37.5	49.7		1				66.3	25	0.4				1			
				NE	177.5		25	29.4	12.5	1				70.7	25	0.4					1		
				SE	177.5		25	34.4	12.5	1				80.3	25	0.5					1		
06-0130R	TURNTABLE BAY ROAD OC	Sha	R29.32	NW	177.5		62.5							14.3	25	0.2			1		1		
				SW	204.8		62.5		12.5						39.1	0.3			1		1		
				NE	150.2		25		25			1		13.6	43.6	0.3			1				
				SE	150.2		25		25			1		15.2	34.9	0.3			1				
06-0160	GILMAN ROAD OC	Sha	R36.83	NW	150.2				25	1													
				SW	150.2				25	1													
				NE	150.2				75	1													
				SE	177.5		37.5	30.7		1				89.2	25	0.5				1			
06-0158	ANTLER SUMMIT OC	Sha	R39.05	NW	177.5		62.5		12.5									1			1		
				SW	177.5		62.5		12.5									1			1		
				NE	204.8		25		75									1					1
				SE	177.5		75											1		1			
02-0097	SISKIYOU AVENUE OC	Sis	2.92	NW		6											14						
				SW	122.9				75	1					100	0.7							
				SE	109.2				12.5	1													1
02-0172	DITCH CREEK ROAD OC	Sis	R62.92	NW	177.5		25		12.5	1											1		
				SW	177.5		25		12.5	1											1		
				NE	177.5		25		12.5	1											1		
				SE	177.5		25		12.5	1											1		
02-0173	BAILEY HILL ROAD OC	Sis	R65.52	NW	177.5		25		12.5	1											1		
				SW	177.5		25		12.5	1											1		
				NE	177.5		25		12.5	1											1		
				SE	177.5		25		12.5	1											1		
	TOTAL				6130.6	6	1025	186.4	662.5	27	1	5	340	862.0	669.2	7.7	14	4	4	7	18	1	

* TOTALS INCLUDED IN ROADWAY QUANTITIES TABLE ON SHEET Q-1

SUMMARY OF QUANTITIES Q-2

REVISED BY | DATE REVISED
RUSSELL FLOOD | ROBERT WEBER
CALCULATED-DESIGNED BY | CHECKED BY
FUNCTIONAL SUPERVISOR: STEVE TOPAL

STATE OF CALIFORNIA - DEPARTMENT OF TRANSPORTATION
Caltrans® DESIGN

P:\proj1\02\4F610_plans\pse\24f610pa002.dgn

LAST REVISION 02-12-15 | DATE PLOTTED => 25-FEB-2015 | TIME PLOTTED => 07:51

Dist	COUNTY	ROUTE	POST MILES TOTAL PROJECT	SHEET No.	TOTAL SHEETS
02	Sha,Sis	5	Var	46	98

ART 01-30-15
REGISTERED ELECTRICAL ENGINEER DATE

01-30-15
PLANS APPROVAL DATE

REGISTERED PROFESSIONAL ENGINEER A.P. ROBLES No. E15293 Exp. 3-31-15 ELECTRICAL STATE OF CALIFORNIA

THE STATE OF CALIFORNIA OR ITS OFFICERS OR AGENTS SHALL NOT BE RESPONSIBLE FOR THE ACCURACY OR COMPLETENESS OF SCANNED COPIES OF THIS PLAN SHEET.

NOTE:

1. FOR ACCURATE RIGHT OF WAY AND ACCESS DATA, CONTACT RIGHT OF WAY ENGINEERING AT THE DISTRICT OFFICE.

NOTES (THIS SHEET):

1. 3"C (TYPE 3), PT, PER PGE REQUIREMENTS.
2. TYPE III-AF SERVICE EQUIPMENT ENCLOSURE. SEE WIRING DIAGRAM, SHEET E-2
3. 2"C, 2#4, 1#4 G (CCTV), 2#8, 1#8 G (RWIS), 2#10, 1#10 G (TDC).
4. PGE CALTRANS ID No. 0206005R039050A (120/240 V, 1Ø, 3W).
5. REMOVE PCC SLAB AND PULL BOX. ABANDON Fdn.
6. Exist 2" SURFACE MOUNTED CONDUIT, 2#8, 1#10 G (RWIS), 2#10, 1#10 G (TDC).
7. Exist 2" SURFACE MOUNTED CONDUIT, 1 TELEPHONE CABLE (CCTV).
8. PLACE PULL BOX PAVING.

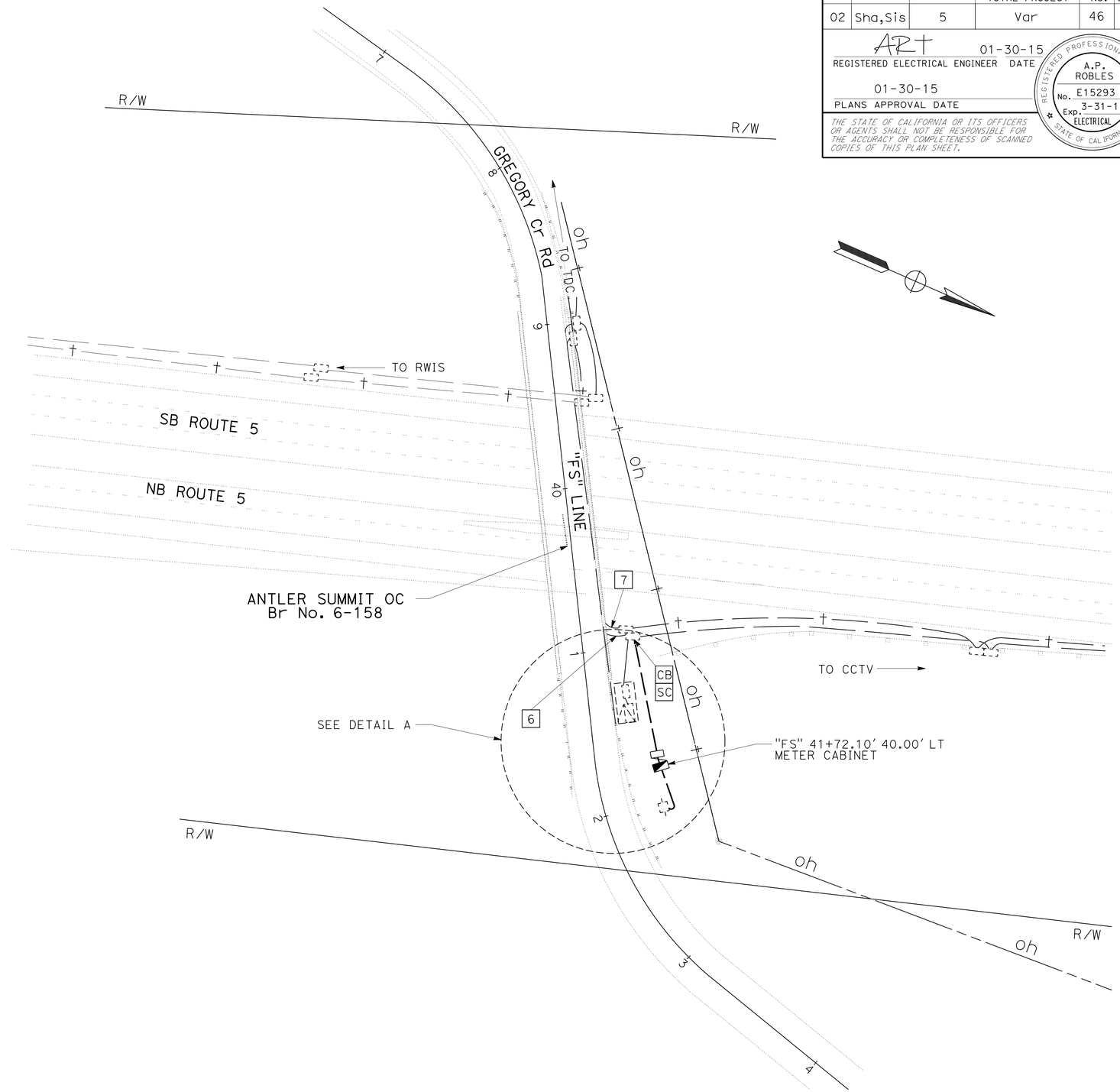

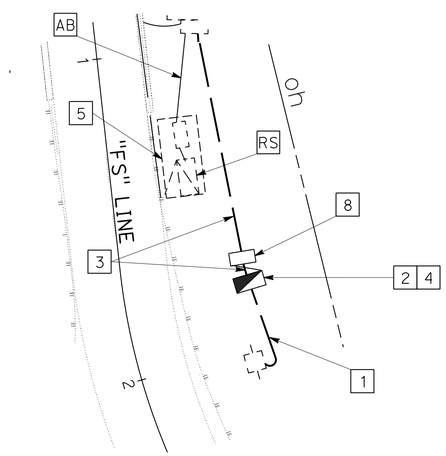

DETAIL A
NO SCALE

APPROVED FOR ELECTRICAL WORK ONLY

MODIFY SERVICE
(LOCATION 10)
SCALE: 1" = 100'

E-1

REVISED BY | DATE REVISED
ARTURO P. ROBLES | CHECKER
CALCULATED-DESIGNED BY | CHECKED BY
FUNCTIONAL SUPERVISOR
ROB STINGER

STATE OF CALIFORNIA - DEPARTMENT OF TRANSPORTATION
Caltrans® **ELECTRICAL DESIGN**

P:\proj\02\4F610_plans\pse\24f610ua001.dgn

LAST REVISION 09-30-19 | DATE PLOTTED => 25-FEB-2015 | TIME PLOTTED => 07:51

BORDER LAST REVISED 7/2/2010 | USERNAME => s115152 | DGN FILE => 24f610ua001.dgn | RELATIVE BORDER SCALE IS IN INCHES 0 1 2 3 | UNIT 0147 | PROJECT NUMBER & PHASE 02-1300-0013-1 EA 02-4F6101

Dist	COUNTY	ROUTE	POST MILES TOTAL PROJECT	SHEET No.	TOTAL SHEETS
02	Sha,Sis	5	Var	47	98

ART 01-30-15
REGISTERED ELECTRICAL ENGINEER DATE

01-30-15
PLANS APPROVAL DATE

REGISTERED PROFESSIONAL ENGINEER A.P. ROBLES No. E15293 Exp. 3-31-15 ELECTRICAL STATE OF CALIFORNIA

THE STATE OF CALIFORNIA OR ITS OFFICERS OR AGENTS SHALL NOT BE RESPONSIBLE FOR THE ACCURACY OR COMPLETENESS OF SCANNED COPIES OF THIS PLAN SHEET.

NOTE:

1. FOR ACCURATE RIGHT OF WAY DATA, CONTACT RIGHT OF WAY ENGINEERING AT THE DISTRICT OFFICE.

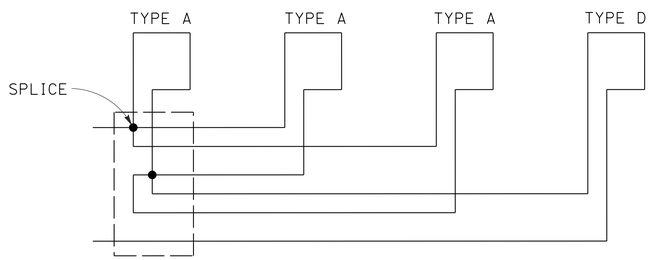

SEE RSP ES-5B

LOOP ARRAY WIRING DETAIL

NO SCALE

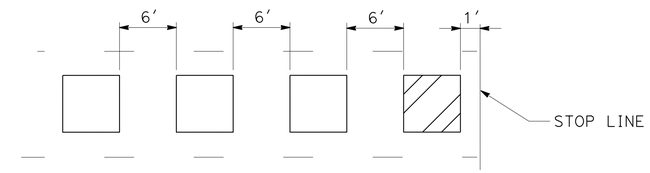

LOOP ARRAY LAYOUT

NO SCALE

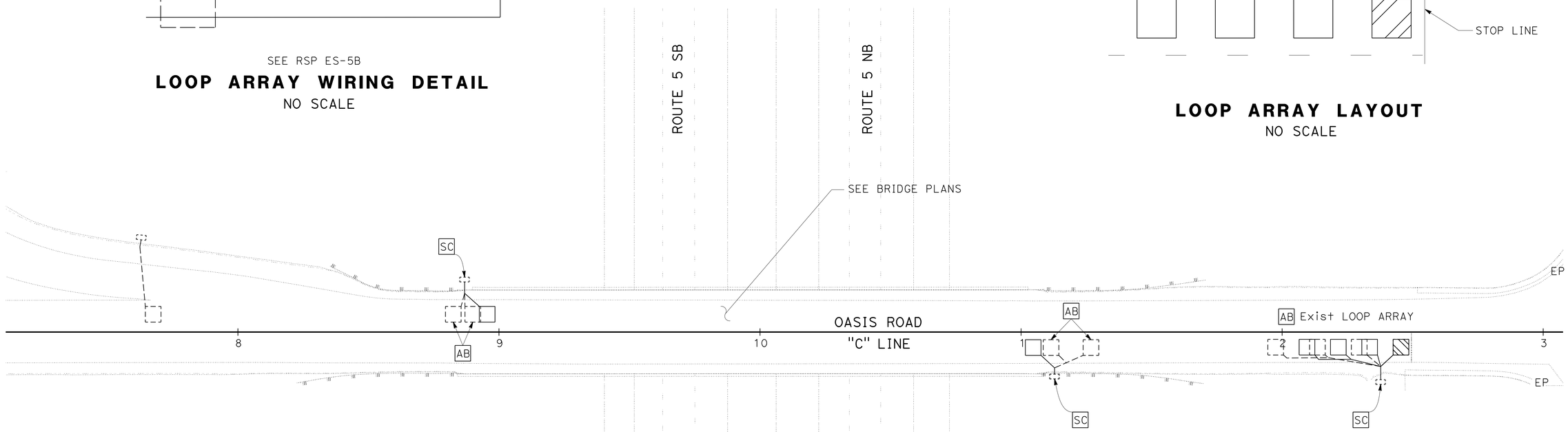

OASIS ROAD OVERCROSSING

INDUCTIVE DETECTOR LOOP
(LOCATION 3)

SCALE: 1" = 20'

E-2

APPROVED FOR ELECTRICAL WORK ONLY

STATE OF CALIFORNIA - DEPARTMENT OF TRANSPORTATION
Caltrans® **ELECTRICAL DESIGN**

FUNCTIONAL SUPERVISOR: ROB STINGER
CALCULATED-DESIGNED BY: DAN BROWN
CHECKED BY: EP
CHECKER: ARTURO P. ROBLES
REVISED BY / DATE REVISED

P:\proj1\02\4F610_plans\pse\24f610ua002.dgn

LAST REVISION 09-30-19
DATE PLOTTED => 25-FEB-2015
TIME PLOTTED => 07:51

BORDER LAST REVISED 7/2/2010
USERNAME => s115152
DGN FILE => 24f610ua002.dgn
RELATIVE BORDER SCALE IS IN INCHES 0 1 2 3
UNIT 0147
PROJECT NUMBER & PHASE 02-1300-0013-1 EA 02-4F6101

Dist	COUNTY	ROUTE	POST MILES TOTAL PROJECT	SHEET No.	TOTAL SHEETS
02	Sha,Sis	5	Var	48	98

ART 01-30-15
REGISTERED ELECTRICAL ENGINEER DATE

01-30-15
PLANS APPROVAL DATE

REGISTERED PROFESSIONAL ENGINEER
A.P. ROBLES
No. E15293
Exp. 3-31-15
ELECTRICAL
STATE OF CALIFORNIA

THE STATE OF CALIFORNIA OR ITS OFFICERS OR AGENTS SHALL NOT BE RESPONSIBLE FOR THE ACCURACY OR COMPLETENESS OF SCANNED COPIES OF THIS PLAN SHEET.

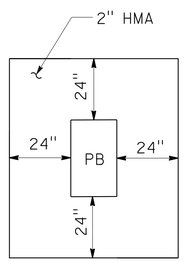

PULL BOX PAVING

NOTE: APPLIES TO ALL INSTALLATIONS IN UNPAVED AREAS

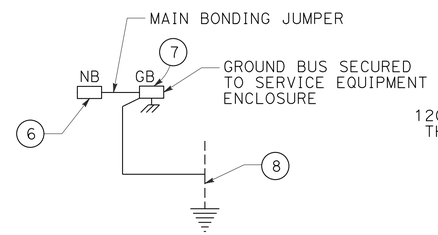

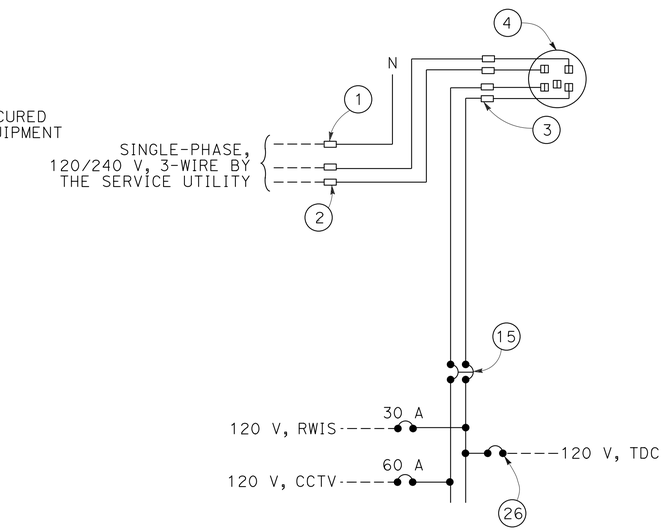

SERVICE WIRING DIAGRAM

FOR ADDITIONAL INFORMATION SEE ES-2D

ELECTRICAL DETAILS

NO SCALE

E-3

STATE OF CALIFORNIA - DEPARTMENT OF TRANSPORTATION
Caltrans® ELECTRICAL DESIGN

FUNCTIONAL SUPERVISOR: ROB STINGER
CALCULATED-DESIGNED BY: ARTURO P. ROBLES
CHECKED BY: CHECKER
REVISED BY
DATE REVISED

P:\proj1\02\4f610_plans\pse\24f610ua003.dgn

LAST REVISION 09-30-13
DATE PLOTTED => 25-FEB-2015
TIME PLOTTED => 07:51

Dist	COUNTY	ROUTE	POST MILES TOTAL PROJECT	SHEET No.	TOTAL SHEETS
02	Sha,Sis	5	Var	49	98

ART 01-30-15
REGISTERED ELECTRICAL ENGINEER DATE

01-30-15
PLANS APPROVAL DATE

REGISTERED PROFESSIONAL ENGINEER A.P. ROBLES No. E15293 Exp. 3-31-15 ELECTRICAL STATE OF CALIFORNIA

THE STATE OF CALIFORNIA OR ITS OFFICERS OR AGENTS SHALL NOT BE RESPONSIBLE FOR THE ACCURACY OR COMPLETENESS OF SCANNED COPIES OF THIS PLAN SHEET.

INDUCTIVE LOOP DETECTOR

SHEET No.	(N) CURB TERMINATION	(N) TYPE A LOOP DETECTOR	(N) TYPE D LOOP DETECTOR
	EA	EA	EA
E-2	3	5	1

(N) - ITEMS ON THIS TABLE ARE NOT SEPARATE PAY ITEMS. FOR INFORMATION ONLY.

MODIFY SERVICE

SHEET No.	(N) TRENCHING AND BACKFILL	(N) WARNING TAPE	(N) 3" CONDUIT	(N) 2" CONDUIT	(N) No. 4 CONDUCTOR	(N) No. 4 G CONDUCTOR	(N) No. 8 CONDUCTOR	(N) No. 8 G CONDUCTOR	(N) No. 10 CONDUCTOR	(N) No. 10 G CONDUCTOR	(N) No. 5 PULL BOX	(N) TYPE III-AF SERVICE EQUIPMENT ENCLOSURE
	LF	LF	LF	LF	LF	LF	LF	LF	LF	LF	EA	EA
E-1	100	100	50	100	200	100	200	100	200	100	1	1

(N) - ITEMS ON THIS TABLE ARE NOT SEPARATE PAY ITEMS. FOR INFORMATION ONLY.

LOOP DETECTORS TO REMAIN IN PLACE AND OPERATIONAL

Loc	PM	ID	LOCATION DESCRIPTION	TYPE
3	PM R19.25	#R16	OASIS ROAD SB ON-RAMP	RAMP
	PM R19.26	#R17	OASIS ROAD NB OFF-RAMP	RAMP
	PM R19.53	#R18	OASIS ROAD NB ON-RAMP	RAMP
	PM R19.67	#R19	OASIS ROAD SB OFF-RAMP	RAMP
4	PM R20.86	#R20	PINE GROVE SB ON-RAMP	RAMP
	PM R20.87	#R21	PINE GROVE NB OFF-RAMP	RAMP
	PM R21.09	#R22	PINE GROVE NB ON-RAMP	RAMP
	PM R21.12	#R23	PINE GROVE SB OFF-RAMP	RAMP
6	PM R23.91	#R28	MOUNTAIN GATE NB OFF-RAMP	RAMP
	PM R23.92	#R29	MOUNTAIN GATE SB ON-RAMP	RAMP
	PM R24.24	#R30	MOUNTAIN GATE SB OFF-RAMP	RAMP
	PM R24.26	#R31	MOUNTAIN GATE NB ON-RAMP	RAMP
7	PM R25.86	#R32	FAWNDALE SB ON-RAMP	RAMP
	PM R25.88	#R33	FAWNDALE NB OFF-RAMP	RAMP
	PM R26.22	#R34	FAWNDALE NB ON-RAMP	RAMP
	PM R26.23	#R35	FAWNDALE SB OFF-RAMP	RAMP
8	PM R29.18	#R44	TURNTABLE BAY ROAD SB ON-RAMP	RAMP
	PM R29.20	#R40	TURNTABLE BAY ROAD NB OFF-RAMP	RAMP
	PM R29.40	#R41	TURNTABLE BAY ROAD NB ON-RAMP	RAMP
	PM R29.47	#R45	TURNTABLE BAY ROAD SB OFF-RAMP	RAMP
9	PM R36.68	#R50	GILMAN ROAD NB OFF-RAMP	RAMP
	PM R36.70	#R51	GILMAN ROAD SB ON-RAMP	RAMP
11	PM 53.07	#R74	GIBSON ROAD SB ON-RAMP	RAMP
	PM 53.31	#R75	GIBSON ROAD NB OFF-RAMP	RAMP
	PM 53.46	#R76	GIBSON ROAD NB ON-RAMP	RAMP
	PM 53.50	#R77	GIBSON ROAD SB OFF-RAMP	RAMP
13	PM R62.72	#R348	DITCH CREEK ROAD SB ON-RAMP	RAMP
	PM R62.75	#R349	DITCH CREEK ROAD NB OFF-RAMP	RAMP
	PM R63.07	#R350	DITCH CREEK ROAD NB ON-RAMP	RAMP
	PM R63.11	#R351	DITCH CREEK ROAD SB OFF-RAMP	RAMP
14	PM R65.32	#R353	BAILEY HILL ROAD SB ON-RAMP	RAMP
	PM R65.35	#R352	BAILEY HILL ROAD NB OFF-RAMP	RAMP
	PM R65.70	#R355	BAILEY HILL ROAD NB ON-RAMP	RAMP
	PM R65.73	#R354	BAILEY HILL ROAD SB OFF-RAMP	RAMP

(N) - ITEMS ON THIS TABLE ARE NOT SEPARATE PAY ITEMS. FOR INFORMATION ONLY.

EXISTING TRAFFIC MANAGEMENT SYSTEM ELEMENTS TO BE MAINTAINED

PROJ LOC	ELEMENT	LOCATION	DESCRIPTION
1	CCTV	Sha-5-R13.96	SB SHOULDER N OF HARTNELL OC
2	SUPER HAR	Sha-5-R16.13	EB SHOULDER OF HILLTOP Dr W OF I-5
3	CMS	Sha-5-R19.40	ON OASIS Rd OC ABOVE NB LANES
3	CMS	Sha-5-R19.40	ON OASIS Rd OC ABOVE SB LANES
4	CMS	Sha-5-R20.98	ON PINE GROVE OC ABOVE NB LANES
4	CCTV	Sha-5-R20.98	ON EB SHOULDER OF PINE GROVE W OF I-5
4	HAR FLASHER	Sha-5-R21.00	ON PINE GROVE OC ABOVE SB LANES
7	CCTV	Sha-5-R26.02	SB SHOULDER S OF FAWNDALE OC
7	HAR	Sha-5-R21.00	NB SHOULDER N OF FAWNDALE OC
10	RWIS	Sha-5-R37.94	SB SHOULDER S OF ANTLER SUMMIT OC
10	CCTV	Sha-5-R39.17	NB SHOULDER N OF ANTLER SUMMIT OC (SACRAMENTO HILL)
11	CCTV	Sha-5-R53.27	NB SHOULDER S OF GIBSON Rd OC
14	TMS	Sis-5-R65.14	MEDIAN S OF BAILEY HILL Rd OC
14	HAR	SIS-5-R65.14	NB SHOULDER S OF BAILEY HILL Rd OC

ELECTRICAL QUANTITIES
E-4

REVISED BY | DATE REVISED
ARTURO P. ROBLES | CHECKER
CALCULATED-DESIGNED BY | CHECKED BY
FUNCTIONAL SUPERVISOR | ROB STINGER
STATE OF CALIFORNIA - DEPARTMENT OF TRANSPORTATION
Caltrans® ELECTRICAL DESIGN

P:\proj1\02\4F610_plans\pse\24f610ua004.dgn

LAST REVISION 02-10-15 | DATE PLOTTED => 25-FEB-2015 | TIME PLOTTED => 07:51

M

Maint	MAINTENANCE
Max	MAXIMUM
MB	METAL BEAM
MBB	METAL BEAM BARRIER
MBGR	METAL BEAM GUARD RAILING
Med	MEDIAN
MGS	MIDWEST GUARDRAIL SYSTEM
MH	MANHOLE
Min	MINIMUM
Misc	MISCELLANEOUS
Misc I & S	MISCELLANEOUS IRON AND STEEL
Mkr	MARKER
Mod	MODIFIED,
	MODIFY
Mon	MONUMENT
MP	METAL PLATE
MPGR	METAL PLATE GUARD RAILING
MR	MOVEMENT RATING
MSE	MECHANICALLY STABILIZED EMBANKMENT
Mt	MOUNTAIN, MOUNT
Mtl	MATERIAL
MVP	MAINTENANCE VEHICLE PULLOUT

N

N	NORTH
NB	NORTHBOUND
No.	NUMBER (MUST HAVE PERIOD)
Nos.	NUMBERS (MUST HAVE PERIOD)
NPS	NOMINAL PIPE SIZE
NS	NEAR SIDE
NSP	NEW STANDARD PLAN
NTS	NOT TO SCALE

O

Oblr	OBLITERATE
OC	OVERCROSSING
OD	OUTSIDE DIAMETER
OF	OUTSIDE FACE
OG	ORIGINAL GROUND
OGAC	OPEN GRADED ASPHALT CONCRETE
OGFC	OPEN GRADED FRICTION COURSE
OH	OVERHEAD
OHWM	ORDINARY HIGH WATER MARK
O-O	OUT TO OUT
Opp	OPPOSITE
OSD	OVERSIDE DRAIN

P

P	PAGE
PAP	PERFORATED ALUMINUM PIPE
PB	PULL BOX
PC	POINT OF CURVATURE,
	PRECAST
PCC	POINT OF COMPOUND CURVE,
	PORTLAND CEMENT CONCRETE
PCMS	PORTABLE CHANGEABLE MESSAGE SIGN
PCP	PERFORATED CONCRETE PIPE,
	PRESTRESSED CONCRETE PIPE
PCVC	POINT OF COMPOUND VERTICAL CURVE
PEC	PERMIT TO ENTER AND CONSTRUCT
Ped	PEDESTRIAN
Ped OC	PEDESTRIAN OVERCROSSING
Ped UC	PEDESTRIAN UNDERCROSSING
Perm Mtl	PERMEABLE MATERIAL

P continued

PG	PROFILE GRADE
PI	POINT OF INTERSECTION
PJP	PARTIAL JOINT PENETRATION
Pkwy	PARKWAY
ℙ,PL	PLATE
P/L	PROPERTY LINE
PM	POST MILE,
	TIME FROM NOON TO MIDNIGHT
PN	PAVING NOTCH
POC	POINT OF HORIZONTAL CURVE
POT	POINT OF TANGENT
POVC	POINT OF VERTICAL CURVE
PP	PIPE PILE,
	PLASTIC PIPE,
	POWER POLE
PPL	PREFORMED PERMEABLE LINER
PPP	PERFORATED PLASTIC PIPE
PRC	POINT OF REVERSE CURVE
PRF	PAVEMENT REINFORCING FABRIC
PRVC	POINT OF REVERSE VERTICAL CURVE
PS&E	PLANS, SPECIFICATIONS AND ESTIMATES
PS, P/S	PRESTRESSED
PSP	PERFORATED STEEL PIPE
PT	POINT OF TANGENCY
PVC	POLYVINYL CHLORIDE
Pvmt	PAVEMENT

Q

Qty	QUANTITY

R

R	RADIUS
R & D	REMOVE AND DISPOSE
R & S	REMOVE AND SALVAGE
R/C	RATE OF CHANGE
RCA	REINFORCED CONCRETE ARCH
RCB	REINFORCED CONCRETE BOX
RCP	REINFORCED CONCRETE PIPE
RCPA	REINFORCED CONCRETE PIPE ARCH
Rd	ROAD
Reinf	REINFORCED,
	REINFORCEMENT,
	REINFORCING
Rel	RELOCATE
Repl	REPLACEMENT
Ret	RETAINING
Rev	REVISED, REVISION
Rdwy	ROADWAY
RHMA	RUBBERIZED HOT MIX ASPHALT
Riv	RIVER
RM	ROAD-MIXED
RP	RADIUS POINT,
	REFERENCE POINT
RR	RAILROAD
RSP	ROCK SLOPE PROTECTION,
	REVISED STANDARD PLAN
Rt	RIGHT
Rte	ROUTE
RW	REDWOOD,
	RETAINING WALL
R/W	RIGHT OF WAY
Rwy	RAILWAY

S

S	SOUTH,
	SUPPLEMENT
SAE	STRUCTURE APPROACH EMBANKMENT
Salv	SALVAGE
SAPP	STRUCTURAL ALUMINUM PLATE PIPE
SB	SOUTHBOUND
SC	SAND CUSHION
SCSP	SLOTTED CORRUGATED STEEL PIPE
SD	STORM DRAIN
Sec	SECOND,
	SECTION
Sep	SEPARATION
SG	SUBGRADE
Shld	SHOULDER
Sht	SHEET
Sim	SIMILAR
℄	STATION LINE
SM	SELECTED MATERIAL
Spec	SPECIAL,
	SPECIFICATIONS
SPP	SLOTTED PLASTIC PIPE
SS	SLOPE STAKE
SSBM	STRAP AND SADDLE BRACKET METHOD
SSD	STRUCTURAL SECTION DRAIN
SSPA	STRUCTURAL STEEL PLATE ARCH
SSPP	STRUCTURAL STEEL PLATE PIPE
SSPPA	STRUCTURAL STEEL PLATE PIPE ARCH
SSRP	STEEL SPIRAL RIB PIPE
St	STREET
Sta	STATION
STBB	SINGLE THRIE BEAM BARRIER
Std	STANDARD
Str	STRUCTURE
Surf	SURFACING
SW	SIDEWALK,
	SOUND WALL
Swr	SEWER
Sym	SYMMETRICAL
S4S	SURFACE 4 SIDES

T

T	SEMI-TANGENT
Tan	TANGENT
TBB	THRIE BEAM BARRIER
Tbr	TIMBER
TC	TOP OF CURB
TCB	TRAFFIC CONTROL BOX
TCE	TEMPORARY CONSTRUCTION EASEMENT
Tel	TELEPHONE
Temp	TEMPORARY
TG	TOP OF GRADE
Tot	TOTAL
TP	TELEPHONE POLE
TPB	TREATED PERMEABLE BASE
TPM	TREATED PERMEABLE MATERIAL
Trans	TRANSITION

T continued

TS	TRANSVERSE,
	TRAFFIC SIGNAL,
	TUBULAR STEEL
Typ	TYPICAL

U

UC	UNDERCROSSING
UD	UNDERDRAIN
UG	UNDERGROUND
UON	UNLESS OTHERWISE NOTED
UP	UNDERPASS

V

V	VALVE,
	DESIGN SPEED
Var	VARIABLE,
	VARIES
VC	VERTICAL CURVE
VCP	VITRIFIED CLAY PIPE
Vert	VERTICAL
Via	VIADUCT
Vol	VOLUME

W

W	WEST,
	WIDTH
WB	WESTBOUND
WH	WEEP HOLE
WM	WIRE MESH
WS	WATER SURFACE
WSP	WELDED STEEL PIPE
Wt	WEIGHT
WV	WATER VALVE
WW	WINGWALL
WWLOL	WINGWALL LAYOUT LINE

X

X Sec	CROSS SECTION
Xing	CROSSING

Y

Yr	YEAR
Yrs	YEARS

Dist	COUNTY	ROUTE	POST MILES TOTAL PROJECT	SHEET No.	TOTAL SHEETS
02	Sha,Sis	5	Var	50	98

Grace M. Tsushima
REGISTERED CIVIL ENGINEER

July 19, 2013
PLANS APPROVAL DATE

REGISTERED PROFESSIONAL ENGINEER
Grace M. Tsushima
No. C49814
Exp. 9-30-14
CIVIL
STATE OF CALIFORNIA

THE STATE OF CALIFORNIA OR ITS OFFICERS OR AGENTS SHALL NOT BE RESPONSIBLE FOR THE ACCURACY OR COMPLETENESS OF SCANNED COPIES OF THIS PLAN SHEET.

TO ACCOMPANY PLANS DATED 01-30-15

UNIT OF MEASUREMENT SYMBOLS:

Some of the symbols used in the project plan quantity tables and in the Bid Item List are:

TABLE A

SYMBOL USED	DEFINITIONS
ACRE	ACRE
CF	CUBIC FOOT
CY	CUBIC YARD
EA	EACH
GAL	GALLON
LB	POUND
LF	LINEAR FOOT
SQFT	SQUARE FOOT
SQYD	SQUARE YARD
STA	100 FEET
TAB	TABLET
TON	2,000 POUNDS

Some of the symbols used in the plans other than in the project plan quantity tables are:

TABLE B

SYMBOL USED	DEFINITIONS
ksi	KIPS PER SQUARE INCH
ksf	KIPS PER SQUARE FOOT
psi	POUNDS PER SQUARE INCH
psf	POUNDS PER SQUARE FOOT
lb/ft^3, pcf	POUNDS PER CUBIC FOOT
tsf	TONS PER SQUARE FOOT
mph, MPH *	MILES PER HOUR
ø	NOMINAL DIAMETER
oz	OUNCE
lb	POUND
kip	1,000 POUNDS
cal	CALORIE
ft	FOOT OR FEET
gal	GALLON

* For use on a sign panel only

STATE OF CALIFORNIA
DEPARTMENT OF TRANSPORTATION

ABBREVIATIONS (SHEET 2 OF 2)

NO SCALE

RSP A10B DATED JULY 19, 2013 SUPERSEDES STANDARD PLAN A10B DATED MAY 20, 2011 - PAGE 2 OF THE STANDARD PLANS BOOK DATED 2010.

REVISED STANDARD PLAN RSP A10B

2010 REVISED STANDARD PLAN RSP A10B

DATE PLOTTED => 25-FEB-2015
TIME PLOTTED => 07:51

Dist	COUNTY	ROUTE	POST MILES TOTAL PROJECT	SHEET No.	TOTAL SHEETS
02	Sha,Sis	5	Var	51	98

REGISTERED CIVIL ENGINEER

July 19, 2013
PLANS APPROVAL DATE

REGISTERED PROFESSIONAL ENGINEER Roberta L. McLaughlin No. C40375 Exp. 3-31-15 CIVIL STATE OF CALIFORNIA

THE STATE OF CALIFORNIA OR ITS OFFICERS OR AGENTS SHALL NOT BE RESPONSIBLE FOR THE ACCURACY OR COMPLETENESS OF SCANNED COPIES OF THIS PLAN SHEET.

TO ACCOMPANY PLANS DATED 01-30-15

EXIT RAMP NEUTRAL AREA (GORE) TREATMENT

DETAIL 36

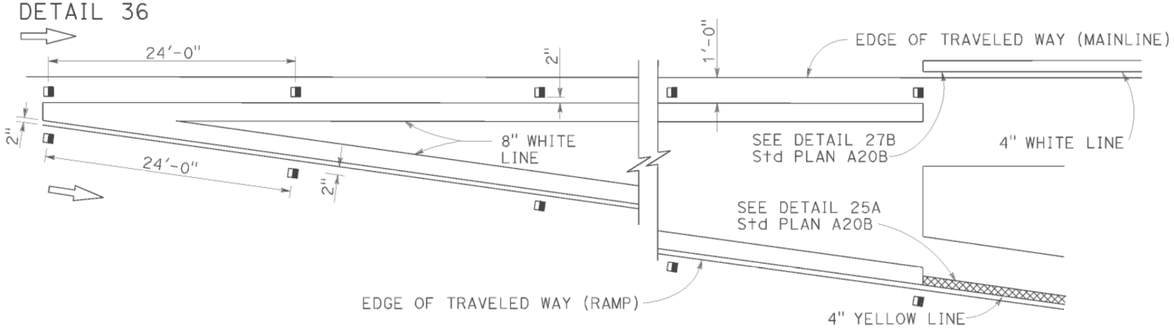

ENTRANCE RAMP NEUTRAL AREA (MERGE) TREATMENT

DETAIL 36A

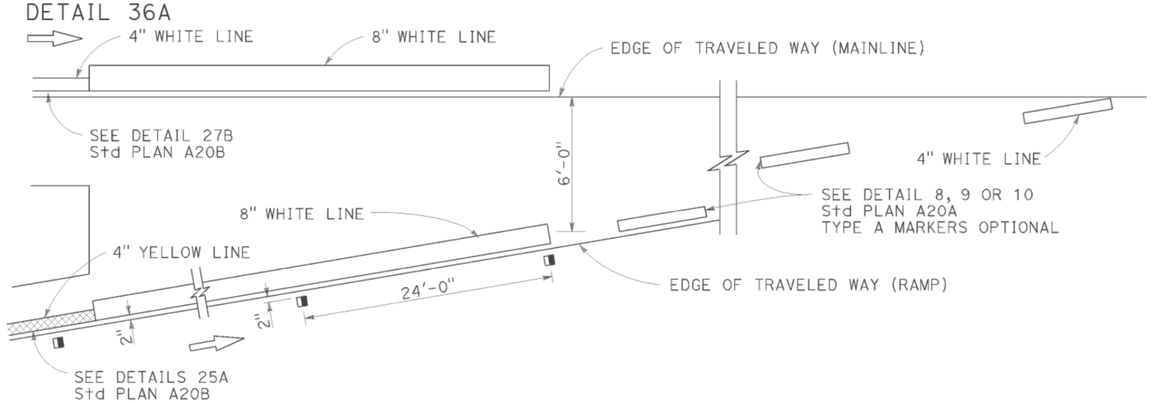

ENTRANCE RAMP NEUTRAL AREA (ACCELERATION LANE) TREATMENT

DETAIL 36B

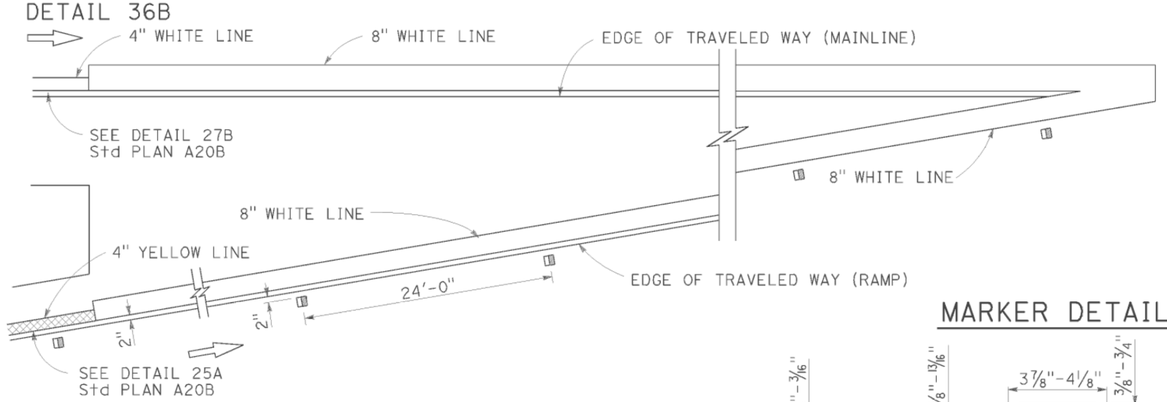

MARKER DETAILS

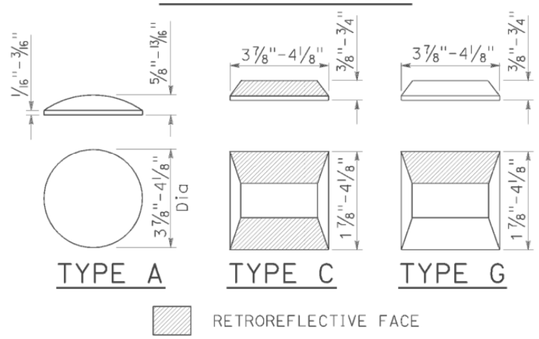

LEGEND:

MARKERS

- ○ TYPE A WHITE NON-REFLECTIVE
- ⊟ TYPE C RED-CLEAR RETROREFLECTIVE
- ◨ TYPE G ONE-WAY CLEAR RETROREFLECTIVE

LANE DROP AT EXIT RAMPS

DETAIL 37

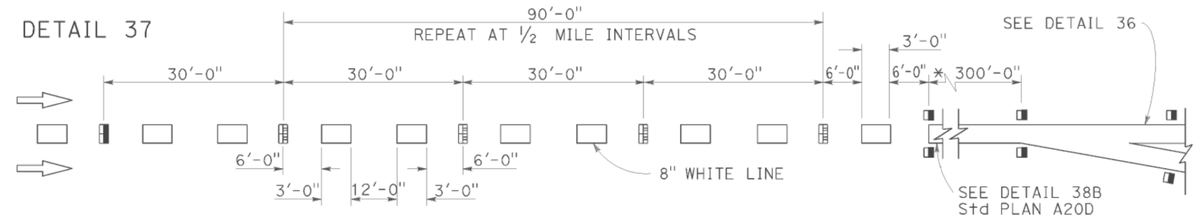

DETAIL 37A

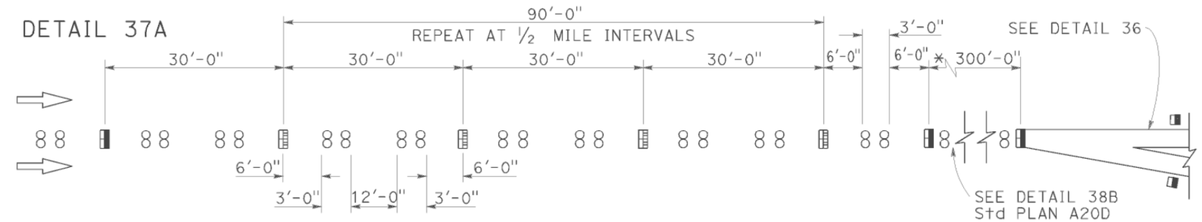

* The solid channelizing line shown may be omitted on short auxiliary lanes where weaving length is critical.

LANE DROP AT INTERSECTIONS

DETAIL 37B

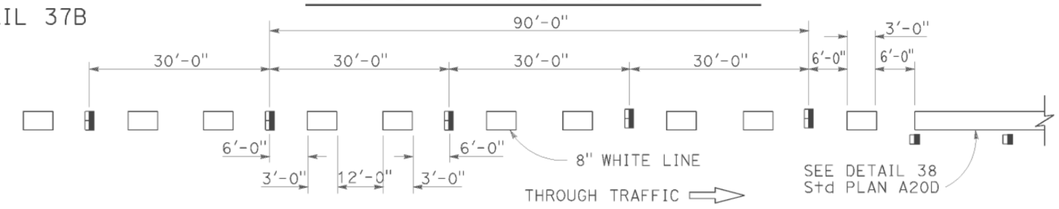

DETAIL 37C

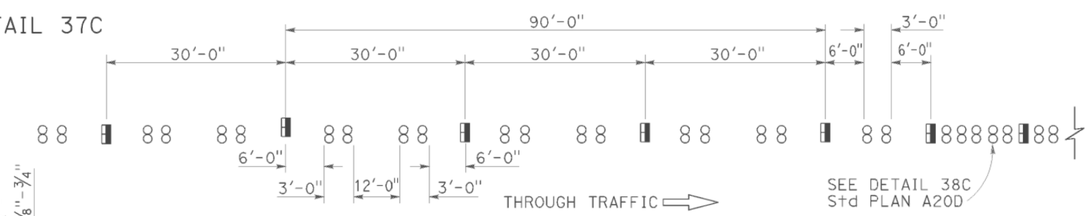

STATE OF CALIFORNIA
DEPARTMENT OF TRANSPORTATION

PAVEMENT MARKERS AND TRAFFIC LINE TYPICAL DETAILS

NO SCALE

RSP A20C DATED JULY 19, 2013 SUPERSEDES STANDARD PLAN A20C DATED MAY 20, 2011 - PAGE 11 OF THE STANDARD PLANS BOOK DATED 2010.

REVISED STANDARD PLAN RSP A20C

2010 REVISED STANDARD PLAN RSP A20C

DATE PLOTTED => 25-FEB-2015
TIME PLOTTED => 07:51

Dist	COUNTY	ROUTE	POST MILES TOTAL PROJECT	SHEET No.	TOTAL SHEETS
02	Sha,Sis	5	Var	52	98

REGISTERED CIVIL ENGINEER

July 20, 2012
PLANS APPROVAL DATE

REGISTERED PROFESSIONAL ENGINEER
Roberta L. McLaughlin
No. C40375
Exp. 3-31-13
CIVIL
STATE OF CALIFORNIA

THE STATE OF CALIFORNIA OR ITS OFFICERS OR AGENTS SHALL NOT BE RESPONSIBLE FOR THE ACCURACY OR COMPLETENESS OF SCANNED COPIES OF THIS PLAN SHEET.

TO ACCOMPANY PLANS DATED 01-30-15

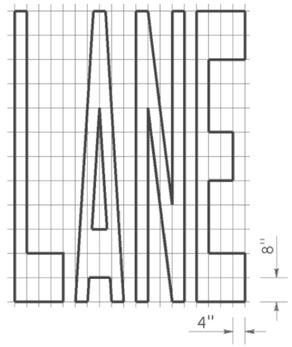

A=24 ft^2

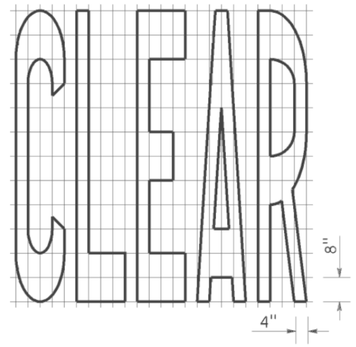

A=27 ft^2

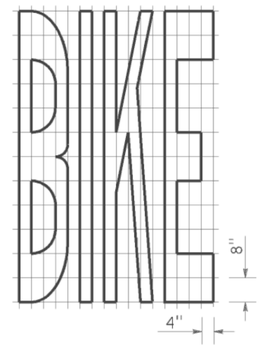

A=21 ft^2

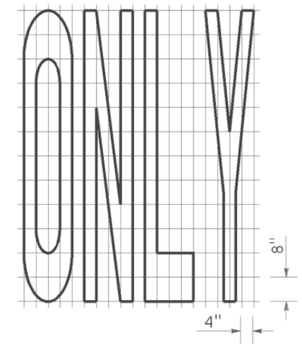

A=22 ft^2

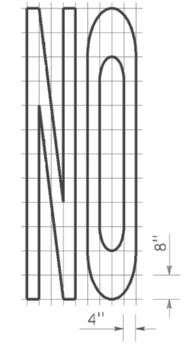

A=14 ft^2

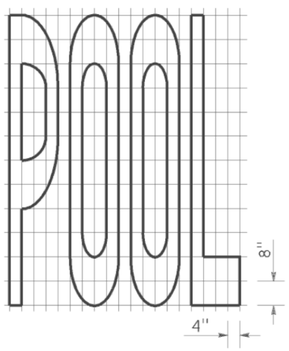

A=23 ft^2

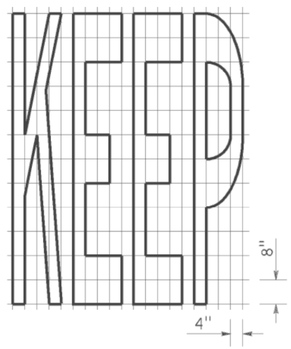

A=24 ft^2

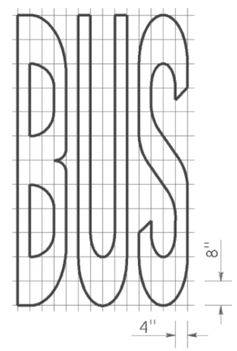

A=20 ft^2

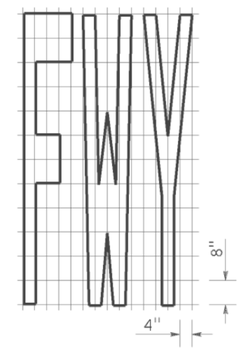

A=16 ft^2

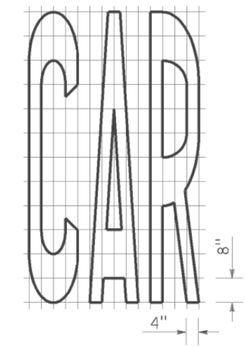

A=17 ft^2

WORD MARKINGS			
ITEM	ft^2	ITEM	ft^2
LANE	24	NO	14
POOL	23	BIKE	21
CAR	17	BUS	20
CLEAR	27	ONLY	22
KEEP	24	FWY	16

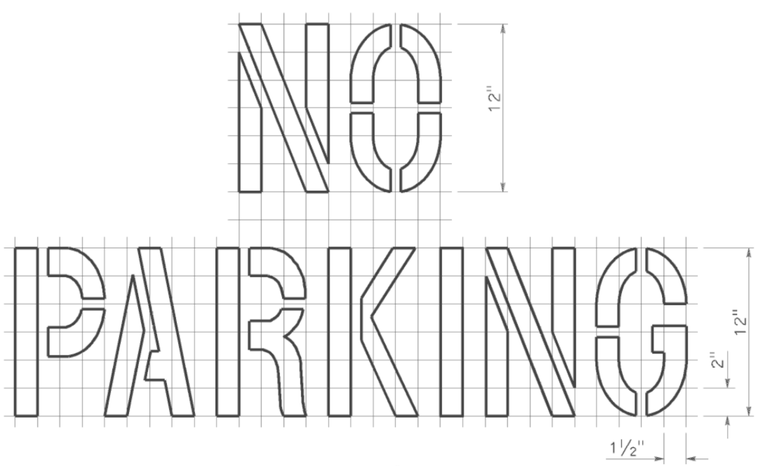

A=2 ft^2
See Notes 6 and 7

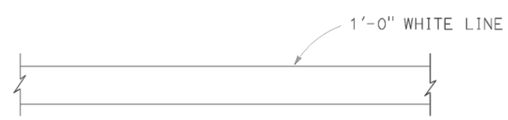

LIMIT LINE (STOP LINE)

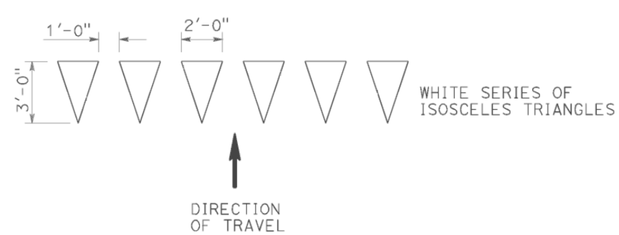

YIELD LINE

NOTES:

1. If a message consists of more than one word, it should read "UP", i.e., the first word should be nearest the driver.
2. The space between words should be at least four times the height of the characters for low speed roads, but not more than ten times the height of the characters. The space may be reduced appropriately where there is limited space because of local conditions.
3. Minor variations in dimensions may be accepted by the Engineer.
4. Portions of a letter, number or symbol may be separated by connecting segments not to exceed 2" in width.
5. The words "NO PARKING" pavement marking is to be used for parking facilities. For typical locations of markings, see Standard Plans A90A and A90B.
6. The words "NO PARKING", shall be painted in white letters no less than 1'-0" high on a contrasting background and located so that it is visible to traffic enforcement officials.

STATE OF CALIFORNIA
DEPARTMENT OF TRANSPORTATION

PAVEMENT MARKINGS WORDS, LIMIT AND YIELD LINES

NO SCALE

RSP A24E DATED JULY 20, 2012 SUPERSEDES STANDARD PLAN A24E
DATED MAY 20, 2011 - PAGE 17 OF THE STANDARD PLANS BOOK DATED 2010.

REVISED STANDARD PLAN RSP A24E

2010 REVISED STANDARD PLAN RSP A24E

DATE PLOTTED => 25-FEB-2015
TIME PLOTTED => 07:51

Dist	COUNTY	ROUTE	POST MILES TOTAL PROJECT	SHEET No.	TOTAL SHEETS
02	Sha,Sis	5	Var	53	98

Randell D. Hiatt
REGISTERED CIVIL ENGINEER

July 19, 2013
PLANS APPROVAL DATE

REGISTERED PROFESSIONAL ENGINEER
Randell D. Hiatt
No. C50200
Exp. 6-30-15
CIVIL
STATE OF CALIFORNIA

THE STATE OF CALIFORNIA OR ITS OFFICERS OR AGENTS SHALL NOT BE RESPONSIBLE FOR THE ACCURACY OR COMPLETENESS OF SCANNED COPIES OF THIS PLAN SHEET.

TO ACCOMPANY PLANS DATED 01-30-15

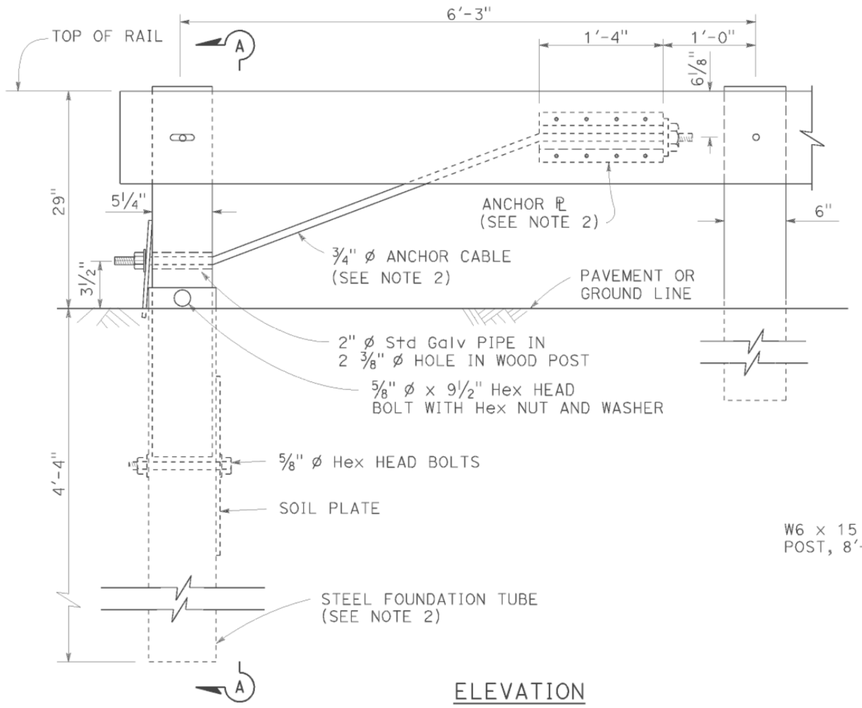

ELEVATION
END ANCHOR
ASSEMBLY (TYPE SFT)

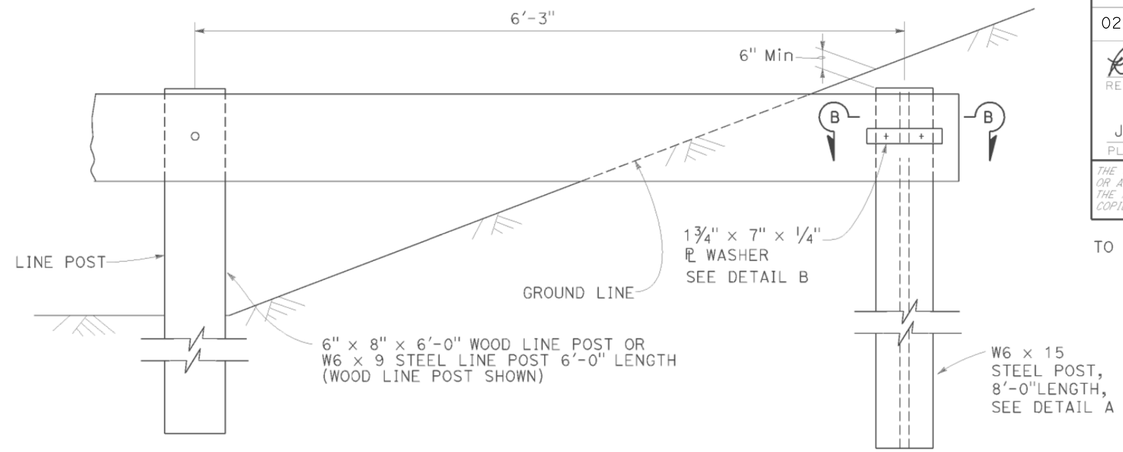

BURIED POST END ANCHOR

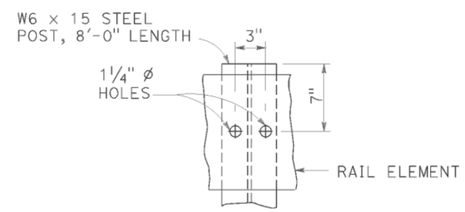

DETAIL A

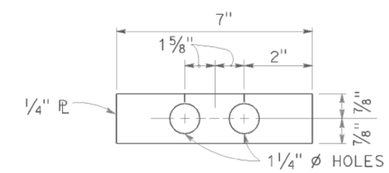

DETAIL B

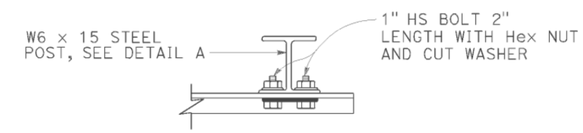

SECTION B-B

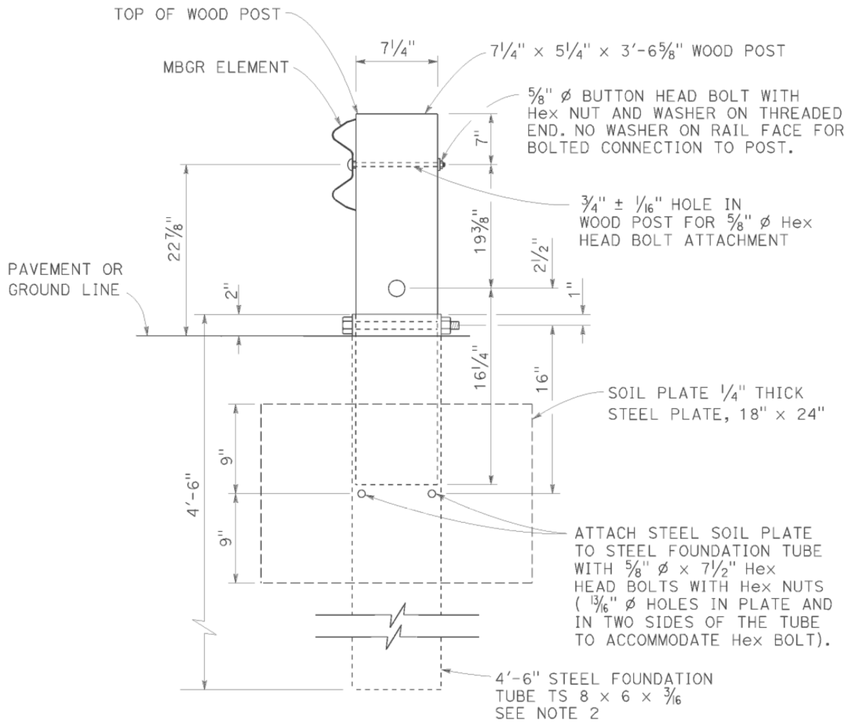

SECTION A-A

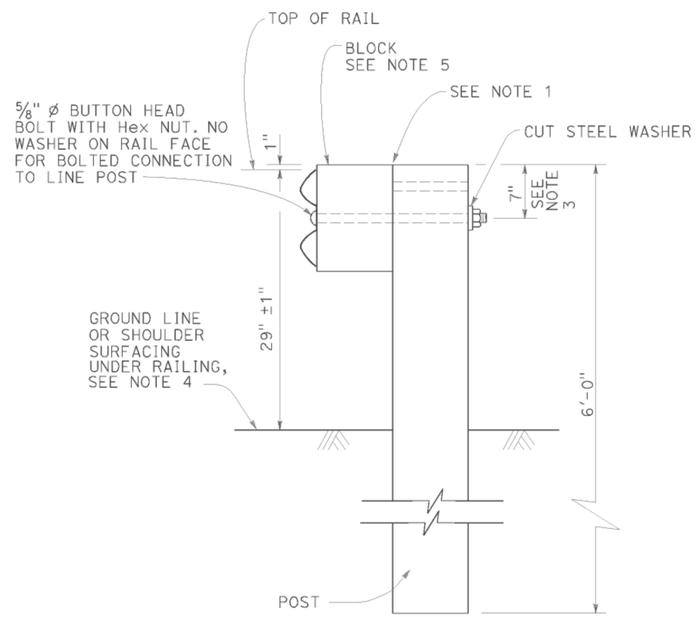

TYPICAL LINE
POST INSTALLATION

NOTES:

1. For wood post and wood block, toenail with 2-16d Galv nails in top of block. For steel post and notched wood or plastic block, notched face of block faces steel post.
2. A 6'-0" Length steel foundation tube, TS 8 x 6 x 3/16, without a soil plate, may be furnished and installed in place of the 4'-6" length steel foundation tube and soil plate shown, Minimum embadment of the 6'-0" length tube shall be 5'-9". A 5/8" ø Hex head bolt and nut shall be installed in the hole in the 6'-0" length tube to keep the wood post from dropping into the tube.
3. To connect railing to 27" terminal system end treatment, transition the top of railing height at a ratio of 120:1 to terminal system end treatment height plus one 12'-6" standard railing section at the transitioned height for a horizontal connection to the end treatment.
4. Install posts in soil.
5. See Revised Standard Plans RSP A77N1 and RSP A77N2 for details.
6. Holes excavation in the slope to construct the buried post end anchor shall be backfilled with selected earth, placed in layers approximately 1'-0" thick. Each layer shall be moistened and thoroughly compacted.

STATE OF CALIFORNIA
DEPARTMENT OF TRANSPORTATION

METAL BEAM GUARD RAILING RECONSTRUCT INSTALLATION

NO SCALE

RSP A77L3 DATED JULY 19, 2013 SUPPLEMENTS THE STANDARD PLANS BOOK DATED 2010.

REVISED STANDARD PLAN RSP A77L3

2010 REVISED STANDARD PLAN RSP A77L3

DATE PLOTTED => 25-FEB-2015
TIME PLOTTED => 07:51

Dist	COUNTY	ROUTE	POST MILES TOTAL PROJECT	SHEET No.	TOTAL SHEETS
02	Sha,Sis	5	Var	54	98

Randell D. Hiatt
REGISTERED CIVIL ENGINEER

July 19, 2013
PLANS APPROVAL DATE

REGISTERED PROFESSIONAL ENGINEER
Randell D. Hiatt
No. C50200
Exp. 6-30-15
CIVIL
STATE OF CALIFORNIA

THE STATE OF CALIFORNIA OR ITS OFFICERS OR AGENTS SHALL NOT BE RESPONSIBLE FOR THE ACCURACY OR COMPLETENESS OF SCANNED COPIES OF THIS PLAN SHEET.

TO ACCOMPANY PLANS DATED 01-30-15

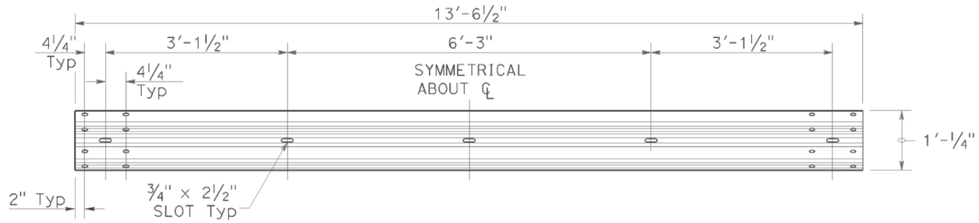

TYPICAL RAIL ELEMENT

NOTE:

1. Slotted holes for splice bolts to overlap ends of rail element.

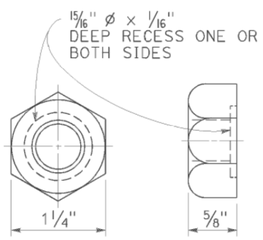

⅝" Ø RECESS NUT

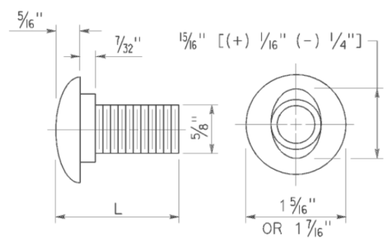

⅝" Ø BUTTON HEAD BOLT

BUTTON HEAD BOLT

L	THREAD LENGTH
1⅜"	FULL THREAD LENGTH
2"	FULL THREAD LENGTH
10"	4" Min THREAD LENGTH
18"	4" Min THREAD LENGTH
20"	4" Min THREAD LENGTH
22"	4" Min THREAD LENGTH
26"	4" Min THREAD LENGTH
36"	4" Min THREAD LENGTH
** 2¾"	2" Min THREAD LENGTH
** 19"	4" Min THREAD LENGTH

** For nested rail applications.

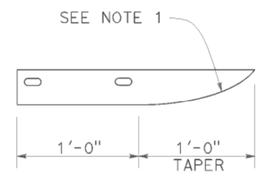

PLAN

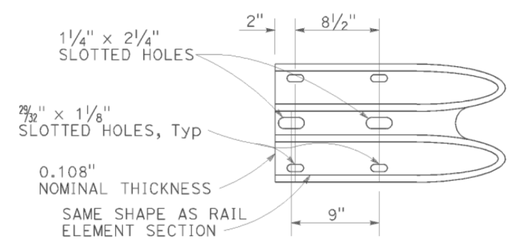

ELEVATION

END CAP
(TYPE A)

STATE OF CALIFORNIA
DEPARTMENT OF TRANSPORTATION

MIDWEST GUARDRAIL SYSTEM STANDARD HARDWARE

NO SCALE

RSP A77M1 DATED JULY 19, 2013 SUPPLEMENTS THE STANDARD PLANS BOOK DATED 2010.

REVISED STANDARD PLAN RSP A77M1

2010 REVISED STANDARD PLAN RSP A77M1

DATE PLOTTED => 25-FEB-2015
TIME PLOTTED => 07:51

Dist	COUNTY	ROUTE	POST MILES TOTAL PROJECT	SHEET No.	TOTAL SHEETS
02	Sha,Sis	5	Var	55	98

Randell D. Hiatt
REGISTERED CIVIL ENGINEER

July 19, 2013
PLANS APPROVAL DATE

REGISTERED PROFESSIONAL ENGINEER
Randell D. Hiatt
No. C50200
Exp. 6-30-15
CIVIL
STATE OF CALIFORNIA

THE STATE OF CALIFORNIA OR ITS OFFICERS OR AGENTS SHALL NOT BE RESPONSIBLE FOR THE ACCURACY OR COMPLETENESS OF SCANNED COPIES OF THIS PLAN SHEET.

TO ACCOMPANY PLANS DATED 01-30-15

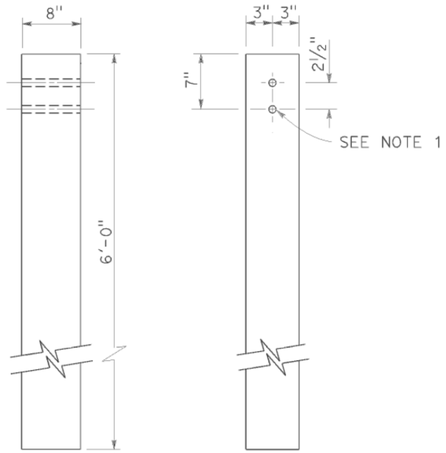

SIDE FRONT

6" x 8" WOOD POST
See Note 3

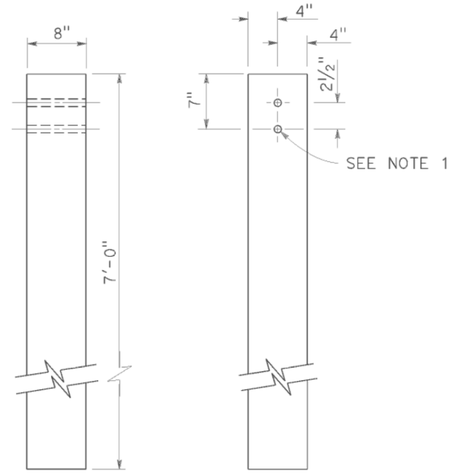

SIDE FRONT

8" x 8" WOOD POST
See Note 4

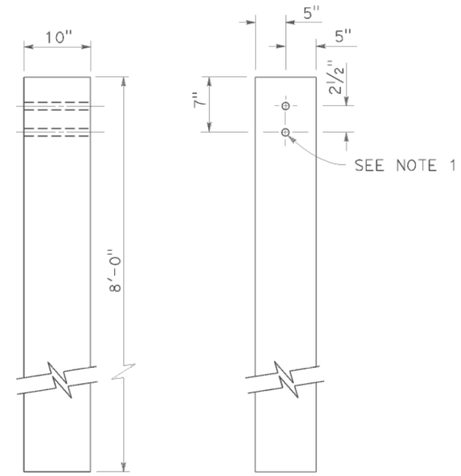

SIDE FRONT

10" x 10" WOOD POST
See Note 5

NOTES:

1. All holes in wood posts and blocks shall be ¾" Dia ± 1/16".
2. Dimensions shown for wood post are nominal.
3. This post and block combination used for standard line post sections of MGS.
4. This post and 8" x 12" block combination used for line post sections of MGS on narrow roadways.
5. This post and 8" x 12" block combination is typically used where strengthened line post sections of MGS are warranted to shield fixed objects.
6. See Revised Standard Plan RSP A77L3 for use of 6" x 8" and 8" x 8" wood blocks.

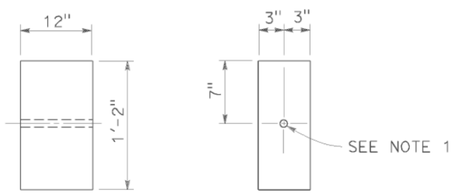

SIDE FRONT

6" x 12" WOOD BLOCK
See Note 3

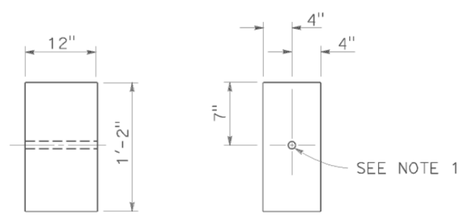

SIDE FRONT

8" x 12" WOOD BLOCK

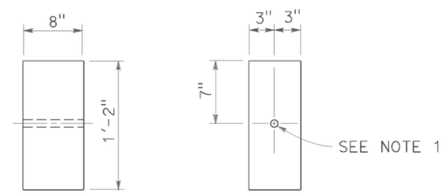

SIDE FRONT

6" x 8" WOOD BLOCK
Only for use with metal beam guard rail see Note 6

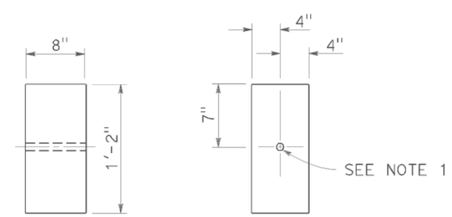

SIDE FRONT

8" x 8" WOOD BLOCK
Only for use with metal beam guard rail see Note 6

STATE OF CALIFORNIA
DEPARTMENT OF TRANSPORTATION

MIDWEST GUARDRAIL SYSTEM WOOD POST AND WOOD BLOCK DETAILS

NO SCALE

RSP A77N1 DATED JULY 19, 2013 SUPPLEMENTS THE STANDARD PLANS BOOK DATED 2010.

REVISED STANDARD PLAN RSP A77N1

2010 REVISED STANDARD PLAN RSP A77N1

DATE PLOTTED => 25-FEB-2015
TIME PLOTTED => 07:52

Dist	COUNTY	ROUTE	POST MILES TOTAL PROJECT	SHEET No.	TOTAL SHEETS
02	Sha,Sis	5	Var	56	98

Randell D. Hiatt
REGISTERED CIVIL ENGINEER

July 19, 2013
PLANS APPROVAL DATE

REGISTERED PROFESSIONAL ENGINEER
Randell D. Hiatt
No. C50200
Exp. 6-30-15
CIVIL
STATE OF CALIFORNIA

THE STATE OF CALIFORNIA OR ITS OFFICERS OR AGENTS SHALL NOT BE RESPONSIBLE FOR THE ACCURACY OR COMPLETENESS OF SCANNED COPIES OF THIS PLAN SHEET.

TO ACCOMPANY PLANS DATED 01-30-15

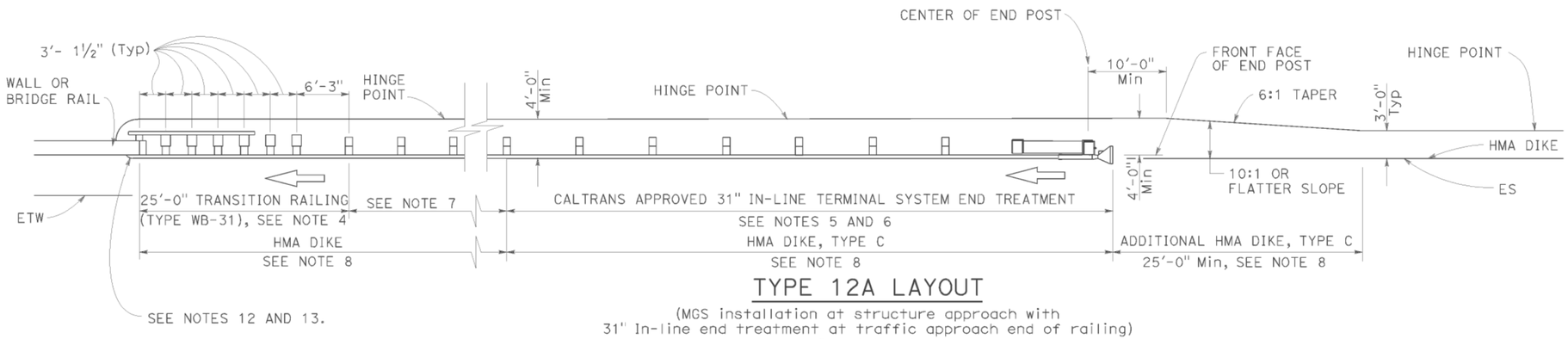

TYPE 12A LAYOUT

(MGS installation at structure approach with
31" In-line end treatment at traffic approach end of railing)
See Notes 9

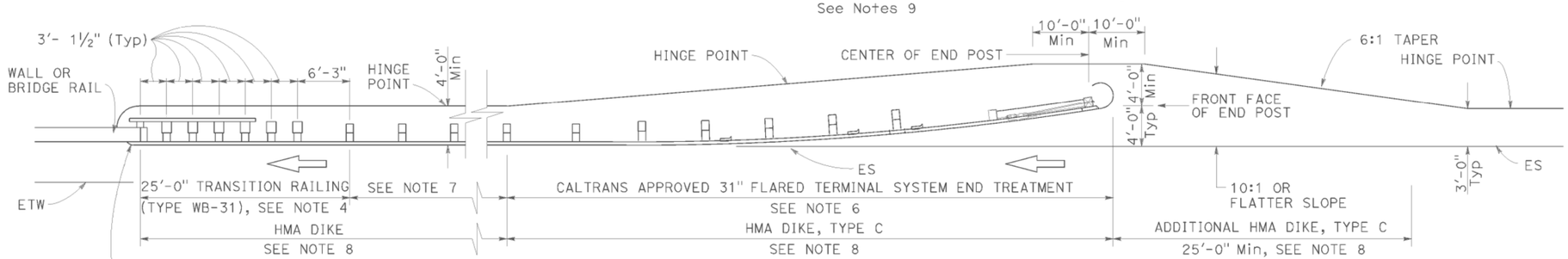

TYPE 12B LAYOUT

(MGS installation at structure approach with
31" Flared end treatment at traffic approach end of railing)
See Notes 9

NOTES:

1. Line post, blocks and hardware to be used are shown on Revised Standard Plans RSP A77L1, RSP A77L2, RSP A77M1, RSP A77N1 and RSP A77N2.
2. MGS post spacing to be 6'-3" center to center, except as otherwise noted.
3. Except as noted, line posts are 6" x 8" x 6'-0" wood with 6" x 12" x 1'-2" wood blocks. W6 x 8.5 or W6 x 9 steel posts, 6'-0" in length, with 6" x 12" x 1'-2" notched wood blocks or plastic blocks may be used for 6" x 8" x 6'-0" wood posts with 6" x 12" x 1'-2" wood blocks where applicable and when specified.
4. For Transition Railing (Type WB-31) details for Types 12A and 12B Layouts, see Revised Standard Plan RSP A77U4.
5. 31" in-line terminal system end treatments are used where site conditions will not accommodate a 31" flared end treatment.
6. The type 31" of terminal system end treatment to be used will be shown on the Project Plans.
7. Dependent on site conditions (embankment height, side slopes, or other fixed objects), it may be advisable to construct additional guard railing (a length equal to multiples of 12'-6" with 6'-3" post spacing) between the transition railing and end treatment. A 12.5 degree angle of departure can be drawn on the Project Plans from the edge of traveled way through the outer most point of the fixed object to determine the additional length of railing needed.
8. Where placement of dike is required with guard railing installations, see Revised Standard Plan RSP A77N4 for dike positioning details.
9. Type 12A or Type 12B Layouts are typically used:
   a. To the right of approaching traffic, at the end of a structure, on two-lane conventional highway where the roadbed width across the structure is less than 40 feet.
   b. To the left of approaching traffic, at the end of a structure, on two-lane conventional highway where the roadbed width across the structure is less than 40 feet.
   c. To the right of approaching traffic at the end of each structure on multilane freeways or expressways with separate adjacent or parallel bridges.
   d. To the right of approaching traffic at the end of the structure on multilane freeways or expressways with decked median on the bridge.
10. See Revised Standard Plan RSP A77Q3 for typical layout used left of approaching traffic at the ends of each structure on multilane freeways or expressways with separate adjacent or parallel bridges.
11. For additional details of typical connections to bridge rail, see Connection Detail AA on Revised Standard Plans RSP A77U1 and RSP A77U2 and Connection Detail FF on Revised Standard Plans RSP A77V1 and RSP A77V2.
12. For additional details of a typical connection to walls or abutments, see Revised Standard Plan RSP A77U3.

STATE OF CALIFORNIA
DEPARTMENT OF TRANSPORTATION

MIDWEST GUARDRAIL SYSTEM TYPICAL LAYOUTS FOR STRUCTURE APPROACH

NO SCALE

RSP A77Q1 DATED JULY 19, 2013 SUPPLEMENTS THE STANDARD PLANS BOOK DATED 2010.

REVISED STANDARD PLAN RSP A77Q1

2010 REVISED STANDARD PLAN RSP A77Q1

DATE PLOTTED => 25-FEB-2015
TIME PLOTTED => 07:52

Dist	COUNTY	ROUTE	POST MILES TOTAL PROJECT	SHEET No.	TOTAL SHEETS
02	Sha,Sis	5	Var	57	98

Randell D. Hiatt
REGISTERED CIVIL ENGINEER

July 19, 2013
PLANS APPROVAL DATE

REGISTERED PROFESSIONAL ENGINEER
Randell D. Hiatt
No. C50200
Exp. 6-30-15
CIVIL
STATE OF CALIFORNIA

THE STATE OF CALIFORNIA OR ITS OFFICERS OR AGENTS SHALL NOT BE RESPONSIBLE FOR THE ACCURACY OR COMPLETENESS OF SCANNED COPIES OF THIS PLAN SHEET.

TO ACCOMPANY PLANS DATED 01-30-15

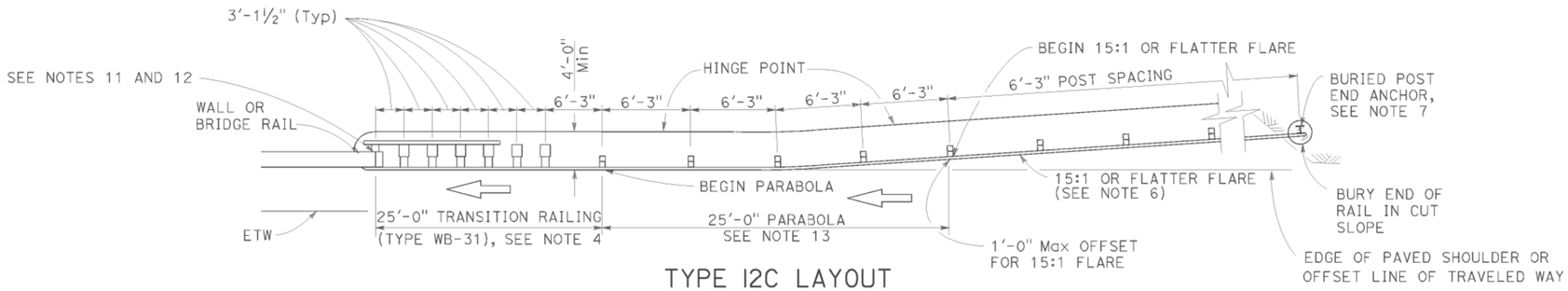

TYPE 12C LAYOUT

(MGS installation at structure approach with a Buried end anchor treatment at traffic approach end of railing)
See Notes 8 and 9

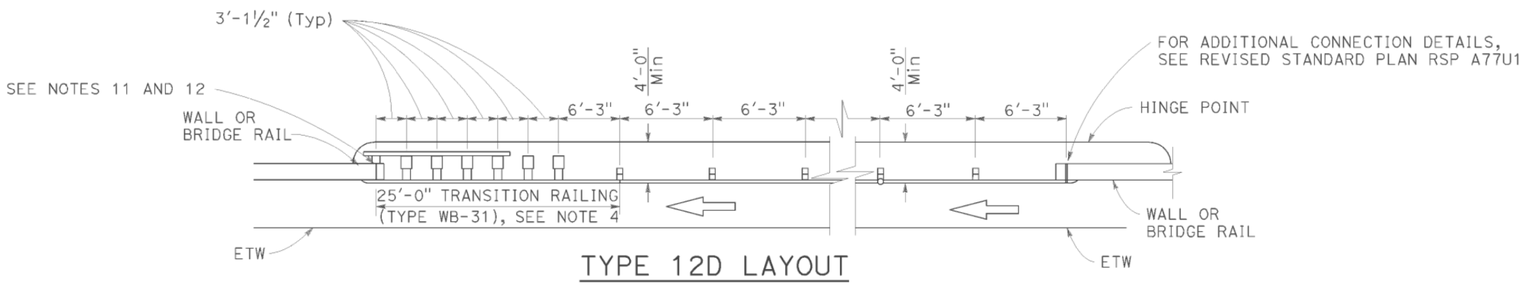

TYPE 12D LAYOUT

(Continuous MGS installation between structures)
See Notes 5 and 9

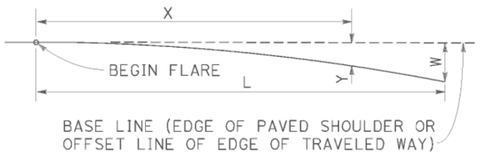

$$Y = \frac{WX^2}{L^2}$$

Y = OFFSET FROM BASE LINE
W = MAXIMUM OFFSET
X = DISTANCE ALONG BASE LINE
L = LENGTH OF FLARE

PARABOLIC FLARE OFFSETS

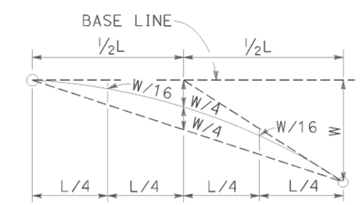

TYPICAL PARABOLIC LAYOUT

NOTES:

1. Line post, blocks and hardware to be used are shown on Revised Standard Plans RSP A77L1, RSP A77L2, RSP A77M1, RSP A77N1 and RSP A77N2.
2. MGS post spacing to be 6'-3" center to center, except as otherwise noted.
3. Except as noted, line posts are 6" x 8" x 6'-0" m wood with 6" x 12" x 1'-2" wood blocks. W6 x 8.5 or W6 x 9 steel posts, 6'-0" in length, with 6" x 12" x 1'-2" notched wood blocks or plastic blocks may be used for 6" x 8" x 6'-0" wood posts with 6" x 12" x 1'-2" wood blocks where applicable and when specified.
4. For Transition Railing (Type WB-31) details for Types 12C and 12D Layouts, see Revised Standard Plan RSP A77U4.
5. Type 12D layout is typically used where continous MGS is recommended between structures.
6. The 15:1 or flatter flare for Type 12C Layout is based on the edge of the paved shoulder or offset line of edge of the traveled way. The length of MGS with the 15:1 or flatter flare is based on site conditions and should be a length equal to multiples of 12'-6".
7. For details of the buried post end anchor used with Type 12C Layout, see Revised Standard Plan RSP A77T2.
8. Where placement of dike is required with MGS installations, see Revised Standard Plan RSP A77N4 for dike positioning details.
9. Type 12C Layout is typically used:
   a. To the right of approaching traffic, at the end of the structure, on two-lane conventional highway where the roadbed width across the structure is less than 40 feet.
   b. To the left of approaching traffic, at each of a structure, on two-lane conventional highway where the roadbed width across the structure is less than 40 feet.
   c. To the right of approaching traffic at the end of each structure on multilane freeways or expressways with separate adjacent or parallel bridges.
   d. To the right of approaching traffic at the end of the structure on multilane freeways or expressways with decked median on the bridge.
10. See Revised Standard Plan RSP A77Q3 for typical layout used left of approaching traffic at the ends of each structure on multilane freeways or expressways with separate adjacent or parallel bridges.
11. For additional details of typical connections to bridge rail, see Connection Detail AA on Revised Standard Plans RSP A77U1 and RSP A77U2 and Connection Detail FF on Revised Standard Plans RSP A77V1 and RSP A77V2.
12. For additional details of a typical connection to walls or abutments, see Revised Standard Plan RSP A77U3.
13. For typical flare offsets for 25'-0" length parabola with maximum offset of 1'-0", see Revised Standard Plan RSP A77P1.

STATE OF CALIFORNIA
DEPARTMENT OF TRANSPORTATION

MIDWEST GUARDRAIL SYSTEM TYPICAL LAYOUTS FOR STRUCTURE APPROACH AND BETWEEN STRUCTURES

NO SCALE

RSP A77Q2 DATED JULY 19, 2013 SUPPLEMENTS THE STANDARD PLANS BOOK DATED 2010.

REVISED STANDARD PLAN RSP A77Q2

2010 REVISED STANDARD PLAN RSP A77Q2

DATE PLOTTED => 25-FEB-2015
TIME PLOTTED => 07:52

Dist	COUNTY	ROUTE	POST MILES TOTAL PROJECT	SHEET No.	TOTAL SHEETS
02	Sha,Sis	5	Var	58	98

Randell D. Hiatt
REGISTERED CIVIL ENGINEER

July 19, 2013
PLANS APPROVAL DATE

REGISTERED PROFESSIONAL ENGINEER
Randell D. Hiatt
No. C50200
Exp. 6-30-15
CIVIL
STATE OF CALIFORNIA

THE STATE OF CALIFORNIA OR ITS OFFICERS OR AGENTS SHALL NOT BE RESPONSIBLE FOR THE ACCURACY OR COMPLETENESS OF SCANNED COPIES OF THIS PLAN SHEET.

TO ACCOMPANY PLANS DATED 01-30-15

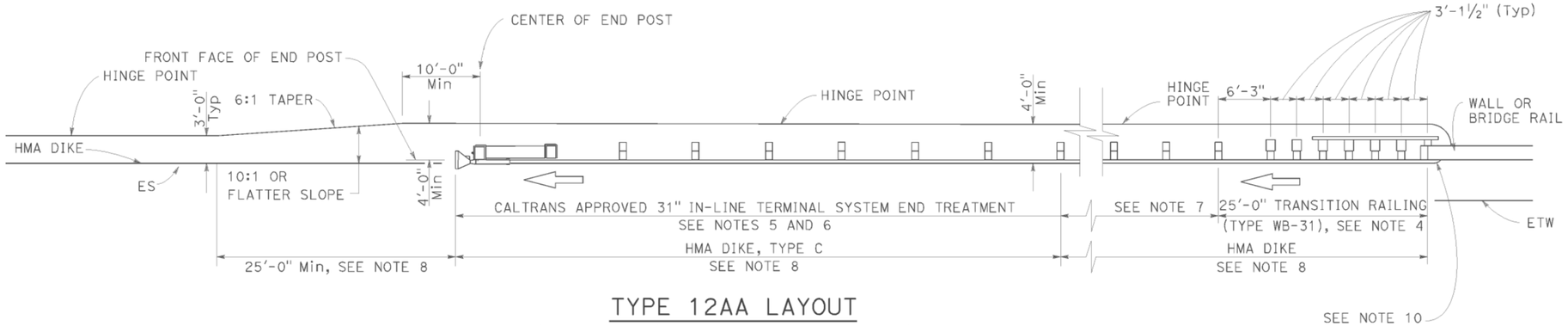

TYPE 12AA LAYOUT

(MGS installation at structure departure with
31" in-line end treatment at trailing end of railing)
See Notes 8 and 9

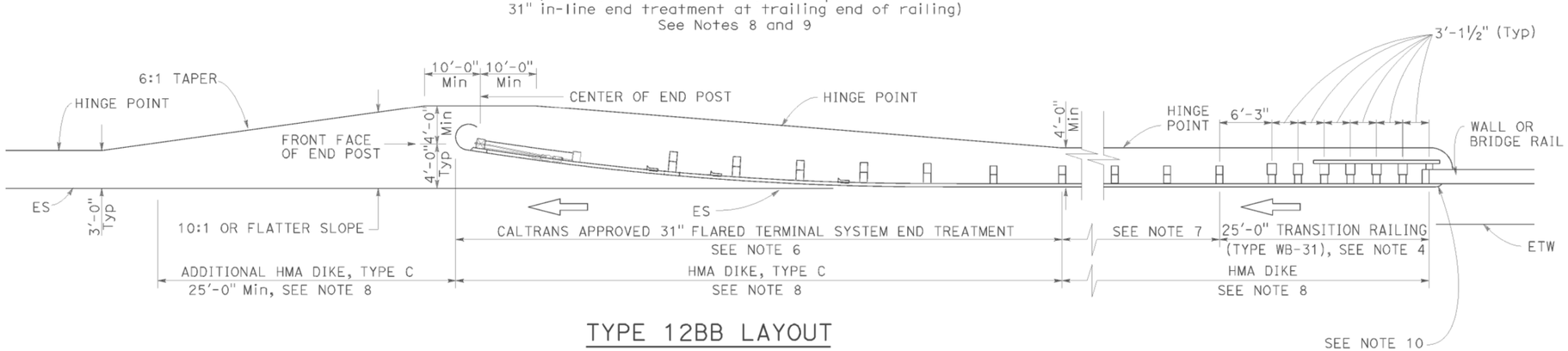

TYPE 12BB LAYOUT

(MGS installation at structure departure with
31" flared end treatment at trailing end of railing)
See Notes 8 and 9

NOTES:

1. Line post, blocks and hardware to be used are shown on Revised Standard Plans RSP A77L1, RSP A77L2, RSP A77M1, RSP A77N1 and RSP A77N2.
2. MGS post spacing to be 6'-3" center to center, except as otherwise noted.
3. Except as noted, line posts are 6" x 8" x 6'-0" wood with 6" x 12" x 1'-2" wood blocks. W6 x 8.5 or W6 x 9 steel posts, 6'-0" in length, with 6" x 12" x 1-2" notched wood blocks or notched recycled plastic blocks may be used for 6" x 8" x 6'-0" wood posts with 6" x 12" x 1'-2" wood blocks where applicable and when specified.
4. For Transition Railing (Type WB-31) details for Types 12AA and 12BB Layouts, see Revised Standard Plan RSP A77U4.
5. 31" in-line terminal system treatments are used where site conditions will not accommodate a 31" flared end treatment.
6. The type of 31" terminal system to be used will be shown on the Project Plans.
7. Dependent on site conditions (embankment height, side slopes, other fixed objects), it may be advisable to construct additional MGS (a length equal to multiples of 12'-6" with 6'-3" post spacing) between the transition railing and 31" end treatments.
8. Where placement of dike is required with MGS installations, see Revised Standard Plan RSP A77N4 for dike positioning details.
9. Type 12AA or Type 12BB Layouts are typically used to the right of traffic departing a structure on two-way conventional highways where the roadbed width across the structure is less than 40 feet.
10. For additional details of typical connections to bridge rail, see Connection Detail CC on Revised Standard Plan RSP A77U2 and Connection Detail HH on Revised Standard Plan RSP A77V2.

STATE OF CALIFORNIA
DEPARTMENT OF TRANSPORTATION

MIDWEST GUARDRAIL SYSTEM TYPICAL LAYOUTS FOR STRUCTURE DEPARTURE

NO SCALE

RSP A77Q4 DATED JULY 19, 2013 SUPPLEMENTS THE STANDARD PLANS BOOK DATED 2010.

REVISED STANDARD PLAN RSP A77Q4

2010 REVISED STANDARD PLAN RSP A77Q4

DATE PLOTTED => 25-FEB-2015
TIME PLOTTED => 07:52

Dist	COUNTY	ROUTE	POST MILES TOTAL PROJECT	SHEET No.	TOTAL SHEETS
02	Sha,Sis	5	Var	59	98

Randell D. Hiatt
REGISTERED CIVIL ENGINEER

July 19, 2013
PLANS APPROVAL DATE

REGISTERED PROFESSIONAL ENGINEER
Randell D. Hiatt
No. C50200
Exp. 6-30-15
CIVIL
STATE OF CALIFORNIA

THE STATE OF CALIFORNIA OR ITS OFFICERS OR AGENTS SHALL NOT BE RESPONSIBLE FOR THE ACCURACY OR COMPLETENESS OF SCANNED COPIES OF THIS PLAN SHEET.

TO ACCOMPANY PLANS DATED 01-30-15

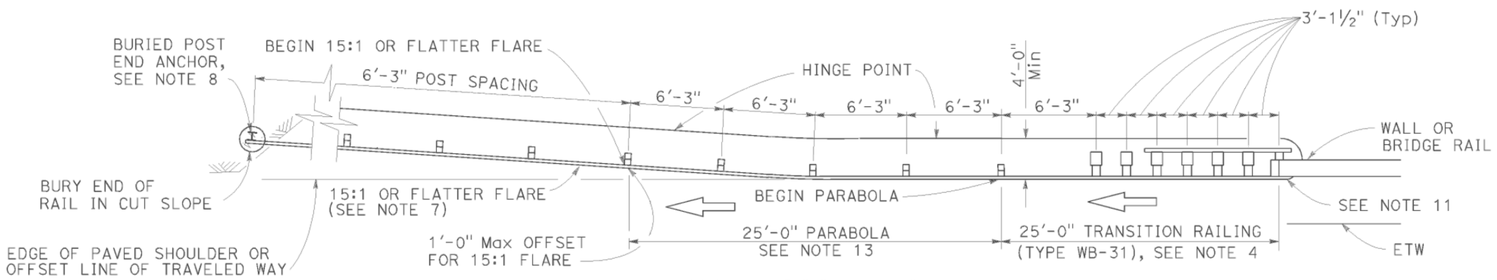

TYPE 12CC LAYOUT

(MGS installation at structure departure with a
Buried end anchor treatment at trailing end of railing)
See Notes 9 and 10

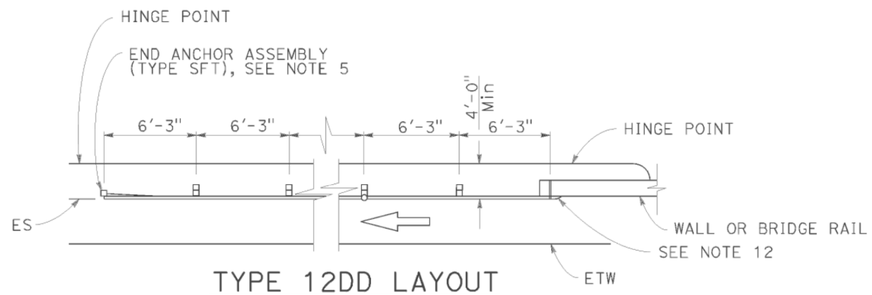

TYPE 12DD LAYOUT

(MGS installation at structure departure
With end anchor assembly at trailing end of railing)
See Notes 6 and 9

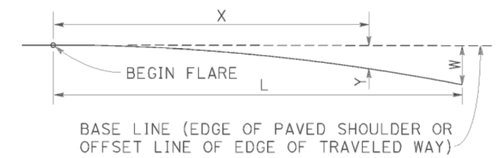

$$Y = \frac{WX^2}{L^2}$$

Y = OFFSET FROM BASE LINE
W = MAXIMUM OFFSET
X = DISTANCE ALONG BASE LINE
L = LENGTH OF FLARE

PARABOLIC FLARE OFFSETS

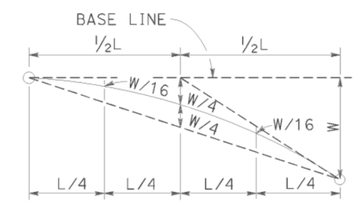

TYPICAL PARABOLIC LAYOUT

NOTES:

1. Line post, blocks and hardware to be used are shown on Revised Standard Plans RSP A77L1, RSP A77L2, RSP A77M1, RSP A77N1 and RSP A77N2.
2. MSG post spacing to be 6'-3" center to center, except as otherwise noted.
3. Except as noted, line posts are 6" x 8" x 6'-0" wood with 6" x 12" x 1'-2" wood blocks. W6 x 8.5 or W6 x 9 steel posts, 6'-0" in length, with 6" x 12" x 1'-2" notched wood blocks or notched recycled plastic blocks may be used for 6" x 8" x 6'-0" wood line posts with 6" x 12" x 1'-2" wood blocks where applicable and when specified.
4. For Transition Railing (Type WB-31) details for Type 12CC Layout, see Revised Standard Plan RSP A77U4.
5. For details of End Anchor Assembly (Type SFT) used with Type 12DD Layout, see Revised Standard Plan RSP A77S1.
6. Type 12DD layout is typically used to the right of traffic departing a structure on two-way conventional highways where the roadbed width across the structure is equal to or greater than 40 feet and MGS is recommended (embankment height, side slopes, other fixed objects). Length of railing to be equal to multiples of 12'-6". For MGS connection details to bridge rail, see Revised Standard Plans RSP A77U1 and RSP A77V1. For MGS connection details to wall, see Revised Standard Plan RSP A77U3.
7. The 15:1 or flatter flare for Type 12CC Layout is based on the edge of the paved shoulder or offset line of edge of the traveled way. The length of MGS within the 15:1 or flatter flare is based on site conditions and should be a length equal to multiples of 12'-6".
8. For details of the buried post end anchor used with Type 12CC Layout, see Revised Standard Plan RSP A77T2.
9. Where placement of dike is required with MGS installations, see Revised Standard Plan RSP A77N4 for dike positioning details.
10. Type 12CC Layout is typically used to the right of traffic departing a structure on two-way conventional highways where the roadbed width across the structure is less than 40 feet.
11. For additional details of a typical connection to bridge rail for Layout Type 12CC, see Connection Detail CC on Revised Standard Plan RSP A77U2 and Connection Detail HH on Revised Standard Plan RSP A77V2.
12. For additional details of a typical connection to bridge rail for Layout Type 12DD, see Connection Detail BB on Revised Standard Plan RSP A77U1 and Connection Detail GG on Revised Standard Plan RSP A77V1.
13. For typical flare offsets for 25'-0" length parabola with maximum offset of 1'-0", see Revised Standard Plan RSP A77P1.

STATE OF CALIFORNIA
DEPARTMENT OF TRANSPORTATION

MIDWEST GUARDRAIL SYSTEM TYPICAL LAYOUTS FOR STRUCTURE DEPARTURE

NO SCALE

RSP A77Q5 DATED JULY 19, 2013 SUPPLEMENTS THE STANDARD PLANS BOOK DATED 2010.

REVISED STANDARD PLAN RSP A77Q5

2010 REVISED STANDARD PLAN RSP A77Q5

DATE PLOTTED => 25-FEB-2015
TIME PLOTTED => 07:52

Dist	COUNTY	ROUTE	POST MILES TOTAL PROJECT	SHEET No.	TOTAL SHEETS
02	Sha,Sis	5	Var	60	98

Randell D. Hiatt
REGISTERED CIVIL ENGINEER

November 15, 2013
PLANS APPROVAL DATE

REGISTERED PROFESSIONAL ENGINEER
Randell D. Hiatt
No. C50200
Exp. 6-30-15
CIVIL
STATE OF CALIFORNIA

THE STATE OF CALIFORNIA OR ITS OFFICERS OR AGENTS SHALL NOT BE RESPONSIBLE FOR THE ACCURACY OR COMPLETENESS OF SCANNED COPIES OF THIS PLAN SHEET.

TO ACCOMPANY PLANS DATED 01-30-15

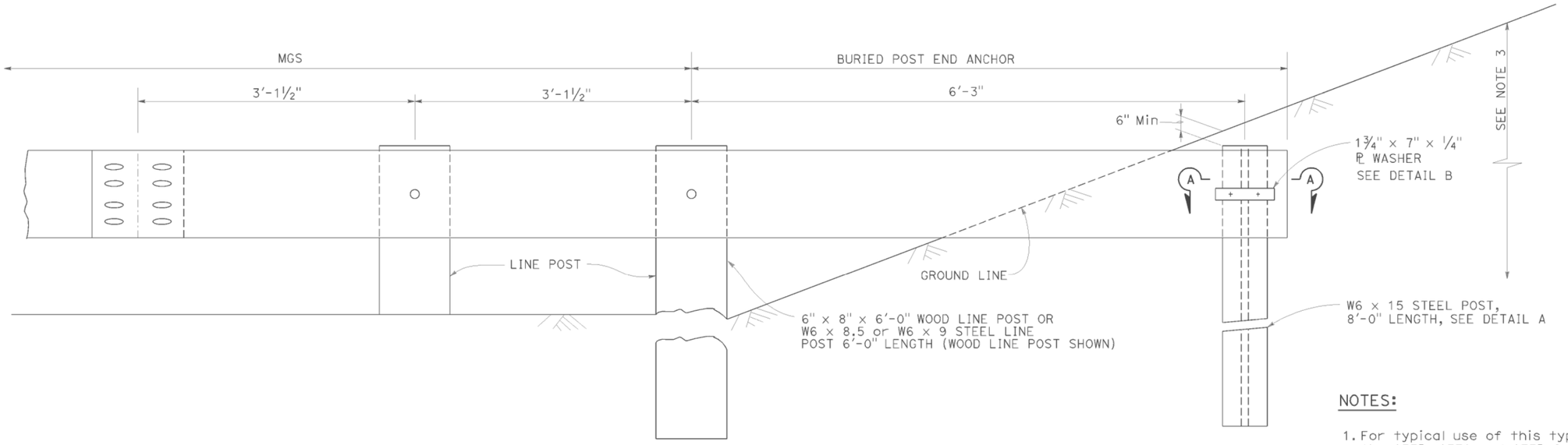

BURIED POST END ANCHOR

See Note 3

NOTES:

1. For typical use of this type of end anchor with MGS see the A77P, A77Q and A77R Series of the Standard Plans.
2. Holes excavation in the slope to construct the buried post end anchor shall be backfilled with selected earth, placed in layers approximately 1'-0" thick. Each layer shall be moistened and thoroughly compacted.
3. The buried post end anchor shall only be constructed at those locations where the slope perpendicular to the roadway is non-traversable.

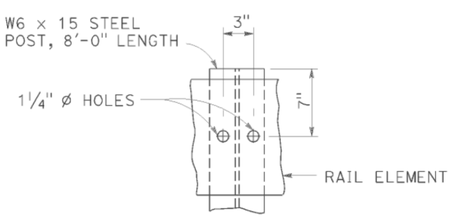

DETAIL A

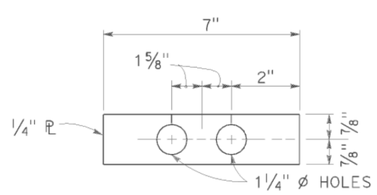

DETAIL B

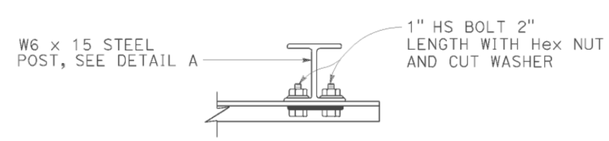

SECTION A-A

STATE OF CALIFORNIA
DEPARTMENT OF TRANSPORTATION

MIDWEST GUARDRAIL SYSTEM BURIED POST END ANCHOR

NO SCALE

RSP A77T2 DATED NOVEMBER 15, 2013 SUPERSEDES RSP A77T2 DATED JULY 19, 2013 THAT SUPPLEMENTS THE STANDARD PLANS BOOK DATED 2010.

REVISED STANDARD PLAN RSP A77T2

2010 REVISED STANDARD PLAN RSP A77T2

DATE PLOTTED => 25-FEB-2015
TIME PLOTTED => 07:52

Dist	COUNTY	ROUTE	POST MILES TOTAL PROJECT	SHEET No.	TOTAL SHEETS
02	Sha,Sis	5	Var	61	98

Randell D. Hiatt
REGISTERED CIVIL ENGINEER

July 19, 2013
PLANS APPROVAL DATE

REGISTERED PROFESSIONAL ENGINEER
Randell D. Hiatt
No. C50200
Exp. 6-30-15
CIVIL
STATE OF CALIFORNIA

THE STATE OF CALIFORNIA OR ITS OFFICERS OR AGENTS SHALL NOT BE RESPONSIBLE FOR THE ACCURACY OR COMPLETENESS OF SCANNED COPIES OF THIS PLAN SHEET.

TO ACCOMPANY PLANS DATED 01-30-15

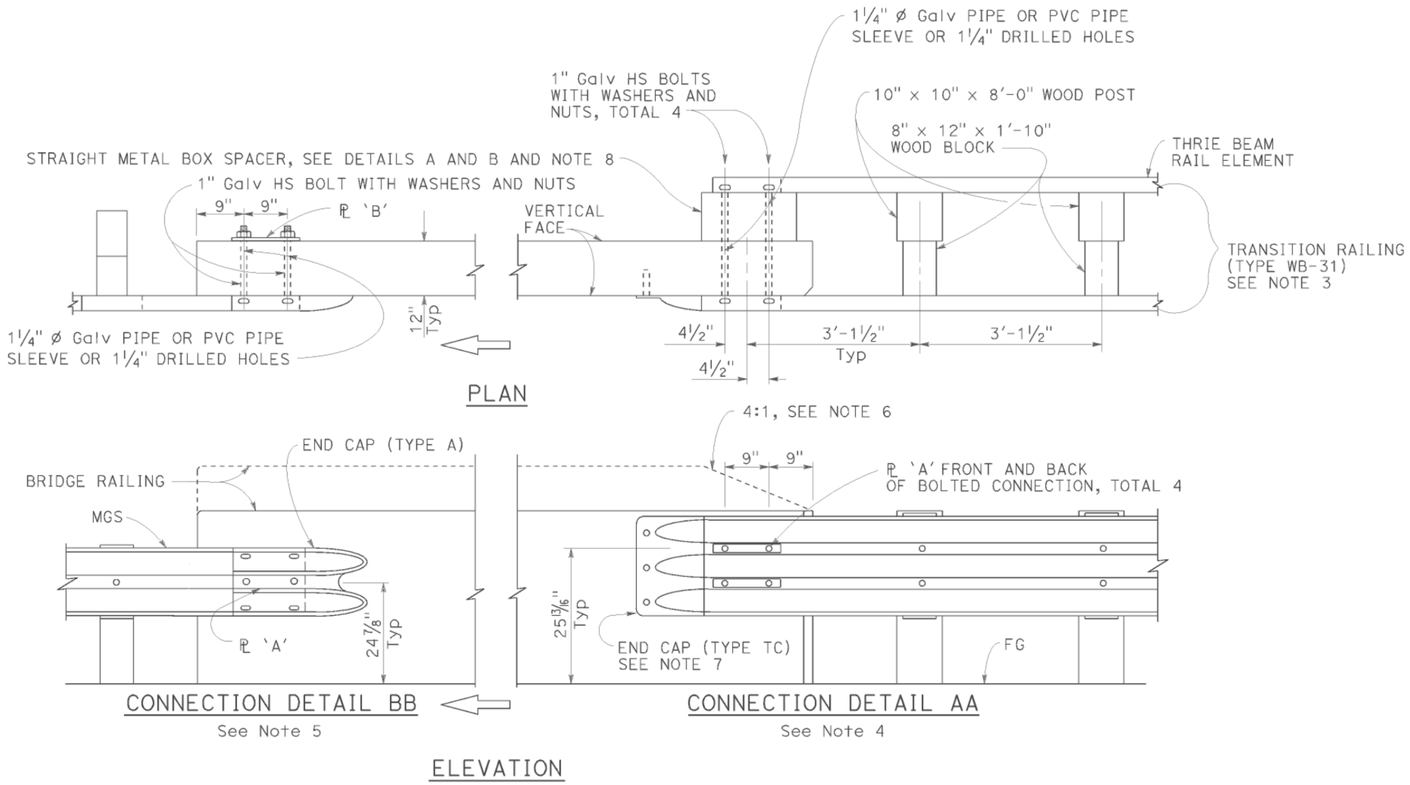

MIDWEST GUARDRAIL SYSTEM CONNECTION TO BRIDGE RAILING WITHOUT SIDEWALK

NOTES:

1. See Revised Standard Plan RSP A77U2 for additional connection details to bridges without sidewalks.
2. Additional details of posts, blocks and hardware are shown on Revised Standard Plans RSP A77M1, RSP A77N1 and RSP A77N2.
3. For additional details of Transition Railing (Type WB-31), see Revised Standard Plan RSP A77U4. Transition Railing (Type WB-31) transitions the 12 gauge MGS railing section to a heavier gage nested thrie beam railing section which is connected to the concrete bridge railing.
4. For typical use of Connection Detail AA, see Layout Types 12A and 12B on Revised Standard Plan RSP A77Q1, Layout Types 12C and 12D on Revised Standard Plan RSP A77Q2, and Layout Type 12E on Revised Standard Plan RSP A77Q3.
5. For typical use of Connection Detail BB, see Layout Type 12D (structure departure railing connection) on Revised Standard Plan RSP A77Q2 and Layout Type 12DD on Revised Standard Plan RSP A77Q5.
6. Where the height of the bridge railing exceeds the height of the thrie beam railing by more than 1" at Connection Detail AA, taper the top of the end of the bridge railing at 4:1 to match the top elevation of the thrie beam rail.
7. For details of End Cap (Type TC), see Revised Standard Plan RSP A77U4.
8. See Revised Standard Plan RSP A77U4 for additional details regarding depth dimension for straight metal box spacer.

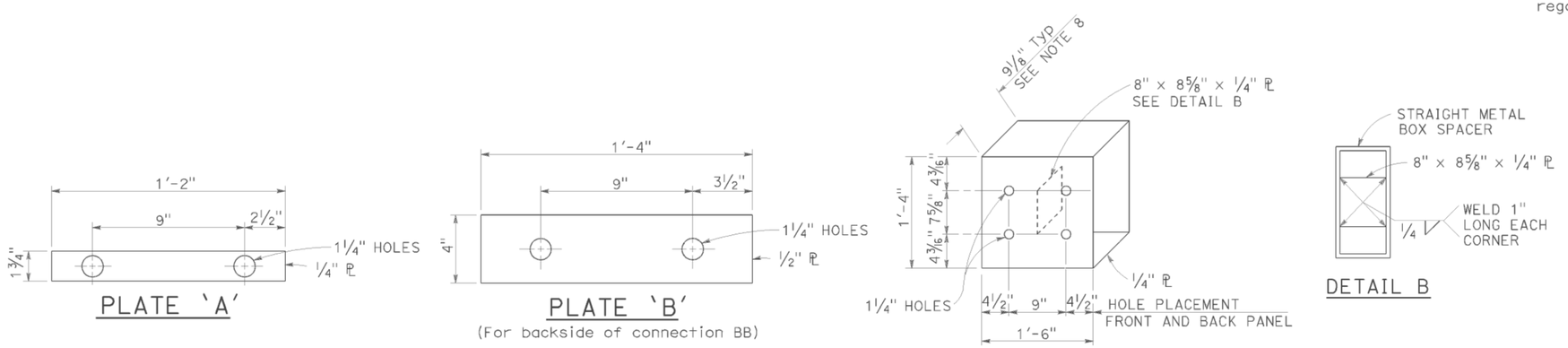

STRAIGHT METAL BOX SPACER

STATE OF CALIFORNIA
DEPARTMENT OF TRANSPORTATION

MIDWEST GUARDRAIL SYSTEM CONNECTIONS TO BRIDGE RAILINGS WITHOUT SIDEWALKS DETAILS No. 1

NO SCALE

RSP A77U1 DATED JULY 19, 2013 SUPPLEMENTS THE STANDARD PLANS BOOK DATED 2010.

REVISED STANDARD PLAN RSP A77U1

2010 REVISED STANDARD PLAN RSP A77U1

DATE PLOTTED => 25-FEB-2015
TIME PLOTTED => 07:52

Dist	COUNTY	ROUTE	POST MILES TOTAL PROJECT	SHEET No.	TOTAL SHEETS
02	Sha,Sis	5	Var	62	98

REGISTERED CIVIL ENGINEER

July 18, 2014
PLANS APPROVAL DATE

REGISTERED PROFESSIONAL ENGINEER Glenn DeCou No. C34547 Exp. 9-30-15 CIVIL STATE OF CALIFORNIA

THE STATE OF CALIFORNIA OR ITS OFFICERS OR AGENTS SHALL NOT BE RESPONSIBLE FOR THE ACCURACY OR COMPLETENESS OF SCANNED COPIES OF THIS PLAN SHEET.

TO ACCOMPANY PLANS DATED 01-30-15

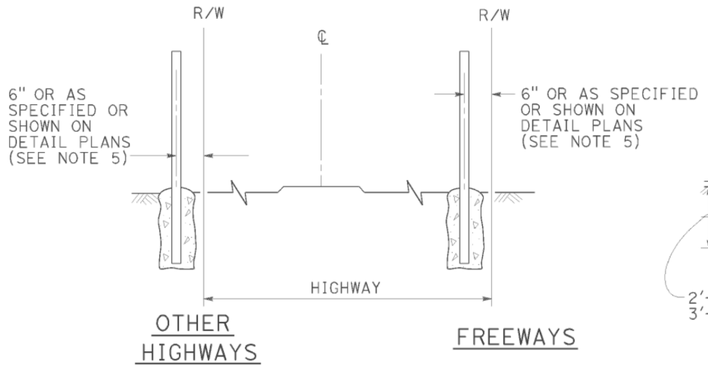

FENCE LOCATION

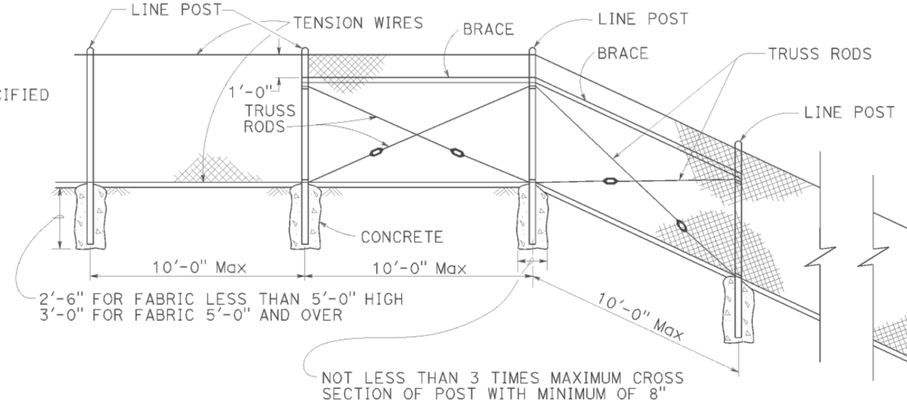

CHAIN LINK FENCE ON SHARP BREAK IN GRADE

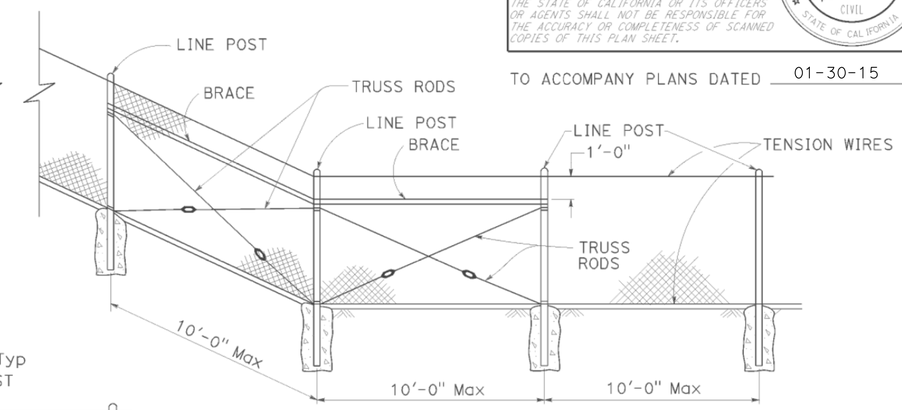

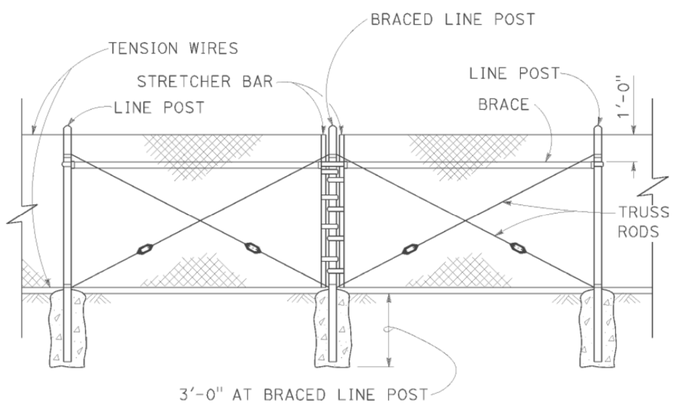

BRACED LINE POST INSTALLATION

Braced line post at intervals not exceeding 1000'

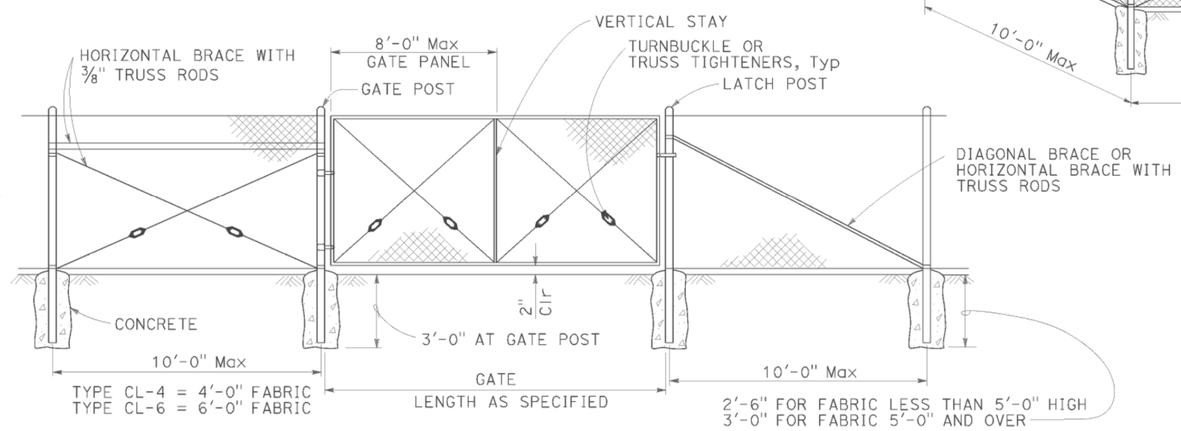

CHAIN LINK GATE INSTALLATION

GATE POST			
FENCE HEIGHT	GATE WIDTHS	ROUND OD PIPE	WEIGHT (lb/ft)
6'-0" AND LESS	UP THRU 6'-0"	2.875"	5.80
	OVER 6'-0" THRU 12'-0"	4.500"	10.80
	OVER 12'-0" THRU 18'-0"	5.563"	14.63
	OVER 18'-0" TO 24'-0" Max	6.625"	18.99
OVER 6'-0" TO 8'-0" Max	UP THRU 6'-0"	3.500"	7.58
	OVER 6'-0" THRU 12'-0"	5.563"	14.63
	OVER 12'-0" THRU 18'-0"	6.625"	18.99
	OVER 18'-0" TO 24'-0" Max	8.625"	28.58

Above post dimensions and weights are minimums. Larger sizes may be used upon approval.

NOTES:

1. The table below shows minimum sized posts and braces complying with the specifications. Larger or heavier post and brace sizes may be used upon approval.
2. Sections shown in the tables must also comply with the strength requirements and other provisions of the Specifications.
3. Other sections which comply with the strength requirements and other provisions of the Specifications may be used upon approval.
4. Options exercised shall be uniform on any one project.
5. Offset to be 2'-0" at monument locations, measured at right angles to R/W lines. Taper to achieve offset to be at least 20'-0" long.
6. See Revised Standard Plan RSP A85B for Brace, Stretcher Bar, and Truss Tightener Details.

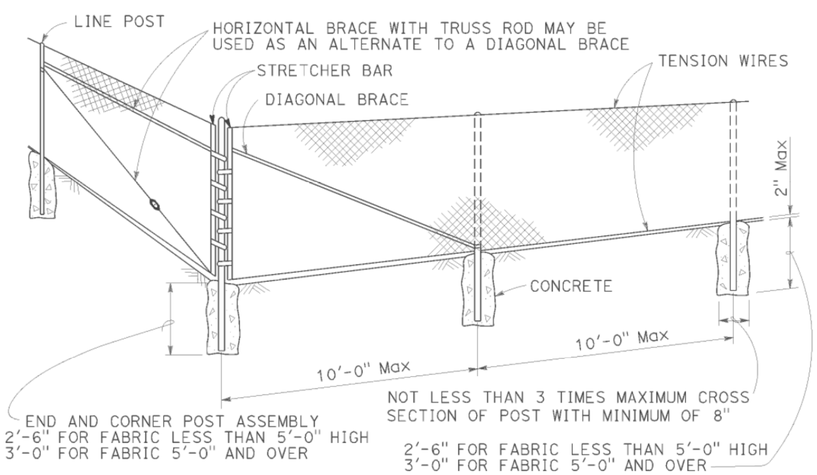

CORNER POST

TYPICAL MEMBER DIMENSIONS (See Notes)										
FENCE HEIGHT	LINE POSTS				END, LATCH AND CORNER POSTS		BRACES			
	ROUND OD PIPE	WEIGHT (lb/ft)	ROLL FORMED		ROUND OD PIPE	WEIGHT (lb/ft)	ROUND OD PIPE	WEIGHT (lb/ft)	ROLL FORMED	
			SECTION	WEIGHT (lb/ft)					SECTION	WEIGHT (lb/ft)
6'-0" AND LESS	1.900"	2.72	1.875" x 1.625"	1.85	2.375"	3.65	1.66"	2.27	1.625" x 1.25"	1.35
OVER 6'-0" TO 8'-0" Max	2.375"	3.65	2.25" x 1.70"	2.78	2.875"	5.80	1.66"	2.27	1.625" x 1.25"	1.35

STATE OF CALIFORNIA
DEPARTMENT OF TRANSPORTATION

CHAIN LINK FENCE

NO SCALE

RSP A85 DATED JULY 18, 2014 SUPERSEDES STANDARD PLAN A85
DATED MAY 20, 2011 - PAGE 112 OF THE STANDARD PLANS BOOK DATED 2010.

REVISED STANDARD PLAN RSP A85

2010 REVISED STANDARD PLAN RSP A85

DATE PLOTTED => 25-FEB-2015
TIME PLOTTED => 07:52

USERNAME => s115152
DGN FILE => 24f610va012.dgn

P:\proj1\02\4F610_plans\pse\24f610va012.dgn

7-1-14

Dist	COUNTY	ROUTE	POST MILES TOTAL PROJECT	SHEET No.	TOTAL SHEETS
02	Sha,Sis	5	Var	63	98

Glenn DeCou
REGISTERED CIVIL ENGINEER

October 19, 2012
PLANS APPROVAL DATE

REGISTERED PROFESSIONAL ENGINEER
Glenn DeCou
No. C34547
Exp. 9-30-13
CIVIL
STATE OF CALIFORNIA

THE STATE OF CALIFORNIA OR ITS OFFICERS OR AGENTS SHALL NOT BE RESPONSIBLE FOR THE ACCURACY OR COMPLETENESS OF SCANNED COPIES OF THIS PLAN SHEET.

TO ACCOMPANY PLANS DATED 01-30-15

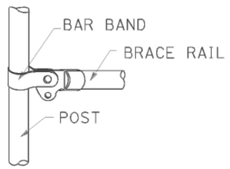

BRACE RAIL

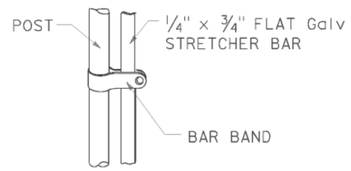

STRETCHER BAR

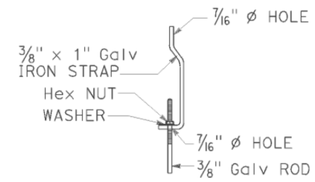

TRUSS TIGHTENER

NOTES:

1. All material for abutment connection to be galvanized.
2. The chain link fabric shall be replaced by barbed wire strands at 12" maximum centers between the double posts.
3. When the width of the culvert makes it necessary to anchor a post to the top of the culvert, a cast iron shoe or other device approved by the Engineer shall be used.
4. Fencing over stream and around headwall may also use Barbed Wire or Wire Mesh fencing with either wood post or steel post installation.
5. See Standard Plan A85 for Chain Link fence dimensions. See Standard Plan A86 for Barbed Wire and Wire Mesh fence dimensions and for wood post and steel post installation.

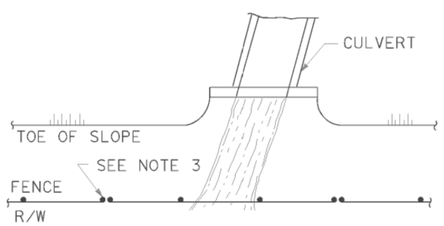

PLAN

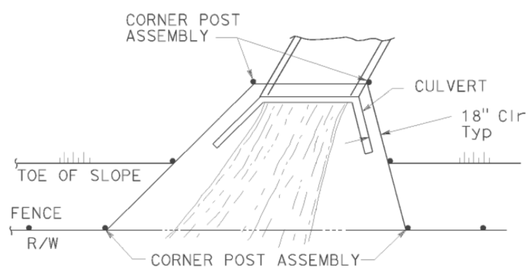

PLAN

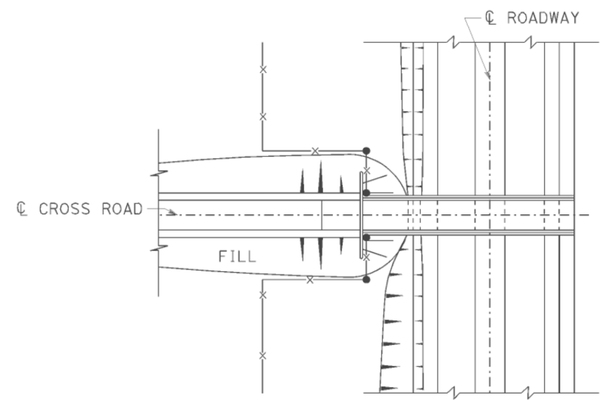

PLAN OF ROADWAY - OVERCROSSING

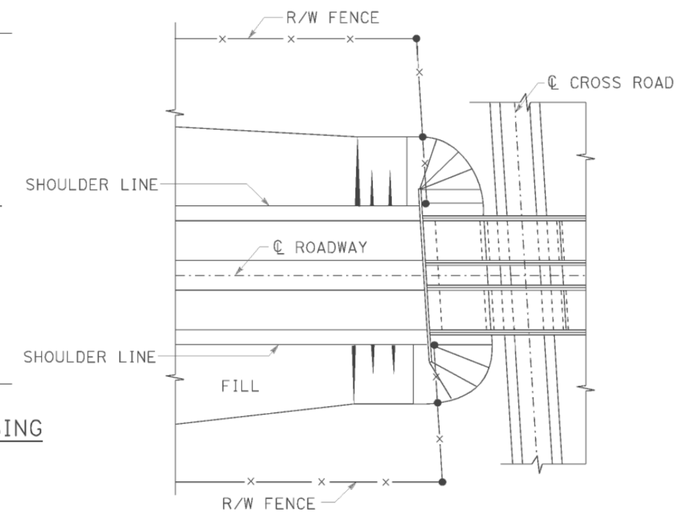

PLAN OF ROADWAY - UNDERCROSSING

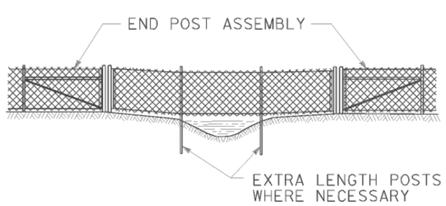

ELEVATION

INSTALLATION OVER STREAM

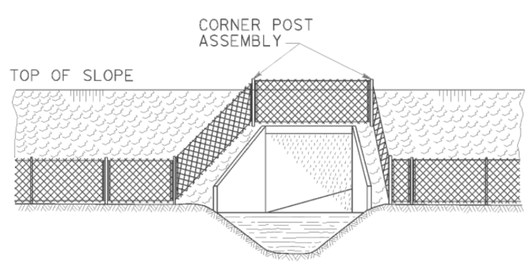

ELEVATION

INSTALLATION AROUND HEADWALL

See Note 4

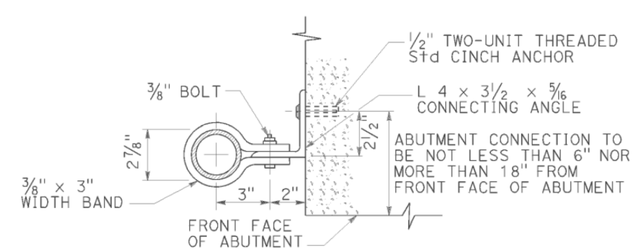

ABUTMENT CONNECTION

TYPICAL INSTALLATION AT BRIDGES

STATE OF CALIFORNIA
DEPARTMENT OF TRANSPORTATION

CHAIN LINK FENCE DETAILS

NO SCALE

RSP A85B DATED OCTOBER 19, 2012 SUPERSEDES STANDARD PLAN A85B DATED MAY 20, 2011 - PAGE 114 OF THE STANDARD PLANS BOOK DATED 2010.

REVISED STANDARD PLAN RSP A85B

2010 REVISED STANDARD PLAN RSP A85B

DATE PLOTTED => 25-FEB-2015
TIME PLOTTED => 07:52

Dist	COUNTY	ROUTE	POST MILES TOTAL PROJECT	SHEET No.	TOTAL SHEETS
02	Sha,Sis	5	Var	64	98

REGISTERED CIVIL ENGINEER

July 19, 2013
PLANS APPROVAL DATE

REGISTERED PROFESSIONAL ENGINEER
Michael Janzen
No. 44788
Exp. 03-31-14
CIVIL
STATE OF CALIFORNIA

THE STATE OF CALIFORNIA OR ITS OFFICERS OR AGENTS SHALL NOT BE RESPONSIBLE FOR THE ACCURACY OR COMPLETENESS OF SCANNED COPIES OF THIS PLAN SHEET.

TO ACCOMPANY PLANS DATED 01-30-15

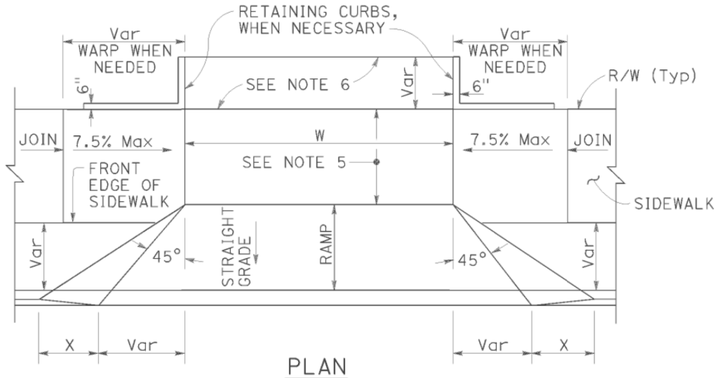

PLAN

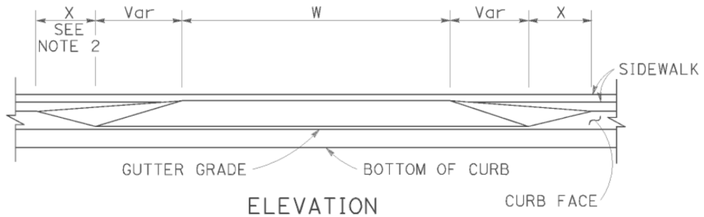

ELEVATION

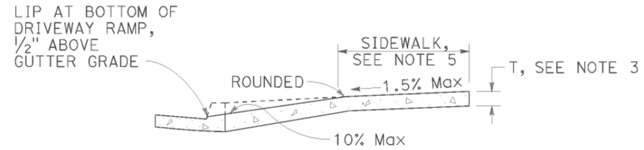

CASE A

Typical driveway, sidewalk not depressed

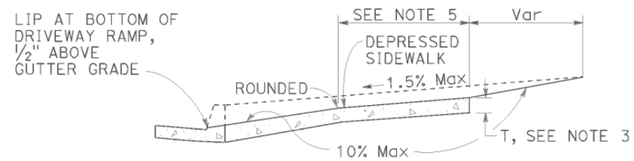

CASE B

Driveway with depressed sidewalk

SECTIONS

DRIVEWAYS

TABLE A

CURB TYPE	DIMENSIONS			
	"H1"	"H2"	"W1"	"W2"
A1-6	1'-2"	6"	7½"	1½"
A1-8	1'-4"	8"	8"	2"
A2-6	1'-0"	6"	2'-7½"	1½"
A2-8	1'-2"	8"	2'-8"	2"
A3-6	6"	5"	7¼"	1¼"
A3-8	8"	7"	7¾"	1¾"
B1-4	1'-0"	4"	7½"	2½"
B1-6	1'-2"	6"	9"	4"
B2-4	10"	4"	2'-7½"	2½"
B2-6	1'-0"	6"	2'-9"	4"
B3-4	4"	3"	7"	2"
B3-6	6"	5"	8½"	3½"
D-4	10"	4"	1'-6"	1'-1"
D-6	1'-0"	6"	2'-2"	1'-9"

CURB QUANTITIES

TYPE	CUBIC YARDS PER LINEAR FOOT
A1-6	0.02585
A1-8	0.03084
A2-6	0.05903
A2-8	0.06379
A3-6	0.01036
A3-8	0.01435
B1-4	0.02185
B1-6	0.02930
B2-4	0.05515
B2-6	0.06171
B3-4	0.00641
B3-6	0.01074
B4	0.05709
D-4	0.04083
D-6	0.06804
E	0.06661

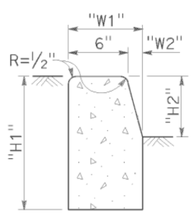

TYPE A1 CURBS

See Table A

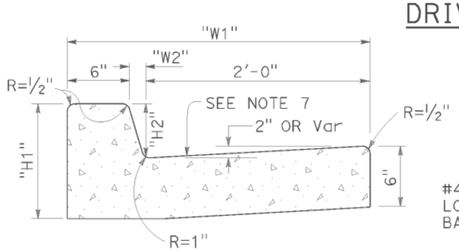

TYPE A2 CURBS

See Table A

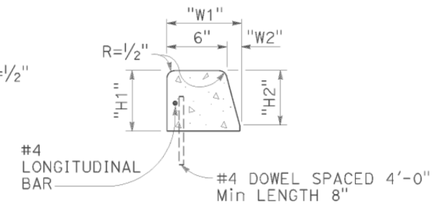

TYPE A3 CURBS

Superimposed on existing pavement
See Table A

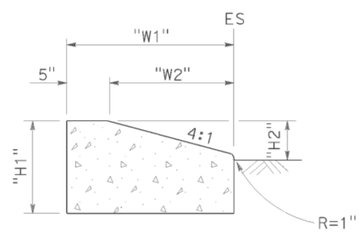

TYPE D CURBS

See Table A

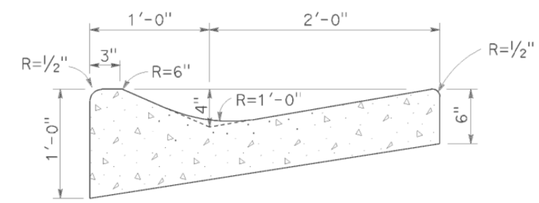

TYPE E CURB

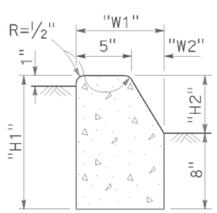

TYPE B1 CURBS

See Table A

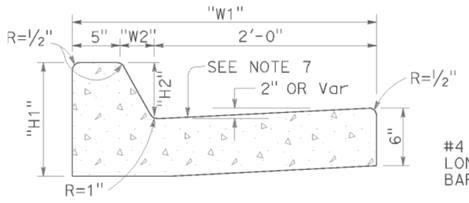

TYPE B2 CURBS

See Table A

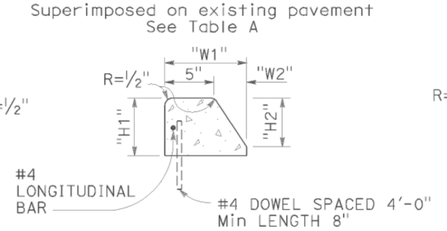

TYPE B3 CURBS

Superimposed on existing pavement
See Table A

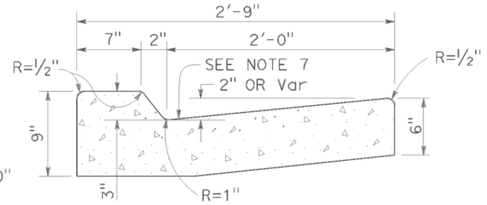

TYPE B4 CURBS

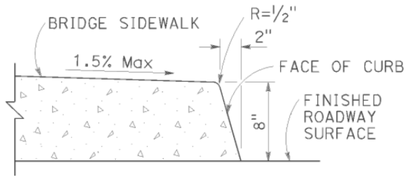

TYPE H CURB

On Bridges

CURBS

NOTES:

1. Case A driveway section typically applies.
2. X=3'-0" except for curb heights over 10" where 4:1 slopes shall be used on curb slope.
3. Sidewalk and ramp thickness "T" at driveway shall be 4" for residental and 6" for commercial.
4. Difference in slope of the driveway ramp and the slope of a line between the gutter and a point on the roadway 5'-0" from gutter line shall not exceed 15%. Reduce driveway ramp slope, not gutter slope, where required.
5. Minimum width of clear passageway for sidewalk shall be 4'-2".
6. Retaining curbs and acquisition of construction easement may be necessary for narrow sidewalks or curb heights in excess of 6".
7. Across the pedestrian route at curb ramp locations, the gutter pan slope shall not exceed 1" of depth for each 2'-0" of width.

STATE OF CALIFORNIA
DEPARTMENT OF TRANSPORTATION

CURBS AND DRIVEWAYS

NO SCALE

RSP A87A DATED JULY 19, 2013 SUPERSEDES STANDARD PLAN A87A
DATED MAY 20, 2011 - PAGE 119 OF THE STANDARD PLANS BOOK DATED 2010.

REVISED STANDARD PLAN RSP A87A

2010 REVISED STANDARD PLAN RSP A87A

DATE PLOTTED => 25-FEB-2015
TIME PLOTTED => 07:53

Dist	COUNTY	ROUTE	POST MILES TOTAL PROJECT	SHEET No.	TOTAL SHEETS
02	Sha,Sis	5	Var	65	98

REGISTERED CIVIL ENGINEER

July 19, 2013
PLANS APPROVAL DATE

REGISTERED PROFESSIONAL ENGINEER
Michael Janzen
No. 44788
Exp. 03-31-14
CIVIL
STATE OF CALIFORNIA

THE STATE OF CALIFORNIA OR ITS OFFICERS OR AGENTS SHALL NOT BE RESPONSIBLE FOR THE ACCURACY OR COMPLETENESS OF SCANNED COPIES OF THIS PLAN SHEET.

TO ACCOMPANY PLANS DATED 01-30-15

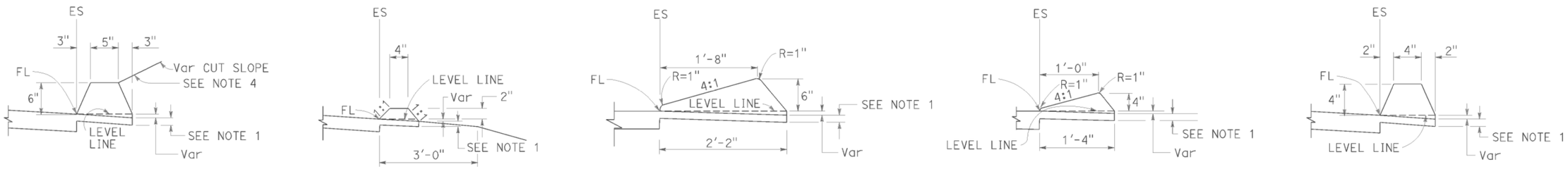

TYPE A
See Note 3

TYPE C

TYPE D

TYPE E

TYPE F
See Note 5

DIKES

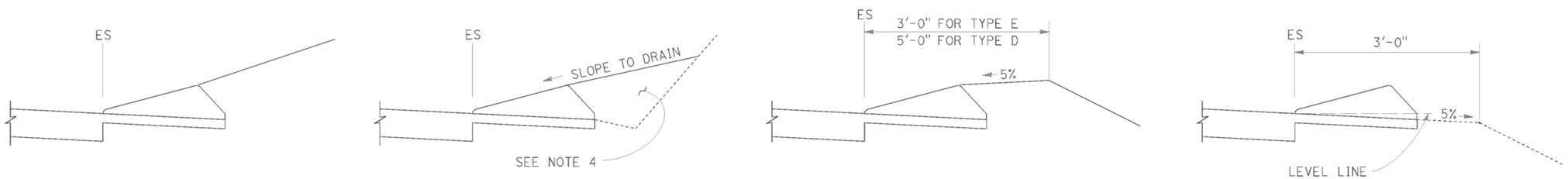

CASE C-1
Cut Slope

CASE C-2
Cut Slope

CASE F

CASE R
See Note 2

TYPE D AND E BACKFILL DETAILS

NOTES:

1. For HMA shoulders only, extend top layer of HMA placed on the shoulder under dike with no joint at the ES. For projects with OGFC shoulders, do not extend OGFC under dike. See project plans for modified dike detail.
2. Case R applies to retrofit only projects where restrictive conditions do not provide enough width for Case F backfill.
3. Type A dike only to be used where restrictive slope conditions do not provide enough width to use Type D or Type E dike.
4. Fill and compact with excavated material to top of dike.
5. Use Type F dike, where dike is required with guard railing installations. See Revised Standard Plan RSP A77N4 for dike positioning details.

DIKE QUANTITIES

TYPE	CUBIC YARDS PER LINEAR FOOT
A	0.0135
C	0.0038
D	0.0293
E	0.0130
F	0.0066

Quantities based on 5% cross slope.

STATE OF CALIFORNIA
DEPARTMENT OF TRANSPORTATION

HOT MIX ASPHALT DIKES

NO SCALE

RSP A87B DATED JULY 19, 2013 SUPERSEDES STANDARD PLAN A87B
DATED MAY 20, 2011 - PAGE 120 OF THE STANDARD PLANS BOOK DATED 2010.

REVISED STANDARD PLAN RSP A87B

2010 REVISED STANDARD PLAN RSP A87B

DATE PLOTTED => 25-FEB-2015
TIME PLOTTED => 07:53

DIST	COUNTY	ROUTE	POST MILES TOTAL PROJECT	SHEET No.	TOTAL SHEETS
02	Sha,Sis	5	Var	66	98

REGISTERED CIVIL ENGINEER

November 15, 2013
PLANS APPROVAL DATE

Cornelis M. Hakim No. C55610 Exp. 12-31-14 CIVIL STATE OF CALIFORNIA REGISTERED PROFESSIONAL ENGINEER

THE STATE OF CALIFORNIA OR ITS OFFICERS OR AGENTS SHALL NOT BE RESPONSIBLE FOR THE ACCURACY OR COMPLETENESS OF SCANNED COPIES OF THIS PLAN SHEET.

TO ACCOMPANY PLANS DATED 01-30-15

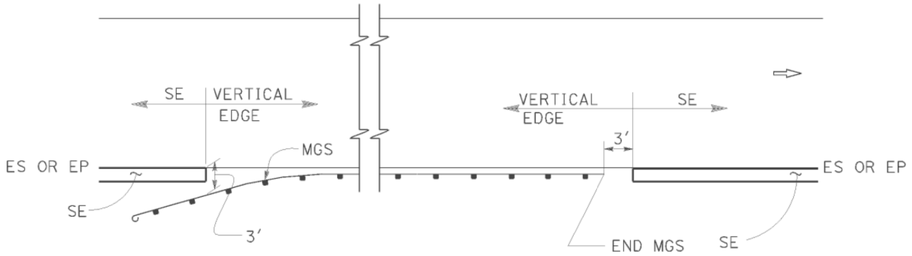

MGS

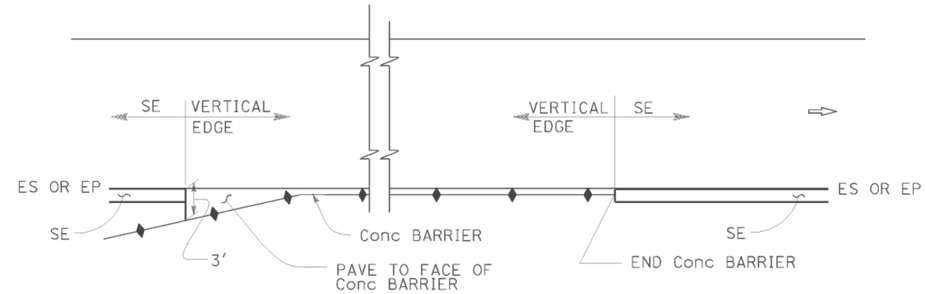

CONCRETE BARRIER

ABBREVIATIONS:

SE SAFETY EDGE

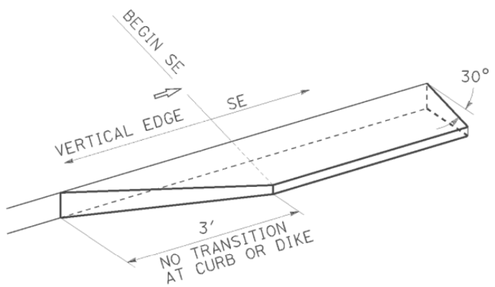

TRANSITION DETAIL FOR CONCRETE ONLY

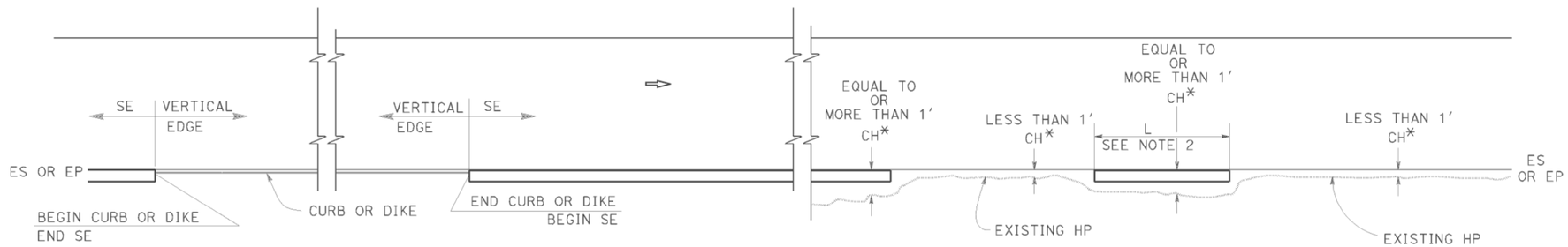

CURB OR DIKE

NARROW SIDE SLOPE

* CH = Distance from ES or EP to existing HP.

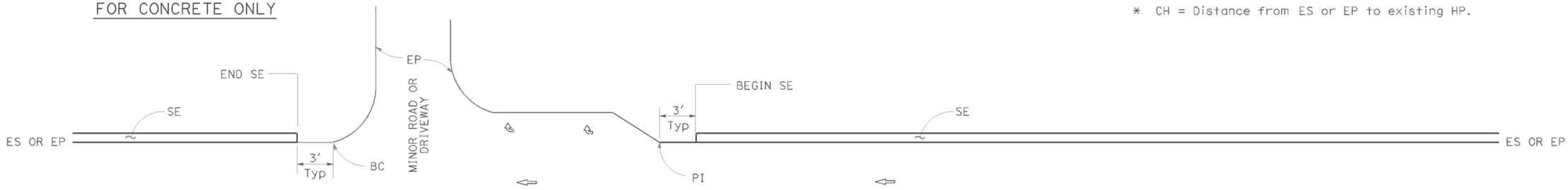

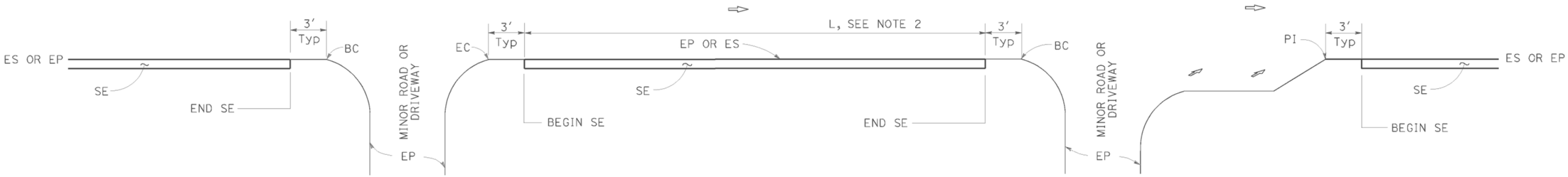

INTERSECTION

MINOR ROADWAY OR DRIVEWAY

DRIVEWAY AND INTERSECTION

NOTES:

1. For details not shown, see Revised Standard Plans RSP P75 and RSP P76.
2. Safety edge is optional when L is less than 30'.

STATE OF CALIFORNIA
DEPARTMENT OF TRANSPORTATION

PAVEMENT EDGE TREATMENTS

NO SCALE

RSP P74 DATED NOVEMBER 15, 2013 SUPERSEDES RSP P74 DATED JANUARY 20, 2012 THAT SUPPLEMENTS THE STANDARD PLANS BOOK DATED 2010.

REVISED STANDARD PLAN RSP P74

2010 REVISED STANDARD PLAN RSP P74

DATE PLOTTED => 25-FEB-2015
TIME PLOTTED => 07:53

DIST	COUNTY	ROUTE	POST MILES TOTAL PROJECT	SHEET No.	TOTAL SHEETS
02	Sha,Sis	5	Var	67	98

REGISTERED CIVIL ENGINEER

November 15, 2013
PLANS APPROVAL DATE

REGISTERED PROFESSIONAL ENGINEER
Cornelis M. Hakim
No. C55610
Exp. 12-31-14
CIVIL
STATE OF CALIFORNIA

THE STATE OF CALIFORNIA OR ITS OFFICERS OR AGENTS SHALL NOT BE RESPONSIBLE FOR THE ACCURACY OR COMPLETENESS OF SCANNED COPIES OF THIS PLAN SHEET.

TO ACCOMPANY PLANS DATED 01-30-15

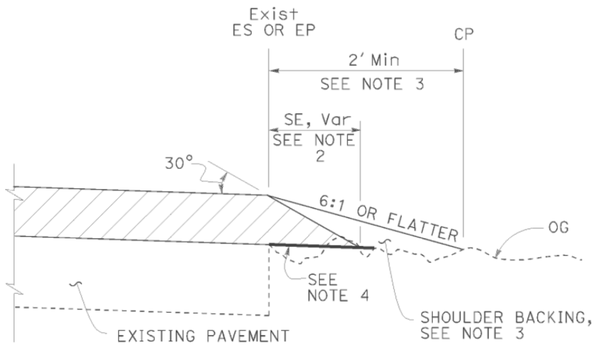

CASE A
Safety Edge

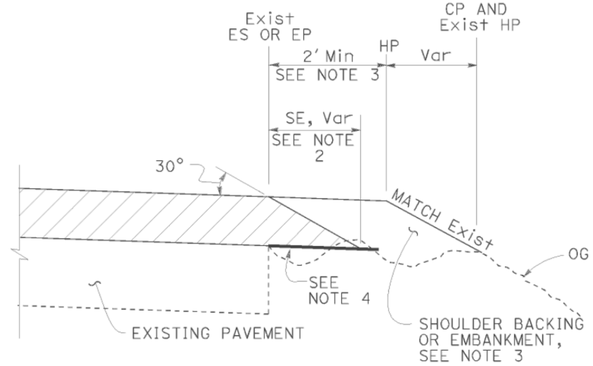

CASE B
Safety Edge

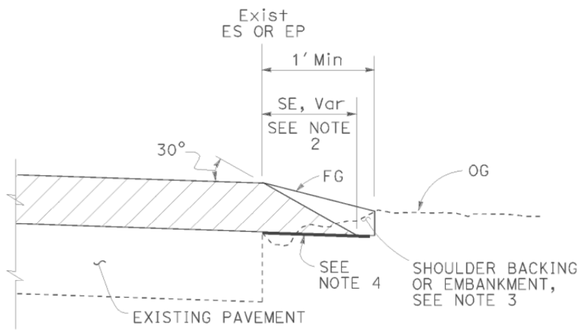

CASE C
Safety Edge

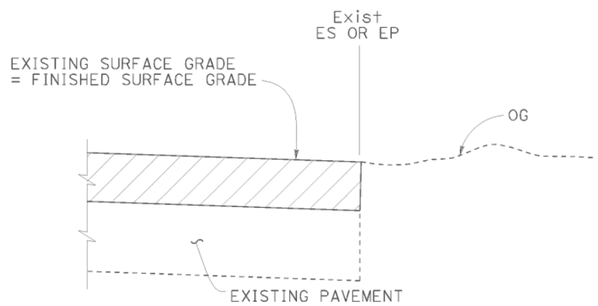

CASE D
Vertical Edge

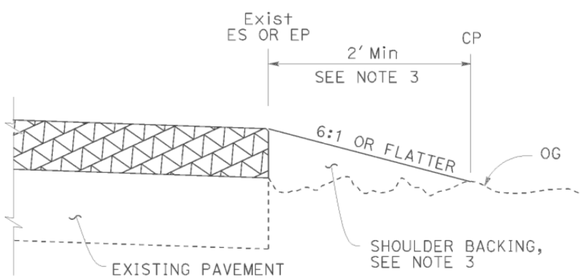

CASE E
Vertical Edge

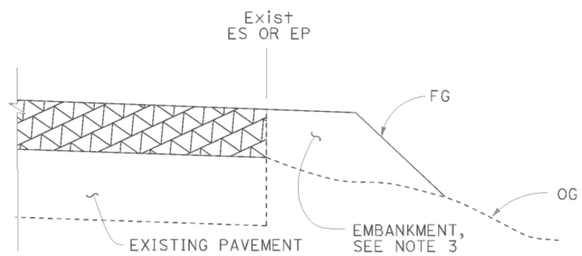

CASE F
Vertical Edge
* See Table A and Revised Std Plan RSP P74

LEGEND:

- HMA OVERLAY
- HMA OR CONCRETE OVERLAY
- CONCRETE OVERLAY

ABBREVIATIONS:

SE SAFETY EDGE
TT TOTAL THICKNESS OF SE

TABLE A
EDGE TREATMENT FOR VARIOUS OVERLAY THICKNESS AND CONDITIONS

	OVERLAY THICKNESS	
FIELD CONDITION	LESS THAN 0.15'	0.15' OR MORE
Exist SLOPE 6:1 OR FLATTER	CASE E	CASE A
Exist SLOPE 3:1 TO 6:1	CASE E	CASE B
Exist SLOPE STEEPER THAN 3:1	CASE F	CASE F
CUT SECTION (REPLACE, COLD PLANE, MILL PAVEMENT)	CASE D	CASE C

ADDITIONAL HMA OR CONCRETE QUANTITIES FOR SE/SIDE/MILE

TYPICAL CROSS SECTION	TT	TOTAL ADDITIONAL MATERIAL FOR SE/SIDE/MILE		
		HMA (TON)	CONCRETE (CY)*	CONCRETE (CY)**
TT	0.15'	NA	NA	NA
	0.20'	13.7	NA	NA
	0.30'	30.9	NA	NA
	0.40'	54.9	NA	NA
	0.45'	69.4	NA	NA
TT 0.43'	0.50'	84.2	NA	NA
	0.60'	113.9	NA	NA
	0.70'	143.6	70.9	94.2
	0.80'	173.3	85.6	112.2
	0.90'	203.0	100.3	130.2
	1.00'	232.7	114.9	148.2
	1.10'	262.4	129.6	166.2
	1.20'	292.1	144.3	184.2

* For Detail "A"
** For Optional Detail "A"

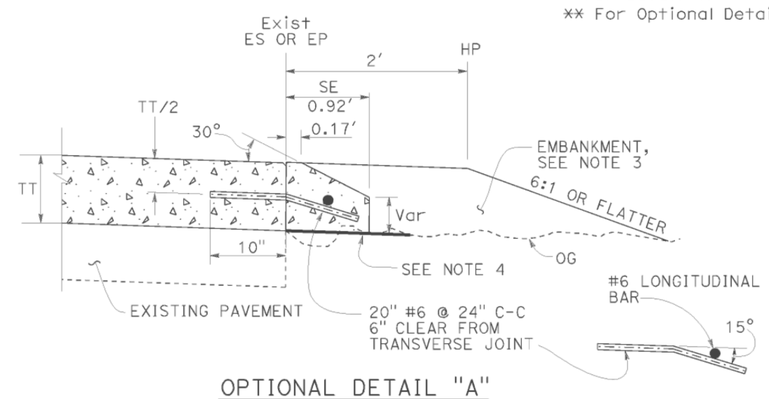

OPTIONAL DETAIL "A"
For concrete overlay
See Note 5

NOTES:

1. For limits of safety edge and vertical edge treatments, see Revised Standard Plan RSP P74.
2. Details shown for HMA overlay thickness less than 0.43'. See Detail "A" for HMA overlay thickness more than 0.43' or concrete overlay.
3. For locations and limits of shoulder backing or embankment see project plans.
4. Grade existing ground to place safety edge. 1' minimum width
5. Safety edge transverse joint must match overlay transverse joint. End of #6 longitudinal bar must be 2" ±½" clear from transverse joint.
6. Safety edge is not needed in the area of MGS, barrier, right turn lane and acceleration lane. See Revised Standard Plan RSP P74.

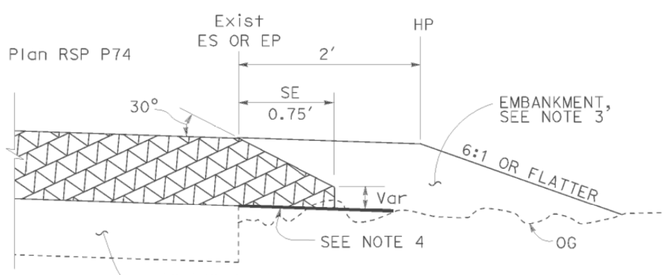

DETAIL "A"
For HMA overlay thickness more than 0.43' or concrete overlay

STATE OF CALIFORNIA
DEPARTMENT OF TRANSPORTATION

PAVEMENT EDGE TREATMENTS-OVERLAYS

NO SCALE

RSP P75 DATED NOVEMBER 15, 2013 SUPERSEDES RSP P75 DATED JANUARY 20, 2012 THAT SUPPLEMENTS THE STANDARD PLANS BOOK DATED 2010.

REVISED STANDARD PLAN RSP P75

2010 REVISED STANDARD PLAN RSP P75

DATE PLOTTED => 25-FEB-2015
TIME PLOTTED => 07:53

DIST	COUNTY	ROUTE	POST MILES TOTAL PROJECT	SHEET No.	TOTAL SHEETS
02	Sha,Sis	5	Var	68	98

REGISTERED CIVIL ENGINEER

November 15, 2013
PLANS APPROVAL DATE

REGISTERED PROFESSIONAL ENGINEER Cornelis M. Hakim No. C55610 Exp. 12-31-14 CIVIL STATE OF CALIFORNIA

THE STATE OF CALIFORNIA OR ITS OFFICERS OR AGENTS SHALL NOT BE RESPONSIBLE FOR THE ACCURACY OR COMPLETENESS OF SCANNED COPIES OF THIS PLAN SHEET.

TO ACCOMPANY PLANS DATED 01-30-15

LEGEND:

- HMA PAVEMENT
- HMA OR CONCRETE PAVEMENT
- CONCRETE PAVEMENT

ABBREVIATIONS:

SE SAFETY EDGE
TT TOTAL THICKNESS OF SE
HW HINGE WIDTH, DISTANCE FROM ES OR EP TO HP

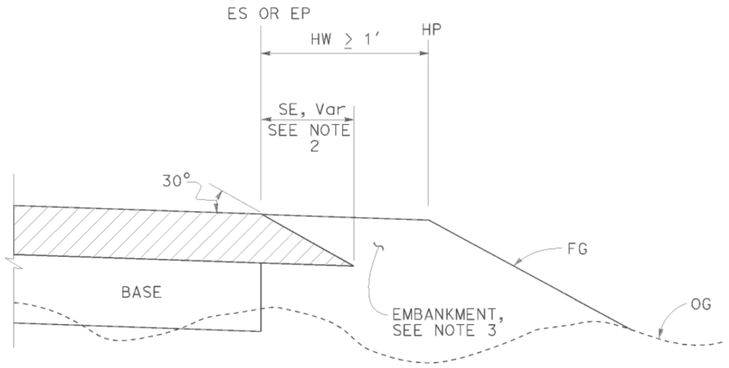

CASE K
Safety Edge - Fill Section, HW ≥ 1′

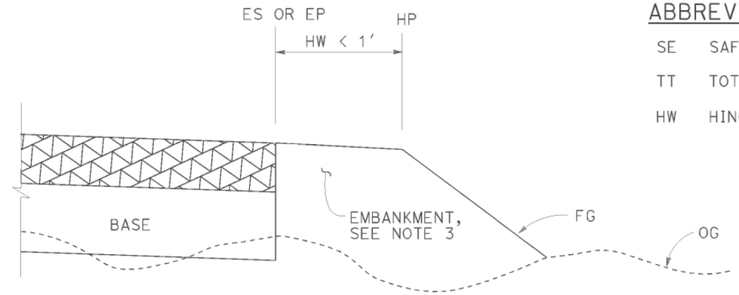

CASE L
Vertical Edge - Fill Section, HW < 1′

FILL SECTION

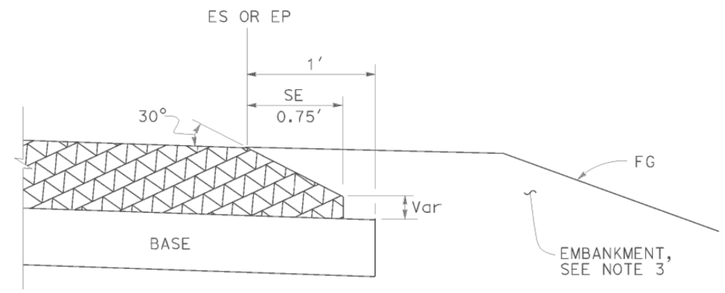

DETAIL "B"
For HMA pavement thickness more than 0.43′ or concrete pavement

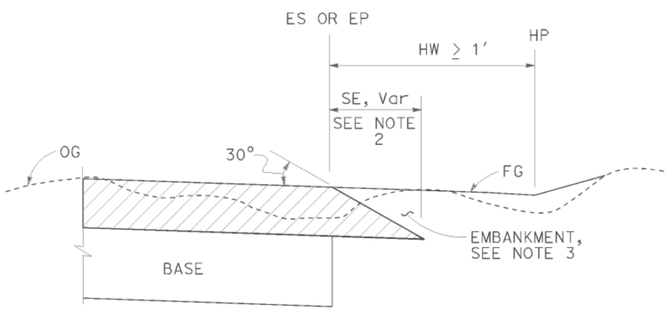

CASE M
Safety Edge - Cut Section, HW ≥ 1′

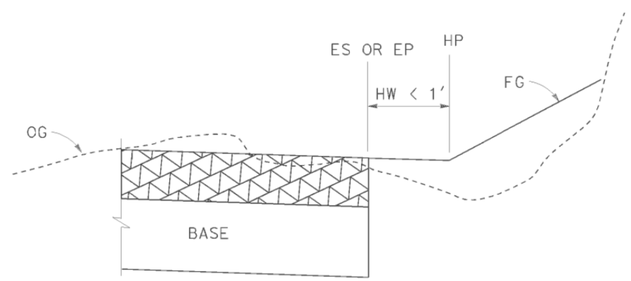

CASE N
Vertical Edge - Cut Section, HW < 1′

CUT SECTION

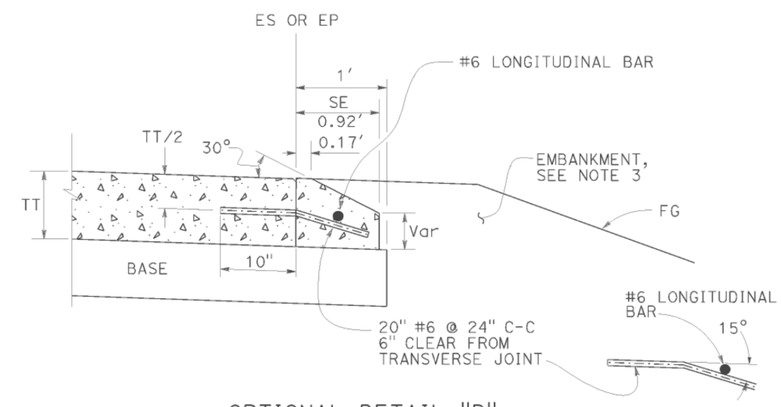

OPTIONAL DETAIL "B"
For concrete pavement
See Note 4

NOTES:

1. For limits of safety edge and vertical edge treatments, see Revised Standard Plan RSP P74
2. Details shown for HMA pavement thickness less than 0.43′. See Detail "B" for HMA pavement thickness more than 0.43′ or concrete pavement.
3. For locations and limits of embankment see project plans.
4. Safety edge transverse joint must match pavement transverse joint. End of #6 longitudinal bar must be 2" ±½" clear from transverse joint.
5. Safety edge is not needed in the area of MGS, barrier, right turn lane and acceleration lane. See Revised Standard Plan RSP P74.

STATE OF CALIFORNIA
DEPARTMENT OF TRANSPORTATION

PAVEMENT EDGE TREATMENTS-NEW CONSTRUCTION

NO SCALE

RSP P76 DATED NOVEMBER 15, 2013 SUPERSEDES RSP P76 DATED JANUARY 20, 2012 THAT SUPPLEMENTS THE STANDARD PLANS BOOK DATED 2010.

REVISED STANDARD PLAN RSP P76

2010 REVISED STANDARD PLAN RSP P76

DATE PLOTTED => 25-FEB-2015
TIME PLOTTED => 07:53

Dist	COUNTY	ROUTE	POST MILES TOTAL PROJECT	SHEET No.	TOTAL SHEETS
02	Sha,Sis	5	Var	69	98

REGISTERED CIVIL ENGINEER

April 19, 2013
PLANS APPROVAL DATE

Raymond Don Tsztoo No. C37332 Exp. 6-30-14 CIVIL STATE OF CALIFORNIA REGISTERED PROFESSIONAL ENGINEER

THE STATE OF CALIFORNIA OR ITS OFFICERS OR AGENTS SHALL NOT BE RESPONSIBLE FOR THE ACCURACY OR COMPLETENESS OF SCANNED COPIES OF THIS PLAN SHEET.

TO ACCOMPANY PLANS DATED 01-30-15

2010 REVISED STANDARD PLAN RSP D77B

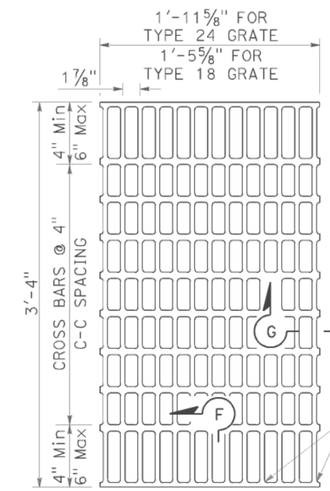

NOTES:

Bearing bars to be 3½" × ¼" bars on 1⅞" centers.

⅜"± ø Cross bars may be fillet welded, resistance welded or electroforged to bearing bars.

Weight of Type 24 grate = 141 LBS.

Weight of Type 18 grate = 107 LBS. (Type 24 grate shown).

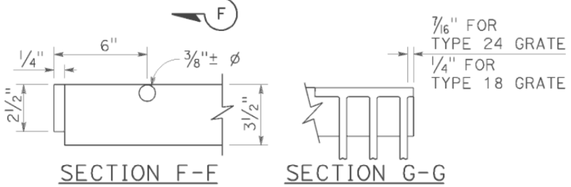

SECTION F-F SECTION G-G

TYPE 18-10 AND 24-13 GRATE

(Welded Steel)

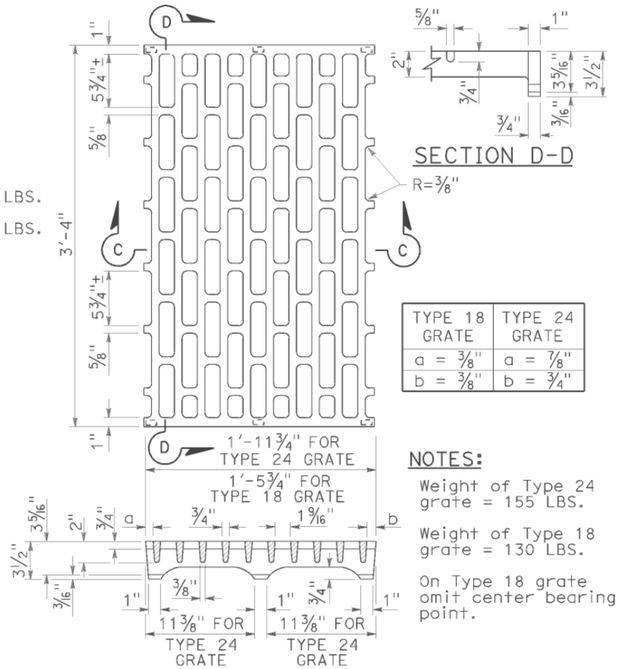

TYPE 18 GRATE	TYPE 24 GRATE
a = ⅜"	a = ⅞"
b = ⅜"	b = ¾"

NOTES:

Weight of Type 24 grate = 155 LBS.

Weight of Type 18 grate = 130 LBS.

On Type 18 grate omit center bearing point.

SECTION C-C

TYPE 18-8C AND 24-10C GRATE

(Cast ductile iron)

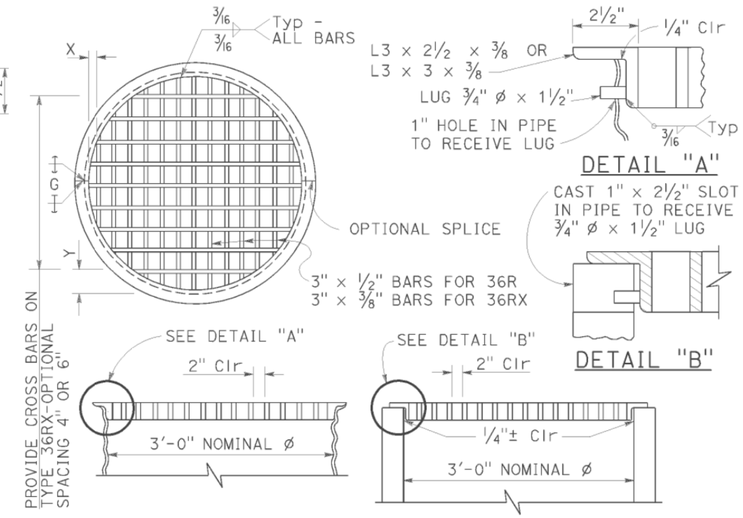

TYPE 36R AND 36RX GRATE DETAILS

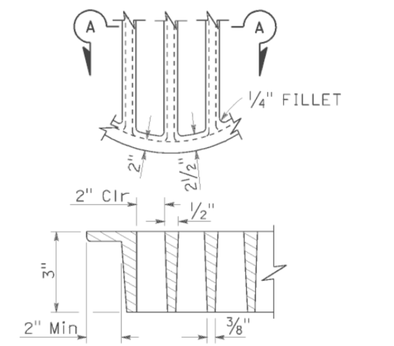

SECTION A-A

ALTERNATIVE CAST DUCTILE IRON GRATE OR CAST CARBON STEEL GRATE TYPE 36R AND 36RX

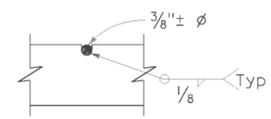

⅜"± ø Cross bars may be fillet welded, resistance welded or electroforged to bearing bars.

CROSS BAR DETAIL TYPE 36RX GRATE (WELDED STEEL)

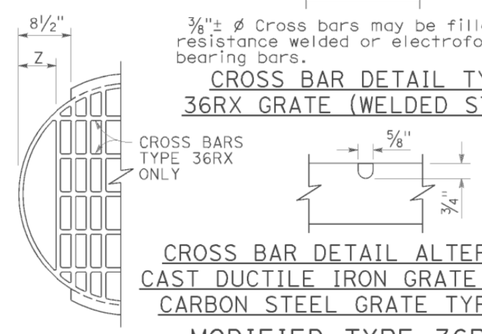

CROSS BAR DETAIL ALTERNATIVE CAST DUCTILE IRON GRATE OR CAST CARBON STEEL GRATE TYPE 36RX

MODIFIED TYPE 36R AND 36RX GRATE FOR ODI INLET

BASIS FOR Misc IRON AND STEEL FINAL PAY WEIGHTS FOR DRAINAGE INLETS

INLET TYPE	GRATE TYPE	No. OF GRATES	WEIGHT LB
GDO (SEE NOTE 4)	24-10C	2	391
	24-10S	2	456
	24-12X	2	473
	24-13	2	374
GO,GOL,G1,G2, G3,G4 (TYPE 24)	24-10C	1	202
	24-10S	1	229
	24-12X	1	239
	24-13	1	188
G4 (TYPE 18) G5,G6	18-8S	1	187
	18-9X	1	187
	18-10	1	149
GT1,GT2	18-8S	2	374
	18-9X	2	374
	18-10	2	298
GT3,GT4	24-10C	2	404
	24-10S	2	458
	24-12X	2	478
	24-13	2	376
ODI	36RX (Mod)	1	196
GMP,GCP,GCPI	36RX	1	215
ODI	36R (Mod)	1	220
GMP,GCP,GCPI	36R	1	236
TRASH RACK			22
GRATE CHAIN			3

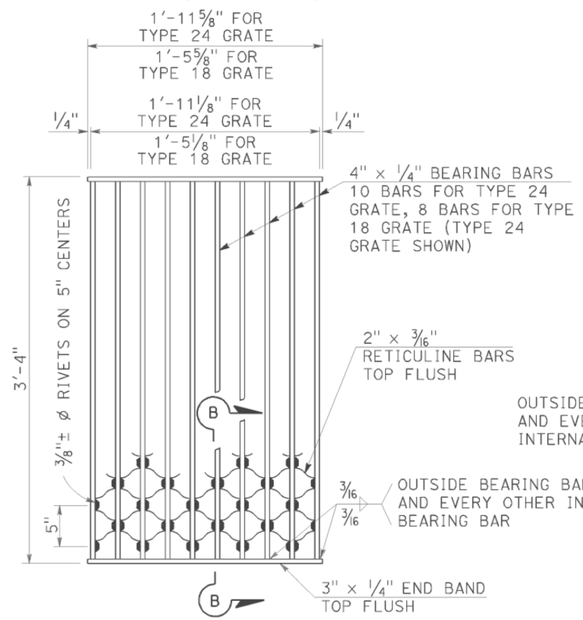

NOTES:

Weight of Type 24 grate = 182 LBS.
Weight of Type 18 grate = 145 LBS.

SECTION B-B

TYPE 18-8S AND 24-10S GRATE

(Welded Steel) Reticuline type

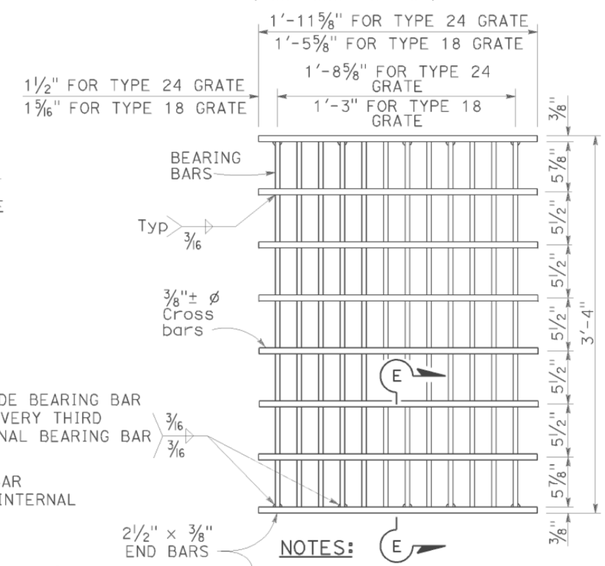

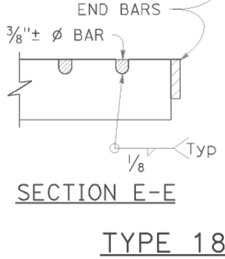

SECTION E-E

NOTES:

Bearing bars to be 3½" × ⅜" bars on 1⅞" centers.

12 Bars for Type 24 grate - 9 bars for Type 18 grates. (Type 24 grate shown).

Weight of Type 24 grate = 192 LBS.

Weight of Type 18 grate = 145 LBS.

⅜"± ø Cross bars may be fillet welded, resistance welded or electroforged to bearing bars.

TYPE 18-9X AND 24-12X GRATE

(Welded Steel)

NOTES:

1. When alternative grates are allowed - Final pay based on alternative with the lesser weight.
2. Use frame shown on Standard Plan D74A, D74B or RSP D77A as appropriate.
3. When Type 24-10S, 24-12X or 24-13 grates are used with GDO Inlets, a ¼" × 3½" × 3'-4⅞" steel bar shall be welded across the center of inlet frame to separate the individual grates.
4. See Revised Standard Plan RSP D77A for connecting chain to welded grate and frame. When chain is required, do not use cast ductile iron grate.

GRATE BAR SPACING TABLE

TYPE	No. OF BARS	CLEAR BAR SPACING	X	Y 4" SPACING	Y 6" SPACING	Z
36R	13	2"	2⅛"	-	-	-
36RX (STEEL)	15	2"	9/16"	3¾"	5¾"	-
36RX (CAST)	13	2"	2⅛"	3¾"	5¾"	-
36R Mod	12	2"	2⅛"	-	-	5"
36RX Mod (STEEL)	13	2"	9/16"	3¾"	5¾"	5 11/16"
36RX Mod (CAST)	12	2"	2⅛"	3¾"	5¾"	5"

STATE OF CALIFORNIA
DEPARTMENT OF TRANSPORTATION

GRATE DETAILS No. 2

NO SCALE

RSP D77B DATED APRIL 19, 2013 SUPERSEDES RSP D77B DATED JULY 20, 2012 AND STANDARD PLAN D77B DATED MAY 20, 2011 - PAGE 165 OF THE STANDARD PLANS BOOK DATED 2010.

REVISED STANDARD PLAN RSP D77B

DATE PLOTTED => 25-FEB-2015
TIME PLOTTED => 07:53

Dist	COUNTY	ROUTE	POST MILES TOTAL PROJECT	SHEET No.	TOTAL SHEETS
02	Sha,Sis	5	Var	70	98

REGISTERED CIVIL ENGINEER

July 19, 2013
PLANS APPROVAL DATE

REGISTERED PROFESSIONAL ENGINEER Gurinderpal Bhullar No. C48815 Exp. 9-30-14 CIVIL STATE OF CALIFORNIA

THE STATE OF CALIFORNIA OR ITS OFFICERS OR AGENTS SHALL NOT BE RESPONSIBLE FOR THE ACCURACY OR COMPLETENESS OF SCANNED COPIES OF THIS PLAN SHEET.

TO ACCOMPANY PLANS DATED 01-30-15

TABLE 1

TAPER LENGTH CRITERIA AND CHANNELIZING DEVICE SPACING

SPEED (S)	MINIMUM TAPER LENGTH * FOR WIDTH OF OFFSET 12 FEET (W)				MAXIMUM CHANNELIZING DEVICE SPACING		
					X	Y	Z **
	TANGENT 2L	MERGING L	SHIFTING L/2	SHOULDER L/3	TAPER	TANGENT	CONFLICT
mph	ft	ft	ft	ft	ft	ft	ft
20	160	80	40	27	20	40	10
25	250	125	63	42	25	50	12
30	360	180	90	60	30	60	15
35	490	245	123	82	35	70	17
40	640	320	160	107	40	80	20
45	1080	540	270	180	45	90	22
50	1200	600	300	200	50	100	25
55	1320	660	330	220	55	110	27
60	1440	720	360	240	60	120	30
65	1560	780	390	260	65	130	32
70	1680	840	420	280	70	140	35

* - For other offsets, use the following merging taper length formula for L:
For speed of 40 mph or less, $L = WS^2/60$
For speed of 45 mph or more, $L = WS$

Where: L = Taper length in feet
W = Width of offset in feet
S = Posted speed limit, off-peak 85th-percentile speed prior to work starting, or the anticipated operating speed in mph

** - Use for taper and tangent sections where there are no pavement markings or where there is a conflict between existing pavement markings and channelizers (CA).

TABLE 2

LONGITUDINAL BUFFER SPACE AND FLAGGER STATION SPACING

SPEED *	Min D **	DOWNGRADE Min D ***		
		-3%	-6%	-9%
mph	ft	ft	ft	ft
20	115	116	120	126
25	155	158	165	173
30	200	205	215	227
35	250	257	271	287
40	305	315	333	354
45	360	378	400	427
50	425	446	474	507
55	495	520	553	593
60	570	598	638	686
65	645	682	728	785
70	730	771	825	891

* - Speed is posted speed limit, off-peak 85th-percentile speed prior to work starting, or the anticipated operating speed in mph

** - Longitudinal buffer space or flagger station spacing

*** - Use on sustained downgrade steeper than -3 percent and longer than 1 mile.

TABLE 3

ADVANCE WARNING SIGN SPACING

ROAD TYPE	DISTANCE BETWEEN SIGNS *		
	A	B	C
	ft	ft	ft
URBAN - 25 mph OR LESS	100	100	100
URBAN - MORE THAN 25 mph TO 40 mph	250	250	250
URBAN - MORE THAN 40 mph	350	350	350
RURAL	500	500	500
EXPRESSWAY / FREEWAY	1000	1500	2640

* - The distances are approximate, are intended for guidance purposes only, and should be applied with engineering judgment. These distances should be adjusted by the Engineer for field conditions, if necessary, by increasing or decreasing the recommmended distances.

STATE OF CALIFORNIA
DEPARTMENT OF TRANSPORTATION

TRAFFIC CONTROL SYSTEM TABLES FOR LANE AND RAMP CLOSURES

NO SCALE

RSP T9 DATED JULY 19, 2013 SUPERSEDES RSP T9 DATED APRIL 19, 2013 THAT SUPPLEMENTS THE STANDARD PLANS BOOK DATED 2010.

REVISED STANDARD PLAN RSP T9

2010 REVISED STANDARD PLAN RSP T9

DATE PLOTTED => 25-FEB-2015
TIME PLOTTED => 07:53

Dist	COUNTY	ROUTE	POST MILES TOTAL PROJECT	SHEET No.	TOTAL SHEETS
02	Sha,Sis	5	Var	71	98

REGISTERED CIVIL ENGINEER

April 19, 2013
PLANS APPROVAL DATE

REGISTERED PROFESSIONAL ENGINEER Gurinderpal Bhullar No. C48815 Exp. 9-30-14 CIVIL STATE OF CALIFORNIA

THE STATE OF CALIFORNIA OR ITS OFFICERS OR AGENTS SHALL NOT BE RESPONSIBLE FOR THE ACCURACY OR COMPLETENESS OF SCANNED COPIES OF THIS PLAN SHEET.

TO ACCOMPANY PLANS DATED 01-30-15

LEGEND

- TRAFFIC CONE
- TEMPORARY TRAFFIC CONTROL SIGN
- FLASHING ARROW SIGN (FAS)
- FAS SUPPORT OR TRAILER
- PORTABLE FLASHING BEACON

SIGN PANEL SIZE (Min)

- A 48" x 48"
- B 24" x 24"
- C 36" x 18"

NOTES:

See Revised Standard Plan RSP T9 for tables.

Use cone spacing X for taper segment, Y for tangent segment or Z for conflict situations, as approriate, per Table 1, unless X, Y, or Z cone spacing is shown on this sheet.

Unless otherwise specified in the special provisions, all temporary warning signs shall have black legend on fluorescent orange background.

California codes are designated by (CA). Otherwise, Federal (MUTCD) codes are shown.

TYPICAL HALF ROAD CLOSURE

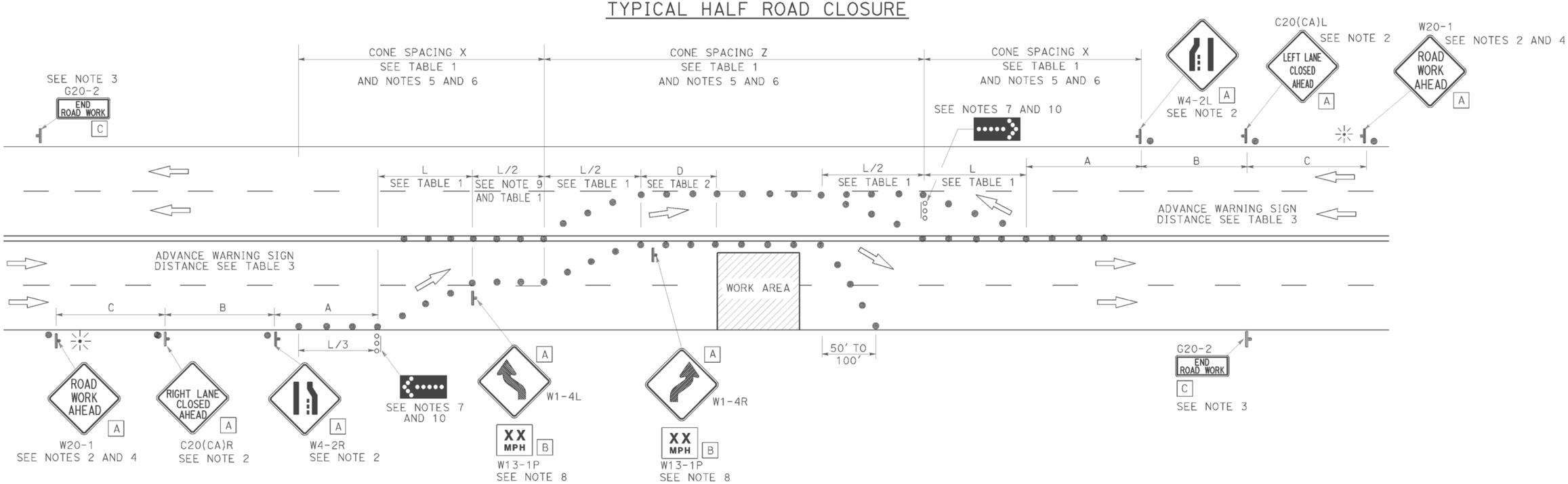

NOTES:

1. At least one person shall be assigned to provide full time maintenance of traffic control devices for lane closure unless, otherwise directed by the Engineer.
2. Each advance warning sign in each direction of travel shall be equipped with at least two flags for daytime closure. Each flag shall be at least 16" x 16" in size and shall be orange or fluorescent red-orange in color. Flashing beacons shall be placed at the locations indicated for lane closure during hours of darkness.
3. A G20-2 "END ROAD WORK" sign, as appropriate, shall be placed at the end of the lane closure unless the end of work area is obvious, or ends within a larger project's limits.
4. If the W20-1 sign would follow within 2000' of a stationary W20-1 or G20-1 "ROAD WORK NEXT _____ MILES", use a C20(CA) sign for the first advance warning sign.
5. All cones used for lane closures during the hours of darkness shall be fitted with retroreflective bands (or sleeves) as specified in the specifications.
6. Portable delineators, placed at one-half the spacing indicated for traffic cones, may be used instead of cones for daytime closures only.
7. Flashing arrow signs shall be either Type I or Type II.
8. Advisory speed will be determined by the Engineer. The W13-1P Plaque will not be required when advisory speed is more than the posted or maximum speed limit.
9. Unless otherwise specified in the special provisions, the tangent (L/2) shall be used.
10. A minimum 1500' of sight distance shall be provided where possible for vehicles approaching the first flashing arrow sign. Lane closures shall not begin at the top of crest vertical curve or on a horizontal curve.

STATE OF CALIFORNIA
DEPARTMENT OF TRANSPORTATION

TRAFFIC CONTROL SYSTEM FOR HALF ROAD CLOSURE ON MULTILANE CONVENTIONAL HIGHWAYS AND EXPRESSWAYS

NO SCALE

RSP T12 DATED APRIL 19, 2013 SUPERSEDES STANDARD PLAN T12 DATED MAY 20, 2011 - PAGE 240 OF THE STANDARD PLANS BOOK DATED 2010.

REVISED STANDARD PLAN RSP T12

2010 REVISED STANDARD PLAN RSP T12

DATE PLOTTED => 25-FEB-2015
TIME PLOTTED => 07:53

Dist	COUNTY	ROUTE	POST MILES TOTAL PROJECT	SHEET No.	TOTAL SHEETS
02	Sha,Sis	5	Var	72	98

Devinder Singh
REGISTERED CIVIL ENGINEER

October 17, 2014
PLANS APPROVAL DATE

REGISTERED PROFESSIONAL ENGINEER
Devinder Singh
No. C50470
Exp. 6-30-15
CIVIL
STATE OF CALIFORNIA

THE STATE OF CALIFORNIA OR ITS OFFICERS OR AGENTS SHALL NOT BE RESPONSIBLE FOR THE ACCURACY OR COMPLETENESS OF SCANNED COPIES OF THIS PLAN SHEET.

TO ACCOMPANY PLANS DATED 01-30-15

NOTES:

See Revised Standard Plan RSP T9 for tables.

Use cone spacing X for taper segment, Y for tangent segment or Z for conflict situations, as approriate, per Table 1, unless X, Y, or Z cone spacing is shown on this sheet.

Unless otherwise specified in the special provisions, all temporary warning signs shall have black legend on fluorescent orange background.

California codes are designated by (CA). Otherwise, Federal (MUTCD) codes are shown.

TYPICAL LANE CLOSURE WITH REVERSIBLE CONTROL

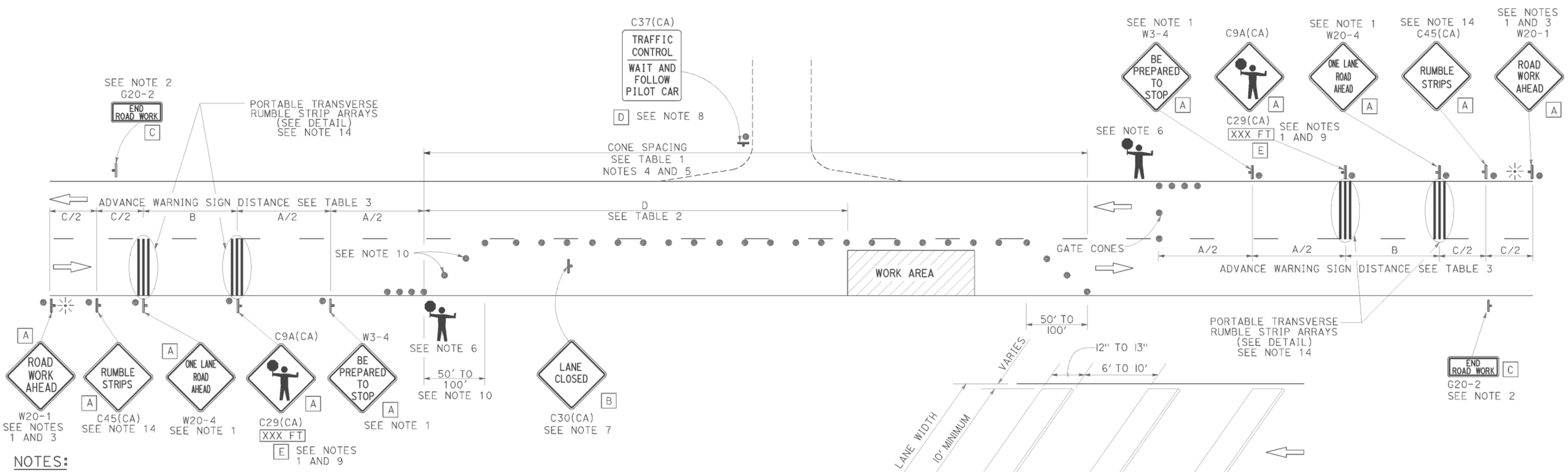

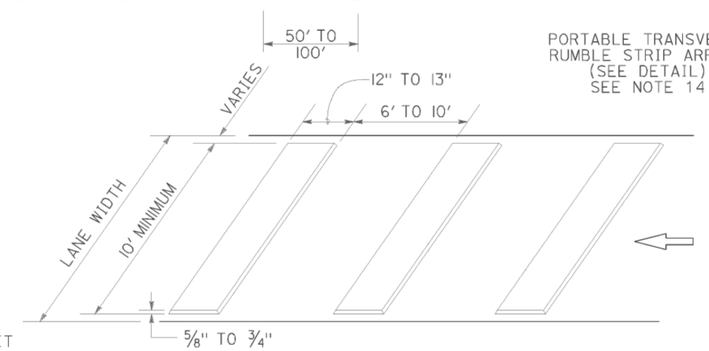

PORTABLE TRANSVERSE RUMBLE STRIP ARRAY DETAIL

NOTES:

1. Each advance warning sign in each direction of travel shall be equipped with at least two flags for daytime closure. Each flag shall be at least 16" x 16" in size and shall be orange or fluorescent red-orange in color. Flashing beacons shall be placed at the locations indicated for lane closure during hours of darkness.
2. A G20-2 "END ROAD WORK" sign, as appropriate, shall be placed at the end of the lane control unless the end of work area is obvious, or ends within a larger project's limits.
3. If the W20-1 sign would follow within 2000' of a stationary W20-1 or G20-1 "ROAD WORK NEXT _____ MILES", use a W20-4 sign for the first advance warning sign.
4. All cones used for lane closures during the hours of darkness shall be fitted with retroreflective bands (or sleeves) as specified in the specifications.
5. Portable delineators, placed at one-half the spacing indicated for traffic cones, may be used instead of cones for daytime closures only.
6. Additional advance flaggers may be required. Flagger should stand in a conspicuous place, be visible to approaching traffic as well as approaching vehicles after the first vehicle has stopped. During the hours of darkness, the flagging-station and flagger shall be illuminated and clearly visible to approaching traffic. The illumination footprint of the lighting on the ground shall be at least 20' in diameter. Place a minimum of four cones at 50' intervals in advance of flagger station as shown.
7. Place C30(CA) "LANE CLOSED" sign at 500' to 1000' intervals throughout extended work areas. They are optional if the work area is visible from the flagger station.
8. When a pilot car is used, place a C37(CA) "TRAFFIC CONTROL-WAIT AND FOLLOW PILOT CAR" sign with black legend on white background at all intersections, driveways and alleys without a flagger within traffic control area. Signs shall be clean and visible at all times. Where traffic can not be effectively self-regulated, at least one flagger shall be used at each intersection within traffic control area.
9. An optional C29(CA) sign may be placed below the C9A(CA) sign.
10. Either traffic cones or barricades shall be placed on the taper. Barricades shall be Type I, II, or III.
11. The color of the portable transverse rumble strips shall be black or orange. Use 2 arrays, each array shall consist of 3 rumble strips.
12. Portable transverse rumble strips shall not be placed on sharp horizontal or vertical curves nor shall they be placed through pedestrian crossings.
13. If the portable transverse rumble strips become out of alignment (skewed) by more than 6 inches, measured from one end to the other, they shall be readjusted to bring the placement back to the original location.
14. Portable transverse rumble strips are not required if any one of the following conditions is satisfied:
    A. Work duration occupies a location for four hours or less
    B. Posted speed limit is below 45 MPH
    C. Work is of emergency nature
    D. Work zone is in snow or icy weather conditions

LEGEND

- TRAFFIC CONE
- TEMPORARY TRAFFIC CONTROL SIGN
- PORTABLE FLASHING BEACON
- FLAGGER

SIGN PANEL SIZE (Min)

A	48" x 48"
B	30" x 30"
C	36" x 18"
D	36" x 42"
E	20" x 7"

STATE OF CALIFORNIA
DEPARTMENT OF TRANSPORTATION

TRAFFIC CONTROL SYSTEM FOR LANE CLOSURE ON TWO LANE CONVENTIONAL HIGHWAYS

NO SCALE

RSP T13 DATED OCTOBER 17, 2014 SUPERSEDES RSP T13 DATED JULY 18, 2014 AND RSP T13 DATED APRIL 19, 2013 AND STANDARD PLAN T13 DATED MAY 20, 2011 - PAGE 241 OF THE STANDARD PLANS BOOK DATED 2010.

REVISED STANDARD PLAN RSP T13

2010 REVISED STANDARD PLAN RSP T13

DATE PLOTTED => 25-FEB-2015
TIME PLOTTED => 07:53

Dist	COUNTY	ROUTE	POST MILES TOTAL PROJECT	SHEET No.	TOTAL SHEETS
02	Sha,Sis	5	Var	73	98

REGISTERED CIVIL ENGINEER

November 15, 2013
PLANS APPROVAL DATE

REGISTERED PROFESSIONAL ENGINEER Tillat Satter No. C42892 Exp. 3-31-14 CIVIL STATE OF CALIFORNIA

THE STATE OF CALIFORNIA OR ITS OFFICERS OR AGENTS SHALL NOT BE RESPONSIBLE FOR THE ACCURACY OR COMPLETENESS OF SCANNED COPIES OF THIS PLAN SHEET.

TO ACCOMPANY PLANS DATED 01-30-15

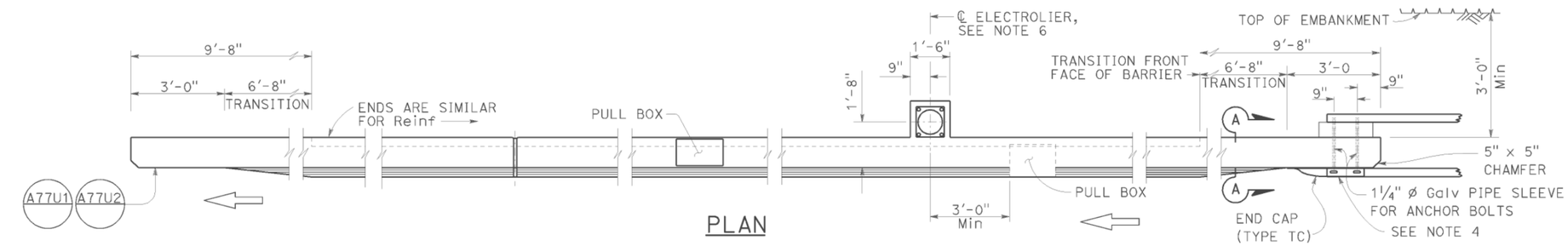

PLAN

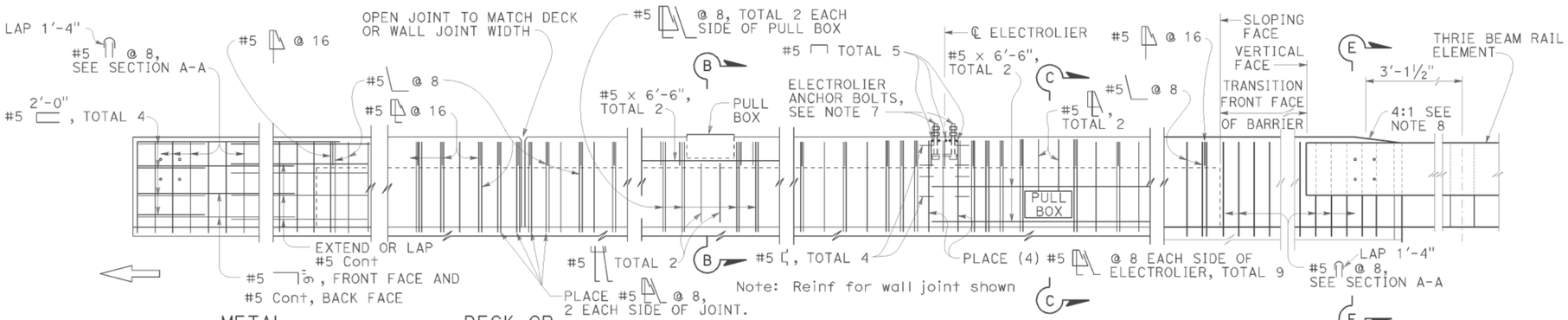

METAL RAILING CONNECTION

DECK OR WALL JOINT

ELEVATION

ELECTROLIER
See Note F

TYPE 736A

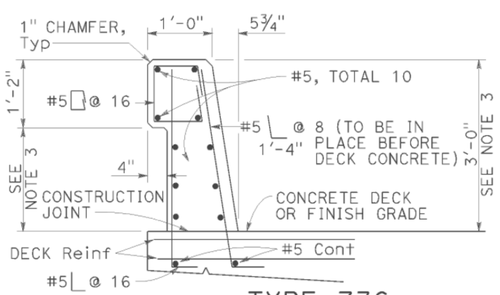

TYPE 736

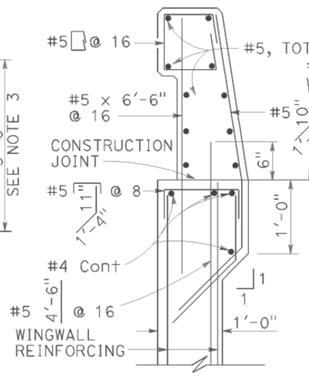

TYPE 736A

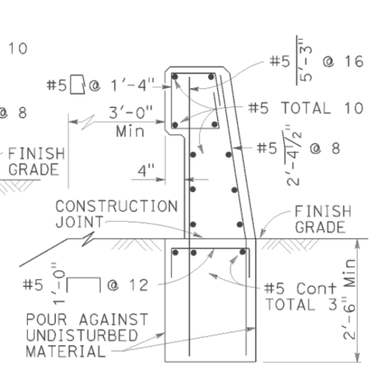

TYPE 736B

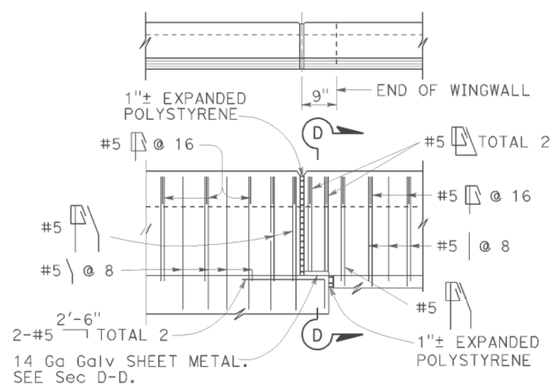

TYPE 736A TYPE 736B

NOTES:

1. Walls are to be backfilled before barrier is placed.
2. Clearance to reinforcing steel in barrier to be 1", except as noted. Longitudinal reinforcement to stop at all expansion joints.
3. Dimensions may vary with roadway cross slope and with certain thickness of surfacing. See Project Plans.
4. For typical metal railing connection details not shown, see Revised Standard Plans RSP A77U1 and RSP A77U2.
5. See Standard Plans ES-9A, ES-9B, ES-9C, ES-9D and ES-9E for electrical details. The maximum number of conduits in the barrier is limited to two 2" conduits along with one 3" conduit. When a 3" conduit is used, it is restricted to the base of the barrier.
6. For electrolier mounting details, See Standard Plans ES-6A and ES-6B.
7. Minimum concrete edge distance, to the reinforcing shown, shall be maintained. Edge distance may be adjusted to accommodate increase in concrete cover for architectual treatment.
8. Taper the top of the end of the bridge railing at 4:1 to match the top elevation of the thrie beam rail element.

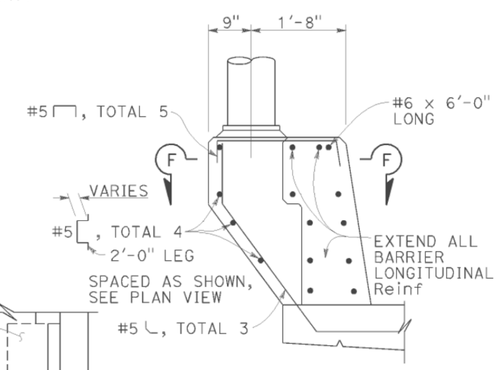

PEDESTAL ELEVATION

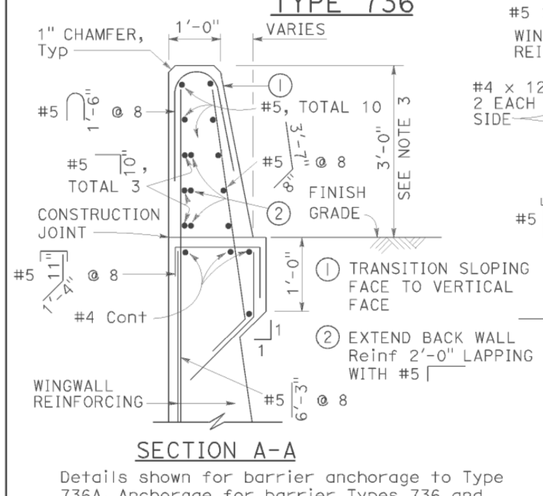

SECTION A-A

Details shown for barrier anchorage to Type 736A. Anchorgae for barrier Types 736 and 736B are similar to their respective details.

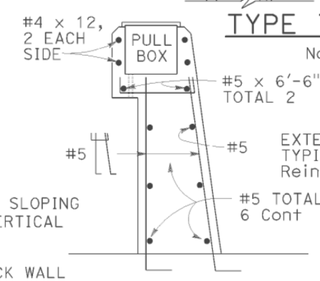

SECTION B-B

Note: Types 736A & 736B are similar to Type 736 except as noted

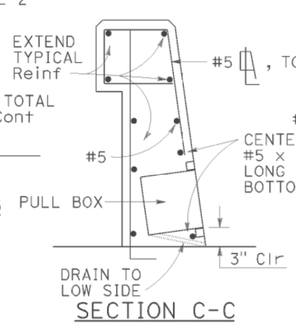

SECTION C-C
See Notes

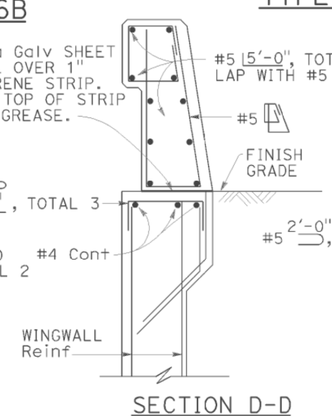

SECTION D-D

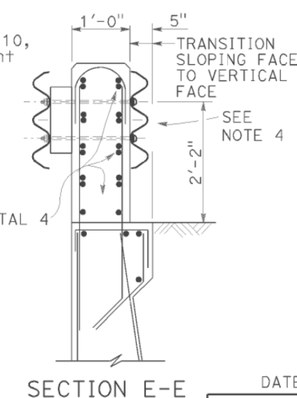

SECTION E-E
See Notes

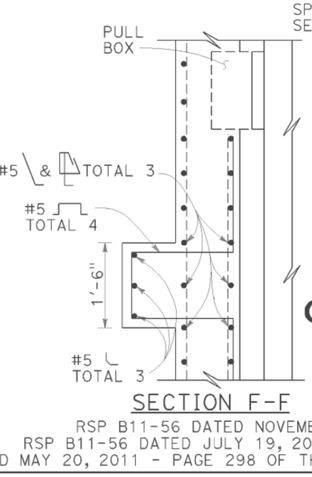

SECTION F-F

STATE OF CALIFORNIA
DEPARTMENT OF TRANSPORTATION

CONCRETE BARRIER TYPE 736

NO SCALE

RSP B11-56 DATED NOVEMBER 15, 2013 SUPERSEDES RSP B11-56 DATED JULY 19, 2013 AND STANDARD PLAN B11-56 DATED MAY 20, 2011 - PAGE 298 OF THE STANDARD PLANS BOOK DATED 2010.

REVISED STANDARD PLAN RSP B11-56

2010 REVISED STANDARD PLAN RSP B11-56

DATE PLOTTED => 25-FEB-2015
TIME PLOTTED => 07:53

Dist	COUNTY	ROUTE	POST MILES TOTAL PROJECT	SHEET No.	TOTAL SHEETS
02	Sha,Sis	5	Var	74	98

Theresa Gabriel
REGISTERED ELECTRICAL ENGINEER

July 19, 2013
PLANS APPROVAL DATE

REGISTERED PROFESSIONAL ENGINEER Theresa Aziz Gabriel No. E15129 Exp. 6-30-14 ELECTRICAL STATE OF CALIFORNIA

THE STATE OF CALIFORNIA OR ITS OFFICERS OR AGENTS SHALL NOT BE RESPONSIBLE FOR THE ACCURACY OR COMPLETENESS OF SCANNED COPIES OF THIS PLAN SHEET.

TO ACCOMPANY PLANS DATED 01-30-15

LEGEND:

AB	ABANDON. IF APPLIED TO CONDUIT, REMOVE CONDUCTORS
BC	INSTALL PULL BOX IN EXISTING CONDUIT RUN
BP	PEDESTRIAN BARRICADE, TYPE AS INDICATED ON PLAN
CB	INSTALL CONDUIT INTO EXISTING PULL BOX
CC	CONNECT NEW AND EXISTING CONDUIT. REMOVE EXISTING CONDUCTORS AND INSTALL CONDUCTORS AS INDICATED
CF	CONDUIT TO REMAIN FOR FUTURE USE. REMOVE CONDUCTORS. INSTALL PULL TAPE
DH	DETECTOR HANDHOLE
FA	FOUNDATION TO BE ABANDONED
IS	INSTALL SIGN ON SIGNAL MAST ARM
NS	NO SLIP BASE ON STANDARD
PEC	PHOTOELECTRIC CONTROL
PEU	PHOTOELECTRIC UNIT
RC	EQUIPMENT OR MATERIAL TO BE REMOVED AND BECOME THE PROPERTY OF THE CONTRACTOR
RE	REMOVE ELECTROLIER, FUSES AND BALLAST. TAPE ENDS OF CONDUCTORS
RL	RELOCATE EQUIPMENT
RR	REMOVE AND REUSE EQUIPMENT
RS	REMOVE AND SALVAGE EQUIPMENT
SC	SPLICE NEW TO EXISTING CONDUCTORS
SD	SERVICE DISCONNECT
TSP	TELEPHONE SERVICE POINT

ABBREVIATIONS

APS	ACCESSIBLE PEDESTRIAN SIGNAL
BBS	BATTERY BACKUP SYSTEM
BC	BOLT CIRCLE
BPB	BICYCLE PUSH BUTTON
C	CONDUIT
CB	CIRCUIT BREAKER
CCTV	CLOSED CIRCUIT TELEVISION
Ckt	CIRCUIT
CMS	CHANGEABLE MESSAGE SIGN
Ctid	CALTRANS IDENTIFICATION
Comm	COMMUNICATION
DLC	LOOP DETECTOR LEAD-IN CABLE
EMS	EXTINGUISHABLE MESSAGE SIGN
EVUC	EMERGENCY VEHICLE UNIT CABLE
EVUD	EMERGENCY VEHICLE UNIT DETECTOR
FB	FLASHING BEACON
FBCA	FLASHING BEACON CONTROL ASSEMBLY
FBS	FLASHING BEACON WITH SLIP BASE
FO	FIBER OPTIC
G	EQUIPMENT GROUNDING CONDUCTOR
GB	GROUND BUS
GFCI	GROUND FAULT CIRCUIT INTERRUPTER
HAR	HIGHWAY ADVISORY RADIO
Hex	HEXAGONAL
HPS	HIGH PRESSURE SODIUM
IISNS	INTERNALLY ILLUMINATED STREET NAME SIGN
ISL	INDUCTION SIGN LIGHTING
LED	LIGHT EMITTING DIODE
LMA	LUMINAIRE MAST ARM
LPS	LOW PRESSURE SODIUM
Ltg	LIGHTING
Lum	LUMINAIRE
M	METERED
MAT	MAST ARM MOUNTING TOP ATTACHMENT
MAS	MAST ARM MOUNTING SIDE ATTACHMENT
M/M	MULTIPLE TO MULTIPLE TRANSFORMER
Mtg	MOUNTING
MV	MERCURY VAPOR LIGHTING FIXTURE
MVDS	MICROWAVE VEHICLE DETECTION SYSTEM
N	NEUTRAL (GROUNDED CONDUCTOR)
NB	NEUTRAL BUS
NC	NORMALLY CLOSE
NO	NORMALLY OPEN
P	CIRCUIT BREAKER'S POLE
PB	PULL BOX
PBA	PUSH BUTTON ASSEMBLY
PEC	PHOTOELECTRIC CONTROL
Ped	PEDESTRIAN
PEU	PHOTOELECTRIC UNIT
PT	CONDUIT WITH PULL TAPE
RE	RELOCATED EQUIPMENT
RM	RAMP METERING
RWIS	ROADSIDE WEATHER INFORMATION SYSTEM
SB	SLIP BASE
SIC	SIGNAL INTERCONNECT CABLE
Sig	SIGNAL
SMA	SIGNAL MAST ARM
SNS	STREET NAME SIGN
SP	SERVICE POINT
TDC	TELEPHONE DEMARCATION CABINET
TMS	TRAFFIC MONITORING STATION
TOS	TRAFFIC OPERATIONS SYSTEM
Veh	VEHICLE
VIVDS	VIDEO IMAGE VEHICLE DETECTION SYSTEM
WIM	WEIGH-IN-MOTION
Xfmr	TRANSFORMER

SOFFIT AND WALL MOUNTED LUMINAIRES

PENDANT, 70 W HPS UNLESS OTHERWISE SPECIFIED

FLUSH, 70 W HPS UNLESS OTHERWISE SPECIFIED

WALL SURFACE, 70 W HPS UNLESS OTHERWISE SPECIFIED

EXISTING SOFFIT OR WALL LUMINAIRE TO REMAIN UNMODIFIED

EXISTING SOFFIT OR WALL LUMINAIRE TO BE MODIFIED AS SPECIFIED

NOTE:
Arrow indicates "street side" of luminaire.

COMMONLY USED SYMBOLS FOR UNITED STATES CUSTOMARY UNITS OF MEASUREMENT:

SYMBOL USED	DEFINITIONS
Ω	OHMS
min	MINUTE
s	SECOND
bps	BITS PER SECOND
Bps	BYTES PER SECOND
A	AMPERE
V	VOLT
V(dc)	VOLT (DIRECT CURRENT)
V(ac)	VOLT (ALTERNATING CURRENT)
FC	FOOT - CANDLE
W	WATTS
VA	VOLT-AMPERE
M	MEGA
k	KILO
m	MILLI
μ	MICRO
P	PICO
Hz	HERTZ

MISCELLANEOUS ELECTROLIERS

NEW	EXISTING	
		LUMINAIRE ON WOOD POLE
		NON-STANDARD ELECTROLIER (SEE PROJECT NOTES OR PROJECT PLANS)
		CITY ELECTROLIER
		ELECTROLIER FOUNDATION (FUTURE INSTALLATION)

NOTES:

1. HPS luminaires shall be 310 W HPS when installed on Type 21, 21D, 30, 31 and 32 Standards, unless otherwise specified. HPS luminaires shall be 200 W when installed on other type standards or poles, unless otherwise specified.
2. LED luminaires shall be 235 W when installed on Type 21, 21D, 30, 31 and 32 Standards, unless otherwise specified. LED luminaires shall be 165 W when installed on other type standards or poles, unless otherwise specified.
3. Luminaires shall be the cutoff type, ANSI Type III medium cutoff lighting distribution, unless otherwise specified.

STANDARD ELECTROLIER

NEW	EXISTING	STANDARD TYPE
		15
		15D
		15 STRUCTURE
		15D STRUCTURE
		21
		21D
		21 STRUCTURE
		21D STRUCTURE
		30
		31
		32

STATE OF CALIFORNIA
DEPARTMENT OF TRANSPORTATION

ELECTRICAL SYSTEMS (LEGEND AND ABBREVIATIONS)

NO SCALE

RSP ES-1A DATED JULY 19, 2013 SUPERSEDES STANDARD PLAN ES-1A DATED MAY 20, 2011 - PAGE 425 OF THE STANDARD PLANS BOOK DATED 2010.

REVISED STANDARD PLAN RSP ES-1A

2010 REVISED STANDARD PLAN RSP ES-1A

DATE PLOTTED => 25-FEB-2015
TIME PLOTTED => 07:54

Dist	COUNTY	ROUTE	POST MILES TOTAL PROJECT	SHEET No.	TOTAL SHEETS
02	Sha,Sis	5	Var	75	98

Theresa Gabriel
REGISTERED ELECTRICAL ENGINEER

July 19, 2013
PLANS APPROVAL DATE

REGISTERED PROFESSIONAL ENGINEER
Theresa Aziz Gabriel
No. E15129
Exp. 6-30-14
ELECTRICAL
STATE OF CALIFORNIA

THE STATE OF CALIFORNIA OR ITS OFFICERS OR AGENTS SHALL NOT BE RESPONSIBLE FOR THE ACCURACY OR COMPLETENESS OF SCANNED COPIES OF THIS PLAN SHEET.

TO ACCOMPANY PLANS DATED 01-30-15

CONDUIT

NEW	EXISTING	
		LIGHTING CONDUIT, UNLESS OTHERWISE INDICATED OR NOTED
		TRAFFIC SIGNAL CONDUIT
C	c	COMMUNICATION CONDUIT
T	t	TELEPHONE CONDUIT
F	f	FIRE ALARM CONDUIT
FO	fo	FIBER OPTIC CONDUIT
		CONDUIT TERMINATION
R	r	CONDUIT RISER ATTACHED TO THE STRUCTURE OR SERVICE POLE

SERVICE EQUIPMENT

NEW	EXISTING	
OH	oh	OVERHEAD LINES
U	U	WOOD POLE, "U" INDICATES UTILITY OWNED
		POLE GUY WITH ANCHOR
		UTILITY TRANSFORMER - GROUND MOUNTED
III	III	SERVICE EQUIPMENT ENCLOSURE TYPE. DOOR INDICATES FRONT OF ENCLOSURE
T	t	TELEPHONE DEMARCATION CABINET

POLE-MOUNTED SERVICE DESIGNATION

TYPE H SERVICE, 28'-10" — TYPE OF INSTALLATION AND POLE HEIGHT ABOVE GRADE

FLASHING BEACON

NEW	EXISTING	
R	R	FLASHING BEACON (ONE VEHICLE SIGNAL HEAD WITH BACKPLATE AND VISOR) "R" INDICATES RED INDICATION, "Y" INDICATES YELLOW INDICATION
Y Y	Y Y	FLASHING BEACON WITH TYPE 15-FBS STANDARD AND A SIGN.
R R	R R	FLASHING BEACON WITH TYPES 9, 9A OR 9B SIGN UNLESS OTHERWISE SPECIFIED OR INDICATED

SIGNAL EQUIPMENT

NEW	EXISTING	
C	C	PEDESTRIAN SIGNAL HEAD "C" INDICATES COUNTDOWN PEDESTRIAN HEAD
		PUSH BUTTON ASSEMBLY POST
		PEDESTRIAN BARRICADE
		VEHICLE SIGNAL HEAD (WITH BACKPLATE AND 3-SECTIONS: RED, YELLOW AND GREEN)
		VEHICLE SIGNAL HEAD WITH ANGLE VISOR
PV	PV	MODIFICATIONS OF BASIC SYMBOL: "L" INDICATES ALL NON-ARROW SECTIONS LOUVERED "LG" INDICATES LOUVERED GREEN SECTION ONLY "PV" INDICATES ALL 12" SECTIONS PROGRAMMED VISIBILITY "8" INDICATES ALL 8" SECTIONS (ONLY WHEN SPECIFIED)
		VEHICLE SIGNAL HEAD CONSISTING OF RED, YELLOW AND GREEN LEFT ARROW SECTIONS
		VEHICLE SIGNAL HEAD CONSISTING OF RED AND YELLOW SECTIONS WITH AN UP GREEN ARROW SECTION
		VEHICLE SIGNAL HEAD (5 SECTION) CONSISTING OF RED, YELLOW AND GREEN SECTIONS WITH YELLOW AND GREEN RIGHT ARROW SECTIONS
		TYPE 15TS STANDARD WITH VEHICLE SIGNAL HEAD AND LUMINAIRE
		TYPE 21TS STANDARD WITH VEHICLE SIGNAL HEAD AND LUMINAIRE
		STANDARD WITH LUMINAIRE AND SIGNAL MAST ARMS AND ATTACHED VEHICLE SIGNAL HEADS
		TYPE 1 STANDARD WITH ATTACHED VEHICLE SIGNAL HEADS
		STANDARD WITH A SIGNAL MAST ARM, ATTACHED VEHICLE SIGNAL HEADS AND INTERNALLY ILLUMINATED STREET NAME SIGN
		CONTROLLER ASSEMBLY. DOOR INDICATES FRONT OF CABINET

SIGNAL EQUIPMENT Cont

NEW	EXISTING	
		GUARD POST
		TYPE 1 STANDARD WITH RAMP METERING SIGN
		OPTICAL DETECTOR FOR THE EMERGENCY VEHICLE DETECTION SYSTEM

NOTES:

1. All signal sections shall be 12" unless shown otherwise.
2. Signal heads shall be provided with backplates unless shown otherwise.

ILLUMINATED OVERHEAD SIGN

NEW	EXISTING	
		SINGLE POST, SINGLE ILLUMINATED SIGN, BALANCED BUTTERFLY
		SINGLE POST, DOUBLE ILLUMINATED SIGN, BALANCED BUTTERFLY
		SINGLE POST, SINGLE ILLUMINATED SIGN, FULL CANTILEVER
		DOUBLE POST, SINGLE ILLUMINATED SIGN
		SINGLE ILLUMINATED SIGN MOUNTED ON STRUCTURE
		DOUBLE POST, SINGLE ILLUMINATED SIGN WITH ELECTROLIER

STATE OF CALIFORNIA
DEPARTMENT OF TRANSPORTATION

ELECTRICAL SYSTEMS (LEGEND AND ABBREVIATIONS)

NO SCALE

RSP ES-1B DATED JULY 19, 2013 SUPERSEDES STANDARD PLAN ES-1B DATED MAY 20, 2011 - PAGE 426 OF THE STANDARD PLANS BOOK DATED 2010.

REVISED STANDARD PLAN RSP ES-1B

2010 REVISED STANDARD PLAN RSP ES-1B

DATE PLOTTED => 25-FEB-2015
TIME PLOTTED => 07:54

Dist	COUNTY	ROUTE	POST MILES TOTAL PROJECT	SHEET No.	TOTAL SHEETS
02	Sha,Sis	5	Var	76	98

Theresa Gabriel
REGISTERED ELECTRICAL ENGINEER

July 19, 2013
PLANS APPROVAL DATE

REGISTERED PROFESSIONAL ENGINEER
Theresa Aziz Gabriel
No. E15129
Exp. 6-30-14
ELECTRICAL
STATE OF CALIFORNIA

THE STATE OF CALIFORNIA OR ITS OFFICERS OR AGENTS SHALL NOT BE RESPONSIBLE FOR THE ACCURACY OR COMPLETENESS OF SCANNED COPIES OF THIS PLAN SHEET.

TO ACCOMPANY PLANS DATED 01-30-15

EQUIPMENT IDENTIFICATION

ILLUMINATED SIGN IDENTIFICATION NUMBER:

SIGN No. 12345
10 ISL SCI 1.0

- SIGN NUMBER - PLACE ON POST OR STRUCTURE
- TRANSFORMER RATING (kVA)
- LIGHTING CONTROL TYPE
- NUMBER AND TYPE OF FIXTURES

DO NOT PLACE ON STANDARD OR STRUCTURE

ELECTROLIER OR EQUIPMENT IDENTIFICATION NUMBER:

12345 - 15'-0"

- MAST ARM LENGTH, IF SHOWN. DO NOT PLACE ON STANDARD OR STRUCTURE
- EQUIPMENT NUMBER - PLACE ON STANDARD OR STRUCTURE. EXISTING EQUIPMENT NUMBERS ARE SHOWN IN PARENTHESIS

CONDUIT AND CONDUCTOR IDENTIFICATION:

1½"C, 2#10, 15#14, 2 DLC, 12P#18

- PAIR
- NUMBER AND SIZE OF CONDUCTORS AND CABLES
- SIZE OF CONDUIT IN INCHES

Ø1, Ø2, Ø2P, etc.	TRAFFIC PHASE IDENTIFICATION FOR SIGNAL FACES, DETECTORS AND PHASE DIAGRAMS
1 2 3	LEGEND NUMBERS
A B C	EQUIPMENT, SIGNAL POLES, INSTALLATION OR ITEMS
1 2 3	CONDUIT RUN NUMBERS

SIGNAL AND LIGHTING STANDARD (TYPICAL DESIGNATION):

19A - 3 - 100

- WIND VELOCITY = 100 mph
- CASE 3 ARM LOADING
- STANDARD TYPE
- STANDARD PLAN SHEET NUMBER
- DETAIL, NUMBER, SECTION, TYPE OR ELEVATION

MISCELLANEOUS EQUIPMENT

NEW	EXISTING	
CMS	cms	CHANGEABLE MESSAGE SIGN
		CLOSED CIRCUIT TELEVISION CAMERA
		HIGHWAY ADVISORY RADIO POLE AND ANTENNA
EMS	ems	EXTINGUISHABLE MESSAGE SIGN
M V	m v	DETECTION DEVICE M = MICROWAVE SENSOR V = VIDEO IMAGE SENSOR

WIRING DIAGRAM LEGEND

- EXTERNAL CONDUCTOR
- CONDUCTOR OR BUS
- TIE POINT
- CONTACTOR COIL
- CONTACTOR, NO CONTACT
- TERMINAL BLOCKS
- CONTACTOR, NC CONTACT
- ENCLOSURE BOND
- GROUNDING ELECTRODE
- CIRCUIT BREAKER
- RECEPTACLE

PULL BOXES

NEW	EXISTING	
		PULL BOX, No. 5 UNLESS OTHERWISE INDICATED OR NOTED
3	9A(21)	PULL BOX, ADDITIONAL DESIGNATIONS OR DESCRIPTIONS

3 No. 3½ PULL BOX
5 No. 5 PULL BOX
6 No. 6 PULL BOX
7 No. 7 (CEILING PULL BOX)
8 No. 8 (PENDANT SOFFIT PULL BOX)
9 No. 9 PULL BOX
9A No. 9A PULL BOX

(C) COMMUNICATIONS PULL BOX
(E) PULL BOX WITH EXTENSION
(S) SPRINKLER CONTROL PULL BOX
(21) ANCHOR BOLTS AND CONDUIT FOR FUTURE INSTALLATION OF TYPE 21 STANDARD
(T) TRAFFIC PULL BOX

VEHICLE DETECTORS

5 J 9 U

- VEHICLE DETECTOR DESIGNATION
- U = UPPER
  L = LOWER
- SLOT NUMBER IN INPUT FILE
- INPUT FILE (I OR J)
- PHASE

NEW	EXISTING	
		TYPE A DETECTOR LOOP. OUTLINE OF SAWCUT SHOWN
		TYPE B DETECTOR LOOP. OUTLINE OF SAWCUT SHOWN
		TYPE C DETECTOR LOOP. OUTLINE OF SAWCUT SHOWN
		TYPE D DETECTOR LOOP. OUTLINE OF SAWCUT SHOWN
		TYPE E DETECTOR LOOP. OUTLINE OF SAWCUT SHOWN
		TYPE Q DETECTOR LOOP. OUTLINE OF SAWCUT SHOWN
		MAGNETIC DETECTOR
DH	dh	DETECTOR HANDHOLE
		MICROWAVE OR VIDEO DETECTION ZONE

STATE OF CALIFORNIA
DEPARTMENT OF TRANSPORTATION

ELECTRICAL SYSTEMS (LEGEND AND ABBREVIATIONS)

NO SCALE

RSP ES-1C DATED JULY 19, 2013 SUPERSEDES STANDARD PLAN ES-1C DATED MAY 20, 2011 - PAGE 427 OF THE STANDARD PLANS BOOK DATED 2010.

REVISED STANDARD PLAN RSP ES-1C

2010 REVISED STANDARD PLAN RSP ES-1C

DATE PLOTTED => 25-FEB-2015
TIME PLOTTED => 07:54

Dist	COUNTY	ROUTE	POST MILES TOTAL PROJECT	SHEET No.	TOTAL SHEETS
02	Sha,Sis	5	Var	77	98

Theresa Gabriel
REGISTERED ELECTRICAL ENGINEER

July 19, 2013
PLANS APPROVAL DATE

REGISTERED PROFESSIONAL ENGINEER
Theresa Aziz Gabriel
No. E15129
Exp. 6-30-14
ELECTRICAL
STATE OF CALIFORNIA

THE STATE OF CALIFORNIA OR ITS OFFICERS OR AGENTS SHALL NOT BE RESPONSIBLE FOR THE ACCURACY OR COMPLETENESS OF SCANNED COPIES OF THIS PLAN SHEET.

TO ACCOMPANY PLANS DATED 01-30-15

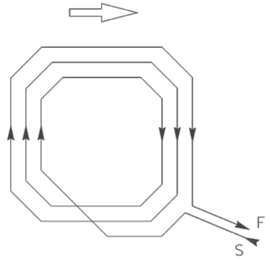

WINDING DETAIL

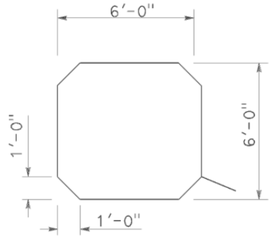

SAWCUT DETAIL

TYPE A LOOP DETECTOR CONFIGURATION

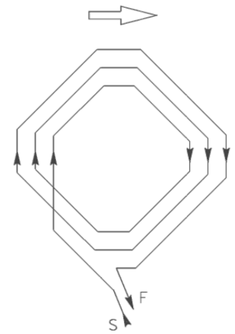

WINDING DETAIL

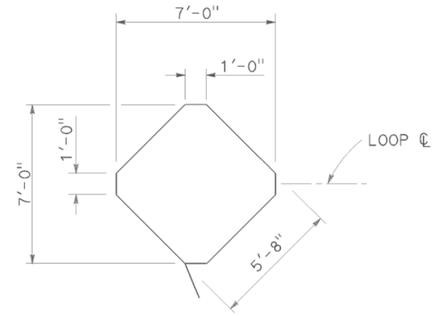

SAWCUT DETAIL

TYPE B LOOP DETECTOR CONFIGURATION

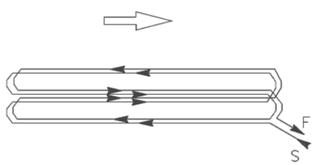

WINDING DETAIL

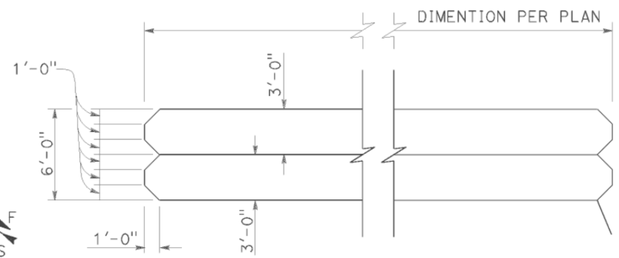

SAWCUT DETAIL

TYPE C LOOP DETECTOR CONFIGURATION

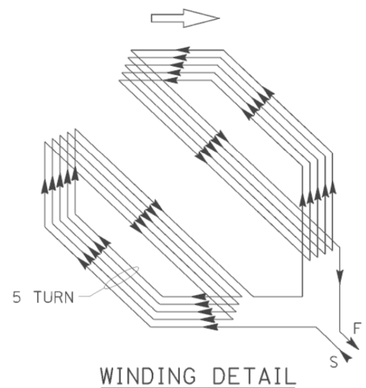

WINDING DETAIL

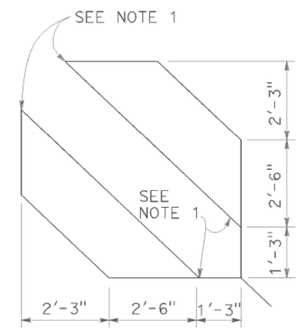

SAWCUT DETAIL

TYPE D LOOP DETECTOR CONFIGURATION

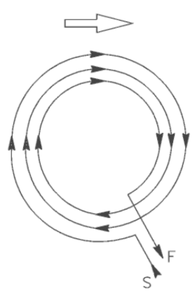

WINDING DETAIL

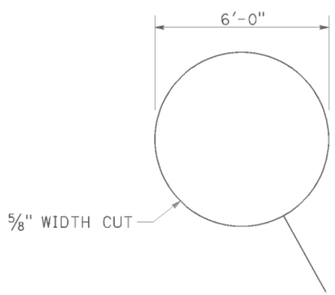

SAWCUT DETAIL

TYPE E LOOP DETECTOR CONFIGURATION

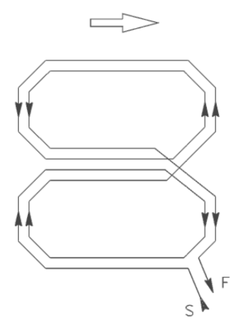

WINDING DETAIL

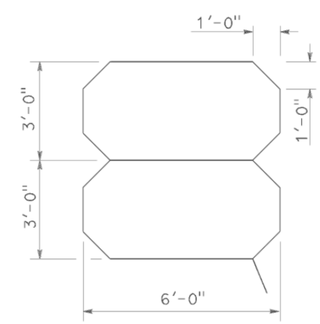

SAWCUT DETAIL

TYPE Q LOOP DETECTOR CONFIGURATION

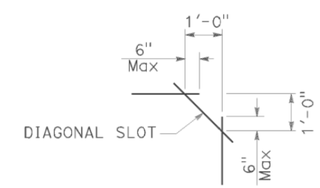

PLAN VIEW OF DIAGONAL SLOT AT CORNERS

NOTES:

1. Round corners of acute angle sawcuts to prevent damage to conductors.
2. Typical distance separating loops from edge to edge is 10' for Type A, B, D and E installation in single lane.

STATE OF CALIFORNIA
DEPARTMENT OF TRANSPORTATION

ELECTRICAL SYSTEMS (DETECTORS)

NO SCALE

RSP ES-5B DATED JULY 19, 2013 SUPERSEDES STANDARD PLAN ES-5B DATED MAY 20, 2011 - PAGE 449 OF THE STANDARD PLANS BOOK DATED 2010.

REVISED STANDARD PLAN RSP ES-5B

2010 REVISED STANDARD PLAN RSP ES-5B

DATE PLOTTED => 25-FEB-2015
TIME PLOTTED => 07:54

Dist	COUNTY	ROUTE	POST MILES TOTAL PROJECT	SHEET No.	TOTAL SHEETS
02	Sha,Sis	5	Var	78	98

Theresa Gabriel
REGISTERED ELECTRICAL ENGINEER

July 19, 2013
PLANS APPROVAL DATE

REGISTERED PROFESSIONAL ENGINEER Theresa Aziz Gabriel No. E15129 Exp. 6-30-14 ELECTRICAL STATE OF CALIFORNIA

THE STATE OF CALIFORNIA OR ITS OFFICERS OR AGENTS SHALL NOT BE RESPONSIBLE FOR THE ACCURACY OR COMPLETENESS OF SCANNED COPIES OF THIS PLAN SHEET.

TO ACCOMPANY PLANS DATED 01-30-15

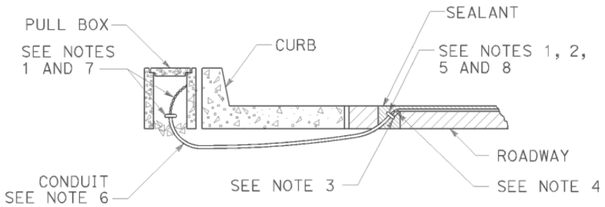

TYPE A
CURB TERMINATION DETAIL

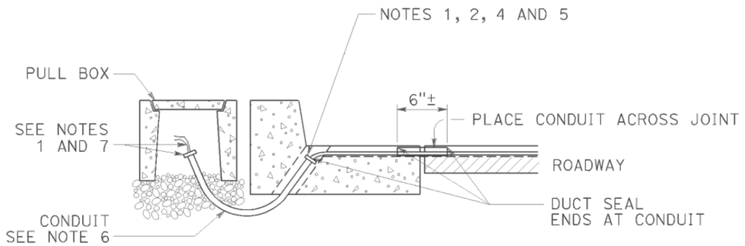

CROSS SECTION

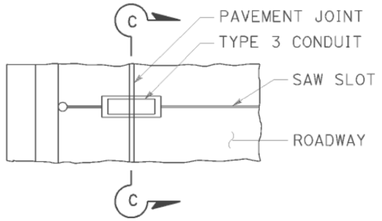

PLAN VIEW

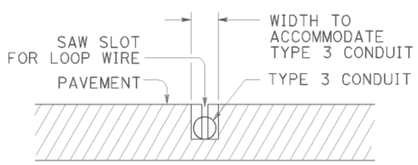

SECTION C-C

TYPE B
CURB TERMINATION DETAIL

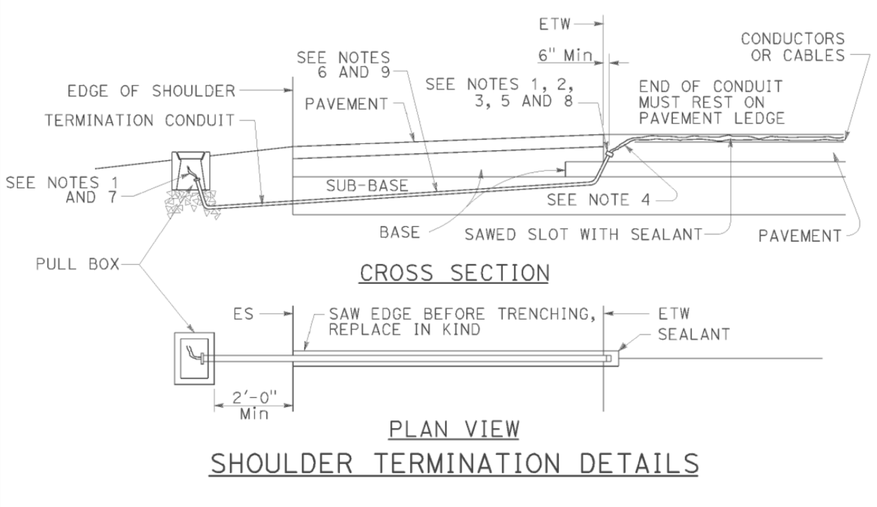

CROSS SECTION

PLAN VIEW

SHOULDER TERMINATION DETAILS

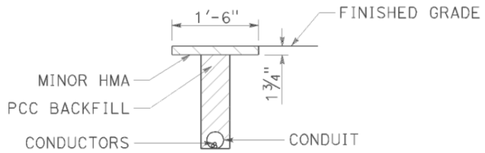

"T" TRENCH
DETAIL T

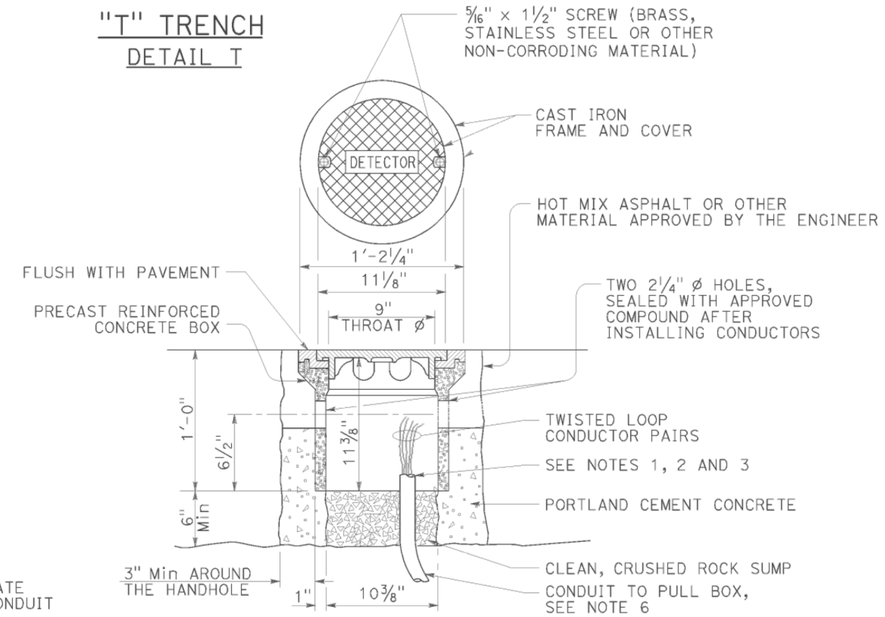

DETECTOR HANDHOLE DETAIL

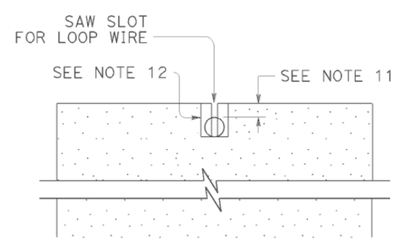

SECTION A-A

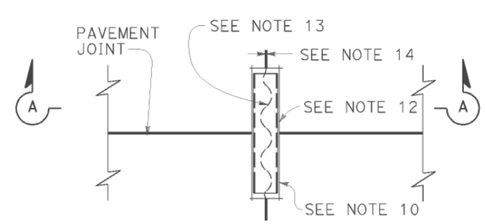

PLAN VIEW

TYPICAL LOOP LEAD-IN DETAIL AT PAVEMENT JOINT

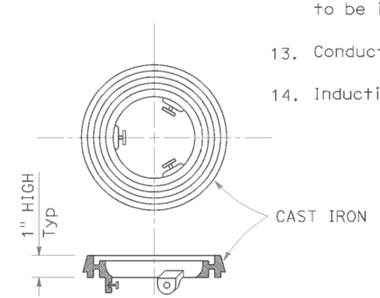

LOCKING GRADE RING

NOTES:

1. Bushing shall be used at end of conduit.
2. Tape detector conductors or cables 3" each side of bushings.
3. Install duct seal compound to each end of termination conduit before installing sealant.
4. Round all sharp edges where detector conductors or cables have to pass.
5. End of conduit shall be 3⅛" below roadway surface.
6.

Conduit size	Loop conductors
1"C minimum	1 to 2 pairs
1½"C minimum	3 to 4 pairs
2"C minimum	5 or more pairs

7. Splice detector conductors or cables to detector lead-in-cable.
8. Location of detector handhole when shown on plans.
9. When the shoulder and traveled way are paved with the same material and there is no joint between them, the conduit shall extend only 2'-0" into the shoulder pavement.
10. ¾"C, Type 3 conduit 6" long minimum, plug both ends with duct compound to keep out sealant.
11. ½" Minimum between top of conduit and pavement surface.
12. Sawcut shall not exceed 1" in width and ⅛" longer than conduit to be installed.
13. Conductors with ½" minimum slack inside conduit.
14. Inductive loop detector saw slot.

STATE OF CALIFORNIA
DEPARTMENT OF TRANSPORTATION

ELECTRICAL SYSTEMS (CURB TERMINATION AND HANDHOLE)

NO SCALE

RSP ES-5D DATED JULY 19, 2013 SUPERSEDES STANDARD PLAN ES-5D DATED MAY 20, 2011 - PAGE 451 OF THE STANDARD PLANS BOOK DATED 2010.

REVISED STANDARD PLAN RSP ES-5D

2010 REVISED STANDARD PLAN RSP ES-5D

DATE PLOTTED => 25-FEB-2015
TIME PLOTTED => 07:54

DIST	COUNTY	ROUTE	POST MILES TOTAL PROJECT	SHEET NO.	TOTAL SHEETS
02	Sha,Sis	5	Var	79	98

Theresa Gabriel
REGISTERED ELECTRICAL ENGINEER

July 19, 2013
PLANS APPROVAL DATE

REGISTERED PROFESSIONAL ENGINEER Theresa Aziz Gabriel No. E15129 Exp. 6-30-14 ELECTRICAL STATE OF CALIFORNIA

THE STATE OF CALIFORNIA OR ITS OFFICERS OR AGENTS SHALL NOT BE RESPONSIBLE FOR THE ACCURACY OR COMPLETENESS OF SCANNED COPIES OF THIS PLAN SHEET.

TO ACCOMPANY PLANS DATED 01-30-15

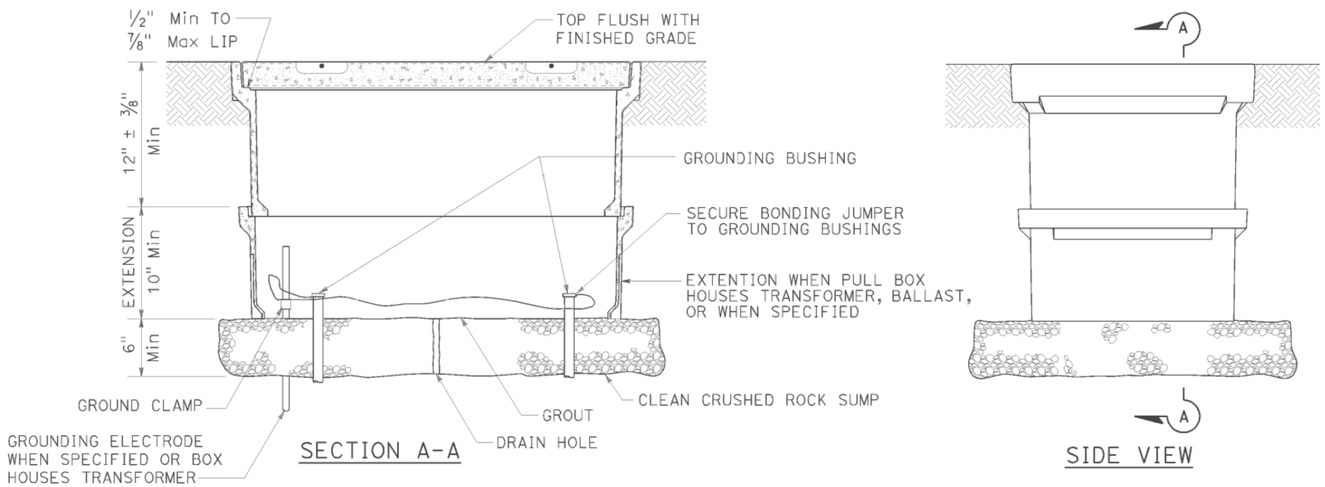

SECTION A-A

SIDE VIEW

INSTALLATION DETAILS

DETAIL A

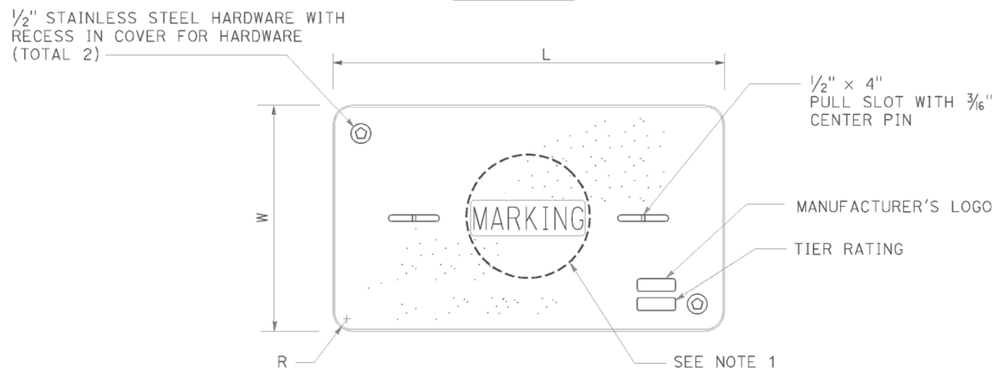

COVER TOP VIEW

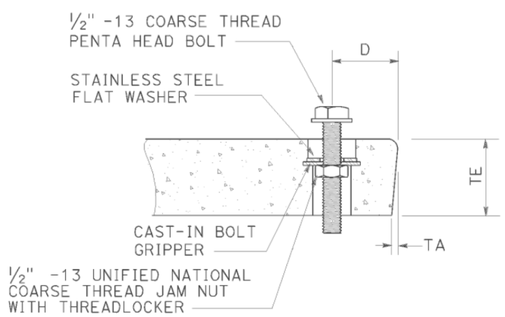

TYPICAL COVER CAPTIVE BOLT

OR SIMILAR

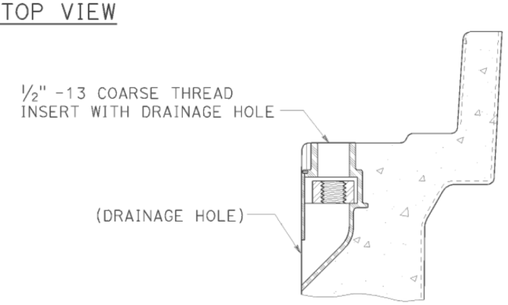

TYPICAL THREADED INSERT

OR SIMILAR

DIMENSION TABLE

PULL BOX	PULL BOX			COVER						
	MINIMUM DEPTH BOX	MINIMUM DEPTH EXTENSION	MAXIMUM WEIGHT	L	W	R	TE	TA	D	MAXIMUM WEIGHT
No. 3½	12"	N/A	40 lb	1' - 3⅜"	10⅛"	1⅜"	2"	⅛"	1¾"	30 lb
No. 5	12"	10"	55 lb	1' - 11¼"	1' - 1¾"	1⅜"	2"	⅛"	1¾"	60 lb
No. 6	12"	10"	70 lb	2' - 6½"	1' - 5½"	1⅜"	2"	⅛"	2"	85 lb

NOTES:

1. Pull box covers shall be marked as follows: "SERVICE" Service circuits between service point and service disconnect; "SPRINKLER-CONTROL" sprinkler control circuits, 50 V or less; "CALTRANS" on all pull boxes, except pull boxes marked "SPRINKLER-CONTROL"; and "TELEPHONE" Telephone service;
   - A) No. 3½ pull box.
     - 1) "SIGNAL" - Traffic signal circuits with or without lighting or sign lighting circuits.
     - 2) "LIGHTING" - Lighting or sign lighting circuits where voltage is under 600 V.
   - B) No. 5, 6, 9 or 9A pull box.
     - 1) "TRAFFIC SIGNAL" - Traffic signal circuits with or without lighting or sign lighting circuits.
     - 2) "LIGHTING" - Lighting or sign lighting circuits where voltage is under 600 V.
     - 3) "LIGHTING-HIGH VOLTAGE" - Lighting or sign lighting circuits where voltage is above 600 V.
     - 4) "IRRIGATION" - Circuits to irrigation controller 120 V or more.
     - 5) "RAMP METER" - Ramp meter circuits.
     - 6) "COUNT STATION" - Count or speed monitor circuits.
     - 7) "COMMUNICATIONS" - Communication circuits.
     - 8) "TOS COMMUNICATIONS" - TOS communication line.
     - 9) "TOS POWER" - TOS power.
     - 10) "TDC POWER" - Telephone demarcation cabinet power.
     - 11) "CCTV" - Closed circuit television circuits.
     - 12) "TMS" - Traffic monitoring station circuits.
     - 13) "CMS" - Changeable message sign circuits.
     - 14) "HAR" - Highway advisory radio circuits.
     - 15) "BOOSTER PUMP" - Booster pump circuit.
2. The nominal dimensions of the opening in which the cover sets shall be the same as the cover dimensions except the length and width dimensions shall be ⅛" greater.
3. Covers and boxes shall be interchangeable with California standard male and female gages. When interchanged with a standard male or female gage, the top surfaces shall be flush within ⅛". Top outside radius of covers and pull boxes shall have a ⅛" radius.
4. Pull box extension may be another pull box as long as the bottom edge of the pull box can fit into the cover opening.
5. All dimensions for the cover for non-traffic pull box are nominal values.

STATE OF CALIFORNIA
DEPARTMENT OF TRANSPORTATION

ELECTRICAL SYSTEMS (NON-TRAFFIC PULL BOX)

NO SCALE

RSP ES-8A DATED JULY 19, 2013 SUPERSEDES RSP ES-8A DATED JANUARY 20, 2012 THAT SUPPLEMENTS THE STANDARD PLANS BOOK DATED 2010.

REVISED STANDARD PLAN RSP ES-8A

2010 REVISED STANDARD PLAN RSP ES-8A

DATE PLOTTED => 25-FEB-2015
TIME PLOTTED => 07:54

DIST	COUNTY	ROUTE	POST MILES TOTAL PROJECT	SHEET No.	TOTAL SHEETS
02	Sha,Sis	5	Var	80	98

Tim Campbell 10-27-14
REGISTERED CIVIL ENGINEER DATE

01-30-15
PLANS APPROVAL DATE

REGISTERED PROFESSIONAL ENGINEER
TIM CAMPBELL
No. 63268
Exp. 06-30-16
CIVIL
STATE OF CALIFORNIA

The State of California or its officers or agents shall not be responsible for the accuracy or completeness of scanned copies of this plan sheet.

NOTE: (APPLY TO ALL SHEETS)
····-·-·- Indicates existing.

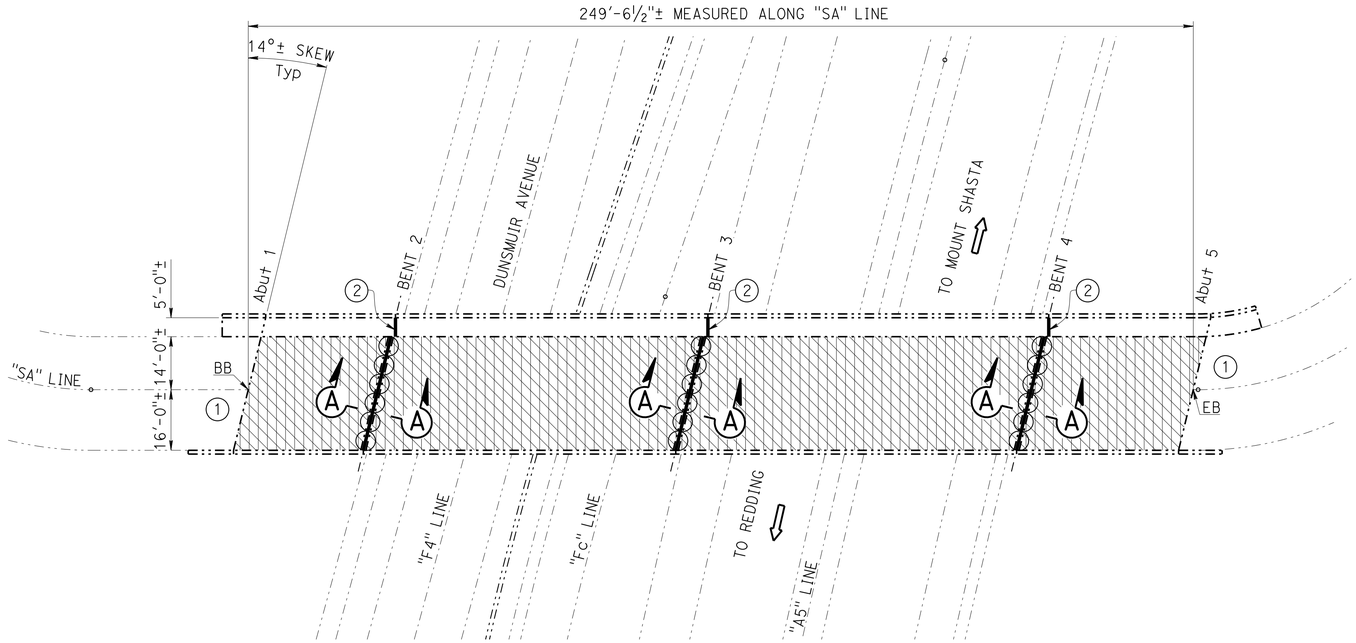

✱✱ 4"± DEPTH AC OVERLAY

SISKIYOU AVENUE OVERCROSSING

Br. No. 02-0097, ROUTE 5, Sis, PM 2.92
1" = 20'

NOTES: (APPLY TO THIS SHEET ONLY)

Indicates limits of prepare concrete bridge deck surface, furnish and place new ¾" minimum depth polyester concrete overlay. Prior to placing new polyester concrete overlay, remove unsound concrete, place galvanic anodes and patch with rapid setting concrete as shown on "Joint And Deck Repair Detail" on "DECK REPAIR DETAILS NO. 1" sheet.

Indicates limits of remove existing (✱✱) depth AC overlay and membrane seal.

Indicates limits of clean expansion joint and install new joint seal. For details, see "JOINT SEAL DETAILS NO. 3" sheet.

Indicates limits of remove existing reinforced concrete expansion dam.

(1) For approach roadway taper, see "Roadway Plans".

(2) For joint seal detail, see "Joint Seal At Sidewalk" on "JOINT SEAL DETAILS NO. 3" sheet.

- For "Section A-A", see "JOINT SEAL DETAILS NO. 1" sheet.

SISKIYOU AVENUE OVERCROSSING BR. NO. 02-0097

QUANTITIES

PUBLIC SAFETY PLAN	LUMP	SUM
RAPID SETTING CONCRETE (PATCH)	187	CF
REMOVE ASPHALT CONCRETE SURFACING	7,486	SQFT
REMOVE UNSOUND CONCRETE	187	CF
PREPARE CONCRETE BRIDGE DECK SURFACE	7,486	SQFT
FURNISH POLYESTER CONCRETE OVERLAY	562	CF
PLACE POLYESTER CONCRETE OVERLAY	7,486	SQFT
CLEAN EXPANSION JOINT	111	LF
JOINT SEAL (MR 1")	111	LF
GALVANIC ANODE	75	EA

INDEX TO PLANS

SHEET NO.	TITLE
1	GENERAL PLAN NO. 1
2	GENERAL PLAN NO. 2
3	GENERAL PLAN NO. 3
4	GENERAL PLAN NO. 4
5	GENERAL PLAN NO. 5
6	GENERAL PLAN NO. 6
7	GENERAL PLAN NO. 7
8	GENERAL PLAN NO. 8
9	DECK ON DECK DETAILS NO. 1
10	DECK ON DECK DETAILS NO. 2
11	DECK ON DECK DETAILS NO. 3
12	DECK REPAIR DETAILS NO. 1
13	DECK REPAIR DETAILS NO. 2
14	DECK REPAIR DETAILS NO. 3
15	DECK REPAIR DETAILS NO. 4
16	JOINT SEAL DETAILS NO. 1
17	JOINT SEAL DETAILS NO. 2
18	JOINT SEAL DETAILS NO. 3
19	STRUCTURE APPROACH TYPE R(30D) MODIFIED

STANDARD PLANS 2010

SHEET NO.	TITLE
A10A	ABBREVIATIONS (SHEET 1 OF 2)
RSP A10B	ABBREVIATIONS (SHEET 2 OF 2)
RSP A77U1	MIDWEST GUARDRAIL SYSTEM CONNECTIONS TO BRIDGE RAILINGS WITHOUT SIDEWALKS DETAILS No. 1
B6-21	JOINT SEALS (MAXIMUM MOVEMENT RATING = 2")
RSP B11-56	CONCRETE BARRIER TYPE 736

STANDARD PLAN SHEET NO.
DETAIL NO.

NOTE:
THE CONTRACTOR MUST VERIFY ALL CONTROLLING FIELD DIMENSIONS BEFORE ORDERING OR FABRICATING ANY MATERIAL.

Matthew W. Lee 10-27-14
DESIGN ENGINEER

	BY	CHECKED			
DESIGN	Tim Campbell	P. Kang	LOAD FACTOR DESIGN	LIVE LOADING: HS20-44 AND ALTERNATIVE AND PERMIT DESIGN LOAD	
DETAILS	Dale Kubochi	P. Kang	LAYOUT	Dale Kubochi	Tim Campbell
QUANTITIES	Tim Campbell	P. Kang	SPECIFICATIONS	Sharon Hansen	PLANS AND SPECS COMPARED Sharon Hansen

STRUCTURES MAINTENANCE GENERAL PLAN SHEET (ENGLISH) (REV. 09-01-10)

ORIGINAL SCALE IN INCHES FOR REDUCED PLANS 0 1 2 3

STATE OF CALIFORNIA
DEPARTMENT OF TRANSPORTATION

DIVISION OF MAINTENANCE
STRUCTURE MAINTENANCE DESIGN

BRIDGE NO. VARIOUS
POST MILE VARIES

ROUTE 5 BRIDGES
GENERAL PLAN NO. 1

UNIT: 3488
PROJECT NUMBER & PHASE: 0213000013
CONTRACT NO.: 02-4F6101

DISREGARD PRINTS BEARING EARLIER REVISION DATES
REVISION DATES 5-30-14 6-9-14 10-23-14

SHEET 1 OF 19

FILE => 02-4f6101-a-gp01.dgn

USERNAME => s115152 DATE PLOTTED => 25-FEB-2015 TIME PLOTTED => 07:54

DIST	COUNTY	ROUTE	POST MILES TOTAL PROJECT	SHEET No.	TOTAL SHEETS
02	Sha,Sis	5	Var	81	98

Tim Campbell 10-27-14
REGISTERED CIVIL ENGINEER DATE

01-30-15
PLANS APPROVAL DATE

REGISTERED PROFESSIONAL ENGINEER
TIM CAMPBELL
No. 63268
Exp. 06-30-16
CIVIL
STATE OF CALIFORNIA

The State of California or its officers or agents shall not be responsible for the accuracy or completeness of scanned copies of this plan sheet.

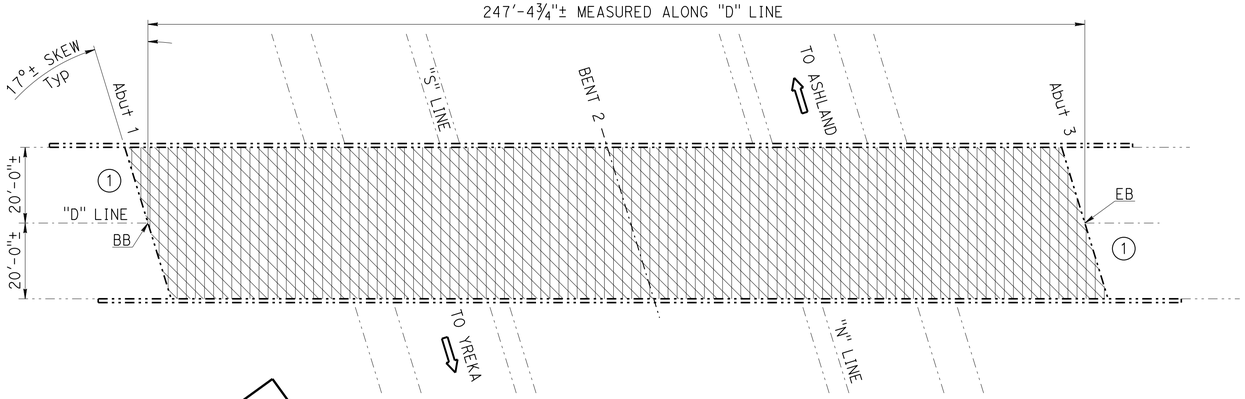

✱✱ 3½"± DEPTH AC OVERLAY

DITCH CREEK ROAD OVERCROSSING

Br. No. 02-0172, ROUTE 5, Sis, PM R62.92
1" = 20'

DITCH CREEK ROAD OVERCROSSING — BR. NO. 02-0172

QUANTITIES

RAPID SETTING CONCRETE (PATCH)	248	CF
REMOVE ASPHALT CONCRETE SURFACING	9,896	SQFT
REMOVE UNSOUND CONCRETE	248	CF
PREPARE CONCRETE BRIDGE DECK SURFACE	9,896	SQFT
FURNISH POLYESTER CONCRETE OVERLAY	742	CF
PLACE POLYESTER CONCRETE OVERLAY	9,896	SQFT
GALVANIC ANODE	99	EA

NOTES: (APPLY TO THIS SHEET ONLY)

Indicates limits of prepare concrete bridge deck surface, furnish and place new ¾" minimum depth polyester concrete overlay. Prior to placing new polyester concrete overlay, remove unsound concrete, place galvanic anodes and patch with rapid setting concrete as shown on "Joint And Deck Repair Detail" on "DECK REPAIR DETAILS NO. 1" sheet.

Indicates limits of remove existing (✱✱) depth AC overlay and membrane seal.

(1) For approach roadway taper, see "Roadway Plans".

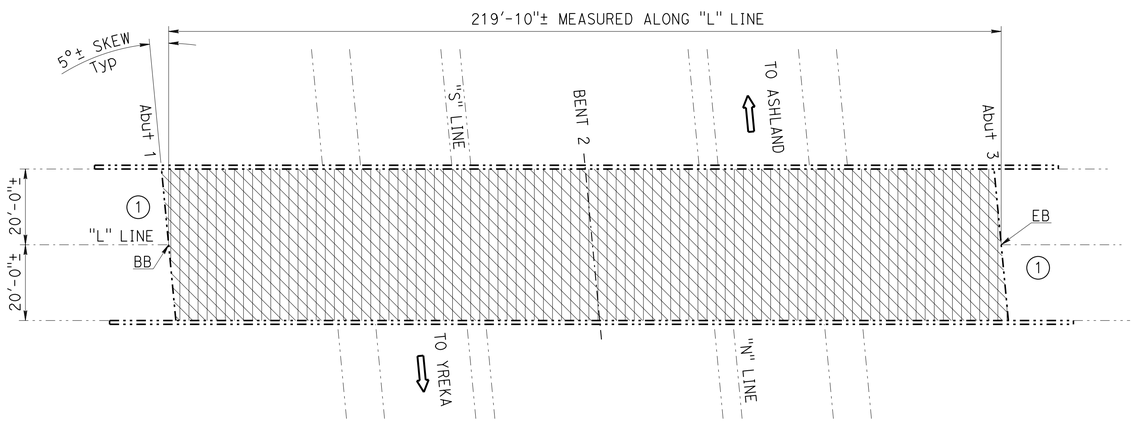

✱✱ 3½"± DEPTH AC OVERLAY

BAILEY HILL ROAD OVERCROSSING

Br. No. 02-0173, ROUTE 5, Sis, PM R65.52
1" = 20'

BAILEY HILL ROAD OVERCROSSING — BR. NO. 02-0173

QUANTITIES

RAPID SETTING CONCRETE (PATCH)	220	CF
REMOVE ASPHALT CONCRETE SURFACING	8,793	SQFT
REMOVE UNSOUND CONCRETE	220	CF
PREPARE CONCRETE BRIDGE DECK SURFACE	8,793	SQFT
FURNISH POLYESTER CONCRETE OVERLAY	660	CF
PLACE POLYESTER CONCRETE OVERLAY	8,793	SQFT
GALVANIC ANODE	88	EA

NOTE:
THE CONTRACTOR MUST VERIFY ALL CONTROLLING FIELD DIMENSIONS BEFORE ORDERING OR FABRICATING ANY MATERIAL.

Matthew Lee 10-27-14
DESIGN ENGINEER

	BY	CHECKED
DESIGN	Tim Campbell	P. Kang
DETAILS	Dale Kubochi	P. Kang
QUANTITIES	Tim Campbell	P. Kang

LOAD FACTOR DESIGN	LIVE LOADING: HS20-44 AND ALTERNATIVE AND PERMIT DESIGN LOAD	
LAYOUT	BY Dale Kubochi	CHECKED Tim Campbell
SPECIFICATIONS	BY Sharon Hansen	PLANS AND SPECS COMPARED Sharon Hansen

STATE OF CALIFORNIA
DEPARTMENT OF TRANSPORTATION

DIVISION OF MAINTENANCE
STRUCTURE MAINTENANCE DESIGN

BRIDGE NO. VARIOUS
POST MILE VARIES

ROUTE 5 BRIDGES
GENERAL PLAN NO. 2

STRUCTURES MAINTENANCE GENERAL PLAN SHEET (ENGLISH) (REV. 09-01-10)

ORIGINAL SCALE IN INCHES FOR REDUCED PLANS 0 1 2 3

UNIT: 3488
PROJECT NUMBER & PHASE: 0213000013
CONTRACT NO.: 02-4F6101

DISREGARD PRINTS BEARING EARLIER REVISION DATES
REVISION DATES 5-30-14 8-8-14 10-23-14

SHEET 2 OF 19

FILE => 02-4f6101-a-gp02.dgn

USERNAME => s115152 DATE PLOTTED => 25-FEB-2015 TIME PLOTTED => 07:54

DIST	COUNTY	ROUTE	POST MILES TOTAL PROJECT	SHEET No.	TOTAL SHEETS
02	Sha,Sis	5	Var	82	98

Tim Campbell 10-27-14
REGISTERED CIVIL ENGINEER DATE

01-30-15
PLANS APPROVAL DATE

REGISTERED PROFESSIONAL ENGINEER
TIM CAMPBELL
No. 63268
Exp. 06-30-16
CIVIL
STATE OF CALIFORNIA

The State of California or its officers or agents shall not be responsible for the accuracy or completeness of scanned copies of this plan sheet.

NOTES: (APPLY TO THIS SHEET ONLY)

Indicates limits of prepare concrete bridge deck surface, furnish and place new ¾" minimum depth polyester concrete overlay. Prior to placing new polyester concrete overlay, remove unsound concrete, place galvanic anodes and patch with rapid setting concrete as shown on the "Joint And Deck Repair Detail" on "DECK REPAIR DETAILS NO. 1" sheet.

Indicates limits of remove existing 2½"± depth AC overlay and membrane seal.

Indicates limits of remove lost deck forms.

Indicates limits of remove full depth (6⅝"±) deck concrete, clean reinforcing steel and place new (6⅝") depth fiber reinforced concrete deck. For details, see "Section B-B" on "DECK REPAIR DETAILS NO. 2" sheet.

Indicates existing soffit access opening.

Indicates new soffit access opening. For details, see "DECK REPAIR DETAILS NO. 4" sheet.

HARTNELL AVENUE OVERCROSSING BR. NO. 06-0124

QUANTITIES

PUBLIC SAFETY PLAN	LUMP	SUM
RAPID SETTING CONCRETE (PATCH)	342	CF
REMOVE ASPHALT CONCRETE SURFACING	13,696	SQFT
REMOVE UNSOUND CONCRETE	342	CF
PREPARE CONCRETE BRIDGE DECK SURFACE	13,696	SQFT
FURNISH POLYESTER CONCRETE OVERLAY	1,027	CF
PLACE POLYESTER CONCRETE OVERLAY	13,696	SQFT
ACCESS OPENING, SOFFIT	8	EA
BRIDGE REMOVAL (PORTION), LOCATION A	LUMP	SUM
STRUCTURAL CONCRETE (BRIDGE, FIBER REINFORCED)	13	CY
GALVANIC ANODE	137	EA

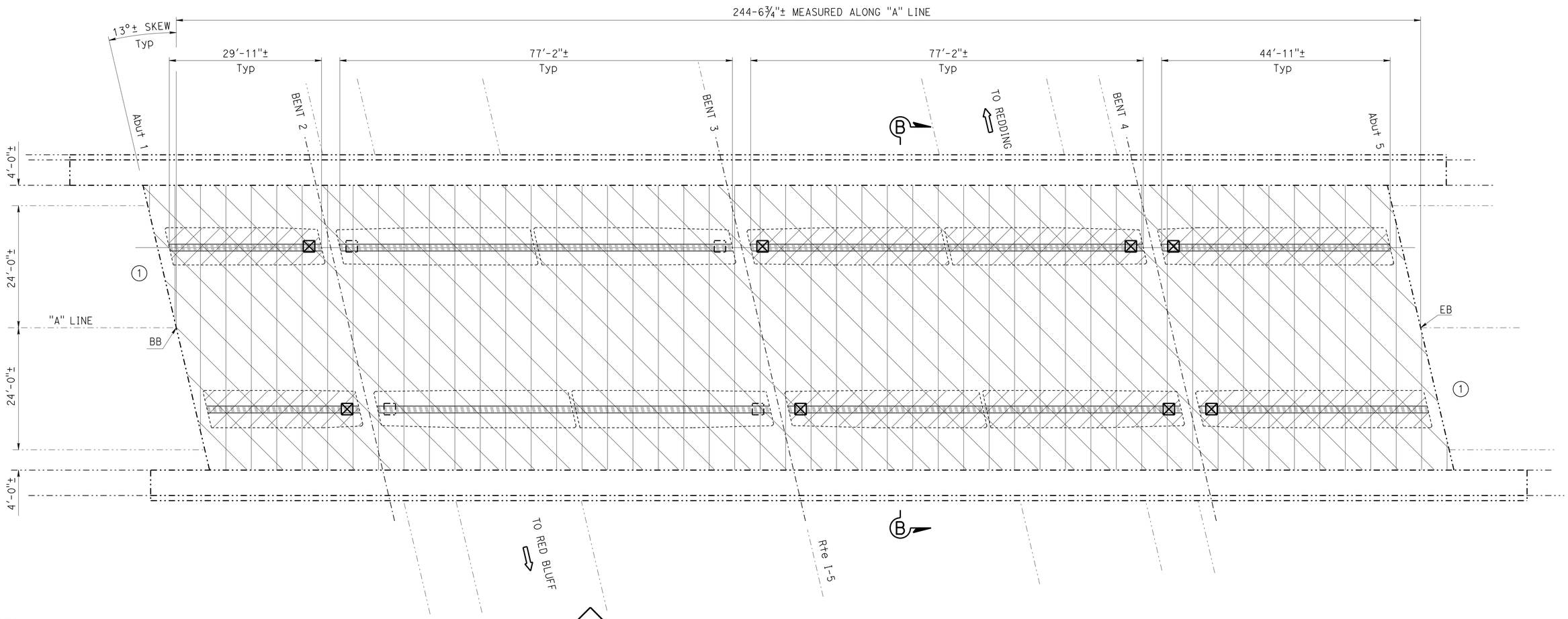

NOTE:
THE CONTRACTOR MUST VERIFY ALL CONTROLLING FIELD DIMENSIONS BEFORE ORDERING OR FABRICATING ANY MATERIAL.

N

HARTNELL AVENUE OVERCROSSING

Br. No. 06-0124, ROUTE 5, Sha, PM R13.95
1" = 10'

Matthew W. Lee 10-27-14
DESIGN ENGINEER

	BY	CHECKED
DESIGN	Tim Campbell	P. Kang
DETAILS	Dale Kubochi	P. Kang
QUANTITIES	Tim Campbell	P. Kang

LOAD FACTOR DESIGN — LIVE LOADING: HS20-44 AND ALTERNATIVE AND PERMIT DESIGN LOAD
LAYOUT — BY Dale Kubochi — CHECKED Tim Campbell
SPECIFICATIONS — BY Sharon Hansen — PLANS AND SPECS COMPARED Sharon Hansen

STATE OF CALIFORNIA
DEPARTMENT OF TRANSPORTATION

DIVISION OF MAINTENANCE
STRUCTURE MAINTENANCE DESIGN

BRIDGE NO. VARIOUS
POST MILE VARIES

ROUTE 5 BRIDGES
GENERAL PLAN NO. 3

STRUCTURES MAINTENANCE GENERAL PLAN SHEET (ENGLISH) (REV. 09-01-10)

ORIGINAL SCALE IN INCHES FOR REDUCED PLANS 0 1 2 3

UNIT: 3488
PROJECT NUMBER & PHASE: 0213000013
CONTRACT NO.: 02-4F6101

DISREGARD PRINTS BEARING EARLIER REVISION DATES
REVISION DATES 5-30-14 9-29-14 10-23-14
SHEET 3 OF 19

FILE => 02-4f6101-a-gp03.dgn

USERNAME => s115152 DATE PLOTTED => 25-FEB-2015 TIME PLOTTED => 07:54

DIST	COUNTY	ROUTE	POST MILES TOTAL PROJECT	SHEET No.	TOTAL SHEETS
02	Sha,Sis	5	Var	83	98

Tim Campbell 10-27-14
REGISTERED CIVIL ENGINEER DATE

01-30-15
PLANS APPROVAL DATE

REGISTERED PROFESSIONAL ENGINEER
TIM CAMPBELL
No. 63268
Exp. 06-30-16
CIVIL
STATE OF CALIFORNIA

The State of California or its officers or agents shall not be responsible for the accuracy or completeness of scanned copies of this plan sheet.

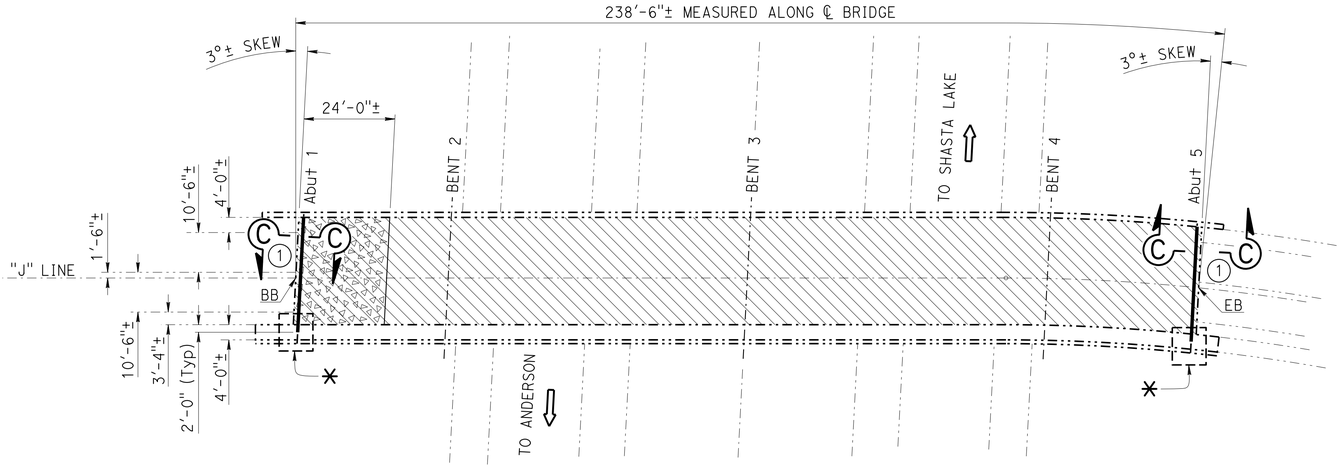

HILLTOP DRIVE OVERCROSSING

Br. No. 06-0101, ROUTE 5, Sha, PM R16.15
1" = 20'

HILLTOP DRIVE OVERCROSSING — BR. NO. 06-0101

QUANTITIES

PUBLIC SAFETY PLAN	LUMP	SUM
RAPID SETTING CONCRETE (PATCH)	85	CF
REMOVE UNSOUND CONCRETE	85	CF
PREPARE CONCRETE BRIDGE DECK SURFACE	6,757	SQFT
FURNISH POLYESTER CONCRETE OVERLAY	507	CF
PLACE POLYESTER CONCRETE OVERLAY	6,757	SQFT
REMOVE CHIP SEAL	680	SQFT
BRIDGE REMOVAL (PORTION), LOCATION B	LUMP	SUM
RECONSTRUCT STEEL COVER PLATE	2	EA
STRUCTURAL CONCRETE, BRIDGE	2	CY
JOINT SEAL (MR 1")	64	LF
BAR REINFORCING STEEL (EPOXY COATED) (BRIDGE)	296	LB
GALVANIC ANODE	34	EA

NOTES: (APPLY TO THIS SHEET ONLY)

Indicates limits of prepare concrete bridge deck surface, furnish and place new ¾" minimum depth polyester concrete overlay. Prior to placing new polyester concrete overlay, remove unsound concrete, place galvanic anodes and patch with rapid setting concrete as shown on "Joint And Deck Repair Detail" on "DECK REPAIR DETAILS NO. 1" sheet.

Indicates limits of remove existing 5"± depth AC overlay and membrane seal.

Indicates limits of remove existing ¾"± depth chip seal.

Indicates limits of install new joint seal. For details, see "JOINT SEAL DETAILS NO. 3" sheet.

Indicates limits of remove asphaltic plug joint seal, clean expansion joint and install new joint seal. For details, see "JOINT SEAL DETAILS NO. 3" sheet.

(1) For approach roadway taper, see "Roadway Plans".

- For "Section C-C", see "JOINT SEAL DETAILS NO. 2" sheet.
- For "Section D-D", see "JOINT SEAL DETAILS NO. 1" sheet.

✳ - See "Sidewalk Repair Detail" on "JOINT SEAL DETAILS NO. 2" sheet.

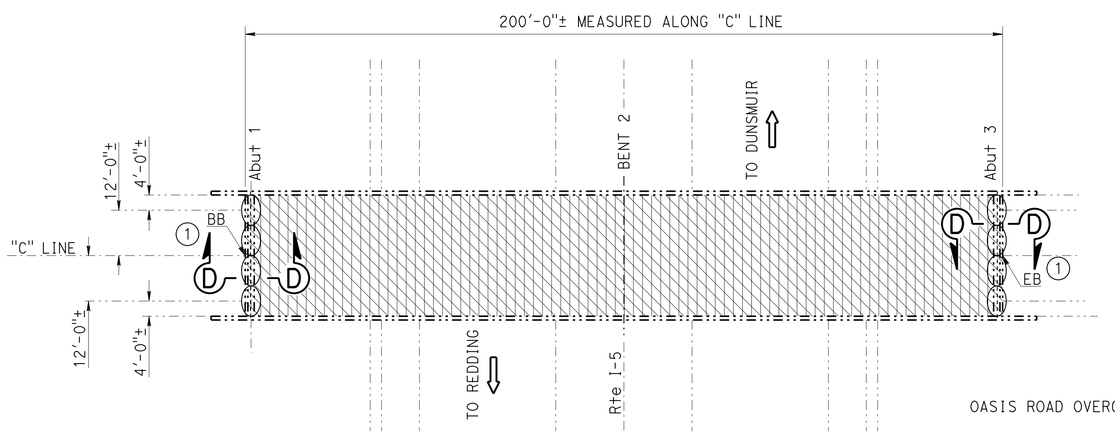

OASIS ROAD OVERCROSSING

Br. No. 06-0155, ROUTE 5, Sha, PM R19.40
1" = 20'

OASIS ROAD OVERCROSSING — BR. NO. 06-0155

QUANTITIES

PUBLIC SAFETY PLAN	LUMP	SUM
RAPID SETTING CONCRETE (PATCH)	160	CF
REMOVE ASPHALT CONCRETE SURFACING	6,400	SQFT
REMOVE UNSOUND CONCRETE	160	CF
PREPARE CONCRETE BRIDGE DECK SURFACE	6,400	SQFT
FURNISH POLYESTER CONCRETE OVERLAY	480	CF
PLACE POLYESTER CONCRETE OVERLAY	6,400	SQFT
CLEAN EXPANSION JOINT	66	LF
JOINT SEAL (MR 1")	66	LF
GALVANIC ANODE	64	EA

NOTE:
THE CONTRACTOR MUST VERIFY ALL CONTROLLING FIELD DIMENSIONS BEFORE ORDERING OR FABRICATING ANY MATERIAL.

Matthew W. Lee 10-27-14
DESIGN ENGINEER

	BY	CHECKED			
DESIGN	Tim Campbell	P. Kang	LOAD FACTOR DESIGN	LIVE LOADING: HS20-44 AND ALTERNATIVE AND PERMIT DESIGN LOAD	
DETAILS	Dale Kubochi	P. Kang	LAYOUT	Dale Kubochi	Tim Campbell
QUANTITIES	Tim Campbell	P. Kang	SPECIFICATIONS	Sharon Hansen	Sharon Hansen

STATE OF CALIFORNIA
DEPARTMENT OF TRANSPORTATION

DIVISION OF MAINTENANCE
STRUCTURE MAINTENANCE DESIGN

BRIDGE NO. VARIOUS
POST MILE VARIES

ROUTE 5 BRIDGES
GENERAL PLAN NO. 4

STRUCTURES MAINTENANCE GENERAL PLAN SHEET (ENGLISH) (REV. 09-01-10)

ORIGINAL SCALE IN INCHES FOR REDUCED PLANS 0 1 2 3

UNIT: 3488
PROJECT NUMBER & PHASE: 0213000013
CONTRACT NO.: 02-4F6101

DISREGARD PRINTS BEARING EARLIER REVISION DATES
REVISION DATES 5-15-14 8-5-14 10-23-14

SHEET 4 OF 19

FILE => 02-4f6101-a-gp04.dgn

USERNAME => s115152 DATE PLOTTED => 25-FEB-2015 TIME PLOTTED => 07:54

DIST	COUNTY	ROUTE	POST MILES TOTAL PROJECT	SHEET No.	TOTAL SHEETS
02	Sha,Sis	5	Var	84	98

Tim Campbell 10-27-14
REGISTERED CIVIL ENGINEER DATE

01-30-15
PLANS APPROVAL DATE

REGISTERED PROFESSIONAL ENGINEER
TIM CAMPBELL
No. 63268
Exp. 06-30-16
CIVIL
STATE OF CALIFORNIA

The State of California or its officers or agents shall not be responsible for the accuracy or completeness of scanned copies of this plan sheet.

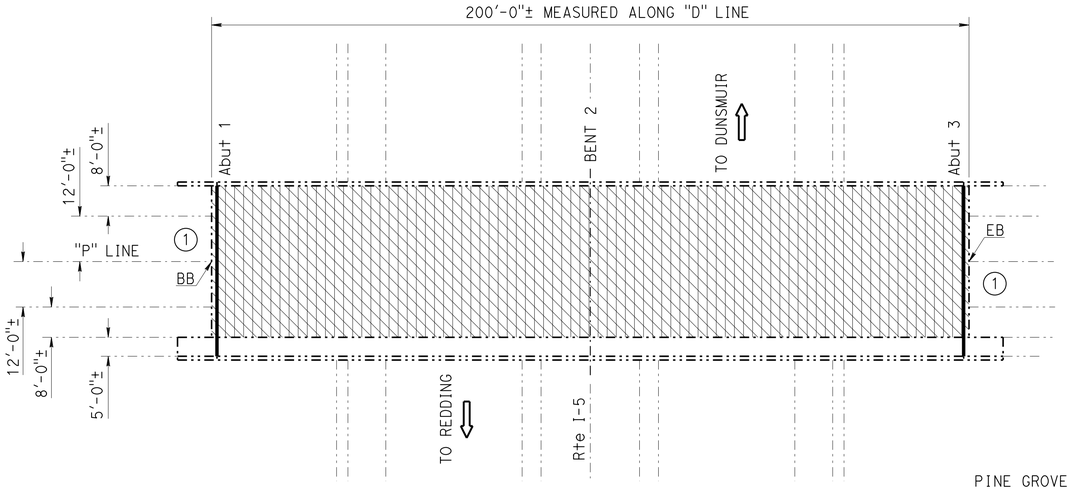

✱✱ 3½"± DEPTH AC OVERLAY

PINE GROVE OVERCROSSING

Br. No. 06-0161, ROUTE 5, Sha, PM R21.00
1" = 20'

PINE GROVE OVERCROSSING — BR. NO. 06-0161

QUANTITIES

PUBLIC SAFETY PLAN	LUMP	SUM
RAPID SETTING CONCRETE (PATCH)	200	CF
REMOVE ASPHALT CONCRETE SURFACING	8,000	SQFT
REMOVE UNSOUND CONCRETE	200	CF
PREPARE CONCRETE BRIDGE DECK SURFACE	8,000	SQFT
FURNISH POLYESTER CONCRETE OVERLAY	600	CF
PLACE POLYESTER CONCRETE OVERLAY	8,000	SQFT
CLEAN EXPANSION JOINT	94	LF
JOINT SEAL (MR 1 1/2")	94	LF
GALVANIC ANODE	80	EA

NOTES: (APPLY TO THIS SHEET ONLY)

Indicates limits of prepare concrete bridge deck surface, furnish and place new ¾" minimum depth polyester concrete overlay. Prior to placing new polyester concrete overlay, remove unsound concrete, place galvanic anodes and patch with rapid setting concrete as shown on "Joint And Deck Repair Detail" on "DECK REPAIR DETAILS NO. 1" sheet.

Indicates limits of remove existing (✱✱) depth AC overlay and membrane seal.

Indicates limits of clean expansion joint and install new joint seal. For details, see "JOINT SEAL DETAILS NO. 3" sheet.

Indicates limits of remove asphaltic plug joint seal, clean expansion joint and install new joint seal. For details, see "JOINT SEAL DETAILS NO. 3" sheet.

(1) For approach roadway taper, see "Roadway Plans".

- For "Section D-D", see "JOINT SEAL DETAILS NO. 1" sheet.

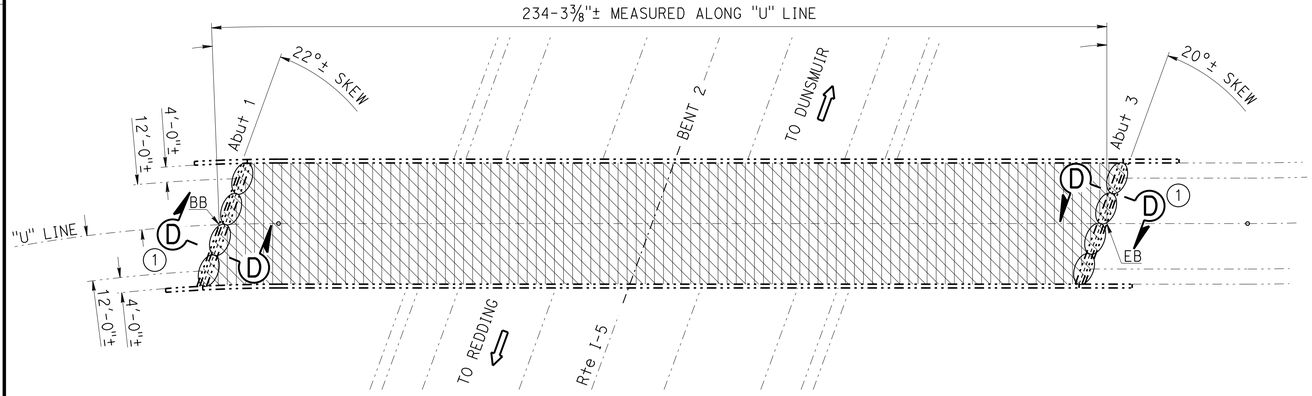

✱✱ 3"± DEPTH AC OVERLAY

UNION SCHOOL ROAD OVERCROSSING

Br. No. 06-0015, ROUTE 5, Sha, PM R22.41
1" = 20'

UNION SCHOOL ROAD OVERCROSSING — BR. NO. 06-0015

QUANTITIES

PUBLIC SAFETY PLAN	LUMP	SUM
RAPID SETTING CONCRETE (PATCH)	187	CF
REMOVE ASPHALT CONCRETE SURFACING	7,497	SQFT
REMOVE UNSOUND CONCRETE	187	CF
PREPARE CONCRETE BRIDGE DECK SURFACE	7,497	SQFT
FURNISH POLYESTER CONCRETE OVERLAY	562	CF
PLACE POLYESTER CONCRETE OVERLAY	7,497	SQFT
CLEAN EXPANSION JOINT	70	LF
JOINT SEAL (MR 1")	70	LF
GALVANIC ANODE	75	EA

NOTE:
THE CONTRACTOR MUST VERIFY ALL CONTROLLING FIELD DIMENSIONS BEFORE ORDERING OR FABRICATING ANY MATERIAL.

Matthew A. Lee 10-27-14
DESIGN ENGINEER

	BY	CHECKED			
DESIGN	Tim Campbell	P. Kang	LOAD FACTOR DESIGN	LIVE LOADING: HS20-44 AND ALTERNATIVE AND PERMIT DESIGN LOAD	
DETAILS	Dale Kubochi	P. Kang	LAYOUT	Dale Kubochi	Tim Campbell
QUANTITIES	Tim Campbell	P. Kang	SPECIFICATIONS	Sharon Hansen	PLANS AND SPECS COMPARED Sharon Hansen

STATE OF CALIFORNIA
DEPARTMENT OF TRANSPORTATION

DIVISION OF MAINTENANCE
STRUCTURE MAINTENANCE DESIGN

BRIDGE NO. VARIOUS
POST MILE VARIES

ROUTE 5 BRIDGES
GENERAL PLAN NO. 5

STRUCTURES MAINTENANCE GENERAL PLAN SHEET (ENGLISH) (REV. 09-01-10)

ORIGINAL SCALE IN INCHES FOR REDUCED PLANS 0 1 2 3

UNIT: 3488
PROJECT NUMBER & PHASE: 0213000013
CONTRACT NO.: 02-4F6101

DISREGARD PRINTS BEARING EARLIER REVISION DATES

REVISION DATES: 5-30-14 6-9-14 8-5-14 10-23-14

SHEET 5 OF 19

FILE => 02-4f6101-a-gp05.dgn

USERNAME => s115152 DATE PLOTTED => 25-FEB-2015 TIME PLOTTED => 07:54

DIST	COUNTY	ROUTE	POST MILES TOTAL PROJECT	SHEET No.	TOTAL SHEETS
02	Sha,Sis	5	Var	85	98

Tim Campbell 10-27-14
REGISTERED CIVIL ENGINEER DATE

01-30-15
PLANS APPROVAL DATE

REGISTERED PROFESSIONAL ENGINEER
TIM CAMPBELL
No. 63268
Exp. 06-30-16
CIVIL
STATE OF CALIFORNIA

The State of California or its officers or agents shall not be responsible for the accuracy or completeness of scanned copies of this plan sheet.

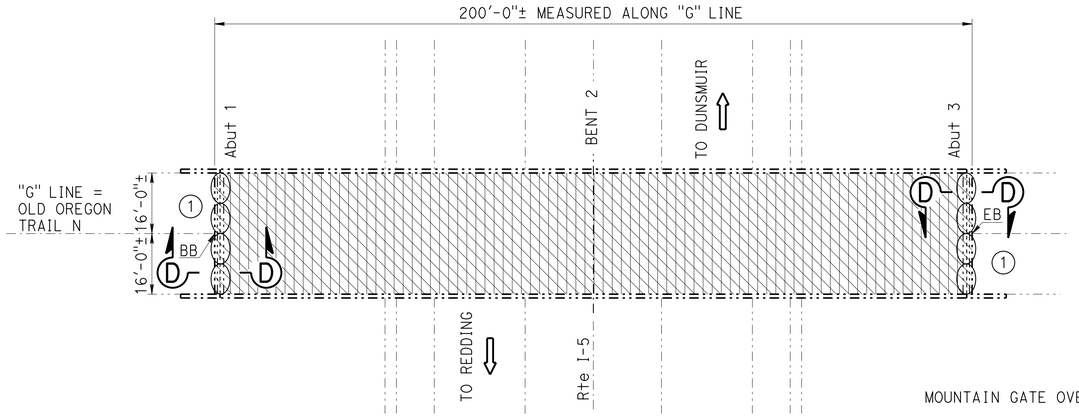

✱✱ 3½"± DEPTH AC OVERLAY

MOUNTAIN GATE OVERCROSSING

Br. No. 06-0154, ROUTE 5, Sha, PM R24.08
1" = 20'

MOUNTAIN GATE OVERCROSSING — BR. NO. 06-0154

QUANTITIES

PUBLIC SAFETY PLAN	LUMP	SUM
RAPID SETTING CONCRETE (PATCH)	160	CF
REMOVE ASPHALT CONCRETE SURFACING	6,400	SQFT
REMOVE UNSOUND CONCRETE	160	CF
PREPARE CONCRETE BRIDGE DECK SURFACE	6,400	SQFT
FURNISH POLYESTER CONCRETE OVERLAY	480	CF
PLACE POLYESTER CONCRETE OVERLAY	6,400	SQFT
CLEAN EXPANSION JOINT	66	LF
JOINT SEAL (MR 1")	66	LF
GALVANIC ANODE	64	EA

NOTES: (APPLY TO THIS SHEET ONLY)

Indicates limits of prepare concrete bridge deck surface, furnish and place new ¾" minimum depth polyester concrete overlay. Prior to placing new polyester concrete overlay, remove unsound concrete, place galvanic anodes and patch with rapid setting concrete as shown on "Joint And Deck Repair Detail" on "DECK REPAIR DETAILS NO. 1" sheet.

Indicates limits of remove existing (✱✱) depth AC overlay and membrane seal.

Indicates limits of clean expansion joint and install new joint seal. For details, see "JOINT SEAL DETAILS NO. 3" sheet.

Indicates limits of remove asphaltic plug joint seal, clean expansion joint and install new joint seal. For details, see "JOINT SEAL DETAILS NO. 3" sheet.

(1) For approach roadway taper, see "Roadway Plans".

- For "Section D-D", see "JOINT SEAL DETAILS NO. 1" sheet.

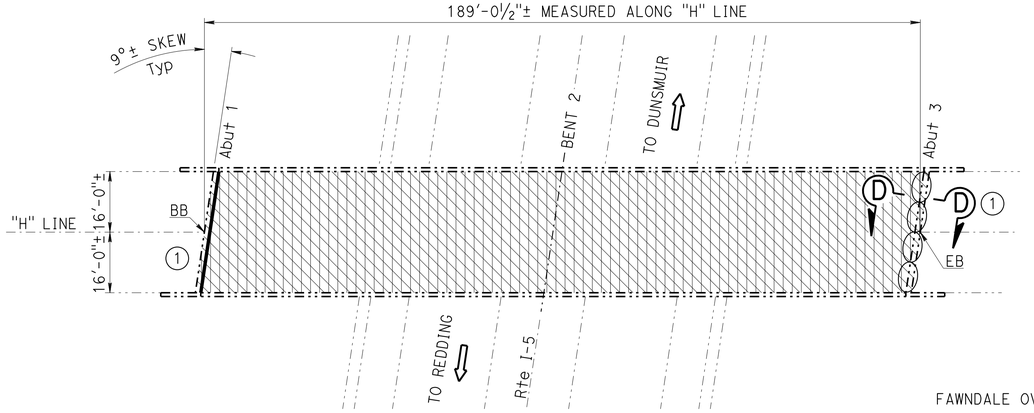

✱✱ 3½"± DEPTH AC OVERLAY

FAWNDALE OVERCROSSING

Br. No. 06-0162, ROUTE 5, Sha, PM R26.04
1" = 20'

FAWNDALE OVERCROSSING — BR. NO. 06-0162

QUANTITIES

PUBLIC SAFETY PLAN	LUMP	SUM
RAPID SETTING CONCRETE (PATCH)	151	CF
REMOVE ASPHALT CONCRETE SURFACING	6,049	SQFT
REMOVE UNSOUND CONCRETE	151	CF
PREPARE CONCRETE BRIDGE DECK SURFACE	6,049	SQFT
FURNISH POLYESTER CONCRETE OVERLAY	454	CF
PLACE POLYESTER CONCRETE OVERLAY	6,049	SQFT
CLEAN EXPANSION JOINT	67	LF
JOINT SEAL (MR 1")	67	LF
GALVANIC ANODE	60	EA

NOTE:
THE CONTRACTOR MUST VERIFY ALL CONTROLLING FIELD DIMENSIONS BEFORE ORDERING OR FABRICATING ANY MATERIAL.

DIST	COUNTY	ROUTE	POST MILES TOTAL PROJECT	SHEET No.	TOTAL SHEETS
02	Sha,Sis	5	Var	86	98

REGISTERED CIVIL ENGINEER 10-27-14 DATE

01-30-15
PLANS APPROVAL DATE

REGISTERED PROFESSIONAL ENGINEER TIM CAMPBELL No. 63268 Exp. 06-30-16 CIVIL STATE OF CALIFORNIA

The State of California or its officers or agents shall not be responsible for the accuracy or completeness of scanned copies of this plan sheet.

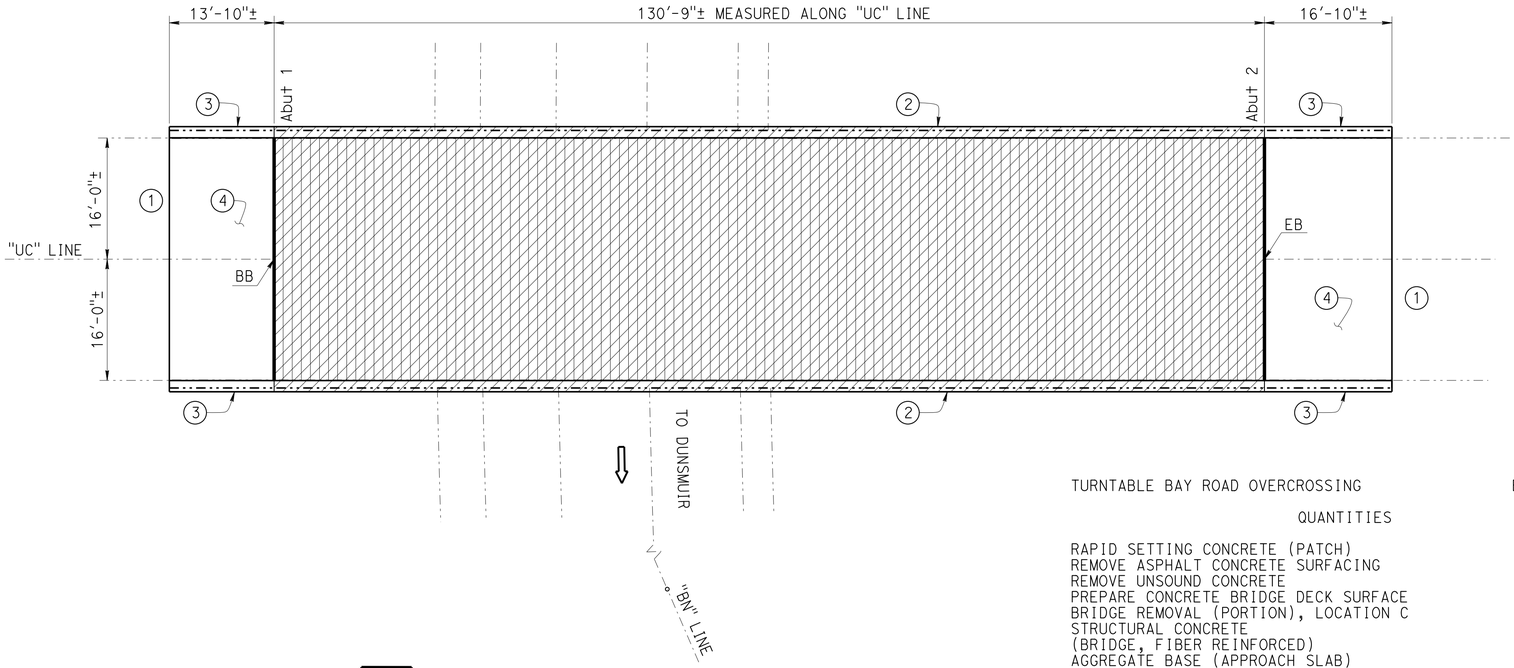

✱✱ 6"± DEPTH AC OVERLAY

TURNTABLE BAY ROAD OVERCROSSING

Br. No. 06-0130R, ROUTE 5, Sha, PM R29.32
1" = 10'

TURNTABLE BAY ROAD OVERCROSSING — BR. NO. 06-0130R

QUANTITIES

RAPID SETTING CONCRETE (PATCH)	105	CF
REMOVE ASPHALT CONCRETE SURFACING	4,184	SQFT
REMOVE UNSOUND CONCRETE	105	CF
PREPARE CONCRETE BRIDGE DECK SURFACE	4,598	SQFT
BRIDGE REMOVAL (PORTION), LOCATION C	LUMP	SUM
STRUCTURAL CONCRETE (BRIDGE, FIBER REINFORCED)	36	CY
AGGREGATE BASE (APPROACH SLAB)	10	CY
STRUCTURAL CONCRETE, APPROACH SLAB (TYPE R)	40	CY
PAVING NOTCH EXTENSION	48	CF
DRILL AND BOND DOWEL	540	LF
JOINT SEAL (MR 1")	66	LF
BAR REINFORCING STEEL (BRIDGE, STAINLESS STEEL)	16,827	LB
GALVANIC ANODE	42	EA
CONCRETE BARRIER (TYPE 736)	61	LF
CONCRETE BARRIER (TYPE 736 MODIFIED)	262	LF

NOTES: (APPLY TO THIS SHEET ONLY)

Indicates limits of prepare concrete bridge deck surface, furnish and place new 4½" fiber reinforced concrete overlay. For details, see "DECK ON DECK DETAILS NO. 1", "DECK ON DECK DETAILS NO. 2" and "DECK ON DECK DETAILS NO. 3" sheets. Prior to placing new fiber reinforced concrete overlay, remove unsound concrete, place galvanic anodes and patch with rapid setting concrete as shown on "Joint And Deck Repair Detail" on "DECK REPAIR DETAILS NO. 1" sheet.

Indicates limits of prepare concrete bridge deck surface, furnish and place new ¾" minimum depth polyester concrete overlay. Prior to placing new polyester concrete overlay, remove unsound concrete, place galvanic anodes and patch with rapid setting concrete as shown on "Joint And Deck Repair Detail" on "DECK REPAIR DETAILS NO. 1" sheet.

Indicates limits of remove existing (✱✱) depth AC overlay and membrane seal.

Indicates location of clean expansion joint and install new joint seal. For details, see "JOINT SEAL DETAILS NO. 3" sheet.

(1) For approach roadway taper, see "Roadway Plans".

(2) Remove existing Type 9 Barrier Rail and replace with Concrete Barrier Type 736 Modified. See "DECK ON DECK DETAILS NO. 2" and "DECK ON DECK DETAILS NO. 3" sheets.

(3) Remove existing Type 9 Barrier Rail and section of wingwall and replace with Concrete Barrier Type 736. See "Elevation At Abutment" on "DECK ON DECK DETAILS NO. 2" sheet.

(4) New approach slab, see "STRUCTURE APPROACH TYPE R(30D) MODIFIED" sheet.

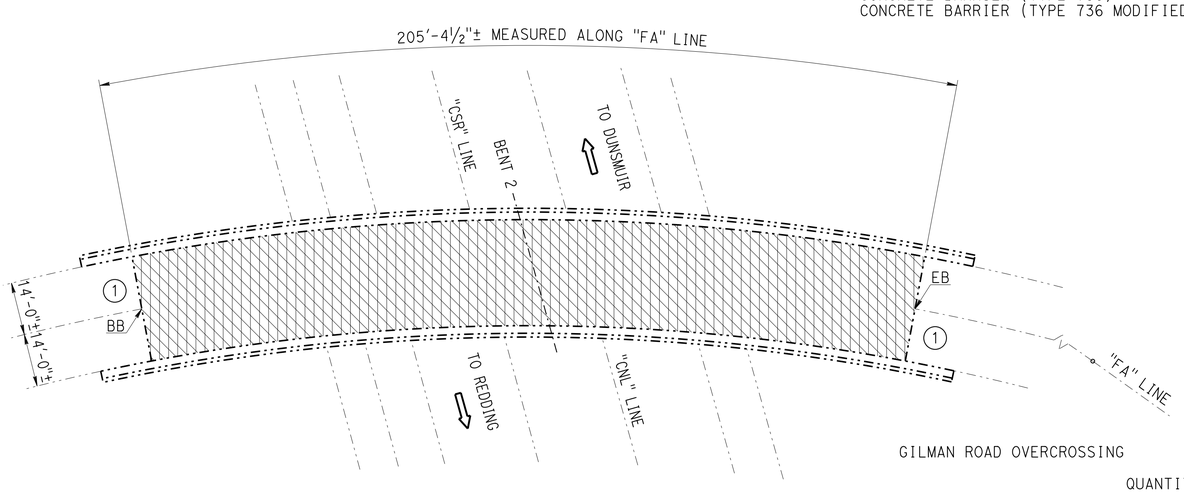

✱✱ 3"± DEPTH AC OVERLAY

GILMAN ROAD OVERCROSSING

Br. No. 06-0160, ROUTE 5, Sha, PM R36.83
1" = 20'

GILMAN ROAD OVERCROSSING — BR. NO. 06-0160

QUANTITIES

RAPID SETTING CONCRETE (PATCH)	144	CF
REMOVE ASPHALT CONCRETE SURFACING	5,751	SQFT
REMOVE UNSOUND CONCRETE	144	CF
PREPARE CONCRETE BRIDGE DECK SURFACE	5,751	SQFT
FURNISH POLYESTER CONCRETE OVERLAY	431	CF
PLACE POLYESTER CONCRETE OVERLAY	5,751	SQFT
GALVANIC ANODE	58	EA

NOTE:
THE CONTRACTOR MUST VERIFY ALL CONTROLLING FIELD DIMENSIONS BEFORE ORDERING OR FABRICATING ANY MATERIAL.

DESIGN ENGINEER 10-27-14

	BY	CHECKED
DESIGN	Tim Campbell	P. Kang
DETAILS	Dale Kubochi	P. Kang
QUANTITIES	Tim Campbell	P. Kang

LOAD FACTOR DESIGN — LIVE LOADING: HS20-44 AND ALTERNATIVE AND PERMIT DESIGN LOAD

	BY	CHECKED
LAYOUT	Dale Kubochi	Tim Campbell
SPECIFICATIONS	Sharon Hansen	PLANS AND SPECS COMPARED Sharon Hansen

STATE OF CALIFORNIA
DEPARTMENT OF TRANSPORTATION

DIVISION OF MAINTENANCE
STRUCTURE MAINTENANCE DESIGN

BRIDGE NO. VARIOUS
POST MILE VARIES

ROUTE 5 BRIDGES
GENERAL PLAN NO. 7

STRUCTURES MAINTENANCE GENERAL PLAN SHEET (ENGLISH) (REV. 09-01-10)

ORIGINAL SCALE IN INCHES FOR REDUCED PLANS 0 1 2 3

UNIT: 3488
PROJECT NUMBER & PHASE: 0213000013
CONTRACT NO.: 02-4F6101

DISREGARD PRINTS BEARING EARLIER REVISION DATES

REVISION DATES 5-15-14 9-29-14 10-23-14

SHEET 7 OF 19

FILE => 02-4f6101-a-gp07.dgn

USERNAME => s115152 DATE PLOTTED => 25-FEB-2015 TIME PLOTTED => 07:54

DIST	COUNTY	ROUTE	POST MILES TOTAL PROJECT	SHEET No.	TOTAL SHEETS
02	Sha,Sis	5	Var	87	98

REGISTERED CIVIL ENGINEER 10-27-14 DATE

01-30-15
PLANS APPROVAL DATE

REGISTERED PROFESSIONAL ENGINEER TIM CAMPBELL No. 63268 Exp. 06-30-16 CIVIL STATE OF CALIFORNIA

The State of California or its officers or agents shall not be responsible for the accuracy or completeness of scanned copies of this plan sheet.

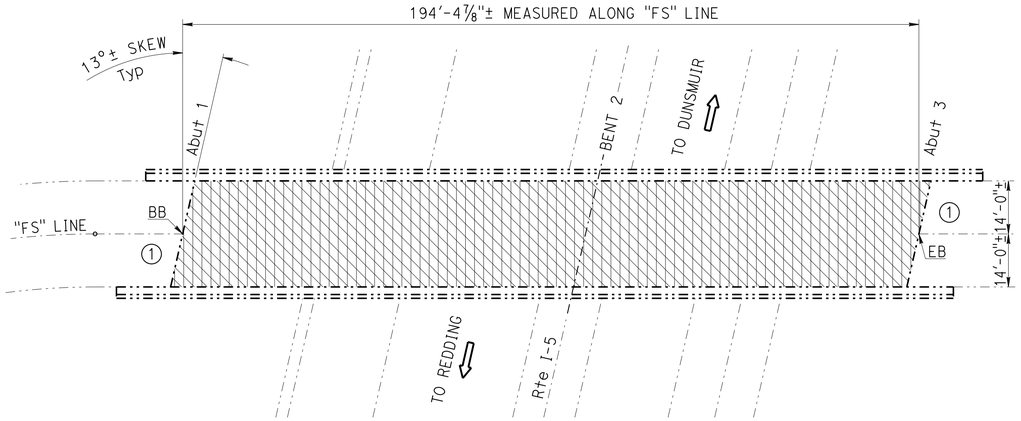

NOTES: (APPLY TO THIS SHEET ONLY)

Indicates limits of prepare concrete bridge deck surface, furnish and place new ¾" minimum depth polyester concrete overlay. Prior to placing new polyester concrete overlay, remove unsound concrete, place galvanic anodes and patch with rapid setting concrete as shown on "Joint And Deck Repair Detail" on "DECK REPAIR DETAILS NO. 1" sheet.

Indicates limits of remove existing 3½"± depth AC overlay and membrane seal.

Indicates limits of clean expansion joint and install new joint seal. For details, see "JOINT SEAL DETAILS NO. 3" sheet.

(1) For approach roadway taper, see "Roadway Plans".

- For "Section E-E", see "JOINT SEAL DETAILS NO. 1" sheet.

ANTLER SUMMIT OVERCROSSING

Br. No. 06-0158, ROUTE 5, Sha, PM R39.05
1" = 20'

ANTLER SUMMIT OVERCROSSING — BR. NO. 06-0158

QUANTITIES

RAPID SETTING CONCRETE (PATCH)	136	CF
REMOVE ASPHALT CONCRETE SURFACING	5,443	SQFT
REMOVE UNSOUND CONCRETE	136	CF
PREPARE CONCRETE BRIDGE DECK SURFACE	5,443	SQFT
FURNISH POLYESTER CONCRETE OVERLAY	408	CF
PLACE POLYESTER CONCRETE OVERLAY	5,443	SQFT
GALVANIC ANODE	54	EA

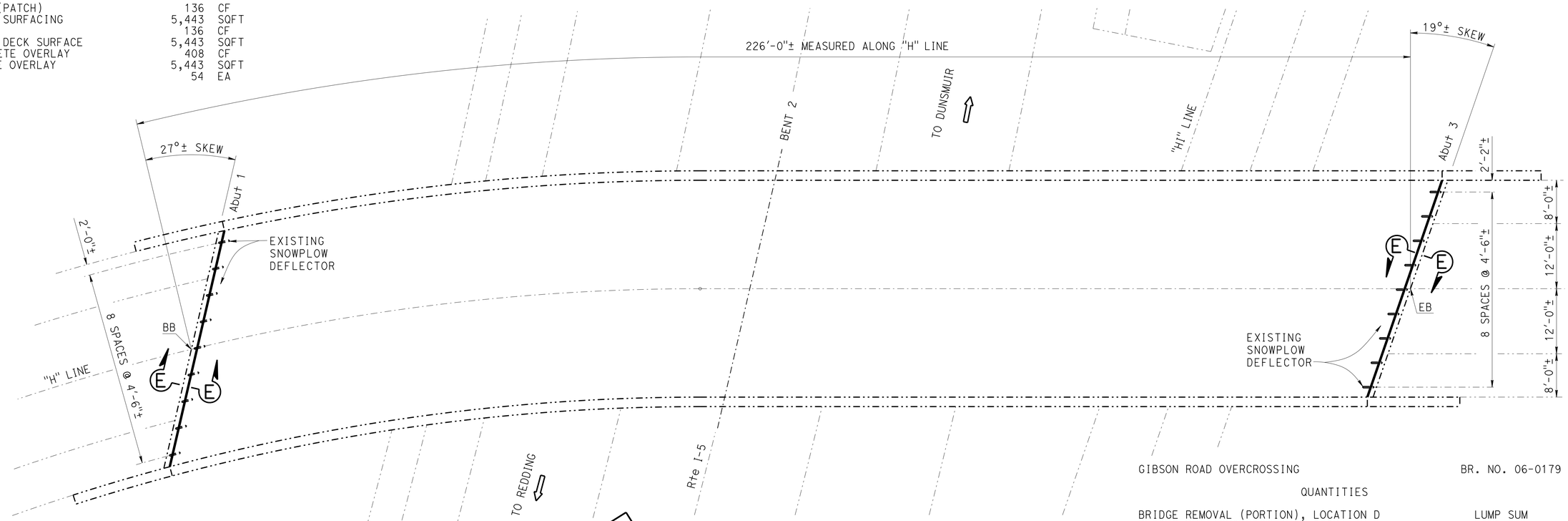

GIBSON ROAD OVERCROSSING — BR. NO. 06-0179

QUANTITIES

BRIDGE REMOVAL (PORTION), LOCATION D	LUMP	SUM
RECONSTRUCT SNOWPLOW DEFLECTOR	18	EA
STRUCTURAL CONCRETE, BRIDGE	4	CY
CLEAN EXPANSION JOINT	89	LF
JOINT SEAL (MR 1")	89	LF
BAR REINFORCING STEEL (EPOXY COATED)	470	LB

NOTE:
THE CONTRACTOR MUST VERIFY ALL CONTROLLING FIELD DIMENSIONS BEFORE ORDERING OR FABRICATING ANY MATERIAL.

GIBSON ROAD OVERCROSSING

Br. No. 06-0179, ROUTE 5, Sha, PM 53.30
1" = 10'

NOTES: (APPLY TO THIS SHEET ONLY)

- All bar reinforcing steel to be stainless steel.

DIST	COUNTY	ROUTE	POST MILES TOTAL PROJECT	SHEET No.	TOTAL SHEETS
02	Sha,Sis	5	Var	88	98

Tim Campbell 10-27-14
REGISTERED CIVIL ENGINEER DATE

01-30-15
PLANS APPROVAL DATE

REGISTERED PROFESSIONAL ENGINEER
TIM CAMPBELL
No. 63268
Exp. 06-30-16
CIVIL
STATE OF CALIFORNIA

The State of California or its officers or agents shall not be responsible for the accuracy or completeness of electronic copies of this plan sheet.

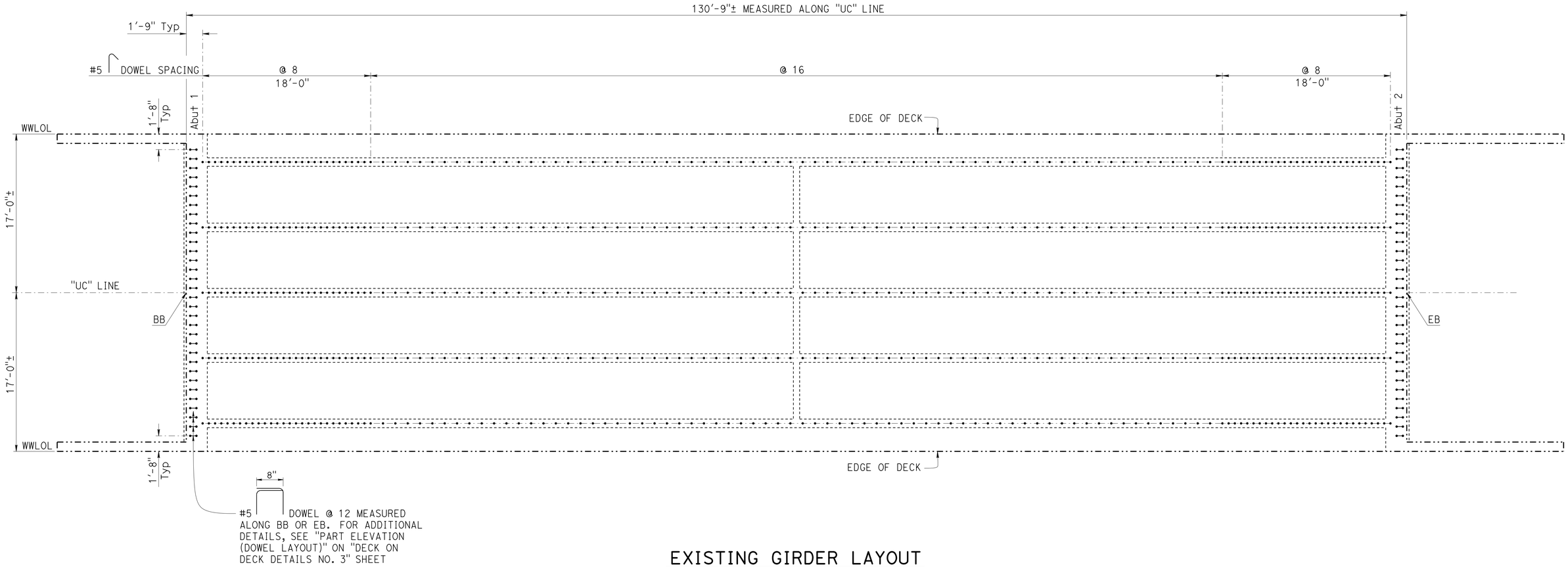

EXISTING GIRDER LAYOUT

3/16" = 1'-0"

(Br. No. 06-0130R)

NOTE:
THE CONTRACTOR MUST VERIFY ALL CONTROLLING FIELD DIMENSIONS BEFORE ORDERING OR FABRICATING ANY MATERIAL.

	BY	CHECKED
DESIGN	Tim Campbell	P. Kang
DETAILS	Dale Kubochi	P. Kang
QUANTITIES	Tim Campbell	P. Kang

STATE OF CALIFORNIA
DEPARTMENT OF TRANSPORTATION

DIVISION OF MAINTENANCE
STRUCTURE MAINTENANCE DESIGN

BRIDGE NO. VARIOUS
POST MILE VARIES

ROUTE 5 BRIDGES
DECK ON DECK DETAILS NO. 1

STRUCTURES MAINTENANCE DETAIL SHEET (ENGLISH) (REV. 09-01-10)

ORIGINAL SCALE IN INCHES FOR REDUCED PLANS 0 1 2 3

UNIT: 3488
PROJECT NUMBER & PHASE: 0213000013
CONTRACT NO.: 02-4F6101

DISREGARD PRINTS BEARING EARLIER REVISION DATES

REVISION DATES: 12-14-13 5-30-14 10-28-14

SHEET 9 OF 19

FILE => 02-4f6101-d-deck-01.dgn

USERNAME => s115152 DATE PLOTTED => 25-FEB-2015 TIME PLOTTED => 07:54

DIST	COUNTY	ROUTE	POST MILES TOTAL PROJECT	SHEET No.	TOTAL SHEETS
02	Sha,Sis	5	Var	89	98

Tim Campbell 10-27-14
REGISTERED CIVIL ENGINEER DATE

01-30-15
PLANS APPROVAL DATE

REGISTERED PROFESSIONAL ENGINEER TIM CAMPBELL No. 63268 Exp. 06-30-16 CIVIL STATE OF CALIFORNIA

The State of California or its officers or agents shall not be responsible for the accuracy or completeness of electronic copies of this plan sheet.

Notes: (APPLY TO THIS SHEET ONLY)

Remove existing 5"± AC overlay with waterproof membrane and Type 9 barrier railing.

Remove existing Type 9 barrier railing and top of Wingwall.

- All bar reinforcing steel to be stainless steel.

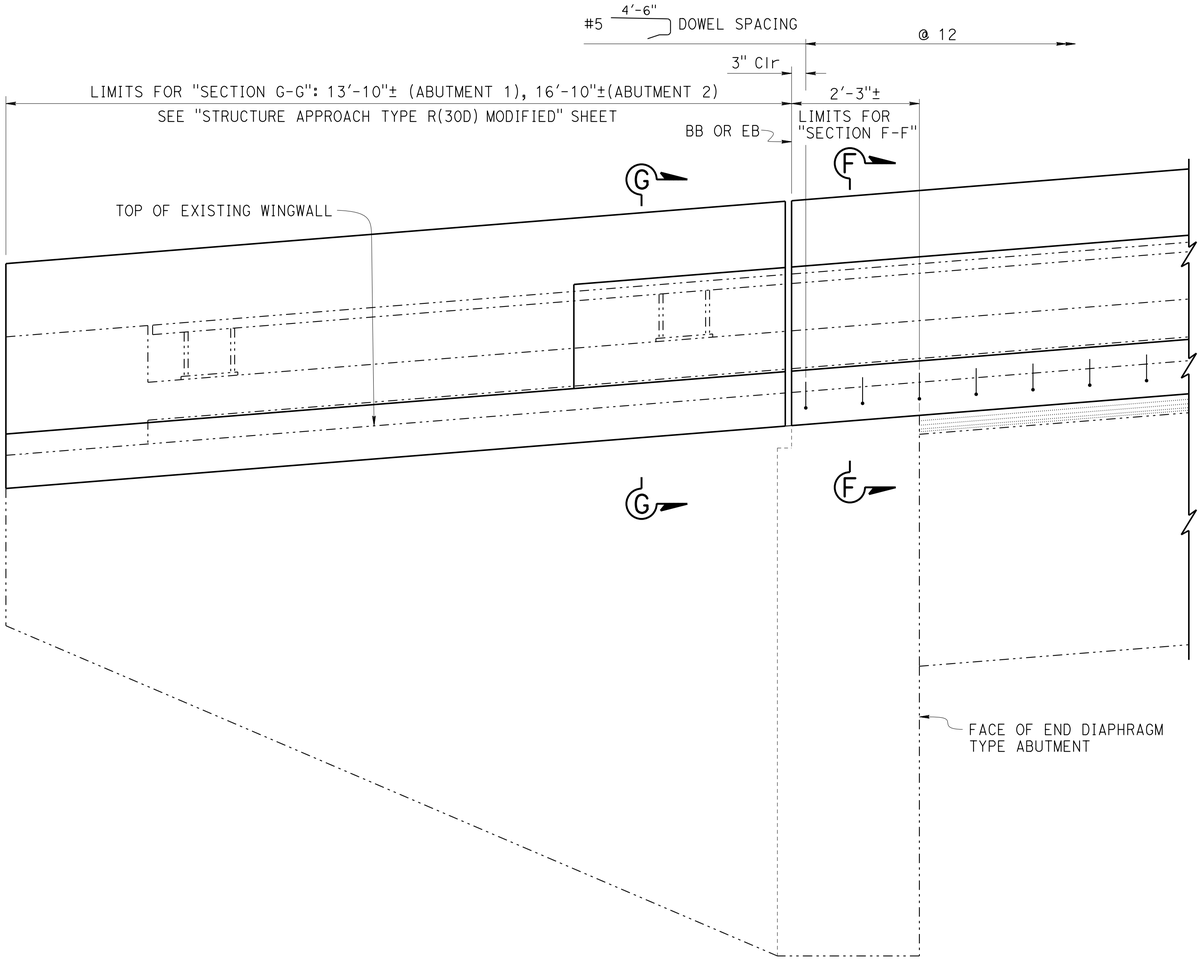

ELEVATION AT ABUTMENT

3/4" = 1'-0"

(Br. No. 06-0130R)

NOTE: Abut 1 shown, Abut 2 similar except as noted.

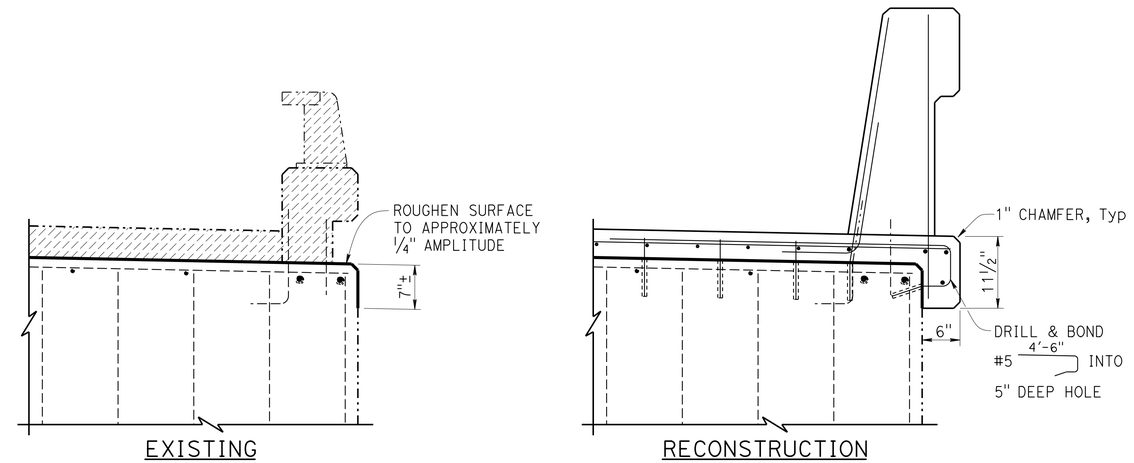

SECTION F-F

1" = 1'-0"

Note: For reinforcement and details not shown or noted, see "Typical Section" on " DECK ON DECK DETAILS NO. 3" sheet.

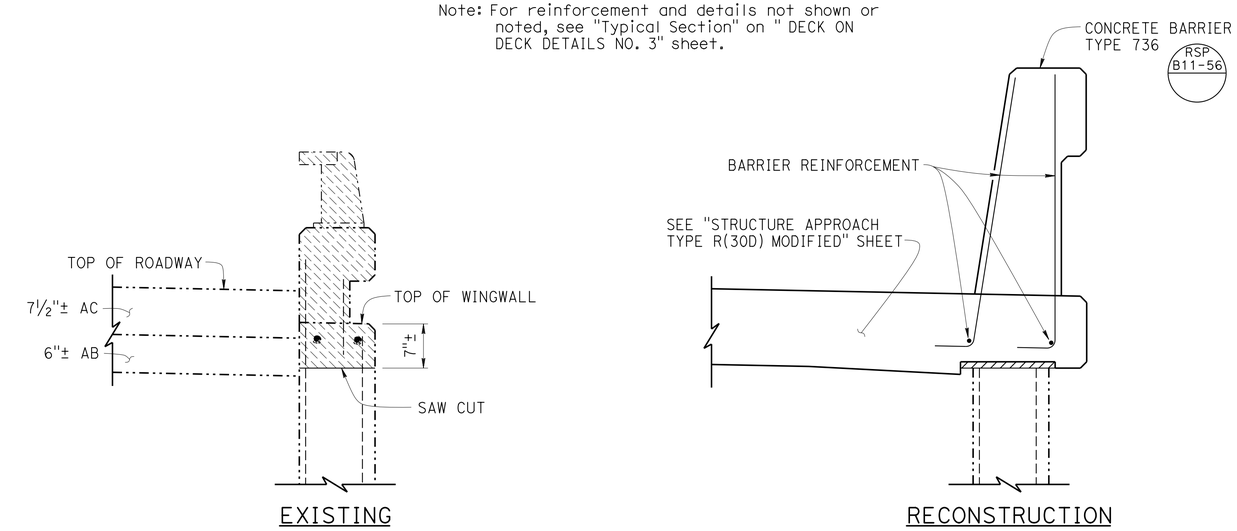

SECTION G-G

1" = 1'-0"

NOTE:
THE CONTRACTOR MUST VERIFY ALL CONTROLLING FIELD DIMENSIONS BEFORE ORDERING OR FABRICATING ANY MATERIAL.

	BY	CHECKED
DESIGN	Tim Campbell	P. Kang
DETAILS	Dale Kubochi	P. Kang
QUANTITIES	Tim Campbell	P. Kang

STATE OF CALIFORNIA
DEPARTMENT OF TRANSPORTATION

DIVISION OF MAINTENANCE
STRUCTURE MAINTENANCE DESIGN

BRIDGE NO. VARIOUS
POST MILE VARIES

ROUTE 5 BRIDGES
DECK ON DECK DETAILS NO. 2

STRUCTURES MAINTENANCE DETAIL SHEET (ENGLISH) (REV. 09-01-10)

ORIGINAL SCALE IN INCHES FOR REDUCED PLANS 0 1 2 3

UNIT: 3488
PROJECT NUMBER & PHASE: 0213000013

CONTRACT NO.: 02-4F6101

DISREGARD PRINTS BEARING EARLIER REVISION DATES

REVISION DATES 12-11-13 5-30-14 10-28-14

SHEET 10 OF 19

FILE => 02-4f6101-d-deck-02.dgn

USERNAME => s115152 DATE PLOTTED => 25-FEB-2015 TIME PLOTTED => 07:54

DIST	COUNTY	ROUTE	POST MILES TOTAL PROJECT	SHEET No.	TOTAL SHEETS
02	Sha,Sis	5	Var	90	98

Tim Campbell 10-27-14
REGISTERED CIVIL ENGINEER DATE

01-30-15
PLANS APPROVAL DATE

REGISTERED PROFESSIONAL ENGINEER TIM CAMPBELL No. 63268 Exp. 06-30-16 CIVIL STATE OF CALIFORNIA

The State of California or its officers or agents shall not be responsible for the accuracy or completeness of electronic copies of this plan sheet.

Notes: (APPLY TO THIS SHEET ONLY)

Remove existing 5"± AC overlay with waterproof membrane and Type 9 Barrier Railing.

(1) Limits to roughen deck surface approximately 1/4" amplitude, BB to EB

- All bar reinforcing steel to be stainless steel.

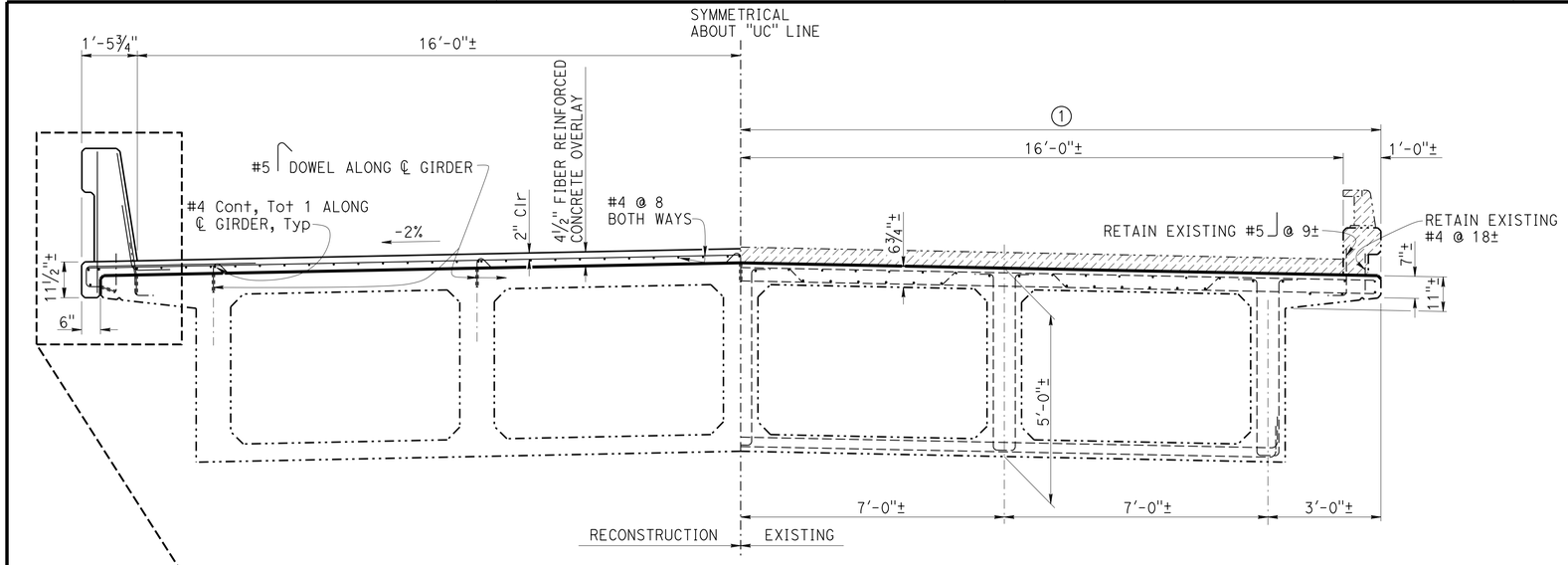

TYPICAL SECTION

1/2" = 1'-0"

(Br. No. 06-0130R)

GENERAL NOTES
LOAD FACTOR DESIGN
(Br. No. 06-0130R)

DESIGN:
Bridge Design Specifications
('96 AASHTO w/Revisions by Caltrans)

DEAD LOAD:
Includes 9 psf for future 3/4" thick polyester concrete overlay.

LIVE LOADING:
HS20-44

CONCRETE:
fy = 60 ksi
f'c = 3.6 ksi
n = 8

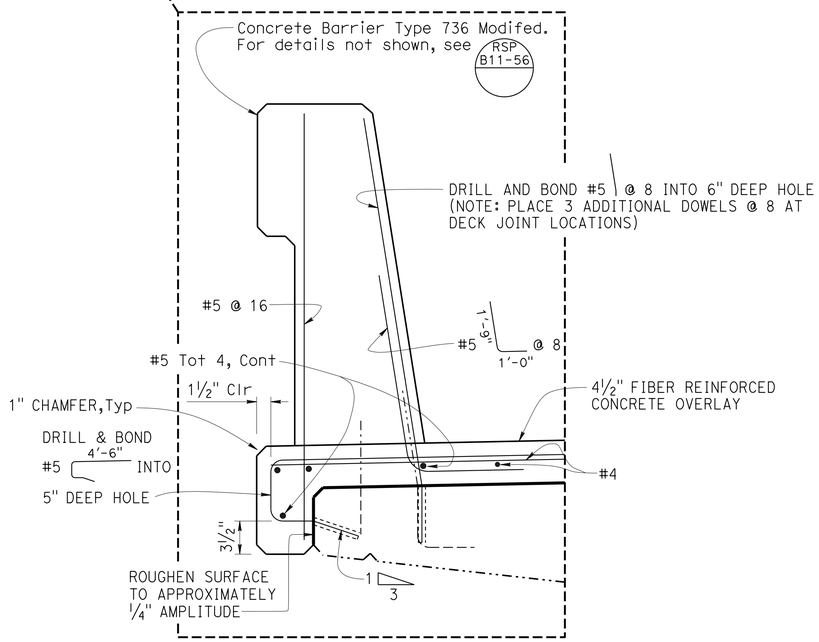

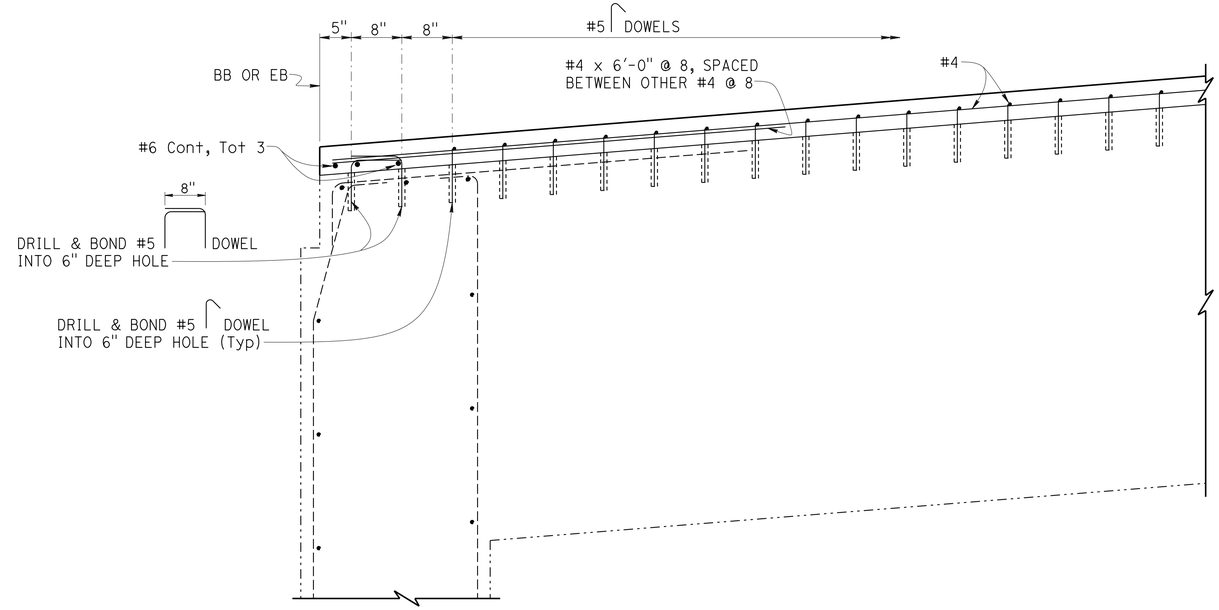

PART ELEVATION (DOWEL LAYOUT)

1" = 1'-0"

(Br. No. 06-0130R)

NOTE: Abut 1 shown, Abut 2 similar.

NOTE:
THE CONTRACTOR MUST VERIFY ALL CONTROLLING FIELD DIMENSIONS BEFORE ORDERING OR FABRICATING ANY MATERIAL.

	BY	CHECKED
DESIGN	Tim Campbell	P. Kang
DETAILS	Dale Kubochi	P. Kang
QUANTITIES	Tim Campbell	P. Kang

STATE OF CALIFORNIA
DEPARTMENT OF TRANSPORTATION

DIVISION OF MAINTENANCE
STRUCTURE MAINTENANCE DESIGN

BRIDGE NO. VARIOUS
POST MILE VARIES

ROUTE 5 BRIDGES
DECK ON DECK DETAILS NO. 3

STRUCTURES MAINTENANCE DETAIL SHEET (ENGLISH) (REV. 09-01-10)

ORIGINAL SCALE IN INCHES FOR REDUCED PLANS 0 1 2 3

UNIT: 3488
PROJECT NUMBER & PHASE: 0213000013
CONTRACT NO.: 02-4F6101

DISREGARD PRINTS BEARING EARLIER REVISION DATES

REVISION DATES 12-13-13 5-12-14 9-29-14 10-28-14

SHEET 11 OF 19

FILE => 02-4f6101-d-deck-03.dgn

USERNAME => s115152 DATE PLOTTED => 25-FEB-2015 TIME PLOTTED => 07:54

DIST	COUNTY	ROUTE	POST MILES TOTAL PROJECT	SHEET No.	TOTAL SHEETS
02	Sha,Sis	5	Var	91	98

Tim Campbell 10-27-14
REGISTERED CIVIL ENGINEER DATE

01-30-15
PLANS APPROVAL DATE

REGISTERED PROFESSIONAL ENGINEER
TIM CAMPBELL
No. 63268
Exp. 06-30-16
CIVIL
STATE OF CALIFORNIA

The State of California or its officers or agents shall not be responsible for the accuracy or completeness of electronic copies of this plan sheet.

DECK REPAIR TABLE
REMOVE UNSOUND CONCRETE AND RAPID SETTING CONCRETE (PATCH)

BRIDGE NAME	BRIDGE NUMBER	APPROXIMATE AREA DAMAGED (PERCENT)	APPROXIMATE DEPTH (INCHES)	APPROXIMATE NUMBER OF GALVANIC ANODES
SISKIYOU AVENUE OVERCROSSING	02-0097	10	3	75
DITCH CREEK ROAD OVERCROSSING	02-0172	10	3	99
BAILEY HILL ROAD OVERCROSSING	02-0173	10	3	88
HARTNELL AVENUE OVERCROSSING	06-0124	10	3	137
HILLTOP DRIVE OVERCROSSING	06-0101	5	3	34
OASIS ROAD OVERCROSSING	06-0155	10	3	64
PINE GROVE OVERCROSSING	06-0161	10	3	80
UNION SCHOOL ROAD OVERCROSSING	06-0015	10	3	75
MOUNTAIN GATE OVERCROSSING	06-0154	10	3	64
FAWNDALE OVERCROSSING	06-0162	10	3	60
TURNTABLE ROAD OVERCROSSING	06-0130R	10	3	42
GILMAN ROAD OVERCROSSING	06-0160	10	3	58
ANTLER SUMMIT OVERCROSSING	06-0158	10	3	54

Locations to be determined by the Engineer.
For details see "Joint And Deck Repair Detail".

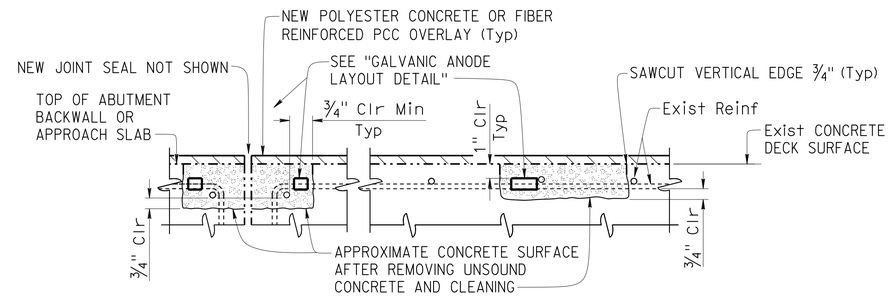

JOINT AND DECK REPAIR DETAIL

Note: Locations to be determined by the Engineer. Reinforcement may be encountered during deck concrete removal.

TEMPORARY DECK PLATE LOAD CRITERIA

MOMENT DEMAND/FOOT (kips-ft/ft)	BOLT SHEAR/FOOT (kips/ft)	BOLT TENSION (kips) / bolt
7	8	6

Plate deflection shall not exceed s/12 inches (s = span of plate).
Maximum anchor bolt spacing = 1'-0".

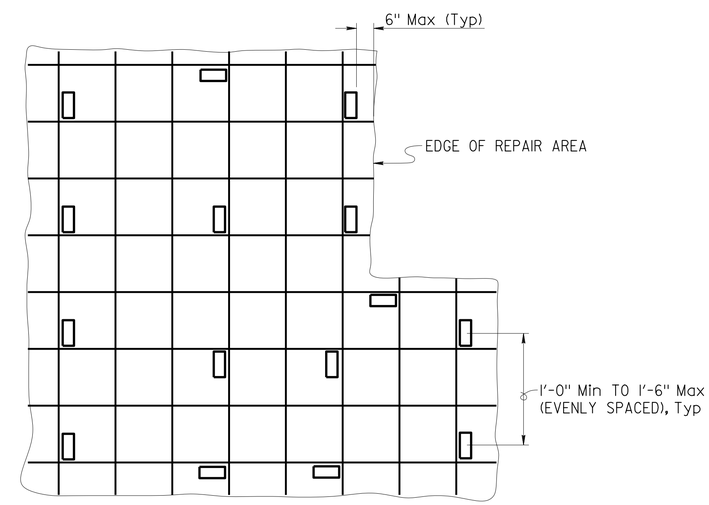

GALVANIC ANODE LAYOUT DETAIL

Note: All galvanic anodes shall be installed with embedding mortar.

NOTE:
THE CONTRACTOR MUST VERIFY ALL CONTROLLING FIELD DIMENSIONS BEFORE ORDERING OR FABRICATING ANY MATERIAL.

	BY	CHECKED
DESIGN	Tim Campbell	P. Kang
DETAILS	Dale Kubochi	P. Kang
QUANTITIES	Tim Campbell	P. Kang

STATE OF CALIFORNIA
DEPARTMENT OF TRANSPORTATION

DIVISION OF MAINTENANCE
STRUCTURE MAINTENANCE DESIGN

BRIDGE NO. VARIOUS
POST MILE VARIES

ROUTE 5 BRIDGES
DECK REPAIR DETAILS NO. 1

STRUCTURES MAINTENANCE DETAIL SHEET (ENGLISH) (REV. 09-01-10)

ORIGINAL SCALE IN INCHES FOR REDUCED PLANS 0 1 2 3

UNIT: 3488
PROJECT NUMBER & PHASE: 0213000013
CONTRACT NO.: 02-4F6101

DISREGARD PRINTS BEARING EARLIER REVISION DATES

REVISION DATES: 5-30-14 10-28-14

SHEET 12 OF 19

FILE => 02-4f6101-i-deckrepair-det01.dgn

USERNAME => s115152 DATE PLOTTED => 25-FEB-2015 TIME PLOTTED => 07:54

DIST	COUNTY	ROUTE	POST MILES TOTAL PROJECT	SHEET No.	TOTAL SHEETS
02	Sha,Sis	5	Var	92	98

Tim Campbell 10-27-14
REGISTERED CIVIL ENGINEER DATE

01-30-15
PLANS APPROVAL DATE

REGISTERED PROFESSIONAL ENGINEER TIM CAMPBELL No. 63268 Exp. 06-30-16 CIVIL STATE OF CALIFORNIA

The State of California or its officers or agents shall not be responsible for the accuracy or completeness of electronic copies of this plan sheet.

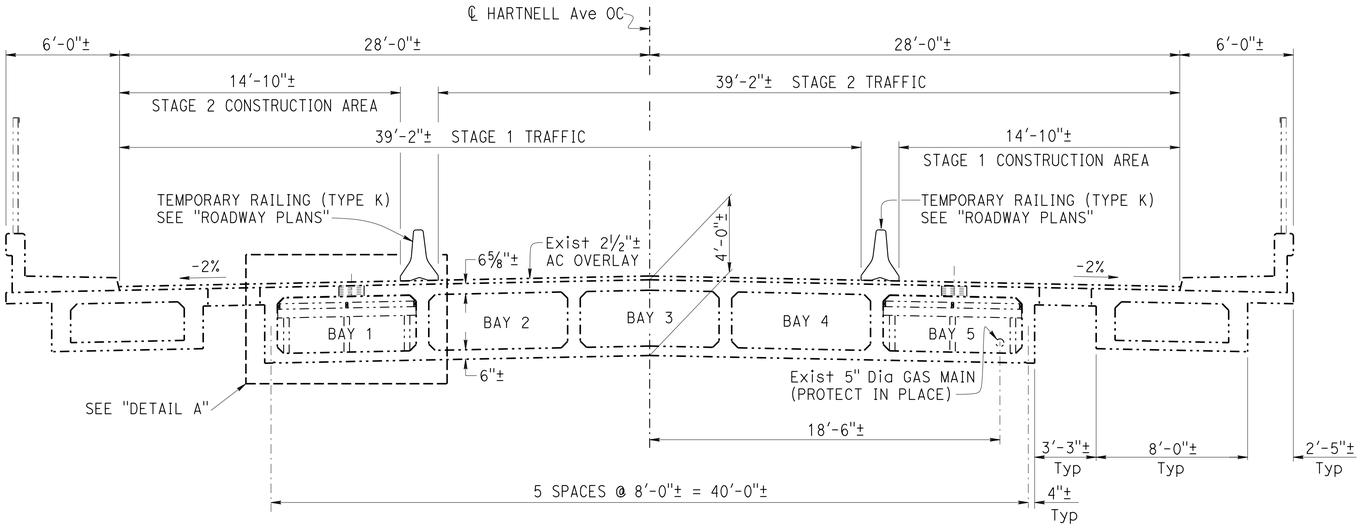

SECTION B-B

¼" = 1'-0"

(Br. No. 06-0124)

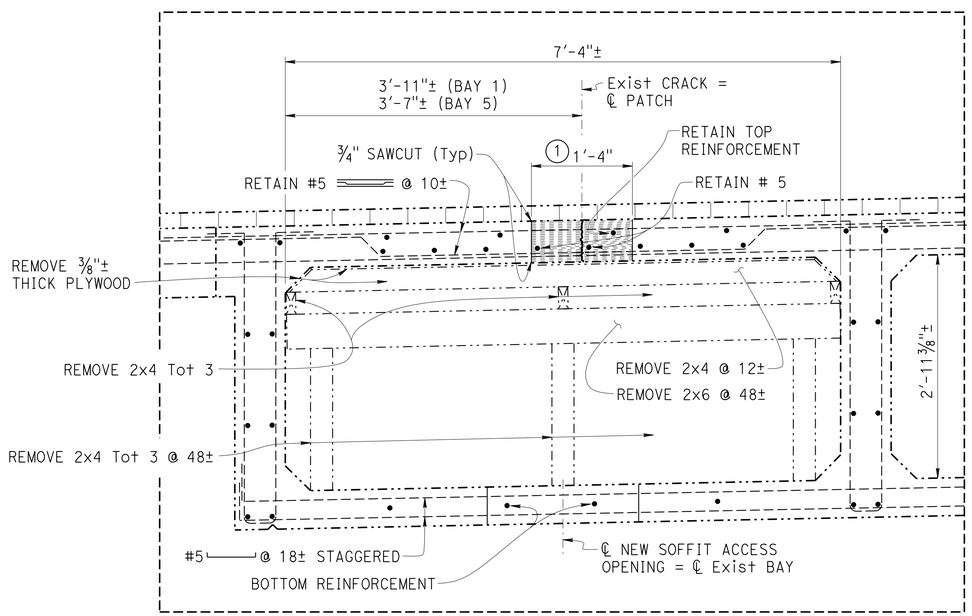

DETAIL A

1" = 1'-0"

NOTE: BAY 1 shown, BAY 5 similar.

NOTE:
THE CONTRACTOR MUST VERIFY ALL CONTROLLING FIELD DIMENSIONS BEFORE ORDERING OR FABRICATING ANY MATERIAL.

NOTES: (APPLY TO THIS SHEET ONLY)

Indicates limits of remove existing 2½"± depth AC overlay and membrane seal.

Indicates limits of remove full depth (6⅝"±) deck concrete, clean reinforcing steel and place new (6⅝") depth fiber reinforced concrete deck.

(1) Limit patch length to one half span length per span. Allow concrete patch material to reach required strength of 3.6 ksi before continuing any concrete removal or opening to traffic.

- For "Top Reinforcement", see "DECK REPAIR DETAILS NO. 3" sheet.

GENERAL NOTES
LOAD FACTOR DESIGN

(BRIDGE NUMBERS: 06-0124, 06-0101 AND 06-0179)

DESIGN:
BRIDGE DESIGN SPECIFICATIONS
(1996 aashto WITH iNTERIMS AND Revisions by CALTRANS)

LIVE LOADING:
HS20-44 and alternative and permit design load.

CONCRETE:
fy = 60 ksi
f'c = 3.6 ksi
n = 8

	BY	CHECKED
DESIGN	Tim Campbell	P. Kang
DETAILS	Dale Kubochi	P. Kang
QUANTITIES	Tim Campbell	P. Kang

STATE OF CALIFORNIA
DEPARTMENT OF TRANSPORTATION

DIVISION OF MAINTENANCE
STRUCTURE MAINTENANCE DESIGN

BRIDGE NO. VARIOUS
POST MILE VARIES

ROUTE 5 BRIDGES
DECK REPAIR DETAILS NO. 2

STRUCTURES MAINTENANCE DETAIL SHEET (ENGLISH) (REV. 09-01-10)

ORIGINAL SCALE IN INCHES FOR REDUCED PLANS 0 1 2 3

UNIT: 3488
PROJECT NUMBER & PHASE: 0213000013
CONTRACT NO.: 02-4F6101

DISREGARD PRINTS BEARING EARLIER REVISION DATES
REVISION DATES 5-5-14 10-28-14 9-24-14
SHEET 13 OF 19

FILE => 02-4f6101-i-deckrepair-det02.dgn

USERNAME => s115152 DATE PLOTTED => 25-FEB-2015 TIME PLOTTED => 07:54

DIST	COUNTY	ROUTE	POST MILES TOTAL PROJECT	SHEET No.	TOTAL SHEETS
02	Sha,Sis	5	Var	93	98

Tim Campbell 10-27-14
REGISTERED CIVIL ENGINEER DATE

01-30-15
PLANS APPROVAL DATE

REGISTERED PROFESSIONAL ENGINEER
TIM CAMPBELL
No. 63268
Exp. 06-30-16
CIVIL
STATE OF CALIFORNIA

The State of California or its officers or agents shall not be responsible for the accuracy or completeness of electronic copies of this plan sheet.

NOTES: (APPLY TO THIS SHEET ONLY)

Indicates limits of remove full depth (6⅝"±) deck concrete, clean reinforcing steel and place new (6⅝") depth fiber reinforced concrete deck.

- All bars are #11 unless noted otherwise. Numbers at ends of bars indicate distance in feet from ℄ Bent.

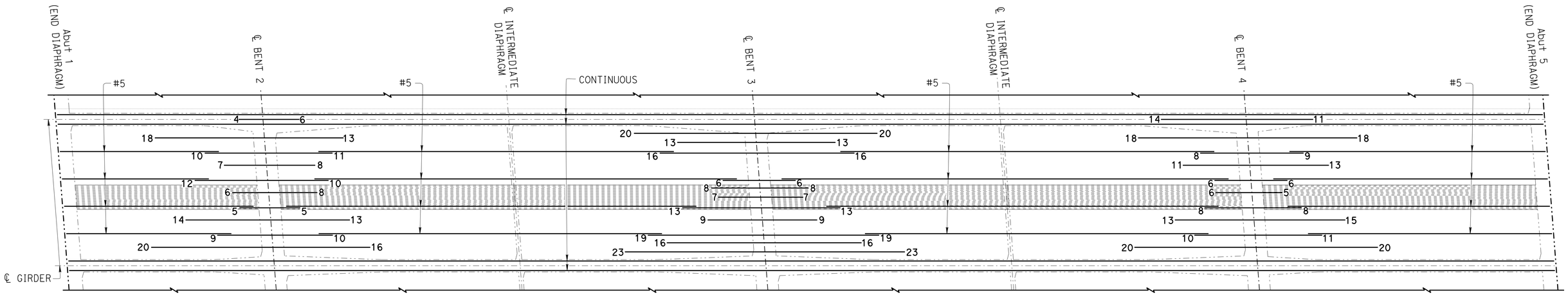

BAY 1

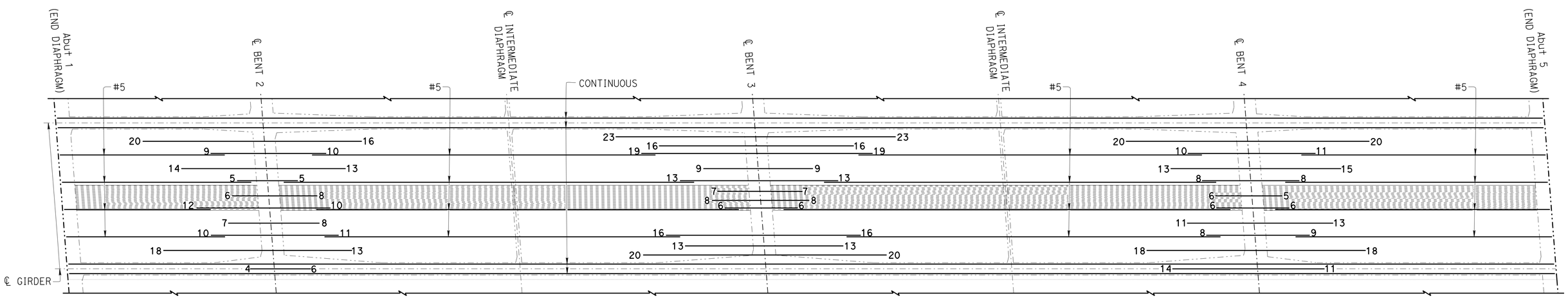

BAY 5

NOTE:
THE CONTRACTOR MUST VERIFY ALL CONTROLLING FIELD DIMENSIONS BEFORE ORDERING OR FABRICATING ANY MATERIAL.

TOP REINFORCEMENT

NO SCALE

(Br. No. 06-0124)

	BY	CHECKED
DESIGN	Tim Campbell	P. Kang
DETAILS	Dale Kubochi	P. Kang
QUANTITIES	Tim Campbell	P. Kang

STATE OF CALIFORNIA
DEPARTMENT OF TRANSPORTATION

DIVISION OF MAINTENANCE
STRUCTURE MAINTENANCE DESIGN

BRIDGE NO.: VARIOUS
POST MILE: VARIES

ROUTE 5 BRIDGES
DECK REPAIR DETAILS NO. 3

STRUCTURES MAINTENANCE DETAIL SHEET (ENGLISH) (REV. 09-01-10)

ORIGINAL SCALE IN INCHES FOR REDUCED PLANS 0 1 2 3

UNIT: 3488
PROJECT NUMBER & PHASE: 0213000013
CONTRACT NO.: 02-4F6101

DISREGARD PRINTS BEARING EARLIER REVISION DATES

REVISION DATES: 6-7-13 9-23-14 10-28-14

SHEET 14 OF 19

FILE => 02-4f6101-i-deckrepair-det03.dgn

USERNAME => s115152 DATE PLOTTED => 25-FEB-2015 TIME PLOTTED => 07:54

DIST	COUNTY	ROUTE	POST MILES TOTAL PROJECT	SHEET No.	TOTAL SHEETS
02	Sha,Sis	5	Var	94	98

Tim Campbell 10-27-14
REGISTERED CIVIL ENGINEER DATE

01-30-15
PLANS APPROVAL DATE

REGISTERED PROFESSIONAL ENGINEER
TIM CAMPBELL
No. 63268
Exp. 06-30-16
CIVIL
STATE OF CALIFORNIA

The State of California or its officers or agents shall not be responsible for the accuracy or completeness of electronic copies of this plan sheet.

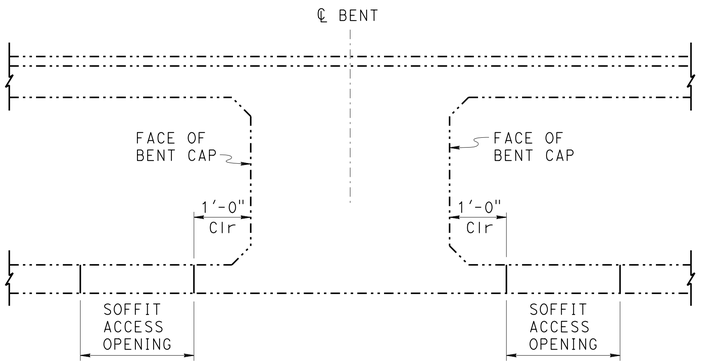

SECTION AT BENT

3/4" = 1'-0"
(Br. No. 06-0124)

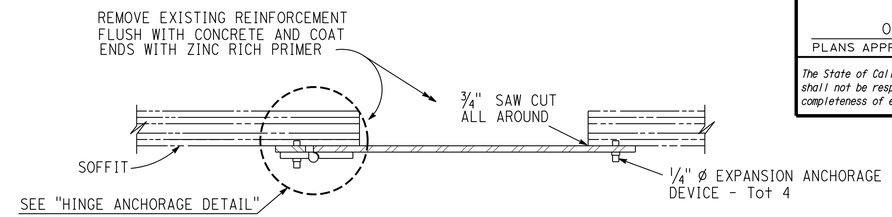

SECTION A-A

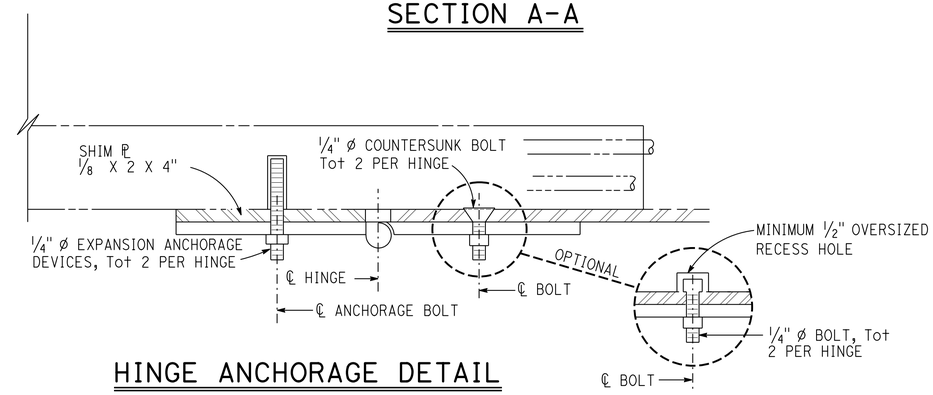

HINGE ANCHORAGE DETAIL

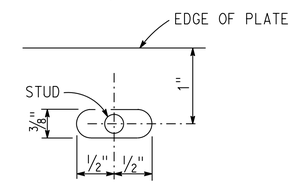

DETAIL A

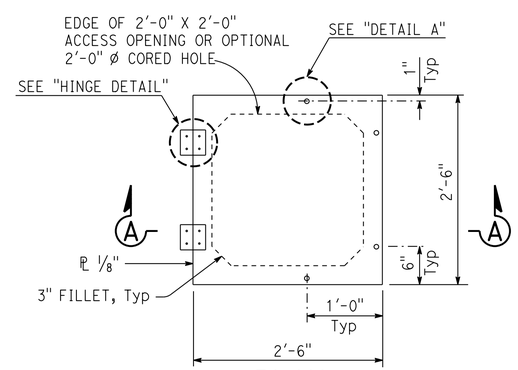

PLAN

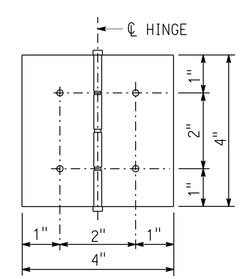

HINGE DETAIL

NOTES:

1. Non-removable pin in hinge
2. Hinge assembly to be galvanized, brass or stainless steel
3. Use thread locking system for all hinge nuts
4. Hinge assembly to be minimum 1/8" Thick

SOFFIT ACCESS DOOR ASSEMBLY

NOTE: SOFFIT ACCESS DOOR OPENING DIRECTION TO BE DETERMINED BY THE ENGINEER

NOTE:
THE CONTRACTOR MUST VERIFY ALL CONTROLLING FIELD DIMENSIONS BEFORE ORDERING OR FABRICATING ANY MATERIAL.

	BY	CHECKED
DESIGN	Tim Campbell	P. Kang
DETAILS	Dale Kubochi	P. Kang
QUANTITIES	Tim Campbell	P. Kang

STATE OF CALIFORNIA
DEPARTMENT OF TRANSPORTATION

DIVISION OF MAINTENANCE
STRUCTURE MAINTENANCE DESIGN

BRIDGE NO. VARIOUS
POST MILE VARIES

ROUTE 5 BRIDGES
DECK REPAIR DETAILS NO. 4

STRUCTURES MAINTENANCE DETAIL SHEET (ENGLISH) (REV. 09-01-10)

ORIGINAL SCALE IN INCHES FOR REDUCED PLANS 0 1 2 3

UNIT: 3488
PROJECT NUMBER & PHASE: 0213000013
CONTRACT NO.: 02-4F6101

DISREGARD PRINTS BEARING EARLIER REVISION DATES

REVISION DATES: 6-4-13 10-28-14

SHEET 15 OF 19

FILE => 02-4f6101-i-deckrepair-det04.dgn

USERNAME => s115152 DATE PLOTTED => 25-FEB-2015 TIME PLOTTED => 07:54

DIST	COUNTY	ROUTE	POST MILES TOTAL PROJECT	SHEET No.	TOTAL SHEETS
02	Sha,Sis	5	Var	95	98

Tim Campbell 10-27-14
REGISTERED CIVIL ENGINEER DATE

01-30-15
PLANS APPROVAL DATE

REGISTERED PROFESSIONAL ENGINEER TIM CAMPBELL No. 63268 Exp. 06-30-16 CIVIL STATE OF CALIFORNIA

The State of California or its officers or agents shall not be responsible for the accuracy or completeness of electronic copies of this plan sheet.

NOTES: (APPLY TO THIS SHEET ONLY)

Indicates remove existing reinforced concrete expansion dam.

Indicates remove existing asphaltic plug joint seal.

Indicates limits of existing concrete removal and placement of new concrete.

✱ Bar reinforcing steel (Epoxy Coated)

"a" reconstructed gap width as determined by Engineer.

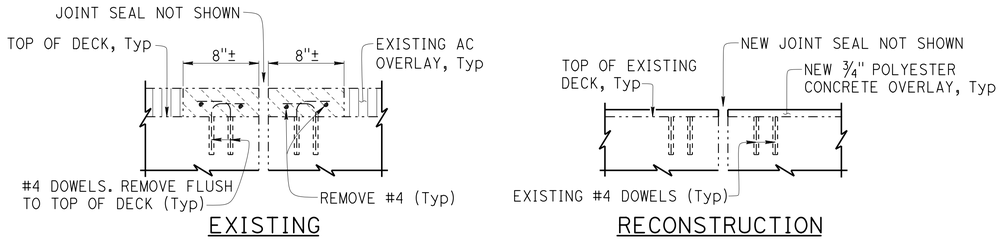

SECTION A-A

1½" = 1'-0"

(Br. No. 02-0097)

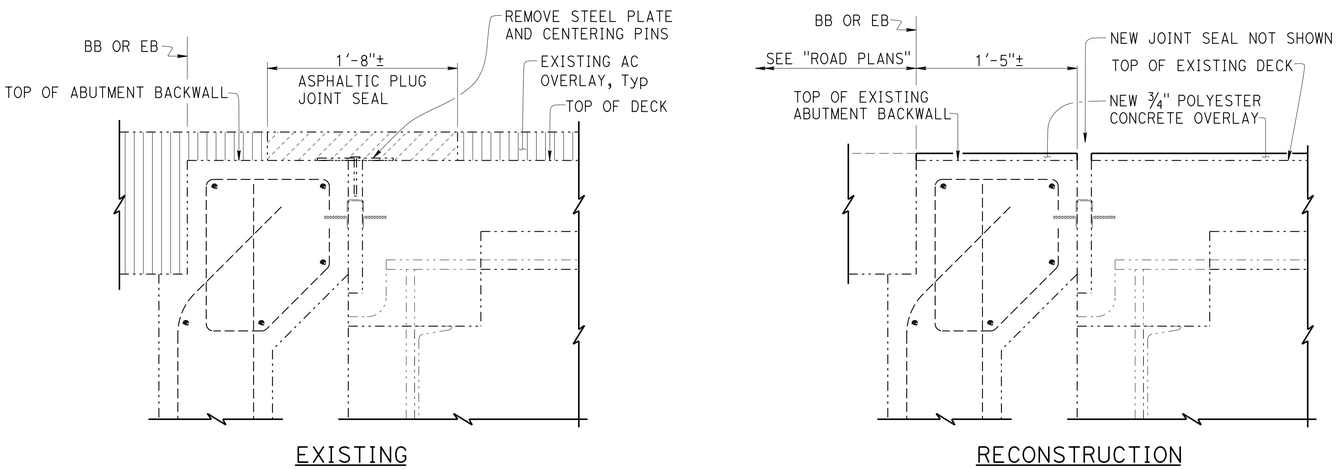

SECTION D-D

1½" = 1'-0"

(Br. No. 06-0155, 06-0015, 06-0154 AND 06-0162)

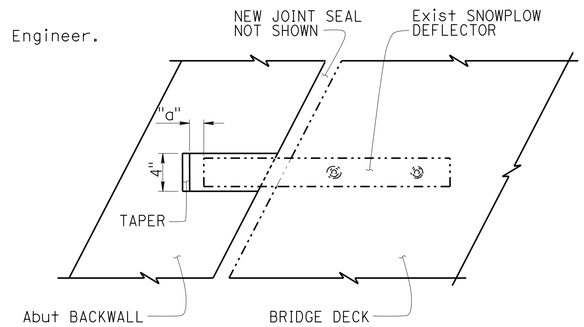

PLAN SNOWPLOW DEFLECTOR

1½" = 1'-0"

(Br. No. 06-0179)

Note: Abutment 1 shown, Abutment 3 similar.

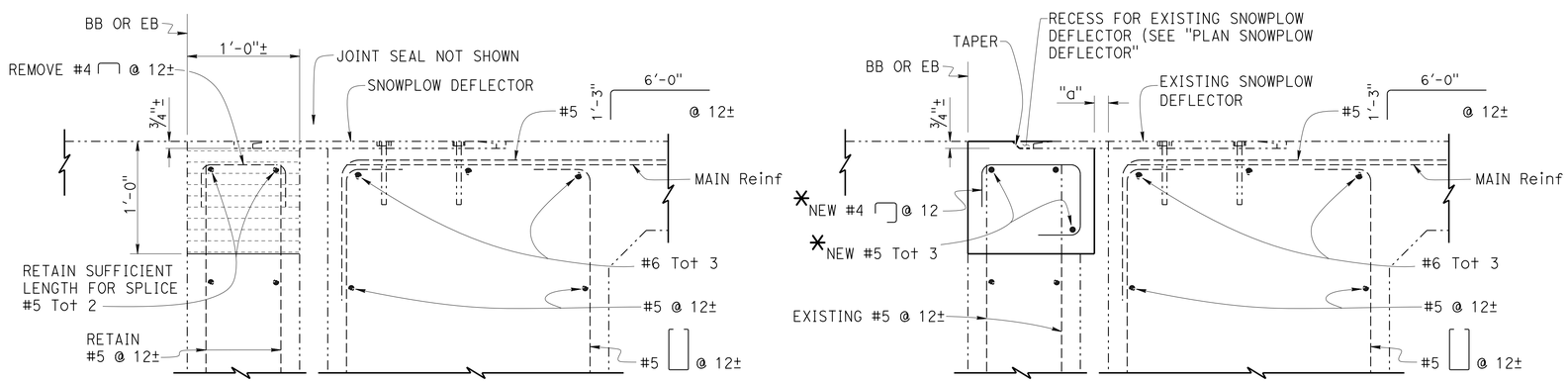

SECTION E-E

1½" = 1'-0"

(Br. No. 06-0179)

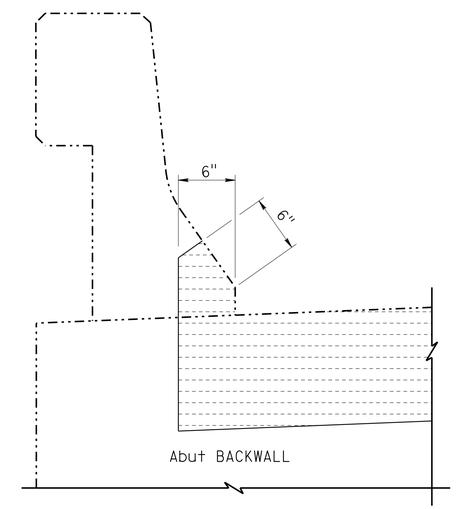

PART ELEVATION LOW SIDE BRIDGE

1½" = 1'-0"

(Br. No. 06-0179)

NOTE:
THE CONTRACTOR MUST VERIFY ALL CONTROLLING FIELD DIMENSIONS BEFORE ORDERING OR FABRICATING ANY MATERIAL.

	BY	CHECKED
DESIGN	Tim Campbell	P. Kang
DETAILS	Dale Kubochi	P. Kang
QUANTITIES	Tim Campbell	P. Kang

STATE OF CALIFORNIA
DEPARTMENT OF TRANSPORTATION

DIVISION OF MAINTENANCE
STRUCTURE MAINTENANCE DESIGN

BRIDGE NO. VARIOUS
POST MILE VARIES

ROUTE 5 BRIDGES
JOINT SEAL DETAILS NO. 1

STRUCTURES MAINTENANCE DETAIL SHEET (ENGLISH) (REV. 09-01-10)

ORIGINAL SCALE IN INCHES FOR REDUCED PLANS 0 1 2 3

UNIT: 3488
PROJECT NUMBER & PHASE: 0213000013
CONTRACT NO.: 02-4F6101

DISREGARD PRINTS BEARING EARLIER REVISION DATES

REVISION DATES 6-7-13 5-13-14 5-18-14 10-28-14

SHEET 16 OF 19

FILE => 02-4f6101-j-jt-det01.dgn

USERNAME => s115152 DATE PLOTTED => 25-FEB-2015 TIME PLOTTED => 07:55

DIST	COUNTY	ROUTE	POST MILES TOTAL PROJECT	SHEET No.	TOTAL SHEETS
02	Sha,Sis	5	Var	96	98

Tim Campbell 10-27-14
REGISTERED CIVIL ENGINEER DATE

01-30-15
PLANS APPROVAL DATE

REGISTERED PROFESSIONAL ENGINEER TIM CAMPBELL No. 63268 Exp. 06-30-16 CIVIL STATE OF CALIFORNIA

The State of California or its officers or agents shall not be responsible for the accuracy or completeness of electronic copies of this plan sheet.

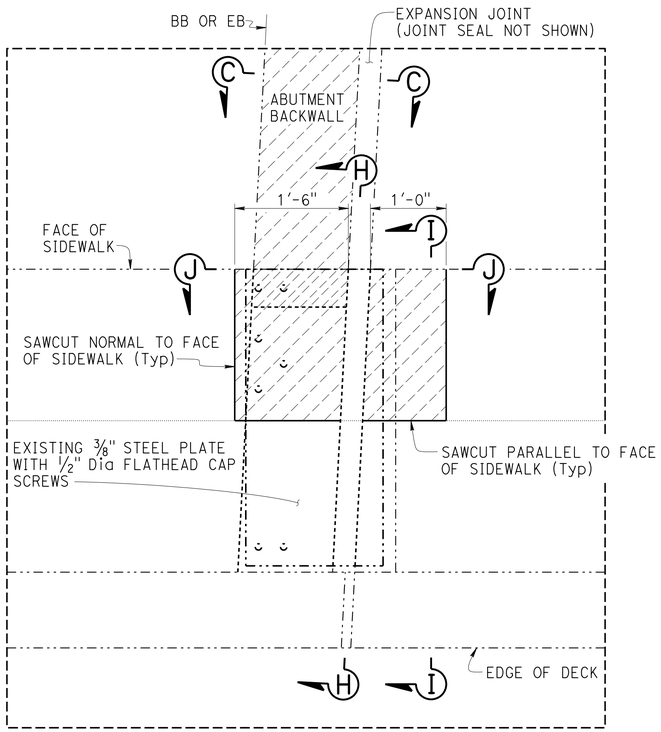

SIDEWALK REPAIR DETAIL

1" = 1'-0"

(Br. No. 06-0101)

Note: Abutment 1 shown, Abutment 5 similar.

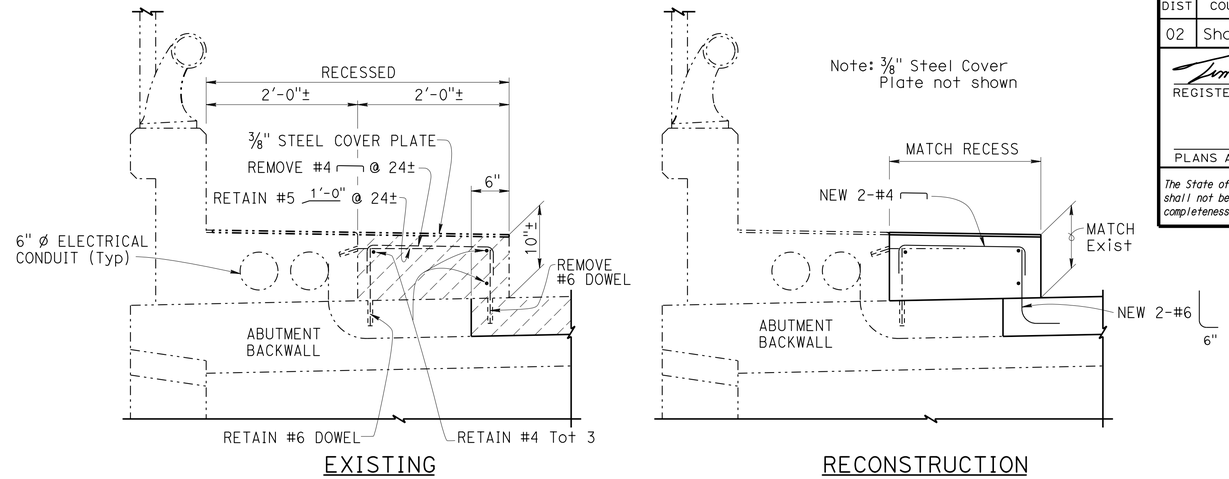

SECTION H-H

1" = 1'-0"

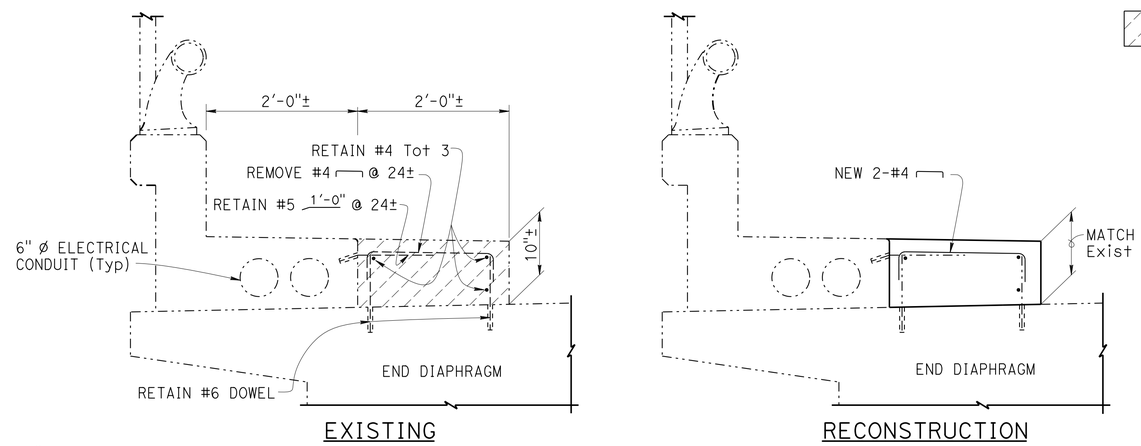

SECTION I-I

1" = 1'-0"

NOTES: (APPLY TO THIS SHEET ONLY)

Indicates limits of remove existing concrete. Retain existing reinforcing as noted and place new concrete.

"a" reconstructed gap width as determined by the Engineer.

- All new bar reinforcing steel (epoxy coated).

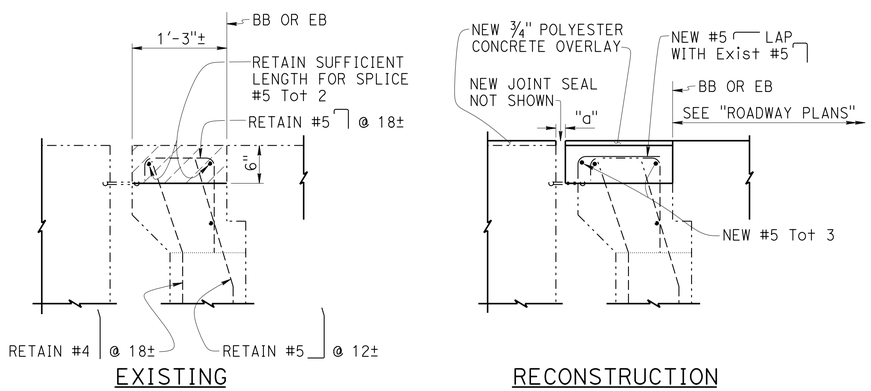

SECTION C-C

1" = 1'-0"

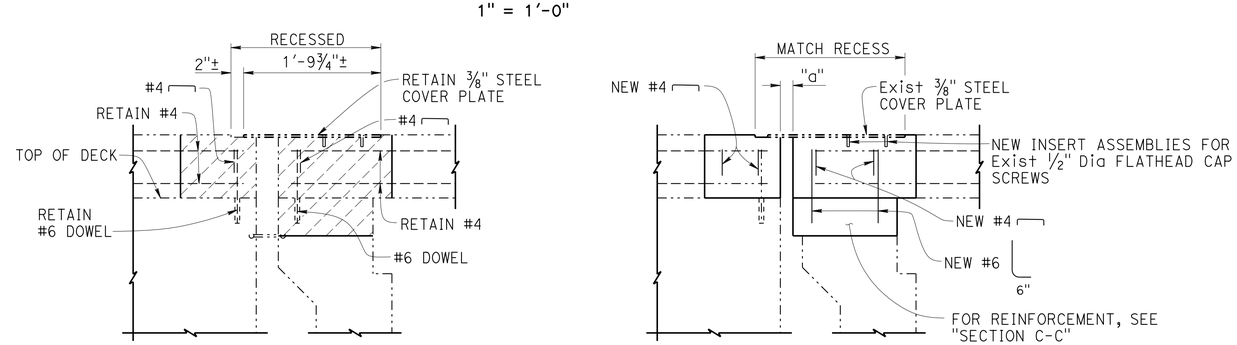

SECTION J-J

1" = 1'-0"

NOTE:
THE CONTRACTOR MUST VERIFY ALL CONTROLLING FIELD DIMENSIONS BEFORE ORDERING OR FABRICATING ANY MATERIAL.

	BY	CHECKED
DESIGN	Tim Campbell	P. Kang
DETAILS	Dale Kubochi	P. Kang
QUANTITIES	Tim Campbell	P. Kang

STATE OF CALIFORNIA
DEPARTMENT OF TRANSPORTATION

DIVISION OF MAINTENANCE
STRUCTURE MAINTENANCE DESIGN

BRIDGE NO. VARIOUS
POST MILE VARIES

ROUTE 5 BRIDGES
JOINT SEAL DETAILS NO. 2

STRUCTURES MAINTENANCE DETAIL SHEET (ENGLISH) (REV. 09-01-10)

ORIGINAL SCALE IN INCHES FOR REDUCED PLANS 0 1 2 3

UNIT: 3488
PROJECT NUMBER & PHASE: 0213000013
CONTRACT NO.: 02-4F6101

DISREGARD PRINTS BEARING EARLIER REVISION DATES

REVISION DATES 6-7-13 6-2-14 10-28-14

SHEET 17 OF 19

FILE => 02-4f6101-j-jt-det02.dgn

USERNAME => s175152 DATE PLOTTED => 25-FEB-2015 TIME PLOTTED => 07:55

DIST	COUNTY	ROUTE	POST MILES TOTAL PROJECT	SHEET No.	TOTAL SHEETS
02	Sha,Sis	5	Var	97	98

Tim Campbell 10-27-14
REGISTERED CIVIL ENGINEER DATE

01-30-15
PLANS APPROVAL DATE

REGISTERED PROFESSIONAL ENGINEER
TIM CAMPBELL
No. 63268
Exp. 06-30-16
CIVIL
STATE OF CALIFORNIA

The State of California or its officers or agents shall not be responsible for the accuracy or completeness of electronic copies of this plan sheet.

JOINT SEAL TABLE

BRIDGE NAME	BRIDGE NUMBER	LOCATION		MINIMUM "MR" (INCHES)	APPROXIMATE LENGTH (FEET)	EXISTING WATERSTOP	APPROX DEPTH TO CLEAN EXP JOINT (INCHES)
SISKIYOU AVENUE OVERCROSSING	02-0097	✱ Bent 2	EJ	1	37.0	YES	6
		✱ Bent 3	EJ	1	37.0	YES	6
		✱ Bent 4	EJ	1	37.0	YES	6
HILLTOP DRIVE OVERCROSSING	06-0101	✱ Abut 1	BW	1	32.0	YES	-
		✱ Abut 5	BW	1	32.0	YES	-
OASIS ROAD OVERCROSSING	06-0155	✱ Abut 1	BW	1	33.0	YES	6
		✱ Abut 3	BW	1	33.0	YES	6
PINE GROVE OVERCROSSING	06-0161	✱ Abut 1	BW	1½	47.0	YES	6
		✱ Abut 3	BW	1½	47.0	YES	6
UNION SCHOOL ROAD OVERCROSSING	06-0015	✱ Abut 1	BW	1	35.0	YES	6
		✱ Abut 3	BW	1	35.0	YES	6
MOUNTAIN GATE OVERCROSSING	06-0154	✱ Abut 1	BW	1	33.0	YES	6
		✱ Abut 3	BW	1	33.0	YES	6
FAWNDALE OVERCROSSING	06-0162	✱ Abut 1	BW	1	34.0	YES	6
		✱ Abut 3	BW	1	34.0	YES	6
TURNTABLE BAY ROAD OVERCROSSING	06-0154	✱ Abut 1	BB	1	33.0	NO	-
		✱ Abut 2	EB	1	33.0	NO	-
GIBSON ROAD OVERCROSSING	06-0179	✱ Abut 1	BW	1	46.0	NO	6
		✱ Abut 3	BW	1	43.0	NO	6

LEGEND:
BW - Abutment backwall joint
BB - Paving Notch at beginning of bridge
EB - Paving Notch at end of bridge
EJ - Expansion Joint
✱ - Use Type B Joint Seal

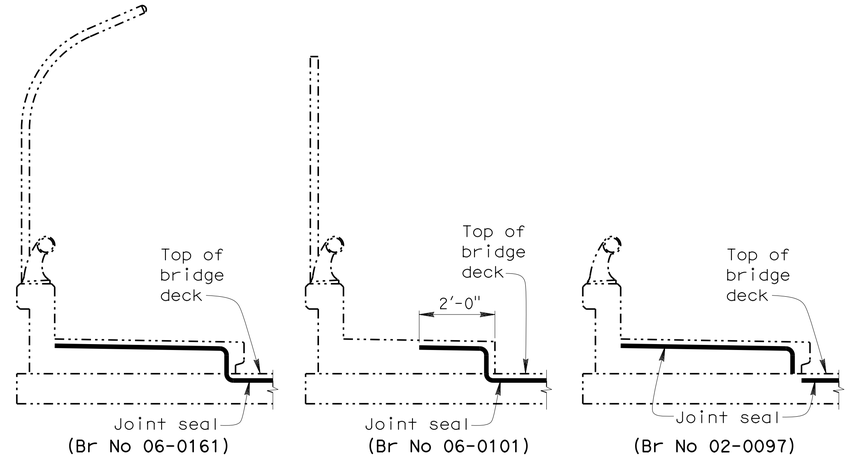

JOINT SEAL AT SIDEWALK

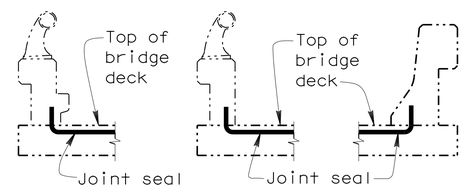

BARRIER RAIL

JOINT SEAL AT LOW SIDE OF DECK

Notes: Details shown for illustration purposes only. For use only where deck joint matches the sidewalk, curb or barrier rail joint.

The following notes apply to JOINT SEAL TYPE B:

1) Seal must satisfy both minimum Movement Rating (MR) and minimum W1 requirements.
2) Minimum W1 is the calculated maximum width of the joint based on field measurements. After the joints have been cleaned, minimum W1 is to be calculated by the Engineer.
3) W1 shall be the smaller of the values determined as follows:
   A) 0.85 times the manufacturer's designed minimum uncompressed width of the seal.
   B) The width of the seal on the third successive test cycle of the pressure deflection test, when compressed to an average pressure of 3 psi.
4) Bend Type B joint seal 6" up into curb or rail on the low side of the deck where deck joint matches curb or rail joint.
5) For details not shown, see B6-21

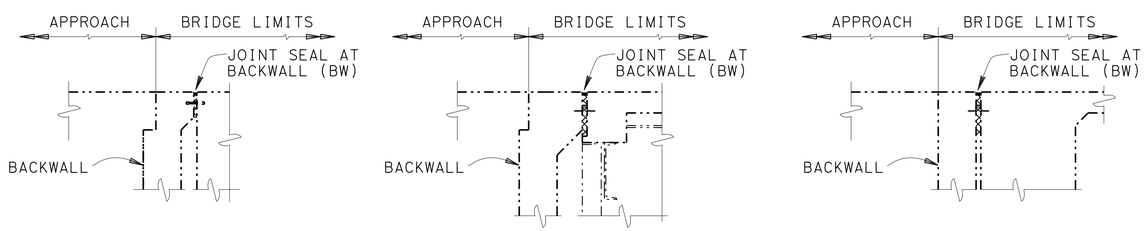

ABUTMENT WITH BACKWALL

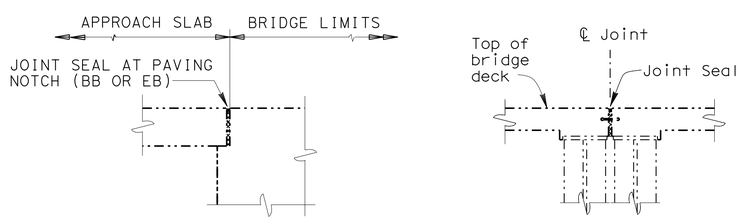

DIAPHRAGM ABUTMENT BENT

JOINT SEAL LOCATION

NOTE:
THE CONTRACTOR MUST VERIFY ALL CONTROLLING FIELD DIMENSIONS BEFORE ORDERING OR FABRICATING ANY MATERIAL.

	BY	CHECKED
DESIGN	Tim Campbell	P. Kang
DETAILS	Dale Kubochi	P. Kang
QUANTITIES	Tim Campbell	P. Kang

STATE OF CALIFORNIA
DEPARTMENT OF TRANSPORTATION

DIVISION OF MAINTENANCE
STRUCTURE MAINTENANCE DESIGN

BRIDGE NO. VARIOUS
POST MILE VARIES

ROUTE 5 BRIDGES
JOINT SEAL DETAILS NO. 3

STRUCTURES MAINTENANCE DETAIL SHEET (ENGLISH) (REV. 09-01-10)

ORIGINAL SCALE IN INCHES FOR REDUCED PLANS 0 1 2 3

UNIT: 3488
PROJECT NUMBER & PHASE: 0213000013
CONTRACT NO.: 02-4F6101

DISREGARD PRINTS BEARING EARLIER REVISION DATES

REVISION DATES 6-7-13 5-13-14 6-2-14 8-6-14

SHEET 18 OF 19

FILE => 02-4f6101-j-jt-det03.dgn

USERNAME => s175152 DATE PLOTTED => 25-FEB-2015 TIME PLOTTED => 07:55

DIST	COUNTY	ROUTE	POST MILES TOTAL PROJECT	SHEET No.	TOTAL SHEETS
02	Sha,Sis	5	Var	98	98

Tim Campbell 10-27-14
REGISTERED CIVIL ENGINEER DATE

01-30-15
PLANS APPROVAL DATE

REGISTERED PROFESSIONAL ENGINEER
TIM CAMPBELL
No. 63268
Exp. 06-30-16
CIVIL
STATE OF CALIFORNIA

The State of California or its officers or agents shall not be responsible for the accuracy or completeness of electronic copies of this plan sheet.

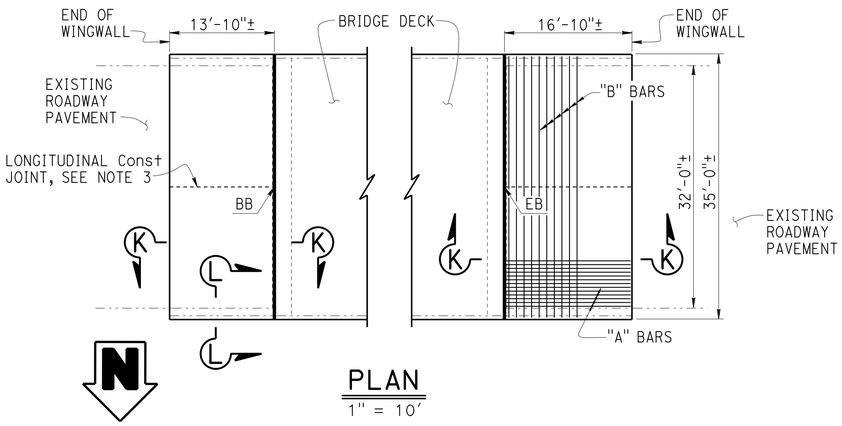

PLAN
1" = 10'

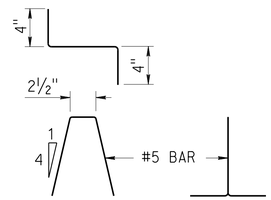

BAR CHAIR DETAIL
1½" = 1'-0"

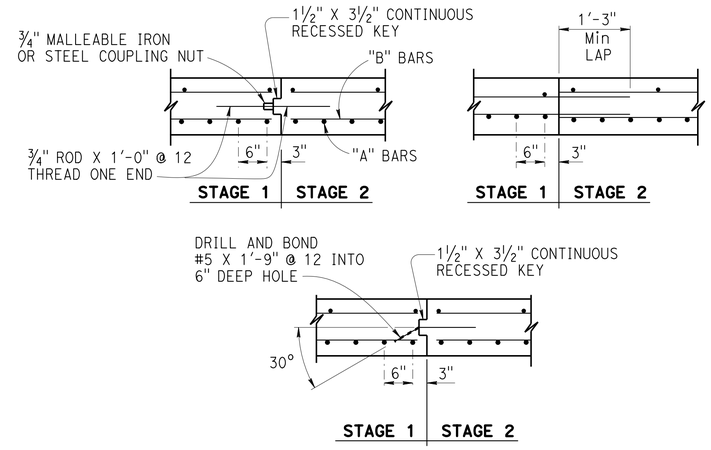

LONGITUDINAL CONSTRUCTION JOINT ALTERNATIVES
¾" = 1'-0"

NOTES:

1. For details not shown or noted, see Structure Plans. Adjust bar reinforcement to clear a sawcut for sealed joint, when required
2. Space to avoid existing prestress anchorages and main reinforcement
3. Longitudinal construction joints, when permitted by the Engineer, shall be located on lane lines

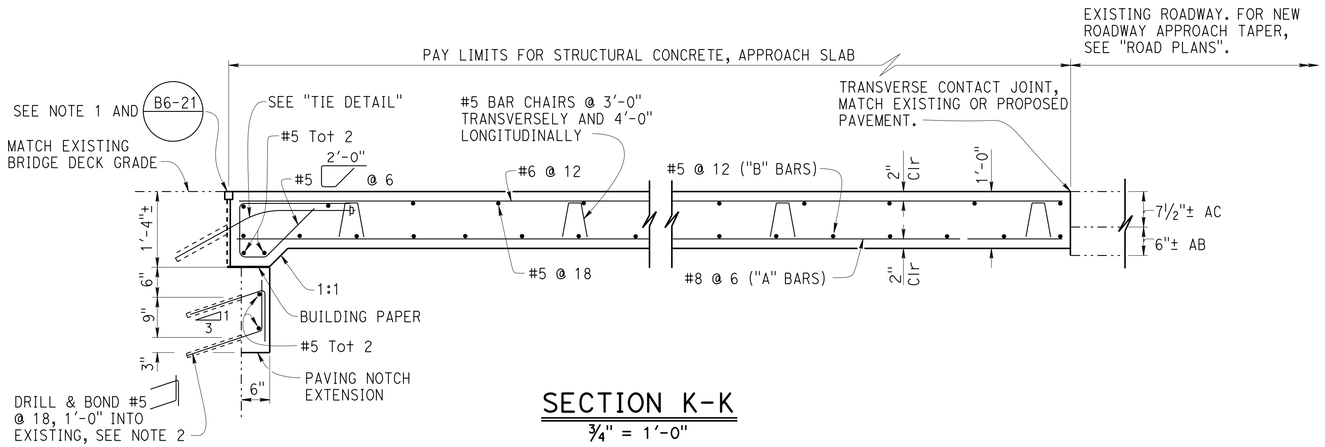

SECTION K-K
¾" = 1'-0"

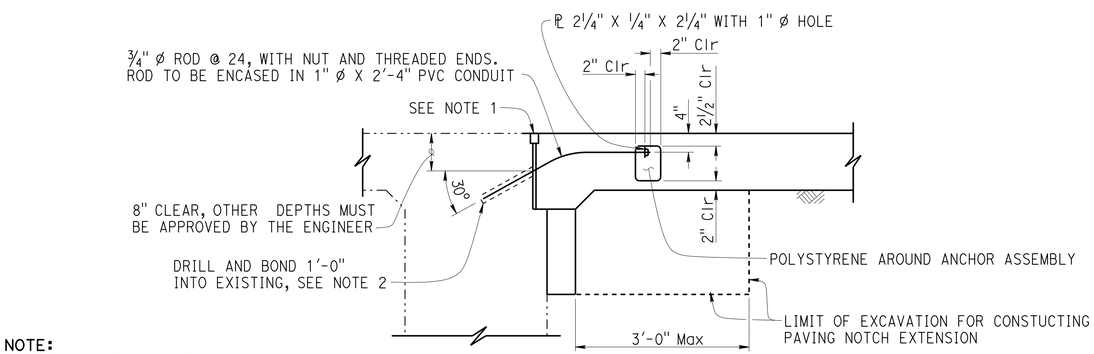

TIE DETAIL
¾" = 1'-0"

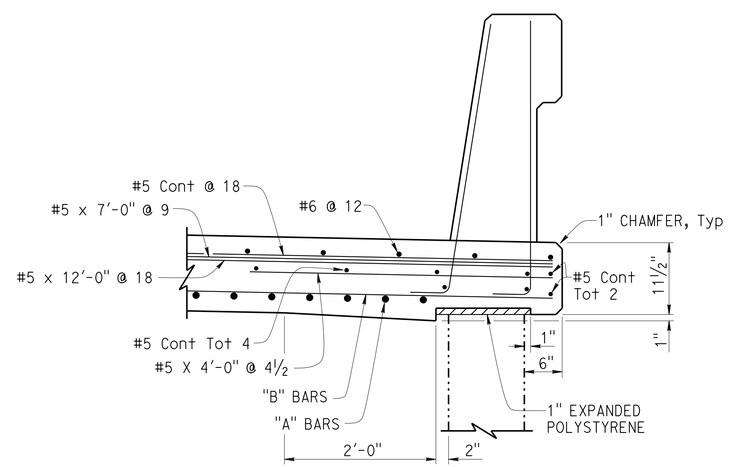

SECTION L-L
1"=1'-0"

NOTE:
THE CONTRACTOR MUST VERIFY ALL CONTROLLING FIELD DIMENSIONS BEFORE ORDERING OR FABRICATING ANY MATERIAL.

	BY	CHECKED
DESIGN	Tim Campbell	P. Kang
DETAILS	Dale Kubochi	P. Kang
QUANTITIES	Tim Campbell	P. Kang

STATE OF CALIFORNIA
DEPARTMENT OF TRANSPORTATION

DIVISION OF MAINTENANCE
STRUCTURE MAINTENANCE DESIGN

BRIDGE NO. VARIOUS
POST MILE VARIES

ROUTE 5 BRIDGES
STRUCTURE APPROACH TYPE R(30D) MODIFIED

STRUCTURES MAINTENANCE DETAIL SHEET (ENGLISH) (REV. 09-01-10)

ORIGINAL SCALE IN INCHES FOR REDUCED PLANS 0 1 2 3

UNIT: 3488
PROJECT NUMBER & PHASE: 0213000013
CONTRACT NO.: 02-4F6101

DISREGARD PRINTS BEARING EARLIER REVISION DATES

REVISION DATES: 12-20-13 5-12-14 6-2-14 6-9-14

SHEET 19 OF 19

FILE => 02-4f6101-s-str-app.dgn

USERNAME => s115152 DATE PLOTTED => 25-FEB-2015 TIME PLOTTED => 07:55