Dist	COUNTY	ROUTE	POST MILES TOTAL PROJECT	SHEET No.	TOTAL SHEETS
02	Teh	5	10.5	1	199

STATE OF CALIFORNIA

DEPARTMENT OF TRANSPORTATION

HSIPIG-005-8(354)E

PROJECT PLANS FOR BUILDING CONSTRUCTION ON

STATE HIGHWAY

IN TEHAMA COUNTY
NEAR CORNING
AT CORNING SAFETY ROADSIDE REST AREAS

TO BE SUPPLEMENTED BY STANDARD PLANS DATED 2010

INDEX OF SHEETS

SHEET No.	DESCRIPTION
1	TITLE AND LOCATION MAP
2-3	LAYOUTS
4-10	CONSTRUCTION DETAILS
11-14	DRAINAGE PLANS, DETAILS AND QUANTITIES
15-16	CONSTRUCTION AREA SIGNS
17-18	PAVEMENT DELINEATION AND SIGN PLANS
19	SUMMARY OF QUANTITIES
20-21	ROADSIDE CLEARING PLANS
22-23	MAINTAIN EXISTING PLANTED AREAS PLANS
24-25	SAFETY ROADSIDE REST AREA PLANS
26-44	IRRIGATION PLANS, SCHEDULES AND QUANTITIES
45-47	PLANTING PLANS
48-52	LANDSCAPE DETAILS
53-55	LANDSCAPE QUANTITIES
56-58	EROSION CONTROL PLANS AND QUANTITIES
59-79	REVISED STANDARD PLANS
	BUILDING PLANS
80-125	ARCHITECTURAL PLANS
126-152	STRUCTURAL PLANS
153-169	MECHANICAL PLANS
170-199	ELECTRICAL PLANS

THE STANDARD PLANS LIST APPLICABLE TO THIS CONTRACT IS INCLUDED IN THE NOTICE TO BIDDERS AND SPECIAL PROVISIONS BOOK.

LOCATION MAP

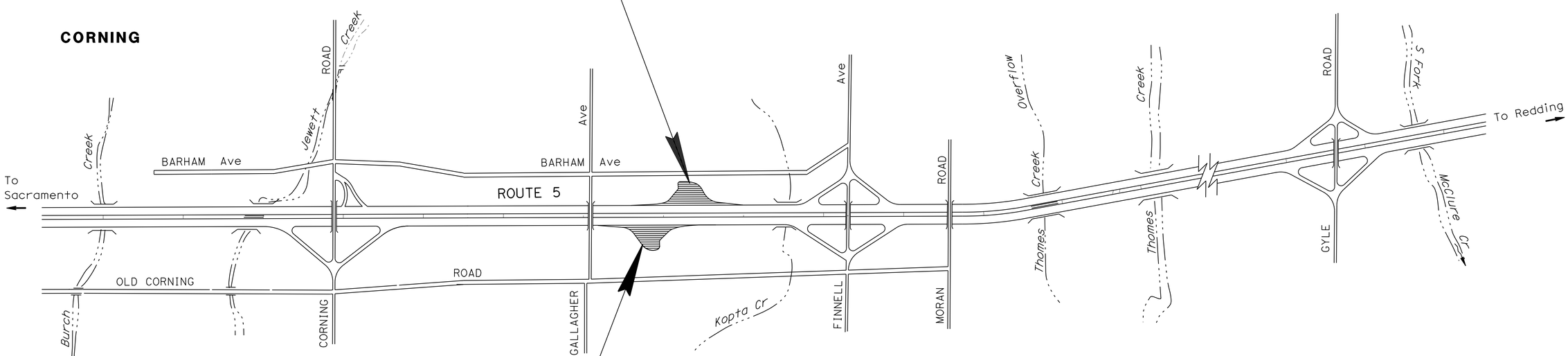

LOCATION OF CONSTRUCTION

CORNING SOUTHBOUND SAFETY ROADSIDE REST AREA PM 10.5

LOCATION OF CONSTRUCTION

CORNING NORTHBOUND SAFETY ROADSIDE REST AREA PM 10.5

Michael R. Webb 12-19-13
PROJECT ENGINEER DATE
REGISTERED CIVIL ENGINEER

April 1, 2014
PLANS APPROVAL DATE

REGISTERED PROFESSIONAL ENGINEER
MICHAEL R. WEBB
No. C73986
Exp. 6-30-15
CIVIL
STATE OF CALIFORNIA

THE STATE OF CALIFORNIA OR ITS OFFICERS OR AGENTS SHALL NOT BE RESPONSIBLE FOR THE ACCURACY OR COMPLETENESS OF SCANNED COPIES OF THIS PLAN SHEET.

THE CONTRACTOR SHALL POSSESS THE CLASS (OR CLASSES) OF LICENSE AS SPECIFIED IN THE "NOTICE TO BIDDERS."

NO SCALE

CONTRACT No.	02-0E3604
PROJECT ID	0200000030

PROJECT MANAGER: STEVE ROGERS
DESIGN ENGINEER: JULIE CASEY

P:\proj2\02\0E360_plans\pse\RESUBMIT_5-11-15\20e360ab001.dgn

LAST REVISION 12-19-13
DATE PLOTTED => 11-MAY-2015
TIME PLOTTED => 10:56

Dist	COUNTY	ROUTE	POST MILES TOTAL PROJECT	SHEET No.	TOTAL SHEETS
02	Teh	5	10.5	2	199

REGISTERED CIVIL ENGINEER 12-19-13 DATE

4-1-14
PLANS APPROVAL DATE

REGISTERED PROFESSIONAL ENGINEER MICHAEL R. WEBB No. C73986 Exp. 6-30-15 CIVIL STATE OF CALIFORNIA

THE STATE OF CALIFORNIA OR ITS OFFICERS OR AGENTS SHALL NOT BE RESPONSIBLE FOR THE ACCURACY OR COMPLETENESS OF SCANNED COPIES OF THIS PLAN SHEET.

NOTE:

1. FOR ACCURATE RIGHT OF WAY DATA, CONTACT RIGHT OF WAY ENGINEERING AT THE DISTRICT OFFICE.

LEGEND

- PARKING AREA SEAL
- Exist HAR FLASHER
- Exist SUPER HAR
- Exist FENCE

ABBREVIATIONS:

HAR HIGHWAY ADVISORY RADIO
SRRA SAFETY ROADSIDE REST AREA
SE SOUTHEAST
QUAD QUADRANT
TMS TRAFFIC MANAGEMENT SYSTEM
(E) EXISTING

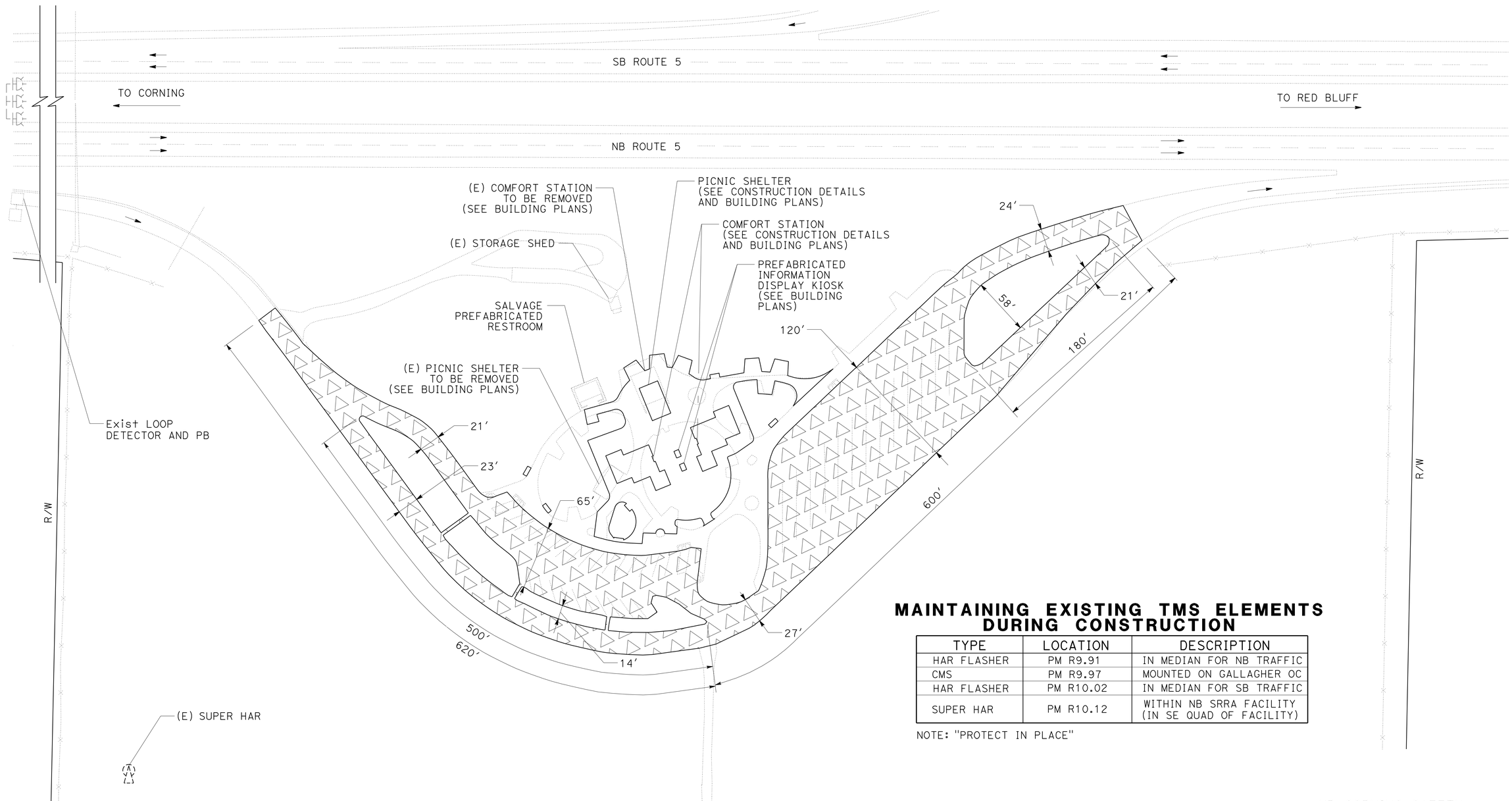

MAINTAINING EXISTING TMS ELEMENTS DURING CONSTRUCTION

TYPE	LOCATION	DESCRIPTION
HAR FLASHER	PM R9.91	IN MEDIAN FOR NB TRAFFIC
CMS	PM R9.97	MOUNTED ON GALLAGHER OC
HAR FLASHER	PM R10.02	IN MEDIAN FOR SB TRAFFIC
SUPER HAR	PM R10.12	WITHIN NB SRRA FACILITY (IN SE QUAD OF FACILITY)

NOTE: "PROTECT IN PLACE"

NB CORNING SAFETY ROADSIDE REST AREA

LAYOUT

SCALE: 1" = 50'

L-1

REVISED BY	DATE REVISED
MICHAEL WEBB	JEANNIE STEFFAN
CALCULATED-DESIGNED BY	CHECKED BY
FUNCTIONAL SUPERVISOR	JULIE CASEY

STATE OF CALIFORNIA - DEPARTMENT OF TRANSPORTATION
Caltrans® DESIGN

P:\proj2\02\0E360_plans\pse\RESUBMIT_5-11-15\20e360ea001.dgn

LAST REVISION 01-18-12 | DATE PLOTTED => 11-MAY-2015 TIME PLOTTED => 10:56

Dist	COUNTY	ROUTE	POST MILES TOTAL PROJECT	SHEET No.	TOTAL SHEETS
02	Teh	5	10.5	3	199

Michael R. Webb 12-19-13
REGISTERED CIVIL ENGINEER DATE

4-1-14
PLANS APPROVAL DATE

REGISTERED PROFESSIONAL ENGINEER
MICHAEL R. WEBB
No. C73986
Exp. 6-30-15
CIVIL
STATE OF CALIFORNIA

THE STATE OF CALIFORNIA OR ITS OFFICERS OR AGENTS SHALL NOT BE RESPONSIBLE FOR THE ACCURACY OR COMPLETENESS OF SCANNED COPIES OF THIS PLAN SHEET.

NOTE:

1. FOR ACCURATE RIGHT OF WAY DATA, CONTACT RIGHT OF WAY ENGINEERING AT THE DISTRICT OFFICE.

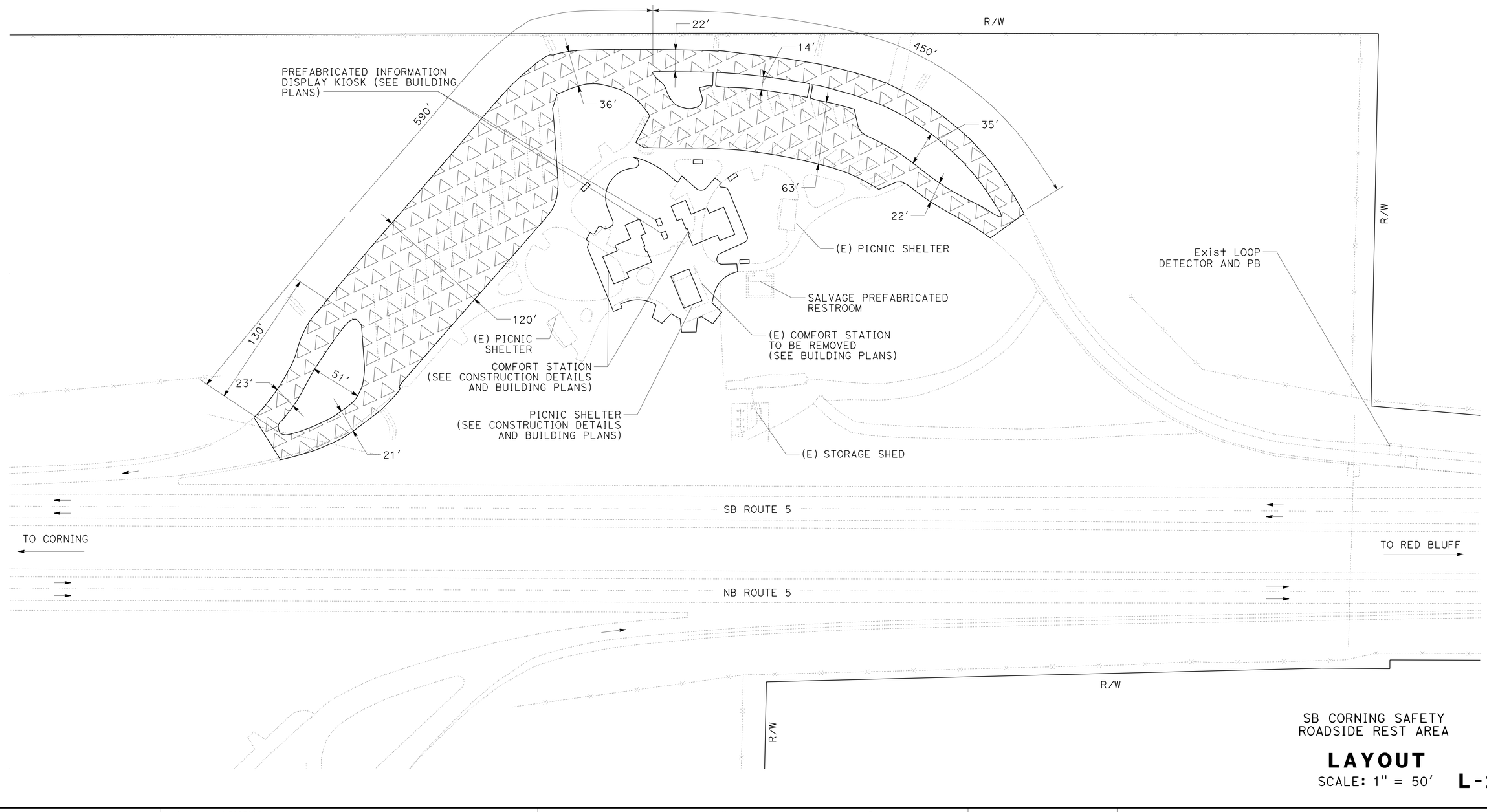

SB CORNING SAFETY ROADSIDE REST AREA

LAYOUT

SCALE: 1" = 50′ **L-2**

REVISED BY | DATE REVISED
MICHAEL WEBB | JEANNIE STEFFAN
CALCULATED-DESIGNED BY | CHECKED BY
FUNCTIONAL SUPERVISOR | JULIE CASEY

STATE OF CALIFORNIA - DEPARTMENT OF TRANSPORTATION
Caltrans® **DESIGN**

P:\proj2\02\0E360_plans\pse\RESUBMIT_5-11-15\20e360ea002.dgn

LAST REVISION | DATE PLOTTED => 11-MAY-2015 | TIME PLOTTED => 10:56
01-18-12

Dist	COUNTY	ROUTE	POST MILES TOTAL PROJECT	SHEET No.	TOTAL SHEETS
02	Teh	5	10.5	4	199

Michael R. Webb 12-19-13
REGISTERED CIVIL ENGINEER DATE

4-1-14
PLANS APPROVAL DATE

REGISTERED PROFESSIONAL ENGINEER MICHAEL R. WEBB No. C73986 Exp. 6-30-15 CIVIL STATE OF CALIFORNIA

THE STATE OF CALIFORNIA OR ITS OFFICERS OR AGENTS SHALL NOT BE RESPONSIBLE FOR THE ACCURACY OR COMPLETENESS OF SCANNED COPIES OF THIS PLAN SHEET.

NOTE:

1. SEE CONSTRUCTION DETAILS SHEET C-3 FOR REFERENCE POINT LOCATIONS.

KEY NOTE (THIS SHEET ONLY):

1 SEE BUILDING PLANS (CONCRETE FINISHES TO MATCH CIVIL SHEETS)

LEGEND:

- MINOR CONCRETE (EXPOSED AGGREGATE CONCRETE)
- REMOVE CONCRETE
- FACE OF Ext Bldg Ftg
- FACE OF Bldg
- FAUCET ASSEMBLY (SEE LANDSCAPE DETAILS)
- Exist CONTROL MONUMENT

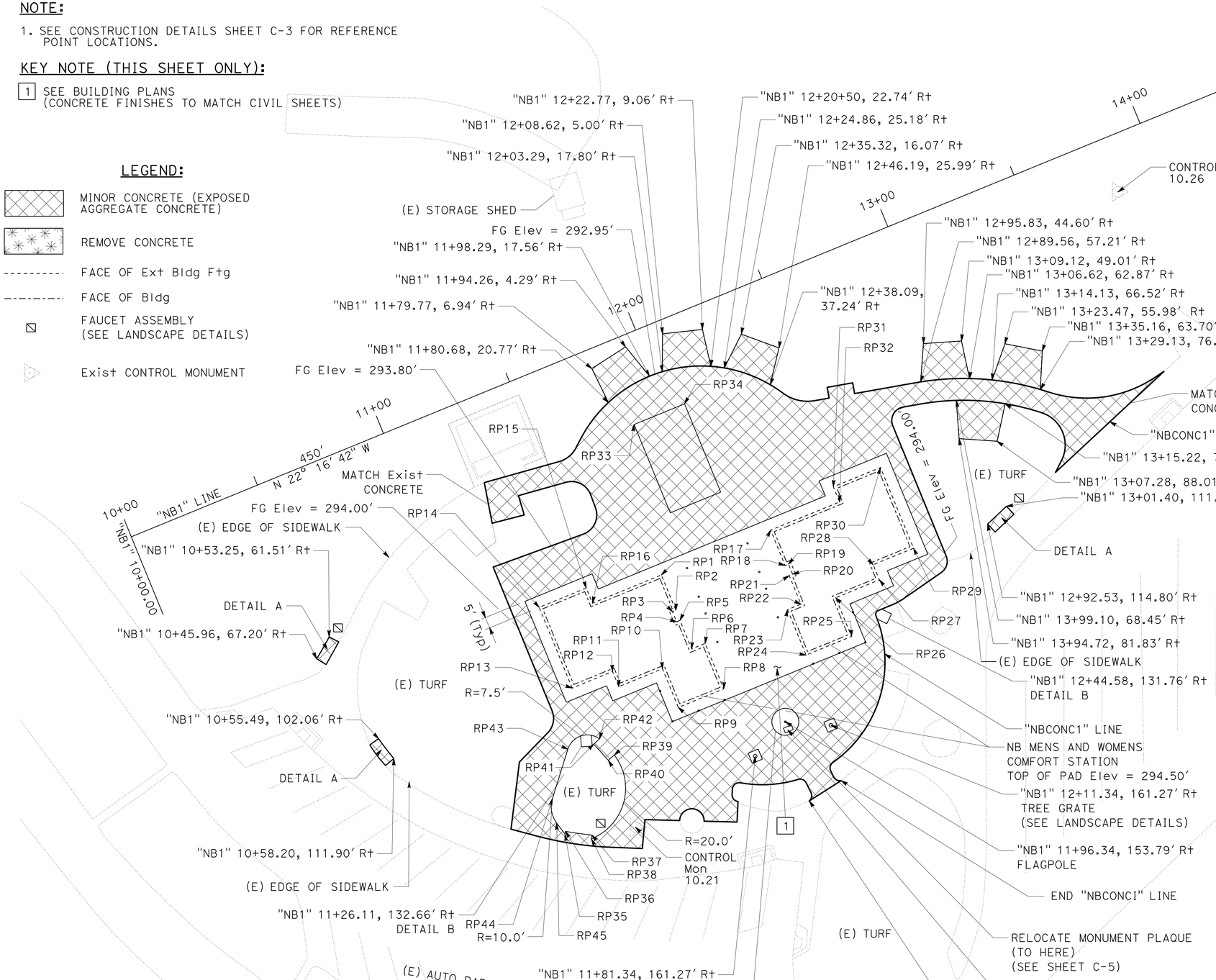

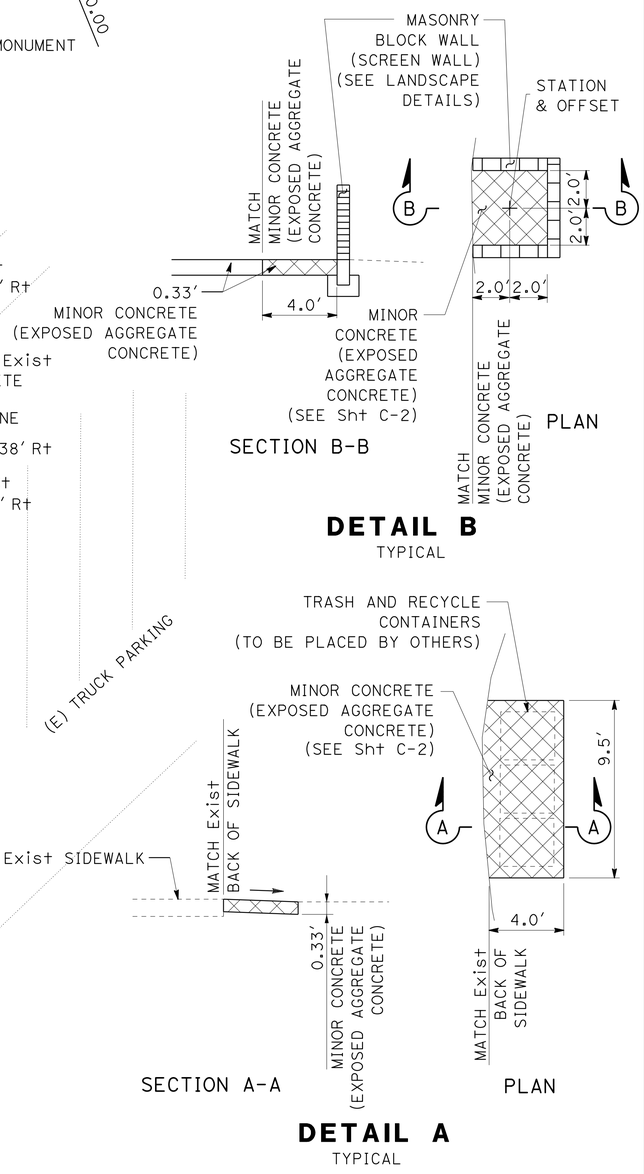

NB CORNING SAFETY ROADSIDE REST AREA

CONSTRUCTION DETAILS

SCALE: 1" = 20'

C-1

REVISED BY	DATE REVISED

CALCULATED-DESIGNED BY: MICHAEL WEBB
CHECKED BY: JEANNIE STEFFAN
FUNCTIONAL SUPERVISOR: JULIE CASEY

STATE OF CALIFORNIA - DEPARTMENT OF TRANSPORTATION
Caltrans
DESIGN

P:\proj2\02\0E360_plans\pse\RESUBMIT_5-11-15\20e360ga001.dgn

LAST REVISION 01-18-12 | DATE PLOTTED => 11-MAY-2015 | TIME PLOTTED => 10:56

Dist	COUNTY	ROUTE	POST MILES TOTAL PROJECT	SHEET No.	TOTAL SHEETS
02	Teh	5	10.5	5	199

Michael R. Webb 12-19-13
REGISTERED CIVIL ENGINEER DATE

4-1-14
PLANS APPROVAL DATE

REGISTERED PROFESSIONAL ENGINEER MICHAEL R. WEBB No. C73986 Exp. 6-30-15 CIVIL STATE OF CALIFORNIA

THE STATE OF CALIFORNIA OR ITS OFFICERS OR AGENTS SHALL NOT BE RESPONSIBLE FOR THE ACCURACY OR COMPLETENESS OF SCANNED COPIES OF THIS PLAN SHEET.

NOTE:

SEE CONSTRUCTION DETAILS SHEET C-4 FOR REFERENCE POINT LOCATIONS.

KEY NOTE (THIS SHEET ONLY):

1 SEE BUILDING PLANS (CONCRETE FINISHES TO MATCH CIVIL SHEETS)

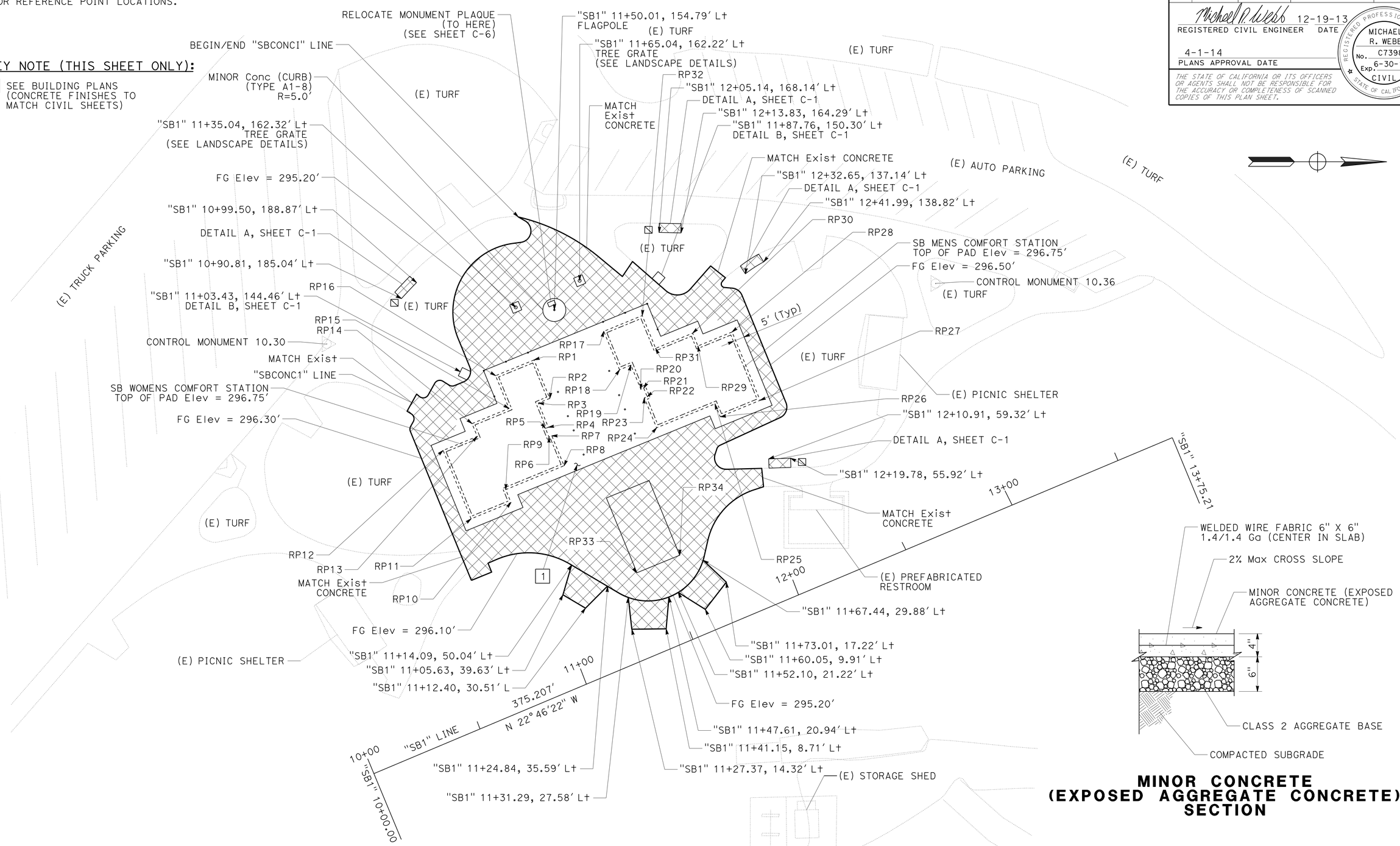

MINOR CONCRETE (EXPOSED AGGREGATE CONCRETE) SECTION

SB CORNING SAFETY ROADSIDE REST AREA

CONSTRUCTION DETAILS

SCALE: 1" = 20'

C-2

REVISED BY | DATE REVISED
MICHAEL WEBB | JEANNIE STEFFAN
CALCULATED-DESIGNED BY | CHECKED BY
FUNCTIONAL SUPERVISOR: JULIE CASEY

STATE OF CALIFORNIA - DEPARTMENT OF TRANSPORTATION
Caltrans
DESIGN

P:\proj2\02\0E360_plans\pse\RESUBMIT_5-11-15\20e360ga002.dgn

LAST REVISION 01-18-12 | DATE PLOTTED => 11-MAY-2015 | TIME PLOTTED => 10:56

Dist	COUNTY	ROUTE	POST MILES TOTAL PROJECT	SHEET No.	TOTAL SHEETS
02	Teh	5	10.5	6	199

Michael R. Webb 12-19-13
REGISTERED CIVIL ENGINEER DATE

4-1-14
PLANS APPROVAL DATE

REGISTERED PROFESSIONAL ENGINEER MICHAEL R. WEBB No. C73986 Exp. 6-30-15 CIVIL STATE OF CALIFORNIA

THE STATE OF CALIFORNIA OR ITS OFFICERS OR AGENTS SHALL NOT BE RESPONSIBLE FOR THE ACCURACY OR COMPLETENESS OF SCANNED COPIES OF THIS PLAN SHEET.

HORIZONTAL AND VERTICAL CONTROL MONUMENT INFORMATION

NAME	DESCRIPTION	NORTHING	EASTING	ELEVATION (FT)
CONTROL MONUMENT 10.21	REBAR/CAP	1863654.5142	6505956.5287	293.93
CONTROL MONUMENT 10.26	REBAR/CAP	1863831.5381	6505723.3534	291.57

"NBCONC1" LINE HORIZONTAL ALIGNMENT DATA

FOR LIMITS OF MINOR CONCRETE (EXPOSED AGGREGATE CONCRETE)

DESCRIPTION	NORTHING	EASTING	DISTANCE FT	RADIUS FT	CURVE LENGTH FT
BEGIN	1863718.3660	6505946.7910	0.249		
BC	1863718.5379	6505946.6105			
PI	1863719.7370	6505945.3510		2.5	3.039
EC	1863718.9733	6505943.7887	3.978		
BC	1863717.2264	6505940.2151			
PI	1863716.2990	6505938.3180		2.5	3.507
EC	1863714.2735	6505938.9150	0.447		
BC	1863713.8447	6505939.0414			
PI	1863703.9090	6505941.9700		45.0	20.362
EC	1863693.6928	6505940.2599	0.662		
BC	1863693.0402	6505940.1507			
PI	1863690.3000	6505939.6920		2.5	4.19
EC	1863690.1320	6505942.4652	1.938		
BC	1863690.0148	6505944.3996			
PI	1863689.9000	6505946.2950		2.5	3.248
EC	1863691.6951	6505946.9141	0.539		
	1863692.2050	6505947.0900	7.490		
	1863691.8320	6505954.5710	12.072		
	1863679.7640	6505954.2510	0.066		
BC	1863679.7639	6505954.1852			
PI	1863679.5620	6505792.2300		4.5	13.887
EC	1863670.7706	6505953.9466	0.066		
	1863670.7670	6505954.0120	12.727		
	1863658.0440	6505953.6740	10.648		
	1863657.0880	6505964.2790	11.639		
BC	1863645.4588	6505963.8086			
PI	1863631.6490	6505963.2500		125	27.530
EC	1863618.2948	6505959.6879	9.735		
	1863608.8890	6505957.1790	24.848		
	1863611.9950	6505932.5260	14.953		
BC	1863622.4026	6505921.7901			
PI	1863625.8180	6505918.2670		7.5	8.69
EC	1863623.9578	6505913.7265	56.959		
	1863602.3640	6505861.0190	35.209		
BC	1863635.4338	6505848.9325			
PI	1863642.4780	6505846.3580		7.5	11.781
EC	1863639.9035	6505839.3138	5.068		
BC	1863638.1639	6505834.5538			
PI	1863635.7800	6505828.0310		7.5	11.205
EC	1863629.0934	6505829.9072	18.125		
	1863611.6420	6505834.8040	7.395		
	1863613.7420	6505841.8950	12.148		
	1863601.9820	6505844.9410	15.200		
	1863599.0860	6505830.0190	28.529		

"NBCONC1" LINE HORIZONTAL ALIGNMENT DATA

FOR LIMITS OF MINOR CONCRETE (EXPOSED AGGREGATE CONCRETE)

DESCRIPTION	NORTHING	EASTING	DISTANCE FT	RADIUS FT	CURVE LENGTH FT
BC	1863626.5537	6505822.3109			
PI	1863630.7370	6505821.1370		10.0	8.198
EC	1863632.7335	6505817.2780	3.402		
BC	1863634.2967	6505814.2568			
PI	1863660.7140	6505763.1970		50.0	85.496
EC	1863707.6172	6505796.4395	1.715		
BC	1863709.0161	6505797.4310			
PI	1863717.1350	6505801.0590		15.0	11.885
EC	1863720.3126	6505799.9619	37.762		
BC	1863757.4932	6505793.3588			
PI	1863782.1660	6505788.9770		100	49.107
EC	1863805.9896	6505796.7479	0.201		
BC	1863806.1808	6505796.8103			
PI	1863826.9320	6505803.5790		45.0	40.645
EC	1863845.0942	6505791.4728	4.188		
	1863848.5790	6505789.1500	54.466		
	1863808.7030	6505826.2500	4.840		
BC	1863810.8958	6505821.9356			
PI	1863817.5710	6505808.8020		12.5	21.68
EC	1863803.5255	6505804.3550	0.816		
BC	1863802.7479	6505804.1089			
PI	1863781.1730	6505797.2780		92.0	44.38
EC	1863758.8912	6505801.2352	6.252		
BC	1863752.7359	6505802.3283			
PI	1863746.6340	6505803.4120		5.0	8.919
EC	1863748.9834	6505809.1468	51.699		
BC	1863768.5823	6505856.9866			
PI	1863770.1040	6505860.7010		5.0	6.764
EC	1863766.8064	6505862.9897	16.468		
BC	1863753.2774	6505872.3796			
PI	1863751.0320	6505873.9380		25.0	5.445
EC	1863748.5029	6505874.9744	5.266		
BC	1863743.6302	6505876.9713			
PI	1863742.2620	6505877.5320		1.5	2.335
EC	1863742.8030	6505878.9081	0.542		
BC	1863743.0013	6505879.4124			
PI	1863755.6740	6505911.6470		45.0	59.039
EC	1863727.7565	6505932.1479	0.963		
BC	1863726.9807	6505932.7176			
PI	1863725.2970	6505933.9540		2.5	3.48
EC	1863726.2144	6505935.8306	2.419		
BC	1863727.2768	6505938.0040			
PI	1863728.0370	6505939.5590		2.5	3.028
EC	1863729.7601	6505939.3947	0.250		
END	1863730.0090	6505939.3710			

REFERENCE POINT INFORMATION

FOR EXTERIOR FACE OF COMFORT STATION FOOTING

REFERENCE POINT	ALIGNMENT	STATION	OFFSET FT	SIDE
RP1	"NB1"	11+74.67	869.69	R†
RP2	"NB1"	11+74.67	100.69	R†
RP3	"NB1"	11+73.34	100.69	R†
RP4	"NB1"	11+73.34	104.69	R†
RP5	"NB1"	11+74.67	104.69	R†
RP6	"NB1"	11+74.67	116.02	R†
RP7	"NB1"	11+80.00	116.02	R†
RP8	"NB1"	11+80.00	134.02	R†
RP9	"NB1"	11+62.00	134.02	R†
RP10	"NB1"	11+62.00	118.69	R†
RP11	"NB1"	11+44.67	118.69	R†
RP12	"NB1"	11+44.67	112.69	R†
RP13	"NB1"	11+28.67	112.69	R†
RP14	"NB1"	11+28.67	80.69	R†
RP15	"NB1"	11+47.34	80.69	R†
RP16	"NB1"	11+47.34	86.69	R†
RP17	"NB1"	12+18.01	86.69	R†
RP18	"NB1"	12+18.01	100.69	R†
RP19	"NB1"	12+19.34	100.69	R†
RP20	"NB1"	12+19.34	104.69	R†
RP21	"NB1"	12+18.01	104.69	R†
RP22	"NB1"	12+18.01	116.02	R†
RP23	"NB1"	12+12.68	116.02	R†
RP24	"NB1"	12+12.68	134.02	R†
RP25	"NB1"	12+30.68	134.02	R†
RP26	"NB1"	12+30.68	118.69	R†
RP27	"NB1"	12+48.01	118.7	R†
RP28	"NB1"	12+48.01	112.69	R†
RP29	"NB1"	12+64.01	112.69	R†
RP30	"NB1"	12+64.01	80.69	R†
RP31	"NB1"	12+45.34	80.69	R†
RP32	"NB1"	12+45.34	86.69	R†
RP33	"NB1"	11+86.34	31.82	R†
RP34	"NB1"	12+06.34	31.82	R†
RP35	"NB1"	11+05.91	161.30	R†
RP36	"NB1"	11+06.48	160.40	R†
RP37	"NB1"	11+14.89	165.31	R†
RP38	"NB1"	11+14.22	166.55	R†
RP39	"NB1"	11+36.64	141.26	R†
RP40	"NB1"	11+30.87	142.25	R†
RP41	"NB1"	11+28.19	134.71	R†
RP42	"NB1"	11+30.87	133.75	R†
RP43	"NB1"	11+18.67	132.85	R†
RP44	"NB1"	11+06.59	147.45	R†
RP45	"NB1"	11+04.62	156.35	R†

NB CORNING SRRA
ROADSIDE REST AREA

CONSTRUCTION DETAILS

NO SCALE

C-3

REVISED BY | DATE REVISED
MICHAEL WEBB | JEANNIE STEFFAN
CALCULATED-DESIGNED BY | CHECKED BY
FUNCTIONAL SUPERVISOR: JULIE CASEY

STATE OF CALIFORNIA - DEPARTMENT OF TRANSPORTATION
Caltrans DESIGN

P:\proj2\02\0E360_plans\pse\RESUBMIT_5-11-15\20e360ga003.dgn

LAST REVISION 01-18-12 | DATE PLOTTED => 11-MAY-2015 | TIME PLOTTED => 10:56

Dist	COUNTY	ROUTE	POST MILES TOTAL PROJECT	SHEET No.	TOTAL SHEETS
02	Teh	5	10.5	7	199

Michael R. Webb 12-19-13
REGISTERED CIVIL ENGINEER DATE

4-1-14
PLANS APPROVAL DATE

REGISTERED PROFESSIONAL ENGINEER MICHAEL R. WEBB No. C73986 Exp. 6-30-15 CIVIL STATE OF CALIFORNIA

THE STATE OF CALIFORNIA OR ITS OFFICERS OR AGENTS SHALL NOT BE RESPONSIBLE FOR THE ACCURACY OR COMPLETENESS OF SCANNED COPIES OF THIS PLAN SHEET.

HORIZONTAL AND VERTICAL CONTROL MONUMENT INFORMATION

NAME	DESCRIPTION	NORTHING	EASTING	ELEVATION (FT)
CONTROL MONUMENT 10.30	PK NAIL W/WASHER	1864215.3037	6505180.1786	294.07
CONTROL MONUMENT 10.36	REBAR/CAP	1864479.2566	6505296.2545	296.65

"SBCONC1" LINE HORIZONTAL ALIGNMENT DATA

FOR LIMITS OF MINOR CONCRETE (EXPOSED AGGREGATE CONCRETE)

DESCRIPTION	NORTHING	EASTING	DISTANCE	RADIUS	CURVE LENGTH
			FT	FT	FT
BEGIN	1864298.3350	6505125.2380	0.986		
BC	1864299.2924	6505125.4736			
PI	1864318.2320	6505130.1340		85.0	38.3450
EC	1864333.2451	6505142.5854	13.236		
	1864343.4330	6505151.0350	7.841		
	1864347.8210	6505144.5370	19.207		
BC	1864362.2850	6505157.1740			
PI	1864367.9140	6505162.0900		7.5	11.7560
EC	1864372.8509	6505156.4795	13.35		
	1864381.6680	6505146.4560	8.194		
	1864388.0840	6505151.5530	2.299		
BC	1864386.6226	6505153.3280			
PI	1864384.8120	6505155.5270		1.5	3.2580
EC	1864387.6496	6505155.7757	3.44		
BC	1864391.0768	6505156.0760			
PI	1864394.1120	6505156.3420		5.0	5.4730
EC	1864395.2671	6505159.1614	50.288		
BC	1864414.3312	6505205.6954			
PI	1864416.1480	6505210.1300		5.0	7.6420
EC	1864411.7944	6505212.1331	28.704		
BC	1864385.7180	6505224.1312			
PI	1864384.7230	6505224.5890		2.5	2.0650
EC	1864384.3850	6505225.6308	2.481		
BC	1864383.6193	6505227.9910			
PI	1864381.4370	6505234.7180		5.0	9.5540
EC	1864388.5067	6505234.5322	15.31		
	1864403.8110	6505234.1300	7.991		
	1864404.6130	6505242.0810	4.338		
BC	1864400.4857	6505243.4164			
PI	1864384.2670	6505248.6640		30	31.003
EC	1864380.4733	6505265.2830	7.008		
BC	1864378.9136	6505272.1155			
PI	1864371.2900	6505305.5120		25	47.017
EC	1864341.8091	6505288.0671	24.546		
BC	1864320.5844	6505275.5668			
PI	1864305.3570	6505266.4970		35	32.949
EC	1864289.0026	6505273.5486	4.143		
	1864285.1980	6505275.1890	4.174		
	1864286.7800	6505279.0520	9.499		
	1864277.9900	6505282.6530	69.761		

"SBCONC1" LINE HORIZONTAL ALIGNMENT DATA CONTINUED

FOR LIMITS OF MINOR CONCRETE (EXPOSED AGGREGATE CONCRETE)

DESCRIPTION	NORTHING	EASTING	DISTANCE	RADIUS	CURVE LENGTH
			FT	FT	FT
BC	1864251.5432	6505218.0999			
PI	1864251.0860	6505216.9840		2.5	2.247
EC	1864251.6747	6505215.9316	2.357		
BC	1864252.8256	6505213.8743			
PI	1864253.9870	6505211.7980		2.5	3.803
EC	1864251.9708	6505210.5351	2.191		
	1864250.1140	6505209.3720	8.489		
	1864254.2590	6505201.9640	1.618		
BC	1864255.4946	6505203.0089			
PI	1864257.8100	6505204.9670		2.5	4.407
EC	1864259.2906	6505202.3206	5.783		
BC	1864262.1145	6505197.2735			
PI	1864263.3960	6505194.9830		2.5	4.049
EC	1864265.6215	6505196.3743	3.245		
BC	1864268.3730	6505198.0945			
PI	1864269.4600	6505198.7740		2.5	2.369
EC	1864270.6462	6505198.2880	4.213		
BC	1864274.5446	6505196.6906			
PI	1864279.1710	6505194.7950		5	7.854
EC	1864277.2756	6505190.1685	13.363		
BC	1864272.2098	6505177.8033			
PI	1864257.4850	6505141.8610		30	54.788
EC	1864295.9817	6505136.6967	3.514		
BC	1864299.4646	6505136.2294			
PI	1864314.0410	6505134.2740		5	12.431
EC	1864301.2932	6505126.9399	3.413		
END	1864298.3350	6505125.2380			

REFERENCE POINT INFORMATION

FOR EXTERIOR FACE OF COMFORT STATION FOOTING

REFERENCE POINT	ALIGNMENT	STATION	OFFSET	SIDE
			FT	
RP1	"SB1"	11+33.52	138.26	Lt
RP2	"SB1"	11+33.36	120.26	Lt
RP3	"SB1"	11+28.03	120.31	Lt
RP4	"SB1"	11+27.92	108.97	Lt
RP5	"SB1"	11+26.59	108.99	Lt
RP6	"SB1"	11+26.55	104.99	Lt
RP7	"SB1"	11+27.89	104.97	Lt
RP8	"SB1"	11+27.76	90.98	Lt
RP9	"SB1"	11+00.42	91.23	Lt
RP10	"SB1"	11+00.37	85.23	Lt
RP11	"SB1"	10+81.64	85.40	Lt
RP12	"SB1"	10+81.94	117.40	Lt
RP13	"SB1"	10+97.94	117.25	Lt
RP14	"SB1"	10+97.99	123.25	Lt
RP15	"SB1"	11+15.38	123.09	Lt
RP16	"SB1"	11+15.52	138.42	Lt
RP17	"SB1"	11+66.17	137.96	Lt
RP18	"SB1"	11+66.00	119.96	Lt
RP19	"SB1"	11+71.33	119.91	Lt
RP20	"SB1"	11+71.23	108.57	Lt
RP21	"SB1"	11+72.56	108.56	Lt
RP22	"SB1"	11+72.53	104.56	Lt
RP23	"SB1"	11+71.19	104.57	Lt
RP24	"SB1"	11+71.06	90.57	Lt
RP25	"SB1"	11+98.39	90.32	Lt
RP26	"SB1"	11+98.34	84.32	Lt
RP27	"SB1"	12+17.30	84.15	Lt
RP28	"SB1"	12+17.59	116.15	Lt
RP29	"SB1"	12+01.59	116.30	Lt
RP30	"SB1"	12+01.65	122.30	Lt
RP31	"SB1"	11+84.03	122.46	Lt
RP32	"SB1"	11+84.17	137.79	Lt
RP33	"SB1"	11+38.91	36.00	Lt
RP34	"SB1"	11+58.91	35.82	Lt

SB CORNING SRRA
ROADSIDE REST AREA

CONSTRUCTION DETAILS

NO SCALE

C-4

REVISED BY | DATE REVISED
MICHAEL WEBB | JEANNIE STEFFAN
CALCULATED-DESIGNED BY | CHECKED BY
FUNCTIONAL SUPERVISOR
JULIE CASEY

STATE OF CALIFORNIA - DEPARTMENT OF TRANSPORTATION
Caltrans DESIGN

P:\proj2\02\0E360_plans\pse\RESUBMIT_5-11-15\20e360ga004.dgn

LAST REVISION 01-18-12 | DATE PLOTTED => 11-MAY-2015 | TIME PLOTTED => 10:56

Dist	COUNTY	ROUTE	POST MILES TOTAL PROJECT	SHEET No.	TOTAL SHEETS
02	Teh	5	10.5	8	199

Michael R. Webb 12-19-13
REGISTERED CIVIL ENGINEER DATE

4-1-14
PLANS APPROVAL DATE

REGISTERED PROFESSIONAL ENGINEER MICHAEL R. WEBB No. C73986 Exp. 6-30-15 CIVIL STATE OF CALIFORNIA

THE STATE OF CALIFORNIA OR ITS OFFICERS OR AGENTS SHALL NOT BE RESPONSIBLE FOR THE ACCURACY OR COMPLETENESS OF SCANNED COPIES OF THIS PLAN SHEET.

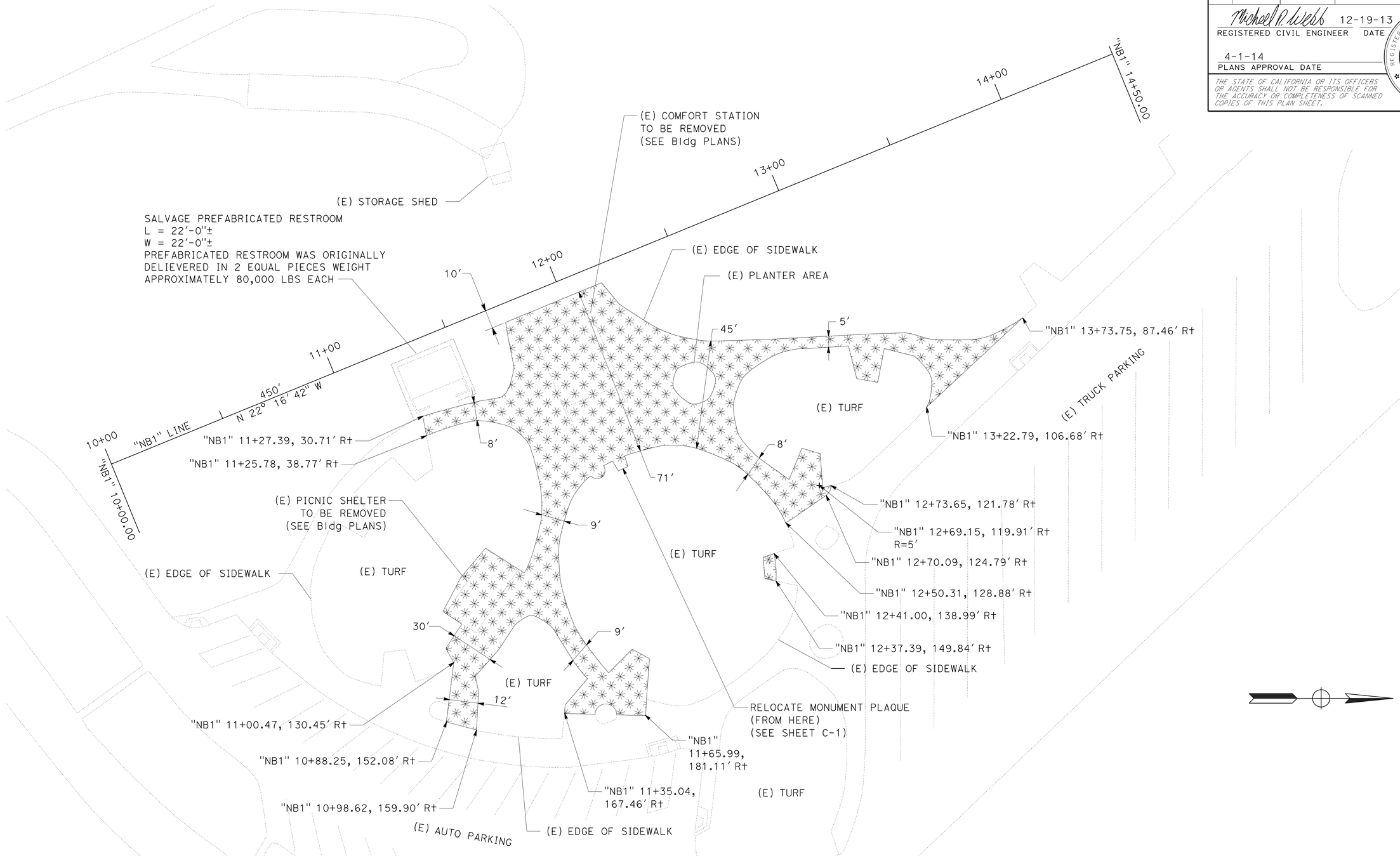

NB CORNING SAFETY
ROADSIDE REST AREA

CONSTRUCTION DETAILS

SCALE: 1" = 20'

C-5

REVISED BY	DATE REVISED

CALCULATED-DESIGNED BY	CHECKED BY
MICHAEL WEBB	JEANNIE STEFFAN

FUNCTIONAL SUPERVISOR: JULIE CASEY

STATE OF CALIFORNIA - DEPARTMENT OF TRANSPORTATION

Caltrans DESIGN

P:\proj2\02\0E360_plans\pse\RESUBMIT_5-11-15\20e360ga005.dgn

LAST REVISION 01-18-12 | DATE PLOTTED => 11-MAY-2015 | TIME PLOTTED => 10:56

Dist	COUNTY	ROUTE	POST MILES TOTAL PROJECT	SHEET No.	TOTAL SHEETS
02	Teh	5	10.5	9	199

Michael R. Webb 12-19-13
REGISTERED CIVIL ENGINEER DATE

4-1-14
PLANS APPROVAL DATE

REGISTERED PROFESSIONAL ENGINEER
MICHAEL R. WEBB
No. C73986
Exp. 6-30-15
CIVIL
STATE OF CALIFORNIA

THE STATE OF CALIFORNIA OR ITS OFFICERS OR AGENTS SHALL NOT BE RESPONSIBLE FOR THE ACCURACY OR COMPLETENESS OF SCANNED COPIES OF THIS PLAN SHEET.

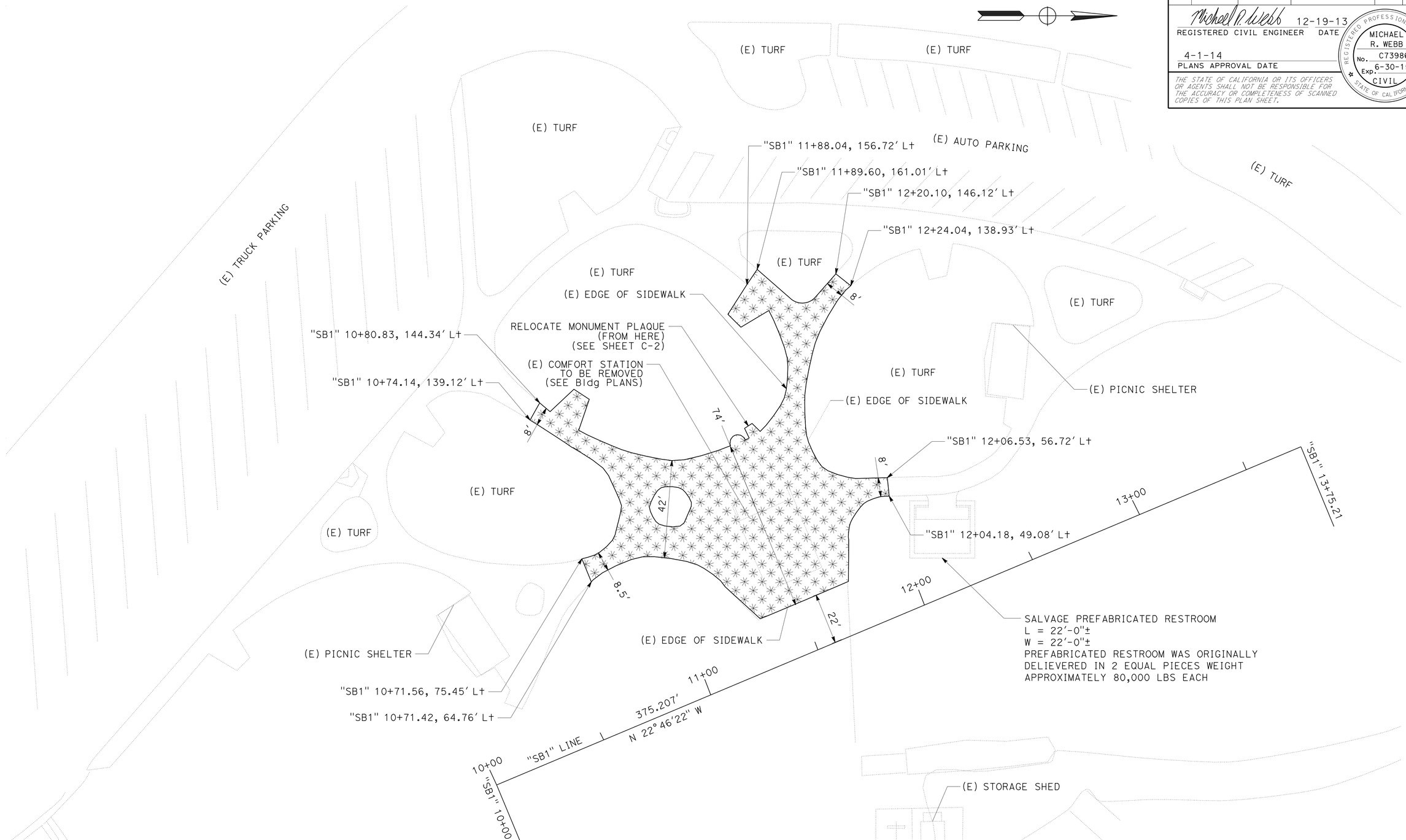

SB CORNING SAFETY
ROADSIDE REST AREA

CONSTRUCTION DETAILS

SCALE: 1" = 20'

C-6

REVISED BY	DATE REVISED

CALCULATED-DESIGNED BY	CHECKED BY
MICHAEL WEBB	JEANNIE STEFFAN

FUNCTIONAL SUPERVISOR: JULIE CASEY

STATE OF CALIFORNIA - DEPARTMENT OF TRANSPORTATION
Caltrans DESIGN

P:\proj2\02\0E360_plans\pse\RESUBMIT_5-11-15\20e360ga006.dgn

LAST REVISION DATE PLOTTED => 11-MAY-2015
01-18-12 TIME PLOTTED => 10:56

Dist	COUNTY	ROUTE	POST MILES TOTAL PROJECT	SHEET No.	TOTAL SHEETS
02	Teh	5	10.5	10	199

Michael R. Webb 12-19-13
REGISTERED CIVIL ENGINEER DATE

4-1-14
PLANS APPROVAL DATE

REGISTERED PROFESSIONAL ENGINEER
MICHAEL R. WEBB
No. C73986
Exp. 6-30-15
CIVIL
STATE OF CALIFORNIA

THE STATE OF CALIFORNIA OR ITS OFFICERS OR AGENTS SHALL NOT BE RESPONSIBLE FOR THE ACCURACY OR COMPLETENESS OF SCANNED COPIES OF THIS PLAN SHEET.

NOTE:

1. ACTUAL FOUNDATION DIMENSIONS MAY VARY PER MANUFACTURER'S RECOMMENDATIONS.

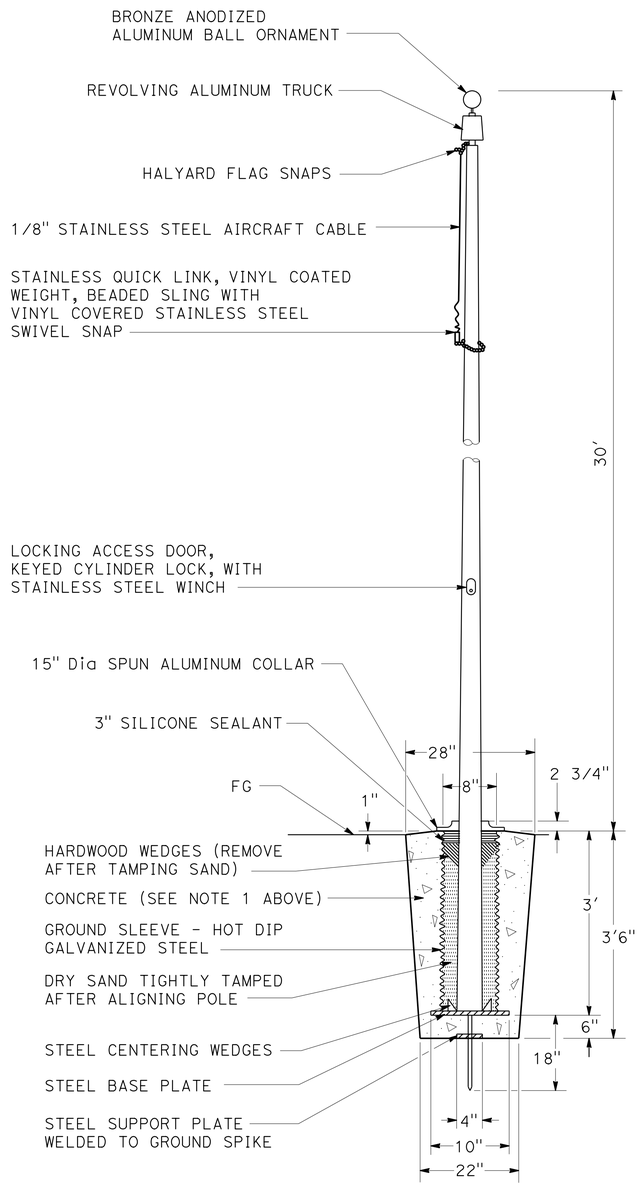

FLAGPOLE
SEE NOTE 1

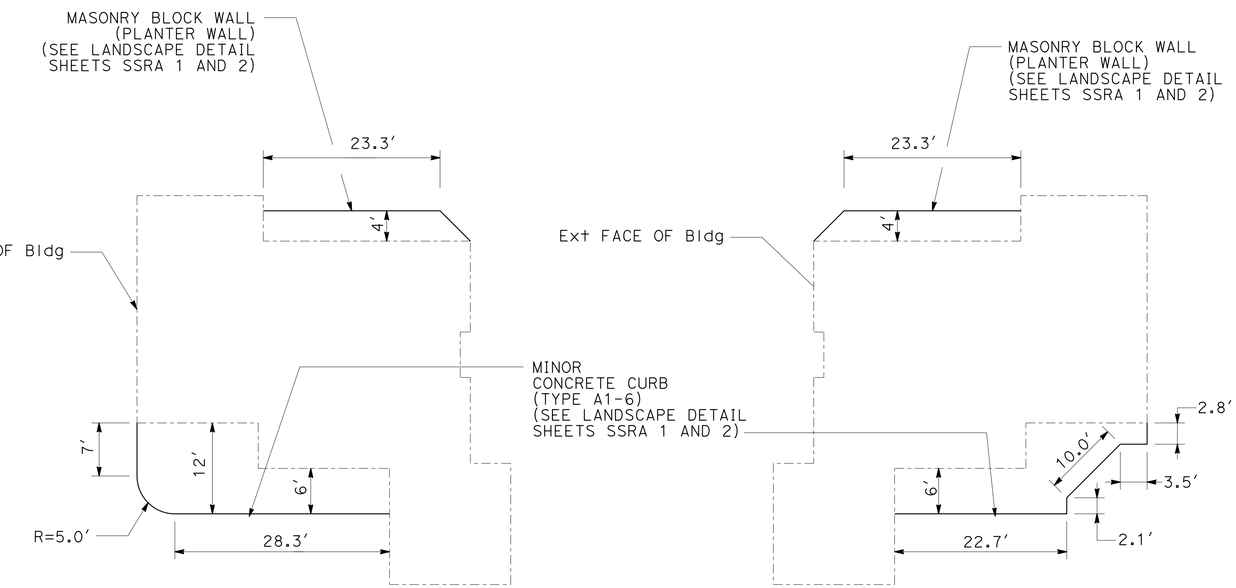

PLAN
PLANTER PLAN

CONSTRUCTION DETAILS
NO SCALE

C-7

REVISED BY | DATE REVISED
MICHAEL WEBB | JEANNIE STEFFAN
CALCULATED-DESIGNED BY | CHECKED BY
FUNCTIONAL SUPERVISOR: JULIE CASEY
STATE OF CALIFORNIA - DEPARTMENT OF TRANSPORTATION
Caltrans® DESIGN
P:\proj2\02\0E360_plans\pse\RESUBMIT_5-11-15\20e360ga007.dgn

LAST REVISION 01-18-12 | DATE PLOTTED => 11-MAY-2015 | TIME PLOTTED => 10:56

Dist	COUNTY	ROUTE	POST MILES TOTAL PROJECT	SHEET No.	TOTAL SHEETS
02	Teh	5	10.5	11	199

Michael R. Webb 03-05-14
REGISTERED CIVIL ENGINEER DATE

4-1-14
PLANS APPROVAL DATE

REGISTERED PROFESSIONAL ENGINEER
MICHAEL R. WEBB
No. C73986
Exp. 6-30-15
CIVIL
STATE OF CALIFORNIA

THE STATE OF CALIFORNIA OR ITS OFFICERS OR AGENTS SHALL NOT BE RESPONSIBLE FOR THE ACCURACY OR COMPLETENESS OF SCANNED COPIES OF THIS PLAN SHEET.

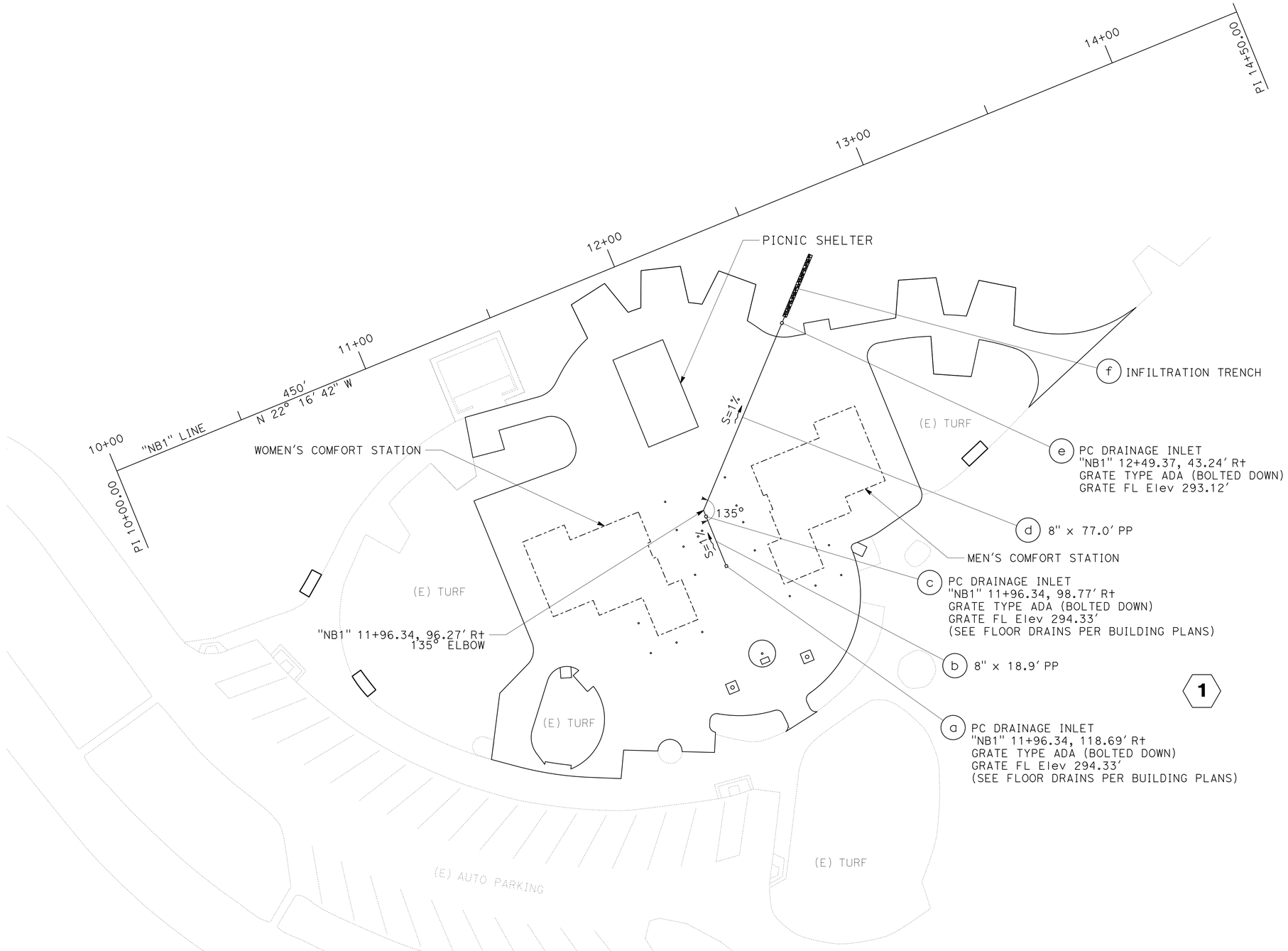

NB CORNING SAFETY
ROADSIDE REST AREA

DRAINAGE PLAN

SCALE: 1" = 20' **D-1**

REVISED BY	DATE REVISED
MICHAEL WEBB	
JAVED IQBAL	

CALCULATED-DESIGNED BY
CHECKED BY

FUNCTIONAL SUPERVISOR
JULIE CASEY

STATE OF CALIFORNIA - DEPARTMENT OF TRANSPORTATION
Caltrans
DESIGN

P:\proj2\02\0E360_plans\pse\RESUBMIT_5-11-15\20e360ia001.dgn

LAST REVISION 01-18-12
DATE PLOTTED => 11-MAY-2015
TIME PLOTTED => 10:56

Dist	COUNTY	ROUTE	POST MILES TOTAL PROJECT	SHEET No.	TOTAL SHEETS
02	Teh	5	10.5	12	199

REGISTERED CIVIL ENGINEER 03-05-14 DATE

4-1-14
PLANS APPROVAL DATE

REGISTERED PROFESSIONAL ENGINEER MICHAEL R. WEBB No. C73986 Exp. 6-30-15 CIVIL STATE OF CALIFORNIA

THE STATE OF CALIFORNIA OR ITS OFFICERS OR AGENTS SHALL NOT BE RESPONSIBLE FOR THE ACCURACY OR COMPLETENESS OF SCANNED COPIES OF THIS PLAN SHEET.

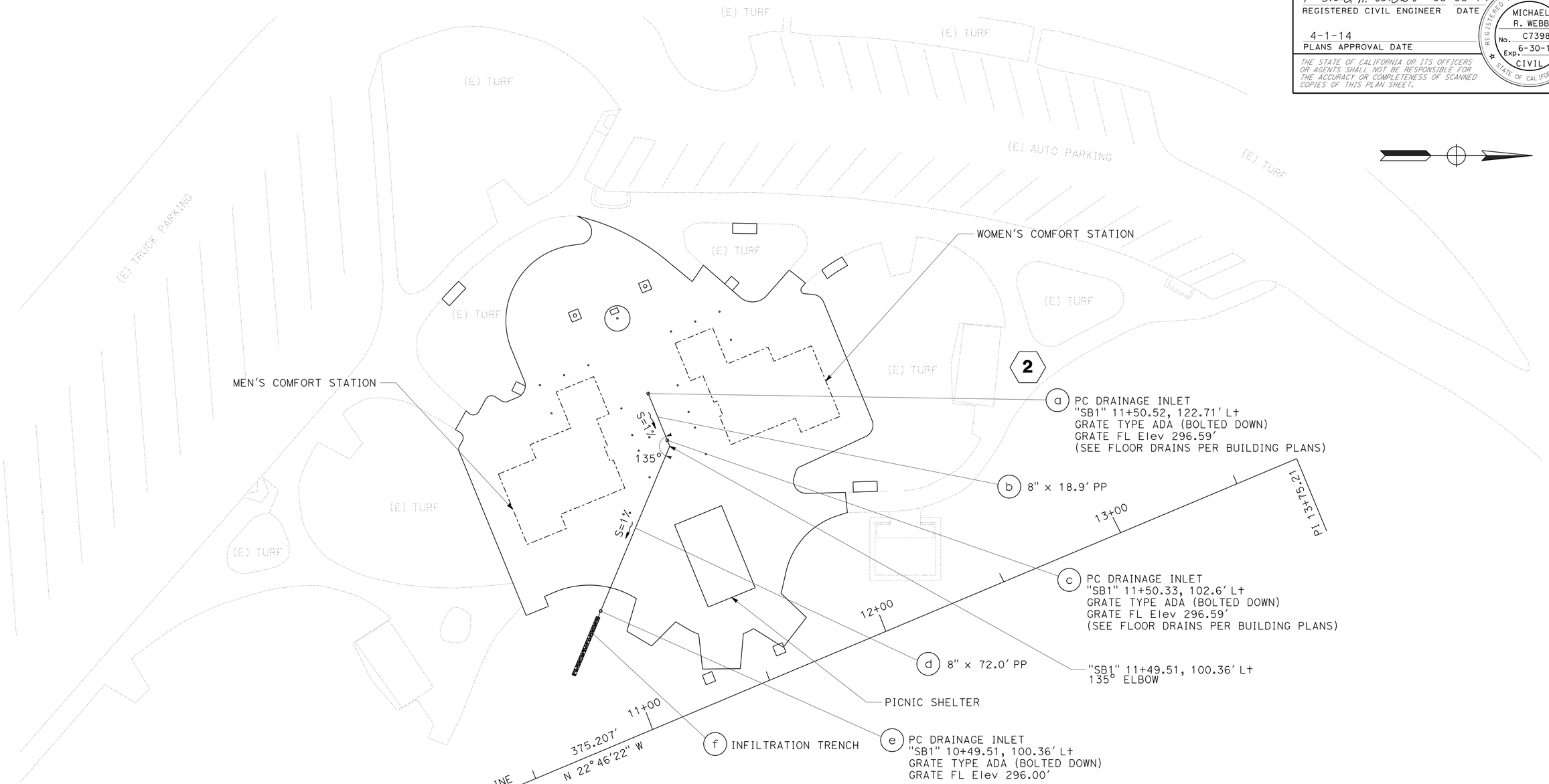

SB CORNING SAFETY
ROADSIDE REST AREA

DRAINAGE PLAN

SCALE: 1" = 20' **D-2**

REVISED BY	DATE REVISED

CALCULATED-DESIGNED BY: MICHAEL WEBB
CHECKED BY: JAVED IQBAL
FUNCTIONAL SUPERVISOR: JULIE CASEY

STATE OF CALIFORNIA - DEPARTMENT OF TRANSPORTATION
Caltrans
DESIGN

P:\proj2\02\0E360_plans\pse\RESUBMIT_5-11-15\20e360ia002.dgn

LAST REVISION 01-18-12 | DATE PLOTTED => 11-MAY-2015 | TIME PLOTTED => 10:56

Dist	COUNTY	ROUTE	POST MILES TOTAL PROJECT	SHEET No.	TOTAL SHEETS
02	Teh	5	10.5	13	199

REGISTERED CIVIL ENGINEER 03-05-14 DATE

4-1-14
PLANS APPROVAL DATE

REGISTERED PROFESSIONAL ENGINEER MICHAEL R. WEBB No. C73986 Exp. 6-30-15 CIVIL STATE OF CALIFORNIA

THE STATE OF CALIFORNIA OR ITS OFFICERS OR AGENTS SHALL NOT BE RESPONSIBLE FOR THE ACCURACY OR COMPLETENESS OF SCANNED COPIES OF THIS PLAN SHEET.

NOTE:

1. FOR ADDITIONAL DETAILS NOT SHOWN SEE STANDARD PLANS.

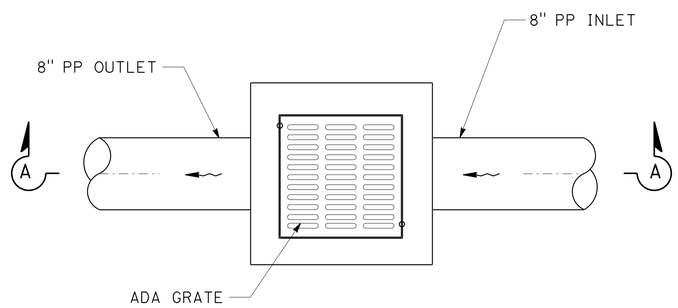

PLAN

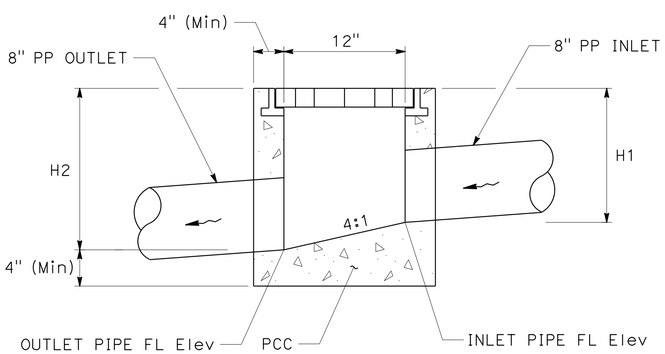

SECTION A-A

PRECAST DRAINAGE INLET

DRAINAGE SYSTEM No. 1 (a) (c) (e)
2 (a) (c) (e)

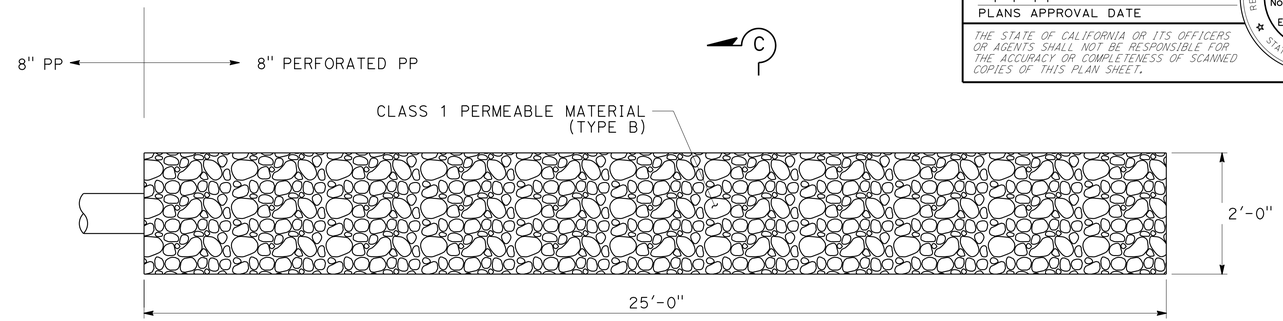

PLAN

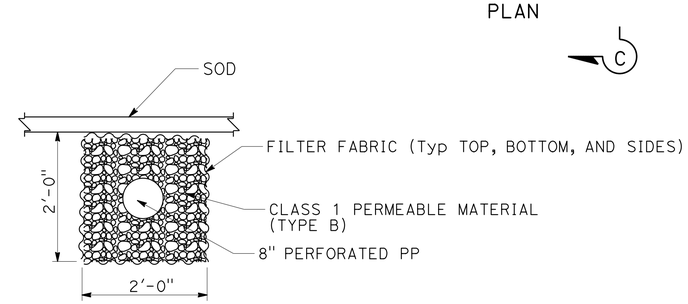

SECTION C-C

INFILTRATION TRENCH

DRAINAGE SYSTEM No. 1 (f)
2 (f)

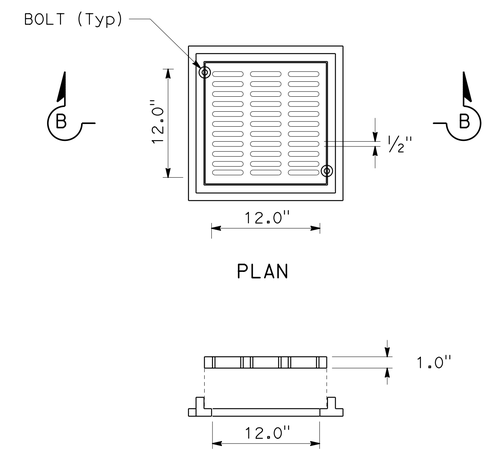

PLAN

SECTION B-B

ADA GRATE

DRAINAGE SYSTEM No. 1 (a) (c) (e)
2 (a) (c) (e)

PRECAST DRAINAGE BASIN DETAIL

DRAINAGE SYSTEM	DRAINAGE UNIT	GRATE FL Elev	INLET FL Elev	H1	OUTLET FL Elev	H2	COMMENTS
		(Ft)	(Ft)	(Ft)	(Ft)	(Ft)	
1	a	294.33	N/A	N/A	292.83	1.5	
	c	294.33	292.64	1.69	292.39	1.94	
	e	293.12	291.62	1.5	291.37	1.75	
2	a	296.59	N/A	N/A	295.09	1.5	
	c	296.59	294.90	1.69	294.65	1.94	
	e	296.00	293.93	2.07	293.68	2.32	

DRAINAGE DETAILS

NO SCALE

DD-1

REVISED BY | DATE REVISED
MICHAEL WEBB | JAVED IQBAL
CALCULATED-DESIGNED BY | CHECKED BY
FUNCTIONAL SUPERVISOR: JULIE CASEY
STATE OF CALIFORNIA - DEPARTMENT OF TRANSPORTATION
DESIGN
Caltrans

P:\proj2\02\0E360_plans\pse\RESUBMIT_5-11-15\20e360ic001.dgn

LAST REVISION 01-18-12 | DATE PLOTTED => 11-MAY-2015 | TIME PLOTTED => 10:56

Dist	COUNTY	ROUTE	POST MILES TOTAL PROJECT	SHEET No.	TOTAL SHEETS
02	Teh	5	10.5	14	199

Michael R. Webb 03-05-14
REGISTERED CIVIL ENGINEER DATE

4-1-14
PLANS APPROVAL DATE

REGISTERED PROFESSIONAL ENGINEER
MICHAEL R. WEBB
No. C73986
Exp. 6-30-15
CIVIL
STATE OF CALIFORNIA

THE STATE OF CALIFORNIA OR ITS OFFICERS OR AGENTS SHALL NOT BE RESPONSIBLE FOR THE ACCURACY OR COMPLETENESS OF SCANNED COPIES OF THIS PLAN SHEET.

NOTE:

1. (N) - NOT A SEPARATE PAY ITEM, FOR INFORMATION ONLY

DRAINAGE QUANTITIES

SHEET No.	DRAINAGE SYSTEM No.	DRAINAGE UNIT	PRECAST DRAINAGE INLET	8" PLASTIC PIPE	(N) 135° ELBOW	INFILTRATION TRENCH	(N) 8" PERFORATED PLASTIC PIPE	(N) CLASS 1 PERMEABLE MATERIAL (TYPE B)	(N) RSP FABRIC (CLASS 8)
			EA	LF	EA	LF	LF	CY	SQFT
D-1	1	a	1						
		b		18.9					
		c	1						
		d		77	1				
		e	1						
		f				25	25	3.4	200
D-2	2	a	1						
		b		18.9					
		c	1						
		d		72	1				
		e	1						
		f				25	25	3.4	200
TOTALS			6	186.8	2	50	50	6.8	400

DRAINAGE QUANTITIES
DQ-1

MICHAEL WEBB
JAVED IQBAL
REVISED BY
DATE REVISED
CALCULATED-DESIGNED BY
CHECKED BY
FUNCTIONAL SUPERVISOR
JULIE CASEY

STATE OF CALIFORNIA - DEPARTMENT OF TRANSPORTATION
Caltrans
DESIGN

P:\proj2\02\0E360_plans\pse\RESUBMIT_5-11-15\20e360id001.dgn

LAST REVISION 01-18-12
DATE PLOTTED => 11-MAY-2015
TIME PLOTTED => 10:56

Dist	COUNTY	ROUTE	POST MILES TOTAL PROJECT	SHEET No.	TOTAL SHEETS
02	Teh	5	10.5	15	199

Michael R. Webb 12-19-13
REGISTERED CIVIL ENGINEER DATE

4-1-14
PLANS APPROVAL DATE

REGISTERED PROFESSIONAL ENGINEER MICHAEL R. WEBB No. C73986 Exp. 6-30-15 CIVIL STATE OF CALIFORNIA

THE STATE OF CALIFORNIA OR ITS OFFICERS OR AGENTS SHALL NOT BE RESPONSIBLE FOR THE ACCURACY OR COMPLETENESS OF SCANNED COPIES OF THIS PLAN SHEET.

NOTE:

1. EXACT LOCATION OF SIGNS WILL BE DETERMINED BY THE ENGINEER.

LEGEND:

- CHANNELIZER (SURFACE MOUNTED)
- I TYPE III BARRICADE

ABBREVIATION:

SRRA SAFETY ROADSIDE REST AREA

CONSTRUCTION AREA SIGNS (STATIONARY MOUNTED)

SIGN	CODE	PANEL SIZE (FT)	SIGN MESSAGE	No. AND SIZE OF POSTS	No. OF SIGNS
A	W20-1	4 x 4	ROAD WORK AHEAD	1-4" x 6"	2
B	G20-2	4 x 1	END ROAD WORK	1-4" x 4"	2
C	C19	4 x 4	RAMP CLOSED AHEAD	1-4" x 6"	2
D	C2	4 x 2½	RAMP CLOSED	N/A	4
E	SC6-4(CA)	4 x 5	RAMP CLOSED W/DURATION	1-4" x 6"	2
1	SPECIAL	4 x 1	48 MILES	N/A	1
2	SPECIAL	FLIP Exist SIGN	CLOSED	N/A	1
3	SPECIAL	FLIP Exist SIGN	CLOSED	N/A	1
4	SPECIAL	FLIP Exist SIGN	CLOSED	N/A	1
5	SPECIAL	FLIP Exist SIGN	CLOSED	N/A	1
6	SPECIAL	FLIP Exist SIGN	CLOSED	N/A	1
7	SPECIAL	FLIP Exist SIGN	CLOSED	N/A	1
8	SPECIAL	4 x 1	52 MILES	N/A	1

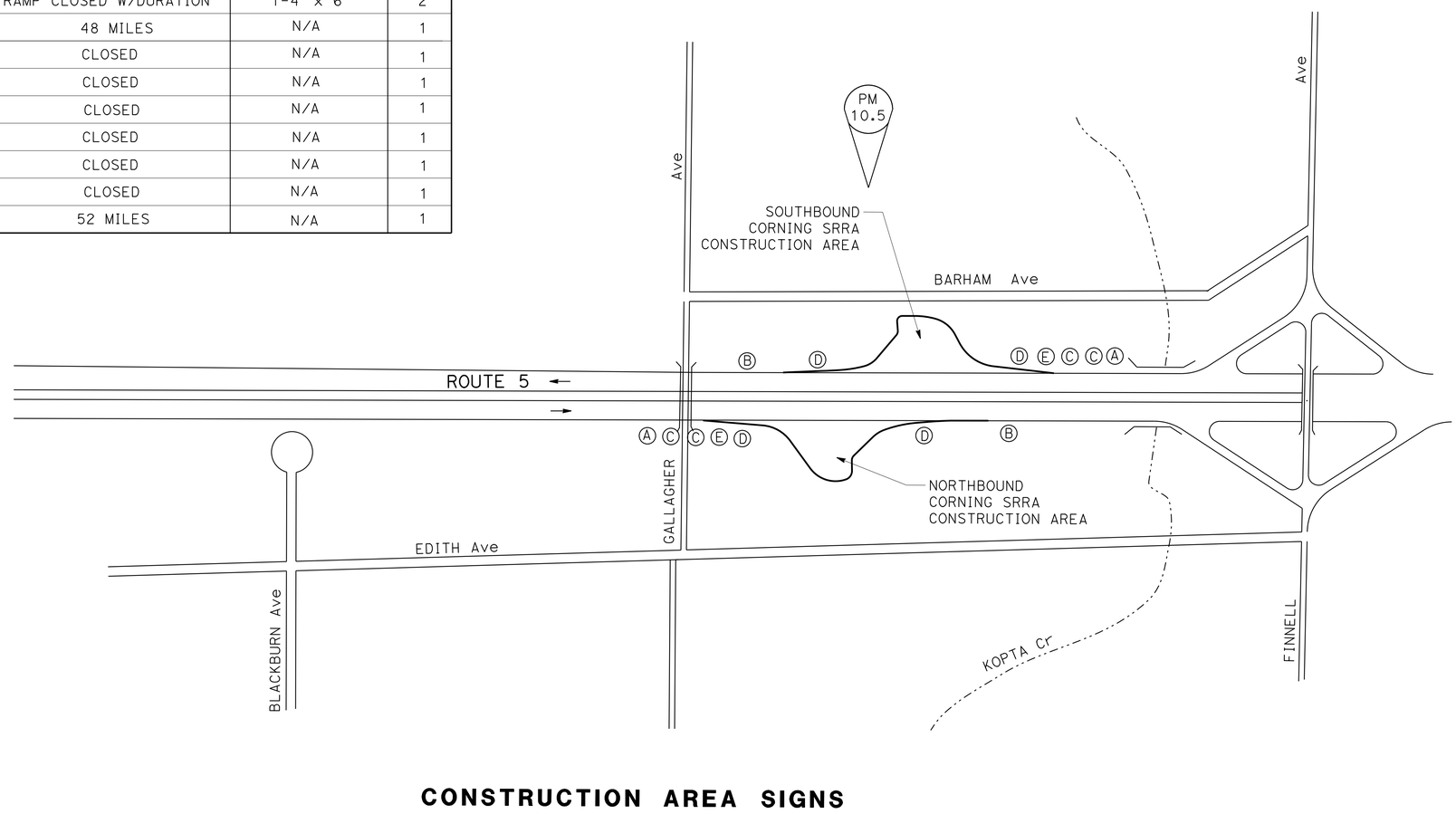

CONSTRUCTION AREA SIGNS

APPROVED FOR CONSTRUCTION AREA SIGNS WORK ONLY

CONSTRUCTION AREA SIGNS
NO SCALE

CS-1

REVISED BY | DATE REVISED
MICHAEL WEBB | JEANNIE STEFFAN
CALCULATED-DESIGNED BY | CHECKED BY
FUNCTIONAL SUPERVISOR: JULIE CASEY
STATE OF CALIFORNIA - DEPARTMENT OF TRANSPORTATION
Caltrans DESIGN

P:\proj2\02\0E3601_plans\pse\RESUBMIT_5-11-15\20e3601a001.dgn

LAST REVISION 01-18-12 | DATE PLOTTED => 11-MAY-2015 | TIME PLOTTED => 10:56

Dist	COUNTY	ROUTE	POST MILES TOTAL PROJECT	SHEET No.	TOTAL SHEETS
02	Teh	5	10.5	16	199

Michael R. Webb 12-19-13
REGISTERED CIVIL ENGINEER DATE

4-1-14
PLANS APPROVAL DATE

REGISTERED PROFESSIONAL ENGINEER MICHAEL R. WEBB No. C73986 Exp. 6-30-15 CIVIL STATE OF CALIFORNIA

THE STATE OF CALIFORNIA OR ITS OFFICERS OR AGENTS SHALL NOT BE RESPONSIBLE FOR THE ACCURACY OR COMPLETENESS OF SCANNED COPIES OF THIS PLAN SHEET.

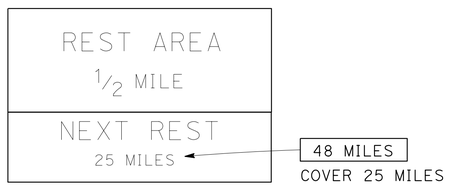

SIGN ①
NB 5
PM 13.86
GLENN COUNTY

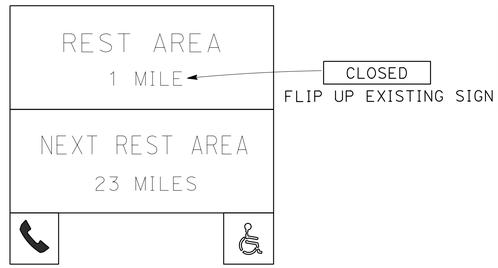

SIGN ②
NB 5
PM 8.94
TEHAMA COUNTY

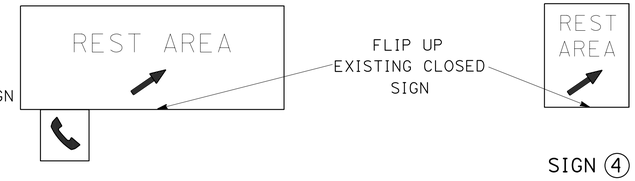

SIGN ③
NB 5
PM 9.95
TEHAMA COUNTY

SIGN ④
NB 5
PM 10.05
TEHAMA COUNTY

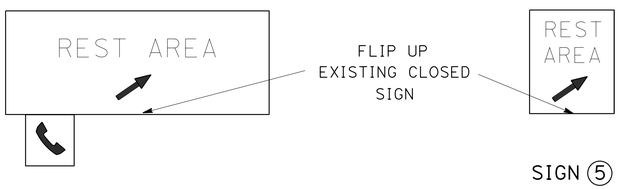

SIGN ⑥
SB 5
PM 10.59
TEHAMA COUNTY

SIGN ⑤
SB 5
PM 10.51
TEHAMA COUNTY

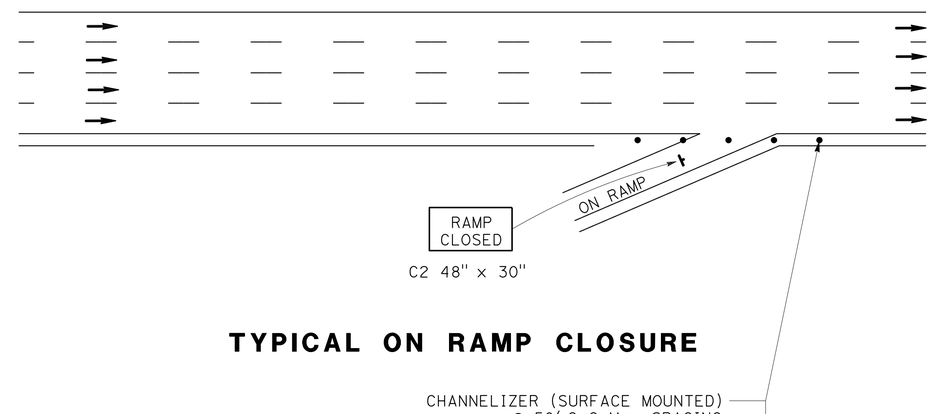

TYPICAL ON RAMP CLOSURE

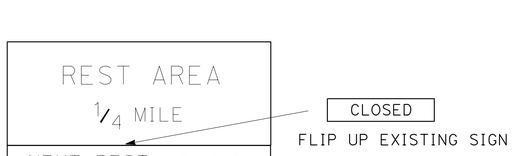

SIGN ⑦
SB 5
PM 11.01
TEHAMA COUNTY

SIGN ⑧
SB 5
PM 35.02
TEHAMA COUNTY

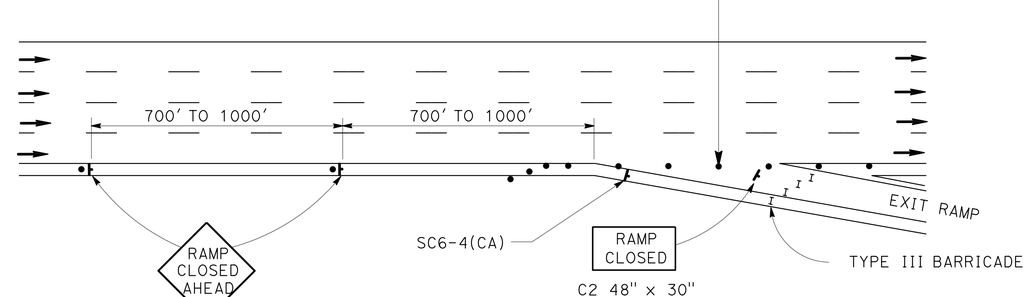

TYPICAL OFF RAMP CLOSURE

CONSTRUCTION AREA SIGNS

NO SCALE

CS-2

APPROVED FOR CONSTRUCTION AREA SIGNS WORK ONLY

REVISED BY | DATE REVISED
MICHAEL WEBB | JEANNIE STEFFAN
CALCULATED-DESIGNED BY | CHECKED BY
FUNCTIONAL SUPERVISOR: JULIE CASEY

STATE OF CALIFORNIA - DEPARTMENT OF TRANSPORTATION
Caltrans
DESIGN

P:\proj2\02\0E360_plans\pse\RESUBMIT_5-11-15\20e3601a002.dgn

LAST REVISION | DATE PLOTTED => 11-MAY-2015 | TIME PLOTTED => 10:56
01-18-12

Dist	COUNTY	ROUTE	POST MILES TOTAL PROJECT	SHEET No.	TOTAL SHEETS
02	Teh	5	10.5	17	199

REGISTERED CIVIL ENGINEER 12-19-13 DATE

4-1-14
PLANS APPROVAL DATE

REGISTERED PROFESSIONAL ENGINEER MICHAEL R. WEBB No. C73986 Exp. 6-30-15 CIVIL STATE OF CALIFORNIA

THE STATE OF CALIFORNIA OR ITS OFFICERS OR AGENTS SHALL NOT BE RESPONSIBLE FOR THE ACCURACY OR COMPLETENESS OF SCANNED COPIES OF THIS PLAN SHEET.

LEGEND

TYPE I ARROW

XX TRAFFIC STRIPE DETAIL

ISA MARKING FOR ACCESSIBLE PARKING SPACE (SEE BUILDING PLANS)

ABBREVIATION:

ISA INTERNATIONAL SYMBOL OF ACCESSIBILITY

PAVEMENT DELINEATION QUANTITIES (NB SRRA)

DETAIL	4" THERMOPLASTIC TRAFFIC STRIPE	THERMOPLASTIC PAVEMENT MARKING
	WHITE (4")	
	LF	SQFT
27B	1885	
TYPE 1 18'-0" ARROW		250
NB SUBTOTAL	1885	250

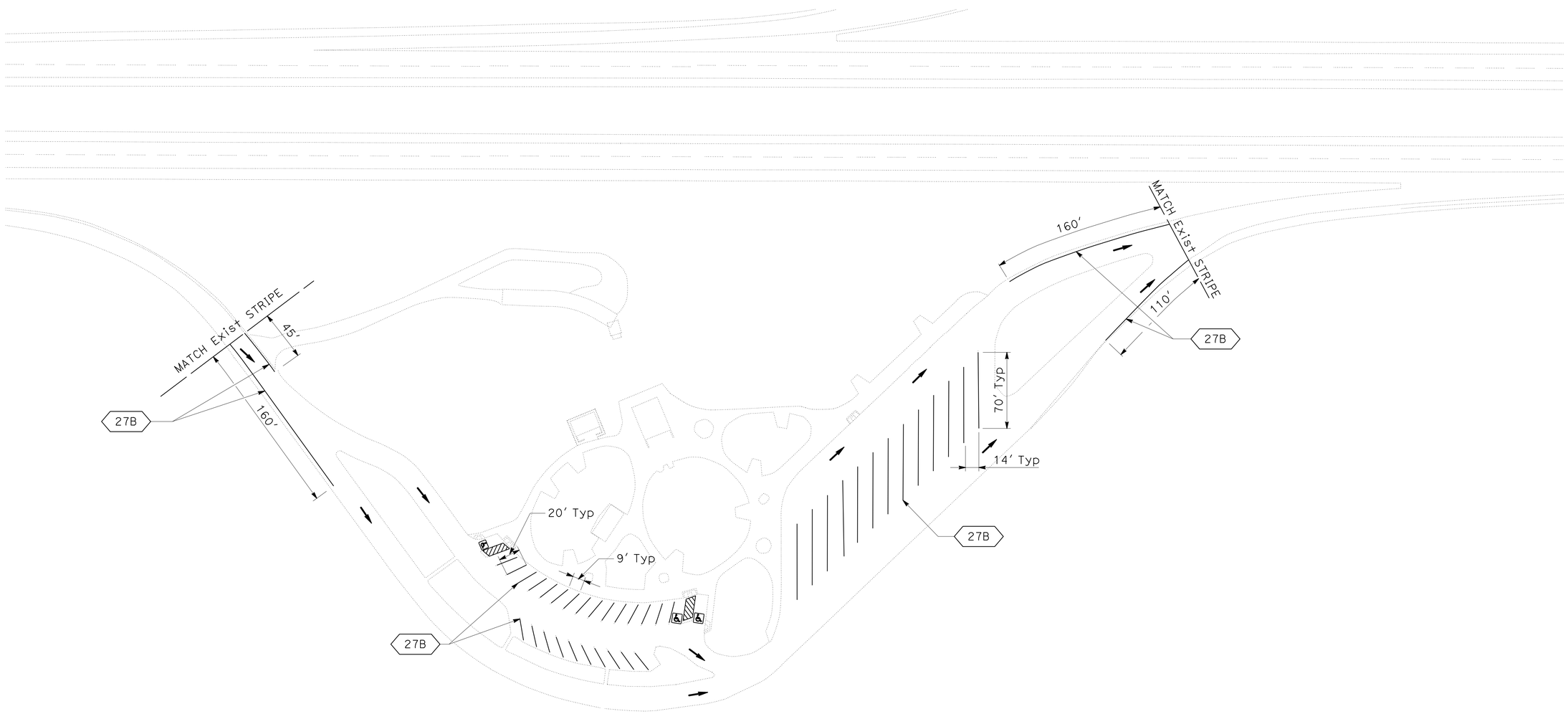

APPROVED FOR PAVEMENT DELINEATION AND SIGN WORK ONLY

NB CORNING SAFETY
ROADSIDE REST AREA

PAVEMENT DELINEATION AND SIGN PLAN

SCALE: 1" = 50'

PD-1

REVISED BY | DATE REVISED
MICHAEL WEBB | JEANNIE STEFFAN
CALCULATED-DESIGNED BY | CHECKED BY
FUNCTIONAL SUPERVISOR
JULIE CASEY

STATE OF CALIFORNIA - DEPARTMENT OF TRANSPORTATION
Caltrans DESIGN

P:\proj2\02\0E360_plans\pse\RESUBMIT_5-11-15\20e360na001.dgn

LAST REVISION 01-18-12 | DATE PLOTTED => 11-MAY-2015 | TIME PLOTTED => 10:56

Dist	COUNTY	ROUTE	POST MILES TOTAL PROJECT	SHEET No.	TOTAL SHEETS
02	Teh	5	10.5	18	199

Michael R. Webb 12-19-13
REGISTERED CIVIL ENGINEER DATE

4-1-14
PLANS APPROVAL DATE

REGISTERED PROFESSIONAL ENGINEER
MICHAEL R. WEBB
No. C73986
Exp. 6-30-15
CIVIL
STATE OF CALIFORNIA

THE STATE OF CALIFORNIA OR ITS OFFICERS OR AGENTS SHALL NOT BE RESPONSIBLE FOR THE ACCURACY OR COMPLETENESS OF SCANNED COPIES OF THIS PLAN SHEET.

PAVEMENT DELINEATION QUANTITIES (SB SRRA)

DETAIL	4" THERMOPLASTIC TRAFFIC STRIPE	THERMOPLASTIC PAVEMENT MARKING
	WHITE (4")	
	LF	SQFT
27B	2145	
TYPE 1 18'-0" ARROW		200
SB SUBTOTAL	2145	200

SB CORNING SAFETY
ROADSIDE REST AREA

PAVEMENT DELINEATION AND SIGN PLAN

SCALE: 1" = 50'

PD-2

APPROVED FOR PAVEMENT DELINEATION AND SIGN WORK WORK ONLY

STATE OF CALIFORNIA - DEPARTMENT OF TRANSPORTATION
Caltrans
DESIGN

FUNCTIONAL SUPERVISOR: JULIE CASEY
CALCULATED-DESIGNED BY: MICHAEL WEBB
CHECKED BY: JEANNIE STEFFAN
REVISED BY
DATE REVISED

P:\proj2\02\0E360_plans\pse\RESUBMIT_5-11-15\20e360na002.dgn

LAST REVISION 01-18-12
DATE PLOTTED => 11-MAY-2015
TIME PLOTTED => 10:56

Dist	COUNTY	ROUTE	POST MILES TOTAL PROJECT	SHEET No.	TOTAL SHEETS
02	Teh	5	10.5	19	199

Michael R. Webb 12-19-13
REGISTERED CIVIL ENGINEER DATE

4-1-14
PLANS APPROVAL DATE

REGISTERED PROFESSIONAL ENGINEER MICHAEL R. WEBB No. C73986 Exp. 6-30-15 CIVIL STATE OF CALIFORNIA

THE STATE OF CALIFORNIA OR ITS OFFICERS OR AGENTS SHALL NOT BE RESPONSIBLE FOR THE ACCURACY OR COMPLETENESS OF SCANNED COPIES OF THIS PLAN SHEET.

NOTE:

1. (N) - NOT A SEPARATE PAY ITEM, FOR INFORMATION ONLY

ABBREVIATION:

SRRA SAFETY ROADSIDE REST AREA

RECONSTRUCT SIDEWALK

LOCATION	RECONSTRUCT SIDEWALK	(N)			NOTES
		LENGTH	WIDTH	DEPTH	
	SQFT	FT	FT	FT	EXACT LOCATIONS TO BE DETERMINED BY THE ENGINEER
CORNING SRRA	2500	10	15	.25	
TOTAL	2500				

TEMPORARY WATER POLLUTION CONTROL

LOCATION	TEMPORARY FIBER ROLL	TEMPORARY COVER	TEMPORARY TACKED STRAW	TEMPORARY SOIL BINDER	TEMPORARY CONCRETE WASHOUT	TEMPORARY DRAINAGE INLET PROTECTION
	LF	SQYD	SQYD	SQYD	EA	EA
NB SRRA	500	1250	1250	1250	1	2
SB SRRA	500	1250	1250	1250	1	2
TOTAL	1000	2500	2500	2500	2	4

SALVAGE PREFABRICATED RESTROOM

LOCATION		SALVAGED STORAGE LOCATION
	EA	
NB SRRA	1	MOON LIM LEE SRRA (TRINTIY Co - ROUTE 299 - PM 56.9)
SB SRRA	1	GRASS LAKE SRRA (SISKIYOU Co - ROUTE 97 - PM 21.7)
TOTAL	2	

ROADWAY QUANTITIES

LOCATION	REMOVE CONCRETE	CLASS 2 AGGREGATE BASE	PARKING AREA SEAL	(N) PARKING AREA SEAL	MINOR CONCRETE (CURB)	MINOR CONCRETE (EXPOSED AGGREGATE CONCRETE)	FLAGPOLE	RELOCATE MONUMENT PLAQUE
	SQYD	CY	TON	SQYD	CY	SQFT	EA	EA
NB SRRA	1162	288	4	8200	3.2	15,561	1	1
SB SRRA	839	209	4	8200	3.2	11,295	1	1
TOTAL	2001	497	8	16400	6.4	26,856	2	2

TEMPORARY TRAFFIC CONTROL DEVICES

LOCATION	TYPE III BARRICADE	CHANNELIZER (SURFACE MOUNTED)	NOTES
	EA	EA	
NB SRRA	4	17	SEE SHEET CS-2
SB SRRA	4	17	
TOTAL	8	34	

PAVEMENT DELINEATION

LOCATION	** 4" THERMOPLASTIC TRAFFIC STRIPE	** THERMOPLASTIC PAVEMENT MARKING	* REMOVE PAINTED TRAFFIC STRIPE	* REMOVE PAINTED PAVEMENT MARKING
	LF	SQFT	LF	SQFT
NB SRRA	1885	250	2200	271
SB SRRA	2145	200	2388	271
TOTAL	4030	450	4588	542

* QUANTITIES FOR REMOVE PAINTED TRAFFIC STRIPE AND REMOVE PAINTED PAVEMENT MARKING ARE FROM WITHIN LIMITS OF PARKING AREA SEAL

** QUANTITIES ALSO SHOWN ON PAVEMENT DELINEATION SHEETS

SUMMARY OF QUANTITIES
Q-1

REVISED BY | DATE REVISED
MICHAEL WEBB | JEANNIE STEFFAN
CALCULATED-DESIGNED BY | CHECKED BY
FUNCTIONAL SUPERVISOR: JULIE CASEY

STATE OF CALIFORNIA - DEPARTMENT OF TRANSPORTATION
Caltrans DESIGN

P:\proj2\02\0E360_plans\pse\RESUBMIT_5-11-15\20e360pa001.dgn

LAST REVISION 01-18-12 | DATE PLOTTED => 11-MAY-2015 | TIME PLOTTED => 10:56

Dist	COUNTY	ROUTE	POST MILES TOTAL PROJECT	SHEET No.	TOTAL SHEETS
02	Teh	5	10.5	20	199

LICENSED LANDSCAPE ARCHITECT

4-1-14
PLANS APPROVAL DATE

LICENSED LANDSCAPE ARCHITECT J. PATRICK SULLIVAN #3125 Signature 07-31-14 Renewal Date 12-12-13 Date STATE OF CALIFORNIA

THE STATE OF CALIFORNIA OR ITS OFFICERS OR AGENTS SHALL NOT BE RESPONSIBLE FOR THE ACCURACY OR COMPLETENESS OF SCANNED COPIES OF THIS PLAN SHEET.

NB CORNING SAFETY
ROADSIDE REST AREA

ROADSIDE CLEARING PLAN

SCALE: 1" = 20'

RC-1

APPROVED FOR LANDSCAPE WORK ONLY

REVISED BY	
DATE REVISED	
J. PATRICK SULLIVAN	
RON FLORY	
CALCULATED-DESIGNED BY	
CHECKED BY	
SENIOR LANDSCAPE ARCHITECT	
RON FLORY	

STATE OF CALIFORNIA - DEPARTMENT OF TRANSPORTATION
Caltrans® LANDSCAPE ARCHITECTURE

P:\proj2\02\0E360_plans\pse\RESUBMIT_5-11-15\20e360sd001.dgn

LAST REVISION 12-12-13 DATE PLOTTED => 11-MAY-2015 TIME PLOTTED => 10:56

Dist	COUNTY	ROUTE	POST MILES TOTAL PROJECT	SHEET No.	TOTAL SHEETS
02	Teh	5	10.5	21	199

LICENSED LANDSCAPE ARCHITECT

4-1-14
PLANS APPROVAL DATE

THE STATE OF CALIFORNIA OR ITS OFFICERS OR AGENTS SHALL NOT BE RESPONSIBLE FOR THE ACCURACY OR COMPLETENESS OF SCANNED COPIES OF THIS PLAN SHEET.

LICENSED LANDSCAPE ARCHITECT
J. PATRICK SULLIVAN
#3125
Signature
07-31-14
Renewal Date
12-12-13
Date
STATE OF CALIFORNIA

SB CORNING SAFETY
ROADSIDE REST AREA

ROADSIDE CLEARING PLAN

SCALE: 1" = 20'

RC-2

APPROVED FOR LANDSCAPE WORK ONLY

REVISED BY	DATE REVISED

CALCULATED-DESIGNED BY	CHECKED BY
J. PATRICK SULLIVAN	RON FLORY

SENIOR LANDSCAPE ARCHITECT: RON FLORY

STATE OF CALIFORNIA - DEPARTMENT OF TRANSPORTATION
Caltrans® LANDSCAPE ARCHITECTURE

P:\proj2\02\0E360_plans\pse\RESUBMIT_5-11-15\20e360sd002.dgn

LAST REVISION 12-12-13 | DATE PLOTTED => 11-MAY-2015 | TIME PLOTTED => 10:56

Dist	COUNTY	ROUTE	POST MILES TOTAL PROJECT	SHEET No.	TOTAL SHEETS
02	Teh	5	10.5	22	199

LICENSED LANDSCAPE ARCHITECT

4-1-14
PLANS APPROVAL DATE

LICENSED LANDSCAPE ARCHITECT J. PATRICK SULLIVAN #3125 Signature 07-31-14 Renewal Date 12-12-13 Date STATE OF CALIFORNIA

THE STATE OF CALIFORNIA OR ITS OFFICERS OR AGENTS SHALL NOT BE RESPONSIBLE FOR THE ACCURACY OR COMPLETENESS OF SCANNED COPIES OF THIS PLAN SHEET.

LEGEND:

LIMITS OF MAINTAIN EXISTING PLANTED AREAS (277,200 SQFT)

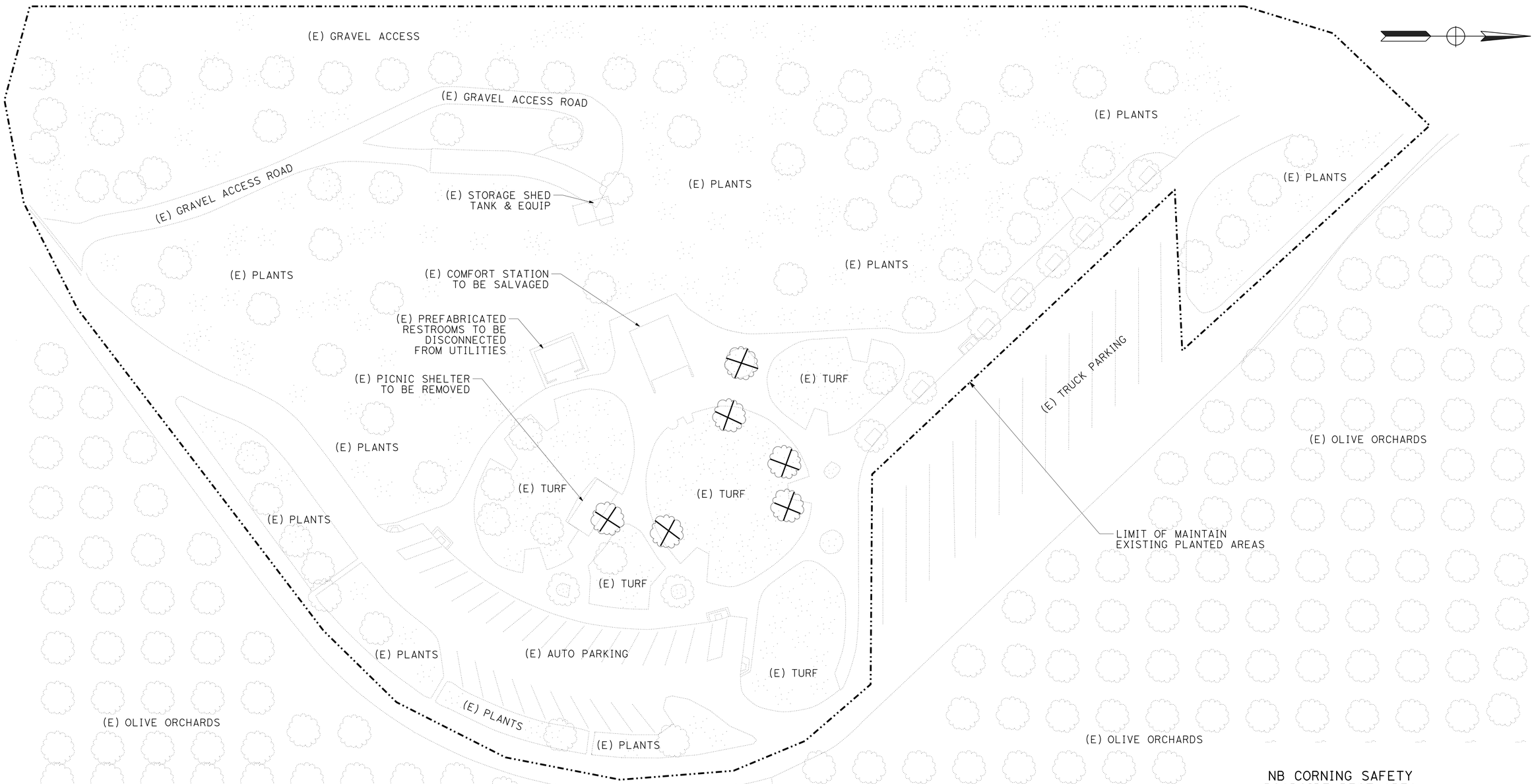

NB CORNING SAFETY ROADSIDE REST AREA

MAINTAIN EXISTING PLANTED AREAS PLAN

SCALE: 1" = 30'

MEPA-1

APPROVED FOR LANDSCAPE WORK ONLY

STATE OF CALIFORNIA - DEPARTMENT OF TRANSPORTATION
Caltrans® LANDSCAPE ARCHITECTURE

SENIOR LANDSCAPE ARCHITECT: RON FLORY
CALCULATED-DESIGNED BY: J. PATRICK SULLIVAN
CHECKED BY: RON FLORY
REVISED BY
DATE REVISED

P:\proj2\02\0t360_plans\pse\RESUBMIT_5-11-15\20e360sf001.dgn

LAST REVISION 12-12-13
DATE PLOTTED => 11-MAY-2015
TIME PLOTTED => 10:56

Dist	COUNTY	ROUTE	POST MILES TOTAL PROJECT	SHEET No.	TOTAL SHEETS
02	Teh	5	10.5	23	199

LICENSED LANDSCAPE ARCHITECT

4-1-14
PLANS APPROVAL DATE

LICENSED LANDSCAPE ARCHITECT J. PATRICK SULLIVAN #3125 Signature 07-31-14 Renewal Date 12-12-13 Date STATE OF CALIFORNIA

THE STATE OF CALIFORNIA OR ITS OFFICERS OR AGENTS SHALL NOT BE RESPONSIBLE FOR THE ACCURACY OR COMPLETENESS OF SCANNED COPIES OF THIS PLAN SHEET.

LEGEND:

LIMITS OF MAINTAIN EXISTING PLANTED AREAS (335,400 SQFT)

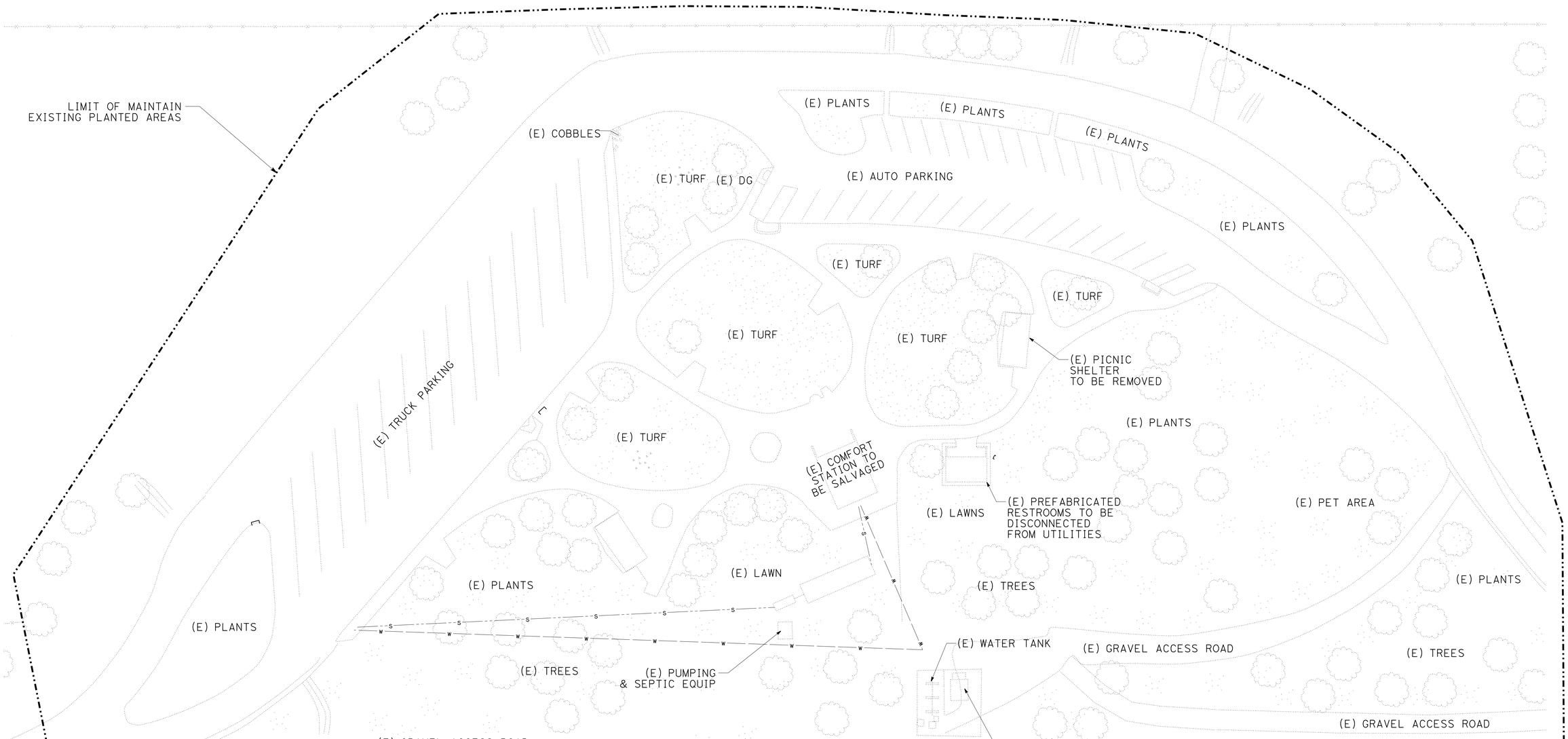

SB CORNING SAFETY ROADSIDE REST AREA

MAINTAIN EXISTING PLANTED AREAS PLAN

SCALE: 1" = 30'

MEPA-2

APPROVED FOR LANDSCAPE WORK ONLY

STATE OF CALIFORNIA - DEPARTMENT OF TRANSPORTATION
Caltrans® LANDSCAPE ARCHITECTURE

SENIOR LANDSCAPE ARCHITECT: RON FLORY
CALCULATED-DESIGNED BY: J. PATRICK SULLIVAN
CHECKED BY: RON FLORY
REVISED BY
DATE REVISED

P:\proj2\02\0E360_plans\pse\RESUBMIT_5-11-15\20e360sf002.dgn

LAST REVISION 12-12-13
DATE PLOTTED => 11-MAY-2015
TIME PLOTTED => 10:56

Dist	COUNTY	ROUTE	POST MILES TOTAL PROJECT	SHEET No.	TOTAL SHEETS
02	Teh	5	10.5	24	199

LICENSED LANDSCAPE ARCHITECT

4-1-14
PLANS APPROVAL DATE

LICENSED LANDSCAPE ARCHITECT J. PATRICK SULLIVAN #3125 Signature 07-31-14 Renewal Date 12/13/13 Date STATE OF CALIFORNIA

THE STATE OF CALIFORNIA OR ITS OFFICERS OR AGENTS SHALL NOT BE RESPONSIBLE FOR THE ACCURACY OR COMPLETENESS OF SCANNED COPIES OF THIS PLAN SHEET.

LEGEND:

- (A) FLAGPOLE
- (B) MINOR CONCRETE CURB (TYPE A1-8)
- (C) RELOCATE MONUMENT PLAQUE
- (D) TRASH AND RECYCLING CONTAINERS TO BE INSTALLED BY OTHERS
- (E) FAUCET ASSEMBLY
- (F) NEW PICNIC TABLE TO BE INSTALLED BY OTHERS
- (G) NEW BENCH TO BE INSTALLED BY OTHERS
- (H) MASONRY BLOCK WALL (SCREEN WALLS)
- (I) TREE GRATES
- (J) CONCRETE JOINTS (WEAKENED PLANE & EXPANSION JOINTS)
- (K) PICNIC TABLE REMOVED AND INSTALLED BY OTHERS
- (L) MASONRY BLOCK WALL (PLANTER) FOR EXACT DIMENSIONS SEE DETAILS, SHEET C-7
- (M) MINOR CONCRETE CURB (TYPE A1-6)
- PEDESTRIAN AREA LIGHT (SEE BUILDING PLANS)
- EXISTING TREES TO REMAIN, Typ

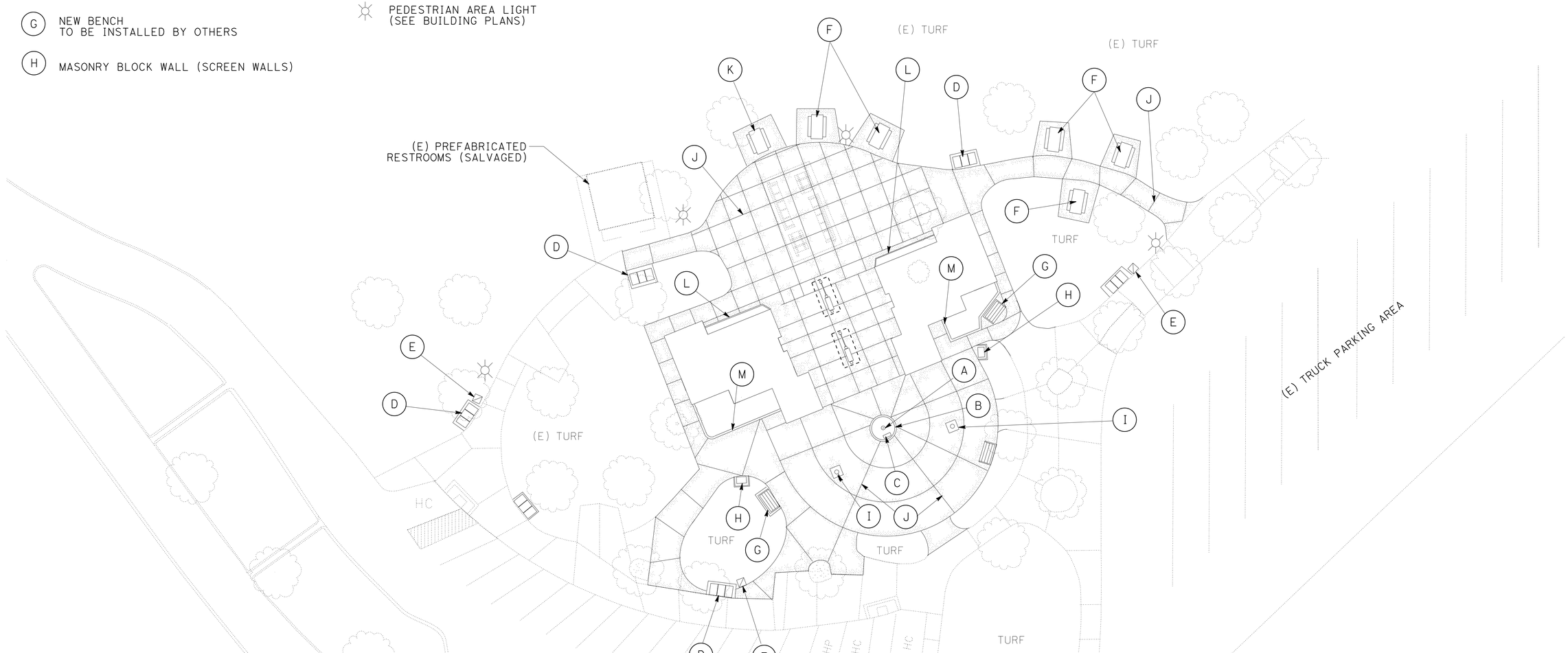

THIS SHEET ACCURATE FOR LANDSCAPE WORK ONLY

NB CORNING

SAFETY ROADSIDE REST AREA PLAN

SCALE: 1" = 20'

SRRA-1

STATE OF CALIFORNIA - DEPARTMENT OF TRANSPORTATION
Caltrans® LANDSCAPE ARCHITECTURE

SENIOR LANDSCAPE ARCHITECT: RON FLORY
CALCULATED-DESIGNED BY: J. PATRICK SULLIVAN
CHECKED BY: RON FLORY
REVISED BY
DATE REVISED

P:\proj2\02\0E360_plans\pse\RESUBMIT_5-11-15\20e360si001.dgn

LAST REVISION 06-29-13
DATE PLOTTED => 11-MAY-2015
TIME PLOTTED => 10:56

Dist	COUNTY	ROUTE	POST MILES TOTAL PROJECT	SHEET No.	TOTAL SHEETS
02	Teh	5	10.5	25	199

LICENSED LANDSCAPE ARCHITECT

4-1-14
PLANS APPROVAL DATE

LICENSED LANDSCAPE ARCHITECT J. PATRICK SULLIVAN #3125 Signature 07/31/14 Renewal Date 12/13/13 Date STATE OF CALIFORNIA

THE STATE OF CALIFORNIA OR ITS OFFICERS OR AGENTS SHALL NOT BE RESPONSIBLE FOR THE ACCURACY OR COMPLETENESS OF SCANNED COPIES OF THIS PLAN SHEET.

THIS SHEET ACCURATE FOR LANDSCAPE WORK ONLY

SB CORNING
SAFETY ROADSIDE REST AREA PLAN

SCALE: 1" = 20'

SRRA-2

REVISED BY	DATE REVISED

CALCULATED-DESIGNED BY: J. PATRICK SULLIVAN
CHECKED BY: RON FLORY
SENIOR LANDSCAPE ARCHITECT: RON FLORY

STATE OF CALIFORNIA - DEPARTMENT OF TRANSPORTATION
Caltrans® LANDSCAPE ARCHITECTURE

P:\proj2\02\0E360_plans\pse\RESUBMIT_5-11-15\20e360si002.dgn

LAST REVISION 06-29-13 | DATE PLOTTED => 11-MAY-2015 | TIME PLOTTED => 10:56

Dist	COUNTY	ROUTE	POST MILES TOTAL PROJECT	SHEET No.	TOTAL SHEETS
02	Teh	5	10.5	26	199

LICENSED LANDSCAPE ARCHITECT

4-1-14
PLANS APPROVAL DATE

LICENSED LANDSCAPE ARCHITECT J. PATRICK SULLIVAN #3125 Signature 07-31-14 Renewal Date 12-12-13 Date STATE OF CALIFORNIA

THE STATE OF CALIFORNIA OR ITS OFFICERS OR AGENTS SHALL NOT BE RESPONSIBLE FOR THE ACCURACY OR COMPLETENESS OF SCANNED COPIES OF THIS PLAN SHEET.

SPRINKLER LEGEND

SYMBOL	DESCRIPTION	SPRAY PATTERN	OPERATING PRESSURE (psi)	PRESSURE COMPENSATING	PLUS / MINUS 5% (2) DISCHARGE: GALLONS PER MINUTE (GPM)	DISCHARGE: GALLONS PER HOUR (GPH)	RADIUS (IN FEET)(ft)	WIDTH x LENGTH (IN FEET)(ft)	MATERIAL	NOZZLE SIZE IN INCHES (in)	INLET CONNECTION (NPT) (DN IN INCHES)(in)	POSITIVE-LOCKING ADJ ARC STOP (SET SCREW)	BACKSPLASH PREVENTER	DIFFUSER PIN	DISTANCE CONTROL FLAP	ADJ DISCHARGE	SPRINKLER ASSEMBLY: RISER: TYPE	RISER: MATERIAL: PLASTIC	RISER: MATERIAL: GALVANIZED	POP UP: SIZE (IPS) (IN INCHES)(in)	POP UP: HEIGHT (IN INCHES)(in)	POP UP: FLOW SHUTOFF DEVICE	SWING JOINT (TYPE)	RISER SUPPORT	SPRINKLER PROTECTOR (TYPE)	TREE WELL: HEIGHT (INCHES)	REMARKS
6	GEAR DRIVEN POP-UP ROTOR (11)	P	30	—	.4 to 3	—	16 to 30 ft	—	PL	—	¾	X	—	—	—	X	—	X	—	¾	—	—	I	—	—	—	(7)(8)(10) POP-UP (LAWN/SHRUB)
6	GEAR DRIVEN POP-UP ROTOR	F		—	2 to 3	—	16 to 32 ft	—		—		X	—	—	—	X	—	X	—		—	—		—	—	—	(7)(8)(10) POP-UP (LAWN/SHRUB)
8	GEAR DRIVEN POP-UP ROTOR	P		—	1 to 2.6	—	28 to 38 ft	—		—		X	—	—	—	X	—	X	—		—	—		—	—	—	(7)(8) POP-UP (LAWN/SHRUB)
8	GEAR DRIVEN POP-UP ROTOR (11)	F		—	.85 - 6.0	—	28 to 38 ft	—		—		X	—	—	—	X	—	X	—		—	—		—	—	—	(7)(8) POP-UP (LAWN/SHRUB)
▲	POP-UP SPRAY (12)	P/F		X	3.8, 1.8, .9	—	15-10 ft	—		—	½	—	—	—	—	X	—	X	—	½	—	—		—	—	—	(7)(8) POP-UP (LAWN/SHRUB)
●	BUBBLER (13)(14)	F		X	.5	—	—	—		—	½	—	—	—	—	—	—	X	—	½	—	—	II	—	—	36	(9) TRICKLE BUBBLER

LEGEND:

X IN BOX DENOTES REQUIREMENT

— IN BOX DENOTES DOES NOT APPLY

APPLICABLE WHEN CIRCLED BELOW:

1 - SEE SPECIAL PROVISIONS.

(2)- IF A PRESSURE COMPENSATING DEVICE IS SPECIFIED, THE DISCHARGE AND RADII SHOWN REFLECT ITS USE.

3 - ARC STOP SHALL BE FITTED WITH ALLEN SET SCREW.

4 - VINYL-COATED CAST IRON HOUSING.

5 - SWING JOINTS REQUIRED.

6 - UNLESS OTHERWISE SHOWN ON PLANS.

(7)- 12 in POP-UP IN SHRUB AREAS.

(8)- 6 in POP-UP IN LAWN AREAS

(9)- FLOOD BUBBLER INSTALLED WITHIN TREE WATERING CANISTER PER TREE WATERING CANISTER DETAIL, LANDSCAPE DETAILS, SHEETS LD-1 & LD-3 FOR ALL TREES PLANTED IN TREE WELL PLANTERS WITH TREE GRATES. 2 TREE WATERING CANISTERS PER TREE.

(10)- SMALL RADIUS ROTOR

(11)- PAY ITEM FOR ROTOR CHANGED TO POP-UP SPRINKLER ASSEMBLY (GEAR DRIVEN)

(12)- PAY ITEM FOR SPRINKLER CHANGED TO POP-UP SPRINKLER ASSEMBLY

(13)- PAY ITEM FOR BUBBLER IN TREE WELL CHANGED TO TREE WELL SPRINKLER ASSEMBLY

(14)- PAY ITEM FOR BUBBLERS NOT IN TREE WELLS CHANGED TO RISER SPRINKLER ASSEMBLY

ABBREVIATIONS

F	full circle	ft	feet/foot
P	part circle	GPM	gallons per minute
F/P	full/part circle	GPH	gallons per hour
Q	quarter circle	Adj	adjustable
T	third circle	PL	plastic
H	half circle	B/B	brass/bronze
TT	two third circle	B/PL	brass/plastic
TQ	three quarter circle	B/B/PL	brass/bronze/plastic
CST	center strip	NPT	national pipe thread
SST	side strip	IPS	iron pipe size
DN	DIAMETER NOMINAL	in	inches
EST	end strip	PSI	pounds per square inch

IRRIGATION SPRINKLER SCHEDULE

ISS-1

APPROVED FOR LANDSCAPE WORK ONLY

REVISED BY | DATE REVISED
J. PATRICK SULLIVAN | RON FLORY
CALCULATED-DESIGNED BY | CHECKED BY
SENIOR LANDSCAPE ARCHITECT | RON FLORY
STATE OF CALIFORNIA - DEPARTMENT OF TRANSPORTATION
Caltrans® LANDSCAPE ARCHITECTURE

P:\proj2\02\0E360_plans\pse\RESUBMIT_5-11-15\20e360sm001.dgn

LAST REVISION | DATE PLOTTED => 11-MAY-2015 | TIME PLOTTED => 10:56
12-12-13

Dist	COUNTY	ROUTE	POST MILES TOTAL PROJECT	SHEET No.	TOTAL SHEETS
02	Teh	5	10.5	27	199

LICENSED LANDSCAPE ARCHITECT

4-1-14
PLANS APPROVAL DATE

LICENSED LANDSCAPE ARCHITECT J. PATRICK SULLIVAN #3125 Signature 07-31-14 Renewal Date 12-12-13 Date STATE OF CALIFORNIA

THE STATE OF CALIFORNIA OR ITS OFFICERS OR AGENTS SHALL NOT BE RESPONSIBLE FOR THE ACCURACY OR COMPLETENESS OF SCANNED COPIES OF THIS PLAN SHEET.

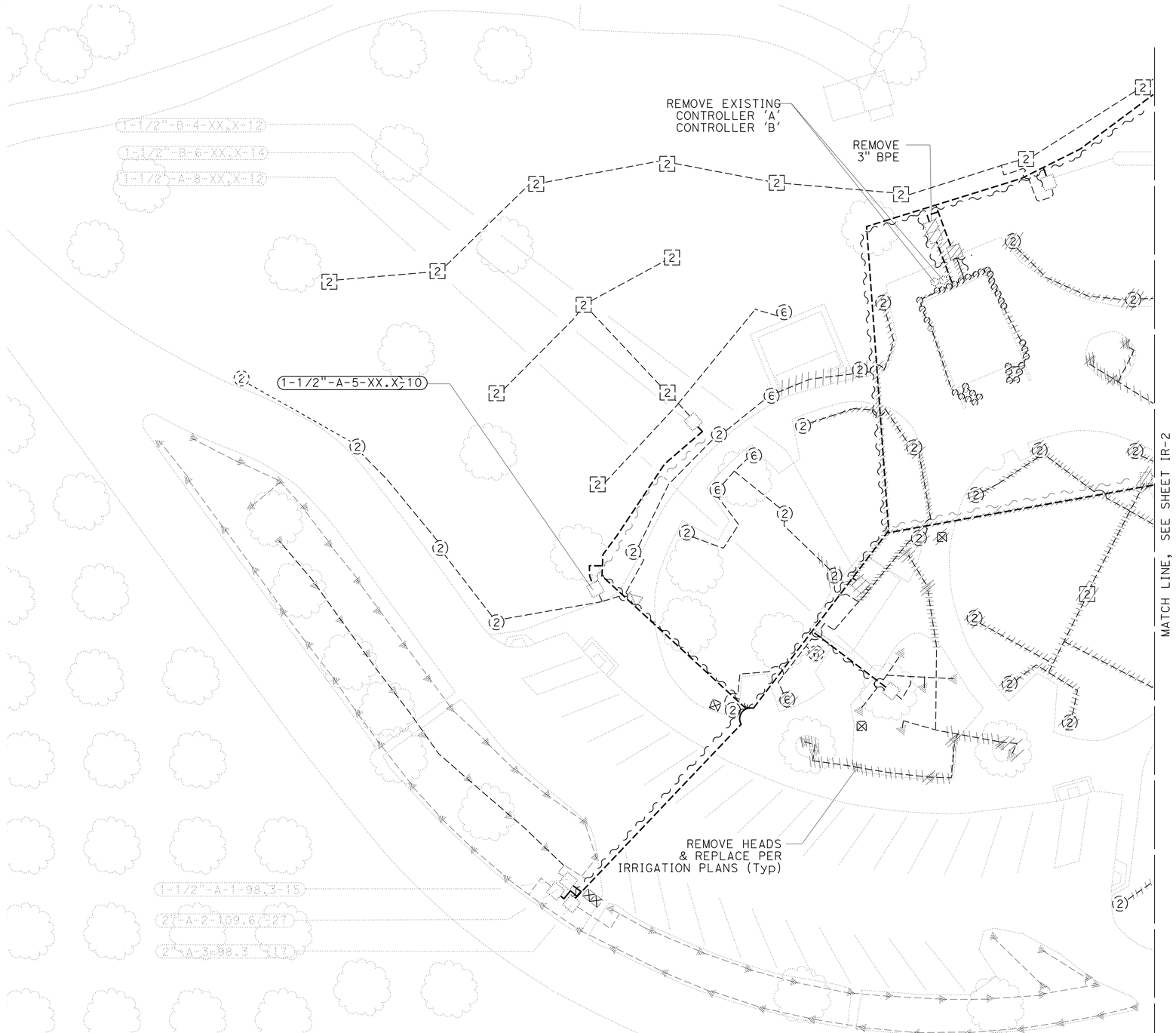

NB CORNING SAFETY
ROADSIDE REST AREA

IRRIGATION REMOVAL PLAN

SCALE: 1" = 20'

IR-1

APPROVED FOR LANDSCAPE WORK ONLY

STATE OF CALIFORNIA - DEPARTMENT OF TRANSPORTATION
Caltrans® LANDSCAPE ARCHITECTURE

J. PATRICK SULLIVAN — SENIOR LANDSCAPE ARCHITECT
RON FLORY — CALCULATED-DESIGNED BY
RON FLORY — CHECKED BY
REVISED BY
DATE REVISED

P:\proj2\02\0E360_plans\pse\RESUBMIT_5-11-15\20e360sn001.dgn

LAST REVISION DATE PLOTTED => 11-MAY-2015
12-12-13 TIME PLOTTED => 10:56

Dist	COUNTY	ROUTE	POST MILES TOTAL PROJECT	SHEET No.	TOTAL SHEETS
02	Teh	5	10.5	28	199

LICENSED LANDSCAPE ARCHITECT

4-1-14
PLANS APPROVAL DATE

LICENSED LANDSCAPE ARCHITECT J. PATRICK SULLIVAN #3125 Signature 07-31-14 Renewal Date 12-12-13 Date STATE OF CALIFORNIA

THE STATE OF CALIFORNIA OR ITS OFFICERS OR AGENTS SHALL NOT BE RESPONSIBLE FOR THE ACCURACY OR COMPLETENESS OF SCANNED COPIES OF THIS PLAN SHEET.

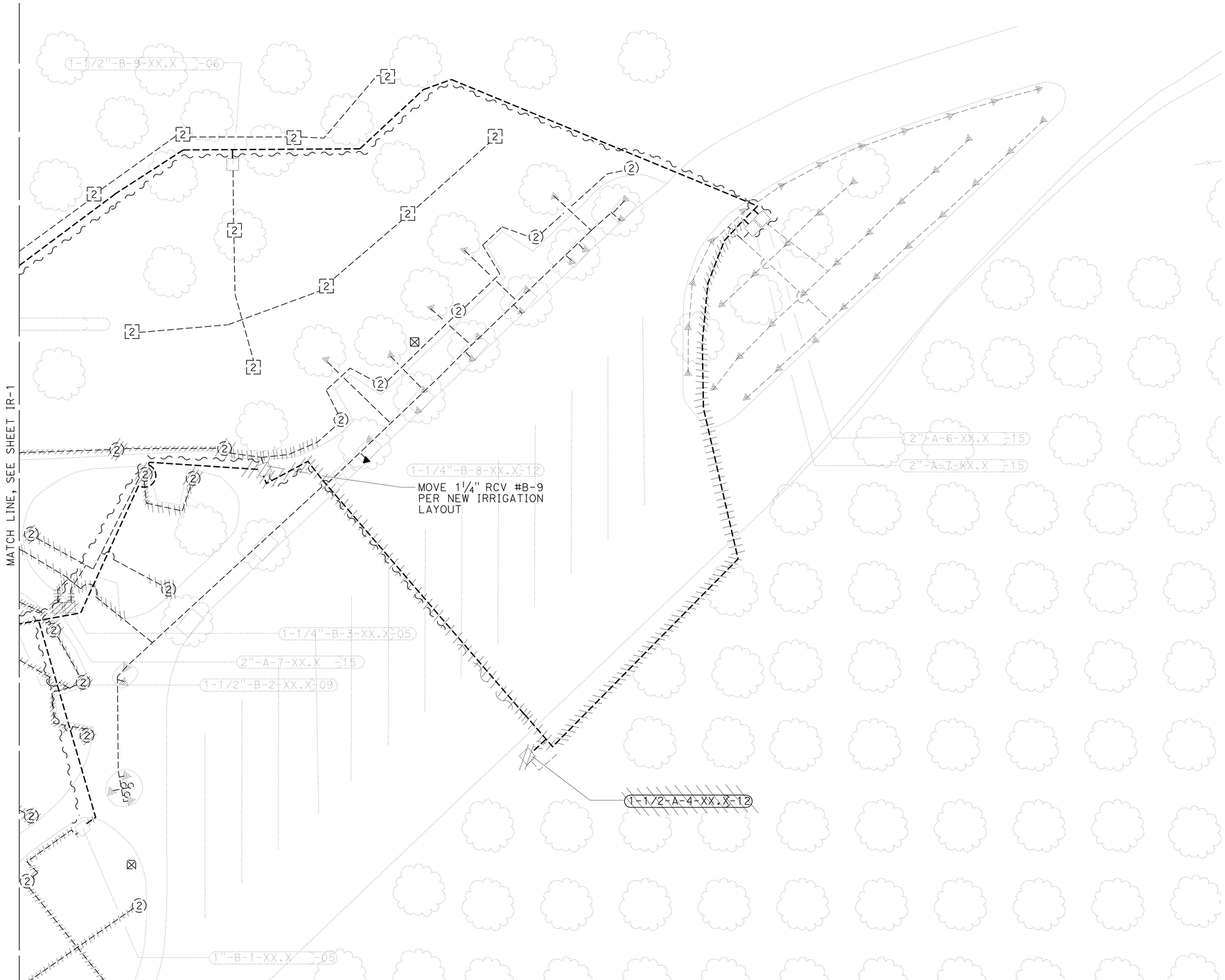

NB CORNING SAFETY
ROADSIDE REST AREA

IRRIGATION REMOVAL PLAN

SCALE: 1" = 20'

IR-2

APPROVED FOR LANDSCAPE WORK ONLY

STATE OF CALIFORNIA - DEPARTMENT OF TRANSPORTATION
Caltrans® LANDSCAPE ARCHITECTURE

SENIOR LANDSCAPE ARCHITECT: RON FLORY
CALCULATED-DESIGNED BY: J. PATRICK SULLIVAN
CHECKED BY: RON FLORY
REVISED BY
DATE REVISED

P:\proj2\02\0E360_plans\pse\RESUBMIT_5-11-15\20e360sn002.dgn

LAST REVISION 12-12-13
DATE PLOTTED => 11-MAY-2015
TIME PLOTTED => 10:56

Dist	COUNTY	ROUTE	POST MILES TOTAL PROJECT	SHEET No.	TOTAL SHEETS
02	Teh	5	10.5	29	199

LICENSED LANDSCAPE ARCHITECT

4-1-14
PLANS APPROVAL DATE

LICENSED LANDSCAPE ARCHITECT J. PATRICK SULLIVAN #3125 Signature 07-31-14 Renewal Date 12-12-13 Date STATE OF CALIFORNIA

THE STATE OF CALIFORNIA OR ITS OFFICERS OR AGENTS SHALL NOT BE RESPONSIBLE FOR THE ACCURACY OR COMPLETENESS OF SCANNED COPIES OF THIS PLAN SHEET.

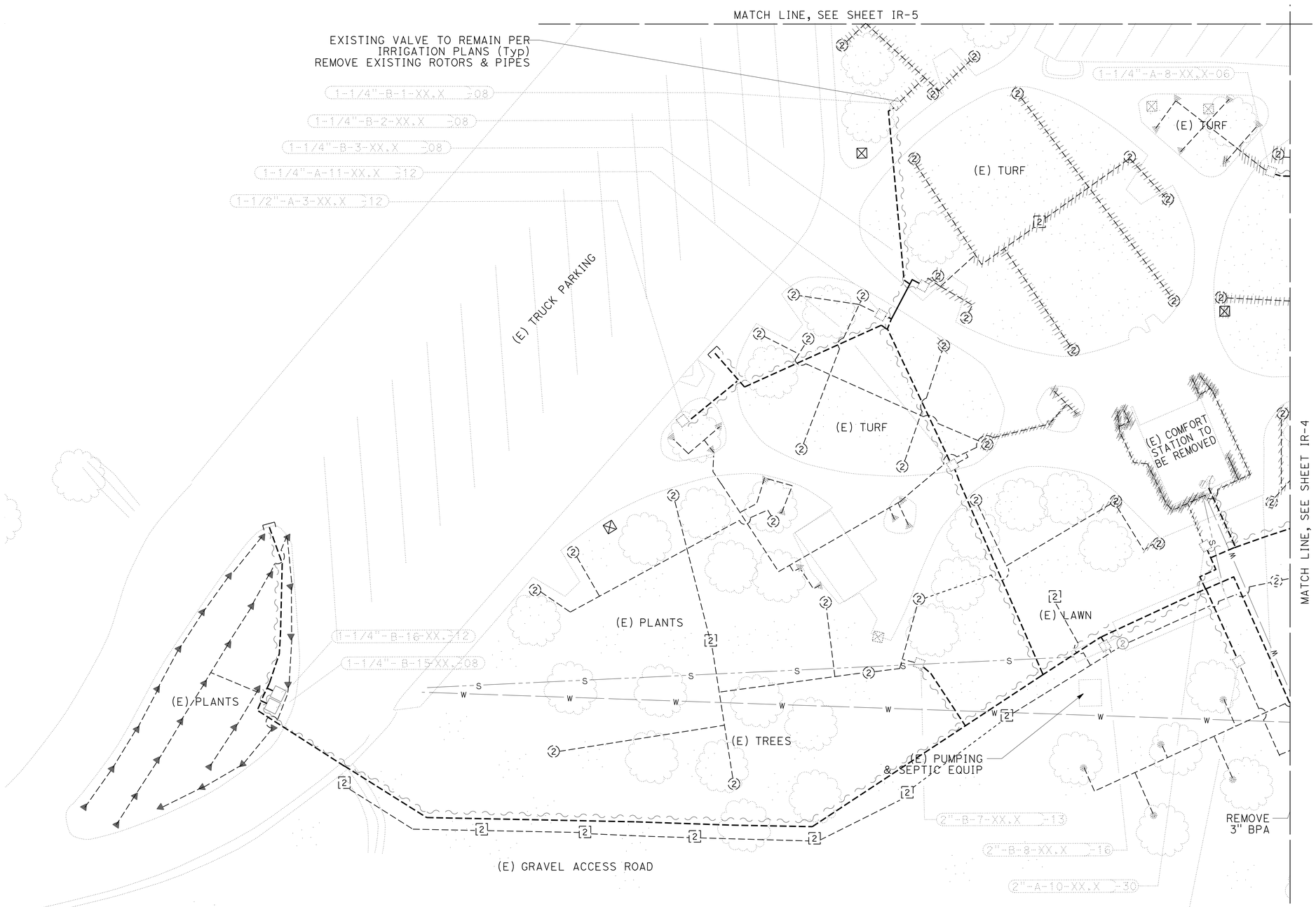

SB CORNING SAFETY
ROADSIDE REST AREA

IRRIGATION REMOVAL PLAN

SCALE: 1" = 20'

IR-3

APPROVED FOR LANDSCAPE WORK ONLY

REVISED BY	
DATE REVISED	
CALCULATED-DESIGNED BY	J. PATRICK SULLIVAN
CHECKED BY	RON FLORY
SENIOR LANDSCAPE ARCHITECT	RON FLORY

STATE OF CALIFORNIA - DEPARTMENT OF TRANSPORTATION
Caltrans® LANDSCAPE ARCHITECTURE

P:\proj2\02\0E360_plans\pse\RESUBMIT_5-11-15\20e360sn003.dgn

LAST REVISION 12-12-13 | DATE PLOTTED => 11-MAY-2015 TIME PLOTTED => 10:56

Dist	COUNTY	ROUTE	POST MILES TOTAL PROJECT	SHEET No.	TOTAL SHEETS
02	Teh	5	10.5	30	199

LICENSED LANDSCAPE ARCHITECT

4-1-14
PLANS APPROVAL DATE

LICENSED LANDSCAPE ARCHITECT J. PATRICK SULLIVAN #3125 Signature 07-31-14 Renewal Date 12-12-13 Date STATE OF CALIFORNIA

THE STATE OF CALIFORNIA OR ITS OFFICERS OR AGENTS SHALL NOT BE RESPONSIBLE FOR THE ACCURACY OR COMPLETENESS OF SCANNED COPIES OF THIS PLAN SHEET.

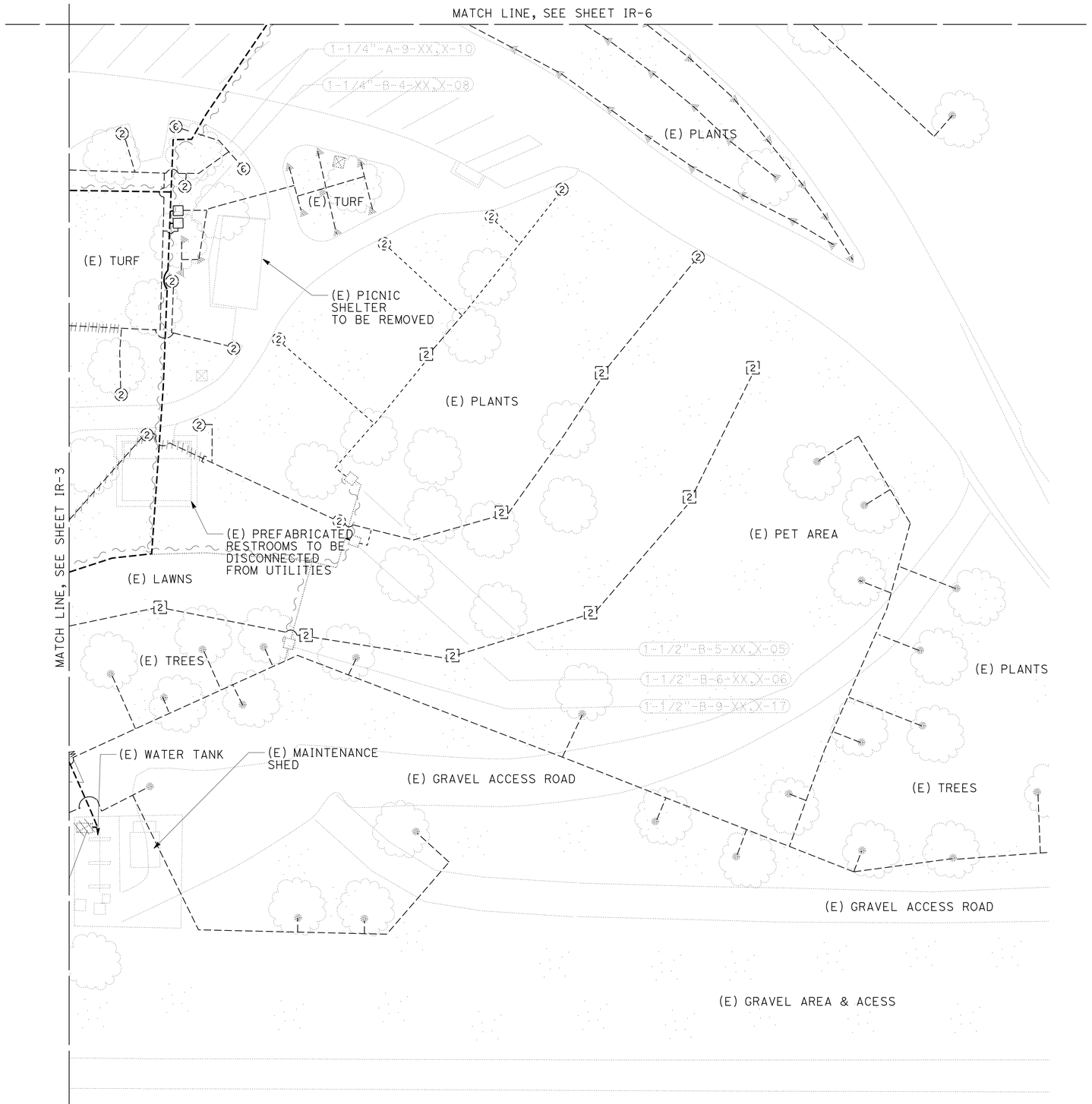

SB CORNING SAFETY
ROADSIDE REST AREA

IRRIGATION REMOVAL PLAN

SCALE: 1" = 20'

IR-4

APPROVED FOR LANDSCAPE WORK ONLY

STATE OF CALIFORNIA - DEPARTMENT OF TRANSPORTATION
Caltrans® LANDSCAPE ARCHITECTURE

SENIOR LANDSCAPE ARCHITECT: RON FLORY
CALCULATED-DESIGNED BY: J. PATRICK SULLIVAN
CHECKED BY: RON FLORY
REVISED BY
DATE REVISED

P:\proj2\02\0E360_plans\pse\RESUBMIT_5-11-15\20e360sn004.dgn

LAST REVISION 12-12-13
DATE PLOTTED => 11-MAY-2015
TIME PLOTTED => 10:56

Dist	COUNTY	ROUTE	POST MILES TOTAL PROJECT	SHEET No.	TOTAL SHEETS
02	Teh	5	10.5	31	199

LICENSED LANDSCAPE ARCHITECT

4-1-14
PLANS APPROVAL DATE

LICENSED LANDSCAPE ARCHITECT
J. PATRICK SULLIVAN
#3125
Signature
07-31-14
Renewal Date
12-12-13
Date
STATE OF CALIFORNIA

THE STATE OF CALIFORNIA OR ITS OFFICERS OR AGENTS SHALL NOT BE RESPONSIBLE FOR THE ACCURACY OR COMPLETENESS OF SCANNED COPIES OF THIS PLAN SHEET.

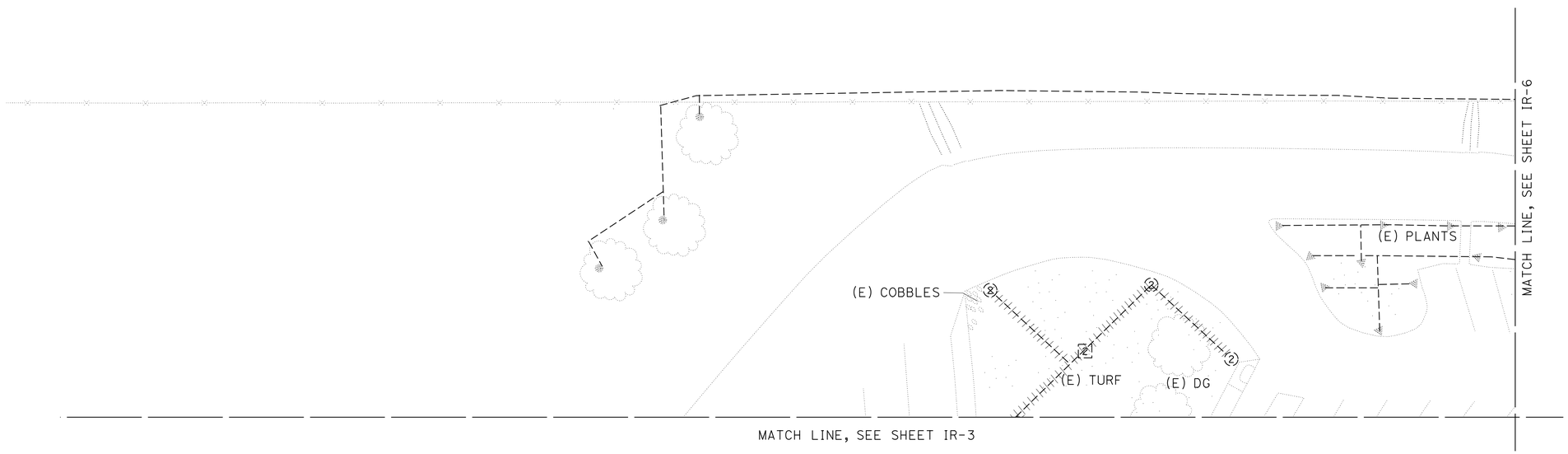

SB CORNING SAFETY
ROADSIDE REST AREA

IRRIGATION REMOVAL PLAN

SCALE: 1" = 20'

IR-5

APPROVED FOR LANDSCAPE WORK ONLY

REVISED BY
DATE REVISED
J. PATRICK SULLIVAN
RON FLORY
CALCULATED-DESIGNED BY
CHECKED BY
SENIOR LANDSCAPE ARCHITECT
RON FLORY
STATE OF CALIFORNIA - DEPARTMENT OF TRANSPORTATION
Caltrans® LANDSCAPE ARCHITECTURE

P:\proj2\02\0E360_plans\pse\RESUBMIT_5-11-15\20e360sn005.dgn

LAST REVISION 12-12-13
DATE PLOTTED => 11-MAY-2015
TIME PLOTTED => 10:56

Dist	COUNTY	ROUTE	POST MILES TOTAL PROJECT	SHEET No.	TOTAL SHEETS
02	Teh	5	10.5	32	199

LICENSED LANDSCAPE ARCHITECT

4-1-14
PLANS APPROVAL DATE

LICENSED LANDSCAPE ARCHITECT
J. PATRICK SULLIVAN
#3125
Signature
07-31-14
Renewal Date
12-12-13
Date
STATE OF CALIFORNIA

THE STATE OF CALIFORNIA OR ITS OFFICERS OR AGENTS SHALL NOT BE RESPONSIBLE FOR THE ACCURACY OR COMPLETENESS OF SCANNED COPIES OF THIS PLAN SHEET.

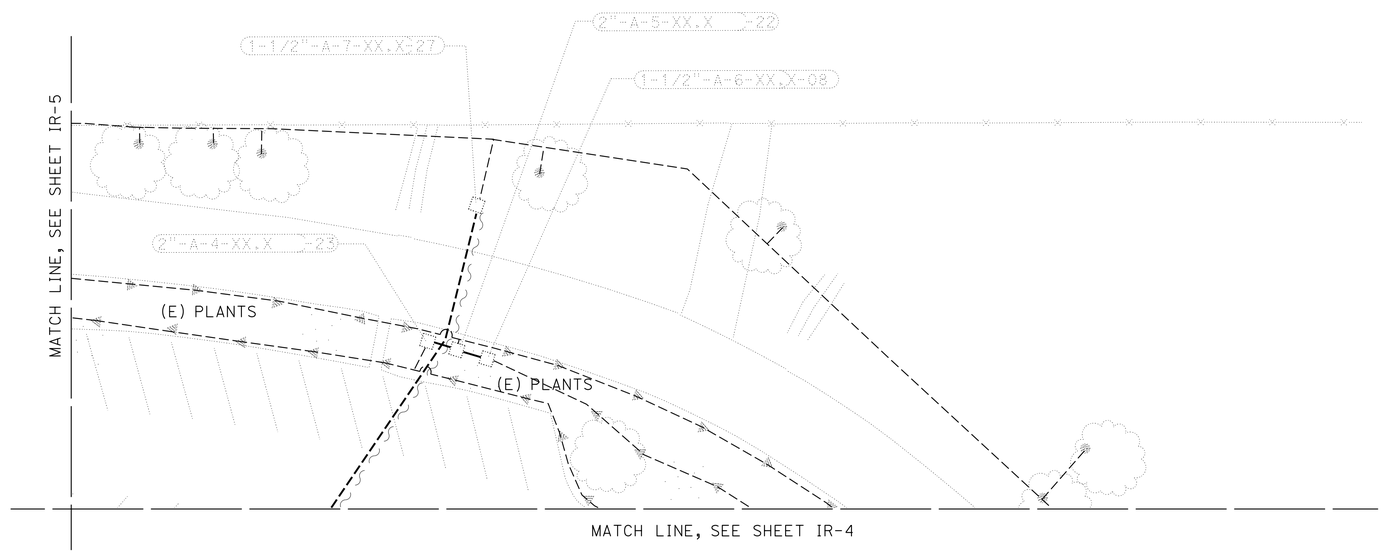

SB CORNING SAFETY
ROADSIDE REST AREA

IRRIGATION REMOVAL PLAN

SCALE: 1" = 20'

IR-6

APPROVED FOR LANDSCAPE WORK ONLY

REVISED BY	J. PATRICK SULLIVAN	CALCULATED-DESIGNED BY	SENIOR LANDSCAPE ARCHITECT	STATE OF CALIFORNIA - DEPARTMENT OF TRANSPORTATION
DATE REVISED	RON FLORY	CHECKED BY	RON FLORY	LANDSCAPE ARCHITECTURE

P:\proj2\02\0E360_plans\pse\RESUBMIT_5-11-15\20e360sn006.dgn

LAST REVISION 12-12-13
DATE PLOTTED => 11-MAY-2015
TIME PLOTTED => 10:57

Dist	COUNTY	ROUTE	POST MILES TOTAL PROJECT	SHEET No.	TOTAL SHEETS
02	Teh	5	10.5	33	199

LICENSED LANDSCAPE ARCHITECT

4-1-14
PLANS APPROVAL DATE

LICENSED LANDSCAPE ARCHITECT J. PATRICK SULLIVAN #3125 Signature 07-31-14 Renewal Date 12-12-13 Date STATE OF CALIFORNIA

THE STATE OF CALIFORNIA OR ITS OFFICERS OR AGENTS SHALL NOT BE RESPONSIBLE FOR THE ACCURACY OR COMPLETENESS OF SCANNED COPIES OF THIS PLAN SHEET.

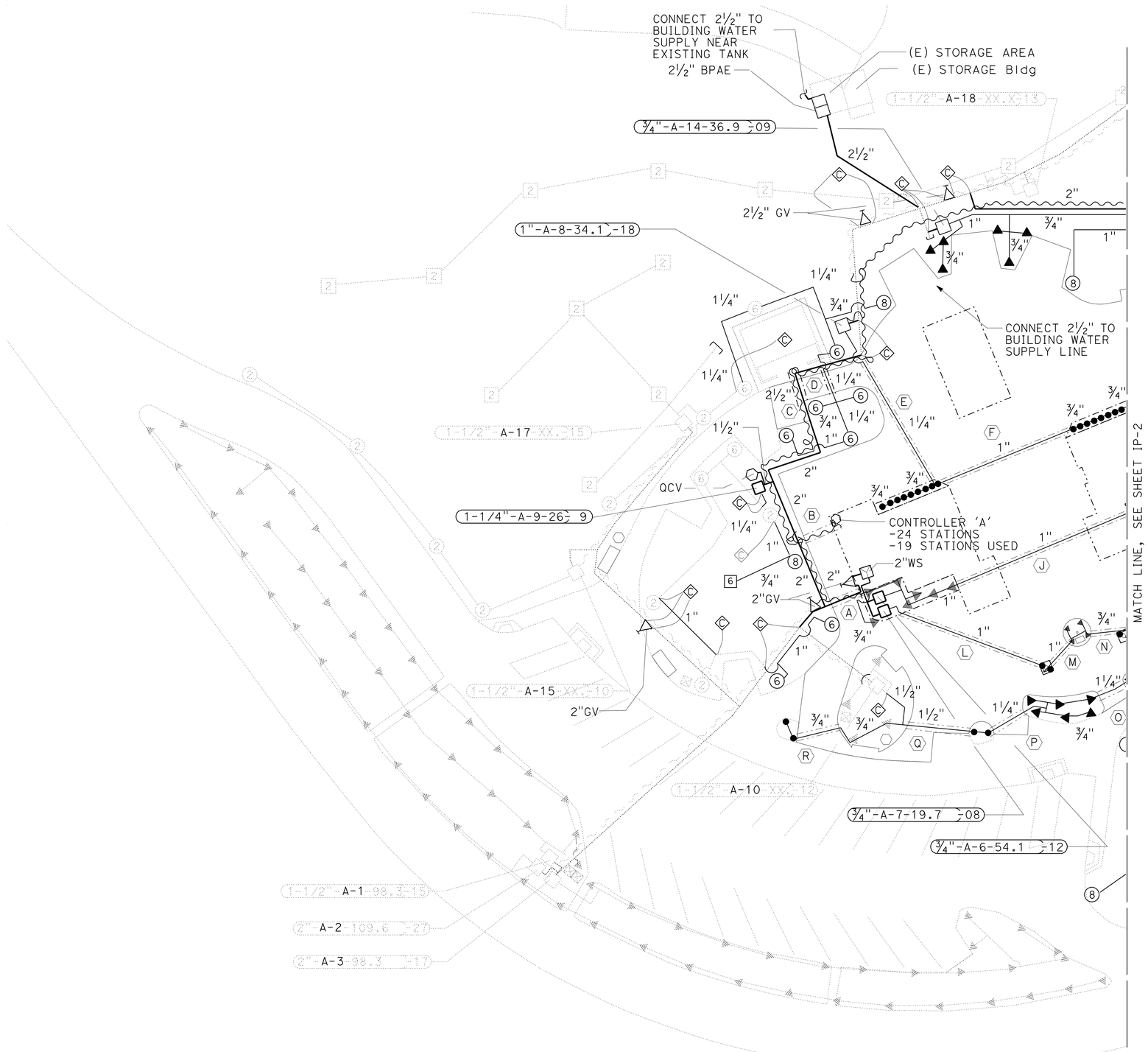

IRRIGATION SLEEVE

SYMBOL	DESCRIPTION	LENGTH
A	4" PIPE	14′
B	2" PIPE	16′
C	6"PIPE	12′
D	2" PIPE	12′
E	3" PIPE	55′
F	2" PIPE	52′
G	4" PIPE	19′
H	6" PIPE	12′
I	6" PIPE	16′
J	2" PIPE	99′
K	2" PIPE	13′
L	2" PIPE	60′
M	2" PIPE	13′
N	2" PIPE	12.5′
O	3" PIPE	15′
P	3" PIPE	16′
Q	3" PIPE	26′
R	2" PIPE	18′
S	6" PIPE	16′

SUMMARY OF QUANTITIES (THIS SHEET)

IRRIGATION SLEEVE	
DESCRIPTION	TOTALS
2" PIPE	295.5′
3" PIPE	57′
4"PIPE	33′
6"PIPE	56′

NOTE:
1. ALL IRRGATION SLEEVE PIPE UNDER 8" SIZING MUST BE SCH 40.
2. IRRIGATION SLEEVE PAID FOR AS PLASTIC PIPE.

NB CORNING SAFETY
ROADSIDE REST AREA

IRRIGATION PLAN

SCALE: 1" = 20′

IP-1

APPROVED FOR LANDSCAPE WORK ONLY

STATE OF CALIFORNIA - DEPARTMENT OF TRANSPORTATION
Caltrans® LANDSCAPE ARCHITECTURE

SENIOR LANDSCAPE ARCHITECT: RON FLORY
CALCULATED-DESIGNED BY: J. PATRICK SULLIVAN
CHECKED BY: RON FLORY
REVISED BY
DATE REVISED

P:\proj2\02\0E360_plans\pse\RESUBMIT_5-11-15\20e360sp001.dgn

LAST REVISION 12-12-13
DATE PLOTTED => 11-MAY-2015
TIME PLOTTED => 10:57

Dist	COUNTY	ROUTE	POST MILES TOTAL PROJECT	SHEET No.	TOTAL SHEETS
02	Teh	5	10.5	34	199

LICENSED LANDSCAPE ARCHITECT

4-1-14
PLANS APPROVAL DATE

LICENSED LANDSCAPE ARCHITECT
J. PATRICK SULLIVAN
#3125
Signature
07-31-14
Renewal Date
12-12-13
Date
STATE OF CALIFORNIA

THE STATE OF CALIFORNIA OR ITS OFFICERS OR AGENTS SHALL NOT BE RESPONSIBLE FOR THE ACCURACY OR COMPLETENESS OF SCANNED COPIES OF THIS PLAN SHEET.

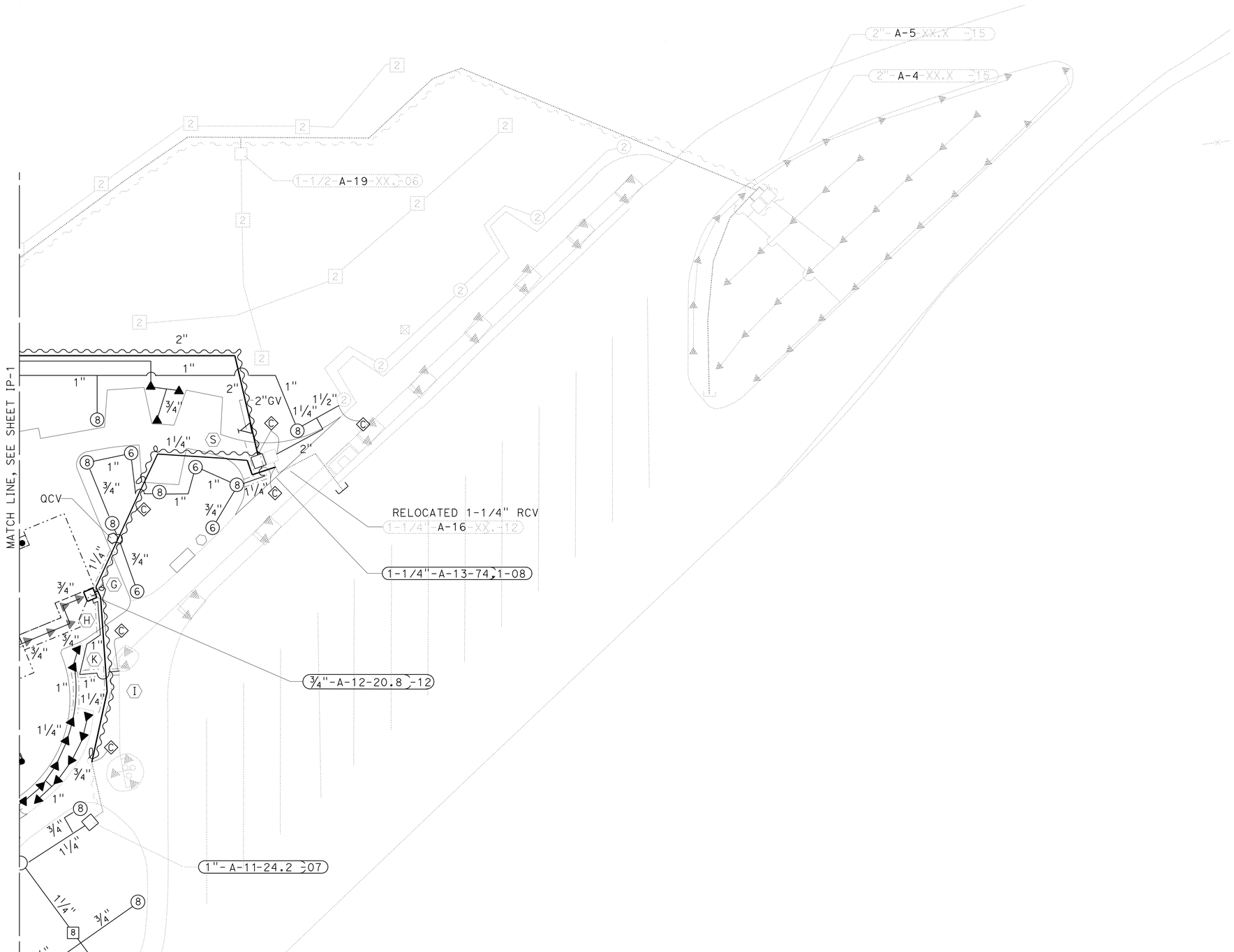

NB CORNING SAFETY
ROADSIDE REST AREA

IRRIGATION PLAN

SCALE: 1" = 20'

IP-2

APPROVED FOR LANDSCAPE WORK ONLY

J. PATRICK SULLIVAN
RON FLORY
SENIOR LANDSCAPE ARCHITECT
RON FLORY
REVISED BY
DATE REVISED
CALCULATED-DESIGNED BY
CHECKED BY

STATE OF CALIFORNIA - DEPARTMENT OF TRANSPORTATION
Caltrans LANDSCAPE ARCHITECTURE

P:\proj2\02\0E360_plans\pse\RESUBMIT_5-11-15\20e360sp002.dgn

LAST REVISION 12-12-13
DATE PLOTTED => 11-MAY-2015
TIME PLOTTED => 10:57

Dist	COUNTY	ROUTE	POST MILES TOTAL PROJECT	SHEET No.	TOTAL SHEETS
02	Teh	5	10.5	35	199

LICENSED LANDSCAPE ARCHITECT

4-1-14
PLANS APPROVAL DATE

LICENSED LANDSCAPE ARCHITECT J. PATRICK SULLIVAN #3125 Signature 07-31-14 Renewal Date 12-12-13 Date STATE OF CALIFORNIA

THE STATE OF CALIFORNIA OR ITS OFFICERS OR AGENTS SHALL NOT BE RESPONSIBLE FOR THE ACCURACY OR COMPLETENESS OF SCANNED COPIES OF THIS PLAN SHEET.

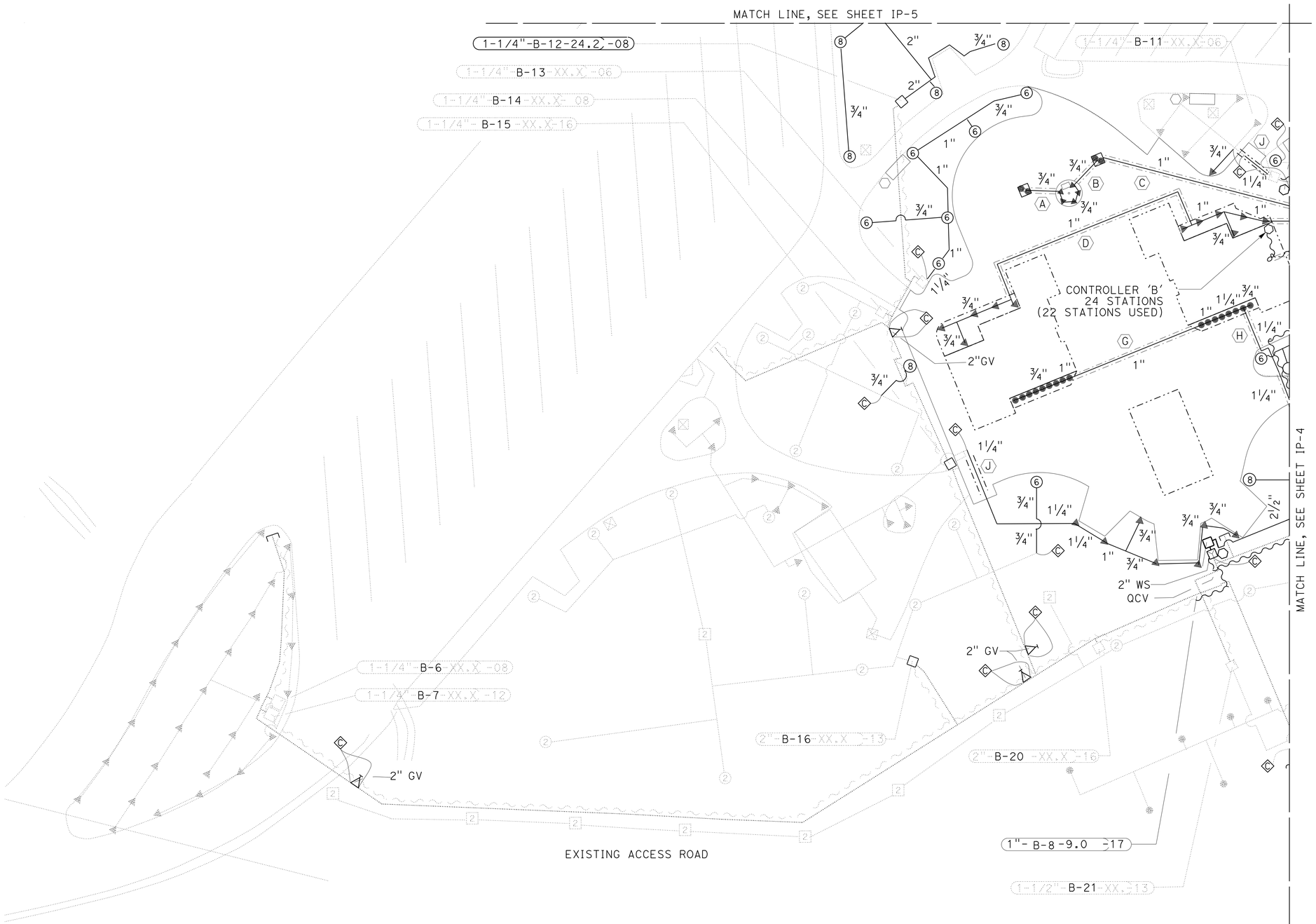

IRRIGATION SLEEVE		
SYMBOL	DESCRIPTION	LENGTH
A	2" PIPE	12′
B	2" PIPE	12′
C	2" PIPE	79′
D	2" PIPE	95′
E	2" PIPE	15′
F	2" PIPE	18′
G	2" PIPE	54′
H	3" PIPE	18′
I	6" PIPE	14′
J	2" PIPE	16′

SUMMARY OF QUANTITIES (THIS SHEET)

IRRIGATION SLEEVE	
DESCRIPTION	TOTALS
2" PIPE	301′
3" PIPE	18′
6"PIPE	14′

NOTE:
IRRIGATION SLEEVE PAID FOR AS PLASTIC PIPE.

SB CORNING SAFETY
ROADSIDE REST AREA

IRRIGATION PLAN

SCALE: 1" = 20′

IP-3

APPROVED FOR LANDSCAPE WORK ONLY

REVISED BY	DATE REVISED

J. PATRICK SULLIVAN — RON FLORY
CALCULATED-DESIGNED BY — CHECKED BY
SENIOR LANDSCAPE ARCHITECT — RON FLORY

STATE OF CALIFORNIA - DEPARTMENT OF TRANSPORTATION
Caltrans® LANDSCAPE ARCHITECTURE

P:\proj2\02\0E360_plans\pse\RESUBMIT_5-11-15\20e360sp003.dgn

LAST REVISION 12-12-13 | DATE PLOTTED => 11-MAY-2015 | TIME PLOTTED => 10:57

BORDER LAST REVISED 7/2/2010 | USERNAME => S123119 | DGN FILE => 20e360sp003.dgn | RELATIVE BORDER SCALE IS IN INCHES 0 1 2 3 | UNIT 0382 | PROJECT NUMBER & PHASE 02000000301

Dist	COUNTY	ROUTE	POST MILES TOTAL PROJECT	SHEET No.	TOTAL SHEETS
02	Teh	5	10.5	36	199

LICENSED LANDSCAPE ARCHITECT

4-1-14
PLANS APPROVAL DATE

LICENSED LANDSCAPE ARCHITECT J. PATRICK SULLIVAN #3125 Signature 07-31-14 Renewal Date 12-12-13 Date STATE OF CALIFORNIA

THE STATE OF CALIFORNIA OR ITS OFFICERS OR AGENTS SHALL NOT BE RESPONSIBLE FOR THE ACCURACY OR COMPLETENESS OF SCANNED COPIES OF THIS PLAN SHEET.

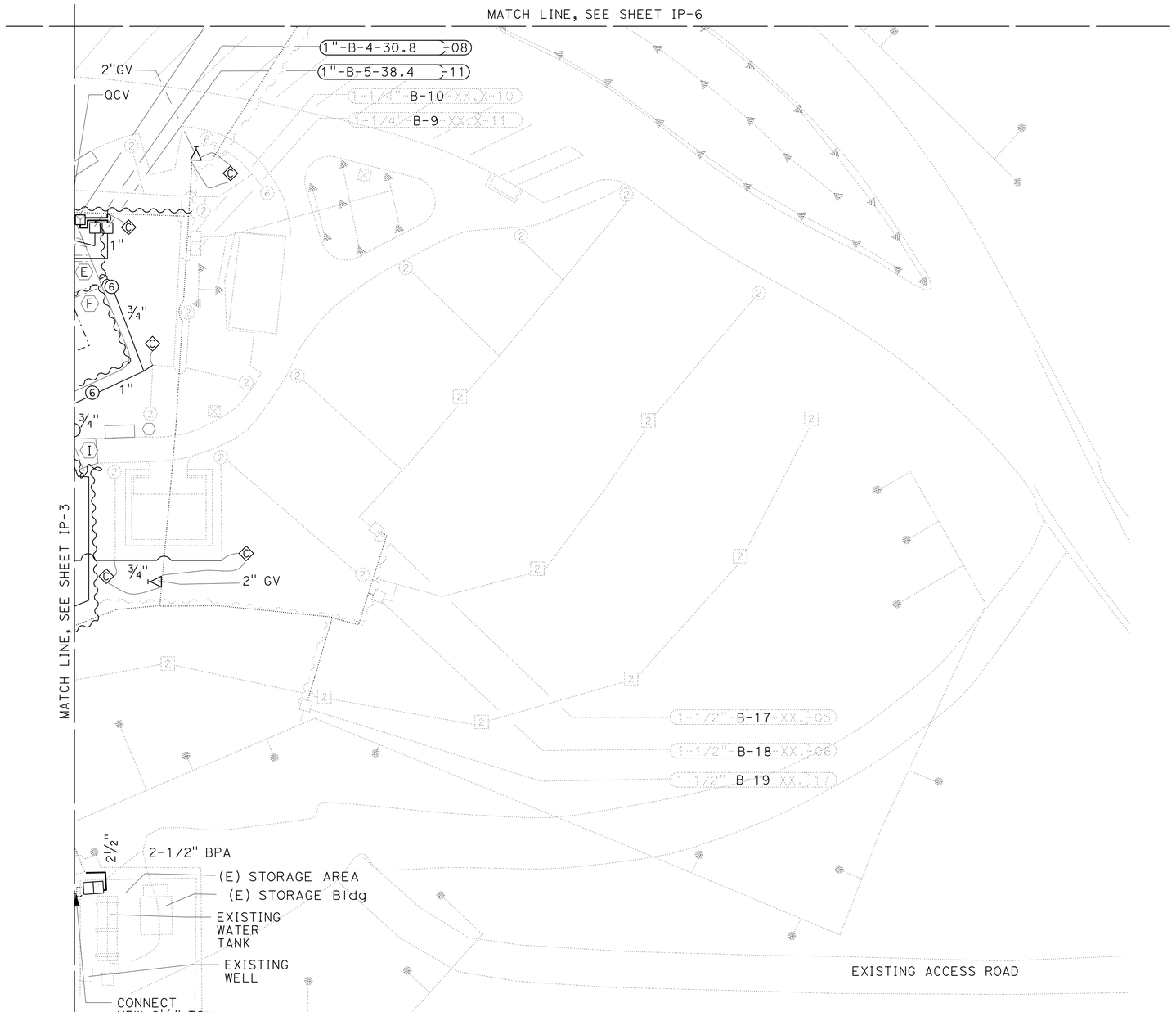

SB CORNING SAFETY
ROADSIDE REST AREA

IRRIGATION PLAN

SCALE: 1" = 20'

IP-4

APPROVED FOR LANDSCAPE WORK ONLY

STATE OF CALIFORNIA - DEPARTMENT OF TRANSPORTATION
Caltrans® LANDSCAPE ARCHITECTURE

SENIOR LANDSCAPE ARCHITECT: RON FLORY
CALCULATED-DESIGNED BY: J. PATRICK SULLIVAN
CHECKED BY: RON FLORY
REVISED BY
DATE REVISED

P:\proj2\02\0E360_plans\pse\RESUBMIT_5-11-15\20e360sp004.dgn

LAST REVISION 12-12-13
DATE PLOTTED => 11-MAY-2015
TIME PLOTTED => 10:57

Dist	COUNTY	ROUTE	POST MILES TOTAL PROJECT	SHEET No.	TOTAL SHEETS
02	Teh	5	10.5	37	199

LICENSED LANDSCAPE ARCHITECT

4-1-14
PLANS APPROVAL DATE

LICENSED LANDSCAPE ARCHITECT
J. PATRICK SULLIVAN
#3125
Signature
07-31-14
Renewal Date
12-12-13
Date
STATE OF CALIFORNIA

THE STATE OF CALIFORNIA OR ITS OFFICERS OR AGENTS SHALL NOT BE RESPONSIBLE FOR THE ACCURACY OR COMPLETENESS OF SCANNED COPIES OF THIS PLAN SHEET.

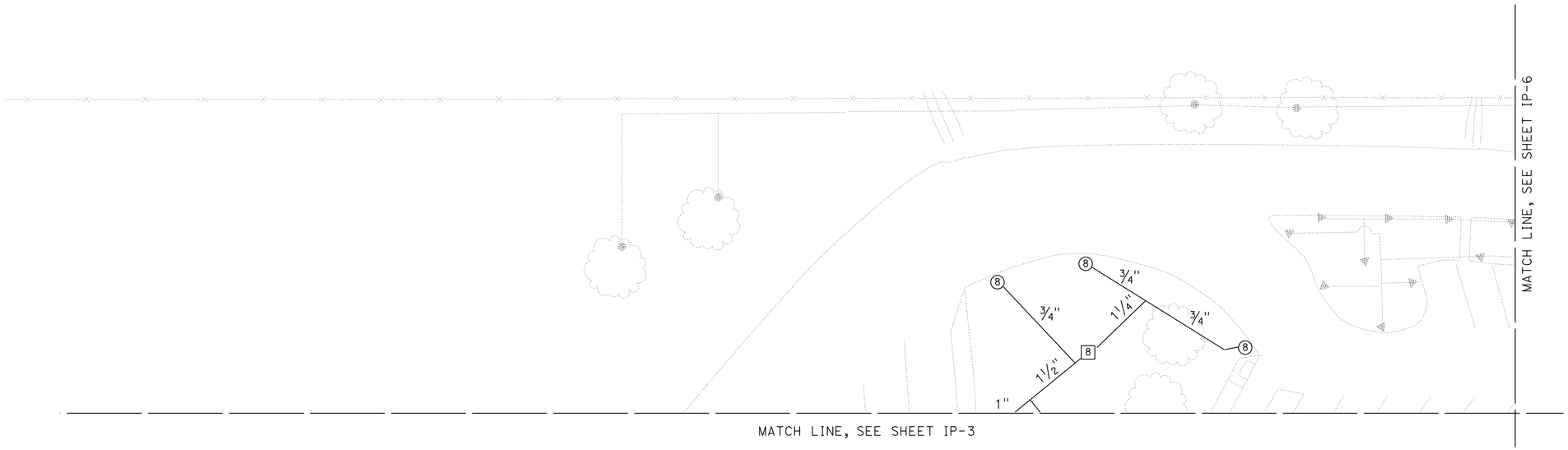

SB CORNING SAFETY
ROADSIDE REST AREA

IRRIGATION PLAN

SCALE: 1" = 20'

IP-5

APPROVED FOR LANDSCAPE WORK ONLY

REVISED BY	J. PATRICK SULLIVAN
DATE REVISED	RON FLORY
CALCULATED-DESIGNED BY	SENIOR LANDSCAPE ARCHITECT
CHECKED BY	RON FLORY

STATE OF CALIFORNIA - DEPARTMENT OF TRANSPORTATION
Caltrans® LANDSCAPE ARCHITECTURE

P:\proj2\02\0E360_plans\pse\RESUBMIT_5-11-15\20e360sp005.dgn

LAST REVISION 12-12-13 | DATE PLOTTED => 11-MAY-2015 | TIME PLOTTED => 10:57

Dist	COUNTY	ROUTE	POST MILES TOTAL PROJECT	SHEET No.	TOTAL SHEETS
02	Teh	5	10.5	38	199

LICENSED LANDSCAPE ARCHITECT

4-1-14
PLANS APPROVAL DATE

LICENSED LANDSCAPE ARCHITECT
J. PATRICK SULLIVAN
#3125
Signature
07-31-14
Renewal Date
12-12-13
Date
STATE OF CALIFORNIA

THE STATE OF CALIFORNIA OR ITS OFFICERS OR AGENTS SHALL NOT BE RESPONSIBLE FOR THE ACCURACY OR COMPLETENESS OF SCANNED COPIES OF THIS PLAN SHEET.

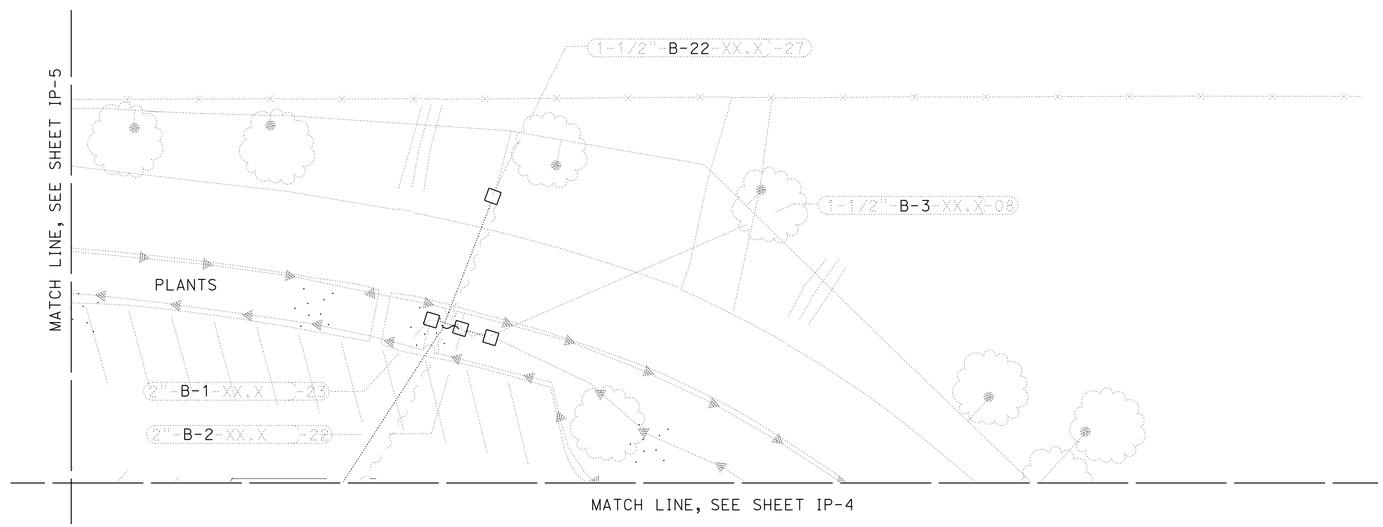

SB CORNING SAFETY
ROADSIDE REST AREA

IRRIGATION PLAN

SCALE: 1" = 20'

IP-6

APPROVED FOR LANDSCAPE WORK ONLY

STATE OF CALIFORNIA - DEPARTMENT OF TRANSPORTATION
Caltrans® LANDSCAPE ARCHITECTURE

SENIOR LANDSCAPE ARCHITECT: RON FLORY
CALCULATED-DESIGNED BY: J. PATRICK SULLIVAN
CHECKED BY: RON FLORY
REVISED BY
DATE REVISED

P:\proj2\02\0E360_plans\pse\RESUBMIT_5-11-15\20e360sp006.dgn

LAST REVISION 12-12-13
DATE PLOTTED => 11-MAY-2015
TIME PLOTTED => 10:57

Dist	COUNTY	ROUTE	POST MILES TOTAL PROJECT	SHEET No.	TOTAL SHEETS
02	Teh	5	10.5	39	199

LICENSED LANDSCAPE ARCHITECT

4-1-14
PLANS APPROVAL DATE

LICENSED LANDSCAPE ARCHITECT J. PATRICK SULLIVAN #3125 Signature 07-31-14 Renewal Date 12-12-13 Date STATE OF CALIFORNIA

THE STATE OF CALIFORNIA OR ITS OFFICERS OR AGENTS SHALL NOT BE RESPONSIBLE FOR THE ACCURACY OR COMPLETENESS OF SCANNED COPIES OF THIS PLAN SHEET.

LEGEND:

LIMITS OF OPERATE EXISTING IRRIGATION (210,000 SQFT TOTAL PROJECT)

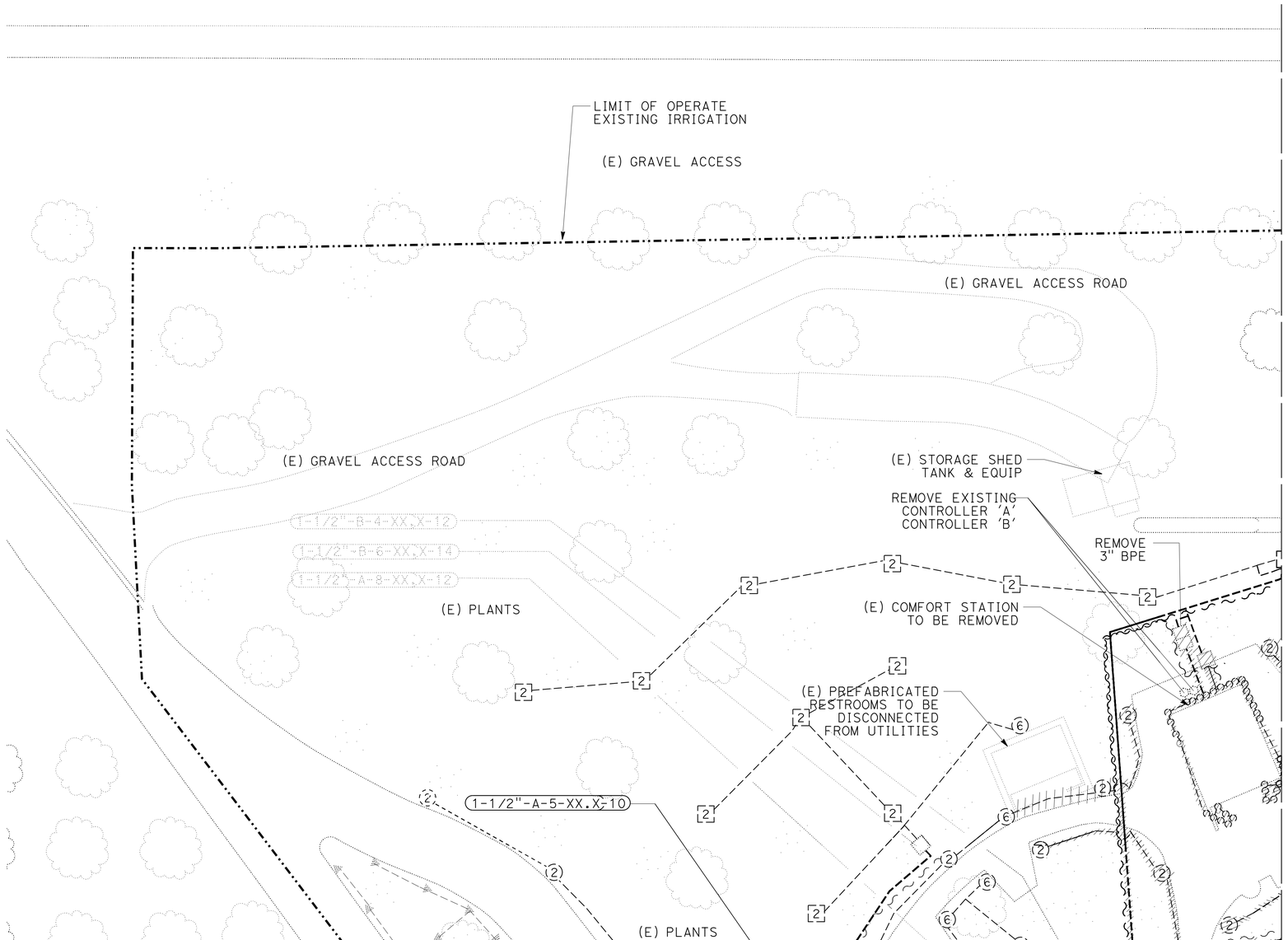

NB CORNING SAFETY ROADSIDE REST AREA

OPERATE EXISTING IRRIGATION PLAN

SCALE: 1" = 20'

MEIF-1

APPROVED FOR LANDSCAPE WORK ONLY

STATE OF CALIFORNIA - DEPARTMENT OF TRANSPORTATION
Caltrans® LANDSCAPE ARCHITECTURE

SENIOR LANDSCAPE ARCHITECT: RON FLORY
CALCULATED-DESIGNED BY: J. PATRICK SULLIVAN
CHECKED BY: RON FLORY
REVISED BY
DATE REVISED

P:\proj2\02\0E360_plans\pse\RESUBMIT_5-11-15\20e360sp007.dgn

LAST REVISION 12-12-13
DATE PLOTTED => 11-MAY-2015
TIME PLOTTED => 10:57

Dist	COUNTY	ROUTE	POST MILES TOTAL PROJECT	SHEET No.	TOTAL SHEETS
02	Teh	5	10.5	40	199

LICENSED LANDSCAPE ARCHITECT

4-1-14
PLANS APPROVAL DATE

LICENSED LANDSCAPE ARCHITECT J. PATRICK SULLIVAN #3125 Signature 07-31-14 Renewal Date 12-12-13 Date STATE OF CALIFORNIA

THE STATE OF CALIFORNIA OR ITS OFFICERS OR AGENTS SHALL NOT BE RESPONSIBLE FOR THE ACCURACY OR COMPLETENESS OF SCANNED COPIES OF THIS PLAN SHEET.

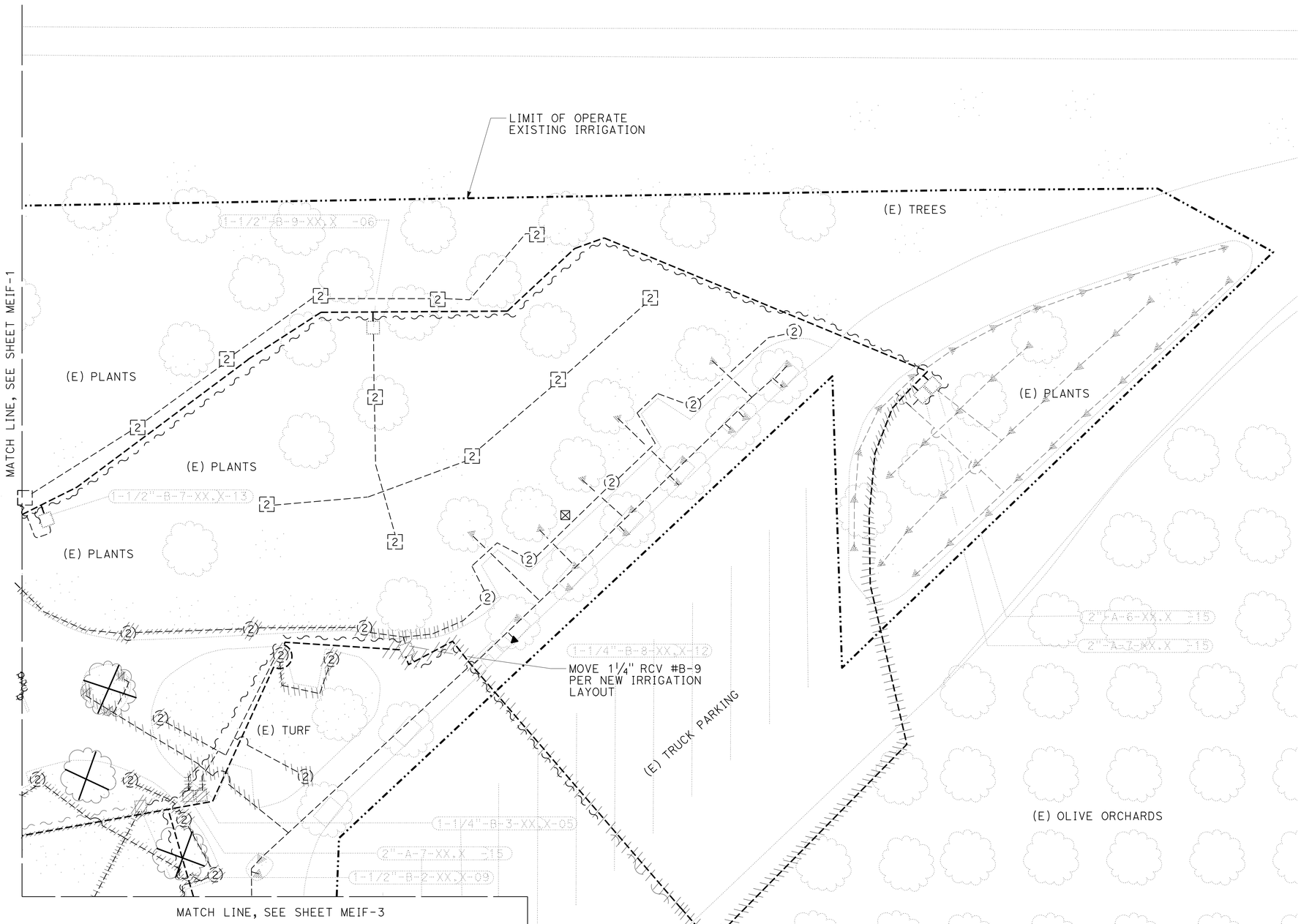

LEGEND:

LIMITS OF OPERATE EXISTING IRRIGATION (210,000 SQFT TOTAL PROJECT)

NB CORNING SAFETY
ROADSIDE REST AREA

OPERATE EXISTING IRRIGATION PLAN

SCALE: 1" = 20'

MEIF-2

APPROVED FOR LANDSCAPE WORK ONLY

STATE OF CALIFORNIA - DEPARTMENT OF TRANSPORTATION
LANDSCAPE ARCHITECTURE

SENIOR LANDSCAPE ARCHITECT: RON FLORY
CALCULATED-DESIGNED BY: J. PATRICK SULLIVAN
CHECKED BY: RON FLORY
REVISED BY
DATE REVISED

LAST REVISION 12-12-13
DATE PLOTTED => 11-MAY-2015
TIME PLOTTED => 10:57

P:\proj2\02\0E360_plans\pse\RESUBMIT_5-11-15\20e360sp008.dgn

Dist	COUNTY	ROUTE	POST MILES TOTAL PROJECT	SHEET No.	TOTAL SHEETS
02	Teh	5	10.5	41	199

LICENSED LANDSCAPE ARCHITECT

4-1-14
PLANS APPROVAL DATE

LICENSED LANDSCAPE ARCHITECT J. PATRICK SULLIVAN #3125 Signature 07-31-14 Renewal Date 12-12-13 Date STATE OF CALIFORNIA

THE STATE OF CALIFORNIA OR ITS OFFICERS OR AGENTS SHALL NOT BE RESPONSIBLE FOR THE ACCURACY OR COMPLETENESS OF SCANNED COPIES OF THIS PLAN SHEET.

LEGEND:

LIMITS OF OPERATE EXISTING IRRIGATION (210,000 SQFT TOTAL PROJECT)

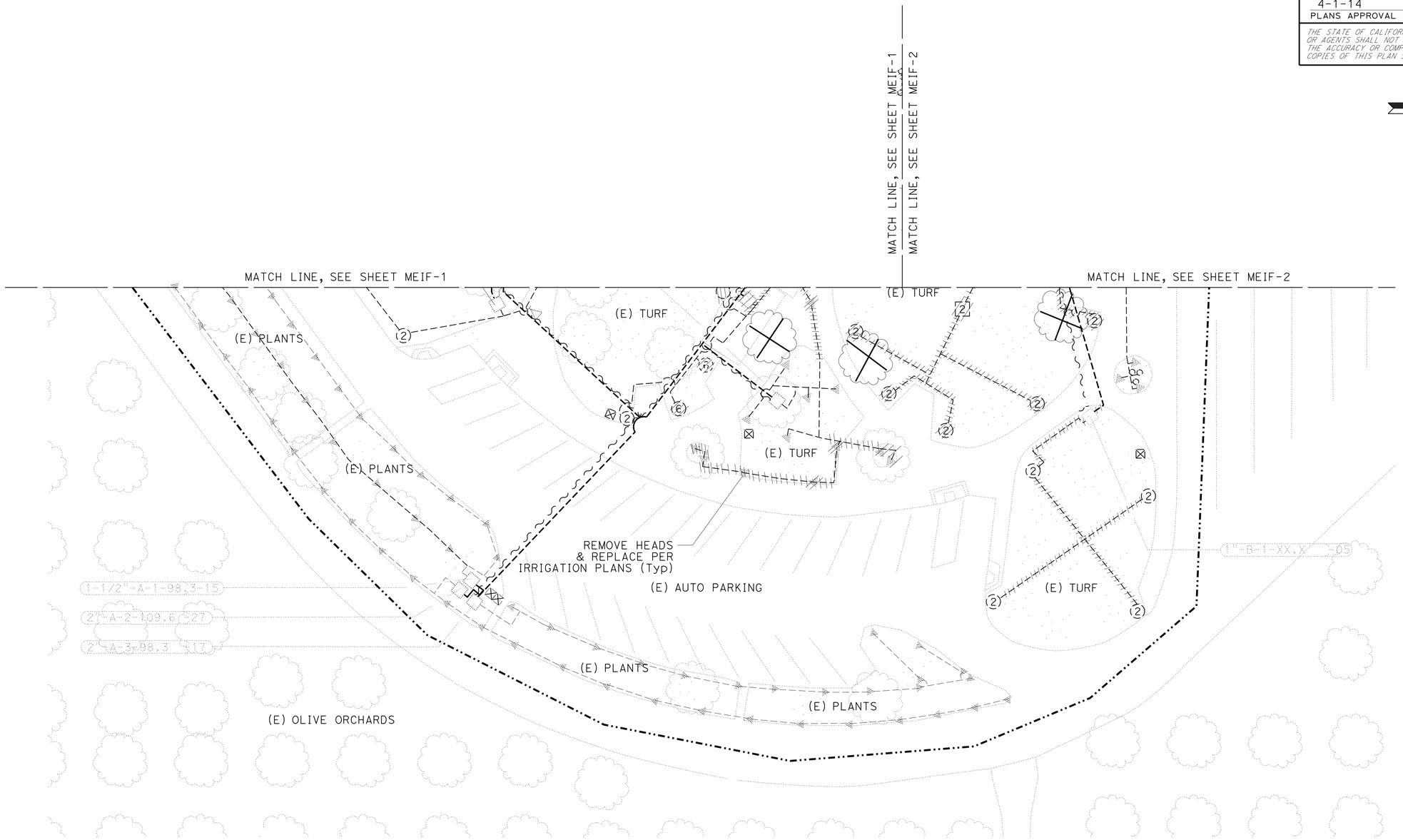

NB CORNING SAFETY
ROADSIDE REST AREA

OPERATE EXISTING IRRIGATION PLAN

SCALE: 1" = 20'

MEIF-3

APPROVED FOR LANDSCAPE WORK ONLY

STATE OF CALIFORNIA - DEPARTMENT OF TRANSPORTATION
Caltrans® LANDSCAPE ARCHITECTURE

SENIOR LANDSCAPE ARCHITECT: RON FLORY
CALCULATED-DESIGNED BY: J. PATRICK SULLIVAN
CHECKED BY: RON FLORY
REVISED BY
DATE REVISED

P:\proj2\02\0E360_plans\pse\RESUBMIT_5-11-15\20e360sp009.dgn

LAST REVISION 12-12-13
DATE PLOTTED => 11-MAY-2015
TIME PLOTTED => 10:57

BORDER LAST REVISED 7/2/2010
USERNAME => S123119
DGN FILE => 20e360sp009.dgn
RELATIVE BORDER SCALE IS IN INCHES 0 1 2 3
UNIT 0382
PROJECT NUMBER & PHASE 02000000301

Dist	COUNTY	ROUTE	POST MILES TOTAL PROJECT	SHEET No.	TOTAL SHEETS
02	Teh	5	10.5	42	199

LICENSED LANDSCAPE ARCHITECT

4-1-14
PLANS APPROVAL DATE

LICENSED LANDSCAPE ARCHITECT
J. PATRICK SULLIVAN
#3125
Signature
07-31-14
Renewal Date
12-12-13
Date
STATE OF CALIFORNIA

THE STATE OF CALIFORNIA OR ITS OFFICERS OR AGENTS SHALL NOT BE RESPONSIBLE FOR THE ACCURACY OR COMPLETENESS OF SCANNED COPIES OF THIS PLAN SHEET.

LEGEND:

LIMITS OF OPERATION
EXISTING IRRIGATION

OPERATE EXISTING IRRIGATION
TOTAL 349,00 SF

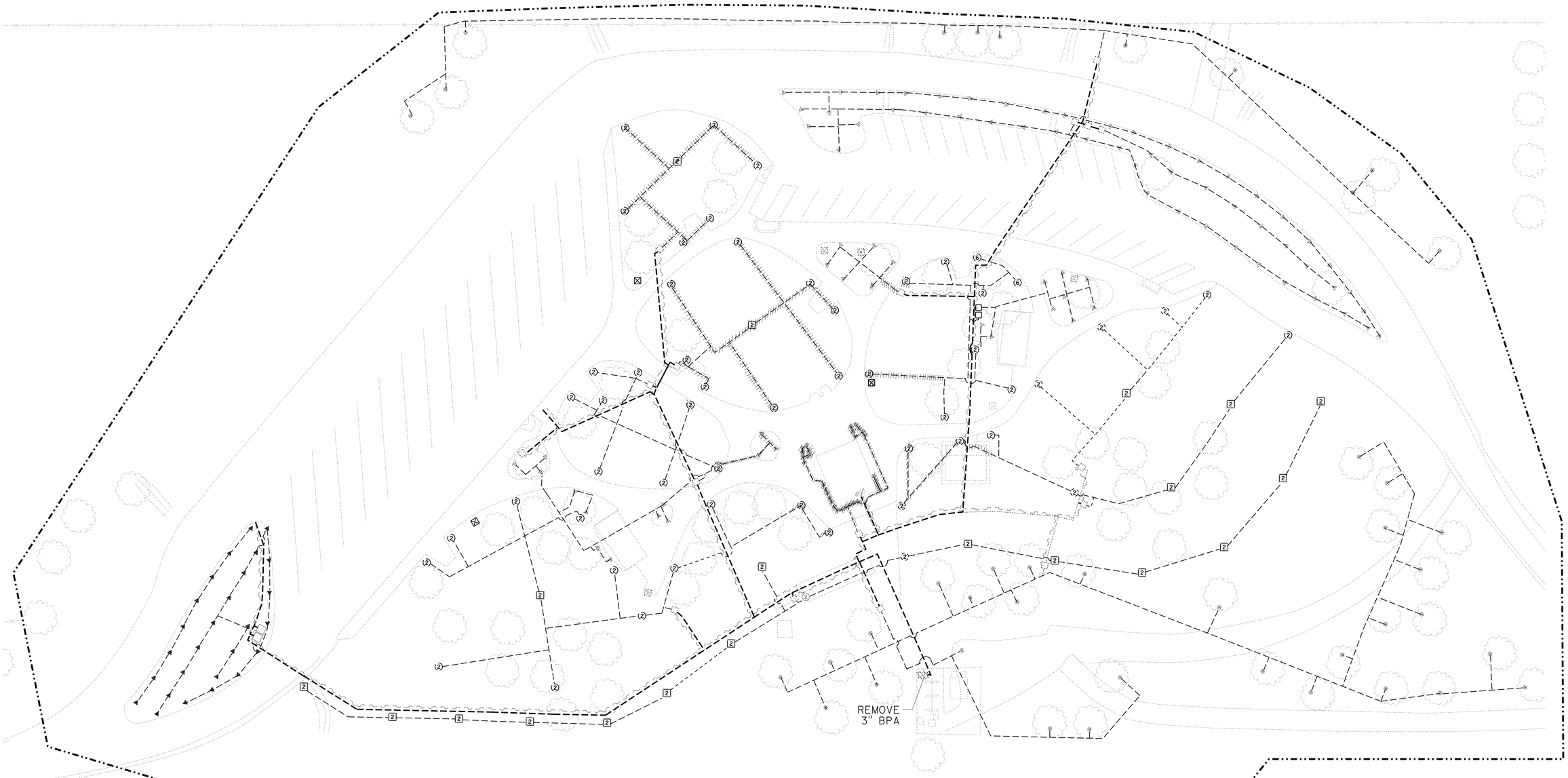

SB CORNING SAFETY
ROADSIDE REST AREA

OPERATE EXISTING IRRIGATION PLAN

SCALE: 1" = 30'

MEIF-4

APPROVED FOR LANDSCAPE WORK ONLY

REVISED BY
DATE REVISED

J. PATRICK SULLIVAN
RON FLORY

CALCULATED-DESIGNED BY
CHECKED BY

SENIOR LANDSCAPE ARCHITECT
RON FLORY

STATE OF CALIFORNIA - DEPARTMENT OF TRANSPORTATION
Caltrans® LANDSCAPE ARCHITECTURE

P:\proj2\02\0E360_plans\pse\RESUBMIT_5-11-15\20e360sp010.dgn

LAST REVISION 12-12-13
DATE PLOTTED => 11-MAY-2015
TIME PLOTTED => 10:57

Dist	COUNTY	ROUTE	POST MILES TOTAL PROJECT	SHEET No.	TOTAL SHEETS
02	Teh	5	10.5	43	199

LICENSED LANDSCAPE ARCHITECT

4-1-14
PLANS APPROVAL DATE

LICENSED LANDSCAPE ARCHITECT J. PATRICK SULLIVAN #3125 Signature 07-31-14 Renewal Date 12-12-13 Date STATE OF CALIFORNIA

THE STATE OF CALIFORNIA OR ITS OFFICERS OR AGENTS SHALL NOT BE RESPONSIBLE FOR THE ACCURACY OR COMPLETENESS OF SCANNED COPIES OF THIS PLAN SHEET.

SUBTOTALS PER VALVE ON LATERAL SUPPLY SIDE OF CONTROL VALVE

DESCRIPTION		UNIT	CONTROLLER 'A' NB CORNING SRRA																			SUBTOTALS	UNIT	DESCRIPTION		
			A-1	A-2	A-3	A-4	A-5	A-6	A-7	A-8	A-9	A-10	A-11	A-12	A-13	A-14	A-15	A-16	A-17	A-18	A-19					
PLASTIC PIPE SUPPLY LINE	SCH 40 ¾"	LF	-	-	-	-	-	72	45	47	30	151	120	75	85	182	-	-	45	-	-	852	LF	¾"	SCH 40	PLASTIC PIPE SUPPLY LINE
	1 "	↓	-	-	-	-	-	65	105	57	34	45	-	42	90	33	-	114	68	-	-	653	↓	1 "		
	1-¼"	↓	-	-	-	-	-	-	-	60	10	181	8	-	22	-	-	10	130	-	-	421	↓	1-¼"		
	1-½"	↓	-	-	-	-	-	-	-	-	-	58	-	-	-	-	-	24	-	-	-	82	↓	1-½"		
	2 "	✓	-	-	-	-	-	-	-	-	-	-	-	-	-	-	-	25	-	-	-	25	✓	2 "		
SPRINKLER TYPE	⑥ A-6	EA	-	-	-	-	-	-	-	-	2	-	-	-	4	-	-	3	7	-	-	16	EA	⑥ A-6		SPRINKLER TYPE
	6 A-6	↓	-	-	-	-	-	-	-	-	1	-	-	-	-	-	-	-	-	-	-	1	↓	6 A-6		
	⑧ A-8	↓	-	-	-	-	-	-	-	-	-	-	5	-	4	-	-	-	2	-	-	11	↓	⑧ A-8		
	8 A-8	↓	-	-	-	-	-	-	-	-	-	-	-	-	-	-	-	-	-	-	-	-	↓	8 A-8		
	▲ B-2	↓	-	-	-	-	-	12	4	-	-	17	-	-	-	9	-	-	-	-	-	42	↓	▲ B-2		
	● C-2	↓	-	-	-	-	-	4	4	18	-	4	-	-	-	-	-	-	-	-	-	30	↓	● C-2		
	TREE WELL	✓	-	-	-	-	-	-	4	-	-	-	-	-	-	-	-	-	-	-	-	4	✓	TREE WELL		

SUBTOTALS PER VALVE ON LATERAL SUPPLY SIDE OF CONTROL VALVE

DESCRIPTION		UNIT	CONTROLLER 'B' SB CORNING SRRA																							SUBTOTALS	UNIT	DESCRIPTION		
			B-1	B-2	B-3	B-4	B-5	B-6	B-7	B-8	B-9	B-10	B-11	B-12	B-13	B-14	B-15	B-16	B-17	B-18	B-19	B-20	B-21	B-22						
PLASTIC PIPE SUPPLY LINE	SCH 40 ¾"	LF	-	-	-	66	58	-	-	20	68	-	14	206	74	16	62	34	-	68	-	-	-	-		686	LF	¾"	SCH 40	PLASTIC PIPE SUPPLY LINE
	1 "	↓	-	-	-	82	120	-	-	68	22	-	-	21	76	-	10	-	-	-	-	-	-	-		399	↓	1 "		
	1-¼"	↓	-	-	-	-	-	-	-	146	-	-	18	41	-	-	78	-	-	-	-	-	-	-		283	↓	1-¼"		
	1-½"	↓	-	-	-	-	-	-	-	-	-	-	-	20	-	-	-	-	-	-	-	-	-	-		20	↓	1-½"		
	2 "	✓	-	-	-	-	-	-	-	-	-	-	-	55	-	-	-	-	-	-	-	-	-	-		55	✓	2 "		
SPRINKLER TYPE	⑥ A-6	EA	-	-	-	-	-	-	-	-	3	5	-	-	6	-	-	1	-	-	-	-	-	-		15	EA	⑥ A-6		SPRINKLER TYPE
	6 A-6	↓	-	-	-	-	-	-	-	-	-	-	-	-	-	-	-	-	-	-	-	-	-	-		-	↓	6 A-6		
	⑧ A-8	↓	-	-	-	-	-	-	-	-	-	-	-	7	1	-	-	-	-	1	-	-	-	-		9	↓	⑧ A-8		
	8 A-8	↓	-	-	-	-	-	-	-	-	-	-	-	1	-	1	-	-	-	-	-	-	-	-		2	↓	8 A-8		
	▲ B-2	↓	-	-	-	5	11	-	-	-	-	-	1	-	-	-	7	-	-	-	-	-	-	-		24	↓	▲ B-2		
	● C-2	↓	-	-	-	4	-	-	-	17	-	-	-	-	-	-	-	-	-	-	-	-	-	-		21	↓	● C-2		
	TREE WELL	✓	-	-	-	4	-	-	-	-	-	-	-	-	-	-	-	-	-	-	-	-	-	4			✓	TREE WELL		

IRRIGATION QUANTITIES

IQ-1

REVISED BY | DATE REVISED
J. PATRICK SULLIVAN | RON FLORY
CALCULATED-DESIGNED BY | CHECKED BY
SENIOR LANDSCAPE ARCHITECT | RON FLORY
STATE OF CALIFORNIA - DEPARTMENT OF TRANSPORTATION
Caltrans® LANDSCAPE ARCHITECTURE

P:\proj2\02\0E360_plans\pse\RESUBMIT_5-11-15\20e360sr001.dgn

LAST REVISION 12-12-13 | DATE PLOTTED => 11-MAY-2015 | TIME PLOTTED => 10:57

Dist	COUNTY	ROUTE	POST MILES TOTAL PROJECT	SHEET No.	TOTAL SHEETS
02	Teh	5	10.5	44	199

LICENSED LANDSCAPE ARCHITECT

4-1-14
PLANS APPROVAL DATE

LICENSED LANDSCAPE ARCHITECT J. PATRICK SULLIVAN #3125 Signature 07-31-14 Renewal Date 12-12-13 Date STATE OF CALIFORNIA

THE STATE OF CALIFORNIA OR ITS OFFICERS OR AGENTS SHALL NOT BE RESPONSIBLE FOR THE ACCURACY OR COMPLETENESS OF SCANNED COPIES OF THIS PLAN SHEET.

NOTE:
(N) - NOT A SEPARATE PAY ITEM, FOR INFORMATION ONLY

ABBREVIATIONS:
FA — faucet assembly
PRV — pressure reducing valve

IRRIGATION SLEEVE CHANGED TO PLASTIC SUPPLY PIPE (SCH 40) OR (CLASS 315)

SIZING	UNIT	TOTAL
2"	LF	662
3"		113
4"		47
6"		56

1. IRRIGATION SLEEVE TOTALS REFLECTED IN BID ITEM LIST PLASTIC SUPPLY PIPE.

SUBTOTALS PER PLAN SHEET ON MAIN SUPPLY SIDE OF CONTROL VALVE

DESCRIPTION			UNIT	SHEET NUMBER IP-1	IP-2	IP-3	IP-4	IP-5	IP-6	LD-4	LD-5		SUBTOTALS
BPA		2-1/2"	EA	1	-	1	-	-	-	-	-		2
BPA		ENCLOSURE	EA	1	-	1	-	-	-	-	-		2
IRRIGATION CONTROLLER		24 -STATION	EA	1	-	1	-	-	-	-	-		2
VALVES AND ASSEMBLIES	RCV	¾"	EA	3	1	-	-	-	-	-	-		4
	RCV	1"		1	1	1	2	-	-	-	-		5
	RCV	1-1/4"		1	1	1	-	-	-	-	-		3
	RCV	1-1/2"		-	-	-	-	-	-	-	-		-
	RCV	2"		-	-	-	-	-	-	-	-		-
	QCV	1"		1	1	2	-	-	-	-	-		4
	GV	2"	EA	3	1	4	2	-	-	-	-		10
	GV	2-1/2"	"	2	-	-	-	-	-	-	-		2
	BV	1-1/4"	EA	-	-	-	-	-	-	2	2		4
	WS	2"	EA	1	1	1	1	-	-	-	-		4
	FA		EA							3	3		6
PLASTIC PIPE SUPPLY LINE	SCH 40	¾"	LF	-	-	-	-	-	-	-	-		-
	SCH 40	1"		-	-	-	-	-	-	196	108		304
	SCH 40	1-1/4"		-	180	-	-	-	-	283	420		883
	SCH 40	1-1/2"		-	-	-	-	-	-	-	-		-
	SCH 40	2"		204	122	10	12	-	-	-	-		348
	PR 315	2-1/2"	LF	66	-	40	-	-	-	-	-		106
	PR 315	3"	LF	57	-	18	-	-	-	-	28		103
IRRIGATION SLEEVE (N) (SUBTOTALS)		2"	LF	296	-	301	-	-	-	42	23		662
		3"		57	-	18	-	-	-	10	28		113
		4"		33	-	14	-	-	-	-	-		47
		6"		56	-	-	-	-	-	-	-		56

1. ALL IRRIGATION VALVE BOXES, SPLICE BOXES AND PULL BOXES MUST BE CONCRETE. REGULAR VALVE BOX LIDS MUST BE STEEL. CIRCULAR VALVE BOXES MUST BE CONCRETE.
2. QUICK COUPLERS MUST HAVE LOCKING YELLOW VINYL CAPS. PROVIDE (4) SETS OF KEYS AND SWIVEL HOSE ADAPTORS.

TOTAL QUANTITIES

TOTALS	UNIT	DESCRIPTION		
2	EA	2-1/2"		BPA
2	EA	ENCLOSURE/BLANKET		BPA
2	EA	24-STATION		IRRIGATION CONTROLLER
4	EA	¾"	RCV	VALVES AND ASSEMBLIES
5		1"	RCV	VALVES AND ASSEMBLIES
3		1-1/4"	RCV	VALVES AND ASSEMBLIES
-		1-1/2"	RCV	VALVES AND ASSEMBLIES
-		2"	RCV	VALVES AND ASSEMBLIES
4			QCV	VALVES AND ASSEMBLIES
10		2"	GV	VALVES AND ASSEMBLIES
2		2-1/2"	GV	VALVES AND ASSEMBLIES
4		1-1/4"	BV	VALVES AND ASSEMBLIES
4		2"	WS	VALVES AND ASSEMBLIES
6		EA	FA	VALVES AND ASSEMBLIES
1538	LF	¾"	SCH 40	PLASTIC PIPE SUPPLY LINE
1356		1"	SCH 40	PLASTIC PIPE SUPPLY LINE
1587		1¼"	SCH 40	PLASTIC PIPE SUPPLY LINE
102		1½"	SCH 40	PLASTIC PIPE SUPPLY LINE
428		2"	SCH 40	PLASTIC PIPE SUPPLY LINE
-			SCH 40	PLASTIC PIPE SUPPLY LINE
106		2½"	PR 315	PLASTIC PIPE SUPPLY LINE
662		2"	PR 315	PLASTIC PIPE SUPPLY LINE
113		3"	PR 315	PLASTIC PIPE SUPPLY LINE
47		4"	PR 315	PLASTIC PIPE SUPPLY LINE
56		6"	PR 315	PLASTIC PIPE SUPPLY LINE
54	EA			POP-UP SPRINKLER ASSEMBLY (GEAR DRIVEN)
31	EA	⑥ A-6		SPRINKLER ASSEMBLY
1		6 A-6		SPRINKLER ASSEMBLY
20		⑧ A-8		SPRINKLER ASSEMBLY
2		8 A-8		SPRINKLER ASSEMBLY
66	EA	▲ B-2		SPRINKLER ASSEMBLY
51		● C-2		SPRINKLER ASSEMBLY
8		TREE WELL		SPRINKLER ASSEMBLY

OPERATE EXISTING IRRIGATION

WORK ITEM DESCRIPTION	SHEET No.	(N) AREA	
OPERATE EXISTING NB IRRIGATION	MEIF-1	210,000	OPERATE EXISTING IRRIGATION
OPERATE EXISTING SB IRRIGATION	MEIF-2	370,000	
	TOTAL SQFT	580,000	LS

1. CONTRACTOR MUST MAINTAIN IRRIGATION FACILITY PER PLANS DURING THE LIFE OF THIS CONTRACT

REMOVE EXISTING IRRIGATION FACILITY

WORK ITEM DESCRIPTION	SHEET No.	(N) AREA	
REMOVE IRRIGATION FACILITY NB SRRA	IR-1	277,200	REMOVE EXISTING IRRIGATION FACILITY
REMOVE IRRIGATION FACILITY SB SRRA	IR-2	335,400	
	TOTAL SQFT	612,600	LS

1. CONTRACTOR MUST REMOVE IRRIGATION FACILITY PER PLANS, PRIOR TO BUILDING AND PAVING DEMOLITION WORK.

CHECK AND TEST EXISTING IRRIGATION FACILITIES

WORK ITEM DESCRIPTION	SHEET No.	(N) AREA	
CHECK & TEST IRRIGATION NB SRRA	IR-1	210,000	CHECK & TEST EXISTING IRRIGATION FACILITY
CHECK & TEST IRRIGATION SB SRRA	IR-2	370,000	
	TOTAL SQFT	580,000	LS

1.CHECK AND TEST EXISTING IRRIGATION SYSTEM FOR PROPER FUNCTION PRIOR TO THE REMOVAL OF THE OLD IRRIGATION SYSTEM.

2.CHECK AND TEST EXISTING IRRIGATION SYSTEM PRIOR TO BEGINNING THE MAINTENANCE OF THE SYSTEM; CHECK FOR PROPER FUNCTIONING AND DEFECENCIES.

3.CHECK AND TEST IRRIGATIONS SYSTEM FOR PROPER FUNCTIONING UPON COMPLETION OF NEW WORK.

APPROVED FOR LANDSCAPE WORK ONLY

IRRIGATION QUANTITIES

IQ-2

REVISED BY | DATE REVISED
J. PATRICK SULLIVAN | RON FLORY
CALCULATED-DESIGNED BY | CHECKED BY
SENIOR LANDSCAPE ARCHITECT | RON FLORY
STATE OF CALIFORNIA - DEPARTMENT OF TRANSPORTATION
Caltrans® LANDSCAPE ARCHITECTURE
P:\proj2\02\0E360_plans\pse\RESUBMIT_5-11-15\20e360sr002.dgn

LAST REVISION 12-12-13 | DATE PLOTTED => 11-MAY-2015 TIME PLOTTED => 10:57

Dist	COUNTY	ROUTE	POST MILES TOTAL PROJECT	SHEET No.	TOTAL SHEETS
02	Teh	5	10.5	45	199

LICENSED LANDSCAPE ARCHITECT

4-1-14
PLANS APPROVAL DATE

LICENSED LANDSCAPE ARCHITECT J. PATRICK SULLIVAN #3125 Signature 07-31-14 Renewal Date 12-12-13 Date STATE OF CALIFORNIA

THE STATE OF CALIFORNIA OR ITS OFFICERS OR AGENTS SHALL NOT BE RESPONSIBLE FOR THE ACCURACY OR COMPLETENESS OF SCANNED COPIES OF THIS PLAN SHEET.

APPLICABLE WHEN CIRCLED:

1 - QUANTITIES SHOWN ARE "PER PLANT" UNLESS SHOWN AS SQFT APPLICATIONS RATES.
2 - SUFFICIENT TO RECEIVE ROOT BALL.
3 - DOES NOT APPLY TO MULCH AREAS.
4 - SPACE AS SHOWN.
5 - UNLESS OTHERWISE NOTED.
6 - REQUIRED.
7 - 3 CY PER 1000 SQFT.
8 - ROOT BARRIER REQUIRED. SEE LANDSCAPE DETAILS.
9 - BASIN AREA EQUIVALENT TO (3 Ft) IN DIAMETER.
10 - MULCH SHALL BE INSTALLED TO WITHIN THREE FEET FROM EDGE OF PAVING/AC DIKE.
11 - CULTIVATION REQUIRED. (COMMERCIAL FERTILIZER APPLIED AT 20 Lbs PER 1000 SQFT) (SOIL AMENDMENT APPLIED PER 7 ABOVE FOR CULTIVATION OF SOD AREAS).

NOTE:

1. UNDERLINED PORTIONS OF THE BOTANICAL NAME INDICATE ABBREVIATIONS USED ON PLANTING PLANS.

LEGEND:

X IN BOX DENOTES REQUIREMENT
— IN BOX DENOTES NOT A REQUIREMENT

ABBREVIATIONS:

CUYD —— CUBIC YARD/YARDS
CUFT —— CUBIC FEET/FOOT
Pkt —— PACKET
SQFT —— SQUARE FEET/FOOT
SQYDS —— SQUARE YARDS

LANDSCAPE CONSTRUCTION LEGEND:

○ TREE GRATES

PLANT LEGEND

PLANT GROUP	PLANT No.	SYMBOL	BOTANICAL NAME	COMMON NAME	SIZE	QUANTITY EACH	HOLE SIZE (Ft) Dia	HOLE SIZE (Ft) DEPTH	BASIN TYPE 9	SOIL AMENDMENT TYPE	SOIL AMENDMENT CUFT 1	COMMERCIAL FERTILIZER PLANTING	COMMERCIAL FERTILIZER PLT ESTB	MULCH 1 3 (CUFT)	STAKING	PLANTING LIMITS MINIMUM DISTANCE (Ft) FROM ETW	Pvmt	FENCE	WALL	PAVED DITCH	EARTH DITCH	ON CENTER (Ft)	REMARKS
A	1	○	COROEPSIS VERTICILATA 'MOONBEAM'	MOONBEAM TICKWEED	No. 1	29	1.0	0.8	II	CEDAR	0.4	1 Pkt	0.22 lbs	-	-	-	-	-	2.5	-	-	-	PERENNIAL COLOR
	2	◎	HEMEROCALLIS SSP. YELLOW & ORANGE	YELLOW & ORANGE DAYLILIES	No. 1	31	1.0	0.8	II		0.4	1 Pkt	0.22 lbs	-	-	-	-	-	2.5	-	-	-	PERENNIAL ACCENT
	3	◉	LIRIOPE MUSCARI	LILY TURF	No. 1	16	1.0	0.8	II		0.4	1 Pkt	0.22 lbs	-	-	-	-	-	2.5	-	-	-	PERENNIAL ACCENT
	4	⬡	TRACHELOSPERMUM JASMINIODES	STAR JASMINE	No. 1	38	1.0	0.8	II		0.4	1 Pkt	0.22 lbs	-	-	-	-	-	2.5	-	-	3.0	GROUND COVER
B	5		JUNIPERUS CHINENSIS 'TORULOSA'	HOLLYWOOD JUNIPER	No. 5	2	2.0	1.5	II		1.25	3 Pkt	0.66 lbs	-	-	-	-	-	5.0	-	-	-	ARCHITECTURAL ACCENT
	6		NANDINA DOMESTICA 'PLUM PASSION'	PLUM PASSION HEAVENLY BAMBOO	No. 5	24	2.0	1.5	II		1.25	3 Pkt	0.66 lbs	-	-	-	-	-	2.5	-	-	-	FOUNDATION SHRUB
	7		MAGNOLIA STELLATA 'ROYAL STAR'	STAR MAGNOLIA	No. 5	4	2.0	1.5	II		1.25	3 Pkt	0.66 lbs	-	-	-	-	-	5.0	-	-	-	FLOWERING FOCAL SHRUB
	8		PITTOSPORUM TOBIRA 'VARIEGATA'	VARIEGATED MOCK ORANGE	No. 5	25	2.0	1.5	II		1.25	3 Pkt	0.66 lbs	-	-	-	-	-	2.5	-	-	-	FOUNDATION SHRUB
U	9		LAGERSTROMIA X FAUREI 'PURPLE'	CRAPE MYRTLE	No. 15	7	2.8	2.5	II		3.0	6 Pkt	2.0 lbs	-	X	-	-	-		-	-	-	8 STANDARD TREE
	10		PISTACIA CHINENSIS	CHINESE PISTACHE	No. 15	21	2.8	2.5	II		3.0	6 Pkt	2.0 lbs	1.0	X	-	-	-		-	-	-	STANDARD TREE 4
	11		PYRUS CALLERYANA 'BRADFORDII'	BRADFORD PEAR	No. 15	20	2.8	2.5	II		3.0	6 Pkt	2.0 lbs	1.0	X	-	-	-		-	-	-	STANDARD TREE 4
	12		ROBINIA X AMBIGUA 'PURPLE ROBE'	PURPLE ROBE LOCUST	No. 15	6	2.8	2.5	II		3.0	6 Pkt		1.0	X	-	-	-		-	-	-	STANDARD TREE 4
T	13		SOD	90% -IMPROVED TURF TYPE FESCUE 10% -IMPROVED PERENNIAL RYE MIX	SOD	4134 SQYD	-	-	-	✓	7	-	11	-	-	-	-	-		-	-	-	7 11 90% TALL FESCUE 10% IMPROVED RYEGRASS

REVISED BY | DATE REVISED
J. PATRICK SULLIVAN | RON FLORY
CALCULATED-DESIGNED BY | CHECKED BY
SENIOR LANDSCAPE ARCHITECT | RON FLORY

STATE OF CALIFORNIA - DEPARTMENT OF TRANSPORTATION
Caltrans® LANDSCAPE ARCHITECTURE

P:\proj2\02\0E360_plans\pse\RESUBMIT_5-11-15\20e360st001.dgn

PLANT LEGEND
PL-1

LAST REVISION 12-12-13 | DATE PLOTTED => 11-MAY-2015 TIME PLOTTED => 10:57

Dist	COUNTY	ROUTE	POST MILES TOTAL PROJECT	SHEET No.	TOTAL SHEETS
02	Teh	5	10.5	46	199

LICENSED LANDSCAPE ARCHITECT

4-1-14
PLANS APPROVAL DATE

LICENSED LANDSCAPE ARCHITECT J. PATRICK SULLIVAN #3125 Signature 07-31-14 Renewal Date 12-12-13 Date STATE OF CALIFORNIA

THE STATE OF CALIFORNIA OR ITS OFFICERS OR AGENTS SHALL NOT BE RESPONSIBLE FOR THE ACCURACY OR COMPLETENESS OF SCANNED COPIES OF THIS PLAN SHEET.

NOTES:

1. TOPSOIL TO BE PLACED BELOW SOD AREAS.
2. 4" Max EXCAVATION FOR PLACEMENT OF TOPSOIL.

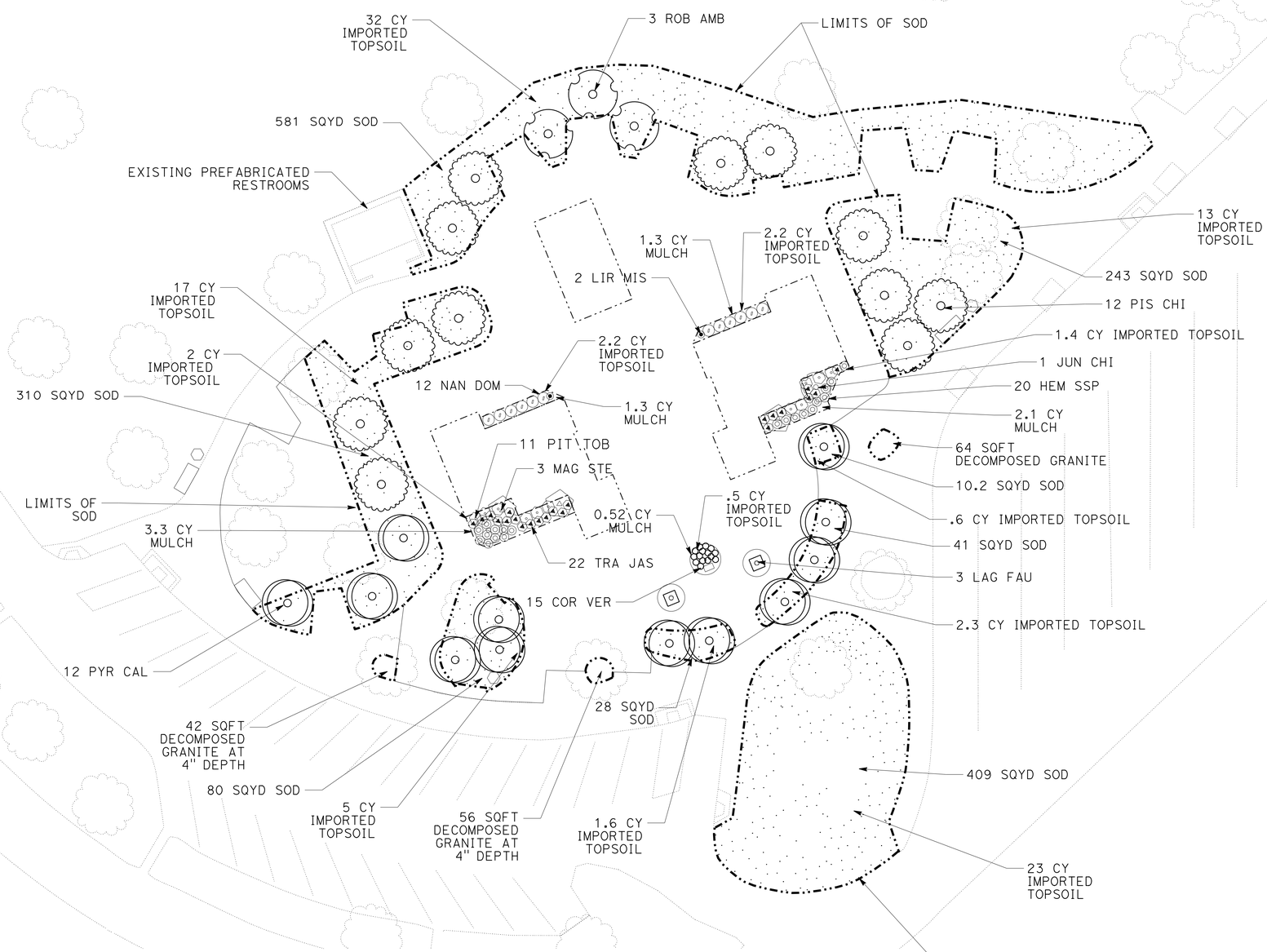

LEGEND:

LIMITS OF SOD OR DECOMPOSED GRANITE (DG)

IMPORTED TOPSOIL	
TOTAL CY THIS SHEET	104

NB CORNING SAFETY ROADSIDE REST AREA

PLANTING PLAN

SCALE: 1" = 20'

PP-1

APPROVED FOR LANDSCAPE WORK ONLY

STATE OF CALIFORNIA - DEPARTMENT OF TRANSPORTATION
Caltrans® LANDSCAPE ARCHITECTURE

J. PATRICK SULLIVAN — SENIOR LANDSCAPE ARCHITECT
CALCULATED-DESIGNED BY: RON FLORY
CHECKED BY: RON FLORY
REVISED BY
DATE REVISED

P:\proj2\02\0E360_plans\pse\RESUBMIT_5-11-15\20e360su001.dgn

LAST REVISION 12-12-13
DATE PLOTTED => 11-MAY-2015
TIME PLOTTED => 10:57

Dist	COUNTY	ROUTE	POST MILES TOTAL PROJECT	SHEET No.	TOTAL SHEETS
02	Teh	5	10.5	47	199

LICENSED LANDSCAPE ARCHITECT

4-1-14
PLANS APPROVAL DATE

LICENSED LANDSCAPE ARCHITECT J. PATRICK SULLIVAN #3125 Signature 07-31-14 Renewal Date 12-12-13 Date STATE OF CALIFORNIA

THE STATE OF CALIFORNIA OR ITS OFFICERS OR AGENTS SHALL NOT BE RESPONSIBLE FOR THE ACCURACY OR COMPLETENESS OF SCANNED COPIES OF THIS PLAN SHEET.

NOTES:

1. TOPSOIL TO BE PLACED BELOW SOD AREAS.
2. 4" Max EXCAVATION FOR PLACEMENT OF TOPSOIL.

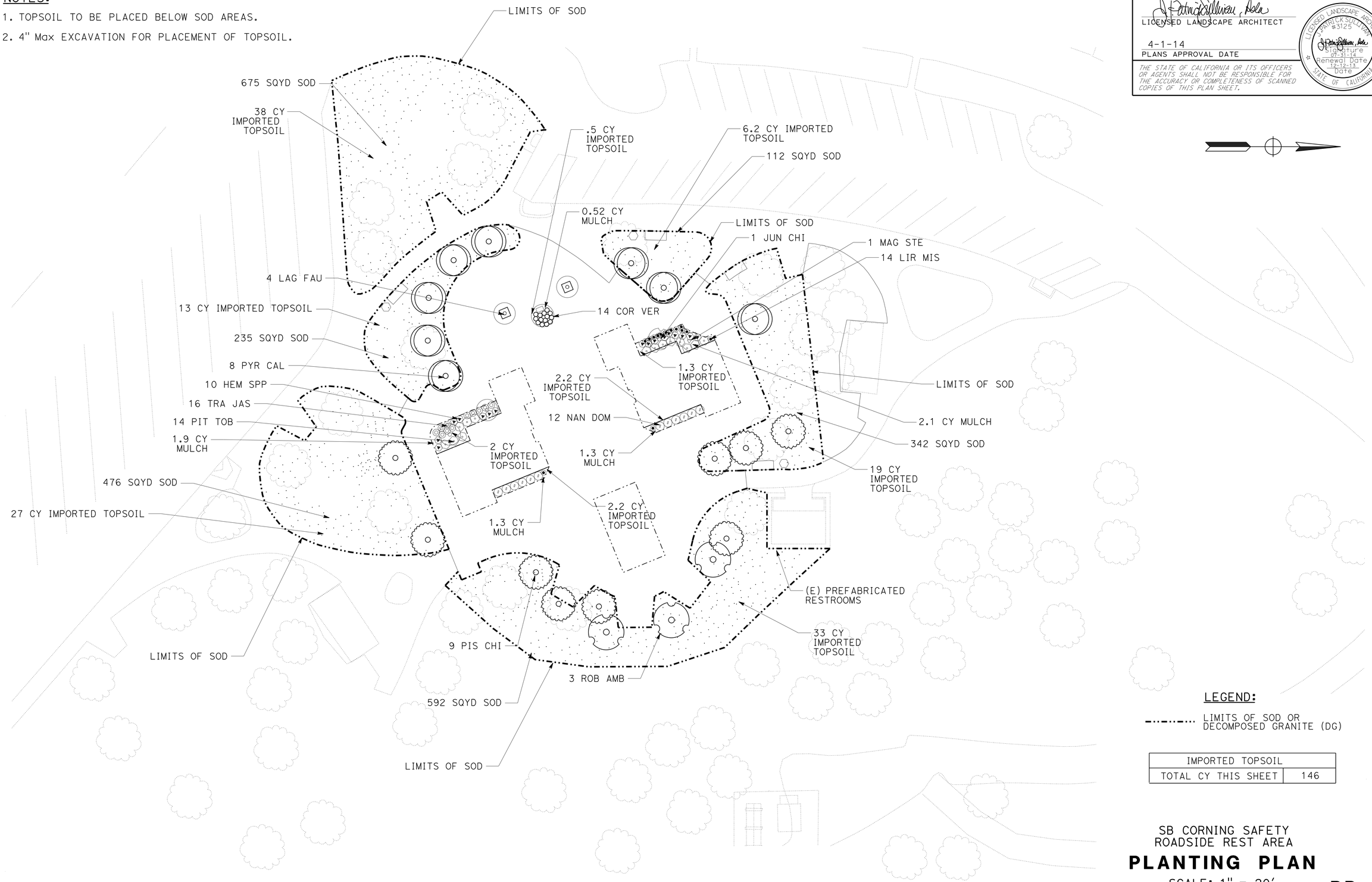

LEGEND:

LIMITS OF SOD OR DECOMPOSED GRANITE (DG)

IMPORTED TOPSOIL	
TOTAL CY THIS SHEET	146

SB CORNING SAFETY ROADSIDE REST AREA

PLANTING PLAN

SCALE: 1" = 20'

PP-2

APPROVED FOR LANDSCAPE WORK ONLY

REVISED BY | DATE REVISED
J. PATRICK SULLIVAN | RON FLORY
CALCULATED-DESIGNED BY | CHECKED BY
SENIOR LANDSCAPE ARCHITECT | RON FLORY

STATE OF CALIFORNIA - DEPARTMENT OF TRANSPORTATION
Caltrans® LANDSCAPE ARCHITECTURE

P:\proj2\02\0E360_plans\pse\RESUBMIT_5-11-15\20e360su002.dgn

LAST REVISION 12-12-13 | DATE PLOTTED => 11-MAY-2015 TIME PLOTTED => 10:57

Dist	COUNTY	ROUTE	POST MILES TOTAL PROJECT	SHEET No.	TOTAL SHEETS
02	Teh	5	10.5	48	199

LICENSED LANDSCAPE ARCHITECT

4-1-14
PLANS APPROVAL DATE

LICENSED LANDSCAPE ARCHITECT J. PATRICK SULLIVAN #3125 Signature 07-31-14 Renewal Date 12-12-13 Date STATE OF CALIFORNIA

THE STATE OF CALIFORNIA OR ITS OFFICERS OR AGENTS SHALL NOT BE RESPONSIBLE FOR THE ACCURACY OR COMPLETENESS OF SCANNED COPIES OF THIS PLAN SHEET.

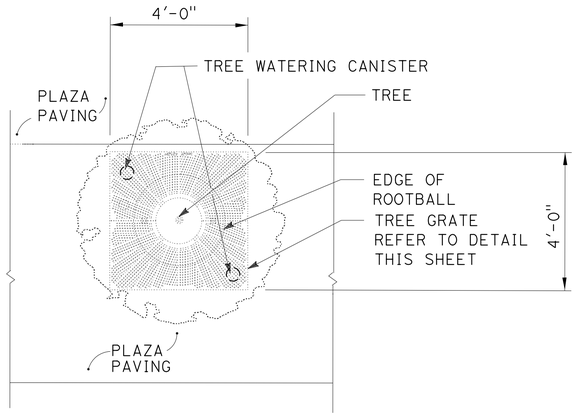

PLAN

TREE GRATE (PLANTER)

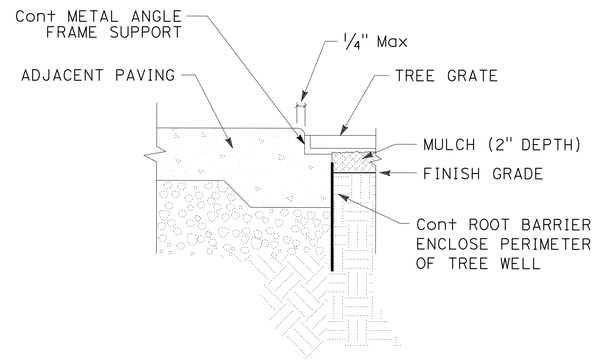

TYPICAL SECTION

TREE GRATE CONNECTION WITH ADJACENT PAVING

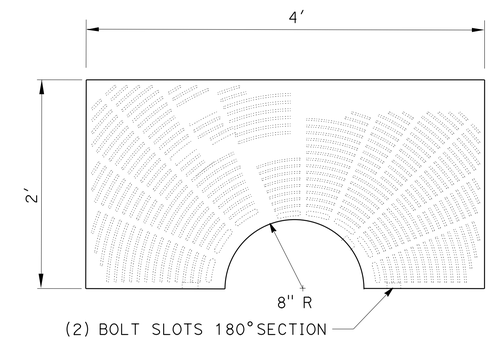

PLAN

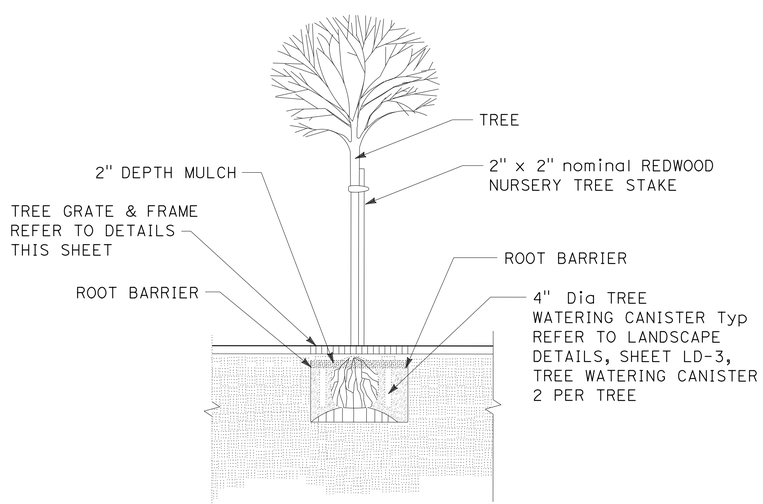

TYPICAL SECTION

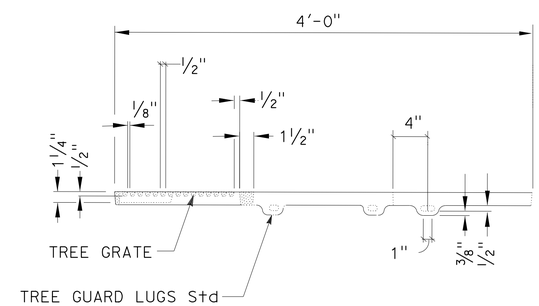

TYPICAL SECTION

TREE GRATE DETAIL

LANDSCAPE DETAILS

NO SCALE

LD-1

REVISED BY | DATE REVISED
J. PATRICK SULLIVAN | RON FLORY
CALCULATED-DESIGNED BY | CHECKED BY
SENIOR LANDSCAPE ARCHITECT | RON FLORY

STATE OF CALIFORNIA - DEPARTMENT OF TRANSPORTATION
Caltrans® LANDSCAPE ARCHITECTURE

P:\proj2\02\0E360_plans\pse\RESUBMIT_5-11-15\20e360sy001.dgn

LAST REVISION 12-12-13 | DATE PLOTTED => 11-MAY-2015 | TIME PLOTTED => 10:57

Dist	COUNTY	ROUTE	POST MILES TOTAL PROJECT	SHEET No.	TOTAL SHEETS
02	Teh	5	10.5	49	199

LICENSED LANDSCAPE ARCHITECT

4-1-14
PLANS APPROVAL DATE

LICENSED LANDSCAPE ARCHITECT J. PATRICK SULLIVAN #3125 Signature 07-31-14 Renewal Date 12-12-13 Date STATE OF CALIFORNIA

THE STATE OF CALIFORNIA OR ITS OFFICERS OR AGENTS SHALL NOT BE RESPONSIBLE FOR THE ACCURACY OR COMPLETENESS OF SCANNED COPIES OF THIS PLAN SHEET.

NOTE:

1. THE EDGE OF THE GRAVEL FILLED SUMP SHALL HAVE A MINIMUM CLEARANCE OF 6" FROM ANY ELECTRICAL OR IRRIGATION PULL BOX.

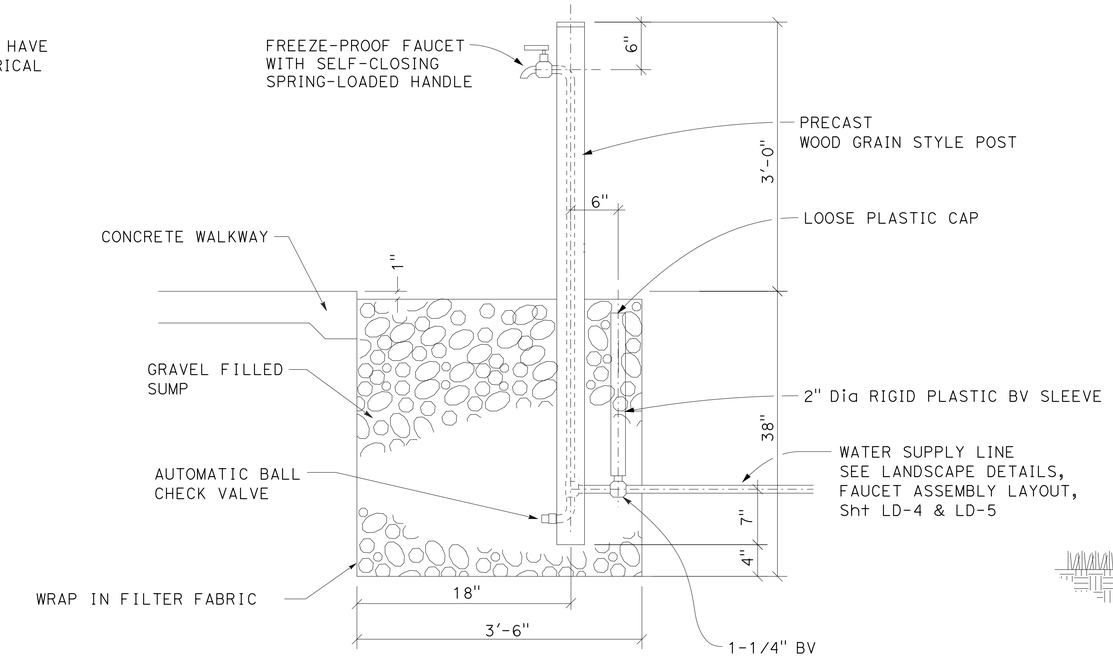

FAUCET ASSEMBLY DETAIL

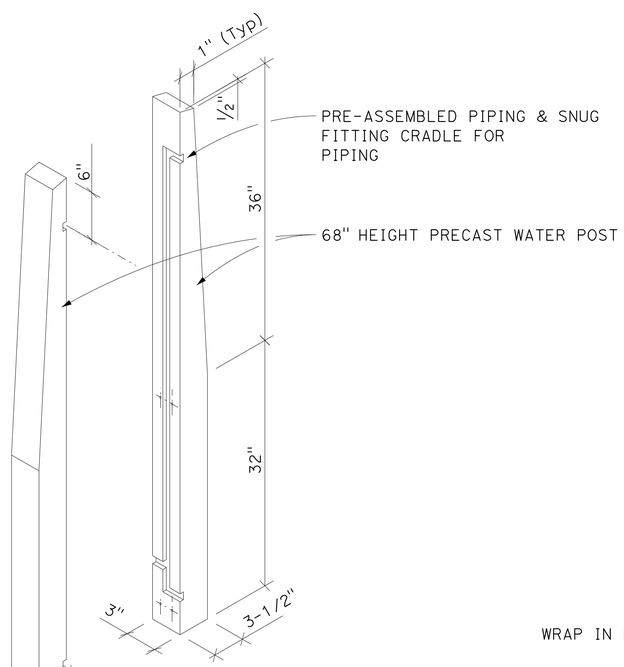

ISOMETRIC
(SECTION)

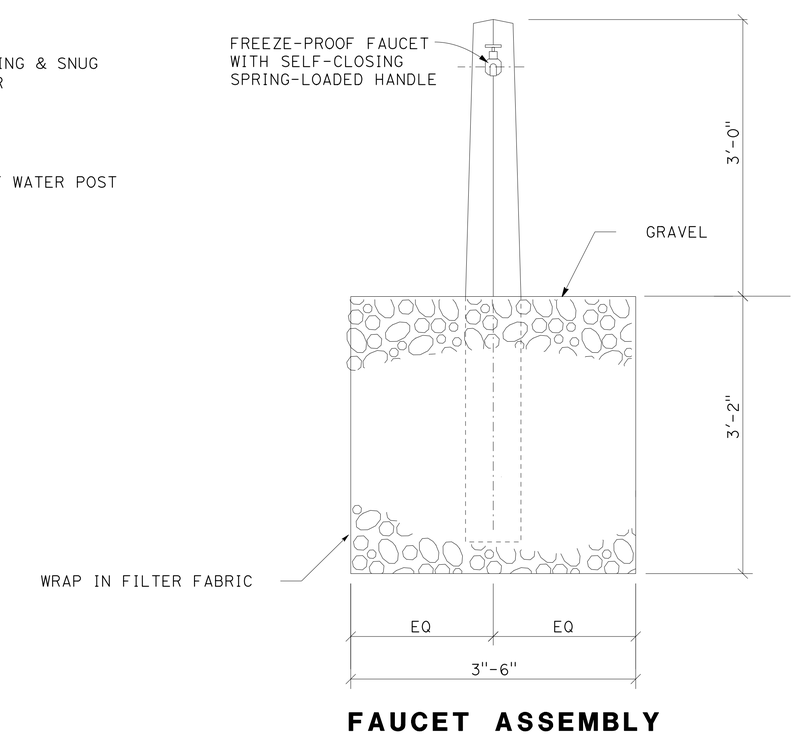

FAUCET ASSEMBLY

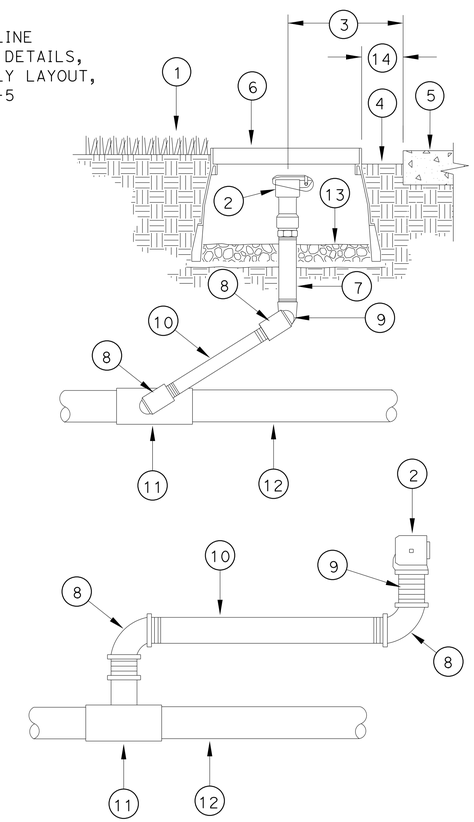

LEGEND:

1. FINISH GRADE TURF AREA, FLUSH W/VALVE BOX
2. QUICK COUPLING VALVE WITH LOCKING RUBBER COVER
3. SET QUICK COUPLER 1 Ft FROM EDGE OF PLANTING AREA
4. FINISH GRADE SOIL IN SHRUB OR GROUNDCOVER AREAS-1" BELOW TOP OF BOX
5. CURB, HEADER OR PAVING
6. ROUND FIBERGLASS REINFORCED VALVE BOX WITH QUICK COUPLING VALVE
7. 6" SCHEDULE 80 NIPPLE
8. SCHEDULE 80 PVC STREET 90 (TXT)
9. SCHEDULE 80 PVC SHORT NIPPLE
10. SCHEDULE 80 PVC NIPPLE; Min 12" LENGTH
11. SCHEDULE 40 PVC TEE (SXSXT)
12. SCHEDULE 40 PVC MAINLINE; 1-1/2 Ft Min COVER
13. 1 CF OF CRUSHED GRAVEL
14. 1 Ft CLEAR FROM SIDEWALK OR CURBING; Max 1-1/2 Ft

NOTE:

ALL THREADED CONNECTIONS SHALL RECEIVE Min 3 WRAPS OF TEFLON TAPE PREASSEMBLED RISERS MAY BE SUBSITUTED.

QUICK COUPLING VALVE

LANDSCAPE DETAILS
NO SCALE

LD-2

REVISED BY	DATE REVISED
J. PATRICK SULLIVAN	RON FLORY
CALCULATED-DESIGNED BY	CHECKED BY
SENIOR LANDSCAPE ARCHITECT	RON FLORY

STATE OF CALIFORNIA - DEPARTMENT OF TRANSPORTATION
Caltrans® LANDSCAPE ARCHITECTURE

P:\proj2\02\0E360_plans\pse\RESUBMIT_5-11-15\20e360sy002.dgn

LAST REVISION 12-12-13 | DATE PLOTTED => 11-MAY-2015 TIME PLOTTED => 10:57

Dist	COUNTY	ROUTE	POST MILES TOTAL PROJECT	SHEET No.	TOTAL SHEETS
02	Teh	5	10.5	50	199

LICENSED LANDSCAPE ARCHITECT

4-1-14
PLANS APPROVAL DATE

LICENSED LANDSCAPE ARCHITECT J. PATRICK SULLIVAN #3125 Signature 07-31-14 Renewal Date 12-12-13 Date STATE OF CALIFORNIA

THE STATE OF CALIFORNIA OR ITS OFFICERS OR AGENTS SHALL NOT BE RESPONSIBLE FOR THE ACCURACY OR COMPLETENESS OF SCANNED COPIES OF THIS PLAN SHEET.

NOTE:

MASONRY COMPRESSIVE STRENGTH (fm) MUST BE 1500 psi.

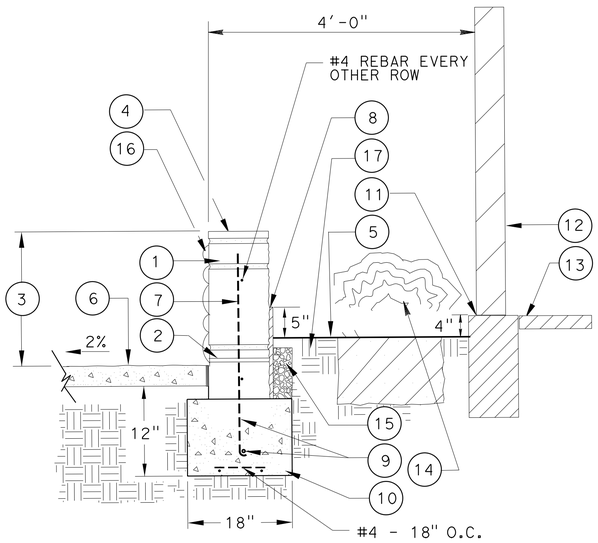

TYPICAL SECTION

LEGEND:

1. CONCRETE MASONRY UNIT (SPLIT FACE ON INSIDE OF) BLOCK 8" x 8" x 4" (TO MATCH Bldg)
2. WEEP HOLES @ 24" O.C.
3. HEIGHT 20"
4. CONCRETE MASONRY UNIT CAP 8" x 8" x 16"
5. FG PLANTER
6. MINOR CONCRETE (EXPOSED AGGREGATE CONCRETE)
7. #4 REBAR Vert (32" O.C.)
8. WATERPROOFING
9. 3#14 REBAR Cont
10. CONCRETE FOOTING
11. EXPOSED FOOTING
12. FACILITY WALL
13. INTERIOR SLAB
14. FOUNDATION SHRUB PLANTINGS
15. CRUSHED ROCK 2" x 3" x 2" WRAPPED IN FABRIC
16. ROCK VENEER (TO MATCH Bldg)
17. IMPORTED TOPSOIL TO FILL PLANTER

MASONRY BLOCK WALL (PLANTER WALL) DETAIL

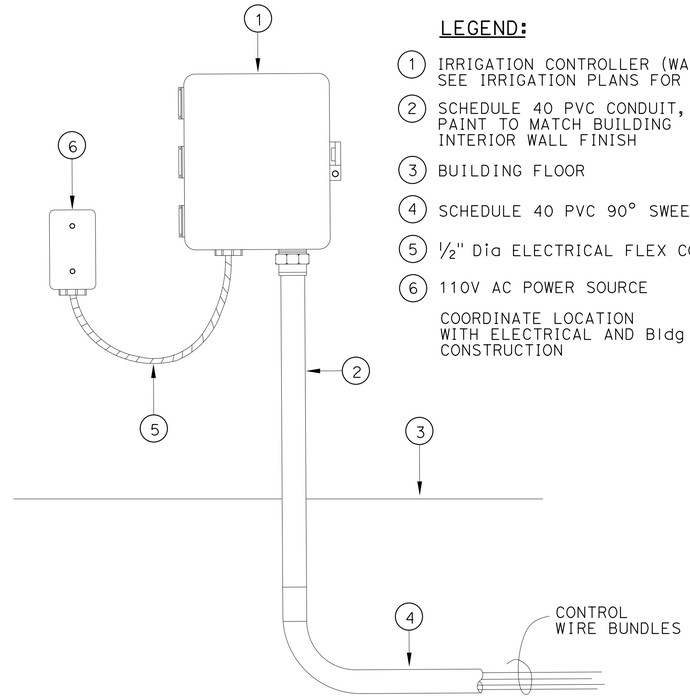

ELEVATION

IRRIGATION CONTROLLER (WALL MOUNT)

LEGEND:

1. IRRIGATION CONTROLLER (WALL MOUNT) (INTERIOR), SEE IRRIGATION PLANS FOR LOCATION
2. SCHEDULE 40 PVC CONDUIT, PAINT TO MATCH BUILDING INTERIOR WALL FINISH
3. BUILDING FLOOR
4. SCHEDULE 40 PVC 90° SWEEP
5. ½" Dia ELECTRICAL FLEX CONDUIT
6. 110V AC POWER SOURCE

COORDINATE LOCATION WITH ELECTRICAL AND Bldg CONSTRUCTION

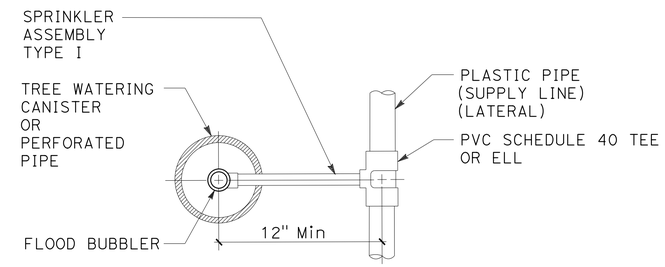

PLAN

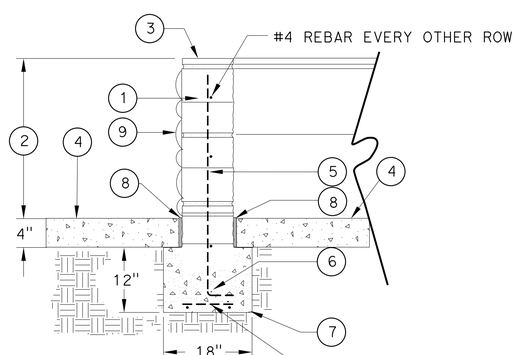

TYPICAL SECTION

LEGEND:

1. CONCRETE MASONRY UNITS (SPLIT FACE BLOCKS) (ON INSIDES) (TO MATCH Bldg TYPE)
2. 4 Ft HEIGHT
3. CONCRETE MASONRY CAP 8" x 8" x 16"
4. MINOR CONCRETE PAVING (EXPOSED AGGREGATE CONCRETE)
5. #4 REBAR Vert (AS REQ'D) (32" O.C.)
6. 3#14 REBAR Cont
7. CONCRETE FOOTING
8. EXPANSION JOINT
9. ROCK VENEER (TO MATCH Bldg)

MASONRY BLOCK WALL (SCREEN WALLS) DETAIL

APPROVED FOR LANDSCAPE WORK ONLY

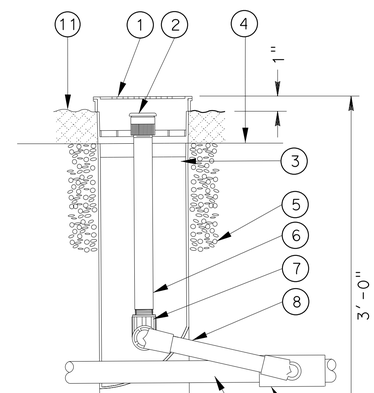

TYPICAL SECTION

LEGEND:

1. GRATE
2. FLOOD BUBBLER
3. TREE WATERING CANISTER 4" Dia PERFORATED PVC PIPE OR MESH TUBING
4. FINISHED GRADE
5. 1 CF PEA GRAVEL
6. ½" PVC SCHEDULE 80 NIPPLE
7. ½" 90° ELBOW TxT
8. SPRINKLER ASSEMBLY TYPE I
9. PVC SCHEDULE 40 TEE OR ELL
10. PLASTIC PIPE (SUPPLY LINE) (LATERAL)
11. PLANTER BASIN MULCH

LOCATE BUBBLERS (2) IN OPPOSITE CORNERS OF TREE PLANTER WELL

TREE WELL SPRINKLER ASSEMBLY DETAIL

LANDSCAPE DETAILS

NO SCALE

LD-3

REVISED BY	DATE REVISED

CALCULATED-DESIGNED BY: J. PATRICK SULLIVAN
CHECKED BY: RON FLORY
SENIOR LANDSCAPE ARCHITECT: RON FLORY

STATE OF CALIFORNIA - DEPARTMENT OF TRANSPORTATION
Caltrans® LANDSCAPE ARCHITECTURE

P:\proj2\02\0E360_plans\pse\RESUBMIT_5-11-15\20e360sy003.dgn

LAST REVISION 12-12-13 | DATE PLOTTED => 11-MAY-2015 | TIME PLOTTED => 10:57

Dist	COUNTY	ROUTE	POST MILES TOTAL PROJECT	SHEET No.	TOTAL SHEETS
02	Teh	5	10.5	51	199

LICENSED LANDSCAPE ARCHITECT

4-1-14
PLANS APPROVAL DATE

LICENSED LANDSCAPE ARCHITECT
J. PATRICK SULLIVAN
#3125
Signature
07-31-14
Renewal Date
12-12-13
Date
STATE OF CALIFORNIA

THE STATE OF CALIFORNIA OR ITS OFFICERS OR AGENTS SHALL NOT BE RESPONSIBLE FOR THE ACCURACY OR COMPLETENESS OF SCANNED COPIES OF THIS PLAN SHEET.

NOTE:

1. PLACE WATER SUPPLY LINES IN COMMON TRENCHES WITH IRRIGATION LINES WHERE POSSIBLE.

LEGEND:

FAUCET ASSEMBLY

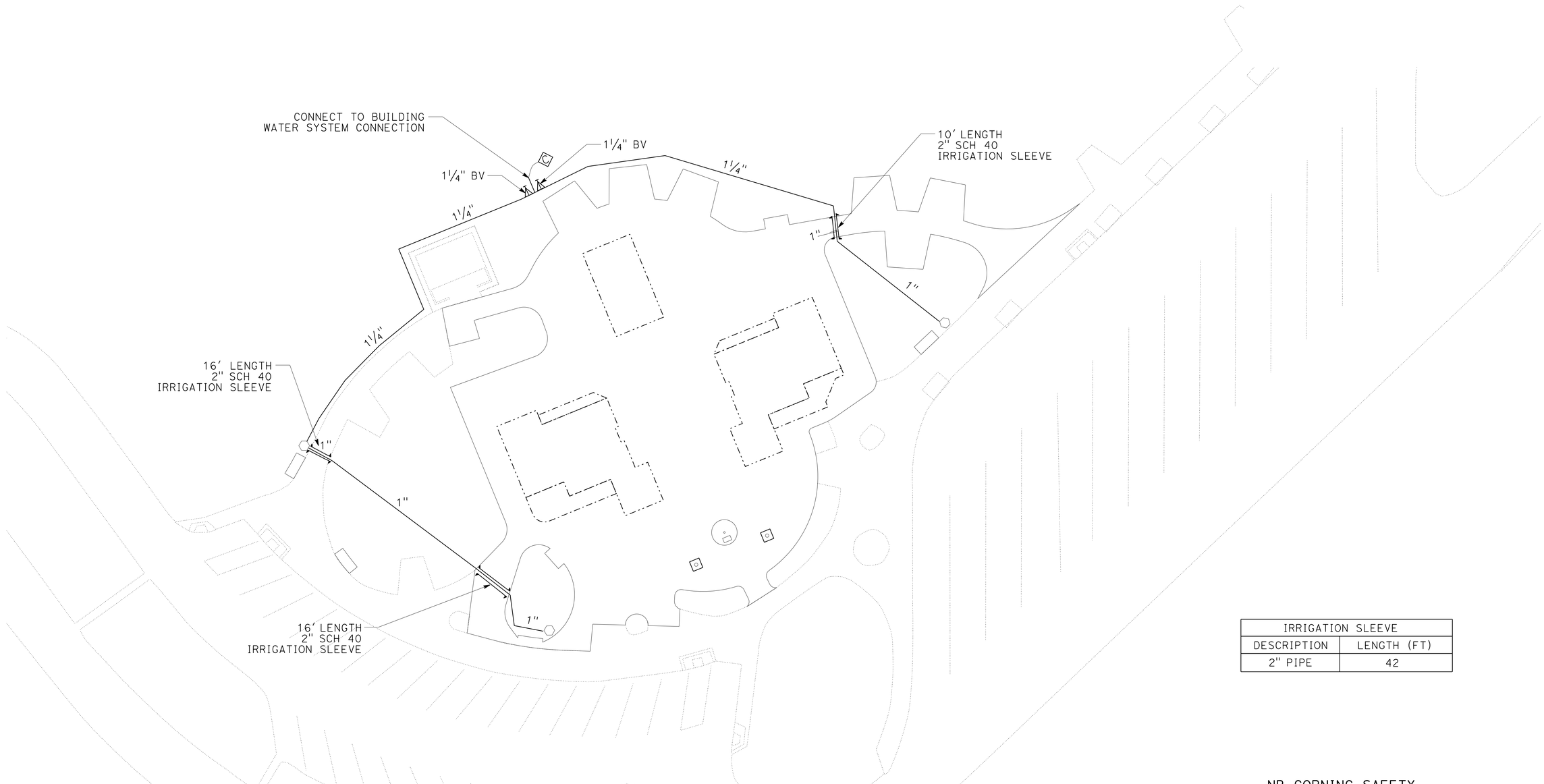

IRRIGATION SLEEVE	
DESCRIPTION	LENGTH (FT)
2" PIPE	42

NB CORNING SAFETY
ROADSIDE REST AREA

LANDSCAPE DETAILS
FAUCET ASSEMBLY LAYOUT

SCALE: 1" = 20'

LD-4

APPROVED FOR LANDSCAPE WORK ONLY

REVISED BY | DATE REVISED
J. PATRICK SULLIVAN | RON FLORY
CALCULATED-DESIGNED BY | CHECKED BY
SENIOR LANDSCAPE ARCHITECT | RON FLORY
STATE OF CALIFORNIA - DEPARTMENT OF TRANSPORTATION
Caltrans® LANDSCAPE ARCHITECTURE

P:\proj2\02\0E360_plans\pse\RESUBMIT_5-11-15\20e360sy004.dgn

LAST REVISION 12-12-13 | DATE PLOTTED => 11-MAY-2015 | TIME PLOTTED => 10:57

BORDER LAST REVISED 7/2/2010 | USERNAME => S123119 | DGN FILE => 20e360sy004.dgn | RELATIVE BORDER SCALE IS IN INCHES 0 1 2 3 | UNIT 0382 | PROJECT NUMBER & PHASE 02000000301

Dist	COUNTY	ROUTE	POST MILES TOTAL PROJECT	SHEET No.	TOTAL SHEETS
02	Teh	5	10.5	52	199

LICENSED LANDSCAPE ARCHITECT

4-1-14
PLANS APPROVAL DATE

LICENSED LANDSCAPE ARCHITECT
J. PATRICK SULLIVAN
#3125
Signature
07-31-14
Renewal Date
12-12-13
Date
STATE OF CALIFORNIA

THE STATE OF CALIFORNIA OR ITS OFFICERS OR AGENTS SHALL NOT BE RESPONSIBLE FOR THE ACCURACY OR COMPLETENESS OF SCANNED COPIES OF THIS PLAN SHEET.

NOTE:

1. PLACE WATER SUPPLY LINES IN COMMON TRENCHES WITH IRRIGATION LINES WHERE POSSIBLE.

LEGEND:

⬡ FAUCET ASSEMBLY

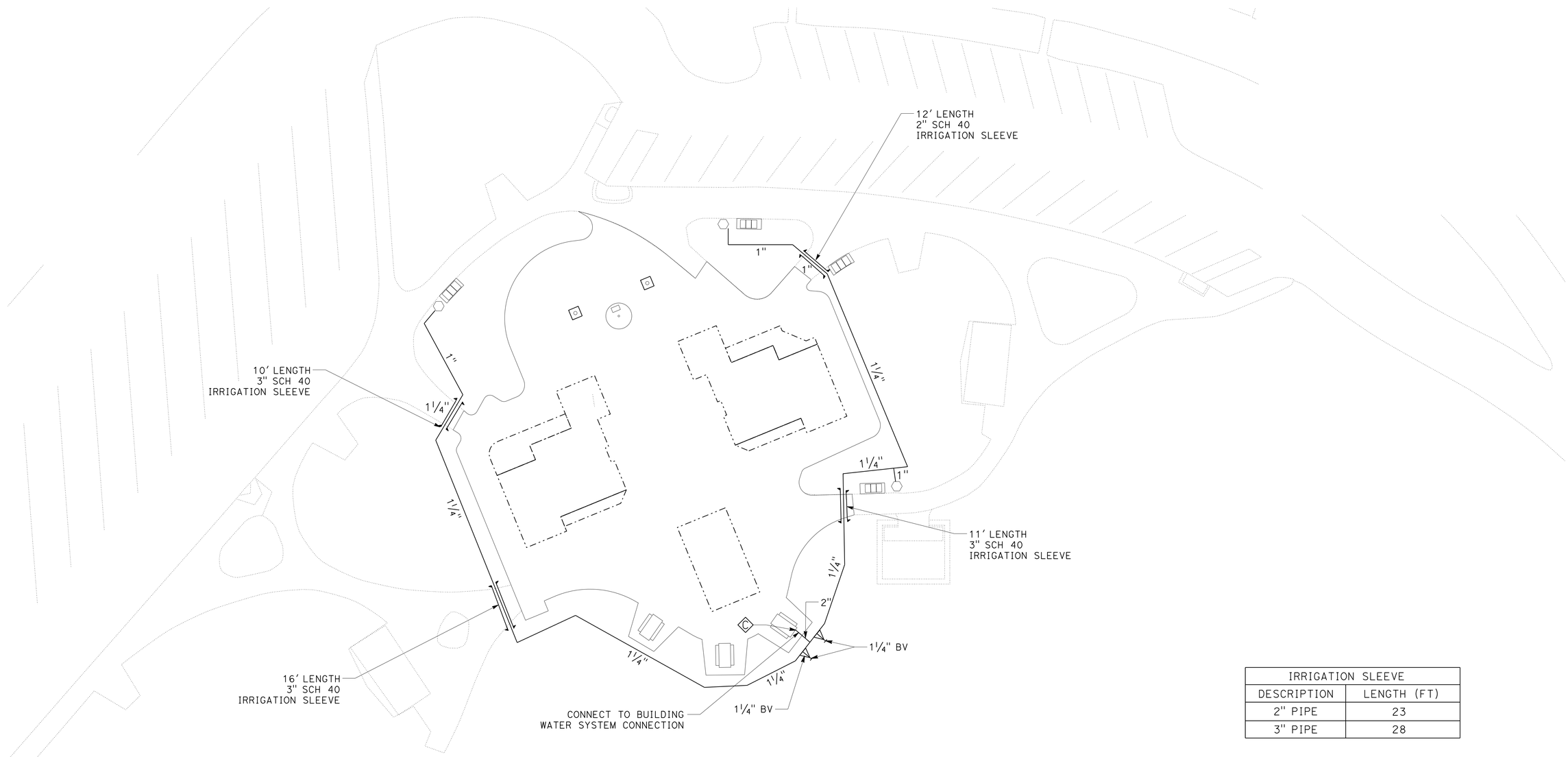

IRRIGATION SLEEVE	
DESCRIPTION	LENGTH (FT)
2" PIPE	23
3" PIPE	28

SB CORNING SAFETY
ROADSIDE REST AREA

LANDSCAPE DETAILS
FAUCET ASSEMBLY LAYOUT

SCALE: 1" = 20'

LD-5

APPROVED FOR LANDSCAPE WORK ONLY

STATE OF CALIFORNIA - DEPARTMENT OF TRANSPORTATION
Caltrans® LANDSCAPE ARCHITECTURE

SENIOR LANDSCAPE ARCHITECT: RON FLORY
CALCULATED-DESIGNED BY: J. PATRICK SULLIVAN
CHECKED BY: RON FLORY
REVISED BY
DATE REVISED

P:\proj2\02\0E360_plans\pse\RESUBMIT_5-11-15\20e360sy005.dgn

LAST REVISION 12-12-13
DATE PLOTTED => 11-MAY-2015
TIME PLOTTED => 10:57

Dist	COUNTY	ROUTE	POST MILES TOTAL PROJECT	SHEET No.	TOTAL SHEETS
02	Teh	5	10.5	53	199

LICENSED LANDSCAPE ARCHITECT

4-1-14
PLANS APPROVAL DATE

LICENSED LANDSCAPE ARCHITECT J. PATRICK SULLIVAN #3125 Signature 07-31-14 Renewal Date 12-12-13 Date STATE OF CALIFORNIA

THE STATE OF CALIFORNIA OR ITS OFFICERS OR AGENTS SHALL NOT BE RESPONSIBLE FOR THE ACCURACY OR COMPLETENESS OF SCANNED COPIES OF THIS PLAN SHEET.

NOTE:

1. (N) - NOT A SEPARATE PAY ITEM, FOR INFORMATION ONLY

ROADSIDE CLEARING (LS)

WORK ITEM		(N) AREA	ROADSIDE CLEARING
DESCRIPTION	SHEET No.		
ROADSIDE CLEARING	RC-1	54,850	
ROADSIDE CLEARING	RC-2	53,800	
	TOTAL SQFT	108,650	LS

IMPORTED TOPSOIL

WORK ITEM		IMPORTED TOPSOIL
DESCRIPTION	SHEET No.	
IMPORTED TOPSOIL	PP-1	104
IMPORTED TOPSOIL	PP-2	146
	TOTAL CY	250

1. TOPSOIL MUST BE USED FOR FILLING AND BRINGING TO GRADE THE RAISED PLANTER WALL AREAS, NEW TURF SOD AREAS TREE WELLS & OTHER PLANTED AREAS ON SHEETS PP-1 & PP-2.
2. IN TURF AREAS, GENERALLY, APPLY 2"-4" OF IMPORTED TOPSOIL FOR FILLING & LEVELING PURPOSES, PRIOR TO THE CULTIVATION OF SOIL.

DECOMPOSED GRANITE

WORK ITEM		DECOMPOSED GRANITE
DESCRIPTION	SHEET No.	
DECOMPOSED GRANITE	PP-1	160
DECOMPOSED GRANITE	PP-2	0
	TOTAL SQFT	160

1. INSTALL DECOMPOSED GRANITE WITHOUT SOIL STERILANTS, AGGREGATE BASE, OR EDGING.
2. INSTALL DECOMPOSED GRANITE TO A 4" DEPTH AND THE GRAVEL AGGREGATE BASE TO 2" DEPTH.
3. CONTRACTOR MUST TAKE PRECAUTIONS TO NOT DAMAGE EXISTING OLIVE TREE TRUNKS NOR EXPOSE MAJOR ROOTS.

CULTIVATION

WORK ITEM		CULTIVATE (SOIL AMENDMENT)
DESCRIPTION	SHEET No.	
CULTIVATION	PP-1	1702
CULTIVATION	PP-2	2400
	TOTAL SQYD	4134

1. THE CULTIVATION ITEM OF WORK IS LIMITED TO NEW TURF INSTALLATION AREAS ONLY.
2. APPLY SOIL AMENDMENT & GRANULAR FERTILIZER AT THE RATES SHOWN ON SHEET PL-1.

SOIL AMENDMENT

WORK ITEM		SOIL AMENDMENT
DESCRIPTION	SHEET No.	
SOIL AMENDMENT	PP-1	49
SOIL AMENDMENT	PP-2	68
	TOTAL CY	117

1. SOIL AMENDMENT MUST BE CEDAR.
2. APPLY SOIL AMENDMENT TO PLANTS PER STANDARD PLANT DETAILS & PER SHEET PL-1.

WOOD MULCH

WORK ITEM		WOOD MULCH
DESCRIPTION	SHEET No.	
MULCH	PP-1	10
MULCH	PP-2	8.5
	TOTAL CY	18

1. WOOD MULCH MUST BE SHREDDED BARK -(FIR, WALK-ON, FREEWAY BARK).
2. APPLY WOOD MULCH 3" DEEP, WHERE SHOWN ON PLANTING PLANS SHEETS PP-1 & PP-2; EXCEPT IN TREE GRATE PLANTERS, APPLY WOOD MULCH AT 2" DEPTH.

PACKET FERTILIZER

WORK ITEM		PACKET FERTILIZER
DESCRIPTION	SHEET No.	
FERTILIZER (PACKET)	PP-1	316
FERTILIZER (PACKET)	PP-2	277
	TOTAL EA	593

1. APPLY FERTILIZER (PACKET) FOR EACH PLANT TYPE AS SHOWN ON SHEET PL-1.

LANDSCAPE QUANTITIES
LQ-1

REVISED BY | DATE REVISED
J. PATRICK SULLIVAN | RON FLORY
CALCULATED-DESIGNED BY | CHECKED BY
SENIOR LANDSCAPE ARCHITECT | RON FLORY
STATE OF CALIFORNIA - DEPARTMENT OF TRANSPORTATION
Caltrans® LANDSCAPE ARCHITECTURE
P:\proj2\02\0E360_plans\pse\RESUBMIT_5-11-15\20e360sz001.dgn

LAST REVISION 12-12-13 | DATE PLOTTED => 11-MAY-2015 | TIME PLOTTED => 10:57

Dist	COUNTY	ROUTE	POST MILES TOTAL PROJECT	SHEET No.	TOTAL SHEETS
02	Teh	5	10.5	54	199

LICENSED LANDSCAPE ARCHITECT

4-1-14
PLANS APPROVAL DATE

LICENSED LANDSCAPE ARCHITECT J. PATRICK SULLIVAN #3125 Signature 07-31-14 Renewal Date 12-12-13 Date STATE OF CALIFORNIA

THE STATE OF CALIFORNIA OR ITS OFFICERS OR AGENTS SHALL NOT BE RESPONSIBLE FOR THE ACCURACY OR COMPLETENESS OF SCANNED COPIES OF THIS PLAN SHEET.

SLOW RELEASE FERTILIZER

WORK ITEM DESCRIPTION	SHEET No.	GRANULAR FERTILIZER
GRANULAR FERTILIZER	PP-1	384
GRANULAR FERTILIZER	PP-2	555
	TOTAL LBS	939

1. APPLY GRANULAR FERTILIZER FOR PLANT TYPES ON SHEET PL-1.
2. PRE-PLANT FERTILIZER/CULTIVATE FERTILIZER MUST BE 6-24-24 & PLANTING/PLANT ESTABLISHMENT FERTILIZER MUST BE 15-15-15.

PLANT (GROUP A) (No. 1)

WORK ITEM DESCRIPTION	SHEET No.	PLANT (GROUP A)
PLANT (GROUP A)	PP-1	59
PLANT (GROUP A)	PP-2	55
	TOTAL EA	119

1. FOR PLANT SPECIES & TYPES SEE SHEET PL-1.
2. FOR PLANT LOCATIONS SEE SHEETS PP-1 & PP-2.

PLANT (GROUP B) (No. 5)

WORK ITEM DESCRIPTION	SHEET No.	PLANT (GROUP B)
PLANT (GROUP B)	PP-1	27
PLANT (GROUP B)	PP-2	28
	TOTAL EA	55

1. FOR PLANT SPECIES & TYPES SEE SHEET PL-1.
2. FOR PLANT LOCATIONS SEE SHEETS PP-1 & PP-2.

PLANT (GROUP U) (No. 15)

WORK ITEM DESCRIPTION	SHEET No.	PLANT (GROUP U)
PLANT (GROUP U)	PP-1	30
PLANT (GROUP U)	PP-2	24
	TOTAL EA	54

1. FOR PLANT SPECIES & TYPES SEE SHEET PL-1.
2. FOR PLANT LOCATIONS SEE SHEETS PP-1 & PP-2.

SOD

WORK ITEM DESCRIPTION	SHEET No.	SOD
SOD	PP-1	1702
SOD	PP-2	2432
	TOTAL SQ YDS	4,134

1. FOR SOD SPECIES & TYPES SEE SHEET PL-1.
2. FOR SOD LOCATIONS SEE SHEETS PP-1 & PP-2.

MAINTAIN EXISTING PLANTED AREAS

WORK ITEM DESCRIPTION	SHEET No.	(N) AREA	MAINTAIN EXISTING PLANTING
MAINTAIN EXISTING PLANTED AREAS	MEA-1	277,200	
MAINTAIN EXISTING PLANTED AREAS	MEA-2	335,400	
	TOTAL SF	612,600	LS

1. INSPECT EXISTING PLANTS WITH THE ENGINEER PRIOR TO COMMENCING OF WORK.

PLANT ESTABLISHMENT WORK

WORK ITEM DESCRIPTION	SHEET No.	AREA	PLANT ESTABLISHMENT
PLANT MAINTENANCE NB SRRA	PP-1	277,200	
PLANT MAINTENANCE SB SRRA	PP-2	335,400	
	TOTAL SQFT	612,600	LS

1. PLANT ESTABLISHMENT MUST BE 60 DAYS.
2. PLANT ESTABLISHMENT MUST BE TYPE II.

ROOT BARRIER

WORK ITEM DESCRIPTION	SHEET No.	ROOT BARRIER
ROOT BARRIER	PP-1	32
ROOT BARRIER	PP-2	32
	TOTAL LF	64

1. INSTALL ROOT BARRIER PER DETAILS ON SHEET LD-1 AND IN LOCATIONS PER SHEETS PP-1 & PP-2.

LANDSCAPE QUANTITIES
LQ-2

REVISED BY | DATE REVISED
J. PATRICK SULLIVAN | RON FLORY
CALCULATED-DESIGNED BY | CHECKED BY
SENIOR LANDSCAPE ARCHITECT | RON FLORY
STATE OF CALIFORNIA - DEPARTMENT OF TRANSPORTATION
Caltrans® LANDSCAPE ARCHITECTURE

P:\proj2\02\0E360_plans\pse\RESUBMIT_5-11-15\20e360sz002.dgn

LAST REVISION 12-12-13 | DATE PLOTTED => 11-MAY-2015 | TIME PLOTTED => 10:57

Dist	COUNTY	ROUTE	POST MILES TOTAL PROJECT	SHEET No.	TOTAL SHEETS
02	Teh	5	10.5	55	199

LICENSED LANDSCAPE ARCHITECT

4-1-14
PLANS APPROVAL DATE

LICENSED LANDSCAPE ARCHITECT J. PATRICK SULLIVAN #3125 Signature 07-31-14 Renewal Date 12-12-13 Date STATE OF CALIFORNIA

THE STATE OF CALIFORNIA OR ITS OFFICERS OR AGENTS SHALL NOT BE RESPONSIBLE FOR THE ACCURACY OR COMPLETENESS OF SCANNED COPIES OF THIS PLAN SHEET.

MASONRY BLOCK WALL

WORK ITEM DESCRIPTION	SHEET No.	MASONRY BLOCK WALL
PLANTER WALL	SRRA-1	127
PLANTER WALL	SRRA-2	127
SCREEN WALL	SRRA-1	114
SCREEN WALL	SRRA-2	114
	TOTAL SQFT	482

1. INSTALL MASONRY BLOCK WALLS PER DETAILS ON SHEET LD-2 AND PER ENGINEERING LAYOUT SHEETS; SRRA-1 & SRRA-2.

TREE GRATE

WORK ITEM DESCRIPTION	SHEET No.	ROOT BARRIER
TREE GRATE	PP-1	2
TREE GRATE	PP-2	2
	TOTAL EA	4

1. INSTALL TREE GRATE PER DETAILS ON SHEET LD-1 AND PER SHEETS PP-1 & PP-2.

CONTROL AND NEUTRAL CONDUCTORS

WORK ITEM DESCRIPTION	SHEET No.	(N) VARIOUS COMPONENTS MEASUREMENTS	
CONTROL AND NEUTRAL CONDUCTORS SB IRRIGATION	IP-1 THRU IP-2	2650 LF	CONTROL AND NEUTRAL CONDUCTORS
PULL BOXES (SB)	" " "	6 EA	
ELECTRICAL CONDUIT (2" MINIMUM)	" " "	260 LF	
CONTROL AND NEUTRAL CONDUCTORS NB IRRIGATION	IP-3 THRU IP-6	4,200 LF	
PULL BOXES (NB)	" " "	6 EA	
ELECTRICAL CONDUIT (2" MINIMUM)	" " "	650 LF	
			LS

1. PROVIDE ENGINEER WITH SCHEDULE OF WIRING DIAGRAMS & WIRE SIZING.
2. PLACE NEW WIRING IN ELECTRICAL CONDUIT, MINIMUM 2" Dia. FOR THE RUN TO THE CONTROLLER.
3. WIRING RUNS BETWEEN VALVE GROUPS OF TWO OR MORE, MUST BE ½" Dia CONDUIT.

LANDSCAPE QUANTITIES

LQ-3

Dist	COUNTY	ROUTE	POST MILES TOTAL PROJECT	SHEET No.	TOTAL SHEETS
02	Teh	5	10.5	56	199

LICENSED LANDSCAPE ARCHITECT

4-1-14
PLANS APPROVAL DATE

LICENSED LANDSCAPE ARCHITECT
J. PATRICK SULLIVAN
#3125
Signature
07-31-14
Renewal Date
12-12-13
Date
STATE OF CALIFORNIA

THE STATE OF CALIFORNIA OR ITS OFFICERS OR AGENTS SHALL NOT BE RESPONSIBLE FOR THE ACCURACY OR COMPLETENESS OF SCANNED COPIES OF THIS PLAN SHEET.

LEGEND:

HYDROSEED

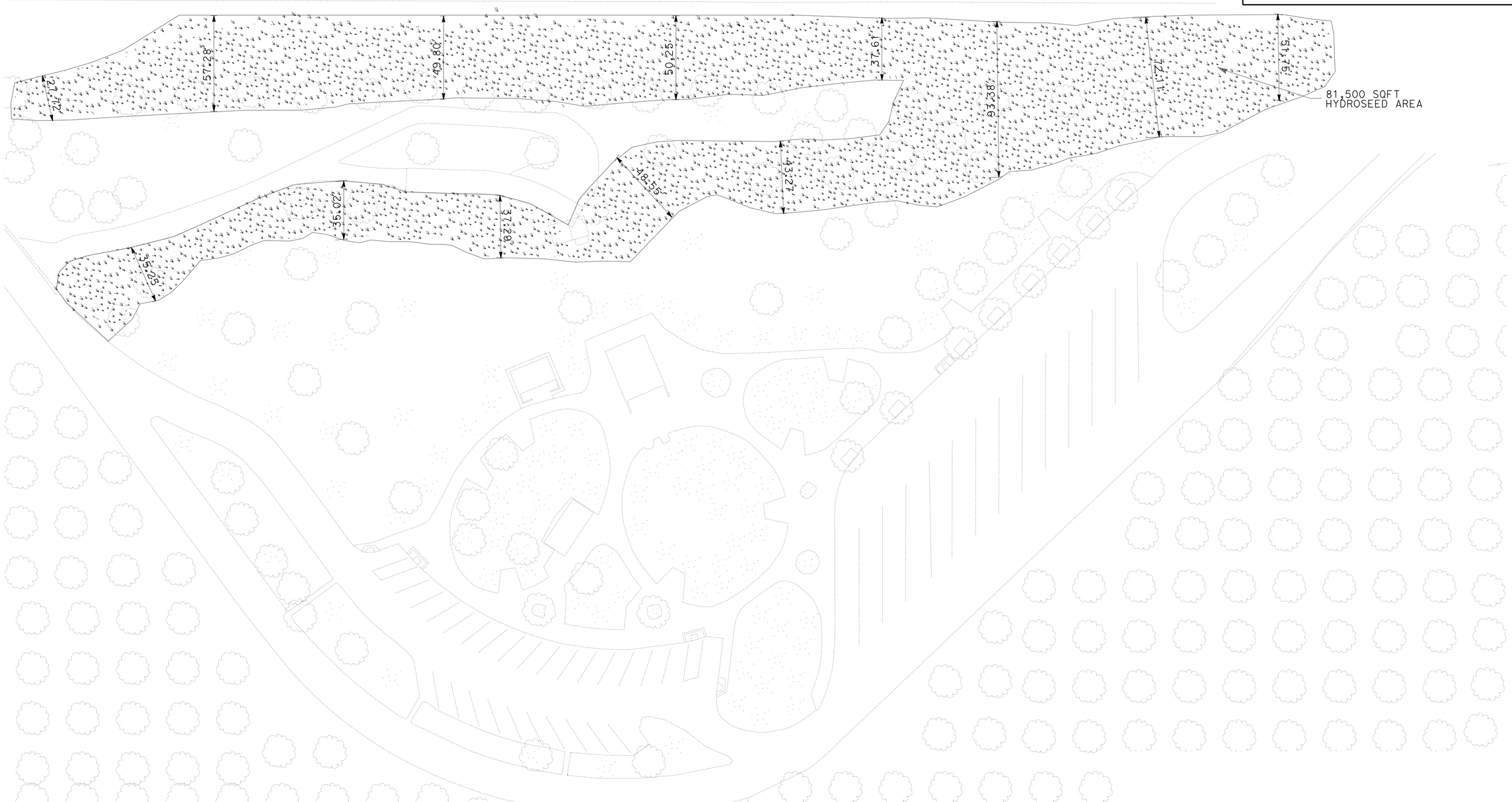

NB CORNING SAFETY
ROADSIDE REST AREA

EROSION CONTROL PLAN

SCALE: 1" = 30'

EC-1

APPROVED FOR EROSION CONTROL WORK ONLY

REVISED BY	
DATE REVISED	
CALCULATED-DESIGNED BY	J. PATRICK SULLIVAN
CHECKED BY	RON FLORY
SENIOR LANDSCAPE ARCHITECT	RON FLORY

Caltrans® LANDSCAPE ARCHITECTURE
STATE OF CALIFORNIA - DEPARTMENT OF TRANSPORTATION

P:\proj2\02\0E360_plans\pse\RESUBMIT_5-11-15\20e360te001.dgn

LAST REVISION 12-12-13 | DATE PLOTTED => 11-MAY-2015 TIME PLOTTED => 10:57

Dist	COUNTY	ROUTE	POST MILES TOTAL PROJECT	SHEET No.	TOTAL SHEETS
02	Teh	5	10.5	57	199

J. Patrick Sullivan, Jr.
LICENSED LANDSCAPE ARCHITECT

4-1-14
PLANS APPROVAL DATE

LICENSED LANDSCAPE ARCHITECT
J. PATRICK SULLIVAN
#3125
Signature
07-31-14
Renewal Date
12-12-13
Date
STATE OF CALIFORNIA

THE STATE OF CALIFORNIA OR ITS OFFICERS OR AGENTS SHALL NOT BE RESPONSIBLE FOR THE ACCURACY OR COMPLETENESS OF SCANNED COPIES OF THIS PLAN SHEET.

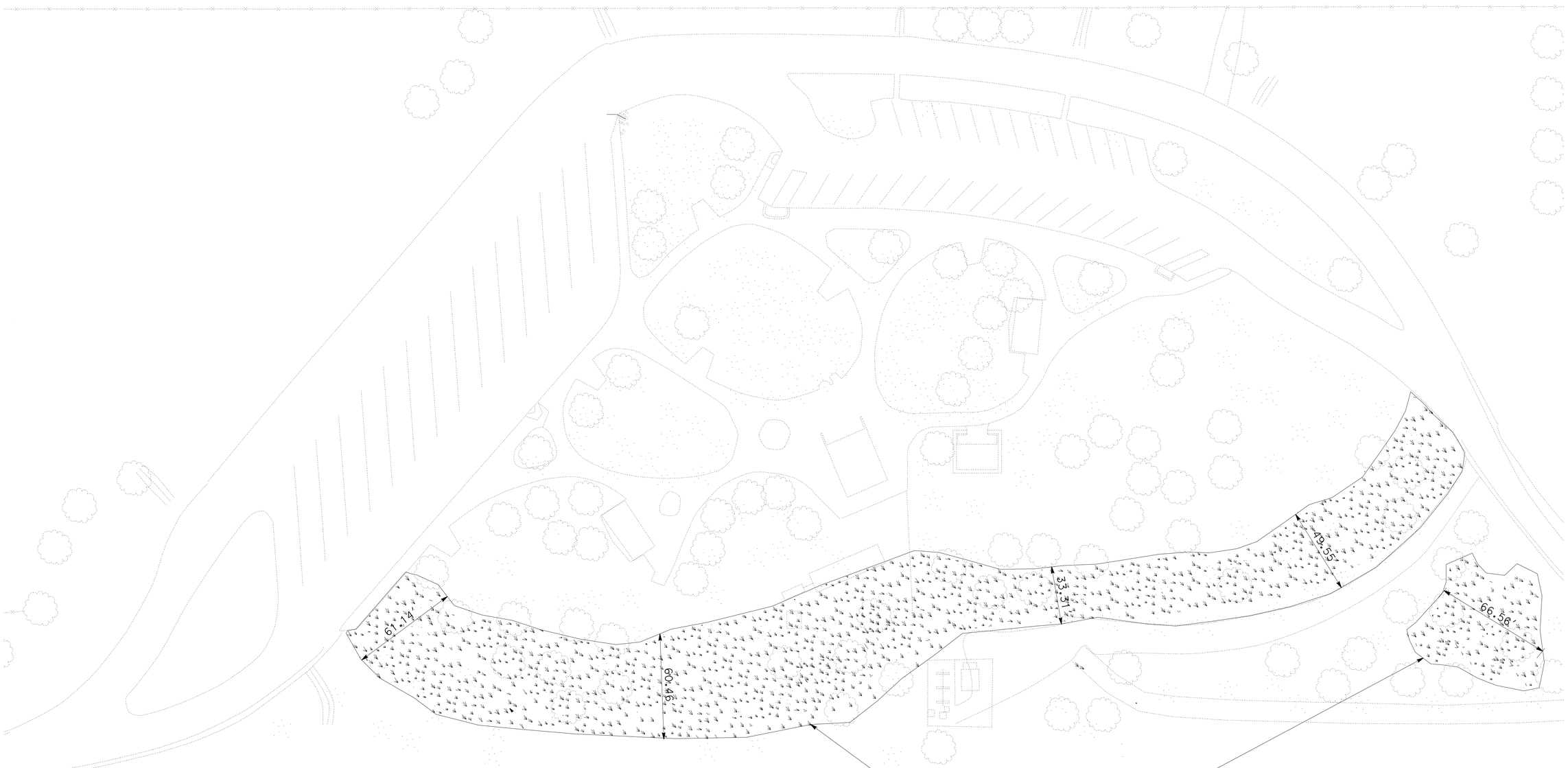

SB CORNING SAFETY
ROADSIDE REST AREA

EROSION CONTROL PLAN

SCALE: 1" = 30'

EC-2

APPROVED FOR EROSION CONTROL WORK ONLY

REVISED BY | DATE REVISED

J. PATRICK SULLIVAN | RON FLORY

CALCULATED-DESIGNED BY | CHECKED BY

SENIOR LANDSCAPE ARCHITECT | RON FLORY

STATE OF CALIFORNIA - DEPARTMENT OF TRANSPORTATION
Caltrans® LANDSCAPE ARCHITECTURE

P:\proj2\02\0E360_plans\pse\RESUBMIT_5-11-15\20e360te002.dgn

LAST REVISION | DATE PLOTTED => 11-MAY-2015 | TIME PLOTTED => 10:57
12-12-13

Dist	COUNTY	ROUTE	POST MILES TOTAL PROJECT	SHEET No.	TOTAL SHEETS
02	Teh	5	10.5	58	199

LICENSED LANDSCAPE ARCHITECT

4-1-14
PLANS APPROVAL DATE

LICENSED LANDSCAPE ARCHITECT J. PATRICK SULLIVAN #3125 Signature 07-31-14 Renewal Date 12-12-13 Date STATE OF CALIFORNIA

THE STATE OF CALIFORNIA OR ITS OFFICERS OR AGENTS SHALL NOT BE RESPONSIBLE FOR THE ACCURACY OR COMPLETENESS OF SCANNED COPIES OF THIS PLAN SHEET.

HYDROSEED SEQUENCE/ APPLICATION RATES (N)

SEQUENCE	ITEM	MATERIAL DESCRIPTION	MATERIAL TYPE	APPLICATION RATE (N)
STEP 1	HYDROSEED APPLICATION	PURE LIVE SEED	MIX	50 LB/ACRE
		FIBER	ALTERNATE	2000 LB/ACRE
		SLOW RELEASE FERTLIZER	GRANULAR	100 LB/ACRE
STEP 2	HYDROSEED APPLICATION	COMPOST	RECYCLED WOOD PRODUCT	1.2 CUYD/ACRE
		FIBER	ALTERNATE	1000 LB/ACRE
		TACKIFIER	PSYLLIUM	100 LB/ACRE

SEED MIX (N)

BOTANICAL NAME (COMMON NAME)	PERCENT GERMINATION (MINIMUM)	POUNDS PURE LIVE SEED PER ACRE (N) (SLOPE MEASUREMENT)
ACHILLEA MILLEFOLIUM (COMMON YARROW)	50	2
CLARKIA AMONEA (FAREWELL TO SPRING)	70	5
FESTUCA IDAHOENSIS (WESTERN FESCUE)	70	20
LASTHENIA CALIFORNICA (DWARF GOLDFIELDS)	60	5
LUPINUS NANA (DWARF LUPINES)	60	3
TRIFOLIUM HIRTIUM (ROSE CLOVER)	80	15
TOTAL		50

HYDROSEED

MATERIAL DESCRIPTION	MATERIAL TYPE	TOTALS	
PURE LIVE SEED	MIX	160 LB (N)	HYDROSEED
FIBER	ALTERNATE	9600 LB (N)	
SLOW RELEASE FERTLIZER	GRANULAR	320 LB (N)	
COMPOST	RECYCLED WOOD PRODUCT	3.84 CUYD (N)	
TACKIFIER	PSYLLIUM	320 LB (N)	
SHEET No.			
EC-1		SQFT	57,000
EC-2		SQFT	42,000
		TOTAL SQFT	99,000

EROSION CONTROL QUANTITIES

ECQ-1

REVISED BY | DATE REVISED
J. PATRICK SULLIVAN | RON FLORY
CALCULATED-DESIGNED BY | CHECKED BY
SENIOR LANDSCAPE ARCHITECT | RON FLORY

STATE OF CALIFORNIA - DEPARTMENT OF TRANSPORTATION
Caltrans® LANDSCAPE ARCHITECTURE

P:\proj2\02\0E360_plans\pse\RESUBMIT_5-11-15\20e360tg001.dgn

LAST REVISION 12-12-13 | DATE PLOTTED => 11-MAY-2015 TIME PLOTTED => 10:57

M

Maint	MAINTENANCE
Max	MAXIMUM
MB	METAL BEAM
MBB	METAL BEAM BARRIER
MBGR	METAL BEAM GUARD RAILING
Med	MEDIAN
MGS	MIDWEST GUARDRAIL SYSTEM
MH	MANHOLE
Min	MINIMUM
Misc	MISCELLANEOUS
Misc I & S	MISCELLANEOUS IRON AND STEEL
Mkr	MARKER
Mod	MODIFIED, MODIFY
Mon	MONUMENT
MP	METAL PLATE
MPGR	METAL PLATE GUARD RAILING
MR	MOVEMENT RATING
MSE	MECHANICALLY STABILIZED EMBANKMENT
Mt	MOUNTAIN, MOUNT
Mtl	MATERIAL
MVP	MAINTENANCE VEHICLE PULLOUT

N

N	NORTH
NB	NORTHBOUND
No.	NUMBER (MUST HAVE PERIOD)
Nos.	NUMBERS (MUST HAVE PERIOD)
NPS	NOMINAL PIPE SIZE
NS	NEAR SIDE
NSP	NEW STANDARD PLAN
NTS	NOT TO SCALE

O

Oblr	OBLITERATE
OC	OVERCROSSING
OD	OUTSIDE DIAMETER
OF	OUTSIDE FACE
OG	ORIGINAL GROUND
OGAC	OPEN GRADED ASPHALT CONCRETE
OGFC	OPEN GRADED FRICTION COURSE
OH	OVERHEAD
OHWM	ORDINARY HIGH WATER MARK
O-O	OUT TO OUT
Opp	OPPOSITE
OSD	OVERSIDE DRAIN

P

P	PAGE
PAP	PERFORATED ALUMINUM PIPE
PB	PULL BOX
PC	POINT OF CURVATURE, PRECAST
PCC	POINT OF COMPOUND CURVE, PORTLAND CEMENT CONCRETE
PCMS	PORTABLE CHANGEABLE MESSAGE SIGN
PCP	PERFORATED CONCRETE PIPE, PRESTRESSED CONCRETE PIPE
PCVC	POINT OF COMPOUND VERTICAL CURVE
PEC	PERMIT TO ENTER AND CONSTRUCT
Ped	PEDESTRIAN
Ped OC	PEDESTRIAN OVERCROSSING
Ped UC	PEDESTRIAN UNDERCROSSING
Perm Mtl	PERMEABLE MATERIAL

P continued

PG	PROFILE GRADE
PI	POINT OF INTERSECTION
PJP	PARTIAL JOINT PENETRATION
Pkwy	PARKWAY
ℙ,PL	PLATE
P/L	PROPERTY LINE
PM	POST MILE, TIME FROM NOON TO MIDNIGHT
PN	PAVING NOTCH
POC	POINT OF HORIZONTAL CURVE
POT	POINT OF TANGENT
POVC	POINT OF VERTICAL CURVE
PP	PIPE PILE, PLASTIC PIPE, POWER POLE
PPL	PREFORMED PERMEABLE LINER
PPP	PERFORATED PLASTIC PIPE
PRC	POINT OF REVERSE CURVE
PRF	PAVEMENT REINFORCING FABRIC
PRVC	POINT OF REVERSE VERTICAL CURVE
PS&E	PLANS, SPECIFICATIONS AND ESTIMATES
PS, P/S	PRESTRESSED
PSP	PERFORATED STEEL PIPE
PT	POINT OF TANGENCY
PVC	POLYVINYL CHLORIDE
Pvmt	PAVEMENT

Q

Qty	QUANTITY

R

R	RADIUS
R & D	REMOVE AND DISPOSE
R & S	REMOVE AND SALVAGE
R/C	RATE OF CHANGE
RCA	REINFORCED CONCRETE ARCH
RCB	REINFORCED CONCRETE BOX
RCP	REINFORCED CONCRETE PIPE
RCPA	REINFORCED CONCRETE PIPE ARCH
Rd	ROAD
Reinf	REINFORCED, REINFORCEMENT, REINFORCING
Rel	RELOCATE
Repl	REPLACEMENT
Ret	RETAINING
Rev	REVISED, REVISION
Rdwy	ROADWAY
RHMA	RUBBERIZED HOT MIX ASPHALT
Riv	RIVER
RM	ROAD-MIXED
RP	RADIUS POINT, REFERENCE POINT
RR	RAILROAD
RSP	ROCK SLOPE PROTECTION, REVISED STANDARD PLAN
Rt	RIGHT
Rte	ROUTE
RW	REDWOOD, RETAINING WALL
R/W	RIGHT OF WAY
Rwy	RAILWAY

S

S	SOUTH, SUPPLEMENT
SAE	STRUCTURE APPROACH EMBANKMENT
Salv	SALVAGE
SAPP	STRUCTURAL ALUMINUM PLATE PIPE
SB	SOUTHBOUND
SC	SAND CUSHION
SCSP	SLOTTED CORRUGATED STEEL PIPE
SD	STORM DRAIN
Sec	SECOND, SECTION
Sep	SEPARATION
SG	SUBGRADE
Shld	SHOULDER
Sht	SHEET
Sim	SIMILAR
℄	STATION LINE
SM	SELECTED MATERIAL
Spec	SPECIAL, SPECIFICATIONS
SPP	SLOTTED PLASTIC PIPE
SS	SLOPE STAKE
SSBM	STRAP AND SADDLE BRACKET METHOD
SSD	STRUCTURAL SECTION DRAIN
SSPA	STRUCTURAL STEEL PLATE ARCH
SSPP	STRUCTURAL STEEL PLATE PIPE
SSPPA	STRUCTURAL STEEL PLATE PIPE ARCH
SSRP	STEEL SPIRAL RIB PIPE
St	STREET
Sta	STATION
STBB	SINGLE THRIE BEAM BARRIER
Std	STANDARD
Str	STRUCTURE
Surf	SURFACING
SW	SIDEWALK, SOUND WALL
Swr	SEWER
Sym	SYMMETRICAL
S4S	SURFACE 4 SIDES

T

T	SEMI-TANGENT
Tan	TANGENT
TBB	THRIE BEAM BARRIER
Tbr	TIMBER
TC	TOP OF CURB
TCB	TRAFFIC CONTROL BOX
TCE	TEMPORARY CONSTRUCTION EASEMENT
Tel	TELEPHONE
Temp	TEMPORARY
TG	TOP OF GRADE
Tot	TOTAL
TP	TELEPHONE POLE
TPB	TREATED PERMEABLE BASE
TPM	TREATED PERMEABLE MATERIAL
Trans	TRANSITION

T continued

TS	TRANSVERSE, TRAFFIC SIGNAL, TUBULAR STEEL
Typ	TYPICAL

U

UC	UNDERCROSSING
UD	UNDERDRAIN
UG	UNDERGROUND
UON	UNLESS OTHERWISE NOTED
UP	UNDERPASS

V

V	VALVE, DESIGN SPEED
Var	VARIABLE, VARIES
VC	VERTICAL CURVE
VCP	VITRIFIED CLAY PIPE
Vert	VERTICAL
Via	VIADUCT
Vol	VOLUME

W

W	WEST, WIDTH
WB	WESTBOUND
WH	WEEP HOLE
WM	WIRE MESH
WS	WATER SURFACE
WSP	WELDED STEEL PIPE
Wt	WEIGHT
WV	WATER VALVE
WW	WINGWALL
WWLOL	WINGWALL LAYOUT LINE

X

X Sec	CROSS SECTION
Xing	CROSSING

Y

Yr	YEAR
Yrs	YEARS

Dist	COUNTY	ROUTE	POST MILES TOTAL PROJECT	SHEET No.	TOTAL SHEETS
02	Teh	5	10.5	59	199

Grace M. Tsushima
REGISTERED CIVIL ENGINEER

July 19, 2013
PLANS APPROVAL DATE

REGISTERED PROFESSIONAL ENGINEER
Grace M. Tsushima
No. C49814
Exp. 9-30-14
CIVIL
STATE OF CALIFORNIA

THE STATE OF CALIFORNIA OR ITS OFFICERS OR AGENTS SHALL NOT BE RESPONSIBLE FOR THE ACCURACY OR COMPLETENESS OF SCANNED COPIES OF THIS PLAN SHEET.

TO ACCOMPANY PLANS DATED 4-1-14

2010 REVISED STANDARD PLAN RSP A10B

UNIT OF MEASUREMENT SYMBOLS:

Some of the symbols used in the project plan quantity tables and in the Bid Item List are:

TABLE A

SYMBOL USED	DEFINITIONS
ACRE	ACRE
CF	CUBIC FOOT
CY	CUBIC YARD
EA	EACH
GAL	GALLON
LB	POUND
LF	LINEAR FOOT
SQFT	SQUARE FOOT
SQYD	SQUARE YARD
STA	100 FEET
TAB	TABLET
TON	2,000 POUNDS

Some of the symbols used in the plans other than in the project plan quantity tables are:

TABLE B

SYMBOL USED	DEFINITIONS
ksi	KIPS PER SQUARE INCH
ksf	KIPS PER SQUARE FOOT
psi	POUNDS PER SQUARE INCH
psf	POUNDS PER SQUARE FOOT
lb/ft^3, pcf	POUNDS PER CUBIC FOOT
tsf	TONS PER SQUARE FOOT
mph, MPH *	MILES PER HOUR
ø	NOMINAL DIAMETER
oz	OUNCE
lb	POUND
kip	1,000 POUNDS
cal	CALORIE
ft	FOOT OR FEET
gal	GALLON

* For use on a sign panel only

STATE OF CALIFORNIA
DEPARTMENT OF TRANSPORTATION

ABBREVIATIONS (SHEET 2 OF 2)

NO SCALE

RSP A10B DATED JULY 19, 2013 SUPERSEDES STANDARD PLAN A10B DATED MAY 20, 2011 - PAGE 2 OF THE STANDARD PLANS BOOK DATED 2010.

REVISED STANDARD PLAN RSP A10B

6-7-13

Dist	COUNTY	ROUTE	POST MILES TOTAL PROJECT	SHEET No.	TOTAL SHEETS
02	Teh	5	10.5	60	199

REGISTERED CIVIL ENGINEER

April 20, 2012
PLANS APPROVAL DATE

REGISTERED PROFESSIONAL ENGINEER
Roberta L. McLaughlin
No. C40375
Exp. 3-31-13
CIVIL
STATE OF CALIFORNIA

THE STATE OF CALIFORNIA OR ITS OFFICERS OR AGENTS SHALL NOT BE RESPONSIBLE FOR THE ACCURACY OR COMPLETENESS OF SCANNED COPIES OF THIS PLAN SHEET.

TO ACCOMPANY PLANS DATED 4-1-14

2010 REVISED STANDARD PLAN RSP A24A

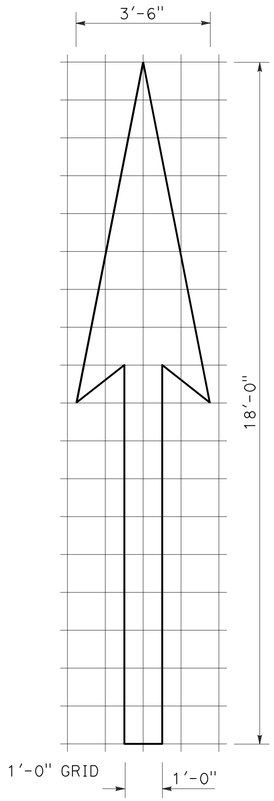

A=25 ft^2

TYPE I 18'-0" ARROW

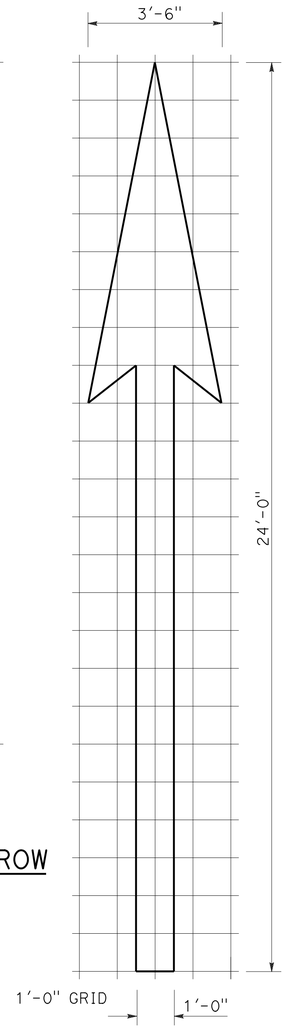

A=31 ft^2

TYPE I 24'-0" ARROW

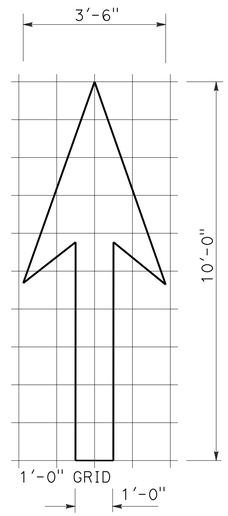

A=14 ft^2

TYPE I 10'-0" ARROW

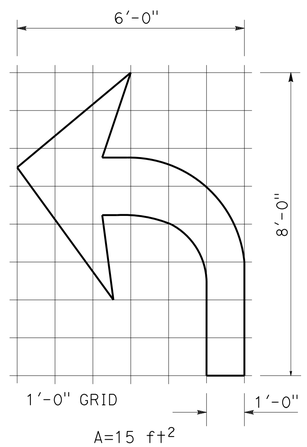

A=15 ft^2

TYPE IV (L) ARROW

(For Type IV (R) arrow, use mirror image)

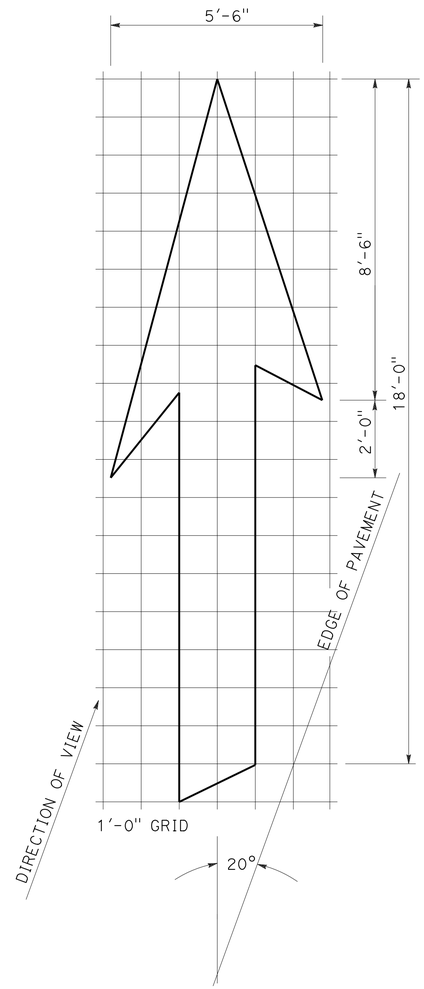

A=42 ft^2

TYPE VI ARROW

Right lane drop arrow
(For left lane, use mirror image)

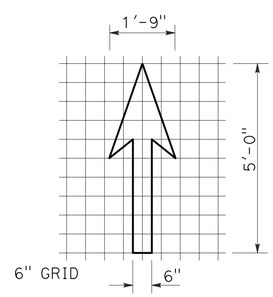

A=3.5 ft^2

BIKE LANE ARROW

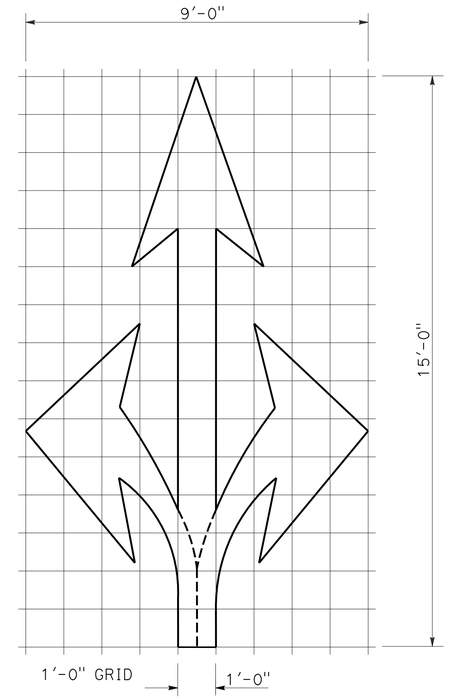

A=36 ft^2

TYPE VIII ARROW

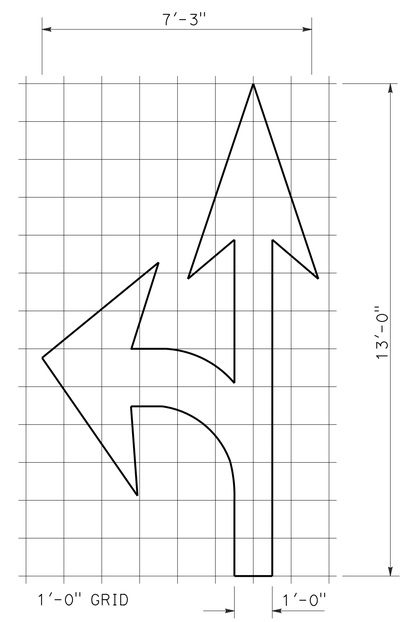

A=27 ft^2

TYPE VII (L) ARROW

(For Type VII (R) arrow, use mirror image)

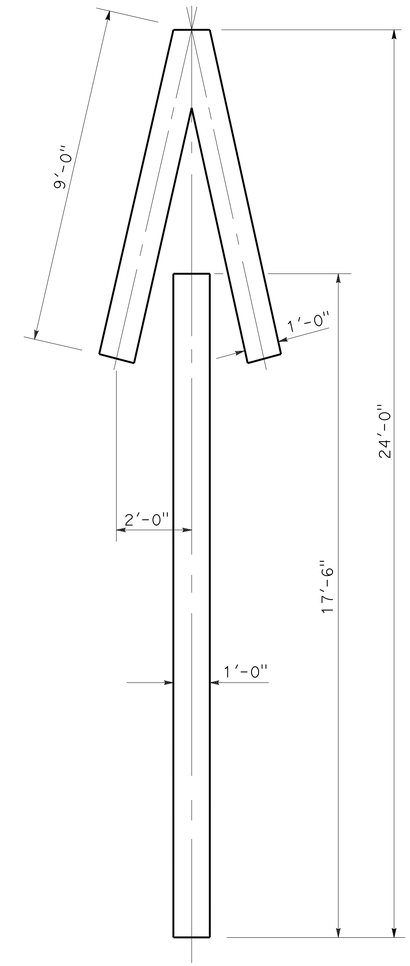

A=33 ft^2

TYPE V ARROW

NOTE:
Minor variations in dimensions may be accepted by the Engineer.

STATE OF CALIFORNIA
DEPARTMENT OF TRANSPORTATION

PAVEMENT MARKINGS ARROWS

NO SCALE

RSP A24A DATED APRIL 20, 2012 SUPERSEDES STANDARD PLAN A24A DATED MAY 20, 2011 - PAGE 13 OF THE STANDARD PLANS BOOK DATED 2010.

REVISED STANDARD PLAN RSP A24A

3-14-12

Dist	COUNTY	ROUTE	POST MILES TOTAL PROJECT	SHEET No.	TOTAL SHEETS
02	Teh	5	10.5	61	199

REGISTERED CIVIL ENGINEER

October 19, 2012
PLANS APPROVAL DATE

REGISTERED PROFESSIONAL ENGINEER
Roberta L. McLaughlin
No. C40375
Exp. 3-31-13
CIVIL
STATE OF CALIFORNIA

THE STATE OF CALIFORNIA OR ITS OFFICERS OR AGENTS SHALL NOT BE RESPONSIBLE FOR THE ACCURACY OR COMPLETENESS OF SCANNED COPIES OF THIS PLAN SHEET.

NOTE: TO ACCOMPANY PLANS DATED 4-1-14

Minor variations in dimensions may be accepted by the Engineer.

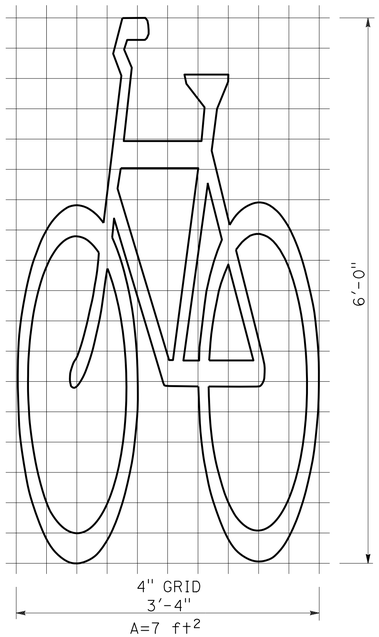

BIKE LANE SYMBOL WITHOUT PERSON

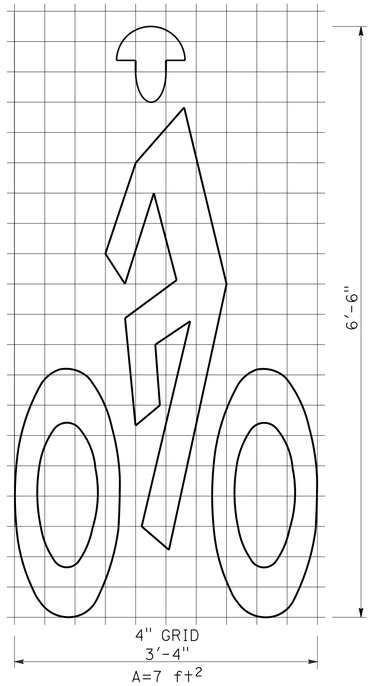

BIKE LANE SYMBOL WITH PERSON

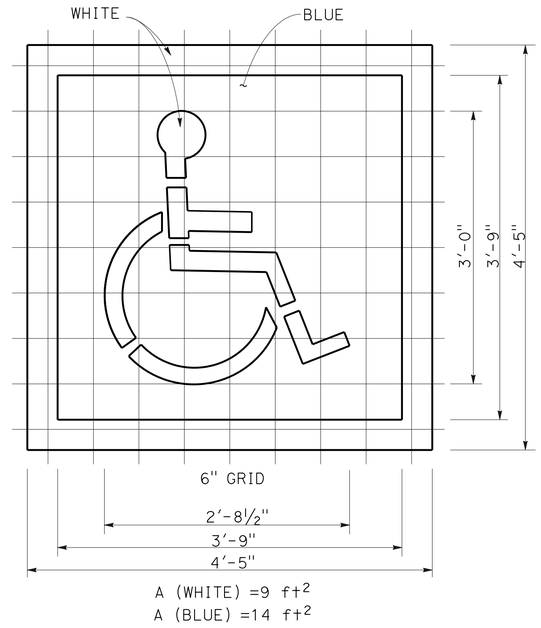

INTERNATIONAL SYMBOL OF ACCESSIBILITY (ISA) MARKING

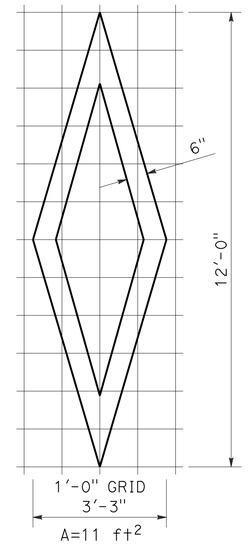

DIAMOND SYMBOL

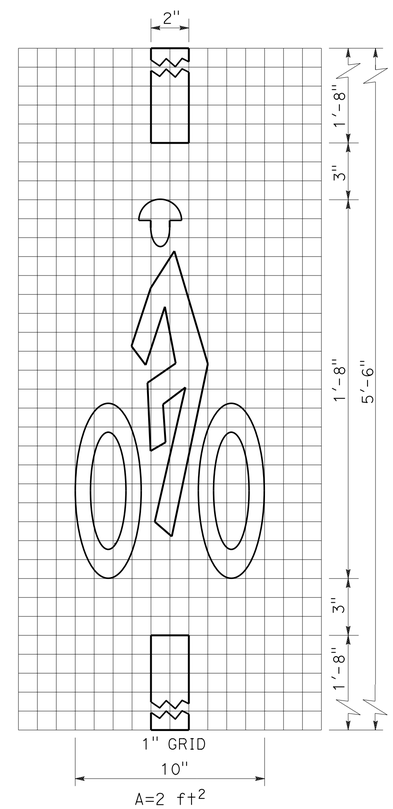

BICYCLE LOOP DETECTOR SYMBOL

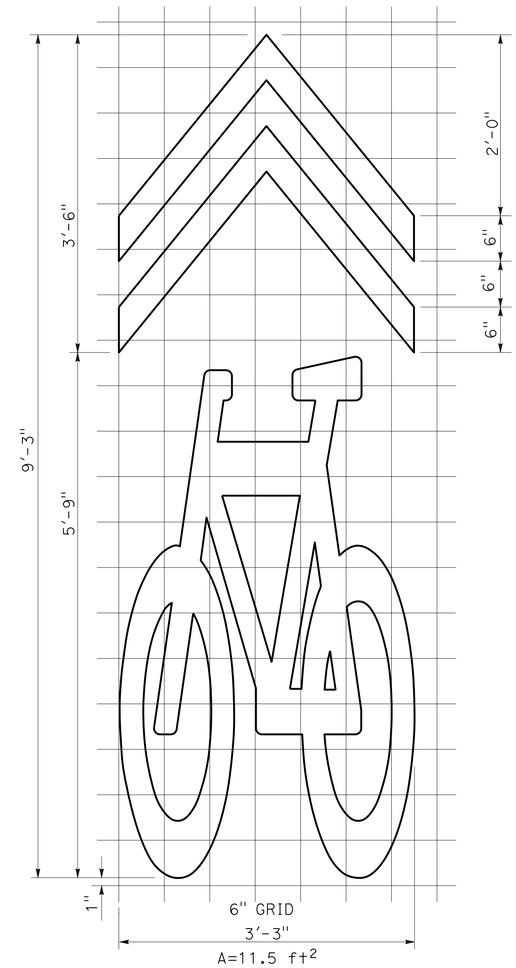

SHARED ROADWAY BICYCLE MARKING

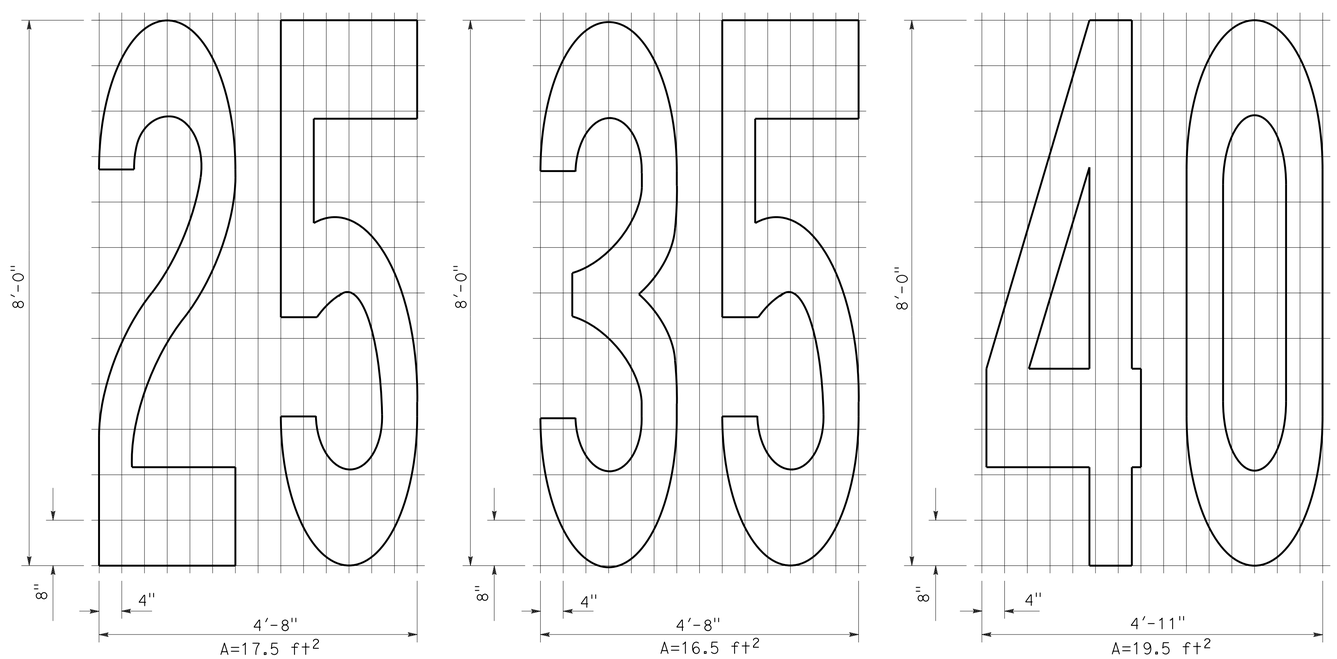

NUMERALS

STATE OF CALIFORNIA
DEPARTMENT OF TRANSPORTATION

PAVEMENT MARKINGS SYMBOLS AND NUMERALS

NO SCALE

RSP A24C DATED OCTOBER 19, 2012 SUPERSEDES STANDARD PLAN A24C DATED MAY 20, 2011 - PAGE 15 OF THE STANDARD PLANS BOOK DATED 2010.

REVISED STANDARD PLAN RSP A24C

2010 REVISED STANDARD PLAN RSP A24C

6-28-12

Dist	COUNTY	ROUTE	POST MILES TOTAL PROJECT	SHEET No.	TOTAL SHEETS
02	Teh	5	10.5	62	199

REGISTERED CIVIL ENGINEER

July 19, 2013
PLANS APPROVAL DATE

REGISTERED PROFESSIONAL ENGINEER
Michael Janzen
No. 44788
Exp. 03-31-14
CIVIL
STATE OF CALIFORNIA

THE STATE OF CALIFORNIA OR ITS OFFICERS OR AGENTS SHALL NOT BE RESPONSIBLE FOR THE ACCURACY OR COMPLETENESS OF SCANNED COPIES OF THIS PLAN SHEET.

TO ACCOMPANY PLANS DATED 4-1-14

2010 REVISED STANDARD PLAN RSP A87A

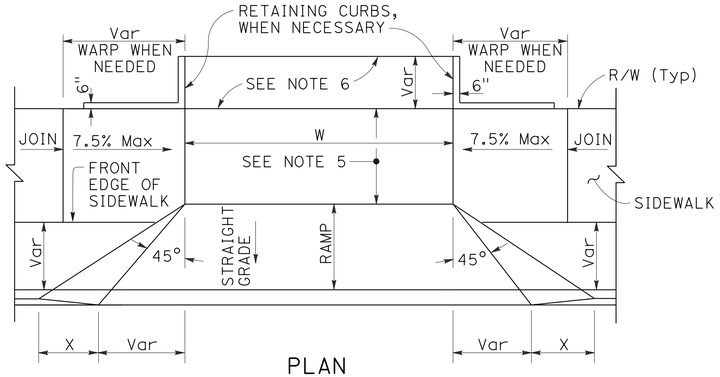

PLAN

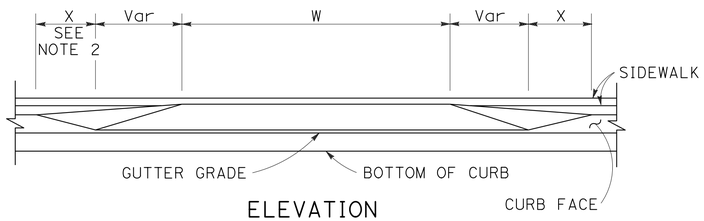

ELEVATION

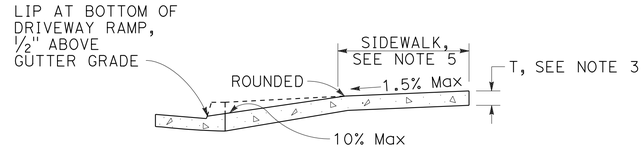

CASE A

Typical driveway, sidewalk not depressed

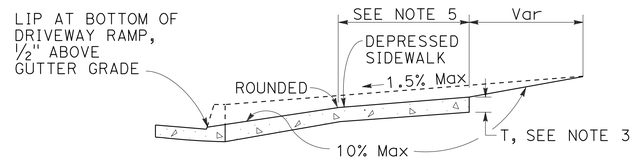

CASE B

Driveway with depressed sidewalk

SECTIONS

TABLE A

CURB TYPE	DIMENSIONS			
	"H1"	"H2"	"W1"	"W2"
A1-6	1'-2"	6"	7½"	1½"
A1-8	1'-4"	8"	8"	2"
A2-6	1'-0"	6"	2'-7½"	1½"
A2-8	1'-2"	8"	2'-8"	2"
A3-6	6"	5"	7¼"	1¼"
A3-8	8"	7"	7¾"	1¾"
B1-4	1'-0"	4"	7½"	2½"
B1-6	1'-2"	6"	9"	4"
B2-4	10"	4"	2'-7½"	2½"
B2-6	1'-0"	6"	2'-9"	4"
B3-4	4"	3"	7"	2"
B3-6	6"	5"	8½"	3½"
D-4	10"	4"	1'-6"	1'-1"
D-6	1'-0"	6"	2'-2"	1'-9"

CURB QUANTITIES

TYPE	CUBIC YARDS PER LINEAR FOOT
A1-6	0.02585
A1-8	0.03084
A2-6	0.05903
A2-8	0.06379
A3-6	0.01036
A3-8	0.01435
B1-4	0.02185
B1-6	0.02930
B2-4	0.05515
B2-6	0.06171
B3-4	0.00641
B3-6	0.01074
B4	0.05709
D-4	0.04083
D-6	0.06804
E	0.06661

DRIVEWAYS

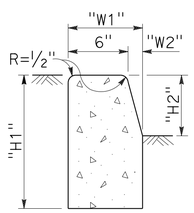

TYPE A1 CURBS

See Table A

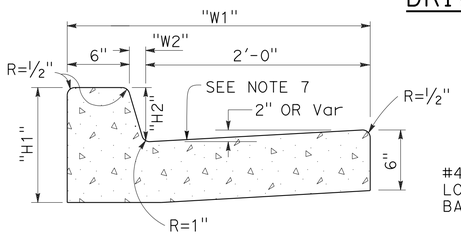

TYPE A2 CURBS

See Table A

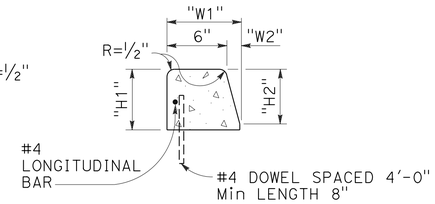

TYPE A3 CURBS

Superimposed on existing pavement
See Table A

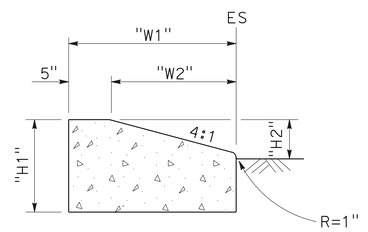

TYPE D CURBS

See Table A

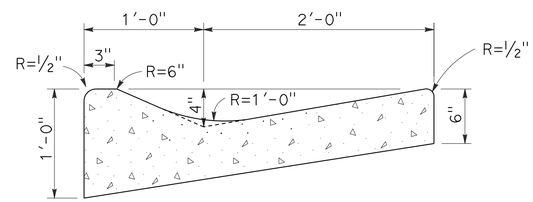

TYPE E CURB

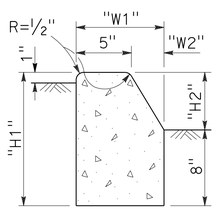

TYPE B1 CURBS

See Table A

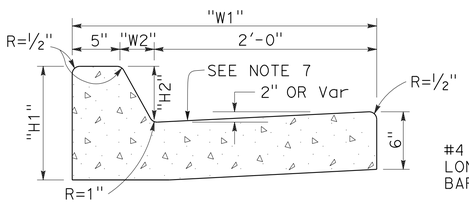

TYPE B2 CURBS

See Table A

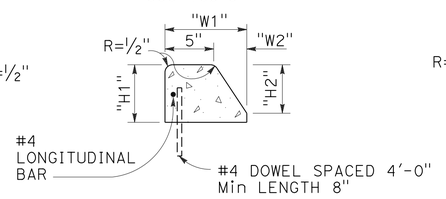

TYPE B3 CURBS

Superimposed on existing pavement
See Table A

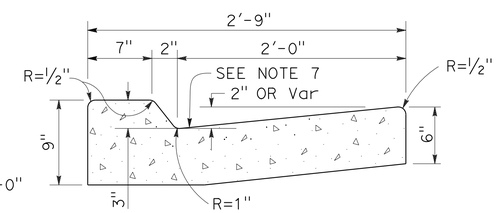

TYPE B4 CURBS

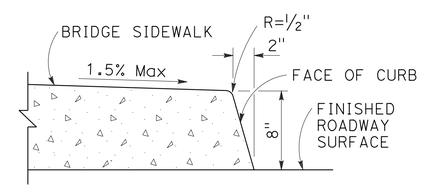

TYPE H CURB

On Bridges

CURBS

NOTES:

1. Case A driveway section typically applies.
2. X=3'-0" except for curb heights over 10" where 4:1 slopes shall be used on curb slope.
3. Sidewalk and ramp thickness "T" at driveway shall be 4" for residental and 6" for commercial.
4. Difference in slope of the driveway ramp and the slope of a line between the gutter and a point on the roadway 5'-0" from gutter line shall not exceed 15%. Reduce driveway ramp slope, not gutter slope, where required.
5. Minimum width of clear passageway for sidewalk shall be 4'-2".
6. Retaining curbs and acquisition of construction easement may be necessary for narrow sidewalks or curb heights in excess of 6".
7. Across the pedestrian route at curb ramp locations, the gutter pan slope shall not exceed 1" of depth for each 2'-0" of width.

STATE OF CALIFORNIA
DEPARTMENT OF TRANSPORTATION

CURBS AND DRIVEWAYS

NO SCALE

RSP A87A DATED JULY 19, 2013 SUPERSEDES STANDARD PLAN A87A
DATED MAY 20, 2011 - PAGE 119 OF THE STANDARD PLANS BOOK DATED 2010.

REVISED STANDARD PLAN RSP A87A

7-8-13

Dist	COUNTY	ROUTE	POST MILES TOTAL PROJECT	SHEET No.	TOTAL SHEETS
02	Teh	5	10.5	63	199

REGISTERED CIVIL ENGINEER

July 19, 2013
PLANS APPROVAL DATE

REGISTERED PROFESSIONAL ENGINEER
Hector David Cordova
No. C41957
Exp. 3-31-14
CIVIL
STATE OF CALIFORNIA

THE STATE OF CALIFORNIA OR ITS OFFICERS OR AGENTS SHALL NOT BE RESPONSIBLE FOR THE ACCURACY OR COMPLETENESS OF SCANNED COPIES OF THIS PLAN SHEET.

TO ACCOMPANY PLANS DATED 4-1-14

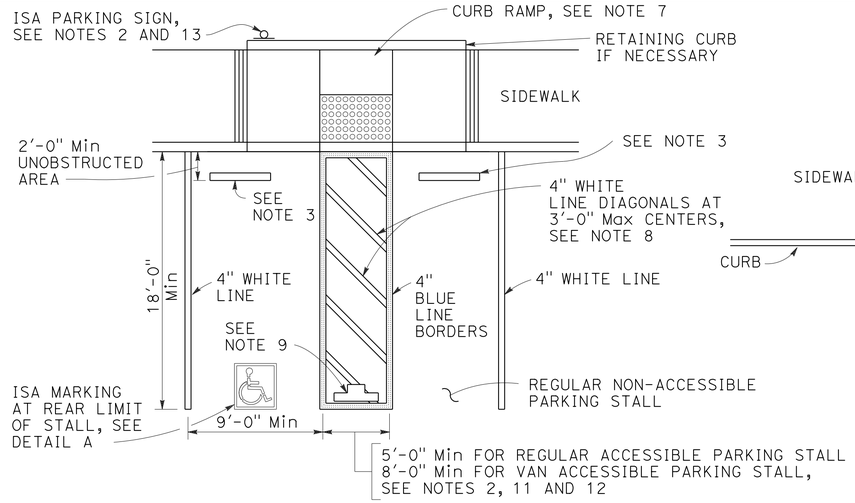

SINGLE PARKING STALL

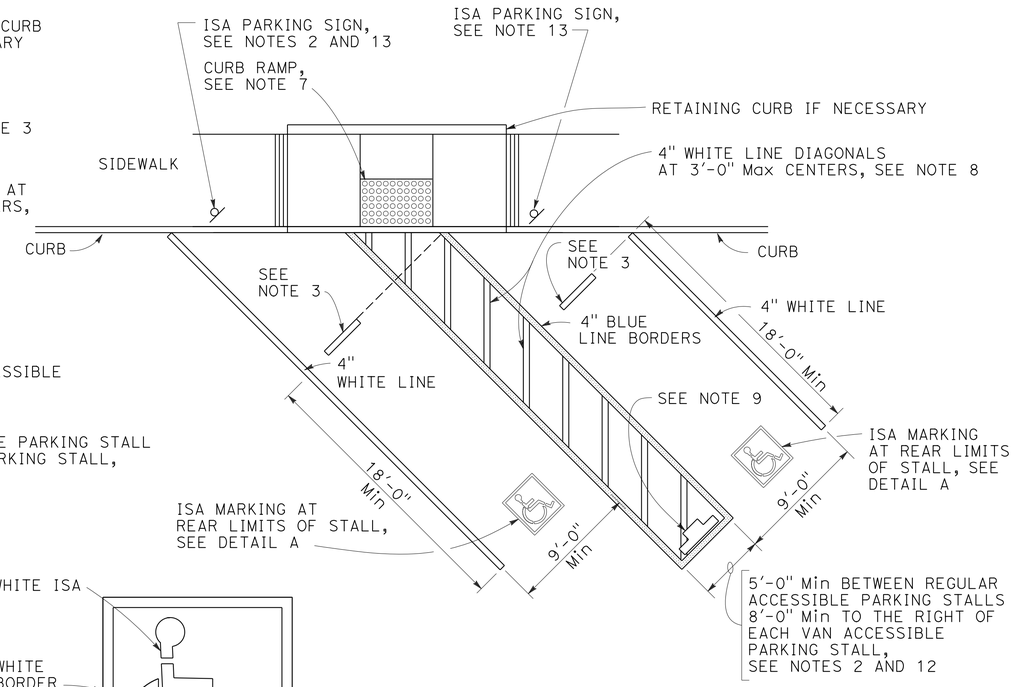

DIAGONAL DOUBLE PARKING STALLS

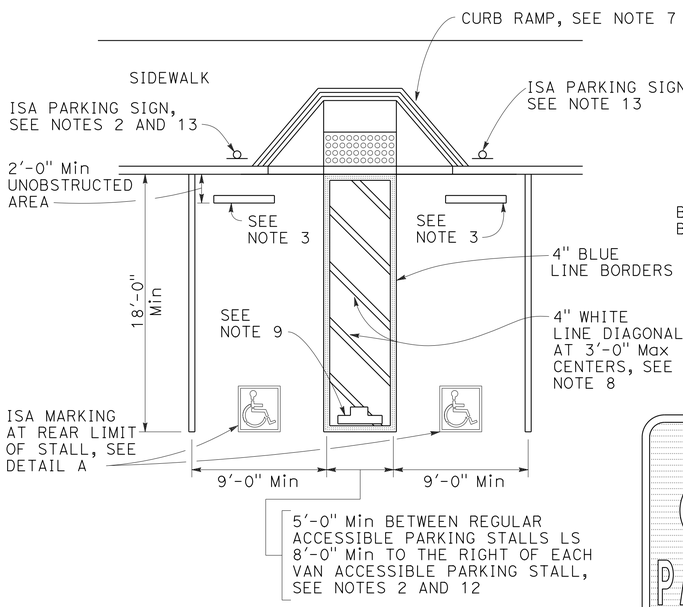

DOUBLE PARKING STALL

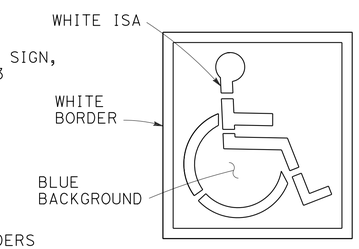

ISA MARKING
See Revised Std Plan RSP A24C

DETAIL A

TABLE A

TOTAL NUMBER OF PARKING SPACES PROVIDED IN PARKING FACILITY	MINIMUM NUMBER OF REQUIRED ACCESSIBLE PARKING SPACES
1-25	1
26-50	2
51-75	3
76-100	4
101-150	5
151-200	6
201-300	7
301-400	8
401-500	9
501-1000	2 PERCENT OF TOTAL
1001 AND OVER	20 PLUS 1 FOR EACH 100 OR FRACTION THEREOF OVER 1000

SIGN R99 (CA)

SIGN R99C (CA)
See Note 6

PLAQUE R99B (CA)

SIGN R99 (CA) with PLAQUE R99B (CA)
See Note 6

UNAUTHORIZED VEHICLES PARKED IN DESIGNATED ACCESSIBLE SPACES NOT DISPLAYING DISTINGUISHING PLACARDS OR SPECIAL LICENSE PLATES ISSUED FOR PERSONS WITH DISABILITIES WILL BE TOWED AWAY AT THE OWNER'S EXPENSE

TOWED VEHICLES MAY BE RECLAIMED AT
(Insert Address)

OR BY TELEPHONING
(Insert Telephone Number)

SIGN R100B (CA)
See Note 10

SIGN R7-8b
See Notes 2 and 6

OFF-STREET PARKING SIGNS
(Parking lot or garage)
See Note 6

NOTES:

1. Accessible parking spaces serving a particular building shall be located on the shortest accessible route of travel from adjacent parking to an accessible entrance. In parking facilities that do not serve a particular building, accessible parking shall be located on the shortest accessible route of travel to an accessible pedestrian entrance of the parking facility.
2. One in every six accessible off-street parking stalls, but not less than one, shall be served by an accessible aisle of 8'-0" minimum width and shall be signed van accessible. The R7-8b sign shall be mounted below the R99B (CA) plaque or the R99C (CA) sign.
3. In each parking stall, a curb or parking bumper shall be provided if required to prevent encroachment of vehicles over the required width of walkways. Parking stalls shall be so located that persons with disabilities are not compelled to wheel or walk behind parked vehicles other than their own. For more parking bumper requirements, see the Special Provisions.
4. Parking spaces and access aisles shall be level with surface slopes not exceeding 1.5% in all directions.
5. Table A shall be used to determine the required number of accessible parking stalls in each parking lot or garage.
6. Where Plaque R99B (CA), Sign R99C (CA) or Sign R7-8b are installed, the bottom of the sign or plaque panel shall be a minimum of 7'-0" above the surrounding surface.
7. Curb ramps shall conform to the details shown on Revised Standard Plan RSP A88A.
8. Blue paint, instead of white may be used for marking accessibility aisles in areas where snow may cause white markings to not be visible.
9. The words "NO PARKING", shall be painted in white letters no less than 1'-0" high and located so that it is visible to traffic enforcement officials. See Revised Standard Plan RSP A90B for details of the "NO PARKING" pavement marking.
10. A R100B (CA) sign shall be posted in a conspicuous place at each entrance to off-street parking facilities or immediately adjacent to and visible from each stall. The sign shall include the address where the towed vehicle may be reclaimed and the telephone number of the local traffic law enforcement agency.
11. Where a single (non-van) accessible parking space is provided, the loading and unloading access aisle shall be on the passenger side of the vehicle as the vehicle is going forward into the parking space.
12. Where a van accessible parking space is provided, the loading and unloading access aisle shall be 8'-0" wide minimum, and shall be on the passenger side of the vehicle as the vehicle is going forward into the parking space.
13. Accessible Parking Only Sign shall be Sign R99C (CA) or Sign R99 (CA) with Plaque R99B (CA).

LEGEND

ISA = International Symbol of Accessibility

STATE OF CALIFORNIA
DEPARTMENT OF TRANSPORTATION

ACCESSIBLE PARKING OFF-STREET

NO SCALE

RSP A90A DATED JULY 19, 2013 SUPERSEDES STANDARD PLAN A90A
DATED MAY 20, 2011 - PAGE 123 OF THE STANDARD PLANS BOOK DATED 2010.

REVISED STANDARD PLAN RSP A90A

2010 REVISED STANDARD PLAN RSP A90A

7-8-13

Dist	COUNTY	ROUTE	POST MILES TOTAL PROJECT	SHEET No.	TOTAL SHEETS
02	Teh	5	10.5	64	199

Gregory A. Balzer
LICENSED LANDSCAPE ARCHITECT

July 19, 2013
PLANS APPROVAL DATE

THE STATE OF CALIFORNIA OR ITS OFFICERS OR AGENTS SHALL NOT BE RESPONSIBLE FOR THE ACCURACY OR COMPLETENESS OF SCANNED COPIES OF THIS PLAN SHEET.

LICENSED LANDSCAPE ARCHITECT
Gregory A. Balzer 2576
Gregory A. Balzer
Original Date 2-28-15
Renewal Date 7-19-13
Date
STATE OF CALIFORNIA

TO ACCOMPANY PLANS DATED 4-1-14

A

AB	AGGREGATE BASE
ABS	ACRYLONITRILE-BUTADIENE-STYRENE
AC	ASPHALT CONCRETE
ACC	ARMOR-CLAD CONDUCTORS
Adj	ADJACENT/ADJUSTABLE
AIC	AUXILIARY IRRIGATION CONTROLLER
Alt	ALTERNATIVE
AMEND	AMENDMENT
ARV	AIR RELEASE VALVE
AUTO	AUTOMATIC
AUX	AUXILIARY
AVB	ATMOSPHERIC VACUUM BREAKER

B

B&B	BALLED AND BURLAPPED
B/B	BRASS/BRONZE
B/B/PL	BRASS/BRONZE/PLASTIC
B/PL	BRASS/PLASTIC
BFM	BONDED FIBER MATRIX
Bit Ctd	BITUMINOUS COATED
BP	BOOSTER PUMP
BPA	BACKFLOW PREVENTER ASSEMBLY
BPE	BACKFLOW PREVENTER ENCLOSURE
BV	BALL VALVE

C

C	CONDUIT
CAP	CORRUGATED ALUMINUM PIPE
CARV	COMBINATION AIR RELEASE VALVE
CB	COUPLING BAND
CCA	CAM COUPLER ASSEMBLY
CEC	CONTROLLER ENCLOSURE CABINET
CHDPE	CORRUGATED HIGH DENSITY POLYETHYLENE
CL	CHAIN LINK
CNC	CONTROL AND NEUTRAL CONDUCTORS
Conc	CONCRETE
CP	COPPER PIPE
CS	COMPOST SOCK
CSP	CORRUGATED STEEL PIPE
CST	CENTER STRIP
CV	CHECK VALVE

D

Dia	DIAMETER
DIP	DUCTILE IRON PIPE
DIT	DRIP IRRIGATION TUBING
DG	DECOMPOSED GRANITE
DN	DIAMETER NOMINAL
DVA	DRIP VALVE ASSEMBLY

E

EC	EROSION CONTROL
ECTC	EROSION CONTROL TECHNOLOGY COUNCIL
Elect	ELECTRIC/ELECTRICAL
Elev	ELEVATION
ELL	ELBOW
ENCL	ENCLOSURE
EP	EDGE OF PAVEMENT
ES	EDGE OF SHOULDER
EST	END STRIP
ESTB	ESTABLISHMENT
ETW	EDGE OF TRAVELED WAY

F

F	FULL CIRCLE
F/P	FULL/PART CIRCLE
FCV	FLOW CONTROL VALVE
FERT	FERTILIZER
FG	FINISHED GRADE
FH	FLEXIBLE HOSE
FIPT	FEMALE IRON PIPE THREAD
FIS	FERTILIZER INJECTOR SYSTEM
FL	FLOW LINE
FR	FIBER ROLL
FS	FLOW SENSOR
FSC	FLOW SENSOR CABLE
FV	FLUSH VALVE

G

Galv	GALVANIZED
GARV	GARDEN VALVE
GARVA	GARDEN VALVE ASSEMBLY
GM	GRAVEL MULCH
GPH	GALLONS PER HOUR
GPM	GALLONS PER MINUTE
GSP	GALVANIZED STEEL PIPE
GV	GATE VALVE

H

H	HALF CIRCLE
HDPE	HIGH DENSITY POLYETHYLENE
HP	HORSEPOWER/HINGE POINT
HPL	HIGH PRESSURE LINE
Hwy	HIGHWAY

I

IC	IRRIGATION CONTROLLER
ICC	IRRIGATION CONTROLLER(S) IN CONTROLLER ENCLOSURE CABINET
ID	INSIDE DIAMETER
IFS	IRRIGATION FILTRATION SYSTEM
IPS	IRON PIPE SIZE
IPT	IRON PIPE THREAD
Irr	IRRIGATION

L

L	LENGTH

M

Max	MAXIMUM
MBGR	METAL BEAM GUARD RAILING
MCV	MANUAL CONTROL VALVE
MIC	MASTER IRRIGATION CONTROLLER
Min	MINIMUM
MIPT	MALE IRON PIPE THREAD
Misc	MISCELLANEOUS
Mtl	MATERIAL
MVP	MAINTENANCE VEHICLE PULLOUT

N

NCN	NO COMMON NAME
NL	NOZZLE LINE
No.	NUMBER
NPT	NATIONAL PIPE THREAD

O

O/C	ON CENTER
OD	OUTSIDE DIAMETER
OL	OVERLAP

P

P	PART CIRCLE
PB	PULL BOX
PCC	PORTLAND CEMENT CONCRETE
PE	POLYETHYLENE
Pkt	PACKET
PL	PLASTIC
PLS	PURE LIVE SEED
PLT	PLANT/PLANTING
PLT ESTB	PLANT ESTABLISHMENT
PM	POST MILE
PR	PRESSURE RATED
PRLV	PRESSURE RELIEF VALVE
PRV	PRESSURE REGULATING VALVE
PVC	POLYVINYL CHLORIDE
Pvmt	PAVEMENT

Q

Q	QUARTER CIRCLE
QCV	QUICK COUPLING VALVE

R

R	RADIUS
RCP	REINFORCED CONCRETE PIPE
RCV	REMOTE CONTROL VALVE
RCVM	REMOTE CONTROL VALVE (MASTER)
RCVMF	REMOTE CONTROL VALVE (MASTER) W/FLOW SENSOR
RCVP	REMOTE CONTROL VALVE W/PRESSURE REGULATOR
RCW	RECYCLED WATER
RECP	ROLLED EROSION CONTROL PRODUCT
REQ	REQUIRED
RICS	REMOTE IRRIGATION CONTROL SYSTEM
R/W	RIGHT OF WAY

S

S	SLIP
SCH	SCHEDULE
SF	STATE-FURNISHED
Shld	SHOULDER
Sq	SQUARE
SST	SIDE STRIP
Sta	STATION
Std	STANDARD
SW	SIDEWALK/SOUND WALL

T

T	THIRD CIRCLE/THREAD
TLS	TRUCK LOADING STANDPIPE
TQ	THREE QUARTER CIRCLE
TRM	TURF REINFORCEMENT MAT
TT	TWO-THIRDS CIRCLE
TWSA	TREE WELL SPRINKLER ASSEMBLY
Typ	TYPICAL

U

UG	UNDERGROUND

W

W	WIDTH
W/	WITH
WM	WATER METER
WS	WYE STRAINER
WSA	WYE STRAINER ASSEMBLY
WSP	WELDED STEEL PIPE
WWM	WELDED WIRE MESH

NOTE:
For additional abbreviations, see Standard Plans A10A and A10B.

STATE OF CALIFORNIA
DEPARTMENT OF TRANSPORTATION

LANDSCAPE AND EROSION CONTROL ABBREVIATIONS

NO SCALE

RSP H1 DATED JULY 19, 2013 SUPERSEDES STANDARD PLAN H1 DATED MAY 20, 2011 - PAGE 218 OF THE STANDARD PLANS BOOK DATED 2010.

REVISED STANDARD PLAN RSP H1

2010 REVISED STANDARD PLAN RSP H1

6-28-13

Dist	COUNTY	ROUTE	POST MILES TOTAL PROJECT	SHEET No.	TOTAL SHEETS
02	Teh	5	10.5	65	199

Gregory A. Balzer
LICENSED LANDSCAPE ARCHITECT

November 15, 2013
PLANS APPROVAL DATE

LICENSED LANDSCAPE ARCHITECT
Gregory A. Balzer 2516
Gregory A. Balzer
Original
2-28-15
Renewal Date
11-15-13
Date
STATE OF CALIFORNIA

THE STATE OF CALIFORNIA OR ITS OFFICERS OR AGENTS SHALL NOT BE RESPONSIBLE FOR THE ACCURACY OR COMPLETENESS OF SCANNED COPIES OF THIS PLAN SHEET.

TO ACCOMPANY PLANS DATED 4-1-14

2010 REVISED STANDARD PLAN RSP H2

EXISTING	NEW	ITEM DESCRIPTION
		WATER METER (WM)
		BACKFLOW PREVENTER ASSEMBLY (BPA)
		BACKFLOW PREVENTER ENCLOSURE (BPE)
		BOOSTER PUMP (BP)
		TRUCK LOADING STANDPIPE (TLS)
	FS	FLOW SENSOR (FS)
		MASTER IRRIGATION CONTROLLER (MIC)
		AUXILIARY IRRIGATION CONTROLLER (AIC)
		IRRIGATION CONTROLLER (IC) IRRIGATION CONTROLLER (IC) (BATTERY) IRRIGATION CONTROLLER (IC) (SOLAR) IRRIGATION CONTROLLER (IC) (TWO WIRE) IRRIGATION CONTROLLER(S) IN CONTROLLER ENCLOSURE CABINET (ICC)
acc	ACC	ARMOR-CLAD CONDUCTORS (ACC)
cnc	CNC	CONTROL AND NEUTRAL CONDUCTORS (CNC)
		IRRIGATION CONDUIT
		EXTEND IRRIGATION CONDUIT
dip	DIP	DUCTILE IRON PIPE (SUPPLY LINE) (MAIN) (DIP)
		GALVANIZED STEEL PIPE (SUPPLY LINE) (MAIN) (GSP)
		GALVANIZED STEEL PIPE (SUPPLY LINE) (LATERAL) (GSP)
		PLASTIC PIPE (SUPPLY LINE) (MAIN)
		PLASTIC PIPE (SUPPLY LINE) (LATERAL)
cp	CP	COPPER PIPE (SUPPLY LINE)
dit	DIT	DRIP IRRIGATION TUBING
		REMOTE CONTROL VALVE (RCV) REMOTE CONTROL VALVE (MASTER) (RCVM) REMOTE CONTROL VALVE (MASTER) W/FLOW METER (RCVMF)
P	P	REMOTE CONTROL VALVE W/PRESSURE REGULATOR (RCVP)
		EXISTING MANUAL CONTROL VALVE (MCV)
	V	DRIP VALVE ASSEMBLY (DVA)
	Y	WYE STRAINER ASSEMBLY (WSA)

EXISTING	NEW	ITEM DESCRIPTION
		GATE VALVE (GV)
		BALL VALVE (BV)
		QUICK COUPLING VALVE (QCV)
		CAM COUPLER ASSEMBLY (CCA)
		GARDEN VALVE ASSEMBLY (GARVA)
		PRESSURE REGULATING VALVE (PRV)
		PRESSURE RELIEF VALVE (PRLV)
		FLOW CONTROL VALVE (FCV)
		COMBINATION AIR RELEASE VALVE (CARV)
		CHECK VALVE (CV)
		FLUSH VALVE (FV)
		EXISTING NOZZLE LINE W/TURNING UNION
		EXISTING IRRIGATION SYSTEM
		EXISTING IRRIGATION SYSTEM TO BE REMOVED
		CHAIN LINK GATE
		QUICK COUPLING VALVE W/SPRINKLER PROTECTOR
3	3	SPRINKLER W/SPRINKLER PROTECTOR
	C	CONNECT TO EXISTING SYSTEM
		CAP
		CAP EXISTING
	\\\FR\\\	FIBER ROLL
	\\\CS\\\	COMPOST SOCK

RCV SIZE
IRRIGATION CONTROLLER
CONTROLLER STATION
VALVE IN PARALLEL (IF APPLICABLE)
GPM
QUANTITY OF SPRINKLERS (WHEN SHOWN)

* 2½"-A-2b-40-60

VALVE CODE

* VALVE CODES FOR EXISTING VALVES ARE SHOWN IN A DASHED ENCLOSURE.

STATE OF CALIFORNIA
DEPARTMENT OF TRANSPORTATION

LANDSCAPE AND EROSION CONTROL SYMBOLS

NO SCALE

RSP H2 DATED NOVEMBER 15, 2013 SUPERSEDES RSP H2 DATED JULY 19, 2013 AND STANDARD PLAN H2 DATED MAY 20, 2011 - PAGE 219 OF THE STANDARD PLANS BOOK DATED 2010.

REVISED STANDARD PLAN RSP H2

10-9-13

Dist	COUNTY	ROUTE	POST MILES TOTAL PROJECT	SHEET No.	TOTAL SHEETS
02	Teh	5	10.5	66	199

Gregory A. Balzer
LICENSED LANDSCAPE ARCHITECT

July 19, 2013
PLANS APPROVAL DATE

LICENSED LANDSCAPE ARCHITECT
Gregory A. Balzer 2516
Expiration Date
2-28-15
Renewal Date
7-19-13
Date
STATE OF CALIFORNIA

THE STATE OF CALIFORNIA OR ITS OFFICERS OR AGENTS SHALL NOT BE RESPONSIBLE FOR THE ACCURACY OR COMPLETENESS OF SCANNED COPIES OF THIS PLAN SHEET.

TO ACCOMPANY PLANS DATED 4-1-14

2010 REVISED STANDARD PLAN RSP H4

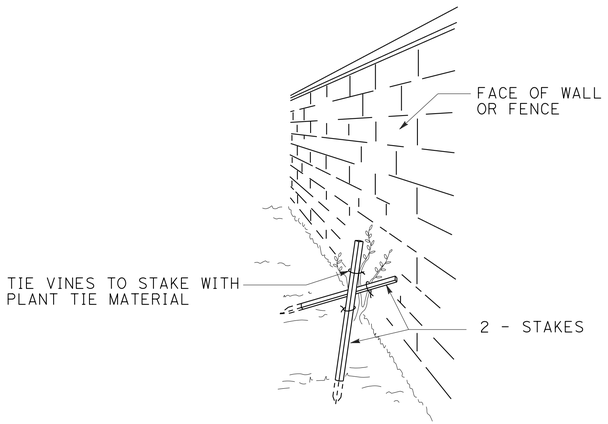

PERSPECTIVE
VINE STAKING

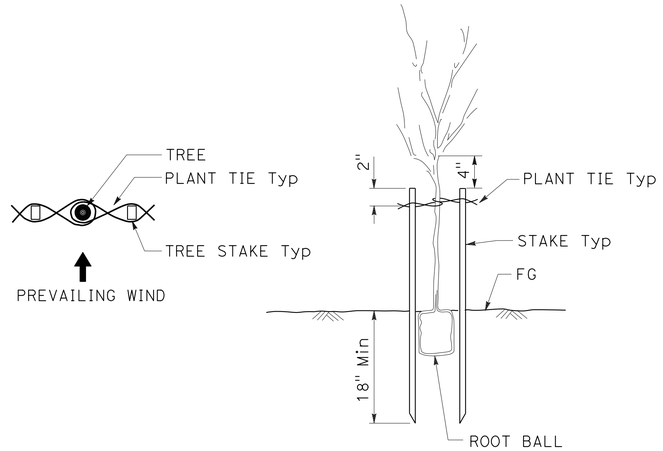

TREE STAKING

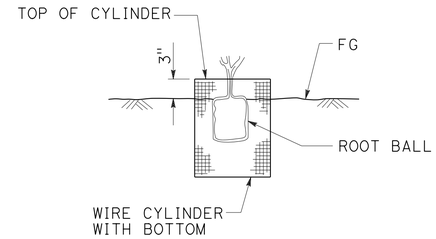

SECTION
ROOT PROTECTOR

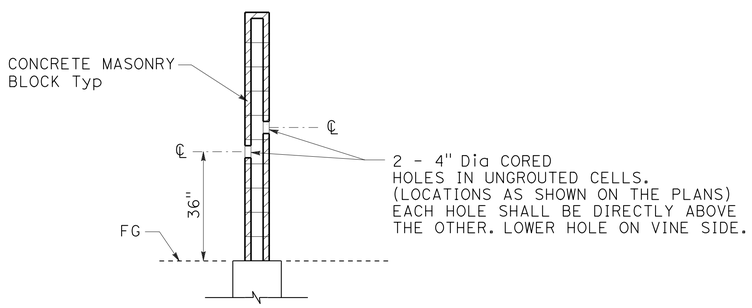

SECTION
CORE HOLE (VINE)

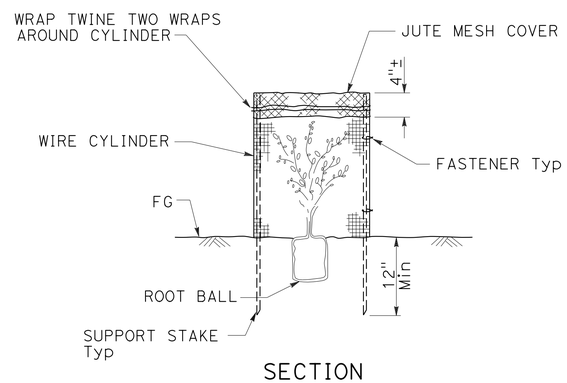

SECTION
FOLIAGE PROTECTOR

STATE OF CALIFORNIA
DEPARTMENT OF TRANSPORTATION

LANDSCAPE DETAILS

NO SCALE

RSP H4 DATED JULY 19, 2013 SUPERSEDES STANDARD PLAN H4
DATED MAY 20, 2011 - PAGE 221 OF THE STANDARD PLANS BOOK DATED 2010.

REVISED STANDARD PLAN RSP H4

6-28-13

Dist	COUNTY	ROUTE	POST MILES TOTAL PROJECT	SHEET No.	TOTAL SHEETS
02	Teh	5	10.5	67	199

LICENSED LANDSCAPE ARCHITECT

July 19, 2013
PLANS APPROVAL DATE

THE STATE OF CALIFORNIA OR ITS OFFICERS OR AGENTS SHALL NOT BE RESPONSIBLE FOR THE ACCURACY OR COMPLETENESS OF SCANNED COPIES OF THIS PLAN SHEET.

LICENSED LANDSCAPE ARCHITECT — Gregory A. Balzer — 2576 — 02-28-15 Renewal Date — 7-19-13 Date — STATE OF CALIFORNIA

TO ACCOMPANY PLANS DATED 4-1-14

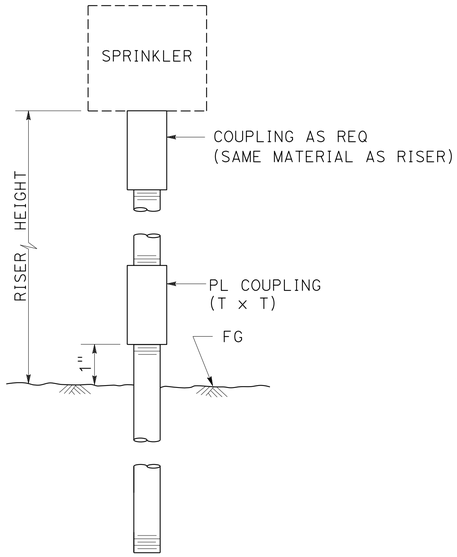

ELEVATION

RISER SPRINKLER ASSEMBLY TYPE I

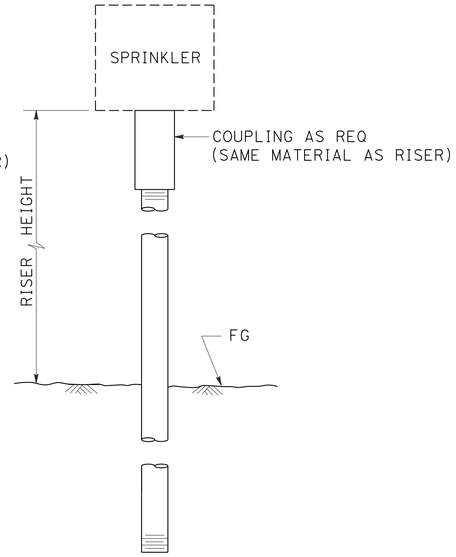

ELEVATION

RISER SPRINKLER ASSEMBLY TYPE II

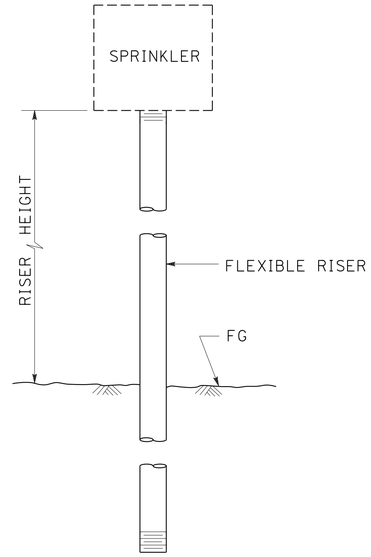

ELEVATION

RISER SPRINKLER ASSEMBLY TYPE III

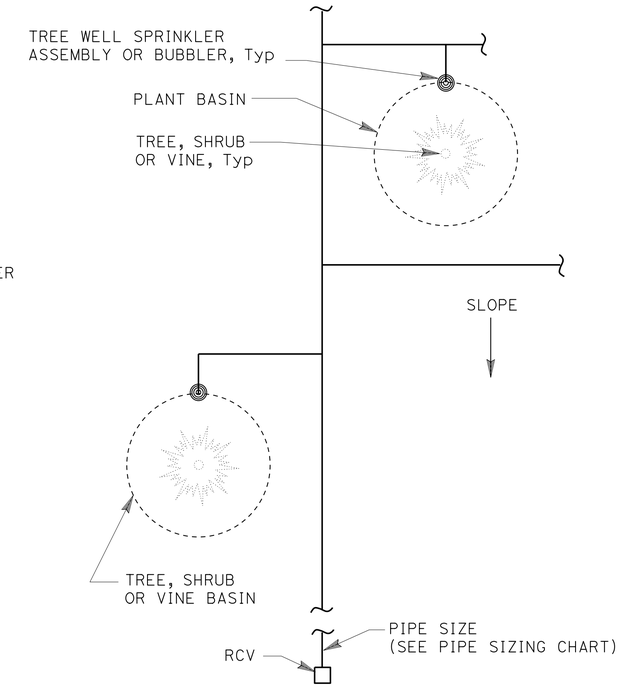

PLAN

NOTES:

1. Install tree well sprinkler assembly on up-hill side of plant when on slope.
2. Install bubbler within basin.

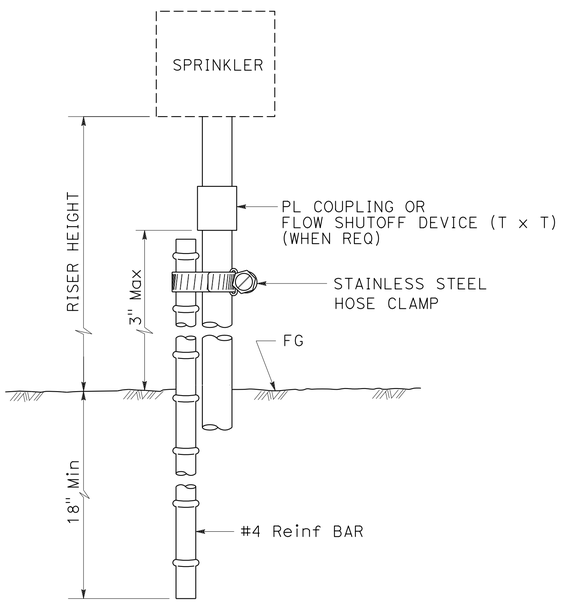

ELEVATION

RISER SPRINKLER ASSEMBLY TYPE IV

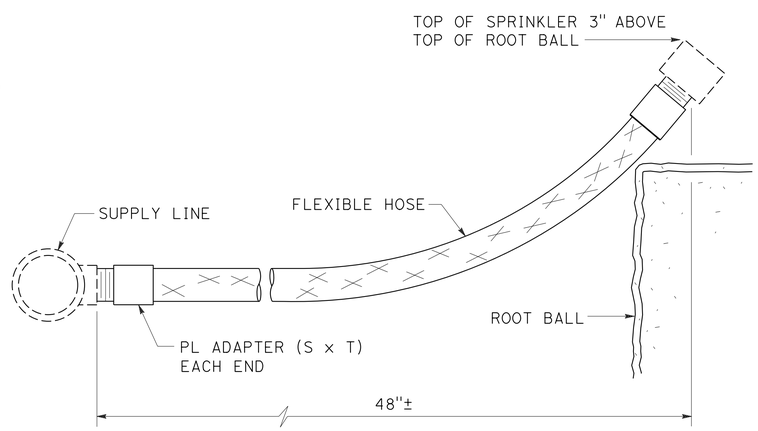

ELEVATION

RISER SPRINKLER ASSEMBLY TYPE V

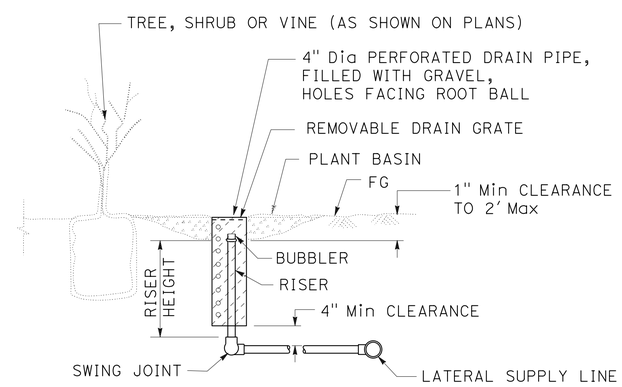

SECTION

TREE WELL SPRINKLER ASSEMBLY

STATE OF CALIFORNIA
DEPARTMENT OF TRANSPORTATION

LANDSCAPE DETAILS

NO SCALE

RSP H5 DATED JULY 19, 2013 SUPERSEDES STANDARD PLAN H5
DATED MAY 20, 2011 - PAGE 222 OF THE STANDARD PLANS BOOK DATED 2010.

REVISED STANDARD PLAN RSP H5

2010 REVISED STANDARD PLAN RSP H5

6-28-13

Dist	COUNTY	ROUTE	POST MILES TOTAL PROJECT	SHEET No.	TOTAL SHEETS
02	Teh	5	10.5	68	199

Gregory A. Balzer
LICENSED LANDSCAPE ARCHITECT

July 19, 2013
PLANS APPROVAL DATE

LICENSED LANDSCAPE ARCHITECT Gregory A. Balzer 2516 Expiration Date 2-28-15 Renewal Date 7-19-13 Date STATE OF CALIFORNIA

THE STATE OF CALIFORNIA OR ITS OFFICERS OR AGENTS SHALL NOT BE RESPONSIBLE FOR THE ACCURACY OR COMPLETENESS OF SCANNED COPIES OF THIS PLAN SHEET.

TO ACCOMPANY PLANS DATED 4-1-14

2010 REVISED STANDARD PLAN RSP H6

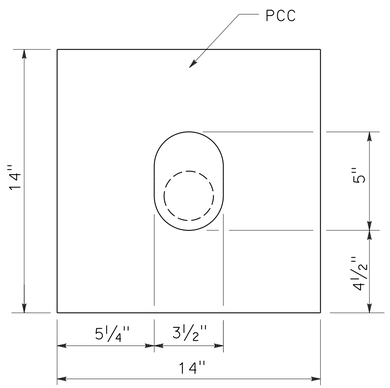

PLAN

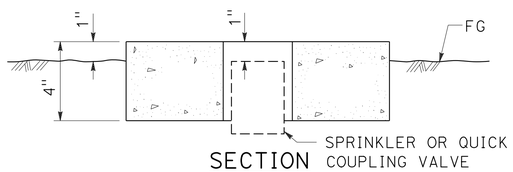

SECTION

SPRINKLER PROTECTOR TYPE I

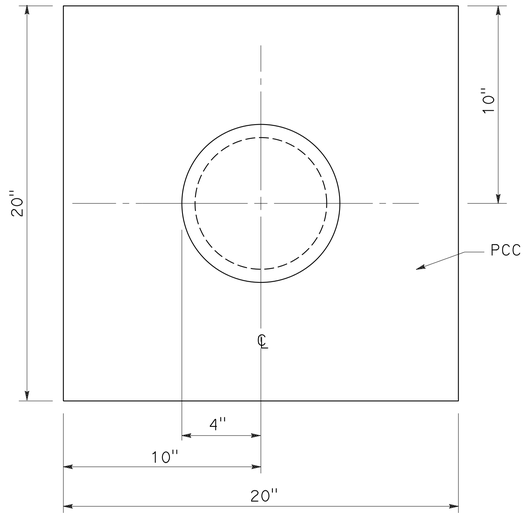

PLAN

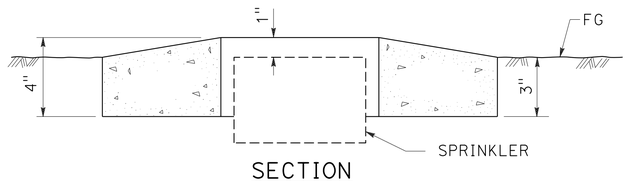

SECTION

SPRINKLER PROTECTOR TYPE II

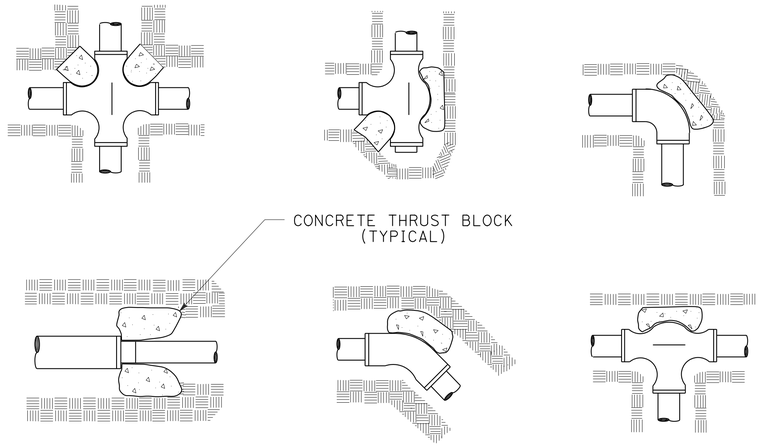

TYPICAL THRUST BLOCKS

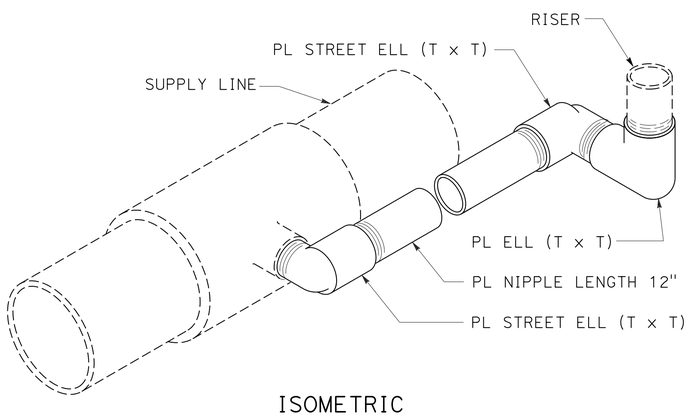

ISOMETRIC

POP-UP SPRINKLER ASSEMBLY TYPE I

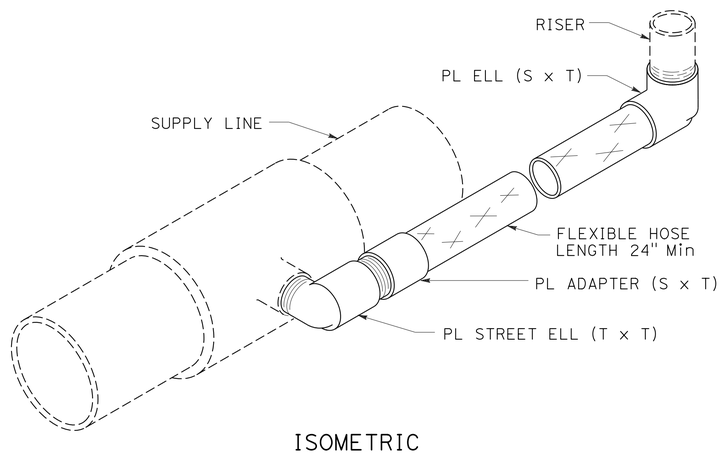

ISOMETRIC

POP-UP SPRINKLER ASSEMBLY TYPE II

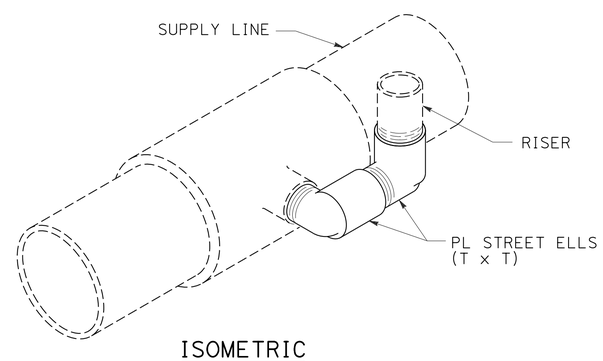

ISOMETRIC

POP-UP SPRINKLER ASSEMBLY TYPE III

STATE OF CALIFORNIA
DEPARTMENT OF TRANSPORTATION

LANDSCAPE DETAILS

NO SCALE

RSP H6 DATED JULY 19, 2013 SUPERSEDES STANDARD PLAN H6
DATED MAY 20, 2011 - PAGE 223 OF THE STANDARD PLANS BOOK DATED 2010.

REVISED STANDARD PLAN RSP H6

6-28-13

Dist	COUNTY	ROUTE	POST MILES TOTAL PROJECT	SHEET No.	TOTAL SHEETS
02	Teh	5	10.5	69	199

LICENSED LANDSCAPE ARCHITECT

July 19, 2013
PLANS APPROVAL DATE

THE STATE OF CALIFORNIA OR ITS OFFICERS OR AGENTS SHALL NOT BE RESPONSIBLE FOR THE ACCURACY OR COMPLETENESS OF SCANNED COPIES OF THIS PLAN SHEET.

LICENSED LANDSCAPE ARCHITECT — Gregory A. Balzer 2516 — Expiration Date 2-28-15 — Renewal Date 7-19-13 — Date — STATE OF CALIFORNIA

TO ACCOMPANY PLANS DATED 4-1-14

2010 REVISED STANDARD PLAN RSP H7

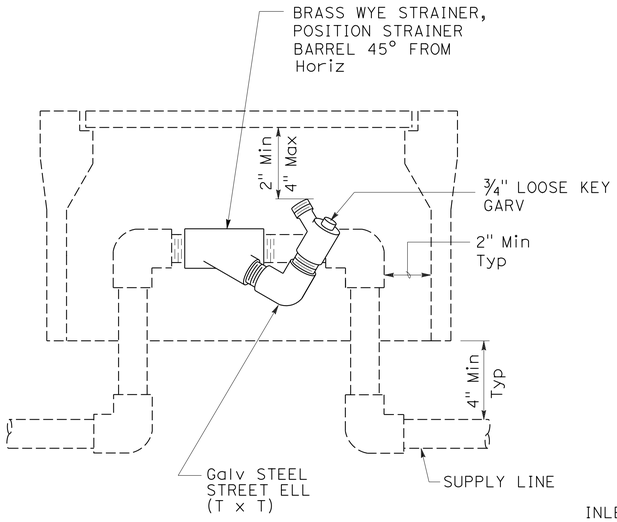

ELEVATION
WYE STRAINER ASSEMBLY

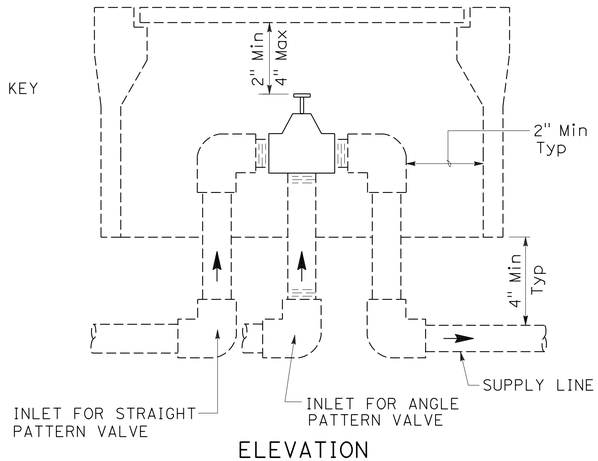

ELEVATION
VALVE

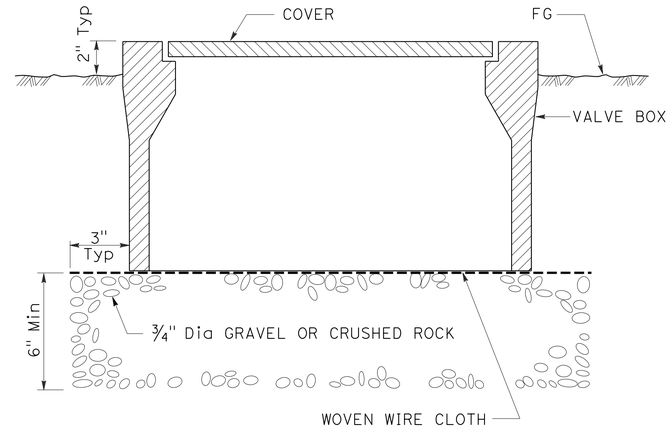

SECTION
VALVE BOX

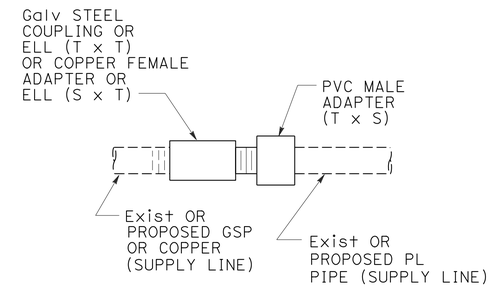

GALVANIZED OR COPPER PIPE CONNECTION TO PLASTIC PIPE

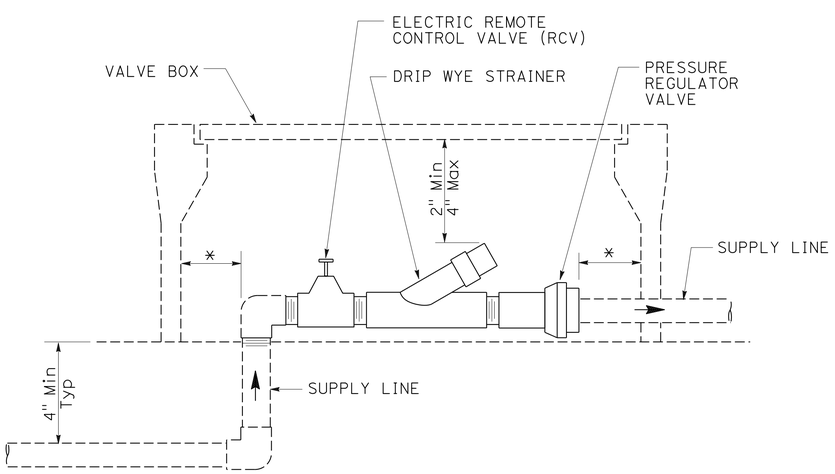

* 2" CLEARANCE ON ALL SIDES

ELEVATION
DRIP VALVE ASSEMBLY

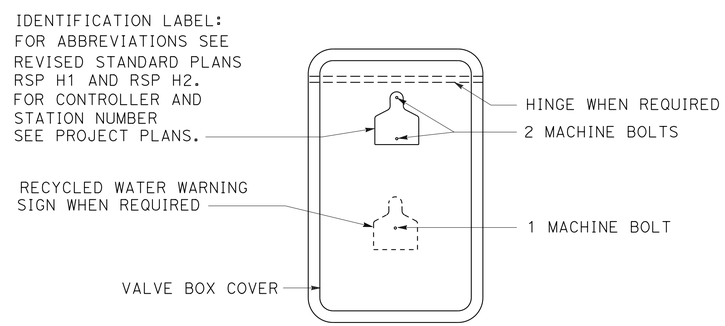

PLAN

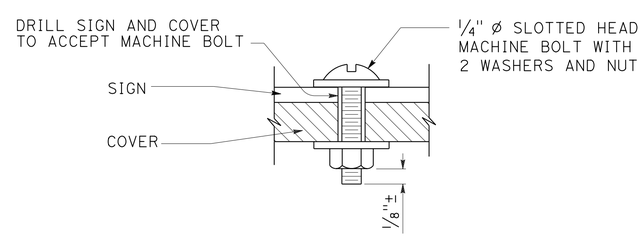

SECTION
VALVE BOX IDENTIFICATION

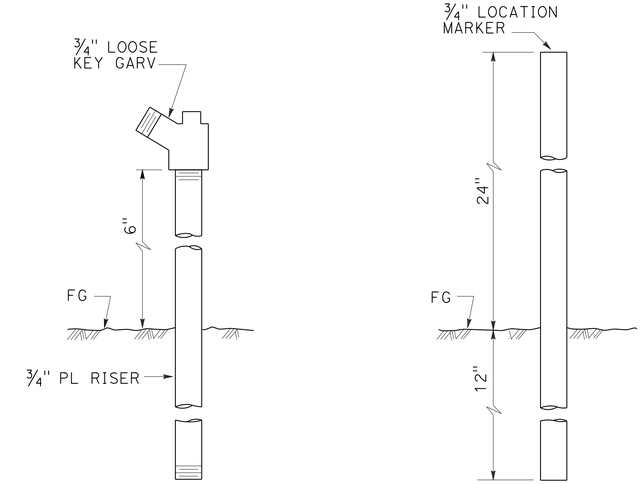

ELEVATION
GARDEN VALVE ASSEMBLY

ELEVATION
LOCATION MARKER

GARDEN VALVE ASSEMBLY

STATE OF CALIFORNIA
DEPARTMENT OF TRANSPORTATION

LANDSCAPE DETAILS

NO SCALE

RSP H7 DATED JULY 19, 2013 SUPERSEDES STANDARD PLAN H7
DATED MAY 20, 2011 - PAGE 224 OF THE STANDARD PLANS BOOK DATED 2010.

REVISED STANDARD PLAN RSP H7

6-20-13

Dist	COUNTY	ROUTE	POST MILES TOTAL PROJECT	SHEET No.	TOTAL SHEETS
02	Teh	5	10.5	70	199

Gregory A. Balzer
LICENSED LANDSCAPE ARCHITECT

July 19, 2013
PLANS APPROVAL DATE

LICENSED LANDSCAPE ARCHITECT Gregory A. Balzer 2516 Gregory A. Balzer 6-10-13 Expiration Date 2-28-15 Renewal Date 7-19-13 Date STATE OF CALIFORNIA

THE STATE OF CALIFORNIA OR ITS OFFICERS OR AGENTS SHALL NOT BE RESPONSIBLE FOR THE ACCURACY OR COMPLETENESS OF SCANNED COPIES OF THIS PLAN SHEET.

TO ACCOMPANY PLANS DATED 4-1-14

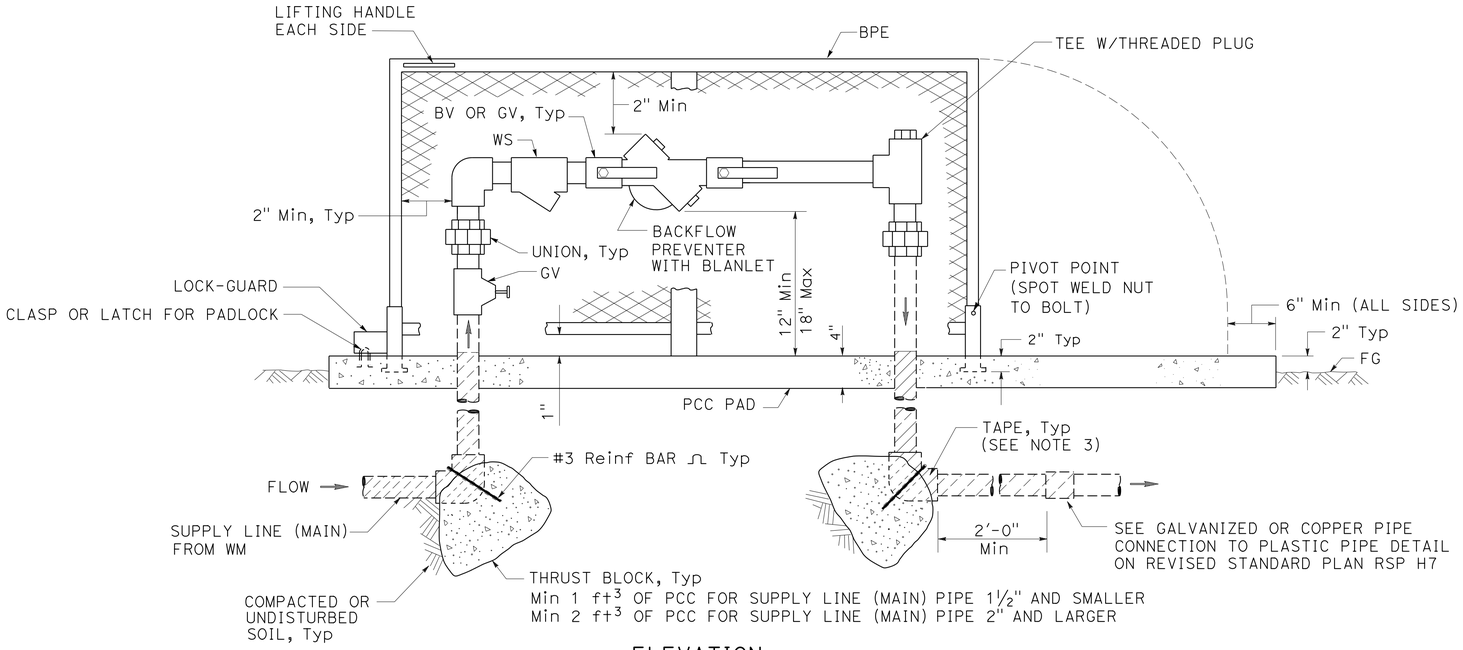

ELEVATION

BACKFLOW PREVENTER ASSEMBLY

IN ONE PIECE ENCLOSURE

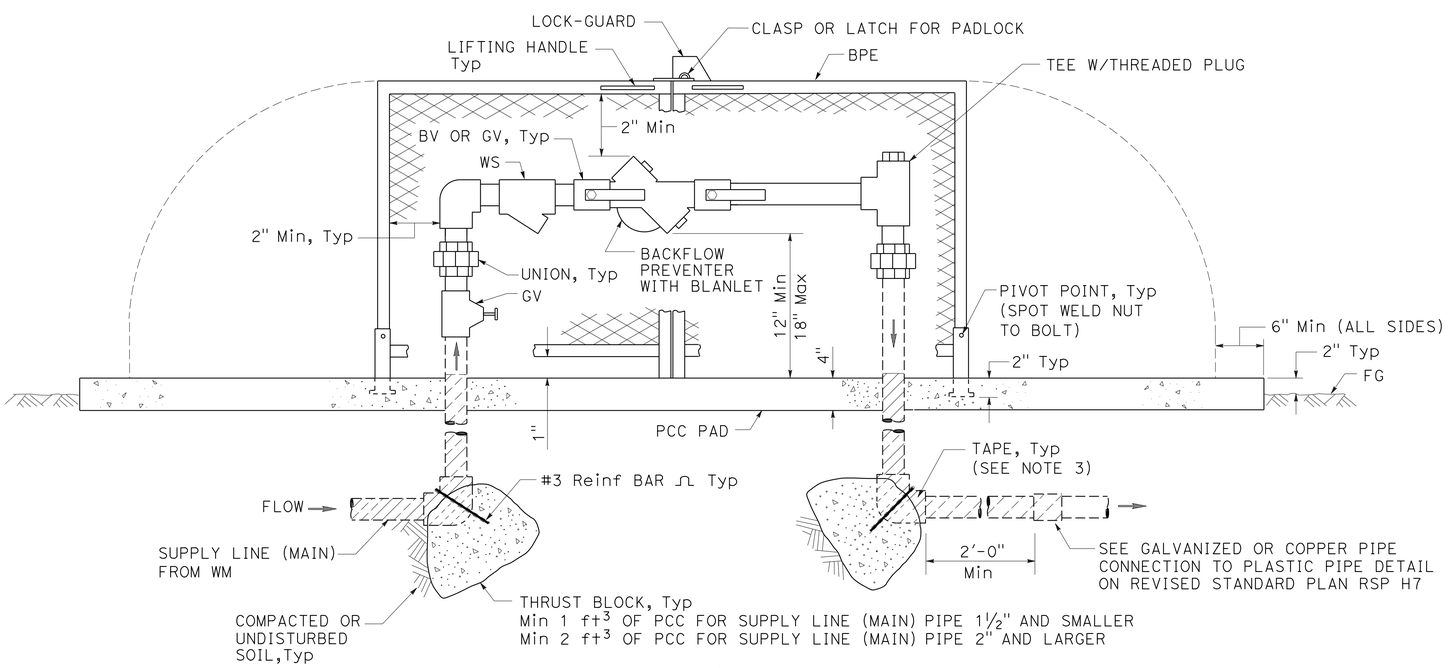

ELEVATION

BACKFLOW PREVENTER ASSEMBLY

IN TWO PIECE ENCLOSURE

NOTES:

1. Wye strainer and fittings must be the same size as the backflow preventer shown on the plans.
2. Backflow preventer assembly manifold pipe must be the same pipe as the supply line (main) pipe to be installed from the water meter to the backflow preventer assembly.
3. All metal in contact with soil and Portland Cement Concrete must be wrapped with 2" wide plastic backed adhesive polyethylene tape 20 mil thick with ½" overlap.

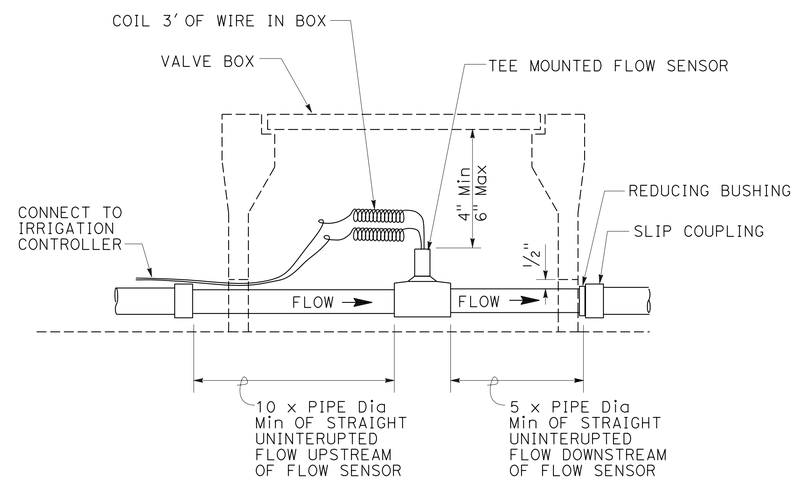

SECTION

FLOW SENSOR

STATE OF CALIFORNIA
DEPARTMENT OF TRANSPORTATION

LANDSCAPE DETAILS

NO SCALE

RSP H8 DATED JULY 19, 2013 SUPERSEDES STANDARD PLAN H8
DATED MAY 20, 2011 - PAGE 225 OF THE STANDARD PLANS BOOK DATED 2010.

REVISED STANDARD PLAN RSP H8

2010 REVISED STANDARD PLAN RSP H8

6-28-13

Dist	COUNTY	ROUTE	POST MILES TOTAL PROJECT	SHEET No.	TOTAL SHEETS
02	Teh	5	10.5	71	199

LICENSED LANDSCAPE ARCHITECT

July 19, 2013
PLANS APPROVAL DATE

LICENSED LANDSCAPE ARCHITECT
Gregory A. Balzer 2516
Expiration Date
2-28-15
Renewal Date
7-19-13
Date
STATE OF CALIFORNIA

THE STATE OF CALIFORNIA OR ITS OFFICERS OR AGENTS SHALL NOT BE RESPONSIBLE FOR THE ACCURACY OR COMPLETENESS OF SCANNED COPIES OF THIS PLAN SHEET.

TO ACCOMPANY PLANS DATED 4-1-14

2010 REVISED STANDARD PLAN RSP H9

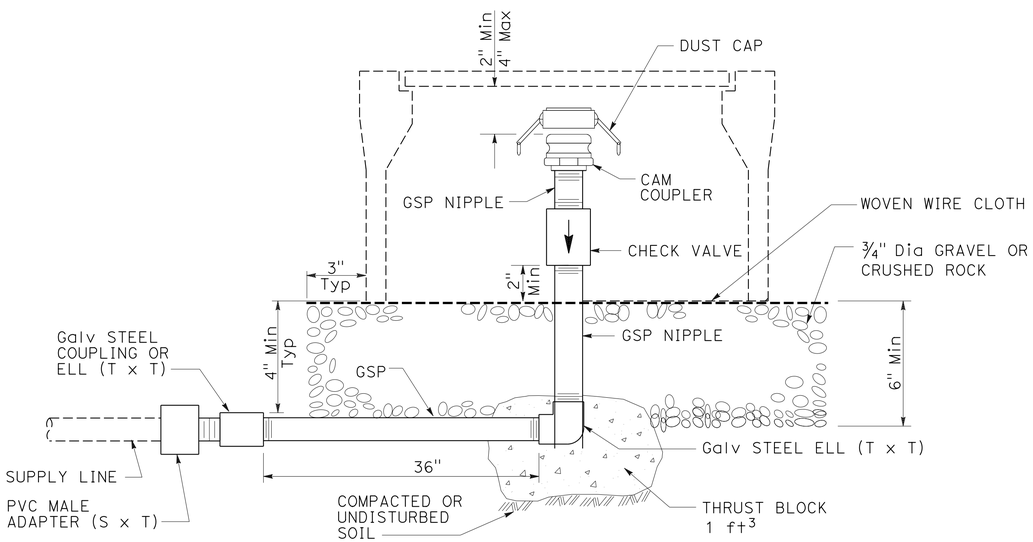

ELEVATION

CAM COUPLER ASSEMBLY

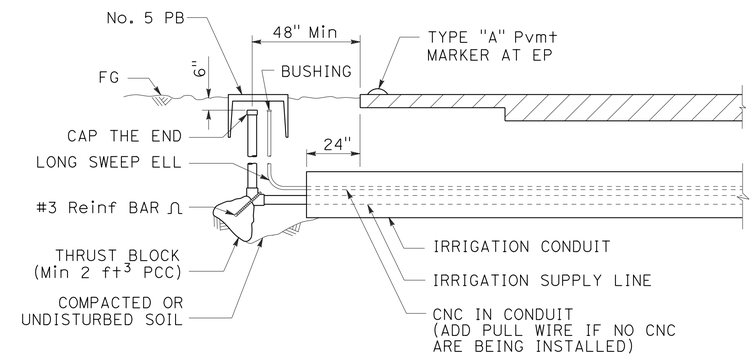

SECTION

IRRIGATION CONDUIT

UNDER TRAVELED WAY

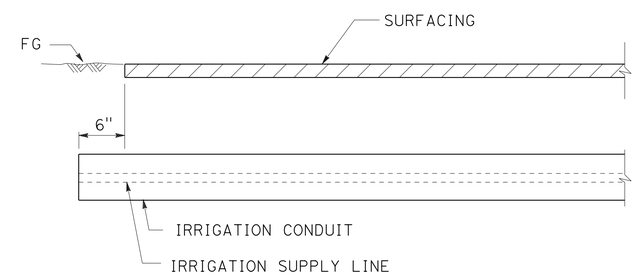

SECTION

IRRIGATION CONDUIT

UNDER SIDEWALKS, DRIVEWAYS AND PATHS

STATE OF CALIFORNIA
DEPARTMENT OF TRANSPORTATION

LANDSCAPE DETAILS

NO SCALE

RSP H9 DATED JULY 19, 2013 SUPERSEDES STANDARD PLAN H9
DATED MAY 20, 2011 - PAGE 226 OF THE STANDARD PLANS BOOK DATED 2010.

REVISED STANDARD PLAN RSP H9

6-28-13

Dist	COUNTY	ROUTE	POST MILES TOTAL PROJECT	SHEET No.	TOTAL SHEETS
02	Teh	5	10.5	72	199

Gregory A. Balzer
LICENSED LANDSCAPE ARCHITECT

July 19, 2013
PLANS APPROVAL DATE

LICENSED LANDSCAPE ARCHITECT
Gregory A. Balzer 2576
Expiration Date
2-28-15
Renewal Date
7-19-13
Date
STATE OF CALIFORNIA

THE STATE OF CALIFORNIA OR ITS OFFICERS OR AGENTS SHALL NOT BE RESPONSIBLE FOR THE ACCURACY OR COMPLETENESS OF SCANNED COPIES OF THIS PLAN SHEET.

TO ACCOMPANY PLANS DATED 4-1-14

2010 REVISED STANDARD PLAN RSP H9A

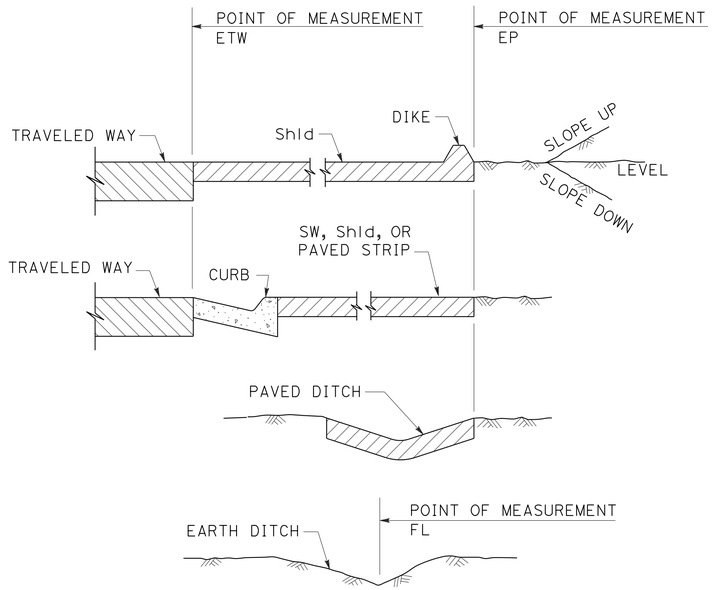

SECTION
POINTS OF MEASUREMENT

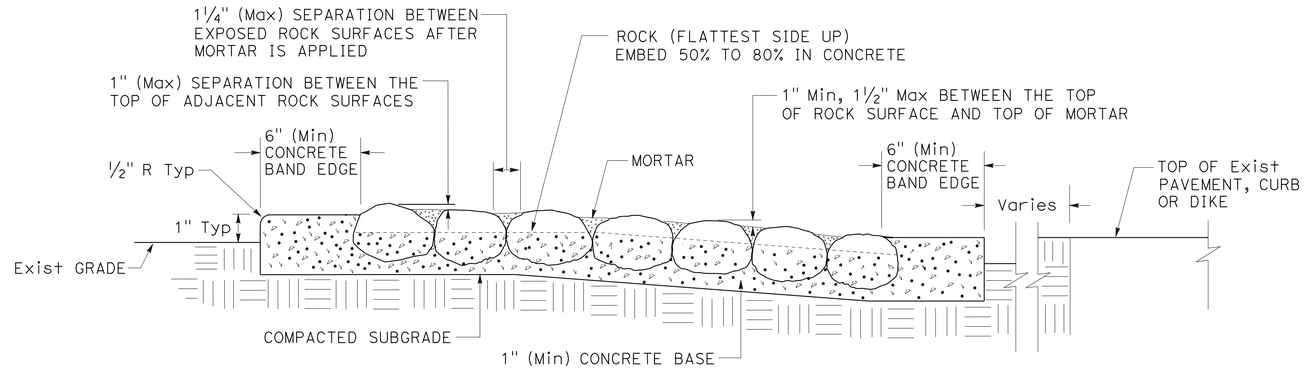

SECTION
ROCK BLANKET

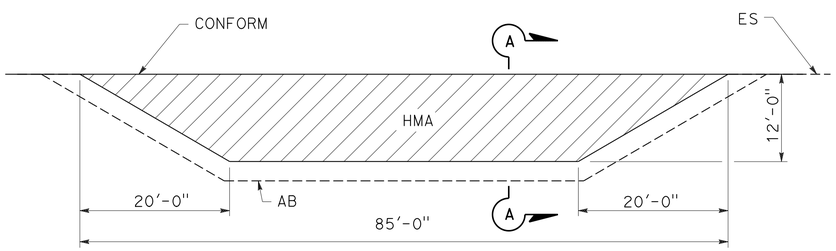

PLAN

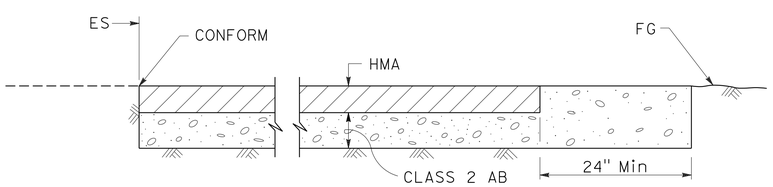

SECTION A-A
MAINTENANCE VEHICLE PULLOUT

STATE OF CALIFORNIA
DEPARTMENT OF TRANSPORTATION

LANDSCAPE DETAILS

NO SCALE

RSP H9A DATED JULY 19, 2013 SUPPLEMENTS THE STANDARD PLANS BOOK DATED 2010.

REVISED STANDARD PLAN RSP H9A

6-21-13

Dist	COUNTY	ROUTE	POST MILES TOTAL PROJECT	SHEET No.	TOTAL SHEETS
02	Teh	5	10.5	73	199

REGISTERED CIVIL ENGINEER

July 19, 2013
PLANS APPROVAL DATE

REGISTERED PROFESSIONAL ENGINEER
Gurinderpal Bhullar
No. C48815
Exp. 9-30-14
CIVIL
STATE OF CALIFORNIA

THE STATE OF CALIFORNIA OR ITS OFFICERS OR AGENTS SHALL NOT BE RESPONSIBLE FOR THE ACCURACY OR COMPLETENESS OF SCANNED COPIES OF THIS PLAN SHEET.

TO ACCOMPANY PLANS DATED 4-1-14

2010 REVISED STANDARD PLAN RSP T9

TABLE 1

TAPER LENGTH CRITERIA AND CHANNELIZING DEVICE SPACING

SPEED (S)	MINIMUM TAPER LENGTH * FOR WIDTH OF OFFSET 12 FEET (W)				MAXIMUM CHANNELIZING DEVICE SPACING		
					X	Y	Z **
	TANGENT 2L	MERGING L	SHIFTING L/2	SHOULDER L/3	TAPER	TANGENT	CONFLICT
mph	ft	ft	ft	ft	ft	ft	ft
20	160	80	40	27	20	40	10
25	250	125	63	42	25	50	12
30	360	180	90	60	30	60	15
35	490	245	123	82	35	70	17
40	640	320	160	107	40	80	20
45	1080	540	270	180	45	90	22
50	1200	600	300	200	50	100	25
55	1320	660	330	220	55	110	27
60	1440	720	360	240	60	120	30
65	1560	780	390	260	65	130	32
70	1680	840	420	280	70	140	35

* - For other offsets, use the following merging taper length formula for L:
For speed of 40 mph or less, $L = WS^2/60$
For speed of 45 mph or more, $L = WS$

Where: L = Taper length in feet
W = Width of offset in feet
S = Posted speed limit, off-peak 85th-percentile speed prior to work starting, or the anticipated operating speed in mph

** - Use for taper and tangent sections where there are no pavement markings or where there is a conflict between existing pavement markings and channelizers (CA).

TABLE 2

LONGITUDINAL BUFFER SPACE AND FLAGGER STATION SPACING

SPEED *	Min D **	DOWNGRADE Min D ***		
		-3%	-6%	-9%
mph	ft	ft	ft	ft
20	115	116	120	126
25	155	158	165	173
30	200	205	215	227
35	250	257	271	287
40	305	315	333	354
45	360	378	400	427
50	425	446	474	507
55	495	520	553	593
60	570	598	638	686
65	645	682	728	785
70	730	771	825	891

* - Speed is posted speed limit, off-peak 85th-percentile speed prior to work starting, or the anticipated operating speed in mph

** - Longitudinal buffer space or flagger station spacing

*** - Use on sustained downgrade steeper than -3 percent and longer than 1 mile.

TABLE 3

ADVANCE WARNING SIGN SPACING

ROAD TYPE	DISTANCE BETWEEN SIGNS *		
	A	B	C
	ft	ft	ft
URBAN - 25 mph OR LESS	100	100	100
URBAN - MORE THAN 25 mph TO 40 mph	250	250	250
URBAN - MORE THAN 40 mph	350	350	350
RURAL	500	500	500
EXPRESSWAY / FREEWAY	1000	1500	2640

* - The distances are approximate, are intended for guidance purposes only, and should be applied with engineering judgment. These distances should be adjusted by the Engineer for field conditions, if necessary, by increasing or decreasing the recommmended distances.

STATE OF CALIFORNIA
DEPARTMENT OF TRANSPORTATION

TRAFFIC CONTROL SYSTEM TABLES FOR LANE AND RAMP CLOSURES

NO SCALE

RSP T9 DATED JULY 19, 2013 SUPERSEDES RSP T9 DATED APRIL 19, 2013 THAT SUPPLEMENTS THE STANDARD PLANS BOOK DATED 2010.

REVISED STANDARD PLAN RSP T9

4-30-13

Dist	COUNTY	ROUTE	POST MILES TOTAL PROJECT	SHEET No.	TOTAL SHEETS
02	Teh	5	10.5	74	199

REGISTERED CIVIL ENGINEER

April 19, 2013
PLANS APPROVAL DATE

REGISTERED PROFESSIONAL ENGINEER Gurinderpal Bhullar No. C48815 Exp. 9-30-14 CIVIL STATE OF CALIFORNIA

THE STATE OF CALIFORNIA OR ITS OFFICERS OR AGENTS SHALL NOT BE RESPONSIBLE FOR THE ACCURACY OR COMPLETENESS OF SCANNED COPIES OF THIS PLAN SHEET.

TO ACCOMPANY PLANS DATED 4-1-14

TYPICAL RAMP CLOSURES

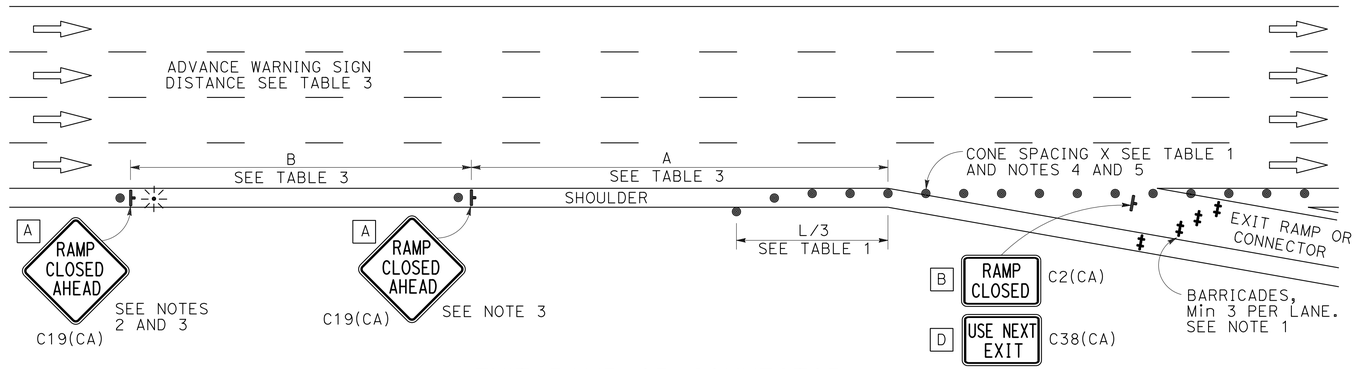

EXIT RAMP OR CONNECTOR

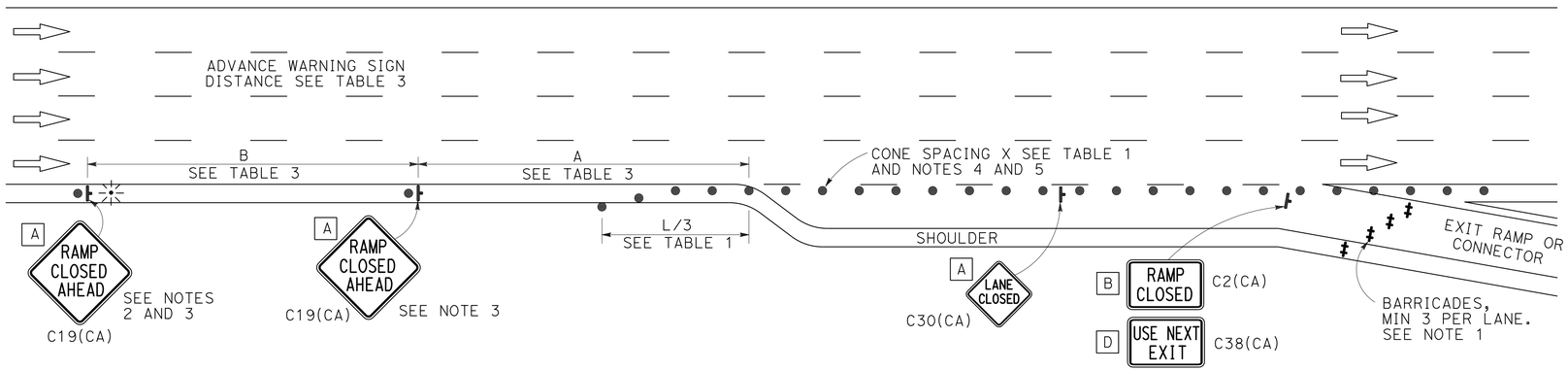

EXIT RAMP OR CONNECTOR WITH ADDITIONAL LANE

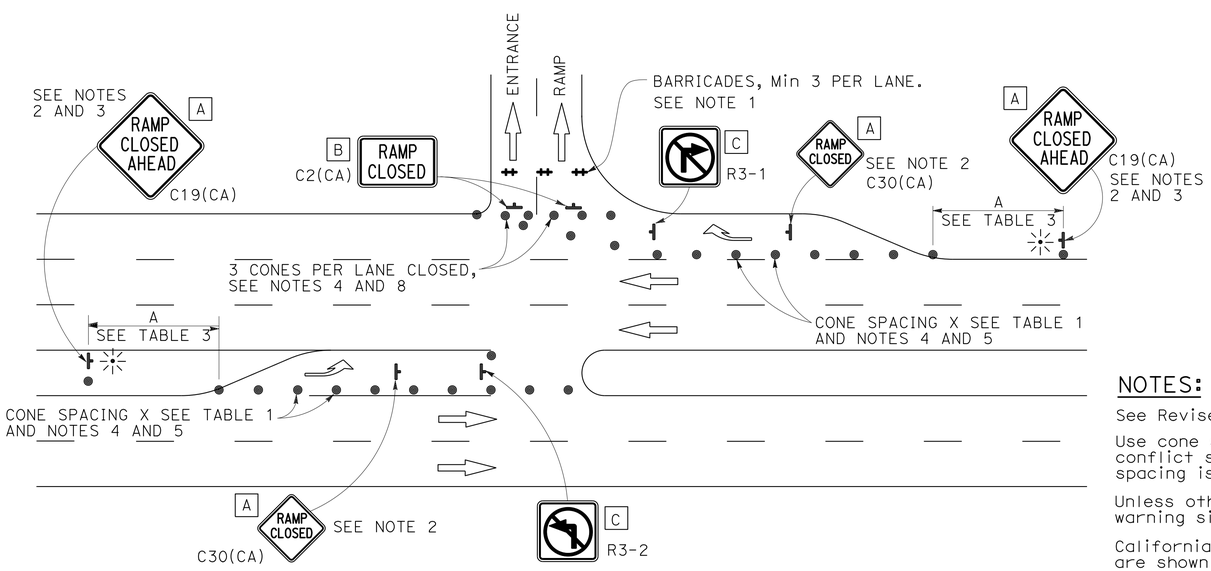

ENTRANCE RAMP WITH TURNING POCKETS

SIGN PANEL SIZE (Min)

- A 48" x 48"
- B 48" x 30"
- C 36" x 36"
- D 48" x 36"

LEGEND

- TRAFFIC CONE
- TEMPORARY TRAFFIC CONTROL SIGN
- BARRICADES
- PORTABLE FLASHING BEACON

NOTES:

1. Barricades shall be Type I, II, or III for closures lasting one week or less and Type III for closures lasting longer than one week.
2. In addition to placing the C19(CA) "RAMP CLOSED AHEAD" and C30(CA) "RAMP CLOSED" signs, black on orange overlay plates with the word "CLOSED" may be mounted, as directed by the Engineer, on all guide signs that refer to the closed ramp. The letter size on the overlay shall be the same as the guide sign.
3. Each advance C19(CA) "RAMP CLOSED AHEAD" sign shall be equipped with at least two flags for daytime closure. Each flag shall be at least 16" x 16" in size and shall be orange or fluorescent red-orange in color. A flashing beacon shall be placed on top of the first C19(CA) sign during hours of darkness.
4. All cones used for ramp closures during the hours of darkness shall be fitted with retroreflective bands (or sleeves) as specified in the specifications.
5. Portable delineators, placed at one-half the spacing indicated for traffic cones, may be used instead of cones for daytime ramp closures only.
6. At least one person shall be assigned to provide full time maintenance of traffic control devices, unless otherwise directed by the Engineer.
7. The existing "EXIT" signs shall be covered during ramp closures.
8. A minimum of 3 cones shall be placed transversely across each closed lane and shoulder.

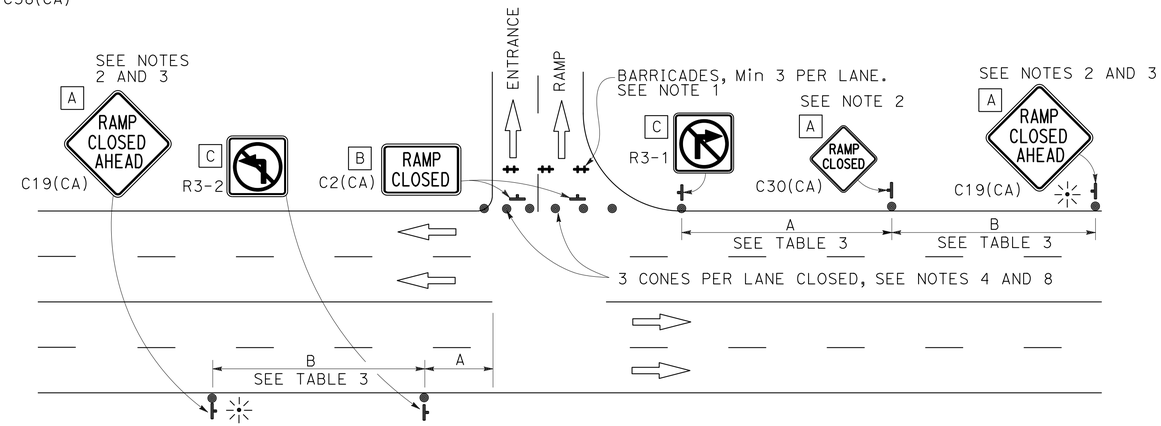

ENTRANCE RAMP WITHOUT TURNING POCKETS

NOTES:

See Revised Standard Plan RSP T9 for tables.

Use cone spacing X for taper segment, Y for tangent segment or Z for conflict situations, as approriate, per Table 1, unless X, Y, or Z cone spacing is shown on this sheet.

Unless otherwise specified in the special provisions, all temporary warning signs shall have black legend on fluorescent orange background.

California codes are designated by (CA). Otherwise, Federal (MUTCD) codes are shown.

STATE OF CALIFORNIA
DEPARTMENT OF TRANSPORTATION

TRAFFIC CONTROL SYSTEM FOR RAMP CLOSURE

NO SCALE

RSP T14 DATED APRIL 19, 2013 SUPERSEDES STANDARD PLAN T14 DATED MAY 20, 2011 - PAGE 242 OF THE STANDARD PLANS BOOK DATED 2010.

REVISED STANDARD PLAN RSP T14

2010 REVISED STANDARD PLAN RSP T14

12-18-12

Dist	COUNTY	ROUTE	POST MILES TOTAL PROJECT	SHEET No.	TOTAL SHEETS
02	Teh	5	10.5	75	199

Theresa Gabriel
REGISTERED ELECTRICAL ENGINEER

July 19, 2013
PLANS APPROVAL DATE

REGISTERED PROFESSIONAL ENGINEER
Theresa Aziz Gabriel
No. E15129
Exp. 6-30-14
ELECTRICAL
STATE OF CALIFORNIA

THE STATE OF CALIFORNIA OR ITS OFFICERS OR AGENTS SHALL NOT BE RESPONSIBLE FOR THE ACCURACY OR COMPLETENESS OF SCANNED COPIES OF THIS PLAN SHEET.

TO ACCOMPANY PLANS DATED 4-1-14

LEGEND:

AB	ABANDON. IF APPLIED TO CONDUIT, REMOVE CONDUCTORS
BC	INSTALL PULL BOX IN EXISTING CONDUIT RUN
BP	PEDESTRIAN BARRICADE, TYPE AS INDICATED ON PLAN
CB	INSTALL CONDUIT INTO EXISTING PULL BOX
CC	CONNECT NEW AND EXISTING CONDUIT. REMOVE EXISTING CONDUCTORS AND INSTALL CONDUCTORS AS INDICATED
CF	CONDUIT TO REMAIN FOR FUTURE USE. REMOVE CONDUCTORS. INSTALL PULL TAPE
DH	DETECTOR HANDHOLE
FA	FOUNDATION TO BE ABANDONED
IS	INSTALL SIGN ON SIGNAL MAST ARM
NS	NO SLIP BASE ON STANDARD
PEC	PHOTOELECTRIC CONTROL
PEU	PHOTOELECTRIC UNIT
RC	EQUIPMENT OR MATERIAL TO BE REMOVED AND BECOME THE PROPERTY OF THE CONTRACTOR
RE	REMOVE ELECTROLIER, FUSES AND BALLAST. TAPE ENDS OF CONDUCTORS
RL	RELOCATE EQUIPMENT
RR	REMOVE AND REUSE EQUIPMENT
RS	REMOVE AND SALVAGE EQUIPMENT
SC	SPLICE NEW TO EXISTING CONDUCTORS
SD	SERVICE DISCONNECT
TSP	TELEPHONE SERVICE POINT

ABBREVIATIONS

APS	ACCESSIBLE PEDESTRIAN SIGNAL
BBS	BATTERY BACKUP SYSTEM
BC	BOLT CIRCLE
BPB	BICYCLE PUSH BUTTON
C	CONDUIT
CB	CIRCUIT BREAKER
CCTV	CLOSED CIRCUIT TELEVISION
Ckt	CIRCUIT
CMS	CHANGEABLE MESSAGE SIGN
Ctid	CALTRANS IDENTIFICATION
Comm	COMMUNICATION
DLC	LOOP DETECTOR LEAD-IN CABLE
EMS	EXTINGUISHABLE MESSAGE SIGN
EVUC	EMERGENCY VEHICLE UNIT CABLE
EVUD	EMERGENCY VEHICLE UNIT DETECTOR
FB	FLASHING BEACON
FBCA	FLASHING BEACON CONTROL ASSEMBLY
FBS	FLASHING BEACON WITH SLIP BASE
FO	FIBER OPTIC
G	EQUIPMENT GROUNDING CONDUCTOR
GB	GROUND BUS
GFCI	GROUND FAULT CIRCUIT INTERRUPTER
HAR	HIGHWAY ADVISORY RADIO
Hex	HEXAGONAL
HPS	HIGH PRESSURE SODIUM
IISNS	INTERNALLY ILLUMINATED STREET NAME SIGN
ISL	INDUCTION SIGN LIGHTING
LED	LIGHT EMITTING DIODE
LMA	LUMINAIRE MAST ARM
LPS	LOW PRESSURE SODIUM
Ltg	LIGHTING
Lum	LUMINAIRE
M	METERED
MAT	MAST ARM MOUNTING TOP ATTACHMENT
MAS	MAST ARM MOUNTING SIDE ATTACHMENT
M/M	MULTIPLE TO MULTIPLE TRANSFORMER
Mtg	MOUNTING
MV	MERCURY VAPOR LIGHTING FIXTURE
MVDS	MICROWAVE VEHICLE DETECTION SYSTEM
N	NEUTRAL (GROUNDED CONDUCTOR)
NB	NEUTRAL BUS
NC	NORMALLY CLOSE
NO	NORMALLY OPEN
P	CIRCUIT BREAKER'S POLE
PB	PULL BOX
PBA	PUSH BUTTON ASSEMBLY
PEC	PHOTOELECTRIC CONTROL
Ped	PEDESTRIAN
PEU	PHOTOELECTRIC UNIT
PT	CONDUIT WITH PULL TAPE
RE	RELOCATED EQUIPMENT
RM	RAMP METERING
RWIS	ROADSIDE WEATHER INFORMATION SYSTEM
SB	SLIP BASE
SIC	SIGNAL INTERCONNECT CABLE
Sig	SIGNAL
SMA	SIGNAL MAST ARM
SNS	STREET NAME SIGN
SP	SERVICE POINT
TDC	TELEPHONE DEMARCATION CABINET
TMS	TRAFFIC MONITORING STATION
TOS	TRAFFIC OPERATIONS SYSTEM
Veh	VEHICLE
VIVDS	VIDEO IMAGE VEHICLE DETECTION SYSTEM
WIM	WEIGH-IN-MOTION
Xfmr	TRANSFORMER

SOFFIT AND WALL MOUNTED LUMINAIRES

PENDANT, 70 W HPS UNLESS OTHERWISE SPECIFIED

FLUSH, 70 W HPS UNLESS OTHERWISE SPECIFIED

WALL SURFACE, 70 W HPS UNLESS OTHERWISE SPECIFIED

EXISTING SOFFIT OR WALL LUMINAIRE TO REMAIN UNMODIFIED

EXISTING SOFFIT OR WALL LUMINAIRE TO BE MODIFIED AS SPECIFIED

NOTE:

Arrow indicates "street side" of luminaire.

COMMONLY USED SYMBOLS FOR UNITED STATES CUSTOMARY UNITS OF MEASUREMENT:

SYMBOL USED	DEFINITIONS
Ω	OHMS
min	MINUTE
s	SECOND
bps	BITS PER SECOND
Bps	BYTES PER SECOND
A	AMPERE
V	VOLT
V(dc)	VOLT (DIRECT CURRENT)
V(ac)	VOLT (ALTERNATING CURRENT)
FC	FOOT - CANDLE
W	WATTS
VA	VOLT-AMPERE
M	MEGA
k	KILO
m	MILLI
μ	MICRO
P	PICO
Hz	HERTZ

MISCELLANEOUS ELECTROLIERS

NEW	EXISTING	
		LUMINAIRE ON WOOD POLE
		NON-STANDARD ELECTROLIER (SEE PROJECT NOTES OR PROJECT PLANS)
		CITY ELECTROLIER
		ELECTROLIER FOUNDATION (FUTURE INSTALLATION)

NOTES:

1. HPS luminaires shall be 310 W HPS when installed on Type 21, 21D, 30, 31 and 32 Standards, unless otherwise specified. HPS luminaires shall be 200 W when installed on other type standards or poles, unless otherwise specified.
2. LED luminaires shall be 235 W when installed on Type 21, 21D, 30, 31 and 32 Standards, unless otherwise specified. LED luminaires shall be 165 W when installed on other type standards or poles, unless otherwise specified.
3. Luminaires shall be the cutoff type, ANSI Type III medium cutoff lighting distribution, unless otherwise specified.

STANDARD ELECTROLIER

NEW	EXISTING	STANDARD TYPE
		15
		15D
		15 STRUCTURE
		15D STRUCTURE
		21
		21D
		21 STRUCTURE
		21D STRUCTURE
		30
		31
		32

STATE OF CALIFORNIA
DEPARTMENT OF TRANSPORTATION

ELECTRICAL SYSTEMS (LEGEND AND ABBREVIATIONS)

NO SCALE

RSP ES-1A DATED JULY 19, 2013 SUPERSEDES STANDARD PLAN ES-1A DATED MAY 20, 2011 - PAGE 425 OF THE STANDARD PLANS BOOK DATED 2010.

REVISED STANDARD PLAN RSP ES-1A

2010 REVISED STANDARD PLAN RSP ES-1A

Dist	COUNTY	ROUTE	POST MILES TOTAL PROJECT	SHEET No.	TOTAL SHEETS
02	Teh	5	10.5	76	199

Theresa Gabriel
REGISTERED ELECTRICAL ENGINEER

July 19, 2013
PLANS APPROVAL DATE

REGISTERED PROFESSIONAL ENGINEER Theresa Aziz Gabriel No. E15129 Exp. 6-30-14 ELECTRICAL STATE OF CALIFORNIA

THE STATE OF CALIFORNIA OR ITS OFFICERS OR AGENTS SHALL NOT BE RESPONSIBLE FOR THE ACCURACY OR COMPLETENESS OF SCANNED COPIES OF THIS PLAN SHEET.

TO ACCOMPANY PLANS DATED 4-1-14

CONDUIT

NEW	EXISTING	
		LIGHTING CONDUIT, UNLESS OTHERWISE INDICATED OR NOTED
		TRAFFIC SIGNAL CONDUIT
C	c	COMMUNICATION CONDUIT
T	t	TELEPHONE CONDUIT
F	f	FIRE ALARM CONDUIT
FO	fo	FIBER OPTIC CONDUIT
		CONDUIT TERMINATION
R	r	CONDUIT RISER ATTACHED TO THE STRUCTURE OR SERVICE POLE

SERVICE EQUIPMENT

NEW	EXISTING	
OH	oh	OVERHEAD LINES
U	U	WOOD POLE, "U" INDICATES UTILITY OWNED
		POLE GUY WITH ANCHOR
		UTILITY TRANSFORMER - GROUND MOUNTED
III	III	SERVICE EQUIPMENT ENCLOSURE TYPE. DOOR INDICATES FRONT OF ENCLOSURE
T	t	TELEPHONE DEMARCATION CABINET

POLE-MOUNTED SERVICE DESIGNATION

TYPE H SERVICE, 28'-10" — TYPE OF INSTALLATION AND POLE HEIGHT ABOVE GRADE

FLASHING BEACON

NEW	EXISTING	
R	R	FLASHING BEACON (ONE VEHICLE SIGNAL HEAD WITH BACKPLATE AND VISOR) "R" INDICATES RED INDICATION, "Y" INDICATES YELLOW INDICATION
Y Y	Y Y	FLASHING BEACON WITH TYPE 15-FBS STANDARD AND A SIGN.
R R	R R	FLASHING BEACON WITH TYPES 9, 9A OR 9B SIGN UNLESS OTHERWISE SPECIFIED OR INDICATED

SIGNAL EQUIPMENT

NEW	EXISTING	
C	C	PEDESTRIAN SIGNAL HEAD "C" INDICATES COUNTDOWN PEDESTRIAN HEAD
		PUSH BUTTON ASSEMBLY POST
		PEDESTRIAN BARRICADE
		VEHICLE SIGNAL HEAD (WITH BACKPLATE AND 3-SECTIONS: RED, YELLOW AND GREEN)
		VEHICLE SIGNAL HEAD WITH ANGLE VISOR
PV	PV	MODIFICATIONS OF BASIC SYMBOL: "L" INDICATES ALL NON-ARROW SECTIONS LOUVERED "LG" INDICATES LOUVERED GREEN SECTION ONLY "PV" INDICATES ALL 12" SECTIONS PROGRAMMED VISIBILITY "8" INDICATES ALL 8" SECTIONS (ONLY WHEN SPECIFIED)
		VEHICLE SIGNAL HEAD CONSISTING OF RED, YELLOW AND GREEN LEFT ARROW SECTIONS
		VEHICLE SIGNAL HEAD CONSISTING OF RED AND YELLOW SECTIONS WITH AN UP GREEN ARROW SECTION
		VEHICLE SIGNAL HEAD (5 SECTION) CONSISTING OF RED, YELLOW AND GREEN SECTIONS WITH YELLOW AND GREEN RIGHT ARROW SECTIONS
		TYPE 15TS STANDARD WITH VEHICLE SIGNAL HEAD AND LUMINAIRE
		TYPE 21TS STANDARD WITH VEHICLE SIGNAL HEAD AND LUMINAIRE
		STANDARD WITH LUMINAIRE AND SIGNAL MAST ARMS AND ATTACHED VEHICLE SIGNAL HEADS
		TYPE 1 STANDARD WITH ATTACHED VEHICLE SIGNAL HEADS
		STANDARD WITH A SIGNAL MAST ARM, ATTACHED VEHICLE SIGNAL HEADS AND INTERNALLY ILLUMINATED STREET NAME SIGN
		CONTROLLER ASSEMBLY. DOOR INDICATES FRONT OF CABINET

SIGNAL EQUIPMENT Cont

NEW	EXISTING	
		GUARD POST
		TYPE 1 STANDARD WITH RAMP METERING SIGN
		OPTICAL DETECTOR FOR THE EMERGENCY VEHICLE DETECTION SYSTEM

NOTES:

1. All signal sections shall be 12" unless shown otherwise.
2. Signal heads shall be provided with backplates unless shown otherwise.

ILLUMINATED OVERHEAD SIGN

NEW	EXISTING	
		SINGLE POST, SINGLE ILLUMINATED SIGN, BALANCED BUTTERFLY
		SINGLE POST, DOUBLE ILLUMINATED SIGN, BALANCED BUTTERFLY
		SINGLE POST, SINGLE ILLUMINATED SIGN, FULL CANTILEVER
		DOUBLE POST, SINGLE ILLUMINATED SIGN
		SINGLE ILLUMINATED SIGN MOUNTED ON STRUCTURE
		DOUBLE POST, SINGLE ILLUMINATED SIGN WITH ELECTROLIER

STATE OF CALIFORNIA
DEPARTMENT OF TRANSPORTATION

ELECTRICAL SYSTEMS (LEGEND AND ABBREVIATIONS)

NO SCALE

RSP ES-1B DATED JULY 19, 2013 SUPERSEDES STANDARD PLAN ES-1B DATED MAY 20, 2011 - PAGE 426 OF THE STANDARD PLANS BOOK DATED 2010.

REVISED STANDARD PLAN RSP ES-1B

2010 REVISED STANDARD PLAN RSP ES-1B

7-15-13

Dist	COUNTY	ROUTE	POST MILES TOTAL PROJECT	SHEET No.	TOTAL SHEETS
02	Teh	5	10.5	77	199

Theresa Gabriel
REGISTERED ELECTRICAL ENGINEER

July 19, 2013
PLANS APPROVAL DATE

REGISTERED PROFESSIONAL ENGINEER
Theresa Aziz Gabriel
No. E15129
Exp. 6-30-14
ELECTRICAL
STATE OF CALIFORNIA

THE STATE OF CALIFORNIA OR ITS OFFICERS OR AGENTS SHALL NOT BE RESPONSIBLE FOR THE ACCURACY OR COMPLETENESS OF SCANNED COPIES OF THIS PLAN SHEET.

TO ACCOMPANY PLANS DATED 4-1-14

EQUIPMENT IDENTIFICATION

ILLUMINATED SIGN IDENTIFICATION NUMBER:

SIGN No. 12345
10 ISL SCI 1.0

- SIGN NUMBER - PLACE ON POST OR STRUCTURE
- TRANSFORMER RATING (kVA)
- LIGHTING CONTROL TYPE
- NUMBER AND TYPE OF FIXTURES

} DO NOT PLACE ON STANDARD OR STRUCTURE

ELECTROLIER OR EQUIPMENT IDENTIFICATION NUMBER:

12345 - 15'-0"

- MAST ARM LENGTH, IF SHOWN. DO NOT PLACE ON STANDARD OR STRUCTURE
- EQUIPMENT NUMBER - PLACE ON STANDARD OR STRUCTURE. EXISTING EQUIPMENT NUMBERS ARE SHOWN IN PARENTHESIS

CONDUIT AND CONDUCTOR IDENTIFICATION:

1½"C, 2#10, 15#14, 2 DLC, 12P#18

- PAIR
- NUMBER AND SIZE OF CONDUCTORS AND CABLES
- SIZE OF CONDUIT IN INCHES

Ø1, Ø2, Ø2P, etc.	TRAFFIC PHASE IDENTIFICATION FOR SIGNAL FACES, DETECTORS AND PHASE DIAGRAMS
1 2 3	LEGEND NUMBERS
A B C	EQUIPMENT, SIGNAL POLES, INSTALLATION OR ITEMS
1 2 3	CONDUIT RUN NUMBERS

SIGNAL AND LIGHTING STANDARD (TYPICAL DESIGNATION):

19A - 3 - 100

- WIND VELOCITY = 100 mph
- CASE 3 ARM LOADING
- STANDARD TYPE
- STANDARD PLAN SHEET NUMBER
- DETAIL, NUMBER, SECTION, TYPE OR ELEVATION

MISCELLANEOUS EQUIPMENT

NEW	EXISTING	
CMS	cms	CHANGEABLE MESSAGE SIGN
		CLOSED CIRCUIT TELEVISION CAMERA
		HIGHWAY ADVISORY RADIO POLE AND ANTENNA
EMS	ems	EXTINGUISHABLE MESSAGE SIGN
M V	m v	DETECTION DEVICE M = MICROWAVE SENSOR V = VIDEO IMAGE SENSOR

WIRING DIAGRAM LEGEND

----	EXTERNAL CONDUCTOR
	CONDUCTOR OR BUS
	TIE POINT
	CONTACTOR COIL
	CONTACTOR, NO CONTACT
	TERMINAL BLOCKS
	CONTACTOR, NC CONTACT
	ENCLOSURE BOND
	GROUNDING ELECTRODE
	CIRCUIT BREAKER
R	RECEPTACLE

PULL BOXES

NEW	EXISTING	
		PULL BOX, No. 5 UNLESS OTHERWISE INDICATED OR NOTED
3	9A(21)	PULL BOX, ADDITIONAL DESIGNATIONS OR DESCRIPTIONS

3 No. 3½ PULL BOX
5 No. 5 PULL BOX
6 No. 6 PULL BOX
7 No. 7 (CEILING PULL BOX)
8 No. 8 (PENDANT SOFFIT PULL BOX)
9 No. 9 PULL BOX
9A No. 9A PULL BOX

(C) COMMUNICATIONS PULL BOX
(E) PULL BOX WITH EXTENSION
(S) SPRINKLER CONTROL PULL BOX
(21) ANCHOR BOLTS AND CONDUIT FOR FUTURE INSTALLATION OF TYPE 21 STANDARD
(T) TRAFFIC PULL BOX

VEHICLE DETECTORS

5 J 9 U

- VEHICLE DETECTOR DESIGNATION
- U = UPPER
  L = LOWER
- SLOT NUMBER IN INPUT FILE
- INPUT FILE (I OR J)
- PHASE

NEW	EXISTING	
		TYPE A DETECTOR LOOP. OUTLINE OF SAWCUT SHOWN
		TYPE B DETECTOR LOOP. OUTLINE OF SAWCUT SHOWN
		TYPE C DETECTOR LOOP. OUTLINE OF SAWCUT SHOWN
		TYPE D DETECTOR LOOP. OUTLINE OF SAWCUT SHOWN
		TYPE E DETECTOR LOOP. OUTLINE OF SAWCUT SHOWN
		TYPE Q DETECTOR LOOP. OUTLINE OF SAWCUT SHOWN
		MAGNETIC DETECTOR
DH	dh	DETECTOR HANDHOLE
		MICROWAVE OR VIDEO DETECTION ZONE

STATE OF CALIFORNIA
DEPARTMENT OF TRANSPORTATION

ELECTRICAL SYSTEMS (LEGEND AND ABBREVIATIONS)

NO SCALE

RSP ES-1C DATED JULY 19, 2013 SUPERSEDES STANDARD PLAN ES-1C DATED MAY 20, 2011 - PAGE 427 OF THE STANDARD PLANS BOOK DATED 2010.

REVISED STANDARD PLAN RSP ES-1C

2010 REVISED STANDARD PLAN RSP ES-1C

7-11-13

DIST	COUNTY	ROUTE	POST MILES TOTAL PROJECT	SHEET NO.	TOTAL SHEETS
02	Teh	5	10.5	78	199

Theresa Gabriel
REGISTERED ELECTRICAL ENGINEER

July 19, 2013
PLANS APPROVAL DATE

REGISTERED PROFESSIONAL ENGINEER Theresa Aziz Gabriel No. E15129 Exp. 6-30-14 ELECTRICAL STATE OF CALIFORNIA

THE STATE OF CALIFORNIA OR ITS OFFICERS OR AGENTS SHALL NOT BE RESPONSIBLE FOR THE ACCURACY OR COMPLETENESS OF SCANNED COPIES OF THIS PLAN SHEET.

TO ACCOMPANY PLANS DATED 4-1-14

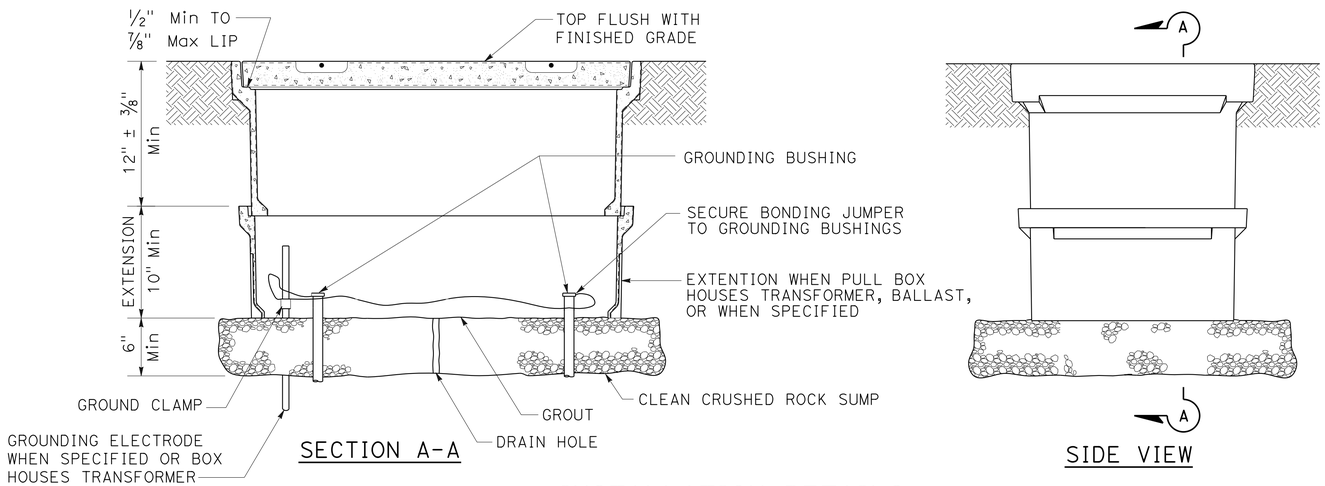

SECTION A-A

SIDE VIEW

INSTALLATION DETAILS

DETAIL A

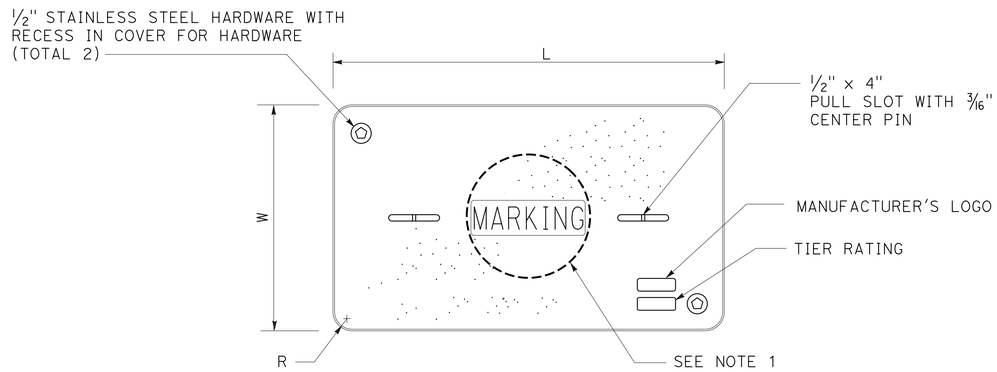

COVER TOP VIEW

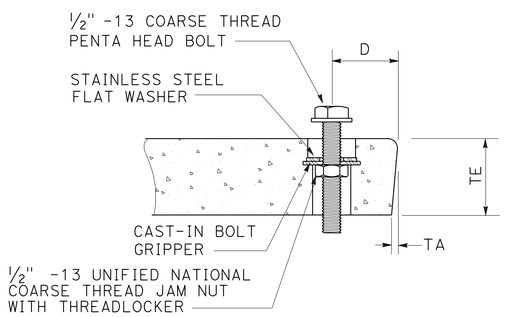

TYPICAL COVER CAPTIVE BOLT

OR SIMILAR

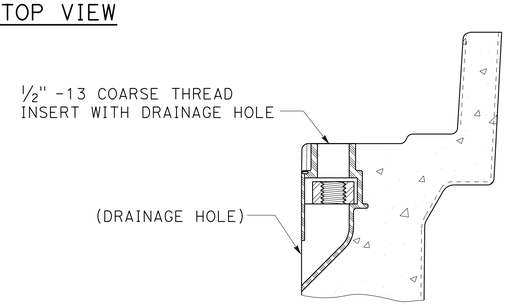

TYPICAL THREADED INSERT

OR SIMILAR

DIMENSION TABLE

PULL BOX	PULL BOX			COVER						
	MINIMUM DEPTH BOX	MINIMUM DEPTH EXTENSION	MAXIMUM WEIGHT	L	W	R	TE	TA	D	MAXIMUM WEIGHT
No. 3½	12"	N/A	40 lb	1′ - 3⅜"	10⅛"	1⅜"	2"	⅛"	1¾"	30 lb
No. 5	12"	10"	55 lb	1′ - 11¼"	1′ - 1¾"	1⅜"	2"	⅛"	1¾"	60 lb
No. 6	12"	10"	70 lb	2′ - 6½"	1′ - 5½"	1⅜"	2"	⅛"	2"	85 lb

NOTES:

1. Pull box covers shall be marked as follows: "SERVICE" Service circuits between service point and service disconnect; "SPRINKLER-CONTROL" sprinkler control circuits, 50 V or less; "CALTRANS" on all pull boxes, except pull boxes marked "SPRINKLER-CONTROL"; and "TELEPHONE" Telephone service;
   - A) No. 3½ pull box.
     - 1) "SIGNAL" - Traffic signal circuits with or without lighting or sign lighting circuits.
     - 2) "LIGHTING" - Lighting or sign lighting circuits where voltage is under 600 V.
   - B) No. 5, 6, 9 or 9A pull box.
     - 1) "TRAFFIC SIGNAL" - Traffic signal circuits with or without lighting or sign lighting circuits.
     - 2) "LIGHTING" - Lighting or sign lighting circuits where voltage is under 600 V.
     - 3) "LIGHTING-HIGH VOLTAGE" - Lighting or sign lighting circuits where voltage is above 600 V.
     - 4) "IRRIGATION" - Circuits to irrigation controller 120 V or more.
     - 5) "RAMP METER" - Ramp meter circuits.
     - 6) "COUNT STATION" - Count or speed monitor circuits.
     - 7) "COMMUNICATIONS" - Communication circuits.
     - 8) "TOS COMMUNICATIONS" - TOS communication line.
     - 9) "TOS POWER" - TOS power.
     - 10) "TDC POWER" - Telephone demarcation cabinet power.
     - 11) "CCTV" - Closed circuit television circuits.
     - 12) "TMS" - Traffic monitoring station circuits.
     - 13) "CMS" - Changeable message sign circuits.
     - 14) "HAR" - Highway advisory radio circuits.
     - 15) "BOOSTER PUMP" - Booster pump circuit.
2. The nominal dimensions of the opening in which the cover sets shall be the same as the cover dimensions except the length and width dimensions shall be ⅛" greater.
3. Covers and boxes shall be interchangeable with California standard male and female gages. When interchanged with a standard male or female gage, the top surfaces shall be flush within ⅛". Top outside radius of covers and pull boxes shall have a ⅛" radius.
4. Pull box extension may be another pull box as long as the bottom edge of the pull box can fit into the cover opening.
5. All dimensions for the cover for non-traffic pull box are nominal values.

STATE OF CALIFORNIA
DEPARTMENT OF TRANSPORTATION

ELECTRICAL SYSTEMS (NON-TRAFFIC PULL BOX)

NO SCALE

RSP ES-8A DATED JULY 19, 2013 SUPERSEDES RSP ES-8A DATED JANUARY 20, 2012 THAT SUPPLEMENTS THE STANDARD PLANS BOOK DATED 2010.

REVISED STANDARD PLAN RSP ES-8A

2010 REVISED STANDARD PLAN RSP ES-8A

7-15-13

Dist	COUNTY	ROUTE	POST MILES TOTAL PROJECT	SHEET No.	TOTAL SHEETS
02	Teh	5	10.5	79	199

Theresa Gabriel
REGISTERED ELECTRICAL ENGINEER

July 19, 2013
PLANS APPROVAL DATE

REGISTERED PROFESSIONAL ENGINEER
Theresa Aziz Gabriel
No. E15129
Exp. 6-30-14
ELECTRICAL
STATE OF CALIFORNIA

THE STATE OF CALIFORNIA OR ITS OFFICERS OR AGENTS SHALL NOT BE RESPONSIBLE FOR THE ACCURACY OR COMPLETENESS OF SCANNED COPIES OF THIS PLAN SHEET.

TO ACCOMPANY PLANS DATED 4-1-14

ISOFOOTCANDLE CURVE - MINIMUM

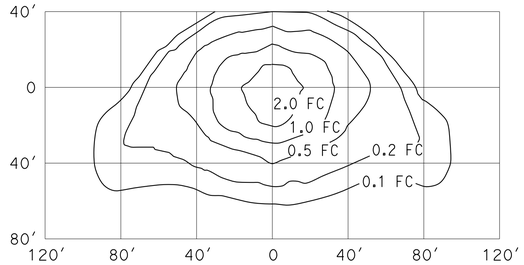

TYPE III MEDIUM CUTOFF

Cutoff Luminaire
34′ Mounting Height
Lamp operated at 22,000 lm
200-W high pressure sodium lamp
ANSI Designation S66

ISOFOOTCANDLE CURVE - MINIMUM

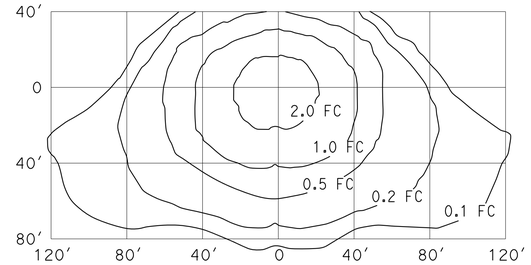

TYPE III MEDIUM CUTOFF

Cutoff Luminaire
40′ Mounting Height
Lamp operated at 37,000 lm
310-W high pressure sodium lamp
ANSI Designation S67

ISOFOOTCANDLE CURVE - MINIMUM

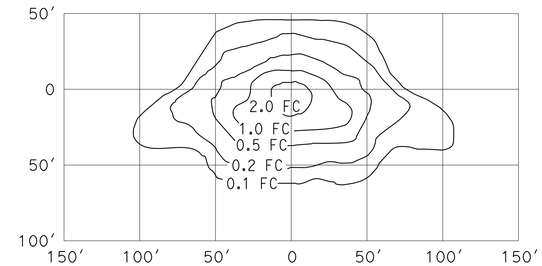

TYPE III MEDIUM CUTOFF

Cutoff Luminaire
30′ Mounting Height
Lamp operated at 16,000 lm
150-W high pressure sodium lamp
ANSI Designation S55

ISOFOOTCANDLE CURVE - MINIMUM

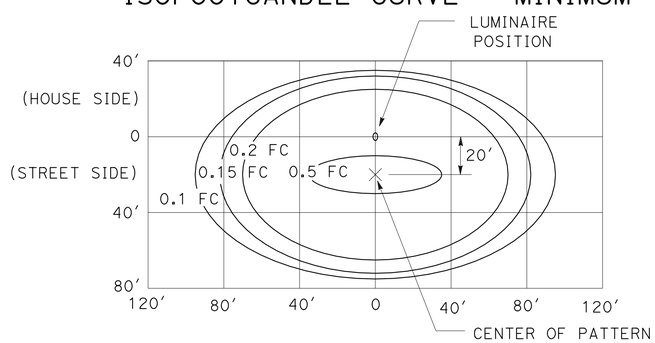

LED LUMINAIRE ROADWAY 1

165-W at 34′ Mounting Height

ISOFOOTCANDLE CURVE - MINIMUM

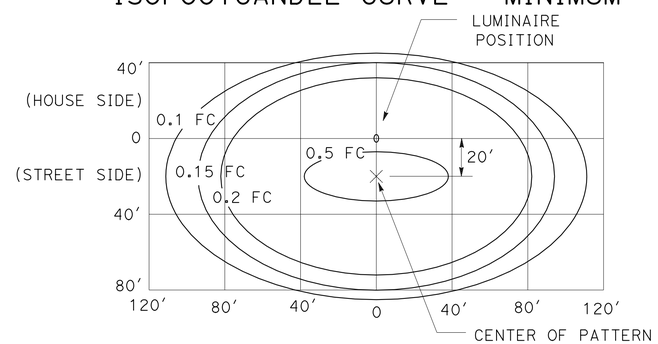

LED LUMINAIRE ROADWAY 2

235-W at 40′ Mounting Height

ISOFOOTCANDLE CURVE - MINIMUM

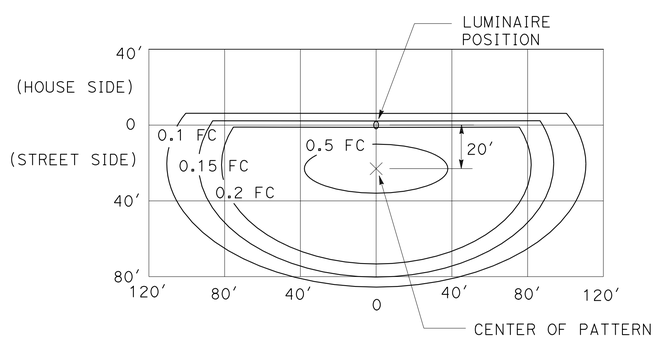

LED LUMINAIRE ROADWAY 3

235-W at 40′ Mounting Height
with back side control

ISOFOOTCANDLE CURVE - MINIMUM

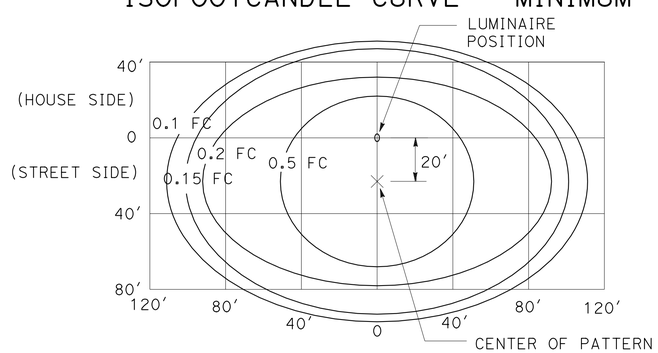

LED LUMINAIRE ROADWAY 4

300-W at 40′ Mounting Height

ISOFOOTCANDLE CURVE - MINIMUM

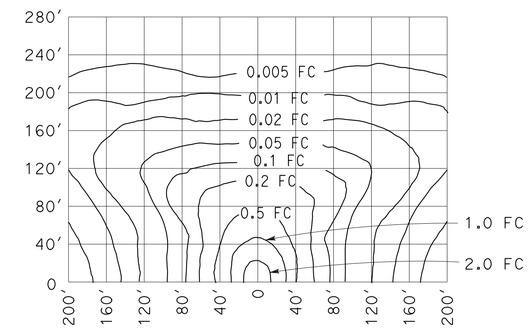

LOW PRESSURE SODIUM LUMINAIRE

40′ Mounting Height
Lamp operated at 33,000 lm
180-W low pressure sodium lamp

STATE OF CALIFORNIA
DEPARTMENT OF TRANSPORTATION

ELECTRICAL SYSTEMS (ISOFOOTCANDLE DIAGRAMS)

NO SCALE

RSP ES-10A DATED JULY 19, 2013 SUPERSEDES RSP ES-10A DATED JULY 20, 2012 THAT SUPPLEMENTS THE STANDARD PLANS BOOK DATED 2010.

REVISED STANDARD PLAN RSP ES-10A

2010 REVISED STANDARD PLAN RSP ES-10A

7-9-13

DIST.	COUNTY	ROUTE	POST MILES TOTAL PROJECT	SHEET NO.	TOTAL SHEETS
02	Teh	5	10.5	80	199

LICENSED ARCHITECT — 9-25-13 — DATE

LICENSED ARCHITECT ANTHONY V. MANANSALA No. C-32260 Ren. 4/30/17 STATE OF CALIFORNIA

4-1-14
PLANS APPROVAL DATE

The State of California or its officers or agents shall not be responsible for the accuracy or completeness of electronic copies of this plan sheet.

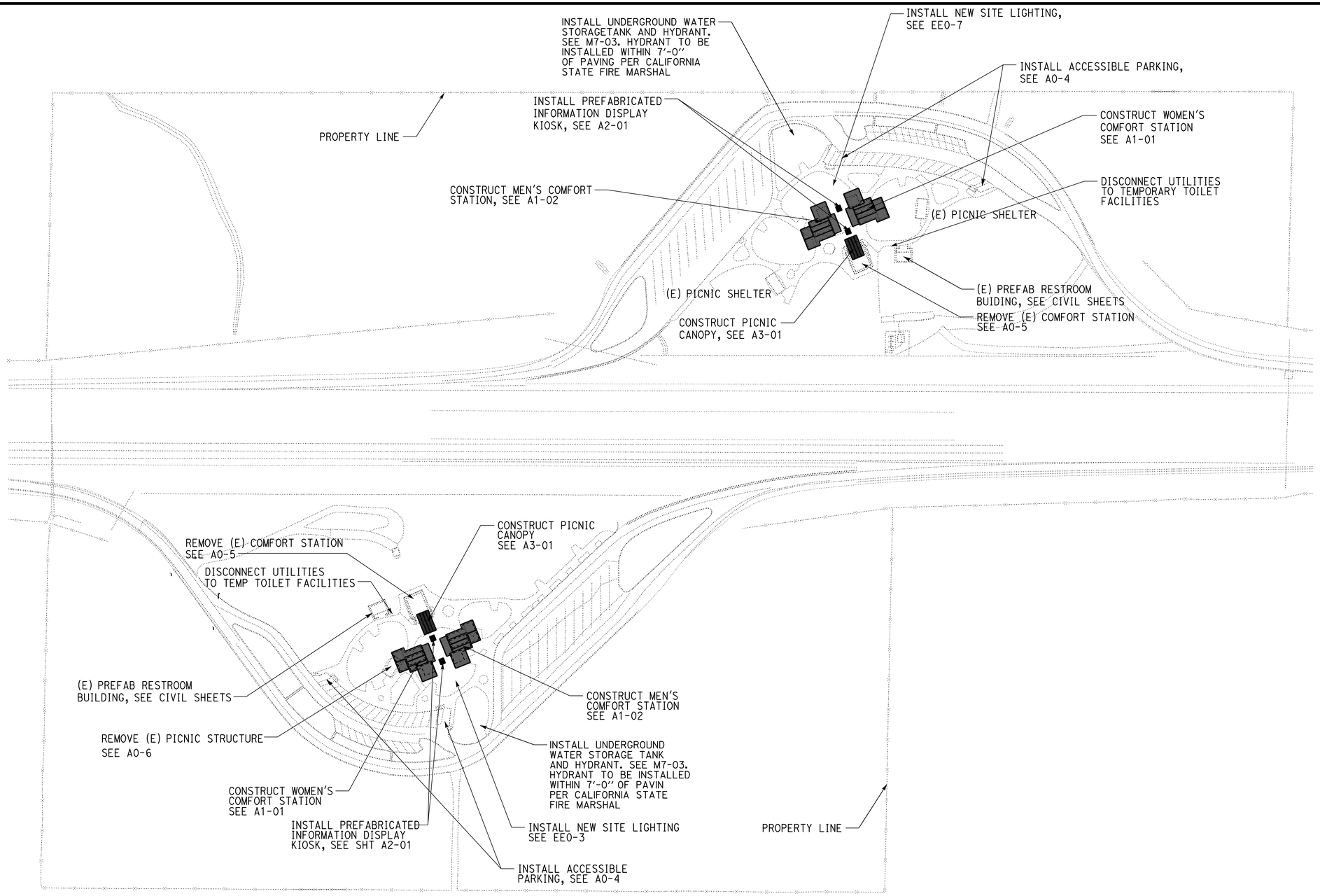

ACCESSIBILITY DESIGN APPROVAL STAMP
DOT / DES / OTA
PROJECT ID **0200000030**
Reviewed by:
Date: 6/15/11

CALIFORNIA STATE FIRE MARSHAL APPROVED
Approval of this plan does not authorize or approve any omission or deviation from applicable regulations. Final approval is subject to field inspection. One set of approved plans shall be available on the project site at all times.
Reviewed by: FRANCIS SOLICH
Approval date: 03-10-2015
CSFM # 01-52-44-0034

OVERALL GENERAL PLAN

SCALE 1" = 1000'

R E Travis
DESIGN SUPERVISOR
Donald E Alvey
DESIGN ARCHITECT

DESIGNER ANTHONY MANANSALA
DRAWN BY ANTHONY MANANSALA
CHECKED BY:
STRUCTURAL REVIEW

SHEET LEGEND
A-1 ARCHITECTURAL ST-1 STRUCTURAL
M-1 MECHANICAL E-1 ELECTRICAL
P-1 PLUMBING SS-1 SANITARY

STATE OF CALIFORNIA
DEPARTMENT OF TRANSPORTATION

DIVISION OF ENGINEERING SERVICES
ARCHITECTURAL AND STRUCTURAL DESIGN

BRIDGE NO. 08R00002L 08R00002R
POST MILE 16.9

GENERAL PLAN

CORNING SRRA UPGRADE
GENERAL PLAN

SHEET **GP**

A_GP.dgn
TAEMWW Imperial Rev. 7/10 12-MAY-2015 13:56

ORIGINAL SCALE IN INCHES FOR REDUCED PLANS 0 1 2 3

UNIT 3600
PROJECT NUMBER & PHASE 02000000301
EA 0E3601

DISREGARD PRINTS BEARING EARLIER REVISION DATES →

REVISION DATES (PRELIMINARY STAGE ONLY) - 07 XX-XX-XX

SHEET X OF X

12-MAY-2015 13:56
A_GP.dgn

NOTE, THERE ARE TWO SITES, NORTHBOUND CORNING S.R.R.A. AND SOUTHBOUND CORNING S.R.R.A.

THIS DRAWING SET REPRESENTS NORTHBOUND CORNING S.R.R.A ONLY; SOUTHBOUND CORNING S.R.R.A. IS SIMILAR, ROTATED 180 DEGREES, UNLESS NOTED OTHERWISE.

DIST.	COUNTY	ROUTE	POST MILES TOTAL PROJECT	SHEET NO.	TOTAL SHEETS
02	Teh	5	10.5	81	199

LICENSED ARCHITECT — 9-25-13 — DATE

LICENSED ARCHITECT ANTHONY V. MANANSALA No. C-32260 Exp. 4/30/17 STATE OF CALIFORNIA

4-1-14
PLANS APPROVAL DATE

The State of California or its officers or agents shall not be responsible for the accuracy or completeness of electronic copies of this plan sheet.

SHEET INDEX

ARCHITECTURAL

GP	GENERAL PLAN
A0-1	SHEET INDEX AND BUILDING DATA
A0-2	ARCHITECTURAL ABBREVIATIONS AND SYMBOLS
A0-3.1	ACCESSIBILITY STANDARD DETAILS
A0-3.2	ACCESSIBILITY STANDARD DETAILS
A0-3.3	ACCESSIBILITY STANDARD DETAILS
A0-3.4	ACCESSIBILTIY STANDARD DETAILS
A0-3.5	ACCESSIBILITY STANDARD DETAILS
A0-4	NORTHBOUND, POT AND ACCESSIBILITY NOTES
A0-5	NORTHBOUND, SOUTHBOUND, DEMOLITION COMFORT STATION
A0-6	NORTHBOUND, DEMOLITION PICNIC CANOPY
A1-00	OVERALL FLOOR PLAN
A1-01	WOMEN'S BUILDING, FLOOR PLAN
A1-02	MEN'S BUILDING, FLOOR PLAN
A1-03	WOMEN'S BUILDING, ROOF PLAN
A1-04	WOMEN'S BUILDING, ROOF PLAN
A1-05	WOMEN'S BUILDING, ROOF PLAN
A1-06	WOMEN'S BUILDING, REFLECTED CEILING PLAN
A1-07	MEN'S BUILDING, REFLECTED CEILING PLAN
A1-08	WOMEN'S BUILDING, EXTERIOR ELEVATIONS
A1-09	WOMEN'S BUILDING, EXTERIOR ELEVATIONS
A1-10	MEN'S BUILDING, EXTERIOR ELEVATIONS
A1-11	MEN'S BUILDING, EXTERIOR ELEVATIONS
A1-12	WOMEN'S BUILDING, SECTIONS
A1-13	WOMEN'S BUILDING, SECTIONS
A1-14	WOMEN'S BUILDING, SECTION
A1-15	MEN'S BUILDING, SECTIONS
A1-16	MEN'S BUILDING, SECTIONS
A1-17	MEN'S BUILDING, SECTION
A1-18	WOMEN'S BUILDING, INTERIOR ELVATIONS
A1-19	WOMEN'S BUILDING, INTERIOR ELVATIONS
A1-20	MEN'S BUILDING, INTERIOR ELVATIONS
A1-21	MEN'S BUILDING, INTERIOR ELVATIONS
A1-22	NORTHBOUND, SOUTHBOUND, FINISH SCHEDULE
A1-23	NORTHBOUND, SOUTHBOUND, DOOR, WINDOW, LOUVER SCHEDULES
A1-24	NORTHBOUND & SOUTHBOUND DETAILS
A1-25	NORTHBOUND & SOUTHBOUND DETAILS
A1-26	NORTHBOUND & SOUTHBOUND DETAILS
A1-27	NORTHBOUND & SOUTHBOUND DETAILS
A1-28	NORTHBOUND & SOUTHBOUND DETAILS
A1-29	NORTHBOUND & SOUTHBOUND DETAILS
A1-30	MEN'S BUILDING, CABINET DETAILS
A2-01	NORTHBOUND & SOUTHBOUND PREMANUFATURED INFORMATION DISPLAY CASE/KIOSK
A3-01	NORTHBOUND & SOUTHBOUND PICNIC CANOPY
A3-02	NORTHBOUND & SOUTHBOUND PICNIC CANOPY
A3-03	NORTHBOUND & SOUTHBOUND PICNIC CANOPY

STRUCTURAL

ST-1	LEGEND
ST-2	CONCRETE STANDARD
ST-3A	CONCRETE MASONRY UNIT STANDARD
ST-3B	CONCRETE MASONRY UNIT STANDARD
ST1-0	DESIGN CRITERIA AND DETAIL NOTES
ST1-1	FOUNDATION PLAN
ST1-2	PARTIAL FOUNDATION PLAN 1
ST1-3	PARTIAL FOUNDATION PLAN 2
ST1-4	ROOF FRAMING PLAN
ST1-5	PARTIAL ROOF FRAMING PLAN 1
ST1-6	PARTIAL ROOF FRAMING PLAN 2
ST1-7	CUPOLA FRAMING PLAN
ST1-8	CEILING FRAMING PLAN
ST1-9	LONGITUDINAL BUILDING SECTION
ST1-10	TRANSVERSE BUILDING SECTION
ST1-11	TRANSVERSE BUILDING SECTION
ST1-12	FOOTING DETAILS
ST1-13	ROOF FRAMING SECTIONS AND DETAILS
ST1-14	CONNECTION DETAILS
ST1-15	WALL AND PILASTER ANCHOR DETAILS
ST1-16	ROOF DECK OPENING AND WELDING DETAILS
ST1-17	TYPICAL COLD FORM STEEL FRAMING DETAILS AND NOTES
ST1-18	TYPICAL COLD FORM STEEL FRAMING DETAILS

STRUCTURAL CONTINUED

ST1-19	MISCELLANEOUS DETIALS
ST1-20	COLD FORM STEEL CEILING DETAILS
LOTB 1	LOG OF TEST BORINGS 1
LOTB 2	LOG OF TEST BORINGS 2

MECHANICAL

M-0	LEGEND
MO-0	TITLE 24 COMPLIANCE CERTIFICATES
MO-1	EXISTING SITE PLAN
MO-2	MODIFIED SITE PLAN
M1-1	DRAINAGE PLAN
M1-2	PLUMBING PLAN
M1-3	HVAC PLAN
M2-1	DRAINAGE PLAN
M2-2	PLUMBING PLAN
M2-3	HVAC PLAN
M3-1	PICNIC CANOPY PLUMBING & DRAINANGE PLAN
M5-1	DRAINIGE ISOMETRIC
M5-2	PLUMBING ISOMETRIC
M7-1	PLUMBING DETAILS 1
M7-2	PLUMBING DETAILS 2
M7-3	FIRE PROTECTION WATER STORAGE TANK
M7-4	PRESSURE TANK & PAD DETAILS

ELECTRICAL

EE0-1	LEGEND
EE0-2	NORTHBOUND, EXISTING SITE PLAN 1
EE0-3	NORTHBOUND, MODIFIED SITE PLAN 1
EE0-4	NORTHBOUND, MODIFIED SITE PLAN 2
EE0-5	SERVICE EQUIPMENT (NORTHBOUND)
EE0-6	SOUTHBOUND, EXISTING SITE PLAN 1
EE0-7	SOUTHBOUND, MODIFIED SITE PLAN 1
EE0-8	SOUTHBOUND, MODIFIED SITE PLAN 2
EE0-9	SERVICE EQUIPMENT (SOUTHBOUND)
EE0-10	TRAVELER INFORMATION KIOSK - POWER AND LIGHTING
EE0-11	PEDESTRIAN AREA LIGHTS
EE0-12	OUTDOOR LIGHTING COMPLIANCE FORM 1
EE0-13	OUTDOOR LIGHTING COMPLIANCE FORM 2
EE0-14	INDOOR LIGHTING COMPLIANCE FORM 1
EE0-15	INDOOR LIGHTING COMPLIANCE FORM 2
EE0-16	INDOOR LIGHTING COMPLIANCE FORM 3
EE1-1	WOMEN'S BUILDING, POWER PLAN
EE1-2	WOMEN'S BUILDING, LIGHTING PLAN
EE1-3	WOMEN'S BUILDING, AUTOMATIC FLUSH SYTEM POWER PLAN
EE1-4	WOMEN'S BUILDING, COMMUNICATION AND CCTV PLAN
EE1-5	NORTHBOUND INTERGRATED FACILTIY SWITCHBOARD
EE1-6	WOMEN'S BUILDING, ELECTRICAL DETAILS
EE1-7	SOUTHBOUND, INTEGRATED FACILITY SWITCHBOARD
EE2-1	MEN'S BUILDING, POWER PLAN
EE2-2	MEN'S BUILDING, LIGHTING PLAN
EE2-3	MEN'S BUILDING, AUTOMATIC FLUSH SYSTEM POWER PLAN
EE2-4	MEN'S BUILDING, COMMUNICATION AND CCTV PLAN
EE2-5	MEN'S BUILDING, ELECTRICAL DETAILS
EE2-6	MEN'S BUILDING, ELECTRICAL DETAILS
EE2-7	MEN'S BUILDING, ELECTRICAL DETAILS

DESIGN CRITERIA

THE BUILDING WORK ON THIS PROJECT HAS BEEN DESIGNED TO CONFORM TO THE FOLLOWING REGULATORY CODES:

2010 CALIFORNIA BUILDING CODE
2010 CALIFORNIA PLUMBING CODE
2010 CALIFORNIA MECHANICAL CODE
2010 CALIFORNIA ELECTRICAL CODE
2010 CALIFORNIA ENERGY CODE
2010 CALIFORNIA FIRE CODE
1991 AMERICANS WITH DISABILITIES ACT STANDARDS

ACCESSIBILITY DESIGN APPROVAL STAMP DOT / DES / OTA
PROJECT ID 0200000030
Reviewed by: [signature]
Date: 6/15/11

CALIFORNIA STATE FIRE MARSHAL APPROVED
Approval of this plan does not authorize or approve any omission or deviation from applicable regulations. Final approval is subject to field inspection. One set of approved plans shall be available on the project site at all times.
Reviewed by: [signature] FRANCIS SOLICH
Approval date: 03-10-2015

BUILDING DATA

NORTHBOUND AND SOUTHBOUND CORNING S.R.R.A., SIMILAR	OCCUPANCY	OCCUPANT LOAD	AREA (S.F.)	ALLOWABLE AREA (S.F.)	AREA INCREASE	BUILDING HEIGHT (FEET)	NO. STORIES	HEIGHT INCREASE	TYPE OF CONSTRUCTION	FIRE SPRINKLERED	FIRE ALARM	SMOKE CONTROL	OTHER FIRE PROTECTION SYSTEM
NORTHBOUND CORNING S.R.R.A	B		3,826	9,000	NO	22'-10''	1	NO	V-B	NO	NO	NO	UNDER GROUND TANK & HYDRANT
WOMEN'S COMFORT STATION	B												
WOMEN'S RESTROOM 1		0											
WOMEN'S RESTROOM 2		0											
OFFICE		1											
RESTROOM		1											
STORAGE		2											
UTILITY		1											
VENDING STORAGE		1											
MEN'S COMFORT STATION	B												
MEN'S RESTROOM 1		0											
MEN'S RESTROOM 2		0											
TELECOMMUNICATION ROOM		2											
STORAGE		1											
UTILITY		1											
BREAK ROOM		5											
PICNIC CANOPY & TRAVELER INFORMATION KIOSK		0											

FIRE-FLOW CALCULATION PER NFPA 1142

$$\frac{\text{TOTAL VOLUME OF STRUCTURE}}{\text{OCCUPANCY HAZARD CLASSIFICATION NUMBER}} \times \text{CONSTRUCTION CLASSIFICATION NUMBER} \times 1.5 = \text{MINIMUM WATER SUPPLY}$$

$$\frac{3{,}826 \text{ SF} \times 16 \text{ FT}}{7} \times 1.5 \times 1.5 = 19{,}677 \text{ GALLONS}$$

USE 20,000 GALLON TANK

NOTE: SEE SHEET M7-03

	BY	CHECKED
DESIGN	A. MANANSALA	Donald E Alvey
DETAILS	A. MANANSALA	Donald E Alvey
QUANTITIES		

STATE OF CALIFORNIA
DEPARTMENT OF TRANSPORTATION

DIVISION OF ENGINEERING SERVICES
ARCHITECTURAL AND STRUCTURAL DESIGN

BRIDGE NO. 08R00002L 08R00002R
POST MILE 16.9

CORNING SRRA UPGRADE

SHEET INDEX & BUILDING DATA

SHEET **A0-1**

A0-01.dgn
TAEMWW Imperial Rev. 7/10 12-MAY-2015 13:56

ORIGINAL SCALE IN INCHES FOR REDUCED PLANS 0 1 2 3

UNIT 3600
PROJECT NUMBER & PHASE 02000000301
EA 0E3601

DISREGARD PRINTS BEARING EARLIER REVISION DATES → - 07

REVISION DATES (PRELIMINARY STAGE ONLY) SHEET X OF X

12-MAY-2015 13:56
A0-01.dgn

ARCHITECTURAL ABBREVIATIONS

&	AND
∠	ANGLE
℄	CENTER LINE
∅	DIAMETER OR ROUND
□	SQUARE
d	PENNY
°	DEGREE
A/C	AIR CONDITIONING
AC	ASPHALT CONCRETE
AB	ANCHOR BOLT
ABV	ABOVE
ACOUS	ACOUSTICAL
ADJ	ADJUSTABLE
ALT	ALTERNATE
ALUM	ALUMINUM
APA	AMERICAN PLYWOOD ASSOCIATION
ARCH	ARCHITECTURAL, ARCHITECT
ASPH	ASPHALT
BD	BOARD
BIT	BITUMINOUS
BLDG	BUILDING
BLK	BLOCK
BLKG	BLOCKING
BM	BEAM
BN	BOUNDARY NAILING
BOT	BOTTOM
BR	BRIDGE
BTM	BOTTOM
BTWN	BETWEEN
BUR	BUILT-UP-ROOFING
CJ	CONTROL JOINT
CL	CHAIN LINK
CAB	CABINET
CB	CATCH BASIN
CEM	CEMENT
CER	CERAMIC
CH	CLOTHES HOOK
CIDH	CAST IN DRILLED HOLE
CIP	CAST IN PLACE
CKBD	CHALKBOARD
CLG	CEILING
CMU	CONCRETE MASONRY UNIT
CLO	CLOSET
CLR	CLEAR
COL	COLUMN
CONC	CONCRETE
CONN	CONNECTION
CONST	CONSTRUCTION
CONT	CONTINUOUS
CORR	CORRIDOR
CPT	CARPET
CT	CERAMIC TILE
CTR	CENTER
CTSK	COUNTERSUNK
CY	CUBIC YARD
DBL	DOUBLE
DEPT	DEPARTMENT
DET	DETAIL
DF	DOUGLAS FIR
DIA	DIAMETER
DIM	DIMENSION
DN	DOWN
DP	DEEP
DR	DOOR
DS	DOWNSPOUT
DWG	DRAWING
DWR	DRAWER
(E)	EXISTING
E	EAST
EA	EACH
EF	EXHAUST FAN
EHD	ELECTRIC HAND DRYER
EJ	EXPANSION JOINT
EL	ELEVATION (HEIGHT)
ELEC	ELECTRICAL
ELEV	ELEVATION (VIEW)
ELVR	ELEVATOR
EMER	EMERGENCY
ENCL	ENCLOSURE
EP	EDGE OF PAVEMENT
EQ	EQUAL
EPB	ELECTRICAL PANELBOARD
EQUIP	EQUIPMENT
ESCL	ESCALATOR
ETW	EDGE OF TRAVEL WAY
EWC	ELECTRIC WATER COOLER
EXP	EXPANSION
EXPO	EXPOSED, EXPOSURE
EXT	EXTERIOR
FD	FLOOR DRAIN
FDN	FOUNDATION
FE	FIRE EXTINGUISHER
FEC	FIRE EXTINGUISHER CABINET
FF	FINISH FLOOR
FG	FINISH GRADE
FH	FIRE HYDRANT
FHC	FIRE HOSE CABINET
FHMS	FLATHEAD METAL SCREW
FHWS	FLATHEAD WOOD SCREW
FIN	FINISH
FJ	FLOOR JOIST
FLASH	FLASHING
FLR	FLOOR
FLUOR	FLUORESCENT
FOC	FACE OF CONCRETE
FOF	FACE OF FINISH
FOM	FACE OF MASONRY
FOS	FACE OF STUD
FRMG	FRAMING
FRPP	FIBERGLASS REINFORCED PLASTIC PANEL
FT	FEET, FOOT
FTG	FOOTING
FURR	FURRING
FWY	FREEWAY
GA	GAUGE
GAL	GALLON
GALV	GALVANIZED
GB	GRAB BAR
GI	GALVANIZED IRON
GL	GLASS
GLM	GLUE LAMINATED MEMBER
GLZ	GLAZING
GR	GRADE
GSM	GALVANIZED SHEET METAL
GYP	GYPSUM
GYP SHTG	GYPSUM SHEATHING
HB	HOSE BIB
HC	HOLLOW CORE
HD	HEAD, HOLD DOWN
HDR	HEADER
HDWD	HARDWOOD
HDWR	HARDWARE
HEX	HEXAGONAL
HF	HEMLOCK-FIR
HGR	HANGER
HM	HOLLOW METAL
HORIZ	HORIZONTAL
HP	HIGH POINT
HR	HOUR
HSB	HIGH STRENGTH BOLT
HT	HEIGHT
HVAC	HEATING, VENTILATING, AIR CONDITIONING
HWY	HIGHWAY
ID	INSIDE DIAMETER
IN	INCH
INFO	INFORMATION
INSUL	INSULATION
INT	INTERIOR
ISA	INTERNATIONAL SYMBOL OF ACCESSIBILITY
JAN	JANITOR
JB	JUNCTION BOX
JH	JOIST HANGER
JST	JOIST
JT	JOINT
KIT	KITCHEN
LAB	LABORATORY
LAV	LAVATORY
LBF	POUND-FORCE
LBS	POUNDS
LF	LINEAR FEET
LKR	LOCKER
LLV	LONG LEG VERTICAL
LOL	LAYOUT LINE
LPG	LIQUIFIED PETROLEUM GAS
LS	LAG SCREW
M	METER
MAT	MATERIAL
MAX	MAXIMUM
MB	MACHINE BOLT
MBR	MEMBER
MECH	MECHANICAL
MEMB	MEMBRANE
MET	METAL
MFR	MANUFACTURER
MH	MAN HOLE
MIN	MINIMUM
MIR	MIRROR
MISC	MISCELLANEOUS
MIW	MALLEABLE IRON WASHER
mm	MILLIMETER
MO	MASONRY OPENING
MTD	MOUNTED
MUL	MULLION
N	NORTH
ND	NAPKIN DISPOSAL
NIC	NOT IN CONTRACT
NO	NUMBER
NOM	NOMINAL
NTS	NOT TO SCALE
OBSC	OBSCURE
OC	ON CENTER
OD	OUTSIDE DIAMETER
OFF	OFFICE
OFD	OVERFLOW DRAIN
OG	ORIGINAL GROUND
OH	OPPOSITE HAND
OHD	OVERHEAD
OHWS	OVALHEAD WOOD SCREW
OP	OPERATIONS
OPNG	OPENING
OPP	OPPOSITE
OPT	OPTION, OPTIONAL
P	PITCH
PB	POST BASE
PC	POST CAP
PCC	PORTLAND CEMENT CONCRETE
PDF	POWDER DRIVEN FASTENERS
PH	PHILLIPS HEAD
PL	PLATE
PLAM	PLASTIC LAMINATE
PLAS	PLASTER
PLYWD	PLYWOOD
PMF	PRESSED METAL FRAME
PR	PAIR
PRTN	PARTITION
PT	POINT
PTD	PAPER TOWEL DISPENSER
PTD/R	PAPER TOWEL DISPENSER /RECEPTACLE
PVC	POLYVINYL CHLORIDE
PWB	PREFABRICATED WOOD I BEAM
QT	QUARRY TILE
(R)	RELOCATED
R	RADIUS, RISER
R/W	RIGHT OF WAY
RD	ROOF DRAIN
RDWD	REDWOOD
REF	REFERENCE
REFG	REFRIGERATOR
REINF	REINFORCED(ING)
REQ	REQUIRED
RFG	ROOFING
RFSWN	ROUGHSAWN
RH	ROUND HEAD
RHWS	ROUND HEAD WOOD SCREWS
RJ	ROOF JOIST
RM	ROOM
RO	ROUGH OPENING
RSWN	RESAWN
RTE	ROUTE
RW	RETAINING WALL
RWL	RAINWATER LEADER
S	SOUTH
SC	SOLID CORE
SCHED	SCHEDULE
SD	SOAP DISPENSER
SDST	SELF DRILLING SELF TAPPING
SF	SQUARE FEET
SH	SHELF
SHWR	SHOWER
SHT	SHEET
SHTG	SHEATHING
SIM	SIMILAR
SL	SCORE LINE
SMS	SHEET METAL SCREW
SOHD	SECTIONAL OVERHEAD DOOR
SPEC	SPECIFICATION
SPS	STRUCTURAL PLYWOOD SHEATHING
SQ	SQUARE
SRRA	SAFETY ROADSIDE REST AREA
SS	SERVICE SINK
SST	STAINLESS STEEL
STA	STATION
STAG	STAGGER
STD	STANDARD
STL	STEEL
STOR	STORAGE
STRUC	STRUCTURAL
SUSP	SUSPENDED
T	TREAD
T&G	TONGUE & GROOVE
TB	TOLL BOOTH
TEL	TELEPHONE
TEMP	TEMPERED
TER	TERRAZZO
THK	THICK
THLD	THRESHOLD
TJ	TOOLED JOINT
TKBD	TACKBOARD
TN	TOE NAIL
TNVM	TAMPON/NAPKIN VENDING MACHINE
TOC	TOP OF CURB OR CONCRETE
TOP	TOP OF PAVEMENT
TOS	TOE OF SLOPE
TOT	TOTAL
TOW	TOP OF WALL
TS	TUBE STEEL
TSCD	TOILET SEAT COVER DISPENSER
TTD	TOILET TISSUE DISPENSER
TTY	TELETYPEWRITER
TYP	TYPICAL
UNF	UNFINISHED
UON	UNLESS OTHERWISE NOTED
UR	URINAL
VAR	VARIES
VCT	VINYL COMPOSITION TILE
VERT	VERTICAL
VEST	VESTIBULE
VR	VENT RISER
VTR	VENT THRU ROOF
W	WEST
W/	WITH
W/O	WITHOUT
WC	WATER CLOSET
WD	WOOD
WDW	WINDOW
WH	WATER HEATER
WP	WORKING POINT
WR	WATER RESISTANT
WSCT	WAINSCOT
WT	WEIGHT
WTPR	WATERPROOFING
WWF	WELDED WIRE FABRIC
YD	YARD

DIST.	COUNTY	ROUTE	POST MILES TOTAL PROJECT	SHEET NO.	TOTAL SHEETS
02	Teh	5	10.5	82	199

LICENSED ARCHITECT — 9-25-13 — DATE

LICENSED ARCHITECT ANTHONY V. MANANSALA No. C-32260 Exp. 4/30/17 STATE OF CALIFORNIA

4-1-14
PLANS APPROVAL DATE

The State of California or its officers or agents shall not be responsible for the accuracy or completeness of electronic copies of this plan sheet.

GENERAL NOTES

1. THE CONTRACTOR SHALL VERIFY ALL CONTROLLING DIMENSIONS AND FIELD CONDITIONS BEFORE ORDERING OR FABRICATING ANY MATERIALS OR ASSEMBLIES.
2. THE CONTRACTOR SHALL NOTIFY THE ENGINEER IN WRITING OF ANY DISCREPENCIES BETWEEN THESE PLANS AND ACTUAL MEASUREMENTS OR FIELD CONDITIONS.

ACCESSIBILITY DESIGN APPROVAL STAMP
DOT / DES / OTA
PROJECT ID
0200000030
Reviewed by:
Date: 6/15/11

CALIFORNIA STATE FIRE MARSHAL APPROVED
Approval of this plan does not authorize or approve any omission or deviation from applicable regulations. Final approval is subject to field inspection. One set of approved plans shall be available on the project site at all times.
Reviewed by: FRANCIS SOLICH
Approval date: 03-10-2015

SYMBOLS

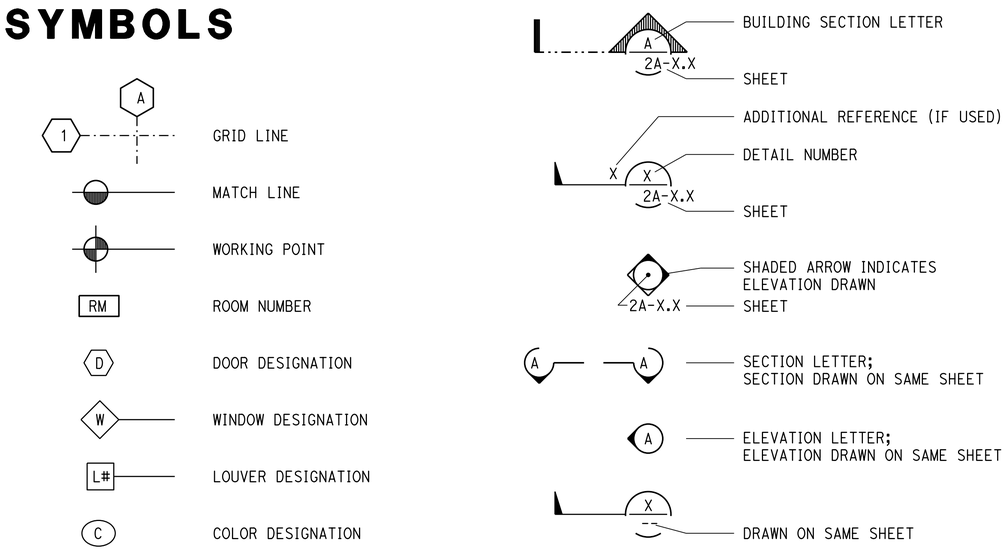

DESIGN SUPERVISOR
DESIGN ARCHITECT
DESIGNER
DRAWN BY
CHECKED BY
STRUCTURAL REVIEW

SHEET LEGEND
A-I ARCHITECTURAL
M-I MECHANICAL
P-I PLUMBING
ST-I STRUCTURAL
E-I ELECTRICAL
SS-I SANITARY

STATE OF CALIFORNIA
DEPARTMENT OF TRANSPORTATION

DIVISION OF ENGINEERING SERVICES
ARCHITECTURAL AND STRUCTURAL DESIGN

BRIDGE NO. 08R00002L 08R00002R
POST MILE 16.9

CORNING SRRA UPGRADE
ARCHITECTURAL ABBREVIATIONS, SYMBOLS

SHEET **A0-2**

a0-02.dgn
TAEMWW Imperial Rev. 7/10 12-MAY-2015 13:56

ORIGINAL SCALE IN INCHES FOR REDUCED PLANS 0 1 2 3

UNIT 3600
PROJECT NUMBER & PHASE 02000000301
EA 0E3601

DISREGARD PRINTS BEARING EARLIER REVISION DATES
REVISION DATES (PRELIMINARY STAGE ONLY) - 07 XX-XX-XX
SHEET X OF X

12-MAY-2015 13:56
a0-02.dgn

DIST.	COUNTY	ROUTE	POST MILES TOTAL PROJECT	SHEET NO.	TOTAL SHEETS
02	Teh	5	10.5	83	199

LICENSED ARCHITECT — DATE 10-19-12

LICENSED ARCHITECT Y.A. WANG No. C14891 Exp. 11-30-15 STATE OF CALIFORNIA

4-1-14
PLANS APPROVAL DATE

The State of California or its officers or agents shall not be responsible for the accuracy or completeness of scanned copies of this plan sheet.

ACCESSIBILITY DESIGN APPROVAL STAMP
DOT / DES / OTA
PROJECT ID 0200000030
Reviewed by:
Date: 6/15/11

CALIFORNIA STATE FIRE MARSHAL APPROVED
Approval of this plan does not authorize or approve any omission or deviation from applicable regulations. Final approval is subject to field inspection. One set of approved plans shall be available on the project site at all times.
Reviewed by: FRANCIS SOLICH
Approval date: 03-10-2015

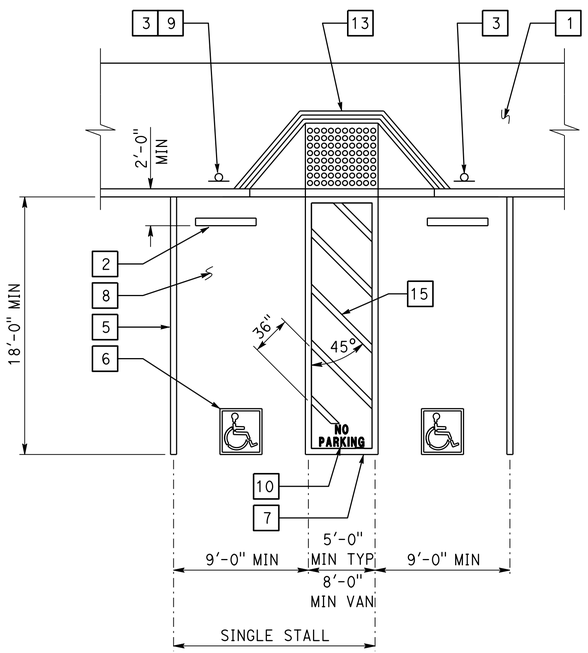

1 ACCESSIBLE PARKING STALL

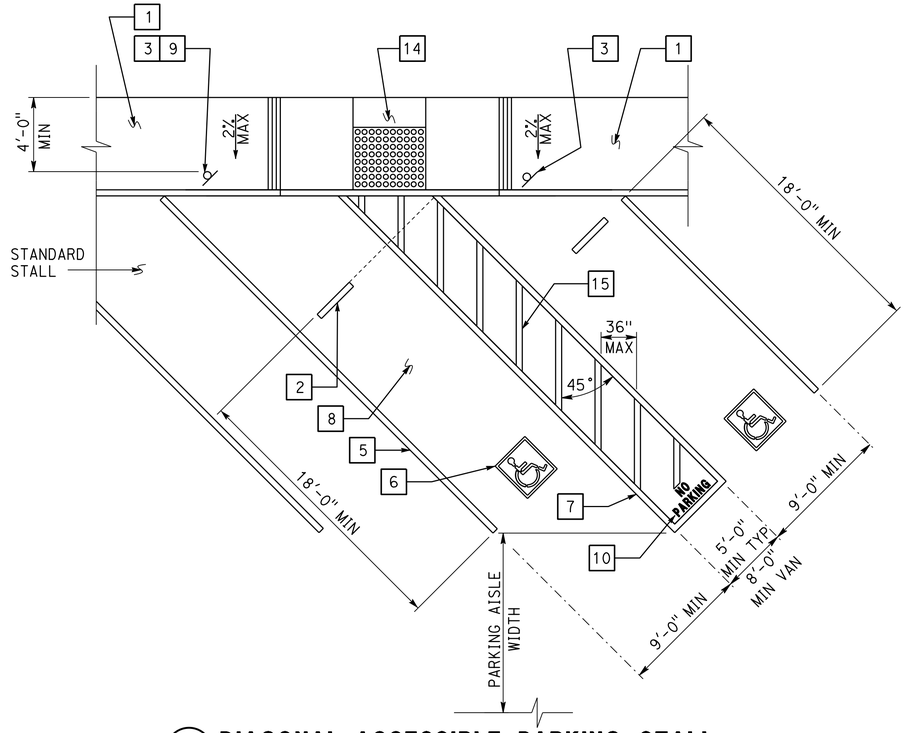

2 DIAGONAL ACCESSIBLE PARKING STALL

See plan for any variation of diagonal parking. Angle of parking stalls shall either match the existing angle or be indicated on plans.

KEYED NOTE LEGEND FOR DETAILS

1. Concrete walkway (where occurs). See plans for width, layout (may vary), finish, joints and elevations.
2. Parking bumper (away from access aisle). See Specifications.
3. Accessible parking space signage. See Detail 1 on sheet A0-3.2.
4. 1' wide grooved border on level surface typ at ramp perimeter. See Detail 3 on this sheet.
5. 4" wide white parking stall designation stripe. See site plan(s) for additional stall striping. See specifications for painting.
6. Accessible parking surface identification painted on pavement. See Detail 6 on sheet A0-3.2.
7. 4" wide blue border designating non-parking access aisle to curb ramp.
8. Maximum slope on parking stall and access aisle to be 2%.
9. Van accessible signage. See Detail 2 on sheet A0-3.2. Access aisle shall be on passenger side only.
10. "NO PARKING" in min 12" high white letters to be placed within access aisle to curb ramp. See Detail 7 on sheet A0-3.2.
11. Level landing -2% max slope w/36" deep detectable warning surface adjoining access aisle or vehicular way. See Detail 6 on this sheet.
12. Detectable warning surface to extend full width and min 36" deep from front edge of sidewalk. See Detail 6 on this sheet.
13. Curb ramp. See Detail 4 on this sheet. Also see plans for width and layout (may vary).
14. Curb ramp. See Detail 5 on this sheet. Also see plans for width and layout (may vary).
15. 4" wide white hatched lines to contrast with asphalt surface. Use blue hatched lines for light-color concrete surface.

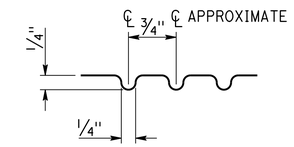

3 GROOVE DETAIL

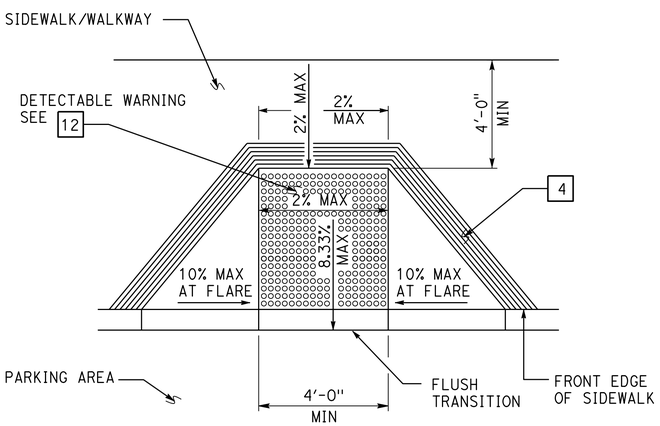

4 PERPENDICULAR CURB RAMP

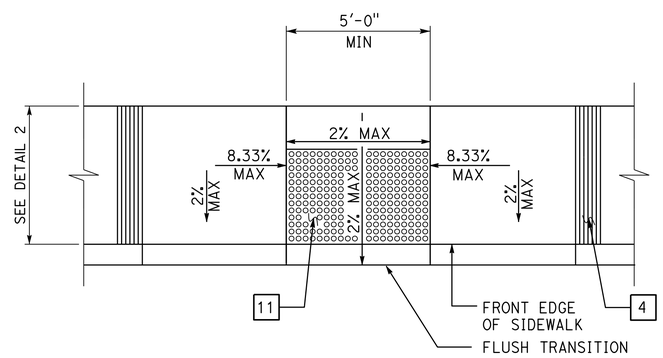

5 PARALLEL CURB RAMP

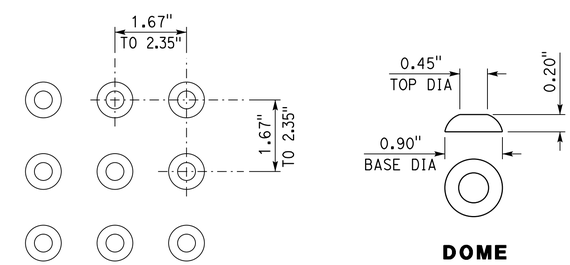

6 DETECTABLE WARNING SURFACE - TRUNCATED DOMES

Dome dimensions are nominal, which may be within ±0.05" for dome spacing, and ±0.02" for dome size.

DETAILS

No scale unless otherwise noted

NOTE: SPECIFIC DETAILS OR NOTES ON OTHER SHEETS SHALL PREVAIL OVER STANDARD DETAILS AND NOTES ON THIS SHEET

STANDARD DRAWING

FILE NO. __-__-_ | DESIGN BY D. Alsey | CHECKED Y. A. Wang | APPROVED R E Travis DESIGN SUPERVISOR
DRAWING DATE 10-12 | DETAILS BY D. Good | CHECKED Y. A. Wang
SUBMITTED BY Y.A. Wang

STATE OF CALIFORNIA DEPARTMENT OF TRANSPORTATION

DIVISION OF ENGINEERING SERVICES ARCHITECTURAL AND STRUCTURAL DESIGN

BRIDGE NO. 08R00002L 08R00002R | POST MILE

CORNING SRRA UPGRADE

ACCESSIBILITY | ACCESSIBILITY STANDARD DETAILS

SHEET A0-3.1

a0-03a_i.dgn
TAEMWW imperial Rev. 7/10 12-MAY-2015 13:57

ORIGINAL SCALE IN INCHES FOR REDUCED PLANS 0 1 2 3

UNIT 3600
PROJECT NUMBER & PHASE 02000000301
EA 0E3601

DISREGARD PRINTS BEARING EARLIER REVISION DATES → REVISION DATES (PRELIMINARY STAGE ONLY) - 07 | SHEET | OF

12-MAY-2015 13:57
a0-03a_i.dgn

DIST.	COUNTY	ROUTE	POST MILES TOTAL PROJECT	SHEET NO.	TOTAL SHEETS
02	Teh	5	10.5	84	199

LICENSED ARCHITECT — DATE 10-19-12

LICENSED ARCHITECT — Y.A. WANG — No. C14891 — Exp. 11-30-15 — STATE OF CALIFORNIA

4-1-14
PLANS APPROVAL DATE

The State of California or its officers or agents shall not be responsible for the accuracy or completeness of scanned copies of this plan sheet.

ACCESSIBILITY DESIGN APPROVAL STAMP DOT / DES / OTA
PROJECT ID 0200000030
Reviewed by:
Date: 6/15/11

CALIFORNIA STATE FIRE MARSHAL APPROVED
Approval of this plan does not authorize or approve any omission or deviation from applicable regulations. Final approval is subject to field inspection. One set of approved plans shall be available on the project site at all times.
Reviewed by: FRANCIS SOLICH
Approval date: 03-10-2015

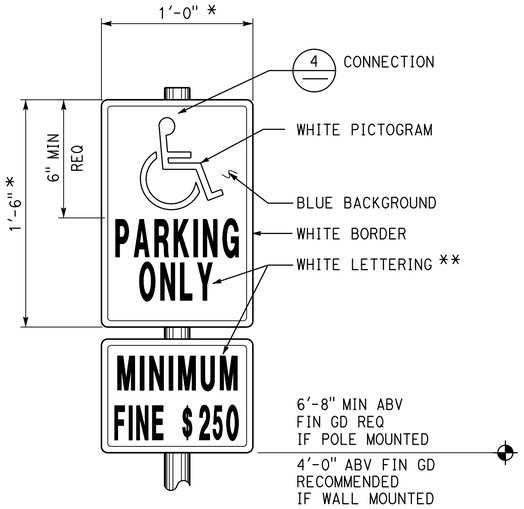

1 ACCESSIBLE PARKING SIGN

Refer to Site Plan for locations.
Combo sign may be used.
* Min area 70 sq in req
** 2" min ht req for up to 10'-0" mounting ht from baseline of highest letter to fin gd.
3" min ht req for mounting ht over 10'-0".

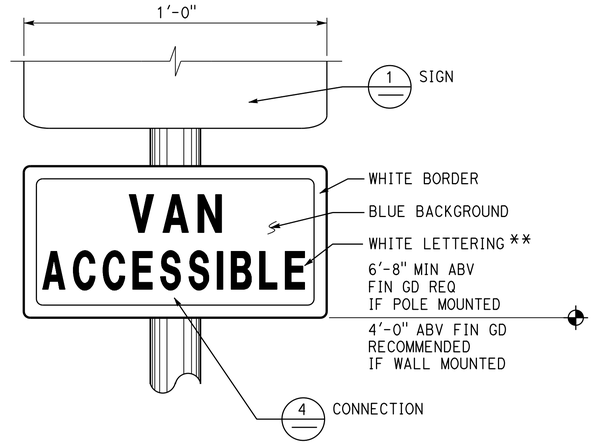

2 ACCESSIBLE VAN PARKING SIGN

Refer to Site Plan for locations.
Combo sign may be used.

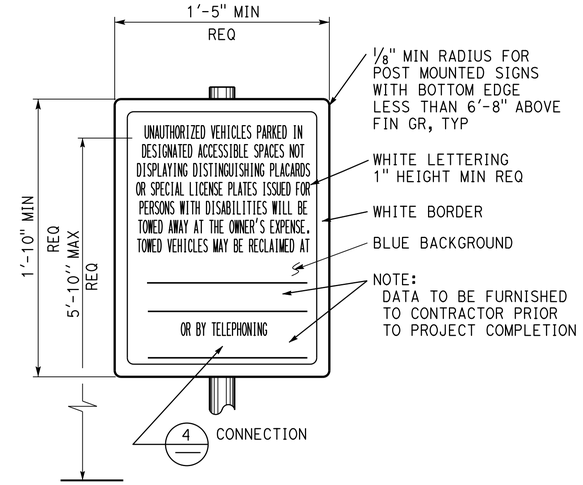

3 UNAUTHORIZED VEHICLES PARKING SIGN

Refer to Site Plan for locations. Colors may vary.
Sign shall not be posted in a path of travel.

Note:
All listed sign sizes are recommended standard sizes, unless otherwise noted as required. All mounting heights are recommended, unless otherwise noted as required.

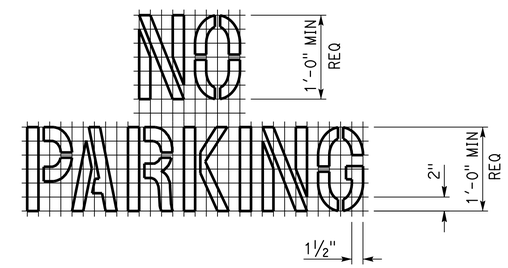

7 ACCESS AISLE PAVEMENT MARKING

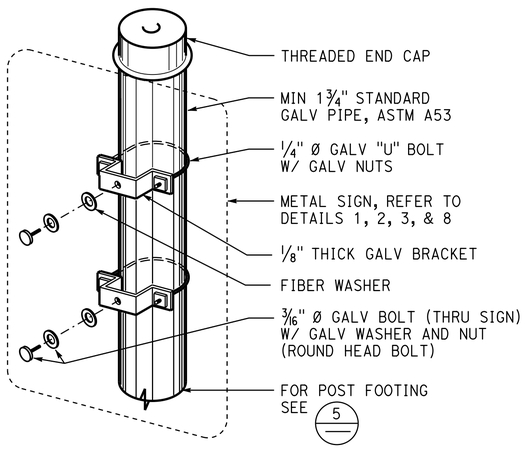

4 SIGN CONNECTION

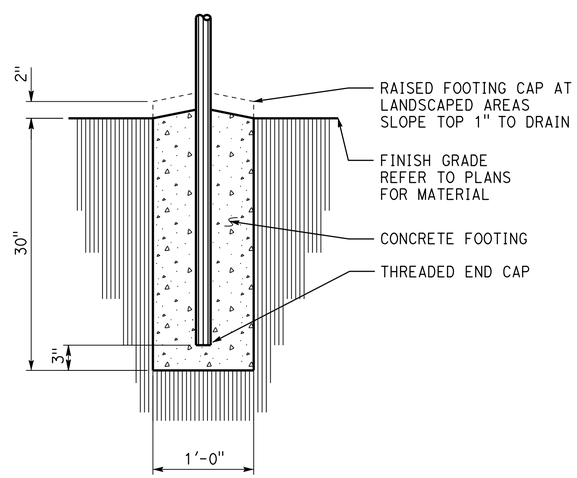

5 SIGN POST FOOTING

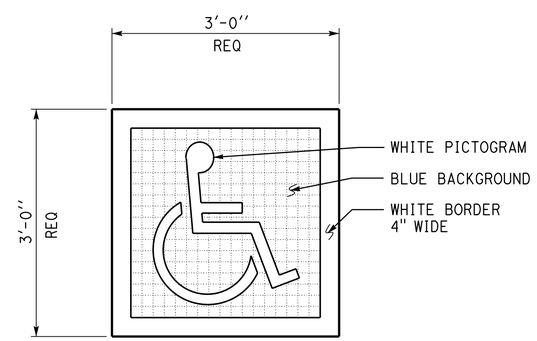

6 ACCESSIBLE PARKING SURFACE IDENTIFICATION

Refer to Details 1 and 2 on sheet A0-3.1 for locations.

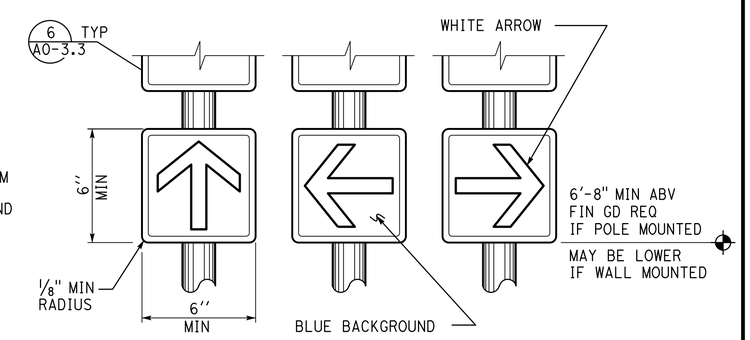

For additional information see 4

8 DIRECTIONAL SIGNS

Refer to Site Plan or General Plan for locations.
Wall or door mounted signs may be used.
Combo sign may be used.
Colors may vary.

DETAILS

No scale unless otherwise noted

NOTE: SPECIFIC DETAILS OR NOTES ON OTHER SHEETS SHALL PREVAIL OVER STANDARD DETAILS AND NOTES ON THIS SHEET

STANDARD DRAWING
FILE NO. __-__-__ | DESIGN BY D. Alsey | CHECKED Y. A. Wang | APPROVED R E Travis
DRAWING DATE 10-12 | DETAILS BY D. Good | CHECKED Y. A. Wang | DESIGN SUPERVISOR
SUBMITTED BY Y.A. Wang

STATE OF CALIFORNIA DEPARTMENT OF TRANSPORTATION

DIVISION OF ENGINEERING SERVICES ARCHITECTURAL AND STRUCTURAL DESIGN

BRIDGE NO. 08R00002L 08R00002R
POST MILE

CORNING SRRA UPGRADE
ACCESSIBILITY — ACCESSIBILITY STANDARD DETAILS

SHEET A0-3.2

a0-03b_i.dgn
TAEMWW imperial Rev. 7/10 12-MAY-2015 13:57

ORIGINAL SCALE IN INCHES FOR REDUCED PLANS 0 1 2 3

UNIT 3600
PROJECT NUMBER & PHASE 02000000301
EA 0E3601

DISREGARD PRINTS BEARING EARLIER REVISION DATES
REVISION DATES (PRELIMINARY STAGE ONLY) - 07 | SHEET | OF

12-MAY-2015 13:57
a0-03b_i.dgn

DIST.	COUNTY	ROUTE	POST MILES TOTAL PROJECT	SHEET NO.	TOTAL SHEETS
02	Teh	5	10.5	85	199

LICENSED ARCHITECT — DATE 10-19-12

LICENSED ARCHITECT Y.A. WANG No. C14891 Exp. 11-30-15 STATE OF CALIFORNIA

4-1-14
PLANS APPROVAL DATE

The State of California or its officers or agents shall not be responsible for the accuracy or completeness of scanned copies of this plan sheet.

ACCESSIBILITY DESIGN APPROVAL STAMP
DOT / DES / OTA
PROJECT ID 0200000030
Reviewed by:
Date: 6/15/11

CALIFORNIA STATE FIRE MARSHAL APPROVED
Approval of this plan does not authorize or approve any omission or deviation from applicable regulations. Final approval is subject to field inspection. One set of approved plans shall be available on the project site at all times.
Reviewed by: FRANCIS SOLICH
Approval date: 03-10-2015

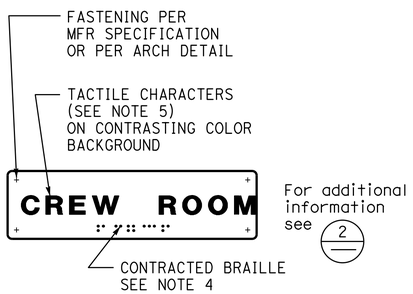

1 ROOM IDENTIFICATION SIGN

Install per Detail 5.
Text varies.
See plans, ext elevations, or door schedule for locations and text.
See Detail 7 for sign mounting heights.

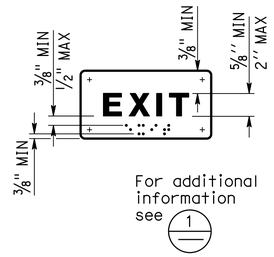

2 INTERIOR EXIT SIGN

Install per Detail 5.
Text may vary.
See plans, or door schedule for locations and text.
See Detail 7 for sign mounting heights.

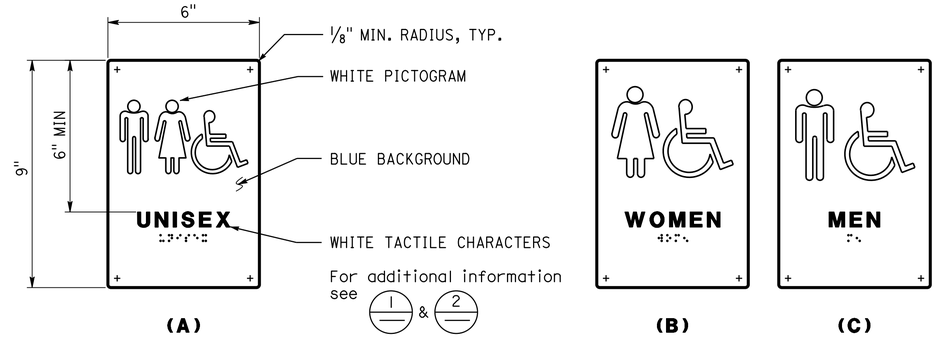

3 RESTROOM/SHOWER ROOM SIGNS

Install per Detail 5.
See Detail 7 for sign mounting height.

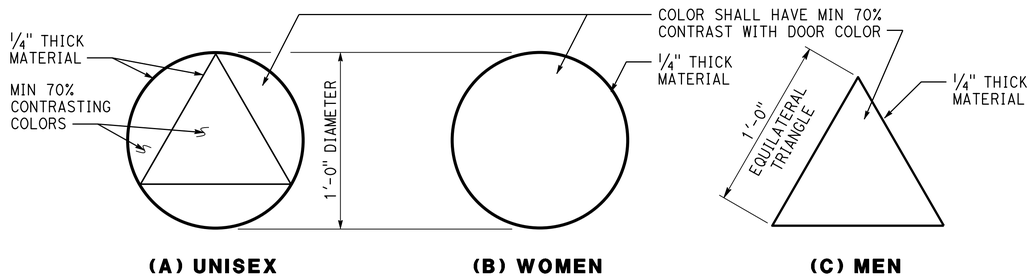

4 RESTROOM/SHOWER ROOM IDENTIFICATION SYMBOLS

Install per Detail 5.
Any pictogram and text are not required.

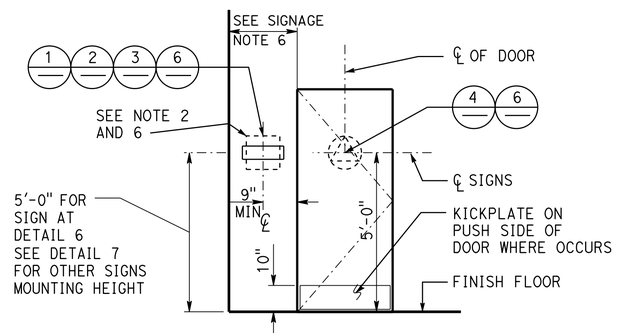

5 SIGN LOCATIONS

Refer to signage notes for additional information.

SIGNAGE NOTES:

1. Locate room identification signs, exit signs, and restroom signs on wall adjacent to door on latch side. If wall space is not available on latch side, locate on nearest adjacent wall. Locate sign on inactive leaf at double doors, or to the right of right hand door at double doors with two active leafs.
2. Refer to specifications for sign material and other color selection. Except Detail 6, sign colors may vary from details.
3. See door schedule for text and sign location, UON.
4. Contracted Braille: dots shall be 1/10" OC in each cell with 2/10" space between cells measured from the second column of dots in the first cell to the first column of dots in the second cell. Dots shall be raised a minimum of 1/40" above the background. Dots shall be domed or rounded.
5. Tactile characters shall be uppercase san serif raised 1/32" min. Fonts shall be selected where width of letter "O" is 60% min and 110% max of height of letter "I". Stroke thickness of letter"I" is 10% min and 20% max of height of the character.
6. Provide 18"x18" min clear floor space in front of and centered on any tactile sign.
7. Sign color shall have a minimum of 70% contrast to door or wall color. Text and pictogram shall have a minimum of 70% contrast to sign color.
8. Tactile character height is measured based on height of uppercase letter "I".

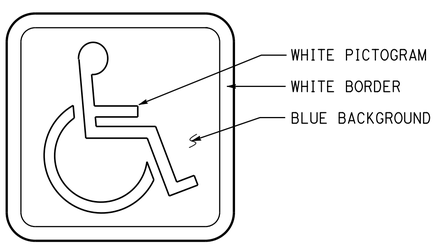

6 INTERNATIONAL SYMBOL OF ACCESSIBILITY SIGN

Install per Detail 5.
See plans, elevations, or schedule for sign locations.
Decal may be used.

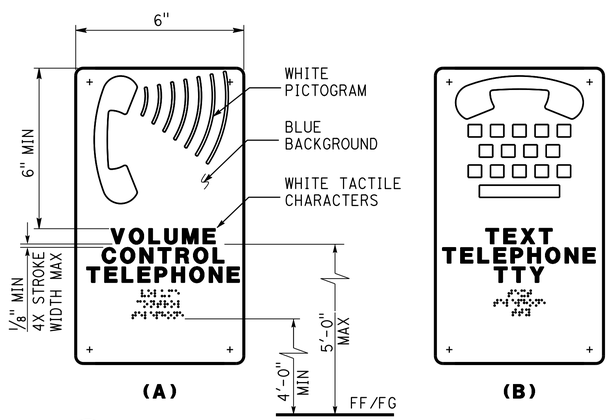

7 TELEPHONE SIGNS

Text may vary.
See plans or exterior elevations for sign locations and mounting heights.

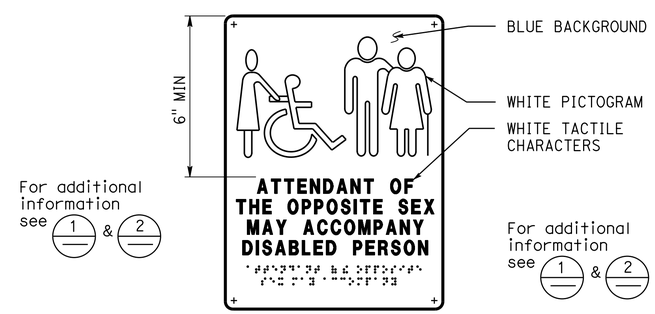

8 RESTROOM ACCOMPANY SIGN

See plans or elevations for locations.
See Detail 7 for sign mounting heights.

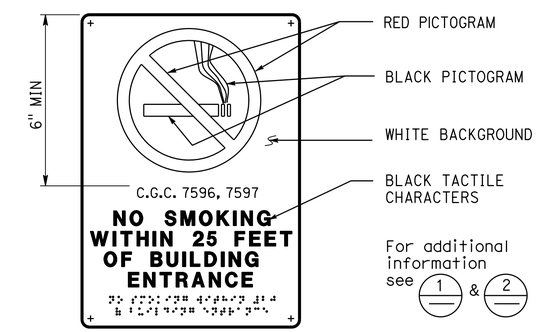

9 NO SMOKING SIGN

See plans or ext elevations for locations.
See Detail 7 for sign mounting heights.

DETAILS

No scale unless otherwise noted

NOTE: SPECIFIC DETAILS OR NOTES ON OTHER SHEETS SHALL PREVAIL OVER STANDARD DETAILS AND NOTES ON THIS SHEET

STANDARD DRAWING
FILE NO. __-__-__
DRAWING DATE 10-12
DESIGN BY D. Alsey CHECKED Y. A. Wang
DETAILS BY D. Good CHECKED Y. A. Wang
SUBMITTED BY Y.A. Wang
APPROVED R.E. Travis DESIGN SUPERVISOR

STATE OF CALIFORNIA DEPARTMENT OF TRANSPORTATION
DIVISION OF ENGINEERING SERVICES ARCHITECTURAL AND STRUCTURAL DESIGN
BRIDGE NO. 08R00002L 08R00002R
POST MILE
CORNING SRRA UPGRADE
ACCESSIBILITY — ACCESSIBILITY STANDARD DETAILS
SHEET A0-3.3

a0-03c_1.dgn
TAEMWW imperial Rev. 7/10 12-MAY-2015 13:57
ORIGINAL SCALE IN INCHES FOR REDUCED PLANS 0 1 2 3
UNIT 3600
PROJECT NUMBER & PHASE 02000000301
EA 0E3601
DISREGARD PRINTS BEARING EARLIER REVISION DATES
REVISION DATES (PRELIMINARY STAGE ONLY) - 07
SHEET OF
12-MAY-2015 13:57
a0-03c_1.dgn

DIST.	COUNTY	ROUTE	POST MILES TOTAL PROJECT	SHEET NO.	TOTAL SHEETS
02	Teh	5	10.5	86	199

LICENSED ARCHITECT — DATE 10-19-12

LICENSED ARCHITECT Y.A. WANG No. C14891 Exp. 11-30-15 STATE OF CALIFORNIA

4-1-14
PLANS APPROVAL DATE

The State of California or its officers or agents shall not be responsible for the accuracy or completeness of scanned copies of this plan sheet.

ACCESSIBILITY DESIGN APPROVAL STAMP
DOT / DES / OTA
PROJECT ID 0200000030
Reviewed by:
Date: 6/15/11

CALIFORNIA STATE FIRE MARSHAL APPROVED
Approval of this plan does not authorize or approve any omission or deviation from applicable regulations. Final approval is subject to field inspection. One set of approved plans shall be available on the project site at all times.
Reviewed by: FRANCIS SOLICH
Approval date: 03-10-2015

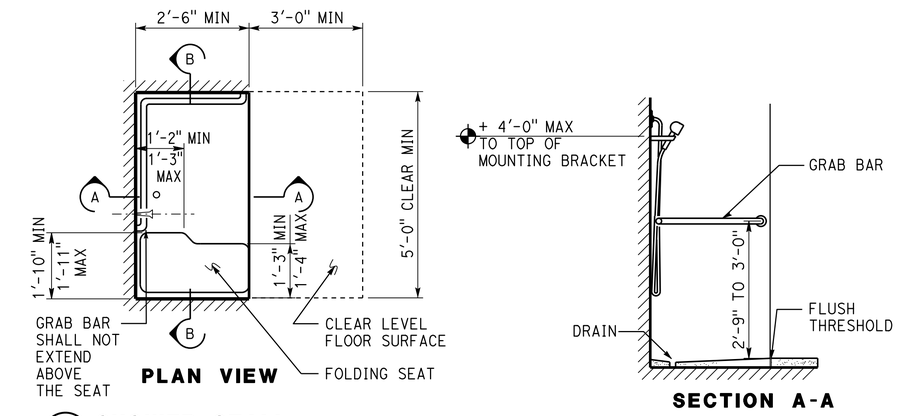

1 SHOWER STALL

Optional standard shower head may be added to wall opposite shower seat. Locate water diverter per water control.

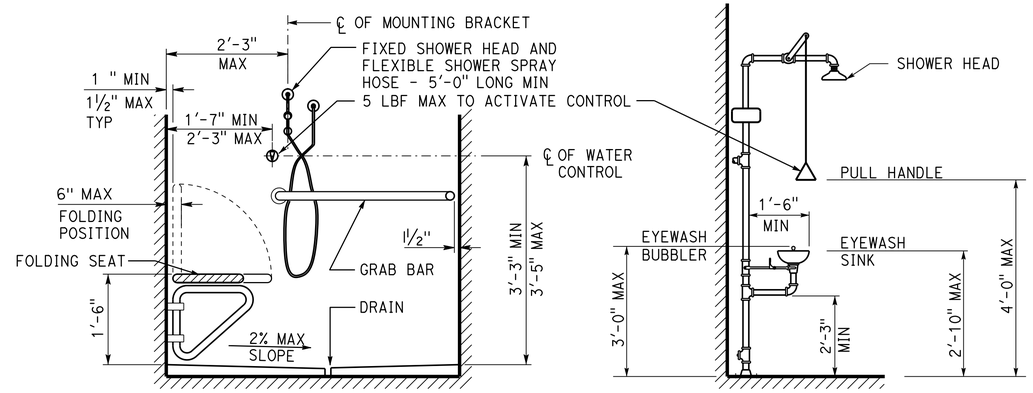

2 EMERGENCY EYEWASH/ SHOWER

Foot pedal may be added to operate equipment

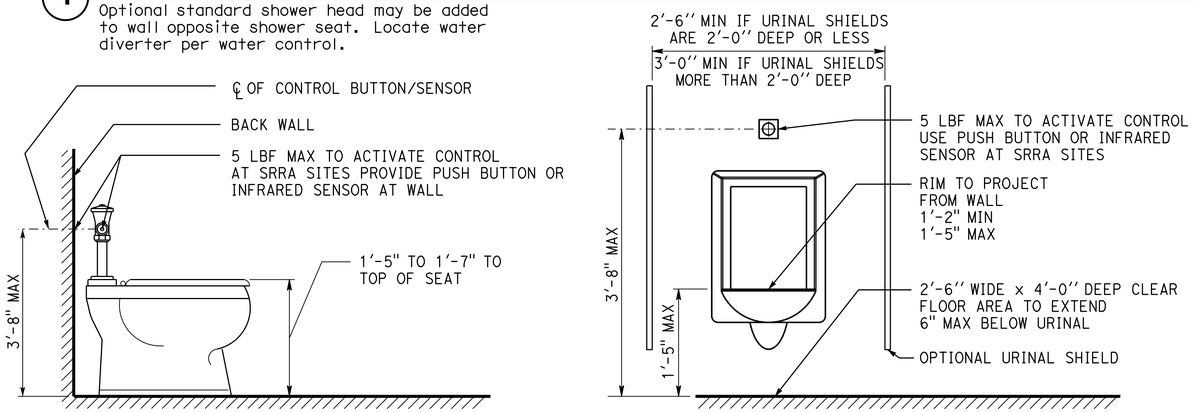

3 WATER CLOSET

See Spec for fixture type

4 URINAL

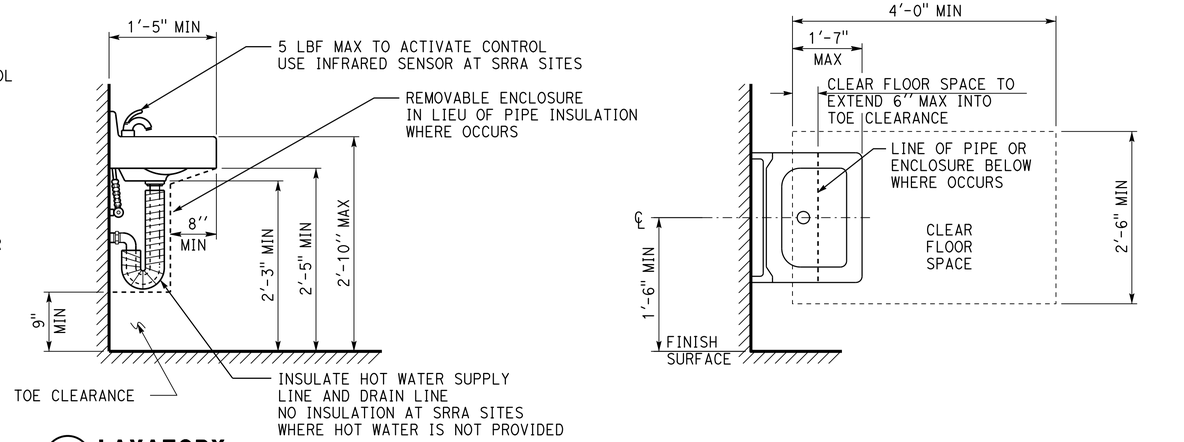

5 LAVATORY

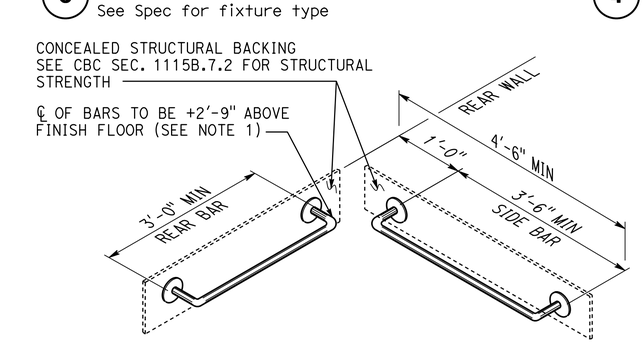

6 GRAB BARS/ WATER CLOSET

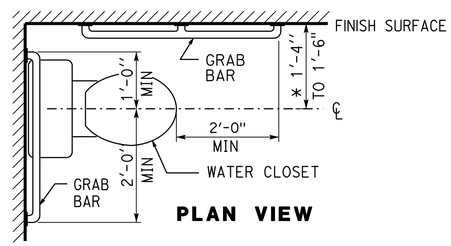

Grab bar note:
1. If tank type toilet is used, centerline of rear bar may be set to 3'-0" max above finish floor. Side bar to remain as shown.
2. Grab bars to be 1 ¼" To 1 ½" diameter with clear space of 1 ½" to smooth wall surface.

* 1'-5" to 1'-7" at ambulatory accessible compartment.

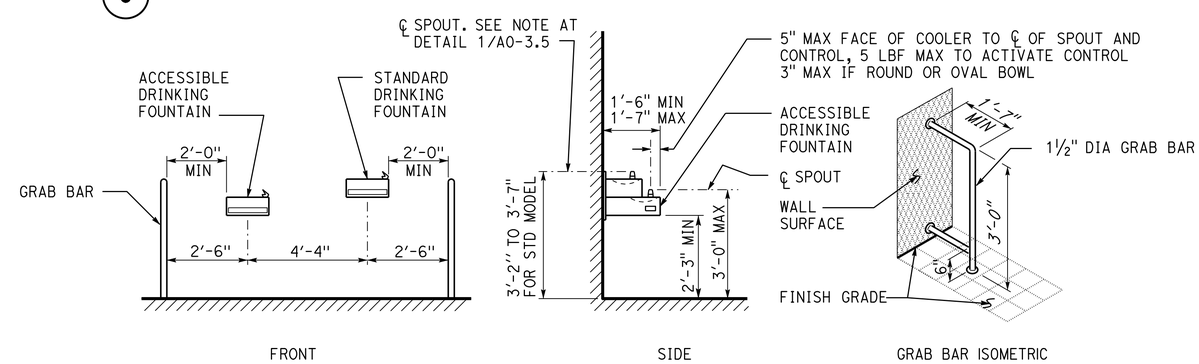

7 ELECTRIC WATER COOLER

In lieu of grab bars, other types of wing walls may be used.
Dimensions at front elevation may vary - see plan.
Provide clear level area w/max 2% slope in all directions at each fixture.
See clear floor space at detail 1/A0-3.5 for size and location.

DETAILS

No scale unless otherwise noted

NOTE: SPECIFIC DETAILS OR NOTES ON OTHER SHEETS SHALL PREVAIL OVER STANDARD DETAILS AND NOTES ON THIS SHEET

STANDARD DRAWING				
FILE NO. __-__-_	DESIGN	BY D. Alsey	CHECKED Y. A. Wang	APPROVED R E Travis DESIGN SUPERVISOR
DRAWING DATE 10-12	DETAILS	BY D. Good	CHECKED Y. A. Wang	
	SUBMITTED BY Y.A. Wang			

STATE OF CALIFORNIA DEPARTMENT OF TRANSPORTATION

DIVISION OF ENGINEERING SERVICES ARCHITECTURAL AND STRUCTURAL DESIGN

BRIDGE NO. 08R00002L 08R00002R
POST MILE

CORNING SRRA UPGRADE

ACCESSIBILITY — ACCESSIBILITY STANDARD DETAILS

SHEET A0-3.4

a0-03d_i.dgn
TAEMWW imperial Rev. 7/10 12-MAY-2015 13:57

ORIGINAL SCALE IN INCHES FOR REDUCED PLANS 0 1 2 3

UNIT 3600
PROJECT NUMBER & PHASE 02000000301
EA 0E3601

DISREGARD PRINTS BEARING EARLIER REVISION DATES

REVISION DATES (PRELIMINARY STAGE ONLY) - 07 — SHEET — OF

12-MAY-2015 13:57
a0-03d_i.dgn

DIST.	COUNTY	ROUTE	POST MILES TOTAL PROJECT	SHEET NO.	TOTAL SHEETS
02	Teh	5	10.5	87	199

LICENSED ARCHITECT — DATE 10-19-12

LICENSED ARCHITECT Y.A. WANG No. C14891 Exp. 11-30-15 STATE OF CALIFORNIA

4-1-14
PLANS APPROVAL DATE

The State of California or its officers or agents shall not be responsible for the accuracy or completeness of scanned copies of this plan sheet.

ACCESSIBILITY DESIGN APPROVAL STAMP DOT / DES / OTA
PROJECT ID 0200000030
Reviewed by: Date: 6/15/11

CALIFORNIA STATE FIRE MARSHAL APPROVED
Approval of this plan does not authorize or approve any omission or deviation from applicable regulations. Final approval is subject to field inspection. One set of approved plans shall be available on the project site at all times.
Reviewed by: FRANCIS SOLICH
Approval date: 03-10-2015

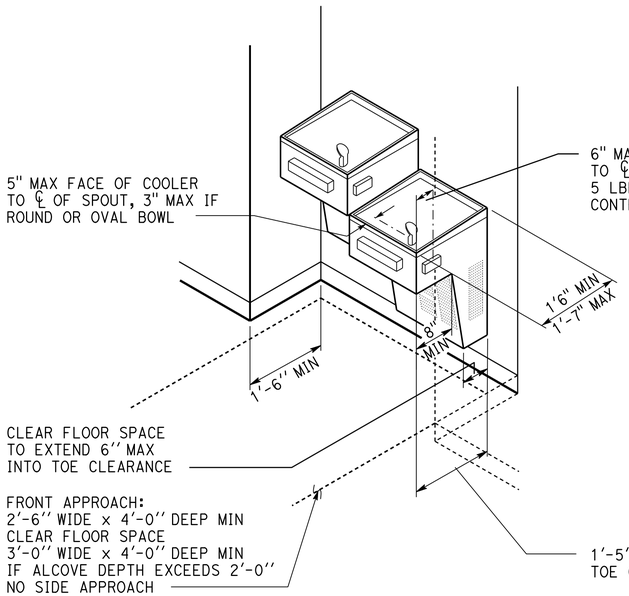

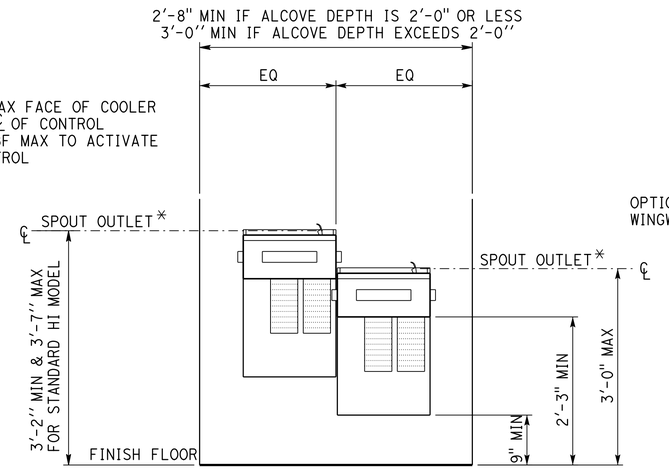

* Spout shall provide min 4" high water flow. If spout is less than 3" from face of cooler, angle of water stream shall be max 30 degrees measured horizontally relative to the face of cooler. If spout is between 3" and 5" from face of cooler, angle shall be max 15 degrees.

1 ELECTRIC WATER COOLER AT ALCOVE

Fixture type may vary.
Width of alcove may vary.
Two fixtures with separate mounting heights may be installed at separate locations.

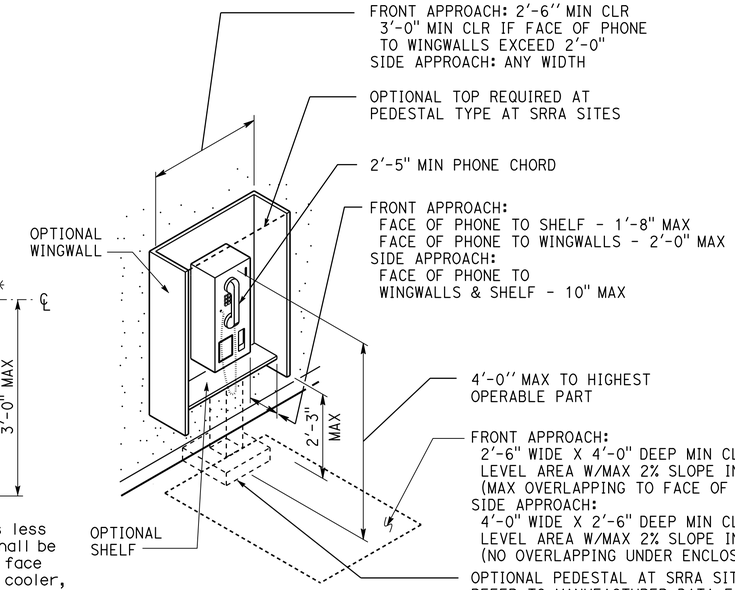

2 TELEPHONE

Note: Seat surface shall be slip resistant and shall not accumulate water (E.G., 2% max slope to drain) when installed in conjuction with wet locations. Structural strength of the bench and attachments shall comply w/CBC Sec. 1115B.7.2

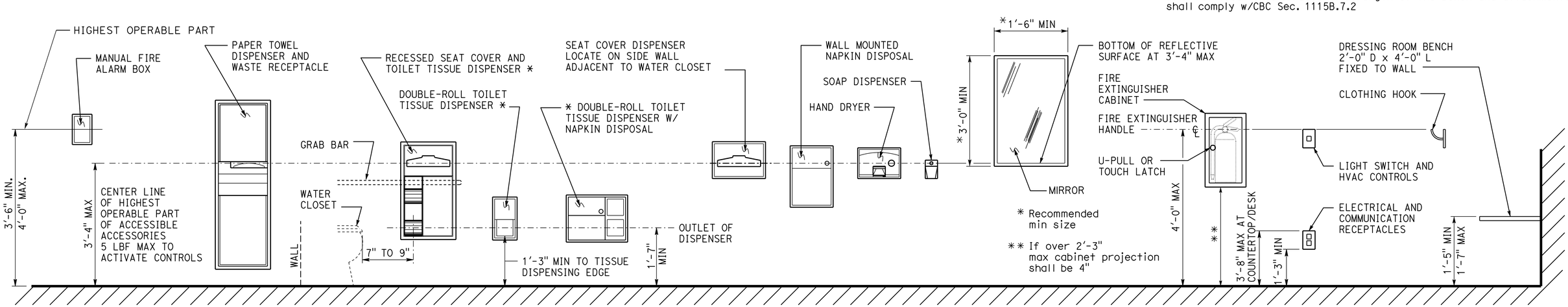

* Toilet tissue dispenser shall be located on wall or partition closet to water closet

3 ACCESSORIES

DETAILS

No scale unless otherwise noted

NOTE: SPECIFIC DETAILS OR NOTES ON OTHER SHEETS SHALL PREVAIL OVER STANDARD DETAILS AND NOTES ON THIS SHEET

STANDARD DRAWING
FILE NO. __-__-__
DRAWING DATE 10-12r
DESIGN BY D. Alsey CHECKED Y. A. Wang
DETAILS BY D. Good CHECKED Y. A. Wang
SUBMITTED BY Y.A. Wang
APPROVED R E Travis DESIGN SUPERVISOR

STATE OF CALIFORNIA DEPARTMENT OF TRANSPORTATION

DIVISION OF ENGINEERING SERVICES ARCHITECTURAL AND STRUCTURAL DESIGN

BRIDGE NO. 08R00002L 08R00002R
POST MILE

CORNING SRRA UPGRADE

ACCESSIBILITY — ACCESSIBILITY STANDARD DETAILS

SHEET A0-3.5

a0-03e_i.dgn
TAEMWW imperial Rev. 7/10 12-MAY-2015 13:57

ORIGINAL SCALE IN INCHES FOR REDUCED PLANS 0 1 2 3

UNIT 3600
PROJECT NUMBER & PHASE 02000000301
EA 0E3601

DISREGARD PRINTS BEARING EARLIER REVISION DATES
REVISION DATES (PRELIMINARY STAGE ONLY) - 07
SHEET OF

12-MAY-2015 13:57
a0-03e_i.dgn

DIST.	COUNTY	ROUTE	POST MILES TOTAL PROJECT	SHEET NO.	TOTAL SHEETS
02	Teh	5	10.5	88	199

LICENSED ARCHITECT — 9-25-13 — DATE

LICENSED ARCHITECT ANTHONY V. MANANSALA No. C-32260 Exp. 4/30/17 STATE OF CALIFORNIA

4-1-14
PLANS APPROVAL DATE

The State of California or its officers or agents shall not be responsible for the accuracy or completeness of electronic copies of this plan sheet.

ACCESSIBILITY DESIGN APPROVAL STAMP DOT / DES / OTA

PROJECT ID **0200000030**

Reviewed by:

Date: 6/15/11

CALIFORNIA STATE FIRE MARSHAL APPROVED

Approval of this plan does not authorize or approve any omission or deviation from applicable regulations. Final approval is subject to field inspection. One set of approved plans shall be available on the project site at all times.

Reviewed by: FRANCIS SOLICH

Approval date: 03-10-2015

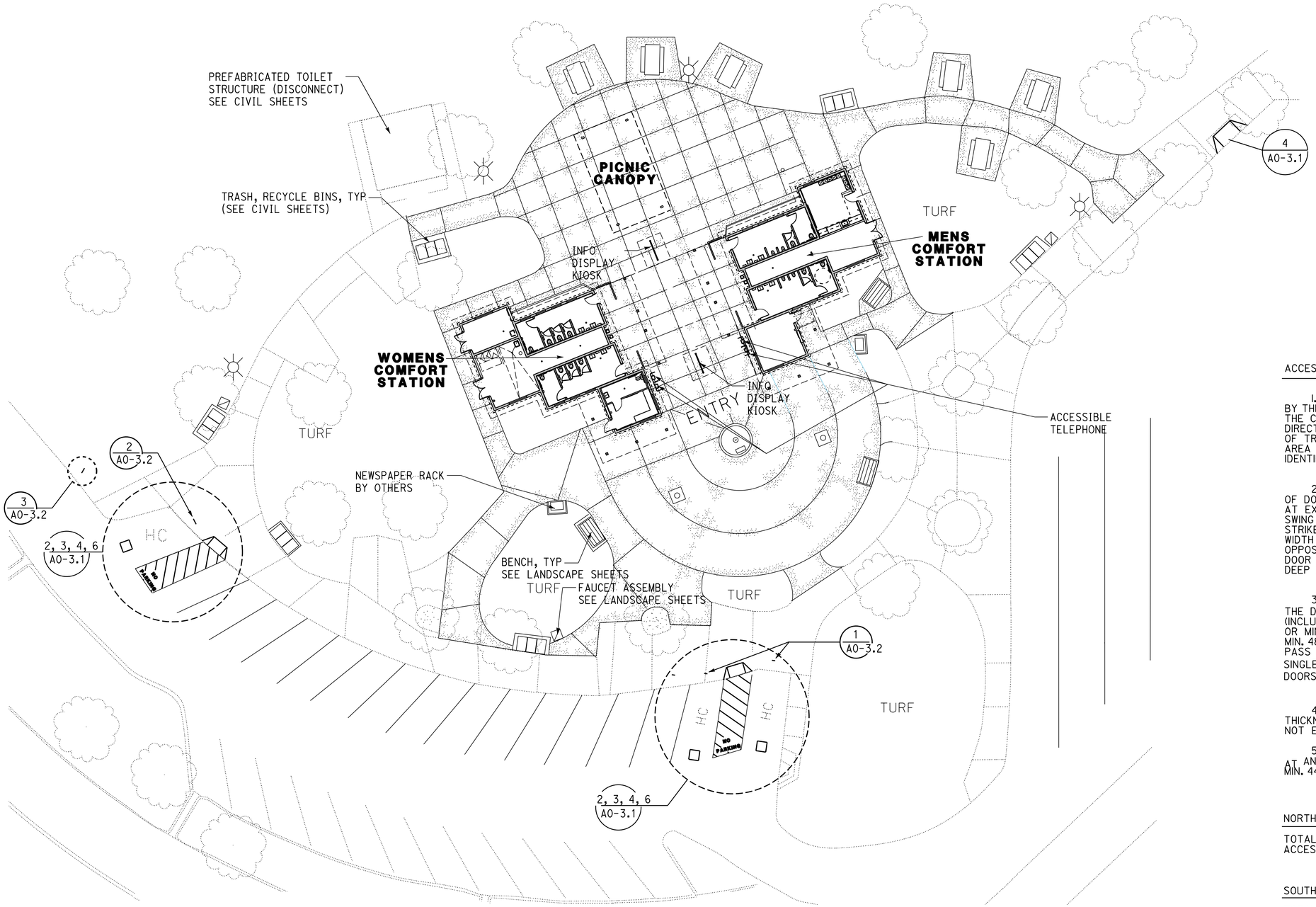

ACCESSIBILITY NOTES

1. THE ENTIRE SITE EXCEPT VEHICLE WAYS HAS BEEN VERIFIED BY THE ARCHITECT TO BE FULLY ACCESSIBLE AND COMPLIANT TO THE CODE REQUIREMENTS, INCLUDING THE MAXIMUM SLOPE IN ANY DIRECTIONS BEING 2%. ANY SPECIFIC EXTERIOR PEDESTRIAN PATH OF TRAVEL (POT) WITHIN THE ENTIRE SITE (OR SHADED /HATCHED AREA INDICATED AT SITE PLAN/FLOOR PLANS) NEEDS NOT TO BE IDENTIFIED.

2. ALL DOORS SHALL HAVE CLEAR LEVEL AREAS ON BOTH SIDES OF DOORS W/MAX. 2% SLOPE IN ANY DIRECTION. CLEAR LEVEL AREA AT EXTERIOR DOOR FRONT APPROACH IN THE DIRECTION OF DOOR SWING SHALL BE MIN. 60"X 60" (INCLUDING MIN. 24" PASS DOOR STRIKE EDGE) FOR SINGLE DOOR, OR MIN 60" DEEP X DOUBLE-DOOR WIDTH FOR DOUBLE DOORS; AND MIN. 48" DEEP X 36" WIDE OPPOSITE DOOR SWING (PLUS MIN. 12" PASS DOOR STRIKE EDGE IF DOOR HAS BOTH LATCH AND CLOSER) FOR SINGLE DOOR, OR MIN 48" DEEP X DOUBLE-DOOR WIDTH FOR DOUBLE DOORS.

3. CLEAR LEVEL AREA AT INTERIOR DOOR FRONT APPROACH IN THE DIRECTION OF DOOR SWING SHALL BE MIN. 60" DEEP X 54" WIDE (INCLUDING MIN. 18" PASS DOOR STRIKE EDGE) FOR SINGLE DOOR, OR MIN 60" DEEP X DOUBLE-DOOR WIDTH FOR DOUBLE DOORS; AND MIN. 48" DEEP X 36" WIDE OPPOSITE DOOR SWING (PLUS MIN. 12" PASS DOOR STRIKE EDGE IF DOOR HAS BOTH LATCH AND CLOSER) FOR SINGLE DOOR, OR MIN 48" DEEP X DOUBLE-DOOR WIDTH FOR DOUBLE DOORS.

4. LEVEL CHANGE AT THE DOORWAY, INCLUDING THRESHOLD THICKNESS, SHALL BE MAX. 1/2" W/MAX. 1:2 SLOPE. LEVEL CHANGE NOT EXCEEDING 1/4" MAY BE VERTICAL.

5. AISLES FORMED BY EQUIPMENT / STORED MATERIALS / WALLS AT ANY ROOMS SHALL BE MIN. 36" WIDE IF SERVING ONE SIDE, AND MIN. 44" WIDE IF SERVING BOTH SIDES.

NORTHBOUND CORNING S.R.R.A

TOTAL PASSENGER PARKING COUNT: 29
ACCESSIBLE PARKING COUNT: 3

SOUTHBOUND CORNING S.R.R.A

TOTAL PASSENGER PARKING COUNT: 29
ACCESSIBLE PARKING COUNT: 3

NORTHBOUND SITE PLAN

NO SCALE

NORTHBOUND SHOWN, SOUTHBOUND SITE SIMILAR, ROTATED 180 DEGREES

DESIGN SUPERVISOR
DESIGN ARCHITECT
DESIGNER
DRAWN BY
CHECKED BY
STRUCTURAL REVIEW

SHEET LEGEND
A-I ARCHITECTURAL ST-I STRUCTURAL
M-I MECHANICAL E-I ELECTRICAL
P-I PLUMBING SS-I SANITARY

STATE OF CALIFORNIA DEPARTMENT OF TRANSPORTATION

DIVISION OF ENGINEERING SERVICES ARCHITECTURAL AND STRUCTURAL DESIGN

BRIDGE NO. 08R00002L 08R00002R
POST MILE 16.9

CORNING SRRA UPGRADE

NORTHBOUND — POT & ACCESSIBILITY NOTES

SHEET **A0-4**

a0-4.dgn
TAEMWW Imperial Rev. 7/10 12-MAY-2015 13:57

ORIGINAL SCALE IN INCHES FOR REDUCED PLANS 0 1 2 3

UNIT 3600
PROJECT NUMBER & PHASE 02000000301
EA 0E3601

DISREGARD PRINTS BEARING EARLIER REVISION DATES

REVISION DATES (PRELIMINARY STAGE ONLY) - 07 XX-XX-XX

SHEET X OF X

12-MAY-2015 13:57
a0-4.dgn

DIST.	COUNTY	ROUTE	POST MILES TOTAL PROJECT	SHEET NO.	TOTAL SHEETS
02	Teh	5	10.5	89	199

LICENSED ARCHITECT — DATE: 9-25-13

LICENSED ARCHITECT ANTHONY V. MANANSALA No. C-32260 Exp. 4/30/17 STATE OF CALIFORNIA

4-1-14
PLANS APPROVAL DATE

The State of California or its officers or agents shall not be responsible for the accuracy or completeness of electronic copies of this plan sheet.

ACCESSIBILITY DESIGN APPROVAL STAMP DOT / DES / OTA
PROJECT ID **0200000030**
Reviewed by:
Date: 6/15/11

CALIFORNIA STATE FIRE MARSHAL APPROVED
Approval of this plan does not authorize or approve any omission or deviation from applicable regulations. Final approval is subject to field inspection. One set of approved plans shall be available on the project site at all times.
Reviewed by: FRANCIS SOLICH
Approval date: 03-10-2015

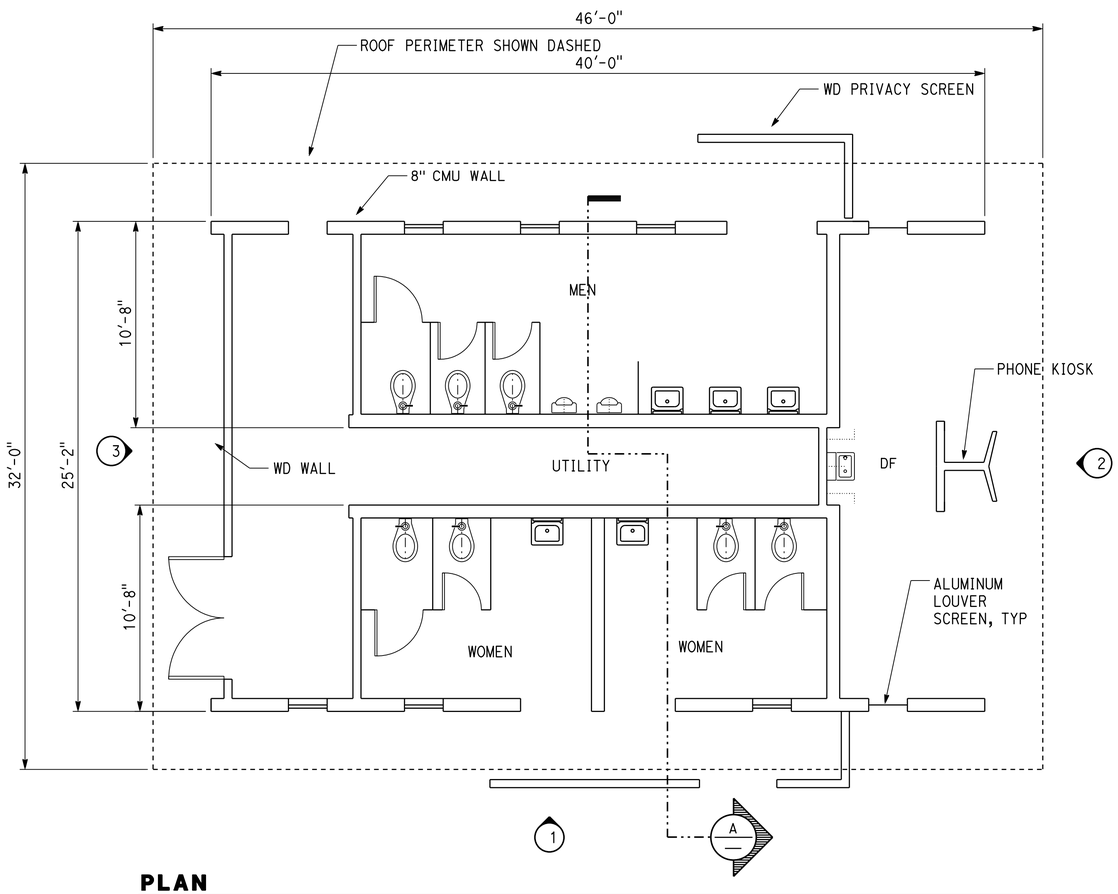

PLAN
SCALE 1/4" = 1'-0"

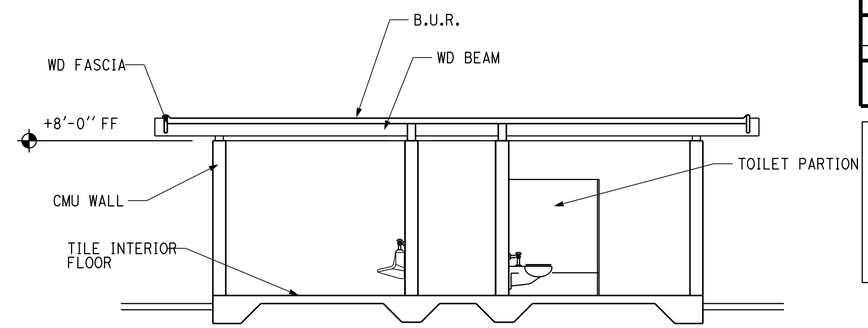

A SECTION
SCALE 1/4" = 1'-0"

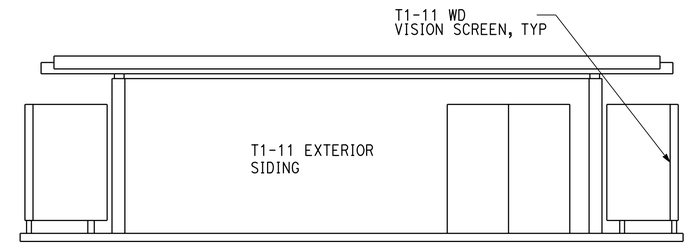

3 REAR ELEVATION
SCALE 1/4" = 1'-0"

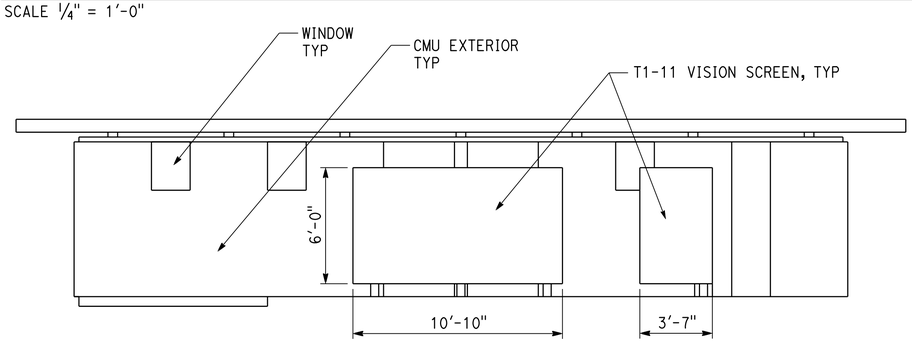

1 SIDE ELEVATION
SCALE 1/4" = 1'-0"

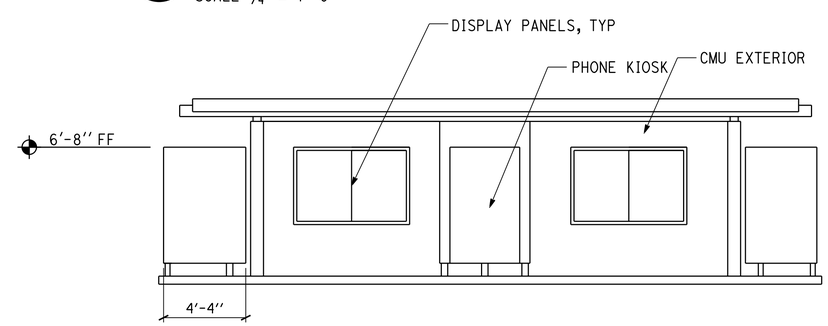

2 FRONT ELEVATION
SCALE 1/4" = 1'-0"

REMOVAL NOTES

1. Remove (e) comfort station including but not limited to, exterior and interior walls, concrete slab and foundation, plumbing, electrical, toilet stall partitions, restroom accessories, doors, louvers, vision screens and roof.
2. Remove existing paving and landscaping in accordance with civil sheets
3. Contractor shall verify (e) conditions prior to removal of comfort stations

	BY	CHECKED
DESIGN	A. MANANSALA	DONALD E. ALSEY
DETAILS	A. MANANSALA	DONALD E. ALSEY
QUANTITIES		

STATE OF CALIFORNIA DEPARTMENT OF TRANSPORTATION

DIVISION OF ENGINEERING SERVICES ARCHITECTURAL AND STRUCTURAL DESIGN

BRIDGE NO. 08R00002L 08R00002R
POST MILE 16.9

NORTHBOUND/ SOUTHBOUND

CORNING SRRA UPGRADE
DEMOLITION COMFORT STATION

SHEET **A0-5**

A0-5.dgn
TAEMWW Imperial Rev. 7/10 12-MAY-2015 13:57

ORIGINAL SCALE IN INCHES FOR REDUCED PLANS 0 1 2 3

UNIT 3600
PROJECT NUMBER & PHASE 02000000301
EA 0E3601

DISREGARD PRINTS BEARING EARLIER REVISION DATES → - 07

REVISION DATES (PRELIMINARY STAGE ONLY) SHEET X OF X

A0-5.dgn 12-MAY-2015 13:57

DIST.	COUNTY	ROUTE	POST MILES TOTAL PROJECT	SHEET NO.	TOTAL SHEETS
02	Teh	5	10.5	90	199

A. Manansala 9-25-13
LICENSED ARCHITECT DATE

LICENSED ARCHITECT ANTHONY V. MANANSALA No. C-32260 Exp. 4/30/17 STATE OF CALIFORNIA

4-1-14
PLANS APPROVAL DATE

The State of California or its officers or agents shall not be responsible for the accuracy or completeness of electronic copies of this plan sheet.

ACCESSIBILITY DESIGN APPROVAL STAMP
DOT / DES / OTA
PROJECT ID
0200000030
Reviewed by:
Date: 6/15/11

CALIFORNIA STATE FIRE MARSHAL
APPROVED
Approval of this plan does not authorize or approve any omission or deviation from applicable regulations. Final approval is subject to field inspection. One set of approved plans shall be available on the project site at all times.
Reviewed by: FRANCIS SOLICH
Approval date: 03-10-2015

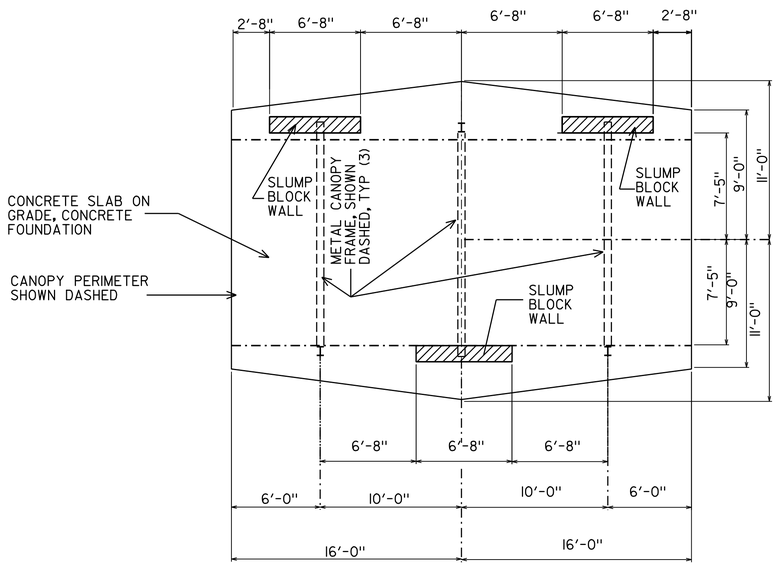

PICNIC CANOPY PLAN

SCALE : 1/4" = 1'-0"

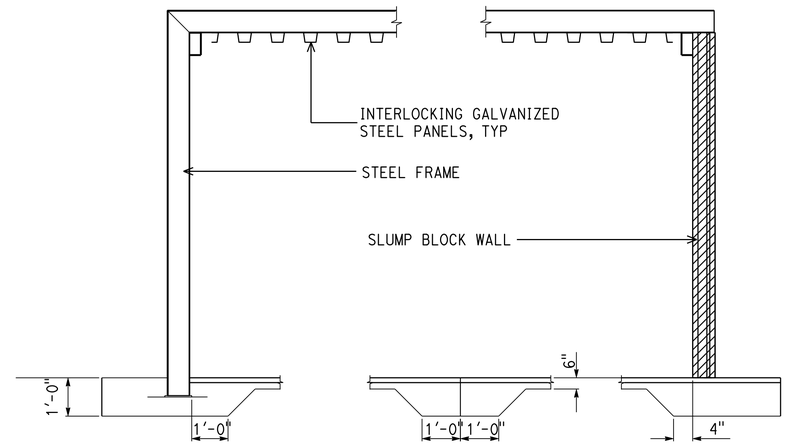

PICNIC CANOPY SECTION

SCALE : 1/2" = 1'-0"

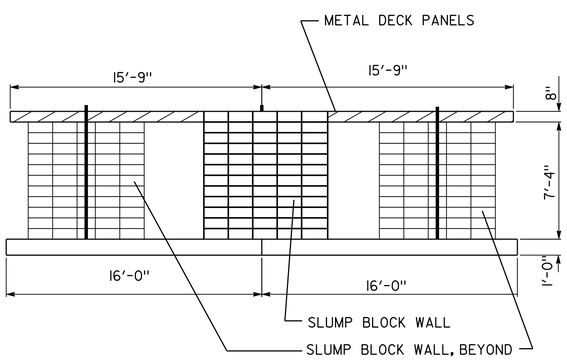

SIDE ELEVATION

SCALE: 1/4" = 1'-0"

NOTE:

REMOVE (1) EXISTING PICNIC CANOPY INCLUDING BUT NOT LIMITED TO CONCRETE SLAB, (3) CONCRETE PINIC TABLES, SLUMP BLOCK WALLS, METAL FRAME, AND METAL DECK PANELS.

CONTRACTOR TO VERIFY LOCATION WITH ENGINEER PRIOR TO REMOVAL

DESIGN	BY A. MANANSALA	CHECKED DONALD E. ALSEY	
DETAILS	BY A. MANANSALA	CHECKED DONALD E. ALSEY	
QUANTITIES	BY	CHECKED	

STATE OF CALIFORNIA DEPARTMENT OF TRANSPORTATION

DIVISION OF ENGINEERING SERVICES ARCHITECTURAL AND STRUCTURAL DESIGN

BRIDGE NO. 08R00002L 08R00002R
POST MILE 16.9

CORNING SRRA UPGRADE

NORTHBOUND

DEMOLITION PICNIC CANOPY

SHEET **A0-6**

A0-6.dgn
TAEMWW Imperial Rev. 7/10 12-MAY-2015 13:57

ORIGINAL SCALE IN INCHES FOR REDUCED PLANS 0 1 2 3

UNIT 3600
PROJECT NUMBER & PHASE 02000000301
EA 0E3601

DISREGARD PRINTS BEARING EARLIER REVISION DATES

REVISION DATES (PRELIMINARY STAGE ONLY) - 07

SHEET X OF X

12-MAY-2015 13:57
A0-6.dgn

DIST.	COUNTY	ROUTE	POST MILES TOTAL PROJECT	SHEET NO.	TOTAL SHEETS
02	Teh	5	10.5	91	199

LICENSED ARCHITECT 9-25-13 DATE

LICENSED ARCHITECT ANTHONY V. MANANSALA No. C-32260 Exp. 4/30/17 STATE OF CALIFORNIA

4-1-14
PLANS APPROVAL DATE

The State of California or its officers or agents shall not be responsible for the accuracy or completeness of electronic copies of this plan sheet.

ACCESSIBILITY DESIGN APPROVAL STAMP
DOT / DES / OTA
PROJECT ID
0200000030
Reviewed by:
Date: 6/15/11

CALIFORNIA STATE FIRE MARSHAL
APPROVED
Approval of this plan does not authorize or approve any omission or deviation from applicable regulations. Final approval is subject to field inspection. One set of approved plans shall be available on the project site at all times.
Reviewed by: FRANCIS SOLICH
Approval date: 03-10-2015

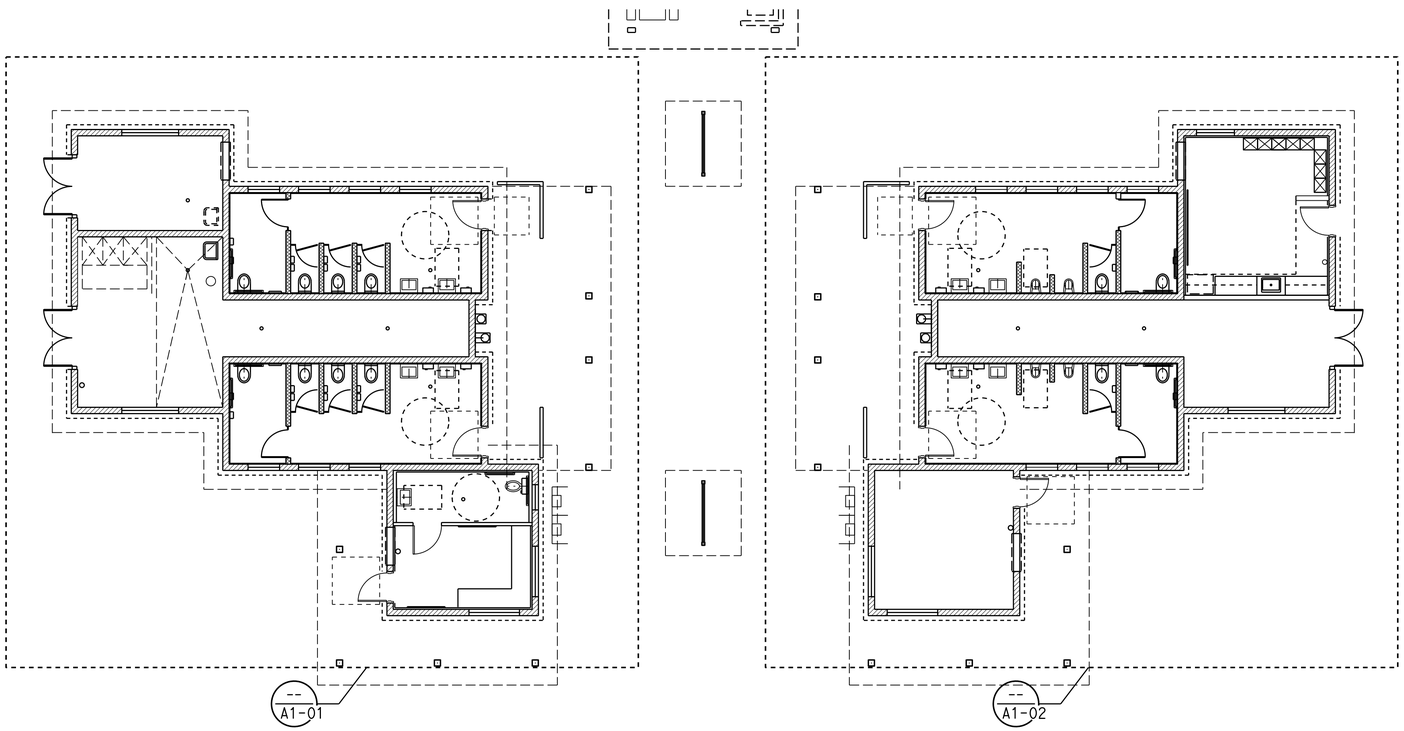

OVERALL FLOOR PLAN

SCALE 1/8" = 1'-0"

NORTHBOUND SHOWN, SOUTHBOUND SITE SIMILAR, ROTATED 180 DEGREES

	BY	CHECKED
DESIGN	A. MANANSALA	DONALD E. ALSEY
DETAILS	A. MANANSALA	DONALD E. ALSEY
QUANTITIES		

STATE OF CALIFORNIA
DEPARTMENT OF TRANSPORTATION

DIVISION OF ENGINEERING SERVICES
ARCHITECTURAL AND STRUCTURAL DESIGN

BRIDGE NO. 08R00002L 08R00002R
POST MILE 16.9

CORNING SRRA UPGRADE

OVERALL FLOOR PLAN

SHEET **A1-00**

A1-00.dgn
TAEMWW Imperial Rev. 7/10 12-MAY-2015 13:57

ORIGINAL SCALE IN INCHES FOR REDUCED PLANS 0 1 2 3

UNIT 3600
PROJECT NUMBER & PHASE 02000000301
EA 0E3601

DISREGARD PRINTS BEARING EARLIER REVISION DATES → REVISION DATES (PRELIMINARY STAGE ONLY) - 07

SHEET X OF X

12-MAY-2015 13:57
A1-00.dgn

DIST.	COUNTY	ROUTE	POST MILES TOTAL PROJECT	SHEET NO.	TOTAL SHEETS
02	Teh	5	10.5	92	199

LICENSED ARCHITECT — DATE 9-25-13

LICENSED ARCHITECT ANTHONY V. MANANSALA No. C-32260 Exp. 4/30/17 STATE OF CALIFORNIA

4-1-14
PLANS APPROVAL DATE

The State of California or its officers or agents shall not be responsible for the accuracy or completeness of electronic copies of this plan sheet.

ACCESSIBILITY DESIGN APPROVAL STAMP DOT / DES / OTA
PROJECT ID **0200000030**
Reviewed by:
Date: 6/15/11

CALIFORNIA STATE FIRE MARSHAL APPROVED
Approval of this plan does not authorize or approve any omission or deviation from applicable regulations. Final approval is subject to field inspection. One set of approved plans shall be available on the project site at all times.
Reviewed by: FRANCIS SOLICH
Approval date: 03-10-2015

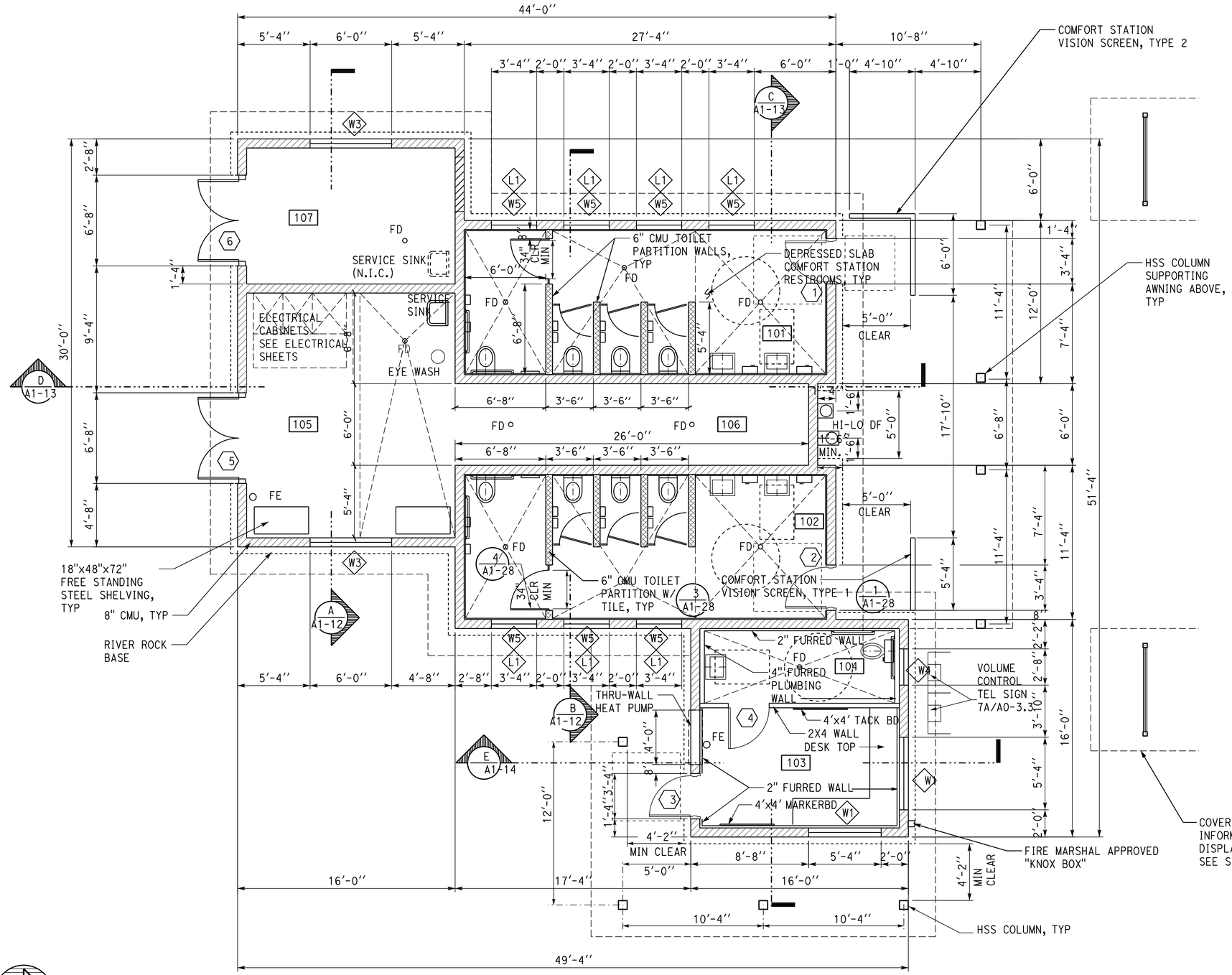

ROOM LEGEND

101	WOMEN'S RESTROOM 1
102	WOMEN'S RESTROOM 2
103	OFFICE
104	RESTROOM
105	STORAGE
106	UTILITY
107	STORAGE

WALL LEGEND

- 8" CMU WALL
- 6" CMU TOILET PARTITION WALL
- 2X4 WALL

FLOOR PLAN

SCALE 1/4" = 1'-0"

NORTHBOUND STRUCTURE SHOWN, SOUTHBOUND STRUCTURE SIMILAR, ROTATED 180 DEGREES

	BY	CHECKED
DESIGN	A. MANANSALA	DONALD E. ALSEY
DETAILS	A. MANANSALA	DONALD E. ALSEY
QUANTITIES		

STATE OF CALIFORNIA DEPARTMENT OF TRANSPORTATION

DIVISION OF ENGINEERING SERVICES ARCHITECTURAL AND STRUCTURAL DESIGN

BRIDGE NO. 08R00002L 08R00002R
POST MILE 16.9

CORNING SRRA UPGRADE
WOMEN'S BUILDING
FLOOR PLAN

SHEET **A1-01**

A1-01.dgn
TAEMWW Imperial Rev. 7/10 12-MAY-2015 13:57

ORIGINAL SCALE IN INCHES FOR REDUCED PLANS 0 1 2 3

UNIT 3600
PROJECT NUMBER & PHASE 02000000301
EA 0E3601

DISREGARD PRINTS BEARING EARLIER REVISION DATES

REVISION DATES (PRELIMINARY STAGE ONLY) - 07 — SHEET X OF X

12-MAY-2015 13:57
A1-01.dgn

DIST.	COUNTY	ROUTE	POST MILES TOTAL PROJECT	SHEET NO.	TOTAL SHEETS
02	Teh	5	10.5	93	199

LICENSED ARCHITECT — 9-25-13 — DATE

LICENSED ARCHITECT ANTHONY V. MANANSALA No. C-32260 Exp. 4/30/17 STATE OF CALIFORNIA

4-1-14
PLANS APPROVAL DATE

The State of California or its officers or agents shall not be responsible for the accuracy or completeness of electronic copies of this plan sheet.

ACCESSIBILITY DESIGN APPROVAL STAMP DOT / DES / OTA
PROJECT ID **0200000030**
Reviewed by:
Date: 6/15/11

CALIFORNIA STATE FIRE MARSHAL APPROVED
Approval of this plan does not authorize or approve any omission or deviation from applicable regulations. Final approval is subject to field inspection. One set of approved plans shall be available on the project site at all times.
Reviewed by: FRANCIS SOLICH
Approval date: 03-10-2015

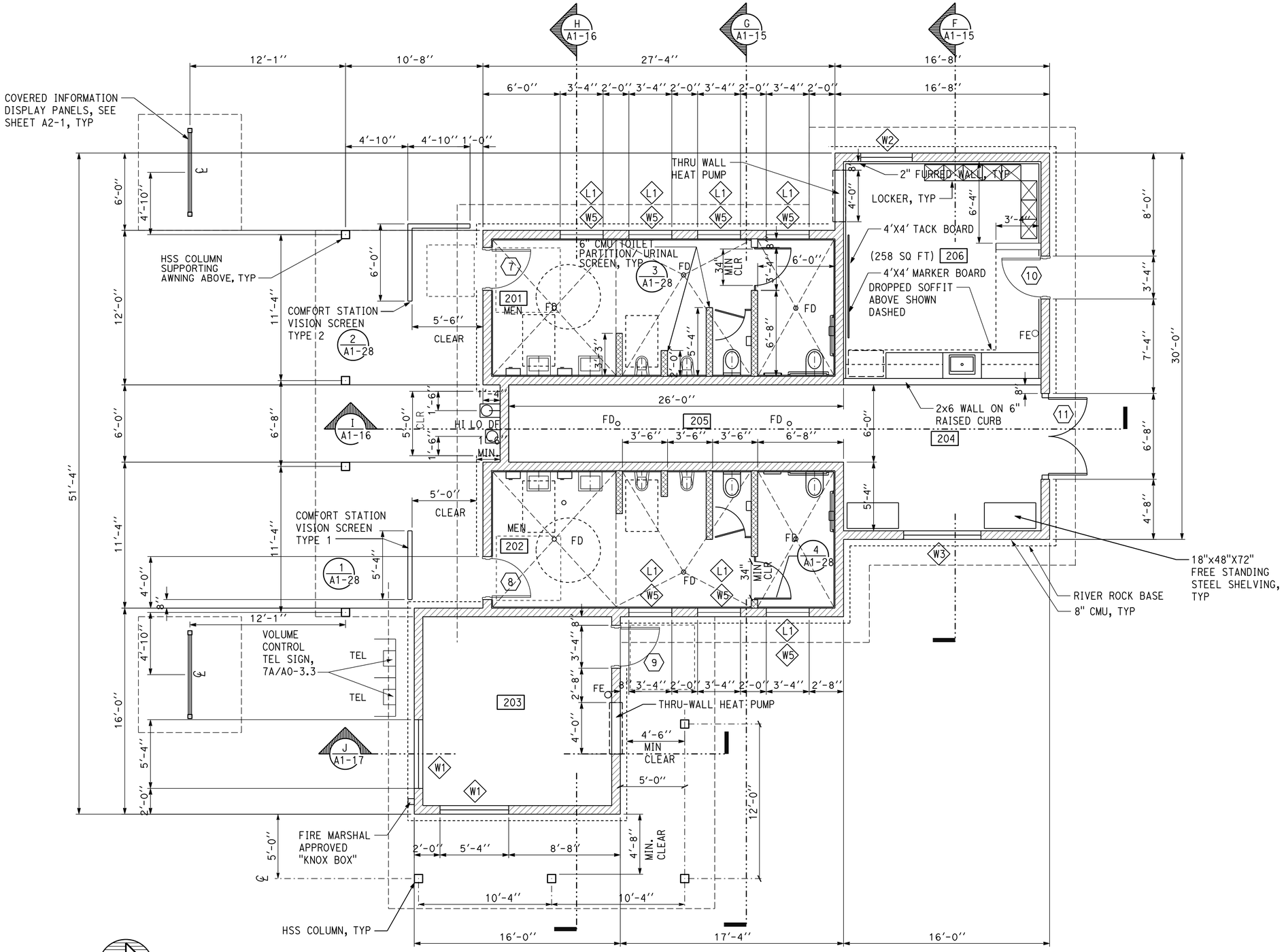

FLOOR PLAN
SCALE 1/4" = 1'-0"

NORTHBOUND STRUCTURE SHOWN, SOUTHBOUND STRUCTURE SIMILAR, ROTATED 180 DEGREES

ROOM LEGEND

201	MEN'S RESTROOM 1
202	MEN'S RESTROOM 2
203	TELECOMMUNICATION ROOM
204	STORAGE
205	UTILTY
206	BREAK ROOM

WALL LEGEND

- 8" CMU WALL
- 6" CMU TOILET PARTITION WALL
- 2X4 METAL STUD WALL

	BY	CHECKED
DESIGN	A. MANANSALA	DONALD E. ALSEY
DETAILS	A. MANANSALA	DONALD E. ALSEY
QUANTITIES		

STATE OF CALIFORNIA DEPARTMENT OF TRANSPORTATION

DIVISION OF ENGINEERING SERVICES ARCHITECTURAL AND STRUCTURAL DESIGN

BRIDGE NO. 08R00002L 08R00002R
POST MILE 16.9

MEN'S BUILDING

CORNING SRRA UPGRADE

FLOOR PLAN

SHEET **A1-02**

A1-02.dgn
TAEMWW Imperial Rev. 7/10 12-MAY-2015 13:57

ORIGINAL SCALE IN INCHES FOR REDUCED PLANS 0 1 2 3

UNIT 3600
PROJECT NUMBER & PHASE 02000000301
EA 0E3601

DISREGARD PRINTS BEARING EARLIER REVISION DATES

REVISION DATES (PRELIMINARY STAGE ONLY) - 07

SHEET X OF X

12-MAY-2015 13:57
A1-02.dgn

DIST.	COUNTY	ROUTE	POST MILES TOTAL PROJECT	SHEET NO.	TOTAL SHEETS
02	Teh	5	10.5	94	199

LICENSED ARCHITECT — 9-25-13 — DATE

LICENSED ARCHITECT ANTHONY V. MANANSALA No. C-32260 Exp. 4/30/17 STATE OF CALIFORNIA

4-1-14
PLANS APPROVAL DATE

The State of California or its officers or agents shall not be responsible for the accuracy or completeness of electronic copies of this plan sheet.

ACCESSIBILITY DESIGN APPROVAL STAMP DOT / DES / OTA
PROJECT ID **0200000030**
Reviewed by:
Date: 6/15/11

CALIFORNIA STATE FIRE MARSHAL APPROVED
Approval of this plan does not authorize or approve any omission or deviation from applicable regulations. Final approval is subject to field inspection. One set of approved plans shall be available on the project site at all times.
Reviewed by: FRANCIS SOLICH
Approval date: 03-10-2015

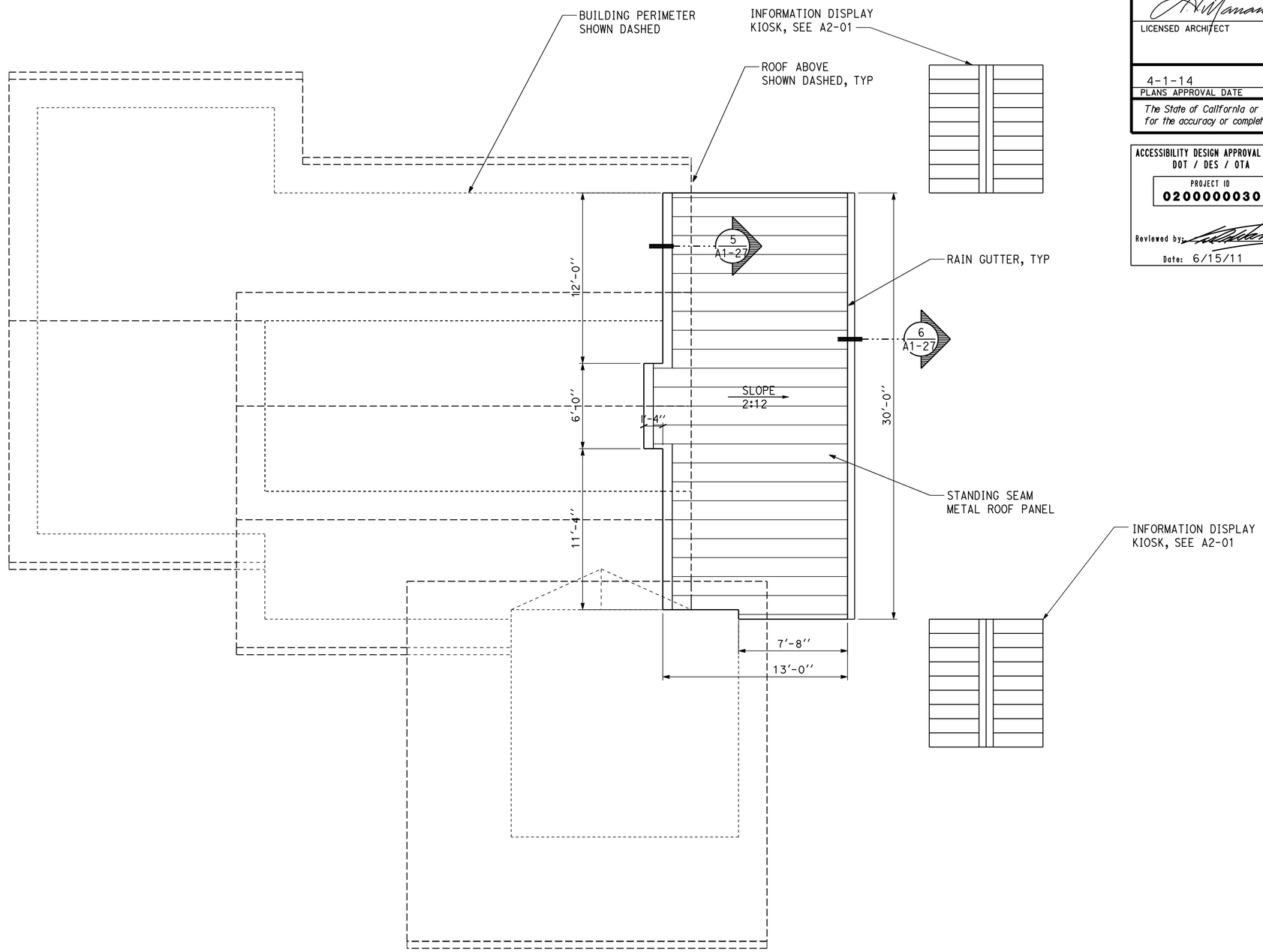

ROOF PLAN

SCALE 1/4" = 1'-0"

WOMENS COMFORT STATION ROOF PLAN SHOWN, MEN'S COMFORT STATION ROOF PLAN MIRRORED

NORTHBOUND STRUCTURE SHOWN, SOUTHBOUND STRUCTURE SIMILAR, ROTATED 180 DEGREES

	BY	CHECKED
DESIGN	A. MANANSALA	DONALD E. ALSEY
DETAILS	A. MANANSALA	DONALD E. ALSEY
QUANTITIES		

STATE OF CALIFORNIA DEPARTMENT OF TRANSPORTATION

DIVISION OF ENGINEERING SERVICES ARCHITECTURAL AND STRUCTURAL DESIGN

BRIDGE NO. 08R00002L 08R00002R
POST MILE 16.9

CORNING SRRA UPGRADE
WOMEN'S BUILDING
ROOF PLAN

SHEET **A1-03**

a1-03.dgn
TAEMWW Imperial Rev. 7/10 12-MAY-2015 13:57

ORIGINAL SCALE IN INCHES FOR REDUCED PLANS 0 1 2 3

UNIT 3600
PROJECT NUMBER & PHASE 02000000301
EA 0E3601

DISREGARD PRINTS BEARING EARLIER REVISION DATES → - 07

REVISION DATES (PRELIMINARY STAGE ONLY) SHEET X OF X

12-MAY-2015 13:57
a1-03.dgn

DIST.	COUNTY	ROUTE	POST MILES TOTAL PROJECT	SHEET NO.	TOTAL SHEETS
02	Teh	5	10.5	95	199

LICENSED ARCHITECT 9-25-13 DATE

LICENSED ARCHITECT ANTHONY V. MANANSALA No. C-32260 Exp. 4/30/17 STATE OF CALIFORNIA

4-1-14
PLANS APPROVAL DATE

The State of California or its officers or agents shall not be responsible for the accuracy or completeness of electronic copies of this plan sheet.

ACCESSIBILITY DESIGN APPROVAL STAMP DOT / DES / OTA

PROJECT ID **0200000030**

Reviewed by:

Date: 6/15/11

CALIFORNIA STATE FIRE MARSHAL APPROVED

Approval of this plan does not authorize or approve any omission or deviation from applicable regulations. Final approval is subject to field inspection. One set of approved plans shall be available on the project site at all times.

Reviewed by: FRANCIS SOLICH

Approval date: 03-10-2015

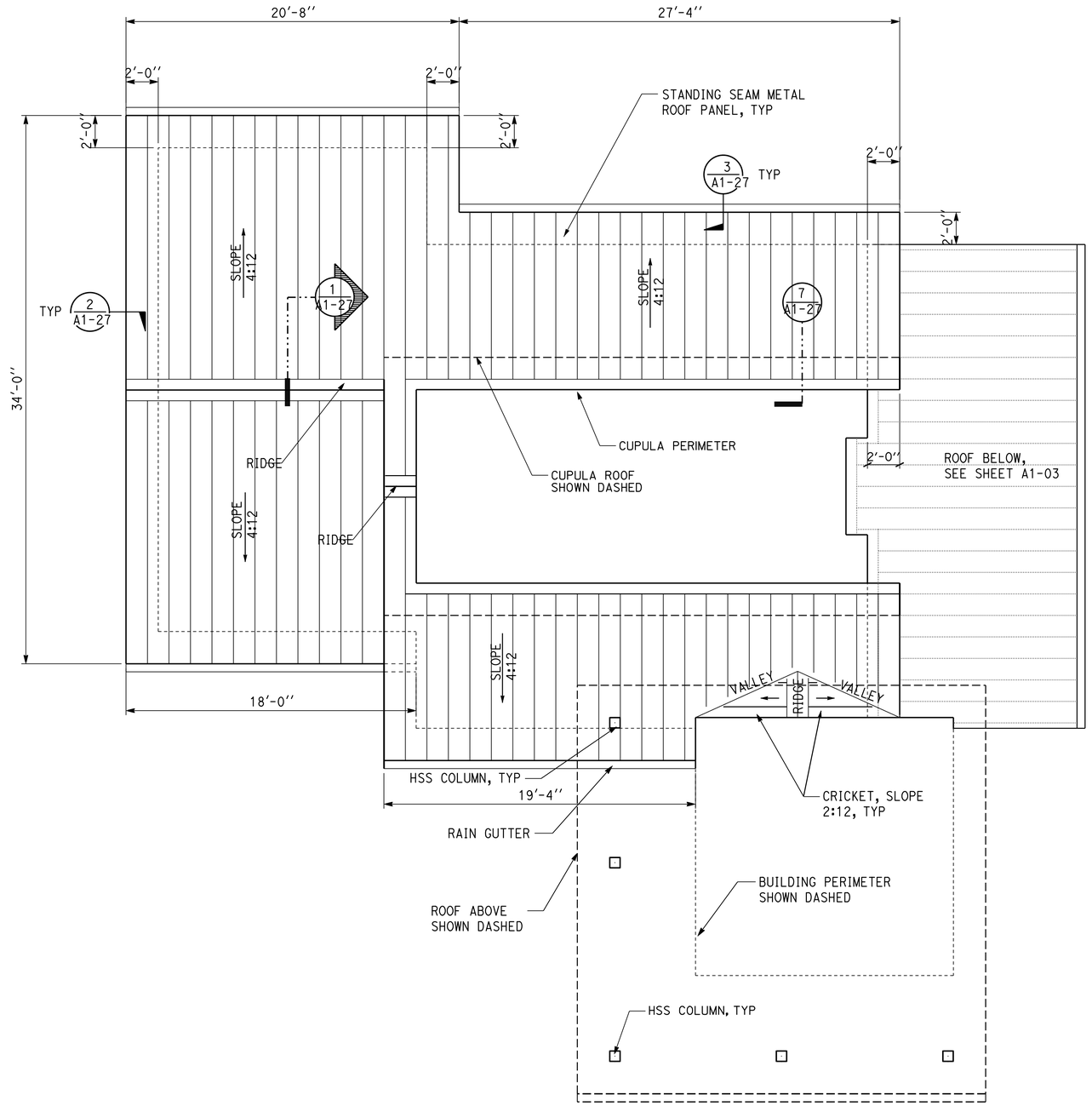

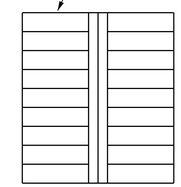

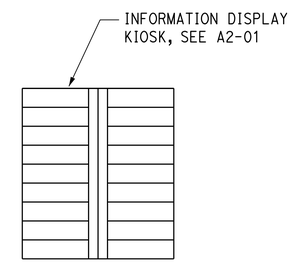

ROOF PLAN

SCALE 1/4" = 1'-0"

WOMENS COMFORT STATION ROOF PLAN SHOWN, MEN'S COMFORT STATION ROOF PLAN MIRRORED

NORTHBOUND STRUCTURE SHOWN, SOUTHBOUND STRUCTURE SIMILAR, ROTATED 180 DEGREES

	BY	CHECKED
DESIGN	A. MANANSALA	DONALD E. ALSEY
DETAILS	A. MANANSALA	DONALD E. ALSEY
QUANTITIES		

STATE OF CALIFORNIA DEPARTMENT OF TRANSPORTATION

DIVISION OF ENGINEERING SERVICES ARCHITECTURAL AND STRUCTURAL DESIGN

BRIDGE NO. 08R00002L 08R00002R

POST MILE 16.9

CORNING SRRA UPGRADE

WOMEN'S BUILDING

ROOF PLAN

SHEET **A1-04**

a1-04.dgn

TAEMWW Imperial Rev. 7/10 12-MAY-2015 13:57

ORIGINAL SCALE IN INCHES FOR REDUCED PLANS 0 1 2 3

UNIT 3600

PROJECT NUMBER & PHASE 02000000301

EA 0E3601

DISREGARD PRINTS BEARING EARLIER REVISION DATES → - -07

REVISION DATES (PRELIMINARY STAGE ONLY)

SHEET X OF X

12-MAY-2015 13:57

a1-04.dgn

DIST.	COUNTY	ROUTE	POST MILES TOTAL PROJECT	SHEET NO.	TOTAL SHEETS
02	Teh	5	10.5	96	199

LICENSED ARCHITECT — 9-25-13 — DATE

LICENSED ARCHITECT ANTHONY V. MANANSALA No. C-32260 Exp. 4/30/17 STATE OF CALIFORNIA

4-1-14
PLANS APPROVAL DATE

The State of California or its officers or agents shall not be responsible for the accuracy or completeness of electronic copies of this plan sheet.

ACCESSIBILITY DESIGN APPROVAL STAMP DOT / DES / OTA
PROJECT ID **0200000030**
Reviewed by:
Date: 6/15/11

CALIFORNIA STATE FIRE MARSHAL APPROVED
Approval of this plan does not authorize or approve any omission or deviation from applicable regulations. Final approval is subject to field inspection. One set of approved plans shall be available on the project site at all times.
Reviewed by: FRANCIS SOLICH
Approval date: 03-10-2015

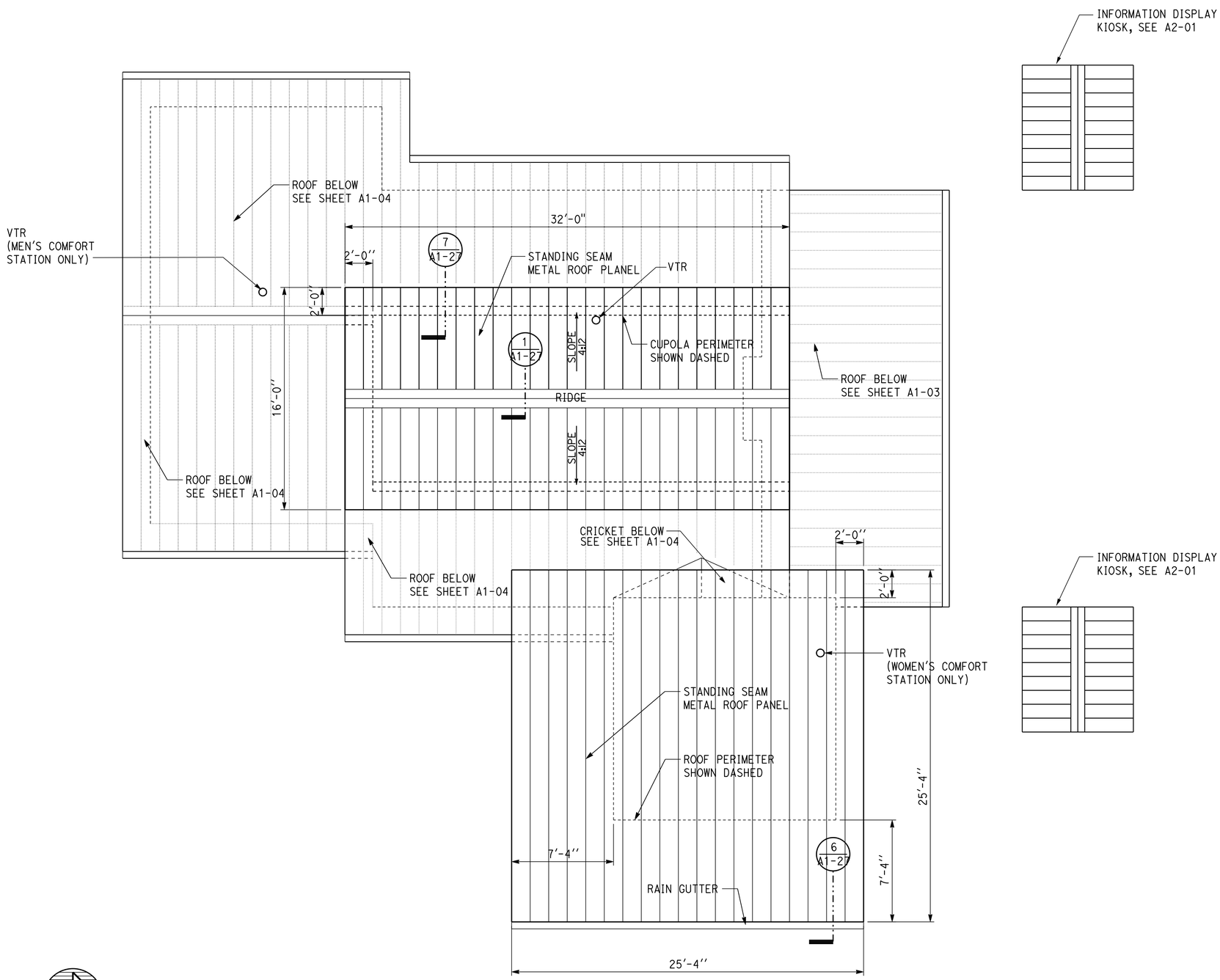

ROOF PLAN

SCALE 1/4" = 1'-0"

WOMENS COMFORT STATION ROOF PLAN SHOWN, MEN'S COMFORT STATION ROOF PLAN MIRRORED

NORTHBOUND STRUCTURE SHOWN, SOUTHBOUND STRUCTURE SIMILAR, ROTATED 180 DEGREES

	BY	CHECKED
DESIGN	A. MANANSALA	DONALD E. ALSEY
DETAILS	A. MANANSALA	DONALD E. ALSEY
QUANTITIES		

STATE OF CALIFORNIA DEPARTMENT OF TRANSPORTATION

DIVISION OF ENGINEERING SERVICES ARCHITECTURAL AND STRUCTURAL DESIGN

BRIDGE NO. 08R00002L 08R00002R
POST MILE 16.9

CORNING SRRA UPGRADE
WOMEN'S BLDG.
ROOF PLAN

SHEET **A1-05**

a1-05.dgn
TAEMWW Imperial Rev. 7/10 12-MAY-2015 13:57

ORIGINAL SCALE IN INCHES FOR REDUCED PLANS 0 1 2 3

UNIT 3600
PROJECT NUMBER & PHASE 02000000301
EA 0E3601

DISREGARD PRINTS BEARING EARLIER REVISION DATES

REVISION DATES (PRELIMINARY STAGE ONLY) - -07

SHEET X OF X

12-MAY-2015 13:57
a1-05.dgn

DIST.	COUNTY	ROUTE	POST MILES TOTAL PROJECT	SHEET NO.	TOTAL SHEETS
02	Teh	5	10.5	97	199

LICENSED ARCHITECT — DATE 9-25-13

LICENSED ARCHITECT ANTHONY V. MANANSALA No. C-32260 Exp. 4/30/17 STATE OF CALIFORNIA

4-1-14
PLANS APPROVAL DATE

The State of California or its officers or agents shall not be responsible for the accuracy or completeness of electronic copies of this plan sheet.

ACCESSIBILITY DESIGN APPROVAL STAMP DOT / DES / OTA
PROJECT ID **0200000030**
Reviewed by:
Date: 6/15/11

CALIFORNIA STATE FIRE MARSHAL APPROVED
Approval of this plan does not authorize or approve any omission or deviation from applicable regulations. Final approval is subject to field inspection. One set of approved plans shall be available on the project site at all times.
Reviewed by: FRANCIS SOLICH
Approval date: 03-10-2015

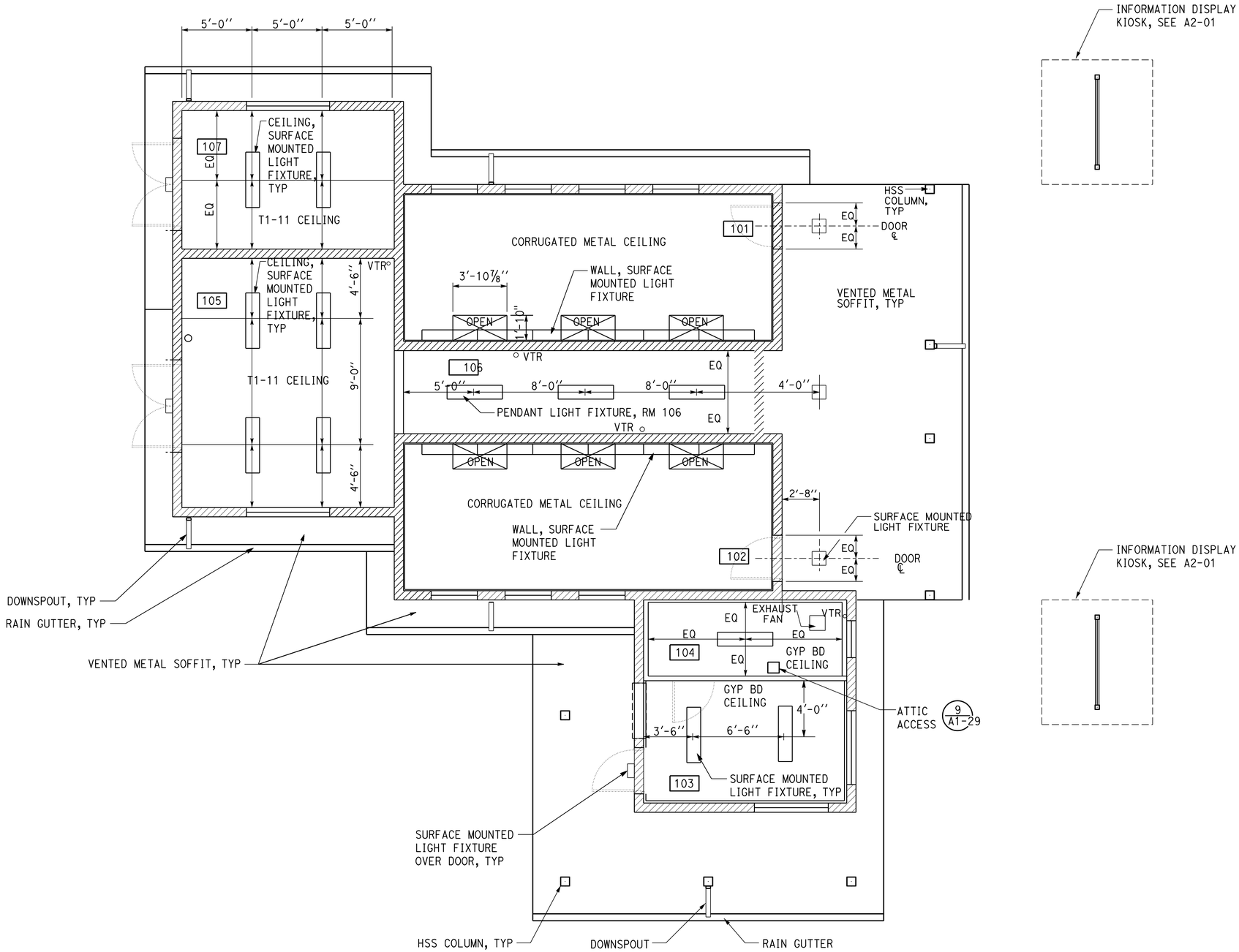

ROOM LEGEND

101	WOMEN'S RESTROOM 1
102	WOMEN'S RESTROOM 2
103	OFFICE
104	RESTROOM
105	STORAGE
106	UTILITY
107	STORAGE

REFLECTED CEILING PLAN

SCALE 1/4" = 1'-0"

NORTHBOUND STRUCTURE SHOWN, SOUTHBOUND STRUCTURE SIMILAR, ROTATED 180 DEGREES

	BY	CHECKED
DESIGN	A. MANANSALA	DONALD E. ALSEY
DETAILS	A. MANANSALA	DONALD E. ALSEY
QUANTITIES		

STATE OF CALIFORNIA DEPARTMENT OF TRANSPORTATION

DIVISION OF ENGINEERING SERVICES ARCHITECTURAL AND STRUCTURAL DESIGN

BRIDGE NO. 08R00002L 08R00002R
POST MILE 16.9

CORNING SRRA UPGRADE
WOMEN'S BUILDING
RELECTED CEILING PLAN

SHEET **A1-06**

a1-06.dgn
TAEMWW Imperial Rev. 7/10 12-MAY-2015 13:57

ORIGINAL SCALE IN INCHES FOR REDUCED PLANS 0 1 2 3

UNIT 3600
PROJECT NUMBER & PHASE 02000000301
EA 0E3601

DISREGARD PRINTS BEARING EARLIER REVISION DATES → - 07

REVISION DATES (PRELIMINARY STAGE ONLY) SHEET X OF X

12-MAY-2015 13:57
a1-06.dgn

DIST.	COUNTY	ROUTE	POST MILES TOTAL PROJECT	SHEET NO.	TOTAL SHEETS
02	Teh	5	10.5	98	199

LICENSED ARCHITECT — 9-25-13 — DATE

LICENSED ARCHITECT ANTHONY V. MANANSALA No. C-32260 Exp. 4/30/17 STATE OF CALIFORNIA

4-1-14
PLANS APPROVAL DATE

The State of California or its officers or agents shall not be responsible for the accuracy or completeness of electronic copies of this plan sheet.

ACCESSIBILITY DESIGN APPROVAL STAMP DOT / DES / OTA
PROJECT ID **0200000030**
Reviewed by:
Date: 6/15/11

CALIFORNIA STATE FIRE MARSHAL APPROVED
Approval of this plan does not authorize or approve any omission or deviation from applicable regulations. Final approval is subject to field inspection. One set of approved plans shall be available on the project site at all times.
Reviewed by: FRANCIS SOLICH
Approval date: 03-10-2015

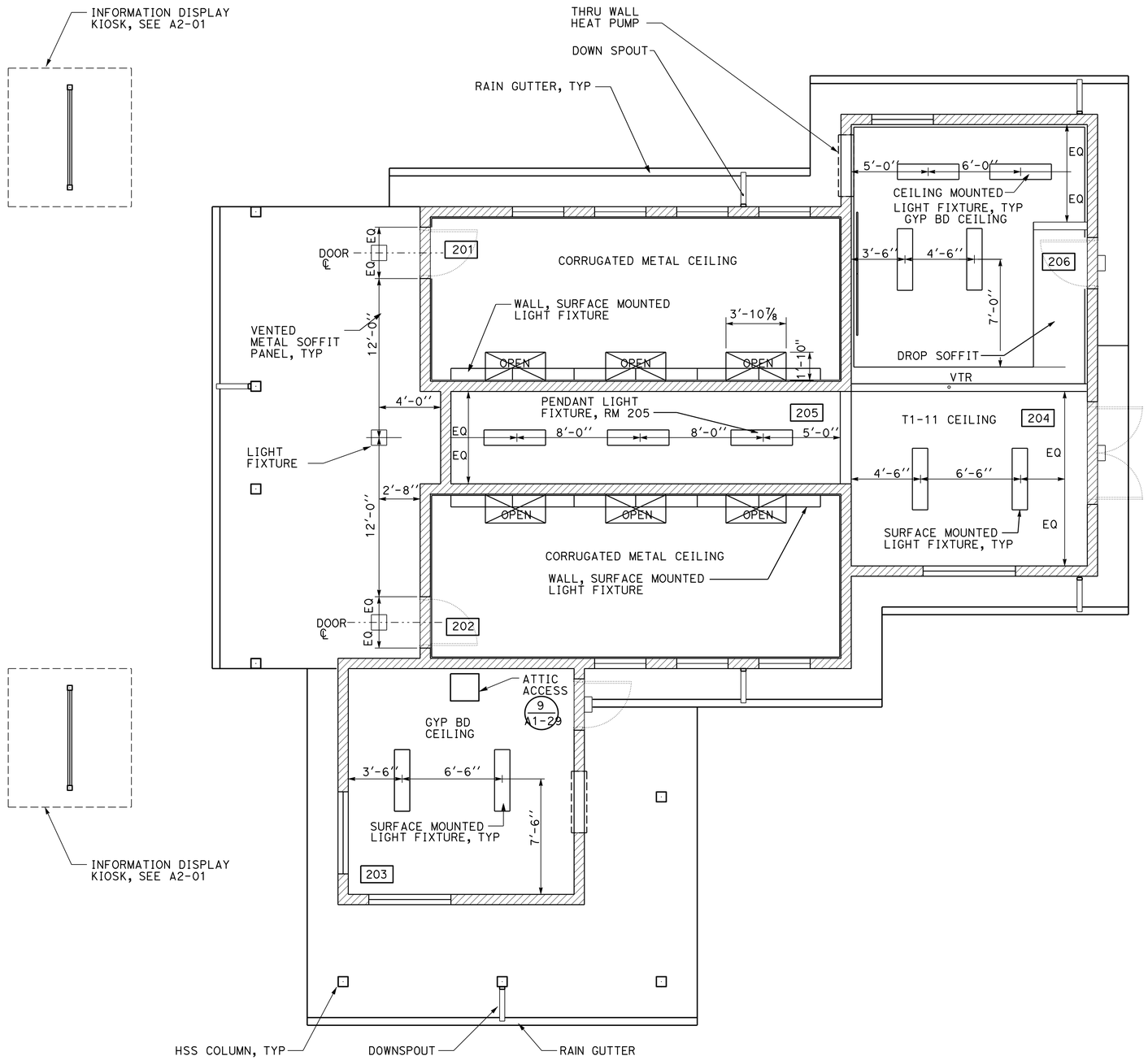

ROOM LEGEND

201	MEN'S RESTROOM 1
202	MEN'S RESTROOM 2
203	TELECOMMUNICATION ROOM
204	STORAGE
205	UTILTY
206	BREAK ROOM

REFLECTED CEILING PLAN

SCALE 1/4" = 1'-0"

NORTHBOUND STRUCTURE SHOWN, SOUTHBOUND STRUCTURE SIMILAR, ROTATED 180 DEGREES

	BY	CHECKED
DESIGN	A. MANANSALA	DONALD E. ALSEY
DETAILS	A. MANANSALA	DONALD E. ALSEY
QUANTITIES		

STATE OF CALIFORNIA DEPARTMENT OF TRANSPORTATION

DIVISION OF ENGINEERING SERVICES ARCHITECTURAL AND STRUCTURAL DESIGN

BRIDGE NO. 08R00002L 08R00002R
POST MILE 16.9

CORNING SRRA UPGRADE

MEN'S BUILDING — RELECTED CEILING PLAN

SHEET **A1-07**

a1-07.dgn
TAEMWW Imperial Rev. 7/10 12-MAY-2015 13:57

ORIGINAL SCALE IN INCHES FOR REDUCED PLANS 0 1 2 3

UNIT 3600
PROJECT NUMBER & PHASE 02000000301
EA 0E3601

DISREGARD PRINTS BEARING EARLIER REVISION DATES
REVISION DATES (PRELIMINARY STAGE ONLY) - -07
SHEET X OF X

12-MAY-2015 13:57
a1-07.dgn

DIST.	COUNTY	ROUTE	POST MILES TOTAL PROJECT	SHEET NO.	TOTAL SHEETS
02	Teh	5	10.5	99	199

LICENSED ARCHITECT — DATE: 9-25-13

LICENSED ARCHITECT ANTHONY V. MANANSALA No. C-32260 Exp. 4/30/17 STATE OF CALIFORNIA

4-1-14
PLANS APPROVAL DATE

The State of California or its officers or agents shall not be responsible for the accuracy or completeness of electronic copies of this plan sheet.

ACCESSIBILITY DESIGN APPROVAL STAMP DOT / DES / OTA
PROJECT ID **0200000030**
Reviewed by:
Date: 6/15/11

CALIFORNIA STATE FIRE MARSHAL APPROVED
Approval of this plan does not authorize or approve any omission or deviation from applicable regulations. Final approval is subject to field inspection. One set of approved plans shall be available on the project site at all times.
Reviewed by: FRANCIS SOLICH
Approval date: 03-10-2015

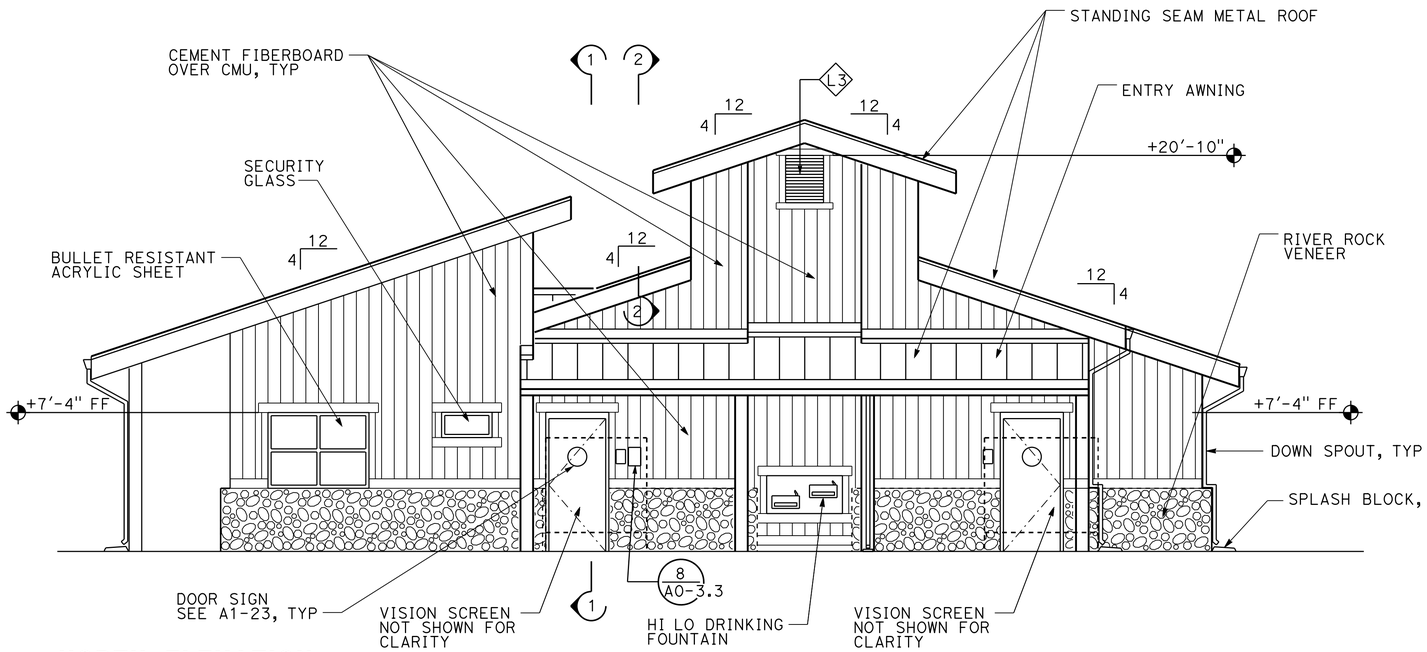

NORTH ELEVATION

SCALE 1/4" = 1'-0"

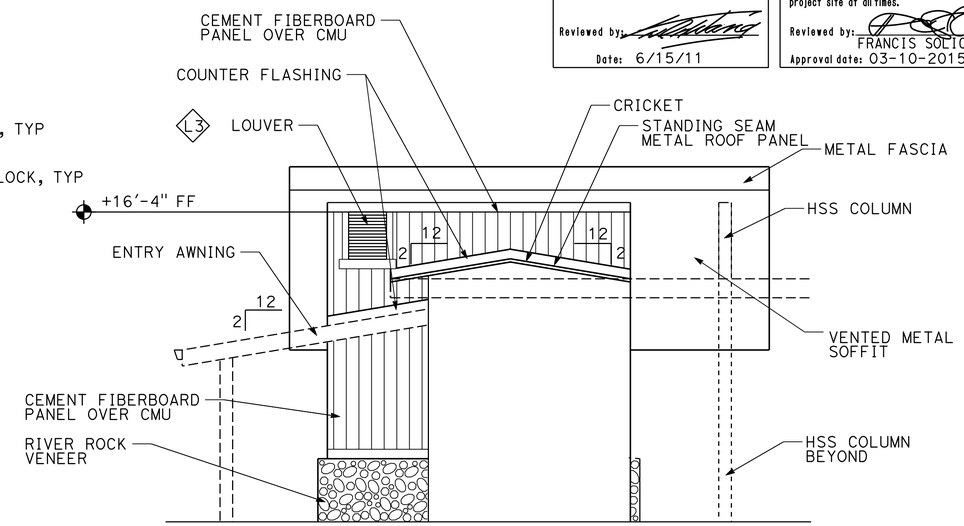

1 OFFICE PARTIAL ELEVATION

SCALE 1/4" = 1'-0"

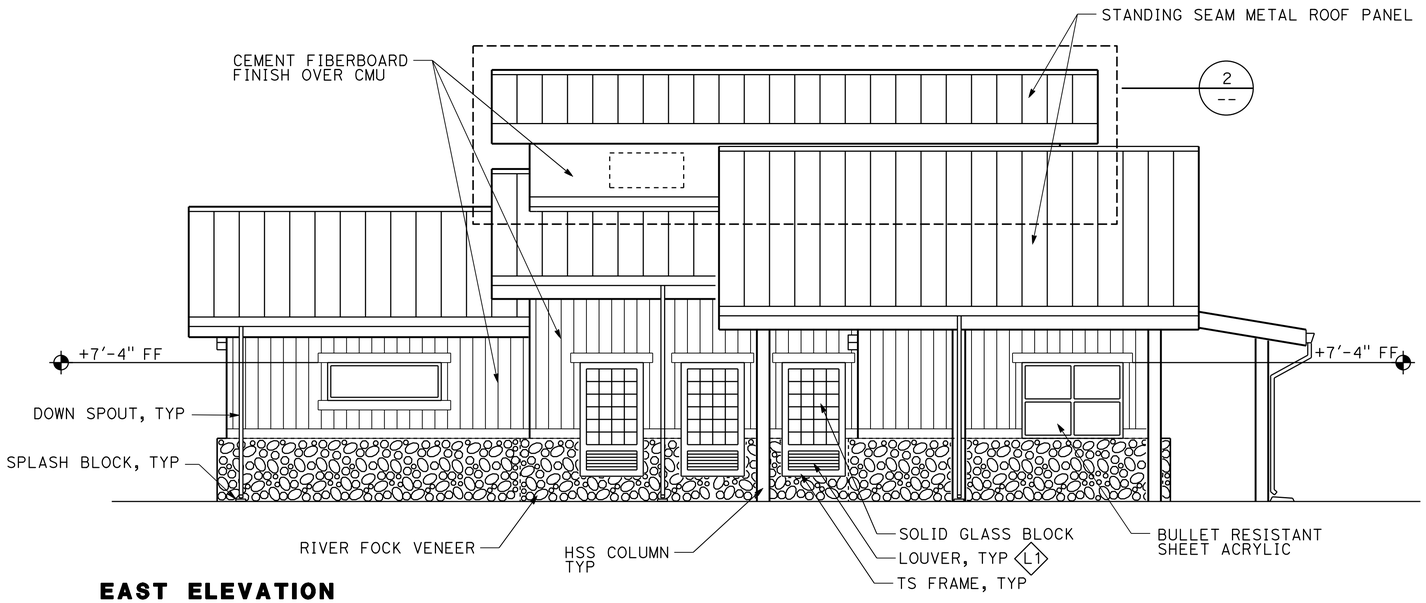

EAST ELEVATION

SCALE 1/4" = 1'-0"

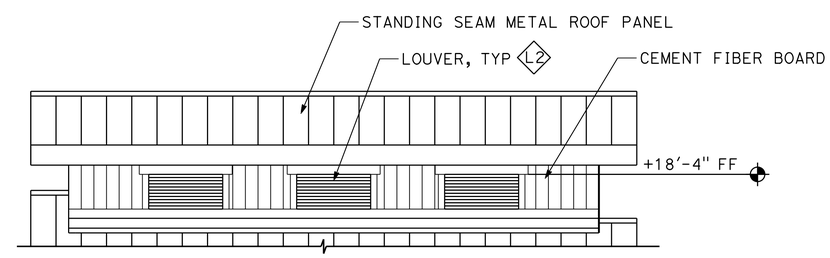

2 CUPOLA PARTIAL ELEVATION

SCALE 1/4" = 1'-0"

NORTHBOUND STRUCTURE SHOWN, SOUTHBOUND STRUCTURE SIMILAR, ROTATED 180 DEGREES

	BY	CHECKED
DESIGN	A. MANANSALA	DONALD E. ALSEY
DETAILS	A. MANANSALA	DONALD E. ALSEY
QUANTITIES		

STATE OF CALIFORNIA DEPARTMENT OF TRANSPORTATION

DIVISION OF ENGINEERING SERVICES ARCHITECTURAL AND STRUCTURAL DESIGN

BRIDGE NO. 08R00002L 08R00002R
POST MILE 16.9

CORNING SRRA UPGRADE
WOMEN'S BUILDING
EXTERIOR ELEVATIONS

SHEET **A1-08**

A1-08.dgn
TAEMWW Imperial Rev. 7/10 12-MAY-2015 13:57

ORIGINAL SCALE IN INCHES FOR REDUCED PLANS 0 1 2 3

UNIT 3600
PROJECT NUMBER & PHASE 02000000301
EA 0E3601

DISREGARD PRINTS BEARING EARLIER REVISION DATES

REVISION DATES (PRELIMINARY STAGE ONLY) - -07

SHEET X OF X

12-MAY-2015 13:57
A1-08.dgn

DIST.	COUNTY	ROUTE	POST MILES TOTAL PROJECT	SHEET NO.	TOTAL SHEETS
02	Teh	5	10.5	100	199

LICENSED ARCHITECT — 9-25-13
DATE

LICENSED ARCHITECT
ANTHONY V. MANANSALA
No. C-32260
Exp. 4/30/17
STATE OF CALIFORNIA

4-1-14
PLANS APPROVAL DATE

The State of California or its officers or agents shall not be responsible for the accuracy or completeness of electronic copies of this plan sheet.

ACCESSIBILITY DESIGN APPROVAL STAMP
DOT / DES / OTA
PROJECT ID
0200000030
Reviewed by:
Date: 6/15/11

CALIFORNIA STATE FIRE MARSHAL
APPROVED
Approval of this plan does not authorize or approve any omission or deviation from applicable regulations. Final approval is subject to field inspection. One set of approved plans shall be available on the project site at all times.
Reviewed by: FRANCIS SOLICH
Approval date: 03-10-2015

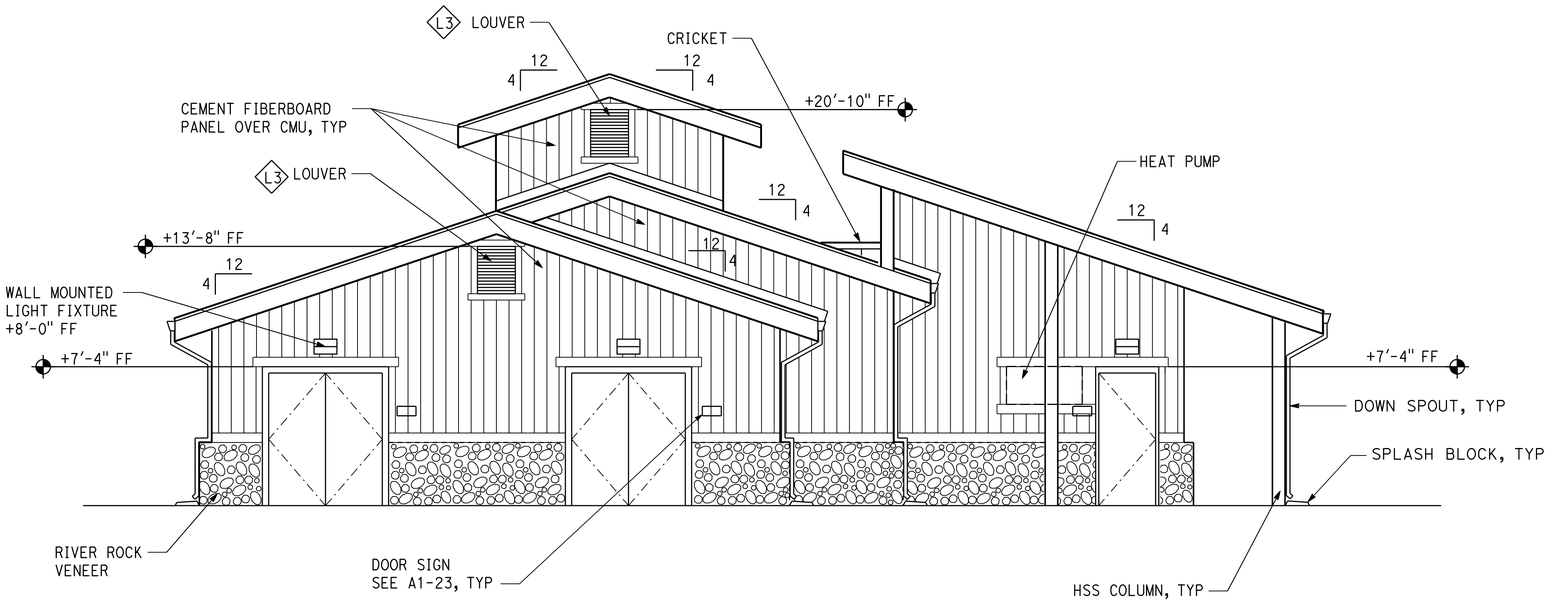

SOUTH ELEVATION

SCALE 1/4" = 1'-0"

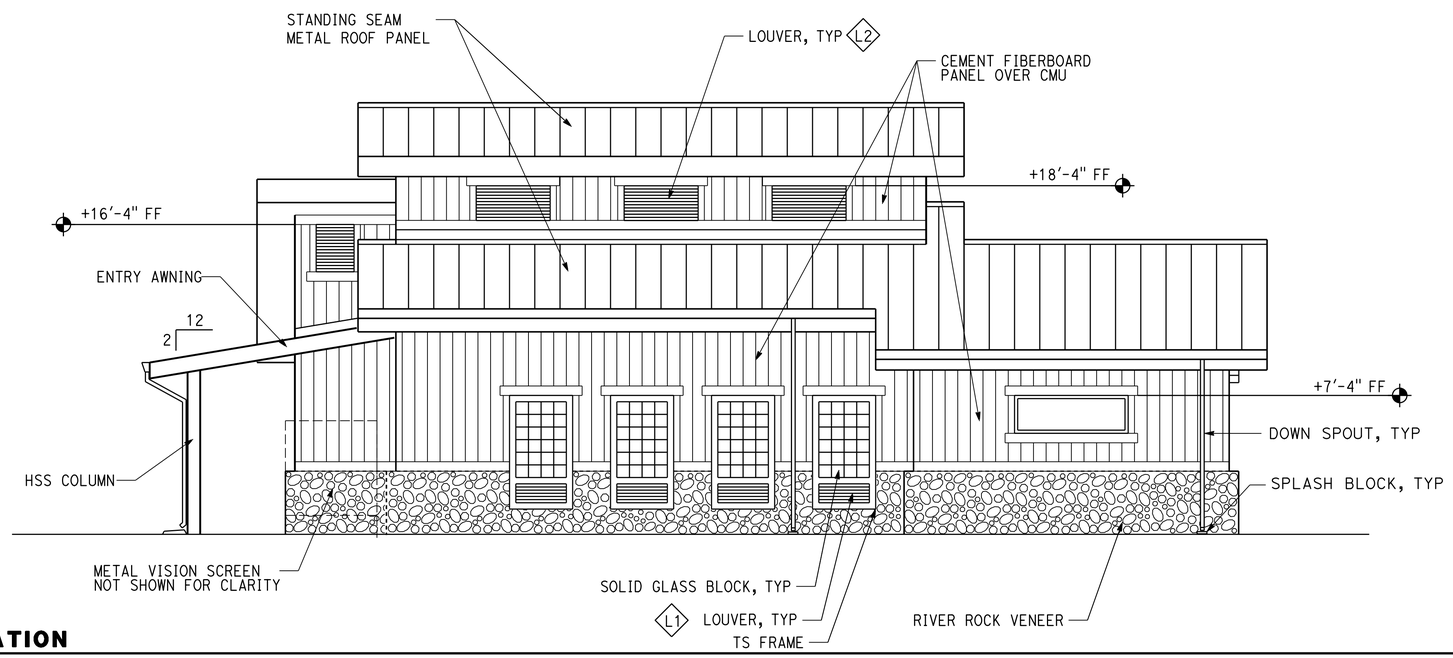

WEST ELEVATION

SCALE 1/4" = 1'-0"

NORTHBOUND STRUCTURE SHOWN, SOUTHBOUND STRUCTURE SIMILAR, ROTATED 180 DEGREES

	BY	CHECKED
DESIGN	A. MANANSALA	DONALD E. ALSEY
DETAILS	A. MANANSALA	DONALD E. ALSEY
QUANTITIES		

STATE OF CALIFORNIA
DEPARTMENT OF TRANSPORTATION

DIVISION OF ENGINEERING SERVICES
ARCHITECTURAL AND STRUCTURAL DESIGN

BRIDGE NO. 08R00002L 08R00002R
POST MILE 16.9

CORNING SRRA UPGRADE
WOMEN'S BUILDING
EXTERIOR ELEVATION

SHEET **A1-09**

A1-09.dgn
TAEMWW Imperial Rev. 7/10 12-MAY-2015 13:57

ORIGINAL SCALE IN INCHES FOR REDUCED PLANS 0 1 2 3

UNIT 3600
PROJECT NUMBER & PHASE 02000000301
EA 0E3601

DISREGARD PRINTS BEARING EARLIER REVISION DATES →
REVISION DATES (PRELIMINARY STAGE ONLY) - 07
SHEET X OF X

12-MAY-2015 13:57
A1-09.dgn