NOTES:

1 ALL DELINEATION WILL BE IN COMPLIANCE WITH CALTRANS EQUIPMENT QUALITY STANDARDS. GO TO www.dot.ca.gov/hq/eqsc AND CLCK ON THE LINK "EQUIPMENT QUALITY STANDARDS" THEN "FLEET IDENTIFICATION"

2 STRIPING APPLICATION: ALL STICKERS, LABELS AND STRIPING SHALL BE LEVEL, STRAIGHT, BUBBLE-FREE AND DEBRIS-FREE. NO SPLICING OF TAPE OR STRIPING SHALL BE ACCEPTABLE. ALL EDGES ON STRIPING SHALL BE TRIMMED 1/8 INCH FROM THE EDGES OF DOORS, PANELS, FENDERS, LIGHTS, EMBLEMS, ETC. REFLECTIVE STRIPING (ITEM 107) SHALL BE TRIMMED TO MATCH BODY CONTOURS AND CREASES WHEN IT WILL NOT LAY HORIZONTAL. ANY REFLECTIVE TYPE OF STRIPE OR STICKER SHALL NOT BE PULLED FROM THE VEHICLE AND REAPPLIED DURING APPLICATION, SINCE THE REFLECTIVE MATERIAL WILL BE COMPROMISED.

4 ITEM 101: LOCATE SUCH THAT THE LOGO IS CENTERED ON THE SIDE OF TANK

5 ITEM 102 TO BE LOCATED BELOW THE "CT" LOGO AND ALONG THE VERTICAL CENTERLINE OF THE TANK.

6 SEVEN-DIGIT EQUIPMENT IDENTIFICATION NUMBER (EQ. ID #) ALWAYS STARTS WITH A "7" AND SHALL BE AFFIXED TO THE REAR OF THE VEHICLE IN THE UPPER RIGHT CORNER.

7 THE FOLLOWING DECAL GROUP SHALL BE PLACED DIRECTLY ABOVE OR NEXT TO EACH FUEL FILLER IN ORDER FROM TOP TO BOTTOM: FUEL TYPE, EQ. ID, MC#

8 ALL CONSPICUITY TREATMENT SHALL MEET THE FMVSS SECTION #108 PART 5.7

BILL OF MATERIALS

	ITEM	QTY	DESCRIPTION	CT DWG # / MF'R #	CT STK #
4	101	2	DECAL, 'CT' WHITE REFLECTIVE, 9" X 12"	03-D004-01	053-4760
5	102	2	DECAL, 'CALTRANS' BLACK SCRIPT, 3"	03-D005-01	053-4762
	103	1	DECAL, 'CT CALTRANS' ORANGE SCRIPT, 5"	03-D014-01	053-4800
	104				
	105	1	APPROVED PUBLIC AWARENESS CAMPAIGN BUMPER STICKER	-	-
	106	1	STRIPING, ORANGE/WHITE DIAG., REFLECTIVE, 8" x 8'	MATERIAL PER SPECIFICATION	053-2047
	107	AS REQ	2" RED/WHITE CONSPICUITY TAPE		053-4681
	108	4	2X12 WHITE CONSPICUITY TAPE		053-4681
6 7	109	1	EQ ID # & MC #- SPECIAL ORDER	-	053-4892
7	110	AS REQD	DECAL, "DIESEL FUEL"	-	053-1511

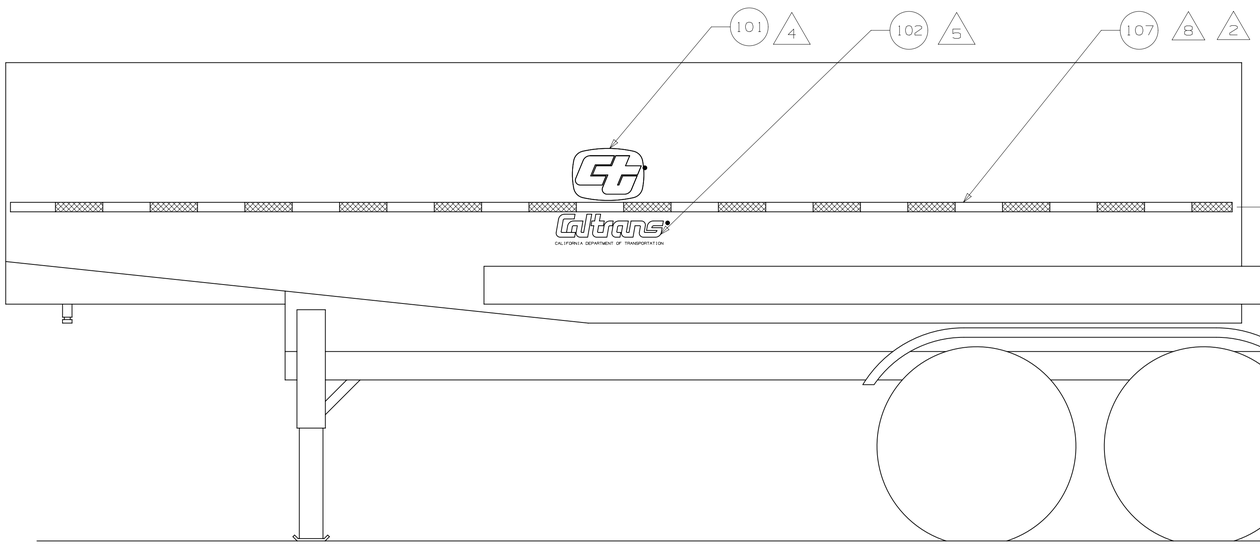

SIDE VIEW

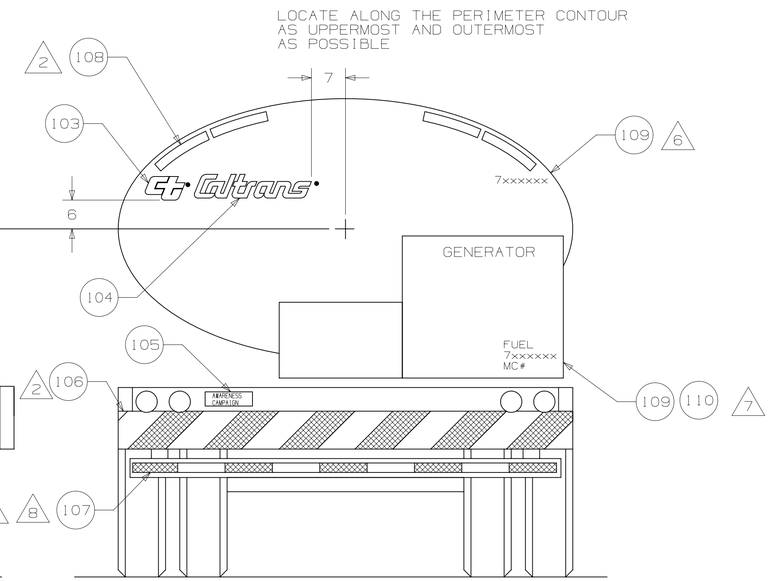

REAR VIEW

DELINEATION AND CONSPICUITY TREATMENT FOR WATER TRAILERS

REV		DESCRIPTION	BY
B	June 2015	UPDATE TO DECALS W/HIGH REFLECTIVITY	J Payne
A	July 2014	UPDATED PER 7-18-14 MEMO	J Payne

NEXT ASSEMBLY

TOLERANCE-UNLESS OTHERWISE SPECIFIED
DECIMAL ±
FRACTIONAL ±
ANGULAR ±
DRILLED HOLES +
REAMED HOLES ±

STATE OF CALIFORNIA
DEPARTMENT OF TRANSPORTATION
EQUIPMENT SERVICE CENTER

4000 GALLON TANKER
DELINEATION AND CONSPICUITY

SCALE 1/16	DATE 06/2001	I-61126-DE	
DRAWN WHEELER	DESIGNED STAFF		
CHECKED	APPROVED	SHEET 1 OF 1 SHEETS	