June Lake Shoulder Widening

Mono County

09-MNO-158-PM0.0/1.1

09-326400

SCH # 2007062032

Initial Study
with Mitigated Negative Declaration

Prepared by the

State of California Department of Transportation

August 2007

General Information About This Document

What's in this document?

This document contains a Mitigated Negative Declaration, which examines the environmental effects of a proposed project on State Route 158 in Mono County.

The Initial Study and proposed Mitigated Negative Declaration were circulated to the public from June 8 to July 14, 2007. Responses to the circulated document are shown in the Comments and Responses section (Appendix C) of this document, which has been added since the document was circulated. Elsewhere in the document, a line in the right margin indicates where changes have been made since the document was circulated.

What happens after this?

The proposed project has completed environmental compliance after the circulation of this document. When funding is approved, the California Department of Transportation can design and construct all or part of the project.

For individuals with sensory disabilities, this document is available in Braille, large print, on audiocassette, or computer disk. To obtain a copy in one of these alternate formats, please call or write to Caltrans, Attn: Tom Dayak, Eastern Sierra Environmental Branch, 500 South Main Street, Bishop CA 93541; (760) 872-0690 Voice, or use the California Relay Service TTY number, (711) 872-0690.

Mitigated Negative Declaration

Pursuant to: Division 13, Public Resources Code

Project Description

The California Department of Transportation (Caltrans) proposes to widen the shoulders on both sides of State Route 158 to approximately 5 feet, from the junction of State Route 158 and U.S. Highway 395 to the junction of State Route 158 and North Shore Drive. The project would also replace three existing corrugated steel pipes and add flared-end sections at post miles 0.4, 0.5, and 0.7. Between post miles 0.8 and 0.9, an asphalt concrete dike and overside drain would be installed and rock slope protection would be placed on the downstream side. Rumble strips would be added to the highway to designate the highway shoulder.

Determination

Caltrans has prepared an Initial Study for this project and, following public review, has determined from this study that the project would not have a significant effect on the environment for the following reasons:

- The proposed project would have no effect on agricultural resources, cultural resources, mineral resources, population and housing, public services, recreation, land use and planning, or utility and service systems.
- The proposed project would have no significant effect on geology and soils, hazards and hazardous materials, hydrology and water quality, air quality, noise, or transportation/traffic.
- The proposed project would have no significantly adverse effect on aesthetics and biological resources because the following mitigation measures would reduce potential effects to insignificance:
    - Existing native vegetation would be protected and preserved; topsoil/duff would be collected and stored; and disturbed areas would be replanted with native vegetation after construction.
    - The native seed mix, application rates, and planting methods would be determined by or approved in cooperation with a Caltrans landscape architect and a Caltrans biologist.
    - Slopes would be rounded at the top and bottom of fills in a non-uniform profile to create more natural connections with existing grades and adjacent slopes. Slope grades would be constructed to provide erosion control and facilitate planting and maintenance.
    - The project limits have been narrowed to reduce effects to Mono Lake lupine and Mono milk-vetch. Temporary fencing would be used to delineate the project limits. No staging or storage areas would occur in areas known to have populations of special-status plants.
    - To avoid disturbing nesting activities of northern goshawk, construction would occur outside of the sensitive period between May 1 and June 30, unless pre-construction surveys are conducted.

Christine Cox-Kovacevich, Office Chief
Office of Environmental Management, North
Central Region Environmental Division
California Department of Transportation

8-29-07
Date

Section 1 Project Information

Project Title

June Lake Shoulder Widening

Lead Agency Name and Address

Caltrans—District 9
500 South Main Street
Bishop, CA 93514

Contact Person and Phone Number

Tom Dayak, Chief, Eastern Sierra Environmental Branch
(760) 872-0690

Project Sponsor's Name and Address

Caltrans—District 9
500 South Main Street
Bishop, CA 93514

General Plan Description

The area is described as Resource Management in the Mono County General Plan.

Zoning

Mono County classifies the area as Resource Management. This designation recognizes lands outside existing communities that may have values related to recreation, wildlife habitat, visual, and other resources.

Project Location

The project lies in Mono County, northeast of the community of June Lake, from June Lake Junction (the junction of State Route 158 and U.S. Highway 395) to the junction of State Route 158 and North Shore Drive. The project would take place on Caltrans easements on U.S. Forest Service Inyo National Forest lands at an elevation of about 7,600 feet to 7,800 feet above sea level. See Figures 1 and 2.

Description of Project

Caltrans proposes to widen the shoulders of both sides of State Route 158 to approximately 5 feet along about one mile of the highway, from the junction of State Route 158 and U.S. Highway 395 to the junction of State Route 158 and North Shore Drive. The project would also replace three existing corrugated steel pipes and add

flared-end sections at post miles 0.4, 0.5, and 0.7. Between post miles 0.8 and 0.9, an asphalt concrete dike and overside drain would be installed and rock slope protection would be placed on the downstream side. Rumble strips would be added to the highway to designate the highway shoulder. See the Project Schematic in Appendix A.

Surrounding Land Uses and Setting

The surrounding land is U.S. Forest Service Inyo National Forest land, characterized by Jeffrey pine forest at higher elevations and sagebrush scrub at lower elevations.

Other Public Agencies Whose Approvals Are Required

U.S. Forest Service approval is required for work on the Caltrans easement.

The California Department of Fish and Game would be a responsible agency under the California Environmental Quality Act.

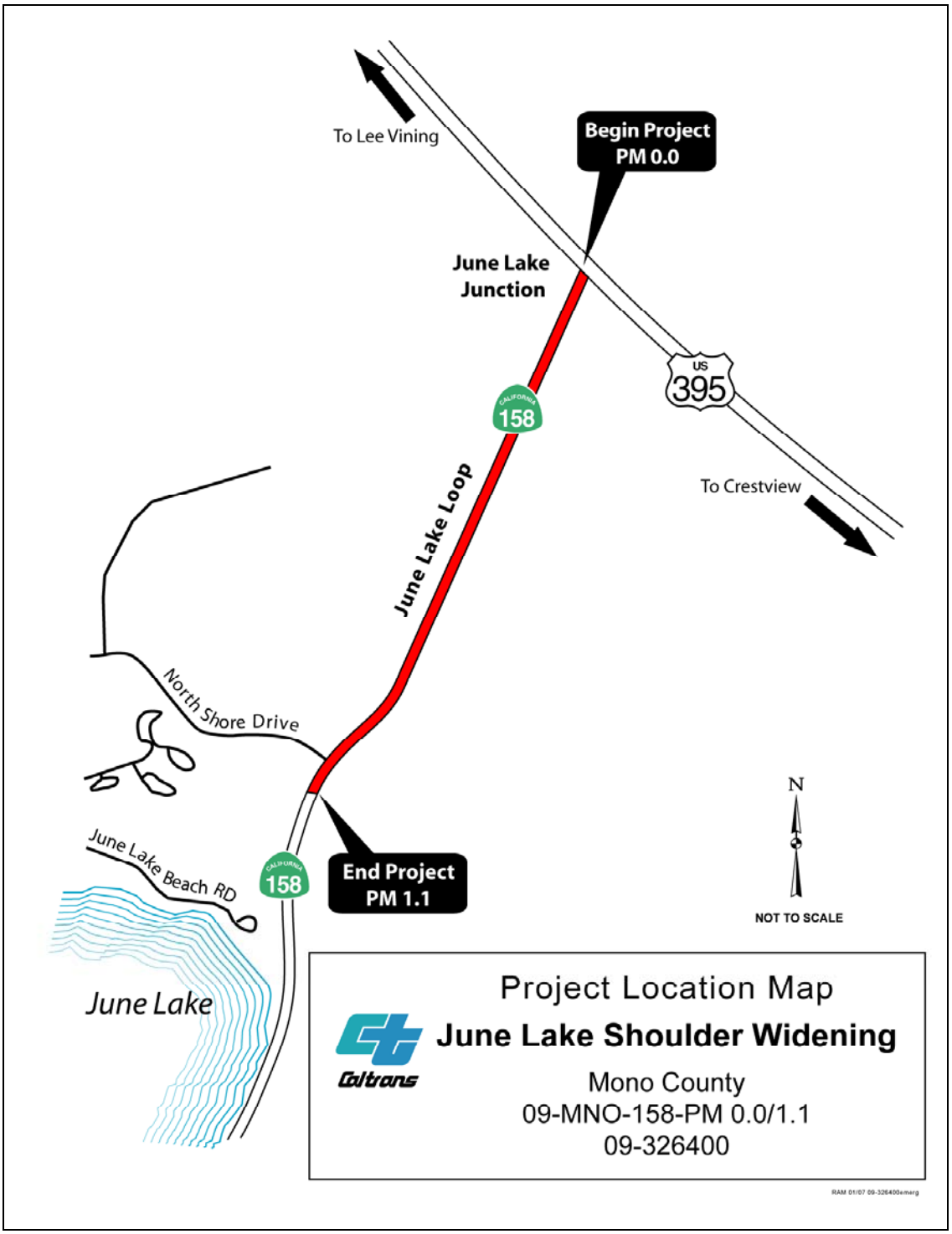

Figure 1. Project Location Map

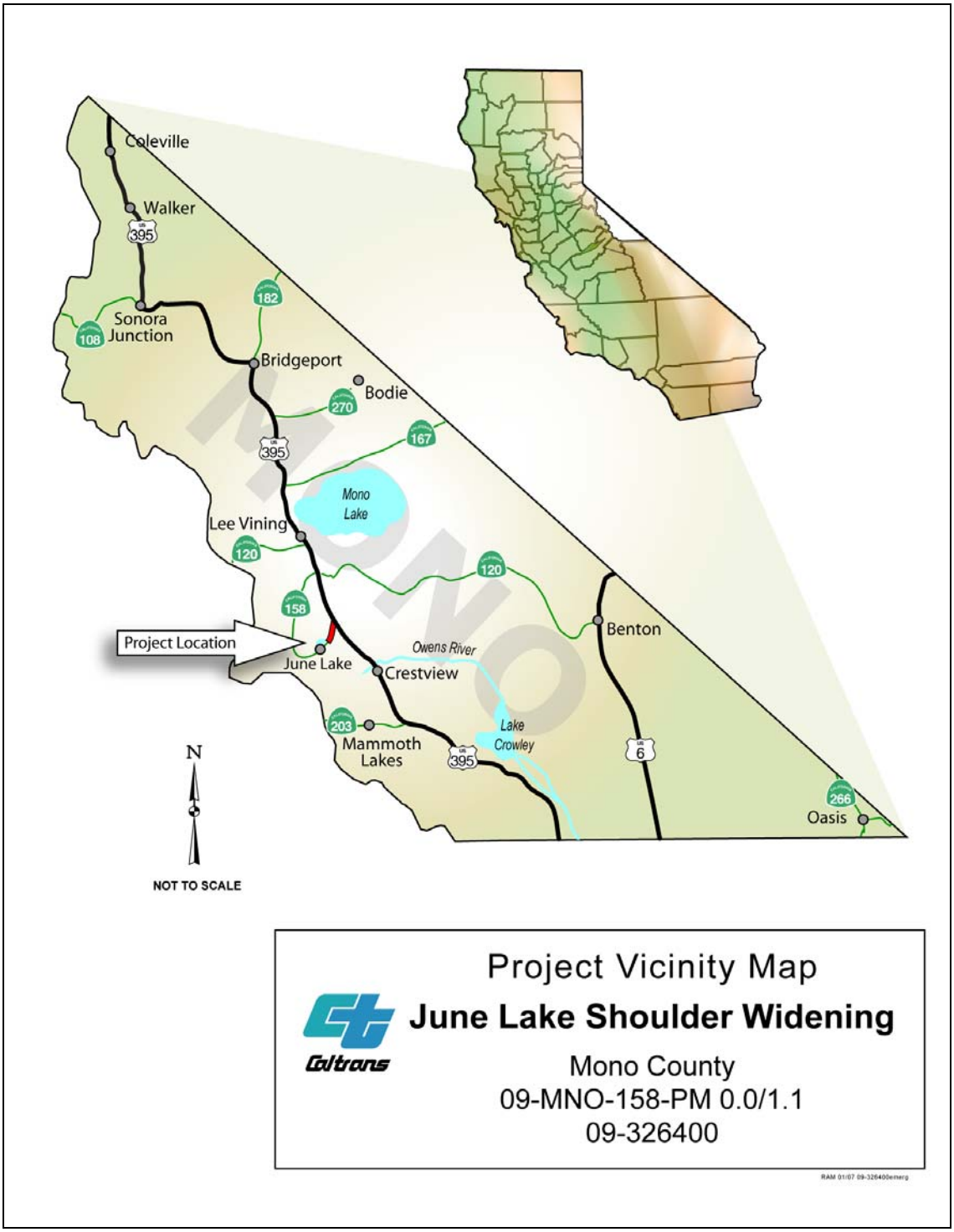

Figure 2. Project Vicinity Map

Section 2 Environmental Factors Potentially Affected

The environmental factors checked below would be potentially affected by this project, involving at least one impact that is a "Potentially Significant Impact" as indicated by the checklist on the following pages.

- [x] Aesthetics
- [ ] Agricultural Resources
- [ ] Air Quality
- [x] Biological Resources
- [ ] Cultural Resources
- [ ] Geology/Soils
- [ ] Hazards and Hazardous Materials
- [ ] Hydrology/Water Quality
- [ ] Land Use/Planning
- [ ] Mineral Resources
- [ ] Noise
- [ ] Population/Housing
- [ ] Public Services
- [ ] Recreation
- [ ] Transportation/Traffic
- [ ] Utilities/Service Systems
- [ ] Mandatory Findings of Significance

Section 3 Determination

On the basis of this determination:

[ ]	I find that the proposed project COULD NOT have a significant effect on the environment, and a NEGATIVE DECLARATION will be prepared.
[X]	I find that although the proposed project could have a significant effect on the environment, there will not be a significant effect in this case because revisions in the project have been made by or agreed to by the project proponent. A MITIGATED NEGATIVE DECLARATION will be prepared.
[ ]	I find that the proposed project MAY have a significant effect on the environment, and an ENVIRONMENTAL IMPACT REPORT is required.
[ ]	I find that the proposed project MAY have a "potentially significant impact" or "potentially significant unless mitigated" impact on the environment, but at least one effect 1) has been adequately analyzed in an earlier document pursuant to applicable legal standards, and 2) has been addressed by mitigation measures based on the earlier analysis as described on attached sheets. An ENVIRONMENTAL IMPACT REPORT is required, but it must analyze only the effects that remain to be addressed.
[ ]	I find that although the proposed project could have a significant effect on the environment, because all potentially significant effects (a) have been analyzed adequately in an earlier EIR or NEGATIVE DECLARATION pursuant to applicable standards, and (b) have been avoided or mitigated pursuant to that earlier EIR or NEGATIVE DECLARATION, including revisions or mitigation measures that are imposed upon the proposed project, nothing further is required.

8-29-07

Christine ~~Cox~~-Kovacevich, Office Chief
Office of Environmental Management, North
Central Region Environmental Division
California Department of Transportation

Date

Section 4 Impacts Checklist

The impacts checklist starting on the next page identifies physical, biological, social, and economic factors that might be affected by the proposed project. Direct and indirect impacts are addressed in checklist items I through XVI. Mandatory Findings of Significance are discussed in item XVII. The California Environmental Quality Act impact levels include “potentially significant impact,” “less than significant impact with mitigation,” “less than significant impact,” and “no impact.”

A brief explanation of each California Environmental Quality Act checklist determination follows each checklist item. Lengthy explanations, if needed, are provided after the checklist.

	Potentially significant impact	Less than significant impact with mitigation	Less than significant impact	No impact
I. AESTHETICS — Would the project:				
a) Have a substantial adverse effect on a scenic vista?		X		

Explanation: See Additional Explanations following the checklist.

b) Substantially damage scenic resources, including, but not limited to, trees, rock outcroppings, and historic buildings within a state scenic highway?			X	

Explanation: Refer to I (a).

c) Substantially degrade the existing visual character or quality of the site and its surroundings?		X		

Explanation: Refer to I (a).

d) Create a new source of substantial light or glare that would adversely affect day or nighttime views in the area?				X

Explanation: There are no sources of light associated with the project, nor would the project produce any source of glare.

II. AGRICULTURE RESOURCES — In determining whether impacts to agricultural resources are significant environmental effects, lead agencies may refer to the California Agricultural Land Evaluation and Site Assessment Model (1997) prepared by the California Dept. of Conservation as an optional model to use in assessing impacts on agriculture and farmland. Would the project:				
a) Convert Prime Farmland, Unique Farmland, or Farmland of Statewide Importance (Farmland), as shown on the maps prepared pursuant to the Farmland Mapping and Monitoring Program of the California Resources Agency, to non-agricultural use?				X

Explanation: There is no farmland in the project area. (State of California Farmland Mapping and Monitoring Program, email, November 20, 2006)

b) Conflict with existing zoning for agricultural use, or a Williamson Act contract?				X

	Potentially significant impact	Less than significant impact with mitigation	Less than significant impact	No impact

Explanation: There is no farmland in the project area. Therefore, there are no Williamson Act contracts or zoning for agricultural use. (State of California Farmland Mapping and Monitoring Program, email, November 20, 2006)

c) Involve other changes in the existing environment, which, due to their location or nature, could result in conversion of farmland, to non-agricultural use?	☐	☐	☐	X

Explanation: There is no agriculture in or near the project area. (State of California Farmland Mapping and Monitoring Program, email, November 20, 2006)

III. AIR QUALITY — Where available, the significance criteria established by the applicable air quality management or air pollution control district may be relied upon to make the following determinations. Would the project:

a) Conflict with or obstruct implementation of the applicable air quality plan?	☐	☐	☐	X

Explanation: No. The project is exempt under Table 2 of 40 Code of Federal Regulations 93.126.

b) Violate any air quality standard or contribute substantially to an existing or projected air quality violation?	☐	☐	X	☐

Explanation: If the contractor's activities would generate excessive dust, the exposed soil would be treated with water and/or other stabilizers to reduce dust. (Caltrans Standard Specification for dust control)

c) Result in a cumulatively considerable net increase of any criteria pollutant for which the project region is non-attainment under an applicable federal or state ambient air quality standard (including releasing emissions, which exceed quantitative thresholds for ozone precursors)?	☐	☐	☐	X

Explanation: The project would not result in a cumulatively considerable increase in air pollutants.

d) Expose sensitive receptors to substantial pollutant concentrations?	☐	☐	☐	X

Explanation: There are no sensitive receptors in the area, and the project would not increase air quality pollutants. (U.S. Geological Survey June Lake 7.5-minute quadrangle map and November 8, 2006 site visit)

	Potentially significant impact	Less than significant impact with mitigation	Less than significant impact	No impact
e) Create objectionable odors affecting a substantial number of people?	☐	☐	☐	X

Explanation: No. The project is in a remote area, and any odor associated with construction would be temporary.

IV. BIOLOGICAL RESOURCES — Would the project:

a) Have a substantial adverse effect, either directly or through habitat modifications, on any species identified as a candidate, sensitive, or special-status species in local or regional plans, policies, or regulations, or by the California Department of Fish and Game or U.S. Fish and Wildlife Service?	☐	X	☐	☐

Explanation: See Additional Explanations following the checklist. (Caltrans Natural Environment Study, January 2007)

b) Have a substantial adverse effect on any riparian habitat or other sensitive natural community identified in local or regional plans, policies, and regulations or by the California Department of Fish and Game or U.S. Fish and Wildlife Service?	☐	☐	☐	X

Explanation: The project would not affect riparian habitat or sensitive natural communities. (Caltrans Natural Environment Study, January 2007)

c) Have a substantial adverse effect on federally protected wetlands as defined by Section 404 of the Clean Water Act (including, but not limited to, marsh, vernal pool, coastal, etc.) through direct removal, filling, hydrological interruption, or other means?	☐	☐	☐	X

Explanation: There are no wetlands in the project area. (Caltrans Natural Environment Study, January 2007)

d) Interfere substantially with the movement of any native resident or migratory fish or wildlife species or with established native resident or migratory wildlife corridors, or impede the use of native wildlife nursery sites?	☐	☐	☐	X

Explanation: The project would not affect the movement of any native resident or migratory fish or wildlife species. (Caltrans Natural Environment Study, January 2007)

e) Conflict with any local policies or ordinances protecting biological resources, such as a tree preservation policy or ordinance?	☐	☐	☐	X

Potentially significant impact	Less than significant impact with mitigation	Less than significant impact	No impact

Explanation: The project would remove about 9 trees and a few rare plants (see Project Features figure in Appendix B), but it would not conflict with any local ordinance or any policy protecting biological resources. (Caltrans Natural Environment Study, January 2007)

f) Conflict with the provisions of an adopted Habitat Conservation Plan, Natural Community Conservation Plan, or other approved local, regional, or state habitat conservation plan?	☐	☐	☐	X

Explanation: The project would not conflict with a Habitat Conservation Plan or Natural Community Conservation Plan. (Caltrans Natural Environment Study, January 2007)

V. CULTURAL RESOURCES — Would the project:

a) Cause a substantial adverse change in the significance of a historical resource as defined in §15064.5?	☐	☐	☐	X

Explanation: There are no historical resources in the project area. No evidence of archaeological resources was found during pre-project surveys (Caltrans Cultural Clearance memorandum, December 2006). If buried cultural materials were unearthed during construction, work would stop until a qualified Caltrans archaeologist could assess the significance of the find. If human remains were exposed during construction, work would stop until the county coroner could determine the origin and disposition of the remains, per Public Resources Code 5097.98 (State Health and Safety Code 7050.5).

b) Cause a substantial adverse change in the significance of an archaeological resource pursuant to §15064.5?	☐	☐	☐	☐

Archaeological resources are considered "historical resources" and are covered under question V (a).

c) Directly or indirectly destroy a unique paleontological resource or site or unique geologic feature?	☐	☐	☐	X

Explanation: Paleontological resources are not likely in the Pleistocene glacial deposits, Pleistocene volcanic rocks, or Mesozoic granitic rocks in the project area (Caltrans Paleontological Identification Report, May 24, 2007). No unique geologic feature would be affected.

d) Disturb any human remains, including those interred outside of formal cemeteries?	☐	☐	☐	X

Potentially significant impact	Less than significant impact with mitigation	Less than significant impact	No impact

Explanation: No human remains are expected in the project area. (Caltrans Cultural Clearance memorandum, December 2006) If buried cultural materials were unearthed during construction, work would stop until a qualified Caltrans archaeologist could assess the significance of the find. If human remains were exposed during construction, work would stop until the county coroner could determine the origin and disposition of the remains, per Public Resources Code 5097.98 (State Health and Safety Code 7050.5).

VI. GEOLOGY AND SOILS — Would the project:

a) Expose people or structures to potential substantial adverse effects, including the risk of loss, injury, or death involving:

i) Rupture of a known earthquake fault, as delineated on the most recent Alquist-Priolo Earthquake Fault Zoning Map issued by the State Geologist for the area or based on other substantial evidence of a known fault? Refer to Division of Mines and Geology Special Publication 42. ☐ ☐ ☐ X

Explanation: The soil type in the project area is Martis-Euer-Inville (CA854). The soils are glacial deposits dominated by volcanic material (California On-Line Soil Survey, University of California at Davis Land, Air and Water Resources Department). The project does not present a risk with seismic activity (Alquist-Priolo Earthquake Hazard Maps, Northern and Eastern Region).

ii) Strong seismic ground shaking? ☐ ☐ ☐ X

Explanation: Strong seismic ground shaking would not pose a risk to people or structures due to the project. (Alquist-Priolo Earthquake Hazard Maps, Northern and Eastern Region)

iii) Seismic-related ground failure, including liquefaction? ☐ ☐ ☐ X

Explanation: The project would not pose a risk due to liquefaction. (Alquist-Priolo Earthquake Hazard Maps, Northern and Eastern Region)

iv) Landslides? ☐ ☐ ☐ X

Explanation: The project would not increase the risk of landslides.

b) Result in substantial soil erosion or the loss of topsoil? ☐ ☐ ☐ X

	Potentially significant impact	Less than significant impact with mitigation	Less than significant impact	No impact

Explanation: The project would not result in substantial erosion. Duff in disturbed areas would be salvaged and replaced. (Caltrans Visual Impact Assessment, March 2007)

c) Be located on a geologic unit or soil that is unstable, or that would become unstable as a result of the project, and potentially result in onsite or offsite landslide, lateral spreading, subsidence, liquefaction, or collapse?	☐	☐	☐	X

Explanation: The project would be on stable soils. (Alquist-Priolo Earthquake Hazard Maps, Northern and Eastern Region)

d) Be located on expansive soil, as defined in Table 18-1-B of the Uniform Building Code (1994), creating substantial risks to life or property.	☐	☐	☐	X

Explanation: The project is not located on expansive soil and would not pose substantial risks to life or property. (California On-Line Soil Survey, http://casoilresource.lawr.ucdavis/, accessed March 26, 2007)

e) Have soils incapable of adequately supporting the use of septic tanks or alternative wastewater disposal systems where sewers are not available for the disposal of wastewater?	☐	☐	☐	X

Explanation: No septic tanks or wastewater disposal systems are associated with the project.

VII. HAZARDS AND HAZARDOUS MATERIALS —
Would the project:

a) Create a significant hazard to the public or the environment through the routine transport, use, or disposal of hazardous materials?	☐	☐	X	☐

Explanation: No hazardous materials would be associated with the project after construction. During construction, Caltrans would use construction best management practices to prevent the release of any hazardous materials to the environment. (Personal communication with Dan Holland, Caltrans Hazardous Materials coordinator)

b) Create a significant hazard to the public or the environment through reasonably foreseeable upset and accident conditions involving the release of hazardous materials into the environment?	☐	☐	X	☐

	Potentially significant impact	Less than significant impact with mitigation	Less than significant impact	No impact

Explanation: No hazardous materials would be associated with the project after construction. Construction best management practices would be used to prevent the release of hazardous materials to the environment. One traffic lane would be open during construction, but the public would be restricted from accessing the construction area. (Personal communication with Dan Holland, Caltrans Hazardous Materials coordinator)

c) Emit hazardous emissions or handle hazardous or acutely hazardous materials, substances, or waste within one-quarter mile of an existing or proposed school?	☐	☐	☐	X

Explanation: No. The project is not within one-quarter mile of an existing or proposed school. (U.S. Geological Survey June Lake 7.5-minute quadrangle map and November 8, 2006 site visit)

d) Be located on a site that is included on a list of hazardous materials sites compiled pursuant to Government Code Section 65962.5 and, as a result, would it create a significant hazard to the public or the environment?	☐	☐	☐	X

Explanation: There are no hazardous materials sites at the project location. (U.S. Geological Survey June Lake 7.5-minute quadrangle map and November 8, 2006 site visit)

e) For a project located within an airport land use plan or, where such a plan has not been adopted, within two miles of a public airport or public use airport, would the project result in a safety hazard for people residing or working in the project area?	☐	☐	☐	X

Explanation: There is no public airport within two miles of the project site. (U.S. Geological Survey June Lake 7.5-minute quadrangle map and November 8, 2006 site visit)

f) For a project within the vicinity of a private airstrip, would the project result in a safety hazard for people residing or working in the project area?	☐	☐	☐	X

Explanation: There is no private airstrip in the vicinity. (U.S. Geological Survey June Lake 7.5-minute quadrangle map and November 8, 2006 site visit)

g) Impair implementation of or physically interfere with an adopted emergency response plan or emergency evacuation plan?	☐	☐	☐	X

Explanation: The project would not interfere with an emergency response plan or emergency evacuation plan. The project would improve access to the June Lake area. (U.S. Geological Survey June Lake 7.5-minute quadrangle map and November 8, 2006 site visit)

	Potentially significant impact	Less than significant impact with mitigation	Less than significant impact	No impact
h) Expose people or structures to a significant risk of loss, injury, or death involving wildland fires, including where wildlands are adjacent to urbanized areas or where residences are intermixed with wildlands?	☐	☐	☐	X

Explanation: The project would not promote development in wildlands and would not increase wildland fire risk.

VIII. HYDROLOGY AND WATER QUALITY —
Would the project:

a) Violate any water quality standards or waste discharge requirements?	☐	☐	X	☐

Explanation: No. Best management practices would be followed during construction in accordance with the Caltrans stormwater permit so that there would be no stormwater releases into waterbodies during construction. (Personal communication with Dan Holland, Caltrans stormwater coordinator) No significant erosion would be expected after construction.

b) Substantially deplete groundwater supplies or interfere substantially with groundwater recharge such that there would be a net deficit in aquifer volume or a lowering of the local groundwater table level (e.g., the production rate of pre-existing nearby wells would drop to a level that would not support existing land uses or planned uses for which permits have been granted)?	☐	☐	☐	X

Explanation: The project would not affect groundwater supplies or groundwater recharge. (Personal communication with Dan Holland, Caltrans stormwater coordinator)

c) Substantially alter the existing drainage pattern of the site or area, including through the alteration of the course of a stream or river, in a manner that would result in substantial erosion or siltation on- or offsite?	☐	☐	X	☐

Explanation: The project would not affect a stream or river or affect drainage. Best management practices would be followed during construction in accordance with the Caltrans stormwater permit so that there would be minimal erosion during construction. (Caltrans Hydraulics Report, April 25, 2006)

d) Substantially alter the existing drainage pattern of the site or area, including through the alteration of the course of a stream or river, or substantially increase the rate or amount of surface runoff in a manner that would result in flooding on- or offsite?	☐	☐	☐	X

	Potentially significant impact	Less than significant impact with mitigation	Less than significant impact	No impact

Explanation: The project would not change the existing drainage. (Caltrans Hydraulics Report, April 25, 2006)

e) Create or contribute runoff water that would exceed the capacity of existing or planned storm water drainage systems or provide substantial additional sources of polluted runoff?	☐	☐	☐	X

Explanation: The project would not produce runoff that would exceed the capacity of stormwater drainage systems. (Caltrans Hydraulics Report, April 25, 2006)

f) Otherwise substantially degrade water quality?	☐	☐	X	☐

Explanation: The project would not degrade water quality. Best management practices would be used during construction to minimize erosion. (Personal communication with Dan Holland, Caltrans stormwater coordinator)

g) Place housing within a 100-year flood hazard area as mapped on a federal Flood Hazard Boundary or Flood Insurance Rate Map or other flood hazard delineation map?	☐	☐	☐	X

Explanation: The project does not include any housing.

h) Place within a 100-year flood hazard area structures that would impede or redirect flood flows?	☐	☐	☐	X

Explanation: The project would not impede flood flows. Floods are not expected in the area. (Caltrans Hydraulics Report, April 25, 2006)

i) Expose people or structures to a significant risk of loss, injury, or death involving flooding, including flooding as a result of the failure of a levee or dam?	☐	☐	☐	X

Explanation: The project would not involve construction that would affect flooding. (Caltrans Hydraulics Report, April 25, 2006)

j) Result in inundation by a seiche, tsunami, or mudflow?	☐	☐	☐	X

Explanation: The project would not affect hydrology. (Caltrans Hydraulics Report, April 25, 2006)

IX. LAND USE AND PLANNING — Would the project:

a) Physically divide an established community?	☐	☐	☐	X

	Potentially significant impact	Less than significant impact with mitigation	Less than significant impact	No impact

Explanation: There are no communities in the immediate project area. The project would not divide an established community. (U.S. Geological Survey June Lake 7.5-minute quadrangle map and November 8, 2006 site visit)

b) Conflict with any applicable land use plan, policy, or regulation of an agency with jurisdiction over the project (including, but not limited to the general plan, specific plan, local coastal program, or zoning ordinance) adopted for the purpose of avoiding or mitigating an environmental effect?	☐	☐	☐	X

Explanation: The project would not conflict with any applicable land use plan, policy, or regulation. Although the project is along a scenic highway, the project would have minimal effects on the visual character of the site. (Caltrans Visual Impact Assessment, March 2007)

c) Conflict with any applicable habitat conservation plan or natural community conservation plan?	☐	☐	☐	X

Explanation: The project would not conflict with any applicable habitat conservation plan or natural community conservation plan.

X. MINERAL RESOURCES — Would the project:

a) Result in the loss of availability of a known mineral resource that would be of value to the region and the residents of the state?	☐	☐	☐	X

Explanation: There are no known mineral resources in the project area, and the project would not result in a loss of availability of minerals. (August 1991, Bureau of Land Management Bishop Resource Management Plan and Environmental Impact Statement)

b) Result in the loss of availability of a locally important mineral resource recovery site delineated on a local general plan, specific plan, or other land use plan?	☐	☐	☐	X

Explanation: There are no known locally important mineral resources in the project area, and the project would not result in a loss of availability of minerals. (August 1991, Bureau of Land Management Bishop Resource Management Plan and Environmental Impact Statement)

XI. NOISE — Would the project result in:

a) Exposure of persons to or generation of noise levels in excess of standards established in the local general plan or noise ordinance, or applicable standards of other agencies?	☐	☐	X	☐

	Potentially significant impact	Less than significant impact with mitigation	Less than significant impact	No impact

Explanation: No, there would be no temporary or permanent noise impacts associated with the project. (Caltrans design engineer)

b) Exposure of persons to or generation of excessive groundborne vibration or groundborne noise levels?	☐	☐	☐	X

Explanation: No, the project would not generate groundborne noise. (Caltrans design engineer)

c) A substantial permanent increase in ambient noise levels in the project vicinity above levels existing without the project?	☐	☐	☐	X

Explanation: The project would not increase ambient noise levels. (Caltrans design engineer)

d) A substantial temporary or periodic increase in ambient noise levels in the project vicinity above levels existing without the project?	☐	☐	☐	X

Explanation: The project would not result in a substantial temporary or periodic increase in ambient noise levels in the project vicinity. (Caltrans design engineer)

e) For a project located within an airport land use plan or, where such a plan has not been adopted, within two miles of a public airport or public use airport, would the project expose people residing or working in the project area to excessive noise levels?	☐	☐	☐	X

Explanation: There is no public airport within two miles of the project site. (U.S. Geological Survey June Lake 7.5-minute quadrangle map and November 8, 2006 site visit)

f) For a project within the vicinity of a private airstrip, would the project expose people residing or working in the project area to excessive noise levels?	☐	☐	☐	X

Explanation: There is no private airstrip in the vicinity. (U.S. Geological Survey June Lake 7.5-minute quadrangle map and November 8, 2006 site visit)

XII. POPULATION AND HOUSING — Would the project:

a) Induce substantial population growth in an area, either directly (for example, by proposing new homes and businesses) or indirectly (for example, through extension of roads or other infrastructure)?	☐	☐	☐	X

	Potentially significant impact	Less than significant impact with mitigation	Less than significant impact	No impact

Explanation: The project would not increase capacity on the highway or induce population growth.

b) Displace substantial numbers of existing housing, necessitating the construction of replacement housing elsewhere?	☐	☐	☐	X

Explanation: There is no housing in the project area. The project would not affect housing. (U.S. Geological Survey June Lake 7.5-minute quadrangle map and November 8, 2006 site visit)

c) Displace substantial numbers of people, necessitating the construction of replacement housing elsewhere?	☐	☐	☐	X

Explanation: The project would not displace people. (U.S. Geological Survey June Lake 7.5-minute quadrangle map and November 8, 2006 site visit)

XIII. PUBLIC SERVICES —

Would the project result in substantial adverse physical impacts associated with the provision of new or physically altered governmental facilities, need for new or physically altered governmental facilities, the construction of which could cause significant environmental impacts, in order to maintain acceptable service ratios, response times, or other performance objectives for any of the public services:

Fire protection?	☐	☐	☐	X
Police protection?	☐	☐	☐	X
Schools?	☐	☐	☐	X
Parks?	☐	☐	☐	X
Other public facilities?	☐	☐	☐	X

Explanation: The project would not result in adverse impacts to governmental facilities.

XIV. RECREATION —

a) Would the project increase the use of existing neighborhood and regional parks or other recreational facilities such that substantial physical deterioration of the facility would occur or be accelerated?	☐	☐	☐	X

	Potentially significant impact	Less than significant impact with mitigation	Less than significant impact	No impact

Explanation: The project would not increase the use of recreational facilities.

b) Does the project include recreational facilities or require the construction or expansion of recreational facilities that might have an adverse physical effect on the environment?	☐	☐	☐	X

Explanation: The project does not include recreational facilities or require the construction of recreational facilities that might have an adverse physical effect on the environment.

XV. TRANSPORTATION/TRAFFIC — Would the project:

a) Cause an increase in traffic that is substantial in relation to the existing traffic load and capacity of the street system (i.e., result in a substantial increase in either the number of vehicle trips, the volume to capacity ratio on roads, or congestion at intersections)?	☐	☐	☐	X

Explanation: The project would not increase traffic substantially. (Caltrans Traffic Memo, March 20, 2007)

b) Exceed, either individually or cumulatively, a level of service standard established by the county congestion management agency for designated roads or highways?	☐	☐	☐	X

Explanation: The project would not increase traffic and would not negatively affect the level of service on State Route 158. (Caltrans Traffic Memo, March 20, 2007)

c) Result in a change in air traffic patterns, including either an increase in traffic levels or a change in location that results in substantial safety risks?	☐	☐	☐	X

Explanation: The project would not affect air traffic.

d) Substantially increase hazards due to a design feature (e.g., sharp curves or dangerous intersections) or incompatible uses (e.g., farm equipment)?	☐	☐	☐	X

Explanation: The project would not increase hazards. Widening the shoulders would improve the safety along State Route 158. (Email from Donna Holland, Caltrans traffic engineer, March 29, 2007)

e) Result in inadequate emergency access?	☐	☐	☐	X

	Potentially significant impact	Less than significant impact with mitigation	Less than significant impact	No impact

Explanation: The project would not negatively affect emergency access. One lane of access would be maintained during construction. After construction, due to the widened shoulders, the project would improve the ability of emergency vehicles to travel on State Route 158 in emergency situations. (Email from Donna Holland, Caltrans traffic engineer, March 29, 2007).

f) Result in inadequate parking capacity?	☐	☐	☐	X

Explanation: The project would not create a need for parking.

g) Conflict with adopted policies, plans, or programs supporting alternative transportation (e.g., bus turnouts, bicycle racks)?	☐	☐	☐	X

Explanation: The project is compatible with alternative transportation because bicycles would be able to use the paved highway shoulders, which would include bicycle-friendly rumble strips.

XVI. UTILITY AND SERVICE SYSTEMS — Would the project:

a) Exceed wastewater treatment requirements of the applicable Regional Water Quality Control Board?	☐	☐	☐	X

Explanation: The project would not produce wastewater.

b) Require or result in the construction of new water or wastewater treatment facilities or expansion of existing facilities, the construction of which could cause significant environmental effects?	☐	☐	☐	X

Explanation: The project does not involve the construction of new water or wastewater treatment facilities.

c) Require or result in the construction of new storm water drainage facilities or expansion of existing facilities, the construction of which could cause significant environmental effects?	☐	☐	☐	X

Explanation: The project would not require the construction of new stormwater drainage facilities.

d) Have sufficient water supplies available to serve the project from existing entitlements and resources, or are new or expanded entitlements needed?	☐	☐	☐	X

	Potentially significant impact	Less than significant impact with mitigation	Less than significant impact	No impact

Explanation: The project would not require water.

e) Result in a determination by the wastewater treatment provider that serves or may serve the project that it has adequate capacity to serve the project's projected demand in addition to the provider's existing commitments?	☐	☐	☐	X

Explanation: The project would not produce wastewater, so wastewater treatment facilities are not needed.

f) Be served by a landfill with sufficient permitted capacity to accommodate the project's solid waste disposal needs?	☐	☐	☐	X

Explanation: The construction contractor would remove any solid waste from the area.

g) Comply with federal, state, and local statutes and regulations related to solid waste?	☐	☐	☐	X

Explanation: The construction contractor would comply with federal, state, and local statutes and regulations related to solid waste.

XVII. MANDATORY FINDINGS OF SIGNIFICANCE —

a) Does the project have the potential to degrade the quality of the environment, substantially reduce the habitat of a fish or wildlife species, cause a fish or wildlife population to drop below self-sustaining levels, threaten to eliminate a plant or animal community, reduce the number or restrict the range of a rare or endangered plant or animal or eliminate important examples of the major periods of California history or prehistory?	☐	☐	☐	X

Explanation: The project as described above in this Initial Study would have no significant impacts.

b) Does the project have impacts that are individually limited, but cumulatively considerable? ("Cumulatively considerable" means that the incremental effects of a project are considerable when viewed in connection with the effects of past projects, the effects of other current projects, and the effects of probable future projects)?	☐	☐	☐	X

	Potentially significant impact	Less than significant impact with mitigation	Less than significant impact	No impact

Explanation: The project as described above would have no residual impacts that would be cumulatively considerable. In addition, this is the only known project in the area.

c) Does the project have environmental effects that will cause substantial adverse effects on human beings, either directly or indirectly?	☐	☐	☐	X

Explanation: As shown above, the project would not have substantial adverse effects on human beings.

Additional Explanations

I. Aesthetics (Item a)

Affected Environment

State Route 158 is a designated State Scenic Highway (Caltrans Visual Impact Assessment, March 2007). The route loops around June Lake, west of U.S. Highway 395. The regional landscape consists of the rugged glacially carved Sierra Nevada Mountains and the forested hills of glacially deposited material.

The June Lake Junction area and the higher elevations of the project contain Jeffrey pine forest. Lower elevations in the project contain sagebrush/antelope bitterbrush scrub.

Impacts

The Visual Impact Assessment concluded that the project would have little impact on the visual quality of the surrounding regional view (Caltrans Visual Impact Assessment, March 2007).

Avoidance, Minimization, and/or Mitigation Measures

Measures to decrease any negative visual impact caused by the project include the following:

- Protect and preserve existing native vegetation.
- Increase slope rounding at top and bottom of fills and a non-uniform profile to create more natural connections with existing grades and adjacent slopes. Slope grades would be constructed to provide erosion control and facilitate planting and maintenance.
- Collect and store topsoil/duff for placement on disturbed areas before replanting.
- Replanting with native vegetation is critical for restoring visual quality. The native seed mix, application rates, and planting methods would be determined by or approved in cooperation with a Caltrans landscape architect and a Caltrans biologist.

IV. Biological Resources (Item a)

Plants

Affected Environment

The project is dominated by big sagebrush characteristic of the Great Basin floristic region and Jeffrey pine forest (Caltrans Natural Environment Study, January 2007). A California Natural Diversity Database search was conducted for species potentially in the project area. Field surveys were conducted on July 12 and 25, 2006 and again on August 17, 2006 (Caltrans Natural Environment Study, January 2007).

Sensitive species in the area are Mono Lake lupine (*Lupinus duranii)* and Mono milk-vetch (*Astragalus monoensis*). These plants are endemic to Mono County and found on coarse, barren volcanic soils in the 6,500-foot to 8,500-foot elevation range. They are candidates for federal listing and are listed on the California Native Plant Society 1B list. Mono milk-vetch is listed as rare under the California Endangered Species Act.

Impacts

The project would remove approximately 9 trees to provide for a clear recovery zone.

The project limits have been narrowed from 8 feet to 5 feet to reduce impacts on Mono Lake lupine and Mono milk-vetch. Twenty Mono Lake lupine and four Mono milk-vetch plants that exist in the already-disturbed cinder shoulders would be affected. Of the areas mapped in the California Natural Diversity Database for Mono Lake lupine and Mono milk-vetch, the highway shoulders would affect less than 10 percent of those areas.

A determination of “may affect individuals but is not likely to result in a trend toward federal listing” was made for the Mono milk-vetch and Mono Lake lupine (Caltrans Natural Environment Study, January 2007).

Avoidance, Minimization, and/or Mitigation Measures

The project limits have been narrowed to reduce impacts to trees, Mono Lake lupine, and Mono milk-vetch. Scenic trees near June Lake Junction would be preserved.

To protect Mono Lake lupine and Mono milk-vetch and their habitat, the project limits would be delineated using temporary fencing. No staging or storage areas would occur in the area known to have populations of these plants. Temporary fencing would be used to delineate the project limits and prevent disturbance of

protected habitat. No staging or storage areas would occur in areas known to have populations of special-status plants.

Threatened and Endangered Species

Affected Environment

Field surveys were conducted on July 12 and 25, 2006 and again on August 17, 2006 (Caltrans Natural Environment Study, January 2007). Caltrans requested and received a species list from the U.S. Fish and Wildlife Service (Caltrans Natural Environment Study, January 2007).

Impacts

The U.S. Fish and Wildlife Service species list letter identified one species, the bald eagle (*Haliaeetus leucocephalus*), a federally threatened, state endangered species, as potentially in the project area.

The northern goshawk (*Accipiter gentilis*), a state species of special concern, could also potentially occur in the project area (California Natural Diversity Database search in Caltrans Natural Environment Study, January 2007).

The northern goshawk and the bald eagle are not likely in the trees adjacent to the highway in the project area due to human activity and traffic (Caltrans Natural Environment Study, January 2007).

Avoidance, Minimization, and/or Mitigation Measures

The northern goshawk and the bald eagle are not likely to occur in the trees adjacent to the highway in the project area; however, to avoid any potential nesting activities, construction of the project would be timed, if possible, to occur before May 1 or after June 30. If construction were to occur between May 1 and June 30, a Caltrans biologist would conduct pre-construction clearance surveys over the entire project area, before any vegetation removal, ground disturbance, or any other activities associated with the start of the project. Clearance surveys would be done every day until construction started and on the days that any vegetation would be removed. If no occupied nests were found during clearance surveys, construction would proceed; if an occupied nest were found, no construction would occur until a Caltrans or Forest Service biologist could verify that the nest was unoccupied.

Appendix A Project Schematic

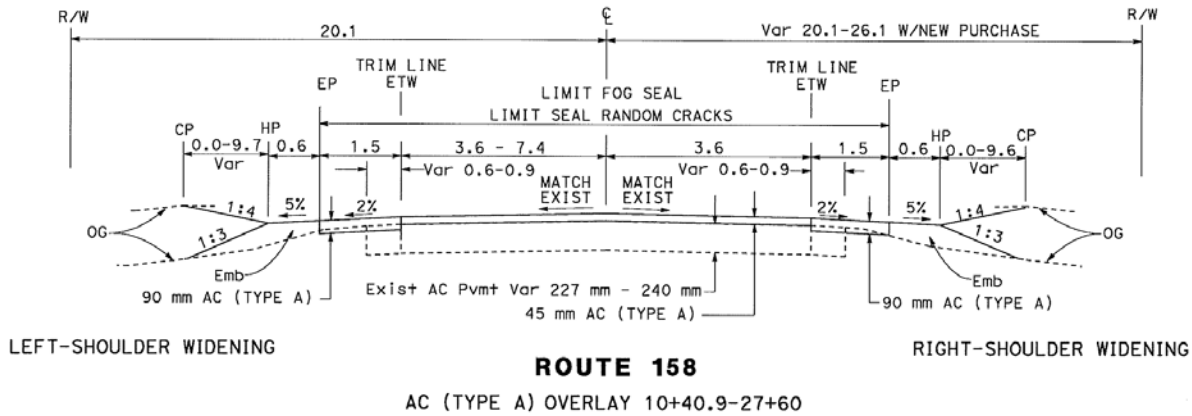

Typical cross section (in metric units)

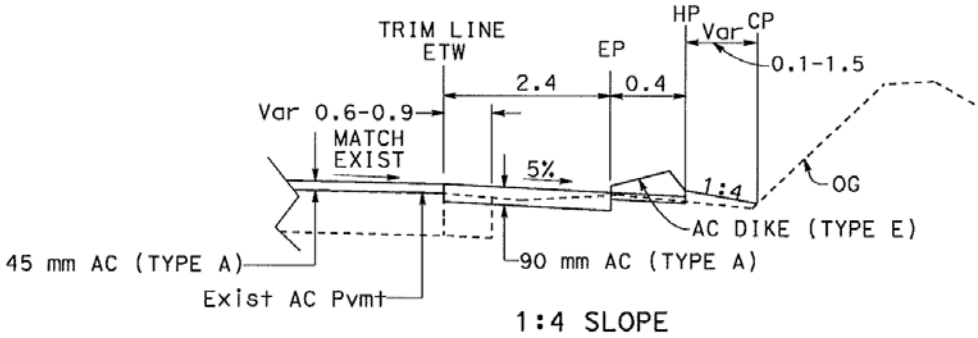

Slope work (in metric units)

Appendix B Project Features

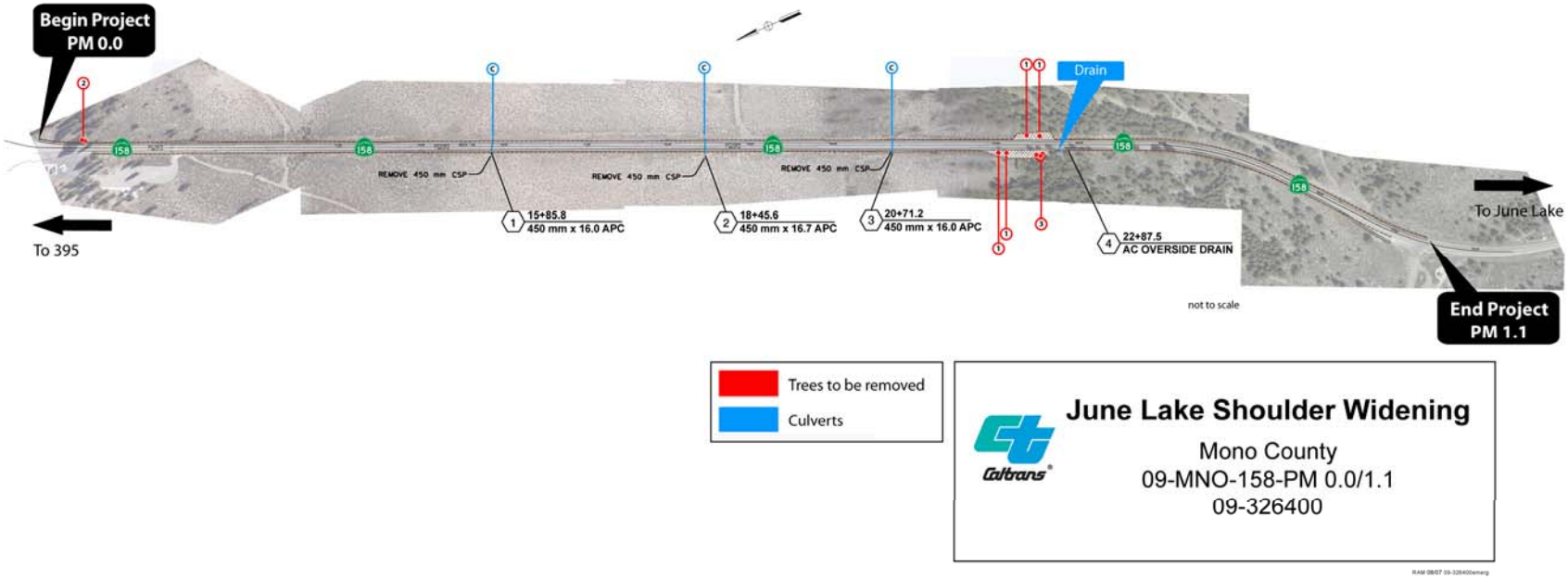

Appendix C Comments and Responses

The Proposed Mitigated Negative Declaration was circulated for public review and comment from June 8, 2007 to July 14, 2007. The document was sent to public agencies including the California State Clearinghouse, U.S. Forest Service, the California Department of Fish and Game, Mono County Planning Department, and the Mono County Board of Supervisors. Public notices were published in local newspapers—the *Inyo Register* and *Mammoth Times*—twice during the public review period. The document was available for review at the June Lake library and the Caltrans District office in Bishop.

A letter was received from the California State Clearinghouse acknowledging Caltrans' compliance with the review requirement for draft environmental documents, per the California Environmental Quality Act. Caltrans also received comment letters from the Native American Heritage Commission and California Department of Fish and Game.

Letter from the State Clearinghouse

STATE OF CALIFORNIA

GOVERNOR'S OFFICE *of* PLANNING AND RESEARCH

STATE CLEARINGHOUSE AND PLANNING UNIT

ARNOLD SCHWARZENEGGER
GOVERNOR

CYNTHIA BRYANT
DIRECTOR

July 10, 2007

Tom Dayak
California Department of Transportation, District 9
500 S. Main Street
Bishop, CA 93514

Subject: June Lake Shoulder Widening
SCH#: 2007062032

Dear Tom Dayak:

The State Clearinghouse submitted the above named Mitigated Negative Declaration to selected state agencies for review. On the enclosed Document Details Report please note that the Clearinghouse has listed the state agencies that reviewed your document. The review period closed on July 9, 2007, and the comments from the responding agency (ies) is (are) enclosed. If this comment package is not in order, please notify the State Clearinghouse immediately. Please refer to the project's ten-digit State Clearinghouse number in future correspondence so that we may respond promptly.

Please note that Section 21104(c) of the California Public Resources Code states that:

> "A responsible or other public agency shall only make substantive comments regarding those activities involved in a project which are within an area of expertise of the agency or which are required to be carried out or approved by the agency. Those comments shall be supported by specific documentation."

These comments are forwarded for use in preparing your final environmental document. Should you need more information or clarification of the enclosed comments, we recommend that you contact the commenting agency directly.

This letter acknowledges that you have complied with the State Clearinghouse review requirements for draft environmental documents, pursuant to the California Environmental Quality Act. Please contact the State Clearinghouse at (916) 445-0613 if you have any questions regarding the environmental review process.

Sincerely,

Terry Roberts

Terry Roberts
Director, State Clearinghouse

Enclosures
cc: Resources Agency

1400 10th Street P.O. Box 3044 Sacramento, California 95812-3044
(916) 445-0613 FAX (916) 323-3018 www.opr.ca.gov

Letter from the State Clearinghouse (continued)

Document Details Report
State Clearinghouse Data Base

SCH# **2007062032**
Project Title June Lake Shoulder Widening
Lead Agency Caltrans #9

Type **MN** Mitigated Negative Declaration
Description D
The California Department of Transportation (Caltrans) proposes to widen the shoulders on both sides of State Route (SR) 158 to approximately 8 feet, from the junction of SR-158 and U.S. Highway 395 to North Shore Drive. The project would also replace three existing corrugated steel pipes and add flared-end sections at post mile 0.4, 0.5, and 0.7. Between post mile 0.8 and 0.9, the existing slope would be cut back forming a 2:1 slope.

Lead Agency Contact
Name Tom Dayak
Agency California Department of Transportation, District 9
Phone (760) 872-0690 ***Fax***
email
Address 500 S. Main Street
City Bishop ***State*** CA ***Zip*** 93514

Project Location
County Mono
City
Region
Cross Streets North Shore Drive
Parcel No. 15-010-73
Township 2S ***Range*** 26E ***Section*** 1 ***Base*** JuneLake

Proximity to:
Highways 158
Airports
Railways
Waterways June Lake
Schools June Lake
Land Use Inyo National Forest, Resource Management

Project Issues Aesthetic/Visual; Air Quality; Biological Resources

Reviewing Agencies California Highway Patrol; Department of Water Resources; Department of Fish and Game, Region 6 (Inyo & Mono Region); Office of Historic Preservation; Native American Heritage Commission; Department of Parks and Recreation; Regional Water Quality Control Board, Region 9; Resources Agency; State Lands Commission

Date Received 06/08/2007 ***Start of Review*** 06/08/2007 ***End of Review*** 07/09/2007

Note: Blanks in data fields result from insufficient information provided by lead agency.

Comments from the Native American Heritage Commission

STATE OF CALIFORNIA — Arnold Schwarzenegger, Governor

NATIVE AMERICAN HERITAGE COMMISSION
915 CAPITOL MALL, ROOM 364
SACRAMENTO, CA 95814
(916) 653-6251
Fax (916) 657-5390
Web Site www.nahc.ca.gov
e-mail: ds_nahc@pacbell.net

July 6, 2007

RECEIVED
JUL - 9 2007
STATE CLEARINGHOUSE

clear
7/9/07
e

Mr. Tom Dayak, Chief
Eastern Sierra Environmental Branch
California Department of Transportation
500 South Main Street
Bishop, CA 93514

Re: SCH#2007062032; CEQA Notice of Completion; Mitigated Negative Declaration for **June Lake (S.R. 158) Loop Shoulder Widening Project**; Mono County (09-MNO-158-0.0/1.1; 09-326400; California

Dear Mr. Dayak:

Thank you for the opportunity to comment on the above-referenced document. The Native American Heritage Commission is the state's Trustee Agency for Native American Cultural Resources. The California Environmental Quality Act (CEQA) requires that any project that causes a substantial adverse change in the significance of an historical resource, that includes archaeological resources, is a 'significant effect' requiring the preparation of an Environmental Impact Report (EIR) per CEQA guidelines § 15064.5(b)(c). In order to comply with this provision, the lead agency is required to assess whether the project will have an adverse impact on these resources within the 'area of potential effect (APE)', and if so, to mitigate that effect. To adequately assess the project-related impacts on historical resources, the Commission recommends the following action:

√ Contact the appropriate California Historic Resources Information Center (CHRIS). Contact information for the Information Center nearest you is available from the State Office of Historic Preservation (916/653-7278)/ http://www.ohp.parks.ca.gov/1068/files/IC%20Roster.pdf The record search will determine:

- If a part or the entire APE has been previously surveyed for cultural resources.
- If any known cultural resources have already been recorded in or adjacent to the APE.
- If the probability is low, moderate, or high that cultural resources are located in the APE.
- If a survey is required to determine whether previously unrecorded cultural resources are present.

√ If an archaeological inventory survey is required, the final stage is the preparation of a professional report detailing the findings and recommendations of the records search and field survey.

- The final report containing site forms, site significance, and mitigation measurers should be submitted immediately to the planning department. All information regarding site locations, Native American human remains, and associated funerary objects should be in a separate confidential addendum, and not be made available for pubic disclosure.
- The final written report should be submitted within 3 months after work has been completed to the appropriate regional archaeological Information Center.

√ Contact the Native American Heritage Commission (NAHC) for:

* A Sacred Lands File (SLF) search of the project area and information on tribal contacts in the project vicinity that may have additional cultural resource information. Please provide this office with the following citation format to assist with the Sacred Lands File search request: USGS 7.5-minute quadrangle citation with name, township, range and section: .

- The NAHC advises the use of Native American Monitors to ensure proper identification and care given cultural resources that may be discovered. The NAHC recommends that contact be made with Native American Contacts on the attached list to get their input on potential project impact (APE).

√ Lack of surface evidence of archeological resources does not preclude their subsurface existence.

- Lead agencies should include in their mitigation plan provisions for the identification and evaluation of accidentally discovered archeological resources, per California Environmental Quality Act (CEQA) §15064.5 (f). In areas of identified archaeological sensitivity, a certified archaeologist and a culturally affiliated Native American, with knowledge in cultural resources, should monitor all ground-disturbing activities.
- Lead agencies should include in their mitigation plan provisions for the disposition of recovered artifacts, in consultation with culturally affiliated Native Americans.

√ Lead agencies should include provisions for discovery of Native American human remains or unmarked cemeteries in their mitigation plans.

* CEQA Guidelines, Section 15064.5(d) requires the lead agency to work with the Native Americans identified by this Commission if the initial Study identifies the presence or likely presence of Native American human remains within the APE. CEQA Guidelines provide for agreements with Native American, identified by the

Comments from the Native American Heritage Commission (continued)

NAHC, to assure the appropriate and dignified treatment of Native American human remains and any associated grave liens.

√ Health and Safety Code §7050.5, Public Resources Code §5097.98 and Sec. §15064.5 (d) of the CEQA Guidelines mandate procedures to be followed in the event of an accidental discovery of any human remains in a location other than a dedicated cemetery.

√ Lead agencies should consider avoidance, as defined in § 15370 of the CEQA Guidelines, when significant cultural resources are discovered during the course of project planning.

Please feel free to contact me at (916) 653-6251 if you have any questions.

Sincerely,

Dave Singleton
Program Analyst

Cc: State Clearinghouse

Attachment: List of Native American Contacts

Response to Comments from the Native American Heritage Commission

Thank you for your comments. The recommendations in your letter are part of Caltrans standard operating procedures and are being followed for this project.

Second Letter from the State Clearinghouse

STATE OF CALIFORNIA

GOVERNOR'S OFFICE *of* PLANNING AND RESEARCH

STATE CLEARINGHOUSE AND PLANNING UNIT

ARNOLD SCHWARZENEGGER
GOVERNOR

CYNTHIA BRYANT
DIRECTOR

July 12, 2007

Tom Dayak
California Department of Transportation, District 9
500 S. Main Street
Bishop, CA 93514

Subject: June Lake Shoulder Widening
SCH#: 2007062032

Dear Tom Dayak:

The enclosed comment (s) on your Mitigated Negative Declaration was (were) received by the State Clearinghouse after the end of the state review period, which closed on July 9, 2007. We are forwarding these comments to you because they provide information or raise issues that should be addressed in your final environmental document.

The California Environmental Quality Act does not require Lead Agencies to respond to late comments. However, we encourage you to incorporate these additional comments into your final environmental document and to consider them prior to taking final action on the proposed project.

Please contact the State Clearinghouse at (916) 445-0613 if you have any questions concerning the environmental review process. If you have a question regarding the above-named project, please refer to the ten-digit State Clearinghouse number (2007062032) when contacting this office.

Sincerely,

Terry Roberts

Terry Roberts
Senior Planner, State Clearinghouse

Enclosures
cc: Resources Agency

1400 10th Street P.O. Box 3044 Sacramento, California 95812-3044
(916) 445-0613 FAX (916) 323-3018 www.opr.ca.gov

Comments from the California Department of Fish and Game

State of California - The Resources Agency ARNOLD SCHWARZENEGGER, Governor

DEPARTMENT OF FISH AND GAME

http://www.dfg.ca.gov
Eastern Sierra - Inland Deserts Region (IDR)
407 West Line Street
Bishop, CA 93514
(760) 872-1171
(760) 872-1284 FAX

RECEIVED
JUL 12 2007
STATE CLEARING HOUSE

clear
7/9/07
late
e

July 6, 2007

Mr. Tom Dayak
Chief, Eastern Sierra Environmental Branch
Caltrans, District 9
500 South Main St.
Bishop, CA 93514

Subject: Proposed Initial Study and Mitigated Negative Declaration for June Lake Shoulder Widening, Mono County, SCH#2007062032

Dear Mr. Dayak:

The Department of Fish and Game (Department) has reviewed the Initial Study (IS) and Mitigated Negative Declaration (MND) for the above referenced project. The proposed project is to widen the shoulders on both sides of State Route 158 to approximately 8 feet, from the junction of state route 158 and U.S. Highway 395 to the junction of State Route 158 and North Shore Drive. The project also proposes to cut existing slopes back in three places, replace three existing corrugated steel pipes, and add flared-end sections. The project is located northeast of the community of June Lake, from the June Lake Junction (the State Route 158 and U.S. Highway 395), to the junction of State Route 158 and North Shore Drive, in Mono County.

The Department is providing comments on the IS/ND as the State agency which has the statutory and common law responsibilities with regard to fish and wildlife resources and habitats. California's fish and wildlife resources, including their habitats, are held in trust for the people of the State by the Department (Fish and Game Code §711.7). The Department has jurisdiction over the conservation, protection, and management of fish, wildlife, native plants, and the habitats necessary for biologically sustainable populations of those species (Fish and Game Code §1802). The Department's Fish and wildlife management functions are implemented through its administration and enforcement of Fish and Game Code (Fish and Game Code §702). The Department is a trustee agency for fish and wildlife under the California Environmental Quality Act (see CEQA Guidelines, 14 Cal. Code Regs. §15386(a)) and a Responsible Agency regarding any discretionary actions (CEQA Guidelines §15381) required by the Department. The Department is providing these comments in furtherance of these statutory responsibilities, as well as its common law role as trustee for the public's fish and wildlife.

Conserving California's Wildlife Since 1870

Comments from the California Department of Fish and Game (continued)

Mr. Tom Dayak
June Lake Shoulder Widening SCH#2007062032
July 9, 2007

The Department offers the following comments and recommendations:

Sensitive plant species known from the project area include Mono Lake lupine (*Lupinus duranii)* and Mono milk-vetch (*Astragalus monoensis)*. According to the MND, the project will affect areas mapped in the California Natural Diversity Database for Mono Lake lupine and Mono milk-vetch and is expected to affect several Mono Lake lupine plants. Mono Lake lupine and Mono milk-vetch are both listed by the California Native Plant Society as List 1B.2 species (rare, threatened, or endangered in CA and elsewhere). In addition, Mono milk-vetch is listed by the State of California as "Rare", pursuant to the Native Plant Protection Act (NPPA) (Fish and Game Code Sections 1900-1913).

The final MND should quantify the take of special-status plant species and impacts to their habitats. Because Mono milk-vetch is a State-listed species (see CCR Title 14, Section 670.2, Plants of California Declared to Be Endangered, Threatened or Rare), mitigation measures for impacts to this species should be developed and specified in a formal agreement between the Department and the project proponent. **1**

Please see http://www.dfg.ca.gov/hcpb/species/tespp/natplntconsv.shtml for more information regarding plants listed under the NPPA.

In addition to state-listed plants, CEQA Guidelines §15380 states that although not presently threatened with extinction, a plant species is considered "rare" when the species is existing in such small numbers throughout all or a significant portion of its range that it may become endangered if its environment worsens. All CNPS List 1 B plants are rare throughout their range with the majority of them endemic to California. All of the plants constituting List 1B meet the definitions of Sec. 1901, Chapter 10 (Native Plant Protection Act) or Secs. 2062 and 2067 (California Endangered Species Act) of the California Department of Fish and Game Code, and are eligible for state listing. It is mandatory that they be fully considered during preparation of environmental documents relating to CEQA.

Although the Department appreciates your efforts to reduce the impacts to Mono Lake lupine and Mono milk-vetch, the project's proposed reduction of the number and/or range of rare and endemic plant species are considered significant under CEQA (see CEQA Guidelines, Section 15380 and CEQA Guidelines Appendix G, Mandatory Findings of Significance). Therefore, further avoidance and mitigation measures are needed to reduce those impacts to less than significant, and the mitigation plan for Mono milk-vetch should be coordinated with the Department. **2**

According to the MND, northern goshawk *(Accipiter gentilis)* and bald eagle (*Hliaeetus leucocephalus)* could potentially occur in the project area but are not likely in the trees adjacent to the highway in the project area due to human activity and traffic. The MND states that if construction occurs between May 1 and June 30, a Caltrans biologist would conduct pre-construction clearance surveys over the project area before construction activities begin. The

2

Comments from the California Department of Fish and Game (continued)

Department of Fish and Game identifies the breeding season of Bald Eagles in California to extend primarily from February to July (Carpenter, 1990). Because it is unlawful to take, possess or destroy any nest or eggs of any birds-of-prey (Fish and Game Code §3503.5), pre-construction clearance surveys should be extended to include these breeding season months. **3**

Thank you for this opportunity to comment. Questions regarding this letter and further coordination on these issues should be directed to Mr. Brad Henderson, Environmental Scientist at (760) 873-4412.

Sincerely,

Denyse Racine
Senior Environmental Scientist

cc:

State Clearinghouse
P.O. Box 3044
Sacramento, CA 95812

Chron

Responses to Comments from the California Department of Fish and Game

Comment 1: Caltrans will provide the California Department of Fish and Game with the Caltrans biology report (Natural Environment Study) with quantification information regarding the special-status plants. There are four Mono milk-vetch plants and 20 Mono Lake lupine plants that occur within the project limits, an area within the existing shoulder backing (cinders) that is currently regularly disturbed by traffic.

Comment 2: Caltrans will reduce the proposed shoulder widening from 8 feet to 5 feet to reduce effects on potential habitat for these special-status plants (note changes in this document). The project will no longer include any cut slopes. Caltrans biologist Wendy Campbell conducted a field visit with California Department of Fish and Game environmental scientist Brad Henderson on August 1, 2007. It was agreed that by reducing the project to the existing disturbed area, no additional potential habitat would be disturbed and no additional mitigation for these plants would be necessary. The project limits will be delineated using temporary fencing. Duff from the disturbed area will be salvaged and reused. No staging or storage areas will occur in the area known to have populations of these plants.

Comment 3: Breeding surveys for the bald eagle can be extended from May to July to February to July. However, project construction would not occur before May due to requirements from the Lahontan Regional Water Quality Control Board (Caltrans would need a variance to construct during the rainy season if construction would occur before May 1). Therefore, Caltrans would not construct before May, and it would not be necessary to conduct breeding surveys for bald eagle before May.