M e m o r a n d u m

Serious drought.
Help Save Water!

To: Oliver Iberien
BRANCH CHIEF
Environmental Analysis

Date: August 24, 2015

File: **041300035**
MRN-1-PM 28.5

From: Peter Soin
Associate Bridge Engineer
ESC, Structure Design Branch 4

Jodi Ketelsen
Project Manager
CH2M HILL

Subject: **Issues Associated with a Retrofit Alternative on the Lagunitas Creek Crossing on Highway 1 in Marin County**

Note: This is not a technical engineering document. The purpose of this memo is to acquaint members of the public interested in Caltrans' proposed Lagunitas Creek Bridge Project with the issues involved in the retrofit of an old steel truss bridge. Caltrans plans to complete its technical assessment of a retrofit/rehabilitation alternative by Spring 2016.

Public Comments Requesting Consideration of a Retrofit Alternative

The California Department of Transportation (Caltrans) noticed the Lagunitas Creek Bridge Seismic Upgrade scoping process on March 6, 2015, and held a public scoping meeting in Point Reyes Station on March 19, 2015. Public comments on the proposed Lagunitas Creek Bridge Project were due on April 17, 2015. The comment period was subsequently extended for comments to be received through June 20, 2015. Many comments received by Caltrans questioned why the current bridge needed to be replaced, and why Caltrans was not considering a retrofit alternative. More specifically, concerns associated with a retrofit alternative included the following:

1. ***Traffic delay.*** Several commenters suggested that a retrofit of the current bridge would reduce the potential of traffic delays associated to construction activities because the use of the current bridge could be maintained during a retrofit. Several commenters also added that the potential for traffic delay associated with building a new bridge, which would require

detouring traffic onto a temporary bridge (originally proposed as a 1-lane temporary bridge), would be reduced if a retrofit alternative were implemented.

2. ***Maintain existing scale.*** Some commenters like the scale of the current bridge, (with an overall outside width of 32 feet, two narrow 11-foot lanes, and 1-foot shoulders), the green color, and the aesthetics of the bridge steel truss. A few commenters mentioned that the current bridge helps define the entry into Point Reyes Station, creates a traffic calming effect, and communicates a rural image. For these reasons, commenters would like to preserve the current bridge. Some comments also mentioned that sidewalks and bicycle lanes are not available on either end of the bridge, and therefore the bicycle and pedestrian accommodation would only be needed on the downstream side of the bridge, where it currently is.

3. ***Shorter construction duration.*** Several commenters expressed concern over the potential three-year construction period, and communicated that the overall duration of construction would be shorter under a retrofit alternative. The commenters also cited potential economic hardships from the effect of the construction period on tourism by restricting access to and from Point Reyes Station and Olema, and impaired accessibility of emergency access vehicles.

4. ***Reduce right-of-way impacts.*** Under the bridge replacement alternatives, the temporary bridge is proposed on the east/upstream side of the current bridge, and would affect two adjacent properties. A retrofit alternative was suggested by several commenters in concert with avoiding property acquisition for a temporary bridge placement.

To address the concerns outlined by the community during the public scoping period, Caltrans has prepared this technical memorandum to provide an explanation of bridge design requirements, outline the array of known bridge deficiencies, and identify what would be entailed to retrofit these deficiencies consistent while remaining consistent with seismic and safety requirements.

Bridge Design Criteria

Bridges in California, and the rest of the United States, must be classified as either: (1) structurally deficient, or (2) functionally obsolete, to qualify for replacement under the FHWA guidelines.

Furthermore, projects using federal and state funds for transportation improvement must meet American Association of State Highway and Transportation Officials (AASHTO) and Caltrans safety and design standards (i.e., current live-load standards, roadway-safety standards, and seismic-strength standards). These terms are defined as follows:

- **Liveload** is the ability of the structure to carry heavy truckloads. Present-day trucks (i.e., HS20 – three-axle, 36-ton tractor-trailer trucks) are substantially larger than when the current Lagunitas Creek Bridge was designed in 1929 (i.e., H15 – two-axle, 15-ton trucks). Present-day bridge designs must meet the carrying capacity for much larger and heavier trucks.

- **Roadway safety standards** are governed by AASHTO and Caltrans design requirements for roadways, which consider speed, mode of transportation, and land use. The road safety standards take into account the size of current vehicles, and the required safe distances between motorized and nonmotorized traffic. The standard lane width is 12 feet with 8-foot shoulders for bicycle travel and emergency staging, and pedestrian sidewalks are typically 5 to 6 feet on both sides of the road.

- **Seismic standards** address the survivability of a structure during a significant seismic event. A seismic event can impart large forces into a structure, which can cause components of the bridge to buckle or rupture, and ultimately undermine the stability or support of the bridge. The ability of a bridge to withstand a seismic event is dependent on the structural strength and ductility of all bridge components; including, but not limited to: abutments, T-beam span, steel truss, piers, and piles. The seismic standards used in 1929 are obsolete because our understanding of seismic events and behavior of structures under large displacements has improved significantly since that time. Current seismic lateral loads on Lagunitas Creek Bridge will probably exceed the structure's weight, whereas seismic loading in the original design was probably closer to 10 to 20 percent of the current structure's weight.

Current Deficiencies of the Bridge

The Lagunitas Creek Bridge was constructed in 1929 by Marin County and was relinquished to the State of California soon thereafter. Caltrans has kept bridge inspection and maintenance records since 1937. After 86 years of service, the existing bridge has had significant corrosion build up on various steel truss components. In addition, the concrete spans and steel truss bridge deck show significant amounts of surface wear and cracking. A review of the 1929 plans found that the original bridge design does not meet today's increased live-load criteria, seismic design criteria, roadway safety standards, and seismic standards, as described above.

Definition and Construction Process of a Retrofit Alternative

The existing 150-foot-long bridge is made up of three spans. The first and third spans are reinforced concrete T-beam structures, each spanning 25 feet from the roadway abutments to piers supported on piles. The piers are located in the creek channel. The middle 100-foot-long span is a steel pony truss that is supported by the two piers in the creek channel. The abutments sit on spread footings.

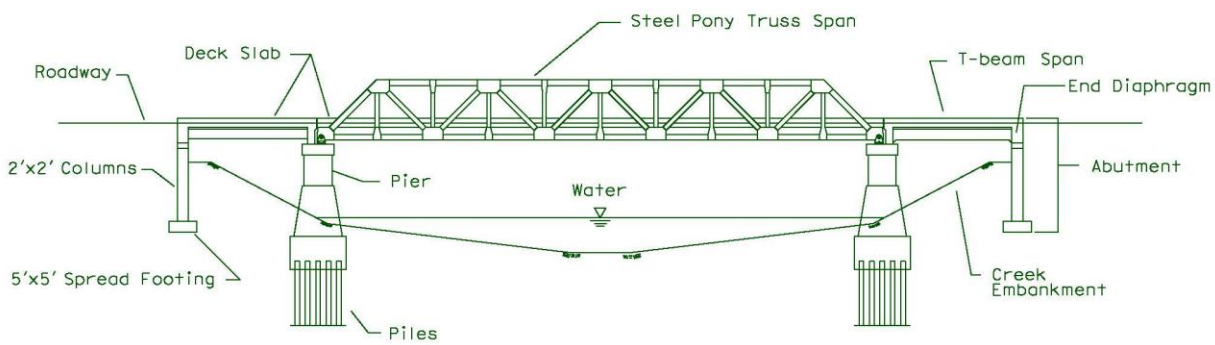

Figure 1.

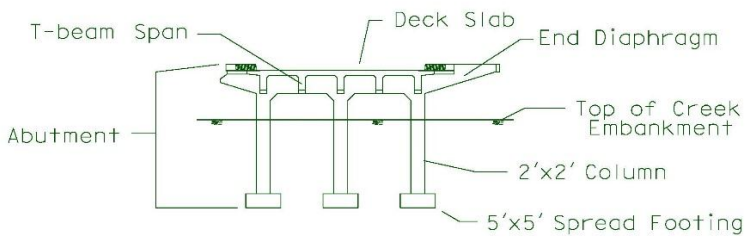

Figure 2.

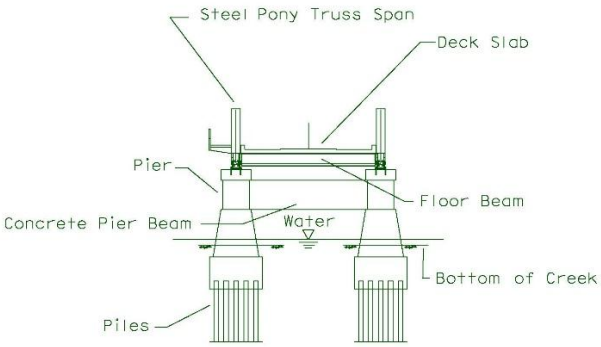

Figure 3.

The retrofit work will require that all bridge components be upgraded or replaced, as necessary, to have the strength to support all traffic and seismic loading as required by current Caltrans bridge design practice. The retrofitted bridge must also satisfy current Caltrans bridge standards for safety, function, and economy. Each of the bridge components described above (abutments, T-beam spans, piers, pier piles, and steel truss) will have their own following retrofit considerations.

ABUTMENTS

Condition: Both existing abutments consist of three, 2-foot-square, under-reinforced concrete columns, which are 14 feet in height and support the end diaphragm of the T-beam span. These columns are individually supported by 5-foot-square spread footings. The columns and spread footings are buried in the creek embankments. The existing concrete abutment columns are poorly configured to take lateral seismic loads, and in all likelihood will fail in a brittle fashion in shear and bending resulting from an earthquake.

Retrofit: A retrofit would require the complete exposure of the abutment columns and spread footings for encasement in some sort of highly reinforced concrete wall. This would require a minimum 16-foot-deep excavation into the slopes of the creek embankment. Work under the roadway approaches to the bridge may also be required. In addition to the concrete wall encasement, a much larger monolithic spread footing would have to be constructed to provide vertical and lateral support for the retrofitted abutment wall. If new spread footings are inadequate, piles may have to be placed to support the new abutment wall. This may be difficult because the existing T-beam span over the work area would interfere with pile driving. To conduct this effort, the existing bridge would have to be shut down to traffic because there is inadequate width for both workers and vehicles. Traffic would have to be detoured during this part of the retrofit.

Variation: Another option would be to completely remove and replacement the two existing abutments, which would require the T-beam spans to be temporarily supported on falsework. Falsework consists of the temporary structures mounted around the work area to support the work being completed during construction. The falsework would have to have its own temporary foundation for support, which would enlarge the construction footprint, as well as add more cost and complexity to the retrofit of the abutments. This effort would require work in and around the creek embankments. With the T-beam falsework in place, the existing abutment columns and spread footings would be completely removed, and new abutments would be built. Again, if new piles are required, their placement may be difficult with the T-beam spans over the work area.

T-BEAM SPANS

Condition: The original plans show that the girders have minimal reinforcement for shear and bending strength that would resist seismic events. Bridge maintenance records also indicate that the existing concrete roadway deck is worn and weathered. In addition, the current bridge railing on the T-beam spans does not meet modern Caltrans safety standards.

Retrofit: Additional reinforcing in the girder webs (i.e., lateral supports under the T-beam spans) will probably be required for increased shear and bending strength. This will entail drilling and bonding additional reinforcement onto the existing T-beam stems. The existing concrete girders may also have to be retrofitted for greater bending strength with post-tensioned steel cables. The end diaphragms over the abutments and piers may also require additional reinforcement, which would be added on by doweling and concrete encasement. The existing deck will have to be retrofitted for the installation of modern bridge railings. The same railing type would be used on all three spans of the bridge. This results in a dangerously narrow bridge deck cross section. Adding railing would encroach 2 feet on either side, affecting the shoulder and the travel lanes so that there would be no shoulder and the travel lanes would narrow down to 10 feet. This is unsafe for a roadway that has signage for 35-mile–per-hour travel.

These efforts require the work to be done from the bridge deck, and there is not enough width on the structure to accommodate traffic, equipment, and workers. The structure would have to be completely closed to traffic for public safety.

PIERS

Condition: The original plans show no steel reinforcement of any type in the piers. Only the concrete pier beams have some minimal shear and bending reinforcement. Pier beams are the concrete beams that run transversely and connect the two columns (i.e., the vertical concrete members above the pile caps). Given the lack of confinement reinforcement, shear

reinforcement, and bending reinforcement, the piers and beams will more than likely fail during a large seismic event.

Retrofit: To retrofit, the existing piers would need to be encased in highly reinforced concrete jackets, which would need to cover the piers and the pier beams system. This will strengthen each element and strengthen the connections, as well as add some ductility capacity (flexibility) to the system. Another possibility would be to use steel jacketing instead of a highly reinforced concrete encasement. However, this would create maintenance issues such as steel jacket corrosion from the water in the creek; and the bridge site proximity to the ocean means that the salty air would aggravate the corrosion potential. Retrofitting the piers would require excavating the creek embankment to expose the piers for retrofit work. It may be best to isolate the piers from the water in the creek using temporary cofferdams, although placing cofferdams would be difficult with the existing overhead bridge in place. Typically, cofferdams are constructed by driving interlocking sheet piles around a pier location; afterwards, the inside is excavated and dewatered to provide a dry accessible area around the pier for the retrofit work to be done.

PIER PILES

Condition: The as-built plans do not document the depth, type, and capacity of the piles supporting the piers. For this project, no feasible way exists to structurally assess the tensile, compressive, and lateral capacities of the piles without compromising portions of the bridge. The embedment of the piles into the bottom of the piers is shown as 18 inches. During a large seismic event, the piles could shear, the pier bottoms could rupture under lateral loading for lack of confinement reinforcing, and the piers could rotate and lift off of the piles with lack of tensile development of the piles.

Retrofit: Because the existing pile capacities cannot be determined, it would be prudent to drive new piles of known capacity around the existing piers, which could then support a retrofitted pier as described above. However, driving piles under the existing bridge will be difficult. The deck may have to be removed to adequately drive piles in the correct location to be structurally sufficient.

STEEL TRUSS SPAN

Condition: The steel structure was built in 1929 and is 86 years old. Even though the structure has been painted several times, its exposure to the weather and close proximity to the coast has caused corrosion to slowly build up over the years. Recent bridge maintenance records show that visual inspections of the trusses and floor beams have found a range of 1/8- to 1/2 inch of rust pack between a number of steel component surfaces and the connections between several

components of the steel truss (e.g., gusset plates, channel flanges, and plates, all of which are held together by rivets). Many rivets show signs of corrosion, and the rivet shank bearing surfaces (where the plates or steel members meet the rivet) might also be compromised if the rivet holes in the existing steel plates have corroded significantly. The corroded holes might be considered too large or deformed to comply with connection current design criteria.

The structure has also endured traffic for years, including a large number of heavy trucks. Under constant repetitive loading, steel begins to fatigue and crack on a small scale; with time, those small cracks can increase in size and begin to degrade the integrity of the structure. Maintenance records show that no significant cracking in the steel truss components has been observed under visual inspection. However, a thorough inspection using nondestructive methods such as ultrasound and radiographic methods has not been done, and those inspections might find cracking or significant corrosion between steel components.

The existing bridge railing appears to be a small steel truss constructed with steel angles and plates. It appears to be about 2 feet deep and probably no more than several inches in width, and is attached directly onto the steel truss. This existing bridge railing is completely ineffective against today's vehicular impact loading requirements.

Finally, the existing concrete deck on the steel truss span is supported by transverse steel floor beams. This deck is also weathered and cracked. Bridge maintenance records show significant rust buildup between the top flanges of the floor beams and concrete deck, which is an indication that water is probably working its way through the existing deck.

Retrofit: A significant problem exists in trying to quantify the amount of structural degradation from corrosion and fatigue. It would be very difficult to survey the entire steel truss structure to pinpoint where and how much corrosive and fatigue degradation has taken place. A thorough survey would require taking the steel components apart and measuring the remaining steel thickness in corroded or cracked cross sections.

Another option would be to scan each steel truss component (i.e., top and bottom chord built-up sections, diagonals, verticals, gusset plates, rivets, and floor beams) with nondestructive testing methods to determine the amount of remaining steel in each truss component. However, it may not be possible to scan every part of the steel structure because of tight spacing between some of the steel components. This assessment would be required for the retrofit design of the existing steel truss span. Determining where the steel cross section thicknesses have been reduced, or are

cracking, would require repairing or replacing those sections for the loads they are meant to carry.

The connections between gusset plates, channel flanges, and plates are held together by rivets. Many of these rivets show signs of corrosion, and may have to be replaced with high-strength bolts because rivets are no longer used. The rivet shank bearing surfaces might also be compromised if the rivet holes in the existing steel plates have corroded significantly. The corroded holes might be considered too large or deformed to comply with connection design criteria. One solution may be to remove the rivet, ream out a larger hole in the existing steel, and install a larger diameter high strength bolt to replace the rivet. However, there may be problems if there isn't enough room for larger holes to meet connection design spacing criteria for the existing rivet hole patterns. If an existing rivet hole or rivet hole pattern can't be used, it may have to be abandoned, which may make retrofit of the connection impossible.

If steel plates are to be added to strengthen existing steel bridge components for the seismic retrofit or increased traffic load capacity, the faying (contact) surfaces between new and existing steel plating will have to be prepared for composite action. This may not be possible if the existing steel surfaces are severely pockmarked with rust or if significant cracking has been found. In this case, the existing truss elements and floor beams may have to be replaced completely. Additional steel will also make the existing structure heavier, which will have to be considered in the retrofit of the existing piers and the number of new piles required.

If thicker and larger gusset plates are required for the retrofit of truss and floor beam connections, then all of the existing rivets and gusset plates will have to be removed. High-strength bolts will be used to replace the rivets, and more bolts may be required to strengthen the connection. If more bolts are required for a given connection, then more holes will be required in the existing steel surface areas. If there isn't enough surface area available for more holes in the existing steel truss span components, then the existing steel truss components will have to be replaced with new steel truss components that have the required surface area.

All of the above-described retrofit work for the truss will require extensive temporary falsework under the steel truss span, which will help unload the various components being changed out. There is no structural redundancy in this existing steel truss bridge. If any single connection, chord, or diagonal or vertical member is taken apart or removed, the steel span structure will fail without any support from underneath. If environmental regulations won't allow the erection of temporary falsework in the creek channel, then retrofitting the steel truss span may have to be ruled out. For safety reasons, it would be best to keep traffic off the bridge during the retrofit of

the steel truss span. If traffic were to use the existing bridge during the retrofit of the steel truss span, which would require stronger falsework to carry dead loads and live traffic loads), only one lane would be available for traffic because the contractor would have to close off at least one existing lane at a time to do the retrofit work.

A new bridge barrier railing will have to be installed onto the bridge deck, which will satisfy current design safety standards. Given that the existing roadway width is only 24 feet from curb to curb, a new railing would remove 2 feet from each side, thus reducing the travel lanes to 10 feet with no shoulder. This would render the bridge functionally obsolete, which is one of two federally defined classifications for which bridges routinely get replaced.

Because the existing concrete deck is weathered and cracked, and because there is significant rust buildup on the top flanges of the floor beams, it may be prudent to replace the floor beams and deck completely. This will probably lead to complete closure of the bridge to traffic during the deck and floor beam replacement.