All dimensions are in meters unless otherwise shown.

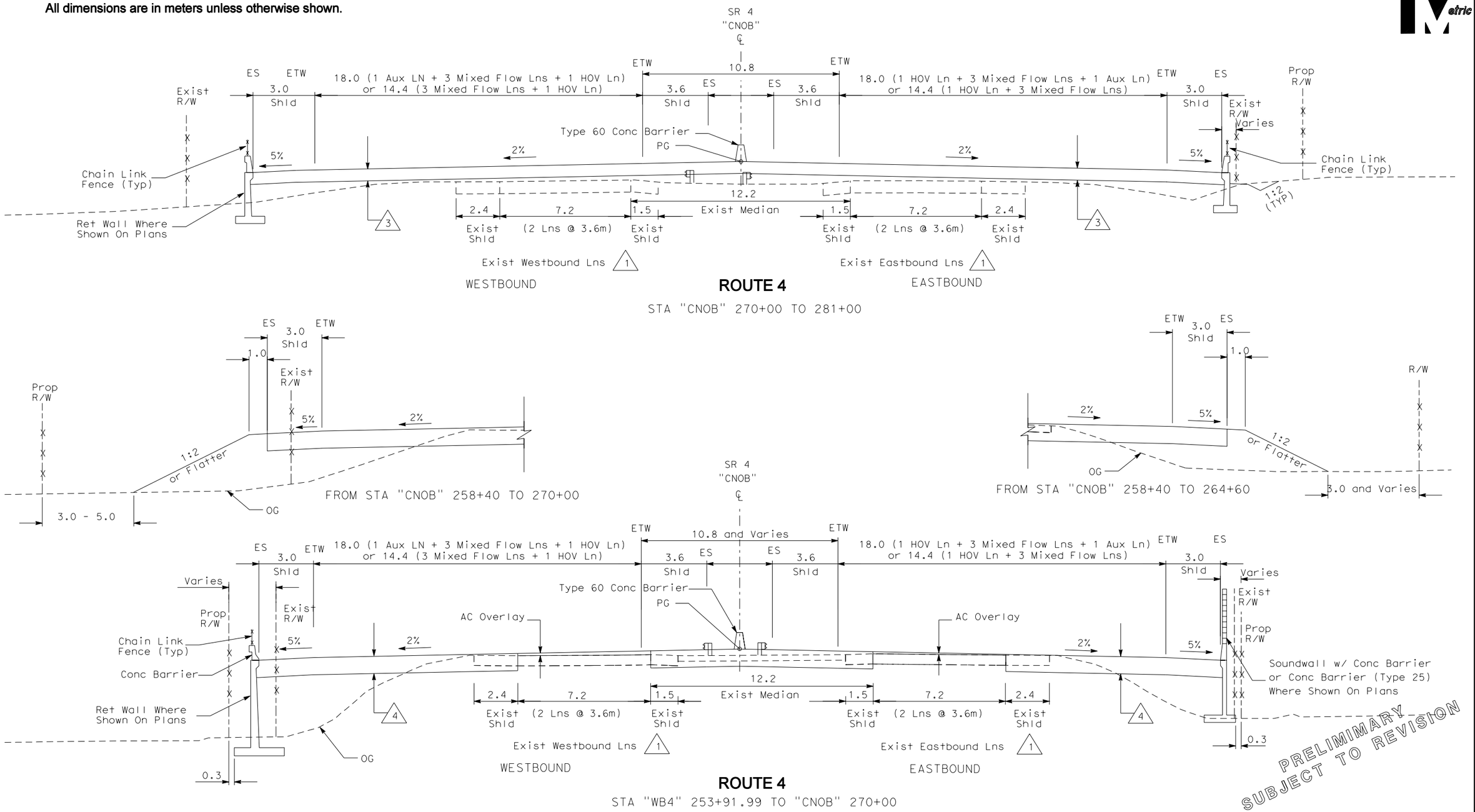

SCALE: NONE

Figure C - Sheet 1 of 2

STATE ROUTE 4 (EAST) WIDENING PROJECT:
LOVERIDGE ROAD TO STATE ROUTE 160

BUILD ALTERNATIVE TYPICAL SECTION

PENTABLE = PEN
USERNAME = $USER$
DGN FILE = $FILE$
DATE PLOTTED = $DATE$
TIME PLOTTED = $TIME$
09/28/2004 02:41:21 PM R:\644483\Drawings\Civil\DPR\FedDoc\483TX02.SHT

All dimensions are in meters unless otherwise shown.

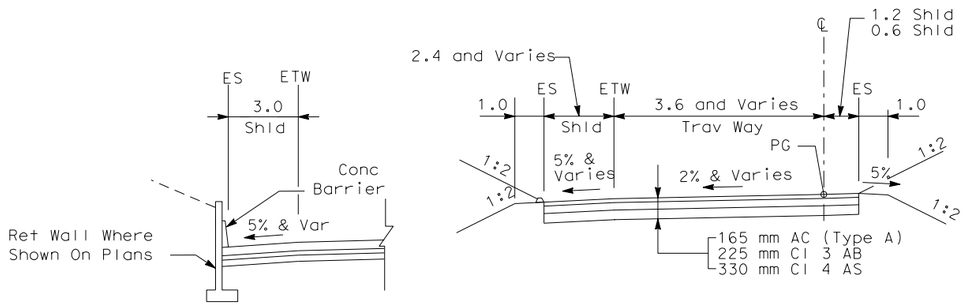

WESTBOUND ENTRANCE RAMP

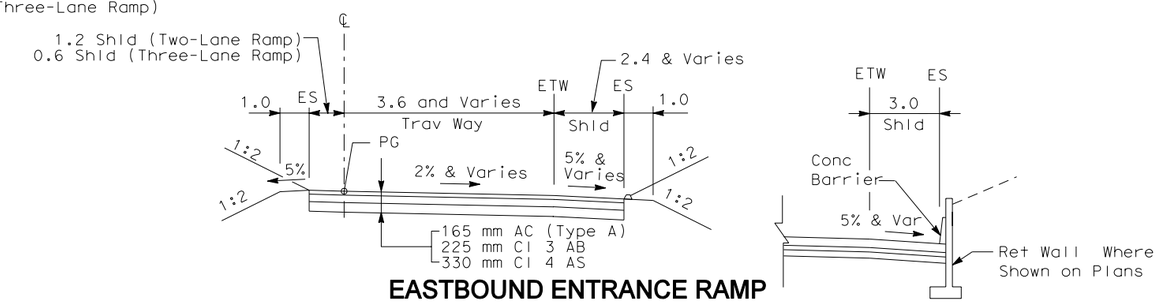

EASTBOUND ENTRANCE RAMP

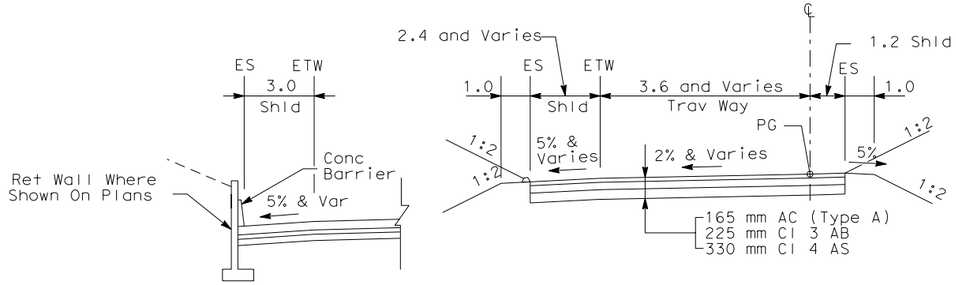

WESTBOUND EXIT RAMP

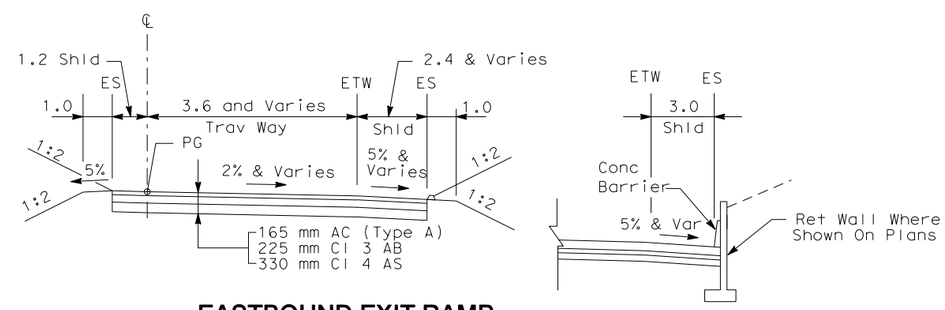

EASTBOUND EXIT RAMP

PRELIMIMARY
SUBJECT TO REVISION

SCALE: NONE

Figure C - Sheet 2 of 2

STATE ROUTE 4 (EAST) WIDENING PROJECT:
LOVERIDGE ROAD TO STATE ROUTE 160

BUILD ALTERNATIVE TYPICAL SECTION

PENTABLE = PEN
USERNAME = $USER$
DGN FILE = $FILE$
DATE PLOTTED = $DATE$
TIME PLOTTED = $TIME$
09/28/2004 02:42:21 PM R:\644483\Drawings\Civil\DPR\FedDoc\483TX05.SHT