Route 84 Safety Improvement Project

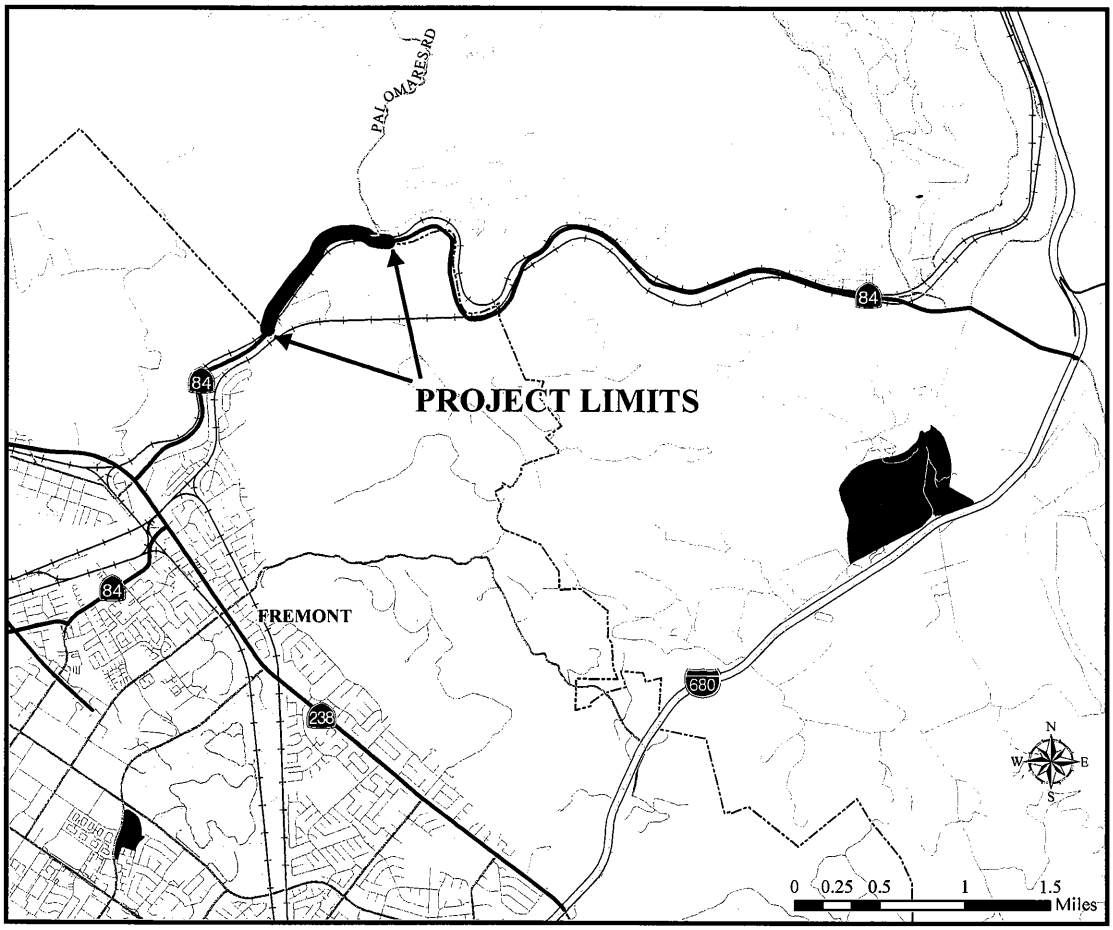

Proposed Negative Declaration/
Initial Study (CEQA) and
Environmental Assessment (NEPA)

Dividing Border Between Union City and the City of Fremont

In Alameda County, California

04-ALA-84-KP 19.5/21.4

EA 174400

May 2005

DEPARTMENT OF TRANSPORTATION
UNITED STATES OF AMERICA

Caltrans

General Information About This Document

What's in this document?

This document is a Proposed Negative Declaration/ Initial Study (CEQA) Environmental Assessment (NEPA) which examines the potential environmental impacts of alternatives for the proposed project located in Alameda County, California. The document describes why the project is being proposed, alternative(s) for the project, the existing environment that could be affected by the project, and resulting potential impacts.

What should you do?

- Please read this Initial Study/Environmental Assessment.
- We welcome your comments. If you have any concerns regarding the proposed project, please send your written comments to Caltrans by the deadline indicated below. Submit comments via regular mail to either of the following addresses:
  - Caltrans
    Attn: Ed Pang, Office of Environmental Analysis
    P.O. Box 23660
    Oakland, CA 94623-0660
  - Federal Highway Administration
    Attn: Maiser Khaled
    650 Capitol Mall, Suite 4-100
    Sacramento, CA 95814-2724
  - OR you may submit comments via email to Ed_Pang@dot.ca.gov
- Please submit comments by: **July 13, 2005**.

What happens after this?

After comments are received from the public and reviewing agencies, Caltrans may: (1) give environmental approval to the proposed project, (2) undertake additional environmental studies, or (3) abandon the project. If the project was given environmental approval and funding was appropriated, Caltrans could design and construct all or part of the project.

For individuals with sensory disabilities, this document is available in Braille, large print, on audiocassette, or computer disk. To obtain a copy in one of these alternate formats, please call or write to Caltrans, Attn: Ed Pang, Office of Environmental Analysis, P.O. Box 23660, Oakland, CA 94623-0660; (510) 286-6214 Voice, or use the California Relay Service TTY number, 1(800) 735-2929.

State of California
Department of Transportation

04-ALA-84-KP 19.5/21.4
EA 174400

Proposed Negative Declaration

Pursuant to: Division 13, Public Resources Code

Project Description

The California Department of Transportation (Caltrans) proposes to realign a section of the existing roadway, widen to accommodate standard shoulders, improve sight distance, and improve vertical clearance at Rosewarnes and Farwell Underpasses on Route 84 in Alameda County. The purpose of the project is to enhance safety.

Determination

Caltrans has prepared an Initial Study and determines from this study that the proposed project would not have a significant effect on the environment for the following reasons:

1. The project will not significantly impact fish, plant life, or wildlife; nor will it significantly impact any rare or endangered species.
2. No historic or archaeological sites or structures of architectural or engineering significance will be affected, nor will there be any significant impacts to cultural resources.
3. The project will not affect neighborhoods, social, or educational facilities, or the economy of the area.
4. There will be no significant impacts upon the aesthetic features of the area.
5. The project will not affect any important farmland or any floodplain.
6. The potential for geologic or seismic hazards will not be increased by the project.
7. The project is compatible with local, regional and state land use planning and will not introduce any new pattern of land use or any growth in the area. It will not alter present patterns of traffic circulation or movement.
8. The project will have no significant impacts to noise, air, or water quality. The project will not change the rate of use of any natural resources.

_____ _____

Susan Chang
Deputy District Director
Division of Environmental Planning and Engineering
California Department Of Transportation

Date

Route 84 Curve Realignment
Dividing Border Between Union City and the City of Fremont
Alameda County, California

Initial Study (CEQA)/Environmental Assessment (NEPA)

Submitted Pursuant to: (State) Division 13, Public Resources Code
(Federal) 42 USC 4332(2)(C)

THE STATE OF CALIFORNIA
Department of Transportation

U.S. DEPARTMENT OF TRANSPORTATION
Federal Highway Administration, and
Cooperating/Responsible Agencies

March 30, 2005
Date of Approval

Robert L. Gross
District Office Chief
District 04 Office of Environmental Analysis
California Department of Transportation

May 17, 2005
Date of Approval

for Gene K. Fong
Division Administrator
Federal Highway Administration

Table of Contents

General Information About This Document ..... A-iii
Proposed Negative Declaration ..... A-iii
Initial Study (CEQA)/Environmental Assessment (NEPA) ..... A-v
Table of Contents i
List of Figures iii
List of Tables iv
List of Abbreviations and Acronyms v
Chapter 1 Proposed Project 1
1.1 Project Description 1
1.2 Project Purpose 1
1.3 Project Need 4
1.4 Alternatives 4
1.4.1 Proposed Build Alternative 4
1.4.2 No Build Alternative 5
1.4.3 Alternatives Considered and Withdrawn 5
1.5 Permits and Approvals Needed 6
Chapter 2 Affected Environment, Environmental Consequences, and Avoidance, Minimization and Compensation Measures 7
2.1 No Adverse Impact Determinations Summary 7
2.2 Community Impacts- Right of Way Requirements 9
2.2.1 Affected Environment 9
2.2.2 Impacts 9
2.2.3 Avoidance, Minimization and Compensation Measures 10
2.3 Traffic and Transportation/ Pedestrian and Bicycle Facilities 10
2.3.1 Affected Environment 10
2.3.2 Avoidance, Minimization and Compensation Measures 12
2.4 Visual/Aesthetics 12
2.4.1 Affected Environment 13
2.4.2 Impacts 14
2.4.3 Avoidance, Minimization and Compensation Measures 14
2.5 Cultural Resources 16
2.5.1 Affected Environment 16
2.5.2 Impacts 17
2.5.3 Avoidance, Minimization and Compensation Measures 18
2.6 Water Quality and Storm Water Runoff 18
2.6.1 Regulatory Setting 19
2.6.2 Affected Environment 19
2.6.3 Impacts 20
2.6.4 Avoidance, Minimization and Compensation Measures 21
2.7 Natural Communities 23
2.7.1 Valley Foothill Riparian 24
2.7.2 Coastal Oak Woodland 25
2.8 Wetlands and Other Waters 26
2.8.1 Regulatory setting 27
2.8.2 Impacts 28
2.8.3 Avoidance, Minimization and Compensation measures 28
2.9 Special Status Plant and Animal Species 28
2.9.1 Regulatory Setting 29
2.9.2 Resident Rainbow Trout (*Oncorhychus mykiss*) 29

2.9.3 California Tiger Salamander (*Ambystoma californiense*) 32
2.9.4 Northwestern (*Clemmys marmorata marmorata*) and Southwestern (*Clammys marmorata pallida*) Pond Turtles 33
2.9.5 Alameda Whipsnake (*Masticophis lateralis euryxanthus*) 34
2.9.6 Little Willow Flycatcher (*Empidonax traillii brewsteri*) 36
2.9.7 Migratory Bird Treaty Act 36
2.10 Hydraulics 37
2.10.1 Affected Environment 37
2.10.2 Impacts 37
2.10.3 Rosewarnes Underpass Improvement Reach 38
2.10.4 Farwell Improvement Reach 39
2.10.5 SFPUC Proposed Removal of Existing Diversion Weir (Niles Dam) 40
2.11 Construction Impacts 40
2.11.1 Air Quality 40
2.11.2 Temporary or Periodic Increase in Ambient Noise Levels 41
2.11.3 Traffic, Transportation and Bicycle 41
2.11.4 Water Quality 42
2.12 Cumulative Impacts 42
Chapter 3 Comments and Coordination 45
3.1 Coordination 45
3.1.1 Historical Resources Coordination 46
3.1.2 Biological Resources Coordination 45
3.1.3 Niles Dam Removal 47
3.1.4 Eligibility for State Scenic Highway Status 47
3.2 Correspondence letters 48
3.2.1 USFWS Letter dated 1-27-05 48
3.2.2 NOAA/NMFS Letter dated 3-10-2005 51
3.2.3 SHPO Concurrence Letter 11-30-2004 53
Chapter 4 List of Preparers 55
Chapter 5 Distribution List 57
Appendix A CEQA Checklist A-1
Appendix B Title VI Policy Statement B-1
Appendix C Relocation Benefits C-1
Appendix D Proposed Alternative Layout Sheets D-1
Appendix E Existing Visual Conditions and Visual Impact Simulations E-1
Appendix F Habitat Impact Maps F-1
Appendix G Stonybrook Creek Culvert Replacement G-1
Appendix H Hydraulic Evaluation Stationing Map H-1
Appendix I List of Technical Studies I-1

List of Figures

Figure 1-1 Project Vicinity 2
Figure 1-2 Project Limits 3

List of Tables

Table 2.1 No Adverse Impact Determinations Summary 7
Table 2.2-1 Project Right-of-Way Requirements 9
Table 2.7-1 Impacts to Natural Communities 23
Table 2.7-2 Permanent Riparian Tree Impacts 24
Table 2.7-3 Permanent Oak Woodland Impacts 26

List of Abbreviations and Acronyms

APE	area of potential effect
ASR	Archaeological Survey Report
Caltrans	California Department of Transportation
CDFG	California Department of Fish and Game
CEQA	California Environmental Quality Act
CNDDB	California Natural Diversity Database
CO	Carbon Monoxide
DBH	Diameter at breast-height
FHWA	Federal Highway Administration
ft	foot/feet
HASR	Historical Architecture Survey Report
km	kilometer(s)
KP	kilometer post
kph	kilometer(s) per hour
m	meter(s)
mi	mile(s)
mph	miles per hour
NEPA	National Environmental Policy Act
NMFS	National Marine Fisheries Service
NOAA	National Oceanic and Atmospheric Administration
NPDES	National Pollutant Discharge Elimination System
PM	post mile
SFPUC	San Francisco Public Utilities Commission
SHPO	State Historic Preservation Officer
TMP	traffic management plan
USACE	U.S. Army Corps of Engineers
USFWS	U.S. Fish and Wildlife Service

Chapter 1 Proposed Project

1.1 Project Description

The proposed project is to widen State Route 84 (SR-84) to accommodate standard shoulder lane widths from Rosewarnes Underpass to just beyond Farwell Underpass in Niles Canyon, Alameda County (Figure 1-1 and Figure 1-2). This project also proposes to improve sight distance and vertical clearance at the Rosewarnes and Farwell Underpasses, provide a northbound left turn pocket at SR-84 and Palomares Road, and realign the intersection.

In the project area, SR-84 is an undivided two-lane highway with narrow shoulders on a typical curving horizontal alignment, bounded on the north by a steep mountainous face, and to the south by Alameda Creek. The existing pavement width from the centerline to the edge of pavement is typically 4.2 to 4.8 m (13.8 to 15.7 ft) , yielding 3.6 m (11.8 ft) lanes and shoulders varying from 0.6 to 1.2 m (2 to 3.9 ft). The posted highway speed limit is 80 kph (50 mph) along most of the project. In sections where there are non-standard horizontal curves, the speed limit is reduced to 40 kph (25 mph).

1.2 Project Purpose

The purpose of this project is to enhance safety on Route 84. Specifically, the purposes of the project are to:

- Enhance traffic safety by increasing shoulder widths to meet current standards at select locations.
- Enhance traffic safety by increasing sight distance.
- Enhance traffic safety by increasing vertical clearances to meet current standards.
- Enhance traffic safety by providing a northbound left turn pocket lane at Palomares Road to reduce backups to through traffic.

The proposed project has independent need and utility. It is a useable and reasonable transportation improvement even if no additional transportation improvements in the area are made. It is not a necessary precedent for action on a larger project or a commitment to a larger project with significant environmental effects.

Figure 1-1 Project Vicinity

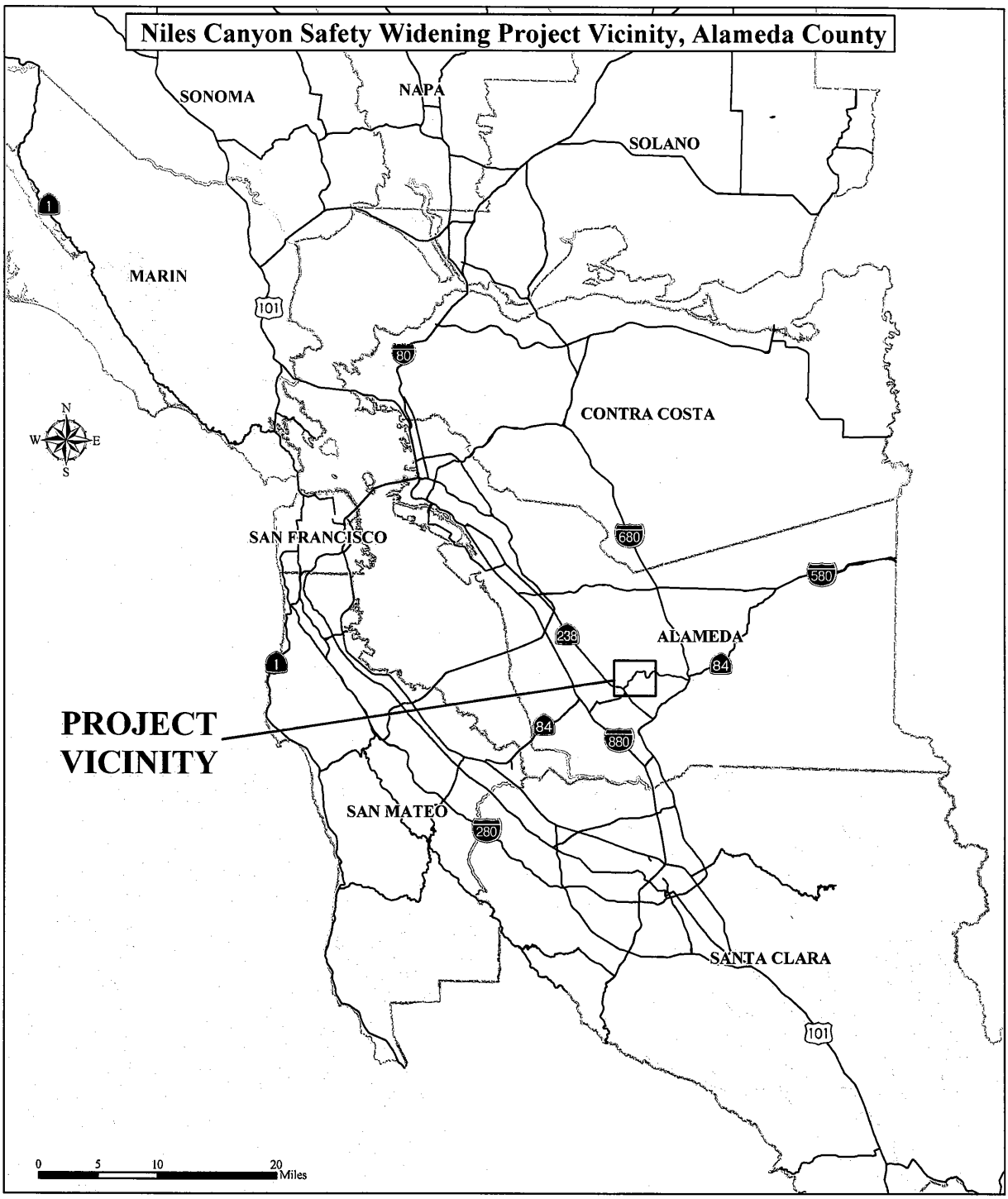

Figure 1-2 Project Limits

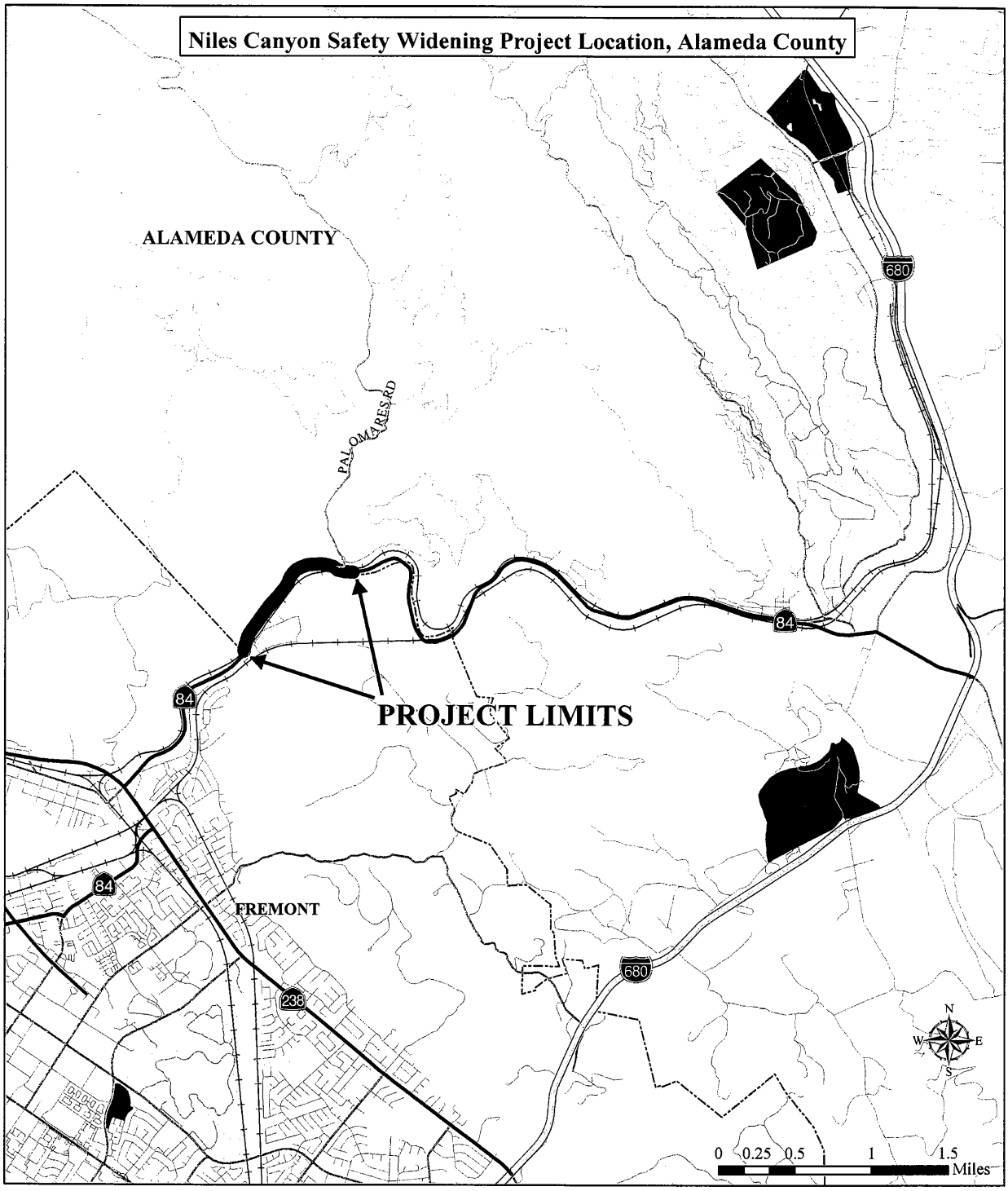

1.3 Project Need

Route 84 in the project area is a narrow two-lane highway in Niles Canyon between Sunol and Fremont/Union City. Limited sight distance and non-standard shoulder widths results in unfavorable driving conditions along the winding road. Disabled vehicles have limited space to pull off onto the shoulder with insufficient room for both driver and passenger to exit the car safely.

Typical accidents at the Rosewarnes Underpass include collisions with the approach guardrail, bridge abutment, concrete barrier, or head on-collisions with oncoming traffic. Typical accident types at the intersection with Palomares Road are head-on, broadside, side-swipe, rear-end, overturn, and hit-object collisions.

1.4 Alternatives

1.4.1 Proposed Build Alternative

From just north of the San Francisco Public Utilities Commission (SFPUC) Niles Dam through the Farwell Underpass, the roadway will be widened to accommodate standard shoulders and lane widths and a left-turn pocket at Palomares Road. The widening will be achieved by constructing retaining walls. The roadway profile will be lowered to achieve standard vertical clearance by approximately 300 mm (12 in) at the Rosewarnes Underpass and 100mm (4 in) at Farwell Underpass. See Appendix D for the proposed alternative layout sheets.

Project Cost and Funding

Project capital cost was estimated at $8,083,000, which includes $20,000 for new R/W and $8,063,000 for construction. This project is currently programmed in the 2004 SHOPP for the 2005/06 FY.

This project also includes the following:

1.4.1.1 Improvements at Rosewarnes Underpass

This project proposes to realign the northbound lane around the existing column and to provide a left shoulder between 0 and 1.5 meters (4.9 ft) wide and a standard 2.4 m (7.9 ft) right shoulder. The roadway profile will also be lowered approximately 300mm (1 ft) in order to achieve standard vertical clearance through Rosewarnes Underpass.

1.4.1.2 Stonybrook Creek Culvert Replacement

The existing reinforced box culvert that drains Stonybrook Creek into Alameda Creek must be replaced to provide increased capacity to meet storm requirements and facilitate

passage of Steelhead from Alameda Creek to Stonybrook Creek. The proposed preliminary culvert design includes a double box culvert and modification of 19 m (62.3 feet) of creek upstream of the new culvert. A more detailed description can be found in Section 2.9.2.3.

1.4.1.3 Palomares Road Intersection Relocation

The relocation of the SR 84 and Palomares Road intersection south of its current location would improve sight distance for motorists traversing this facility and would also provide 3.6 m (12 foot) lanes and 1.2 m (3.9 foot) shoulders. The relocation would be achieved by construction of a retaining wall between the realigned Palomares Road and Stonybrook Creek.

1.4.2 No Build Alternative

Under the No-Build Alternative, the existing highway configuration would remain as is. The No-Build Alternative, however, would not meet the purpose and need of the project which is to enhance safety and address poor driving conditions caused by nonstandard roadway features. Spot improvements or routine maintenance as necessary, are not precluded.

1.4.3 Alternatives Considered and Withdrawn

The Project Study Report (PSR) approved on November 2, 2001 presented two alternatives to address the purpose and need for this project.

Alternative 1 proposed to replace railroad bridges at these two locations with longer spans such that the roadway could be realigned to provide standard sight distance and shoulders. In addition, it was proposed to construct a left-turn lane to enhance left-turn movements entering Palomares Road from Route 84.

This alternative was rejected due to the increased cost and complexity, as well as the substantial environmental impact. Replacing railroad bridges would involve building a temporary detour structure to maintain the railroad operation during the construction phase, resulting in acquisition of additional right of way and easement. Environmentally it would also have an adverse effect on the historically significant bridges and greater impacts to Alameda Creek and the surrounding wildlife habitats. Implementing this alternative would cause a three-year delay in construction and was not acceptable for a safety improvement project.

Alternative 2 widened Route 84 on the north and the south sides of the highway for the entire length of the project limits. After proceeding with the environmental assessment of

this alternative, it was discovered that widening to the north would potentially affect large amounts of potential Alameda whipsnake habitat, listed as a Federally Threatened species. Other biological considerations included impacts to the riparian corridor along Alameda Creek to the south of Route 84. Cultural resource studies also identified an historic aqueduct that would have been adversely affected by this alternative. Alternative 2 would have also resulted in an adverse impact to a resource determined eligible for inclusion on the National Register of Historic Places by the State Preservation Officer (SHPO).

In addition, Alternative 2 was also dropped because of:

- Greater visual impacts due to retaining walls throughout much of the project limits, especially on the north side which is more visible from the highway than the south.
- Constructability issues
- Greater impacts to the travelling public due to longer construction times (construction on both sides of the roadway instead of concentrated on just one)
- Cost (length and height of retaining walls significantly increases the cost)

For these reasons, Alternative 2 was also dropped from further consideration, and a variation of this alternative, referred to as the "proposed project" was developed to avoid or minimize impacts to these resources.

1.5 Permits and Approvals Needed

- Section 1602 Lake and Streambed Alteration Agreement from the California Department of Fish and Game (CDFG).

- Clean Water Act Section 401 Water Quality Certification Permit from the Regional Water Quality Control Board (RWQCB)

- Clean Water Act Section 404 Nationwide Permit 14 from the U. S. Army Corps of Engineers (USACE)

Chapter 2 Affected Environment, Environmental Consequences, and Avoidance, Minimization and Compensation Measures

2.1 No Adverse Impact Determinations Summary

This section presents the result of Caltrans' analysis of environmental issues relevant to this project. Issues were identified by reviewing applicable federal requirements and completing the California Environmental Quality Act (CEQA) checklist, a copy of which can be found in Appendix A.

As part of the scoping and environmental analysis conducted for the project, the following environmental resource areas were also considered but no potential for adverse impacts was identified: air quality, agriculture, community impacts, geology and soils, growth, hazards and hazardous materials, land use and planning, mineral resources, noise, paleontology, public utilities and services, recreation, and transportation and traffic, invasive species, water quality and storm water runoff. Table 2.1 below provides a brief explanation for the "no adverse impact" determination in these subject areas. The remainder of the chapter covers environmental issues that require further consideration or discussion.

Table 2.1 No Adverse Impact Determinations Summary

AIR QUALITY
This project was found to be exempt from Regional and Project level air conformity under 40 CFR 93.126 as a safety project to increase shoulder widths and increase sight distance.
AGRICULTURAL RESOURCES
The project will neither convert farmland to non-agricultural use nor conflict with current open space or agriculture land use designations.
COMMUNITY IMPACTS- Community Character and Cohesion
The project will not change public access, divide neighborhoods, separate residences from community facilities, change the quality of life or increase urbanization or isolation.
CULTURAL RESOURCES- Archaeology
An Archaeological Survey Report (ASR) was performed and found no sensitive archaeological sites within the established Area of Potential Effects (APE).
GEOLOGY AND SOILS
Because the Bay Area is seismically active, Caltrans routinely conducts detailed geotechnical studies and develops project specific construction features to minimize seismic risks. A Preliminary Geotechnical Report has been prepared to determine soil conditions and local earthquake fault characteristics in the immediate project vicinity. A design report stating mitigation recommendations shall be prepared in accordance with the following document: California Division of Mines and Geology Guidelines for Evaluating and Mitigating Seismic

Hazards.
GROWTH
This project is a safety improvement project and the proposed improvements do not alter or increase the capacity of the State Route.
HAZARDS AND HAZARDOUS MATERIALS
This project will not result in any increased hazards or hazardous materials risks after construction. Aerially Deposited Lead (ADL) is known to occur in the area, but any contamination will be addressed by Caltrans' standard construction and remediation practices and will preclude substantial adverse impacts.
LAND USE AND PLANNING
The project does not conflict with any land use or planning policies.
MINERAL RESOURCES
The project does not conflict with resource recovery plans or operations in the vicinity
NOISE
No significant changes in noise levels are expected with this project because it is neither capacity increasing nor adds design elements to the current highway that would cause new sources of noise.
PALEONTOLOGY
The project will not affect paleontological resources.
PUBLIC SERVICES
The project will not affect provision of existing public services or measurably increase the need for new or physically altered government facilities in order to maintain acceptable service ratios, response times, other performance objectives for any public service. Standard Department Management practices will preclude substantial adverse impacts during construction. A traffic management plan (TMP) will be completed prior to construction to address lane closures and traffic rerouting.
RECREATION
Because the project will not cause a substantial noise level increase (12 dBA or more), it will not directly or indirectly reduce the value of any nearby recreational properties. Access to adjacent properties will remain unchanged and therefore the project will not measurably change the use of existing neighborhood and regional parks or other recreational facilities.
UTILITIES and SERVICES
Existing utilities and services will be restored to pre-existing conditions or better after construction. Standard Caltrans procedures for coordinating temporary service disruptions during construction are considered adequate for this project.
INVASIVE SPECIES
In compliance with the Executive Order on Invasive Species, E.O. 13112, and subsequent guidance from the Federal Highway Administration, the landscaping and erosion control included in the project will not use species listed as noxious weeds. In areas of particular sensitivity, extra precautions will be taken if invasive species are found in or adjacent to the construction areas. These include the inspection and cleaning of construction equipment and eradication strategies to be implemented should an invasion occur.
WATER QUALITY AND STORMWATER RUNOFF
Added pavement for shoulders and the left turn pocket at Palomares Road will increase road runoff, but the additional amount is negligible and will not result in significant impacts to water quality.

2.2 Community Impacts- Right of Way Requirements

2.2.1 Affected Environment

Construction of the proposed project will require the acquisition of right-of-way in the immediate area. The types of right-of-way required for this project include partial acquisitions, as well as underground, temporary and drainage easements. There will be no full acquisitions of residential, commercial, or municipal properties.

2.2.2 Impacts

The right-of-way requirements for the proposed project are as follows below in Table 2.2-1 and shown in the layout sheets.

Table 2.2-1 Project Right-of-Way Requirements

APN	ACQUISITION TYPE	AREA, m^2	Ft^2
85A-5400-1-2	Partial Acquisition	668.5	2193.2
85A-5400-1-2	Underground Easement	1774.9	5823.2
85A-507-762-10	Partial Acquisition	56.8	186.4
85A-507-762-10	Partial Acquisition	199.7	655.2
85A-507-762-10	Temporary Construction Easement	916.9	3008.2
85A-507-762-5	Partial Acquisition	36.2	118.8
85A-507-762-5	Drainage Easement	18.5	60.7
85A-507-762-5	Drainage Easement	8.4	27.6
85A-507-762-5	Drainage Easement	1.4	4.6
85A-507-762-5	Partial Acquisition	5.5	18.0
85A-507-762-5	Temporary Construction Easement	2920.3	9581.0
85A-507-762-5	Drainage Easement	12.6	41.3
85A-507-762-5	Drainage Easement	10.1	33.1
85A-507-762-5	Drainage Easement	4.7	15.4
85A-507-762-5	Drainage Easement	9.3	30.5
85A-507-762-5	Drainage Easement	3.5	11.5
85A-507-762-5	Drainage Easement	12.0	39.4
85A-507-762-5	Drainage Easement	12.0	39.4
85A-507-762-5	Temporary Construction Easement	1111.8	3647.6
85A-507-762-5	Partial Acquisition	89.0	292.0
85A-507-762-10	Partial Acquisition	240.6	789.4
85A-507-762-10	Drainage Easement	143.5	470.8
85A-507-762-10	Drainage Easement	12.1	39.7
85A-507-762-10	Temporary Construction Easement	1735.1	5692.6
85A-507-762-10	Drainage Easement	7.4	23.6
85A-507-762-10	Partial Acquisition	1087.1	3566.6
85A-507-762-10	Temporary Construction Easement	1283.1	4209.6

2.2.2.1 Environmental Justice

No minority or low-income populations have been identified that would be adversely impacted by the proposed project. Therefore, this project is not subject to the provisions of Executive Order 12898.

2.2.3 Avoidance, Minimization and Compensation Measures

Acquisitions and relocations will be in accordance with the Federal Uniform Relocation Assistance and Real Property Acquisitions Policies Act of 1970, as amended. The State Uniform Relocation Assistance Program has been developed to assist displacees in successfully relocating homes and businesses, thereby mitigating relocation impacts. This program aims to meet or exceede the requirements of the Federal Uniform Relocation Assistance and Real Property Acquisition Policies Act of 1970 (P.L. 91-646). More information outlining the features of the State Uniform Relocation Assistance Program can be found in Appendix C: Relocation Benefits.

2.3 Traffic and Transportation/ Pedestrian and Bicycle Facilities

2.3.1 Affected Environment

The proposed project is located on SR 84 from just west of Rosewarnes Underpass (Bridge No.33-0034) to just east of the Farwell Underpass (Bridge No. 33-0035). This section of SR 84 is an undivided, two-lane rural highway with narrow shoulders on a typically curving horizontal alignment through rolling terrain.

The existing pavement width from the centerline to the edge of pavement is typically 4.2 to 4.8 m, yielding 3.6 m lanes and shoulders varying from 0.6 – 1.2 m. The posted highway speed limit is 80 kph (50 mph) along most of the project. In sections where there are non-standard horizontal curves, the speed limit is reduced to 40 kph (25mph).

Palomares Road is a two-lane Alameda County road, located between SR 84 and Interstate 580, that passes through rolling terrain with minimal to nonexistent shoulders. At its intersection with SR 84, Palomares Road widens to accommodate a right turn lane onto southbound SR 84 and a left-turn lane onto northbound SR 84. Presently, SR 84 does not have a protected left turn pocket for northbound SR 84 turning left onto Palomares Road.

2.3.1.1 Traffic and Transportation

SR 84 experiences traffic during normal commute times. Peak hour traffic occurs southbound in the morning and northbound in the evening. Off peak and on weekends the highway operates with traffic normally at designated speed limits.

The following traffic volumes were taken from the 2002 Traffic Volumes on California State Highway Booklet:

PM	Location	Peak Hour	Peak Month	AADT
10.82	Fremont, South Junction Route 238	2,500	30,000	29,000
13.00	Palomares	1,300	16,200	15,600
17.29	Sunol, Pleasanton/Sunol Road	760	9,400	9,100

The 2002 Annual Average Daily Truck Traffic on California State Highway System indicated a vehicular AADT of 28,500 with 684 (2.4%) trucks at the north junction of Route 238 (PM 10.83). According to the traffic census counts in Caltrans Transportation System Network, the 2002 Annual Daily Traffic (ADT) adjusted volume for Route 84 was derived to be 9,611 vpd per peak approach with a Design Hourly Volume (DHV) of 946 vehicles in two directions. From the forecasting traffic volume of the Alameda CMA (Project 2002) model and the 2002 Annual Average Daily Truck Traffic on California State Highway System, it is projected that by the year of 2018 the ADT will be 11,358, an 18% increase. The forecasted ADT for the year of 2028 is 12,450, a 30% increase.

Accident Rates

The following traffic data taken from TASAS Table B demonstrates the most recent three-year accident history from October 1, 2000 to September 30, 2003:

Accident Category	Actual Number			Actual Rates			Average Rates		
	Total	Fatal	Injury	F	F+I	Total	F	F+I	Total
All Accidents	32	0	14	.000	.61	1.39	.021	0.81	1.81
Wet Accidents	6	0	2	.000	2.17	6.50	.066	2.51	5.59
Dark Accidents	14	0	4	.000	.17	0.61	.008	0.31	0.69

The TASAS Selective Record Retrieval shows that 11 of the accidents (40.6%) occurred during the afternoon commute hours (2-6 PM). It is also noted that 53.1% of the accidents were hitting objects: guardrail, wall, cut slope and embankment. The majority types of accidents at Rosewarnes Underpass are hitting the approaching guardrails/bridge abutments/concrete barriers, as well as colliding with the opposing vehicles by crossing the centerline. The typical accidents at the Route 84/Palomares Road intersection are head-on, broadside, sideswipe, rear-ender, overturn and hit object. The maneuverability

of the traveling public can be increased and thus will reduce traffic accidents by providing standard shoulders, sight distance, median soft barrier and a left-turn lane.

2.3.1.2 Pedestrian and Bicycle

There are no pedestrian facilities on SR 84 within the project limits. The Alameda Creek Trail is within the project area, but will not be impacted by the proposed improvements.

SR 84 within the project limits is identified as a cross-country corridor in the Alameda County Bike Plan and a proposed Class III bike route with widened shoulders. A Class III bikeway (widened shoulders) is defined as a roadway, generally in rural areas, where the shoulder has been widened to at least 1.2 m (4 ft). Bicycle traffic increased along the corridor and necessitated the installation of bicycle and "share the road" signs. The proposed project will provide the minimum requirement of a Class III bike route of at least 1.2m (4 ft) shoulders throughout the project limits. It should be noted that although this segment of SR 84 has been designated a proposed Class III bike route in the Alameda County Bike Plan, it does not have an official State Bike Route status.

2.3.2 Avoidance, Minimization and Compensation Measures

A comprehensive TMP will be prepared prior to construction to maintain circulation on streets and arterials. The TMP should include advance changeable message signs and broadcast media notifications, detour plans, and other contingency plans. Streets and arterials would be kept open to the maximum extent possible. If possible, lane and ramp closures would be limited to night and off-peak hours. Pedestrian and bicycle access would also be addressed in the TMP.

2.4 Visual/Aesthetics

A comprehensive Visual Impact Assessment Summary was prepared in June 2004 and the methods used for the analysis are in accordance with applicable FHWA guidelines. Existing visual conditions were reviewed on a regional scale and the project area was examined for the presence of smaller, visually distinct landscape units. All publicly accessible locations from which the project would be within view were identified and the distance of the view to the proposed project was determined. Affected user groups, (classes of viewers who differ in their response to the appearance of the highway and its setting), were studied, taking into account their location, activities, and values. Landscape character and levels of visual quality were determined for both pre- and post-project conditions. Visual impacts were then assessed according to the anticipated change in landscape character and visual quality caused but the project and the public's likely response to such change. The Visual Impact Assessment process is supported by

photographs of the project area paired with digitally edited visual simulations depicting the same views but with the completed project in place.

2.4.1 Affected Environment

This segment of Route 84 within the project limits is part of the State Scenic Highway system and is eligible for official designation as a State Scenic Highway. Alameda County is currently preparing a nomination package seeking a formal State Scenic Highway designation on this Route.

In the project area, Route 84 is an undivided, two-lane, rural highway with narrow shoulders. The road winds along the base of a steep hill as it follows Alameda Creek.

The landscape in this area is comprised of the wooded hillsides and valley surrounding Alameda Creek as it flows through Niles Canyon. The area has a predominantly natural, scenic appearance. Views along the highway are enclosed by the steep hillsides and often-dense tree stands. Attractive scenes of Alameda Creek occur through breaks in the band of riparian forest between the highway and the creek. Mature native California oak trees punctuate the grassy hills. Development is sparse with only a few, widely scattered residences are seen within the area.

The project area encompasses three historic resources which were found eligible for the National Register of Historic Places. The Dresser Underpass (Bridge No. 33-0034) Post Mile 12.1 is near he southwest end of the project. It is also referred to as the Rosewarnes Underpass. The Farwell Underpass (Bridge No. 33-0035) Post Mile 13.3 is near the northeast end of the project. A portion of the Vallejo Mills/Spring Valley Water Company water-conveyance system built in the 1840s is visible from the highway near the Dresser Railroad bridge. These historical, large railroad trestles cross over the highway near each end of the project limits. The massive, rusting steel trestles and their hefty stone and concrete abutments are interesting features to highway motorists passing under and past them.

Viewers potentially affected by project-related changes include the following groups:

- Motorists and cyclists traveling on Route 84
- Persons living in private residences (approximately half a dozen homes) along or near Niles Canyon Road with views of the highway from their property.
- Passengers of the Niles Canyon Railway tour trains.
- Employees or persons doing business at Mission Bay Clay Products, located on the opposite side of Alameda Creek.

- Parishioners and employees of the Golden Gate Primitive Baptist Church located at 2950 Niles Canyon Road near Palomares Road.
- Occasional recreational users of Alameda Creek (though the creek is not developed for recreational use.)

2.4.2 Impacts

Implementation of the project would cause both temporary and permanent changes in the appearance of the highway. Temporary changes would result from the removal of trees and from ground surface disturbance. Permanent changes would result from the following:

- constructing a new retaining wall approximately 45 meters (136 feet) long and ranging in height from 1.2 meters (4 feet) to 9 meters (30 feet) on the southbound (uphill) side of the highway.
- realignment of the highway towards Alameda Creek with a new northbound lane on the east side of the existing trestle pier at the Rosewarnes Underpass, and construction of a new retaining wall 130 meters (462.5 feet) long, ranging in height from 1.2 meters (4 feet) to approximately 3.0 meters (10 feet) at the edge of the stream channel, with 0.92 meter (36 inch) height concrete safety barrier and tubular-steel bicycle-safety railing on top of the wall,
- realignment of the highway towards Alameda Creek from Niles Dam to the Farwell Underpass with a new retaining wall approximately 520 meters (1,705 feet) long, ranging in height from 1.2 meters (3.7 feet) to 4.2 meters (13.8 feet.) with 0.92 meter (36 inch) height concrete safety barrier and tubular-steel bicycle-safety railing on top of the wall,
- placement of crash cushions and 0.92 meter (36 inch) height concrete safety barriers at the abutments and piers at the Rosewarnes and Farwell Underpasses,
- alterations to topography,
- a wider paved surface due to shoulder widening,
- realignment of the Palomares Road intersection including a new retaining wall 93 meters (305 feet) long, ranging in height from 1.2 meters (3.7 feet) to 4.2 meters (13.8 feet.) with 0.92 meter (36 inch) height concrete safety barrier and tubular-steel bicycle-safety railing on top of the wall along Stonybrook Creek.

2.4.3 Avoidance, Minimization and Compensation Measures

There are approximately 186 trees in the size range of 6" caliper or larger (measured at breast height) within the project limits. While most of these would remain, some trees would be removed. Trees on both sides of the highway would be affected including those

near the intersection of Palomares Road. It is estimated that approximately 63 riparian trees would be removed and 7 oak trees in the vicinity of Paolmares Road and Stonybrook Creek. The affected trees are common within the vicinity of the project and, based on an initial review, appear not to exhibit the unique or outstanding visual characteristics necessary to be considered Scenic Resources. Even so, their removal would have some degree of visual impact. In some instances, the effect of removing trees could be positive where new, interesting views of the railroad trestles and scenic views of Alameda Creek would be created. In no case would the removal of trees expose unsightly areas. Caltrans policy is to replace vegetation that is damaged or removed due to highway improvement projects. Riparian trees grow quickly so they should provide suitable habitat within approximately 5 years.

The new retaining wall along the uphill side of the highway would be very readily visible to passing motorists and would diminish the scenic appeal of the immediate area. To mitigate the visual impact, this wall would be a soil-nail type wall, carved and stained to match the appearance of natural rock outcroppings in the area (Appendix E). The retaining walls along the banks of Alameda Creek and Stonybrook Creek would be visible from the creeks and the opposite bank, but generally not from the highway. To mitigate the visual impact of these retaining walls, an aesthetic treatment would be applied to the face of the walls to help make them compatible with the surrounding rural landscape. The creek-side faces of the walls would be textured and stained to match the random stacked rock of the existing stone wall sections that would remain. The top portion of the concrete safety barrier would be sand blasted to reduce the visual mass and the tubular-steel bicycle-safety railing would be painted to blend in with the natural surroundings. The wider paved surface created by shoulder improvements would have no apparent visual impact.

The new crash cushions and concrete safety barriers required at the abutments and piers at the Rosewarnes and Farwell Underpasses would be very visible to motorists and would diminish the visual appeal of the historic railroad trestles. To mitigate this visual impact, the crash cushions would be selected to give the appropriate appearance compatible with railroad facilities and the concrete barriers would be sand blasted to match the barriers on top of the retaining walls (Appendix E).

2.5 Cultural Resources

2.5.1 Affected Environment

Surveys of archaeological and historic architectural resources in the project study area were conducted in November 2002, March and October 2003, and September 2004, and are summarized in a Historic Property Survey Report (November 2004). The Area of Potential Effect (APE) for archaeological studies is defined as the area that would be directly impacted by project activities, or the project "footprint", which includes right-of-way takes, construction staging areas, utility relocation sites, and biological mitigation areas. The architectural APE essentially follows the State right-of-way of Route 84 with a few exceptions to include features that extend away from the existing highway alignment. The APE map was approved on October 25, 2004.

Archaeology

Investigations included pre-field review of Caltrans cultural resource files; as-built documents; information available at the Northwest Information Center (NWIC) of the California Historic Resource Inventory System at Sonoma State University; and research at the UC Berkeley Bancroft Library. Files at the NWIC indicated that the area had been previously surveyed. An additional pedestrian survey was conducted by PQS Archaeologist Richard Fitzgerald in 2004. No surface prehistoric cultural resources were observed within the archaeology APE, and the likelihood of any buried resources in this area is minimal.

Architectural History

The HRER (October 2004) identified two resources eligible for the National Register of Historic Places when judged in relation to the Criteria for Evaluation, as well as for the purposes of CEQA compliance when judged in accordance with Section 15064.5(a)(2)-(3) of the CEQA Guidelines, using the criteria outlines in Section 5024.1 of the California Public Resources Code. The California State Office of Historic Preservation (SHPO) concurred with the eligibility findings in a letter dated November 30, 2004.

The two properties determined eligible are the Vallejo's Mill/Spring Valley Water Company water-conveyance system, and the Niles Canyon railroad, which includes two railroad bridges known as Dresser and Farwell. The Niles Canyon railroad has been determined to be a National Register eligible district, with both bridges as contributing features.

The Vallejo's Mill/Spring Valley Water-Conveyance System, originally built in about 1841 by Jose de Jesus Vallejo to direct Alameda Creek waters to his grist mill at the

mouth of the canyon. The system was then altered in 1887 and is made up of three components: the dam, the turnout (distribution box) and gatehouse, and the aqueduct. Exposed portions of the dam are a combination of concrete, stone and mortar, and brick and mortar. The visible portion of the turnout is brick and is angled west to lead water into the aqueduct. The aqueduct is about 2,700 ft long of which the first 1000 feet are located underground beneath the highway pavement. The structure starts to emerge along the north side of Highway 84 with an easily visible hump as it approaches Dresser Bridge. The original open structure of stone was lined and domed with fired red clay brick. This water conveyance system is eligible for the National Register of Historic Places for its early construction and its association with agricultural and industrial development, as well as the evolution of urban water supply in the region. The system also may be eligible as a resource that embodies distinctive characteristics of a type, period, or method of construction. Additionally, the system may be eligible for its likelihood to yield information on early solving construction techniques that addressed the difficult terrain of this narrow canyon as well as the seasonal changes to the flow of Alameda Creek.

The two railroad bridges are components of the Niles Canyon railroad district dating to 1865; the railroad was an original leg of the transcontinental railroad. The piers and abutments are ashlar stone and mortar and the wooden bridges have since been replaced with steel structures. The Farwell bridge was rebuilt in 1896 with a pin-connected truss system. The Dresser Bridge super structure (also known as Rosewarnes Underpass) was replaced in 1906 with a riveted through truss bridge. The two railroad bridges, contributing components of the Niles Canyon railroad district, are eligible for the National Register of Historic Places for their association with the Transcontinental Railroad and associated history of transportation, commerce, and settlement. As contributors, these bridges are also eligible as examples of the progression of technological developments in railroad bridge construction.

2.5.2 Impacts

Archaeological Resources

No archaeological resources were found within the project's APE.

Historical Resources

The proposed build alternative was designed to avoid the above mentioned cultural resources within the project's APE. Avoidance measures include, for the water conveyance system, designing the project so that no components will be physically touched. This is achieved by restricting shoulder widening to either side of the dam and

turnout, and, along the route of the aqueduct, limiting all widening to the opposite, or creek side of the highway.

As with the water-conveyance system, the project will not alter features of the bridges. At the Dresser Bridge, an additional lane will be constructed on the creek side of the western-most pier, thus placing northbound traffic on one side of the pier, and southbound on the other. The roadbed will be lowered at both bridges. Construction methods have been identified and will be implemented to avoid harming these resources. These are described in the Finding of Effects document.

2.5.3 Avoidance, Minimization and Compensation Measures

In the event that archaeological resources are unexpectedly discovered during project construction, work should immediately cease in the surrounding area until it can be evaluated by a qualified professional archaeologist and a suitable course of action developed in compliance with applicable laws and regulations, particularly 36 CFR Part 800.13.

The Federal Highway Administration proposes that a Finding of No Adverse Effect without Standard Conditions is appropriate and is seeking concurrence from the State Office of Historic Preservation in the finding, pursuant to 36 CFR 800.5(c) and Section 106 PA Stipulation X.B(1). A report documenting this finding specifies that conditions be imposed during construction to prevent damage to the historic resources.

For the purpose of the California Environmental Quality Act (CEQA), pursuant to Title 14, Chapter 3, Section 15064.5(b), this undertaking will not cause a substantial adverse change in the significance of a historical resource because the significance of the resource will not be materially impaired.

2.6 Water Quality and Storm Water Runoff

Urban runoff is non-point as well as point source (confined and discrete conveyance or collection system or culverts) discharge into water bodies. In recent years, efforts continue to minimize or avoid the effects of water pollution. An important component of urban runoff is that which comes from streets and freeways. The State Water Resources Control Board (SWRCB) and the Regional Water Quality Control Board (RWQCB) have been working with Caltrans and local agencies to design projects that minimize the discharge of pollutants to the waters of the United States to the maximum extent possible.

2.6.1 Regulatory Setting

The primary federal law regulating Water Quality is the Clean Water Act; (CWA) enforced by the U.S. Environmental Protection Agency (EPA). The EPA delegated its authority in California to the State Water Resources Control Board (SWRCB) and Regional Water Quality Control Boards (RWQCB). The RWQCB prepares and adopts the Water Quality Control Plan, (Basin Plan), a master policy document for managing surface and groundwater quality in the region. The State Water Resources Control Board and the Regional Water Quality Control Board issue permits that implement the standards included in the Basin Plan as well as other requirements of the State Water Code and the federal Clean Water Act.

Section 401 of the CWA requires a water quality certification from the State Board or Regional Board when a project: 1) requires a federal license or permit (a Section 404 permit is the most common federal permit for Caltrans projects), and 2) will result in a discharge to waters of the United States.

Section 402 of the CWA establishes the National Pollutant Discharge Elimination System (NPDES) permit system which directs that storm water discharges are point source discharges and establishes a framework for regulating municipal and industrial storm water discharges. To ensure compliance with Clean Water Act Section 402 the State Water Resources Control Board (SWRCB) has issued Caltrans an NPDES Statewide Storm Water Permit to regulate storm water discharges from Caltrans facilities (Order No. 99-06-DWQ, CAS000003).

In addition, the SWRCB has issued a statewide Construction General Permit for construction activities (Order No. 98-08-DWQ, CAS000002), that applies to all storm water discharges from land where clearing, grading, and excavation result in disturbances of at least 0.4 hectares (1 acre) or more. Construction activity that results in soil disturbances of less than 0.4 hectares (1 acre) is subject to the General Permit if the construction activity is part of a larger Common Plan of Development totaling 0.4 hectares (1 acre) or more of soil disturbing activities, or if there is potential for significant water quality impairment resulting from the activity as determined by the RWQCB. All projects that are subject to the construction general permit require a Storm Water Pollution Prevention Plan (SWPPP). Caltrans' construction projects that are less than 0.4 hectares (1 acre) need to incorporate Water Pollution Prevention Plans (WPCP).

2.6.2 Affected Environment

The project is located within the San Francisco Bay Regional Water Quality Control Board (RWQCB) jurisdiction (Region 2), which is responsible for implementation of

State and Federal water quality protection laws and regulations in the vicinity of the project area.

2.6.2.1 Storm Water

The project site is within the South Bay Basin Watershed. The terrain in this area is mountainous and steep on both sides of the roadway. SR 84 within the project limits is adjacent to Alameda Creek. Storm water from the roadway currently discharges into this creek. Eventually, Alameda Creek discharges into the San Francisco Bay, Lower area, approximately 6.4 km (4 mi) away.

The Region 2 RWQCB Basin Plan establishes beneficial water uses for waterways and water bodies within the region. The following are the listed Beneficial uses for Alameda Creek: 1) agricultural supply, 2) cold freshwater habitat, 3) groundwater recharge, 4) fish migration, 5) water contact recreation, 6) non-contact recreation, 7) fish spawning, 8) warm freshwater habitat, and 9) wildlife habitat.

Per Section 303(d) of the 1972 Clean Water Act, California has developed a list of water quality limited segments. Although Alameda Creek is listed on EPA's 303(d) List of Water Quality Limited Segments for diazinon, this pollutant is not found at levels of concern as a product of roadway runoff.

2.6.2.2 Groundwater

This project is located in the Alameda Creek (Niles Cone) Groundwater Basin. The existing beneficial uses of this groundwater resource according to the Basin Plan include municipal and domestic water supply, industrial process water supply, industrial services water supply, and agricultural water supply. The Alameda Creek flows recharge the Niles Cone groundwater basin before emptying into the San Francisco Bay. Since this project will require construction of a retaining wall between the existing roadway and Alameda Creek, and the proposed re-construction of the box culvert that drains Stonybrook Creek into Alameda Creek, groundwater will likely be encountered during construction.

2.6.3 Impacts

2.6.3.1 Storm Water

Caltrans has performed many studies to monitor and characterize highway storm water runoff throughout the State. Commonly found pollutants are Total Suspended Solids (TSS), nitrate Nitrogen, Total Kjedahl Nitrogen (TKN), phosphorous, Ortho-phosphate, Copper, Lead and Zinc. Some sources of this pollution are natural erosion, phosphorus

from tree leaves, combustion products from fossil fuels, and the wearing effects of brake pads.

This project is a safety project with only one build alternative being considered. The added pavement for shoulders and the left turn pocket will increase roadway runoff. However, the additional amount is negligible and will not result in significant impacts to water quality due to the added impervious pavement from the proposed widening.

2.6.3.2 Groundwater

Groundwater will be encountered during excavation for the retaining wall and culvert extension. Early discussion shall be initiated regarding the handling and disposal of this water during the design phase. Also, the ground water will be tested for potential contamination as part of the Hazardous Waste Site Investigation. Proper handling and disposal of the ground water will be based on the levels of contaminants identified in the Site Investigation report. The main pollution will be sediment. Temporary containment systems are proposed in combination with other sediment removal measures to reduce sediment loads down to acceptable thresholds that will allow for discharge into Alameda Creek. Groundwater that is unsuitable for discharge into the creek will be hauled offsite for disposal. There are no known sanitary inlets near the project site.

Since the retaining wall is anticipated to be constructed during the dry season when there is minimal water flow into the creek, on-site contaminant devices such as Baker Tanks will be used on-site to temporarily hold the goundwater to ensure that sediment level meets the regulatory standards before the water is discharged into Alameda Creek.

2.6.4 Avoidance, Minimization and Compensation Measures

2.6.4.1 Section 401 of the Clean Water Act

The drainage improvements and work within Alameda Creek, will require an Army Corps 404 permit as well as a 401 Water Quality Certification from Region 2, RWQCB.

Any impacts to the Waters of the U.S. will be minimized and mitigation measures will be considered for any unavoidable impacts.

2.6.4.2 Section 402 of the Clean Water Act

According to Caltrans NPDES permit and the Construction General Permit, Best Management Practices (BMPs) will be incorporated into this project to reduce the discharge of pollutants during construction as well as permanently to the Maximum Extent Practicable (MEP). These inlcude, Temporary Construction Site BMPs, Design Pollution Prevention BMPs, and Permanent Treatment BMPs.

(a) **Construction Site BMP**

Construction Site BMPs are implemented during construction activities to reduce pollutants in storm water discharges throughout construction. One critical construction activity, dewatering, may be necessary for this project because of the possibility of encountering groundwater during excavation in Alameda Creek. If necessary, early discussion will be initiated regarding the handling and disposal of this water during the design phase. Dewatering BMPs and temporary holding devices such as Baker Tanks will be included in the special contract provisions to meet the dewatering requirements. Grading of existing slopes will be required. However, the use of retaining structures, especially in excavation areas, will minimize the amount of grading required. Temporary silt fence, stockpile cover, stabilized construction entrance/exit and temporary soil stabilizers are some of the temporary erosion and water pollution control measures that will be utilized in combination to prevent and minimize soil erosion and sediment discharges during construction. Given an anticipated soil disturbance of greater than 0.4 hectares (1 acre), a Storm Water Pollution prevention Plan (SWPPP) will be developed during construction. This dynamic document addresses the deployment of various erosion and water pollution control measures that are required commensurate with the extent of construction activities.

(b) **Permanent Design Pollution Prevention BMPs**

Design Pollution Prevention BMPs are permanent measures to improve storm water quality by reducing erosion, stabilizing disturbed soil areas, and maximizing vegetated surfaces. Erosion control measures will be implemented on all disturbed areas. A retaining wall will be constructed between the new widened roadway and Alameda Creek to minimize impacts to the creek. The use of retaining wall structures will also minimize the amount of open disturbed soil.

Erosion control measures will utilize a combination of source and sediment control measures to prevent and minimize erosion from disturbed areas. Source controls will utilize erosion control netting in combination with hydroseeding. The biodegradable netting is effective in providing good initial mechanical protection while seed applied during the hydroseeding operation germinates and establishes itself. Other forms of source control such as tacked straw will also be used when applicable. Sediment controls, such as biodegradable fiber rolls, are used to retain sediments and to help control runoff from disturbed slope areas. Due to the steep terrain of the project area, it will be further investigated during

the design phase to determine if slope paving or lining for ditches is needed to further minimize erosion potential.

Outlet protection and velocity dissipation devices placed at the downstream end of culverts and channels are also Design Pollution Prevention BMPs that reduce runoff velocity, control erosion, and scour. The need for these devices will be further investigated during the design phase.

(c) **Permanent Treatment BMPs**

Treatment BMPs are permanent devices and facilities treating storm water runoff. Caltrans approved Treatment BMPs are Biofiltration Swales, Infiltration Basins, Detention Basins, Traction Sand Traps, Dry Weather Flow Diversions, Media Filters, Gross Solids Removal Devices (GSRDs), Multi-chamber Treatment Trains, and Wet Basins.

Since this project is a critical safety improvement project (Safety Designation 010), it is exempt from required Permanent Treatment BMPs. However, treatment BMPs are still being considered due to the size of the project. Physical site constraints such as steep terrain and adjacent environmentally sensitive areas, limit the types of Treatment BMPs that can be implemented. Biofiltration Strips and Swales appear to be feasible, space permitting, and these options will be further investigated in the design phase.

2.7 Natural Communities

This section documents natural communities of concern. The focus of this section is on biological communities, not individual plant or animal species. This section also includes information on wildlife corridors, in this case, fish passage. Wildlife corridors are areas of habitat used by wildlife for seasonal or daily migration.

The table below summarizes the acreage of natural community habitat impacted by the proposed project.

Table 2.7-1 Impacts to Natural Communities

Natural Community	Temporary Impacts		Permanent Impacts	
	m^2	Acres	m^2	acres
Valley Foothill Riparian	3535	0.87	5855.5	1.45
Coastal Oak Woodland	0	0	1083.6	0.27

Wetlands and other waters are discussed in Section 2.8.

2.7.1 Valley Foothill Riparian

The California Natural Diversity Database (CNDDB) classifies the riparian area within the project site as Sycamore Alluvial Woodland and is described as "open to moderately closed, winter deciduous broad leafed riparian woodland overwhelmingly dominated by sycamore, buckeye, blue elderberry with an understory of introduced grasses or seep willow.

Riparian habitat is classified as areas that provide cover for riverine habitats. This usually consists of open to dense canopy of a tree or trees of species such as California black walnut or oak varieties. Riparian habitat is distinct from fresh emergent wetlands because trees in riparian habitat do not necessarily occur in jurisdictional wetland areas although they could be associated with them. Riparian habitat value is derived from its proximity to riverine areas as a result of the cover they provide to the waterway.

Valley foothill riparian habitat is found along Alameda and Stonybrook Creeks within the project limits. Although Alameda Creek experiences flood flows and Stonybrook Creek is ephemeral, both corridors support riparian vegetation and habitat including sycamore (*Platanus racemosa*), valley (Quercus lobata) and live oak (*Quercus agrifolia*), bay (*Umbellularia californica*), maple (*Acer platanoides*), and willow (*Salix sp.*) thickets along the waterline.

2.7.1.1 Impacts

The removal of vegetation to accommodate the widening and construction access will result in both temporary and permanent impacts to the riparian environment. A tree survey was conducted by Caltrans biologists in April 2004. The riparian tree impacts area summarized is in Table 2.7-2 below.

Table 2.7-2 Permanent Riparian Tree Impacts

Riparian Tree Species	Number of Permanently Impacted Trees
Alder (*Alnus sp.*)	11
Bay (*Umbellularia californica*)	17
Maple (*Acer platanoides*)	13
Sycamore (*Platanus racemosa*)	19
Walnut (*Juglansnigra*)	3
Total	**63**

The proposed construction will temporarily affect approximately 3535 m^2 (0.87 acre) of riparian habitat and permanently affect 5855 m^2 (1.45 acres) of riparian habitat. The necessary vegetation removal will reduce the available roosting habitat, shelter, and nutrient loading provided by the existing plants and trees.

2.7.1.2 Avoidance, Minimization and Compensation Measures

Caltrans will replace temporarily impacted riparian vegetation in-kind following the removal of the construction work zone and its return to pre-construction grades.

Caltrans will also replace permanently impacted riparian trees at a 3:1 ratio. The California Department of Fish and Game (CDFG) and San Francisco Public Utilities Commission (SFPUC) approved an area upstream of the project limits, east of SR 680, to implement replacement planting that cannot be accommodated onsite.

2.7.2 Coastal Oak Woodland

Coastal Oak Woodland is characterized by mixed chaparral, coastal scrub, and annual grasses. These areas tend to be north-facing with more moisture present and differ from forests in that the canopies touch but seldom overlap.

The oak woodland habitats within the project area are characterized by open to dense canopies of oak species. The understory is derived from the surrounding grassland habitat composed of non-native annual grasses. The clusters of oaks within the project area are associated with topographic depressions between rolling foothills that convey perennial flows.

Three relatively narrow patches of coastal oak woodland are found along three drainages on the upslope side of SR 84. These discrete patches of habitat support mature stands of live oak. The oak woodland can provide quality habitat for many wildlife species as well as provide adequate cover, food, and along with associated drainages, a source of moisture. Although these stands are not continuous, the areas could be used as cover within a wildlife corridor.

2.7.2.1 Regulatory Setting

Oak woodlands in California are protected by California Senate Concurrent Resolution Number 17 which states that California State agencies must preserve and protect to the maximum extent feasible or provide replacement plantings in oak woodlands where Blue (*Quercus douglasii*), Engleman (*Quercus engelmanni*), Valley, or Coast Live oak are removed.

2.7.2.2 Impacts

The proposed construction activities will affect approximately 1083 m^2 (0.27 acre) of coastal oak woodland. The necessary vegetation removal will reduce the available roosting habitat, shelter, and nutrient loading provided by the existing plants and trees. Oak woodland tree impacts are summarized in Table 2.7-3 below.

Table 2.7-3 Permanent Oak Woodland Impacts

Oak Woodland Species	Permanently Impacted Trees
Live Oak (*Quercus agrifolia*)	7

2.7.2.3 Avoidance, minimization, and compensation measures

In an effort to minimize impacts to the existing Oak woodland habitat, Caltrans will limit construction activities to the smallest area possible to complete the proposed work. A clear delineation of this limited construction area will be incorporated into the project plans and specifications. Environmentally Sensitive Area (ESA) fencing will be used to delineate protected areas and confine workers and equipment to the designated construction areas.

Caltrans will mitigate for the removal of all live oak trees larger than 6 inches diameter at breast height (DBH) at a 5:1 ratio as agreed upon by Fred Botti, CDFG liaison, during a site visit on April 5, 2004. Caltrans will prepare a mitigation plan to plant 35 replacement oak trees on-site along the new roadside, thereby buffering the riparian zone from SR 84.

2.8 Wetlands and Other Waters

Wetlands and water sources within the project limits were delineated using the 1987 Army Corps of Engineers (USACE) delineation manual. The ordinary high water for the creek has been verified by the USACE, however, verification of ephemeral tributaries to Alameda Creek is still in progress. Wetlands within the project area are typically small roadside drainage ditches along the roadway and near ruderal/disturbed habitat. However, larger tracts of wetlands can be found in association with riverine habitats. These tracts are known as fresh emergent wetlands and are characterized by rooted plants adapted to an aquatic or very a wet habitat. Areas of intermittent, seasonal inundation support only facultative wetland species, such as canary grass (*Phalaris sp.*), to more obligate plants such as sedges (*Carex sp*). Sites under more wet conditions within the

project area are able to support cattails (*Typa sp.*). See the Habitat Map in Appendix F or details.

2.8.1 Regulatory setting

Wetlands and other waters are protected under a number of laws and regulations. At the federal level, the Clean Water Act (33 U.S.C. 1344) is the primary law regulating wetlands and waters. The Clean Water Act regulates the discharge of dredged or fill material into waters of the United States, including wetlands. Waters of the United States include navigable waters, interstate waters, territorial seas and other waters that may be used in interstate or foreign commerce. To classify wetlands for the purposes of the Clean Water Act, a three-parameter approach is used that includes the presence of hydrophytic (water-loving) vegetation, wetland hydrology, and hydric soils (soils subject to saturation/inundation). All three parameters must be present, under normal circumstances, for an area to be designated as a jurisdictional wetland under the Clean Water Act.

Section 404 of the Clean Water Act establishes a regulatory program that provides no discharge of dredged or fill material can be permitted if a practicable alternative exists that is less damaging to the aquatic environment or if the nation's waters would be significantly degraded. The section 404 permit program is run by the USACE with oversight by the Environmental Protection Agency (EPA).

Executive Order 11990 for the protection of wetlands also regulates the activities of federal agencies with regard to wetlands. Essentially, this executive order states that a federal agency, such as the Federal Highway Administration, cannot undertake or provide assistance for new construction located in wetlands unless the head of the agency finds: 1) that there is no practicable alternative to the construction and 2) the proposed project includes all practicable measures to minimize harm.

At the state level, wetlands and waters are regulated by the CDFG and the RWQCB. Sections 1600-1607 of the Fish and Game Code require any agency that proposes a project that will divert or obstruct the natural flow of, or change the bed or bank of a river, stream, or lake to notify CDFG before beginning construction. A CDFG Lake or Streambed Alteration Agreement will be required for projects within the bed or banks of a stream or lake. CDFG jurisdictional limits are usually defined as the tops of the stream or lake banks, or the outer edge of riparian vegetation, which ever is wider. Wetlands under jurisdiction of the USACE may or may not be included in the area covered by a Streambed Alteration Agreement obtained from the CDFG.

The RWQCBs were established under the Porter-Cologne Water Quality Control Act to oversee water quality. The RWQCB also issues water quality certifications in compliance with Section 401 of the Clean Water Act.

2.8.2 Impacts

Two decidedly small areas of fresh emergent wetland are found within the project boundary (Appendix F). USACE has verified their jurisdiction of both these wetlands. Wetland A is located adjacent to Alameda Creek just to the west of Rosewarnes Underpass. The wetland is approximately 14 m (46 ft) long by 1 m (3 ft) wide. This wetland is inundated all year long due to a constant source of water draining from Wetland B, which is 11 m (35 ft) by 2 m (7 ft) wide and is located on the opposite side of SR 84. Wetland B is filled by a constant hillside seep, which then drains to a silted Caltrans drainage inlet, through a culvert that passses under SR 84 and then empties into Wetland A.

As a result of the proposed widening, Caltrans will completely fill wetlands A and B, a total area of 38 m^2 (0.01 acre). To address the drainage malfunction, Caltrans will replace the existing culvert that drains the seep from Wetland B with a new culvert.

2.8.3 Avoidance, Minimization and Compensation measures

The loss of wetlands will be compensated by replacing the habitat at a 2:1 ratio. The goal of the mitigation will be to create approximately 76 m^2 (0.01 acre) of fresh emergent wetland on-site. The newly created wetland which will be seeded with barley (*Hordeum vulgare*), bristly oxtongue (*Picris echiodes*), pennyroyal (*Hedeoma pulegloides*), and curly dock (*Rumex crispus*). Caltrans will monitor the wetland area for three years and send yearly reports to the permitting agencies. In the event that monitoring data indicate a lack of success, Caltrans will implement contingency measures.

2.9 Special Status Plant and Animal Species

Special status species for this section are defined as any plant or wildlife species present on the U. S. Fish and Wildlife Service (USFWS) species list for the Niles Quad (USFWS Reference # 1-1-03-SP-2424). A Natural Environment Study (September 2004) and Biological Evaluation (September 2004) were completed for this project.

Biological resources in the project area were evaluated based on record searches, field surveys, and habitat assessment. A comprehensive list of special status wildlife species

with the potential to occur in the project area was derived from the official list generated by the U.S. Fish and Wildlife Service (USFWS), a search of the California Department of Fish and Game Natural Diversity Database (CNDDB), and the California Native Plant Society (CNPS) inventory. Literature reviews and habitat assessment in the field resulted in a significant reduction in the number of species that have the potential to occur in the project area based on the presence of supporting habitat.

The resident rainbow trout (*Oncorhynchus mykiss*), California tiger salamander (*Ambystoma californiense*), Northwestern (*Clemmys marmorata marmorata*) and Southwestern (*Clemmys marmorata pallida*) pond turtles , and Alameda whipsnake (*Masticophis lateralis euryxanthus*) are found in the project area.

2.9.1 Regulatory Setting

The Federal and California Endangered Species Acts set forth extensive regulations and procedures to be followed when a plant or animal species is listed as either "Threatened" or "Endangered". These regulations are intended to avoid harm to such species and their habitat and, ultimately, to restore their numbers to where they are no longer threatened or endangered.

Studies conducted to evaluate biological resources in the project area were done in accordance with Section 7 of the Federal Endangered Species Act that preserves Federally listed species and designated critical habitats.

The California Fish and Game Code Section 3503.5 and the federal Migratory Bird Treaty Act (MBTA) of 1918 prohibit "taking" of all migratory birds, or their nests or eggs. This includes loss of fertile eggs or nesting migratory birds or any activities resulting in migratory bird nest abandonment. Any construction or disturbance to the area of nesting migratory birds could result in a "take".

2.9.2 Resident Rainbow Trout (*Oncorhychus mykiss*)

The resident rainbow trout is a proposed federally-threatened species (Federal Register, 2004). The resident rainbow trout of Alameda Creek live in streams and rivers throughout their entire lifecycle, they do not migrate out to sea like their anadromous counterparts (steelhead) due to impassable downstream barriers. Resident rainbow trout do, however, migrate up and downstream in search of food, refugia, and suitable spawning habitat. Resident rainbow trout lay their eggs in small to medium sized gravel beds. They are iteroparous, which means they are capable of spawning more than once in their lifetime, and spawning events are known to occur throughout the year.

Dr. Samuel McGinnis (California State University, Hayward), a USFWS-approved reptile and amphibian expert, did not find trout pairs during either of his two 2002 surveys in Alameda Creek.

2.9.2.1 Impacts

The proposed construction activities will not cause direct impacts to the resident rainbow trout. However, the removal of vegetation on one side of the creek may impose an indirect effect by temporarily reducing shading of the creek and reducing nutrient loading. The proposed revegetation of the stream bank and the subsequent maturing of the replanted trees and understory will reduce this effect. There is no closed canopy over the Niles Canyon stretch of Alameda Creek, which is, in part, why it is such suitable habitat for non-native fish species. The larger trees such as sycamores, live oaks, maples, bays, walnuts, and alders, grow farther up the bank of the creek and only provide shading during very high winter flows, when storm run-off is already cool. Furthermore, the replanted willows will mature quickly to provide the majority of the refugia and shading now existing at ordinary flow levels. Therefore, the loss of the mature trees is not expected to affect the resident rainbow trout.

Although the proposed widening will encroach into the riparian corridor, no permanent features will be constructed in the active channel below the ordinary high water mark of Alameda Creek. Because Alameda Creek flows at relatively consistent levels due to the regulation of the upstream dams, the new structures will only be inundated during storm flows. Accordingly, resident rainbow trout habitat reduction will only be of concern during periods of high flow. During such periods, the opposite side of Alameda Creek provides sufficient refugia for resident rainbow trout transiting the area.

The proposed shoulder widening will create an increased roadway surface area and thereby produce increased runoff into Alameda Creek. However, the proposed project is not capacity increasing. Therefore, the vehicle pollutant load entering Alameda Creek will not be augmented. Additionally, the improved safety features will prevent future collisions, thereby reducing the potential for spilled pollutants to enter Alameda Creek.

2.9.2.2 Avoidance Minimization and Compensation Measures

Caltrans has minimized the construction area to the smallest area needed to complete the project. As a first order of work, Caltrans will erect ESA fencing to ensure that no construction workers, debris, or equipment enter the surrounding aquatic environment.

The stream is to maintain its natural course throughout the duration of construction. Construction will occur during the dry season June 15- October 15, using coffer dams

where necessary to dry out workspaces. Water seeping into the workspaces will be pumped into baker tanks located outside the ordinary high water level to allow for sediment settling before being returned to the creek.

An on-site biological monitor will be present during the coffer dam installation to ensure that no resident rainbow trout fingerlings are impacted by the installation. Should a fingerling be encountered, a qualified biologist will flush the fish from the area of impact.

Before construction begins, the project site will be video taped to document the existing vegetation. The videotape will serve as an aid for the revegetation design and implementation. Stream banks will be regraded to their pre-construction contours and secured to prevent erosion. They will be replanted with native trees and understory plant species.

The existing willows will be cut at ground level to promote rapid regrowth. The flood-prone nature of Alameda Creek induces seasonal losses of vegetation during times of high flows. By cutting the existing vegetation at ground level, the temporal loss of habitat will mimic that of the natural losses that the resident fish populations are adapted. During the growth lag for the replanted willows, the heavily vegetated opposite bank will provide shade for stream cooling and fish thermoregulation during times of lower flows. Therefore, the rainbow trout will not be adversely affected by the temporary vegetation removal.

2.9.2.3 Special Enhancements

At the request of CDFG and National Oceanic and Atmospheric Administration/National Marine Fisheries Service (NOAA/NMFS), the existing reinforced box culvert draining Stonybrook Creek into Alameda Creek will be made fish passable. The new structure will provide capacity to meet storm requirements and facilitate Steelhead (*Oncirhyncus mykiss*) passage from Alameda Creek to Stonybrook Creek.

The proposed channel design includes a double box culvert and modification of 19 meters of the creek upstream of the new culvert inlet. The design also includes a berm at the culvert inlet so that under low to middling discharge, the right (west) barrel, facing downstream will receive all the creek flow. At higher discharges, equivalent to a 2-year or less frequent storm, flow will overtop the berm and enter the left barrel as well. The concrete culvert barrels are 2.44 m (8 ft) wide and 3.67 m (12 ft) deep. Suitable native fill material will be placed on the floor of both barrels at a depth such that the remaining interior dimensions will be approximately 2.44 m (8 ft) square.

The preliminary design includes five boulder weirs within the right culvert barrel and five additional weirs upstream of the culvert inlet. The upstream weirs are necessary to allow continuity with the existing creek conditions. The new culvert will be located such that its inlet is at a lower elevation than the existing culvert inlet in order to increase the culvert's hydraulic capacity. This results in a steeper slope approaching the culvert. The five additional upstream weirs will allow fish passage despite the slope increase.

Appendix G shows the two types of boulder weirs, one to be built inside the low-flow culvert barrel and the other to be built in the 19 m modified section of the creek upstream of the culvert. The design of both types was based on the existing weir boulder structures upstream and downstream of the culverts. All weirs will be composed of large boulders about 1 m (3 ft) in diameter placed in layers with the bottom layer acting as anchorage and the upper layer boulder keyed into the boulders beneath. Smaller rocks ranging in size from 0.3 to 0.8 m (1 to 2.5 ft) in diameter will also be placed among the larger boulders. The remaining part of the weirs will be composed of native fill materials, well-graded to withstand rapid surface flow. In addition, the areas between the weirs will be formed into pools so that migrating fish can rest after jumping each weir. The weir elevations will be established such that the jump from one pool to the next is never greater than 0.3 m (1 ft). The top layer of each weir will also include gaps of 0.2 to 0.5 m (7.9 to 19.7 in) between the boulders to ease travel from pool to pool.

Consultation with various resource agencies (CDFG, NOAA/NMFS) may result in a change to the proposed design.

2.9.3 California Tiger Salamander (*Ambystoma californiense*)

California tiger salamanders (CTS) are biphasic, spending ninety percent of their life upland and ten percent in the water. Females lay 400 to 1,300 eggs that hatch within two to three weeks of laying. Larvae feed on algae, small crustaceans, and mosquito larvae. At six weeks, the larvae eat tadpoles of the Pacific tree frog, California red-legged frog (CRF), western toad and spadefoot toad, as well as aquatic invertebrates. Adults and juveniles disperse up to 670.6 m (0.42 mi) from their ponds.

Adults feed on earthworms, small invertebrates, and vertebrates. They can travel up to 50.8 m (166.6 ft) in one hour. The average CTS breeds between four to six years of age and less than fifty percent breed more than once. The breeding season is December through April. Average lifespan for CTS is 10 years. They follow the same migration route every year.

The CTS prefers cool, wet winters and hot dry summers. Breeding habitat consists of bodies of water that fill in winter and dry by summer, such as vernal pools, seasonal and stock ponds, and roadside ditches.

2.9.3.1 Affected Environment

The CNDDB map shows a CTS occurrence in a stock pond high on the south wall of Niles Canyon, over 2.4 km (1.5 mi) away from the project site. According to the Federal Register (2003), "Adult California tiger salamanders may migrate up to 2 km (1 mi) from their aestivation sites to the breeding ponds" (Sweet, 1998).

Dr. McGinnis has found CTSs in ponds and associated side pools of Arroyo Del Valle Creek in the Pleasanton/Livermore area. Arroyo del Valle eventually flows into Alameda Creek, however the juncture is located over 16 km (10 mi) upstream of the canyon from the proposed project site. Wandering CTS individuals moving down Alameda Creek would be exposed to predatory fish, therefore Dr. McGinnis argues that a CTS occurrence within the project is not possible.

2.9.3.2 Impacts

The CTS is not known to occur within the proposed project area. Therefore, impacts to individuals or populations are not expected to occur as a result of the construction of this safety project.

2.9.4 Northwestern (*Clemmys marmorata marmorata*) and Southwestern (*Clammys marmorata pallida*) Pond Turtles

The western pond turtles are moderate sized (120-210 mm, 4.7-8.3 in), drab brown or khaki colored turtle lacking any prominent markings on its carapace. It is an aquatic turtle, yet leaves the water to reproduce, aestivate, and overwinter. Recent fieldwork has found that not all pond turtles overwinter on land. Some remain active in water during winter, but the pattern varies considerably with latitude and habitat type and is still not well understood. Activity greatly increases when water temperature consistently reaches over 15 degrees Celsius. Therefore, it is possible for western pond turtles to be active year-round along the central and southern coast of California, compared to interior locales or higher latitudes where the western pond turtle becomes active in March or April and overwinters beginning in October or November. Western pond turtles are California species of concern.

2.9.4.1 Affected Environment

Dr. McGinnis did not observe western pond turtles during his 2002 survey of the proposed project area. However, during a survey for a Caltrans project 1.6 km (1 mi) upstream, he observed a western pond turtle leaving a shallow gravel shore area. Suitable habitat does exist within the project vicinity. Their preferred habitat includes ponds or slow moving bodies of water.

2.9.4.2 Impacts

The proposed project will cause temporary impacts to approximately 3010 m^2 (1.87 mi^2) of potential turtle habitat and permanent impacts to approximately 4750 m^2 (2.95 mi^2) of potential turtle habitat. The presence of a biological monitor will ensure that construction activity does not cause direct impacts to any turtles.

2.9.4.3 Avoidance, Compensation and Minimization Measures

The proposed construction zone has been confined to an area necessary for the completion of the project. Caltrans will designate areas not needed for construction as environmentally sensitive areas (ESAs) and mark them with ESA fencing. Construction personnel, equipment, or debris will not be allowed within the ESA.

Coffer dams will be used to dry out work spaces and to prevent disturbance to the surrounding aquatic environment. The creek will not be contained and will maintain its natural flow throughout the duration of the construction.

An onsite biological monitor will be present during the initial ground disturbing activities to remove wildlife encountered from the construction zone. If a turtle is found, the biological monitor will remove the turtle from the construction zone immediately.

2.9.5 Alameda Whipsnake (*Masticophis lateralis euryxanthus*)

The Alameda whipsnake (AW) is typically found in northern coastal scrub, coastal sage scrub and chaparral plant communities, but may also occur in adjacent grasslands and oak and oak/bay woodlands. Optimal habitat for this snake is characterized by southern facing slopes with open-canopy stands, woody debris, and exposed rock outcroppings. This fast moving diurnal predator holds its head high off the ground to peer over rocks and vegetation while pursuing its prey. Its diet consists of lizards, small mammals, snakes, and nesting birds.

AWs can occupy home ranges varying in size from 1.9 to 8.7 hectares (ha) (5.0 to 21.5 acres) and often times overlap with other AWs. They breed from March through June,

and females will lay clutches of 6-11 eggs May through July. The young hatch and emerge in late summer to early fall.

2.9.5.1 Affected Environment

Dr. McGinnis finds that the open canopy coastal scrub and occasional rock outcrops on the steep southeast facing immediately northwest of the project site represent the preferred habitat of the AW (Swaim and McGinnis, 1992). The significant number of the northern fence lizards, the principal prey of the AW, found within the area further substantiates the possibility of the presence of the AW on the steep south-facing slope just north of the proposed widening.

To date, no trapping surveys for the AW have been conducted in Niles Canyon. Records from the CNDDB show AW occurrence from the immediate watershed area of Alameda Creek in Sunol Regional Park and further upstream at the Camp Ahlone staging area. Dr. McGinnis has also documented populations at the current Walpert Ridge development site, at the northern border of Garin Regional Park adjacent to the California State University Hayward campus, and near the border of the Dry Creek Regional Park.

Dr. McGinnis believes that due to the unbroken extent of the main north-south ridge of the Inner Coast Range between Hayward and Niles Canyon, AW likely exists throughout the area, including the north wall of Niles Canyon. However, for the AW to gain access to the north bank of Alameda Creek within the extent of the proposed project, it would have to cross the heavily traveled SR 84, which fragments the riparian and upland habitat in Niles Canyon and creates a migration barrier to AW movements.

During a phone conversation on June 26, 2004, Dr. McGinnis explained that the AW is a very wary snake and would not venture out into an open area to cross SR 84. The AW is also very sensitive to movements and would retreat from passing vehicles. Dr. McGinnis stated that the AW is not a nocturnal snake and that it would be most active during the warm hours of the day when traffic volumes would be highest on SR 84. Therefore, AW is not expected to occur on the south side of SR 84.

2.9.5.2 Impacts

The proposed widening will cause permanent impacts to 182.9 m^2 (0.05 acre) of potential AW habitat of very steep coastal scrub. The area is disturbed by railroad tracks that run adjacent to the parcel. Given the enormous slopes of open canopy coastal scrub available throughout Niles Canyon, the parcel in question is a decidedly insignificant and non-essential portion of the AW habitat complex available in the canyon.

2.9.5.3 Avoidance, Minimization and Compensation Measures

As mentioned before, the construction zone has been minimized to the smallest area possible and all other areas will be designated as ESAs and cordoned with ESA fencing. Construction personnel, equipment, or debris will not be allowed within the ESA.

AW is not expected to occur on the creek side of SR 84 where the majority of the widening will take place. Although the AW prey species, the northern fence lizard, is present along the creek, SR 84 acts as a migration barrier to any snakes attempting to cross the road in search of food (McGinnis phone conversation, 2004).

A small amount of work will be completed on the south-facing slope to avoid a cultural resource on the creek side of SR 84. A retaining wall will also be built, approximately 45 m (136 ft) long and ranging in height from 1.2 m (4 ft) to 9 m (30 ft.) This work area has been confined to the smallest area possible to complete the needed work.

Prior to the initiation of upslope construction, Caltrans will provide an on-site biological monitor to ensure that no AW are present within the 182.9 m^2 (0.05 acre) construction zone.

2.9.6 Little Willow Flycatcher (*Empidonax traillii brewsteri*)

The little willow flycatcher is a federal species of concern. They nest in thickets of low, dense willow that edge wet meadows, ponds, and backwaters.

2.9.6.1 Affected Environment

Marginal habitat exists for the little yellow flycatcher within the biological study area. Higher quality habitat for the species is located outside the study area. If present, the species is expected to be transient within the project vicinity.

2.9.6.2 Impacts

Through the successful implementation of avoidance and minimization efforts, the project will have no impact on the species.

2.9.6.3 Avoidance, Compensation and Minimization Measures

Qualified biologists will conduct a pre-construction nest survey prior to the start of construction. If nests are found, they will be protected.

2.9.7 Migratory Bird Treaty Act

If construction is scheduled during the nesting season, which extends from January through August for most migratory birds in the San Francisco Bay Area, pre-construction

bird surveys will be conducted by a Caltrans biologist before work begins. If the biologist determines that migratory birds are nesting within the zone of potential disturbance, then construction should be rescheduled to avoid the nesting season. If it is not possible to schedule construction to occur between September and the end of December, then the biologist, in consultation with the CDFG, shall determine the extent of a buffer zone (typically 76 m or 250 ft). No work will be allowed within the buffer zones, but work can proceed in all other areas.

An alternate measure would be to allow vegetation removal only during the non-breeding season (September – mid-January). This measure would avoid potential impacts to nesting migratory birds during breeding season. This measure is preferable to pre-construction surveys during the breeding season.

2.10 Hydraulics

A draft Hydraulic Evaluation was completed in December 2004 to determine flooding, erosion, and scour potential as a result of the project's roadway encroachment on Alameda Creek.

2.10.1 Affected Environment

Preliminary impacts to Alameda Creek were evaluated within and upstream of the project limits. An evaluation of Stonybrook Creek flow conditions upstream of the box culvert crossing under SR 84 is still in progress.

Flood conditions were estimated for existing and proposed project conditions during the 2-, 10-, 25- and 100-year flood events from 500 m downstream of the Rosewarnes Underpass to about 580 m upstream of the Farwell Underpass.

Potential impacts to channel stability, erosion, and scour were also evaluated. The calculated channel flow velocity at each cross section was used to develop the critical particle size required for onset of motion to develop a preliminary evaluation of potential erosion in the creek channel.

2.10.2 Impacts

General Flooding Conditions in Alameda Creek

In general the flood boundaries for various floods are not substantially different under the existing and proposed project conditions.

Two-year flood levels remain contained within the creek channel without overtopping the road surface under both existing and proposed conditions. For the 10-year flood, the estimated water surface elevations for existing and project conditions would over top the road surface at Rosewarnes Underpass and just downstream of Farwell Underpass. A 0.9 m (36 inch) barrier is proposed at these two locations to contain 10-year flood within the creek and prevent it from overtopping the roadway. For the 25-year and 100-year floods, the estimated water surface elevations would overtop the road surface more frequently and to a greater depth. The 100-year flood will overtop almost all the whole study reach except for a few localized spots.

2.10.3 Rosewarnes Underpass Improvement Reach

Flood Levels

The calculated flow depths and water surface elevations at Alameda Creek with this project built, will be lower than those under existing conditions between the downstream limit of the project to about the east (upstream) end of the bridge pier on SR 84 between Stations (Sta.) 430 and 575 (See Appendix H for Hydraulic Evaluation Station Map). Encroachment of the roadway towards the creek, results in sections of the creek becoming narrower and water surface elevations then become higher than those under existing conditions from Sta. 580 to the upstream side of the railroad underpass due to the backwater effect from the roadway encroachment. The study indicates that the backwater effect will extend farther upstream as the flood magnitude increases. A lower water section was shown near Sta. 650 and 660 for the 100-year flood, is probably due to the wider section at this location compared to those under existing conditions. The increased flood levels with the project for the 2- to 100-year floods are considered minimal and do not have a measurable impact on the water surface elevations upstream of the project.

Flow Velocity

Calculated channel flow velocities from Sta. 430 to 700 will generally be higher with the project. The more pronounced velocity increases are in the reach from Sta. 510 to 580 where the road widening actually starts and reaches a maximum at about Sta. 580. The road widths are then gradually reduced to the existing road width. The flow velocity could also be decreased within this reach, and the locations are varied according to the magnitudes of the floods. The flow velocity under the build condition will generally be lower than for existing conditions, from about Sta. 700 and extending up to the extent of the backwater effect. The increases in channel flow velocity under project build condition appear to be less for the larger floods, probably because a larger percentage of flood flow would be conveyed above the road surface.

Erosion and Scour

Long-term aggradation and degradation within the project reach is controlled by the downstream weir at the USGS gage station and the upstream diversion weir. Consequently, the long-term aggradation and degradation within the project reach is expected to be minimal. The narrowing of the cross sections at certain locations would result in higher channel flow velocity than under existing conditions, and may cause more contraction scour than under existing conditions. Local scour at the railroad bridge piers may not be significantly different since the creek cross-section at the pier locations does not appear to differ significantly between the existing and project build conditions.

Potential for scour near the center pier of the Rosewarnes Underpass (about Sta. 610) are about the same for existing and proposed project. The effect of the project on the local scour at the bridge pier is negligible.

The higher channel velocity due to the project will result in erosive force on the channel bed and may change the meander of the creek. Within part of the limits of the project, the higher flow velocities will be able to move a larger median particle size than under existing conditions. The size ranges are from 9mm to 27mm for 2- to 100-year flood events, respectively.

2.10.4 Farwell Improvement Reach

Flood Levels

The backwater effects due to the improvements at Rosewarnes Underpass will only extend up to about Station 1320 for the 100-year flood. The backwater effect from the Rosewarnes improvement reach will not affect the creek upstream of the Farwell improvement starting at Sta. 1380.

Increases in water surface elevation are less than 4.5 percent of channel flow depths under the 10- to 100-year floods. These increases in flood levels do not affect the extent of the overtopping area and are considered minor and will not have a measurable impact on the water surface elevations upstream of the project limit.

Channel Flow Velocity

Below the diversion weir at Sta. 1477, project improvements are not expected to increase flow velocities above 6 percent compared to existing conditions for the 2- to 100-year floods. Above the diversion weir, flow velocities are not expected to exceed 4.5 percent above existing conditions. These increases appear negligible.

Erosion and Scour

Since there appears to be no encroachment under the project condition improvements, potential scour at Farwell Underpass (about Sta. 1855 to 2000) will be relatively unchanged for existing and project conditions.

The current low flow channel pattern on Alameda Creek near the Farwell improvements indicates that the channel is migrating toward the road embankment upstream of the existing diversion weir structure. The higher channel flow velocity may cause a slight increase in channel bed erosion in this area. The proposed retaining wall in this improvement reach will have a foundation deep enough to avoid undermining the roadbed.

2.10.5 SFPUC Proposed Removal of Existing Diversion Weir (Niles Dam)

The San Francisco Public Utilities Commission (SFPUC) plans to remove the existing diversion weir at Sta. 1477. Our studies indicate that this structure is eligible for inclusion in the National Register of Historic Places and have therefore designed this highway safety project to not impact the weir. However, the backwater effect (flooding) was evaluated in the event that plans to remove the weir by the SFPUC are implemented.

It was found that Caltrans' improvements to SR 84, either with or without the existing diversion weir structure, will result in backwater converging at about Sta. 1810, about 340 m upstream from the existing diversion weir. Flow conditions beyond Sta. 1810 will not be affected by the removal of the diversion weir. The elimination of the diversion weir will probably not affect the tailwater condition at the outlet of the Stonybrook Creek culvert. The water surface elevations upstream of the project limits should not be affected by the elimination of the diversion weir as well.

2.11 Construction Impacts

2.11.1 Air Quality

During construction, the proposed project would generate air pollutants, including hydrocarbons, nitrogen oxides, carbon monoxide, and particulates. Most of the pollution will consist of wind-blown dust generated by excavation, grading, hauling, and various other activities. The impacts from the above activities would vary from day to day as construction progresses. The Environmental Protection Agency (EPA) considers construction impacts to be temporary and unavoidable. Caltrans Standard Specifications and Special Provisions for construction contracts include dust control measures.

Section 51.454 (g) of the Clean Air Act Amendments states that carbon monoxide and PM10 hot spot analyses are not required to consider construction-related activities which cause temporary increases in emissions. Each site, which is affected by construction related activities, shall be considered separately, using established "Guideline" methods. Temporary increases are defined as those that occur only during the construction phase and last five years or less at any individual site. It is estimated that construction will be completed in less than five years.

The Special Provisions and Standard Specifications will include requirements to minimize or eliminate dust through the application of water or dust palliatives.

2.11.2 Temporary or Periodic Increase in Ambient Noise Levels

Construction activities for the proposed project could result in noise levels greater than the existing noise levels. Since construction activities would move around the respective project areas as construction proceeds, it is unlikely that any one location would experience high noise levels continuously for extended periods of time.

Construction noise is unavoidable and could adversely affect some nearby members of the public during daytime hours. However, the impact would be temporary and limited to the time of the construction in any one location.

Caltrans Standard Specifications for construction contracts include the following noise abatement measures to minimize construction noise impacts:

- All construction equipment shall be required to conform to the provisions in Section 7-1.01I of the latest edition of Standard Specifications to minimize noise from construction activities, such as maintaining equipment mufflers in proper operating order.

- The contractor shall comply with any local noise ordinances.

2.11.3 Traffic, Transportation and Bicycle

Since SR-84 is a narrow 2-lane winding road, construction will require the closure of one or both lanes along the project limits and it is possible that motorists/bicyclists would be detoured. All efforts will be made to minimize lane closures or detours to reduce impacts to the traveling public. Night-time work and lane closures can be expected during construction. Flaggers and message signs may be used to warn travelers of anticipated delays or closures. These issues will be addressed in the Traffic Management Plan

(TMP) to be developed prior to construction. These impacts are considered temporary and not significant.

2.11.4 Water Quality

Please see Water Quality (section 2.6.4.2) for temporary construction impacts.

2.12 Cumulative Impacts

In compliance with NEPA and CEQA requirements, this cumulative effects section identifies past, present, and reasonably anticipated future projects that could result in cumulative impacts on resources (e.g., wetlands and cultural resources) and traffic-related impacts (e.g., noise and air quality). The analysis considers other Caltrans projects and projects proposed by other outside agencies and developers.

Other planned or recently completed transportation improvement projects in the vicinity of this project include the following projects:

- Route 84 Alameda Creek Bridge and Overhead Retrofit (BR 33-0039)
  This project was a seismic retrofit of a 14-span, reinforced concrete box girder bridge. The project was completed in January 2005.

- Route 84 Safety Improvements between Palomares Road and I-680
  This project is in the planning phase and has not yet been funded. The project is a continuation of the work proposed in this document to increase safety by shoulder widening and increasing sight distance.

- Route 84 Alameda Creek Bridge (BR 33-0036) Replacement
  This project proposes to replace the existing two-lane bridge, just north of the Palomares Road intersection on Route 84. The structure crosses over the Union Pacific Railroad tracks and the Alameda Creek

- San Francisco Public Utilities Commission (SFPUC) Fish Passage Project –Niles Dam Removal
  The SFPUC proposes to remove barriers to fish passage along Alameda Creek, once a migration route for breeding anadromous fish. Within the project limits, the SFPUC plans to remove the Niles dam.

Aesthetics

The riparian and oak trees to be removed by the SR 84 Safety Project would have some degree of visual impact, both positive and negative. Tree removal can provide new interesting views to the historic railway trestles and Alameda Creek. Vegetation that is damaged or removed as a result of the project will be replaced. An aesthetic treatment on the face of the retaining wall is proposed to make it compatible with the surrounding rural landscape. Therefore, there are no cumulative impacts.

Biological Resources

Permanently impacted Oak trees (6 DBH or greater) will be replaced at a 5:1 ratio. Permanently impacted wetlands will be replaced at a 2:1 (replaced to impacted) area ratio.

Caltrans will replace temporarily impacted riparian vegetation in-kind following the removal of the construction work zone and its return to pre-construction grades.

Caltrans will also replace permanently impacted riparian trees at a 3:1 ratio. The CDFG and SFPUC approved an area upstream of the project limits, east of SR 680, to implement any replacement planting that cannot be accommodated onsite.

No determinations of likely to adversely affect were made for biological resources.

Considering these compensation measures, it is determined that there are no cumulative impacts to biological resources.

Cultural Resources

The Vallejo Mills/Spring Valley water conveyance system was found eligible for the National Register of Historic Places. While the project was designed to physically avoid impacting this historical resource, precautionary measures will be taken including monitoring by a qualified archaeologist and a Caltrans cultural resource specialist. If required, incorporation of other construction features to reduce potential vibration effects would minimize the potential unforeseen impacts to the Vallejo Mills site.

The Route 84 Safety Improvement Project includes provisions for assessing and mitigating unanticipated cultural resources uncovered during construction. Therefore, there would be no cumulative impacts on historic or archaeological resources as a result of the proposed project.

Hazards and Hazardous Materials

During construction a limited amount of fueling and maintenance of equipment would likely occur on site. Transport, storage, handling, and use of fuels, lubricants, and other chemicals at the site could create the potential for accidental release of hazardous materials. These potential impacts would be minimized by the implementation of a spill and pollution prevention plan and appropriate health and safety training for construction workers who may be exposed to hazardous materials during excavation activities. If encountered, impacted soil will be removed and disposed of appropriately and in accordance with State and local regulations. Preliminary soil sampling will be conducted to evaluate the potential for aerially deposited lead within the project area and any soil generated during construction would be subject to the soil reuse variance issued by Cal/EPA, Department of Toxic Substances Control. With the implementation of these measures, any impacts related to hazardous materials would be localized in extent and quickly remediated. Therefore, there would be no cumulative impacts.

Hydrology

Changes to flood levels, channel flow velocity, and erosion and were found to be less than significant. Therefore no cumulative impacts are expected.

Water Quality

Water quality could be impacted in a variety of ways as a result of construction activities, storm water runoff, and spills of hazardous materials. To avoid and minimize these effects the contractor will implement Best Management Practices (BMPs) for dewatering, spill prevention, material management, and sediment control during the construction period. Compliance with the Caltrans NPDES permit and adherence to erosion control measures included in Caltrans Standards and Specifications would reduce or eliminate potential construction-related impacts. Design Pollution Prevention and Treatment BMPs, if feasible, would be incorporated into the project to improve water quality or reduce the discharge of pollutants. Each of the other projects considered in the cumulative analysis would also include Construction and Design Pollution and Prevention BMPs, thereby minimizing any cumulative impacts.

Transportation/Traffic

Traffic caused by construction of the project would be temporary in nature. The improvements in this Safety Project will not increase capacity of the highway nor will it change the pattern of traffic. Therefore, there would be no cumulative impacts related to traffic.

Chapter 3 Comments and Coordination

Early and continuing coordination with the general public and appropriate public agencies is an essential part of the environmental process to determine the scope of environmental documentation, the level of analysis, potential impacts and mitigation measures and related environmental requirements. Agency consultation and public participation for this project have been accomplished through a variety of formal and informal methods, including: project development team meetings, interagency coordination meetings, and correspondence with other interested parties. This chapter summarizes the results of the Department's efforts to fully identify, address and resolve project-related issues through early and continuing coordination.

3.1 Coordination

3.1.1 Biological Resources Coordination

A Caltrans biologist met with Fred Botti of the CDFG April 5, 2004 for a field review of the proposed improvements and anticipated impacts. Mr. Botti suggested the oak trees removed greater that six inch DBH should be replaced at a 5:1 ratio. A mitigation plan to replant the oak trees on-site along the new roadside will be developed to buffering the riparian zone from SR 84.

Caltrans personnel also met with Tim Koopman of the SFPUC regarding potential mitigation opportunities on SFPUC land also in February 2005.

Phone conversations include the following people:

- Dan Buford, USFWS. February, 2004. Status of the riparian brush rabbit in Niles Canyon.
- Tim Koopman, SFPUC. April 2004. Effect of tree removal on watershed and resident fish.
- Dr. Sam McGinnis, California State University Hayward. June and August 2004. Status of the Western Pond Turtle and Alameda Whipsnake in Alameda Creek, and impact potential on resident fish populations.

3.1.1.1 Section 7 Consultation with the U.S. Fish and Wildlife Service

Caltrans submitted a biological evaluation to the U.S. Fish and Wildlife Service on November 3, 2004 requesting concurrence that the proposed project is not likely to adversely affect the California red-legged frog, Alameda whipsnake, and California tiger

salamander. The Service responded January 27, 2005 requesting additional information (see Section 3.2.1) prior to making a determination. This information is being developed and will be provided. It is expected that the ongoing ESA Section 7 informal consultation will conclude with the USFWS concurring with our finding that the project may effect, but is not likely to adversely affect listed species. If the USFWS does not concur, then Caltrans and FHWA will proceed to formal consultation with the USFWS.

3.1.1.2 Section 7 Consultation with NOAA-NMFS

Caltrans representatives met February 9, 2005 with Gary Stern, National Marine Fisheries Service (NMFS) to discuss the fish passage at Stonybrook Creek. Mr. Stern provided written comments (dated March 10, 2005) on the proposed conceptual design, which was followed-up with a phone conference with Caltrans staff to clarify his comments and further discuss the proposed design. Once the design is finalized to NMFS's satisfaction, a biological assessment will be submitted to initiate formal consultation under Section 7 of the Endangered Species Act. It is expected consultation will conclude with a finding that the project is likely to adversely affect resident rainbow trout. However, because of the Stonybrook Creek culvert replacement element, the project is expected to have an overall beneficial effect on the species.

3.1.2 Historical Resources Coordination

Coordination with a variety of agencies and individuals was conducted in the course of preparing the technical documents for historical resources. Written correspondence include letters between Caltrans, the Federal Highway Administration, and the State Historic Preservation Office (SHPO) regarding the eligibility of cultural resources within the project area as either eligible or ineligible for the National Register of Historic Places. In a letter dated November 30, 2004, SHPO (see letter in Section 3.2.3) concurred with the finding of eligibility of two historic properties. These properties include the Niles Canyon railroad and its two contributing bridges known as Dresser railroad bridge and Farwell railroad bridge, and the Vallejo/Spring Valley water-conveyance system.

When the finding supports eligibility of historic properties, a finding of effect is written to determine if the project is going to adversely affect or harm the resource. An FOE has been written with the determination of no adverse effect and is currently being reviewed by SHPO for concurrence.

Letters were also sent to municipal and county authorities as well as historic society/preservation organization to identify properties that are historically or architecturally significant in the project area. These organizations include: Alameda

County Historical Society, Amador-Livermore Valley Historical Society, Museum of Local History - Fremont, Hayward Area Historical Society and Museum, Mission Peak Heritage Guild, Niles Depot Historical Foundation, and Washington Township Historical Society.

Other correspondence includes letters between Caltrans, the Native American Heritage Commission, and Native American tribe representatives requesting information regarding the presence of Native American cultural resources in the project area. Copies of the correspondence are included in the Historic Property Survey Report (November 2004). Phone conversations and separate meetings also occurred in October 2003 between Caltrans personnel and representatives of the Museum of Local History in Fremont and the Pacific Locomotive Association.

3.1.3 Niles Dam Removal

Ongoing coordination continues with the SFPUC concerning their project to remove barriers to fish passage along Alameda Creek. Within the project limits, the SFPUC plans to remove the Niles Dam, which is found to be eligible for the National Register of Historic Places by the SHPO. Although this SR 84 Safety project was designed to avoid this cultural resource, ongoing coordination with the SFPUC will ensure that the Niles dam removal will not have an effect on the SR 84 project improvements.

3.1.4 Eligibility for State Scenic Highway Status

The segment of SR 84 which includes this project, is eligible for official designation as a State Scenic Highway. Alameda County is currently preparing a formal nomination package seeking State Scenic Highway designation for this Route. Contact with Alameda County Planning staff (Lisa Asche) has been established to follow the status of their efforts for Scenic Highway Designation and they will be included in the distribution of this document to the public.

3.2 Correspondence letters

3.2.1 USFWS letter dated 1-27-05

United States Department of the Interior
FISH AND WILDLIFE SERVICE
Sacramento Fish and Wildlife Office
2800 Cottage Way, Room W-2605
Sacramento, California 95825-1846

IN REPLY REFER TO:
1-1-05-I-0139

JAN 2 7 2005

Mr. Jeffrey G. Jensen
District Office Chief
California Department of Transportation
P.O. Box 23660
Oakland, California 94623-0660

Dear Mr. Jensen

Subject: Response to Request for Concurrence with Not Likely to Adversely Affect Determination on the Proposed State Route 84 (Niles Canyon) Safety Widening Project in Alameda County, California

We have reviewed your request, dated November 3, 2004, for our concurrence with your determination that the California Department of Transportation's (Caltrans) proposed State Route (SR) 84 Widening Project in Alameda County, California is not likely to adversely affect the threatened California red-legged frog (*Rana aurora draytonii*) (red-legged frog), the threatened Alameda whipsnake (*Masticophis lateralis euryxanthus*) (whipsnake), and the threatened California tiger salamander (*Ambystoma californiense*) (tiger salamander). Included with your request for consultation was the *Biological Evaluation for the State Route 84 Niles Canyon Safety Widening Project*, prepared by Caltrans and dated September 2004 and the *Status of Several Aquatic and Terrestrial Special Status Vertebrate Species Within and Adjacent to the Areas Proposed for Road Realignment and Shoulder Widening of Route 84 and Palomares Road, PM 12.1 to 13.3, Niles Canyon, Alameda County, California*, prepared by Samuel M. McGinnis and dated September 30, 2002. Your request was received in our office on November 8, 2004. Our response is in accordance with the Endangered Species Act of 1973, as amended (16 U.S.C. 1531 *et seq.*) (Act).

The proposed project is located on SR 84 between the Rosewarnes Underpass and the Farwell Underpass in Niles Canyon. This section of SR 84 is an undivided, two-lane rural highway with narrow shoulders on a typically curving horizontal alignment through rolling terrain. Caltrans has determined that safety improvements are needed on this section of SR 84 due to higher than average accident rates. The proposed project would 1) improve sight distance and vertical clearances at the Rosewarnes Underpass and the Farwell Underpass; 2) widen existing shoulders to current standards; 3) relocate the Palomares Road/SR 84 intersection approximately 24 meters to the south; 4) construct retaining walls at the Rosewarnes Underpass site, on both sides of the existing roadway at selected locations within the project site, and at the realigned Palomares Rd/SR 84 intersection; and 5) provide a northbound left turn pocket on SR 84 at Palomares Road.

TAKE PRIDE IN AMERICA

The project site is located within red-legged frog proposed critical habitat. The California Natural Diversity Database (CNDDB) documents four occurrences of red-legged frogs within 2.7 miles of the project site. Two occurrences are located within 1.25 miles of the project site near a drainage to Alameda Creek. Alameda Creek parallels the entire project section of SR 84. Stonybrook Creek is located adjacent to Palomares Road which will be realigned as part of the proposed project. The Service believes that Alameda Creek, Stonybrook Creek, and surrounding uplands likely provide suitable habitat for the red-legged frog and possibly the tiger salamander. Though surveys failed to detect red-legged frogs along Alameda Creek adjacent to the project site, the Service believes their presence in Alameda Creek is likely due to nearby documented occurrences of red-legged frogs and the presence of suitable habitat. No surveys for red-legged frogs were conducted in Stonybrook Creek. Predatory fish and bullfrogs have been documented in Alameda Creek, though the presence of these species does not necessarily preclude the presence of red-legged frogs or tiger salamanders, particularly dispersing individuals. CNDDB records document four occurrences of tiger salamanders within 3.0 miles of the project site. Suitable habitat for this species may exist in and along Alameda Creek and Stonybrook Creek, either in aquatic habitat or suitable upland habitat. The biological evaluation did not address whether suitable aestivation habitat is present in the project area.

The project site contains suitable habitat for whipsnakes including the presence of coastal scrub and rock outcroppings on the steep southeast facing slopes along Niles Canyon according to the report prepared for the project by Dr. Samuel McGinnis. According to CNDDB records, the closest documented occurrence is near Walpert Ridge, approximately 5.1 miles from SR 84. An abundance of coastal scrub is present between Walpert Ridge and the proposed project site, providing a continuity of suitable habitat between Walpert Ridge and the project site. The proposed project would result in the removal of approximately 0.04 acres of coastal scrub habitat.

Therefore, pursuant to 50 CFR §402.13, based on the information provided with the request for consultation, we do not concur that the State Route 84 Widening Project is *not likely to adversely affect* the threatened red-legged frog, the threatened whipsnake, and the threatened tiger salamander. The information we have received is not sufficient to thoroughly assess the potential impacts to red-legged frogs, tiger salamanders, and whipsnakes from the proposed project. To complete the initiation package, we require the following information:

- A more detailed project description which includes revised maps or drawings that show the existing right-of-way as compared to the proposed right-of way, location of the proposed retaining walls, and location of the road realignment at Palomares Road. The project description should quantify the amount of upland, riparian, and scrub habitat that may be lost as a result of the proposed project.

- Photographs of the habitat types present in the project area (including upland, riparian, and scrub) and photographs of Alameda Creek and Stonybrook Creek.

- An evaluation of the extent of potential aestivation, breeding (including nearby stock ponds), and dispersal habitat for red-legged frogs and tiger salamanders in the project area.

- A more detailed effects analysis.

In addition to the above information, based on our evaluation of the information provided in the request for consultation, the Service has determined that suitable habitat is present for red-legged frogs, tiger salamanders, and whipsnakes in the project site and vicinity of the project site. Therefore, we recommend the incorporation of additional conservation measures for these species. Additional conservation measures should include those proposed in the report prepared by Dr. Samuel McGinnis, including the installation of exclusion fencing.

If you have further questions regarding this letter, please contact Mary Hammer or the Coast Bay Delta Branch Chief at (916) 414-6625.

Sincerely,

Catrina Martin
Deputy Assistant Field Supervisor

3.2.2 NOAA/NMFS letter dated 3-10-2005

UNITED STATES DEPARTMENT OF COMMERCE
National Oceanic and Atmospheric Administration
NATIONAL MARINE FISHERIES SERVICE
Southwest Region
777 Sonoma Ave., Room 325
Santa Rosa, CA 95404-6528

March 10, 2005 In response refer to:
151422SWR05SR00130:GRS

Mr. Ron Kiaaina, P.E.
Project Manager
California Department of Transportation
District 4
P.O. Box 23660
Oakland, California 94623-0660

Dear Mr. Kiaaina:

Thank you for the opportunity to meet with you and your staff regarding fish passage in Stonybrook Creek, Alameda County, California. The California Department of Transportation (Caltrans) is proposing a roadway improvement project for Highway 84 in Niles Canyon. The project will involve replacing the culvert for Stonybrook Creek under Highway 84. Mr. Gary Stern of NOAA's National Marine Fisheries Service (NMFS) met with you and your staff on February 9, 2005, at the project site to review a conceptual design for fish passage improvements. NMFS offers the following comments on the proposed conceptual design:

1) The proposed culvert design is a reinforced concrete double box culvert. The double culvert design creates several problems. First, the culvert barrel with weirs for fish passage empties into a pool which immediately encounters a reinforced rock wall. Hydraulic conditions at the culvert exit will be complicated by flows bouncing off this wall. Attraction flows for upstream migrating adult steelhead may be compromised by the need for creek flow to turn at this wall. Secondly, immediately upstream of the culvert a flow control weir restrict flows into the second (left) barrel of the culvert. This weir will block upstream migrating adults that pass through the left barrel. Sediment may also deposit at the top of the right culvert barrel opposite the weir. A single barrel culvert avoids these problems and is recommended.
2) Weirs inside the culvert do not need to be rock. Concrete offers greater better stability and less variability.
3) Weir crests should have a cross slope with a notch to concentrate low flows.
4) Rock weirs in Stonybrook Creek upstream of the culvert should span the entire creek width.
5) The right stream bank immediately upstream of the culvert is unstable and eroding. Existing trees on this bank are endangered of toppling. Failure of this slope could

damage the project, lead to large amounts of debris in the culvert and other problems. It is recommended that this bank be stabilized with bioengineering. With stabilization the trees, soil and bank are likely to remain in place and ensure the successful operation of this fish passage structure. Drainage on the driveway on top of the bank may also need to be improved to maintain a stable bank.

6) The removal of several large trees at the downstream end of the culvert is proposed due to the widening of the roadway. Loss of these trees should be mitigated through re-planting on-site and can also be mitigated by taking actions to preserve the large trees on the right bank immediate upstream of the culvert (see item #5 above).

Thank you for the opportunity to comment on the conceptual design for this project. Please provide my staff an opportunity to review the next level of project design. It is also expected that a consultation pursuant to section 7 of the Endangered Species Act will be needed once the project description and design have been finalized to address potential impacts to threatened Central California Coast steelhead and proposed threatened resident rainbow trout.

If you have questions concerning these comments, please contact Gary Stern at (707) 575-6060.

Sincerely,

Dick Butler
Acting Santa Rosa Area Office Supervisor
Protected Resources Division

cc: Philip S. Hill, NMFS Long Beach
Marcia Grefsrud, DFG Yountville
Brian Wines, Regional Water Board, Oakland

3.2.3 SHPO Concurrence letter dated 11-30-2004

STATE OF CALIFORNIA – THE RESOURCES AGENCY ARNOLD SCHWARTZENEGGER, Governor

OFFICE OF HISTORIC PRESERVATION
DEPARTMENT OF PARKS AND RECREATION
P.O. BOX 942896
SACRAMENTO, CA 94296-0001
(916) 653-8624 Fax: (916) 653-9824
calshpo@ohp.parks.ca.gov
www.ohp.parks.ca.gov

November 30, 2004

In reply refer to:
FHWA 041116A

Brian Ramos, Chief
Office of Cultural Resource Studies
Department of Transportation, District 4
111 Grand Avenue
P.O. Box 23660
Oakland, CA 94623-0660

RE: DETERMINATIONS OF ELIGIBILITY FOR PROPERTIES WITHIN THE PROJECT AREA OF THE NILES CANYON ROAD SAFETY PROJECT, STATE ROUTE 84 (04-ALA-84, KP 19.5/21.4, PM 12.1/13.3, EA 04-174400)

Dear Mr. Ramos:

Pursuant to Stipulation VIII.C.5. of the *Programmatic Agreement among the Federal Highway Administration, the Advisory Council on Historic Preservation, the California State Historic Preservation Officer, and the California Department of Transportation Regarding Compliance with Section 106 of the National Historic Preservation Act, as it Pertains to the Administration of the Federal-Aid Highway Program in California* (PA), Caltrans is submitting to me for comment determinations of National Register of Historic Places eligibility for properties within the APE for the subject undertaking.

Your submittal included the following studies:

- *Historic Property Survey Report for the State Route 84 (Niles Canyon) Rosewarnes Underpass to Farwell Underpass (a.k.a. Dresser Bridge to Farwell Bridge) Safety Improvements, Alameda County* (Scantlebury 2004)
- *Historical Resources Evaluation Report for the State Route 84 (Niles Canyon) Rosewarnes Underpass to Farwell Underpass (a.k.a. Dresser Bridge to Farwell Bridge) Safety Improvements, Alameda County* (Scantlebury 2004)
- *Archaeological Survey Report for the State Route 84 (Niles Canyon) Rosewarnes Underpass to Farwell Underpass (a.k.a. Dresser Bridge to Farwell Bridge) Safety Improvements, Alameda County* (Reynolds 2004)

I understand that Caltrans has determined the following properties to be eligible for inclusion in the National Register of Historic Places (NRHP):

Vallejo's Mill/Spring Valley Water Conveyance System – eligible for the NRHP under Criterion A for its association with agricultural/industrial development, as well as the evolution of urban water supply in the San Francisco Bay Area, and eligible under Criterion D for its potential to yield important data regarding the design and construction techniques used in an early water transport system for a power source, and how the system was adapted from agri-industrial purposes to an urban domestic water-supply system.

Brian Ramos
November 30, 2004
Page 2

Niles Canyon Railroad and Contributors – Farwell Railroad Bridge (Br. #33-0035) and Dresser Railroad Bridge (Br. #33-0034 a.k.a. Rosewarnes Underpass) – Niles Canyon Railroad is eligible for the NRHP, with Dresser and Farwell Railroad Bridges as contributing components of the line, under Criterion A for its association with the Transcontinental Railroad and associated history of transportation, commerce, and settlement. It is also eligible under Criterion C for its association with the Transcontinental Railroad, and as an example of the progression of technological developments in railroad bridge construction.

Based on the information you provided, I believe that the Vallejo's Mill/Spring Valley Water Conveyance System is eligible for inclusion in the National Register under Criterion A and prospectively under Criteria C and D, and I concur that the Niles Canyon Railroad and Contributors (Farwell and Dresser Railroad Bridges) is eligible under Criteria A and C. In addition, at your request, I have reviewed the documentation you have submitted and pursuant to Stipulation VIII.B of the PA, I acknowledge that the identification efforts for archaeological properties within the APE are adequate and consistent with SHPO guidance.

Thank you for consulting with me. The information presented clearly demonstrated that this undertaking conforms to the requirements of the PA. I look forward to continuing our consultation efforts for this undertaking. If you have any questions, please contact Blossom Hamusek, Staff Archaeologist, at (916) 651-6956) or at bhamu@ohp.parks.ca.gov.

Sincerely,

Milford Wayne Donaldson, FAIA
State Historic Preservation Officer

Chapter 4 List of Preparers

California Department of Transportation (Caltrans)

Ron Kiaaina, Project Manager
Office of Design, Alameda II
Patrick Pang, Office Chief
Ghulam Popal, District Branch Chief
Don Breeden, Transportation Engineer
James Hsiao, Transportation Engineer
Office of Environmental Analysis
Robert Gross, Office Chief
Ed Pang, Senior Environmental Planner
Christina Lau, Associate Environmental Planner
Kimberly Brimmer, Environmental Planner
Office of Environmental Engineering
Allan Baradar, Office Chief
Office of Water Qualiy
David Yam, Office Chief
Analette Ochoa, Senior Transportation Engineer, Water Quality
Office of Cultural Resources
Brian Ramos, Office Chief
Elizabeth Mckee, Senior Environmental Planner, Archaeology
Elizabeth Krase, Senior Environmental Planner, Architectural History
Meg Scantlebury, Associate Environmental Planner, Architectural History
Richard Fitzgerald, Associate Environmental Planner, Archaeology
Alisa Reynolds, Associate Environmental Planner, Archaeology
Thad Van Bueren, Senior Environmental Planner, Prehistoric Archaeology
Office of Biological Sciences and Permits
Jeffrey Jensen, Office Chief
Margaret Gabil, Senior Environmental Planner, Natural Sciences
Melissa Barrow, Associate Environmental Planner, Natural Sciences
Amy Fowler, Associate Environmental Planner, Natural Sciences
Office of Landscape Architecture
Bryan Walker, Senior Landscape Architect
Keith Suzuki, Associate Landscape Architect
Doug Brown, Landscape Architect
Tom Packard
Division of Design West
Craig Tomimatsu, District Hydraulics Engineer, Engineering Services
Steven Kakihara, Branch Chief, Geotechnical Design-West
Panchanatham Sundaram, Transportation Engineer, Geotechnical Design-West

Federal Highway Administration
Steve Healow, Project Development Engineer-District 4

WRECO Walnut Creek, Han-Bin Liang,

Chapter 5 Distribution List

In compliance with the National Environmental Policy Act (NEPA) and the California Environmental Quality Act (CEQA), this document was distributed to key interested agencies and key elected and appointed officials, as well as to all parties requesting it. The document was made available at the local libraries in Niles, Fremont, Union City, Livermore, and Pleasanton. A list of agencies and individuals that received the Initial Study/ Environmental Assessment follows.

State Legislature:

California State Assemblyman
Guy S. Houston
1635 Chestnut Street Suite A
Livermore, CA 94551

California State Senator
Liz Figueroa, District 10
43801 Mission Blvd., No.103
Fremont, CA 94539

Federal Agencies:

California Environmental Protection Agency
1001 I Street
P.O. Box 2815
Sacramento, CA 95812-2815

Mr. Wayne Nastri
Regional Administrator
U.S. Environmental Protection Agency
75 Hawthorne Street
San Francisco, CA, 94105

Bureau of Indian Affairs
2800 Cottage Way
Sacramento, CA 95825

USFWS
Steve Thomson, Operations Manager
2800 Cottage Way
Sacamento CA 95825

U. S. Geological Suvey
345 Middlefield Road, MS 370
Menlo Park, CA 94027

California Department of Health and Human Services
P.O. Box 997413
Sacramento, CA 95899-7413

Federal Railroad Administration
1120 Vermont Avenue NW
Washington, DC 20590

National Resources Conservation Service
Concord Service Center
5552 Clayton Road
Concord, CA 94521-4158

United States Department Of Energy
1000 Independence Ave., SW
Washington, DC 20585

Department of Housing and Urban Development
1000 Independence Ave., SW
Washington, DC 20585

Federal Emergency Management Agency,
California Governor's Office of Emergency Services
P.O. Box 419047
Rancho Cordova, CA 95741-9047

Federal Transit Administration, Region 9
201 Mission Street, Suite 2210
San Francisco, CA 94105

National Marine Fisheries Service
Northern California Habitat Conservation Manager
777 Sonoma Avenue, Room 325
Santa Rosa, CA 95404-6515

U.S. Army Corps of Engineers
333 Market Street, Room 923
San Francisco, CA 94105-2195

State Agencies:

Department of Water Resources
P. O. Box 942836,
Sacramento, CA 94236

California Department of Parks and Recreation
State Historic Preservation Officer
P. O. Box 942896
Sacramento, CA 94896-0001

California Department of Conservation
801 K Street, MS 24-01
Sacramento, CA 95814

California Resources Agency
1416 Ninth Street, Suite 1311
Sacramento, CA 95814

California Department of Fish and Game
DFG Headquarters
1416 Ninth Street
Sacramento, California 95814

California Department of Fish and Game, Region 3
P. O. Box 47
Yountville, CA 94599

California Highway Patrol
2434 Whipple Road
Hayward, CA 94544

California Public Utilities Commission
Executive Director
505 Van Ness Avenue
San Francisco, CA 94102

Integrated Waste Management Board
P.O. Box 4025
Sacramento, CA 95812-4025

Metropolitan Transportation Commission
Steve Heminger, Executive Director
101 8th Street
Oakland, CA 94607

Native American Heritage Commission
915 Capitol Mall, Room 364
Sacramento, CA 95814

Regional Water Quality Control Board
San Francisco Bay Region
1515 Clay Street, Suite 1400
Oakland, CA 94612

State Clearinghouse
P.O. Box 3044
Sacramento, CA 95814-3044

State Water Resources Control Board
P.O. Box 100
Sacramento, CA 95812

Alameda County Agencies and Officials

Alameda County Clerk
1106 Madison Street
Oakland, CA 94607

Alameda County Planning Department
Attn: Lisa Ashe
224 W. Winton Ave, Suite 111
Hayward, CA 94544

Alameda County Supervisor Gail Steele
1221 Oak Street, Suite 536
Oakland, CA 94612

Alameda County Supervisor Scott Hagarty
1221 Oak Street, Suite 5536
Oakland, CA 94612

Alameda County Congestion Management Agency
1333 Broadway, Suite 220
Oakland, CA 94612

Alameda Control Flood Control and Water Conservation District
Deputy Director Scott Swanson
951 Turner Court, Room 100
Hayward, CA 94545-2698

Alameda County Water District
General Manager - Paul Piraino
43885 South Grimmer Boulevard
Fremont, CA 94537

Alameda County Clerk-Recorder's Office
1106 Madison Street
Oakland, CA 94607

Alameda County Administrator
1221 Oak Street, Room 555
Oakland 94612

Alameda County Counsel
1221 Oak Street, Room 463
Oakland CA 94612

Alameda County Fire Department
Fire Chief William J. McCammon
835 East 14th Street, Suite 200
San Leandro, CA 94577

Alameda County Planning Department
Chris Bazar, Director
224 W. Winton, Room 111
Hayward, CA 94544

Donald J. LaBelle, County of Alameda
Director of Public Works
399 Elmhurst Street
Hayward, CA 94544

Alameda County Sheriff's Office
1401 Lakeside Drive, 12th Floor
Oakland, CA 94612

AC Transportation Improvement Authority
Alameda County Transportation Authority
Christine Monsen, Executive Director
426 17th Street, Suite 100
Oakland, CA 94612-2814

AC Transit
General Manager
1600 Franklin Street
Oakland, CA 94612

Union City Officials

Mark Green, Mayor
34009 Alvarado-Niles Boulevard
Fremont, CA 94587

Larry Cheeves, City Manager
34009 Alvarado-Niles Boulevard
Fremont, CA 94587

Karen Diaz, City Clerk
34009 Alvarado-Niles Boulevard
Fremont, CA 94587

Mintze Cheng, Public Works Director
34009 Alvarado-Niles Boulevard
Fremont, CA 94587

Wilson Lee, Transit Manager
34009 Alvarado-Niles Rd
Union City, Ca 94587

Union City Police Administration
Randy Ulibarri, Police Chief
34009 Alvarado-Niles Road
Union City, California 94587

City Of Fremont Officials

Bob Wasserman, Mayor
P.O. Box 5006
Fremont, CA 94537-5006

City Clerk Office
Lynn Macy, Assistant City Manager
P.O. Box 5006
Fremont, CA 94537-5006

City Manager's Office
Fred Diaz, City Manager
3300 Capitol Avenue
Fremont, CA 94538

City of Fremont Engineering Division
39550 Liberty Street
Fremont, CA 94538

City of Fremont Environmental Services Division
Development Services Center
39550 Liberty Street
Fremont, CA 94538

City of Fremont Office of Housing and Redevelopment
Niles Redevelopment Project Manager
Luke Connolly
39550 Liberty Street
Fremont, CA 94538

City of Fremont Planning Division
39550 Liberty Street
Fremont, CA 94538

Fremont Fire Department
Administration Offices
3300 Capitol Avenue, Building B
Fremont, CA 94538

Fremont Police Department
2000 Stevenson Boulevard
Fremont, CA 94538

Other Agencies/Parties

Association of Bay Area Governments
Henry L. Gardner, Executive Director
P.O. Box 2050
Oakland, CA 94604-2050

Alameda Creek Alliance
Jeff Miller, Director
P.O. Box 192
Canyon, CA 94516

Alameda County Historical Society
Helen Lore, President
484 Lake Park Ave, #307
Oakland, CA 94610-2730

Amador-Livermore Valley Historical Society
603 Main Street
Pleasanton, CA 94566

Bay Area Bicycle Coalition
PO Box 2214
Novato, CA 94948-2214

California Preservation Foundation
Roberta Deering, Executive Director
1611 Telegraph Ave., Suite 820
Oakland, CA 94612

Center for Ecosystem Management and Restoration
4179 Piedmont Avenue, Suite 325
Oakland, California 94611

California Native Plant Society
East Bay Chapter
P. O. Box 5597 Elmwood Station
Berkeley, CA 94705

California State University, Hayward
25800 Carlos Bee Boulevard
Hayward, CA 94542

Hayward Area Historical Society and Museum
227101 Main Street
Hayward, CA 94536

Mission Peak Heritage Guild
4035 Central Ave
Fremont, CA 94536

Museum of Local History
P. O. Box 3087
Fremont, CA 94539

Niles Depot Historical Foundation
P. O. Box 2716
Fremont, CA 94536

Niles Main Street Association
P.O. Box 2038
Fremont, CA 94536

Pacific Locomotive Association
P. O. Box 2247
Fremont, CA 94536-0247

East Bay Municipal Utility District
P.O. Box 24055
Oakland, CA 94623

East Bay Regional Park District
2950 Peralta Oaks Court
P.O. Box 5381
Oakland, CA 94605-0381

Golden Gate Audubon Society
2530 San Pablo Ave, Suite G
Berkeley, CA 94702-2047

San Francisco Public Utilities Commission
1155 Market St., 4th floor
San Francisco CA, 94103

Tri-Valley Council
5354 Sandra Way
Livermore, CA 94704

Washington Township Historical Society
P. O. Box 3045
Fremont, CA 94536

Libraries

Niles Library
150 I Street
Fremont, CA 94538

Castro Valley Library
20055 Redwood Road
Castro Valley, CA 94546

Centerville Library- Fremont
3801 Nicolet Ave
Fremont, CA 94536

Fremont Main Library
2400 Stevenson Boulevard
Fremont, CA 94538

Union City Library
34007 Alvarado Niles Road
Union City, CA 94587-4452

Pleasanton Public Library
400 Old Bernal Avenue
Pleasanton, CA 94566

Civic Center Library- Livermore
1188 S. Livermore Avenue
Livermore, CA 94550

Rincon Library- Livermore
725 Rincon Acenue
Livermore, CA 94551

Springtown Branch- Livermore
998 Bluebell Drive
Livermore, CA 94551

Appendix A CEQA Checklist

One of the basic purposes of the California Environmental Quality Act (CEQA) is to inform state, regional, and local governmental decisions makers and the public of impacts of proposed activities, and in particular, those impacts that are either significant or potentially significant.

Determining and documenting whether an activity may have a significant effect on the environment plays a critical role in the CEQA process. The following CEQA Environmental Significance Checklist is a device that was used to identify and evaluate any potential impacts from the proposed activity on physical, biological, and social and economic resources. This checklist is not a NEPA requirement.

Differences do exist in the way impacts are addressed in CEQA environmental documents as compared to NEPA environmental documents. While CEQA requires that environmental documents state a determination of significant or potentially significant impacts, as has been done in the following CEQA checklist, NEPA does not. It can be seen that having to address significant or potentially significant impacts in joint CEQA and NEPA environmental documents can be confusing especially in those instances where the two laws and implementing regulations have different thresholds of significance.

Under NEPA, the degree to which a resource is impacted is only used to determine whether a NEPA Environmental Impact Statement (EIS) or some other lower level of NEPA documentation would be required. Under NEPA, once the Federal Agency has determined the magnitude of the project's impacts and the level of environmental documentation required, it is the magnitude of the impact that is evaluated in the environmental document and no judgement of its degree of significance is deemed important in the document text. For the purposes of the impact discussion in this document, determination of significant or potentially significant impacts is made in only the context of CEQA. Although not explicitly identified in this document, impacts in the NEPA context can be assumed to be minimal or non-existent.

Based on the results of the technical studies, it has been determined that the appropriate level of documentation for this project is an Initial Study/Negative Declaration.

CEQA Environmental Checklist

The following checklist identifies physical, biological, social, and economic factors that might be affected by the proposed project. The CEQA impact levels include potentially

significant impact, less than significant impact with mitigation, less than significant impact, and no impact. Please refer to the following for detailed discussions regarding impacts:

CEQA:

- Guidance: Title 14, Chapter 3, California Code of Regulations, Sections 15000 et seq. (http://www.ceres.ca.gov/topic/env_law/ceqa/guidelines/)
- Statutes: Division 13, California Public Resource Code, Sections 21000-21178.1 (http://www.ceres.ca.gov/topic/env_law/ceqa/stat/)

CEQA requires that environmental documents determine significant or potentially significant impacts. In many cases, background studies performed in connection with the project indicate no impacts. A "no impact" reflects this determination. Any needed discussion is included in the section following the checklist.

	Potentially significant impact (CEQA context)	Less than significant impact (CEQA context) with mitigation	Less than significant impact (CEQA context)	No impact
AESTHETICS - Would the project:				
a) Have a substantial adverse effect on a scenic vista?	☐	☐	X	☐
b) Substantially damage scenic resources, including, but not limited to, trees, rock outcroppings, and historic building within a state scenic highway?	☐	☐	X	☐
c) Substantially degrade the existing visual character or quality of the site and its surroundings?	☐	☐	X	☐
d) Create a new source of substantial light or glare which would adversely affect day or nighttime views in the area?	☐	☐	X	☐
AGRICULTURE RESOURCES - In determining whether impacts to agricultural resources are significant environmental effects, lead agencies may refer to the California Agricultural Land Evaluation and Site Assessment Model (1997) prepared by the California Dept. of Conservation as an optional model to use in assessing impacts on agriculture and farmland. Would the project:				
a) Convert Prime Farmland, Unique Farmland, or Farmland of Statewide Importance (Farmland), as shown on the maps prepared pursuant to the Farmland Mapping and Monitoring Program of the California Resources Agency, to non-agricultural use?	☐	☐	☐	X
b) Conflict with existing zoning for agricultural use, or a Williamson Act contract?	☐	☐	☐	X
c) Involve other changes in the existing environment which, due to their location or nature, could result in conversion of Farmland, to non-agricultural use?	☐	☐	☐	X
AIR QUALITY - Where available, the significance criteria established by the applicable air quality management or air pollution control district may be relied upon to make the following determinations. Would the project:				
a) Conflict with or obstruct implementation of the applicable air quality plan?	☐	☐	☐	X

	Potentially significant impact (CEQA context)	Less than significant impact (CEQA context) with mitigation	Less than significant impact (CEQA context)	No impact
b) Violate any air quality standard or contribute substantially to an existing or projected air quality violation?	☐	☐	☐	X
c) Result in a cumulatively considerable net increase of any criteria pollutant for which the project region is non-attainment under an applicable federal or state ambient air quality standard (including releasing emissions which exceed quantitative thresholds for ozone precursors)?	☐	☐	☐	X
d) Expose sensitive receptors to substantial pollutant concentration?	☐	☐	☐	X
e) Create objectionable odors affecting a substantial number of people?	☐	☐	☐	X
BIOLOGICAL RESOURCES - Would the project:				
a) Have a substantial adverse effect, either directly or through habitat modifications, on any species identified as a candidate, sensitive, or special status species in local or regional plans, policies, or regulations, or by the California Department of Fish and Game or U.S. Fish and Wildlife Service?	☐	☐	X	☐
b) Have a substantial adverse effect on any riparian habitat or other sensitive natural community identified in local or regional plans, policies, regulations or by the California Department of Fish and Game or U.S. Fish and Wildlife Service?	☐	☐	X	☐
C) Have a substantial adverse effect on federally protected wetlands as defined by Section 404 of the Clean Water Act (including, but not limited to, marsh, vernal pool, coastal, etc.) through direct removal, filling, hydrological interruption, or other means?	☐	☐	X	☐
d) Interfere substantially with the movement of any native resident or migratory fish or wildlife species or with established native resident or migratory wildlife corridors, or impede the use of native wildlife nursery sites?	☐	☐	X	☐
e) Conflict with any local policies or ordinances protecting biological resources, such as a tree preservation policy or ordinance?	☐	☐	☐	X

	Potentially significant impact (CEQA context)	Less than significant impact (CEQA context) with mitigation	Less than significant impact (CEQA context)	No impact
f) Conflict with the provisions of an adopted Habitat Conservation Plan, Natural Community Conservation Plan, or other approved local, regional, or state habitat conservation plan?				X
COMMUNITY RESOURCES - Would the project:				
a) Cause disruption of orderly planned development?				X
b) Be inconsistent with a Coastal Zone Management Plan?				X
c) Affect life-styles, or neighborhood character or stability?				X
d) Physically divide an established community?				X
e) Affect minority, low-income, elderly, disabled, transit-dependent, or other specific interest group?				X
f) Affect employment, industry, or commerce, or require the displacement of businesses or farms?				X
g) Affect property values or the local tax base?				X
h) Affect any community facilities (including medical, educational, scientific, or religious institutions, ceremonial sites or sacred shrines?				X
i) Result in alterations to waterborne, rail, or air traffic?				X
j) Support large commercial or residential development?				X
k) Affect wild or scenic rivers or natural landmarks?				X
l) Result in substantial impacts associated with construction activities (e.g., noise, dust, temporary drainage, traffic detours, and temporary access, etc.)?		X		
CULTURAL RESOURCES - Would the project:				
a) Cause a substantial adverse change in the significance of a historical resource as defined in §15064.5?			X	

	Potentially significant impact (CEQA context)	Less than significant impact (CEQA context) with mitigation	Less than significant impact (CEQA context)	No impact
b) Cause a substantial adverse change in the significance of an archaeological resource pursuant to §15064.5?	☐	☐	☐	X
c) Directly or indirectly destroy a unique paleontological resource or site or unique geologic feature?	☐	☐	☐	X
d) Disturb any human remains, including those interred outside of formal cemeteries?	☐	☐	☐	X
GEOLOGY AND SOILS - Would the project:				
a) Expose people or structures to potential substantial adverse effects, including the risk of loss, injury, or death involving:				
i) Rupture of a known earthquake fault, as delineated on the most recent Alquist-Priolo Earthquake Fault Zoning Map issued by the State Geologist for the area or based on other substantial evidence of a known fault? Refer to Division of Mines and Geology Special Publication 42.	☐	☐	X	☐
ii) Strong seismic ground shaking?	☐	☐	X	☐
iii) Seismic-related ground failure, including liquefaction?	☐	☐	X	☐
iv) Landslides?	☐	☐	X	☐
b) Result in substantial soil erosion or the loss of topsoil?	☐	☐	X	☐
c) Be located on a geologic unit or soil that is unstable, or that would become unstable as a result of the project, and potentially result in on- or off-site landslide, lateral spreading, subsidence, liquefaction or collapse?	☐	☐	X	☐
d) Be located on expansive soil, as defined in Table 18-1-B of the Uniform Building Code (1994), creating substantial risks to life or property.	☐	☐	X	☐
e) Have soils incapable of adequately supporting the use of septic tanks or alternative waste water disposal systems where sewers are not available for the disposal of waste water?	☐	☐	☐	X

	Potentially significant impact (CEQA context)	Less than significant impact (CEQA context) with mitigation	Less than significant impact (CEQA context)	No impact
HAZARDS AND HAZARDOUS MATERIALS - Would the project:				
a) Create a significant hazard to the public or the environment through the routine transport, use, or disposal of hazardous materials?	☐	☐	☐	X
b) Create a significant hazard to the public or the environment through reasonably foreseeable upset and accident conditions involving the release of hazardous materials into the environment?	☐	☐	☐	X
c) Emit hazardous emissions or handle hazardous or acutely hazardous material, substances, or waste within one-quarter mile of an existing or proposed school?	☐	☐	☐	X
d) Be located on a site which is included on a list of hazardous materials sites compiled pursuant to Government Code Section 65962.5 and, as a result, would it create a significant hazard to the public or the environment?	☐	☐	☐	X
e) For a project located within an airport land use plan or, where such a plan has not been adopted, within two miles of a public airport or public use airport, would the project result in a safety hazard for people residing or working in the project area?	☐	☐	☐	X
f) For a project within the vicinity of a private airstrip, would the project result in a safety hazard for people residing or working in the project area?	☐	☐	☐	X
g) Impair implementation of or physically interfere with an adopted emergency response plan or emergency evacuation plan?	☐	☐	☐	X
h) Expose people or structures to a significant risk of loss, injury or death involving wildland fires, including where wildlands are adjacent to urbanized areas or where residences are intermixed with wildlands?	☐	☐	☐	X
HYDROLOGY AND WATER QUALITY - Would the project:				
a) Violate any water quality standards or waste discharge requirements?	☐	☐	X	☐

	Potentially significant impact (CEQA context)	Less than significant impact (CEQA context) with mitigation	Less than significant impact (CEQA context)	No impact
b) Substantially deplete groundwater supplies or interfere substantially with groundwater recharge such that there would be a net deficit in aquifer volume or a lowering of the local groundwater table level (e.g., the production rate of pre-existing nearby wells would drop to a level which would not support existing land uses or planned uses for which permits have been granted)?	☐	☐	☐	X
c) Substantially alter the existing drainage pattern of the site or area, including through the alteration of the course of a stream or river, in a manner which would result in substantial erosion or siltation on- or off-site?	☐	☐	X	☐
d) Substantially alter the existing drainage pattern of the site or area, including through the alteration of the course of a stream or river, or substantially increase the rate or amount of surface runoff in a manner which would result in flooding on- or off-site?	☐	☐	X	☐
e) Create or contribute runoff water which would exceed the capacity of existing or planned storm water drainage systems or provide substantial additional sources of polluted runoff?	☐	☐	X	☐
f) Otherwise substantially degrade water quality?	☐	☐	☐	X
g) Place housing within a 100-year flood hazard area as mapped on a federal Flood Hazard Boundary or Flood Insurance Rate Map or other flood hazard delineation map?	☐	☐	☐	X
h) Place within a 100-year flood hazard area structures which would impede or redirect flood flows?	☐	☐	☐	X
i) Expose people or structures to a significant risk of loss, injury or death involving flooding, including flooding as a result of the failure of a levee or dam?	☐	☐	☐	X
j) Inundation by seiche, tsunami, or mudflow?	☐	☐	☐	X
LAND USE AND PLANNING - Would the project:				
a) Conflict with any applicable land use plan, policy, or regulation of an agency with jurisdiction over the project (including, but not limited to the general plan, specific plan, local coastal program, or zoning ordinance) adopted for the purpose of avoiding or mitigating an environmental effect?	☐	☐	☐	X

	Potentially significant impact (CEQA context)	Less than significant impact (CEQA context) with mitigation	Less than significant impact (CEQA context)	No impact
b) Conflict with any applicable habitat conservation plan or natural community conservation plan?	☐	☐	☐	X
MINERAL RESOURCES - Would the project:				
a) Result in the loss of availability of a known mineral resource that would be of value to the region and the residents of the state?	☐	☐	☐	X
b) Result in the loss of availability of a locally-important mineral resource recovery site delineated on a local general plan, specific plan or other land use plan?	☐	☐	☐	X
NOISE - Would the project:				
a) Exposure of persons to or generation of noise levels in excess of standards established in the local general plan or noise ordinance, or applicable standards of other agencies?	☐	☐	X	☐
b) Exposure of persons to or generation of excessive groundborne vibration or groundborne noise levels?	☐	☐	X	☐
c) A substantial permanent increase in ambient noise levels in the project vicinity above levels existing without the project?	☐	☐	X	☐
d) A substantial temporary or periodic increase in ambient noise levels in the project vicinity above levels existing without the project?	☐	☐	X	☐
e) For a project located within an airport land use plan or, where such a plan has not been adopted, within two miles of a public airport or public use airport, would the project expose people residing or working in the project area to excessive noise levels?	☐	☐	☐	X
f) For a project within the vicinity of a private airstrip, would the project expose people residing or working in the project area to excessive noise levels?	☐	☐	☐	X
POPULATION AND HOUSING - Would the project:				
a) Induce substantial population growth in an area, either directly (for example, by proposing new homes and businesses) or indirectly (for example, through extension of roads or other infrastructure)?	☐	☐	☐	X

	Potentially significant impact (CEQA context)	Less than significant impact (CEQA context) with mitigation	Less than significant impact (CEQA context)	No impact
b) Displace substantial numbers of existing housing, necessitating the construction of replacement housing elsewhere?	☐	☐	☐	X
c) Displace substantial numbers of people, necessitating the construction of replacement housing elsewhere?	☐	☐	☐	X

PUBLIC SERVICES -

a) Would the project result in substantial adverse physical impacts associated with the provision of new or physically altered governmental facilities, need for new or physically altered governmental facilities, the construction of which could cause significant environmental impacts, in order to maintain acceptable service ratios, response times or other performance objectives for any of the public services:				
Fire protection?	☐	☐	☐	X
Police protection?	☐	☐	☐	X
Schools?	☐	☐	☐	X
Parks?	☐	☐	☐	X
Other public facilities?	☐	☐	☐	X

RECREATION -

a) Would the project increase the use of existing neighborhood and regional parks or other recreational facilities such that substantial physical deterioration of the facility would occur or be accelerated?	☐	☐	☐	X
b) Does the project include recreational facilities or require the construction or expansion of recreational facilities which might have an adverse physical effect on the environment?	☐	☐	☐	X

TRANSPORTATION/TRAFFIC - Would the project:

a) Cause an increase in traffic which his substantial in relation to the existing traffic load and capacity of the street system (i.e., result in a substantial increase in either the number of vehicle trips, the volume to capacity ratio on roads, or congestion at intersections)?	☐	☐	☐	X

	Potentially significant impact (CEQA context)	Less than significant impact (CEQA context) with mitigation	Less than significant impact (CEQA context)	No impact
b) Exceed, either individually or cumulatively, a level of service standard established by the county congestion management agency for designated roads or highways?	☐	☐	☐	X
c) Result in a change in air traffic patters, including either an increase in traffic levels or a change in location that results in substantial safety risks?	☐	☐	☐	X
d) Substantially increase hazards due to a design feature (e.g., sharp curves or dangerous intersections) or incomplete uses (e.g., farm equipment)?	☐	☐	☐	X
e) Result in inadequate emergency access?	☐	☐	☐	X
f) Result in inadequate parking capacity?	☐	☐	☐	X
g) Conflict with adopted policies, plans, or programs supporting alternative transportation (e.g., bus turnouts, bicycle racks)?	☐	☐	☐	X
UTILITY AND SERVICE SYSTEMS – Would the project:				
a) Exceed wastewater treatment requirements of the applicable Regional Water Quality Control Board?	☐	☐	☐	X
b) Require or result in the construction of new water or wastewater treatment facilities or expansion of existing facilities, the construction of which could cause significant environmental effects?	☐	☐	☐	X
c) Require or result in the construction of new storm water drainage facilities or expansion of existing facilities, the construction of which could cause significant environmental effects?	☐	☐	☐	X
d) Have sufficient water supplies available to serve the project from existing entitlements and resources, or are new or expanded entitlements needed?	☐	☐	☐	X
e) Result in determination by the wastewater treatment provider which serves or may serve the project that it has adequate capacity to serve the project's projected demand in addition to the provider's existing commitments?	☐	☐	☐	X
f) Be served by a landfill with sufficient permitted capacity to accommodate the project's solid waste disposal needs?	☐	☐	☐	X

	Potentially significant impact (CEQA context)	Less than significant impact (CEQA context) with mitigation	Less than significant impact (CEQA context)	No impact
g) Comply with federal, state, and local statutes and regulations related to solid waste?	☐	☐	☐	X

MANDATORY FINDINGS OF SIGNIFICANCE -	Potentially Significant Impact	Less Than Significant with Mitigation	No Impact
a) Does the project have the potential to degrade the quality of the environment, substantially reduce the habitat of a fish or wildlife species, or cause a fish or wildlife population to drop below self-sustaining levels, threaten to eliminate a plant or animal community, reduce the number or restrict the range of a rare or endangered plant or animal or eliminate important examples of the major periods of California history or prehistory?	☐	X	☐
b) Does the project have impacts that are individually limited, but cumulatively considerable? ("Cumulatively considerable" means that the incremental effects of a project are considerable when viewed in connection with the effects of past projects, the effects of other current projects, and the effects of probable future projects)?	☐	X	☐
c) Does the project have environmental effects which will cause substantial adverse effects on human beings, either directly or indirectly?	☐	☐	X

Appendix B Title VI Policy Statement

STATE OF CALIFORNIA—BUSINESS, TRANSPORTATION AND HOUSING AGENCY ARNOLD SCHWARZENEGGER, Governor

DEPARTMENT OF TRANSPORTATION
OFFICE OF THE DIRECTOR
1120 N STREET
P. O. BOX 942873
SACRAMENTO, CA 94273-0001
PHONE (916) 654-5266
FAX (916) 654-6608
TTY (916) 653-4086

Flex your power!
Be energy efficient!

January 14, 2005

TITLE VI
POLICY STATEMENT

The California Department of Transportation under Title VI of the Civil Rights Act of 1964 and related statutes, ensures that no person in the State of California shall, on the grounds of race, color, national origin, sex, disability, and age, be excluded from participation in, be denied the benefits of, or be otherwise subjected to discrimination under any program or activity it administers.

WILL KEMPTON
Director

Appendix C Relocation Benefits

Acquisitions and relocations will be in accordance with the Uniform Relocation Assistance and Real Property Acquisition Policies Act of 1970, as amended. The State Uniform Relocation Assistance Program has been developed to assist displacees in successfully relocating homes and businesses, thereby mitigating relocation impacts. This program aims at meeting or exceeding the requirements of the Federal Uniform Relocation Assistance and Real Property Acquisition Policies Act of 1970 (P.L. 91-646).

The State Uniform Relocation Assistance Program as it relates to residential displacements is summarized below. The program can be divided into two broad topics: Relocation Assistance Services and Relocation Payment Program.

Residential Relocation Assistance Services.

Any individual or family displaced by Caltrans shall be offered relocation assistance services for purposes of locating a suitable replacement property. A Relocation Advisor from Caltrans will contact the displacee(s) personally and explain relocation services and payments for which the displacee(s) may be eligible. During this interview, the housing needs and desires of the displacee(s) are determined as well as the displacee's eligibility for assistance. Displacee(s) are not required to move unless at least one comparable replacement dwelling is made available to him/her, and ninety days written notice is given. Caltrans will ensure that the housing made available to the displacee(s) meets decent, safe, and sanitary standards. If desired by the displacee(s), the Relocation Advisor will provide current listings of other replacement housing that is available.

Transportation will be provided to inspect available housing, especially for the elderly and the handicapped displacee(s). Special language assistance, if needed, will be provided during the relocation process. Caltrans will also provide the displacee(s) with information concerning other federal, state, and local housing programs that offer assistance to displaced persons, and will provide counseling to minimize hardships. Displacees will also be provided with a booklet which explains their rights and benefits under the Uniform Relocation Assistance Program.

Residential Relocation Payment Program.

Eligible displacees are also entitled to relocation payments to relieve the financial hardship of locating and acquiring replacement housing.

All eligible displaced households will be entitled to reimbursement of the moving costs and related expenses incurred in moving. These could be actual reasonable moving costs including packing and unpacking, temporary storage, transportation,

moving insurance, and other related costs. These could alternately be a fixed moving-cost schedule based on the number of rooms moved.

Replacement housing payments are paid to eligible displaced households to complete a successful relocation. These payments are separated into three types: purchase supplements, rental assistance, and down payments. The type of payment depends on whether the displacee is an owner or a tenant, and how long the displacee has been living in the property prior to the start of negotiations.

- Purchase Supplements. These are paid when the fair market price paid by Caltrans to a homeowner (who has occupied the house for more than 180 days) is not enough to allow the owner to replace the displacement property in the competitive market. This supplement can be up to a maximum of $22,500 (except under Last Resort Housing, explained below), and includes the price differential payment, increased mortgage interest payment, and nonrecurring incidental expenses associated with the purchase of the replacement housing.

- Rental Assistance. Owner occupants and tenants of 90 days or more may be eligible for a rental assistance payment. To be eligible, the tenants and owners must have been in occupancy at least 90 days prior to the initiation of negotiations for the acquisition of the property. The payment enables them to rent a comparable, decent, safe, and sanitary replacement dwelling for a 42-month period. This payment covers the difference in the rents of the displaced dwelling and the replacement dwelling and may not exceed $5250 over the 42-month period (except under Last Resort Housing).

- Down Payment. Displaced tenants may also use the full amount of their rent supplement as a down payment on a replacement dwelling. This payment provides up to $5250 to be used solely for the down payment and incidental purchase expenses.

In situations where the available housing and housing assistance is insufficient to allow the successful relocation of displacees, Caltrans will resolve the problem by the administrative process called Last Resort Housing. Caltrans may provide a replacement housing payment in excess of the $5,250 or $22,500 payment limits. Caltrans evaluates each displacement on a case-by-case basis, and utilizes other options only if considered necessary.

Finally, the Fair Housing Law (Title VIII of the Civil Rights Act of 1968) sets forth the policy of the United States to provide, within Constitutional limitations, for fair housing throughout the United States. This act and other amendments make discriminatory practices in the purchase and rental of most residential units illegal if based on race, color, religion, sex, or national origin. In compliance with Title VI of the 1964 Civil Rights Act, all services and benefits will be administered to the general public without regard to race, color, national origin, or sex. A copy of Title VI Policy Statement is included in Appendix B. The implementation of the Uniform Relocation

Assistance Program mitigates the relocation impacts of the project, to an insignificant level. Under this program, comparable housing will be located within the same or similar desired neighborhoods, so that displacement impacts are minimized.

Business-Farm And Non-Profit Relocation Assistance Program.

Any business displaced by Caltrans will be provided with advisory assistance in finding suitable replacement quarters. Eligible businesses will also receive compensation for moving costs and related expenses. In addition, displaced businesses may be eligible for payments covering losses of tangible personal property, search and reestablishment expenses. For eligible enterprises that cannot be relocated without substantial loss of patronage, an in-lieu payment may be made instead of payment for moving expenses. In this case, payment is equal to the average annual net earnings of the business over the two-year period before displacement. The fixed payment may not be less than $1,000 or more than $20,000.

Appendix D Proposed Alternative Layout Sheets

DIST	COUNTY	ROUTE	KILOMETER POST TOTAL PROJECT	SHEET No	TOTAL SHEETS
04	ALA	84	12.1/13.3		

REGISTERED CIVIL ENGINEER

PLANS APPROVAL DATE

The State of California or its officers or agents shall not be responsible for the accuracy or completeness of electronic copies of this plan sheet.

REGISTERED PROFESSIONAL ENGINEER — No. — Exp. — CIVIL — STATE OF CALIFORNIA

Caltrans now has a web site! To get to the web site, go to: http://www.dot.ca.gov

Caltrans Metric

LEGEND

- FEE ACQUISITION (FEE)
- TEMPORARY EASEMENT (TCE)
- SLOPE EASEMENT (SLOPE)
- DRAINAGE EASEMENT (DRAIN)
- UNDERGROUND EASEMENT (UG)
- PERMANENT FILL LINE
- TEMPORARY CONSTRUCTION EASMENT (C/F LINE)
- PROPOSED RIGHT OF WAY
- EXISTING RIGHT OF WAY

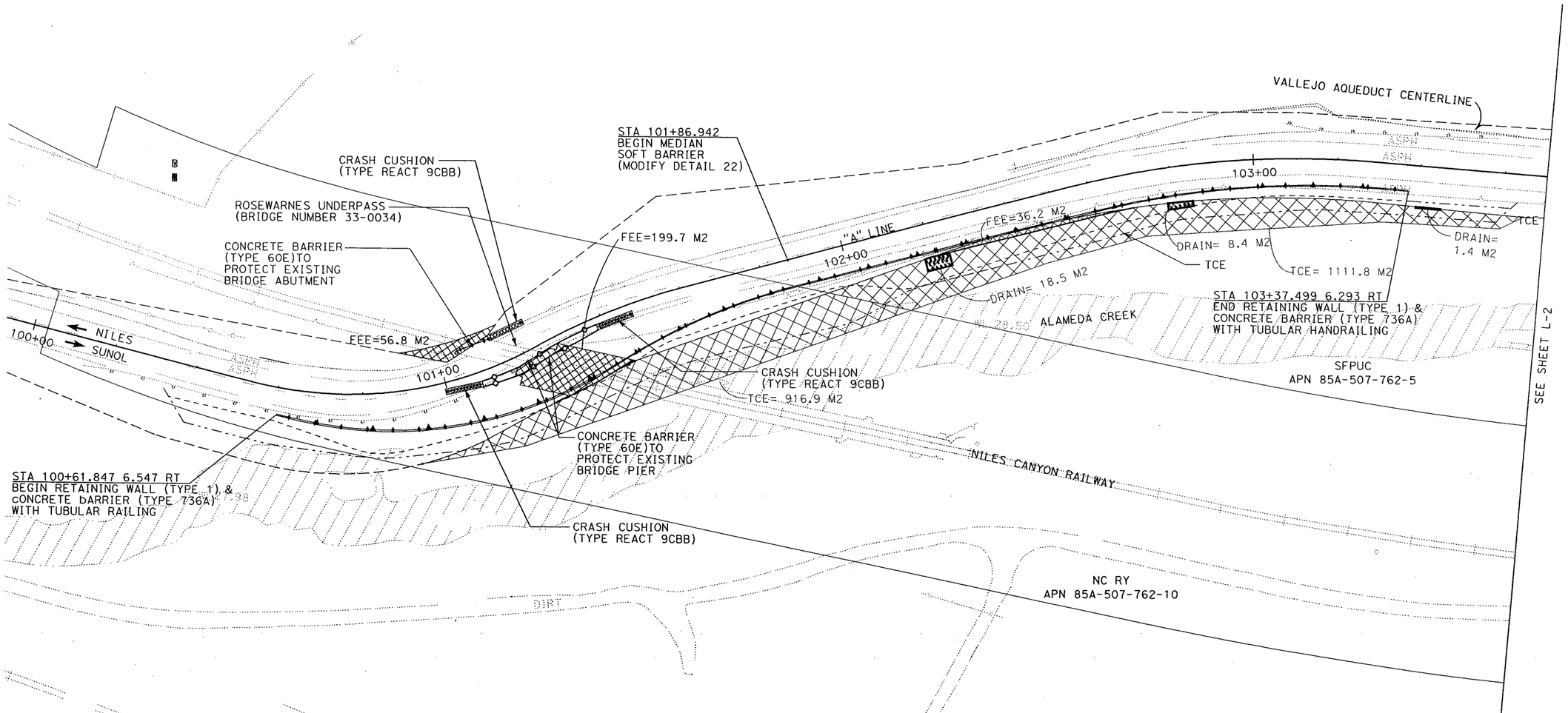

ALL DIMENSIONS ARE IN METERS UNLESS OTHERWISE SHOWN

LAYOUT

SCALE: 1:500

L-1

DATE	REVISED BY	DATE REVISED

CALCULATED/DESIGNED BY

CHECKED BY

PROJECT ENGINEER

JAMES HSIAO

STATE OF CALIFORNIA - DEPARTMENT OF TRANSPORTATION

Caltrans PROJECT DEVELOPMENT

RELATIVE BORDER SCALE IS IN MILLIMETERS 0 20 40 60 80

USERNAME => gbains
DGN FILE => 17440ee01.dgn

CU 04231

EA 174400

LAST REVISION 00-00-00

DATE PLOTTED => 18-MAR-2005
TIME PLOTTED => 07:37

DIST	COUNTY	ROUTE	KILOMETER POST TOTAL PROJECT	SHEET No	TOTAL SHEETS
04	ALA	84	12.1/13.3		

Caltrans Metric

REGISTERED CIVIL ENGINEER

PLANS APPROVAL DATE

REGISTERED PROFESSIONAL ENGINEER — No. — Exp. — CIVIL — STATE OF CALIFORNIA

The State of California or its officers or agents shall not be responsible for the accuracy or completeness of electronic copies of this plan sheet.

Caltrans now has a web site! To get to the web site, go to: http://www.dot.ca.gov

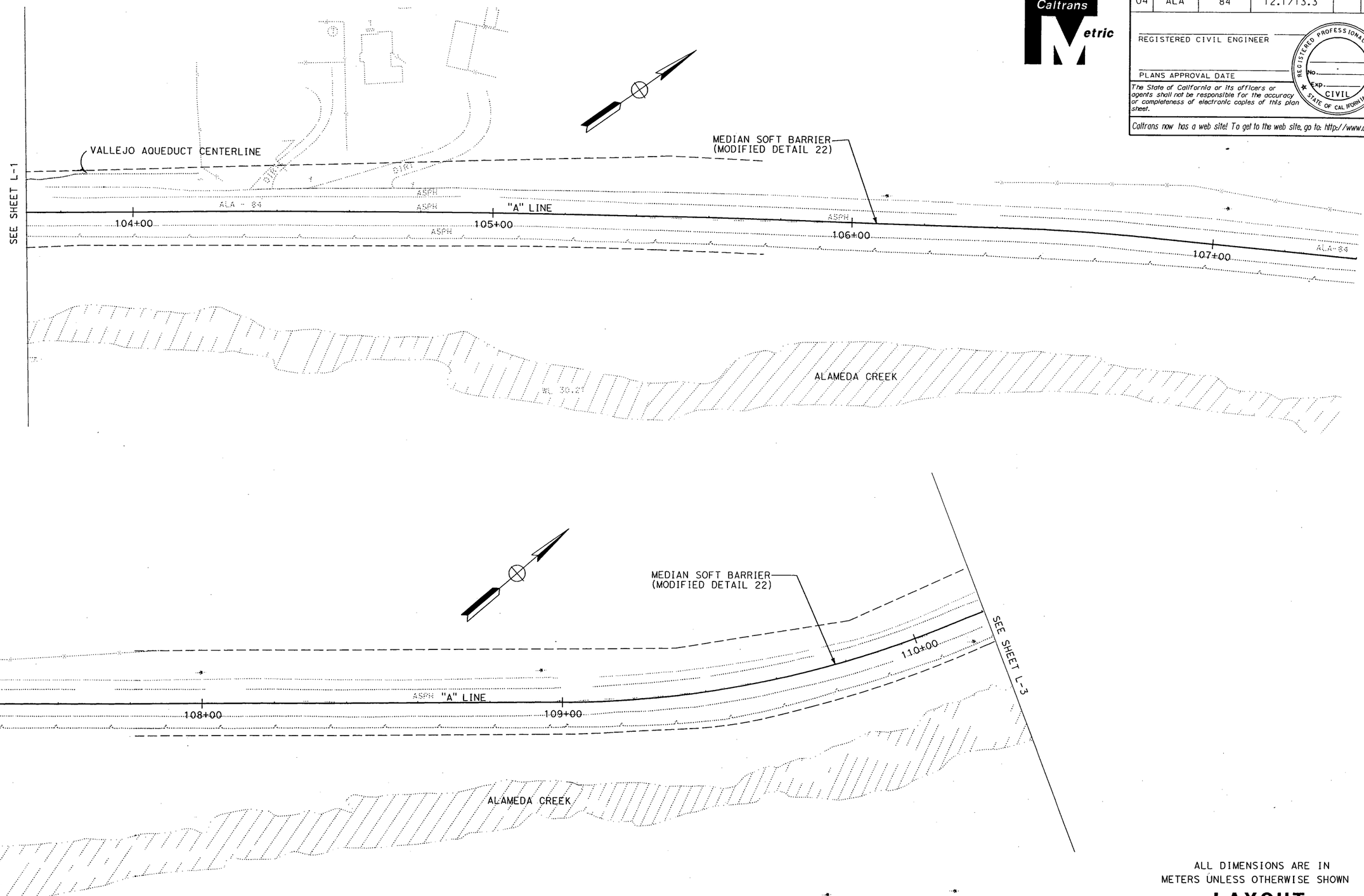

ALL DIMENSIONS ARE IN METERS UNLESS OTHERWISE SHOWN

LAYOUT

SCALE: 1:500

L-2

FOR NOTES & LEGEND, SEE SHEET L-1

RELATIVE BORDER SCALE IS IN MILLIMETERS 0 20 40 60 80

USERNAME => gbains
DGN FILE => 17440e02.dgn

CU 04231

EA 174400

LAST REVISION 00-00-00 DATE PLOTTED => 18-MAR-2005 TIME PLOTTED => 07:38

DATE	REVISED BY	DATE REVISED

CALCULATED/ DESIGNED BY

CHECKED BY

PROJECT ENGINEER
JAMES HSIAO

STATE OF CALIFORNIA - DEPARTMENT OF TRANSPORTATION
Caltrans PROJECT DEVELOPMENT

DIST	COUNTY	ROUTE	KILOMETER POST TOTAL PROJECT	SHEET NO	TOTAL SHEETS
04	ALA	84	12.1/13.3		

Caltrans Metric

REGISTERED CIVIL ENGINEER

PLANS APPROVAL DATE

REGISTERED PROFESSIONAL ENGINEER — No. Exp. CIVIL — STATE OF CALIFORNIA

The State of California or its officers or agents shall not be responsible for the accuracy or completeness of electronic copies of this plan sheet.

Caltrans now has a web site! To get to the web site, go to: http://www.dot.ca.gov

DATE	REVISED BY	DATE REVISED

CALCULATED/ DESIGNED BY

CHECKED BY

PROJECT ENGINEER

JAMES HSIAO

STATE OF CALIFORNIA - DEPARTMENT OF TRANSPORTATION

Caltrans PROJECT DEVELOPMENT

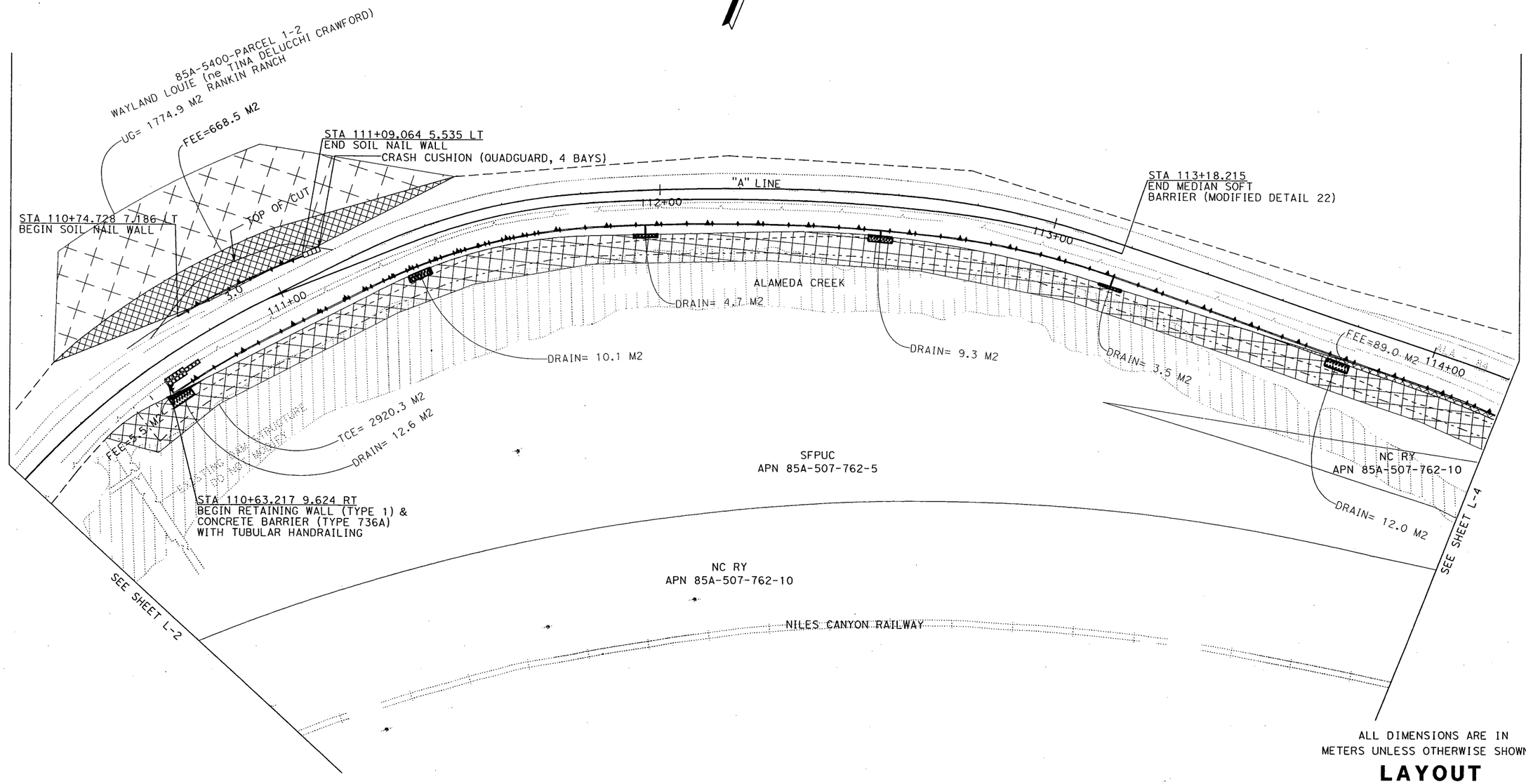

ALL DIMENSIONS ARE IN METERS UNLESS OTHERWISE SHOWN

LAYOUT

SCALE: 1:500

L-3

FOR NOTES & LEGEND, SEE SHEET L-1

RELATIVE BORDER SCALE IS IN MILLIMETERS 0 20 40 60 80

USERNAME => gbains
DGN FILE => 17440ee03.dgn

CU 04231

EA 174400

LAST REVISION 00-00-00

DATE PLOTTED => 18-MAR-2005
TIME PLOTTED => 07:38

DIST	COUNTY	ROUTE	KILOMETER POST TOTAL PROJECT	SHEET No	TOTAL SHEETS
04	ALA	84	12.1/13.3		

REGISTERED CIVIL ENGINEER

PLANS APPROVAL DATE

REGISTERED PROFESSIONAL ENGINEER — No. Exp. CIVIL — STATE OF CALIFORNIA

The State of California or its officers or agents shall not be responsible for the accuracy or completeness of electronic copies of this plan sheet.

Caltrans now has a web site! To get to the web site, go to: http://www.dot.ca.gov

DATE	REVISED BY	DATE REVISED

CALCULATED/DESIGNED BY

CHECKED BY

PROJECT ENGINEER
JAMES HSIAO

STATE OF CALIFORNIA - DEPARTMENT OF TRANSPORTATION
Caltrans PROJECT DEVELOPMENT

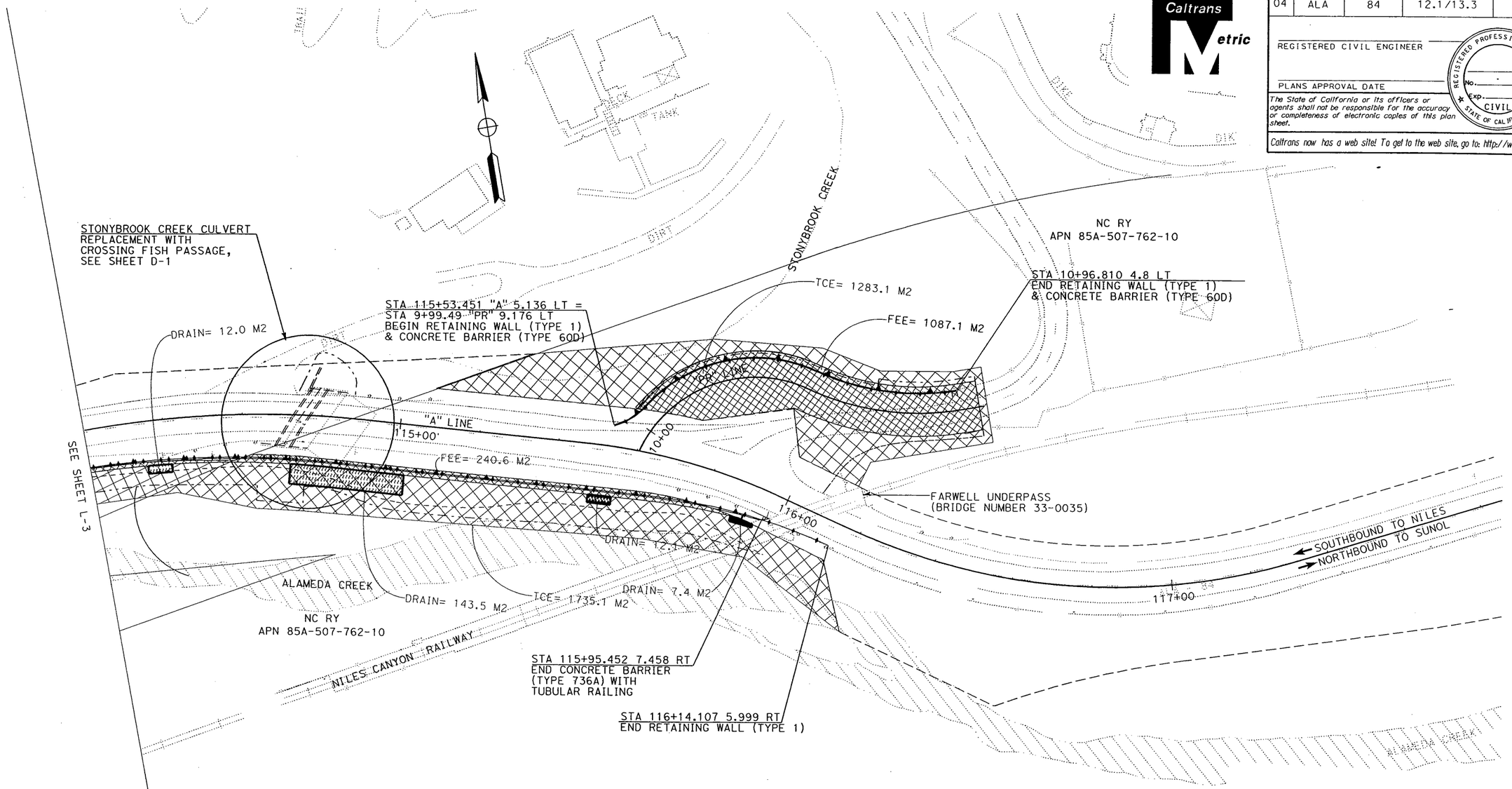

ALL DIMENSIONS ARE IN
METERS UNLESS OTHERWISE SHOWN

LAYOUT

SCALE: 1:500

L-4

FOR NOTES & LEGEND,
SEE SHEET L-1

RELATIVE BORDER SCALE
IS IN MILLIMETERS
0 20 40 60 80

USERNAME => gbains
DGN FILE => 17440ee04.dgn

CU 04231

EA 174400

LAST REVISION 00-00-00
DATE PLOTTED => 18-MAR-2005
TIME PLOTTED => 07:39

DIST	COUNTY	ROUTE	KILOMETER POST TOTAL PROJECT	SHEET No	TOTAL SHEETS
04	ALA	84	12.1/13.3		

REGISTERED CIVIL ENGINEER

PLANS APPROVAL DATE

REGISTERED PROFESSIONAL ENGINEER No. Exp. CIVIL STATE OF CALIFORNIA

The State of California or its officers or agents shall not be responsible for the accuracy or completeness of electronic copies of this plan sheet.

Caltrans now has a web site! To get to the web site, go to: http://www.dot.ca.gov

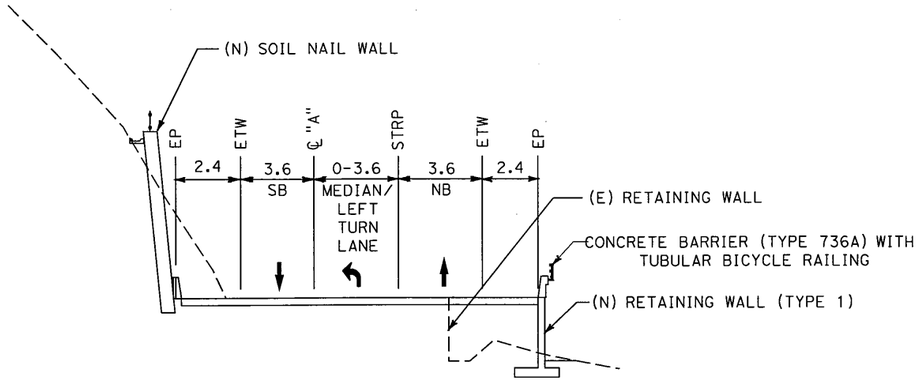

"A" LINE

STA 113+18.215 TO STA 116+14.107

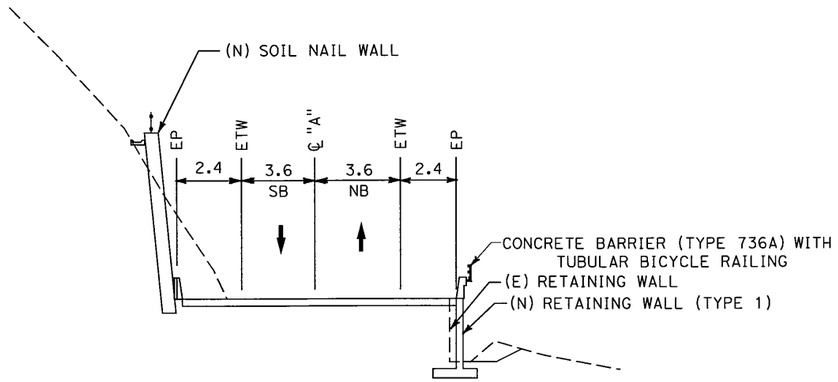

"A" LINE

STA 110+74.728 TO STA 111+09.064

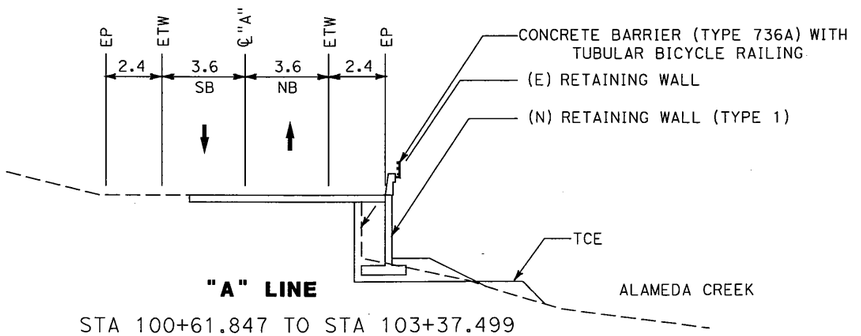

"A" LINE

STA 100+61.847 TO STA 103+37.499
STA 110+63.217 TO STA 110+74.728
STA 111+09.064 TO STA 113+18.215

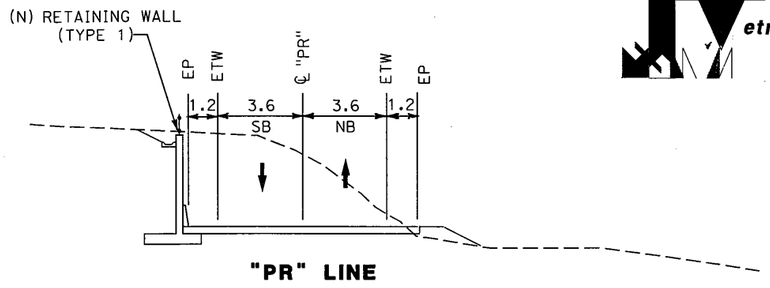

"PR" LINE

STA 9+99.490 TO STA 10+96.810

ABUTMENT E

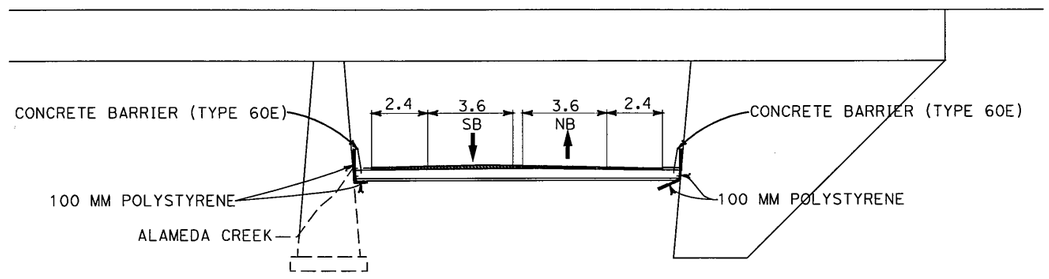

FARWELL UNDERPASS
(BR NO 33-0035)

ABUTMENT W
PIER 1
PIER 2

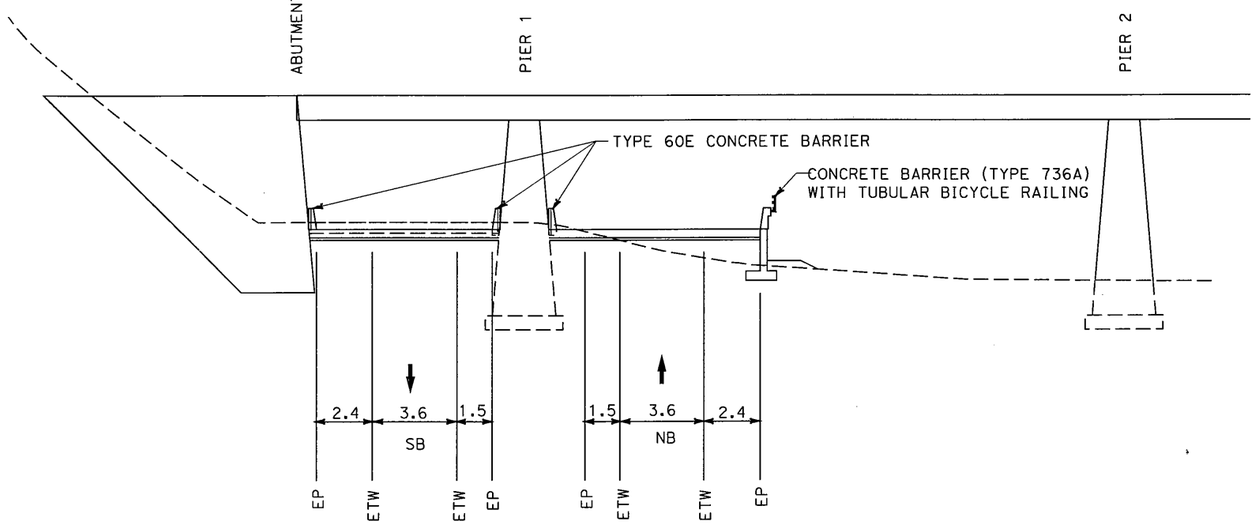

ROSEWARNES UNDERPASS
(BR NO 33-0034)

TYPICAL CROSS SECTIONS

NO SCALE

X-1

STATE OF CALIFORNIA - DEPARTMENT OF TRANSPORTATION
Caltrans PROJECT DEVELOPMENT

PROJECT ENGINEER: JAMES HSIAO

CALCULATED/ DESIGNED BY | CHECKED BY

DATE | REVISED BY | DATE REVISED

LAST REVISION 00-00-00 | DATE PLOTTED => 24-MAR-2005 | TIME PLOTTED => 15:55

RELATIVE BORDER SCALE IS IN MILLIMETERS 0 20 40 60 80

USERNAME => jhsiao
DGN FILE => 17440b01.dgn

CU 04231

EA 174400

Appendix E Existing Visual Conditions and Visual Impact Simulations

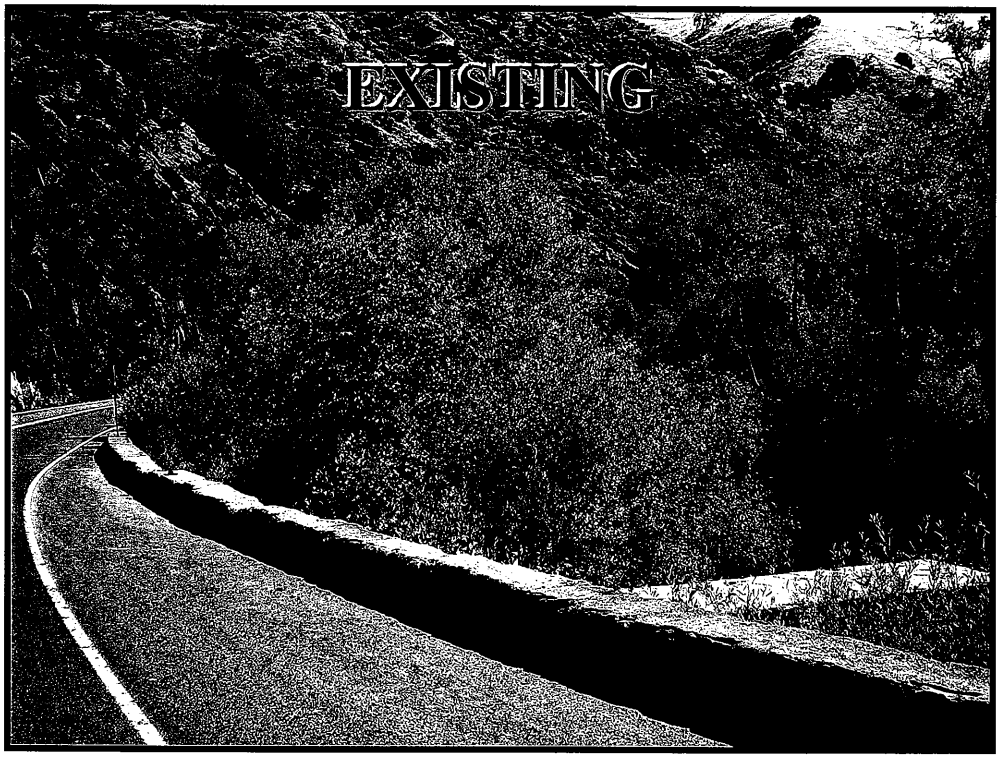

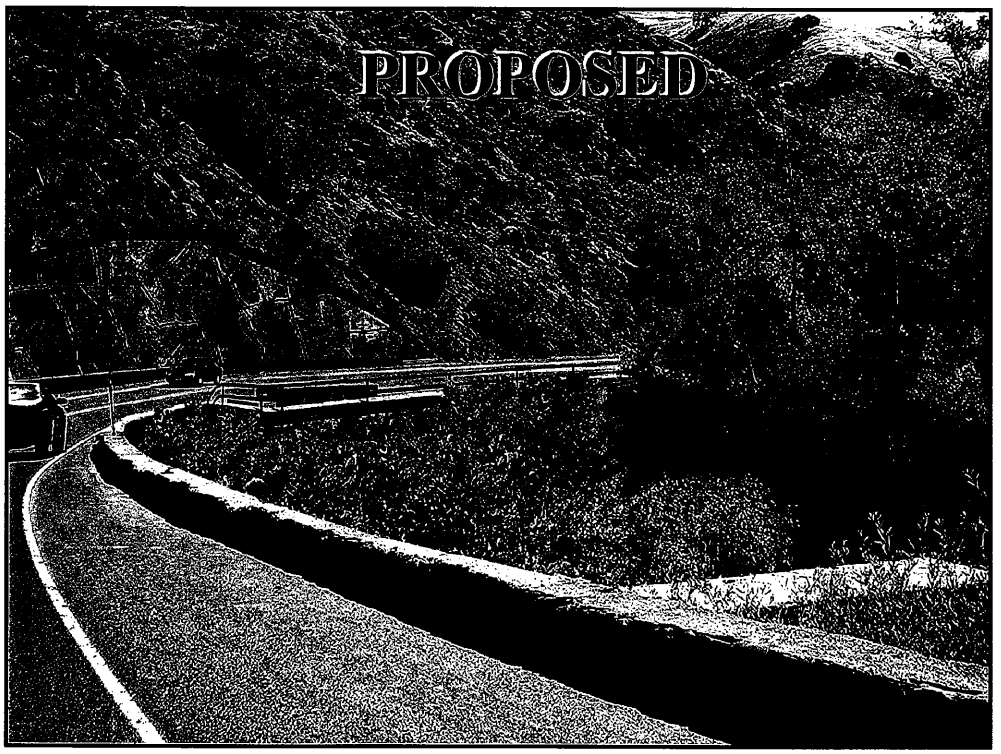

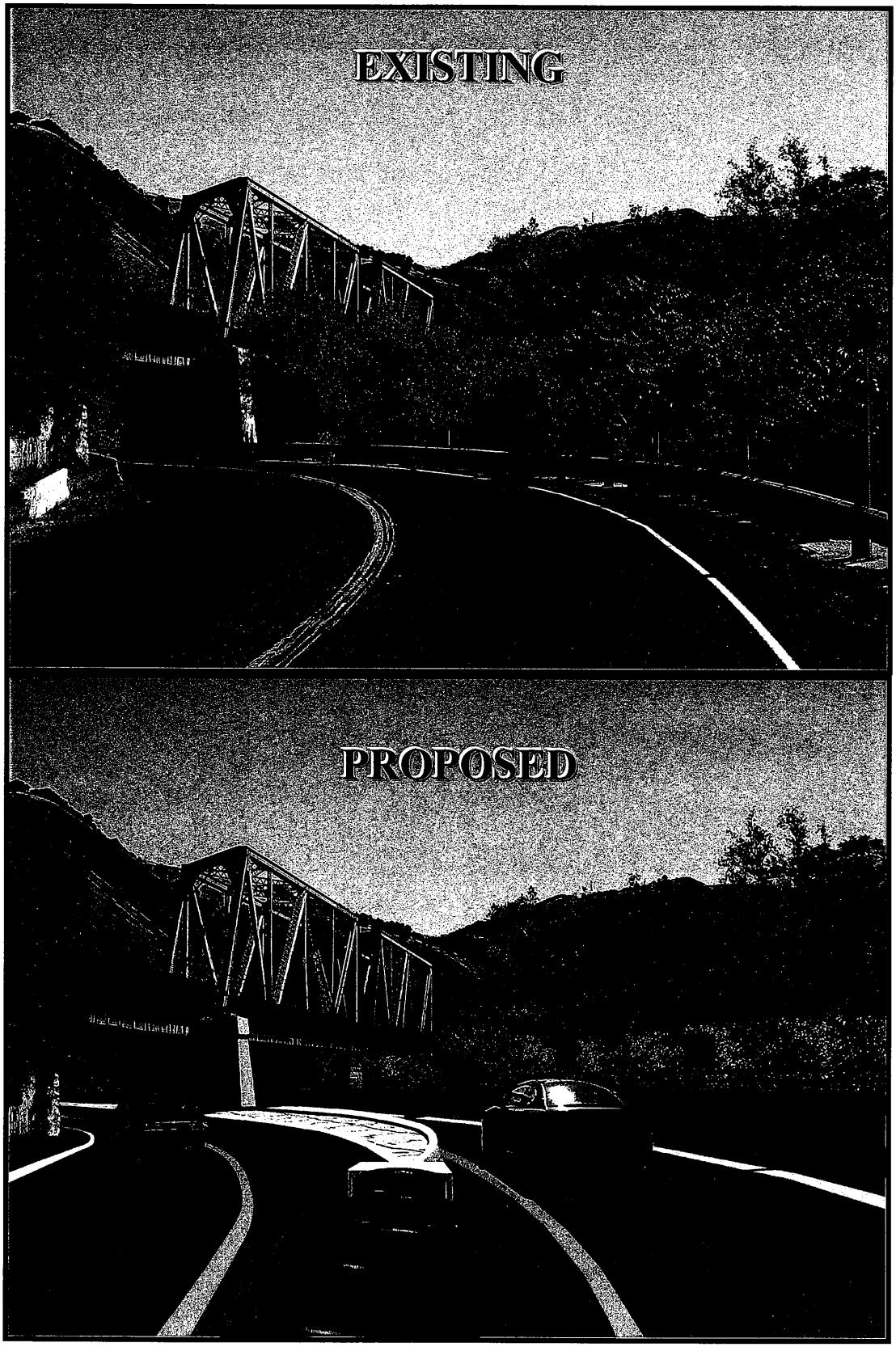
EXISTING
PROPOSED

Appendix F Habitat Impact Maps

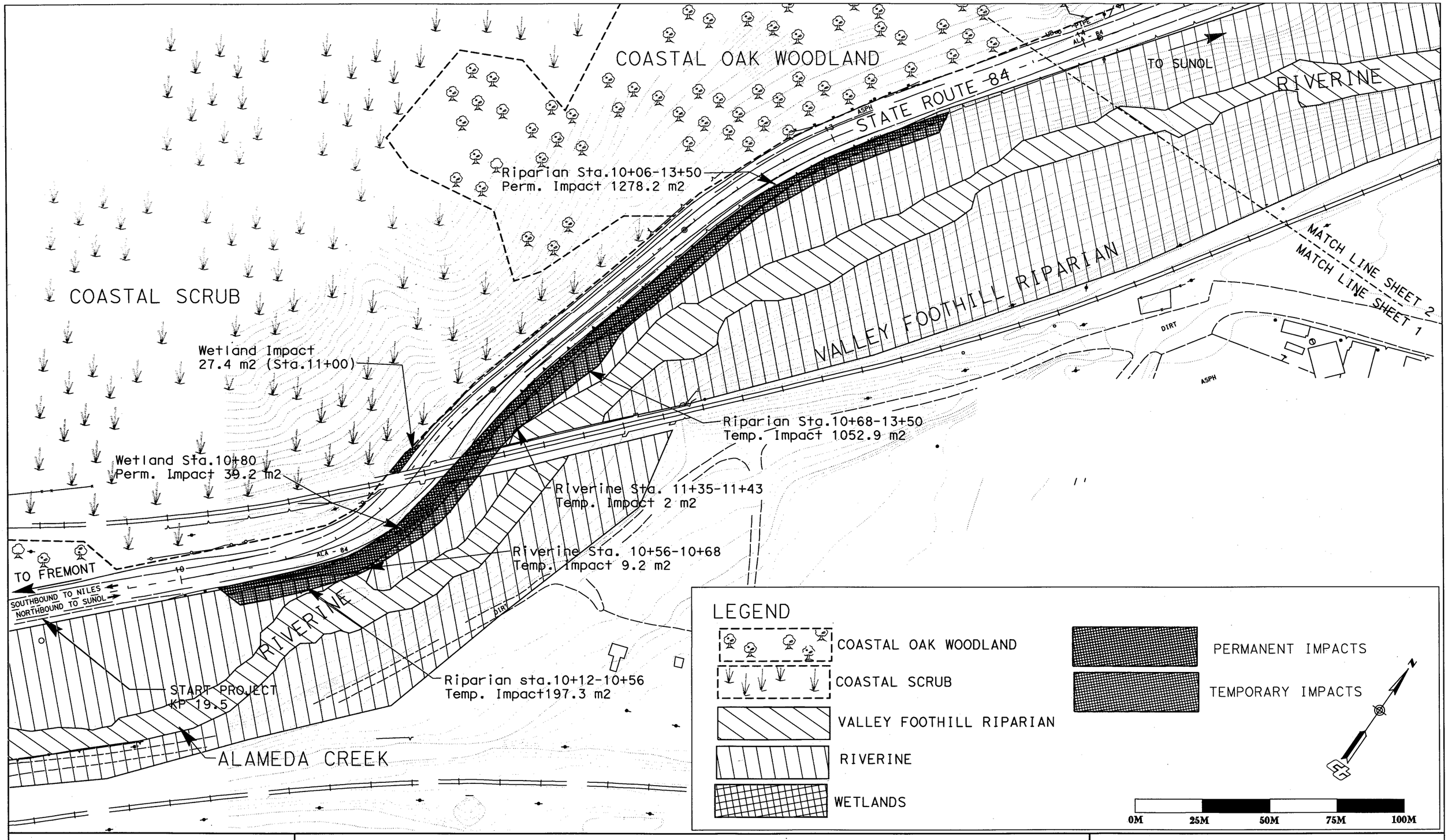

OFFICE OF WATER QUALITY
EROSION CONTROL & MITIGATION

USERNAME => cpadick
DGN FILE =>niles_mapping
DATE PLOTTED =>27 Aug 2004

NILES CANYON SAFETY WIDENING PROJECT
STATE ROUTE 84

NILES CANYON
HABITAT IMPACTS MAP

MATCH LINE SHEET 1

COASTAL OAK WOODLAND

COASTAL SCRUB

TO SUNOL

STATE ROUTE 84

VALLEY FOOTHILL RIPARIAN

ALAMEDA CREEK

TO FREMONT

RIVERINE

VALLEY FOOTHILL RIPARIAN

MATCH LINE SHEET 3
MATCH LINE SHEET 2

MATCH LINE SHEET 2
MATCH LINE SHEET 1

DIRT

ASPH

LEGEND

- COASTAL OAK WOODLAND
- COASTAL SCRUB
- VALLEY FOOTHILL RIPARIAN
- RIVERINE
- WETLANDS
- PERMANENT IMPACTS
- TEMPORARY IMPACTS

0M 25M 50M 75M 100M

OFFICE OF WATER QUALITY
EROSION CONTROL & MITIGATION

USERNAME => cpadick
DGN FILE =>niles_mapping
DATE PLOTTED =>27 Aug 2004

NILES CANYON SAFETY WIDENING PROJECT
STATE ROUTE 84

NILES CANYON
HABITAT IMPACTS MAP

MATCH LINE SHEET 2

COASTAL SCRUB

Coastal Scrub Sta. 20+50-20+95
Perm. Impact 182.9 m2

Riparian (Sta.20+40-25+86)
Perm. Impact 4577.3 m2

COASTAL OAK WOODLAND

STATE ROUTE 84

COASTAL SCRUB

Riverine Sta. 20+65-21+10
Temp. Impact 34.9 m2

ALAMEDA CREEK

Riverine Sta. 21+70-22+20
Temp. Impact 91.2 m2

Riverine Sta. 22+80-23+35
Temp. Impact 140.1 m2

Riparian Sta.20+35-25+80
Temp. Impact 2288.1 m2

RIVERINE

TO SUNOL

TO FREMONT

VALLEY FOOTHILL RIPARIAN

COASTAL OAK WOODLAND

MATCH LINE SHEET 3

MATCH LINE SHEET 4

MATCH LINE SHEET 2

MATCH LINE SHEET 3

LEGEND

- COASTAL OAK WOODLAND
- COASTAL SCRUB
- VALLEY FOOTHILL RIPARIAN
- RIVERINE
- WETLANDS
- PERMANENT IMPACTS
- TEMPORARY IMPACTS

0M 25M 50M 75M 100M

OFFICE OF WATER QUALITY
EROSION CONTROL & MITIGATION

USERNAME => cpadick
DGN FILE =>niles_mapping
DATE PLOTTED =>27 Aug 2004

NILES CANYON SAFETY WIDENING PROJECT
STATE ROUTE 84

NILES CANYON
HABITAT IMPACTS MAP

MATCH LINE SHEET 3

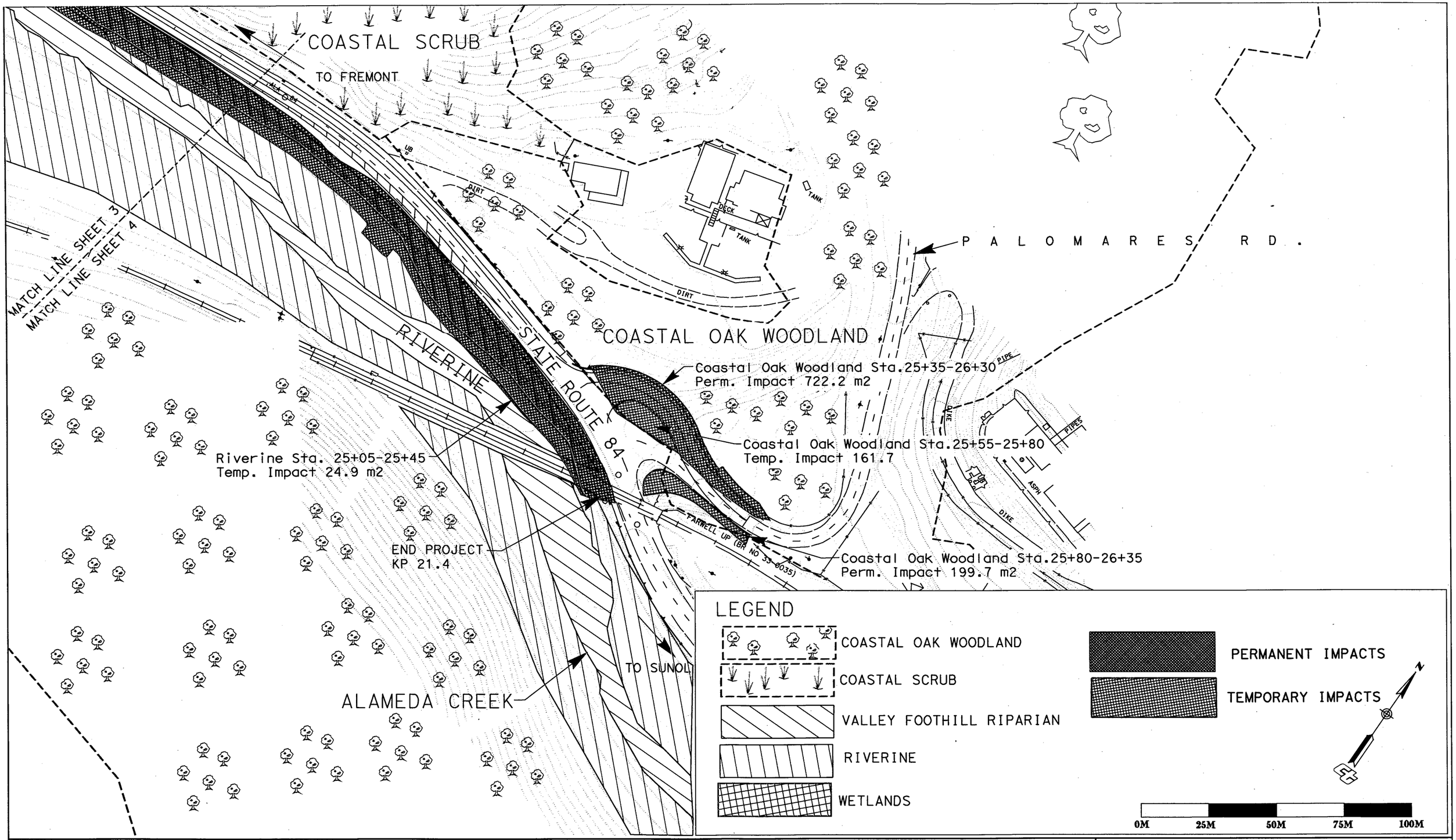

OFFICE OF WATER QUALITY
EROSION CONTROL & MITIGATION
USERNAME => cpadick
DGN FILE =>niles_mapping
DATE PLOTTED =>27 Aug 2004

NILES CANYON SAFETY WIDENING PROJECT STATE ROUTE 84

NILES CANYON HABITAT IMPACTS MAP

MATCH LINE SHEET 4

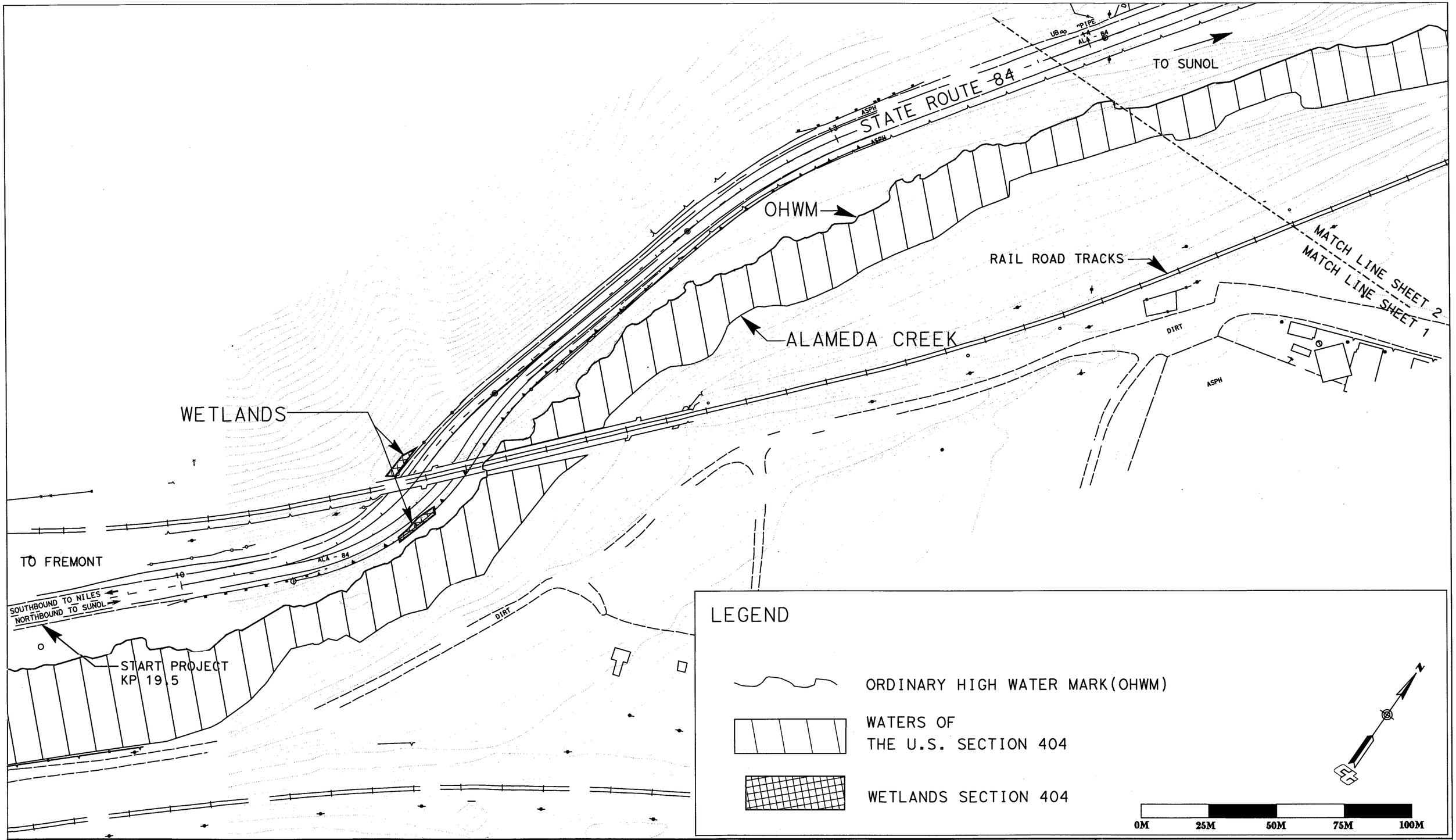

OFFICE OF WATER QUALITY
EROSION CONTROL & MITIGATION

USERNAME => cpadick
DGN FILE =>niles_mapping
DATE PLOTTED =>27 Aug 2004

NILES CANYON SAFETY WIDENING PROJECT
STATE ROUTE 84

NILES CANYON WETLAND STUDY MAP
EXISTING CONDITIONS

MATCH LINE SHEET 1

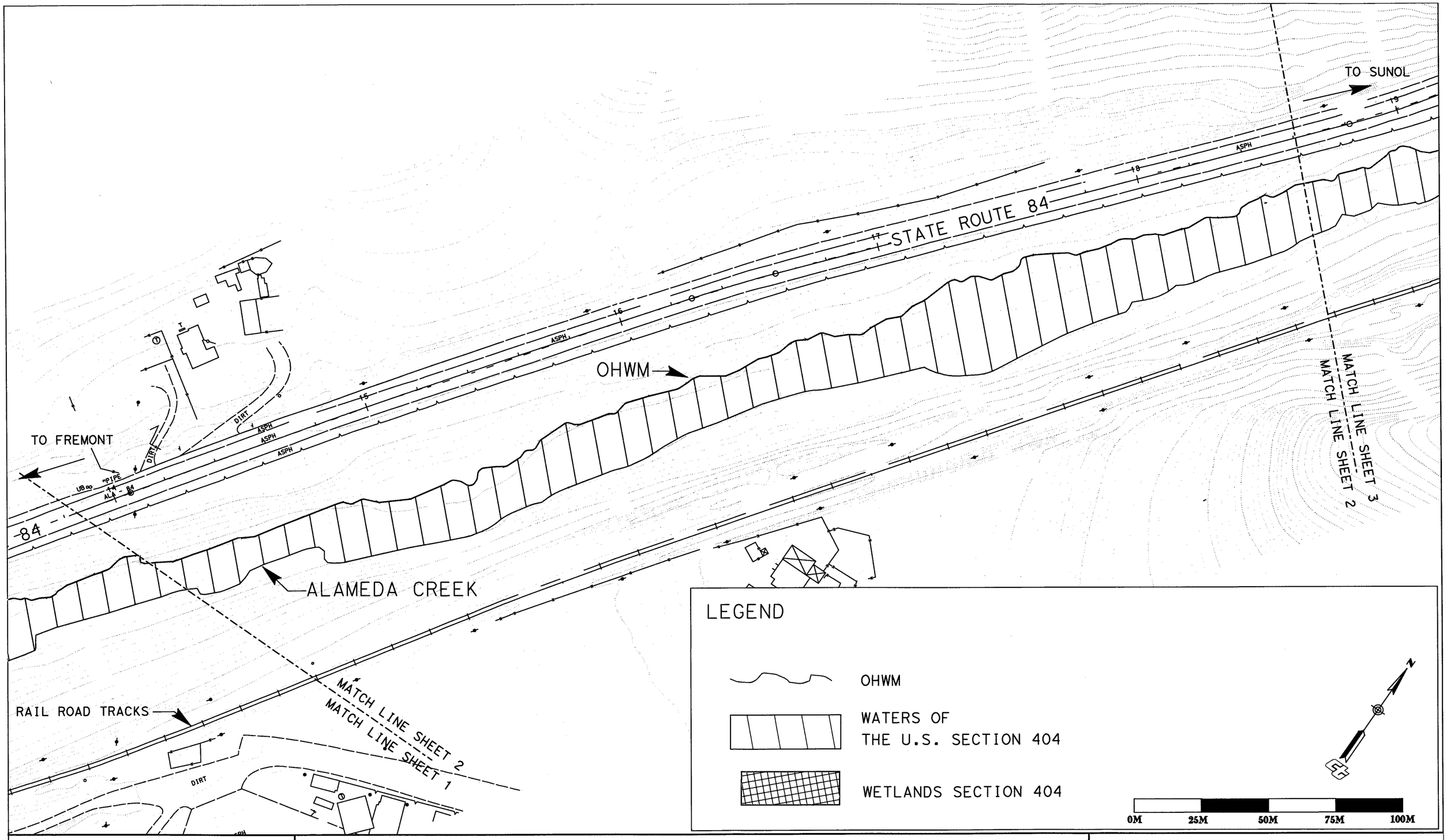

OFFICE OF WATER QUALITY
EROSION CONTROL & MITIGATION

USERNAME => cpadick
DGN FILE =>niles_mapping
DATE PLOTTED =>27 Aug 2004

NILES CANYON SAFETY WIDENING PROJECT
STATE ROUTE 84

NILES CANYON WETLAND STUDY MAP
EXISTING CONDITIONS

MATCH LINE SHEET 2

STATE ROUTE 84

ALAMEDA CREEK

OHWM

TO FREMONT

TO SUNOL

MATCH LINE SHEET 3
MATCH LINE SHEET 2

MATCH LINE SHEET 3
MATCH LINE SHEET 4

LEGEND

OHWM

WATERS OF
THE U.S. SECTION 404

WETLANDS SECTION 404

RAIL ROAD TRACKS

N

0M 25M 50M 75M 100M

OFFICE OF WATER QUALITY
EROSION CONTROL & MITIGATION

USERNAME => cpadick
DGN FILE =>niles_mapping
DATE PLOTTED =>27 Aug 2004

NILES CANYON SAFETY WIDENING PROJECT
STATE ROUTE 84

NILES CANYON WETLAND STUDY MAP
EXISTING CONDITIONS

MATCH LINE SHEET 3

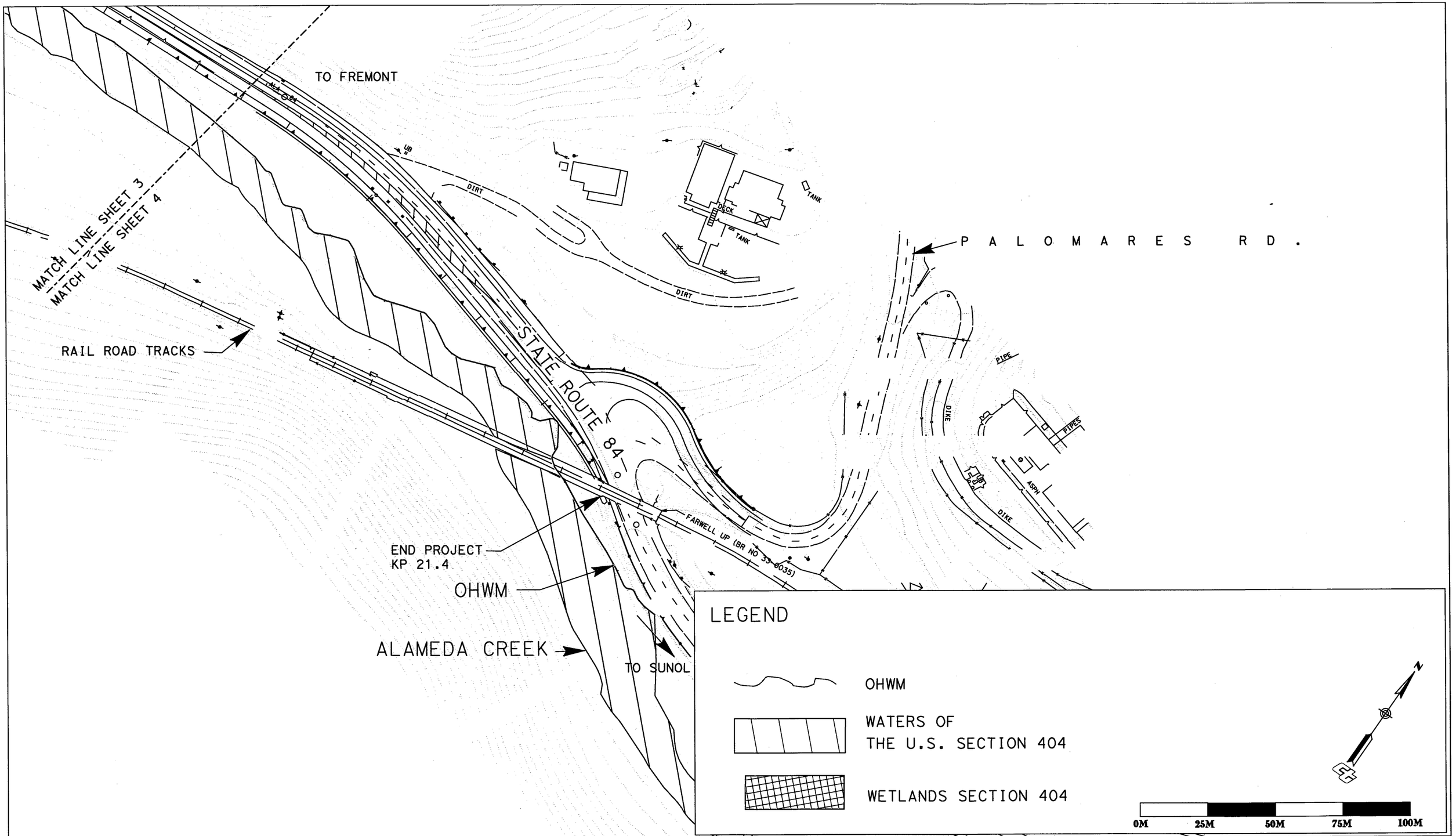

OFFICE OF WATER QUALITY
EROSION CONTROL & MITIGATION

USERNAME => cpadick
DGN FILE =>niles_mapping
DATE PLOTTED =>27 Aug 2004

NILES CANYON SAFETY WIDENING PROJECT
STATE ROUTE 84

NILES CANYON WETLAND STUDY MAP
EXISTING CONDITIONS

MATCH LINE SHEET 4

Appendix G Stonybrook Creek Culvert Replacement

The following pages show preliminary plans for the culvert replacement at Stonybrook Creek.

DIST	COUNTY	ROUTE	KILOMETER POST TOTAL PROJECT	SHEET No	TOTAL SHEETS
04	Ala	84	0.7/5.3		

REGISTERED CIVIL ENGINEER

PLANS APPROVAL DATE

REGISTERED PROFESSIONAL ENGINEER
HAN-BIN LIANG
No. C 48404
Exp. 6/30/04
CIVIL
STATE OF CALIFORNIA

CALTRANS
111 Grand Avenue
Oakland, CA 94612

WRECO
1243 Alpine Road, Suite 108
Walnut Creek,-CA 94596,

The State of California or its officers or agents shall not be responsible for the accuracy or completeness of electronic copies of this plan sheet.

Caltrans now has a web site! To get to the web site, go to: http://www.dot.ca.gov

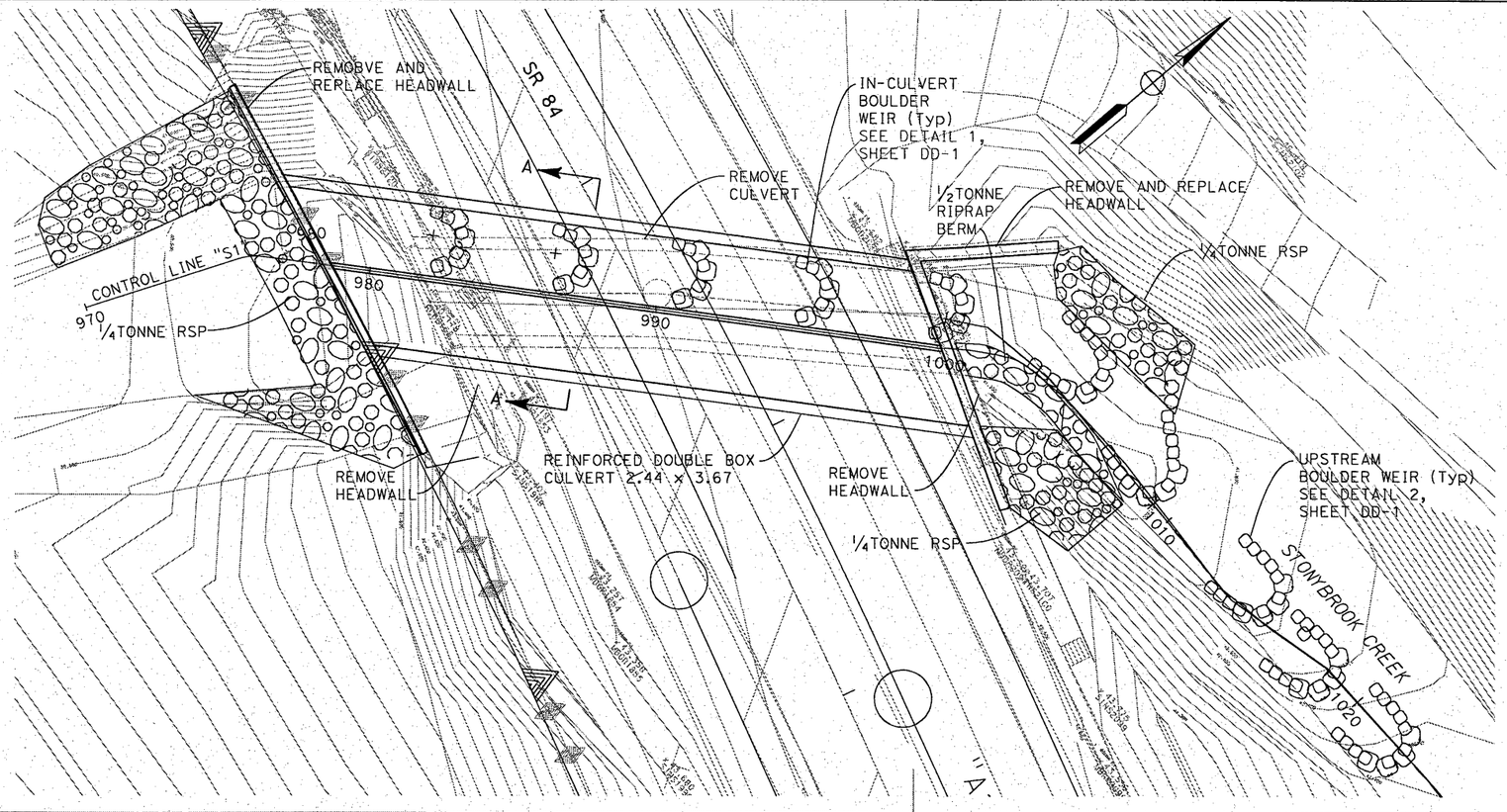

PLAN
SCALE 1:100

LOCATION	RIVER STATION M	CREST/ INV ELEV M	GAP ELEV M
INSIDE BOX CULVERT WEST BARREL			
WER 1 D/S POOL	982.20	39.10	
WER 1 CREST	982.70	39.80	39.80
WER 1 BASE	983.20	39.60	
WER 2 D/S POOL	986.40	39.25	
WER 2 CREST	986.90	39.95	39.95
WER 2 BASE	987.40	39.75	
WER 3 D/S POOL	990.60	39.40	
WER 3 CREST	991.10	40.10	40.10
WER 3 BASE	991.60	39.90	
WER 4 D/S POOL	994.80	39.55	
WER 4 CREST	995.30	40.25	40.25
WER 4 BASE	995.80	40.05	
WER 5 D/S POOL	999.00	39.70	
WER 5 CREST	999.50	40.40	40.40
WER 5 BASE	1000.00	40.20	
BOX CULVERT U/S APPROACH			
WER 6 D/S POOL	1003.50	40.00	
WER 6 CREST	1004.00	40.70	40.40
WER 6 BASE	1004.50	40.50	
WER 7 D/S POOL	1008.00	40.30	
WER 7 CREST	1008.50	41.00	40.70
WER 7 BASE	1009.00	40.80	
WER 8 D/S POOL	1012.50	40.60	
WER 8 CREST	1013.00	41.30	41.00
WER 8 BASE	1013.50	41.10	
WER 9 D/S POOL	1017.00	40.90	
WER 9 CREST	1017.50	41.60	41.30
WER 9 BASE	1018.00	41.40	

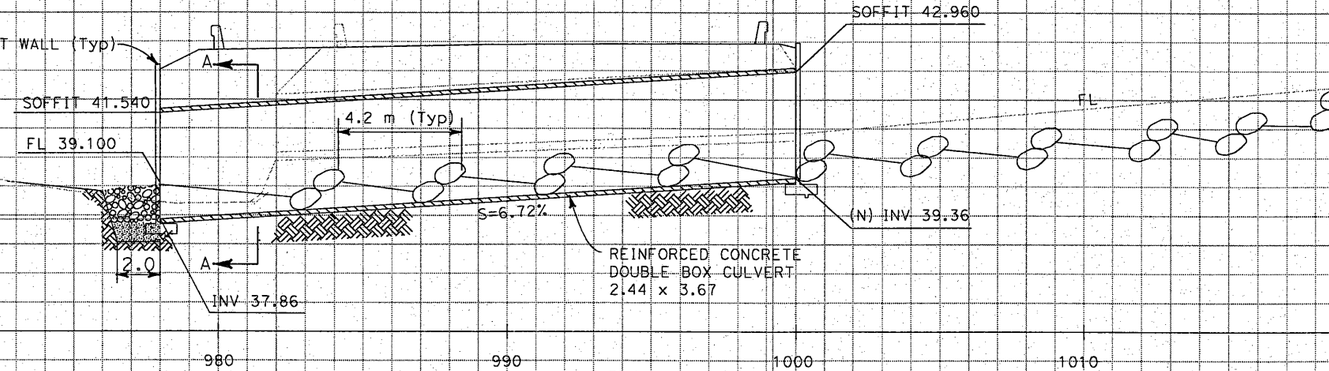

WEST BARREL PROFILE
SCALE 1:100

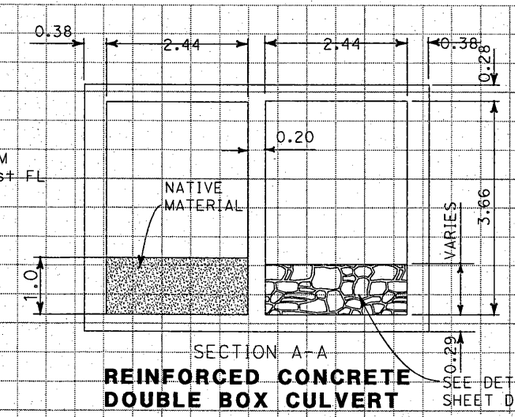

SECTION A-A
REINFORCED CONCRETE DOUBLE BOX CULVERT
NO SCALE

PRELIMINARY

CONCEPTUAL DESIGN ONLY
NOT FOR CONSTRUCTION

NOTE: THIS PLAN AND PROFILE ACCURATE FOR FISH PASSAGE WORK ONLY.

ALL DIMENSIONS ARE IN METERS UNLESS OTHERWISE SHOWN

FISH PASSAGE PLAN, PROFILE AND DETAIL

SCALE AS SHOWN

DESIGN OVERSIGHT
STATE OF CALIFORNIA - DEPARTMENT OF TRANSPORTATION
HYDRAULICS
Caltrans

	DATE	REVISED BY	DATE REVISED
CALCULATED/ DESIGNED BY	---	---	---
CHECKED BY	---	---	---

Station
m³ Exc
Emb

LAST REVISION 08-19-03

FOR REDUCED PLANS ORIGINAL SCALE IS IN MILLIMETERS 0 20 40 60 80

DGN FILE =>

CU XXXXX

EA 238100

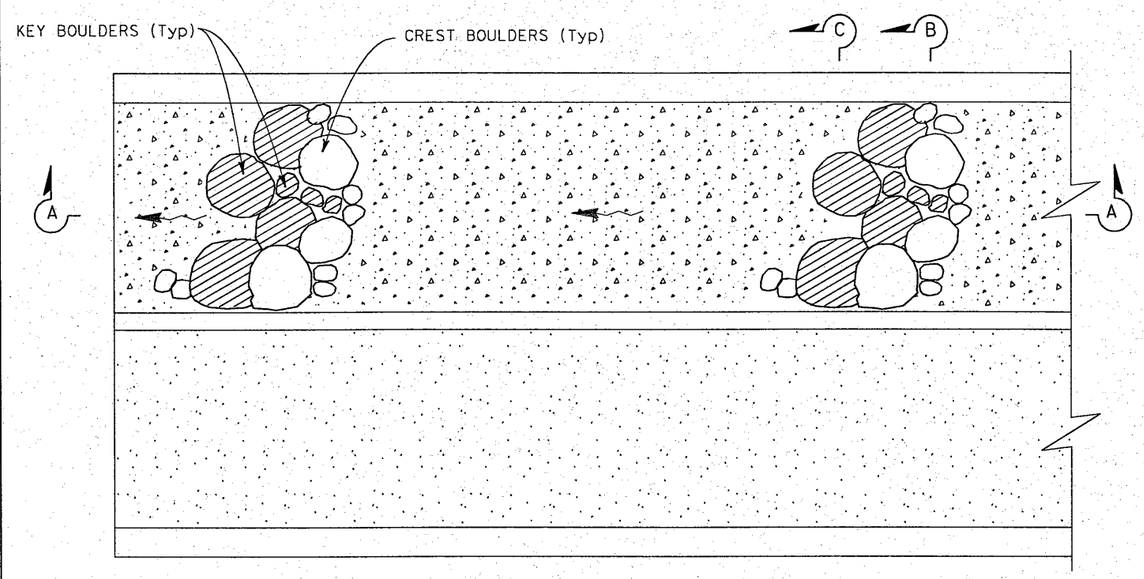

DETAIL 1

CULVERT BOULDER WEIR

NOTE:
CREST BOULDERS PLACED
IN A "V" ALIGNMENT POINT
ORIENTED UPSTREAM

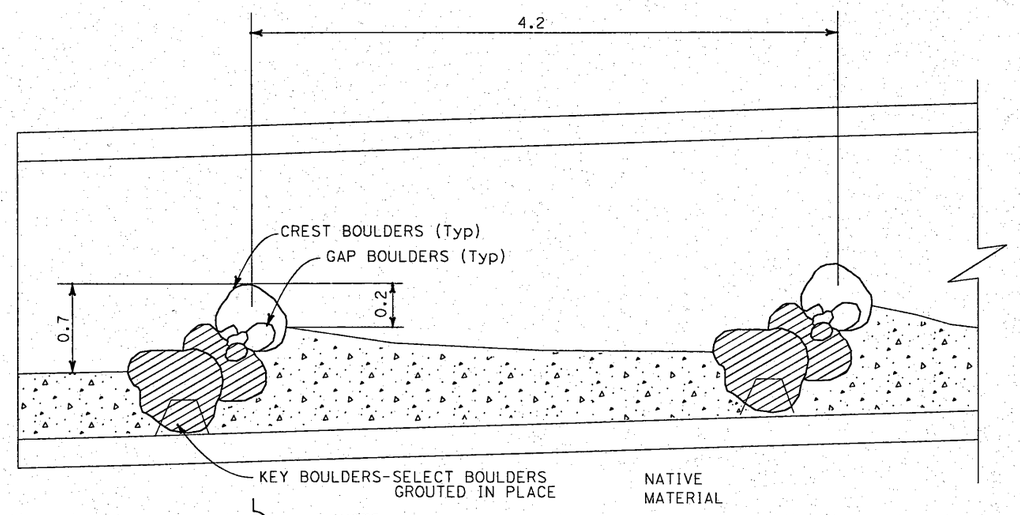

NOTE:
CREST BOULDERS PLACED
TO-FIT IN DIRECT CONTACT
w/ KEY BOULDERS

SECTION A-A

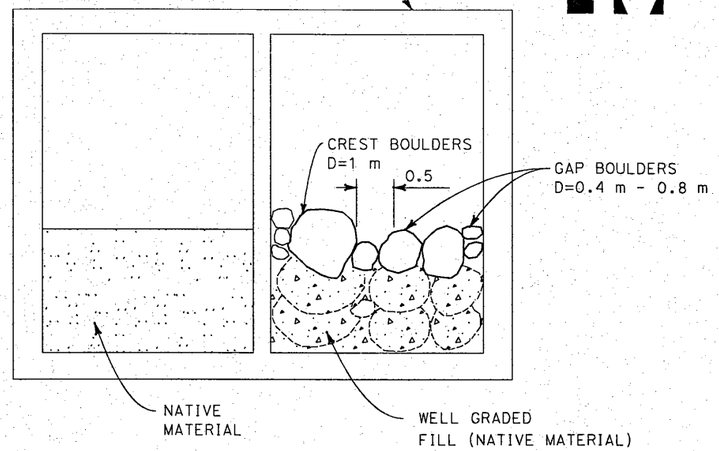

SECTION B-B

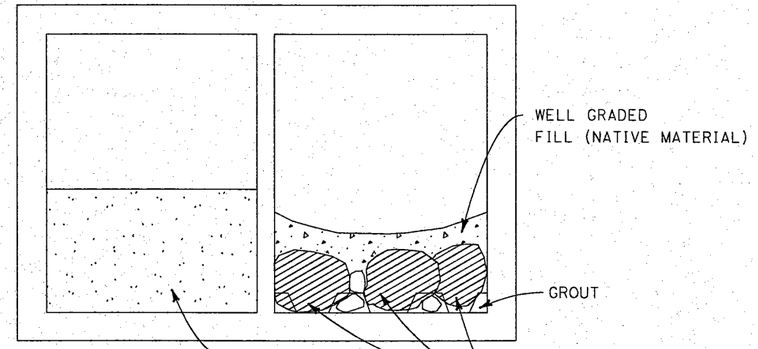

SECTION C-C

DIST	COUNTY	ROUTE	KILOMETER POST TOTAL PROJECT	SHEET No	TOTAL SHEETS
05	Ala	84	83.5/96.5		

REGISTERED CIVIL ENGINEER DATE

PLANS APPROVAL DATE

REGISTERED PROFESSIONAL ENGINEER No. Exp. CIVIL STATE OF CALIFORNIA

The State of California or its officers or agents shall not be responsible for the accuracy or completeness of electronic copies of this plan sheet.

CALTRANS
111 Grand Avenue
Oakland, CA 94612

WRECO
1243 Alpine Road, Suite 108
Walnut Creek, CA 94596

To get to the web site, go to: http://www.dot.ca.gov

PRELIMINARY

ALL DIMENSIONS ARE IN METERS UNLESS OTHERWISE SHOWN

FISH PASSAGE DETAILS

NO SCALE

CALCULATED/DESIGNED BY
CHECKED BY
DATE REVISED
REVISED BY
DATE
UH
HBL
DESIGN OVERSIGHT
STATE OF CALIFORNIA - DEPARTMENT OF TRANSPORTATION
Caltrans

LAST REVISION 00-00-00
DATE PLOTTED => $DATE$
TIME PLOTTED => $TIME$

FOR REDUCED PLANS ORIGINAL SCALE IS IN MILLIMETERS 0 10 20 30 40
USERNAME => VCJ
DGN FILE => $FILE$
CU -
EA -

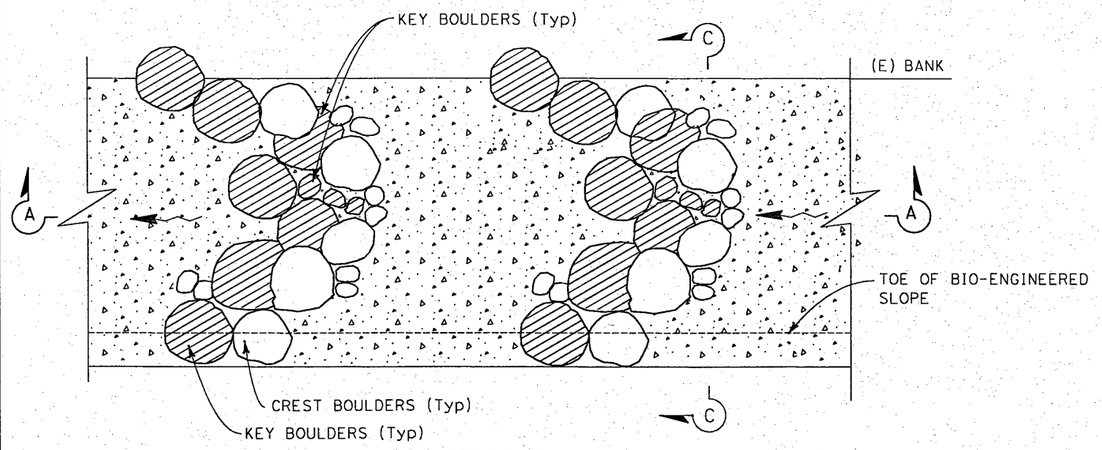

DETAIL 1

UPSTREAM BOULDER VORTEX WEIR

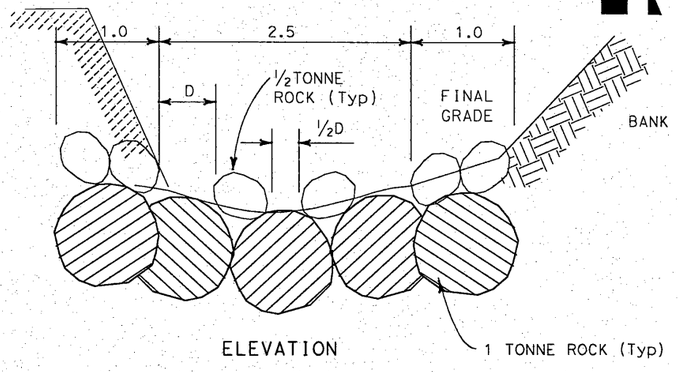

ELEVATION

BOULDER VORTEX WEIR

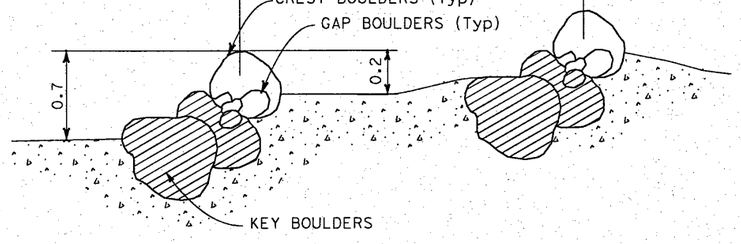

SECTION A-A

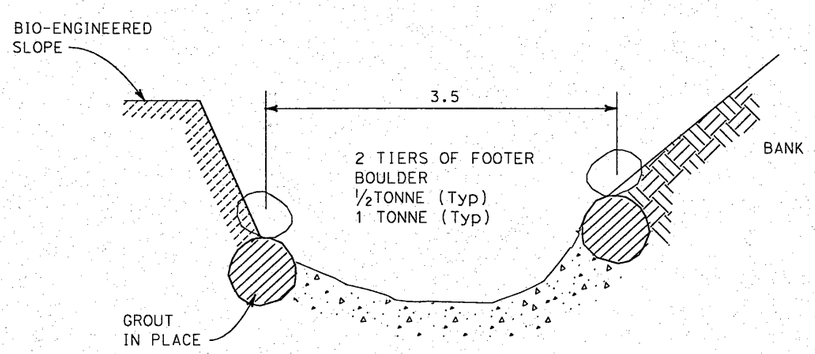

SECTION B-B

PRELIMINARY

ALL DIMENSIONS ARE IN METERS UNLESS OTHERWISE SHOWN

FISH PASSAGE DETAILS

NO SCALE

DIST	COUNTY	ROUTE	KILOMETER POST TOTAL PROJECT	SHEET No	TOTAL SHEETS
05	Ala	84	83.5/96.5		

REGISTERED CIVIL ENGINEER DATE

REGISTERED PROFESSIONAL ENGINEER No. Exp. CIVIL STATE OF CALIFORNIA

PLANS APPROVAL DATE

The State of California or its officers or agents shall not be responsible for the accuracy or completeness of electronic copies of this plan sheet.

CALTRANS
111 Grand Avenue
Oakland, CA 94612

WRECO
1243 Alpine Road, Suite 108
Walnut Creek, CA 94596

To get to the web site, go to: http://www.dot.ca.gov

Caltrans Metric

DESIGN OVERSIGHT

CALCULATED/ DESIGNED BY UH

CHECKED BY HBL

DATE REVISED

REVISED BY

DATE

STATE OF CALIFORNIA - DEPARTMENT OF TRANSPORTATION

Caltrans

LAST REVISION 00-00-00

DATE PLOTTED => $DATE$

TIME PLOTTED => $TIME$

FOR REDUCED PLANS ORIGINAL SCALE IS IN MILLIMETERS 0 10 20 30 40

USERNAME => VCJ
DGN FILE => $FILE$

CU -

EA -

Appendix H Hydraulic Evaluation Stationing Map

Figure - 1

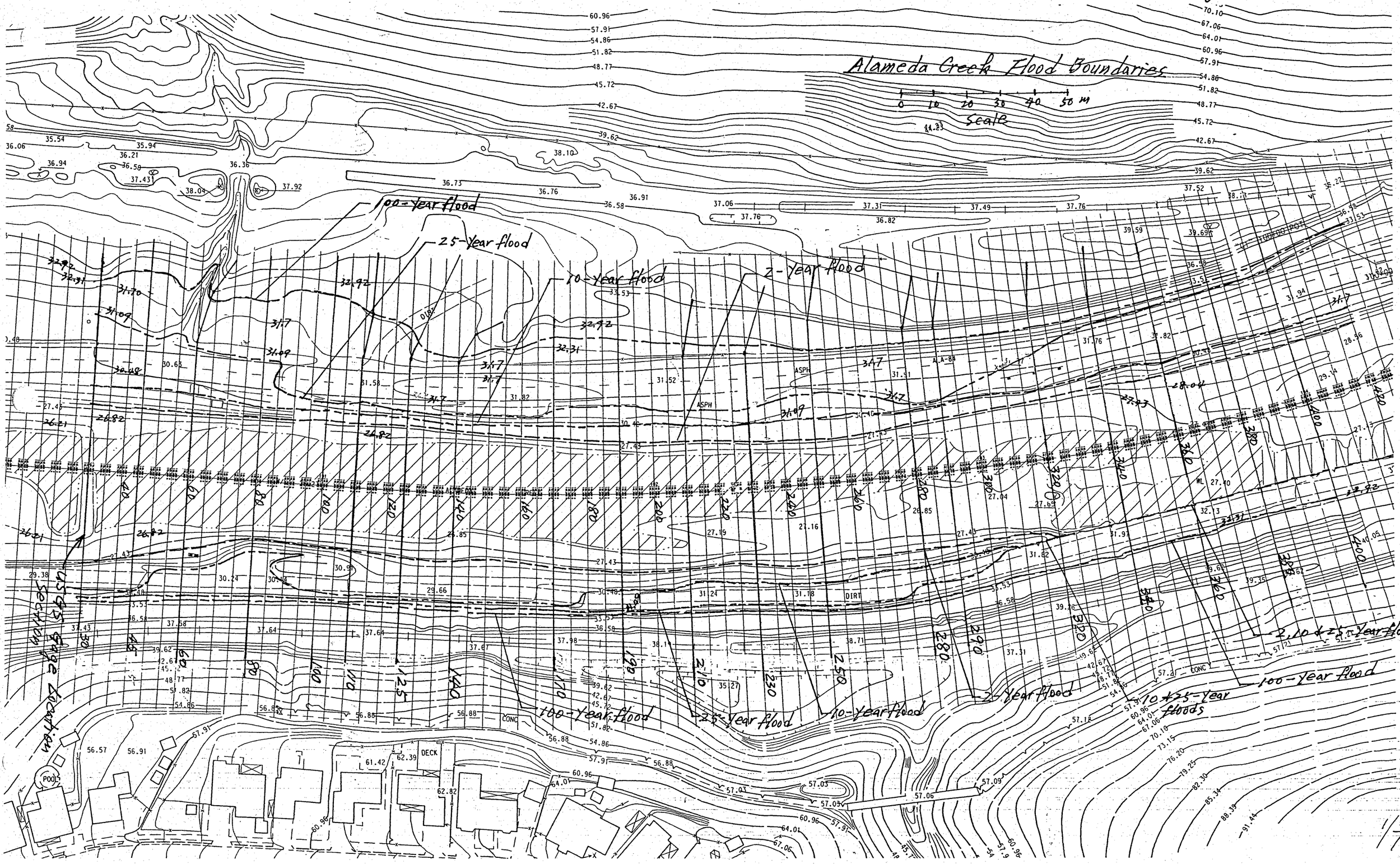

Alameda Creek Flood Boundaries
0 10 20 30 40 50 m
Scale
100-Year flood
25-Year flood
10-Year flood
2-Year flood
100-Year flood
25-Year flood
10-Year flood
2-Year flood
2, 10 & 25-Year floods
10 & 25-Year floods
100-Year flood
USGS Gage Location
Section
DIRT
ASPH
CONC
DECK
POOL

1/7

Figure - 2

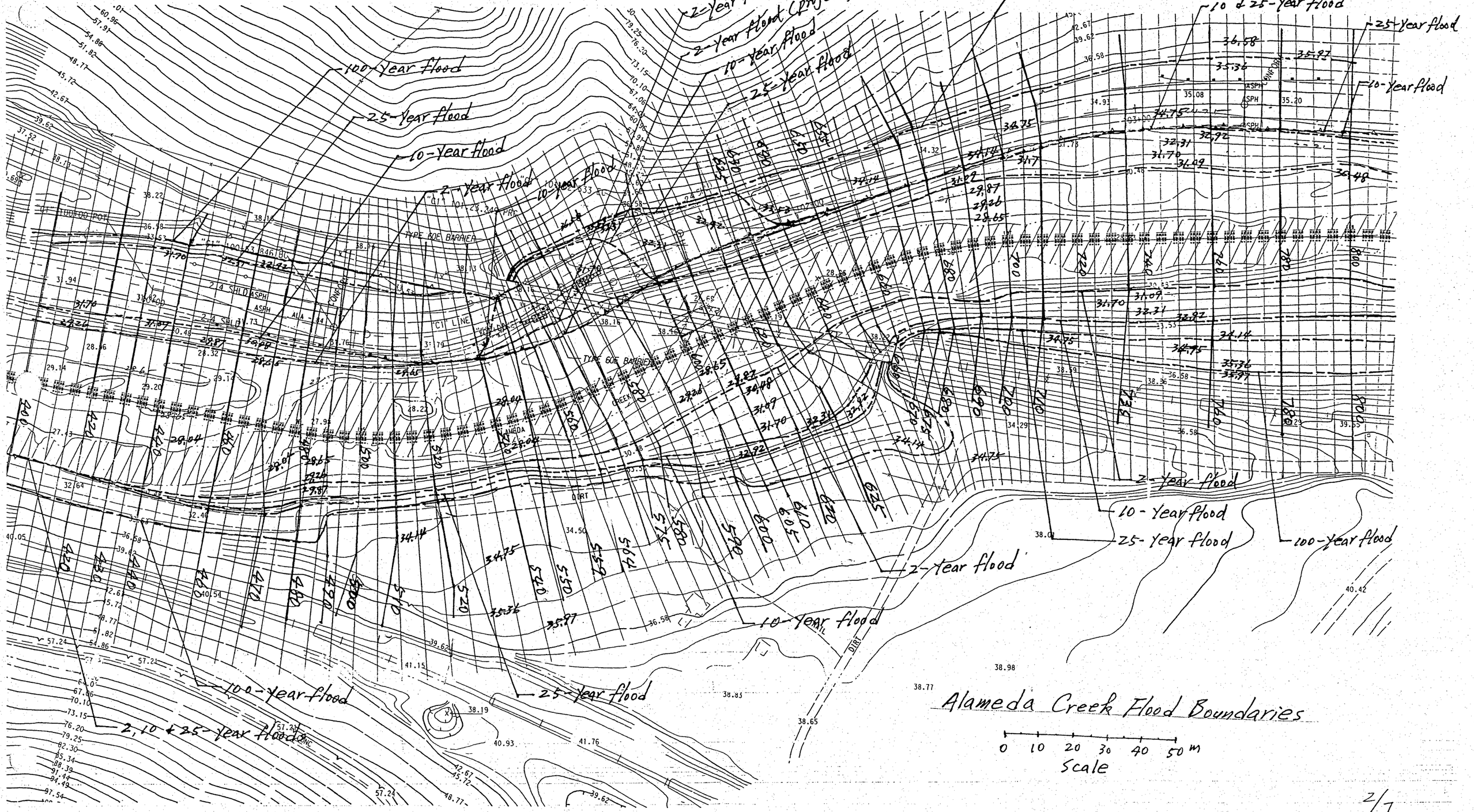
100-Year Flood
25-Year Flood
10-Year Flood
2-Year Flood
2-Year Flood (exist)
2-Year Flood (project)
10-Year Flood
25-Year Flood
100-Year Flood
10 & 25-Year Flood
25-Year Flood
10-Year Flood
2-Year Flood
10-Year Flood
25-Year Flood
100-Year Flood
2-Year Flood
10-Year Flood
100-Year Flood
2, 10 & 25-Year Flood
TYPE 60E BARRIER
TYPE 60E BARRIER
CONCRETE
ASPH
DIRT
CREEK
ALAMEDA
Alameda Creek Flood Boundaries
0 10 20 30 40 50 m
Scale

2/1

Figure – 3

Alameda Creek Flood Boundaries

Scale 0 10 20 30 40 50 m

100-Year Flood

25-Year Flood

10-Year Flood

2-Year Flood

25 + 100-Year Flood

10-Year Flood

25-Year Flood

100-Year Flood

10 & 25-Year Floods

2-Year Flood

2-year flood

10-year flood

25-year flood

100-year flood

ALAMEDA CREEK

DIRT

ASPH

POLE

ALA-84

Figure - 4

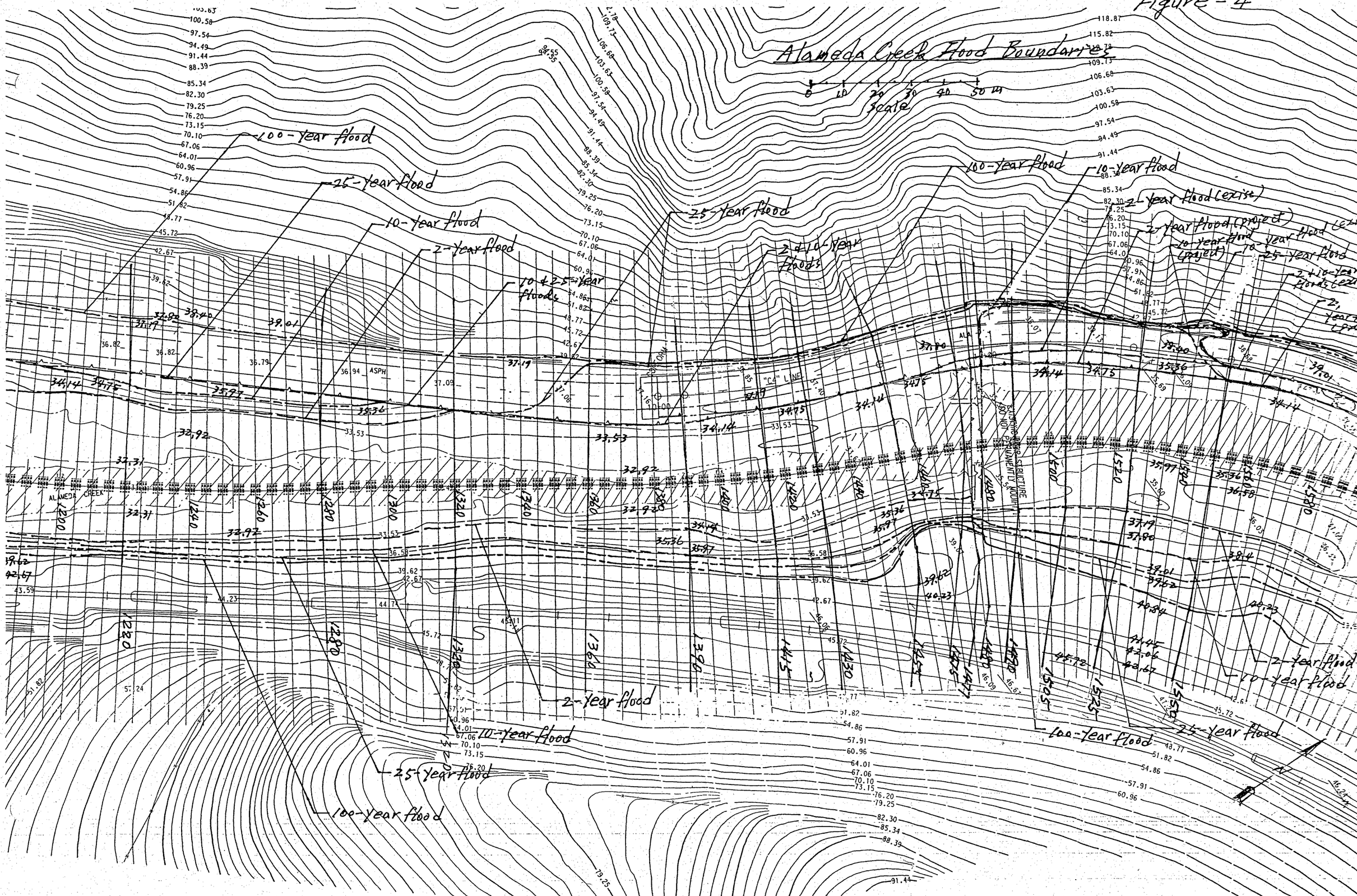

Alameda Creek Flood Boundaries
0 10 20 30 40 50 m
Scale
100-Year flood
25-Year flood
10-Year flood
2-Year flood
10 & 25-Year floods
25-Year flood
2 & 10-Year floods
100-Year flood
10-Year flood
2-Year flood (exist)
2-Year flood (project)
10-Year flood (project)
10-Year flood (exist)
25-Year flood
2 & 10-Year floods (exist)
2-Year floods (project)
2-Year flood
10-Year flood
25-Year flood
100-Year flood
2-Year flood
10-Year flood
25-Year flood
100-Year flood
ALAMEDA CREEK
"C4" LINE
ASPH

Figure - 5

Alameda Creek Flood Boundaries

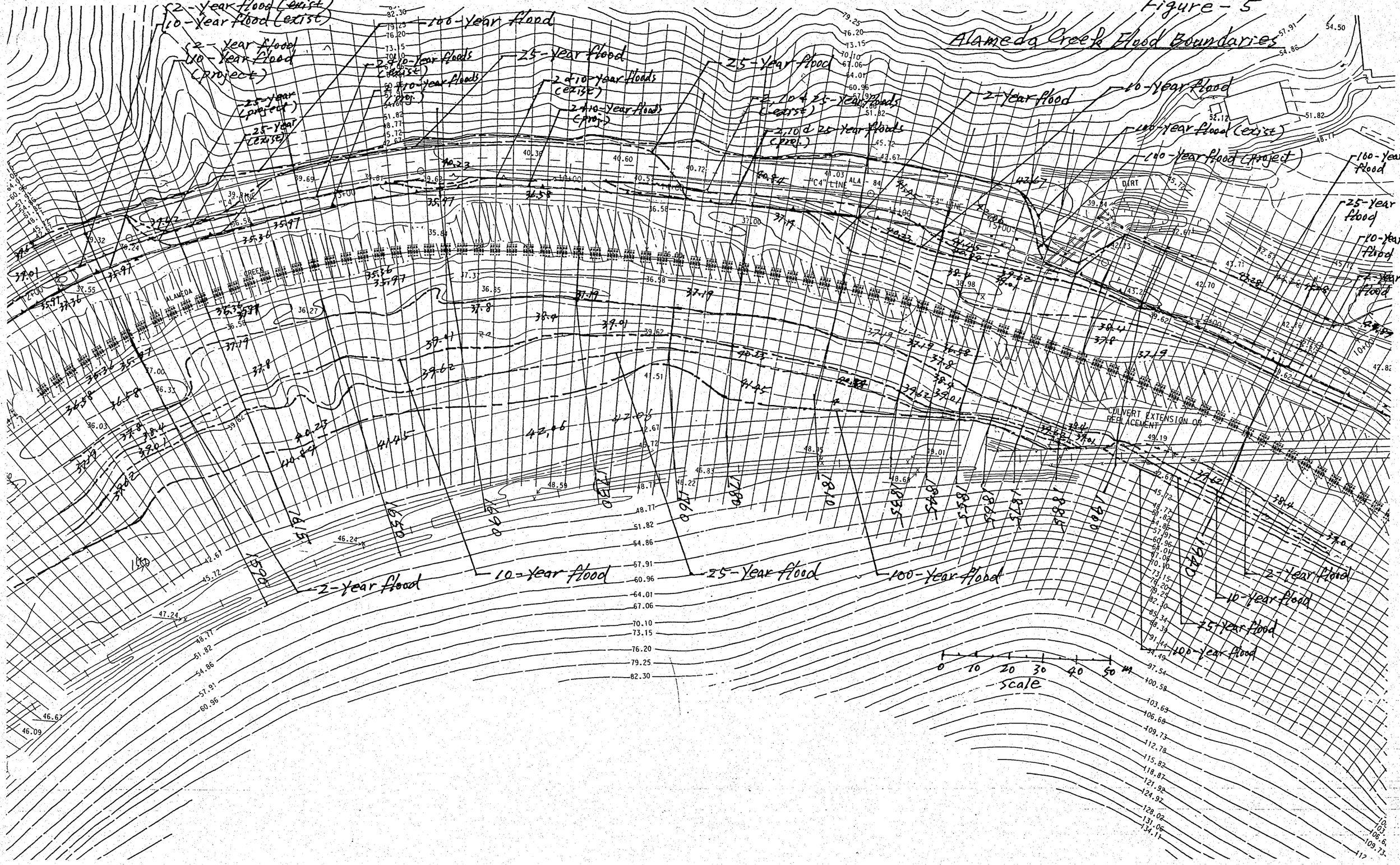

Figure-6

Alameda Creek Flood Boundaries

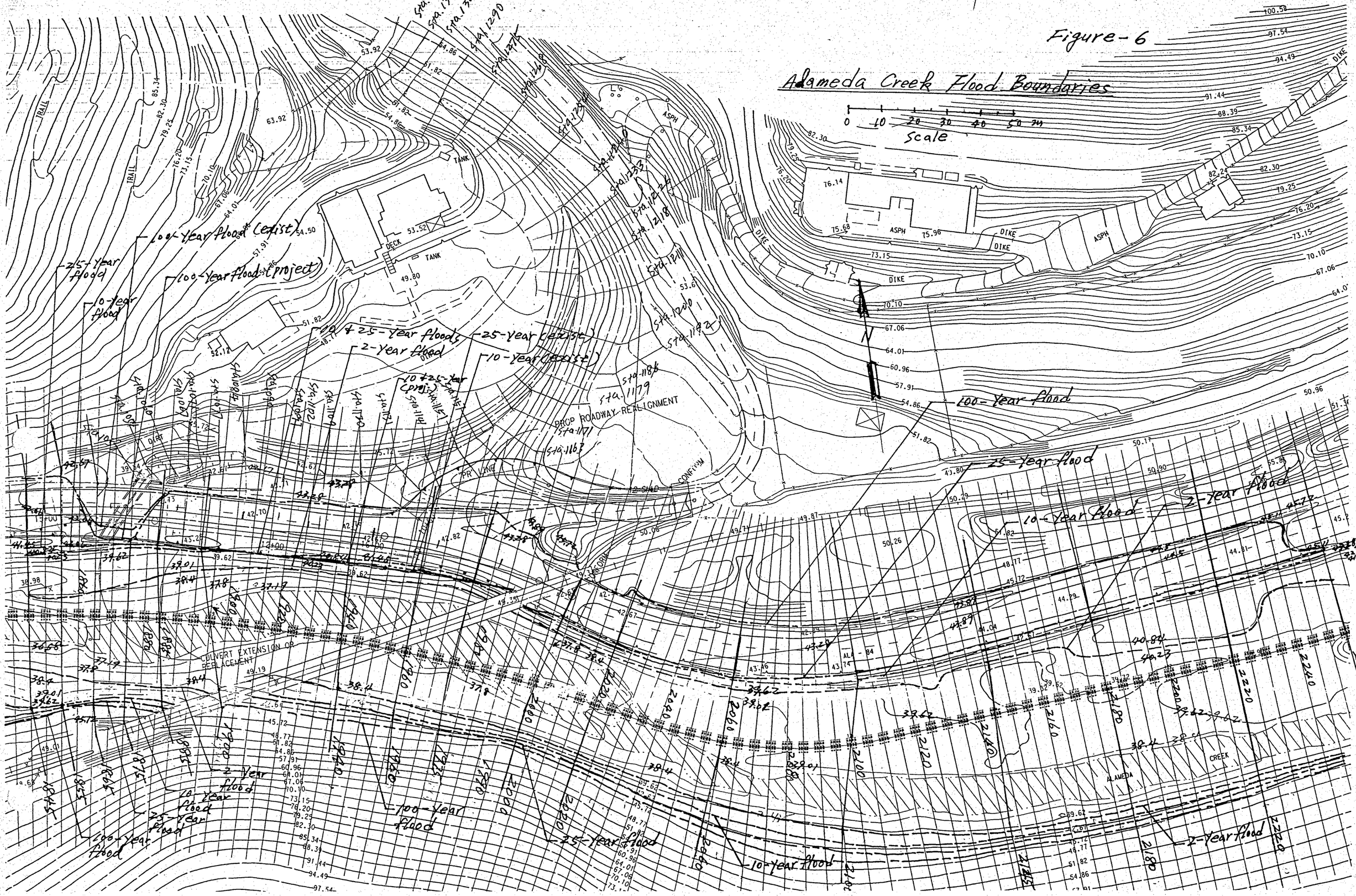

Figure-7

Alameda Creek Flood Boundaries

Scale: 0 10 20 30 40 m

100-year flood

25-year flood

10-year flood

2-year flood

DIKE

ASPH

U/C

Appendix I List of Technical Studies

Archaeological Survey Report, October 2004

Biological Evaluation, September 2004

Ground Penetrating Radar Report, October 2004

Historical Property Survey Report, November 2004

Historical Resources Evaluation Report, November 2004

Draft Hydraulic Evaluation, December 2004

Natural Environment Study Report, September 2004

Stonybrook Creek Crossing Fish Passage Draft Mitigation Report, February 2005

Visual Impact Assessment Summary, June 2004

Water Quality Report, November 2004