INDEX OF PLANS

STATE OF CALIFORNIA
DEPARTMENT OF TRANSPORTATION

PROJECT PLANS FOR CONSTRUCTION ON
STATE HIGHWAY

IN SOLANO COUNTY
NEAR RIO VISTA
FROM 4.3 MILES SOUTH OF ROUTE 220
TO 1.3 MILES SOUTH OF ROUTE 220

TO BE SUPPLEMENTED BY STANDARD PLANS DATED MAY 2006

Dist	COUNTY	ROUTE	POST MILES TOTAL PROJECT	SHEET No.	TOTAL SHEETS
04	Sol	84	3.0/6.0		

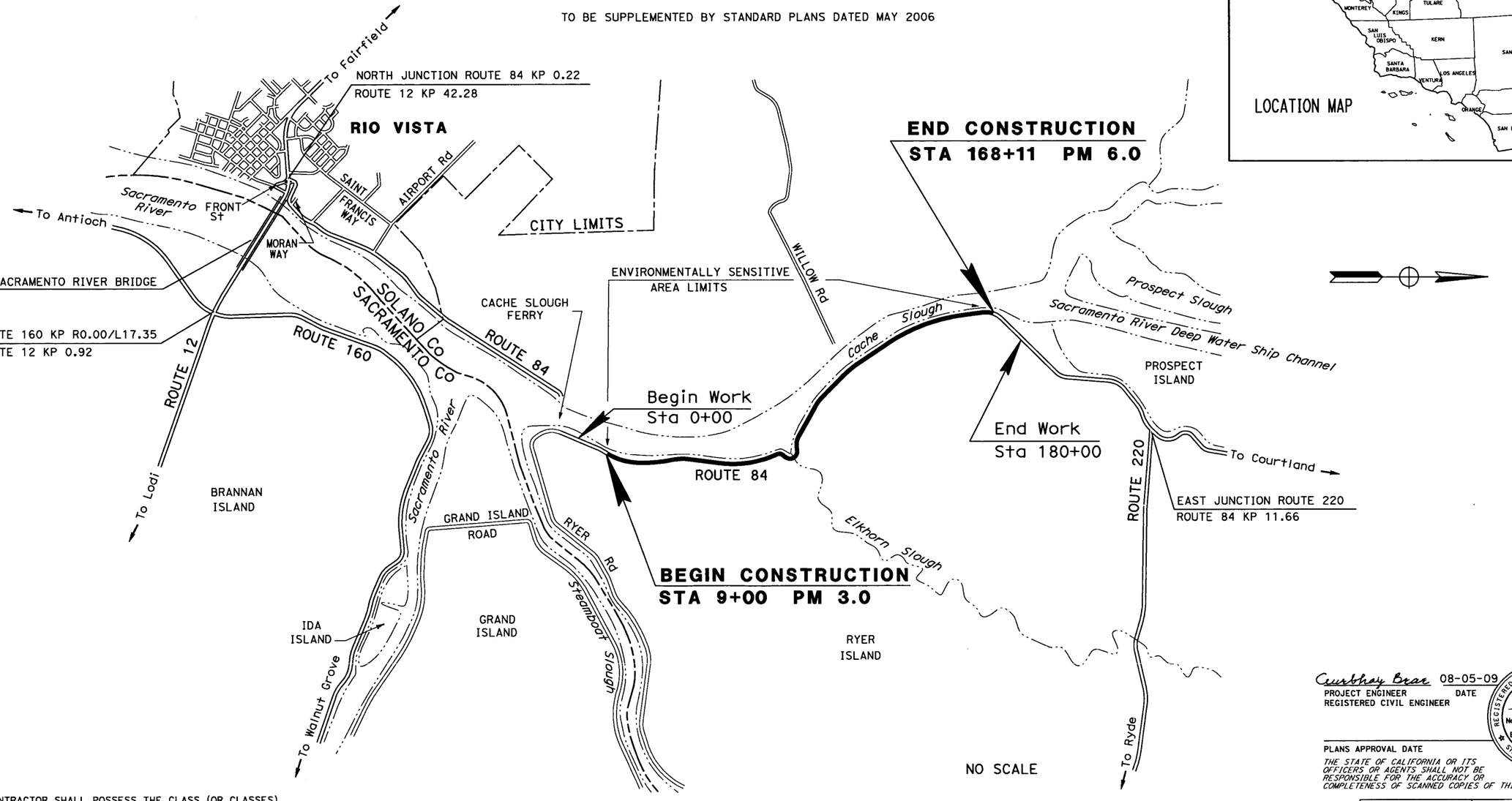

THE CONTRACTOR SHALL POSSESS THE CLASS (OR CLASSES) OF LICENSE AS SPECIFIED IN THE "NOTICE TO BIDDERS."

PROJECT MANAGER: JAY HAGHPARAST

DESIGN ENGINEER: GURBHAY BRAR

Gurbhay Brar 08-05-09
PROJECT ENGINEER DATE
REGISTERED CIVIL ENGINEER

REGISTERED PROFESSIONAL ENGINEER — GURBHAY S. BRAR — No. 52104 — Exp. 12-31-10 — CIVIL — STATE OF CALIFORNIA

PLANS APPROVAL DATE

THE STATE OF CALIFORNIA OR ITS OFFICERS OR AGENTS SHALL NOT BE RESPONSIBLE FOR THE ACCURACY OR COMPLETENESS OF SCANNED COPIES OF THIS PLAN SHEET.

LAST REVISION 08-26-09
DATE PLOTTED => 29-OCT-2009
TIME PLOTTED => 08:20

CONTRACT No. 04-3S7104

BORDER LAST REVISED 8/1/2008 | CALTRANS WEB SITE IS: HTTP//WWW.DOT.CA.GOV/ | RELATIVE BORDER SCALE IS IN INCHES 0 1 2 3 | USERNAME => s113541 DGN FILE => 43s710ab001.dgn | CU 06222 | EA 3S7101

Dist	COUNTY	ROUTE	POST MILES TOTAL PROJECT	SHEET No.	TOTAL SHEETS
04	Sol	84	3.0/6.0		

Gurbhay Brar 08-05-09
REGISTERED CIVIL ENGINEER DATE

PLANS APPROVAL DATE

REGISTERED PROFESSIONAL ENGINEER
GURBHAY S. BRAR
No. 52104
Exp 12-31-10
CIVIL
STATE OF CALIFORNIA

THE STATE OF CALIFORNIA OR ITS OFFICERS OR AGENTS SHALL NOT BE RESPONSIBLE FOR THE ACCURACY OR COMPLETENESS OF SCANNED COPIES OF THIS PLAN SHEET.

NOTES:

1. DIMENSIONS OF THE PAVEMENT STRUCTURES (STRUCTURAL SECTIONS) ARE SUBJECT TO TOLERANCES SPECIFIED IN THE STANDARD SPECIFICATIONS.
2. SUPERELEVATION AS SHOWN OR AS DIRECTED BY THE ENGINEER.
3. FOR ACCURATE RIGHT OF WAY AND ACCESS DATA, CONTACT RIGHT OF WAY ENGINEERING AT DISTRICT OFFICE.
4. SEE LAYOUT FOR EXACT LOCATION OF TEMPORARY FENCE (TYPE ESA).

ABBREVIATION

CP - CATCH POINT

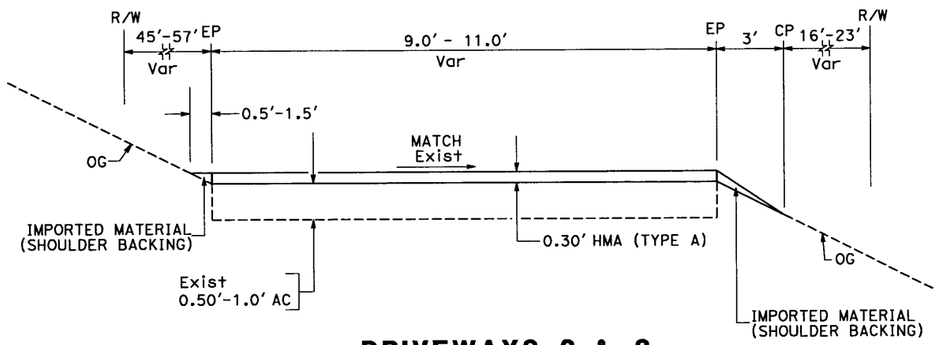

DRIVEWAYS 2 & 3

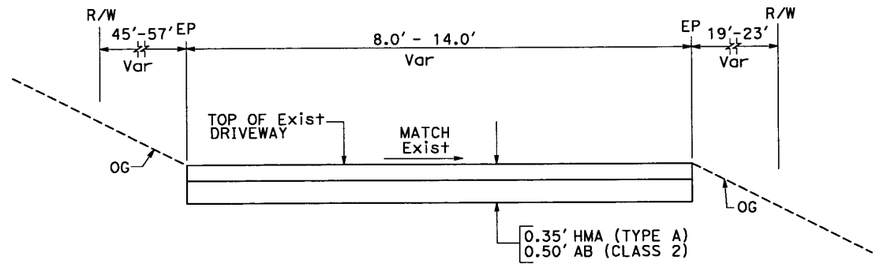

DRIVEWAYS 1 & 4 THROUGH 15

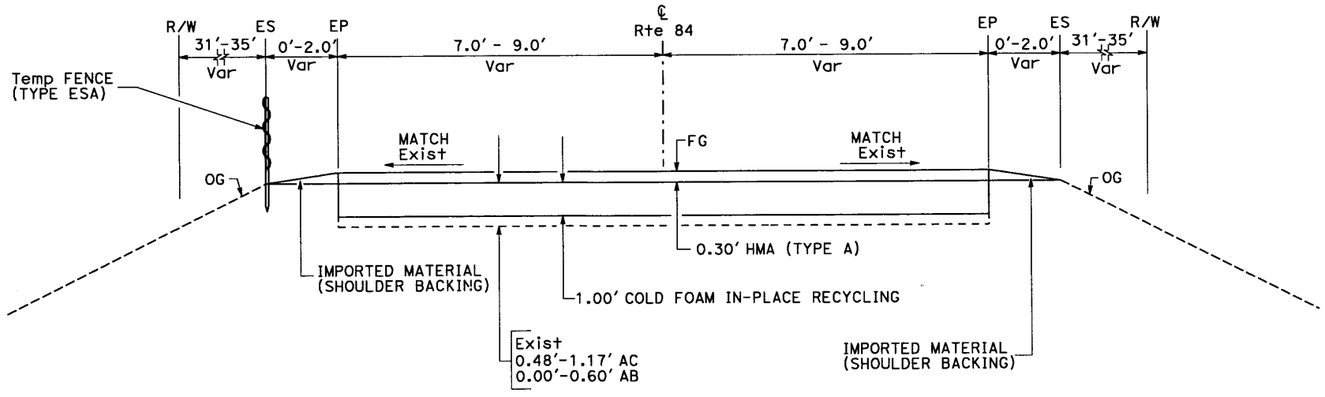

ROUTE 84

STA 9+00.00 TO STA 168+10.50

TYPICAL CROSS SECTIONS

NO SCALE

X-1

LAST REVISION 09-29-09
DATE PLOTTED => 29-OCT-2009
TIME PLOTTED => 08:20

REVISED BY	DATE REVISED

CALCULATED-DESIGNED BY: DAVID VELAZCO
CHECKED BY: YEDIYUR SHANKAR
FUNCTIONAL SUPERVISOR: GURBHAY BRAR
STATE OF CALIFORNIA - DEPARTMENT OF TRANSPORTATION
Caltrans 06-DESIGN

BORDER LAST REVISED 4/11/2008

RELATIVE BORDER SCALE IS IN INCHES 0 1 2 3

USERNAME => s113541
DGN FILE => 43s710ca001.dgn

CU 06222

EA 3S7101

NOTE: FOR ACCURATE RIGHT OF WAY AND ACCESS DATA, CONTACT RIGHT OF WAY ENGINEERING AT DISTRICT OFFICE.

Dist	COUNTY	ROUTE	POST MILES TOTAL PROJECT	SHEET No.	TOTAL SHEETS
04	Sol	84	3.0/6.0		

Gurbhay Brar 08-05-09
REGISTERED CIVIL ENGINEER DATE

PLANS APPROVAL DATE

REGISTERED PROFESSIONAL ENGINEER — GURBHAY S. BRAR — No. 52104 — Exp 12-31-10 — CIVIL — STATE OF CALIFORNIA

THE STATE OF CALIFORNIA OR ITS OFFICERS OR AGENTS SHALL NOT BE RESPONSIBLE FOR THE ACCURACY OR COMPLETENESS OF SCANNED COPIES OF THIS PLAN SHEET.

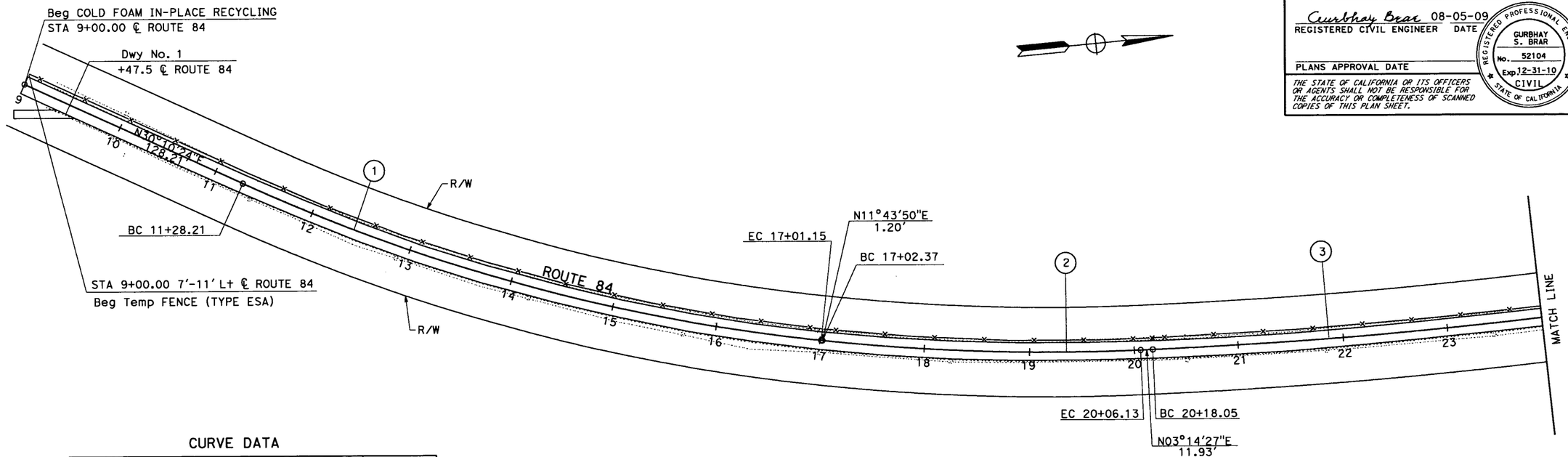

CURVE DATA

No.	R	Δ	T	L
①	1780.00′	18°26′34"	288.98′	572.96′
②	2050.00′	8°29′23"	152.16′	303.76′
③	5000.00′	4°29′31"	196.09′	391.99′
④	4000.00′	9°2′56"	316.52′	631.73′
⑤	1020.00′	20°4′20"	180.52′	357.33′

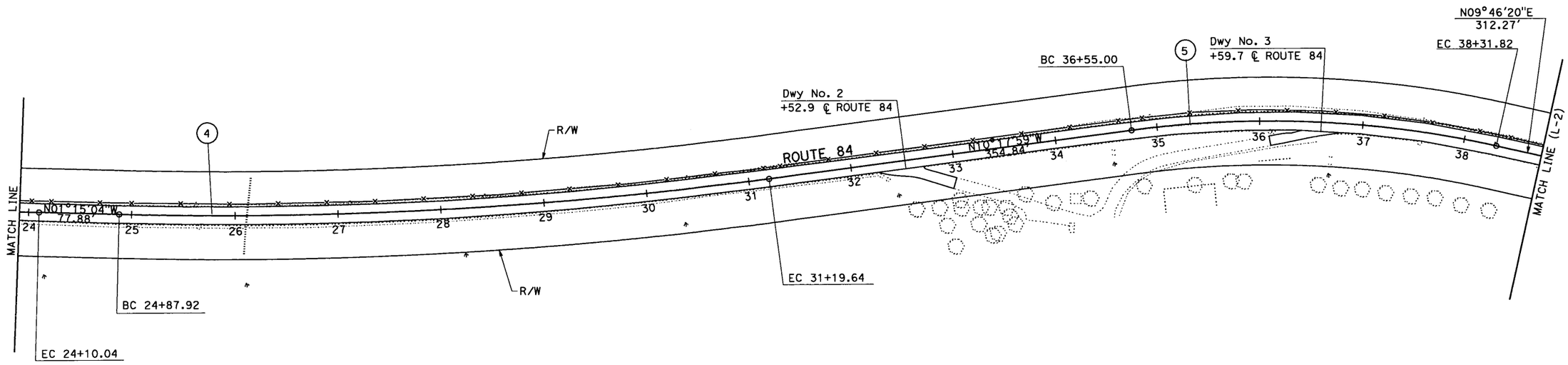

LAYOUT

SCALE: 1"=50′ **L-1**

LAST REVISION	DATE PLOTTED => 29-OCT-2009
09-29-09	TIME PLOTTED => 08:20

REVISED BY	DATE REVISED

CALCULATED-DESIGNED BY: DAVID VELAZCO
CHECKED BY: YEDIYUR SHANKAR
FUNCTIONAL SUPERVISOR: GURBHAY BRAR

STATE OF CALIFORNIA - DEPARTMENT OF TRANSPORTATION
Caltrans
06-DESIGN

BORDER LAST REVISED 4/11/2008

RELATIVE BORDER SCALE IS IN INCHES 0 1 2 3

USERNAME => s113541
DGN FILE => 43s710ea001.dgn

CU 06222

EA 3S7101

NOTE: FOR ACCURATE RIGHT OF WAY AND ACCESS DATA, CONTACT RIGHT OF WAY ENGINEERING AT DISTRICT OFFICE.

CURVE DATA

No.	R	Δ	T	L
(6)	8000.00′	4°38′05"	323.73′	647.11′
(7)	1800.00′	12°1′14"	189.52′	377.64′
(8)	6200.00′	03°55′11"	212.15′	424.14′
(9)	2150.00′	11°38′05"	219.05′	436.59′

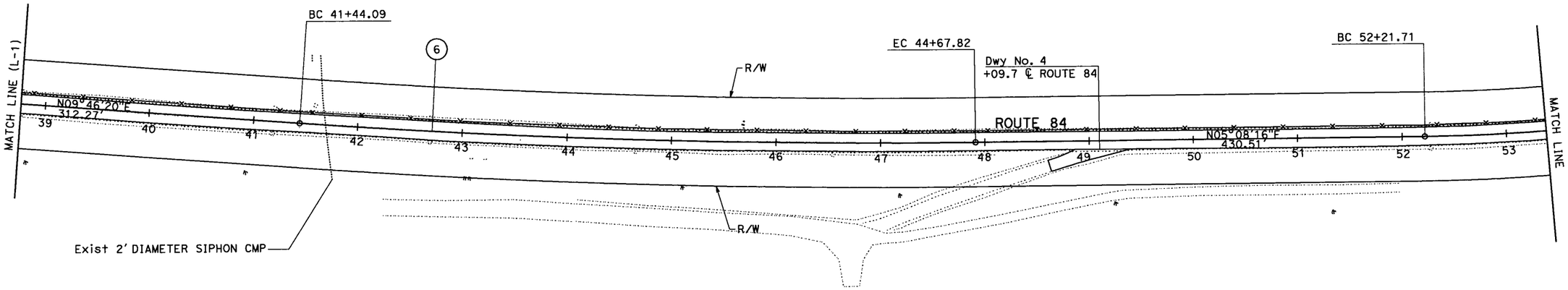

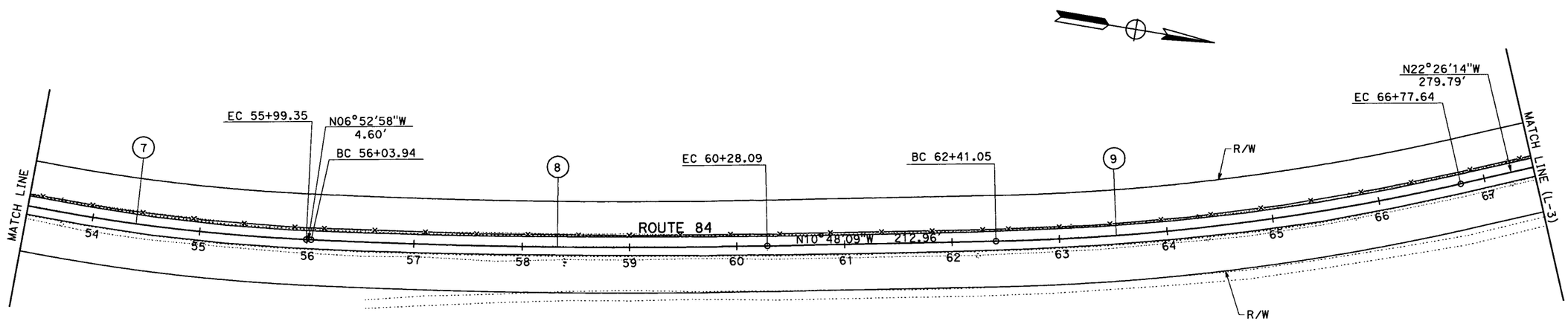

Dist	COUNTY	ROUTE	POST MILES TOTAL PROJECT	SHEET No.	TOTAL SHEETS
04	Sol	84	3.0/6.0		

Gurbhay Brar 08-05-09
REGISTERED CIVIL ENGINEER DATE

PLANS APPROVAL DATE

REGISTERED PROFESSIONAL ENGINEER — GURBHAY S. BRAR — No. 52104 — Exp 12-31-10 — CIVIL — STATE OF CALIFORNIA

THE STATE OF CALIFORNIA OR ITS OFFICERS OR AGENTS SHALL NOT BE RESPONSIBLE FOR THE ACCURACY OR COMPLETENESS OF SCANNED COPIES OF THIS PLAN SHEET.

REVISED BY	DATE REVISED

CALCULATED-DESIGNED BY: DAVID VELAZCO
CHECKED BY: YEDIYUR SHANKAR

FUNCTIONAL SUPERVISOR: GURBHAY BRAR

STATE OF CALIFORNIA - DEPARTMENT OF TRANSPORTATION
Caltrans
06-DESIGN

LAYOUT

SCALE: 1"=50′ **L-2**

LAST REVISION 09-29-09
DATE PLOTTED => 29-OCT-2009
TIME PLOTTED => 08:20

BORDER LAST REVISED 4/11/2008

RELATIVE BORDER SCALE IS IN INCHES 0 1 2 3

USERNAME => s113541
DGN FILE => 43s710ea002.dgn

CU 06222

EA 3S7101

NOTE: FOR ACCURATE RIGHT OF WAY AND ACCESS DATA, CONTACT RIGHT OF WAY ENGINEERING AT DISTRICT OFFICE.

CURVE DATA

No.	R	Δ	T	L
10	470.00′	11°50′38"	48.75′	97.16′
11	165.00′	35°50′02"	53.35′	103.19′
12	250.00′	23°14′30"	51.41′	101.41′
13	300.00′	16°33′03"	43.63′	86.66′
14	210.00′	44°10′20"	85.21′	161.90′
15	201.00′	73°14′24"	149.38′	256.93′
16	239.99′	19°29′34"	41.22′	81.65′
17	445.00′	30°14′23"	120.24′	234.86′
18	800.04′	7°39′01"	53.49′	106.82′
19	1900.00′	5°50′59"	97.08′	193.98′

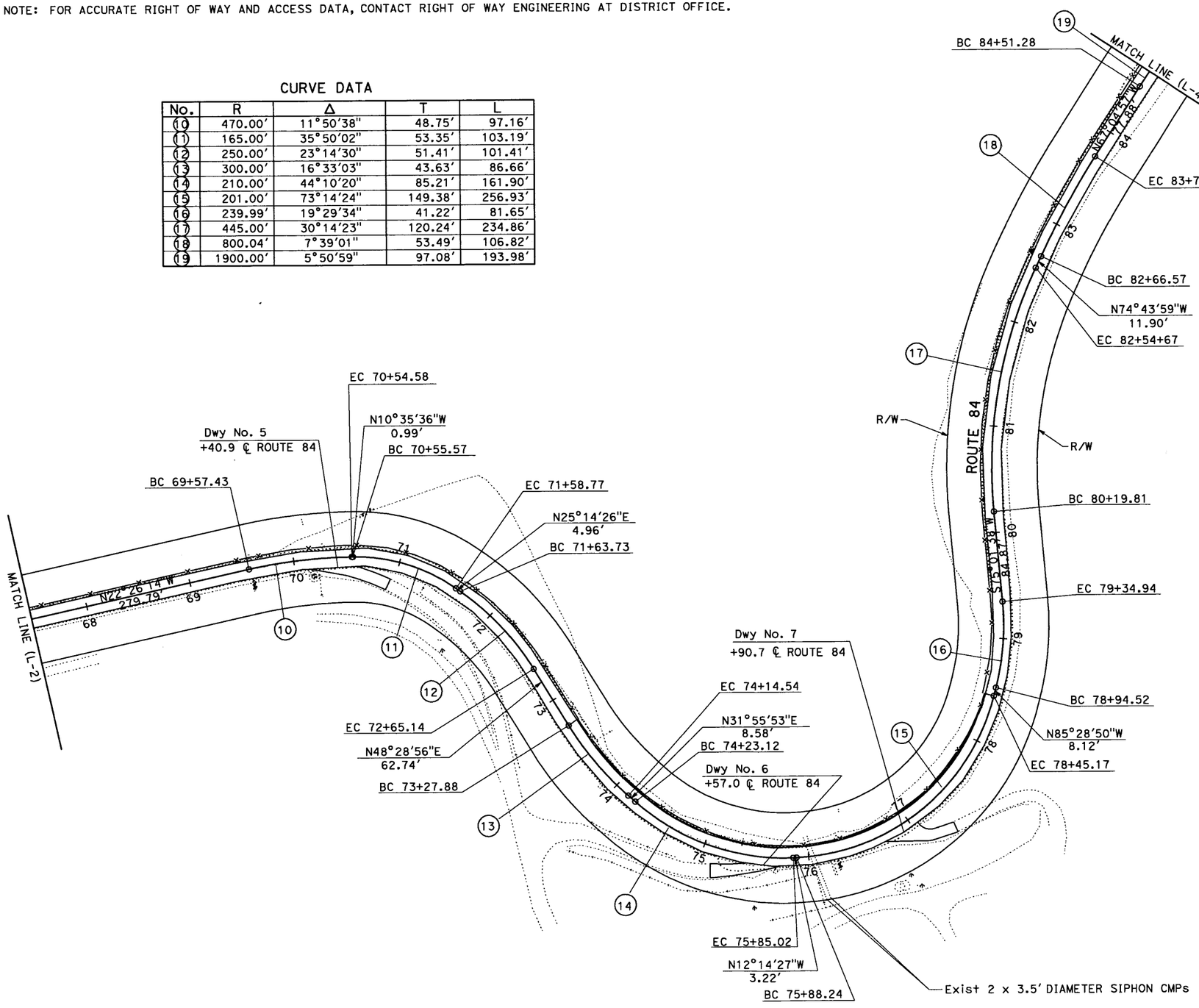

Dist	COUNTY	ROUTE	POST MILES TOTAL PROJECT	SHEET No.	TOTAL SHEETS
04	Sol	84	3.0/6.0		

Gurbhay Brar 08-05-09
REGISTERED CIVIL ENGINEER DATE

PLANS APPROVAL DATE

REGISTERED PROFESSIONAL ENGINEER — GURBHAY S. BRAR — No. 52104 — Exp 12-31-10 — CIVIL — STATE OF CALIFORNIA

THE STATE OF CALIFORNIA OR ITS OFFICERS OR AGENTS SHALL NOT BE RESPONSIBLE FOR THE ACCURACY OR COMPLETENESS OF SCANNED COPIES OF THIS PLAN SHEET.

CALCULATED-DESIGNED BY: DAVID VELAZCO
CHECKED BY: YEDIYUR SHANKAR
FUNCTIONAL SUPERVISOR: GURBHAY BRAR
REVISED BY
DATE REVISED

STATE OF CALIFORNIA - DEPARTMENT OF TRANSPORTATION
Caltrans
06-DESIGN

LAYOUT

SCALE: 1"=50′ L-3

LAST REVISION 09-02-09
DATE PLOTTED => 29-OCT-2009
TIME PLOTTED => 08:20

BORDER LAST REVISED 4/11/2008

RELATIVE BORDER SCALE IS IN INCHES 0 1 2 3

USERNAME => s113541
DGN FILE => 43s710ea003.dgn

CU 06222

EA 3S7101

NOTE: FOR ACCURATE RIGHT OF WAY AND ACCESS DATA, CONTACT RIGHT OF WAY ENGINEERING AT DISTRICT OFFICE.

CURVE DATA

No.	R	Δ	T	L
(19)	1900.00′	5°50′59"	97.08′	193.98′
(20)	2700.02′	9°28′32"	223.77′	446.53′
(21)	4000.38′	3°37′05"	126.35′	252.61′
(22)	1800.01′	9°32′46"	150.30′	299.90′
(23)	900.02′	12°18′57"	97.10′	193.46′
(24)	1249.97′	12°59′05"	142.25′	283.28′
(25)	4500.06′	4°45′33"	187.01′	373.80′

Dist	COUNTY	ROUTE	POST MILES TOTAL PROJECT	SHEET No.	TOTAL SHEETS
04	Sol	84	3.0/6.0		

Gurbhay Brar 08-05-09
REGISTERED CIVIL ENGINEER DATE

PLANS APPROVAL DATE

REGISTERED PROFESSIONAL ENGINEER — GURBHAY S. BRAR — No. 52104 — Exp. 12-31-10 — CIVIL — STATE OF CALIFORNIA

THE STATE OF CALIFORNIA OR ITS OFFICERS OR AGENTS SHALL NOT BE RESPONSIBLE FOR THE ACCURACY OR COMPLETENESS OF SCANNED COPIES OF THIS PLAN SHEET.

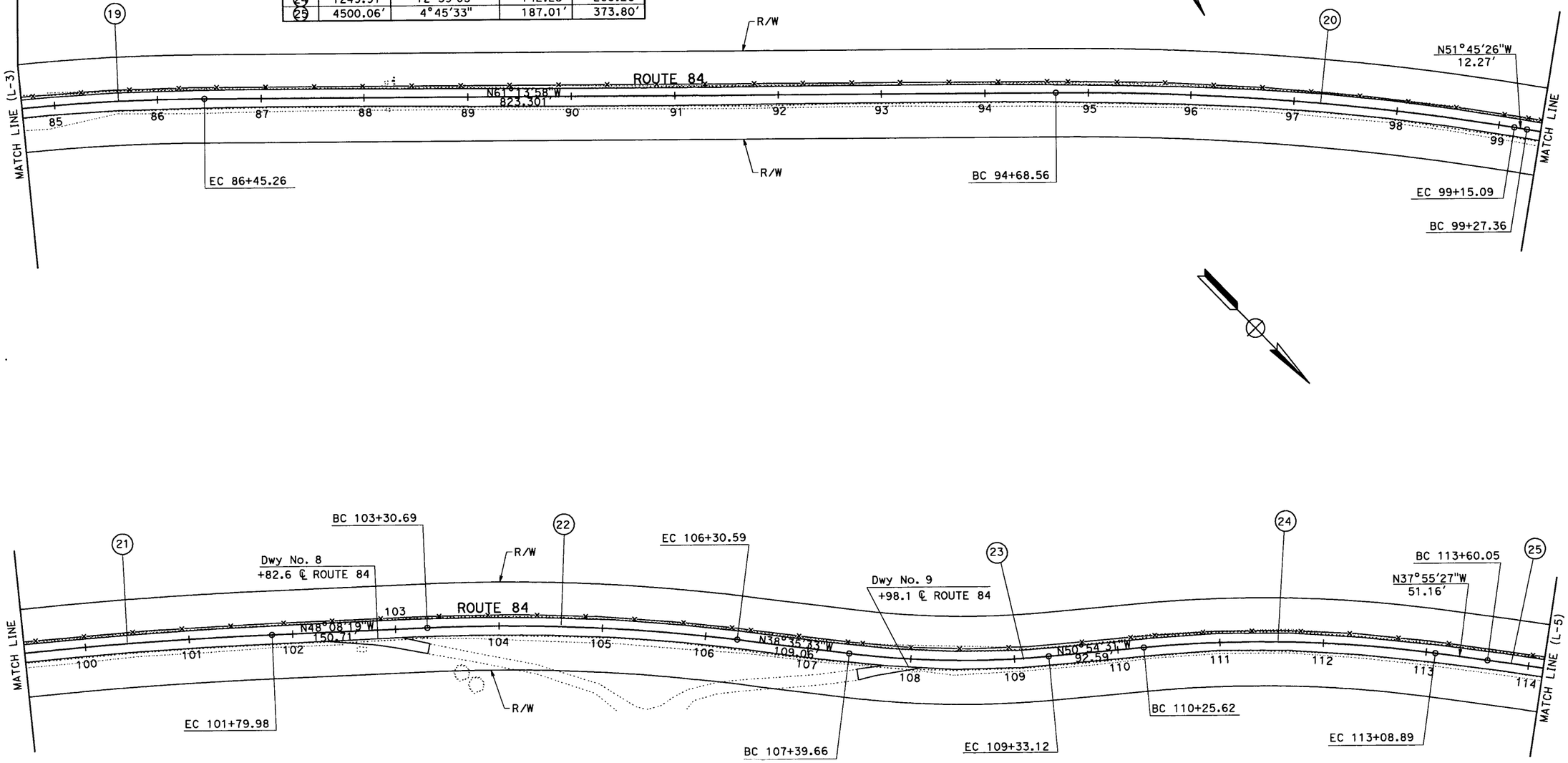

LAYOUT

SCALE: 1"=50′ **L-4**

CALCULATED-DESIGNED BY	DAVID VELAZCO	REVISED BY	
CHECKED BY	YEDIYUR SHANKAR	DATE REVISED	
FUNCTIONAL SUPERVISOR	GURBHAY BRAR		
STATE OF CALIFORNIA - DEPARTMENT OF TRANSPORTATION	06-DESIGN		

LAST REVISION 09-29-09
DATE PLOTTED => 29-OCT-2009
TIME PLOTTED => 08:20

BORDER LAST REVISED 4/11/2008

RELATIVE BORDER SCALE IS IN INCHES 0 1 2 3

USERNAME => s113541
DGN FILE => 43s710ea004.dgn

CU 06222

EA 3S7101

NOTE: FOR ACCURATE RIGHT OF WAY AND ACCESS DATA, CONTACT RIGHT OF WAY ENGINEERING AT DISTRICT OFFICE.

CURVE DATA

No.	R	Δ	T	L
25	4500.06′	4°45′33"	187.01′	373.80′
26	4997.19′	0°55′00"	39.98′	79.95′
27	2400.06′	5°59′28"	125.59′	250.96′
28	2199.89′	4°25′51"	85.10′	170.12′
29	3000.05′	6°3′34"	158.78′	317.27′

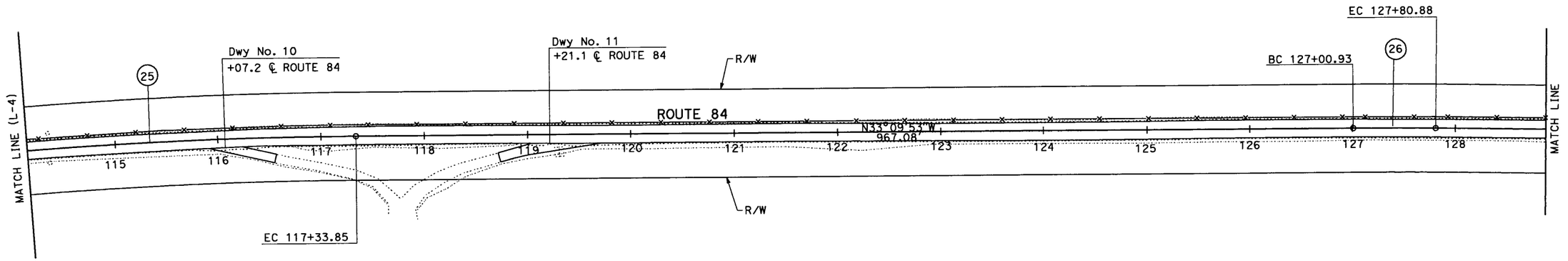

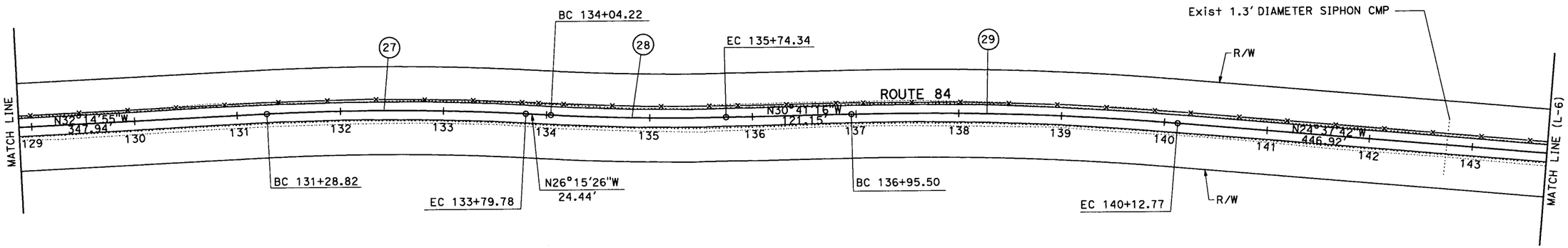

Dist	COUNTY	ROUTE	POST MILES TOTAL PROJECT	SHEET No.	TOTAL SHEETS
04	Sol	84	3.0/6.0		

Gurbhay Brar 08-05-09
REGISTERED CIVIL ENGINEER DATE

PLANS APPROVAL DATE

REGISTERED PROFESSIONAL ENGINEER — GURBHAY S. BRAR — No. 52104 — Exp 12-31-10 — CIVIL — STATE OF CALIFORNIA

THE STATE OF CALIFORNIA OR ITS OFFICERS OR AGENTS SHALL NOT BE RESPONSIBLE FOR THE ACCURACY OR COMPLETENESS OF SCANNED COPIES OF THIS PLAN SHEET.

LAYOUT

SCALE: 1"=50′ **L-5**

REVISED BY	
DATE REVISED	
DAVID VELAZCO	CALCULATED-DESIGNED BY
YEDIYUR SHANKAR	CHECKED BY
FUNCTIONAL SUPERVISOR	
GURBHAY BRAR	
STATE OF CALIFORNIA - DEPARTMENT OF TRANSPORTATION	
Caltrans	06-DESIGN

LAST REVISION 09-29-09
DATE PLOTTED => 29-OCT-2009
TIME PLOTTED => 08:21

BORDER LAST REVISED 4/11/2008

RELATIVE BORDER SCALE IS IN INCHES 0 1 2 3

USERNAME => s113541
DGN FILE => 43s710ea005.dgn

CU 06222

EA 3S7101

NOTE: FOR ACCURATE RIGHT OF WAY AND ACCESS DATA, CONTACT RIGHT OF WAY ENGINEERING AT DISTRICT OFFICE.

Dist	COUNTY	ROUTE	POST MILES TOTAL PROJECT	SHEET No.	TOTAL SHEETS
04	Sol	84	3.0/6.0		

Gurbhay Brar 08-05-09
REGISTERED CIVIL ENGINEER DATE

PLANS APPROVAL DATE

REGISTERED PROFESSIONAL ENGINEER
GURBHAY S. BRAR
No. 52104
Exp 12-31-10
CIVIL
STATE OF CALIFORNIA

THE STATE OF CALIFORNIA OR ITS OFFICERS OR AGENTS SHALL NOT BE RESPONSIBLE FOR THE ACCURACY OR COMPLETENESS OF SCANNED COPIES OF THIS PLAN SHEET.

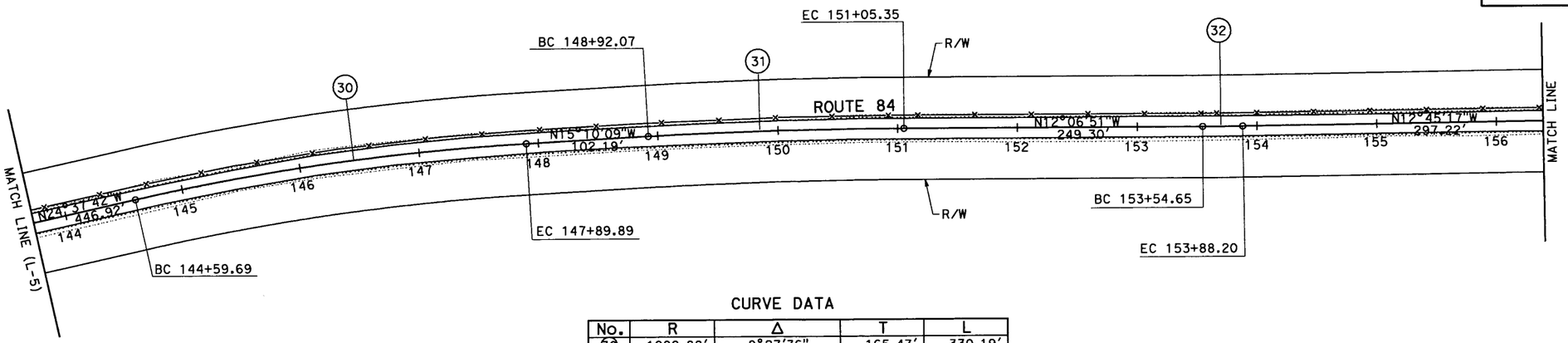

CURVE DATA

No.	R	Δ	T	L
30	1999.88′	9°27′36"	165.47′	330.19′
31	4000.49′	3°3′17"	106.67′	213.28′
32	2990.65′	0°38′34"	16.77′	33.54′
33	3000.01′	4°42′34"	123.36′	246.59′
34	1300.27′	5°10′53"	58.83′	117.59′
35	2001.22′	2°13′42"	38.92′	77.83′
36	99.88′	3°38′58"	3.18′	6.36′
37	330.01′	4°27′05"	12.83′	25.64′

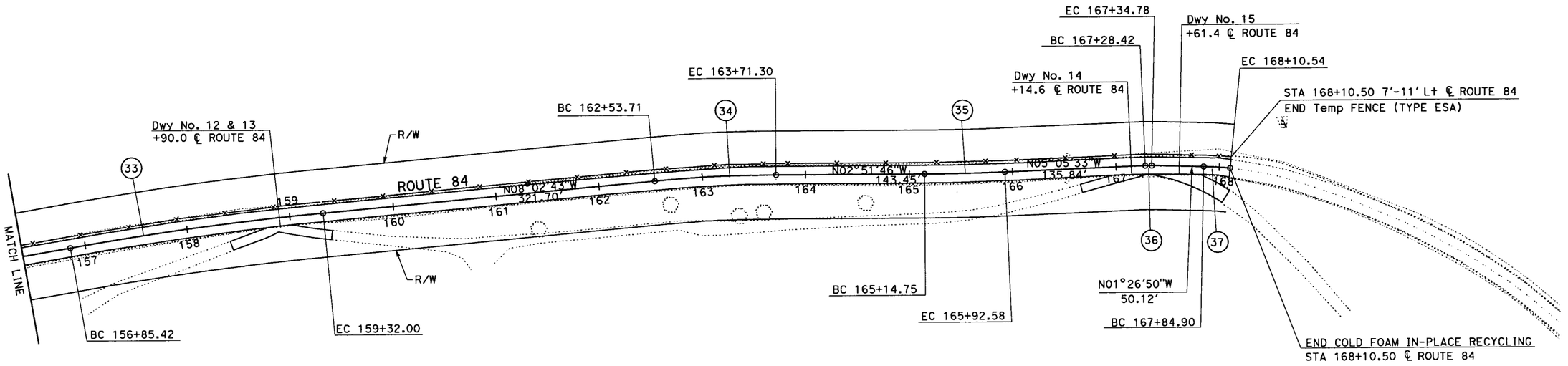

LAYOUT

SCALE: 1"=50′ **L-6**

STATE OF CALIFORNIA - DEPARTMENT OF TRANSPORTATION
Caltrans
06-DESIGN
FUNCTIONAL SUPERVISOR: GURBHAY BRAR
CALCULATED-DESIGNED BY: DAVID VELAZCO
CHECKED BY: YEDIYUR SHANKAR
REVISED BY | DATE REVISED

LAST REVISION 09-29-09
DATE PLOTTED => 29-OCT-2009
TIME PLOTTED => 08:21

BORDER LAST REVISED 4/11/2008
RELATIVE BORDER SCALE IS IN INCHES 0 1 2 3
USERNAME => s113541
DGN FILE => 43s710ea006.dgn
CU 06222
EA 3S7101

NOTE:

1. CONTRACTOR TO VERIFY LOCATIONS OF EXISTING PIPES IN THE FIELD BEFORE START OF CONSTRUCTION.

DRIVEWAYS QUANTITY

LOCATION	(N) WIDTH	(N) LENGTH	PLACE HMA (MISCELLANEOUS AREA)	HMA (TYPE A)	(N) TACK COAT	AB (CLASS 2)	COLD PLANE AC Pvmt	ROADWAY EXCAVATION	IMPORTED MATERIAL (SHOULDER BACKING)
	LF	LF	SQYD	TON	TON	CY	SQYD	CY	TON
Driveway No. 1	8	50	44	10	0.02	7		13	
Driveway No. 2	11	50	60	12	0.03		12		1.68
Driveway No. 3	9	50	48	10	0.02		10		0.85
Driveway No. 4	12	50	68	16	0.03	11		19	
Driveway No. 5	11	50	61	14	0.03	10		17	
Driveway No. 6	11	50	62	15	0.03	10		17	
Driveway No. 7	11	50	59	14	0.03	10		17	
Driveway No. 8	10	50	58	14	0.02	10		16	
Driveway No. 9	9	50	52	12	0.02	9		15	
Driveway No. 10	8	50	47	11	0.02	8		13	
Driveway No. 11	10	50	55	13	0.02	9		16	
Driveway No. 12	9	50	50	12	0.02	8		14	
Driveway No. 13	9	50	49	12	0.02	8		14	
Driveway No. 14	8	50	46	11	0.02	8		13	
Driveway No. 15	14	50	76	18	0.03	13		21	
TOTAL			835	* 194		* 121	* 22	* 205	* 2.53

* - INCLUDED IN ROADWAY QUANTITIES TABLE

(N) - NOT A SEPARATE PAY ITEM, FOR INFORMATION ONLY

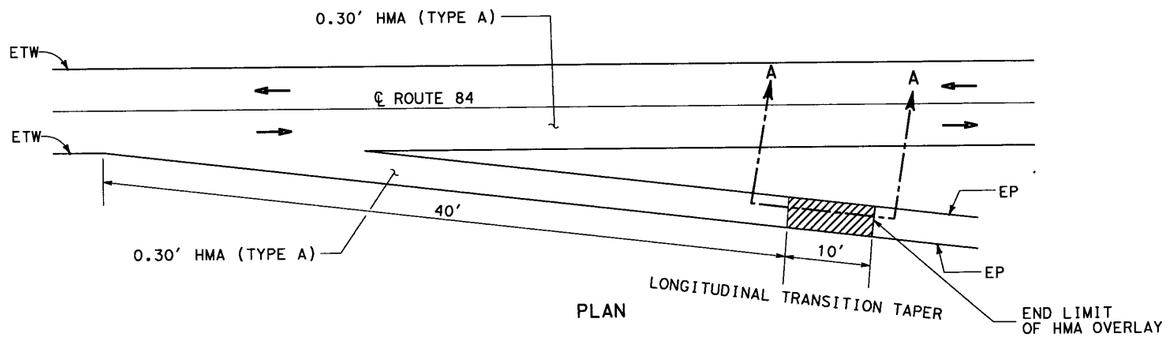

PLAN

TRANSITION DETAIL FOR DRIVEWAYS 2 AND 3

(DRIVEWAY 2 SHOWN, DRIVEWAY 3 SIMILAR)

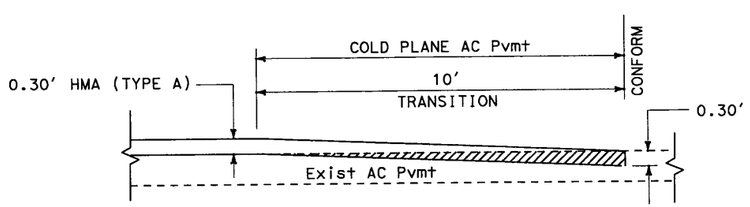

SECTION A-A

LEGEND

0.00'-0.30' COLD PLANE AC Pvmt
0.00'-0.30' HMA (TYPE A)

DIRECTION OF TRAFFIC

Dist	COUNTY	ROUTE	POST MILES TOTAL PROJECT	SHEET No.	TOTAL SHEETS
04	Sol	84	3.0/6.0		

Gurbhay Brar 08-05-09
REGISTERED CIVIL ENGINEER DATE

PLANS APPROVAL DATE

THE STATE OF CALIFORNIA OR ITS OFFICERS OR AGENTS SHALL NOT BE RESPONSIBLE FOR THE ACCURACY OR COMPLETENESS OF SCANNED COPIES OF THIS PLAN SHEET.

REGISTERED PROFESSIONAL ENGINEER
GURBHAY S. BRAR
No. 52104
Exp. 12-31-10
CIVIL
STATE OF CALIFORNIA

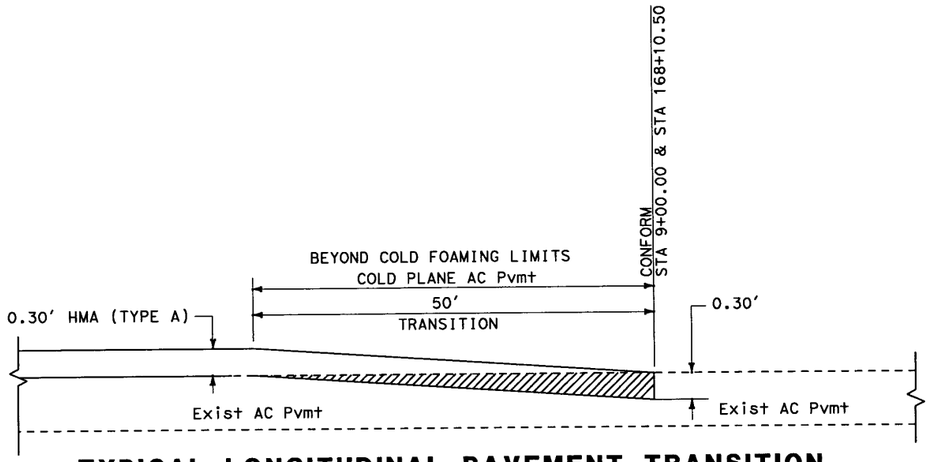

TYPICAL LONGITUDINAL PAVEMENT TRANSITION AT Beg & END OF MAINLINE

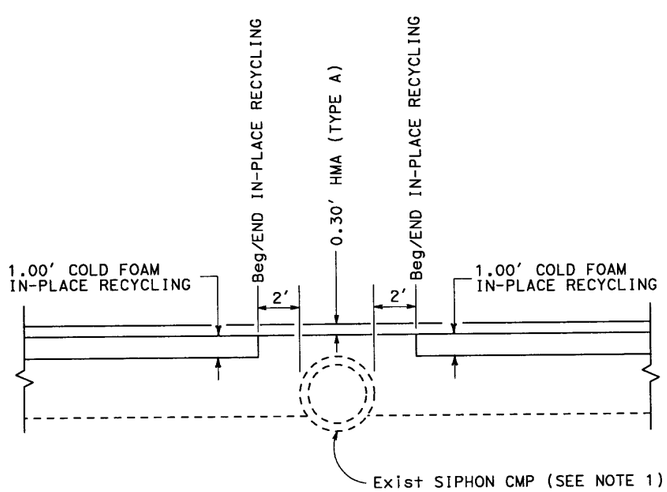

TYPICAL DETAIL AT EXISTING UNDERGROUND PIPES

CONSTRUCTION DETAILS

NO SCALE

C-1

REVISED BY	DATE REVISED

CALCULATED-DESIGNED BY: DAVID VELAZCO
CHECKED BY: YEDIYUR SHANKAR
FUNCTIONAL SUPERVISOR: GURBHAY BRAR
STATE OF CALIFORNIA - DEPARTMENT OF TRANSPORTATION
Caltrans 06-DESIGN

LAST REVISION 09-02-09
DATE PLOTTED => 29-OCT-2009
TIME PLOTTED => 08:21

BORDER LAST REVISED 4/11/2008

RELATIVE BORDER SCALE IS IN INCHES 0 1 2 3

USERNAME => s113541
DGN FILE => 43s710gd001.dgn

CU 06222

EA 3S7101

Dist	COUNTY	ROUTE	POST MILES TOTAL PROJECT	SHEET No.	TOTAL SHEETS
04	Sol	84	3.0/6.0		

Hassan Taha 08-05-09
REGISTERED CIVIL ENGINEER DATE

PLANS APPROVAL DATE

REGISTERED PROFESSIONAL ENGINEER HASSAN M.TAHA No. 60130 Exp. 06/30/10 CIVIL STATE OF CALIFORNIA

THE STATE OF CALIFORNIA OR ITS OFFICERS OR AGENTS SHALL NOT BE RESPONSIBLE FOR THE ACCURACY OR COMPLETENESS OF SCANNED COPIES OF THIS PLAN SHEET.

CONSTRUCTION AREA SIGNS

SIGN No.	SIGN CODE	PANEL SIZE in x in	SIGN MESSAGE	No. OF POSTS	POST SIZE in x in	No. OF SIGNS
A	W20-1	48 x 48	ROAD WORK AHEAD	1	6 x 4	2
B	G20-2	60 x 24	END ROAD WORK	1	4 x 4	2

NOTES: 1. LOCATIONS OF CONSTRUCTION AREA SIGNS SHOWN ARE APPROXIMATE. EXACT LOCATIONS TO BE DETERMINED BY THE ENGINEER.

2. SEE TRAFFIC HANDLING PLAN FOR ADDITIONAL CONSTRUCTION AREA SIGNS.

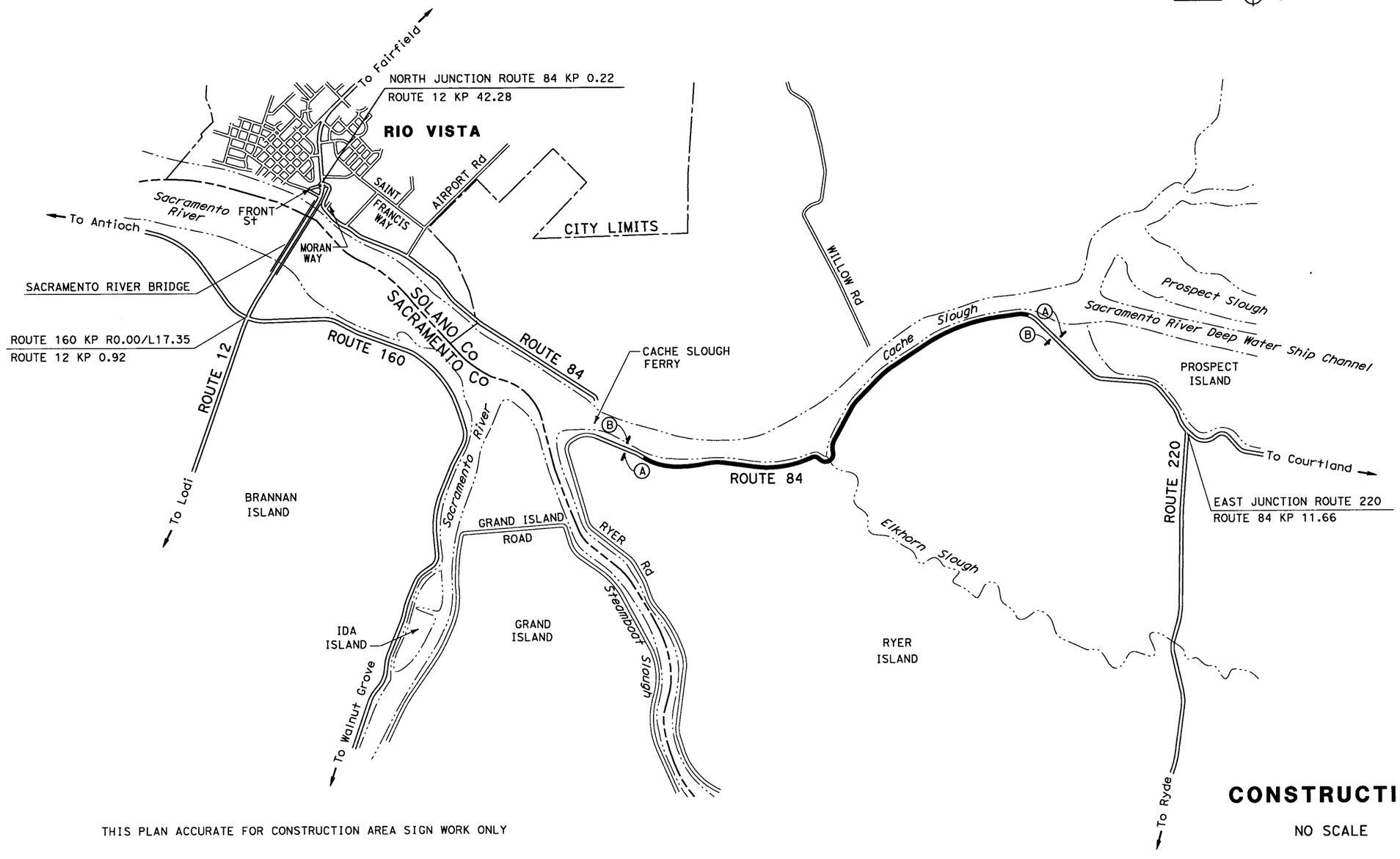

THIS PLAN ACCURATE FOR CONSTRUCTION AREA SIGN WORK ONLY

CONSTRUCTION AREA SIGN

NO SCALE

CS-1

STATE OF CALIFORNIA - DEPARTMENT OF TRANSPORTATION
Caltrans 06-TRAFFIC DESIGN

FUNCTIONAL SUPERVISOR: MOHAMMED QATAMI
CALCULATED-DESIGNED BY: KHONDOKER IMTEAZ UDDIN
CHECKED BY: HASSAN TAHA
REVISED BY
DATE REVISED

LAST REVISION 09-28-09
DATE PLOTTED => 29-OCT-2009
TIME PLOTTED => 08:21

BORDER LAST REVISED 4/11/2008

RELATIVE BORDER SCALE IS IN INCHES 0 1 2 3

USERNAME => s113541
DGN FILE => 43s7101a001.dgn

CU 06386

EA 3S7101

Dist	COUNTY	ROUTE	POST MILES TOTAL PROJECT	SHEET No.	TOTAL SHEETS
04	Sol	84	3.0/6.0		

Hassan Taha 08-05-09
REGISTERED CIVIL ENGINEER DATE

PLANS APPROVAL DATE

HASSAN M. TAHA No. 60130 Exp 06/30/10 CIVIL — REGISTERED PROFESSIONAL ENGINEER — STATE OF CALIFORNIA

THE STATE OF CALIFORNIA OR ITS OFFICERS OR AGENTS SHALL NOT BE RESPONSIBLE FOR THE ACCURACY OR COMPLETENESS OF SCANNED COPIES OF THIS PLAN SHEET.

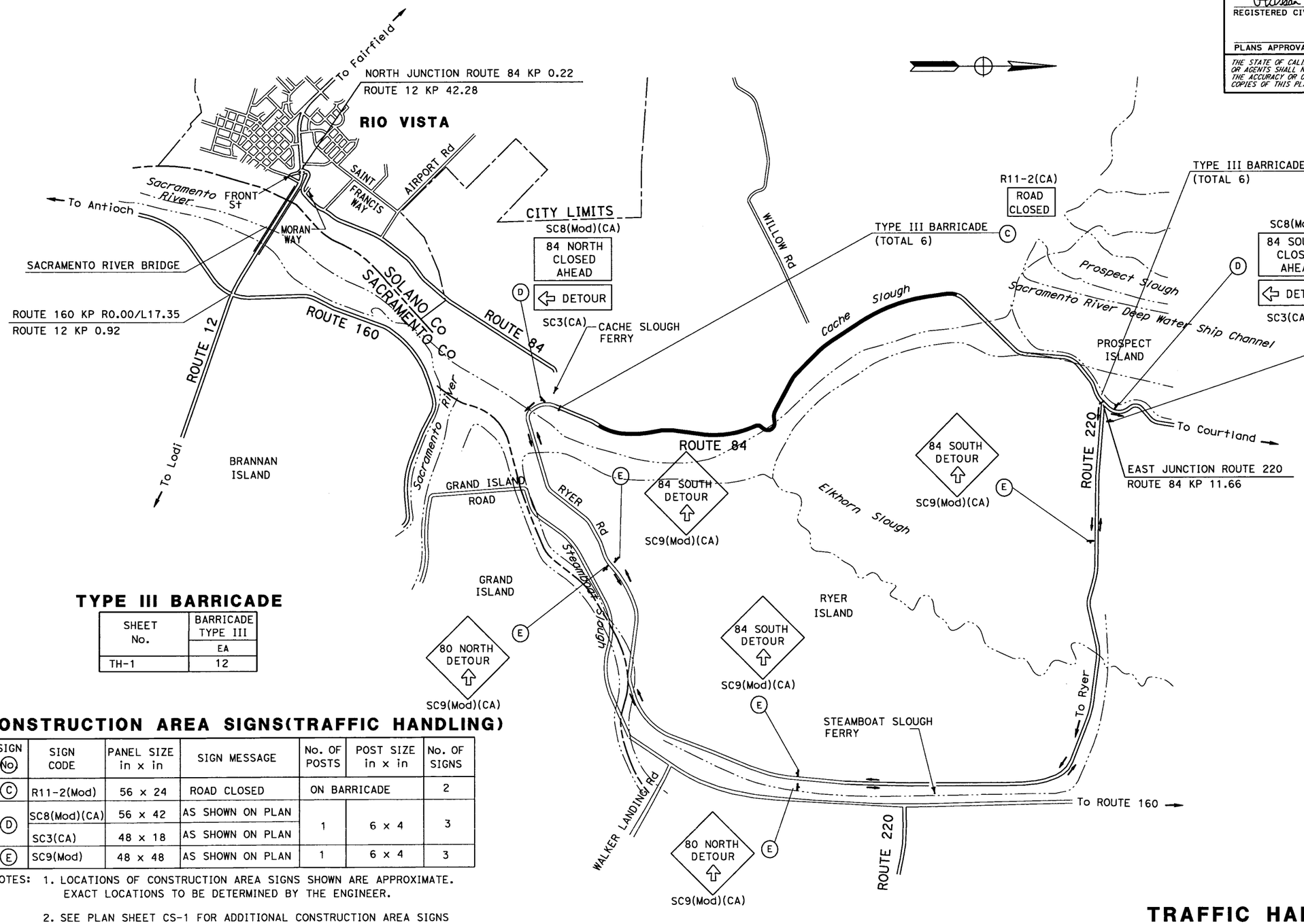

TYPE III BARRICADE

SHEET No.	BARRICADE TYPE III
	EA
TH-1	12

CONSTRUCTION AREA SIGNS(TRAFFIC HANDLING)

SIGN No.	SIGN CODE	PANEL SIZE in x in	SIGN MESSAGE	No. OF POSTS	POST SIZE in x in	No. OF SIGNS
C	R11-2(Mod)	56 x 24	ROAD CLOSED	ON BARRICADE		2
D	SC8(Mod)(CA)	56 x 42	AS SHOWN ON PLAN	1	6 x 4	3
	SC3(CA)	48 x 18	AS SHOWN ON PLAN			
E	SC9(Mod)	48 x 48	AS SHOWN ON PLAN	1	6 x 4	3

NOTES: 1. LOCATIONS OF CONSTRUCTION AREA SIGNS SHOWN ARE APPROXIMATE. EXACT LOCATIONS TO BE DETERMINED BY THE ENGINEER.

2. SEE PLAN SHEET CS-1 FOR ADDITIONAL CONSTRUCTION AREA SIGNS

THIS PLAN ACCURATE FOR TRAFFIC HANDLING ONLY

TRAFFIC HANDLING PLAN

NO SCALE

TH-1

CALCULATED-DESIGNED BY	REVISED BY	DATE REVISED
CHECKED BY	KHONDOKER IMTEAZ UDDIN	
	HASSAN TAHA	

FUNCTIONAL SUPERVISOR: MOHAMMED OATAMI

STATE OF CALIFORNIA - DEPARTMENT OF TRANSPORTATION
Caltrans 06-TRAFFIC DESIGN

LAST REVISION 09-02-09
DATE PLOTTED => 30-OCT-2009
TIME PLOTTED => 08:26

BORDER LAST REVISED 4/11/2008

RELATIVE BORDER SCALE IS IN INCHES 0 1 2 3

USERNAME => s113541
DGN FILE => 43s710md001.dgn

CU 06386

EA 3S7101

Dist	COUNTY	ROUTE	TOTAL PROJECT	No.	SHEETS
04	Sol	84	3.0/6.0		

Hassan Taha 05-06-09
REGISTERED CIVIL ENGINEER DATE

REGISTERED PROFESSIONAL ENGINEER
HASSAN M. TAHA
No. 60130
Exp. 06/30/10
CIVIL
STATE OF CALIFORNIA

PLANS APPROVAL DATE

THE STATE OF CALIFORNIA OR ITS OFFICERS OR AGENTS SHALL NOT BE RESPONSIBLE FOR THE ACCURACY OR COMPLETENESS OF SCANNED COPIES OF THIS PLAN SHEET.

PAVEMENT DELINEATION QUANTITIES

ROUTE	LOCATION		DIRECTION	DETAIL No.	PAVEMENT MARKERS (RETROREFLECTIVE)		REMOVE PAVEMENT MARKERS	THERMOPLASTIC TRAFFIC STRIPE		
					TYPE D Yellow (Two-Way)	TYPE H Yellow (One-Way)	(N)	4" SOLID	4" BROKEN (36-12)	4" BROKEN (17-7)
	FROM	TO			EA	EA	EA	LF	LF	LF
ROUTE 84	9+00	168+01	NB	27B				15901		
	9+00	168+01	SB	27B				15901		
	9+00	28+01		2	41		41			1901
	28+01	34+34		22	56		56	1266		
	34+34	38+04		19	10	16	26	370	370	
	38+04	47+02		2	20		20			898
	47+02	61+80		19	34	63	97	1478	1478	
	61+80	107+74		2	97		97			4594
	107+74	110+90		19	10	14	24	316	316	
	110+90	168+11		2	120		120			5721
					388	93				
	TOTAL				481			35232	2164	13114

(N) NOT A SEPERATE ITEM, FOR INFORMATION ONLY

STATE OF CALIFORNIA - DEPARTMENT OF TRANSPORTATION
TRAFFIC DESIGN
FUNCTIONAL SUPERVISOR: M. QATAMI
CALCULATED-DESIGNED BY: KHONDOKER I UDDIN
CHECKED BY: HASSAN M TAHA
REVISED BY
DATE REVISED

LAST REVISION 09-28-09
DATE PLOTTED => 29-OCT-2009
TIME PLOTTED => 08:21

PAVEMENT DELINEATION QUANTITIES

PDQ-1

BORDER LAST REVISED 4/11/2008

RELATIVE BORDER SCALE IS IN INCHES 0 1 2 3

USERNAME => s113541
DGN FILE => 43s710nc001.dgn

CU 06386

EA 3S7101

Dist	COUNTY	ROUTE	POST MILES TOTAL PROJECT	SHEET No.	TOTAL SHEETS
04	Sol	84	3.0/6.0		

Gurbhay Brar 08-05-09
REGISTERED CIVIL ENGINEER DATE

PLANS APPROVAL DATE

REGISTERED PROFESSIONAL ENGINEER
GURBHAY S. BRAR
No. 52104
Exp. 12-31-10
CIVIL
STATE OF CALIFORNIA

THE STATE OF CALIFORNIA OR ITS OFFICERS OR AGENTS SHALL NOT BE RESPONSIBLE FOR THE ACCURACY OR COMPLETENESS OF SCANNED COPIES OF THIS PLAN SHEET.

ROADWAY QUANTITIES

LOCATION STA TO STA	COLD FOAM IN-PLACE RECYCLING	STABILIZING AGENT (FOAMED ASPHALT)	STABILIZING AGENT (CEMENTITIOUS MATERIAL)	ASPHALTIC EMULSION	HMA (TYPE A)	IMPORTED MATERIAL (SHOULDER BACKING)	AB (CLASS 2)	COLD PLANE AC Pvmt	ROADWAY EXCAVATION	TEMPORARY FENCE (TYPE ESA)
	SQYD	TON	TON	TON	TON	TON	CY	SQYD	CY	LF
9+00.00 TO 168+10.50	31,821	730	420	13.62	6437	360		200		15,911
DRIVEWAYS					194	2.53	121	22	205	
TOTAL	31,821	730	420	13.62	6631	362.53	121	222	205	15,911

SUMMARY OF QUANTITIES

Q-1

CALCULATED-DESIGNED BY: DAVID VELAZCO
CHECKED BY: YEDIYUR SHANKAR
REVISED BY
DATE REVISED

FUNCTIONAL SUPERVISOR: GURBHAY BRAR

STATE OF CALIFORNIA - DEPARTMENT OF TRANSPORTATION
Caltrans
06-DESIGN

LAST REVISION 10-28-09
DATE PLOTTED => 29-OCT-2009
TIME PLOTTED => 08:21

BORDER LAST REVISED 4/11/2008

RELATIVE BORDER SCALE IS IN INCHES 0 1 2 3

USERNAME => s113541
DGN FILE => 43s710pa001.dgn

CU 06222

EA 3S7101