CALIFORNIA DEPARTMENT OF TRANSPORTATION

DEWATERING AND NON-STORMWATER DISCHARGES INFORMATION HANDOUT

Contract No. 04-448804
In Santa Clara County in Gilroy from 0.4 KM West of Uvas Creek Bridge to 0.5 KM East of Uvas Creek Bridge

This information hand out is intended to assist the contractor with the handling, monitoring and disposal of dewatering discharges. The following items are included in the handout that are referred to in the "Dewatering and Non-stormwater Discharge Control" special provision:

Attachment 1:
Title Sheet
Layout Plans
Dewatering SSP

10-1.__ TEMPORARY ACTIVE TREATMENT SYSTEM

GENERAL

Summary

This work includes designing, placing, operating, monitoring, maintaining, and later removing a temporary active treatment system. The active treatment system shall be used to remove sediment, turbidity, and other pollutants from uncontaminated groundwater, stormwater or both and then discharge the treated water.

The SWPPP must describe and include the use of temporary active treatment system as a water pollution control practice for non-stormwater management and materials pollution control.

Your attention is directed to the Department's "Storm Water Pollution Prevention Plan (SWPPP) and Water Pollution Control Program (WPCP) Preparation Manual" (Preparation Manual) and "Field Guide to Construction Site Dewatering" (Dewatering Guide) for documents referenced in this section.

A Dewatering and Non-Stormwater Discharge Control Information Package (Information Package) has been prepared for this contract and is available as described in "Project Information" of these special provisions. This Information Package includes the information on the estimated volume of groundwater encountered in structure excavations. Copies of the Information Package are available for inspection at the office of the District Construction Duty Senior at 111 Grand Avenue Oakland, CA 94612, Telephone (510) 286-5209 or email dutysenior-district 04@dot.ca.gov. Continuous pumping from well points outside the excavations shall not be allowed.

If you do not use an active treatment system, then you must discharge to a Publicly Owned Treatment Works (POTW) system. If uncontaminated groundwater, stormwater or both are discharged to a POTW, then you must obtain a municipal batch discharge permit. You are responsible for all costs and requirements related to obtaining the municipal batch discharge permit and discharging the water.

Submittals

At least 70 days before dewatering operations start, submit:

1. A dewatering and discharge plan (DDP):
   - 1.1 Title sheet
   - 1.2 Table of contents
   - 1.3 Certification and approval sheet (Section 100 of the Preparation Manual)
   - 1.4 Amendment log and format (Section 200 of the Preparation Manual)
   - 1.5 Description and schedule of the dewatering and discharge operations
   - 1.6 Discharge alternatives, including: reuse of treated water for dust control, irrigation, fill compaction, concrete batch plant; percolation; storm sewers; and surface waters
   - 1.7 Treatment system description and components
   - 1.8 Anticipated flow rates
   - 1.9 Operation and system maintenance procedures and example maintenance log
   - 1.10 Field-recorded data, visual inspection, and calibration procedures and example logs
   - 1.11 Measuring equipment descriptions
   - 1.12 Working drawings of dewatering and discharge operations showing:

     1.12.1 Section and plan views of storm water effluent treatment systems

1.12.2 Location of sampling points for water quality measurements
1.12.3 Flow path and placement of pipes, hoses, pumps, holding tanks, and other equipment used to convey water
1.12.4 General position of treatment dewatering and discharge components relative to excavations or other operations requiring dewatering
1.12.5 Point of storm water discharge

2. Daily Inspection Report (DIR). The DIR form shall:

2.1 Be approved by the Engineer prior to use
2.2 Include discharge volumes
2.3 Include water quality monitoring records
2.4 Include discharge point information for:
2.4.1 Date and time
2.4.1 Weather conditions including wind direction and velocity
2.4.1 The presence or absence of water fowl or aquatic wildlife
2.4.1 The color and clarity of the effluent discharge
2.4.1 Erosion or ponding downstream of the discharge site
2.4.1 Photographs labeled with the time, date, and location

3. POTW municipal batch discharge permit, if used

4. If you use chemical coagulants, in-line flocculants or both, in the treatment system, then submit a Coagulant Prevention Plan (CPP) with the DDP. The CPP must include:
4.1 A description of the best management practices (BMPs) to prevent accidental spillage, overfeeding into the treatment system, or other mishandling of coagulant agents
4.2 A monitoring plan for all coagulant or flocculant agents to be used
4.3 A description of the agent (chemical and trade name description)
4.4 A determination of acute and chronic toxicity for aquatic organisms conforming to EPA methods for the agents
4.5 A monitoring proposal to detect residual agent at concentrations at or below established acute toxicity levels for freshwater and marine conditions for that agent
4.6 A copy of the documentation showing RWQCB approval of the CPP and approval of the chemical coagulants or in-line flocculants proposed

The CPP must be approved by the RWQCB. You have complete responsiblity for securing approval of the CPP from the RWQCB. If the RWQCB does not approve your proposal to use chemical coagulants or in-line flocculants, you must propose an alternative treatment system component to comply with the receiving water and effluent discharge limitations.

Within 15 days after contract approval, the Contractor shall submit 3 copies of the DDP to the Engineer. The Contractor shall allow 15 days for the Engineer's review. If revisions are required, the Engineer will provide comments and specify the date that the review stopped. The Contractor shall revise and resubmit the DDP within 7 days of receipt of the Engineer's comments. The Engineer's review will resume when the complete DDP is resubmitted. When the Engineer approves the DDP, the Contractor shall submit 4 copies of the approved DDP to the Engineer. After approval, the Engineer will submit one copy of the approved DDP to the

California Regional Water Quality Control Board (RWQCB) for their review and comment. If the RWQCB provides comments to the DDP, the Contractor shall amend the DDP. Construction activities shall begin no sooner than 30 days after the Engineer approves the DDP. If the Engineer fails to complete the review within the time allowed and if, in the opinion of the Engineer, completion of the work is delayed or interfered with because of the Engineer's or the RWQCB's review, the Contractor will be compensated for resulting losses, and an extension of time will be granted, as provided for in Section 8-1.09, "Right of Way Delays," of the Standard Specifications.

Quality Control and Assurance

Retain and submit records of temporary active treatment system including:

1. Delivery and removal of temporary active treatment system components
2. Daily Inspection Report (DIR). All information and recorded data collected or submitted as part of the DIR shall be certified as true and accurate and signed by those who gather the information

MATERIALS

Active Treatment System

You must design and implement an appropriate water treatment system for the site conditions and anticipated flow rate.

1. Active treatment system must include:

    1.1 Treatment system
    1.2 Collection and conveyance system
    1.3 Discharge method

Treatment System

Size treatment systems to remove sediment and turbidity-producing suspended solids. Primary and secondary treatment may be required, or the design of the treatment system may require combined use of the various treatment components in series to achieve effective treatment.

1. Treatment system components to remove sediment and turbidity-producing suspended solids may include:

    1.1 Desilting basins
    1.2 Settling tanks
    1.3 Sediment traps
    1.4 Gravity bag filters
    1.5 Sand media filters
    1.6 Pressurized bag filters
    1.7 Cartridge filters
    1.8 Chemical coagulants including in-line flocculants
    1.9 Temporary holding tanks
    1.10 A combination of these systems to provide primary and secondary treatment

2. Treatment system components to adjust pH or dissolved oxygen may include:

    2.1 Treatment for water with high pH may include the addition of sulfuric, phosphoric, citric, or nitric acid in conformance with the supplier's specifications
    2.2 Treatment for water with low pH may include filtration through a limestone bed or the addition of sodium hydroxide
    2.3 Treatment for water with low dissolved oxygen may include aeration

Collection and Conveyance System

Provide pumps and piping to convey the water from the point of dewatering to the treatment system and to the point of discharge.

Use a flow meter to measure all discharges from dewatering operations.

Materials shall conform to the provisions in Section 6, "Control of Materials," Section 7-1.16, "Contractor's Responsibility for the Work and Materials," and Section 74-2, "Drainage Pump Equipment," of the Standard Specifications and these special provisions.

Discharge Method

Provide a method for discharging treated water and include a discharge location.

1. Discharge treated water:

    1.1 For dust control in active work areas
    1.2 To land where the grade allows sheet flow and the soil allows infiltration
    1.3 In a manner that does not cause erosion or scour. If scour occurs, install a velocity dissipator

2. Do not discharge treated water in a manner that impacts natural bedding or aquatic life

CONSTRUCTION

Placement

Place active treatment system components at the project site:

1. Prior to dewatering work
2. In the immediate area of the dewatering work as approved by the Engineer
3. Away from construction traffic or public access areas

Operation

Divert stormwater away from excavations that would require dewatering.

If observations and measurements confirm that the water quality limits are exceeded, then:

1. Stop the discharge immediately
2. Notify the Engineer
3. Begin corrective measures to modify, repair, or replace the equipment used for the discharge

Obtain approval from the Engineer before resuming dewatering and discharge operations. The Engineer will inspect the corrective work prior to granting approval to resume the discharge.

Once the Engineer's approval has been granted, you may begin startup-phase sampling requirements before the regular-phase sampling requirements.

Sediments removed from uncontaminated areas during maintenance of the treatment system shall be dried and distributed uniformly at a location within the project limits approved by the Engineer.

Relocate active treatment system as needed for dewatering work.

Monitoring

While the active treatment system is operated, perform:

1. Flow rate monitoring:

    1.1 To record daily discharge volumes
    1.2 To compute average daily volumes

Conform with the manufacturer's instructions for all calibrations of the flow meter. Perform calibrations in the presence of the Engineer.

2. Receiving water limitations monitoring. In the receiving storm water drainage system, the discharge shall not cause:

    2.1 The downstream turbidity to increase to more than 50 Nephelometric Turbidity Units (NTU) when the natural background turbidity is less than 50 NTU
    2.2 The downstream turbidity to increase more than 10 percent above the natural background turbidity when the natural background turbidity is 50 NTU or greater
    2.3 The normal ambient temperature to be altered more than 5 degrees Fahrenheit
    2.4 The normal ambient pH to fall below 6.5, exceed 8.5, or change more than 0.5 units
    2.5 The dissolved oxygen concentration to fall below 5.0 mg/L

3. Discharge effluent limitations monitoring. The water to be discharged (effluent) shall not exceed the following limits:

    3.1 The discharged water turbidity shall not be greater than 50 Nephelometric Turbidity Units (NTU)
    3.2 The pH of the discharged water shall not be less than 6.5 nor greater than 8.5
    3.3 The discharged water shall not contain chlorine in excess of 0.02 mg/L (instantaneous maximum)

Use these procedures to do water quality measurements for the parameters listed under "Receiving Water Limitations" and "Discharge Effluent Limitations":

1. For discharges of water that exceed 4 hours in duration occurring within a 24-hr period:

    1.1 When the discharge has the potential to affect the receiving body of water in a storm water drainage system, take measurements at the background and receiving water sampling locations no more than one hour before discharging treated water
    1.2 Startup-phase sampling includes stormwater runoff, background, and receiving water measurements taken during the first 3 days of discharge. Begin start-up phase sampling 10 to 30 minutes after measurable runoff occurs during a storm.

Take samples on regular intervals during the storm. Take at least 4 samples for each discharge lasting 4 hours or more. The time between sampling shall not exceed 4 hours.

1.3 Regular-phase sampling includes effluent, background, and receiving water measurements that occur after the third day of operation. Do regular-phase sampling at least twice daily. Take samplese at regular intervals.

1.4 If there is a noticeable change in color or clarity in the receiving body of water then take additional effluent, background, and downstream measurements

1.5 If an initial measurement shows that water quality limits are exceded, then you must take an additional measurement no less than 15 minutes and no more than one hour after the initial measurement

1.6 If the second test confirms that the limits were exceeded, the Contractor shall revert to the startup-phase sampling requirements before resuming the regular-phase sampling

1.7 For cofferdam maintenance dewatering, regular-phase monitoring may be discontinued after 10 days if, in the opinion of the Engineer, the effluent and receiving water measurements are consistently below the water quality limits

2. For discharges of water of less than 4 hours in duration occurring within a 24-hr period:

2.1 When the discharge has the potential to affect the receiving body of water in a storm water drainage system, take measurements at the background and receiving water sampling locations no more than one hour before discharging treated water

2.2 Take effluent, background, and receiving water measurements between 10 and 30 minutes after initiating discharge. Continue to take measurements every hour.

2.3 If an initial measurement shows that water quality limits are exceded, then you must take an additional measurement no more than 15 minutes after the initial measurement

2.4 If there is a noticeable change in color or clarity in the receiving body of water then take additional effluent, background, and downstream measurements

3. For all discharges of water:

3.1 Measure for stormwater effluent turbidity and pH at the end of the outfall or inline sampling port

3.2 Measure receiving water turbidity, pH, and dissolved oxygen at a point within 15 feet (5 m) downstream of the discharge point

3.3 Measure for natural background turbidity, dissolved oxygen, and pH at a location that is 9 to 15 feet (3 m to 5 m) upstream of the discharge point. If there is other construction activity, then measure at least 150 feet (50 m) upstream of the discharge point

3.4 If the discharge is made into a surface body of water, or into a stormwater drainage system that produces an observable effect on a surface body of water, then the receiving water shall be monitored.

4. For receiving water and natural background measurements:

4.1 If the receiving water is deeper than 3 feet (1.0 m), then the measurement shall be depth-averaged

4.2 Obtain depth-averaged measurements by taking samples from 3 points within the water column and averaging the 3 measurements: one at 12 inches (0.3 m) below the surface, one at mid depth, and one at 12 inches (0.3 m) above the bottom

4.3 If the receiving water is less than 3 feet (1.0 m) in depth, then only one measurement shall be taken at 12 inches (0.3 m) below the surface

Conform with the manufacturer's instructions for use and calibrations of meters and devices for taking water quality measurements. Perform calibrations in the presence of the Engineer.

Inspection

Inspect temporary active treatment system:

1. Daily if dewatering work occurs daily
2. Weekly if dewatering work does not occur daily

Reporting

If observations and measurements confirm that the water quality limits are exceeded, then:

1. Submit a Notice of Discharge Report as shown in the Preparation Manual within 3 working days of exceeding the limits
2. Document the reasons and corrective work performed to prevent a reoccurrence in the Notice of Discharge

Maintenance

Maintain the various components to prevent leaks and provide proper function. If a component of the dewatering equipment is not functioning properly, discontinue the dewatering operation and repair or replace the component.

Removal

Ground disturbance, including holes and depressions, caused by the installation and removal of the temporary active treatment system must be backfilled and repaired in conformance with the provisions in Section 15-1.02, "Preservation of Property," of the Standard Specifications.

PAYMENT

The contract lump sum price paid for temporary active treatment system includes full compensation for furnishing all labor, materials, tools, equipment, and incidentals, and for doing all the work involved in designing, implementing, monitoring, maintaining, and later removing the temporary active treatment system, including disposal of accumulated sediment, as specified in the Standard Specifications and these special provisions, and as directed by the Engineer.

INDEX OF SHEETS

STATE OF CALIFORNIA
DEPARTMENT OF TRANSPORTATION

PROJECT PLANS FOR CONSTRUCTION ON
STATE HIGHWAY

IN SANTA CLARA COUNTY
IN GILROY
FROM 0.4 KM WEST OF UVAS CREEK BRIDGE
TO 0.5 KM EAST OF UVAS CREEK BRIDGE

TO BE SUPPLEMENTED BY STANDARD PLANS DATED JULY 2004

Dist	COUNTY	ROUTE	KILOMETER POST TOTAL PROJECT	SHEET No.	TOTAL SHEETS
04	SCl	152	9.8/10.7		

LOCATION MAP

Caltrans

Caltrans Metric

BEGIN CONSTRUCTION
STA 14+00 KP 9.8
PM 6.1

END CONSTRUCTION
STA 23+40 KP 10.7
PM 6.7

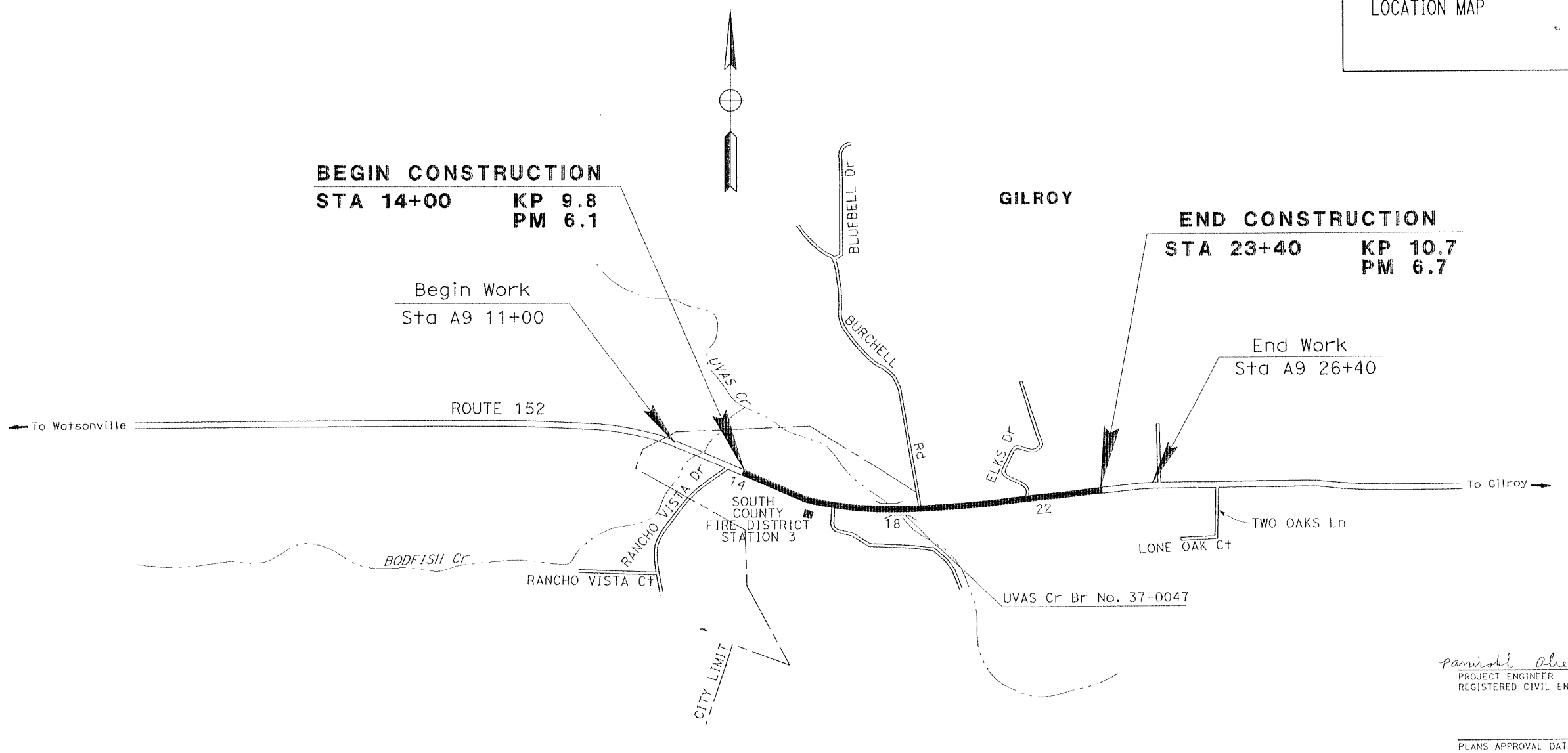

NO SCALE

THE CONTRACTOR SHALL POSSESS THE CLASS (OR CLASSES) OF LICENSE AS SPECIFIED IN THE "NOTICE TO CONTRACTORS."

DESIGN ENGINEER — MORTEZA AZIMI
PROJECT MANAGER — FRANCIS MENSAH

Parviz Abedi 2-14-08
PROJECT ENGINEER DATE
REGISTERED CIVIL ENGINEER

REGISTERED PROFESSIONAL ENGINEER
P. Abedi
No. 36025
Exp. 6-30-08
CIVIL
STATE OF CALIFORNIA

PLANS APPROVAL DATE

THE STATE OF CALIFORNIA OR ITS OFFICERS OR AGENTS SHALL NOT BE RESPONSIBLE FOR THE ACCURACY OR COMPLETENESS OF ELECTRONIC COPIES OF THIS PLAN SHEET.

LAST REVISION 04-18-08
DATE PLOTTED => 21-MAY-2008
TIME PLOTTED => 13:45

CONTRACT No. 04-448804
CU 04271 EA 448801

BORDER LAST REVISED 3/1/2007 | CALTRANS WEB SITE IS: HTTP://WWW.DOT.CA.GOV/ | RELATIVE BORDER SCALE IS IN MILLIMETERS 0 20 40 60 80 | USERNAME => s111573 DGN FILE => 448804ab001.dgn

FOR COMPLETE RIGHT OF WAY DATA,
SEE RIGHT OF WAY RECORD MAPS
AT DISTRICT OFFICE.

Dist	COUNTY	ROUTE	KILOMETER POST TOTAL PROJECT	SHEET No.	TOTAL SHEETS
04	SCI	152	9.8/10.7		

Caltrans Metric

Parirokh Abedi 2-14-08
REGISTERED CIVIL ENGINEER DATE

P. Abedi No. 36025 Exp. 6-30-08 CIVIL
REGISTERED PROFESSIONAL ENGINEER — STATE OF CALIFORNIA

PLANS APPROVAL DATE

THE STATE OF CALIFORNIA OR ITS OFFICERS OR AGENTS SHALL NOT BE RESPONSIBLE FOR THE ACCURACY OR COMPLETENESS OF ELECTRONIC COPIES OF THIS PLAN SHEET.

CURVE DATA

No.	R	Δ	T	L
①	320	30°32'48"	87.382	170.605
②	15	102°57'58"	18.846	26.956
③	15	122°21'38"	27.263	32.034

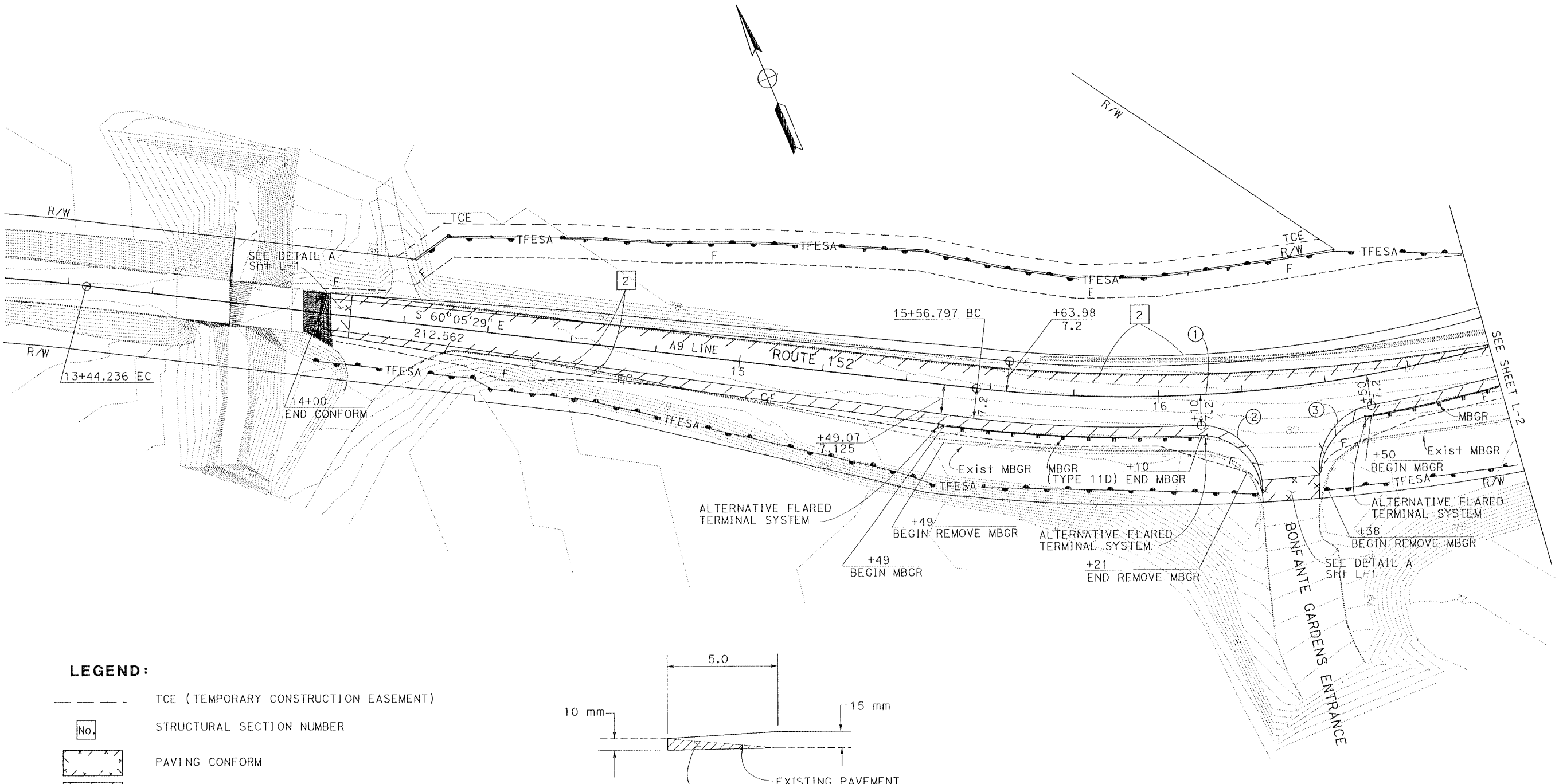

LEGEND:

- TCE (TEMPORARY CONSTRUCTION EASEMENT)
- No. — STRUCTURAL SECTION NUMBER
- PAVING CONFORM
- COLD PLANE AND OVERLAY
- TEMPORARY FENCE (TYPE ESA)

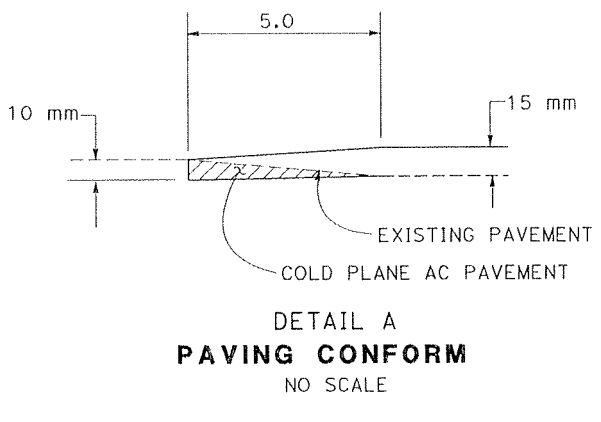

DETAIL A
PAVING CONFORM
NO SCALE

ALL DIMENSIONS ARE IN METERS UNLESS OTHERWISE SHOWN

LAYOUT
SCALE 1:500

L-1

STATE OF CALIFORNIA - DEPARTMENT OF TRANSPORTATION
Caltrans
DESIGN

FUNCTIONAL SUPERVISOR: MORTEZA AZIMI
CALCULATED-DESIGNED BY: PARRIROKH ABEDI
CHECKED BY: PARRIROKH ABEDI
REVISED BY
DATE REVISED

LAST REVISION: DATE PLOTTED => 21-MAY-2008
05-07-08 TIME PLOTTED => 13:46

BORDER LAST REVISED 3/1/2007

RELATIVE BORDER SCALE IS IN MILLIMETERS 0 20 40 60 80

USERNAME => s111573
DGN FILE => 444880ea001.dgn

CU 04271

EA 448801

Dist	COUNTY	ROUTE	KILOMETER POST TOTAL PROJECT	SHEET No.	TOTAL SHEETS
04	SCI	152	9.8/10.7		

Parrirokh Abedi 2-14-08
REGISTERED CIVIL ENGINEER DATE

PLANS APPROVAL DATE

REGISTERED PROFESSIONAL ENGINEER P. Abedi No. 36025 Exp. 6-30-08 CIVIL STATE OF CALIFORNIA

THE STATE OF CALIFORNIA OR ITS OFFICERS OR AGENTS SHALL NOT BE RESPONSIBLE FOR THE ACCURACY OR COMPLETENESS OF ELECTRONIC COPIES OF THIS PLAN SHEET.

Caltrans Metric

FOR COMPLETE RIGHT OF WAY DATA, SEE RIGHT OF WAY RECORD MAPS AT DISTRICT OFFICE.

CURVE DATA

No.	R	Δ	T	L
4	320	30°32'48"	87.382	170.605
5	15	117°19'14"	24.632	30.714
6	15	119°25'15"	25.680	31.264
7	65	57°33'19"	35.701	65.294
8	67.663	47°36'47"	29.852	56.228

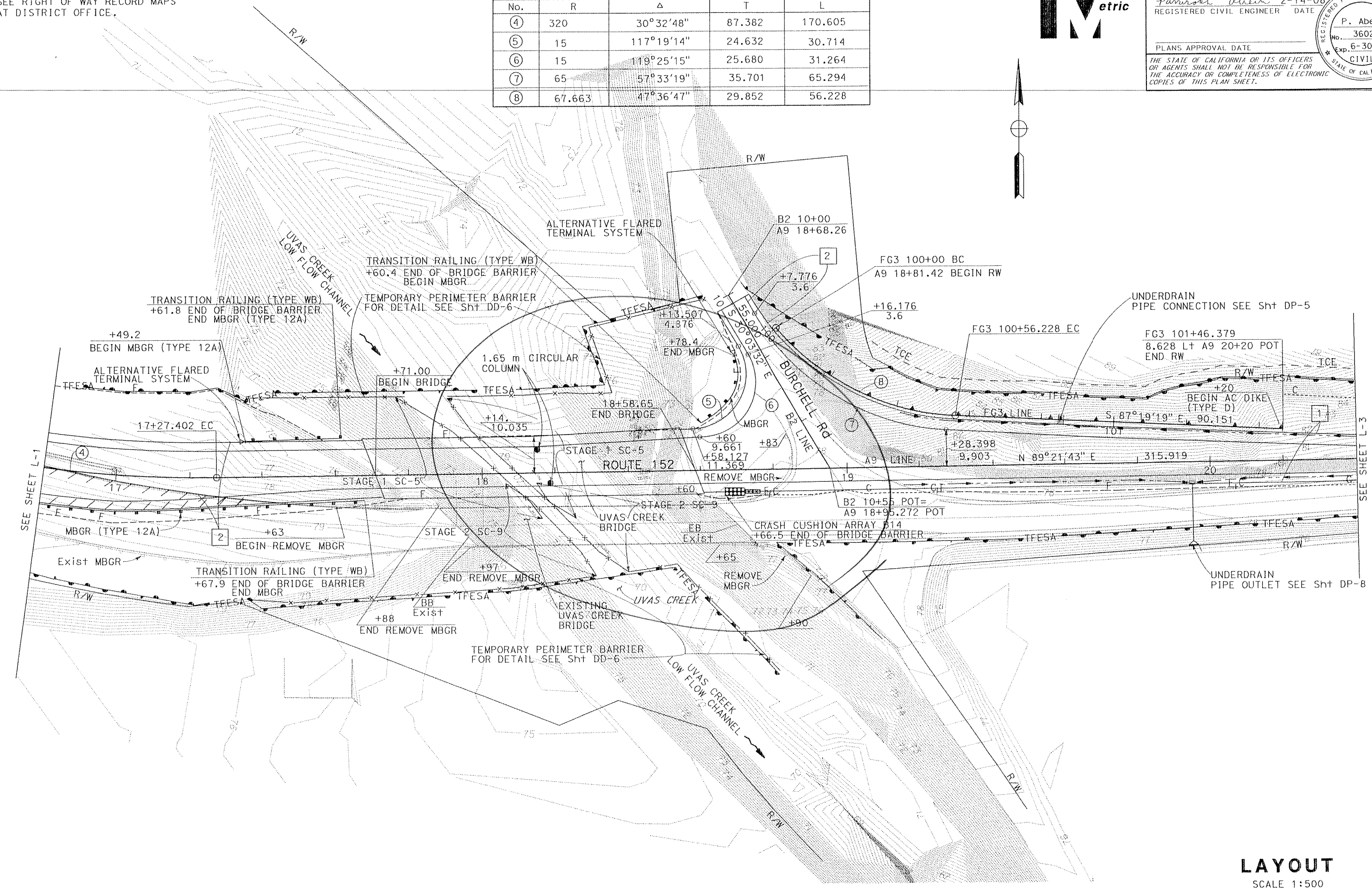

FOR NOTES, ABBREVIATIONS &/OR LEGEND, SEE SHEET L-1

ALL DIMENSIONS ARE IN METERS UNLESS OTHERWISE SHOWN

LAYOUT

SCALE 1:500

L-2

STATE OF CALIFORNIA - DEPARTMENT OF TRANSPORTATION

Caltrans

DESIGN

FUNCTIONAL SUPERVISOR: MORTEZA AZIMI

CALCULATED-DESIGNED BY: PARRIROKH ABEDI

CHECKED BY: PARRIROKH ABEDI

REVISED BY

DATE REVISED

LAST REVISION 05-13-08 DATE PLOTTED => 21-MAY-2008 TIME PLOTTED => 13:46

BORDER LAST REVISED 3/1/2007

RELATIVE BORDER SCALE IS IN MILLIMETERS 0 20 40 60 80

USERNAME => s111573
DGN FILE => 444880ea002.dgn

CU 04271

EA 448801

FOR COMPLETE RIGHT OF WAY DATA,
SEE RIGHT OF WAY RECORD MAPS
AT DISTRICT OFFICE.

CURVE DATA

No.	R	Δ	T	L
⑨	6000	2°46'50"	145.625	291.193
⑩	15	69°53'17"	10.481	18.297
⑪	15	69°53'18"	10.481	18.297

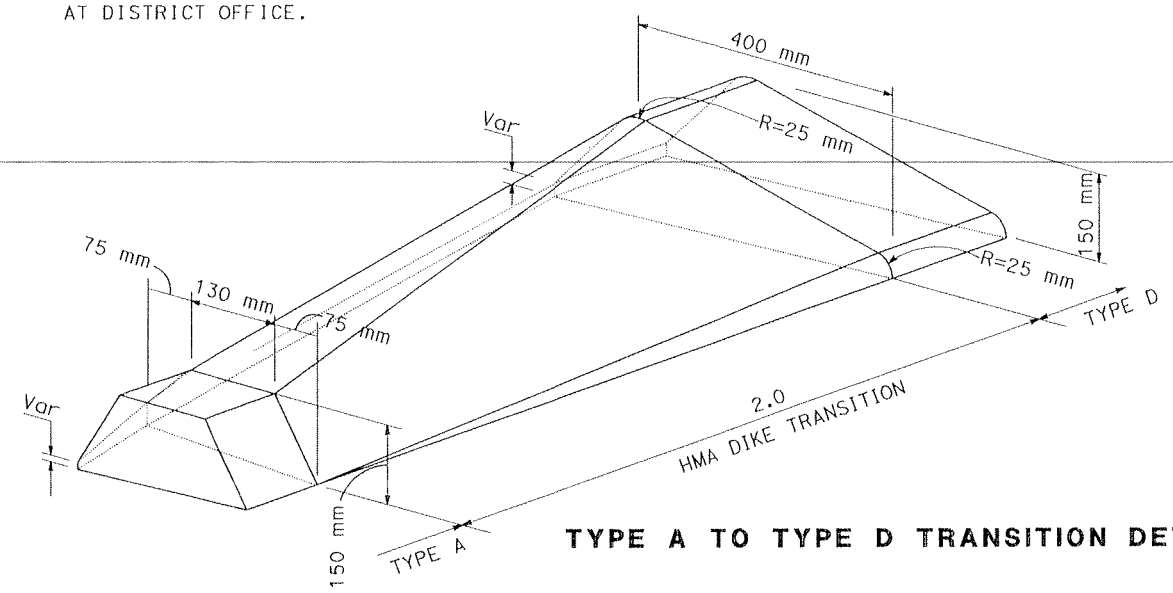

TYPE A TO TYPE D TRANSITION DETAIL

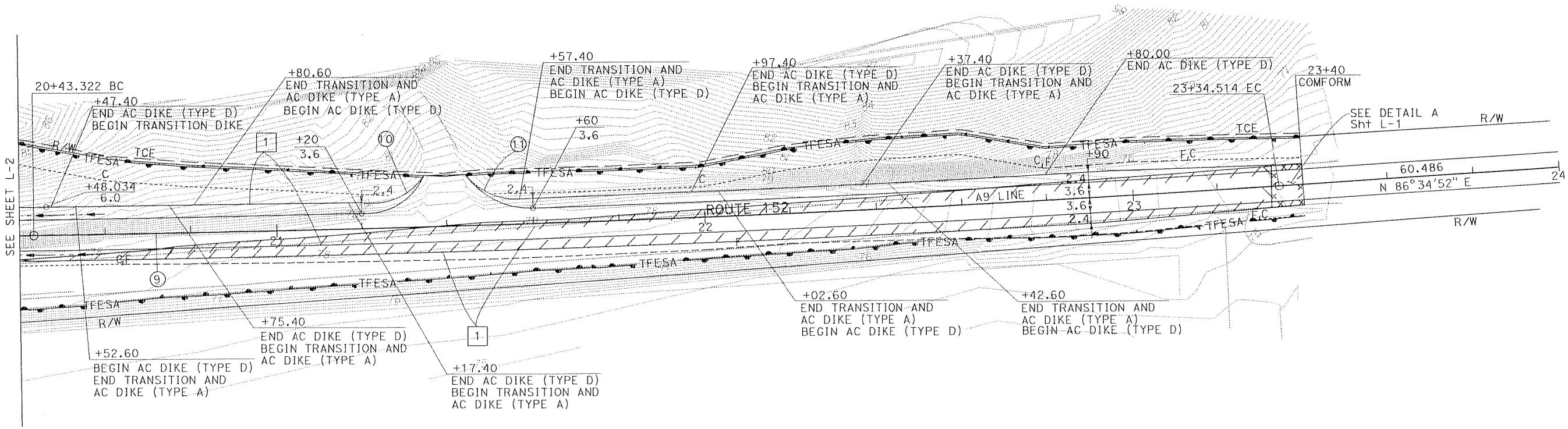

FOR NOTES, ABBREVIATIONS &/OR LEGEND, SEE SHEET L-1

ALL DIMENSIONS ARE IN METERS UNLESS OTHERWISE SHOWN

LAYOUT

SCALE 1:500

L-3

Dist	COUNTY	ROUTE	KILOMETER POST TOTAL PROJECT	SHEET No.	TOTAL SHEETS
04	SCI	152	9.8/10.7		

Parirokh Abedi 2-14-08
REGISTERED CIVIL ENGINEER DATE

PLANS APPROVAL DATE

P. Abedi No. 36025 Exp. 6-30-08 CIVIL — REGISTERED PROFESSIONAL ENGINEER — STATE OF CALIFORNIA

THE STATE OF CALIFORNIA OR ITS OFFICERS OR AGENTS SHALL NOT BE RESPONSIBLE FOR THE ACCURACY OR COMPLETENESS OF ELECTRONIC COPIES OF THIS PLAN SHEET.

CALCULATED-DESIGNED BY: PARRIROKH ABEDI
CHECKED BY: PARRIROKH ABEDI
FUNCTIONAL SUPERVISOR: MORTEZA AZIMI
REVISED BY
DATE REVISED

STATE OF CALIFORNIA - DEPARTMENT OF TRANSPORTATION
Caltrans
DESIGN

LAST REVISION
DATE PLOTTED => 21-MAY-2008

BORDER LAST REVISED 3/1/2007

RELATIVE BORDER SCALE IS IN MILLIMETERS 0 20 40 60 80

USERNAME => s111573
DGN FILE => 448801ea003.dgn

CU 04271

EA 448801