DIST.	COUNTY	ROUTE	POST MILES TOTAL PROJECT	SHEET NO.	TOTAL SHEETS
04	SCI	87	1.1/3.9	527	787

CHIEF, OFFICE OF STRUCTURE DESIGN
REGISTERED CIVIL ENGINEER

12-5-88
PLANS APPROVAL DATE

REGISTERED PROFESSIONAL ENGINEER — S.D. NEWELL — No. 13798 — Exp. 3-31-89 — CIVIL — STATE OF CALIFORNIA

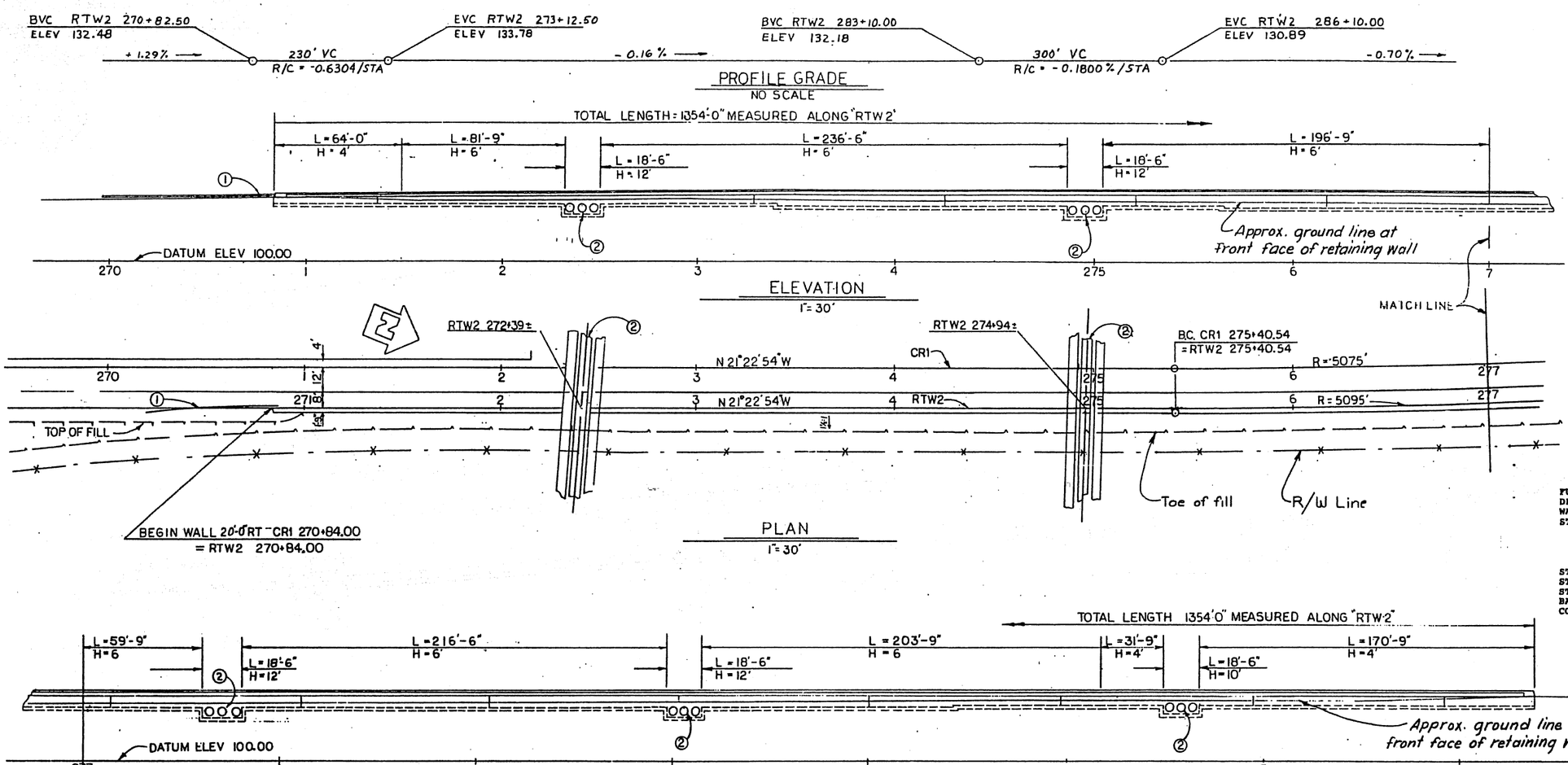

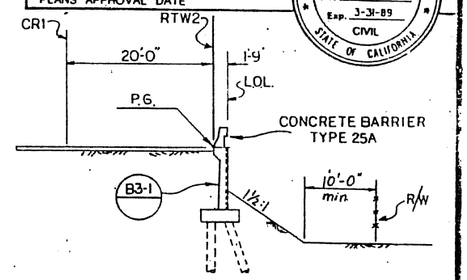

TYPICAL SECTION
1"=10'

APPROXIMATE QUANTITIES

FURNISH PILING (CLASS 45)	8,857 LF
DRIVE PILE (CLASS 45)	201 EA
WATERSTOP	81 LF
STRUCTURE DRAINAGE SYSTEM	LUMP SUM

FINAL PAY QUANTITIES

STRUCTURE EXCAVATION (RETAINING WALL)	1,515 CY
STRUCTURE BACKFILL (RETAINING WALL)	965 CY
STRUCTURAL CONCRETE, RETAINING WALL	669 CY
BAR REINFORCING STEEL (RETAINING WALL)	50,700 LB
CONCRETE BARRIER (TYPE 25A)	1,354 LF

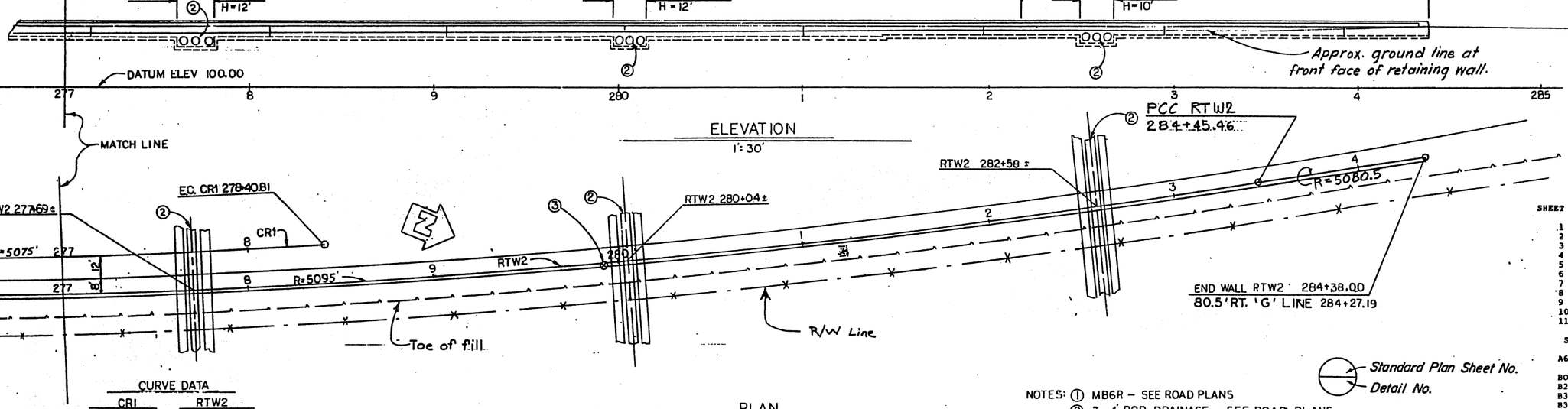

REDUCED PLAN
USE SCALE BELOW
0 1 2 3
3 INCHES ON ORIGINAL PLAN

CURVE DATA

CR1	RTW2	
R = 5075'	R = 5095'	R = 5080.5'
Δ = 3°23'24"	Δ = 9°03'06"	Δ = 01°02'37"
T = 150.18'	T = 403.30'	T = 46.27'
L = 300.27'	L = 804.922'	L = 92.54'

NOTES: ① MB6R – SEE ROAD PLANS
② 3-4' RCP DRAINAGE – SEE ROAD PLANS
③ 02942 ELECTROLIER – SEE ROAD PLANS(FUTURE)

Standard Plan Sheet No.
Detail No.

FOR GENERAL NOTES SEE "FOUNDATION PLAN NO. 1"

INDEX TO PLANS

SHEET NO.	TITLE
1	GENERAL PLAN
2	FOUNDATION PLAN NO. 1
3	FOUNDATION PLAN NO. 2
4	FOUNDATION PLAN NO. 3
5	LAYOUT NO. 1
6	LAYOUT NO. 2
7	LAYOUT NO. 3
8	REINF. CONCRETE PIPE OPENING DETAILS
9	LOG OF TEST BORINGS 1 OF 3
10	LOG OF TEST BORINGS 2 OF 3
11	LOG OF TEST BORINGS 3 OF 3

STANDARD PLANS DATED JANUARY 1988

A62-B	EXCAVATION AND BACKFILL – BRIDGE
	SURCHARGE AND WALL
B0-3	BRIDGE DETAILS
B2-5	PILE DETAILS – CLASS 45 & CLASS 70
B3-1	RETAINING WALL – TYPE 1 H = 4' – 30'
B3-8	RETAINING WALL DETAILS NO. 1
B11-53	CONCRETE BARRIER TYPE 25

Submitted by: [signature] C 19078 — REGISTERED CIVIL ENGINEER — REGISTERED CIVIL ENGINEER NUMBER
Approval Recommended By: [signature] 8/88 — DESIGN METHODS ENGINEER — REGISTERED CIVIL ENGINEER NUMBER

DESIGN	By J W Olson 5/86	Checked D. McCauley 4/86	LAYOUT
DETAILS	By T. Farnan 5/85	Checked D. McCauley 4/86	LIVE LOADING: HS20-44 AND ALTERNATIVE
QUANTITIES	By J W Olson 4/86	Checked Michael Hall 4/86	SPECIFICATIONS By T. Farnan 5/85 Checked J.W. Olson; By Karla Meeks 04-1088 Plans and Specs Compared Kern 12/88

State of CALIFORNIA
DEPARTMENT OF TRANSPORTATION

STRUCTURES - DESIGN 10
Thomas W. Farnan 36419
PROJECT ENGINEER — REGISTERED CIVIL ENGINEER NO.

BRIDGE NO. 37-RW02
POST MILE 2.9

GUADALUPE CORRIDOR
RETAINING WALL NO. 2
GENERAL PLAN

ORIGINAL SCALE IN INCHES FOR REDUCED PLANS 0 1 2 3

CU 04
WO 487141

Disregard prints bearing earlier revision dates →
REVISION DATES (PRELIMINARY STAGE ONLY)

SHEET OF

DIST.	COUNTY	ROUTE	POST MILES—TOTAL PROJECT	SHEET NO.	TOTAL SHEETS
04	SCl	87	1.1/3.9	528	787

Gerald Inenaga 6/20/78
DESIGN ENGINEER — REGISTERED CIVIL ENGINEER NUMBER

DATE APPROVED 12-5-88

REGISTERED PROFESSIONAL ENGINEER G. S. INENAGA No. 12078 Exp. 3-31-89 CIVIL STATE OF CALIFORNIA

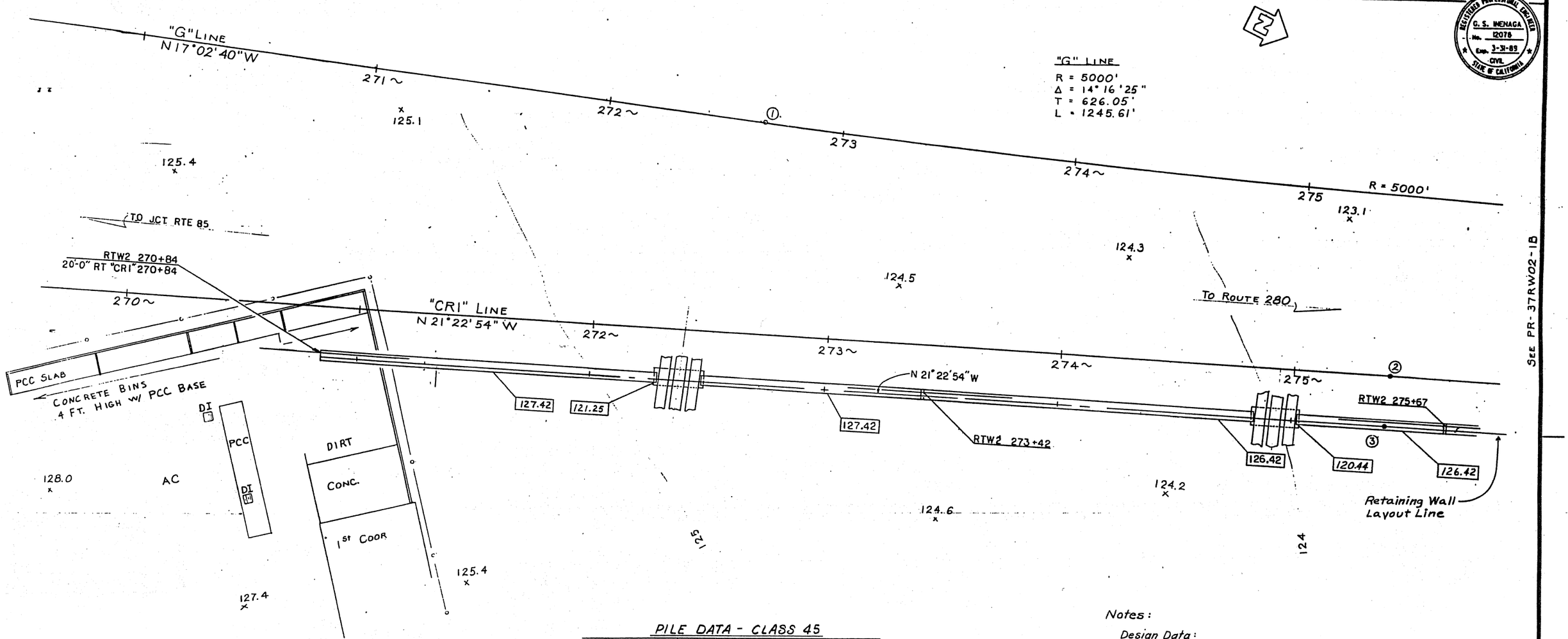

NOTE:
① "G" 272 + 66.47 BC
② "CR1" 275 + 40.54 BC
③ "RTW2" 275+40.54 BC

NOTE:
— indicates bottom of footing elevation in feet.

DR-3
FD. R.R. SPIKE W/X
LOCATED 200' RT. "CR1" 266
ELEV. = 128.60'

PILE DATA - CLASS 45

Location	Specified Tip Elev.	Probable Tip Elev.
Station 270+84 to 274+00	80	75
Station 274+00 to 283+00	85	80
Station 283+00 to 284+28	80	75

Notes:
Design Data:
fc = 1300 psi f'c = 3250 psi fs = 24,000 psi n = 10 earth = 120 pcf
2' Surcharge:
Equivalent fluid pressure = 36 pcf max / 27 pcf min

REDUCED PLAN
USE SCALE BELOW
0 1 2 3
3 INCHES ON ORIGINAL PLAN

PR-37RW02-1A

PRELIMINARY INVESTIGATION SECTION											
SCALE 1" = 20'	DATUM N.G.V.D.	PHOTOGRAMMETRY AS OF:		DRAWN	By LJH	6-85	DESIGN	By J W Olson 3/86	Checked P. McCauley 4/86	State of CALIFORNIA DEPARTMENT OF TRANSPORTATION	STRUCTURES - DESIGN 10
		SURVEYED	By DISTRICT	TRACED	By LJH	6-85	DETAILS	By J W Olson 3/86	Checked P. McCauley 4/86		Thomas Farnan 36419 PROJECT ENGINEER REGISTERED CIVIL ENGINEER NO.
ALIGNMENT TIES DR. No. 487041-W241		FIELD CHKD	By RDR 4-85	CHECKED	By RDR	6-85	QUANTITIES	By L. Alvin 4/86	Checked Michael Gulli 4/86		

BRIDGE NO. 37-RW02
POST MILE 2.9

RETAINING WALL NO. 2
FOUNDATION PLAN NO. 1

ORIGINAL SCALE IN INCHES FOR REDUCED PLANS 0 1 2 3

CU 04
WO 487141

Disregard prints bearing earlier revision dates

REVISION DATES (PRELIMINARY STAGE ONLY) 3/4/85 3/4/86 4/1/86

SHEET 2 OF 11

DIST.	COUNTY	ROUTE	POST MILES—TOTAL PROJECT	SHEET NO.	TOTAL SHEETS
04	SCl	87	1.1/3.9	529	787

DESIGN ENGINEER — REGISTERED ENGINEER NUMBER 61078

DATE APPROVED 12-5-88

REGISTERED PROFESSIONAL ENGINEER
G. S. INENAGA
No. 12078
Exp. 3-31-89
CIVIL
STATE OF CALIFORNIA

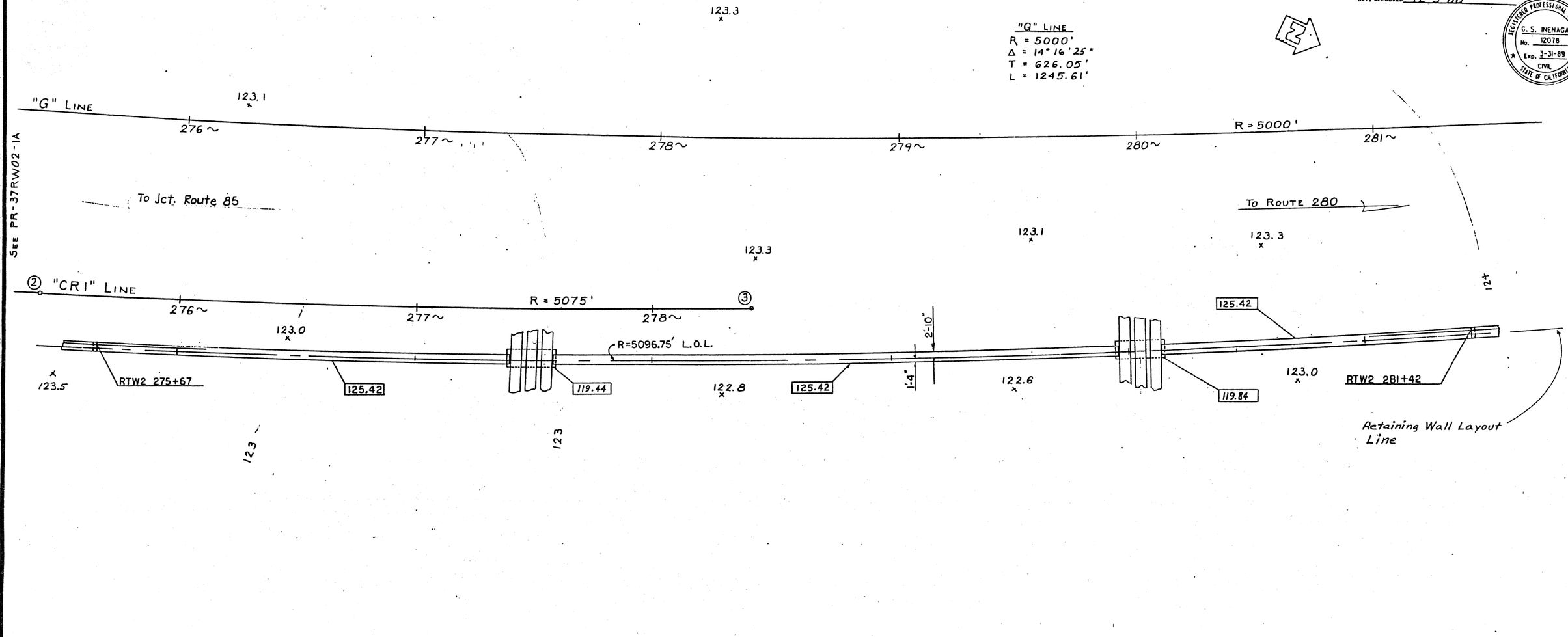

Note:

② "CR1" 275 + 40.54 BC

③ "CR1" 278 + 40.81 EC

DR-3
Fd. R.R. spike w/x
located 200' Rt. "CR1" 266
Elev. = 128.60'

For notes: see 'Foundation Plan No. 1' sheet

REDUCED PLAN
USE SCALE BELOW
0 2 3
3 INCHES ON ORIGINAL PLAN

PR-37RW02-1B

PRELIMINARY INVESTIGATION SECTION										
SCALE 1" = 20'	DATUM N.G.V.D.	PHOTOGRAMMETRY AS OF:		DRAWN	By LJH	6-85	DESIGN	By JW Olson 3/86	Checked P. McCauley
		SURVEYED	By DISTRICT	TRACED	By LJH	6-85	DETAILS	By JW Olson 3/86	Checked P. McCauley
ALIGNMENT TIES DR. No. 48704I-W241		FIELD CHKD	By RDR 4-85	CHECKED	By RDR	6-85	QUANTITIES	By Olson 4/86	Checked Michael Duffy

State of CALIFORNIA
DEPARTMENT OF TRANSPORTATION

STRUCTURES - DESIGN 10
Thomas Farmer 36419
PROJECT ENGINEER — REGISTERED CIVIL ENGINEER NO.

BRIDGE NO. 37-RW02
POST MILE 2.9

RETAINING WALL NO. 2
FOUNDATION PLAN NO. 2

05 8145

ORIGINAL SCALE IN INCHES FOR REDUCED PLANS 0 1 2 3

CU 04
WO 487141

Disregard prints bearing earlier revision dates →

REVISION DATES (PRELIMINARY STAGE ONLY)

SHEET 3 OF 11

DIST.	COUNTY	ROUTE	POST MILES—TOTAL PROJECT	SHEET NO.	TOTAL SHEETS
04	9Cl.	87	11/3.9	530	707

DESIGN ENGINEER C 12078 REGISTERED CIVIL ENGINEER NUMBER

DATE APPROVED 12-5-88

REGISTERED PROFESSIONAL ENGINEER G. S. INENAGA No. 12078 Exp. 3-31-89 CIVIL STATE OF CALIFORNIA

"G" LINE
R = 5000'
Δ = 14° 16' 25"
T = 626.05'
L = 1245.61'

To Jct. Route 85

To Route 280

"G" Line

281~ 282~ 283~ 284~ R = 5000' ④ 285~ N 31°19'05" W 286~

125.9 125.3 125.2 125.8 125.6 125.5 125.5

PCC RTW2
283+45.16

RTW2
R=5096.75

124.1 124.5

Retaining Wall
Layout Line

2'-10"

1'-4"

RTW2 281+42

126.42 120.84 126.42

125.1

RTW2 284+38.0
END OF WALL

124 125

L.O.L R= 5078.75

124.5

PUMP HOUSE
& PUMP

SEE PR-37RW02-1B

NOTE:
④ "G" 285+12.08 EC

DR-10
FD. 1" I.P. W/PP & T
LOCATED 22.0' RT. "G" 288+75
ELEV. = 126.30'

For notes: see 'Foundation Plan No. 1' sheet

REDUCED PLAN
USE SCALE BELOW
0 2 3
3 INCHES ON ORIGINAL PLAN

PR-37RW02-1C

PRELIMINARY INVESTIGATION SECTION							
SCALE 1" = 20'	DATUM N.G.V.D	PHOTOGRAMMETRY AS OF:		DRAWN	By LJH 6-85		
ALIGNMENT TIES DR. No. 487041-W241		SURVEYED By DISTRICT		TRACED	By LJH 6-85		
		FIELD CHKD By RDR 4-85		CHECKED	By RDR 6-85		

DESIGN	By J W Olson 3/86	Checked P. McCauley
DETAILS	By J W Olson 3/86	Checked P. McCauley
QUANTITIES	By Chris 4/86	Checked Michael Gallo

State of CALIFORNIA DEPARTMENT OF TRANSPORTATION

STRUCTURES - DESIGN 10

Thomas Farmon 3/4/89
PROJECT ENGINEER REGISTERED CIVIL ENGINEER NO.

BRIDGE NO. 37-RW02
POST MILE 2.9

RETAINING WALL NO. 2
FOUNDATION PLAN NO.3

01 0345

ORIGINAL SCALE IN INCHES FOR REDUCED PLANS

CU 04

REVISION DATES (PRELIMINARY STAGE ONLY)

SHEET OF

DIST.	COUNTY	ROUTE	POST MILES—TOTAL PROJECT	SHEET NO.	TOTAL SHEETS
04	SCl	87	1.1/3.9	531	787

REGISTERED PROFESSIONAL ENGINEER — G. S. INENAGA — No. 12078 — Exp. 3-31-89 — CIVIL — STATE OF CALIFORNIA

DESIGN ENGINEER — c/12078 — REGISTERED CIVIL ENGINEER NUMBER

DATE APPROVED 12-5-88

NOTES: ⊕ indicates vertical pile

⊕ indicates battered pile, 1:3

Longitudinal dimensions are measured along RTW2 line

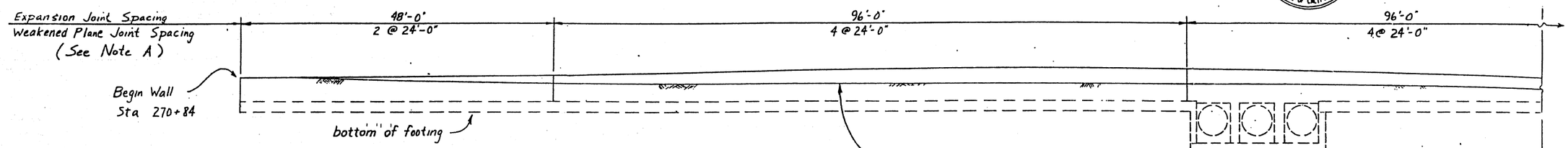

ELEVATION
1/8" = 1'-0"

Note A: For Expansion Joint and Weakened Plane Joint, see "Reinf. Concrete Pipe Opening Details" sheet.

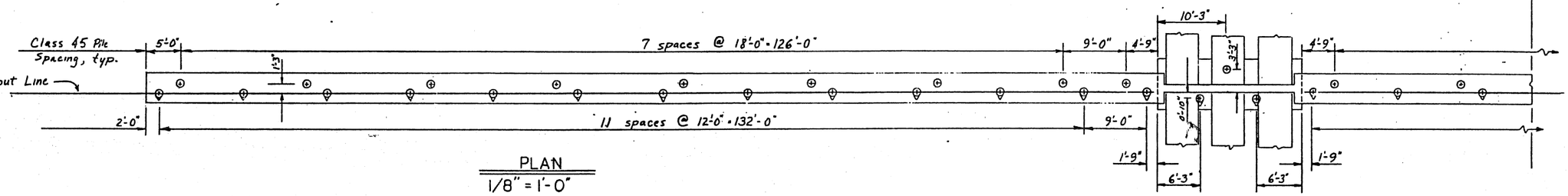

PLAN
1/8" = 1'-0"

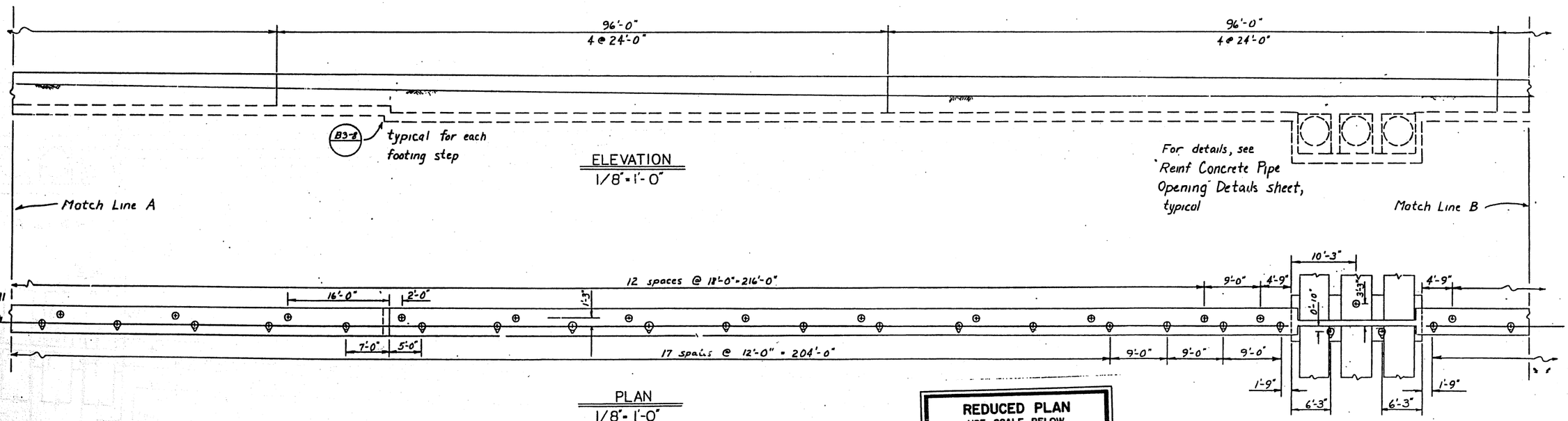

ELEVATION
1/8" = 1'-0"

PLAN
1/8" = 1'-0"

REDUCED PLAN
USE SCALE BELOW
0 2 3
3 INCHES ON ORIGINAL PLAN

DESIGN	By J W Olson	Checked P. McCauley
DETAILS	By J W Olson	Checked P. McCauley
QUANTITIES	By Alvin 4/86	Checked Michael Duffy

State of CALIFORNIA
DEPARTMENT OF TRANSPORTATION

STRUCTURES - DESIGN 10
Thomas Farmer 36919
PROJECT ENGINEER — REGISTERED CIVIL ENGINEER NO.

BRIDGE NO. 37 RW02
POST MILE 2.9

RETAINING WALL NO. 2
LAYOUT NO. 1

ORIGINAL SCALE IN INCHES FOR REDUCED PLANS 0 1 2 3

CU 04
WO 487141

Disregard prints bearing earlier revision dates →

REVISION DATES (PRELIMINARY STAGE ONLY)

SHEET 5 OF 11

DIST.	COUNTY	ROUTE	POST MILES—TOTAL PROJECT	SHEET NO.	TOTAL SHEETS
04	SCI	87	1.1/3.9	532	787

DESIGN ENGINEER — REGISTERED CIVIL ENGINEER NUMBER C12078

DATE APPROVED 12-5-88

REGISTERED PROFESSIONAL ENGINEER G. S. INENAGA No. 12078 Exp. 3-31-89 CIVIL STATE OF CALIFORNIA

For NOTES: See "Layout No. 1" sheet

REDUCED PLAN
USE SCALE BELOW
0 1 2 3
3 INCHES ON ORIGINAL PLAN

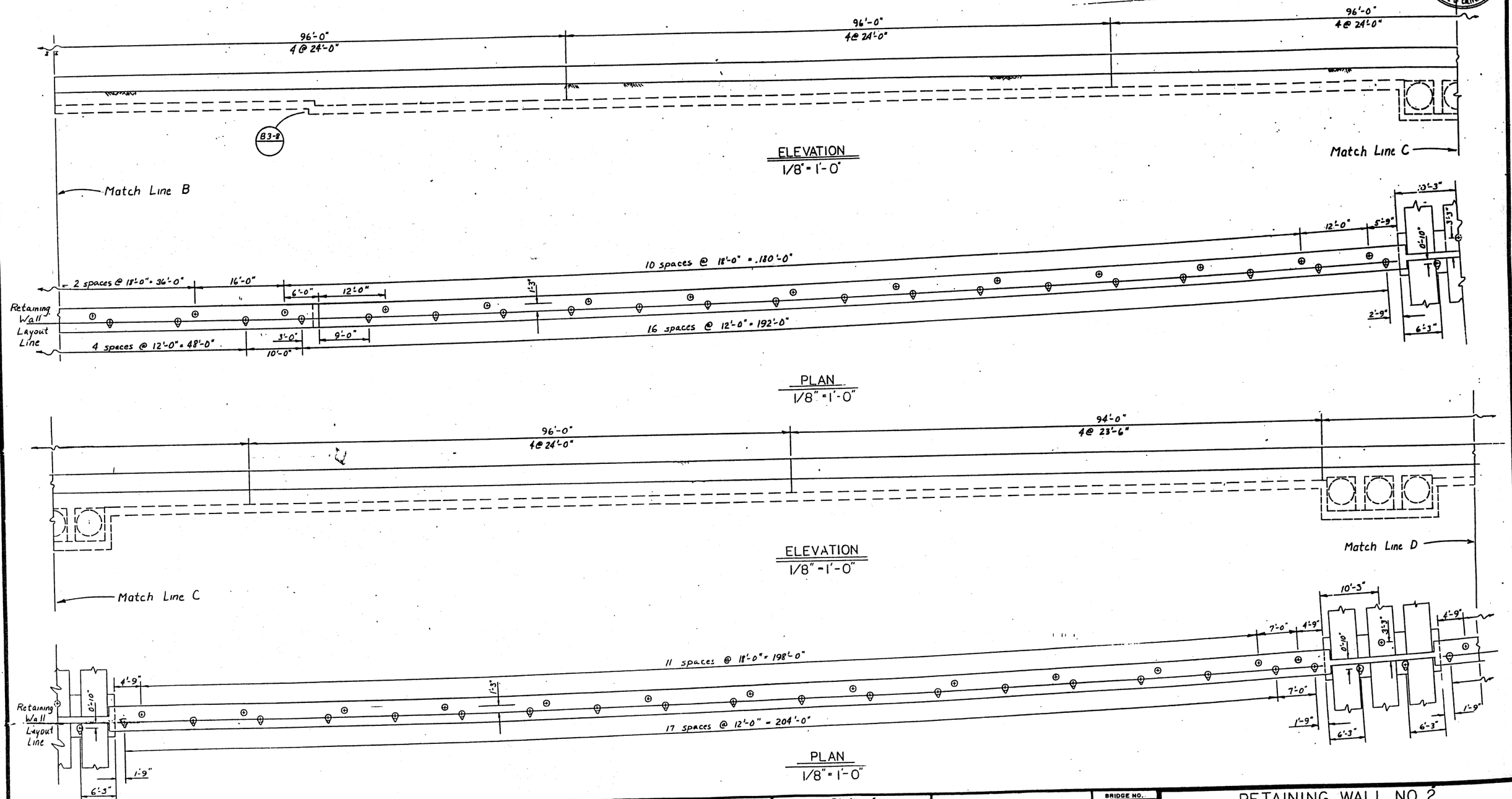

ELEVATION
1/8" = 1'-0"

PLAN
1/8" = 1'-0"

ELEVATION
1/8" = 1'-0"

PLAN
1/8" = 1'-0"

DESIGN	By J W Olson	Checked P. McCauley	
DETAILS	By J W Olson	Checked P. McCauley	
QUANTITIES	By Alino 4/86	Checked Michael Griffin	

State of CALIFORNIA
DEPARTMENT OF TRANSPORTATION

STRUCTURES - DESIGN 10
Thomas Farman 36419
PROJECT ENGINEER — REGISTERED CIVIL ENGINEER NO.

BRIDGE NO. 37 RW02
POST MILE 2.9

RETAINING WALL NO. 2
LAYOUT NO. 2

REVISION DATES (PRELIMINARY STAGE ONLY)

SHEET 6 OF 11

DIST.	COUNTY	ROUTE	POST MILES—TOTAL PROJECT	SHEET NO.	TOTAL SHEETS
04	SCI	87	1.1/3.9	533	78

DESIGN ENGINEER — REGISTERED CIVIL ENGINEER NUMBER C12078

DATE APPROVED 12-5-88

REGISTERED PROFESSIONAL ENGINEER G. S. INENAGA No. 12078 Exp. 3-31-89 CIVIL STATE OF CALIFORNIA

For NOTES: See "Layout No. 1" sheet

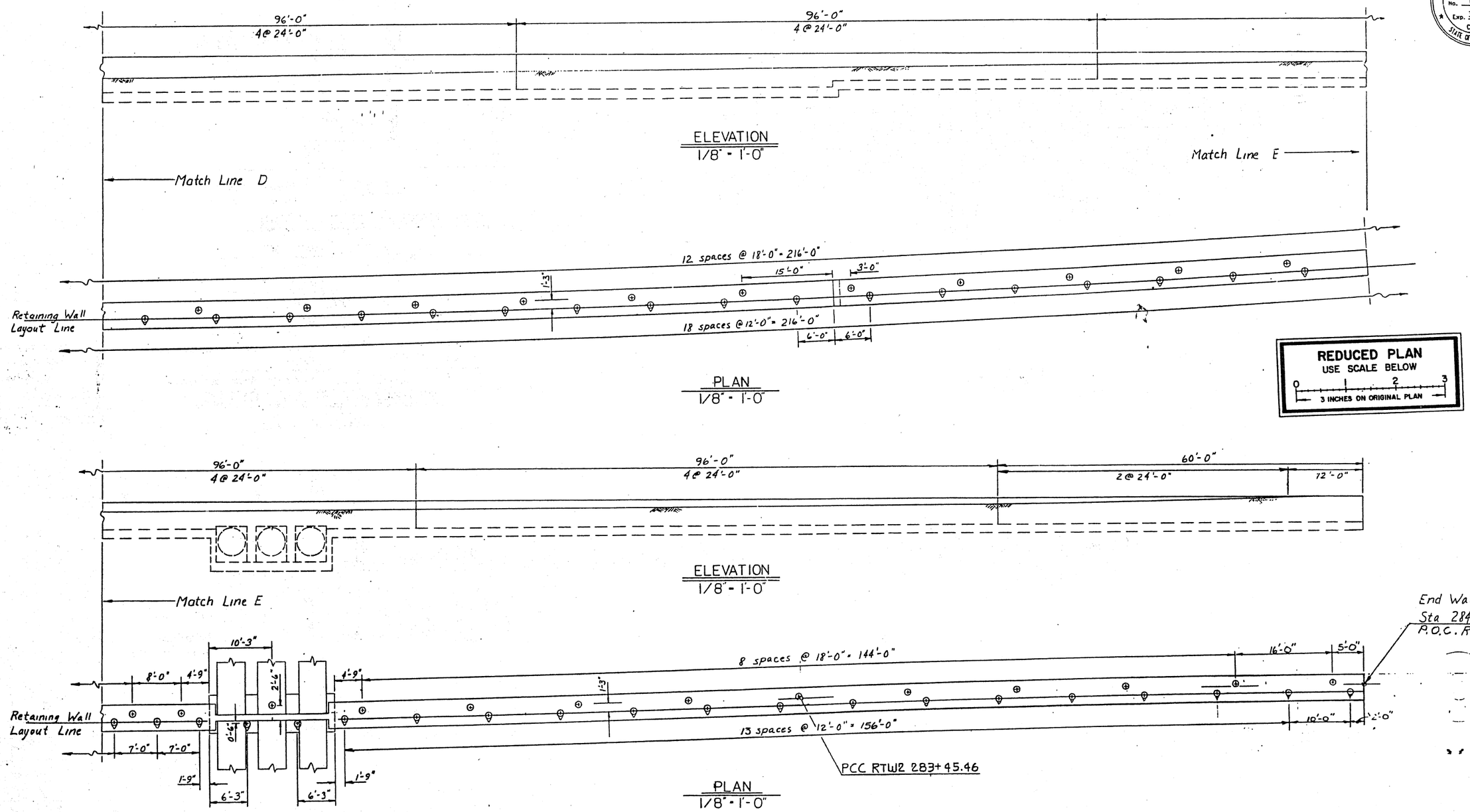

REDUCED PLAN
USE SCALE BELOW
0 1 2 3
3 INCHES ON ORIGINAL PLAN

DESIGN	By J W Olson	Checked P. McCauley	State of CALIFORNIA DEPARTMENT OF TRANSPORTATION	STRUCTURES - DESIGN 10	BRIDGE NO. 37-RW02
DETAILS	By J W Olson	Checked P. McCauley		Thomas Fornal 36417	POST MILE 2.9
QUANTITIES	By Alino 4/86	Checked Michael Gubb		PROJECT ENGINEER REGISTERED CIVIL ENGINEER NO	

RETAINING WALL NO. 2
LAYOUT NO. 3

ORIGINAL SCALE IN INCHES FOR REDUCED PLANS

CU 04
WO 487141

Disregard prints bearing earlier revision dates

REVISION DATES (PRELIMINARY STAGE ONLY)

SHEET 7

DIST.	COUNTY	ROUTE	POST MILES—TOTAL PROJECT	SHEET NO.	TOTAL SHEETS
04	SCl	87			

DESIGN ENGINEER C12078 REGISTERED CIVIL ENGINEER NUMBER

DATE APPROVED

REGISTERED PROFESSIONAL ENGINEER — G. S. INENAGA — No. 12078 — Exp. 3-31-89 — CIVIL — STATE OF CALIFORNIA

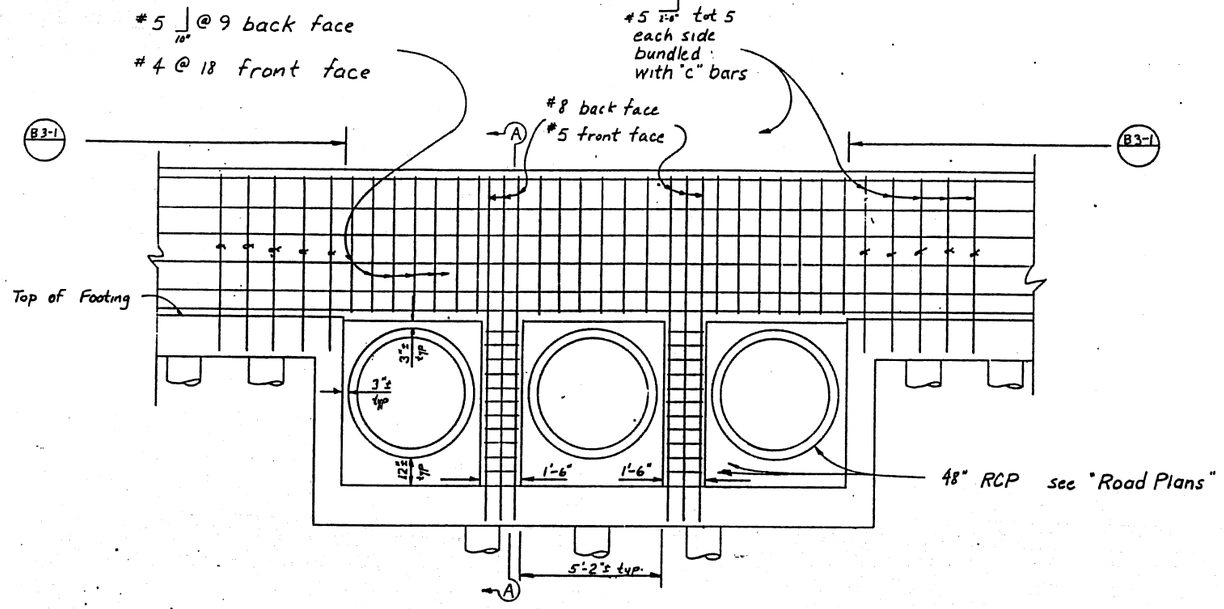

ELEVATION
3/8" = 1'-0"

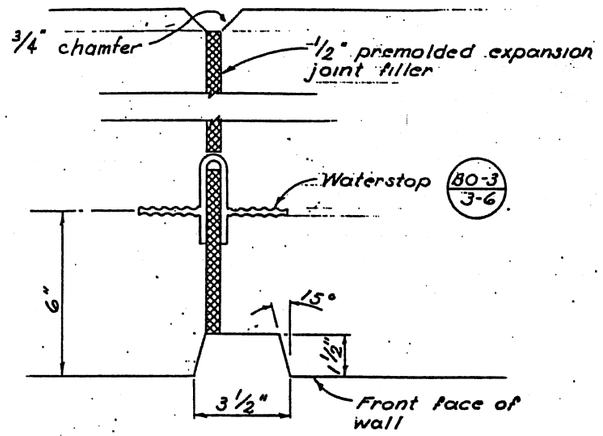

EXPANSION JOINT DETAIL

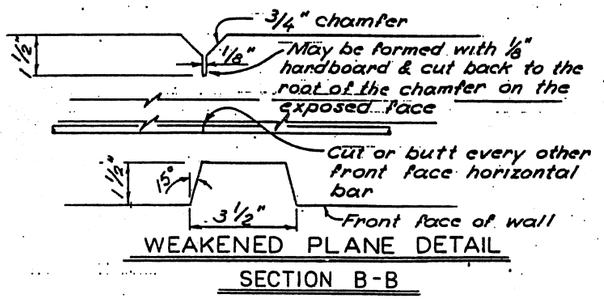

WEAKENED PLANE DETAIL
SECTION B-B

REDUCED PLAN
USE SCALE BELOW
0 1 2 3
3 INCHES ON ORIGINAL PLAN

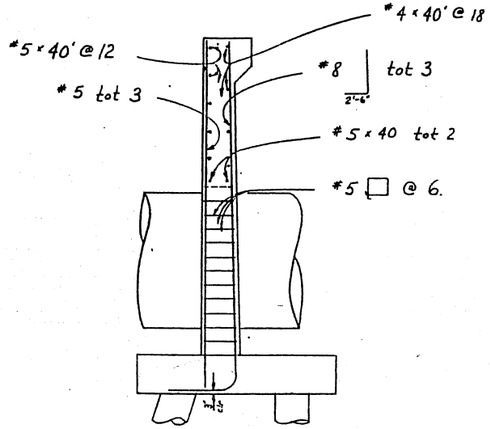

SECTION A-A
3/8" = 1'-0"

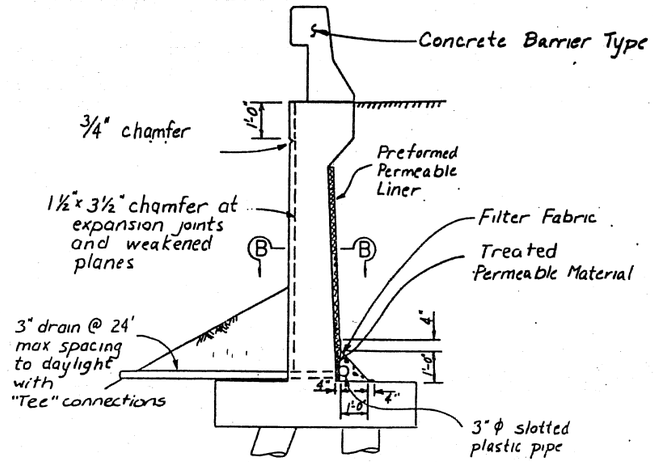

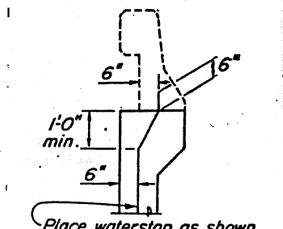

WATERSTOP
AT TOP OF WALL

DETAILS
NO SCALE

DESIGN	By J W Olson	Checked D. McCauley	State of CALIFORNIA DEPARTMENT OF TRANSPORTATION	STRUCTURES - DESIGN 10	BRIDGE NO. 37-RW02
DETAILS	By J W Olson	Checked D. McCauley		Thomas Farnan 3419 PROJECT ENGINEER REGISTERED CIVIL ENGINEER NO.	POST MILE 2.9
QUANTITIES	By alms 4/86	Checked Michael Bull			

RETAINING WALL NO. 2
REINF. CONCRETE PIPE OPENING DETAILS

ORIGINAL SCALE IN INCHES

REVISION DATES (PRELIMINARY STAGE ONLY)

SHEET OF