DIST	COUNTY	ROUTE	KILOMETER POST TOTAL PROJECT	SHEET NO.	TOTAL SHEETS
04	SM	101	21.7/28.5		

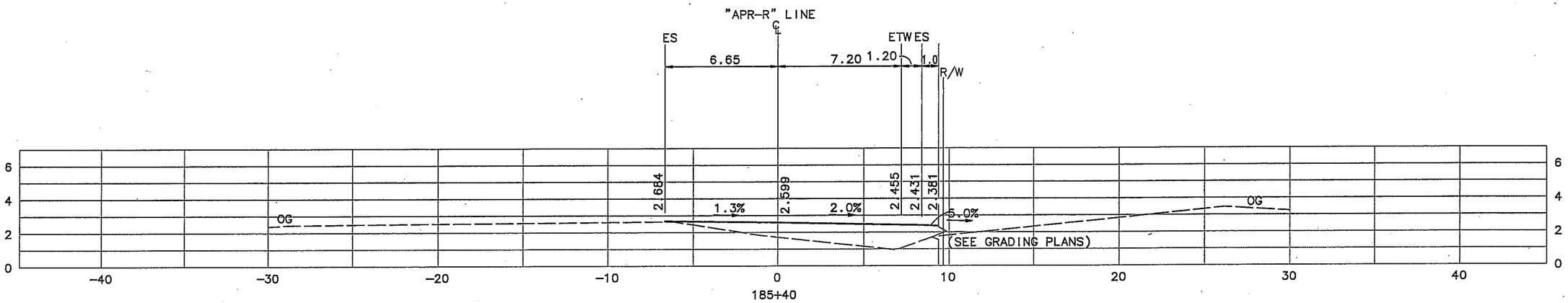

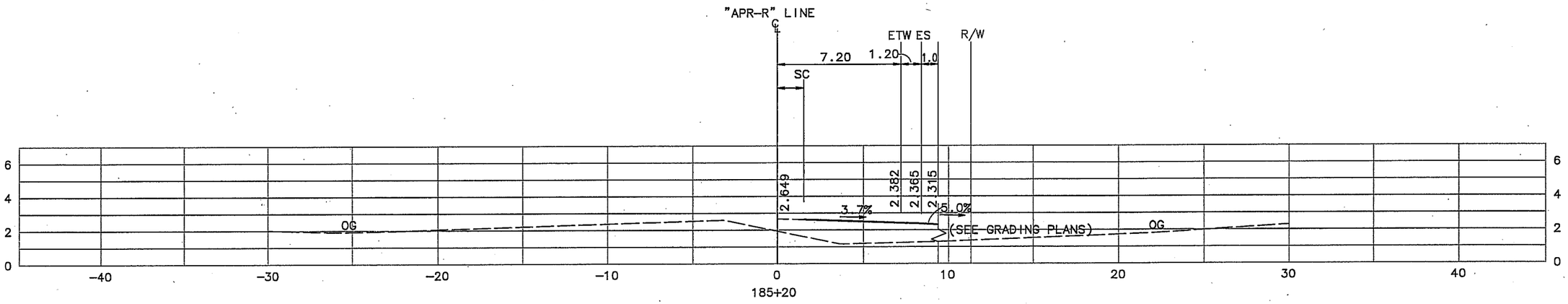

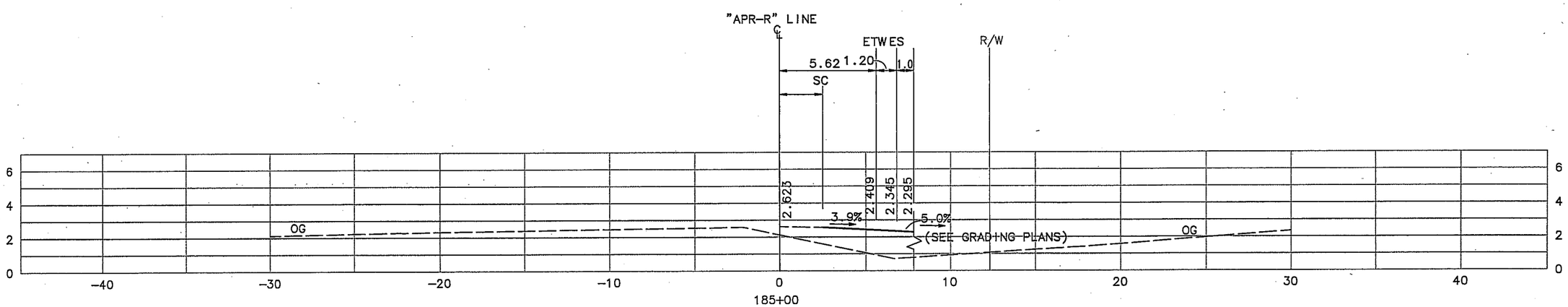

"APR-R" LINE
CROSS SECTIONS
SCALE 1:250

ALL DIMENSIONS ARE IN METERS UNLESS OTHERWISE SHOWN

CU 04245	EA 264204

DIST	COUNTY	ROUTE	KILOMETER POST TOTAL PROJECT	SHEET NO.	TOTAL SHEETS
04	SM	101	21.7/28.5		

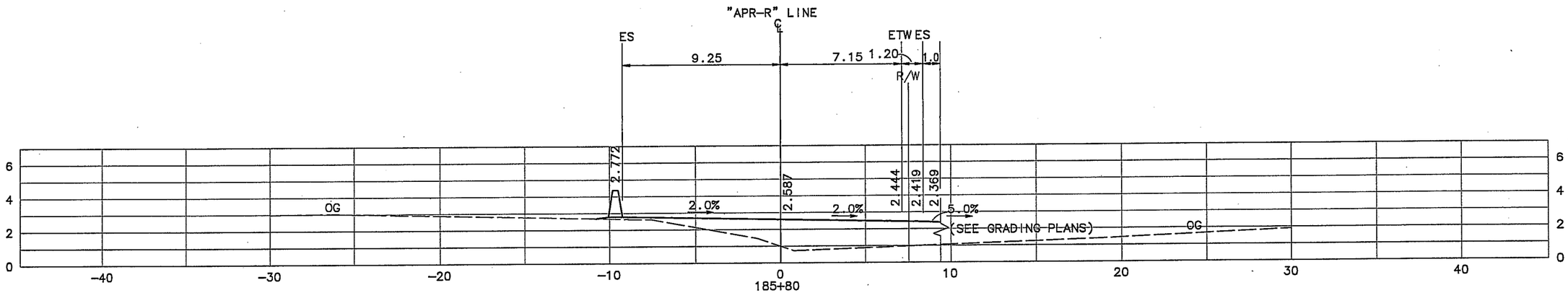

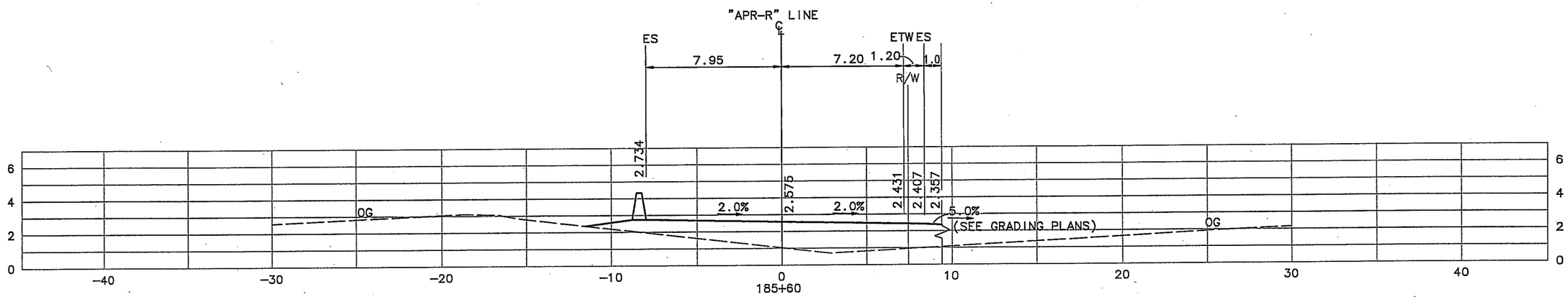

"APR-R" LINE
CROSS SECTIONS
SCALE 1:250

ALL DIMENSIONS ARE IN METERS UNLESS OTHERWISE SHOWN

CU 04245	EA 264204

DIST	COUNTY	ROUTE	KILOMETER POST TOTAL PROJECT	SHEET NO.	TOTAL SHEETS
04	SM	101	21.7/28.5		

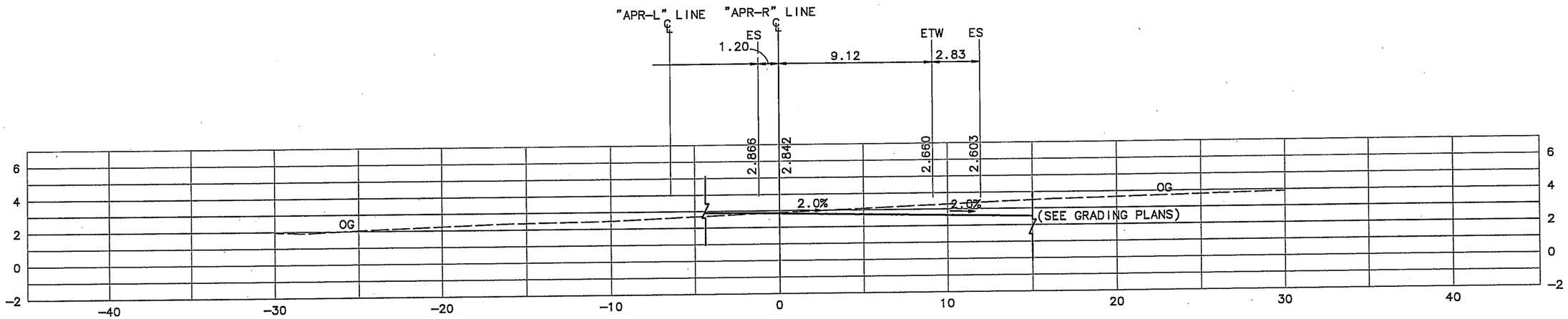

186+40

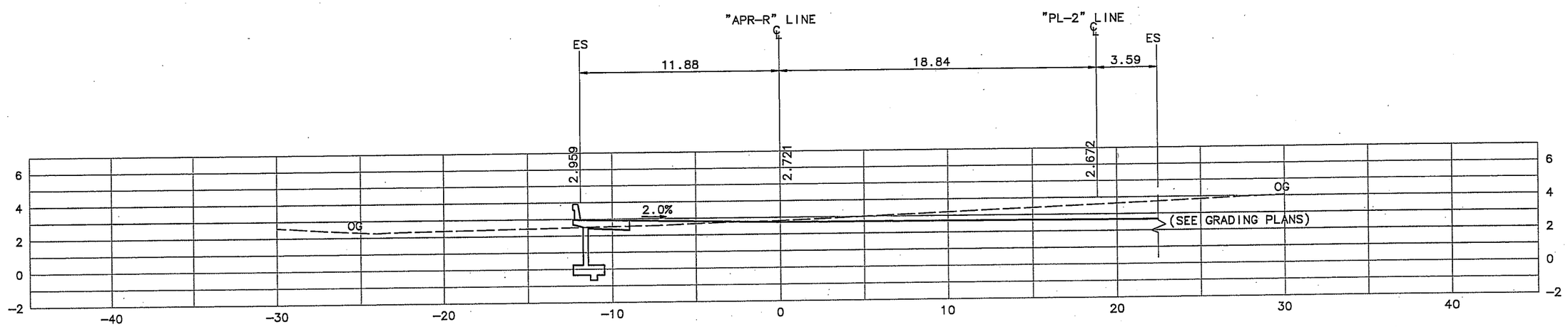

186+20

"APR-R" LINE
CROSS SECTIONS
SCALE 1:250

ALL DIMENSIONS ARE IN METERS UNLESS OTHERWISE SHOWN

CU 04245	EA 264204

DIST	COUNTY	ROUTE	KILOMETER POST TOTAL PROJECT	SHEET NO.	TOTAL SHEETS
04	SM	101	21.7/28.5		

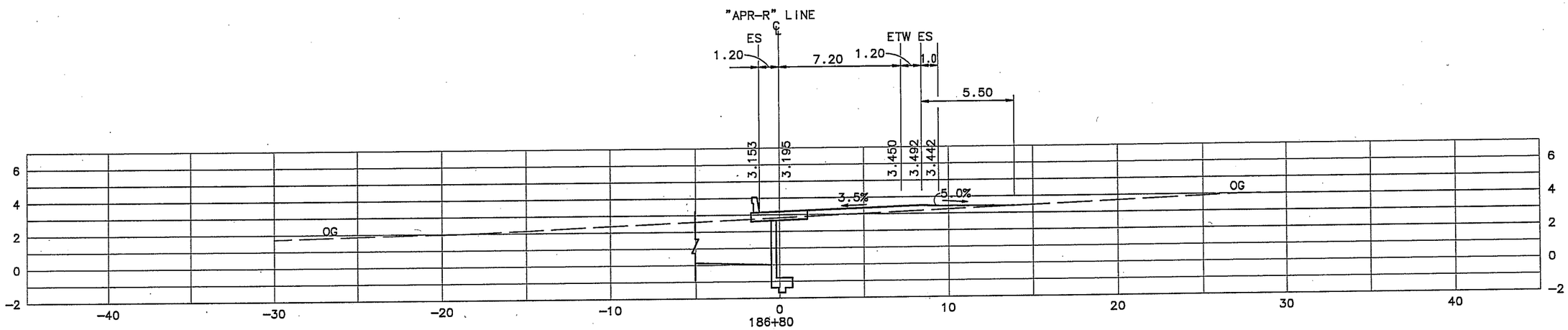

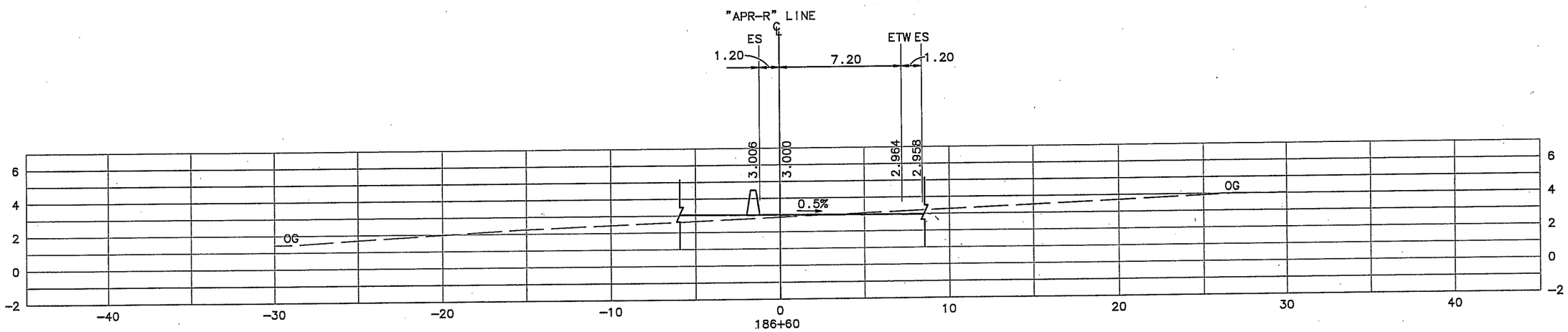

"APR-R" LINE
CROSS SECTIONS
SCALE 1:250

ALL DIMENSIONS ARE IN METERS UNLESS OTHERWISE SHOWN

CU 04245	EA 264204

DIST	COUNTY	ROUTE	KILOMETER POST TOTAL PROJECT	SHEET NO.	TOTAL SHEETS
04	SM	101	21.7/28.5		

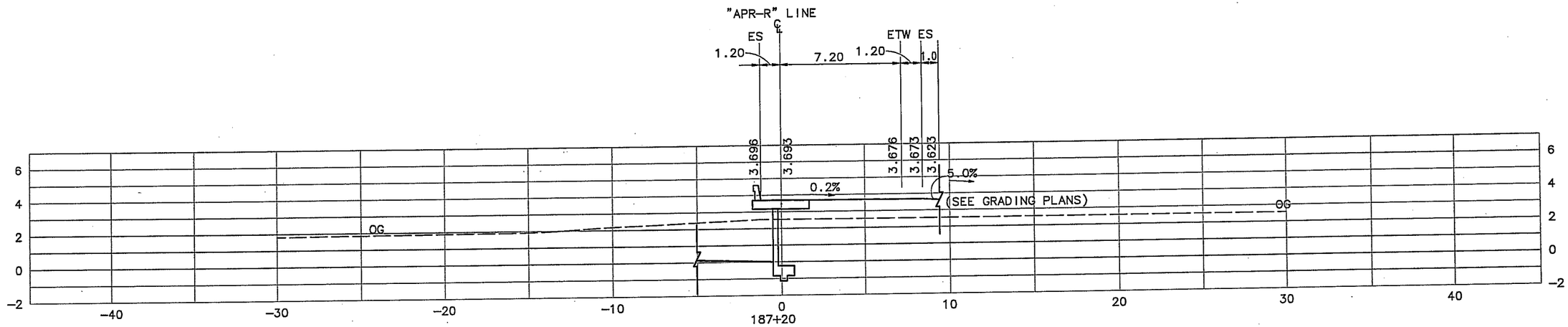

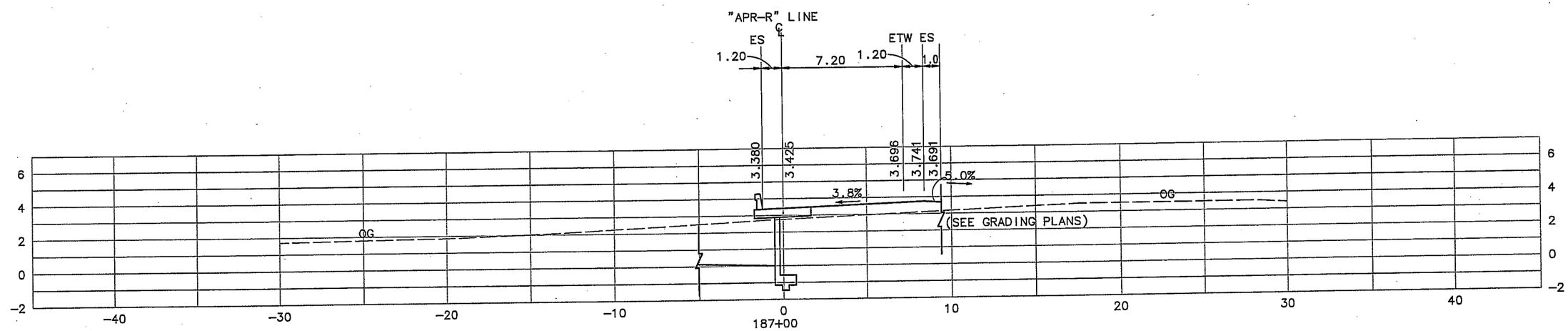

"APR-R" LINE
CROSS SECTIONS
SCALE 1:250

ALL DIMENSIONS ARE IN METERS UNLESS OTHERWISE SHOWN

CU 04245	EA 264204

DIST	COUNTY	ROUTE	KILOMETER POST TOTAL PROJECT	SHEET NO.	TOTAL SHEETS
04	SM	101	21.7/28.5		

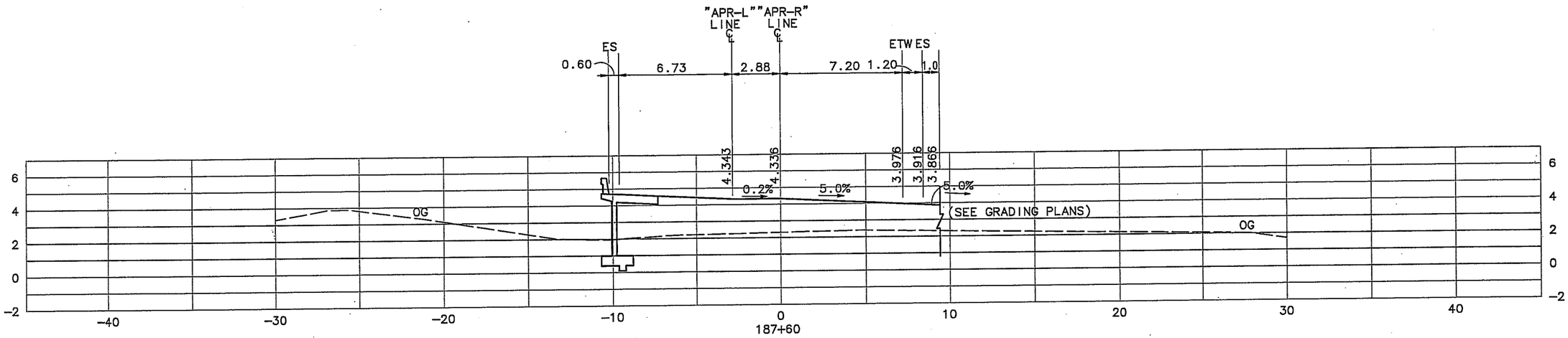

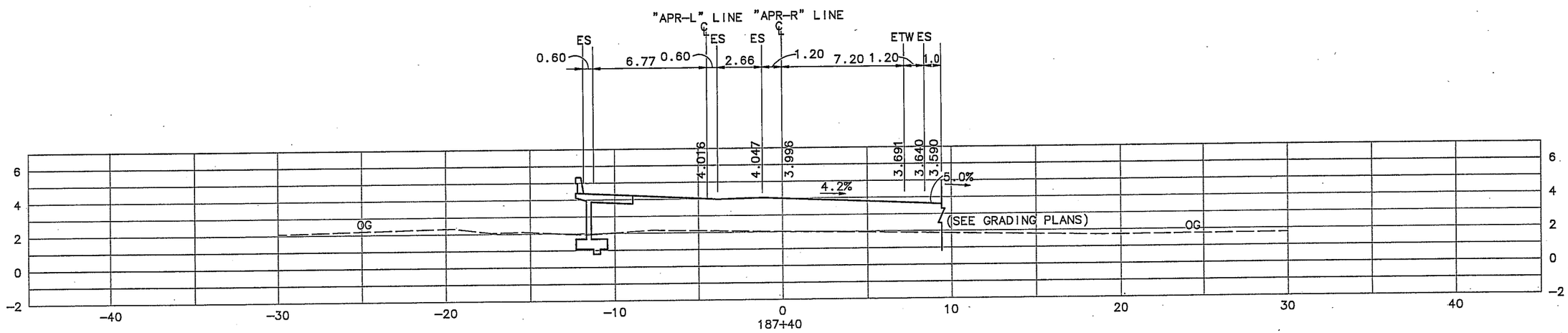

"APR-R" LINE
CROSS SECTIONS
SCALE 1:250

ALL DIMENSIONS ARE IN METERS UNLESS OTHERWISE SHOWN

CU 04245	EA 264204

DIST	COUNTY	ROUTE	KILOMETER POST TOTAL PROJECT	SHEET NO.	TOTAL SHEETS
04	SM	101	21.7/28.5		

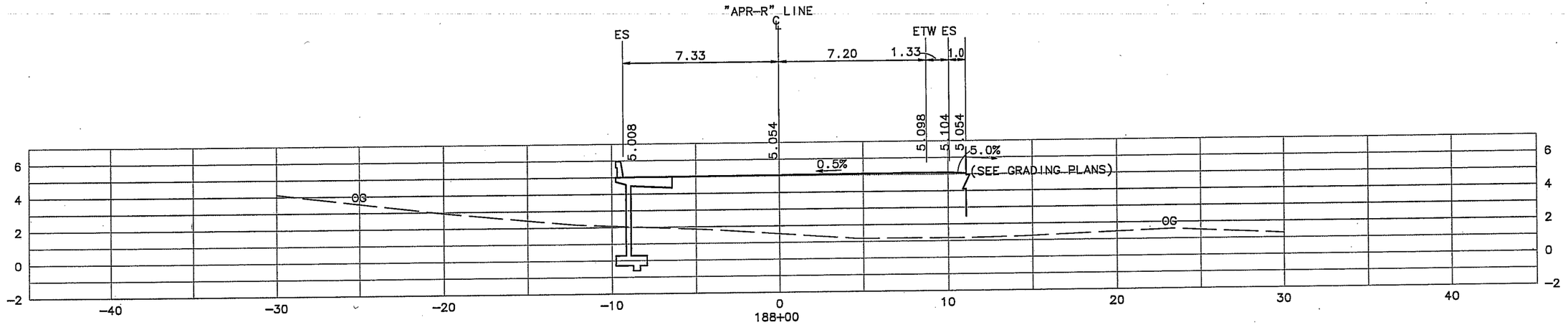

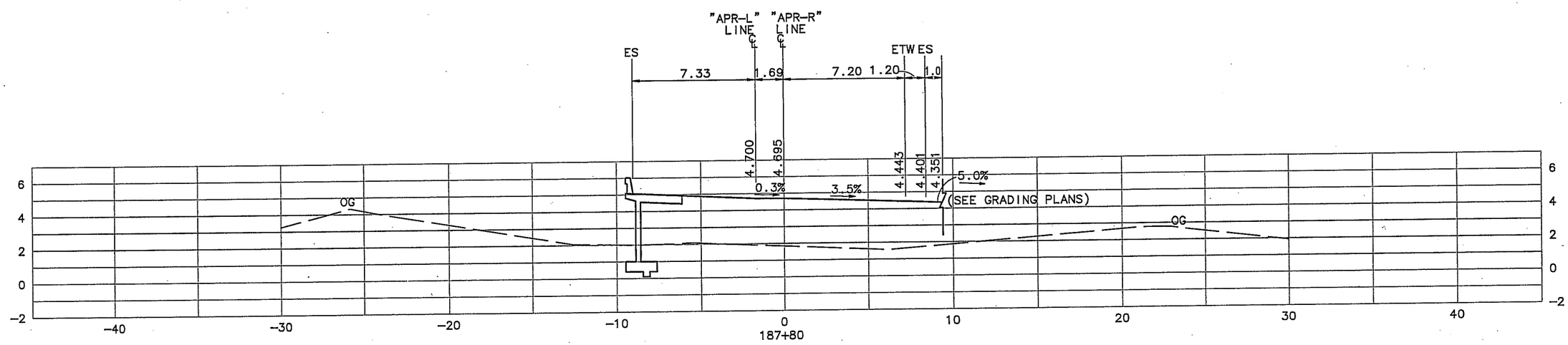

"APR-R" LINE
CROSS SECTIONS
SCALE 1:250

ALL DIMENSIONS ARE IN METERS UNLESS OTHERWISE SHOWN

CU 04245	EA 264204

DIST	COUNTY	ROUTE	KILOMETER POST TOTAL PROJECT	SHEET NO.	TOTAL SHEETS
04	SM	101	21.7/28.5		

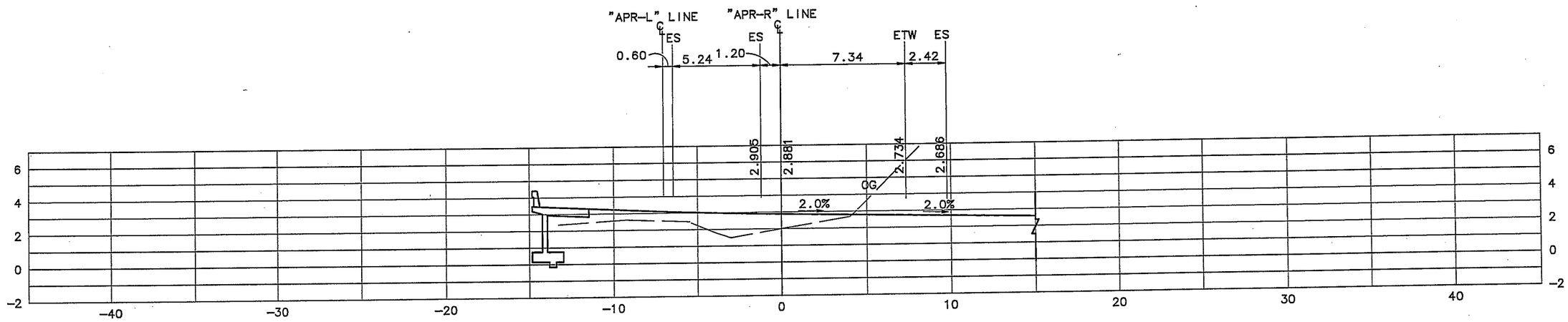

GB APR-R 186+45.369 PVI

"APR-R" LINE
CROSS SECTIONS
SCALE 1:250

ALL DIMENSIONS ARE IN METERS UNLESS OTHERWISE SHOWN

CU 04245	EA 264204

DIST	COUNTY	ROUTE	KILOMETER POST TOTAL PROJECT	SHEET NO.	TOTAL SHEETS
04	SM	101	21.7/28.5		

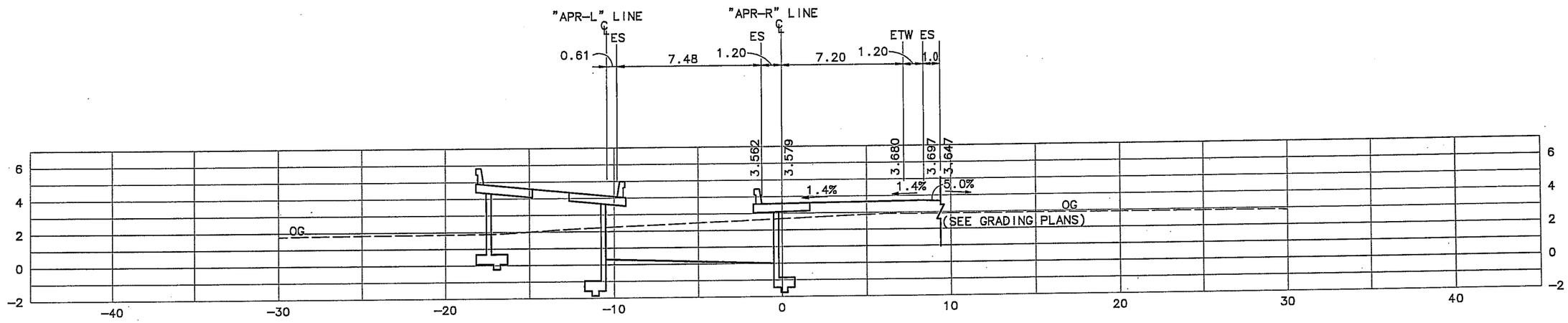

GB APR-R 187+11.800 PRC

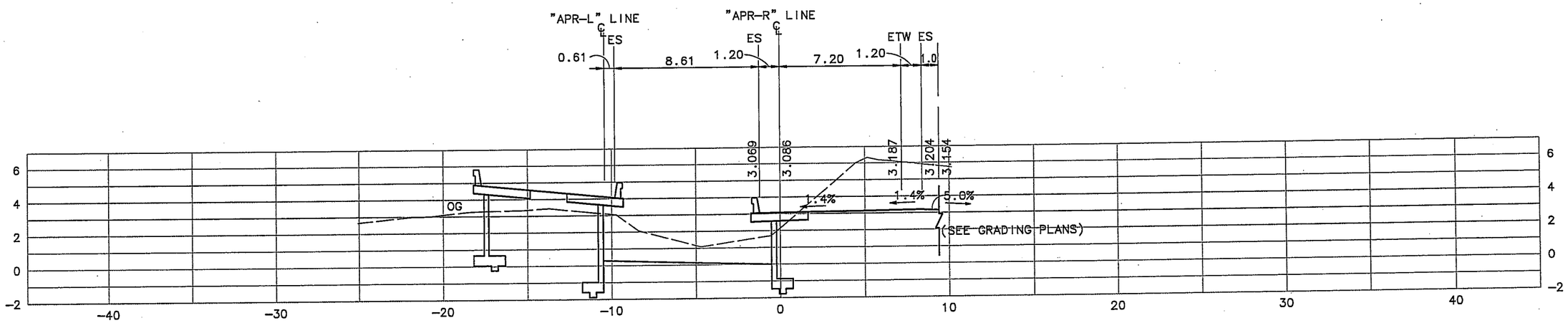

GB APR-R 186+69.307 PCC

"APR-R" LINE
CROSS SECTIONS
SCALE 1:250

ALL DIMENSIONS ARE IN METERS UNLESS OTHERWISE SHOWN

CU 04245	EA 264204

DIST	COUNTY	ROUTE	KILOMETER POST TOTAL PROJECT	SHEET NO.	TOTAL SHEETS
04	SM	101	21.7/28.5		

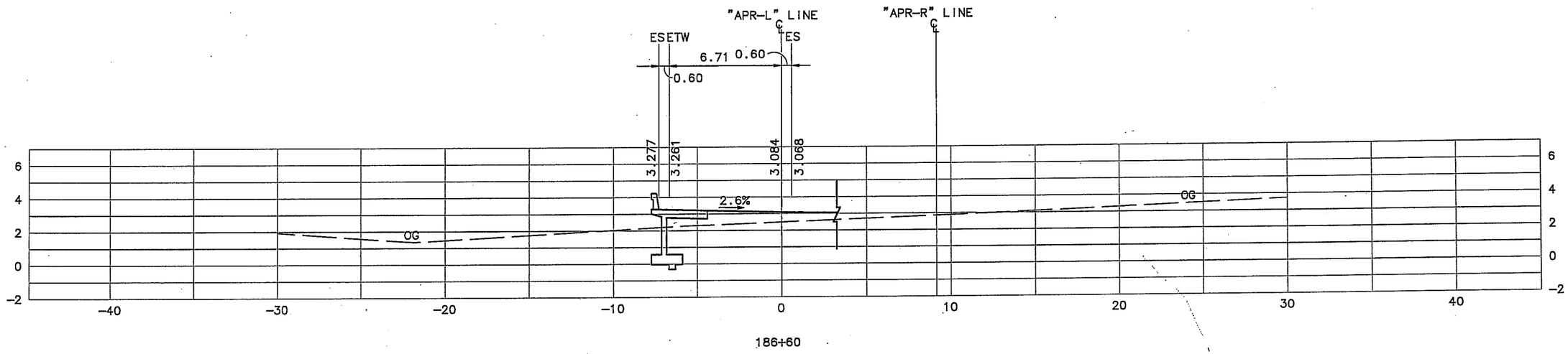

186+60

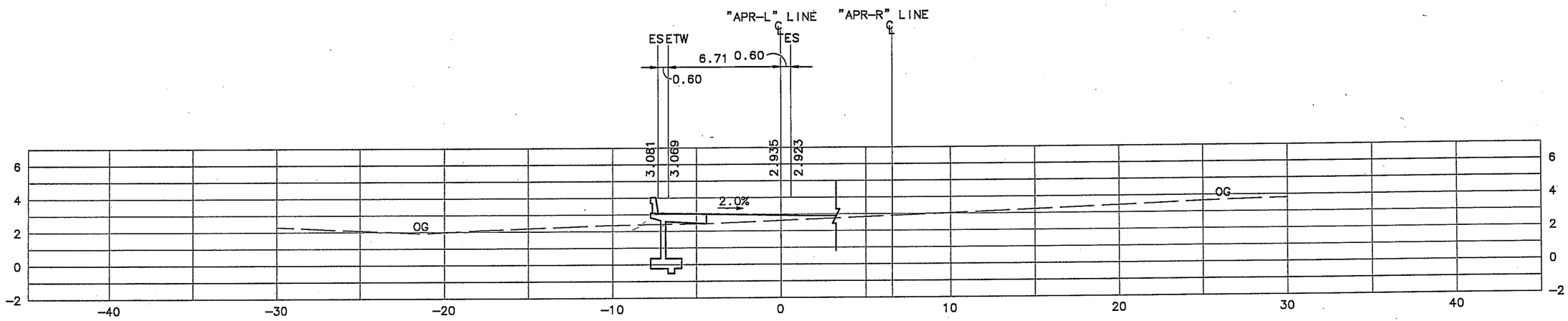

186+40

"APR-L" LINE
CROSS SECTIONS
SCALE 1:250

ALL DIMENSIONS ARE IN METERS UNLESS OTHERWISE SHOWN

CU 04245	EA 264204

DIST	COUNTY	ROUTE	KILOMETER POST TOTAL PROJECT	SHEET NO.	TOTAL SHEETS
04	SM	101	21.7/28.5		

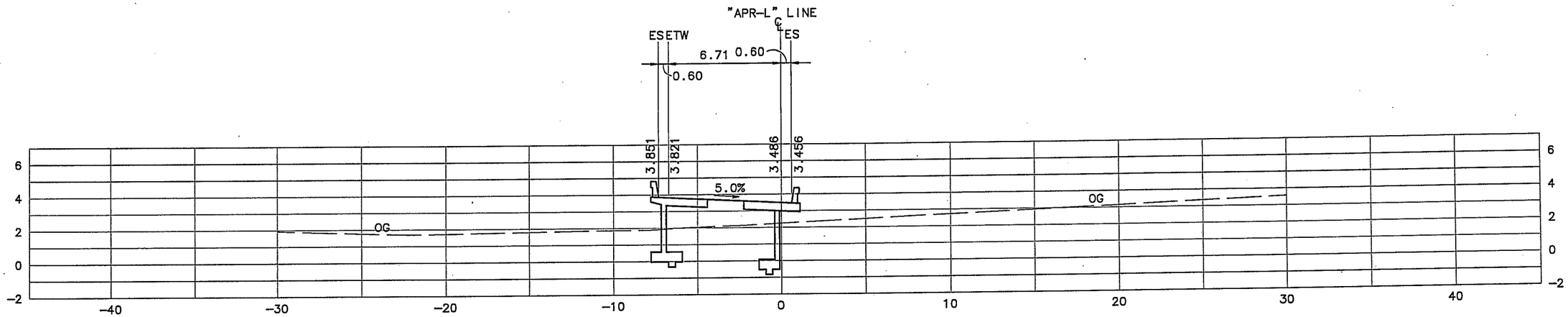

187+00

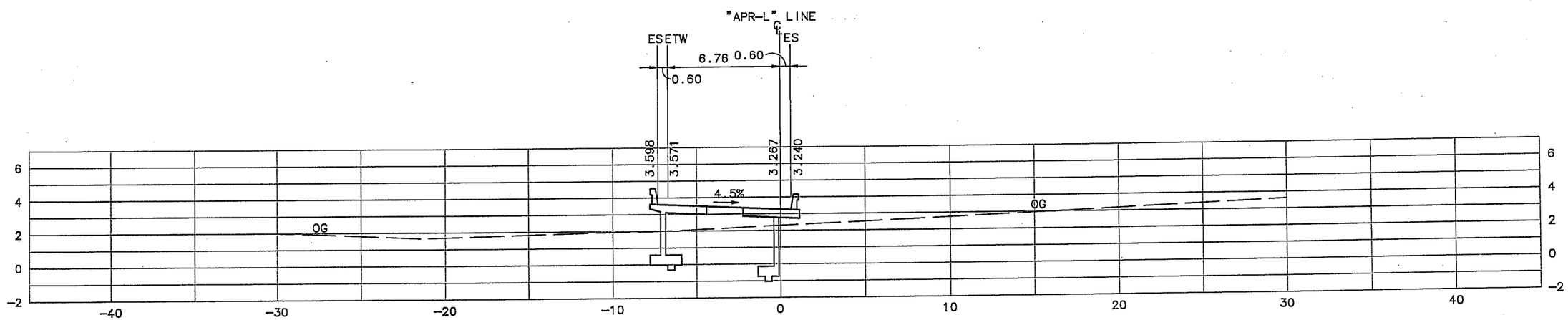

186+80

"APR-L" LINE
CROSS SECTIONS
SCALE 1:250

ALL DIMENSIONS ARE IN METERS UNLESS OTHERWISE SHOWN

CU 04245	EA 264204

DIST	COUNTY	ROUTE	KILOMETER POST TOTAL PROJECT	SHEET NO.	TOTAL SHEETS
04	SM	101	21.7/28.5		

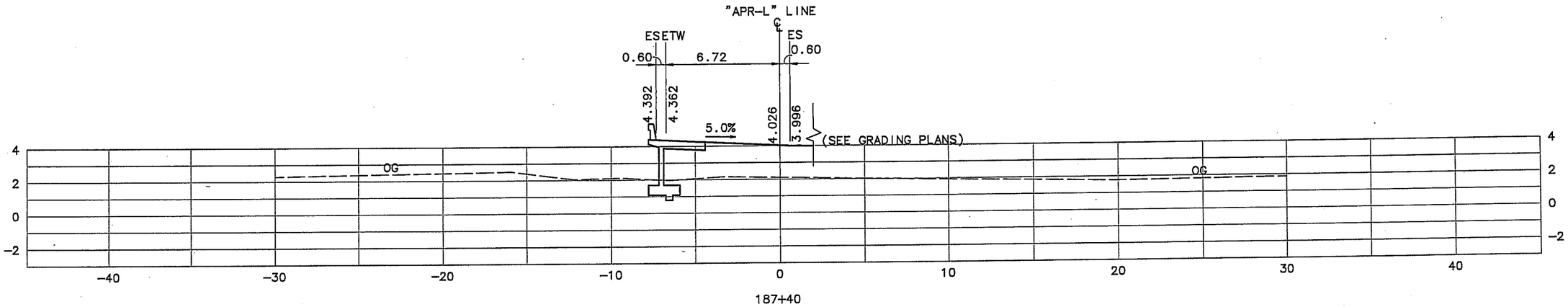

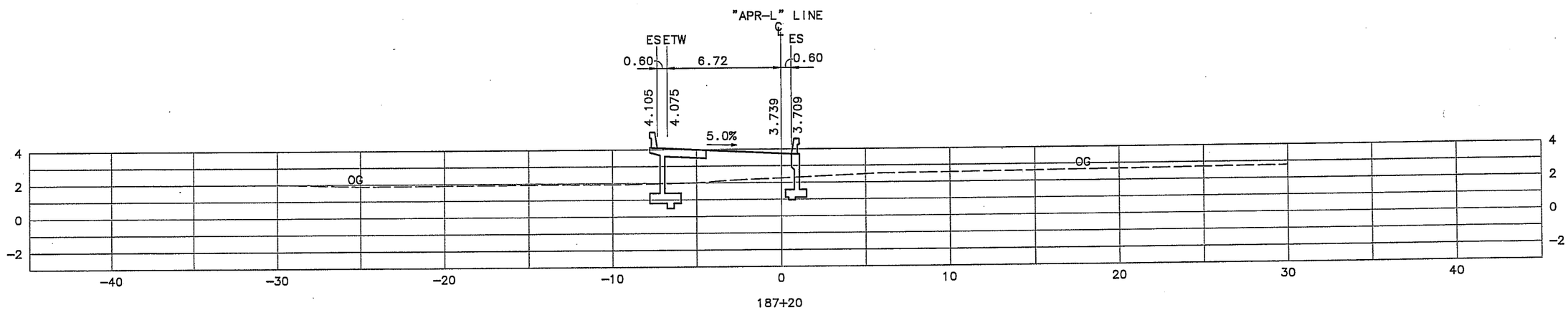

"APR-L" LINE
CROSS SECTIONS
SCALE 1:250

ALL DIMENSIONS ARE IN METERS UNLESS OTHERWISE SHOWN

CU 04245	EA 264204

DIST	COUNTY	ROUTE	KILOMETER POST, TOTAL PROJECT	SHEET NO.	TOTAL SHEETS
04	SM	101	21.7/28.5		

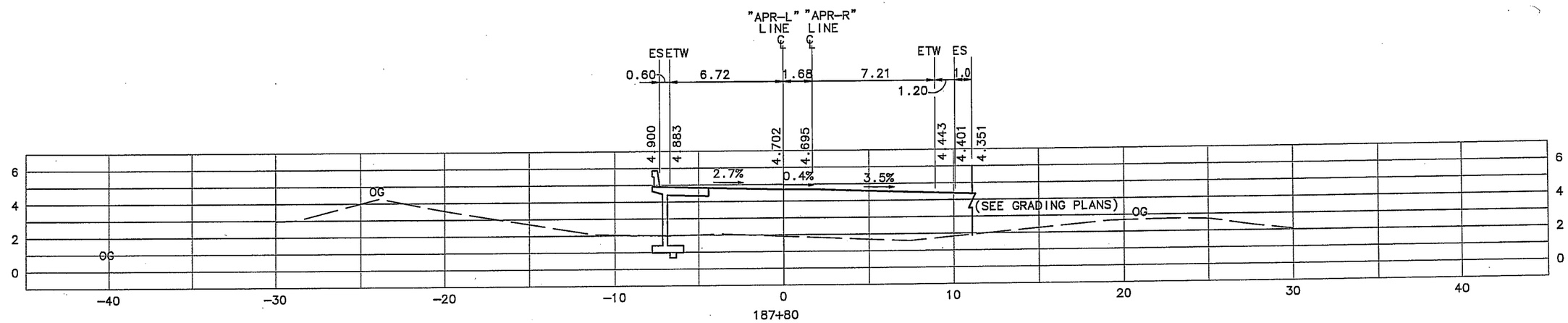

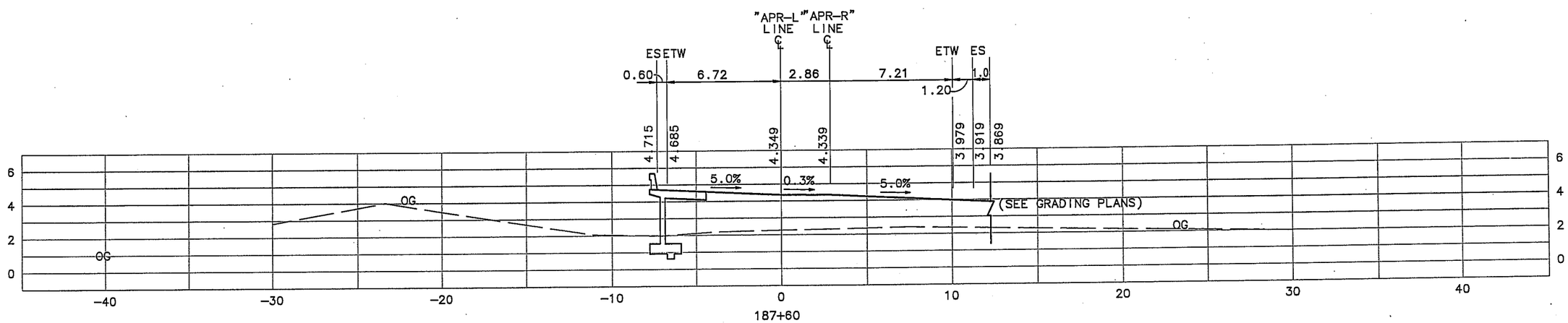

"APR-L" LINE
CROSS SECTIONS
SCALE 1:250

ALL DIMENSIONS ARE IN METERS UNLESS OTHERWISE SHOWN

CU 04245	EA 264204

DIST	COUNTY	ROUTE	KILOMETER POST TOTAL PROJECT	SHEET NO.	TOTAL SHEETS
04	SM	101	21.7/28.5		

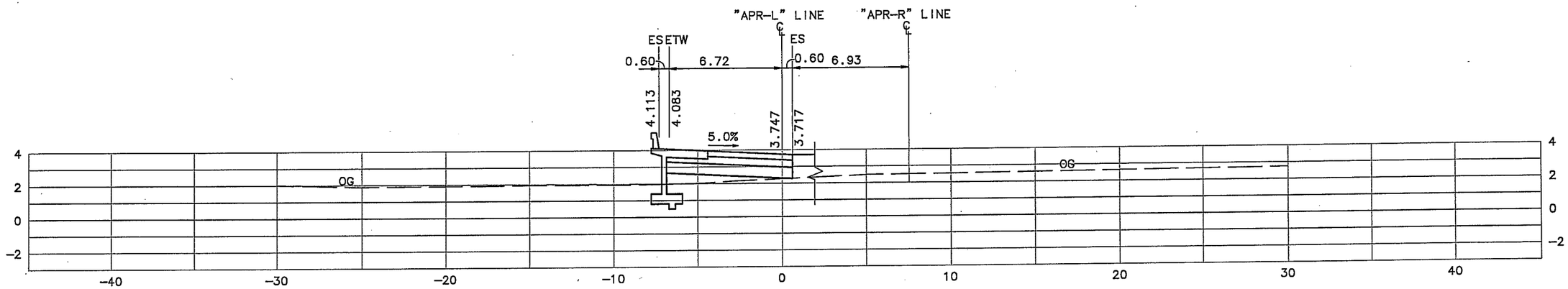

APR-L 187+20.609 BC

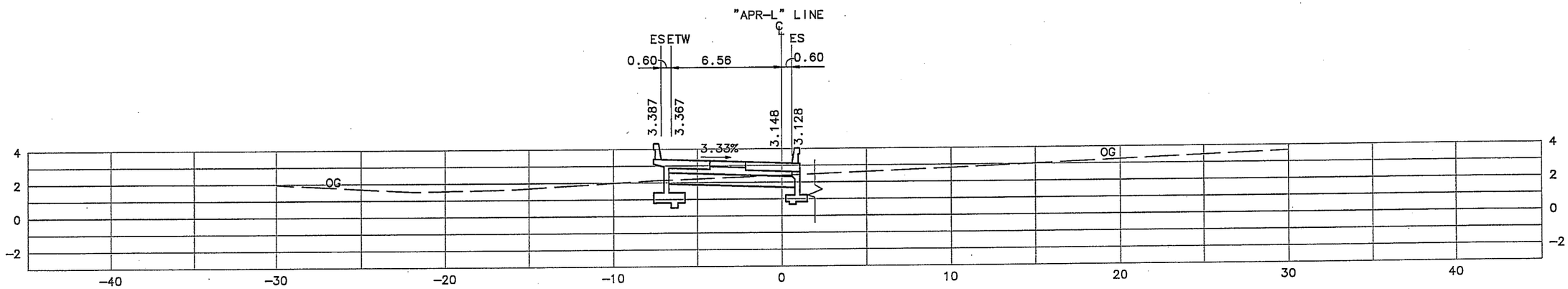

APR-L 186+67.473 BC

"APR-L" LINE
CROSS SECTIONS
SCALE 1:250

ALL DIMENSIONS ARE IN METERS UNLESS OTHERWISE SHOWN

CU 04245	EA 264204

DIST	COUNTY	ROUTE	KILOMETER POST TOTAL PROJECT	SHEET NO.	TOTAL SHEETS
04	SM	101	21.7/28.5		

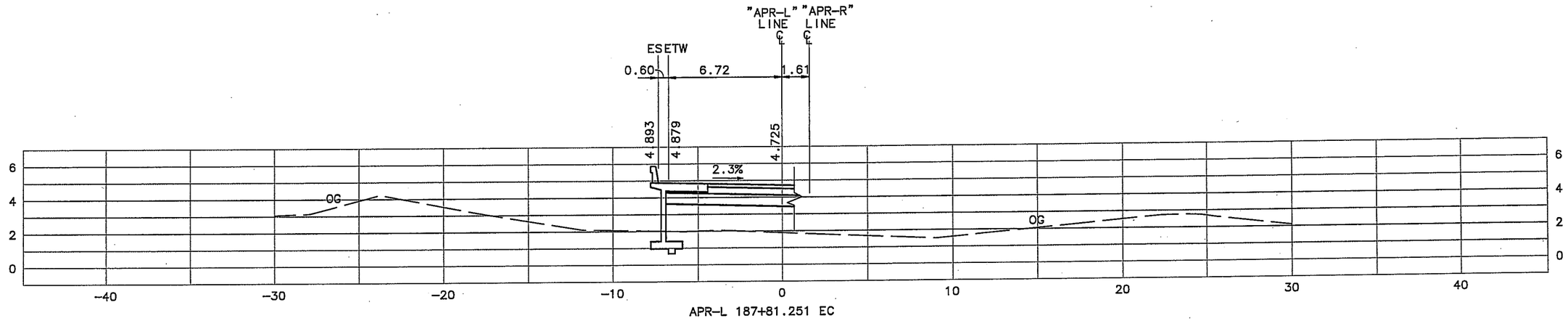

APR-L 187+81.251 EC

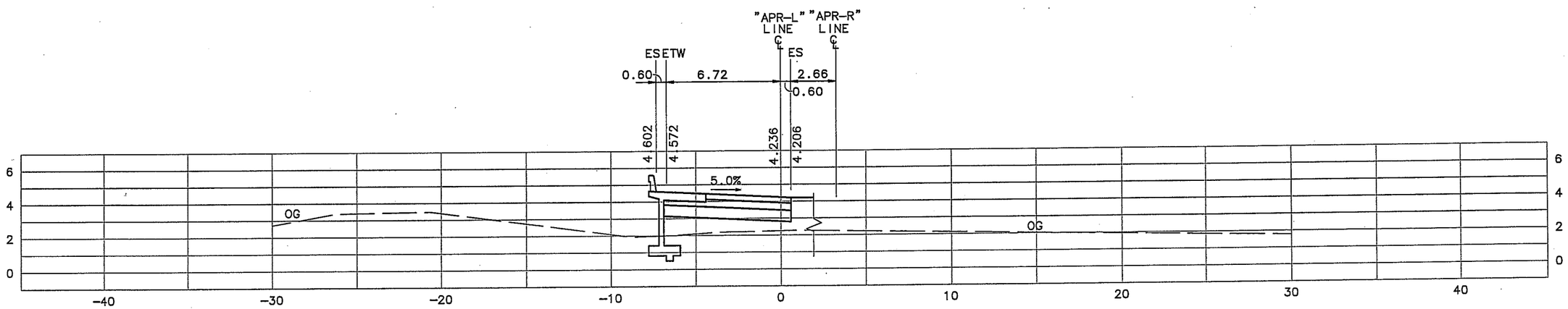

APR-L 187+53.220 BC

"APR-L" LINE
CROSS SECTIONS
SCALE 1:250

ALL DIMENSIONS ARE IN METERS UNLESS OTHERWISE SHOWN

CU 04245	EA 264204

DIST	COUNTY	ROUTE	KILOMETER POST TOTAL PROJECT	SHEET NO.	TOTAL SHEETS
04	SM	101	21.7/28.5		

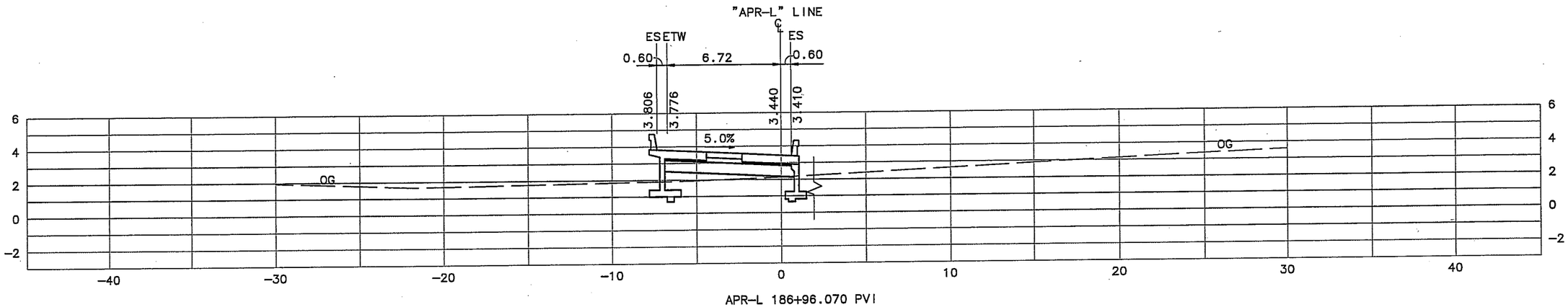

"APR-L" LINE
CROSS SECTIONS
SCALE 1:250

ALL DIMENSIONS ARE IN METERS UNLESS OTHERWISE SHOWN

CU 04245	EA 264204

DIST	COUNTY	ROUTE	KILOMETER POST TOTAL PROJECT	SHEET NO.	TOTAL SHEETS
04	SM	101	21.7/28.5		

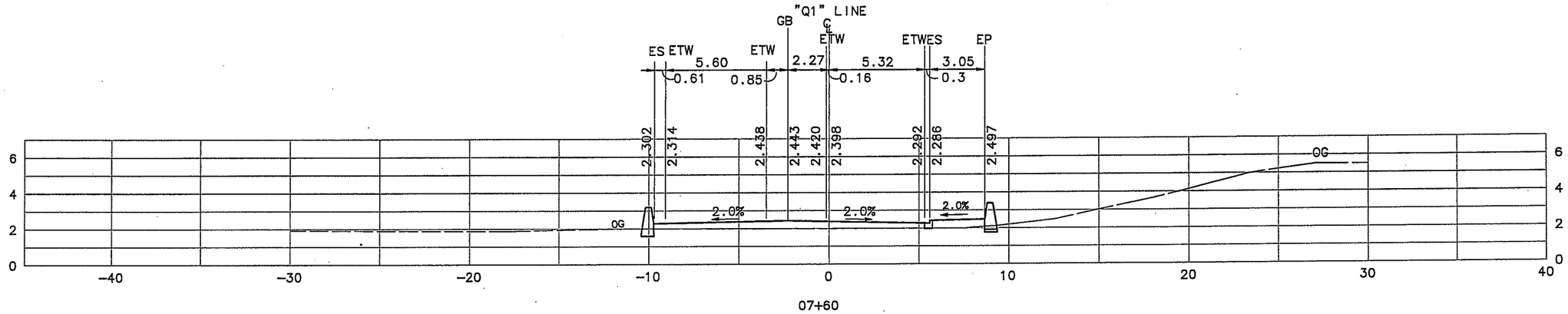

07+60

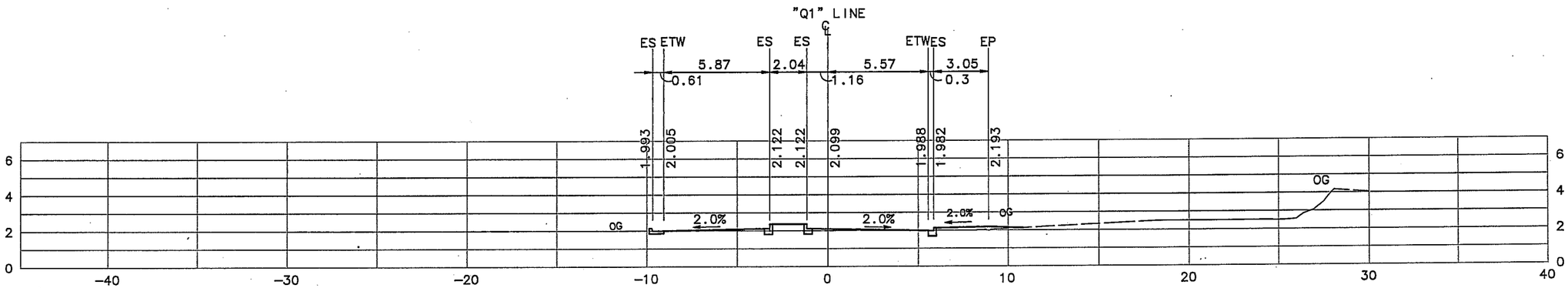

07+40

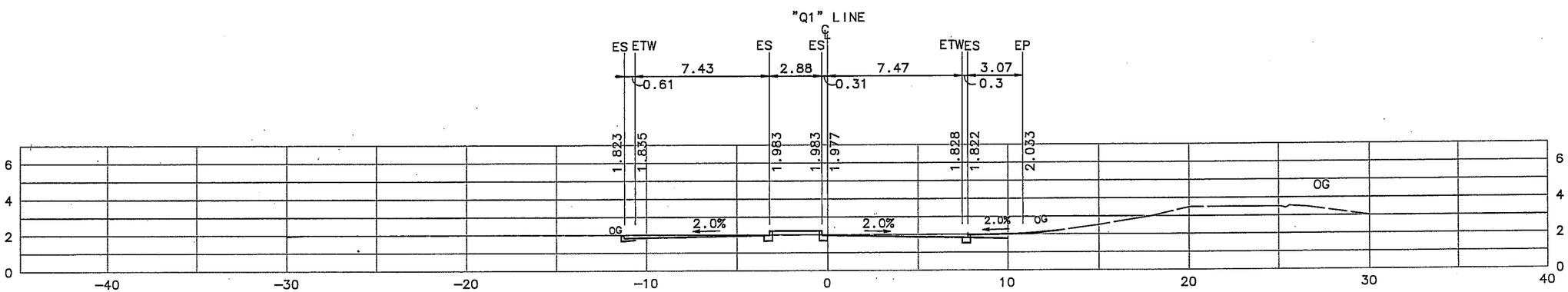

07+20

"Q–1" LINE
CROSS SECTIONS
SCALE 1:250

ALL DIMENSIONS ARE IN METERS UNLESS OTHERWISE SHOWN

CU 04245	EA 264204

DIST	COUNTY	ROUTE	KILOMETER POST TOTAL PROJECT	SHEET NO.	TOTAL SHEETS
04	SM	101	21.7/28.5		

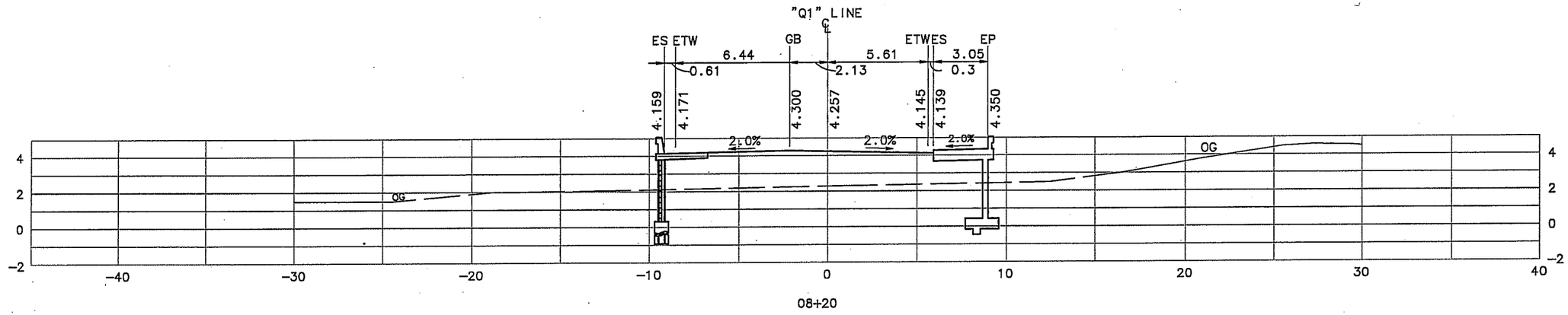

08+20

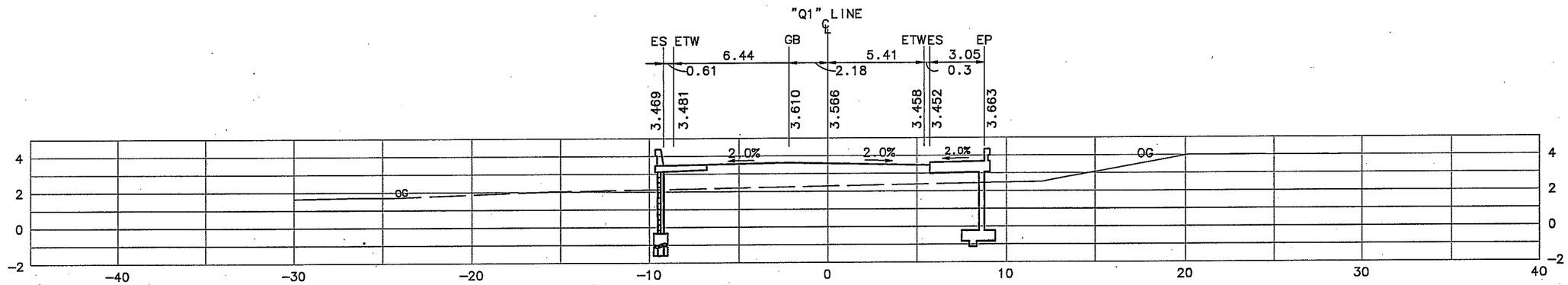

08+00

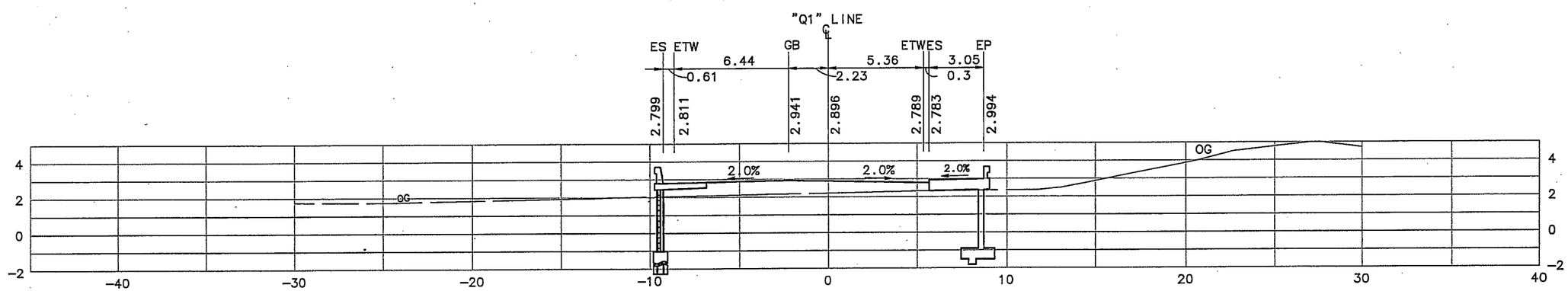

07+80

"Q-1" LINE
CROSS SECTIONS
SCALE 1:250

ALL DIMENSIONS ARE IN METERS UNLESS OTHERWISE SHOWN

CU 04245	EA 264204

DIST	COUNTY	ROUTE	KILOMETER POST TOTAL PROJECT	SHEET NO.	TOTAL SHEETS
04	SM	101	21.7/28.5		

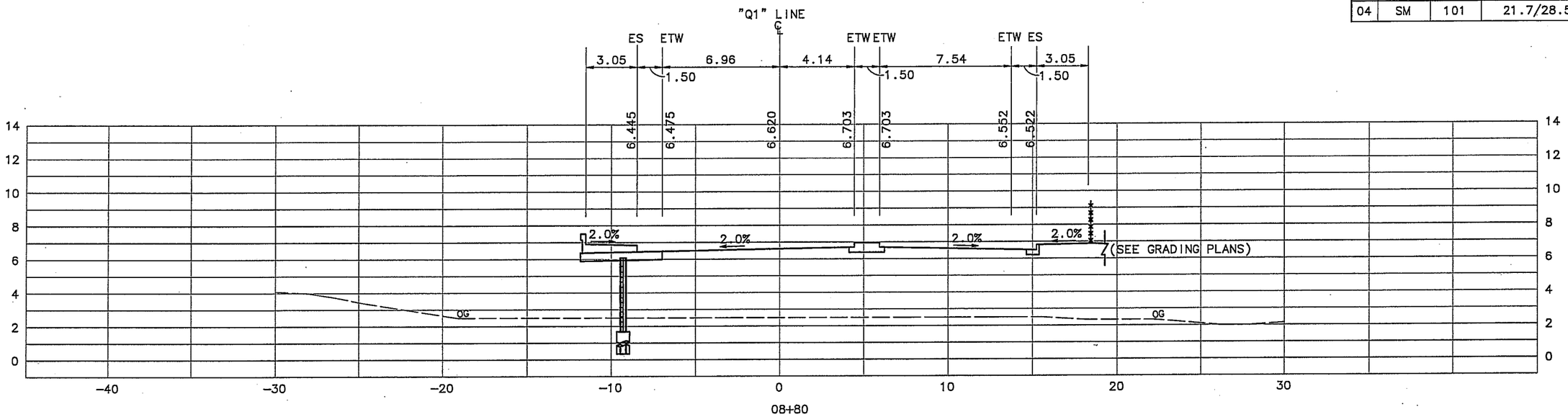

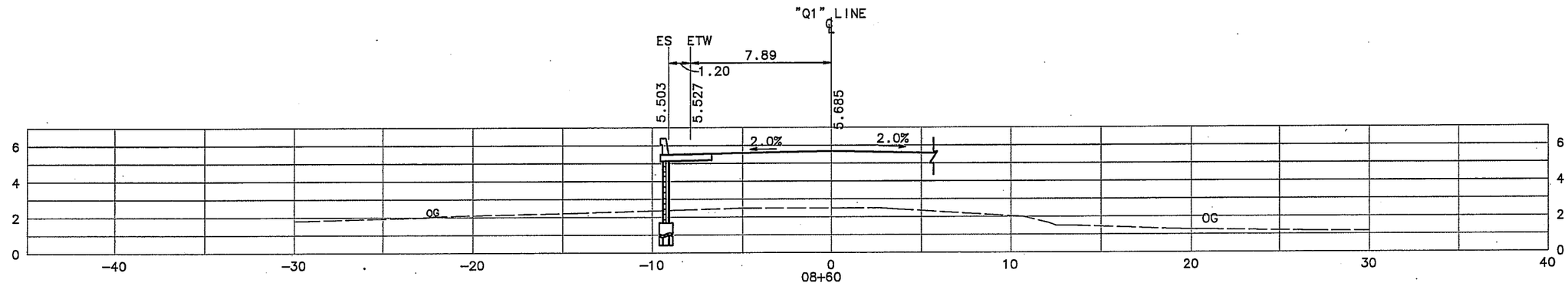

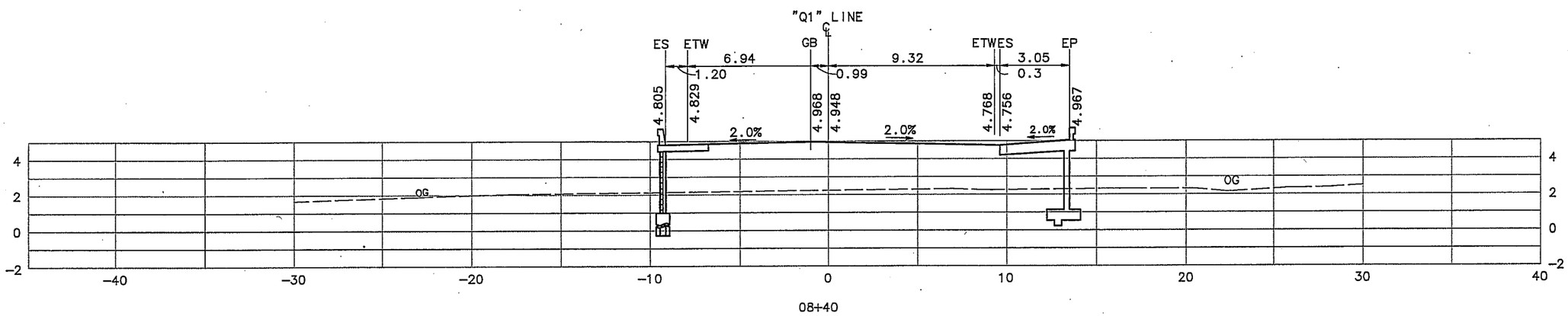

"Q-1" LINE
CROSS SECTIONS
SCALE 1:250

ALL DIMENSIONS ARE IN METERS UNLESS OTHERWISE SHOWN

CU	EA
04245	264204

DIST	COUNTY	ROUTE	KILOMETER POST TOTAL PROJECT	SHEET NO.	TOTAL SHEETS
04	SM	101	21.7/28.5		

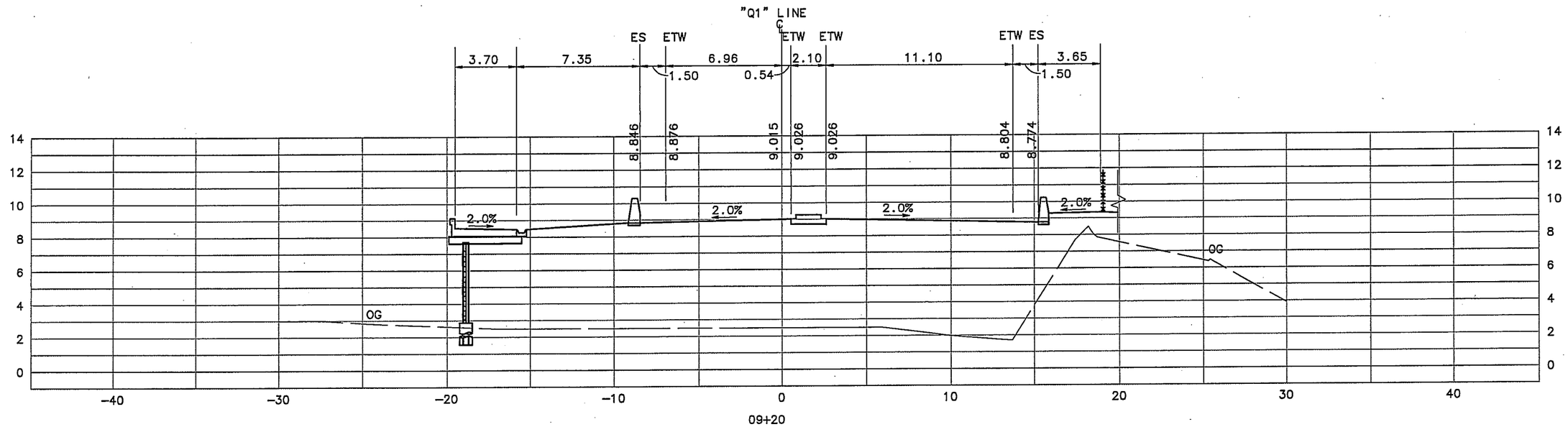

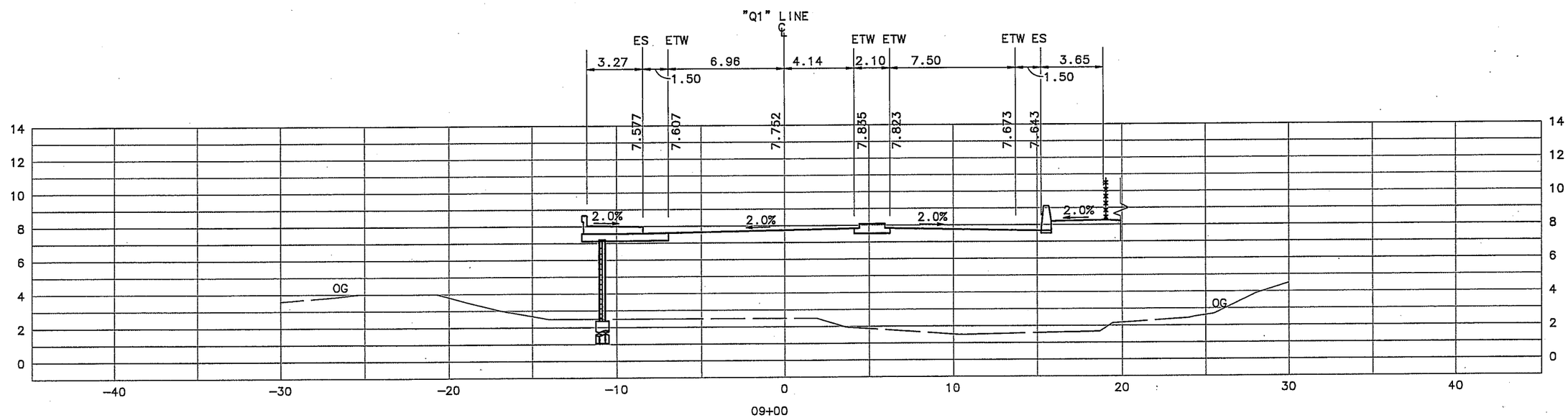

"Q-1" LINE
CROSS SECTIONS
SCALE 1:250

ALL DIMENSIONS ARE IN METERS UNLESS OTHERWISE SHOWN

CU	EA
04245	264204

DIST	COUNTY	ROUTE	KILOMETER POST TOTAL PROJECT	SHEET NO.	TOTAL SHEETS
04	SM	101	21.7/28.5		

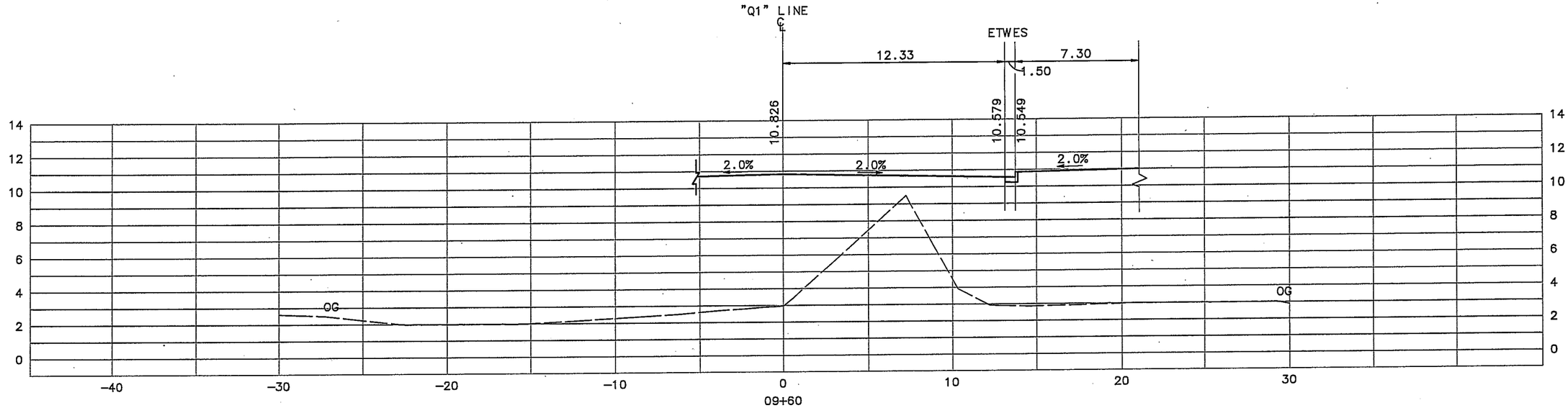

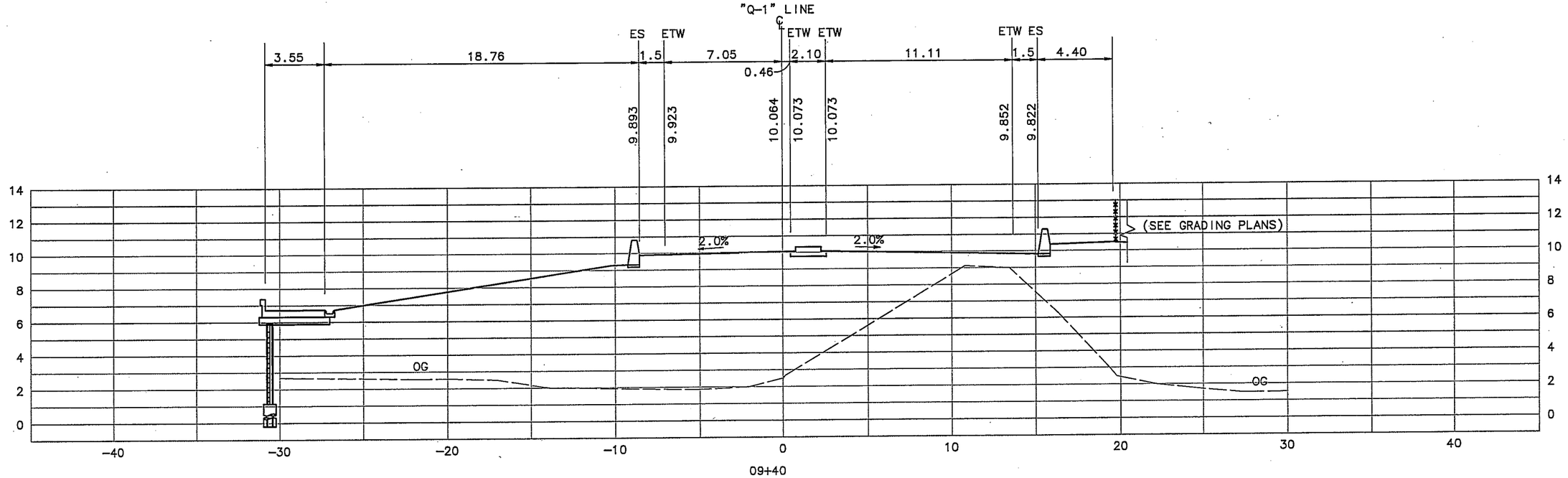

"Q-1" LINE
CROSS SECTIONS
SCALE 1:250

ALL DIMENSIONS ARE IN METERS UNLESS OTHERWISE SHOWN

CU 04245	EA 264204

DIST	COUNTY	ROUTE	KILOMETER POST TOTAL PROJECT	SHEET NO.	TOTAL SHEETS
04	SM	101	21.7/28.5		

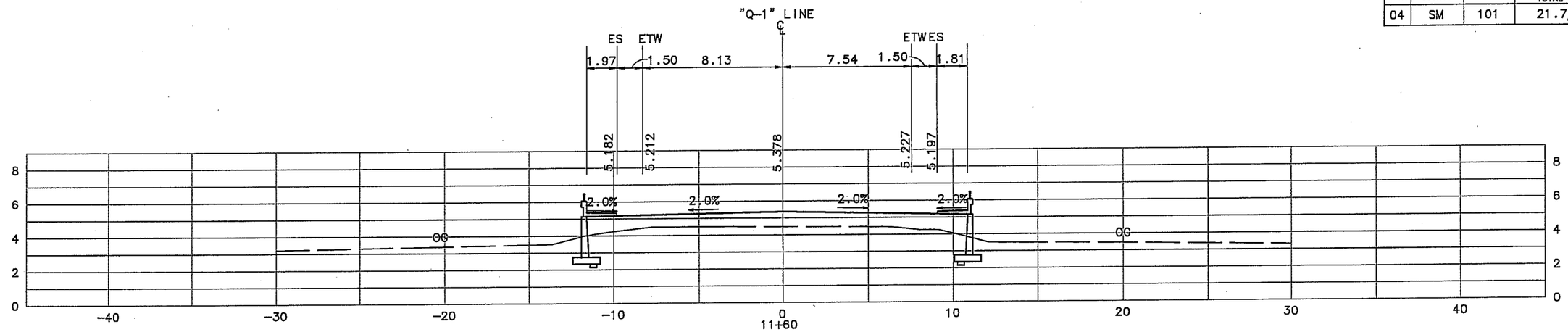

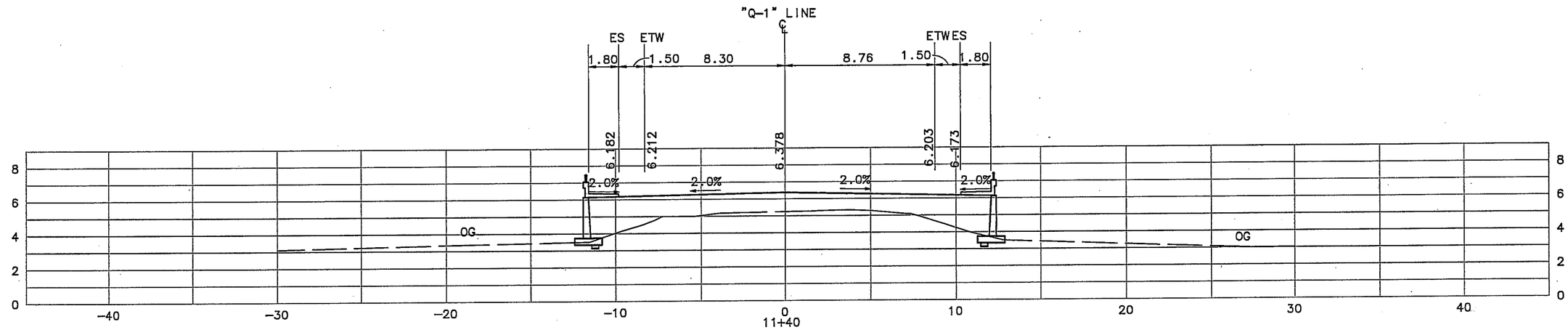

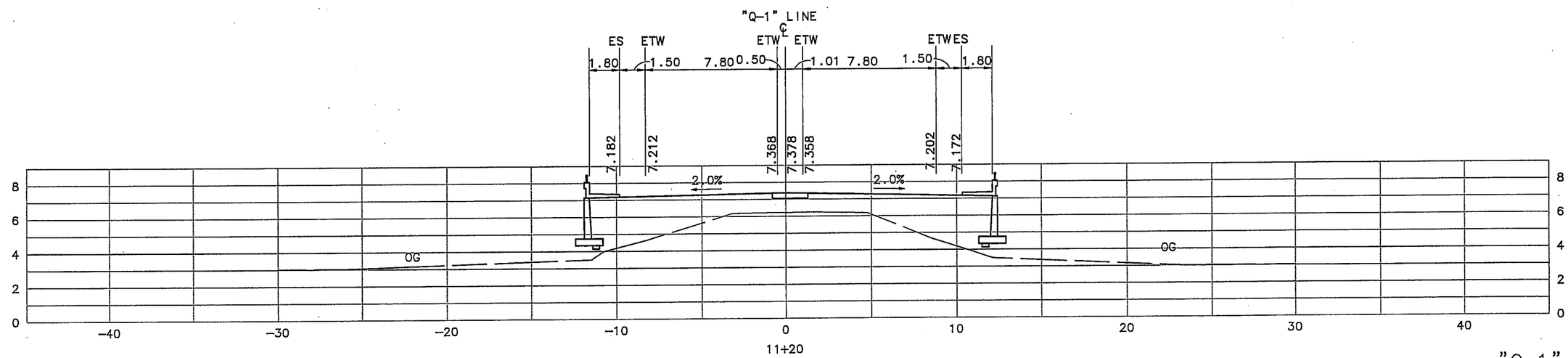

"Q-1" LINE
CROSS SECTIONS
SCALE 1:250

ALL DIMENSIONS ARE IN METERS UNLESS OTHERWISE SHOWN

CU 04245	EA 264204

DIST	COUNTY	ROUTE	KILOMETER POST TOTAL PROJECT	SHEET NO.	TOTAL SHEETS
04	SM	101	21.7/28.5		

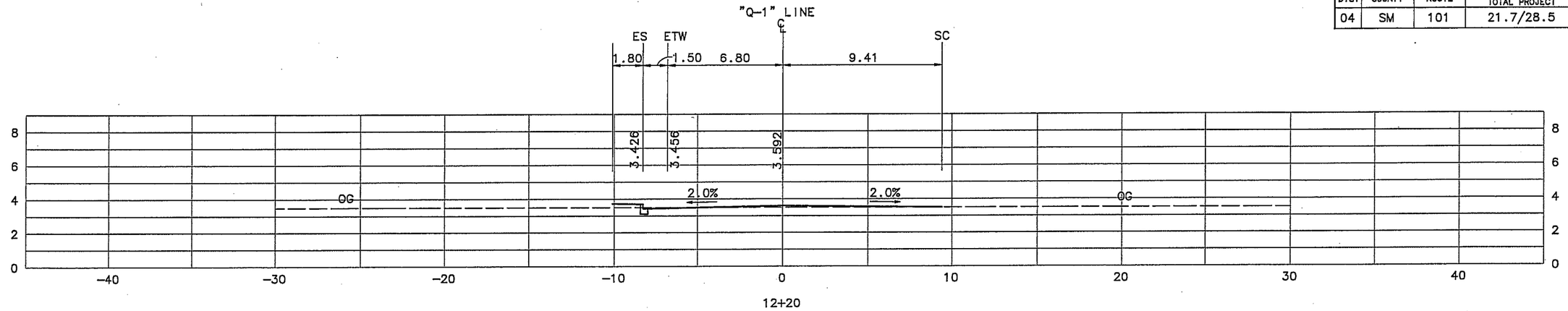

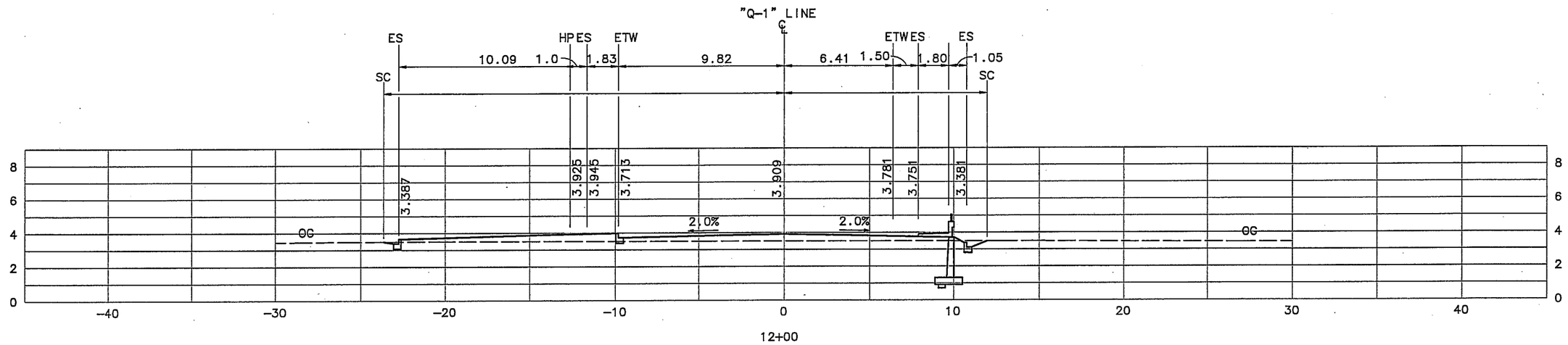

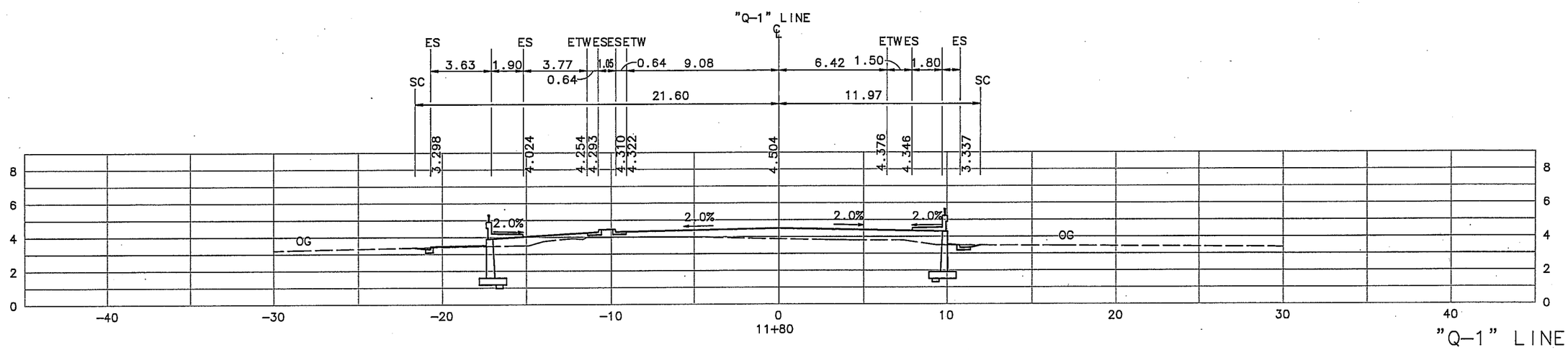

"Q-1" LINE
CROSS SECTIONS
SCALE 1:250

ALL DIMENSIONS ARE IN METERS UNLESS OTHERWISE SHOWN

CU 04245	EA 264204

DIST	COUNTY	ROUTE	KILOMETER POST. TOTAL PROJECT	SHEET NO.	TOTAL SHEETS
04	SM	101	21.7/28.5		

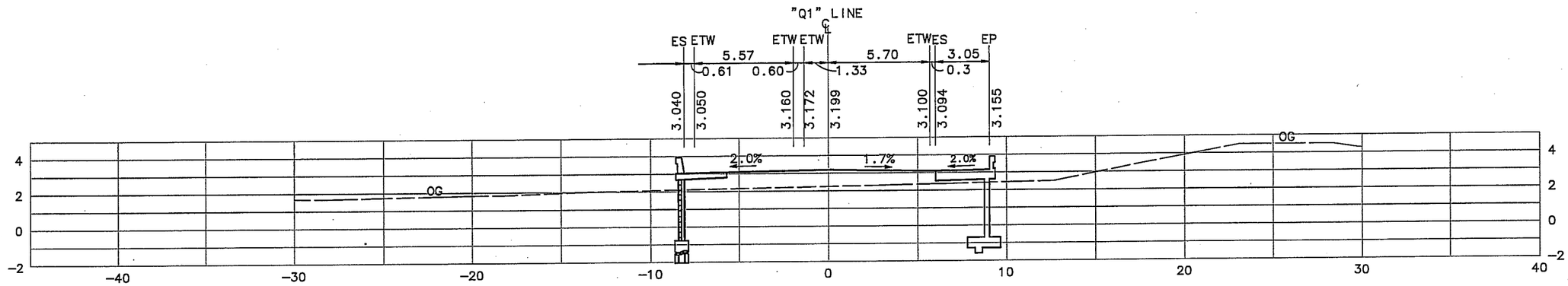

VC Q1 07+89.387 EVC

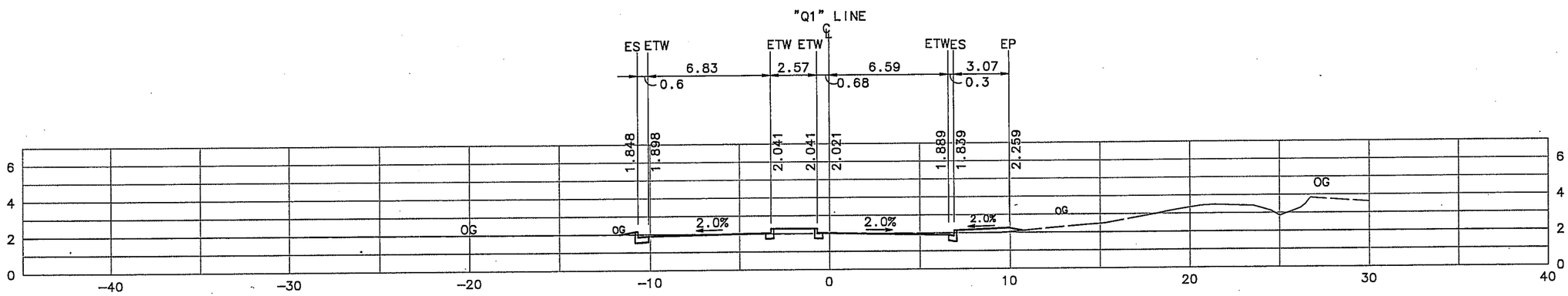

VC Q1 07+29.387 BVC

"Q-1" LINE
CROSS SECTIONS
SCALE 1:250

ALL DIMENSIONS ARE IN METERS UNLESS OTHERWISE SHOWN

CU 04245	EA 264204

DIST	COUNTY	ROUTE	KILOMETER POST TOTAL PROJECT	SHEET NO.	TOTAL SHEETS
04	SM	101	21.7/28.5		

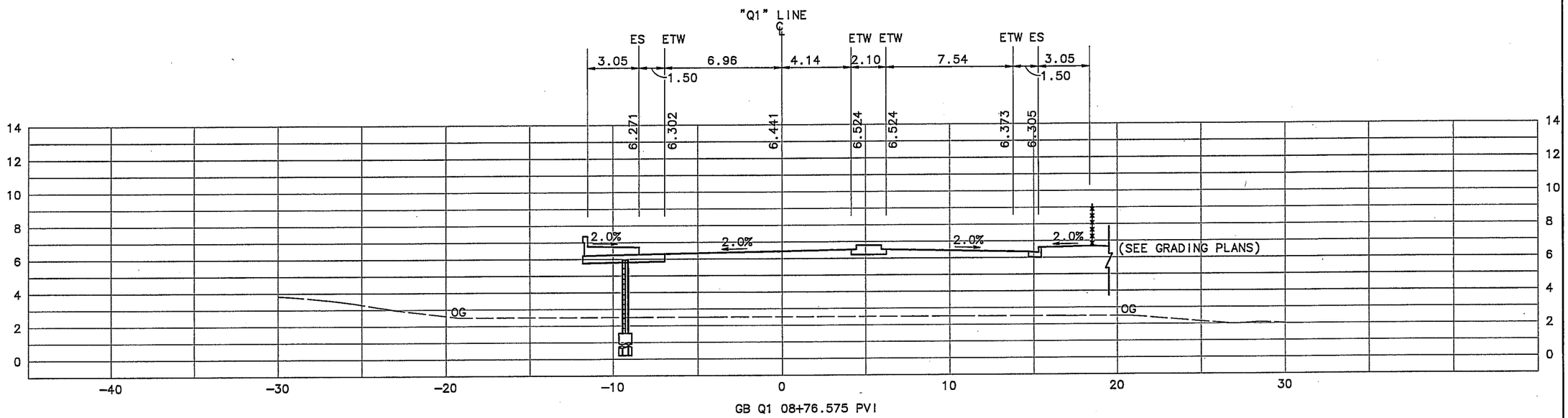

GB Q1 08+76.575 PVI

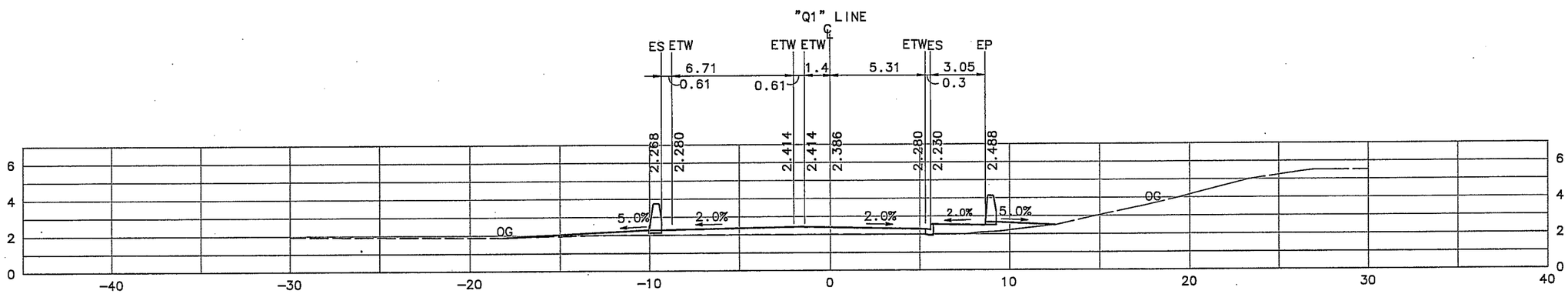

GB Q1 07+59.387 PVI

"Q-1" LINE
CROSS SECTIONS
SCALE 1:250

ALL DIMENSIONS ARE IN METERS UNLESS OTHERWISE SHOWN

CU 04245	EA 264204

DIST	COUNTY	ROUTE	KILOMETER POST TOTAL PROJECT	SHEET NO.	TOTAL SHEETS
04	SM	101	21.7/28.5		

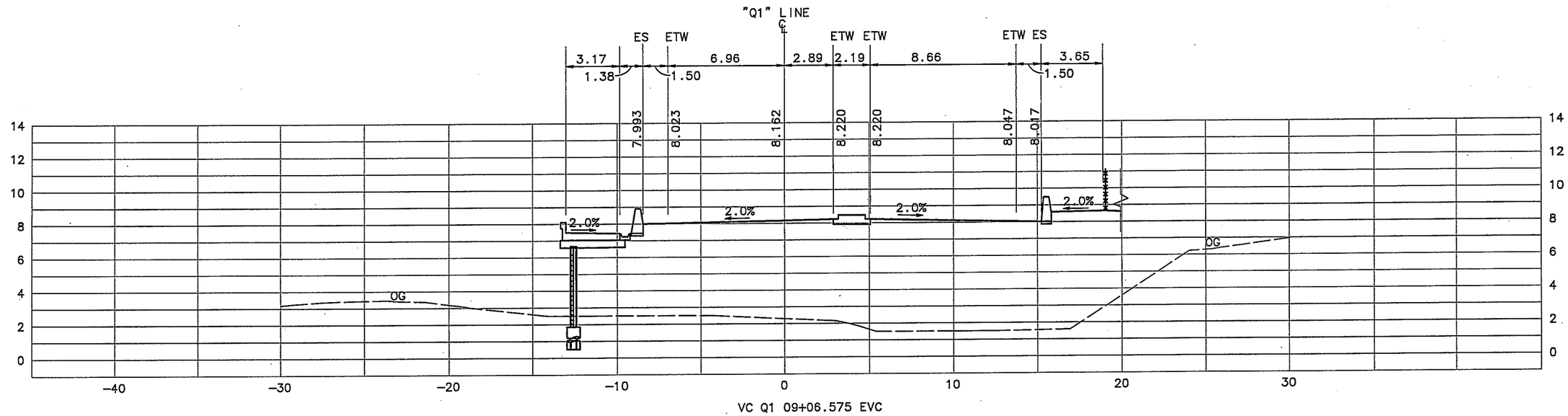

VC Q1 09+06.575 EVC

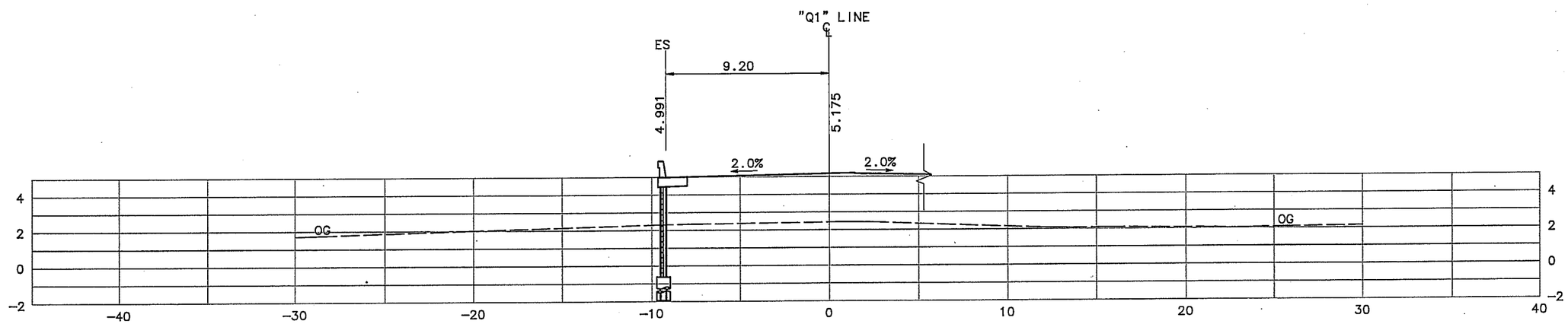

VC Q1 08+46.575 BVC

"Q-1" LINE
CROSS SECTIONS
SCALE 1:250

ALL DIMENSIONS ARE IN METERS UNLESS OTHERWISE SHOWN

CU 04245	EA 264204

DIST	COUNTY	ROUTE	KILOMETER POST TOTAL PROJECT	SHEET NO.	TOTAL SHEETS
04	SM	101	21.7/28.5		

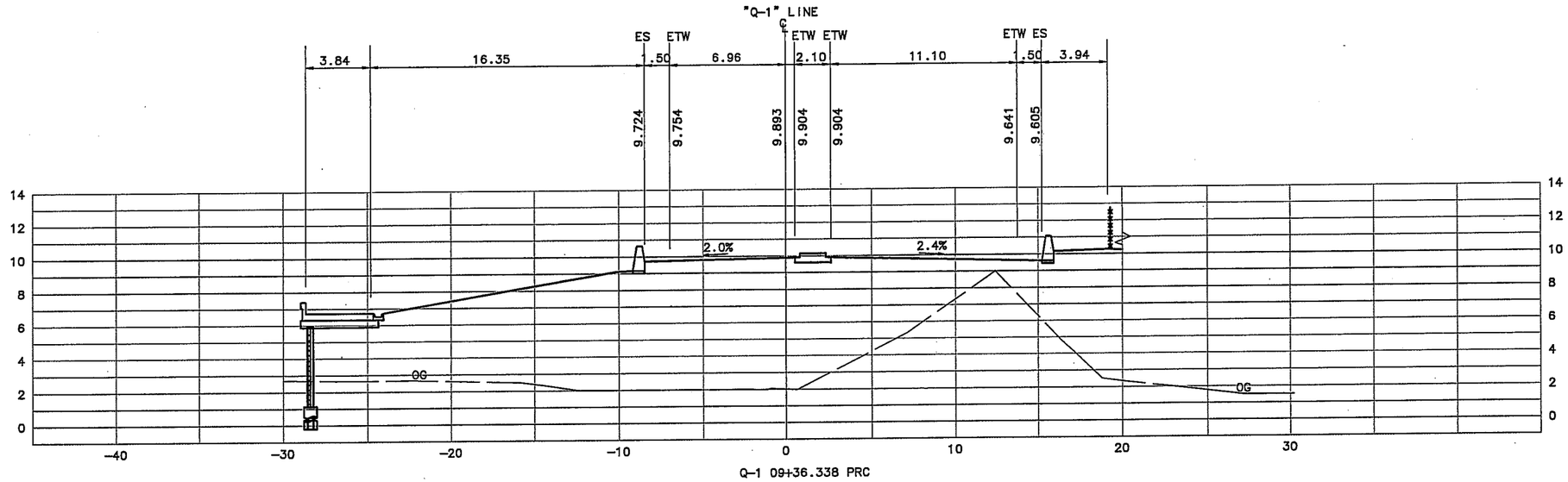

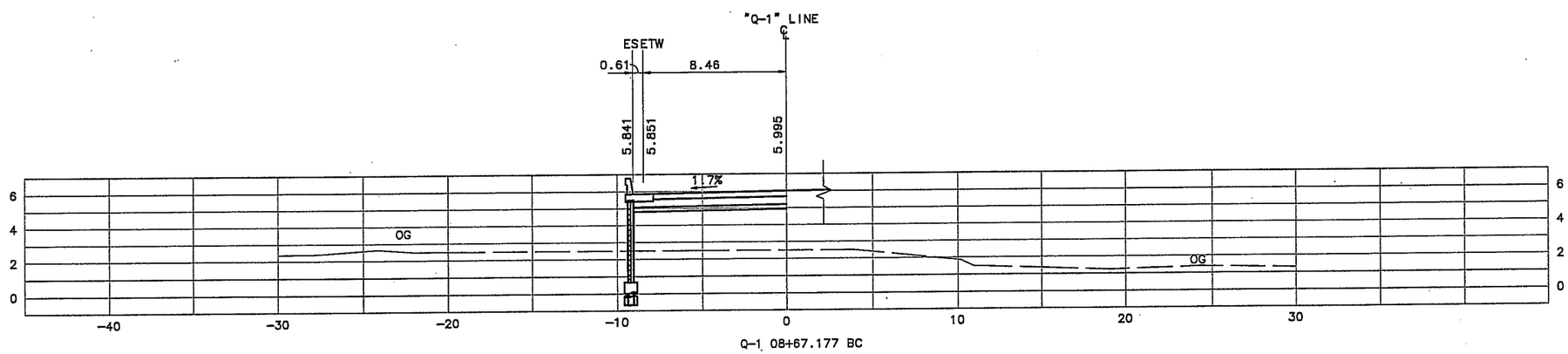

"Q-1" LINE
CROSS SECTIONS
SCALE 1:250

ALL DIMENSIONS ARE IN METERS UNLESS OTHERWISE SHOWN

CU	04245	EA	264204

DIST	COUNTY	ROUTE	KILOMETER POST TOTAL PROJECT	SHEET NO.	TOTAL SHEETS
04	SM	101	21.7/28.5		

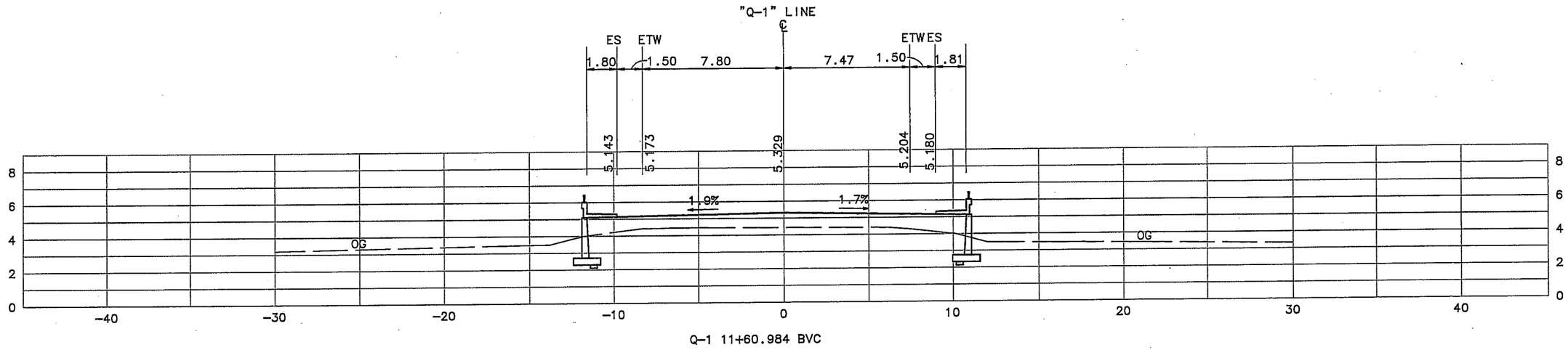

Q-1 11+60.984 BVC

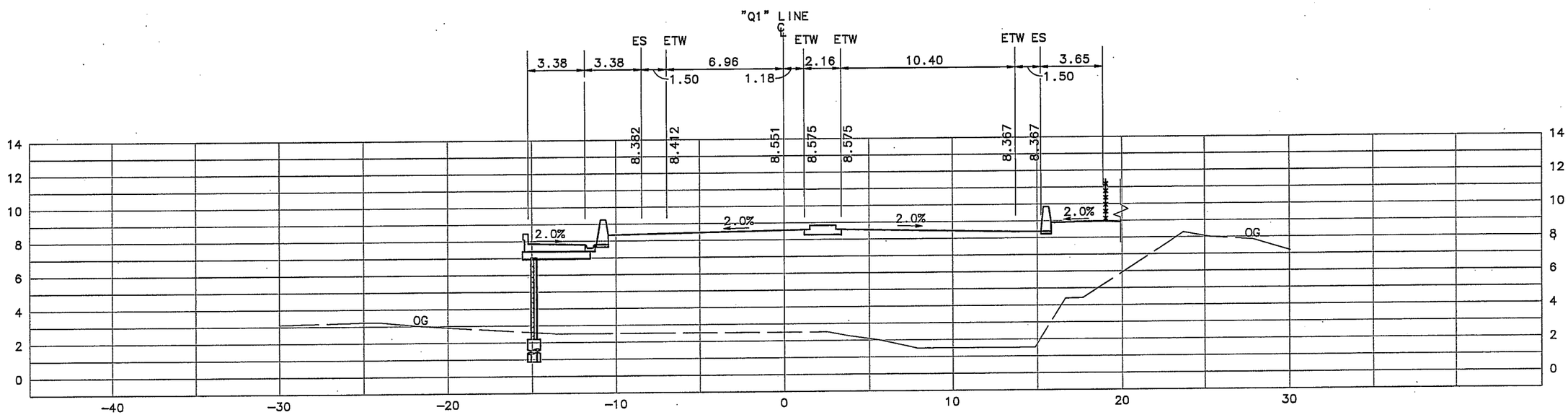

VC Q1 09+12.552 BVC

"Q-1" LINE
CROSS SECTIONS
SCALE 1:250

ALL DIMENSIONS ARE IN METERS UNLESS OTHERWISE SHOWN

CU 04245	EA 264204

DIST	COUNTY	ROUTE	KILOMETER POST TOTAL PROJECT	SHEET NO.	TOTAL SHEETS
04	SM	101	21.7/28.5		

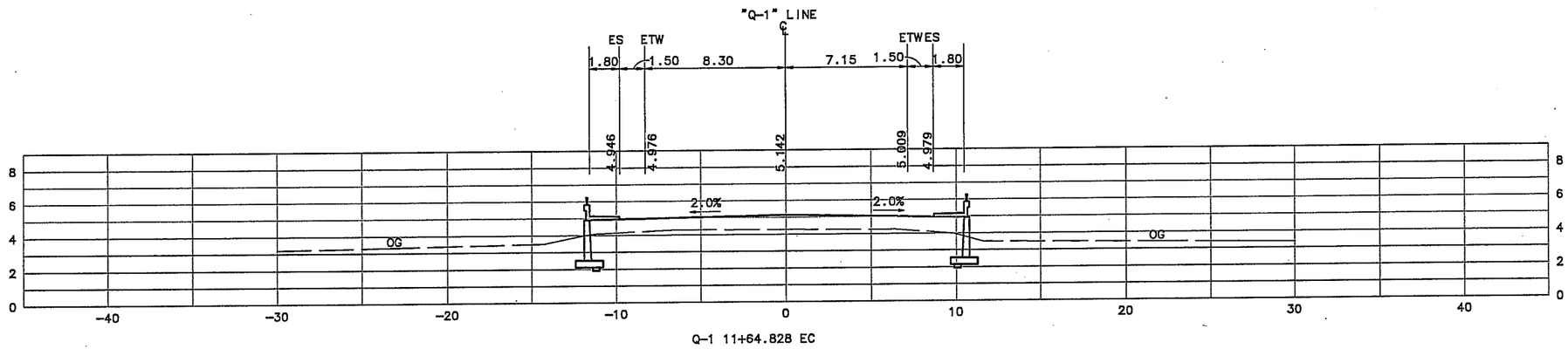

Q-1 11+64.828 EC

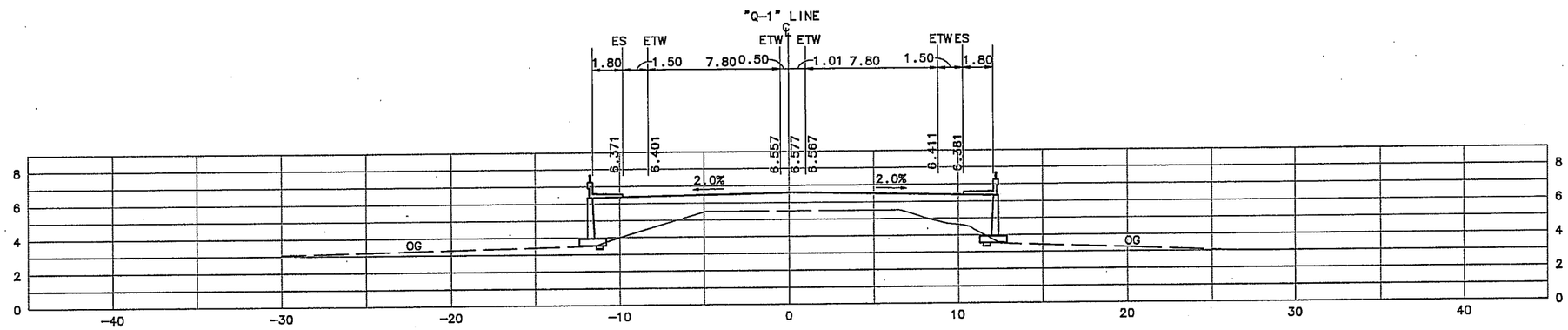

Q-1 11+36.017 BC

"Q-1" LINE
CROSS SECTIONS
SCALE 1:250

ALL DIMENSIONS ARE IN METERS UNLESS OTHERWISE SHOWN

CU 04245	EA 264204

DIST	COUNTY	ROUTE	KILOMETER POST TOTAL PROJECT	SHEET NO.	TOTAL SHEETS
04	SM	101	21.7/28.5		

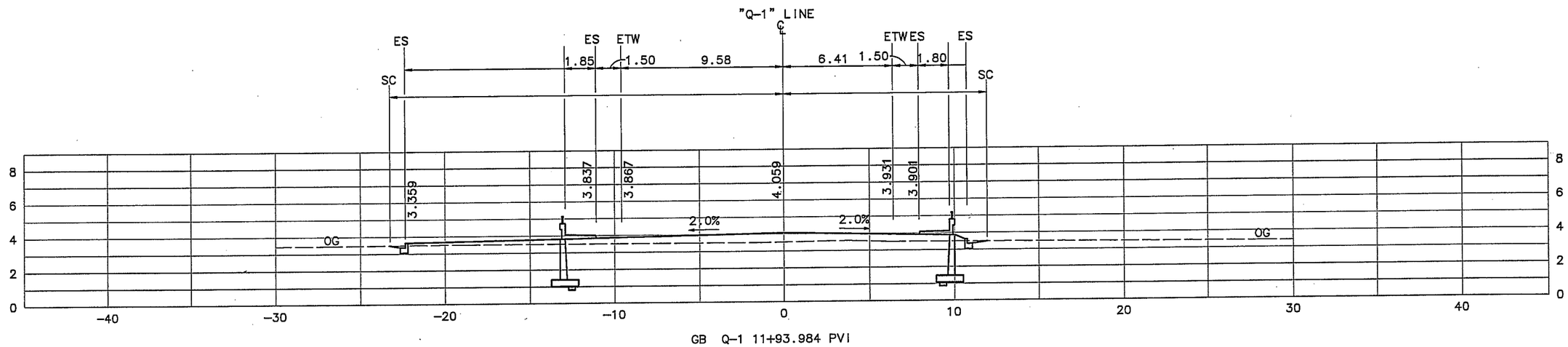

"Q-1" LINE
CROSS SECTIONS
SCALE 1:250

ALL DIMENSIONS ARE IN METERS UNLESS OTHERWISE SHOWN

CU 04245	EA 264204

DIST	COUNTY	ROUTE	KILOMETER POST TOTAL PROJECT	SHEET NO.	TOTAL SHEETS
04	SM	101	21.7/28.5		

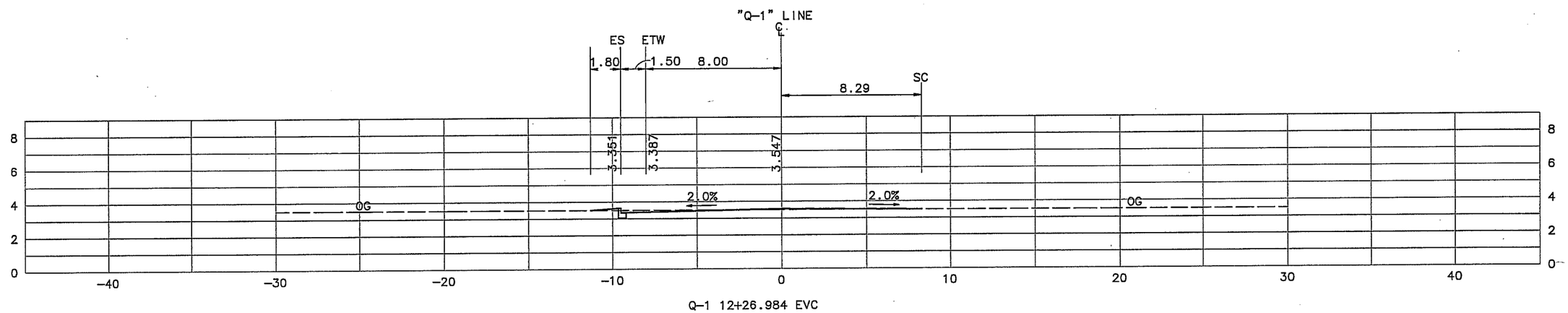

"Q-1" LINE
CROSS SECTIONS
SCALE 1:250

ALL DIMENSIONS ARE IN METERS UNLESS OTHERWISE SHOWN

CU 04245	EA 264204

DIST	COUNTY	ROUTE	KILOMETER POST TOTAL PROJECT	SHEET NO.	TOTAL SHEETS
04	SM	101	21.7/28.5		

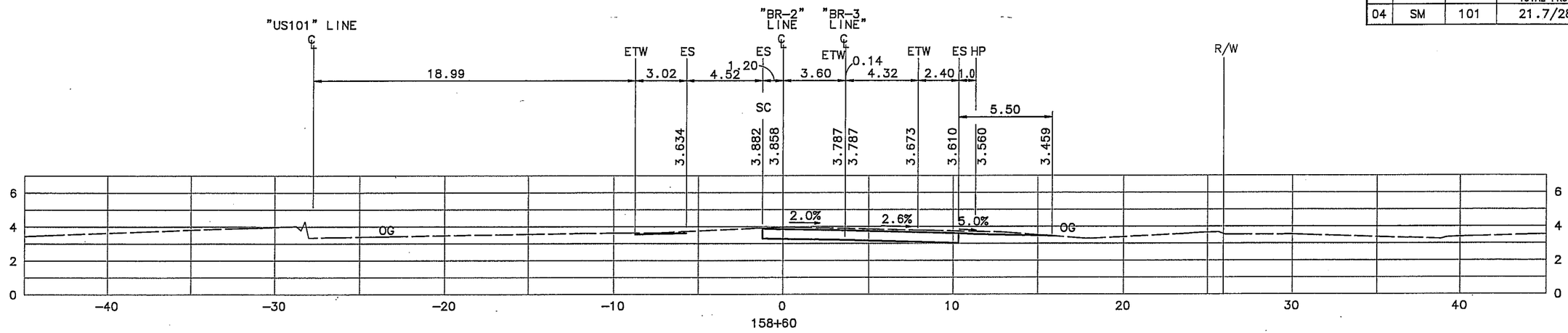

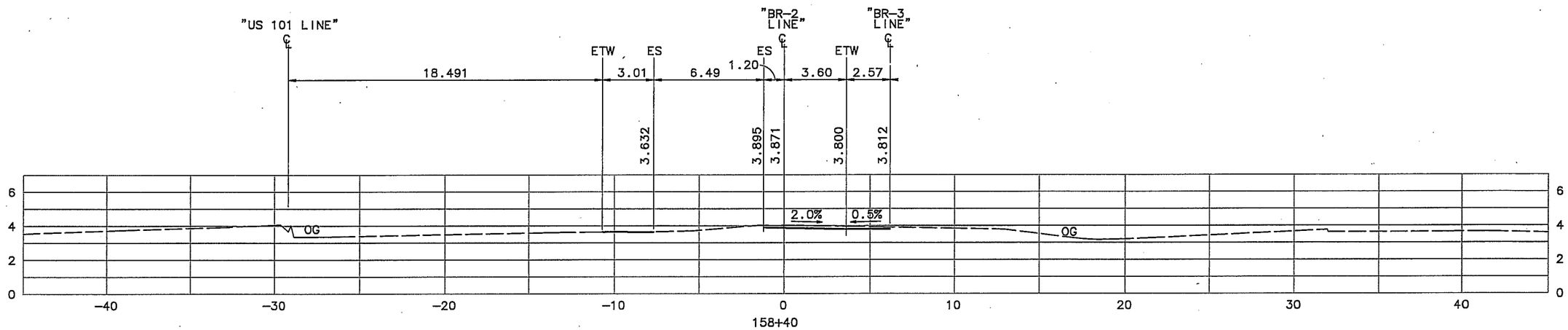

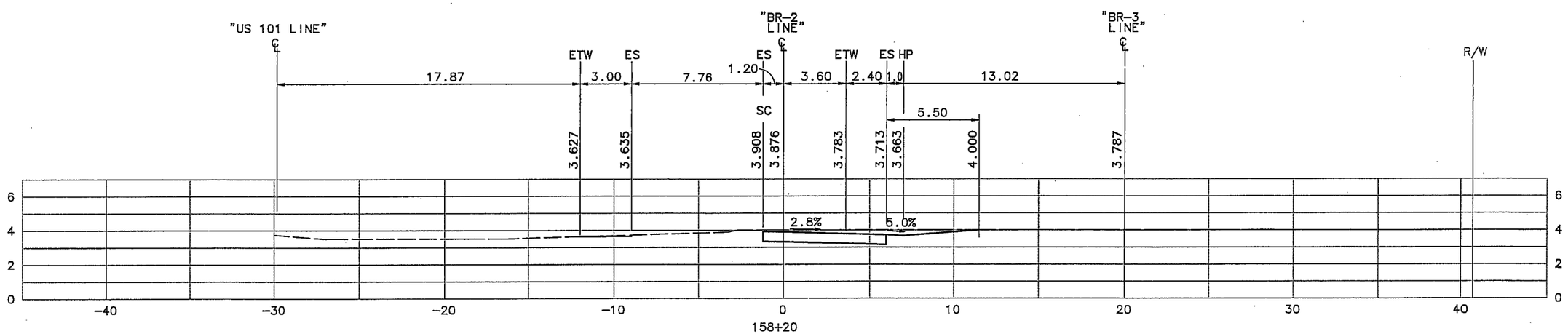

ALL DIMENSIONS ARE IN METERS UNLESS OTHERWISE SHOWN

"BR-2" LINE
CROSS SECTIONS
SCALE 1:250

CU 04245	EA 264204

DIST	COUNTY	ROUTE	KILOMETER POST TOTAL PROJECT	SHEET NO.	TOTAL SHEETS
04	SM	101	21.7/28.5	:	

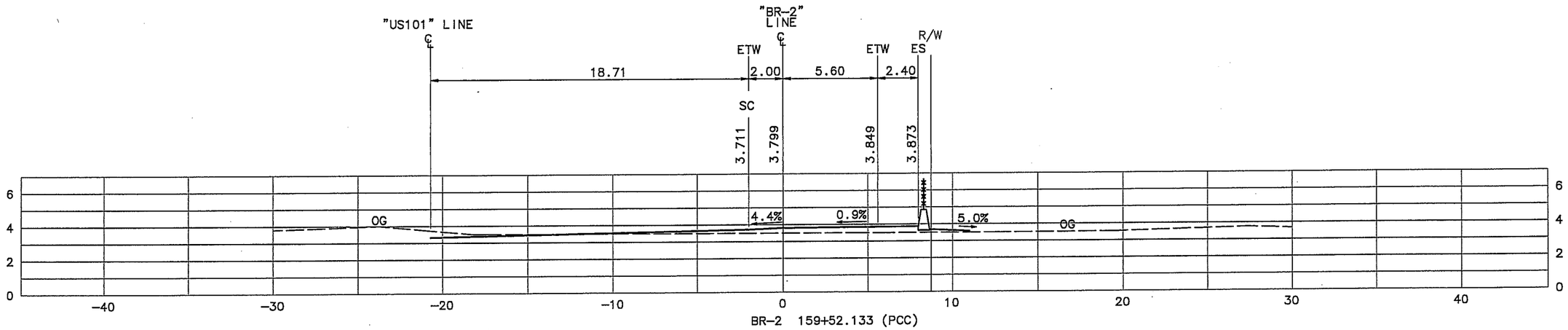

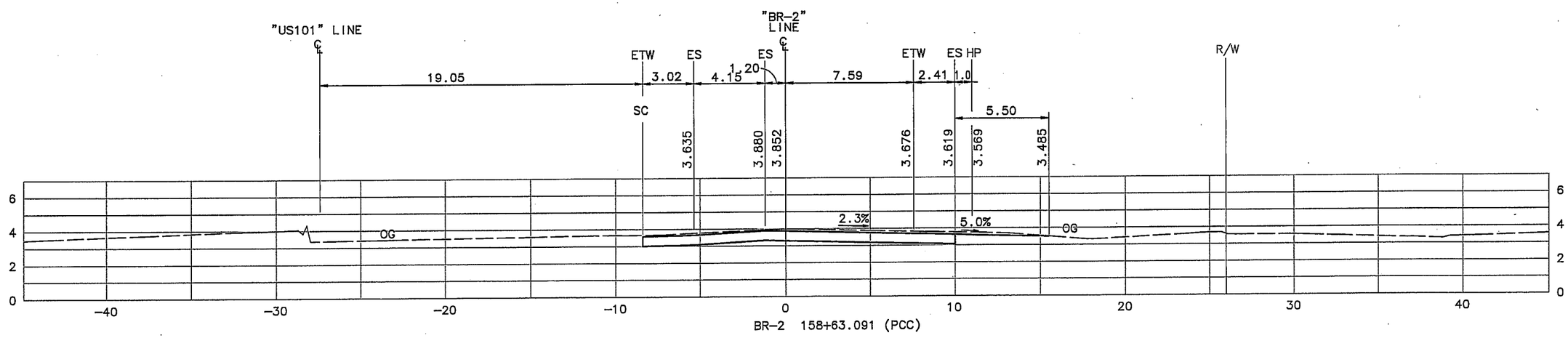

"BR-2" LINE
CROSS SECTIONS
SCALE 1:250

ALL DIMENSIONS ARE IN METERS UNLESS OTHERWISE SHOWN

CU 04245	EA 264204

DIST	COUNTY	ROUTE	KILOMETER POST TOTAL PROJECT	SHEET NO.	TOTAL SHEETS
04	SM	101	21.7/28.5		

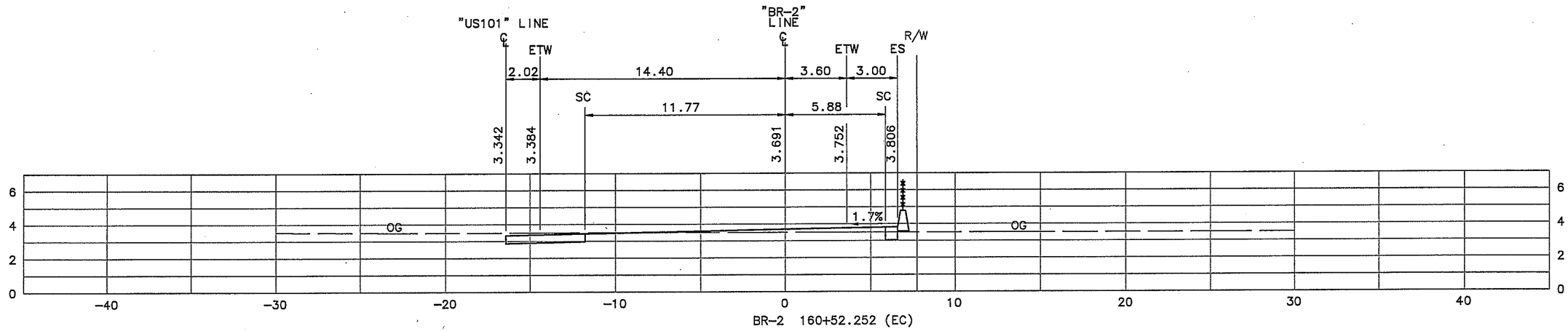

ALL DIMENSIONS ARE IN METERS UNLESS OTHERWISE SHOWN

"BR-2" LINE
CROSS SECTIONS
SCALE 1:250

CU 04245	EA 264204

DIST	COUNTY	ROUTE	KILOMETER POST TOTAL PROJECT	SHEET NO.	TOTAL SHEETS
04	SM	101	21.7/28.5		

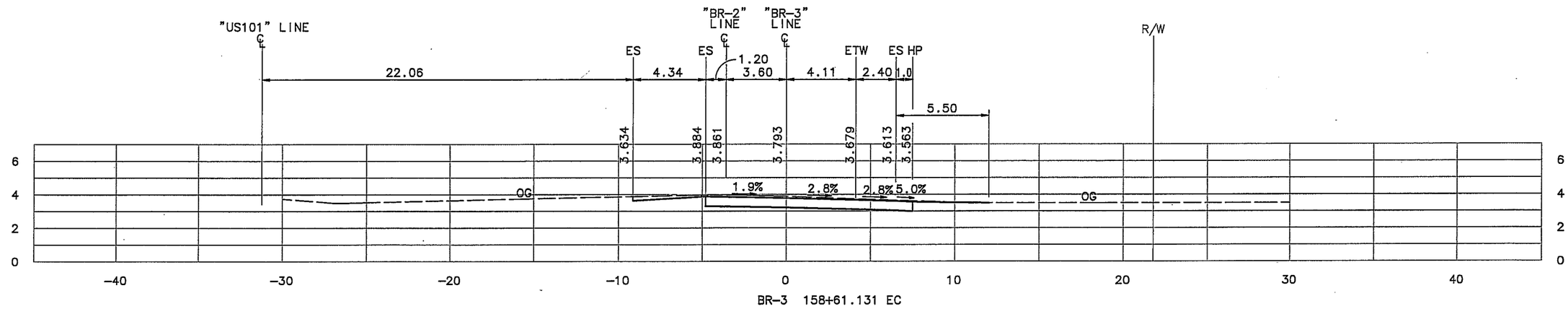

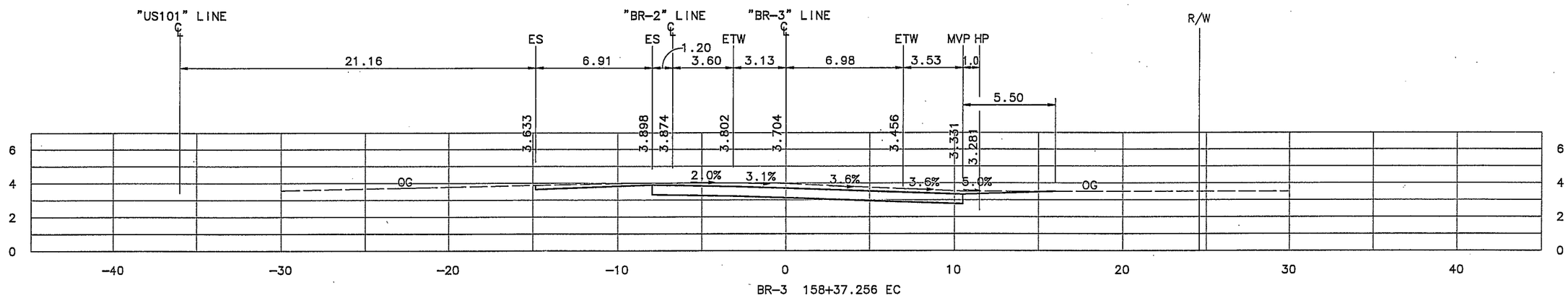

ALL DIMENSIONS ARE IN METERS UNLESS OTHERWISE SHOWN

"BR-3" LINE
CROSS SECTIONS
SCALE 1:250

CU	EA
04245	264204

DIST	COUNTY	ROUTE	KILOMETER POST TOTAL PROJECT	SHEET NO.	TOTAL SHEETS
04	SM	101	21.7/28.5		

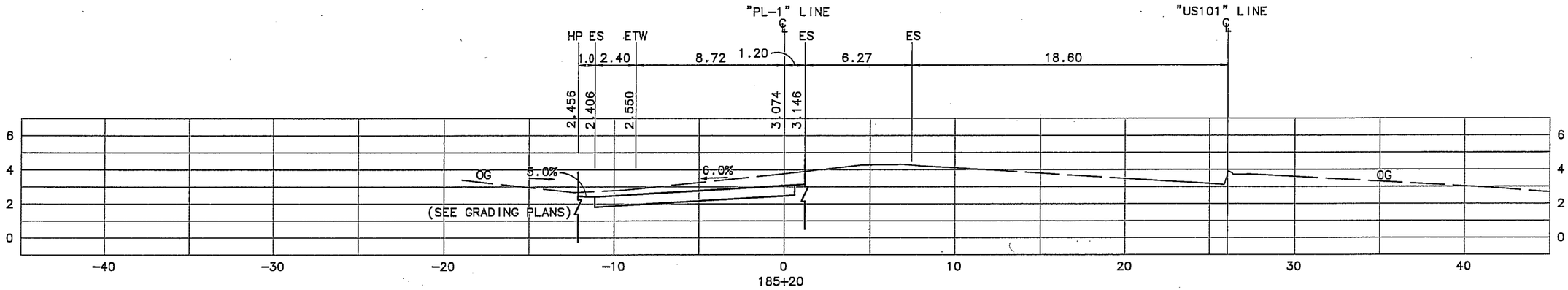

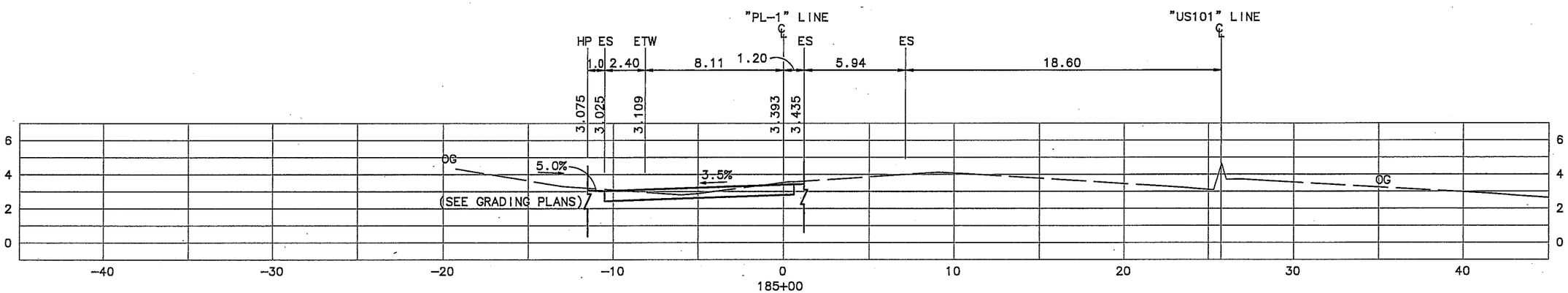

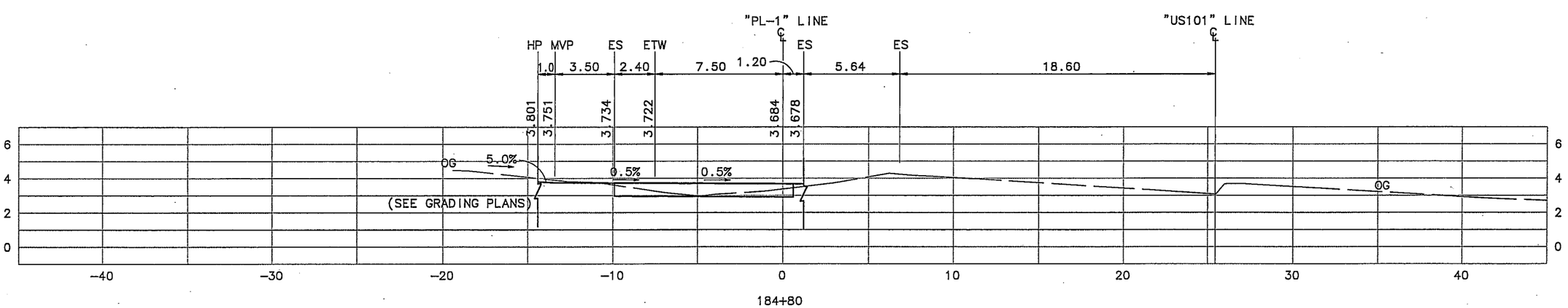

"PL-1" LINE
CROSS SECTIONS
SCALE 1:250

ALL DIMENSIONS ARE IN METERS UNLESS OTHERWISE SHOWN

CU 04245	EA 264204

DIST	COUNTY	ROUTE	KILOMETER POST TOTAL PROJECT	SHEET NO.	TOTAL SHEETS
04	SM	101	21.7/28.5		

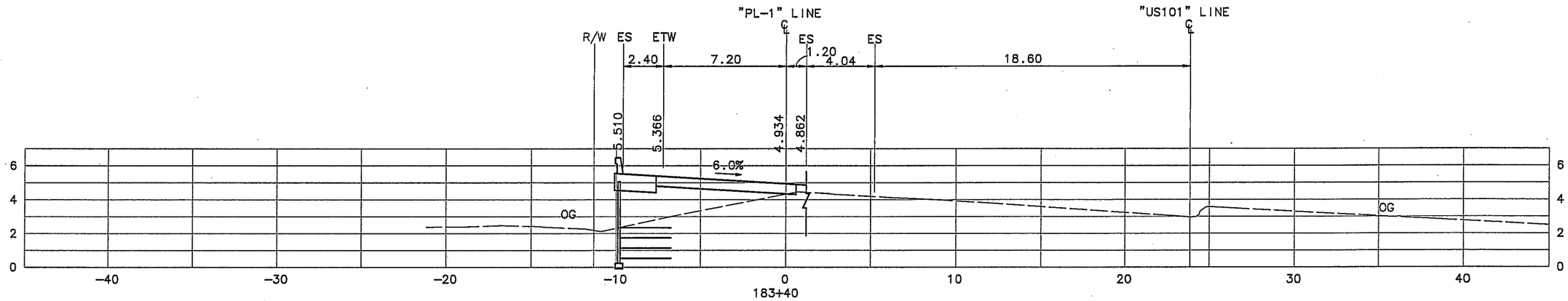

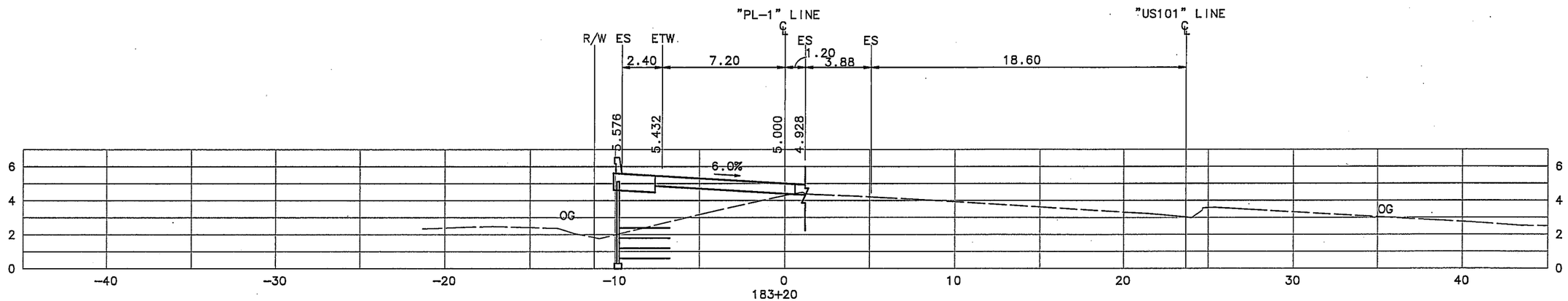

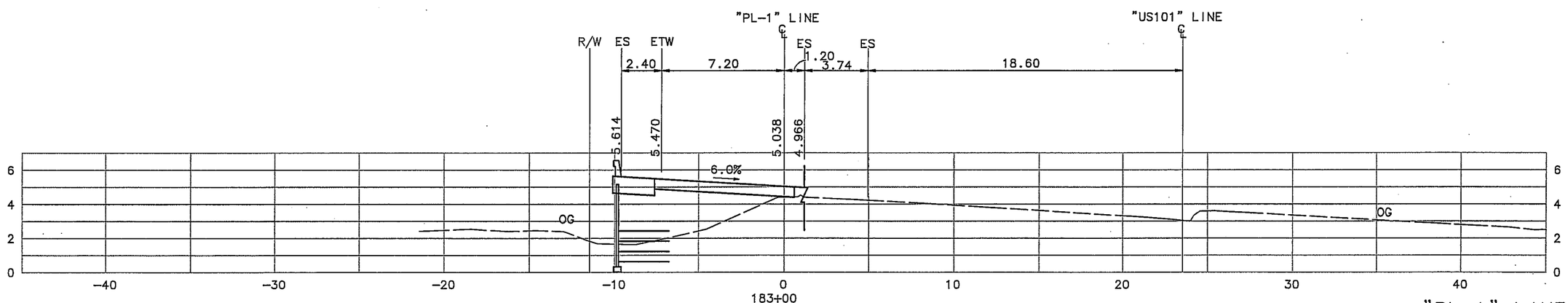

"PL-1" LINE
CROSS SECTIONS
SCALE 1:250

ALL DIMENSIONS ARE IN METERS UNLESS OTHERWISE SHOWN

CU 04245	EA 264204

DIST	COUNTY	ROUTE	KILOMETER POST TOTAL PROJECT	SHEET NO.	TOTAL SHEETS
04	SM	101	21.7/28.5		

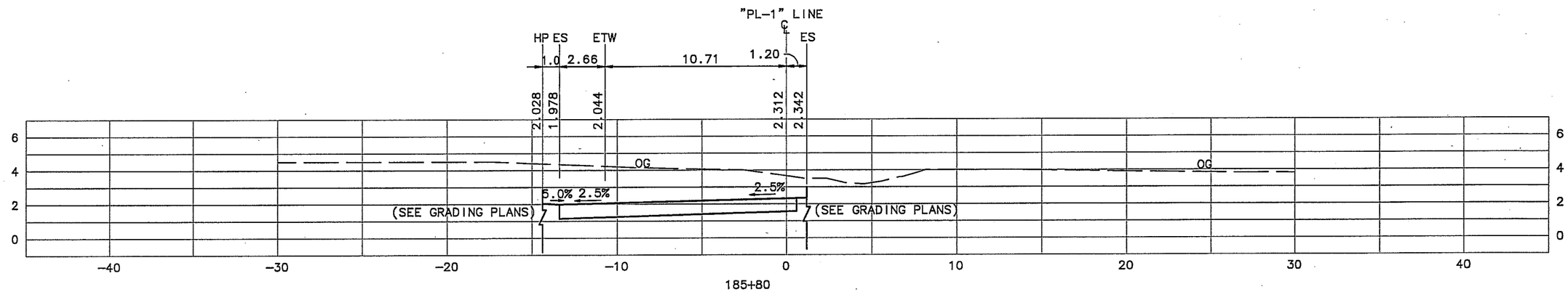

ALL DIMENSIONS ARE IN METERS UNLESS OTHERWISE SHOWN

"PL-1" LINE
CROSS SECTIONS
SCALE 1:250

CU 04245	EA 264204

DIST	COUNTY	ROUTE	KILOMETER POST TOTAL PROJECT	SHEET NO.	TOTAL SHEETS
04	SM	101	21.7/28.5		

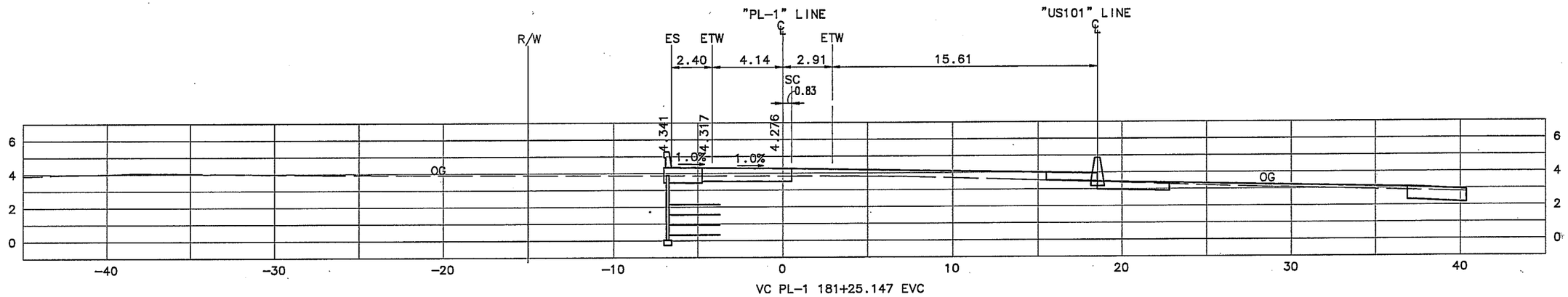

VC PL-1 181+25.147 EVC

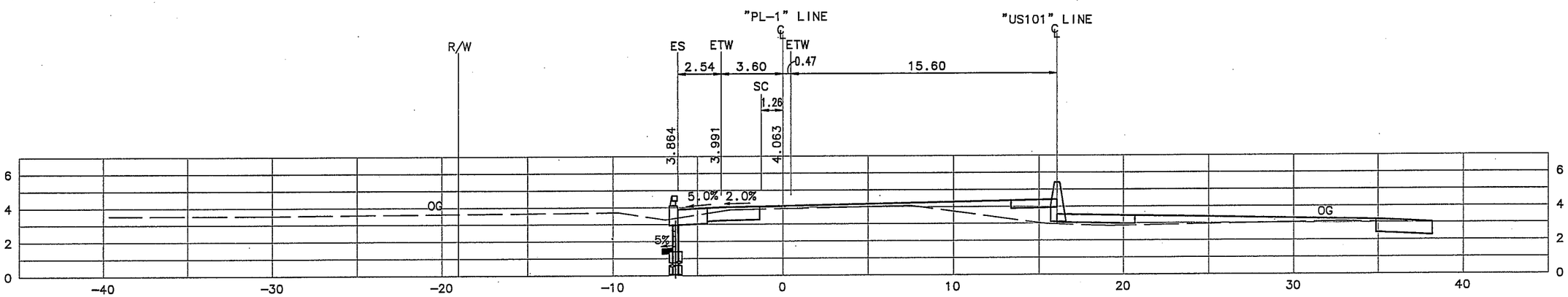

VC PL-1 180+25.147 BVC

"PL-1" LINE
CROSS SECTIONS
SCALE 1:250

ALL DIMENSIONS ARE IN METERS UNLESS OTHERWISE SHOWN

CU 04245	EA 264204

DIST	COUNTY	ROUTE	KILOMETER POST TOTAL PROJECT	SHEET NO.	TOTAL SHEETS
04	SM	101	21.7/28.5	9	

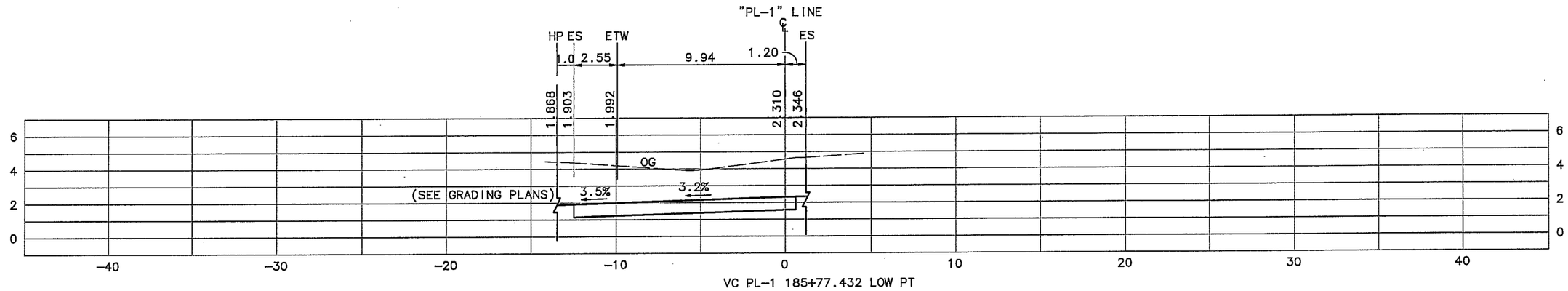

VC PL-1 185+77.432 LOW PT

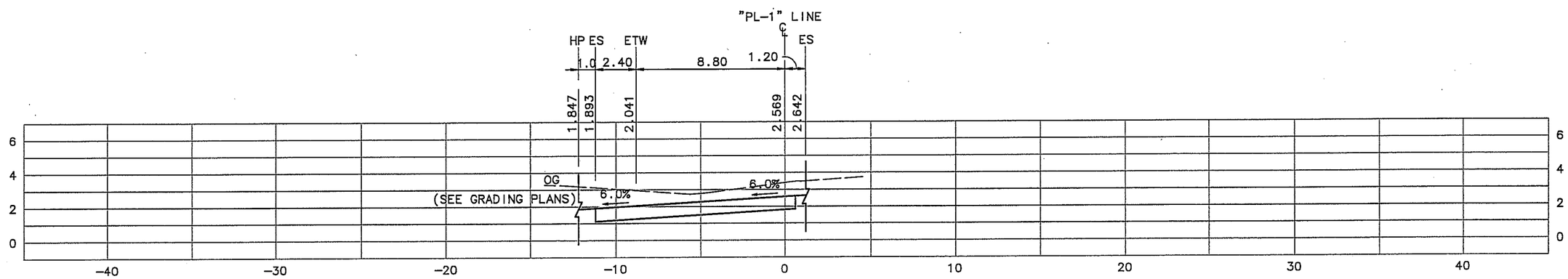

VC PL-1 185+48.731 BVC

"PL-1" LINE
CROSS SECTIONS
SCALE 1:250

ALL DIMENSIONS ARE IN METERS UNLESS OTHERWISE SHOWN

CU 04245	EA 264204

DIST	COUNTY	ROUTE	KILOMETER POST TOTAL PROJECT	SHEET NO.	TOTAL SHEETS
04	SM	101	21.7/28.5	9	

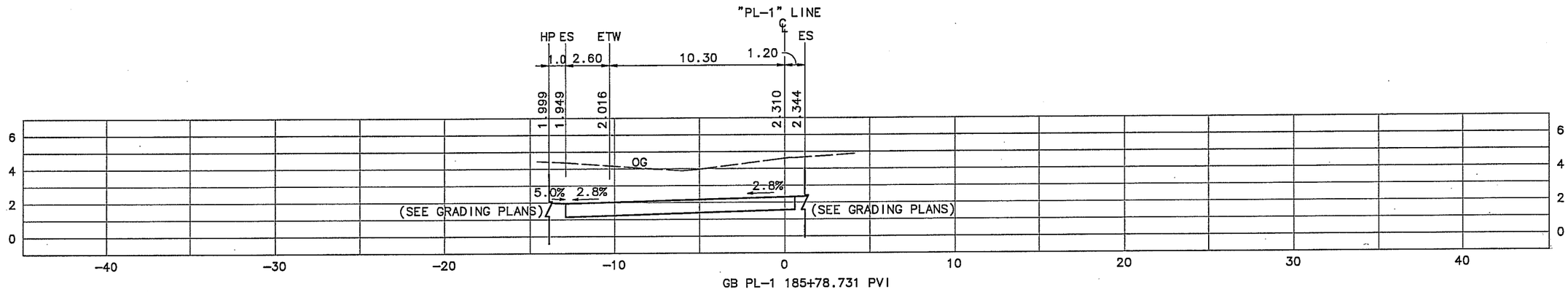

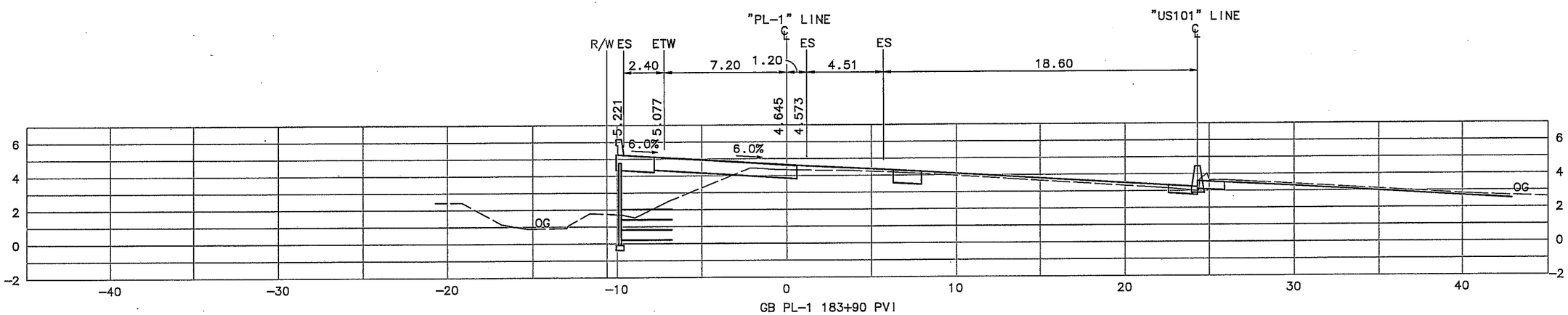

"PL-1" LINE
CROSS SECTIONS
SCALE 1:250

ALL DIMENSIONS ARE IN METERS UNLESS OTHERWISE SHOWN

CU 04245	EA 264204

DIST	COUNTY	ROUTE	KILOMETER POST TOTAL PROJECT	SHEET NO.	TOTAL SHEETS
04	SM	101	21.7/28.5		

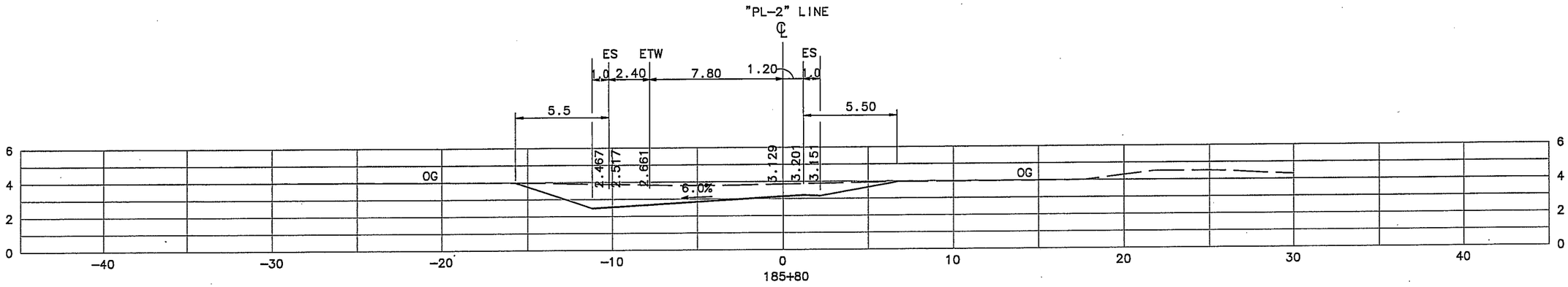

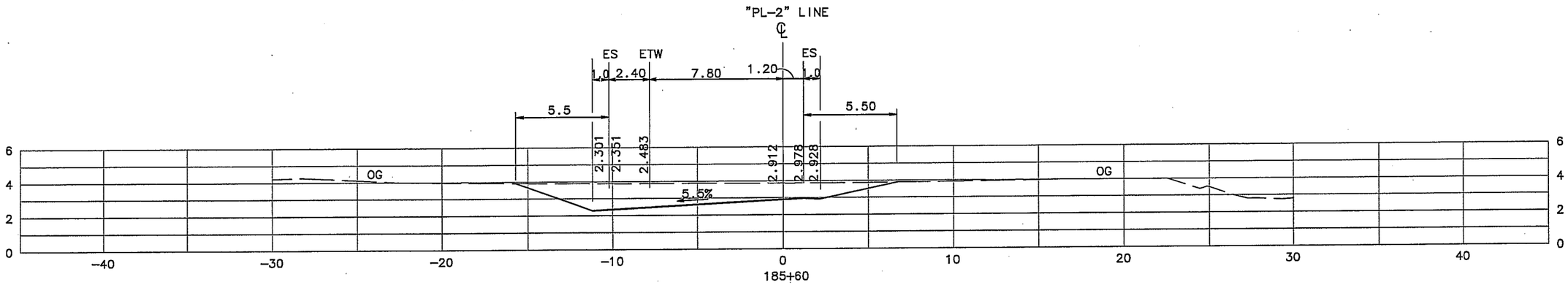

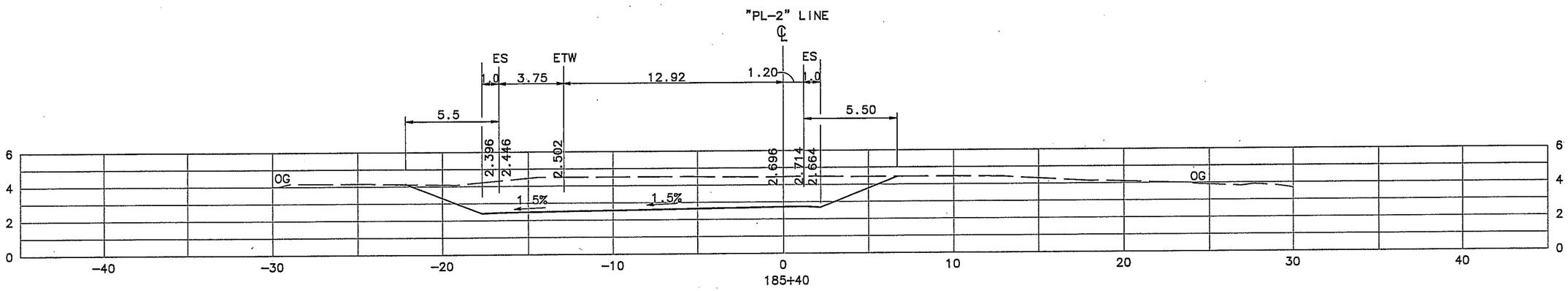

"PL-2" LINE
CROSS SECTIONS
SCALE 1:250

ALL DIMENSIONS ARE IN METERS UNLESS OTHERWISE SHOWN

CU 04245	EA 264204

DIST	COUNTY	ROUTE	KILOMETER POST TOTAL PROJECT	SHEET NO.	TOTAL SHEETS
04	SM	101	21.7/28.5		

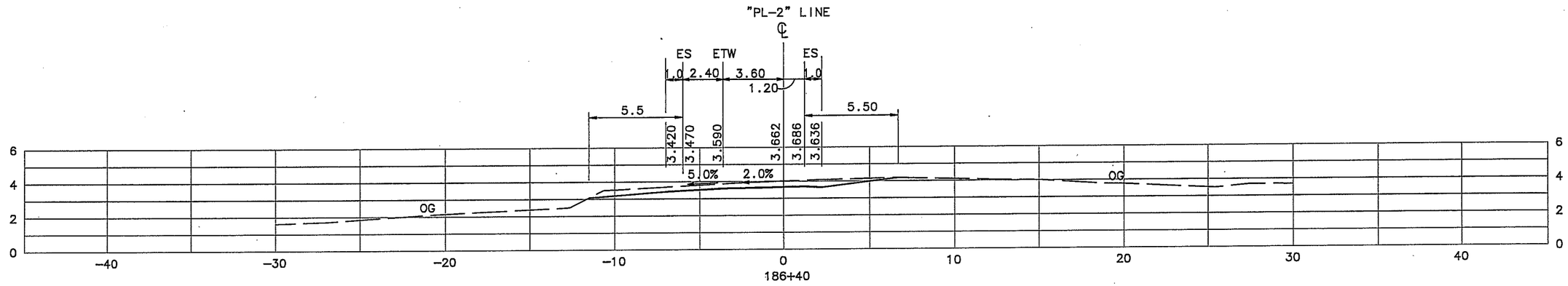

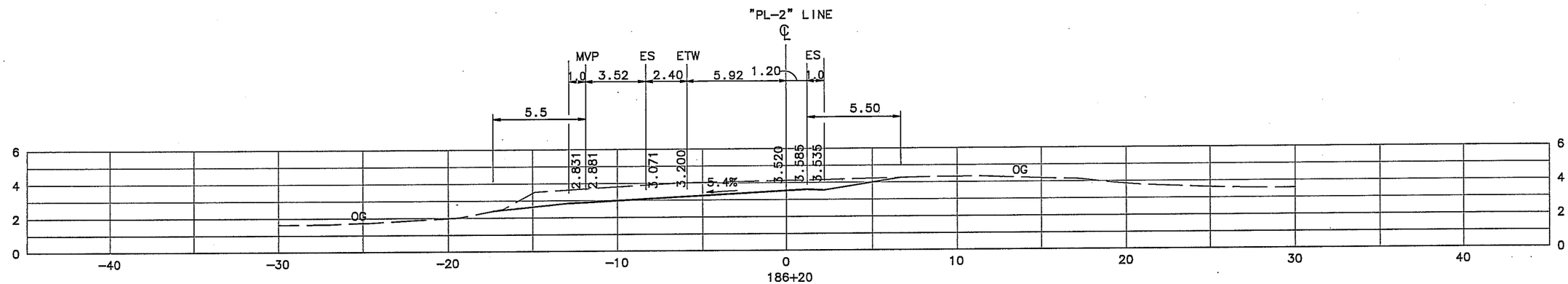

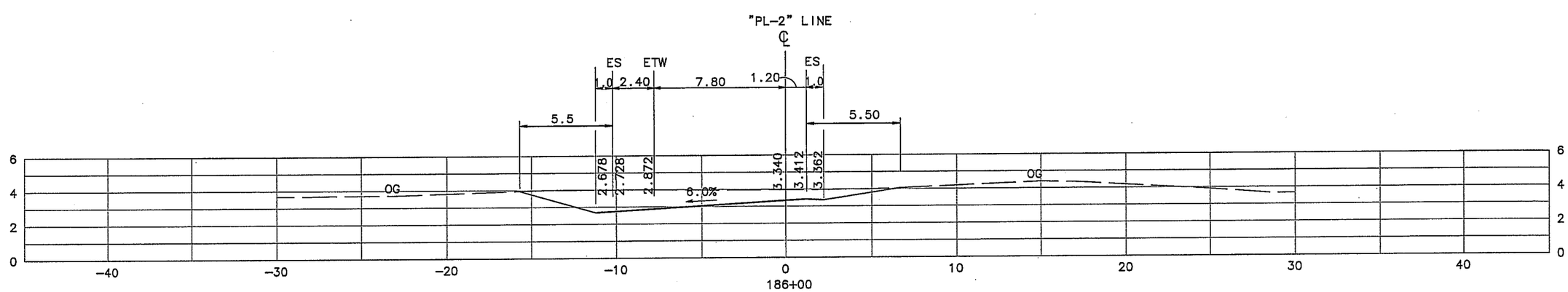

"PL-2" LINE
CROSS SECTIONS
SCALE 1:250

ALL DIMENSIONS ARE IN METERS UNLESS OTHERWISE SHOWN

CU 04245	EA 264204

DIST	COUNTY	ROUTE	KILOMETER POST TOTAL PROJECT	SHEET NO.	TOTAL SHEETS
04	SM	101	21.7/28.5		

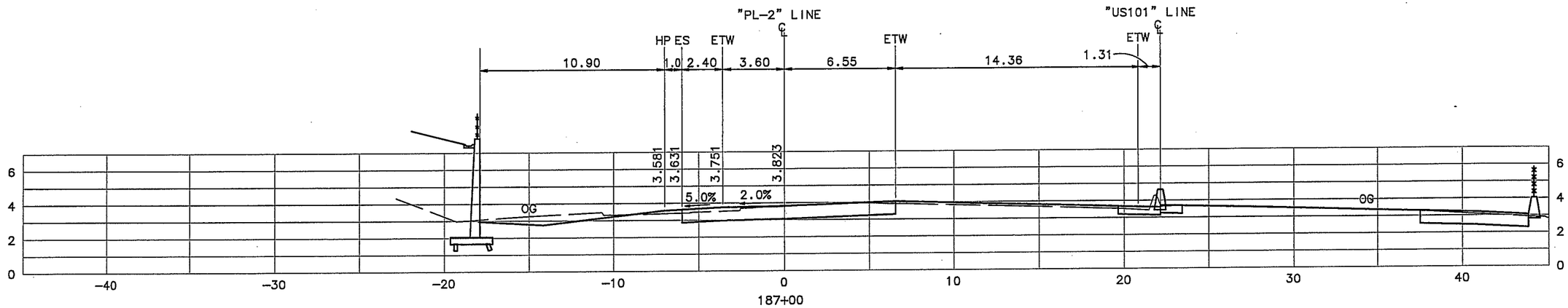

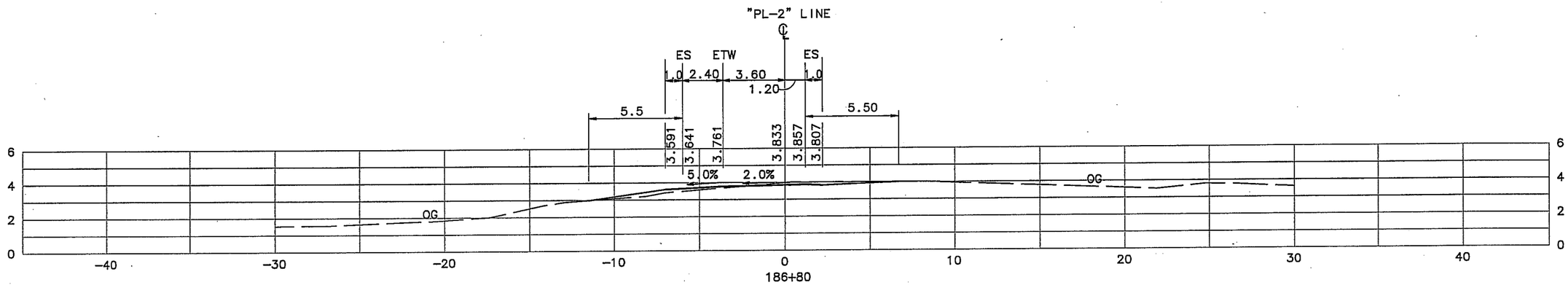

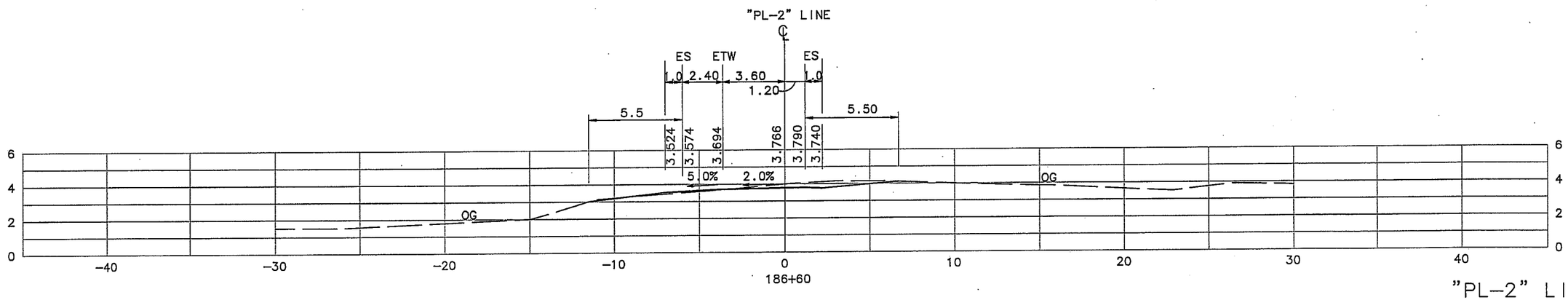

"PL-2" LINE
CROSS SECTIONS
SCALE 1:250

ALL DIMENSIONS ARE IN METERS UNLESS OTHERWISE SHOWN

CU 04245	EA 264204

DIST	COUNTY	ROUTE	KILOMETER POST TOTAL PROJECT	SHEET NO.	TOTAL SHEETS
04	SM	101	21.7/28.5		

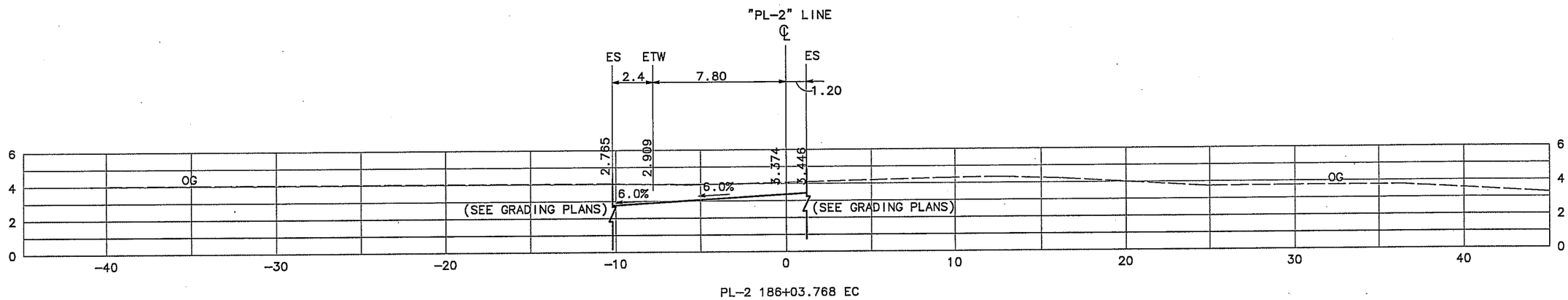

"PL-2" LINE
CROSS SECTIONS
SCALE 1:250

ALL DIMENSIONS ARE IN METERS UNLESS OTHERWISE SHOWN

CU 04245	EA 264204

DIST	COUNTY	ROUTE	KILOMETER POST TOTAL PROJECT	SHEET NO.	TOTAL SHEETS
04	SM	101	21.7/28.5		

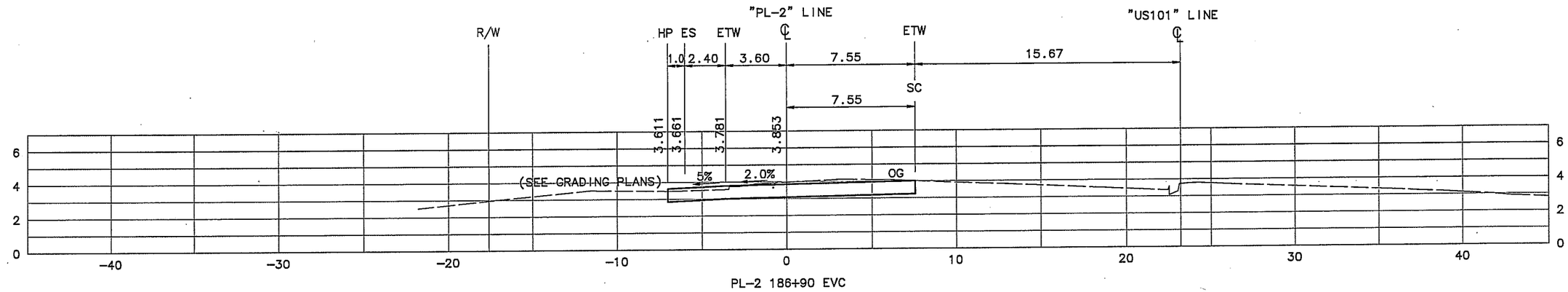

PL-2 186+90 EVC

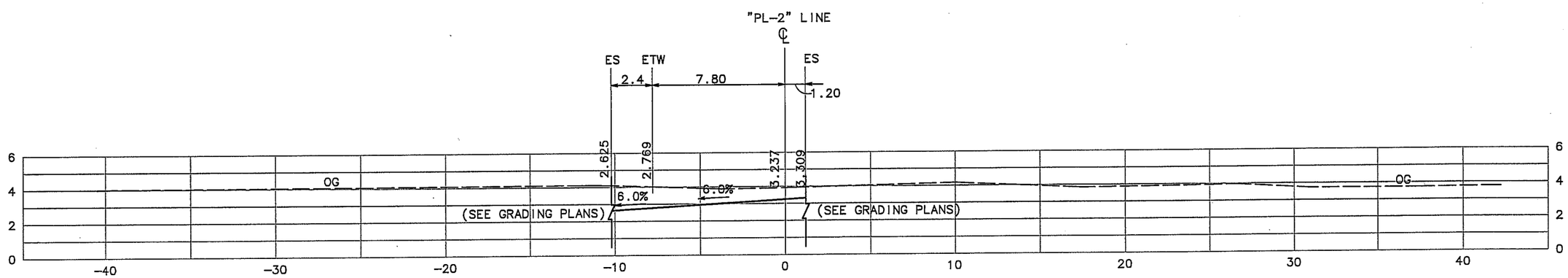

PL-2 185+90 BVC

"PL-2" LINE
CROSS SECTIONS
SCALE 1:250

ALL DIMENSIONS ARE IN METERS UNLESS OTHERWISE SHOWN

CU 04245	EA 264204

DIST	COUNTY	ROUTE	KILOMETER POST TOTAL PROJECT	SHEET NO.	TOTAL SHEETS
04	SM	101	21.7/28.5		

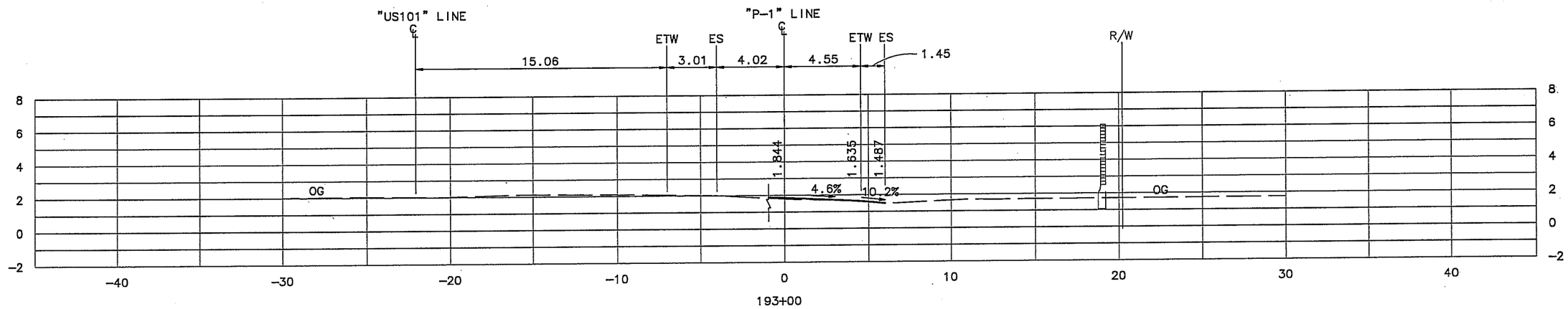

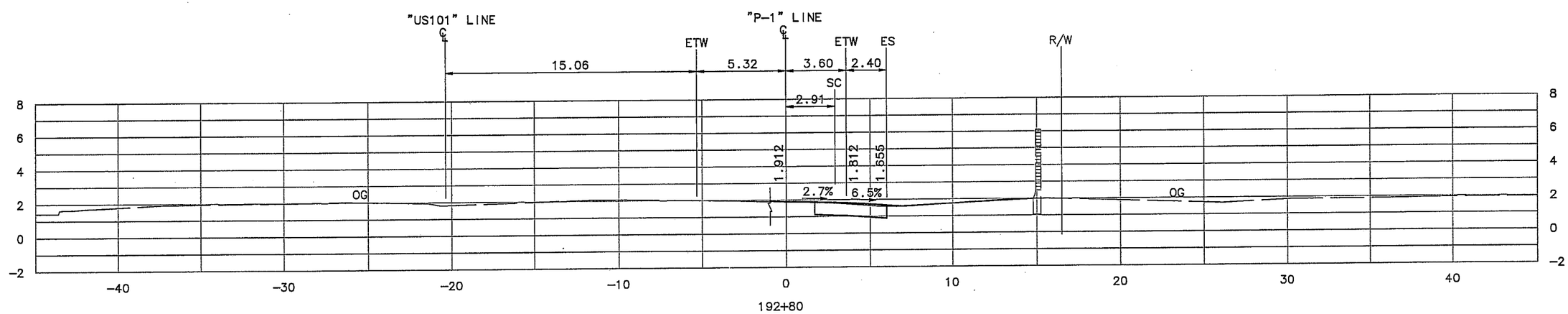

"P-1" LINE
CROSS SECTIONS
SCALE 1:250

ALL DIMENSIONS ARE IN METERS UNLESS OTHERWISE SHOWN

CU 04245	EA 264204

DIST	COUNTY	ROUTE	KILOMETER POST TOTAL PROJECT	SHEET NO.	TOTAL SHEETS
04	SM	101	21.7/28.5		

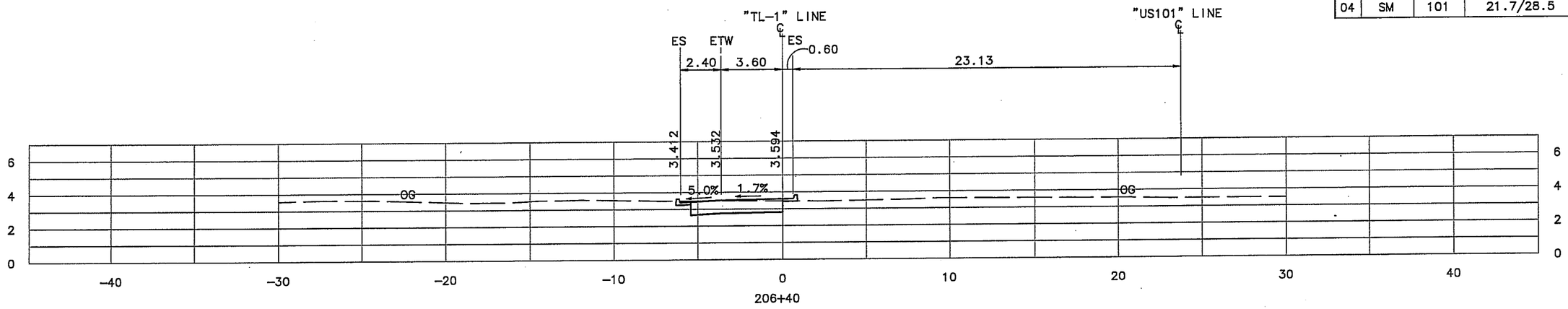

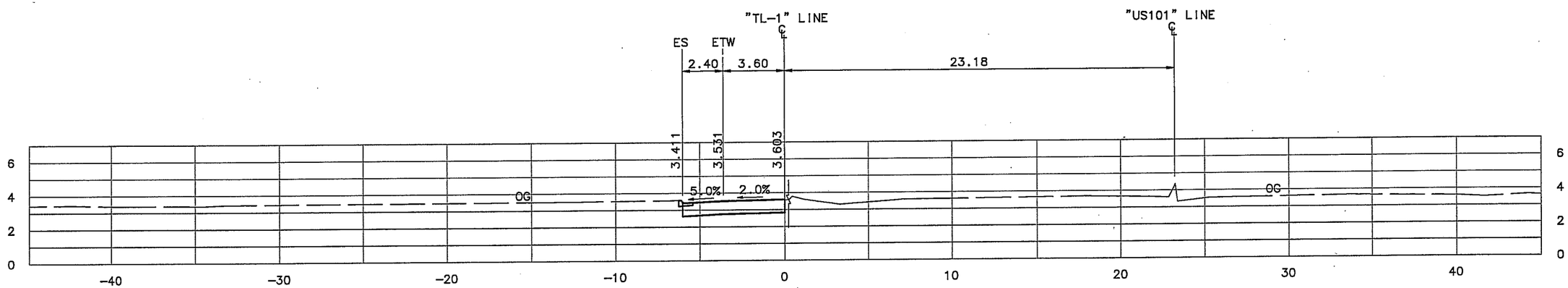

206+20

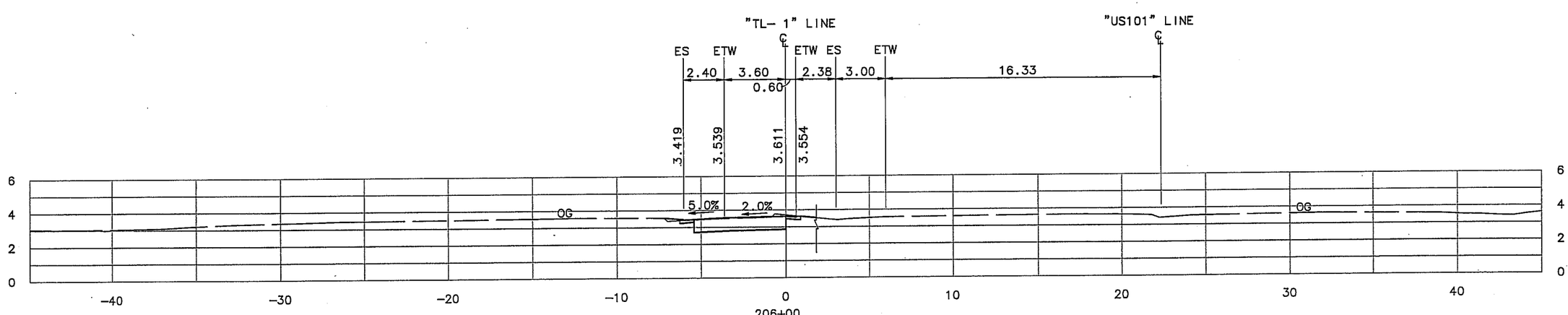

"TL-1" LINE
CROSS SECTIONS
SCALE 1:250

ALL DIMENSIONS ARE IN METERS UNLESS OTHERWISE SHOWN

CU 04245	EA 264204

DIST	COUNTY	ROUTE	KILOMETER POST TOTAL PROJECT	SHEET NO.	TOTAL SHEETS
04	SM	101	21.7/28.5		

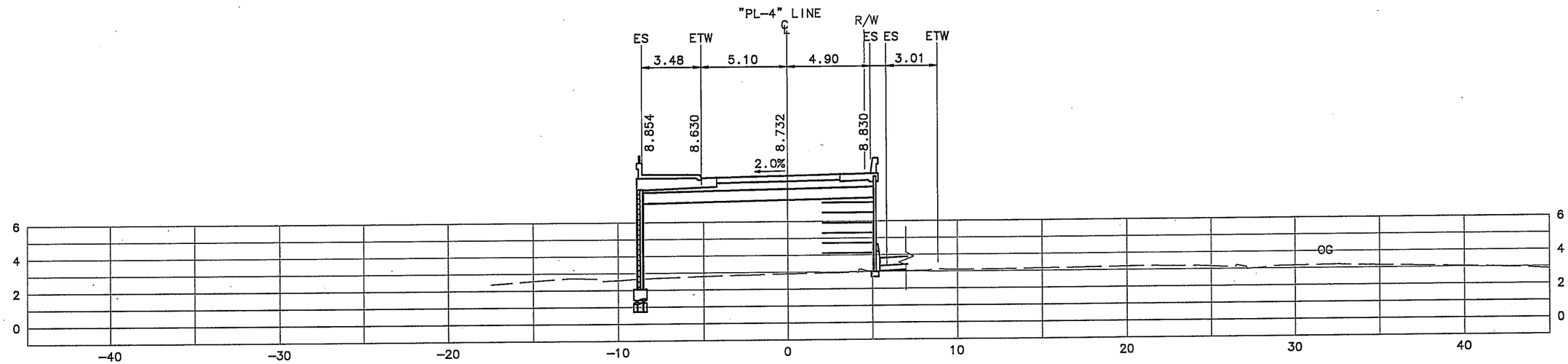

PL-4 188+23.664 EVC

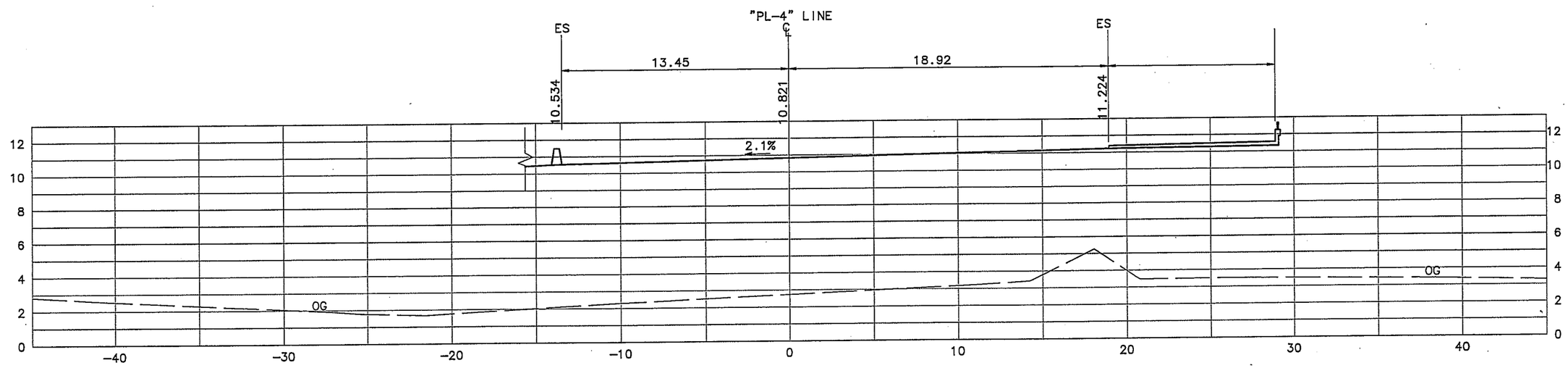

PL-4 187+63.664 BVC

"PL-4" LINE
CROSS SECTIONS
SCALE 1:250

ALL DIMENSIONS ARE IN METERS UNLESS OTHERWISE SHOWN

CU 04245	EA 264204

DIST	COUNTY	ROUTE	KILOMETER POST TOTAL PROJECT	SHEET NO.	TOTAL SHEETS
04	SM	101	21.7/28.5		

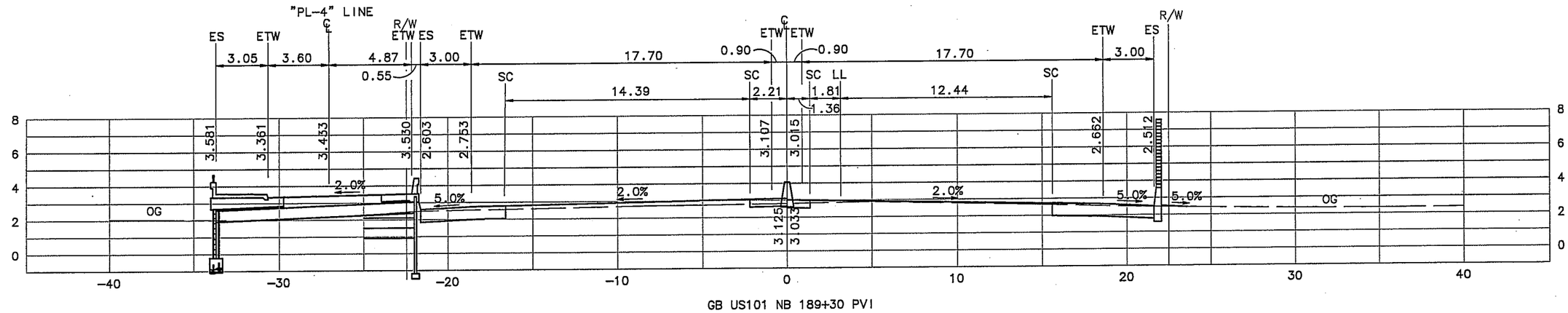

GB US101 NB 189+30 PVI

188+20

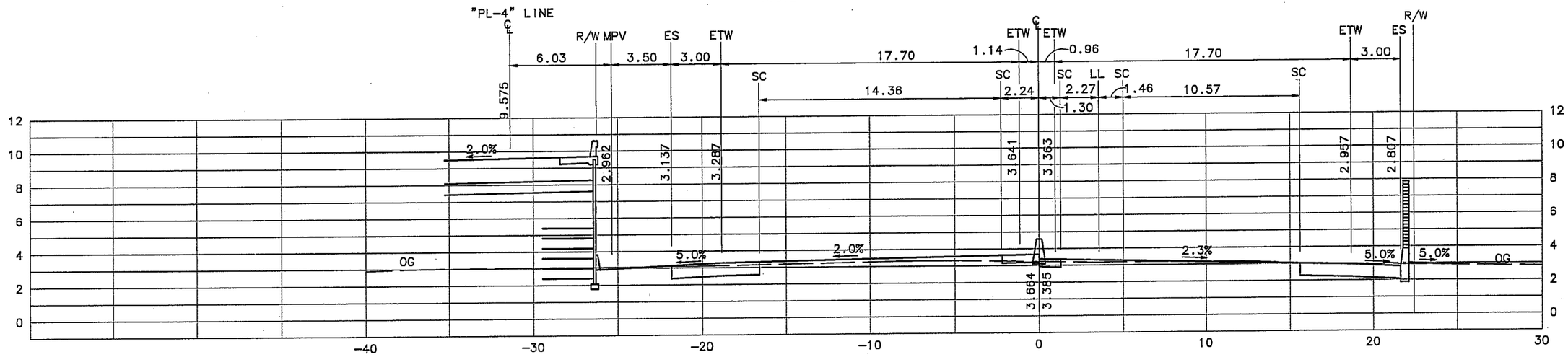

GB US101 NB 188+05 PVI

"US101" LINE
CROSS SECTIONS
SCALE 1:250

ALL DIMENSIONS ARE IN METERS UNLESS OTHERWISE SHOWN

CU 04245	EA 264204

DIST	COUNTY	ROUTE	KILOMETER POST TOTAL PROJECT	SHEET NO.	TOTAL SHEETS
04	SM	101	21.7/28.5		

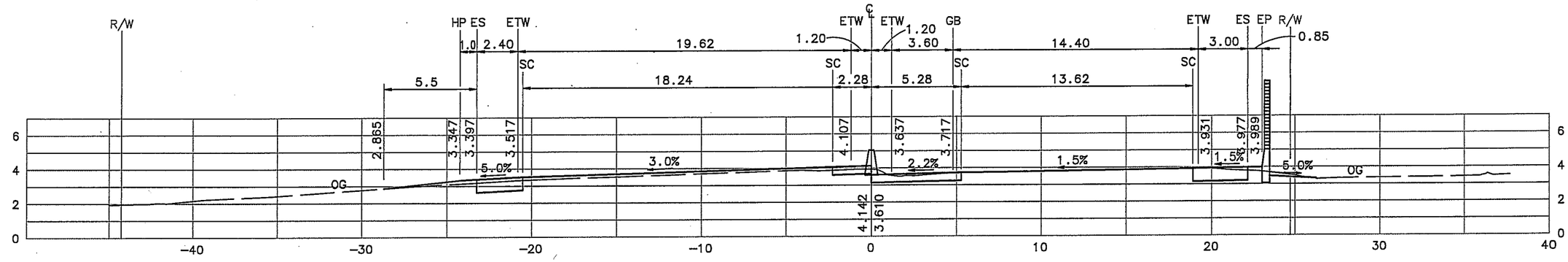

163+00

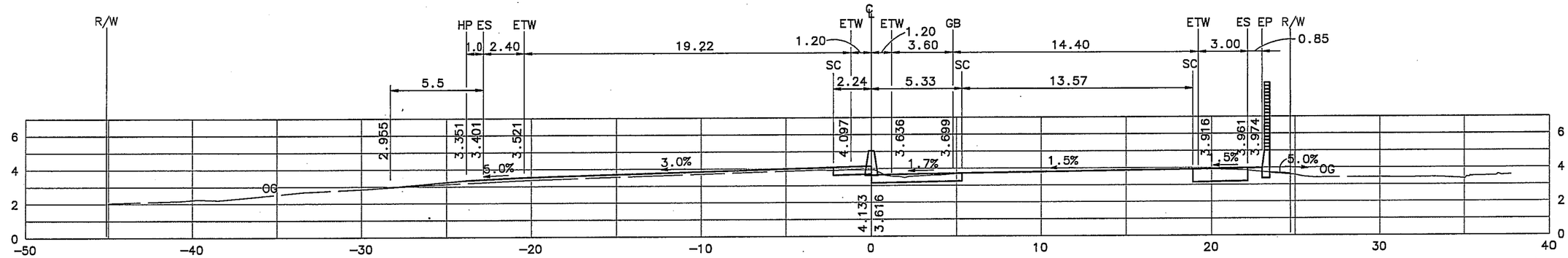

162+80

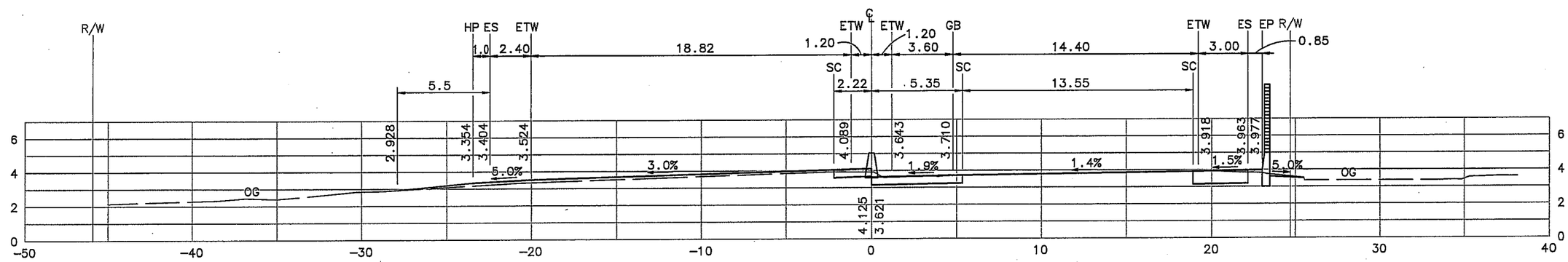

162+60

"US101" LINE
CROSS SECTIONS
SCALE 1:250

ALL DIMENSIONS ARE IN METERS UNLESS OTHERWISE SHOWN

CU 04245	EA 264204

DIST	COUNTY	ROUTE	KILOMETER POST TOTAL PROJECT	SHEET NO.	TOTAL SHEETS
04	SM	101	21.7/28.5		

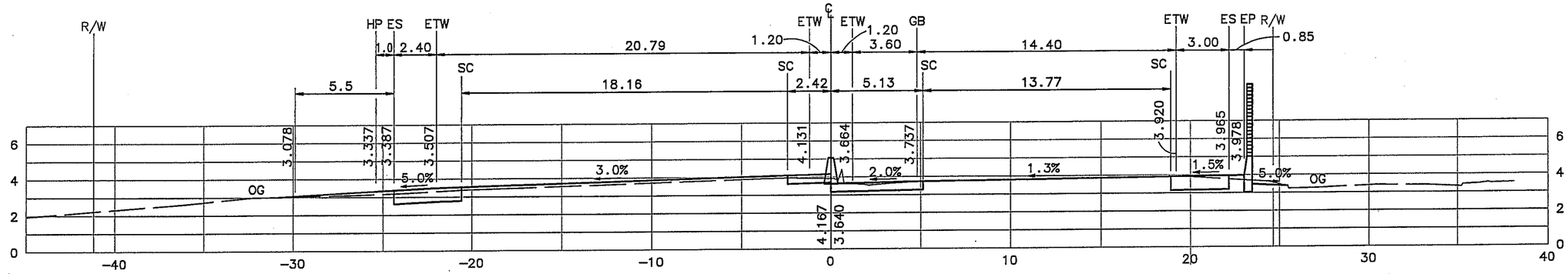

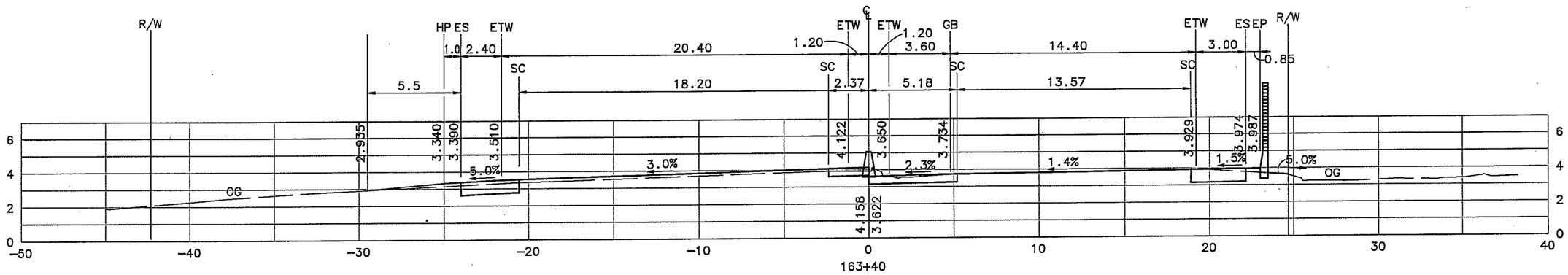

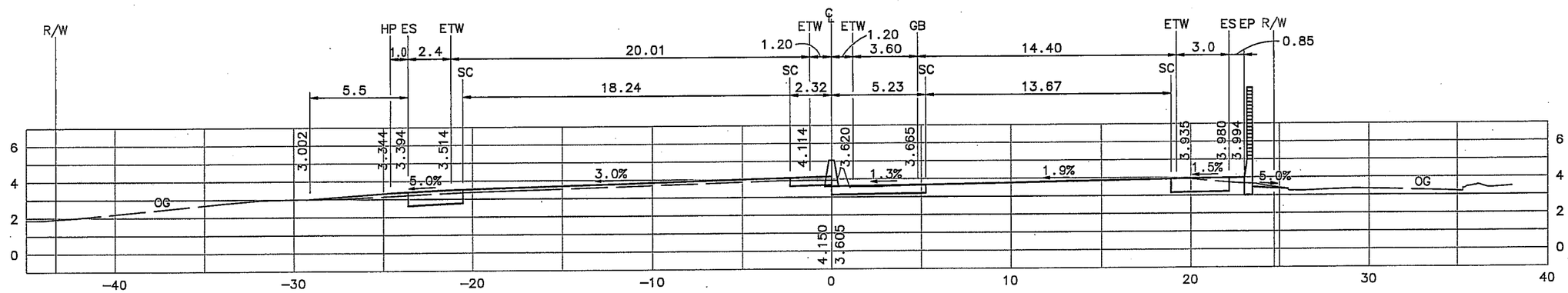

"US101" LINE
CROSS SECTIONS
SCALE 1:250

ALL DIMENSIONS ARE IN METERS UNLESS OTHERWISE SHOWN

CU 04245	EA 264204

DIST	COUNTY	ROUTE	KILOMETER POST TOTAL PROJECT	SHEET NO.	TOTAL SHEETS
04	SM	101	21.7/28.5		

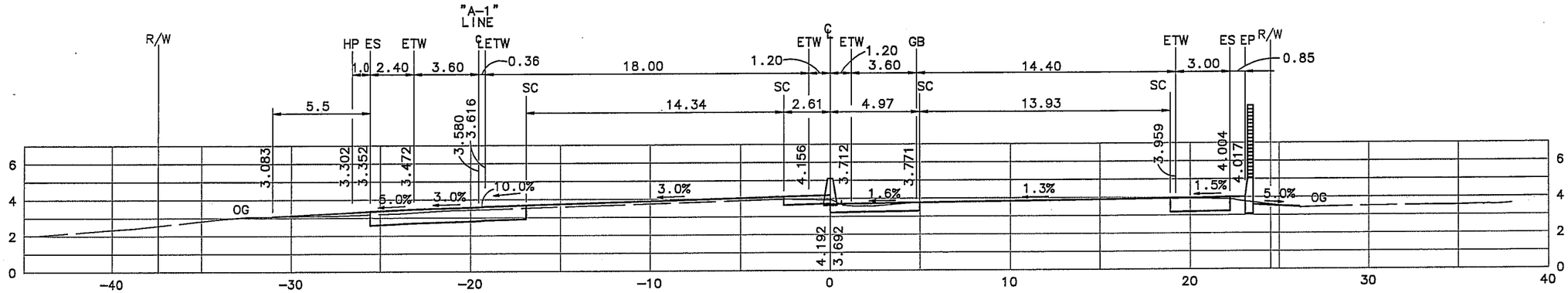

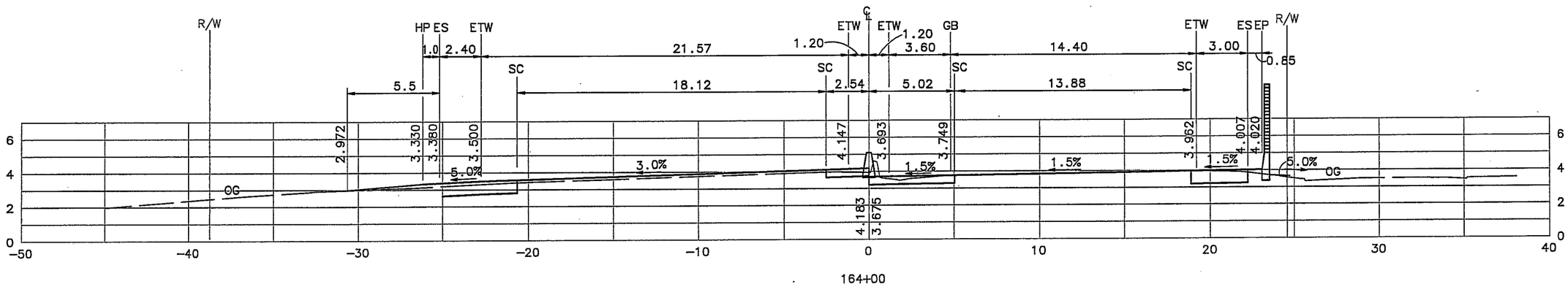

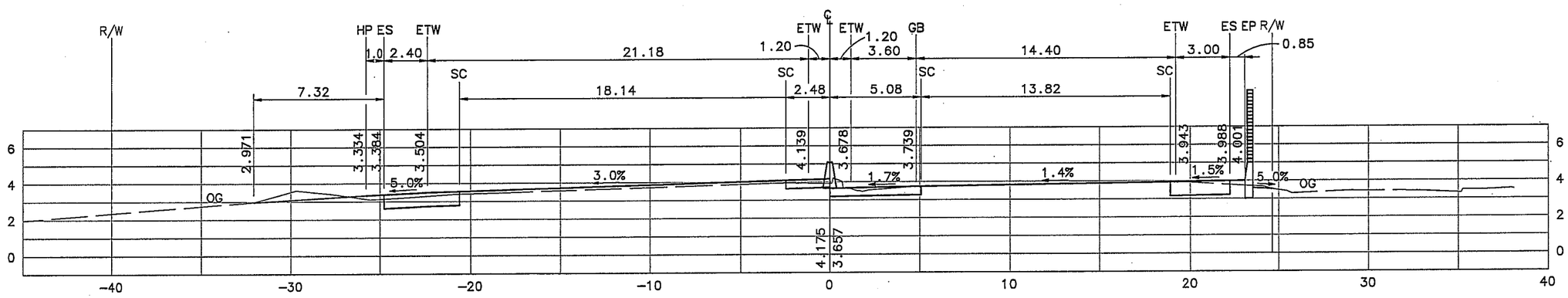

"US101" LINE
CROSS SECTIONS
SCALE 1:250

ALL DIMENSIONS ARE IN METERS UNLESS OTHERWISE SHOWN

CU 04245	EA 264204

DIST	COUNTY	ROUTE	KILOMETER POST TOTAL PROJECT	SHEET NO.	TOTAL SHEETS
04	SM	101	21.7/28.5		

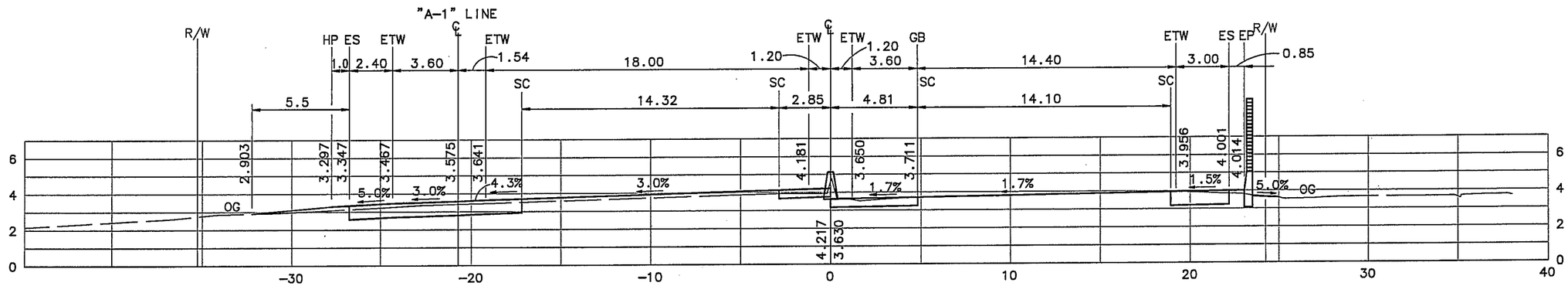

164+80

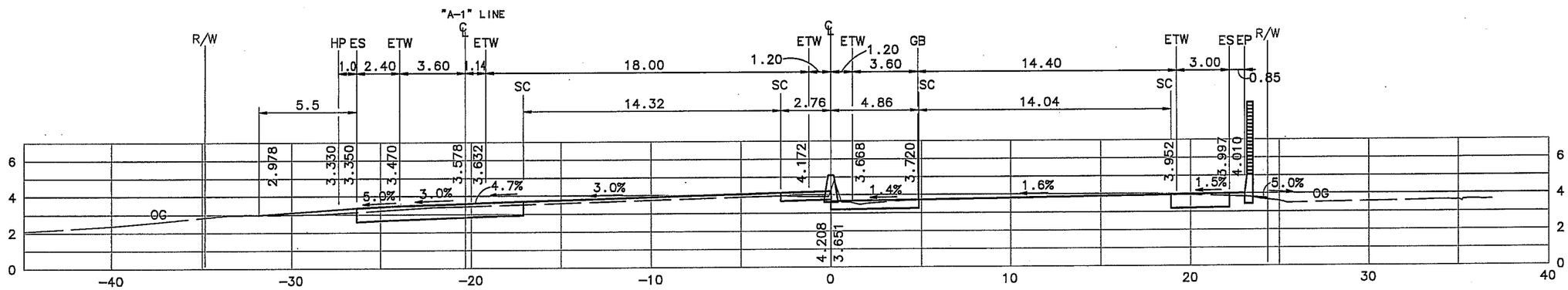

164+60

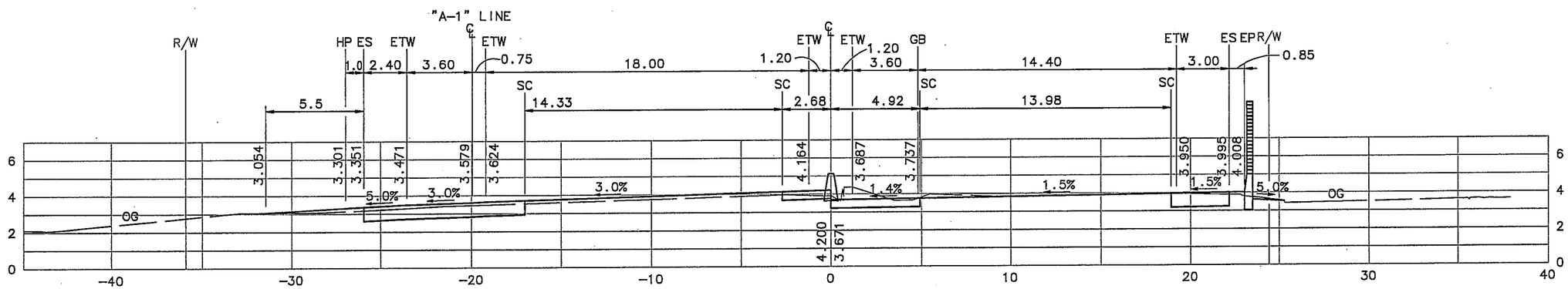

164+40

"US101" LINE
CROSS SECTIONS
SCALE 1:250

ALL DIMENSIONS ARE IN METERS UNLESS OTHERWISE SHOWN

CU 04245	EA 264204

DIST	COUNTY	ROUTE	KILOMETER POST TOTAL PROJECT	SHEET NO.	TOTAL SHEETS
04	SM	101	21.7/28.5		

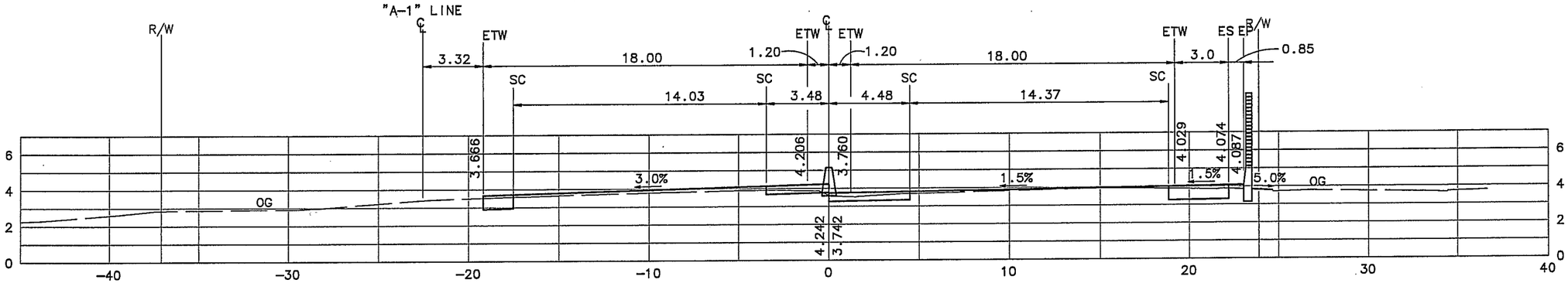

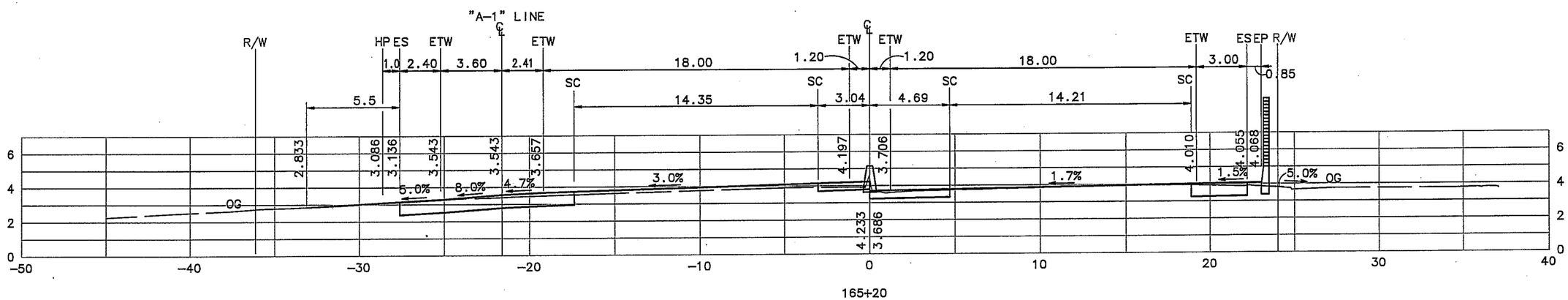

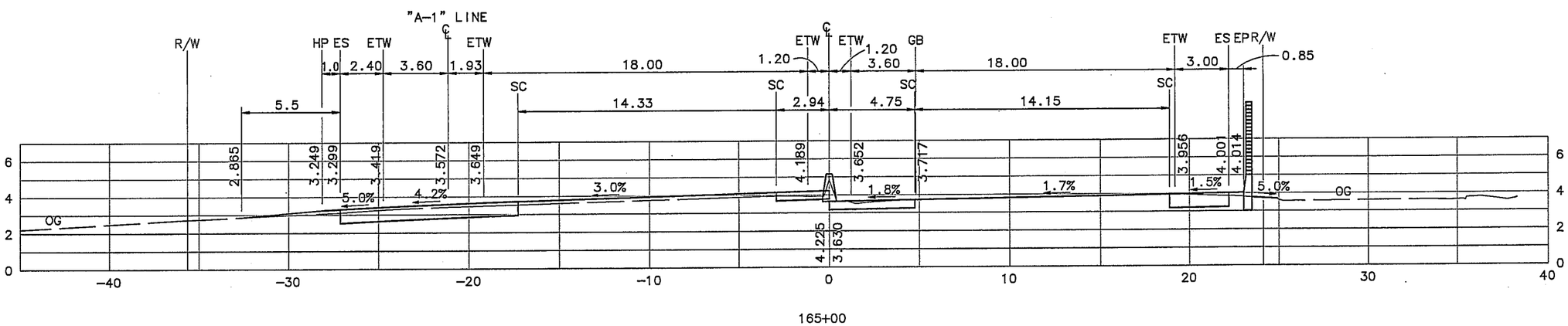

"US101" LINE
CROSS SECTIONS
SCALE 1:250

ALL DIMENSIONS ARE IN METERS UNLESS OTHERWISE SHOWN

CU 04245	EA 264204

DIST	COUNTY	ROUTE	KILOMETER POST TOTAL PROJECT	SHEET NO.	TOTAL SHEETS
04	SM	101	21.7/28.5		

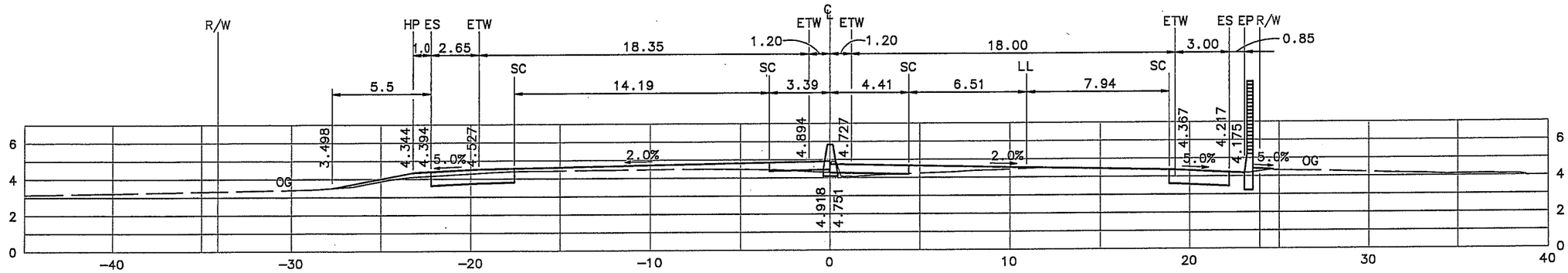

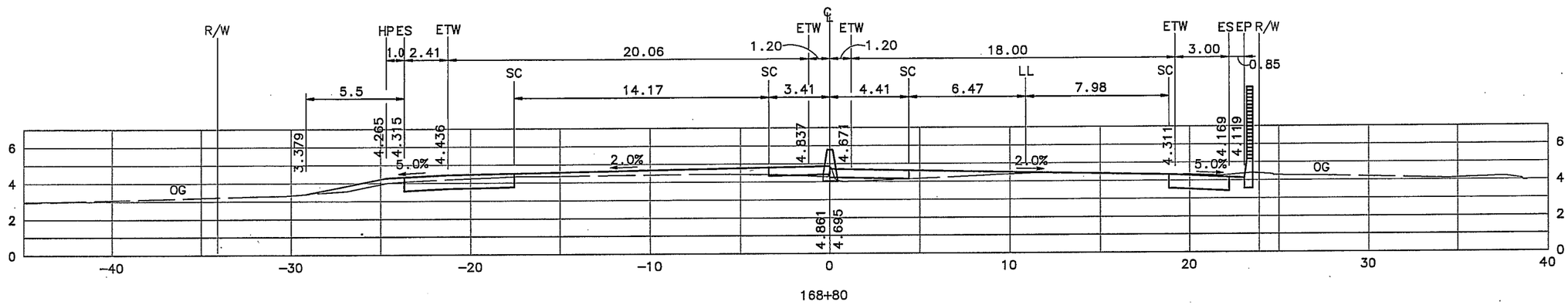

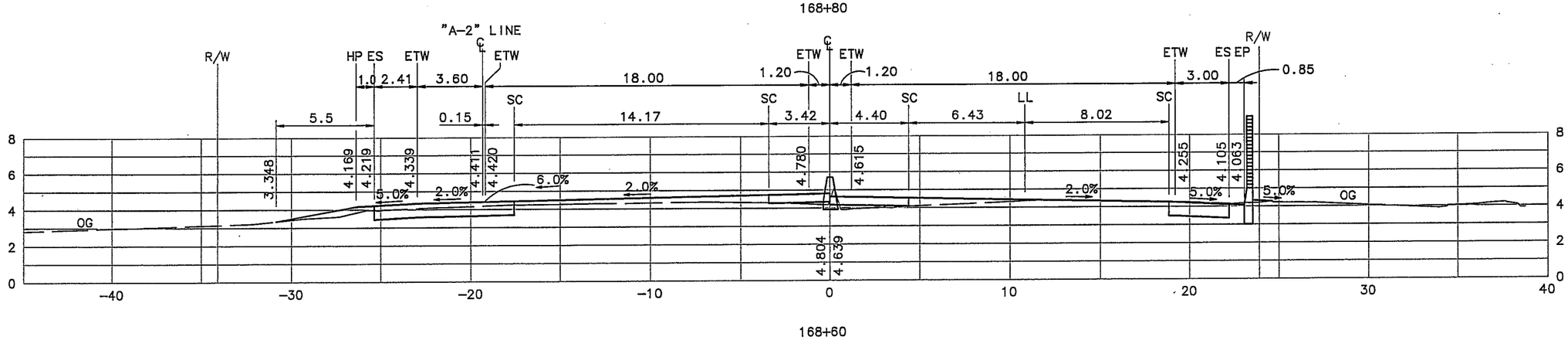

"US101" LINE
CROSS SECTIONS
SCALE 1:250

ALL DIMENSIONS ARE IN METERS UNLESS OTHERWISE SHOWN

CU 04245	EA 264204

DIST	COUNTY	ROUTE	KILOMETER POST TOTAL PROJECT	SHEET NO.	TOTAL SHEETS
04	SM	101	21.7/28.5		

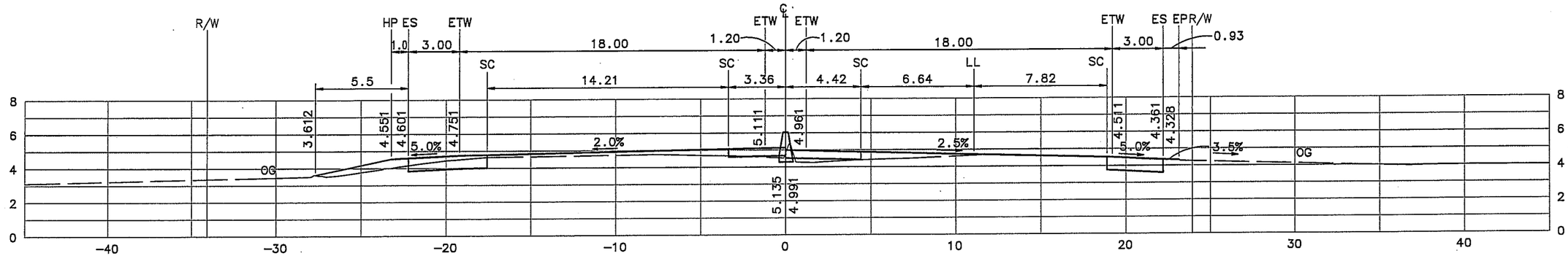

169+60

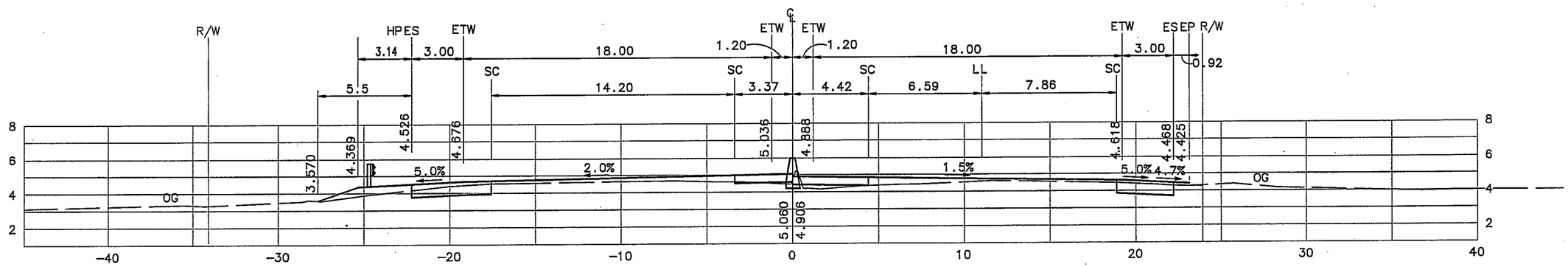

169+40

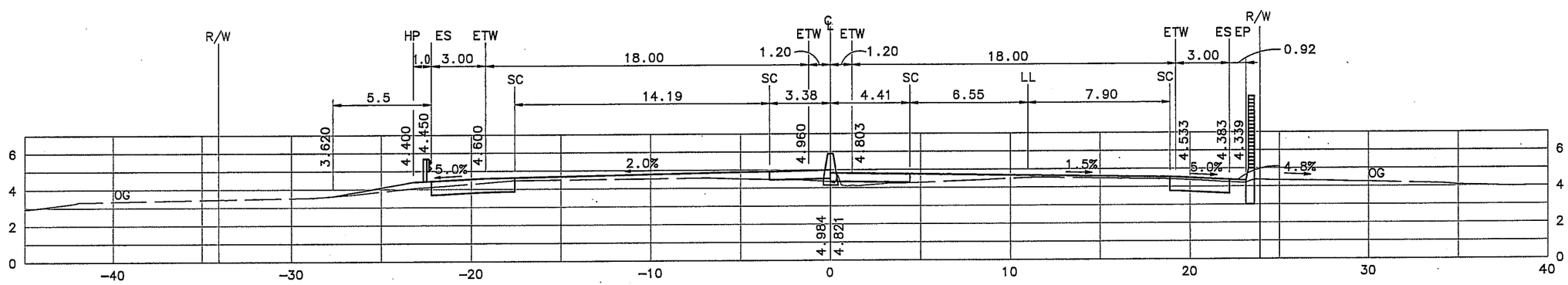

169+20

"US101" LINE
CROSS SECTIONS
SCALE 1:250

ALL DIMENSIONS ARE IN METERS UNLESS OTHERWISE SHOWN

CU 04245	EA 264204

DIST	COUNTY	ROUTE	KILOMETER POST TOTAL PROJECT	SHEET NO.	TOTAL SHEETS
04	SM	101	21.7/28.5		

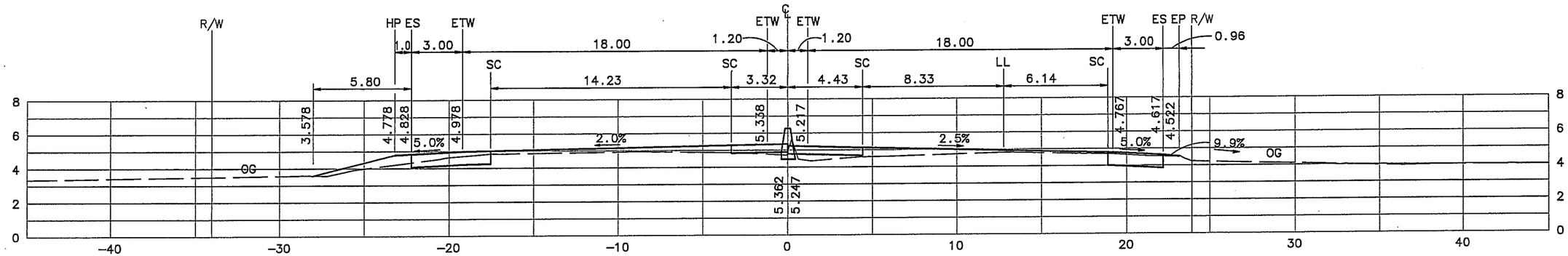

170+20

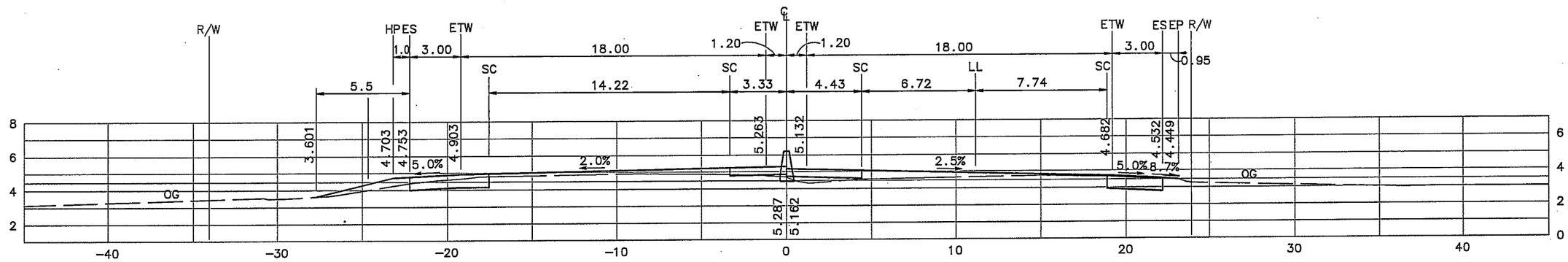

170+00

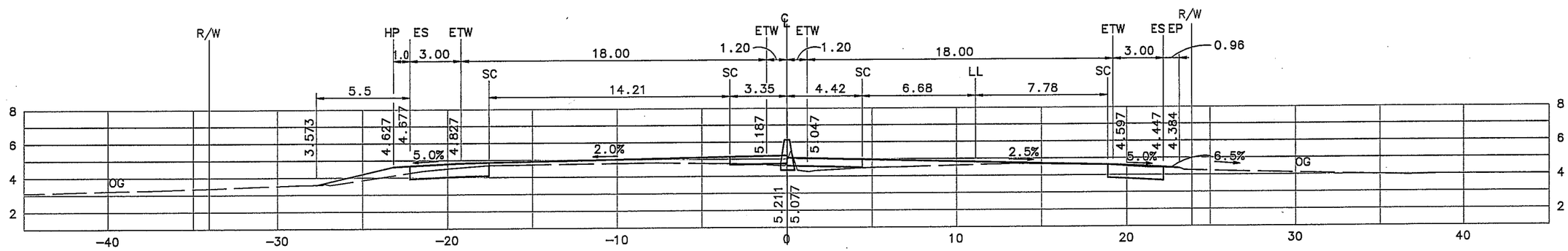

169+80

"US101" LINE
CROSS SECTIONS
SCALE 1:250

ALL DIMENSIONS ARE IN METERS UNLESS OTHERWISE SHOWN

CU 04245	EA 264204

DIST	COUNTY	ROUTE	KILOMETER POST TOTAL PROJECT	SHEET NO.	TOTAL SHEETS
04	SM	101	21.7/28.5		

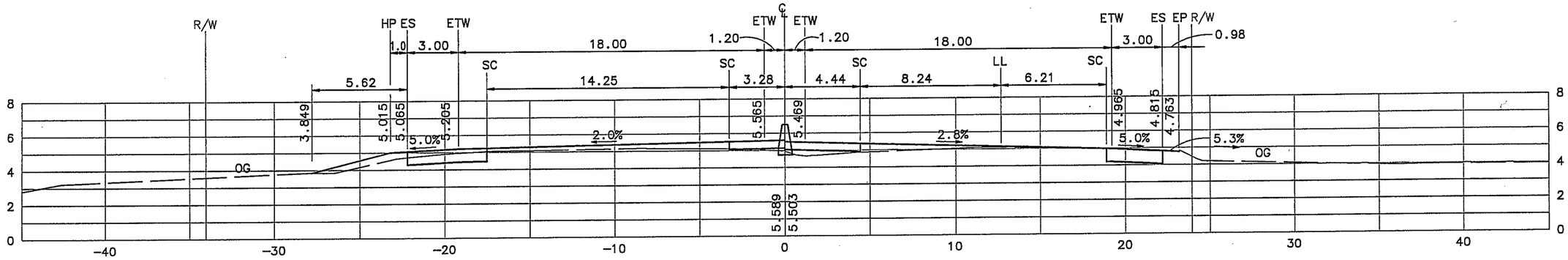

170+80

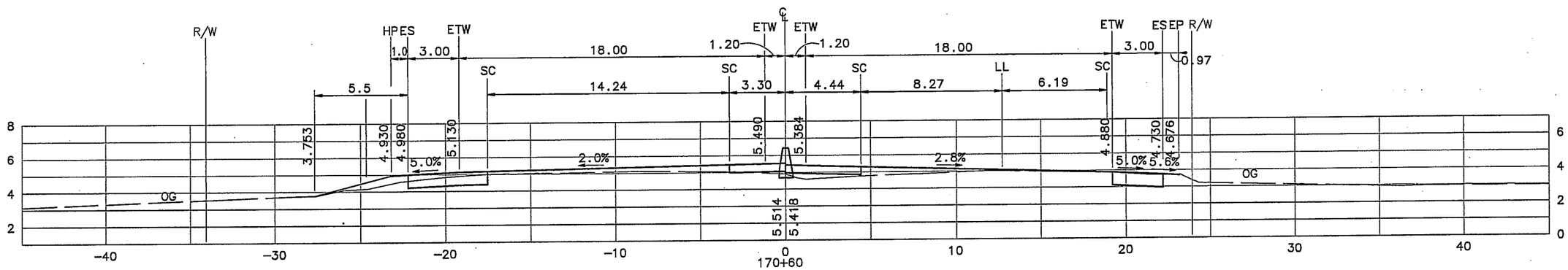

170+60

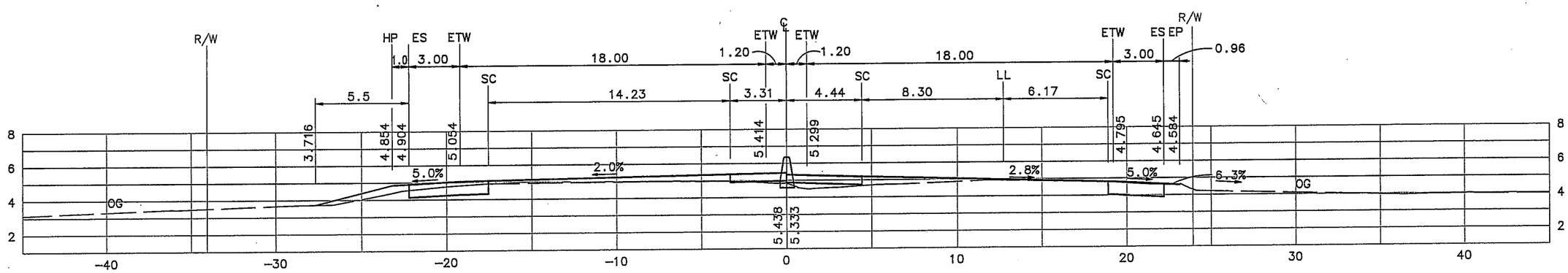

170+40

"US101" LINE
CROSS SECTIONS
SCALE 1:250

ALL DIMENSIONS ARE IN METERS UNLESS OTHERWISE SHOWN

CU 04245	EA 264204

DIST	COUNTY	ROUTE	KILOMETER POST TOTAL PROJECT	SHEET NO.	TOTAL SHEETS
04	SM	101	21.7/28.5		

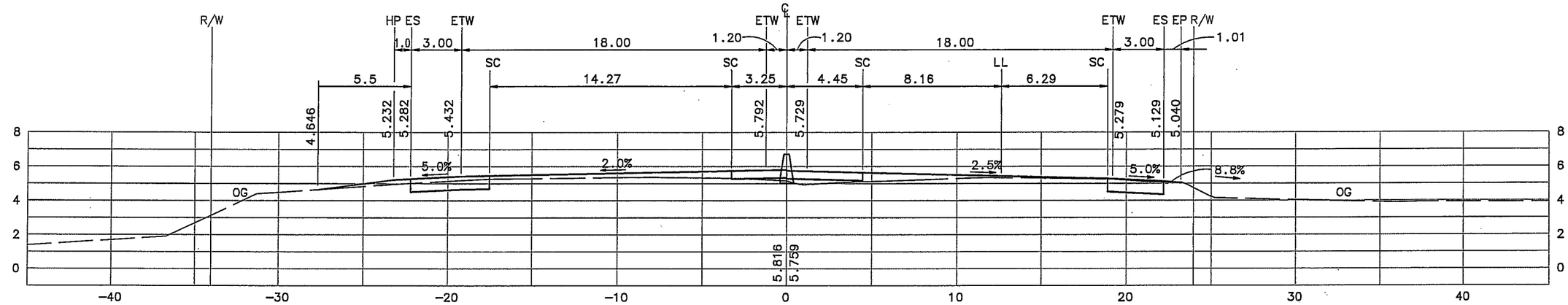

171+40

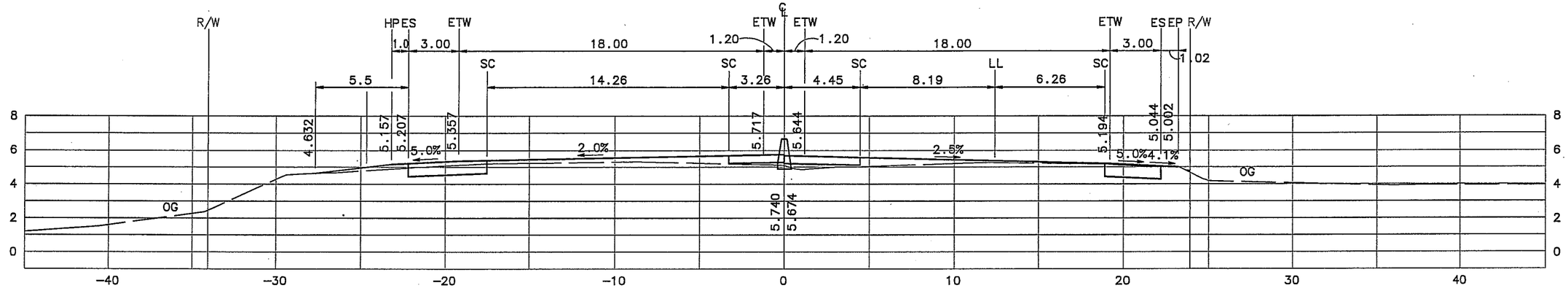

171+20

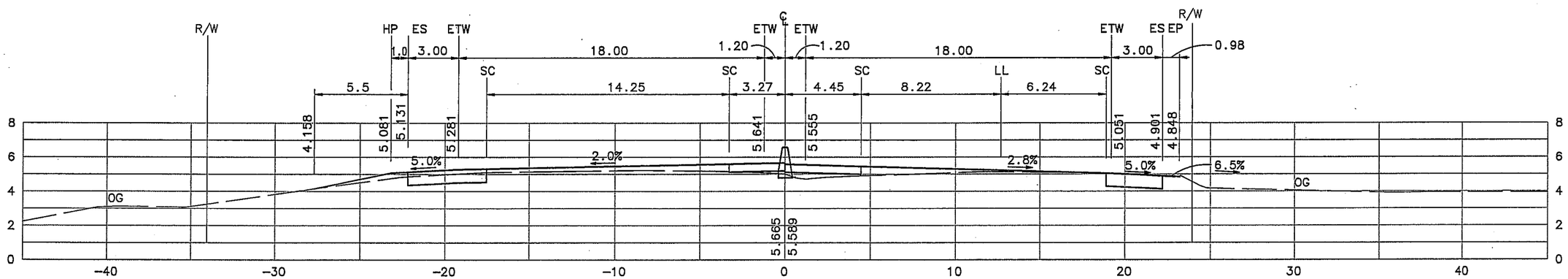

171+00

ALL DIMENSIONS ARE IN METERS UNLESS OTHERWISE SHOWN

"US101" LINE
CROSS SECTIONS
SCALE 1:250

CU 04245 | EA 264204