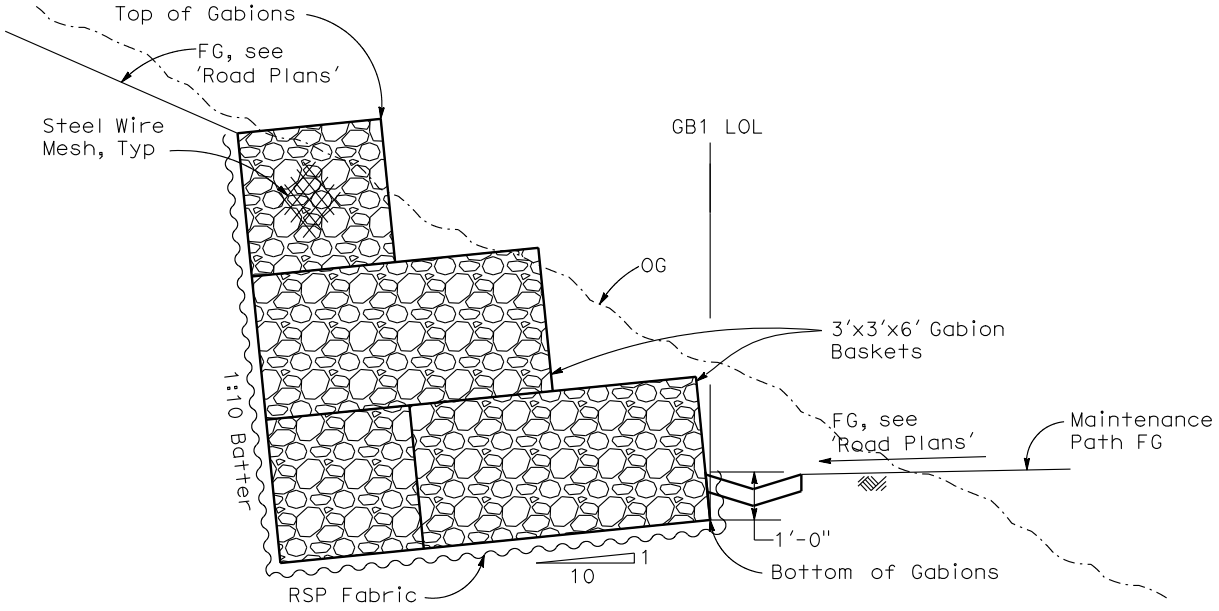

GABIONS - TYPICAL SECTION (H=9')

No Scale