REV.	REV. #	REVISION NOTE	DATE	CHECKED BY

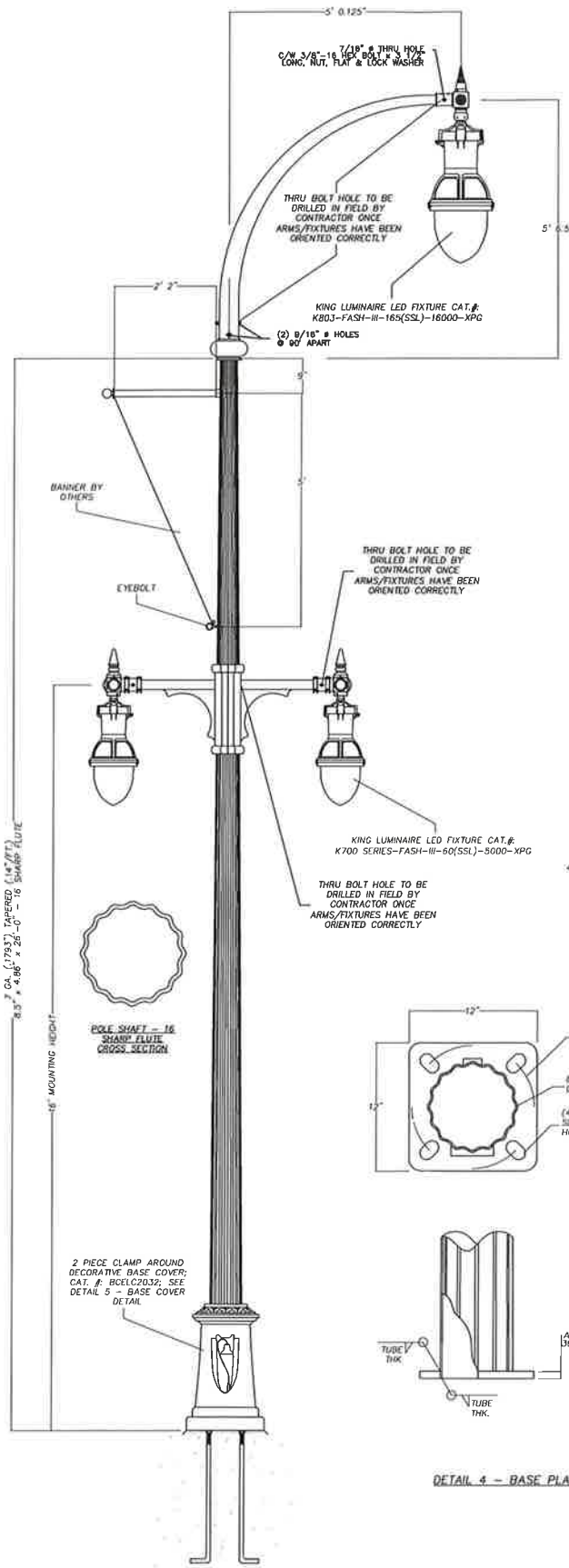

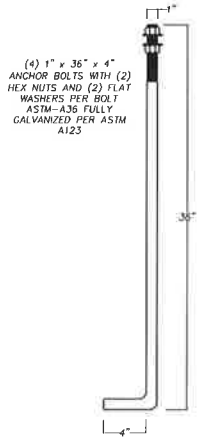

DETAIL 1 - ANCHOR BOLT

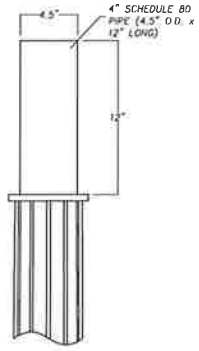

DETAIL 2 - POLE TOP TENON

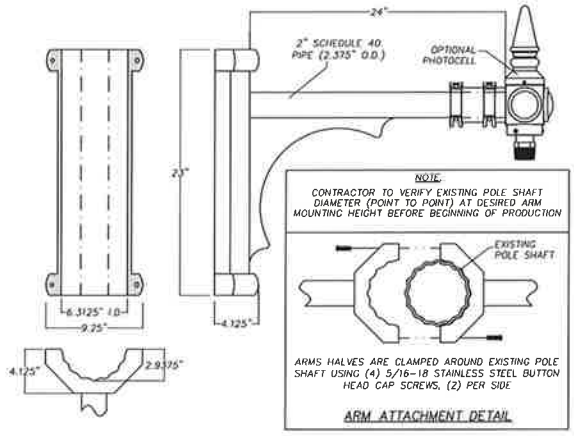

DETAIL 3 - MID-POLE ARM

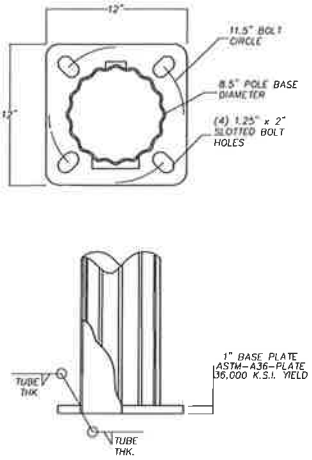

DETAIL 4 - BASE PLATE

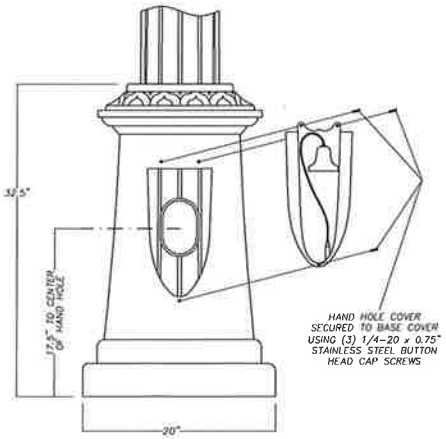

DETAIL 5 - BASE COVER

TWELVE FIFTY FOUR INDUSTRIES

SCL NORTH

SCL-North
Sean Cheney
sean@sclnorth.com
805.441.0070 (cell) 805.548.0200 (office)

DRAWN BY:	CATALOG #:	DATE:
R.R.	12BC-ELC2032/850E260/12AR-ELC24-2AL/K803-LED	1.25.15

CUSTOMER:	PROJECT NAME:	
C.O.SAN MATEO	EL CAMINO REAL	
	DRAWING NUMBER: J-01252015-1	SHEET: 1 OF 1

REV.	ALTERATION	DATE	BY

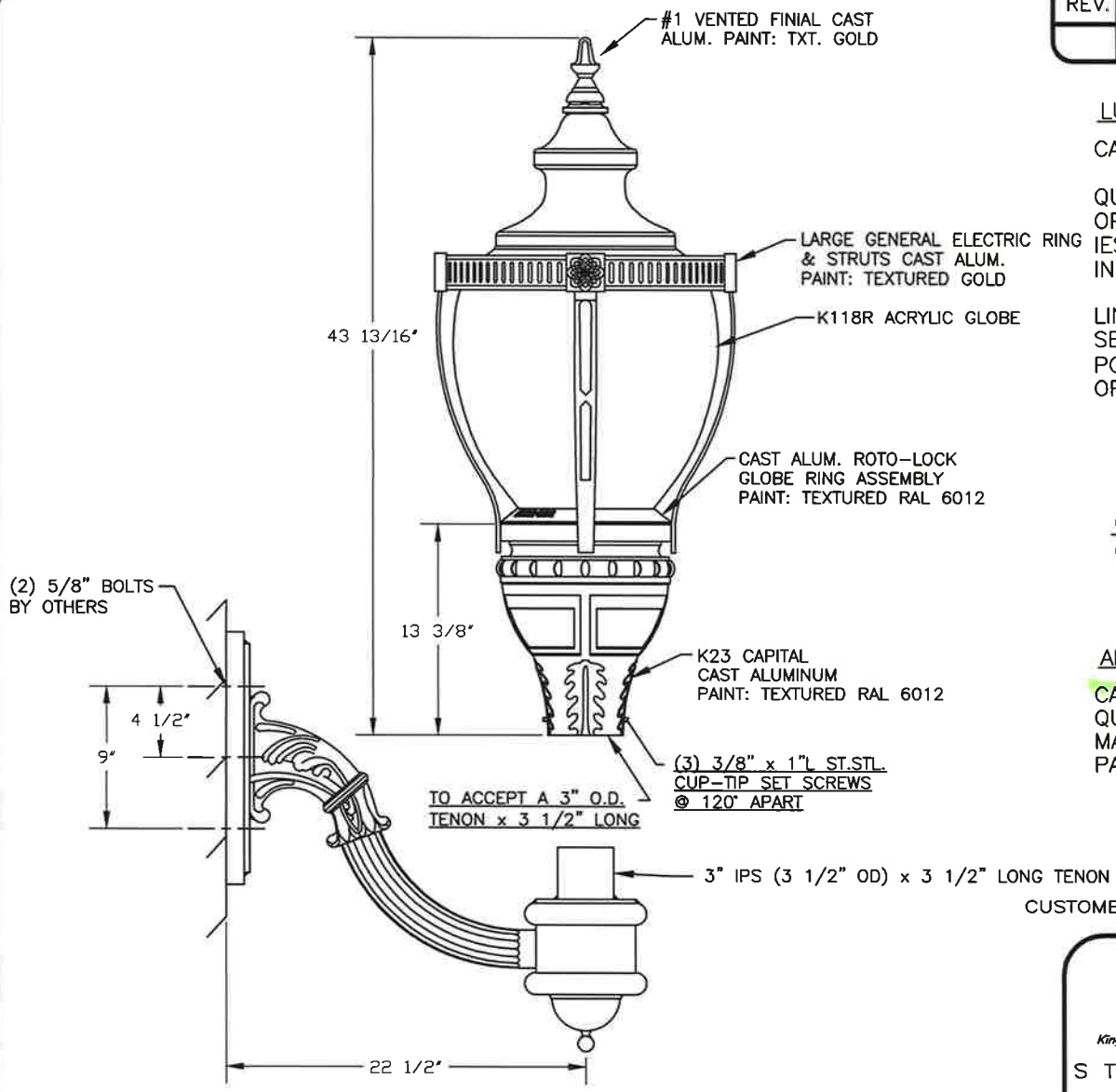

LUMINAIRE SPECIFICATIONS

CATALOGUE NO.:	K118R-B3AR-IV-100W(SSL) -1054-120:277V-K23-GRS-PR7
QUANTITY:	
OPTICAL SYSTEM:	BAFFLED ARRAY ACRYLIC RIPPLED
IES CLASS.:	TYPE IV
INPUT WATTAGE:	100W
	SOLID STATE LIGHTING
LINE VOLTAGE:	120:277V
SERIES:	1054
POLE ADAPTOR:	K23
OPTIONS:	#1 VENTED FINIAL GENERAL ELECTRIC RING & STRUTS 7-PRONG TWISTLOCK PHOTOCELL (PHOTO-EYE BY OTHERS)

OPTIONS:

QUICK DISCONNECT ☒

ARM SPECIFICATIONS

CATALOGUE NO.:	KA52W
QUANTITY:	---
MATERIAL:	ALUMINUM
PAINT:	TXT. MIDNIGHT GREEN RAL 6012

CUSTOMER APPROVAL & DATE: _____

King Luminaire • StressCrete • Est. 1953

STRESSCRETE GROUP

Manufacturing Locations:

Burlington, Ontario 1-800-268-7809

Northport, Alabama 1-800-435-6563

Atchison, Kansas 1-800-837-1024

Jefferson, Ohio 1-800-268-7809

CUSTOMER ORDER No:
-
STRESSCRETE ORDER No:
-

PROJECT/CUSTOMER:				
EL CAMINO - 17TH THROUGH 20TH				
DRAWN BY: SHAUN C	AT: SC3	CHECKED BY	DATE: 1-13-15	REVISION:
DRAWING TYPE: CONCEPT DRAWING			DRAWING NUMBER: SAN MATEO - EL CAMINO STANDARD-3	

REV.	ALTERATION	DATE	BY

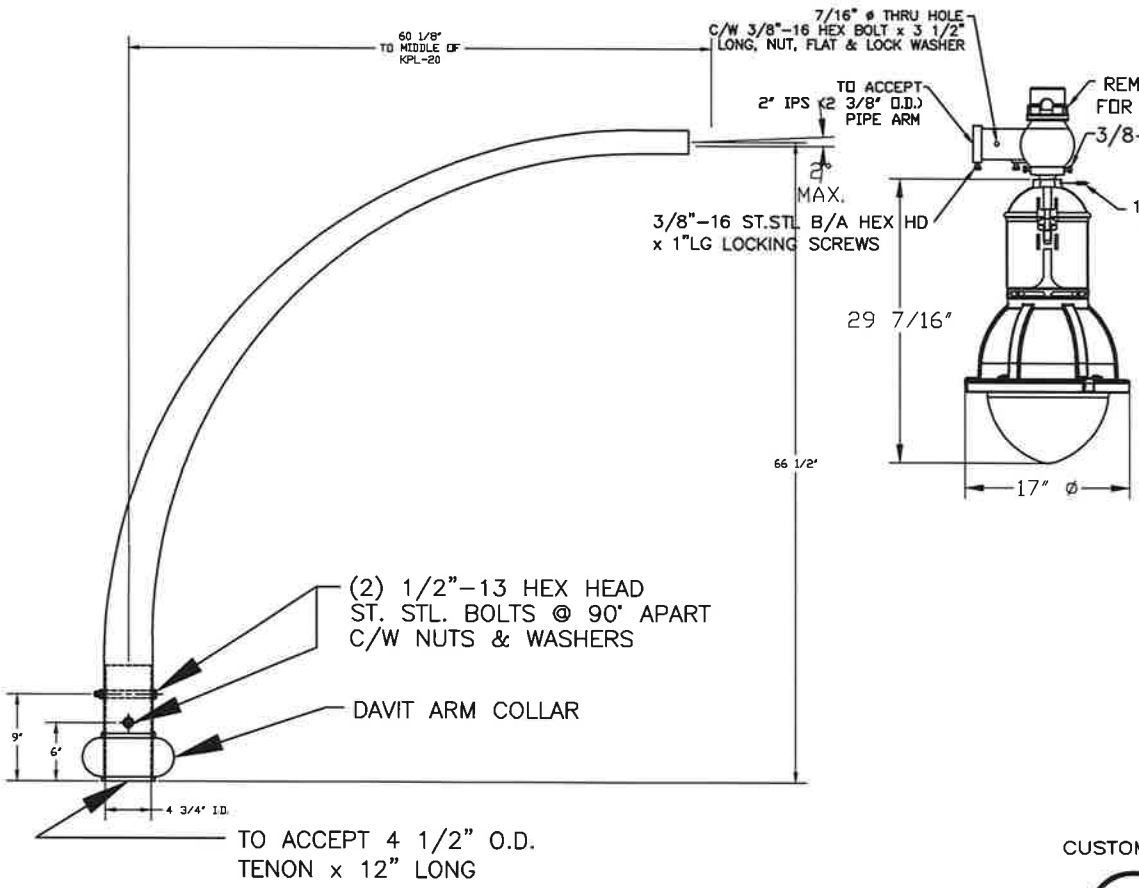

ARM SPECIFICATIONS

CATALOGUE NO.: KA115
QUANTITY: ---
MATERIAL: ALUMINUM
PAINT: SMOOTH MIDNIGHT GREEN RAL 6012

LUMINAIRE SPECIFICATIONS

CATALOGUE NO.: K803-P4SH-III-150(SSL)-8084-120:277V-KPL20-PR7
QUANTITY:
OPTICAL SYSTEM: FLAT ARRAY, SHALLOW LENS
IES CLASS.: TYPE III
WATTAGE: 150W
SOLID STATE LIGHTING
SERIES: 8084
LINE VOLTAGE: 120:277V
PAINT: SMOOTH MIDNIGHT GREEN RAL 6012
OPTIONS: S/F KPL20 LEVELING DEVICE C/W 7-PRONG TWISTLOCK PHOTOCELL (PHOTO-EYE BY OTHERS)

OPTIONS:

QUICK DISCONNECT [X]

CUSTOMER APPROVAL & DATE: _____

King Luminaire • StressCrete • Est. 1953

STRESSCRETE GROUP

Manufacturing Locations:

Burlington, Ontario 1-800-268-7809
Northport, Alabama 1-800-435-6563
Atchison, Kansas 1-800-837-1024
Jefferson, Ohio 1-800-268-7809

PROJECT/CUSTOMER: SAN MATEO CITY STANDARDS
EL CAMINO REAL - 17TH TO 20TH

DRAWN BY:	AT:	CHECKED BY	DATE:	REVISION:
SHAUN C	SC3		1-13-15	

CUSTOMER ORDER No:

STRESSCRETE ORDER NO.:

DRAWING TYPE: CONCEPT DRAWING

DRAWING NUMBER: SAN MATEO - EL CAMINO STANDARD-2

NOTE:
1) PHOTO-EYE BY OTHERS
2) PIPE SEALER TO BE USED ON ALL N.P.T. THREADED COMPONENTS

REV.	ALTERATION	DATE	BY

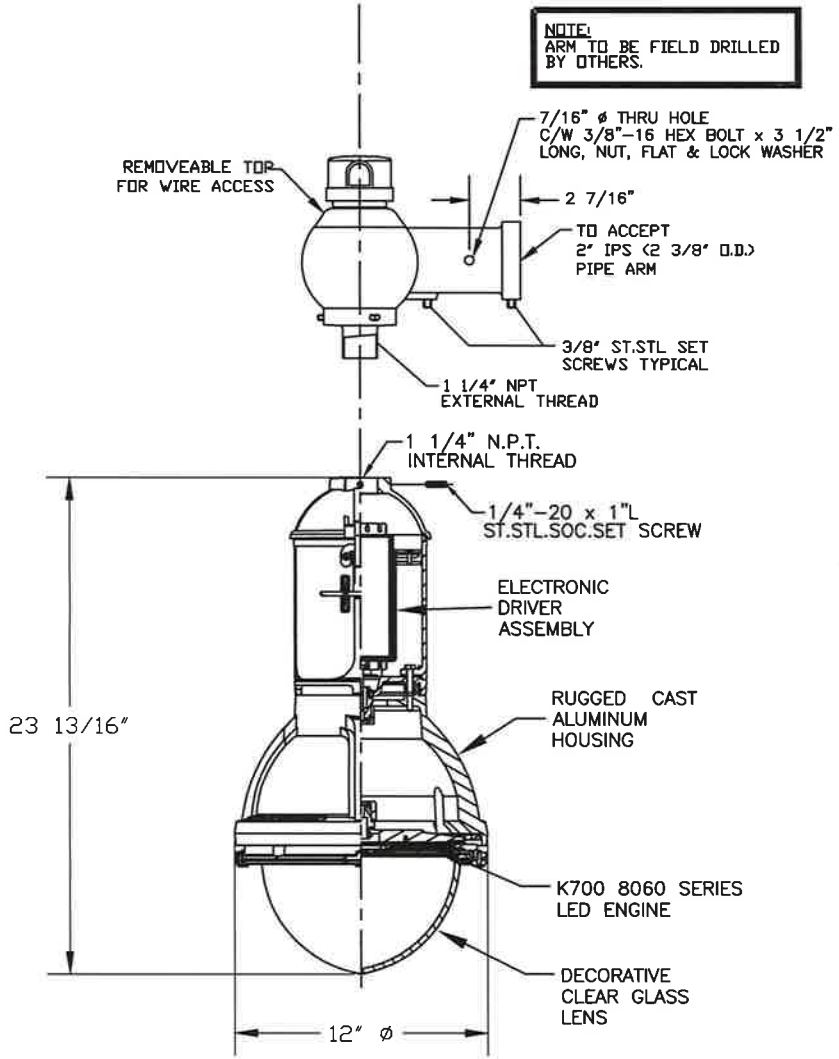

SPECIFICATIONS

CATALOGUE NO.:	K703-P4SH-III-60(SSL) -8060-120:277-KPL20-PR7
QUANTITY:	
OPTICAL SYSTEM:	FLAT ARRAY, CLEAR SHALLOW LENS
IES LTG. CLASS.:	TYPE III
INPUT WATTAGE:	60W
	SOLID STATE LIGHTING
SERIES:	8060
CCT:	4300K (+/- 300K)
LINE VOLTAGE:	120:277V
PAINT:	SMOOTH MIDNIGHT GREEN RAL 6012
OPTIONS:	KPL-20 LEVELING DEVICE C/W 7-PRONG TWISTLOCK PHOTOCELL (PHOTO-EYE BY OTHERS)

OPTIONS:

QUICK DISCONNECT [X]

CUSTOMER APPROVAL & DATE:

King Luminaire • StressCrete Est. 1953 •

STRESSCRETE GROUP

Manufacturing Locations:

Burlington, Ontario 1-800-268-7809

Northport, Alabama 1-800-435-6563

Atchison, Kansas 1-800-837-1024

Jefferson, Ohio 1-800-268-7809

PROJECT/CUSTOMER: SAN MATEO CITY STANDARDS EL CAMINO REAL - 17TH TO 20TH

DRAWN BY:	AT:	CHECKED BY:	DATE:	REVISION:
SHAUN C	SC3		1-13-14	

DRAWING TYPE: CONCEPT DRAWING

DRAWING NUMBER: SAN MATEO - EL CAMINO STANDARD-1

CUSTOMER ORDER No: ---

KING U.S. ORDER No: ---

NOTE:

1) PHOTO-EYE BY OTHERS

2) PIPE SEALER TO BE USED ON ALL N.P.T. THREADED COMPONENTS