For Earthwork Development Only

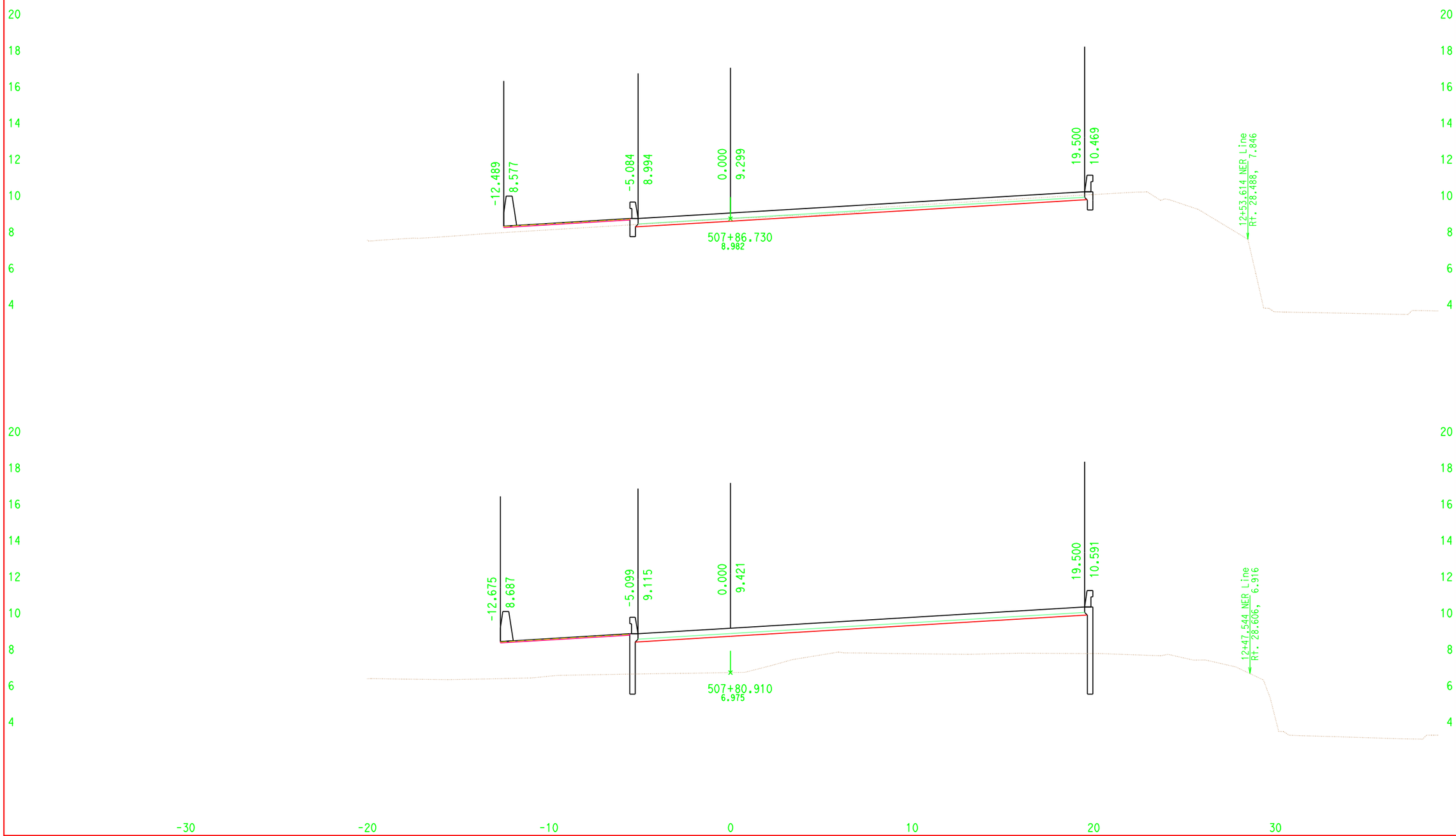

DATE: 10/24/2007

ALL DIMENSIONS ARE IN METERS

Scale Ratio: 1:100 Horiz.
1:100 Vert.

Project: 00245 File: D:\USERS\Project\00245\JT_Files\N_Line\DesignX\jt_n1_des.ear

N1
CROSS SECTIONS

SHEET 1 OF XXX

For Earthwork Development Only

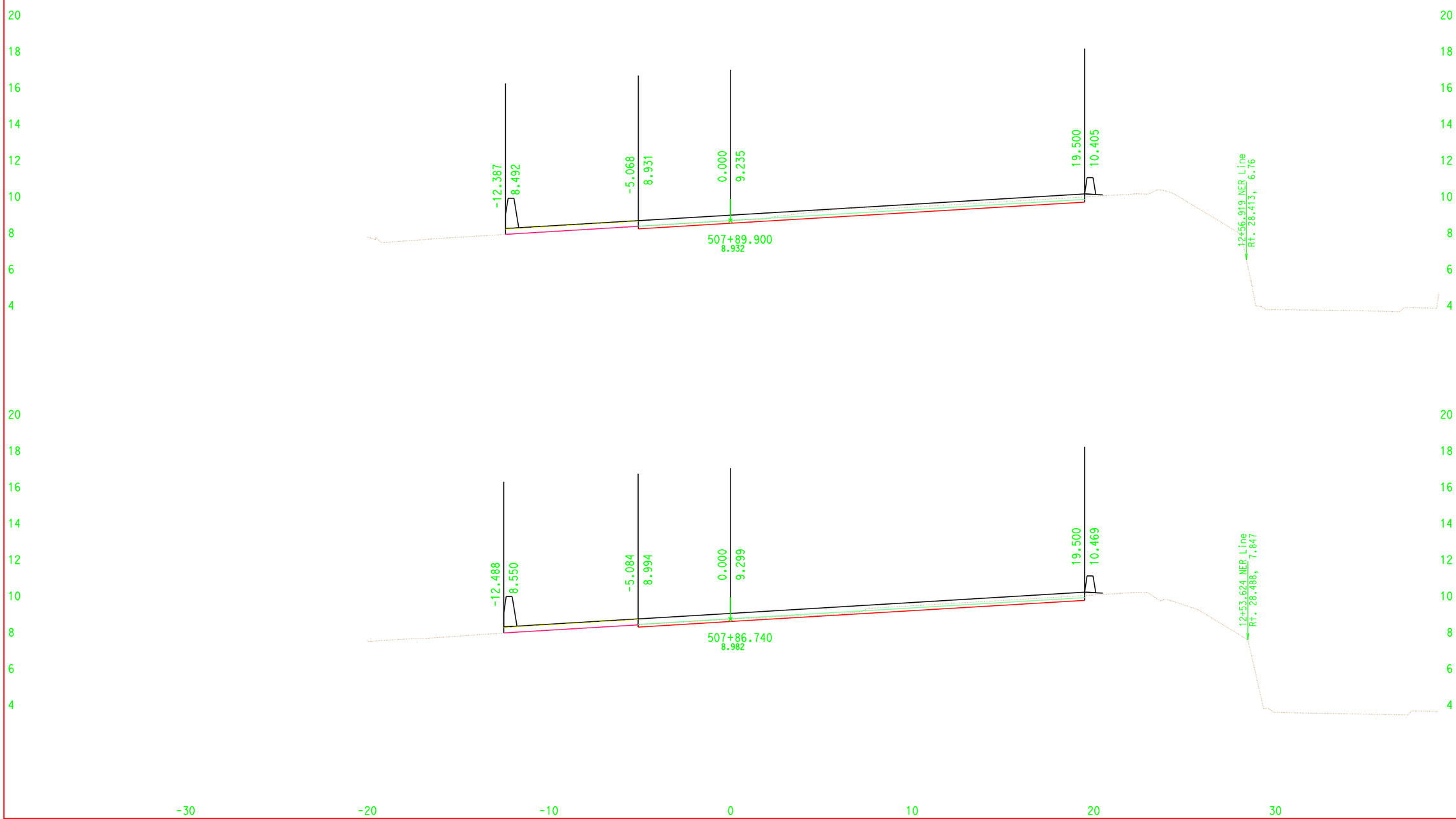

DATE: 10/24/2007

ALL DIMENSIONS ARE IN METERS

Scale Ratio: 1:100 Horiz.
1:100 Vert.

N1
CROSS SECTIONS
SHEET 2 OF XXX

Project: 00245 File: D:\USERS\Project\00245\JT_Files\N_Line\DesignX\jt_n1_des.ear

For Earthwork Development Only

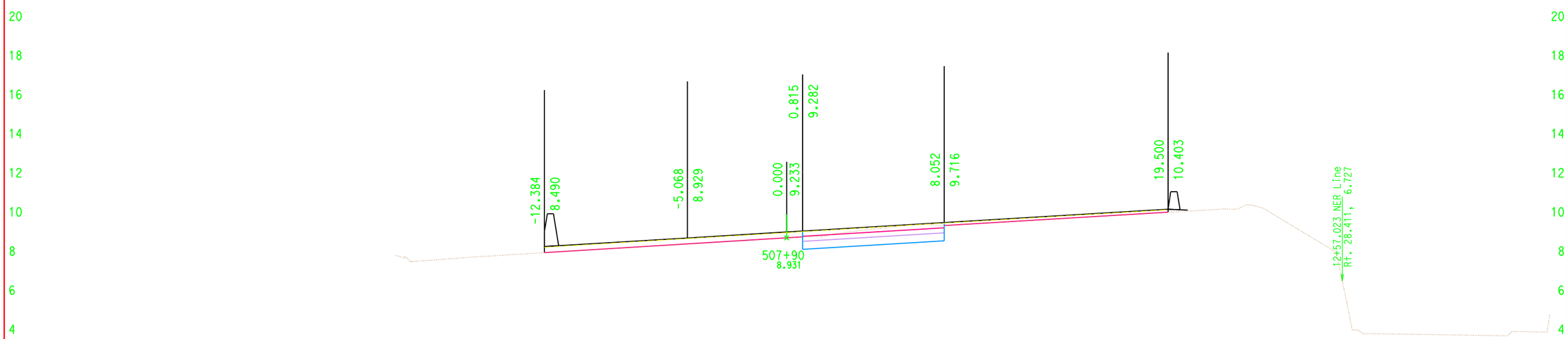

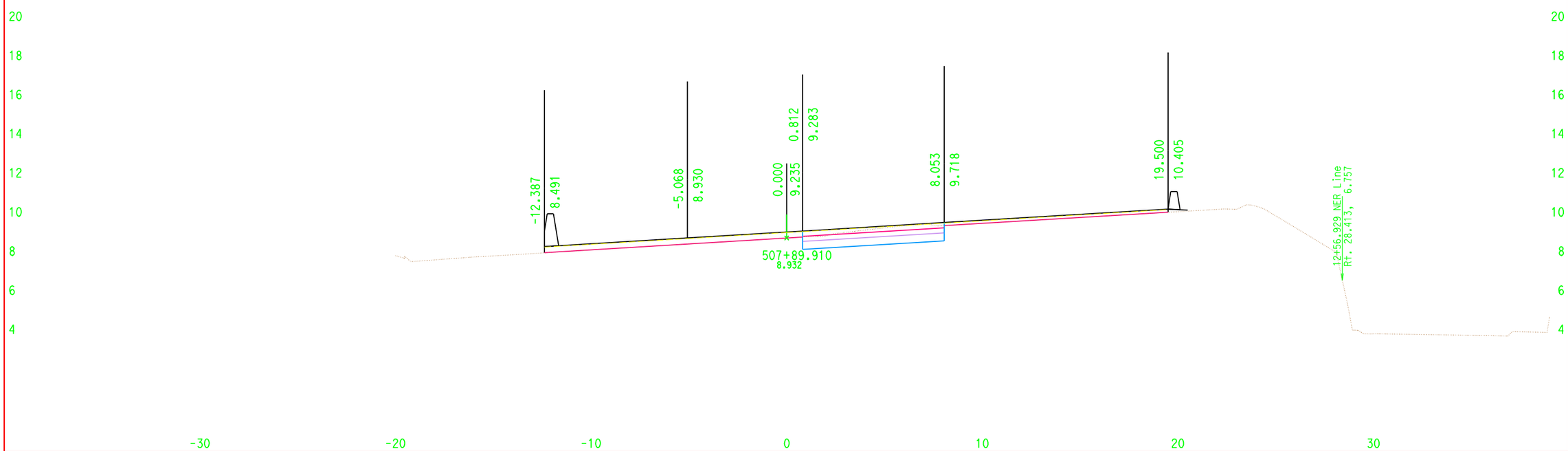

DATE: 10/24/2007

ALL DIMENSIONS ARE IN METERS

Scale Ratio: 1:100 Horiz.
1:100 Vert.

N1
CROSS SECTIONS
SHEET 3 OF XXX

Project: 00245 File: D:\USERS\Project\00245\JT_Files\N_Line\DesignX\jt_n1_des.ear

For Earthwork Development Only

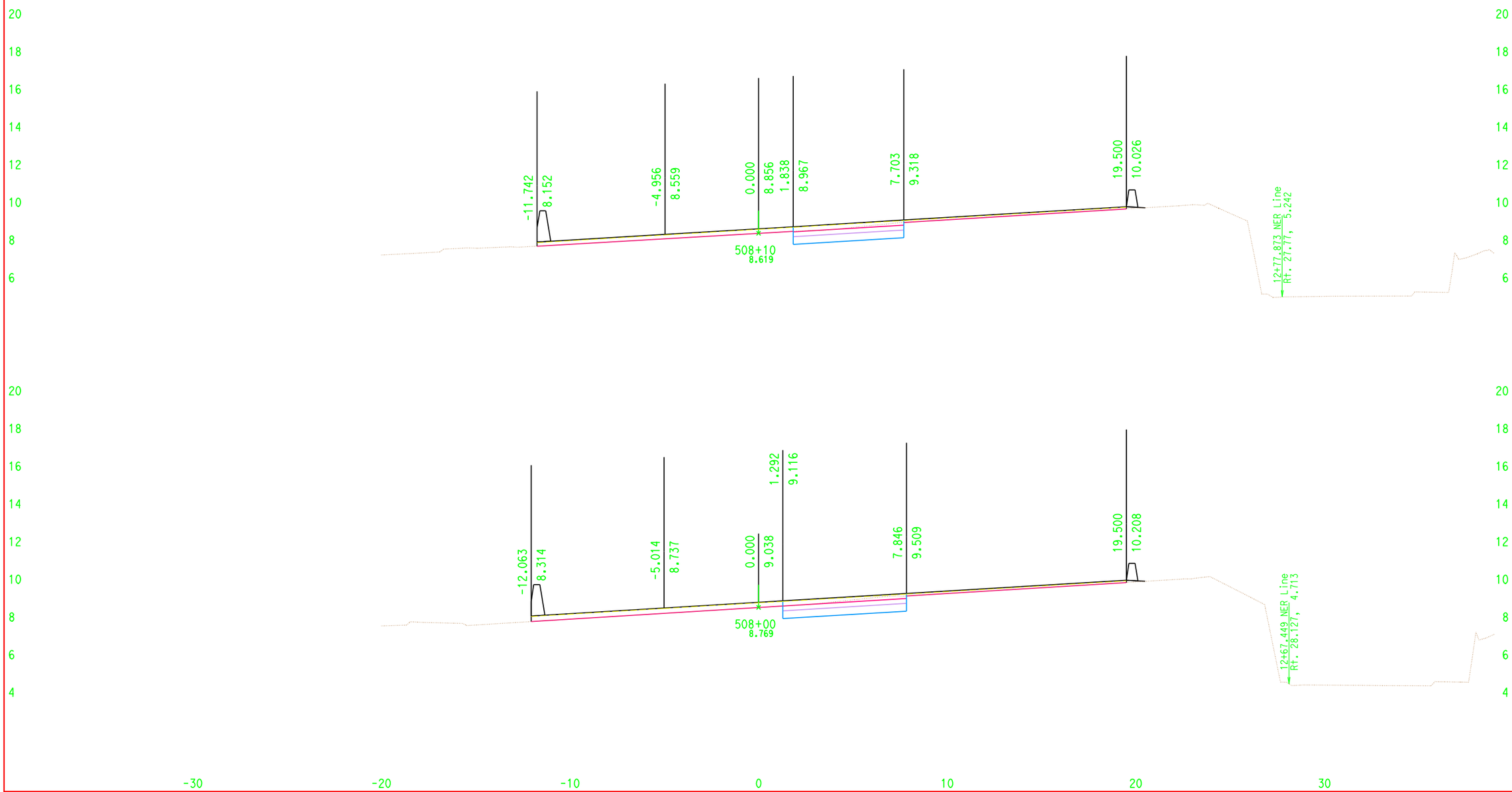

DATE: 10/24/2007

ALL DIMENSIONS ARE IN METERS

Scale Ratio: 1:100 Horiz.
1:100 Vert.

N1
CROSS SECTIONS

SHEET 4 OF XXX

Project: 00245 File: D:\USERS\Project\00245\JT_Files\N_Line\DesignX\jt_n1_des.ear

For Earthwork Development Only

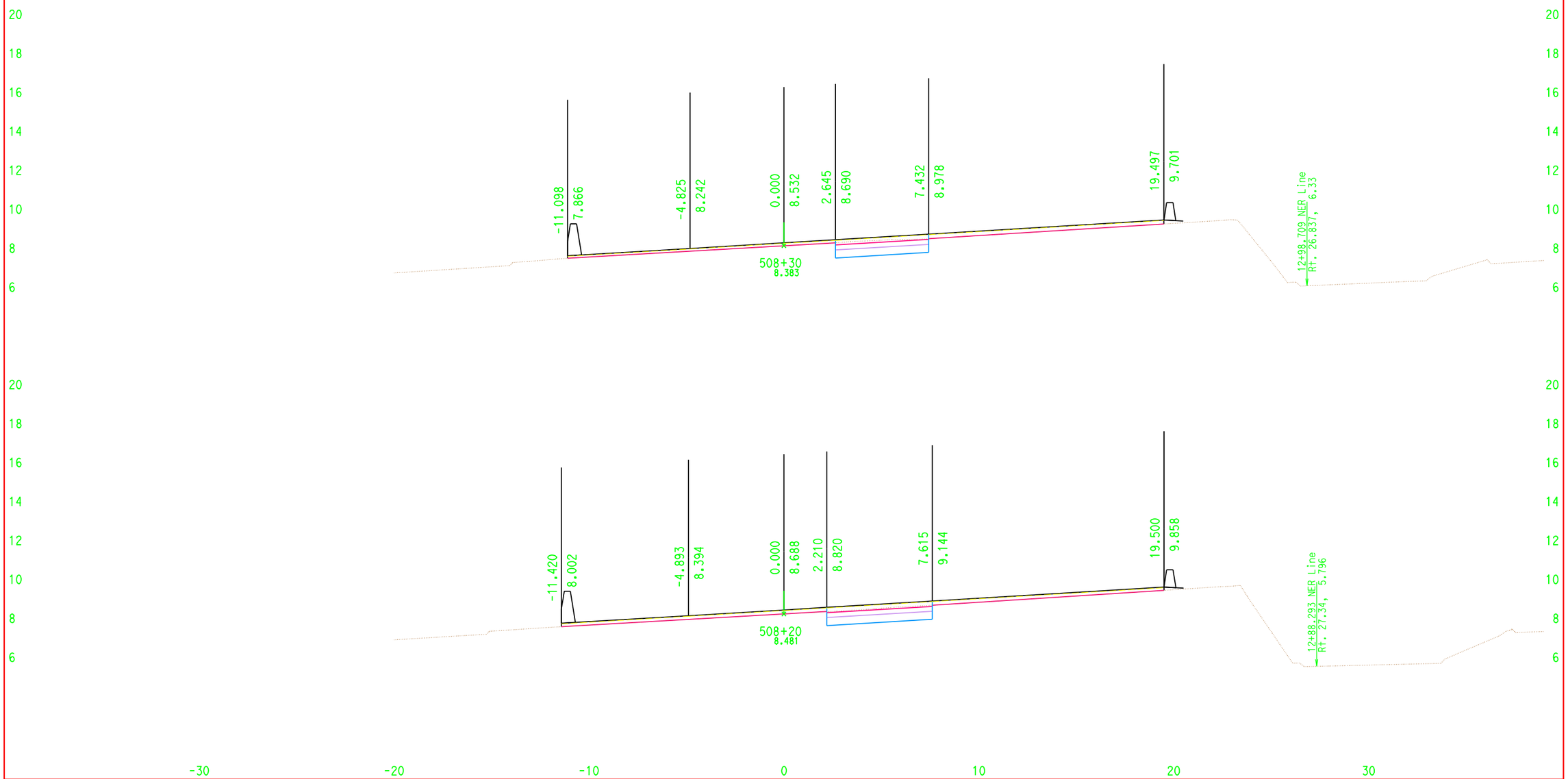

DATE: 10/24/2007

ALL DIMENSIONS ARE IN METERS

Scale Ratio: 1:100 Horiz.
1:100 Vert.

Project: 00245 File: D:\USERS\Project\00245\JT_Files\N_Line\DesignX\jt_n1_des.ear

N1
CROSS SECTIONS

SHEET 5 OF XXX

For Earthwork Development Only

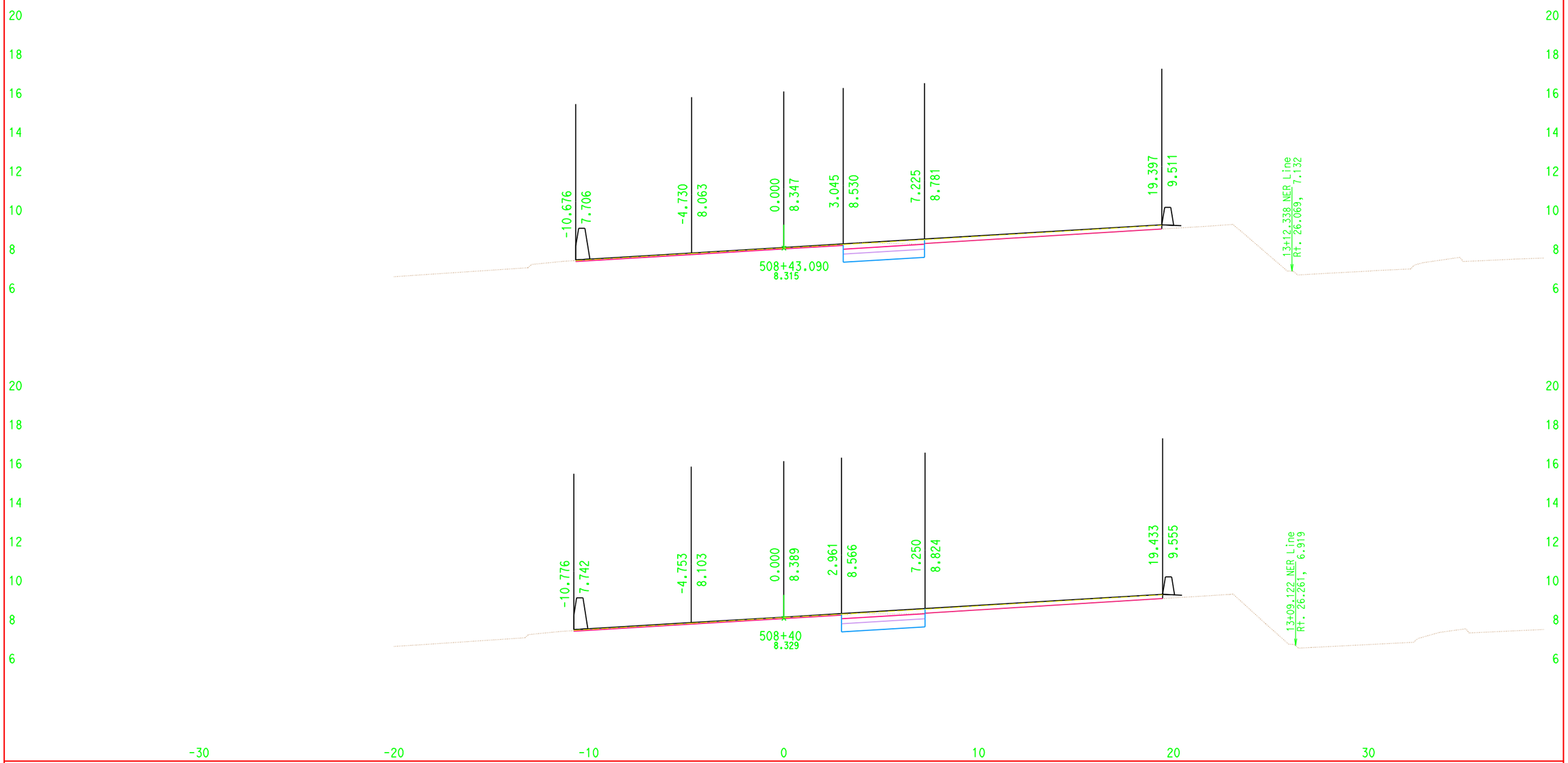

DATE: 10/24/2007 ALL DIMENSIONS ARE IN METERS

Scale Ratio: 1:100 Horiz.
1:100 Vert.

N1
CROSS SECTIONS
SHEET 6 OF XXX

Project: 00245 File: D:\USERS\Project\00245\JT_Files\N_Line\DesignX\jt_n1_des.ear

For Earthwork Development Only

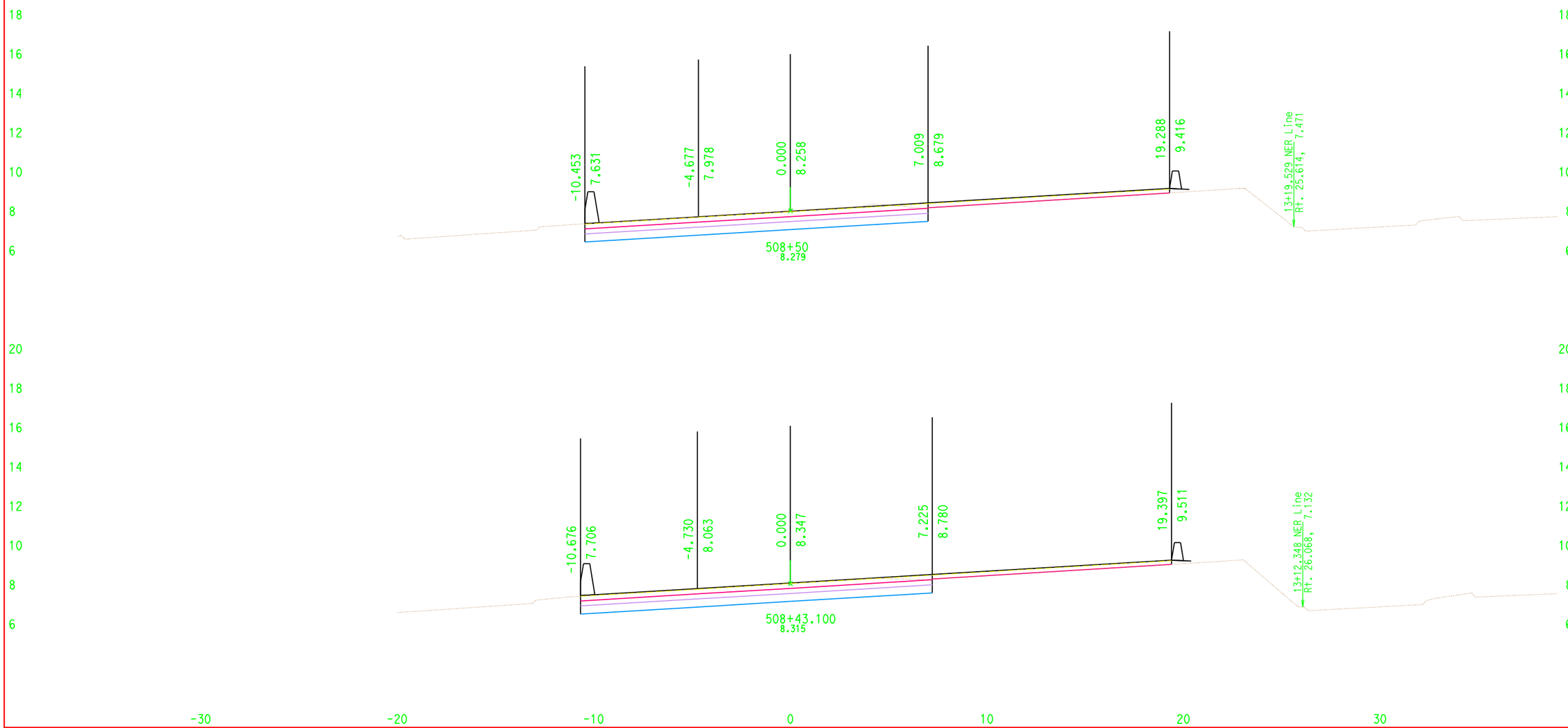

DATE: 10/24/2007 ALL DIMENSIONS ARE IN METERS

Scale Ratio: 1:100 Horiz.
1:100 Vert.

N1
CROSS SECTIONS
SHEET 7 OF XXX

Project: 00245 File: D:\USERS\Project\00245\JT_Files\N_Line\DesignX\jt_n1_des.ear

For Earthwork Development Only

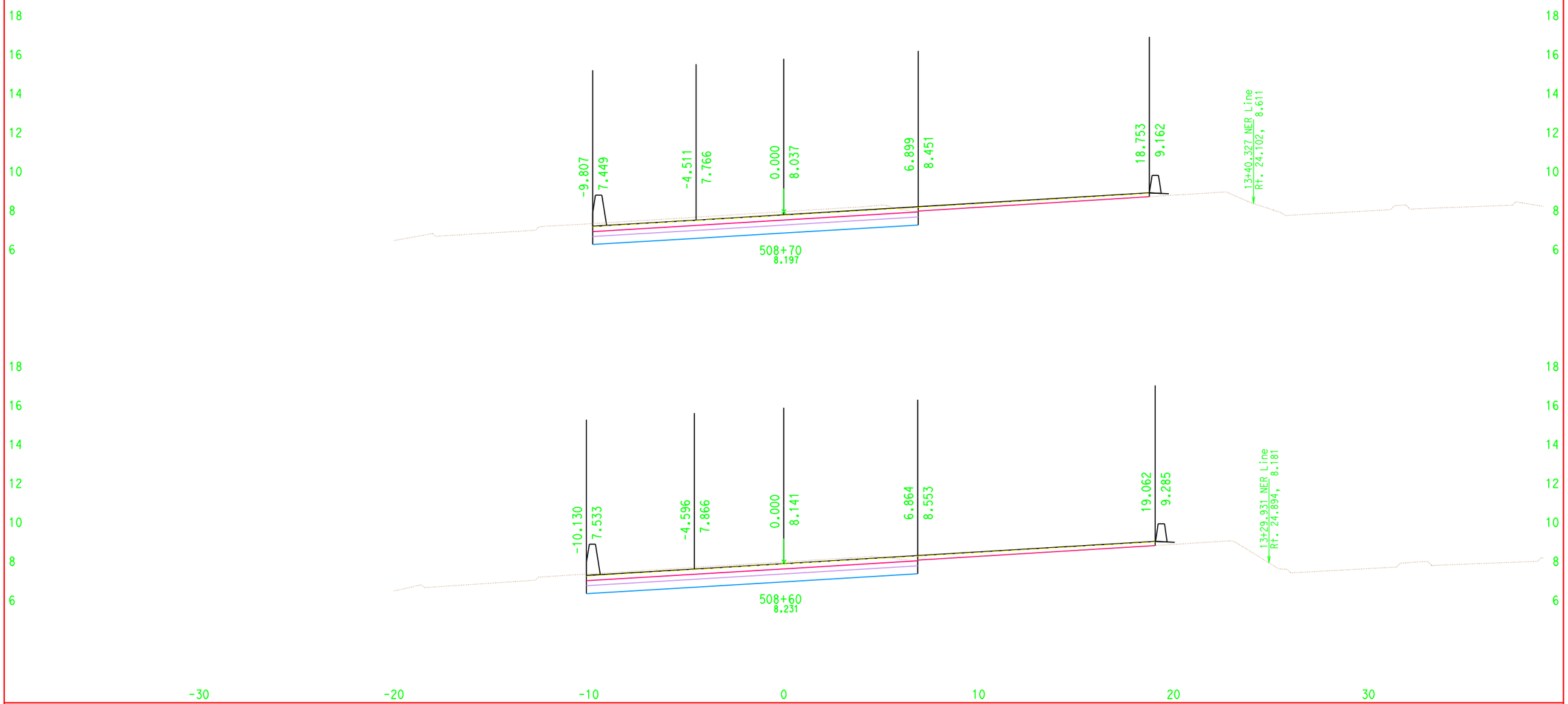

DATE: 10/24/2007

ALL DIMENSIONS ARE IN METERS

Scale Ratio: 1:100 Horiz.
1:100 Vert.

Project: 00245 File: D:\USERS\Project\00245\JT_Files\N_Line\DesignX\jt_n1_des.ear

N1
CROSS SECTIONS

SHEET 8 OF XXX

For Earthwork Development Only

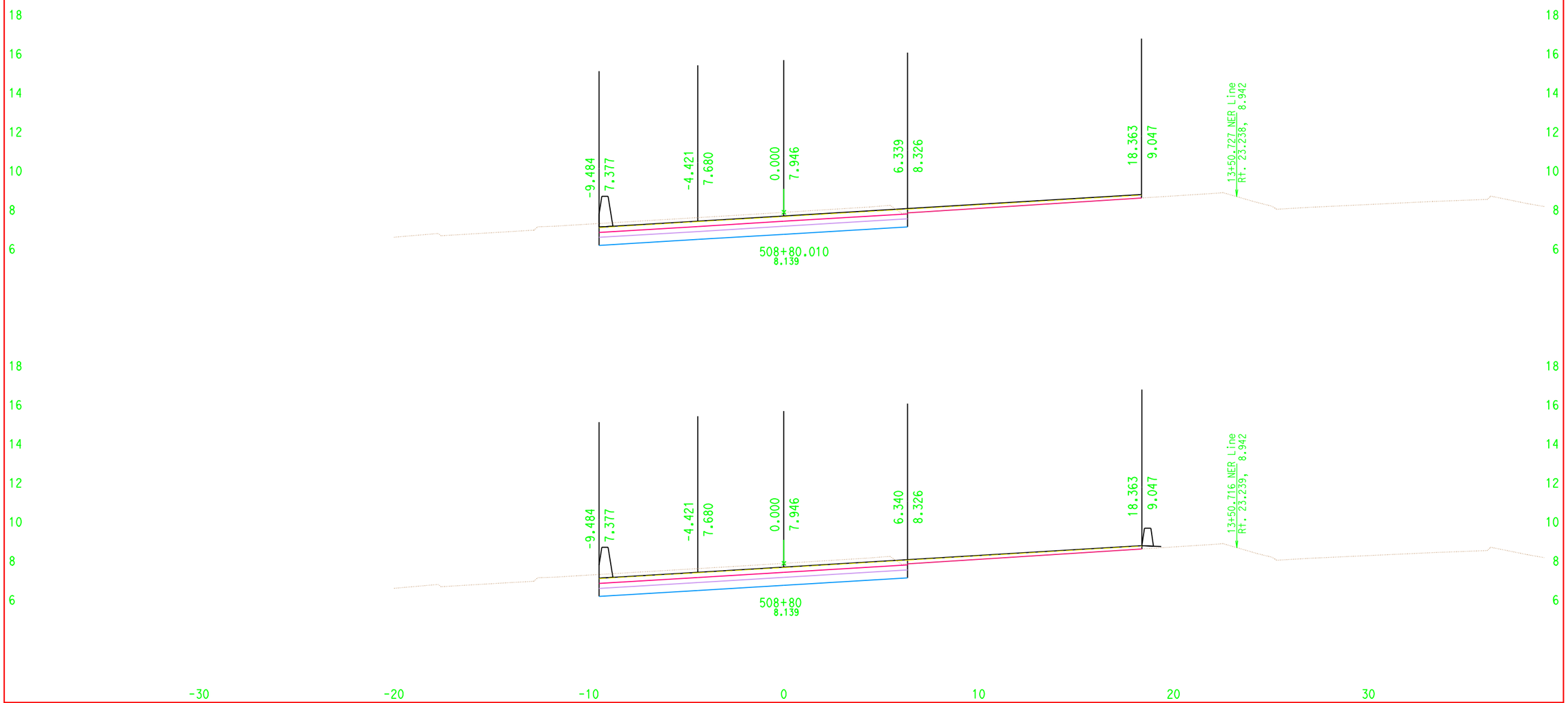

DATE: 10/24/2007

ALL DIMENSIONS ARE IN METERS

Scale Ratio: 1:100 Horiz.
1:100 Vert.

Project: 00245 File: D:\USERS\Project\00245\JT_Files\N_Line\DesignX\jt_n1_des.ear

N1
CROSS SECTIONS

For Earthwork Development Only

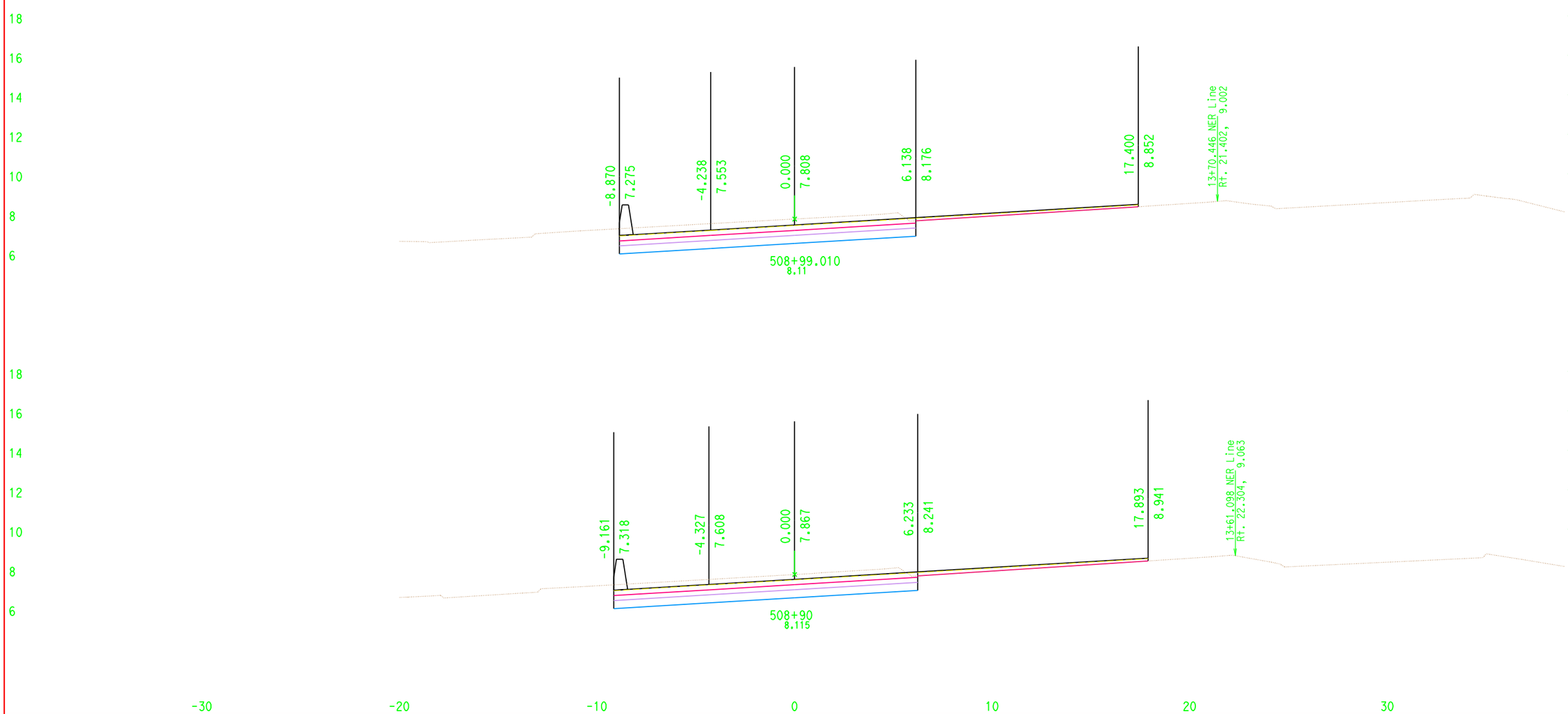

DATE: 10/24/2007 ALL DIMENSIONS ARE IN METERS

Scale Ratio: 1:100 Horiz.
1:100 Vert.

Project: 00245 File: D:\USERS\Project\00245\JT_Files\N_Line\DesignX\jt_n1_des.ear

N1
CROSS SECTIONS
SHEET 10 OF XXX

For Earthwork Development Only

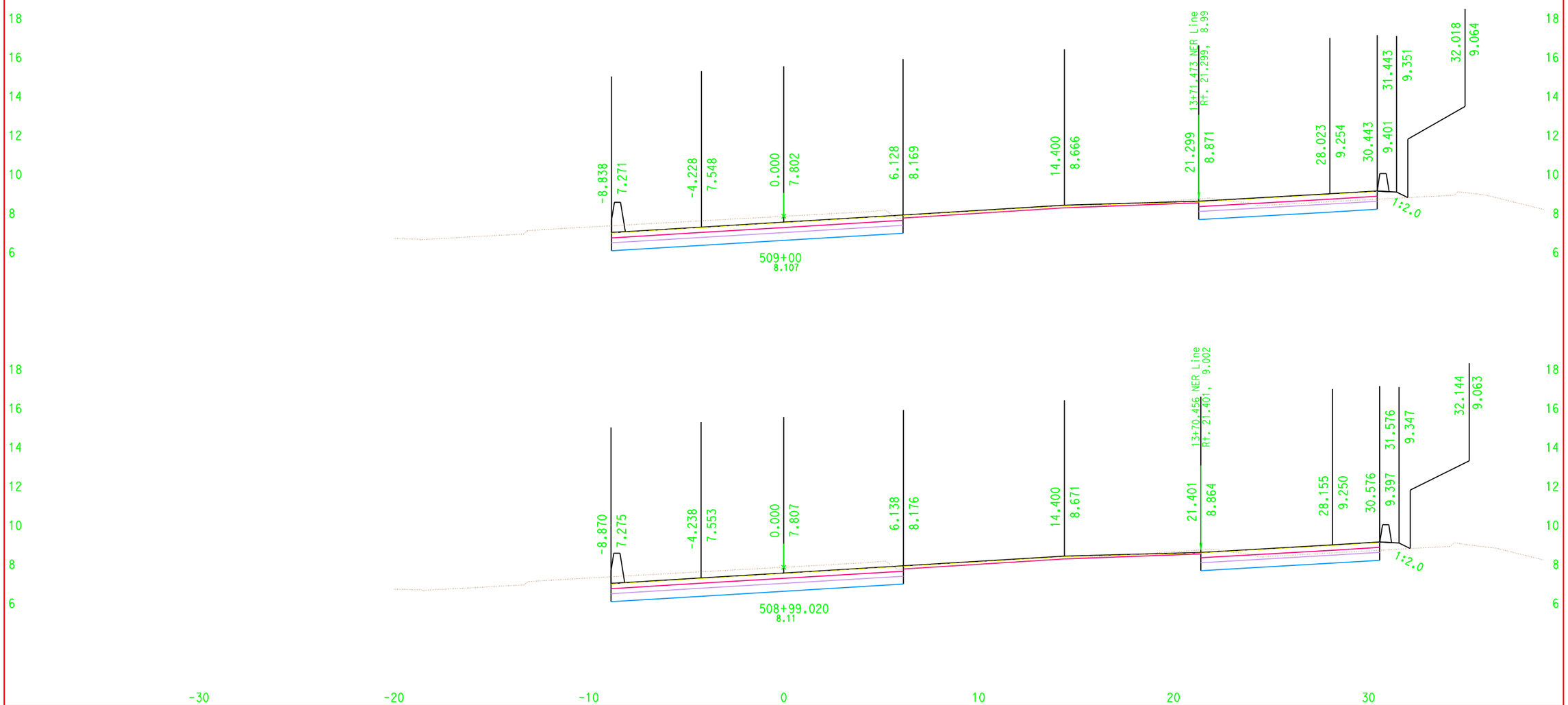

DATE: 10/24/2007 ALL DIMENSIONS ARE IN METERS

Scale Ratio: 1:100 Horiz.
1:100 Vert.

N1
CROSS SECTIONS
SHEET 11 OF XXX

Project: 00245 File: D:\USERS\Project\00245\JT_Files\N_Line\DesignX\jt_n1_des.ear

For Earthwork Development Only

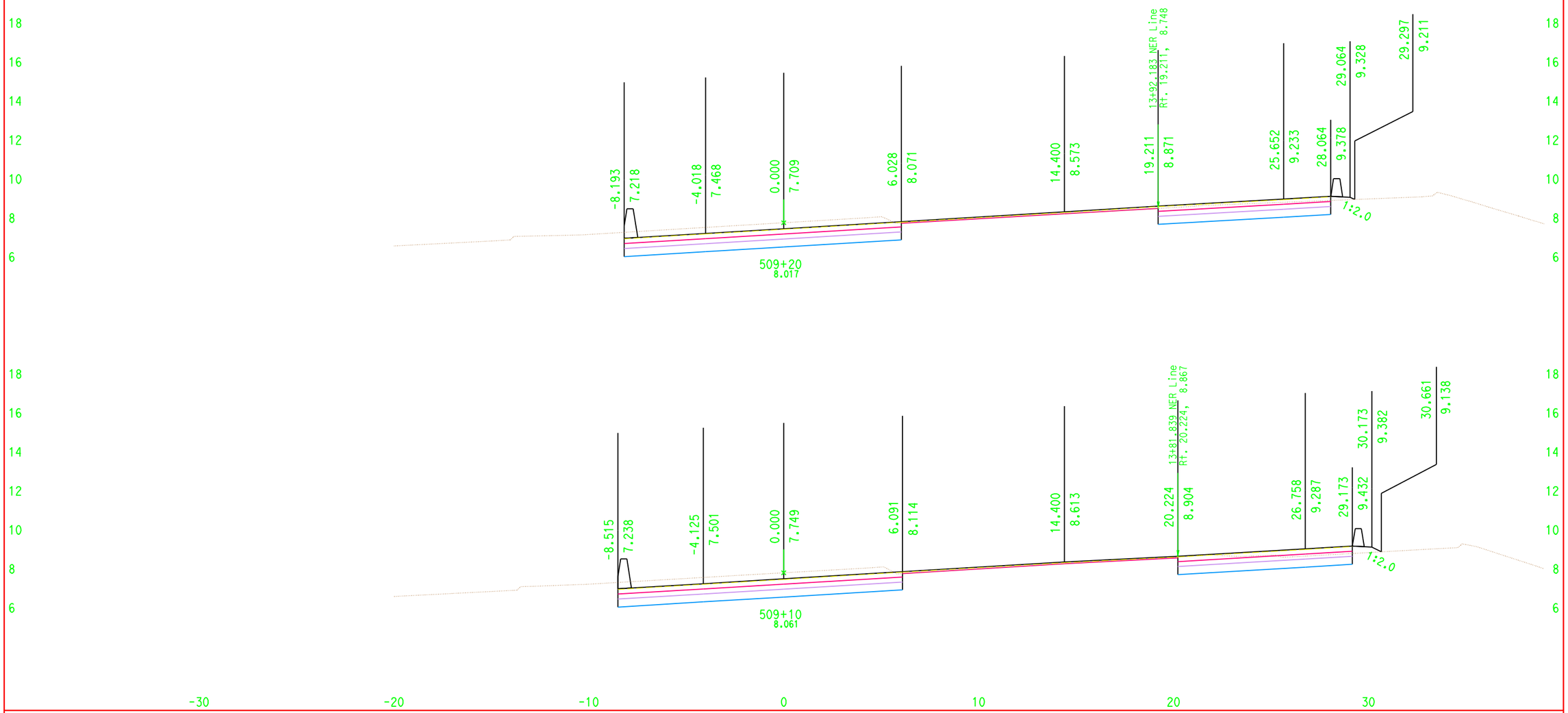

DATE: 10/24/2007

ALL DIMENSIONS ARE IN METERS

Scale Ratio: 1:100 Horiz.
1:100 Vert.

N1
CROSS SECTIONS
SHEET 12 OF XXX

Project: 00245 File: D:\USERS\Project\00245\JT_Files\N_Line\DesignX\jt_n1_des.ear

For Earthwork Development Only

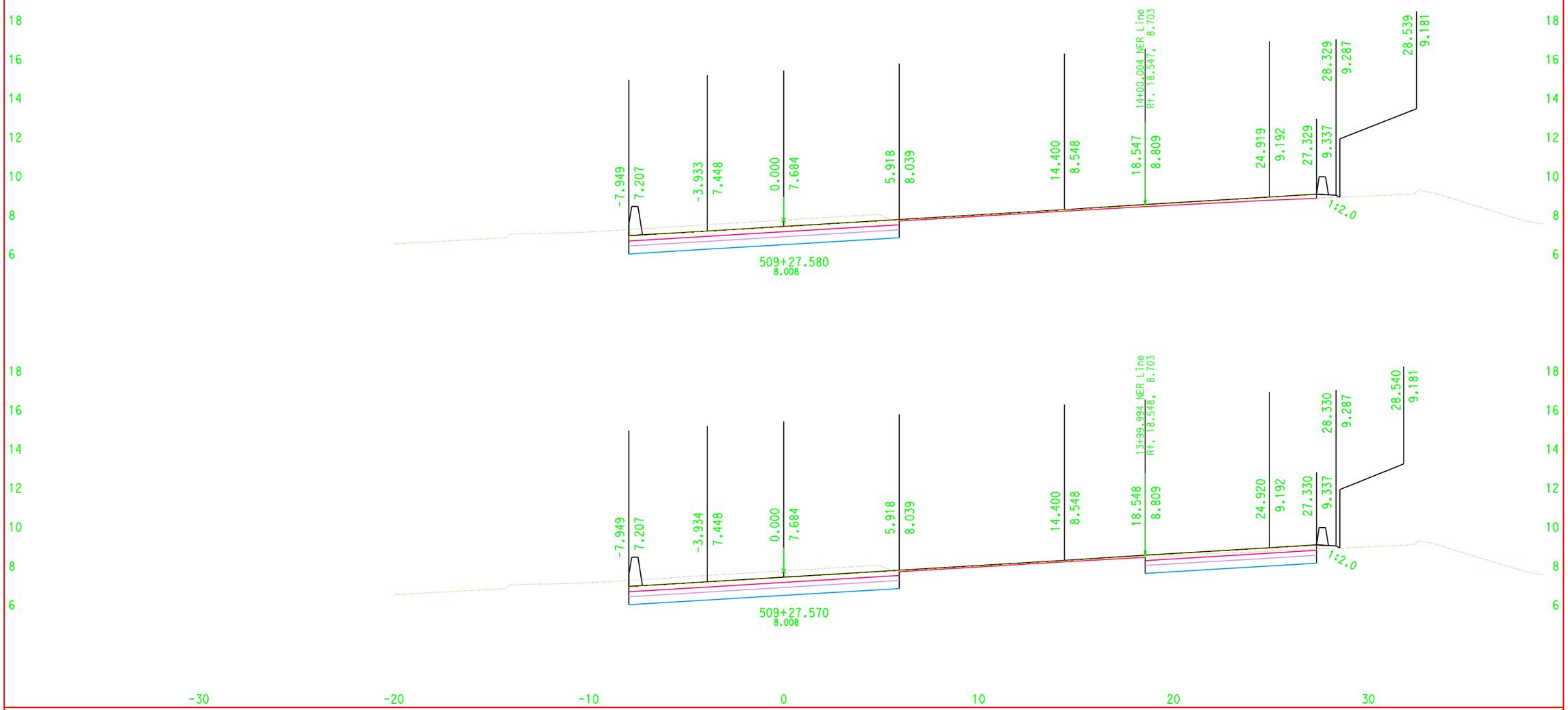

DATE: 10/24/2007 ALL DIMENSIONS ARE IN METERS

Scale Ratio: 1:100 Horiz.
1:100 Vert.

N1
CROSS SECTIONS
SHEET 13 OF XXX

Project: 00245 File: D:\USERS\Project\00245\JT_Files\N_Line\DesignX\jt_n1_des.ear

For Earthwork Development Only

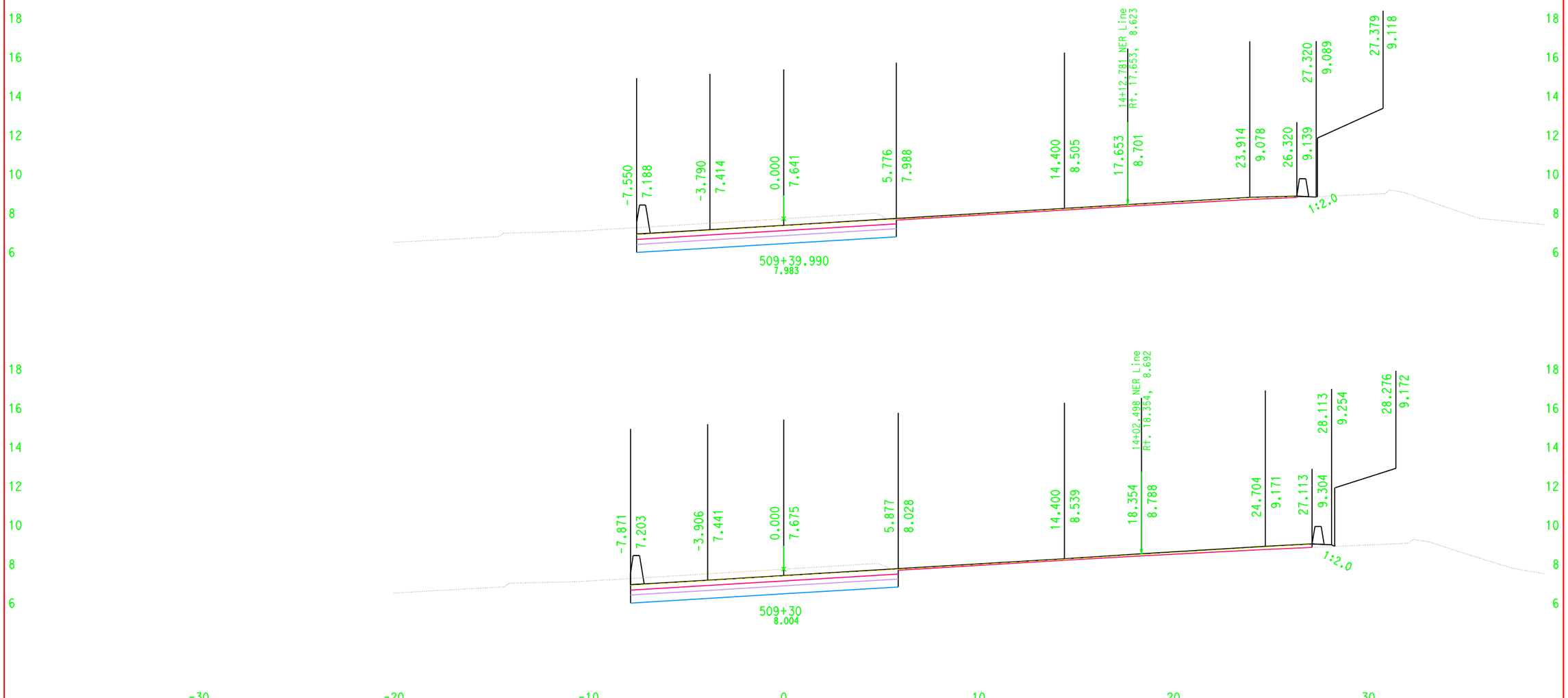

DATE: 10/24/2007

ALL DIMENSIONS ARE IN METERS

Scale Ratio: 1:100 Horiz.
1:100 Vert.

Project: 00245 File: D:\USERS\Project\00245\JT_Files\N_Line\DesignX\jt_n1_des.ear

N1
CROSS SECTIONS

SHEET 14 OF XXX

For Earthwork Development Only

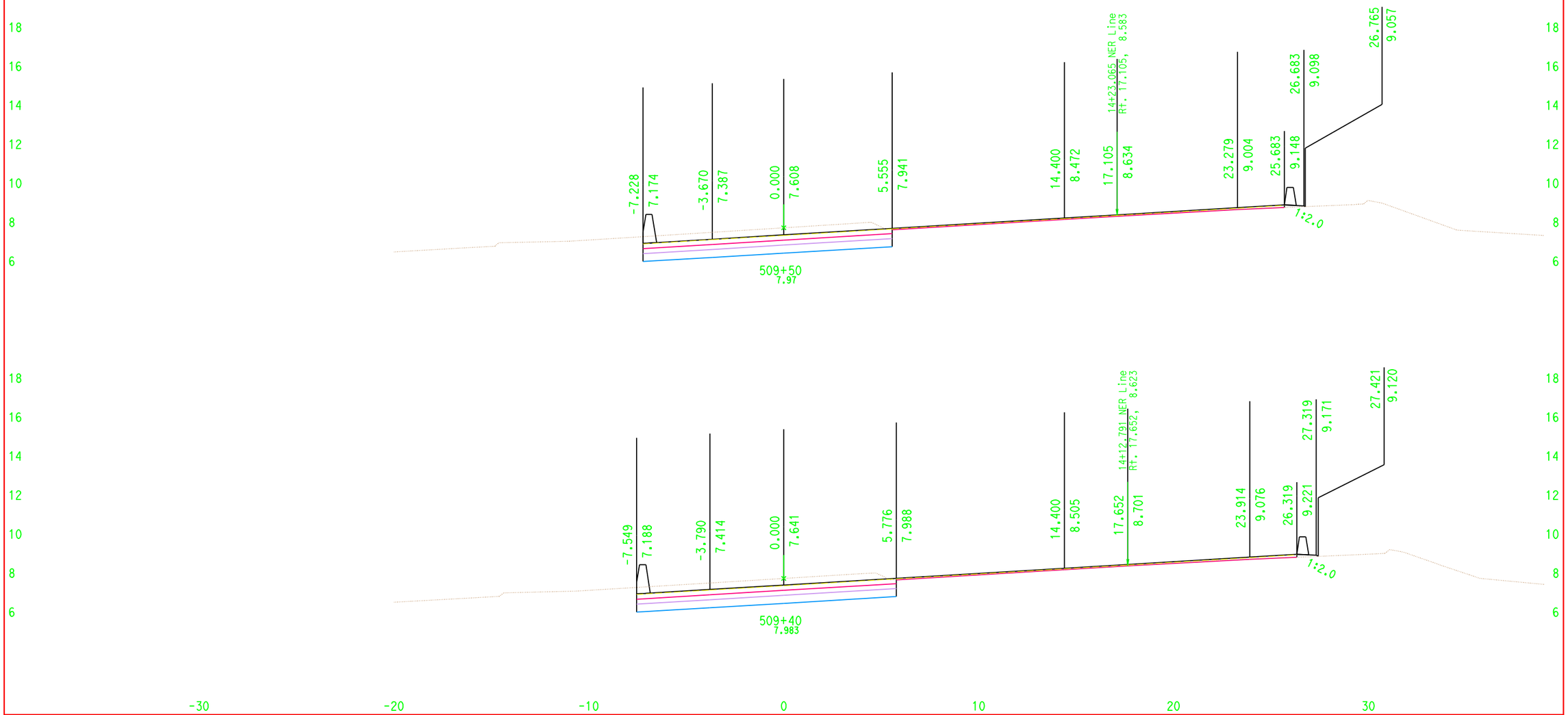

DATE: 10/24/2007

ALL DIMENSIONS ARE IN METERS

Scale Ratio: 1:100 Horiz.
1:100 Vert.

Project: 00245 File: D:\USERS\Project\00245\JT_Files\N_Line\DesignX\jt_n1_des.ear

N1
CROSS SECTIONS

For Earthwork Development Only

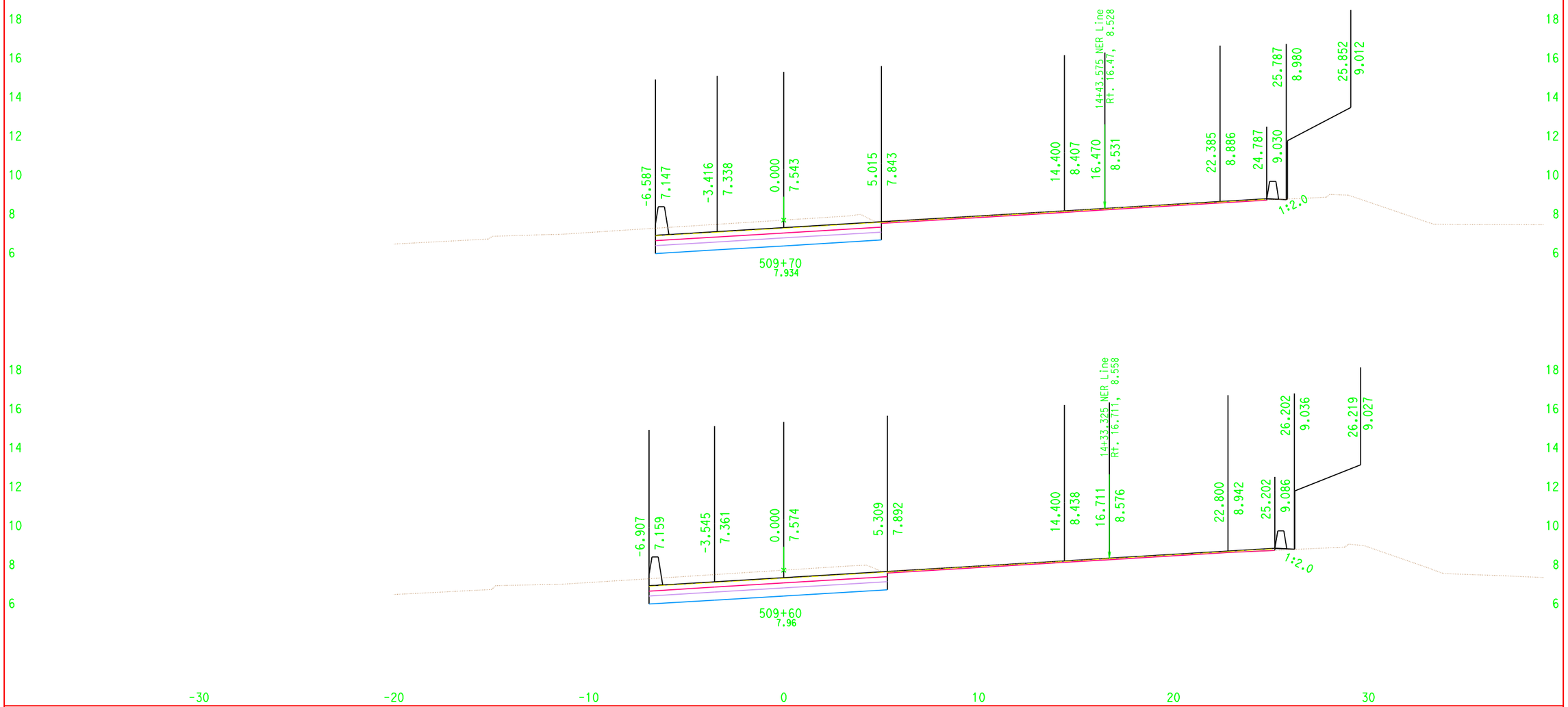

DATE: 10/24/2007

ALL DIMENSIONS ARE IN METERS

Scale Ratio: 1:100 Horiz.
1:100 Vert.

Project: 00245 File: D:\USERS\Project\00245\JT_Files\N_Line\DesignX\jt_n1_des.ear

N1
CROSS SECTIONS

SHEET 16 OF XXX

For Earthwork Development Only

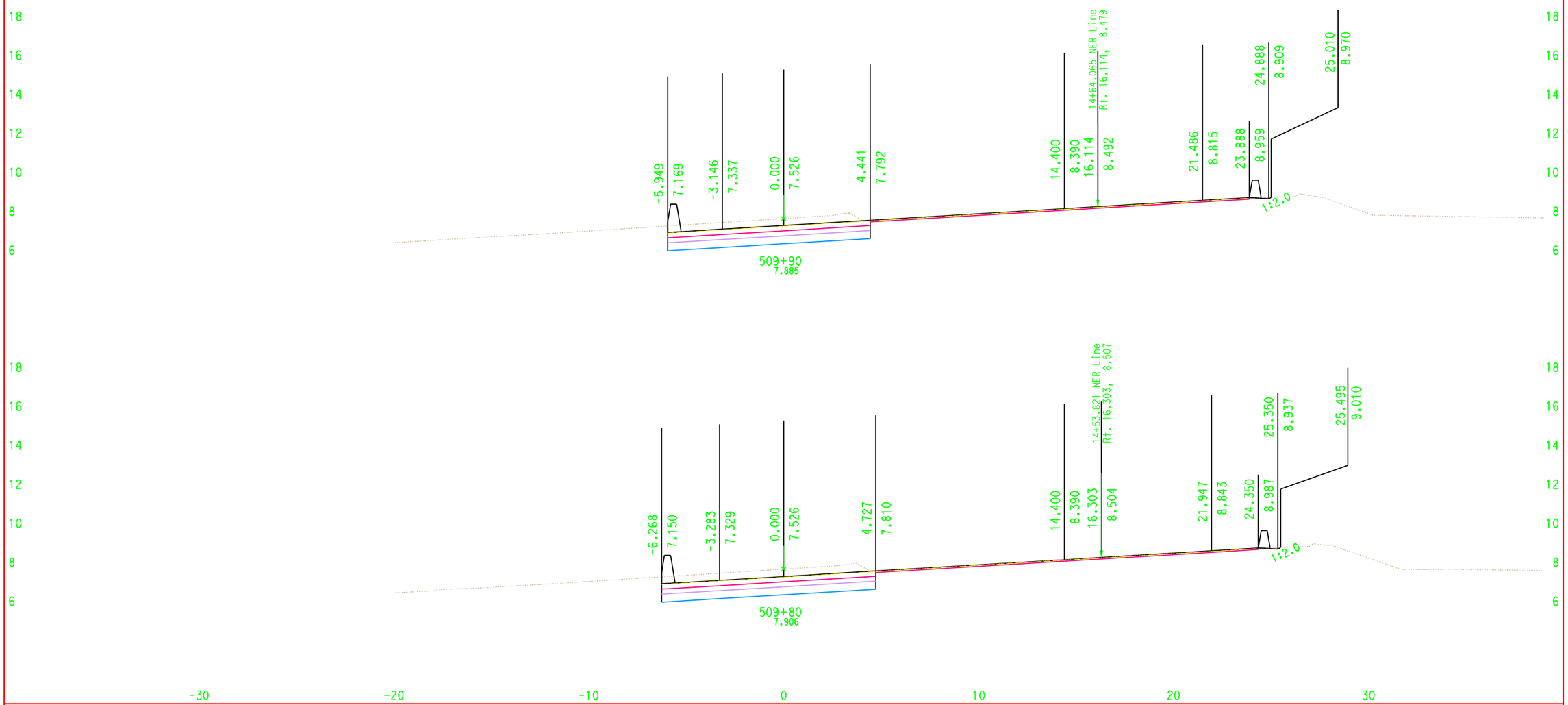

DATE: 10/24/2007

ALL DIMENSIONS ARE IN METERS

Scale Ratio: 1:100 Horiz.
1:100 Vert.

Project: 00245 File: D:\USERS\Project\00245\JT_Files\N_Line\DesignX\jt_n1_des.ear

N1
CROSS SECTIONS

For Earthwork Development Only

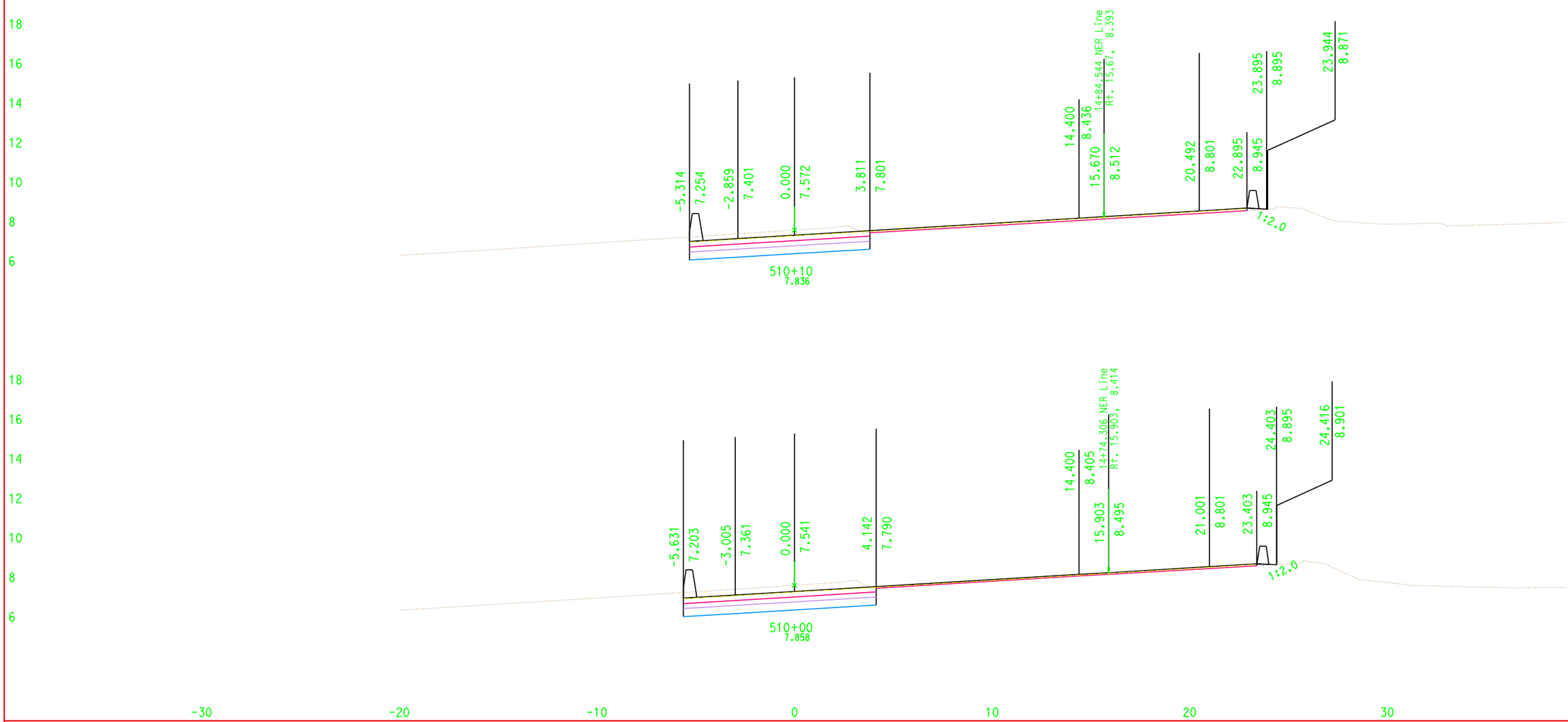

DATE: 10/24/2007 ALL DIMENSIONS ARE IN METERS

Scale Ratio: 1:100 Horiz.
1:100 Vert.

Project: 00245 File: D:\USERS\Project\00245\JT_Files\N_Line\DesignX\jt_n1_des.ear

N1
CROSS SECTIONS
SHEET 18 OF XXX

For Earthwork Development Only

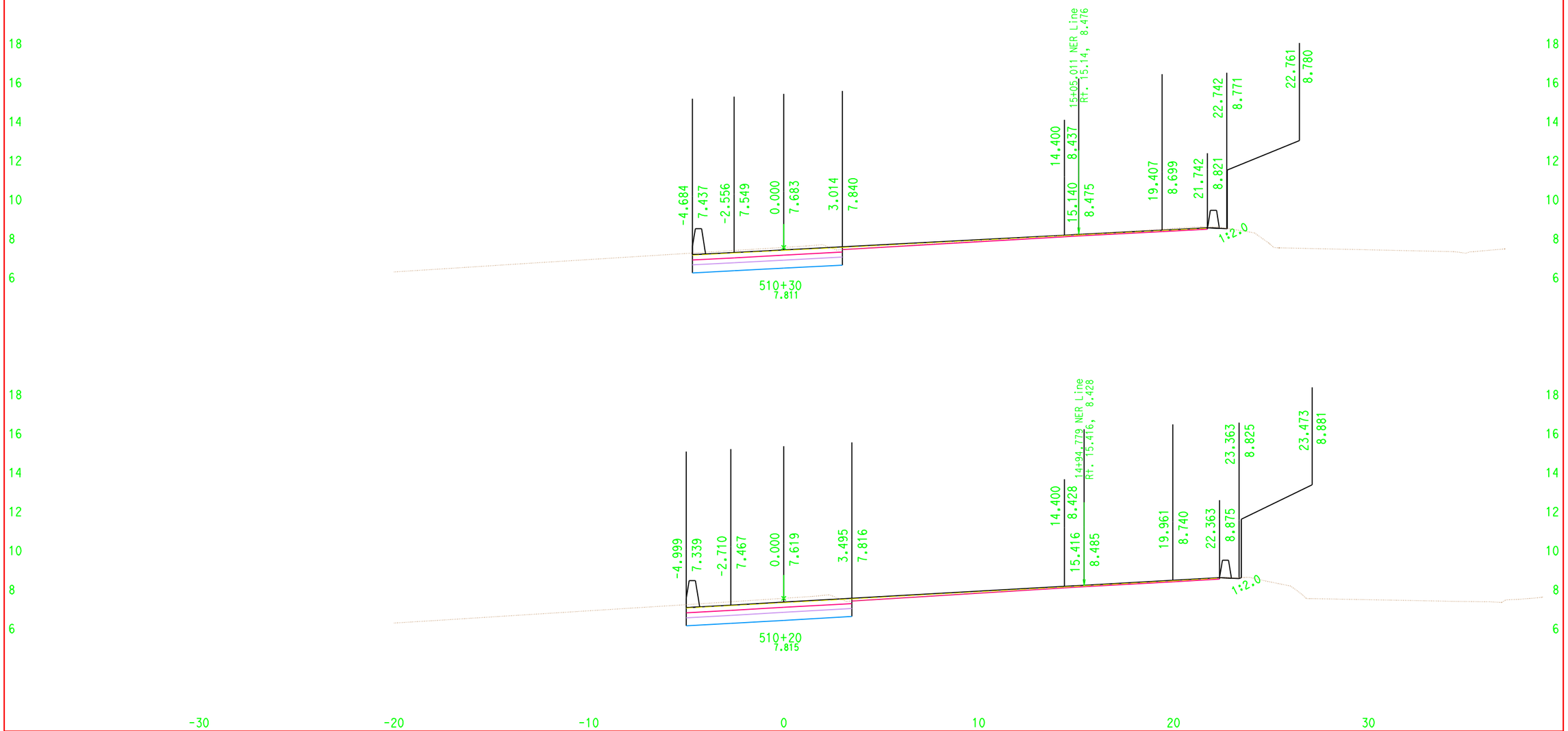

DATE: 10/24/2007

ALL DIMENSIONS ARE IN METERS

Scale Ratio: 1:100 Horiz.
1:100 Vert.

N1
CROSS SECTIONS
SHEET 19 OF XXX

Project: 00245 File: D:\USERS\Project\00245\JT_Files\N_Line\DesignX\jt_n1_des.ear

For Earthwork Development Only

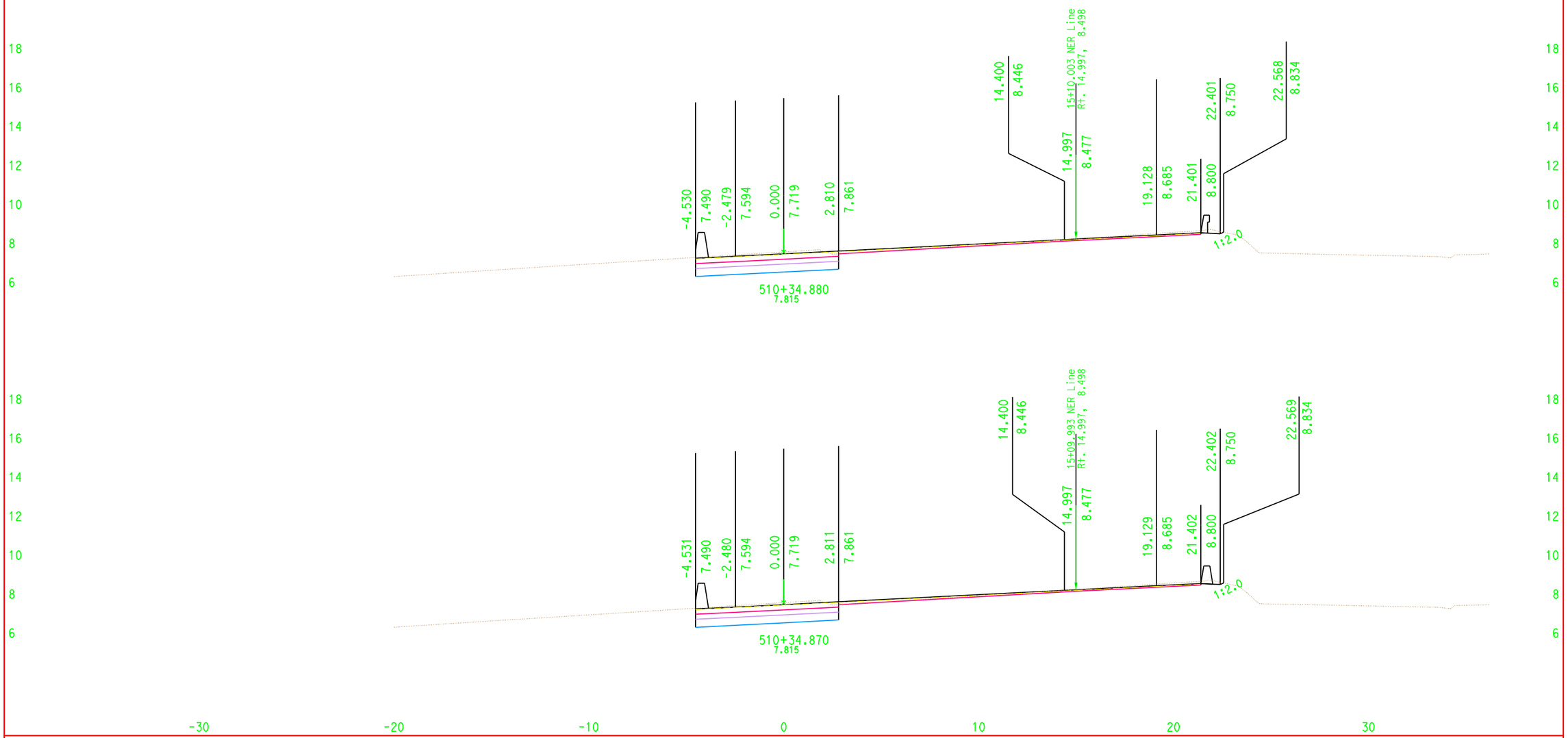

DATE: 10/24/2007 ALL DIMENSIONS ARE IN METERS

Scale Ratio: 1:100 Horiz.
1:100 Vert.

N1
CROSS SECTIONS
SHEET 20 OF XXX

Project: 00245 File: D:\USERS\Project\00245\JT_Files\N_Line\DesignX\jt_n1_des.ear

For Earthwork Development Only

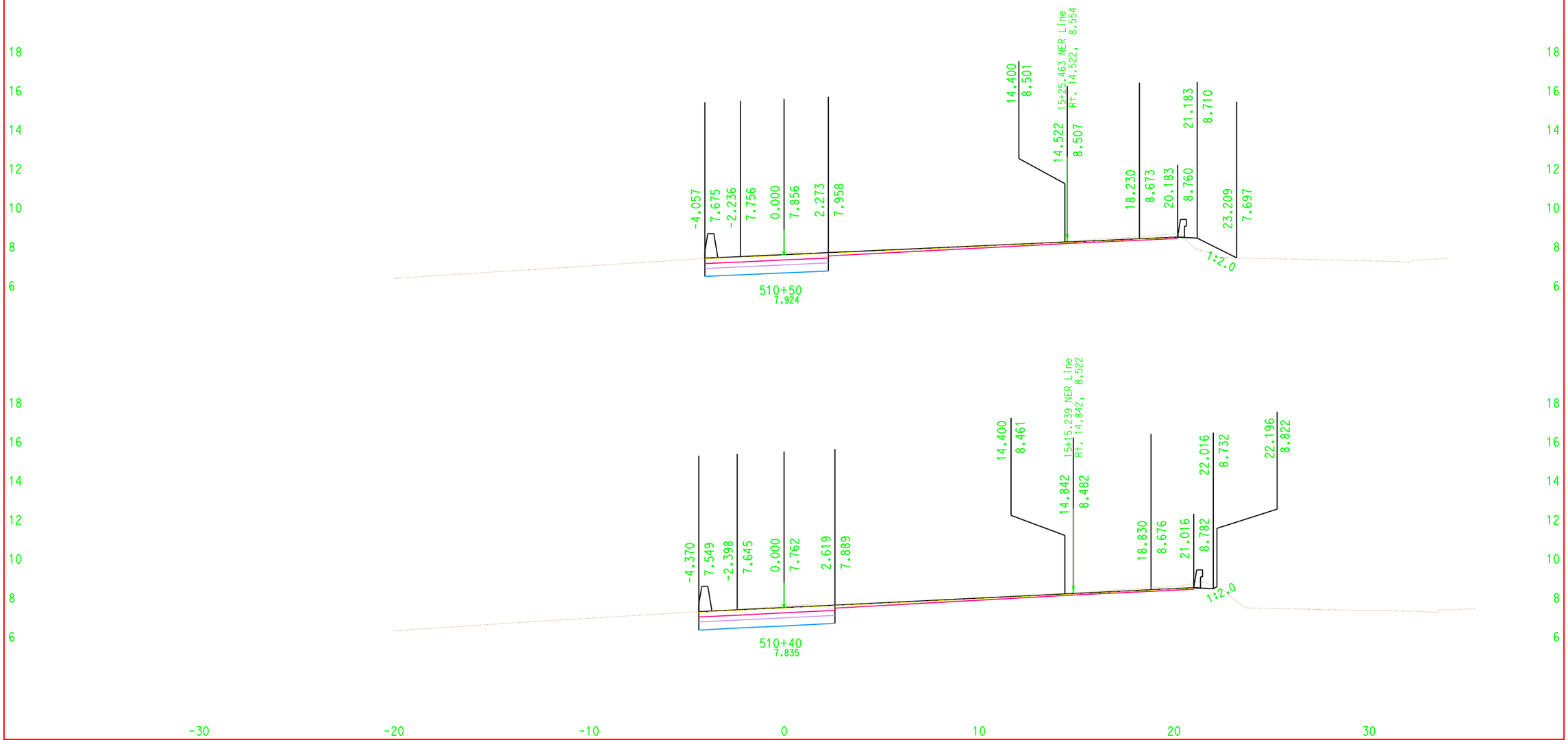

DATE: 10/24/2007

ALL DIMENSIONS ARE IN METERS

Scale Ratio: 1:100 Horiz.
1:100 Vert.

Project: 00245 File: D:\USERS\Project\00245\JT_Files\N_Line\DesignX\jt_n1_des.ear

N1
CROSS SECTIONS

SHEET 21 OF XXX

For Earthwork Development Only

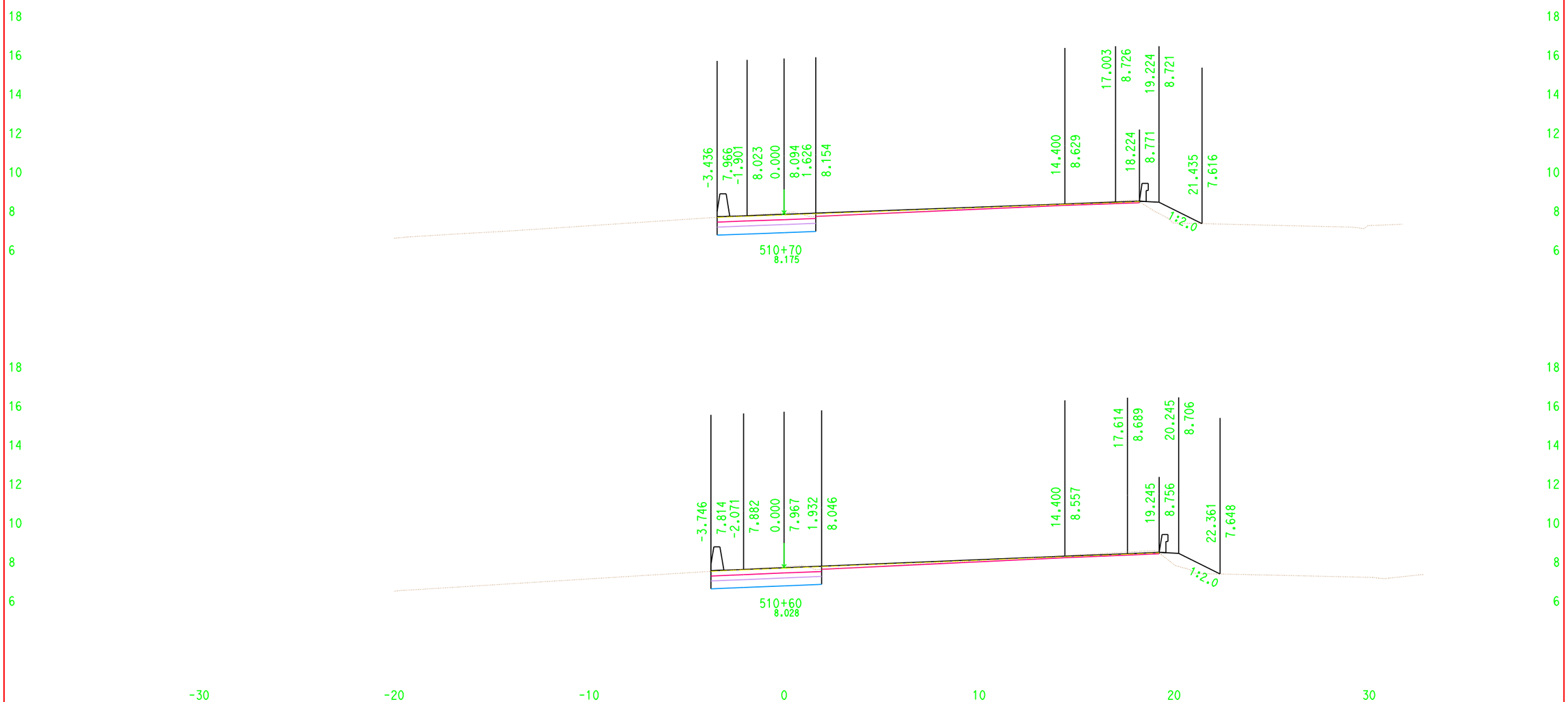

DATE: 10/24/2007 ALL DIMENSIONS ARE IN METERS

Scale Ratio: 1:100 Horiz.
1:100 Vert.

Project: 00245 File: D:\USERS\Project\00245\JT_Files\N_Line\DesignX\jt_n1_des.ear

N1
CROSS SECTIONS
SHEET 22 OF XXX

For Earthwork Development Only

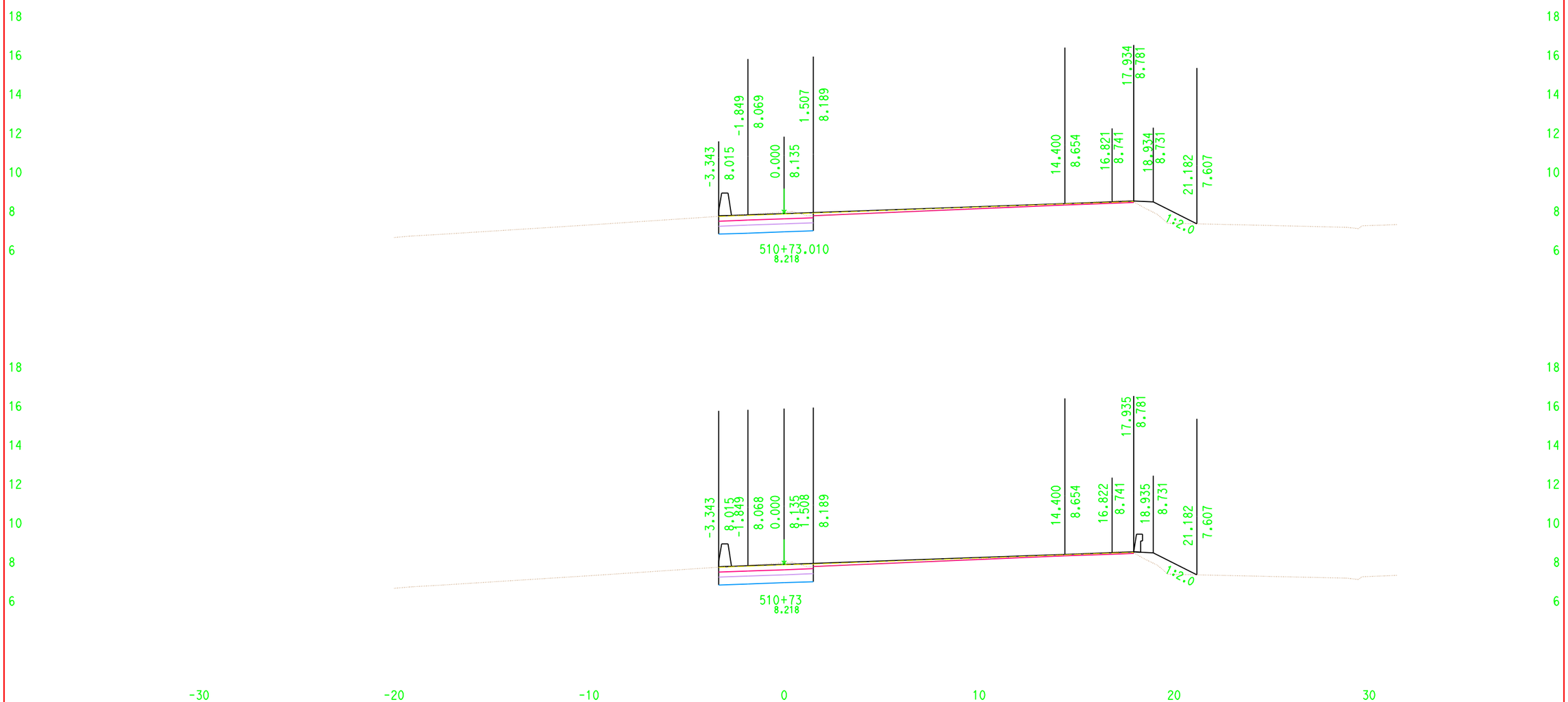

DATE: 10/24/2007 ALL DIMENSIONS ARE IN METERS

Scale Ratio: 1:100 Horiz.
1:100 Vert.

Project: 00245 File: D:\USERS\Project\00245\JT_Files\N_Line\DesignX\jt_n1_des.ear

N1
CROSS SECTIONS
SHEET 23 OF XXX

For Earthwork Development Only

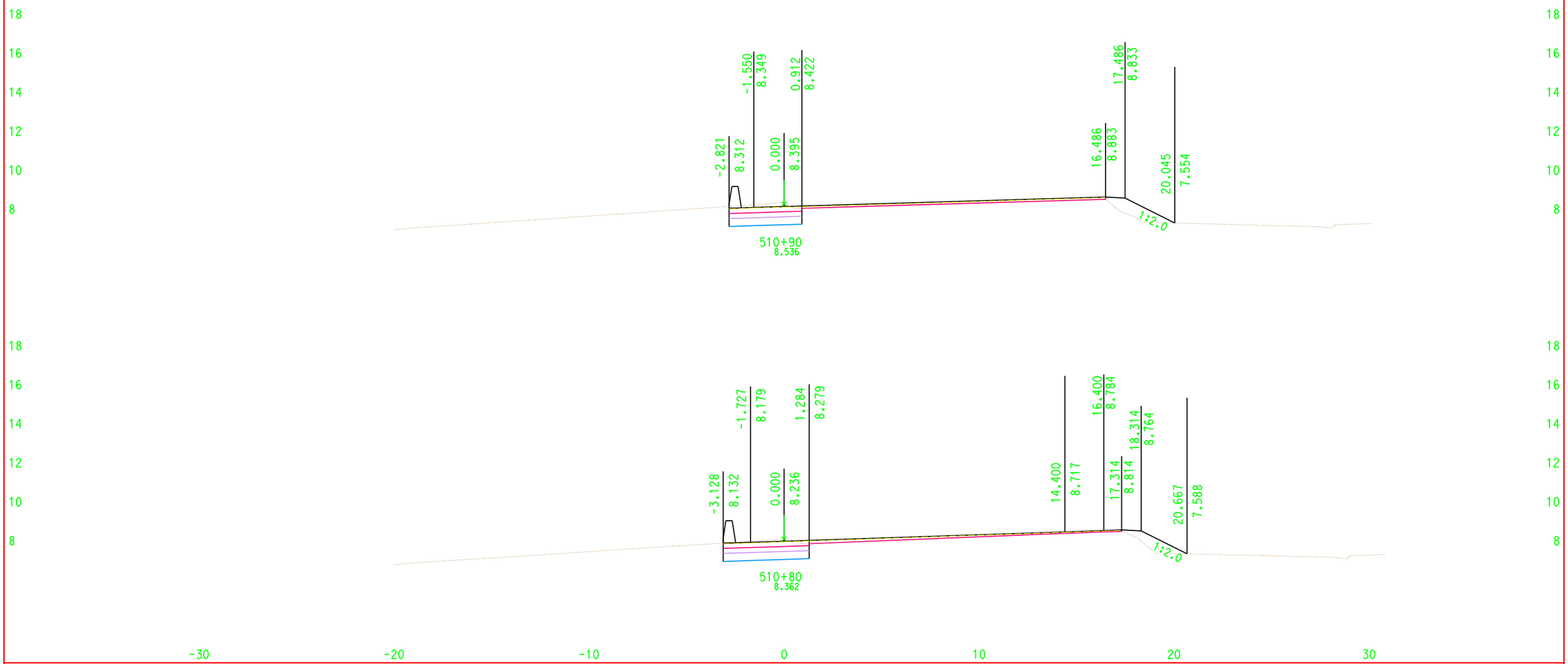

DATE: 10/24/2007

ALL DIMENSIONS ARE IN METERS

Scale Ratio: 1:100 Horiz.
1:100 Vert.

N1
CROSS SECTIONS

SHEET 24 OF XXX

Project: 00245 File: D:\USERS\Project\00245\JT_Files\N_Line\DesignX\jt_n1_des.ear

For Earthwork Development Only

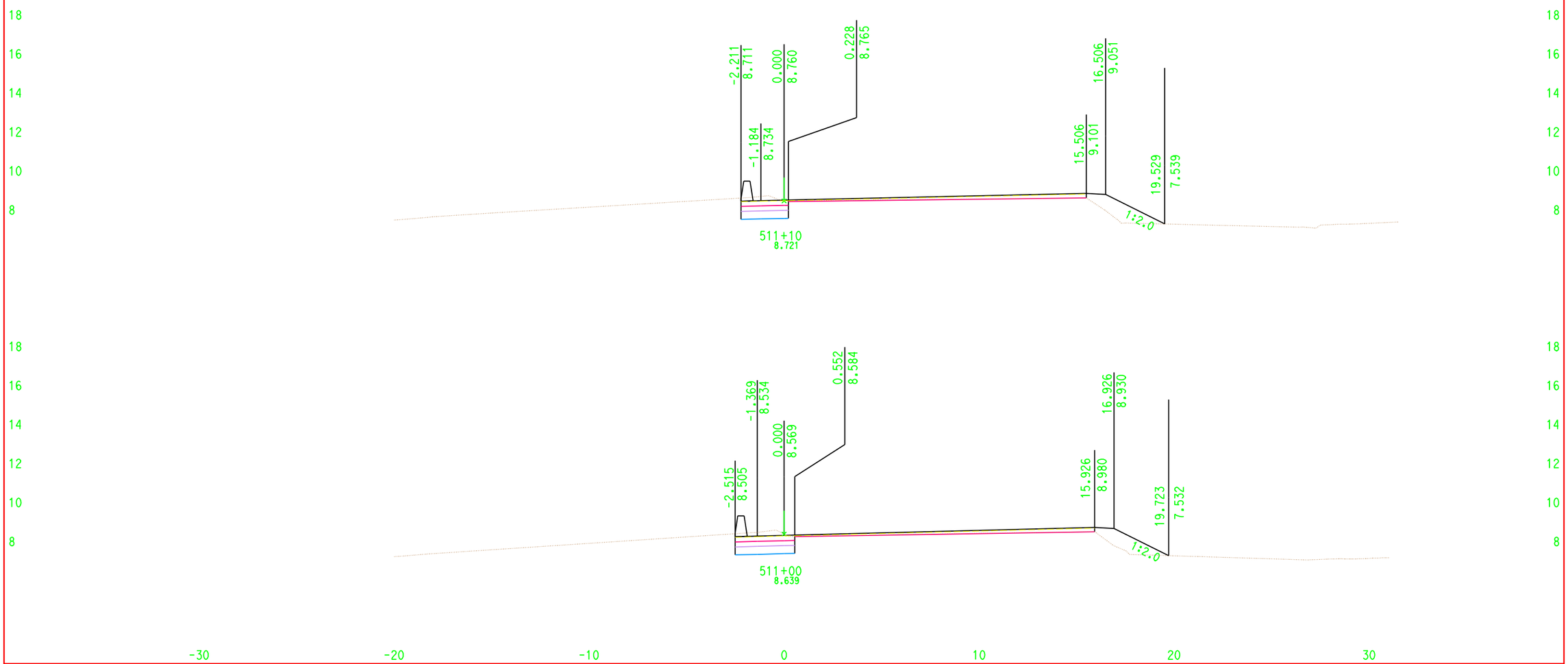

DATE: 10/24/2007 ALL DIMENSIONS ARE IN METERS

Scale Ratio: 1:100 Horiz.
1:100 Vert.

Project: 00245 File: D:\USERS\Project\00245\JT_Files\N_Line\DesignX\jt_n1_des.ear

N1
CROSS SECTIONS
SHEET 25 OF XXX

For Earthwork Development Only

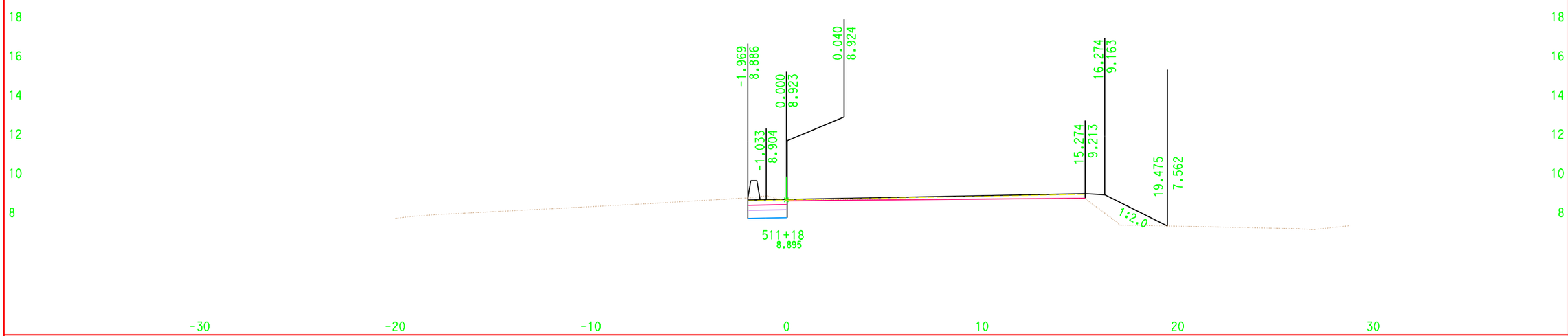

DATE: 10/24/2007

ALL DIMENSIONS ARE IN METERS

Scale Ratio: 1:100 Horiz.
1:100 Vert.

Project: 00245 File: D:\USERS\Project\00245\JT_Files\N_Line\DesignX\jt_n1_des.ear

N1
CROSS SECTIONS

SHEET 26 OF XXX

For Earthwork Development Only

(Sta. 497+66.00 to 502+55.90)

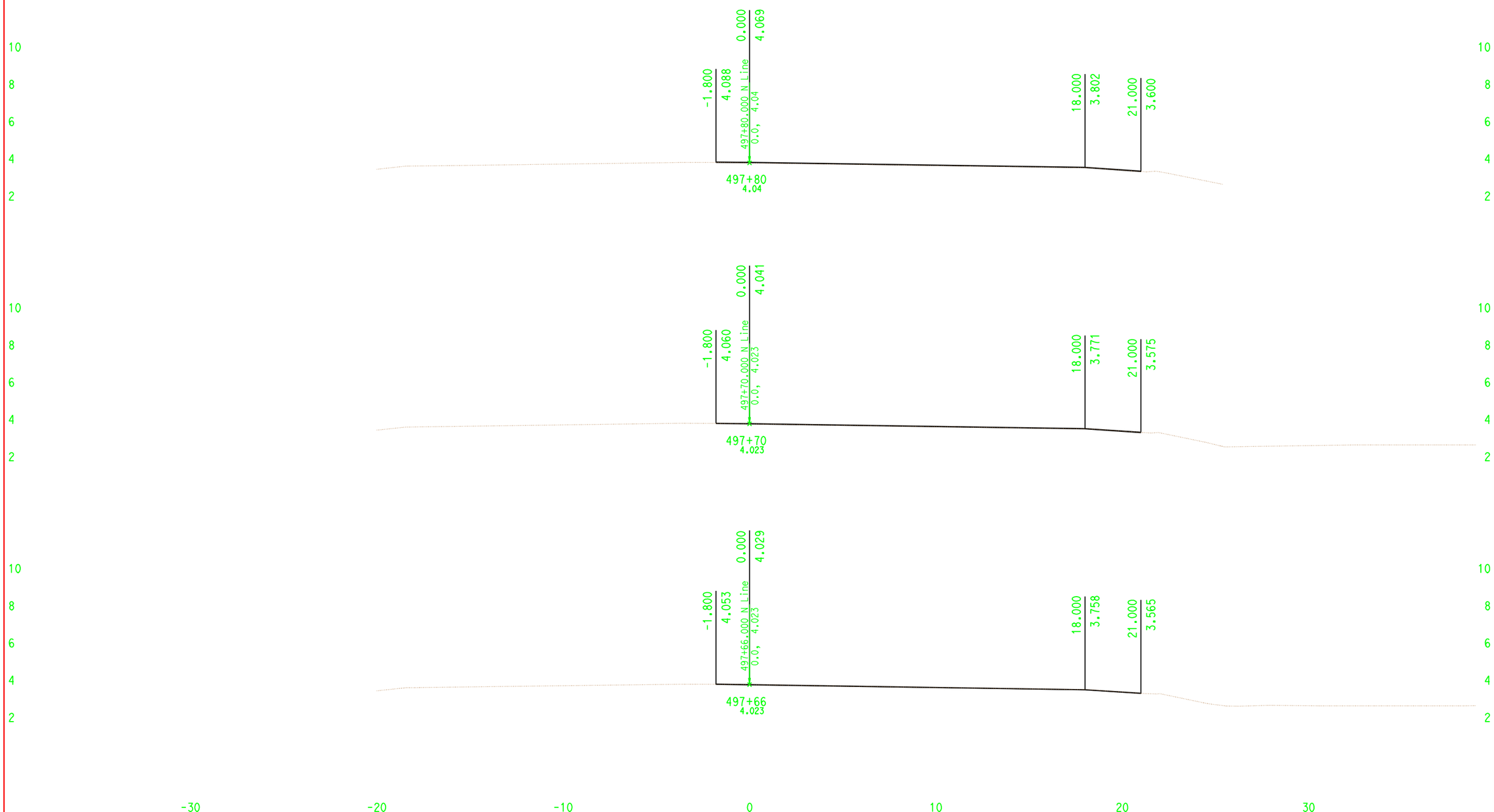

CROSS SECTIONS CREATED BY: JT DATE: 12/11/2007 ALL DIMENSIONS ARE IN METERS

EA: 165421

Scale Ratio: 1:100 Horiz. 1:100 Vert.

Project: 00245 File: D:\USERS\Project\00245\JT_Files\N_Line\DesignX\jt_n2_DES.ear

N Line
CROSS SECTIONS

SHEET 1 OF 33

For Earthwork Development Only

(Sta. 497+66.00 to 502+55.90)

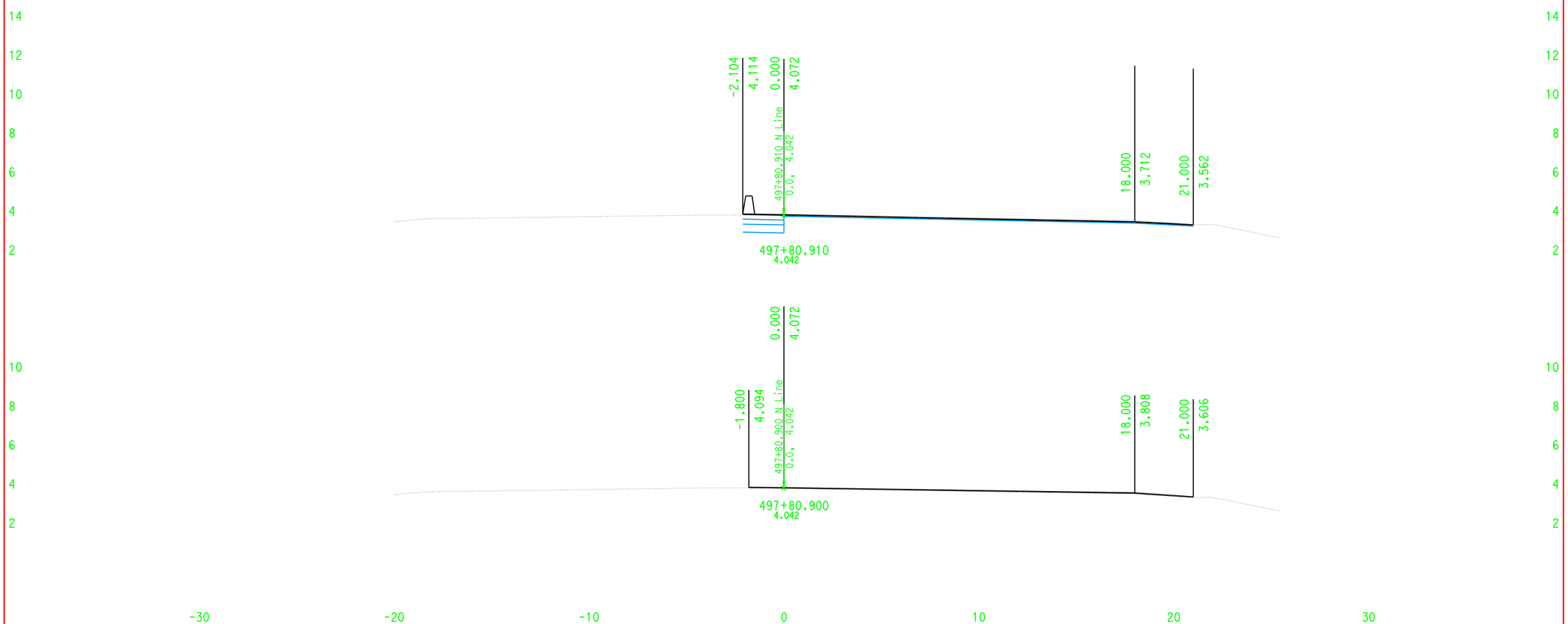

CROSS SECTIONS CREATED BY: JT DATE: 12/11/2007 ALL DIMENSIONS ARE IN METERS

Project: 00245 File: D:\USERS\Project\00245\JT_Files\N_Line\DesignX\jt_n2_DES.ear

EA: 165421

Scale Ratio: 1:100 Horiz.
1:100 Vert.

N Line
CROSS SECTIONS

For Earthwork Development Only

(Sta. 497+66.00 to 502+55.90)

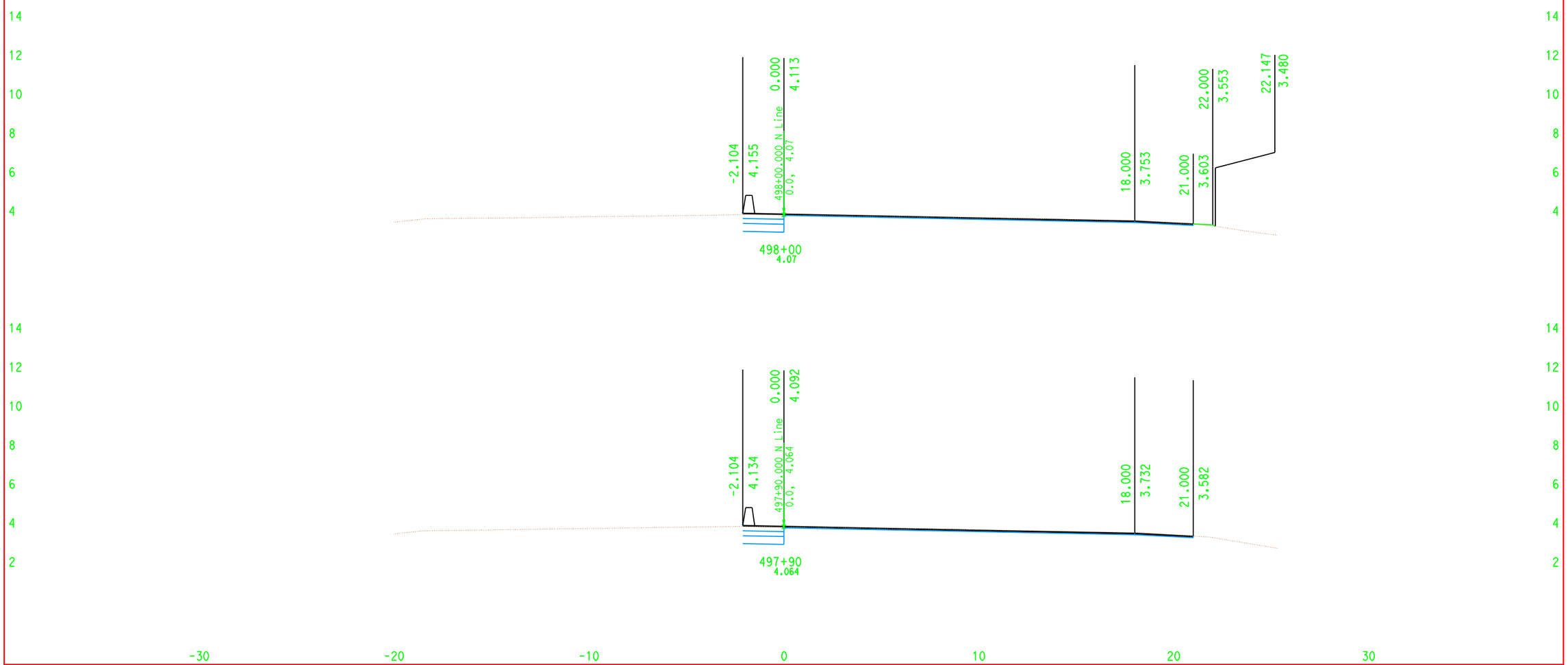

CROSS SECTIONS CREATED BY: JT DATE: 12/11/2007 ALL DIMENSIONS ARE IN METERS

Project: 00245 File: D:\USERS\Project\00245\JT_Files\N_Line\DesignX\jt_n2_DES.ear

EA: 165421

Scale Ratio: 1:100 Horiz.
1:100 Vert.

N Line
CROSS SECTIONS

For Earthwork Development Only

(Sta. 497+66.00 to 502+55.90)

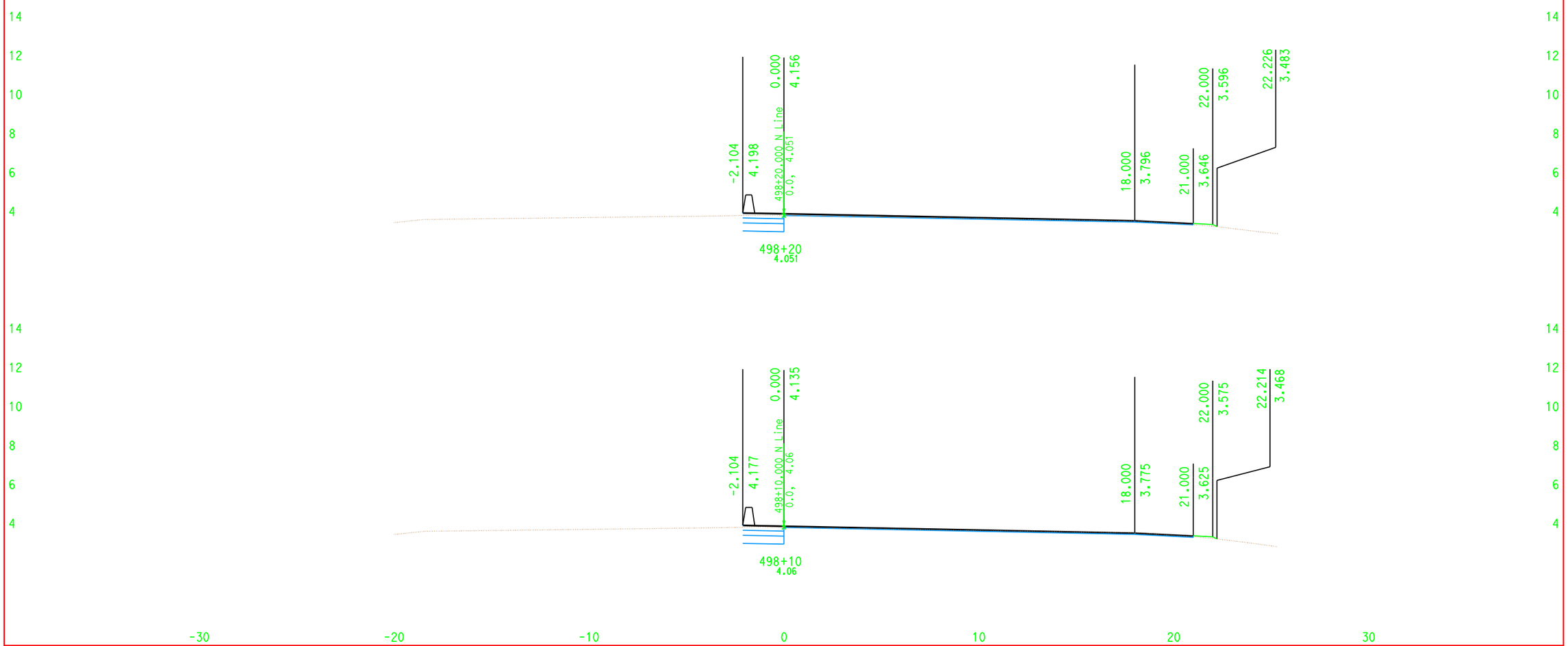

CROSS SECTIONS CREATED BY: JT DATE: 12/11/2007 ALL DIMENSIONS ARE IN METERS

Project: 00245 File: D:\USERS\Project\00245\JT_Files\N_Line\DesignX\jt_n2_DES.ear

EA: 165421

Scale Ratio: 1:100 Horiz.
1:100 Vert.

N Line
CROSS SECTIONS

SHEET 4 OF 33

For Earthwork Development Only

(Sta. 497+66.00 to 502+55.90)

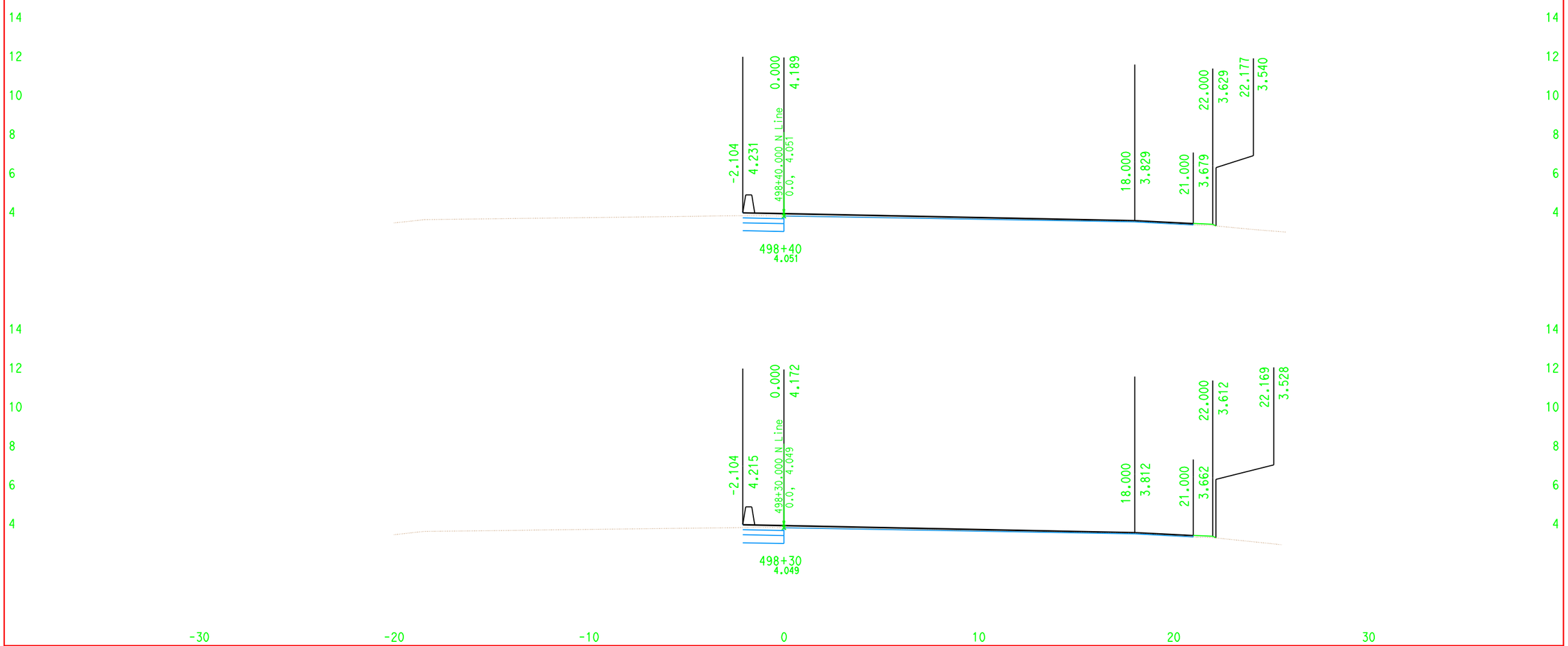

CROSS SECTIONS CREATED BY: JT DATE: 12/11/2007 ALL DIMENSIONS ARE IN METERS

Project: 00245 File: D:\USERS\Project\00245\JT_Files\N_Line\DesignX\jt_n2_DES.ear

EA: 165421

Scale Ratio: 1:100 Horiz.
1:100 Vert.

N Line
CROSS SECTIONS

For Earthwork Development Only

(Sta. 497+66.00 to 502+55.90)

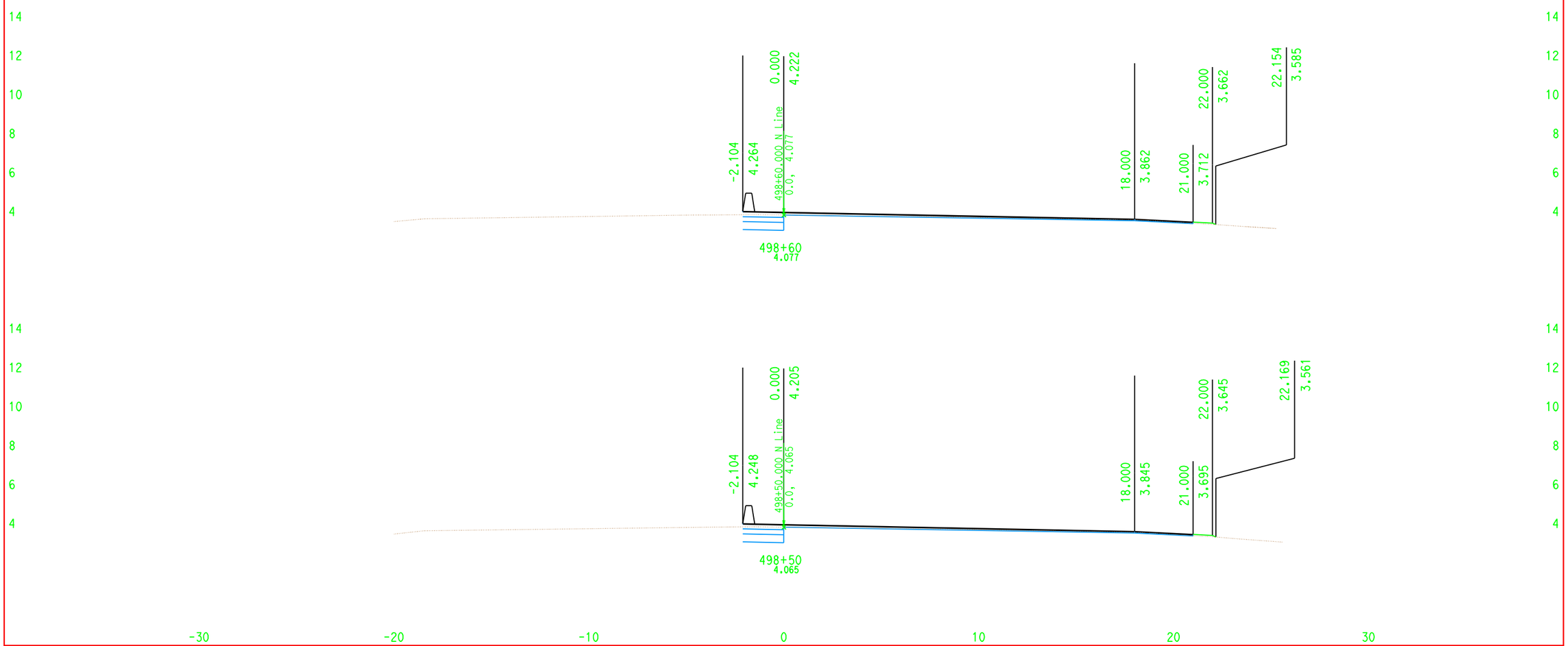

CROSS SECTIONS CREATED BY: JT DATE: 12/11/2007 ALL DIMENSIONS ARE IN METERS

Project: 00245 File: D:\USERS\Project\00245\JT_Files\N_Line\DesignX\jt_n2_DES.ear

EA: 165421

Scale Ratio: 1:100 Horiz.
1:100 Vert.

N Line
CROSS SECTIONS

SHEET 6 OF 33

For Earthwork Development Only

(Sta. 497+66.00 to 502+55.90)

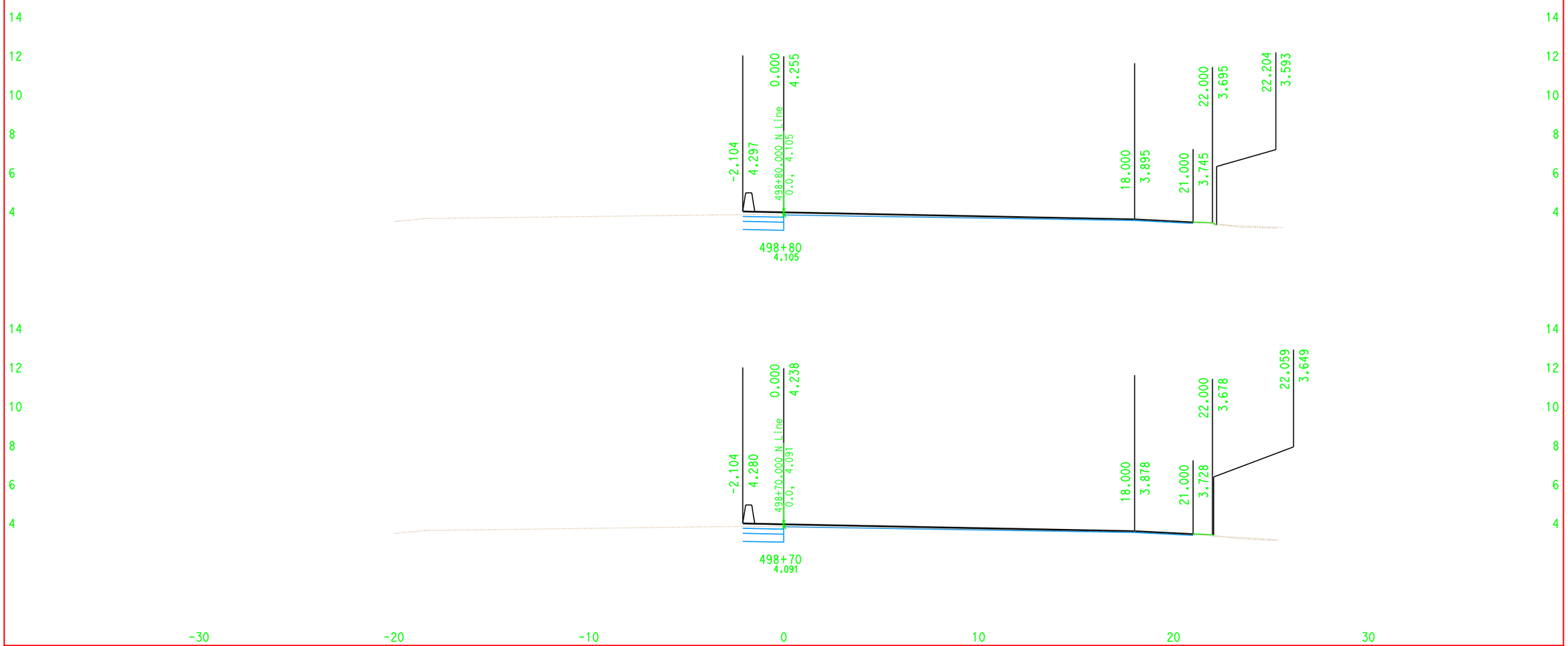

CROSS SECTIONS CREATED BY: JT DATE: 12/11/2007 ALL DIMENSIONS ARE IN METERS

Project: 00245 File: D:\USERS\Project\00245\JT_Files\N_Line\DesignX\jt_n2_DES.ear

EA: 165421

Scale Ratio: 1:100 Horiz.
1:100 Vert.

N Line
CROSS SECTIONS

For Earthwork Development Only

(Sta. 497+66.00 to 502+55.90)

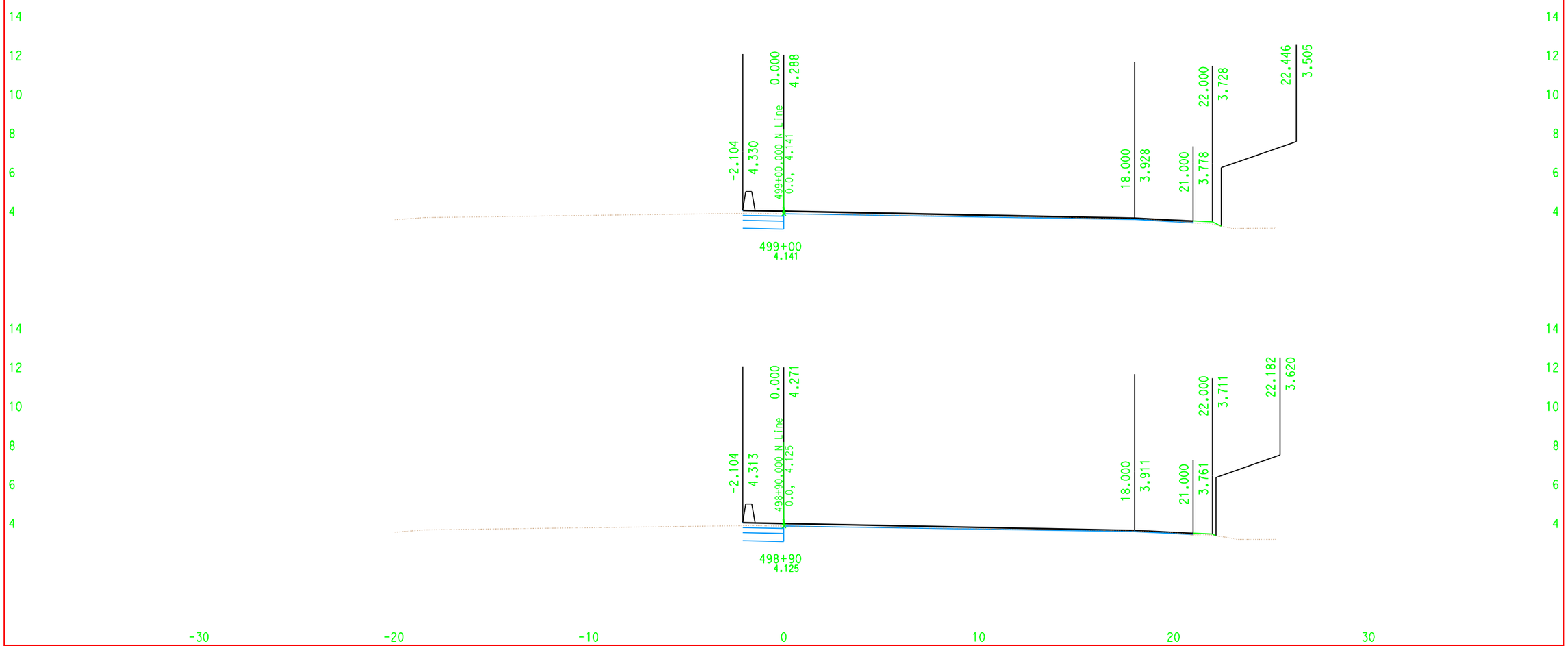

CROSS SECTIONS CREATED BY: JT DATE: 12/11/2007 ALL DIMENSIONS ARE IN METERS

Project: 00245 File: D:\USERS\Project\00245\JT_Files\N_Line\DesignX\jt_n2_DES.ear

EA: 165421

Scale Ratio: 1:100 Horiz.
1:100 Vert.

N Line
CROSS SECTIONS

SHEET 8 OF 33

For Earthwork Development Only

(Sta. 497+66.00 to 502+55.90)

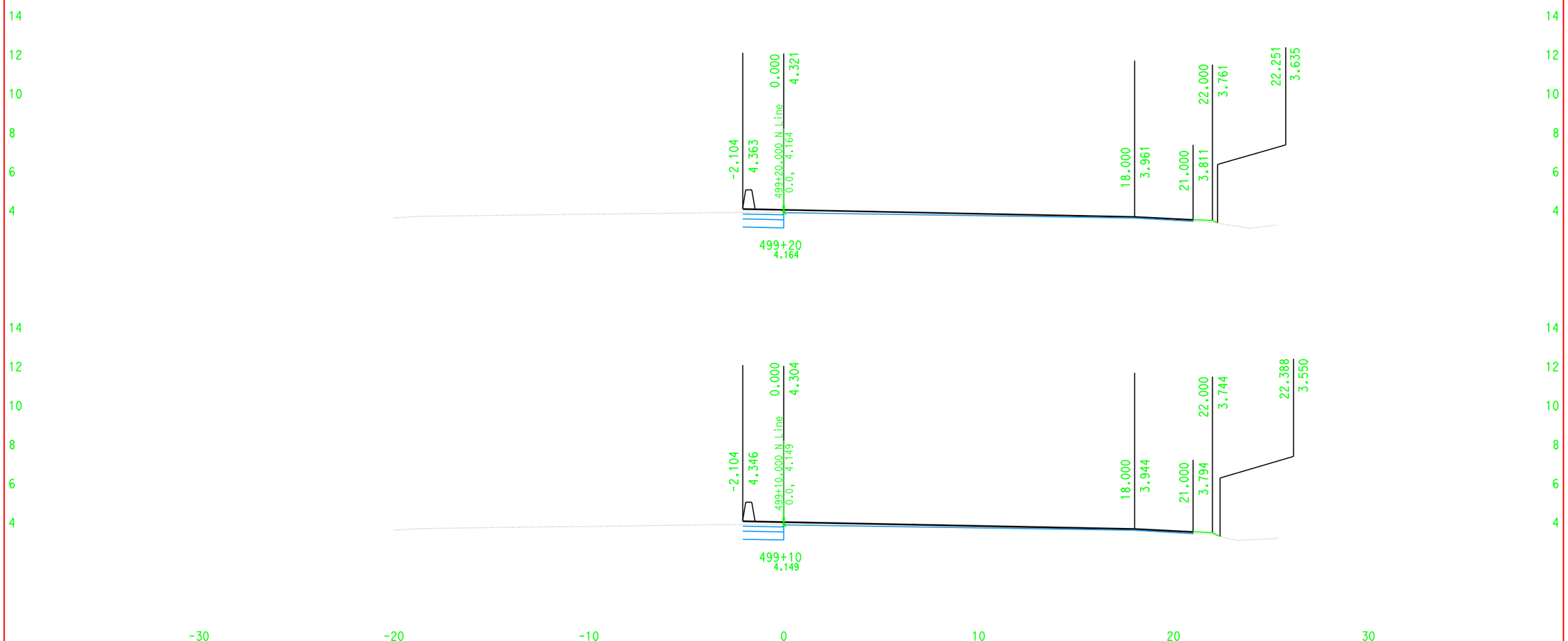

CROSS SECTIONS CREATED BY: JT DATE: 12/11/2007 ALL DIMENSIONS ARE IN METERS

EA: 165421

Scale Ratio: 1:100 Horiz. 1:100 Vert.

Project: 00245 File: D:\USERS\Project\00245\JT_Files\N_Line\DesignX\jt_n2_DES.ear

N Line
CROSS SECTIONS

For Earthwork Development Only

(Sta. 497+66.00 to 502+55.90)

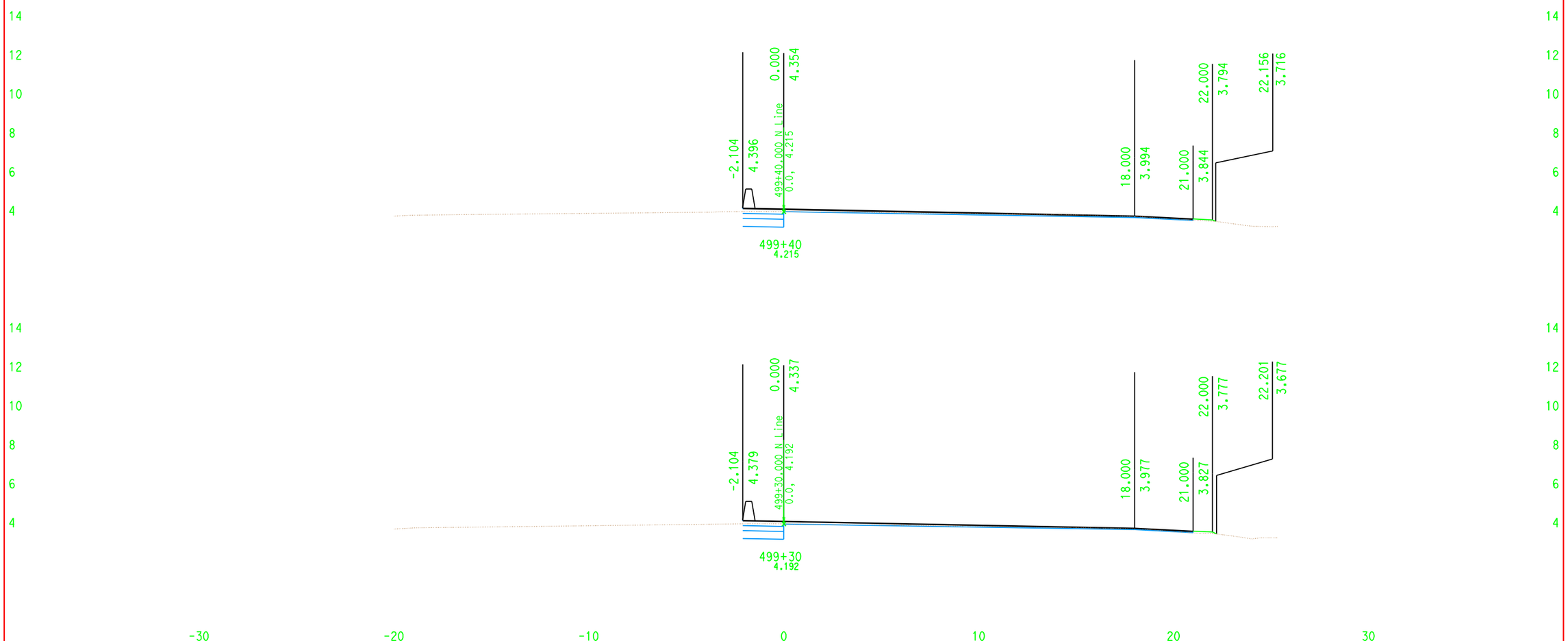

CROSS SECTIONS CREATED BY: JT DATE: 12/11/2007 ALL DIMENSIONS ARE IN METERS

EA: 165421

Scale Ratio: 1:100 Horiz. 1:100 Vert.

Project: 00245 File: D:\USERS\Project\00245\JT_Files\N_Line\DesignX\jt_n2_DES.ear

N Line
CROSS SECTIONS

For Earthwork Development Only

(Sta. 497+66.00 to 502+55.90)

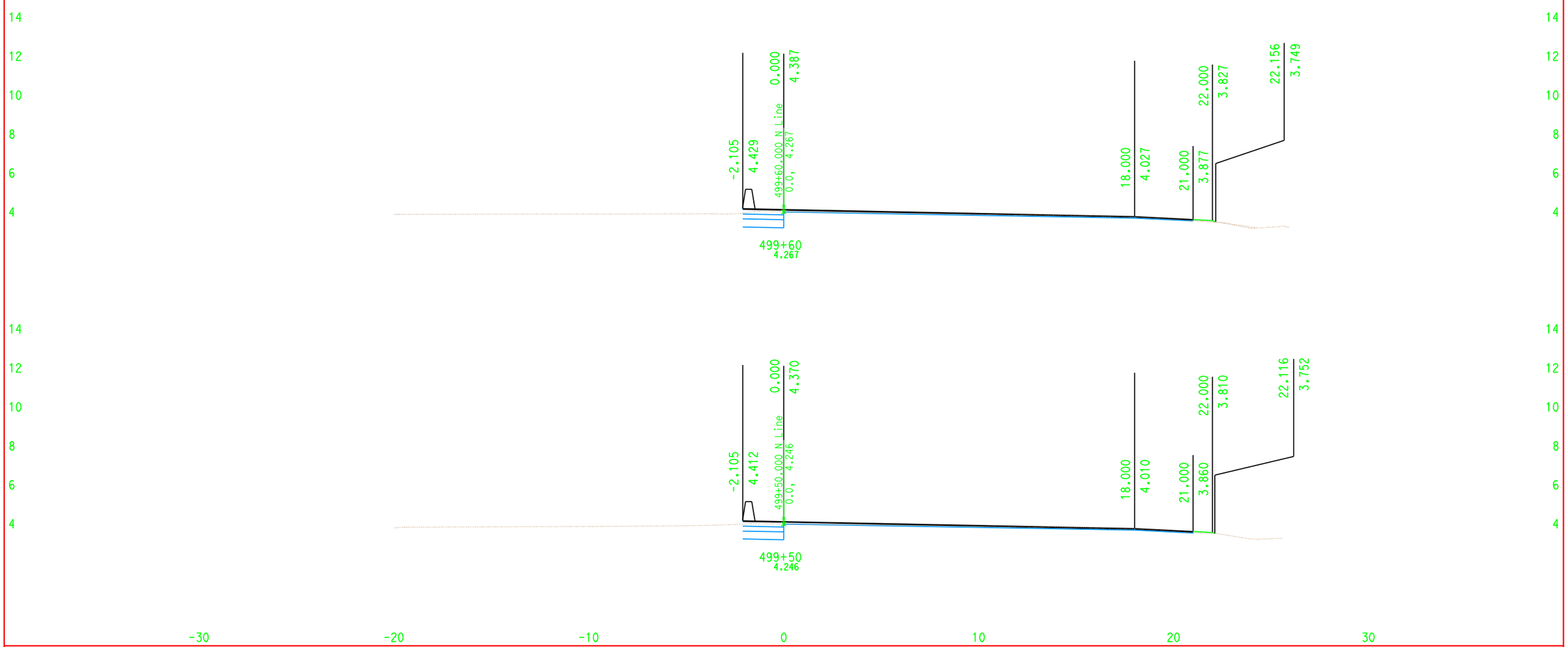

CROSS SECTIONS CREATED BY: JT DATE: 12/11/2007 ALL DIMENSIONS ARE IN METERS

EA: 165421

Scale Ratio: 1:100 Horiz. 1:100 Vert.

Project: 00245 File: D:\USERS\Project\00245\JT_Files\N_Line\DesignX\jt_n2_DES.ear

N Line
CROSS SECTIONS

For Earthwork Development Only

(Sta. 497+66.00 to 502+55.90)

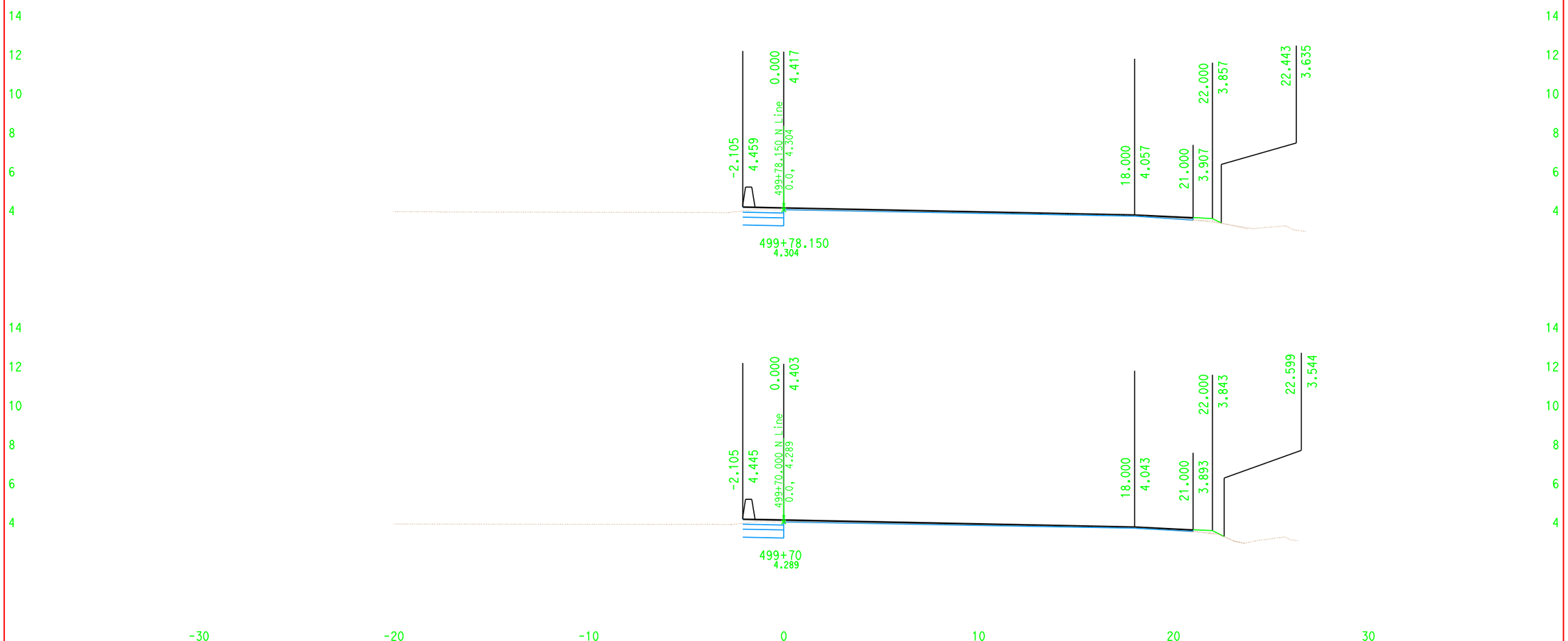

CROSS SECTIONS CREATED BY: JT DATE: 12/11/2007 ALL DIMENSIONS ARE IN METERS

EA: 165421

Scale Ratio: 1:100 Horiz.
1:100 Vert.

Project: 00245 File: D:\USERS\Project\00245\JT_Files\N_Line\DesignX\jt_n2_DES.ear

N Line
CROSS SECTIONS

For Earthwork Development Only

(Sta. 497+66.00 to 502+55.90)

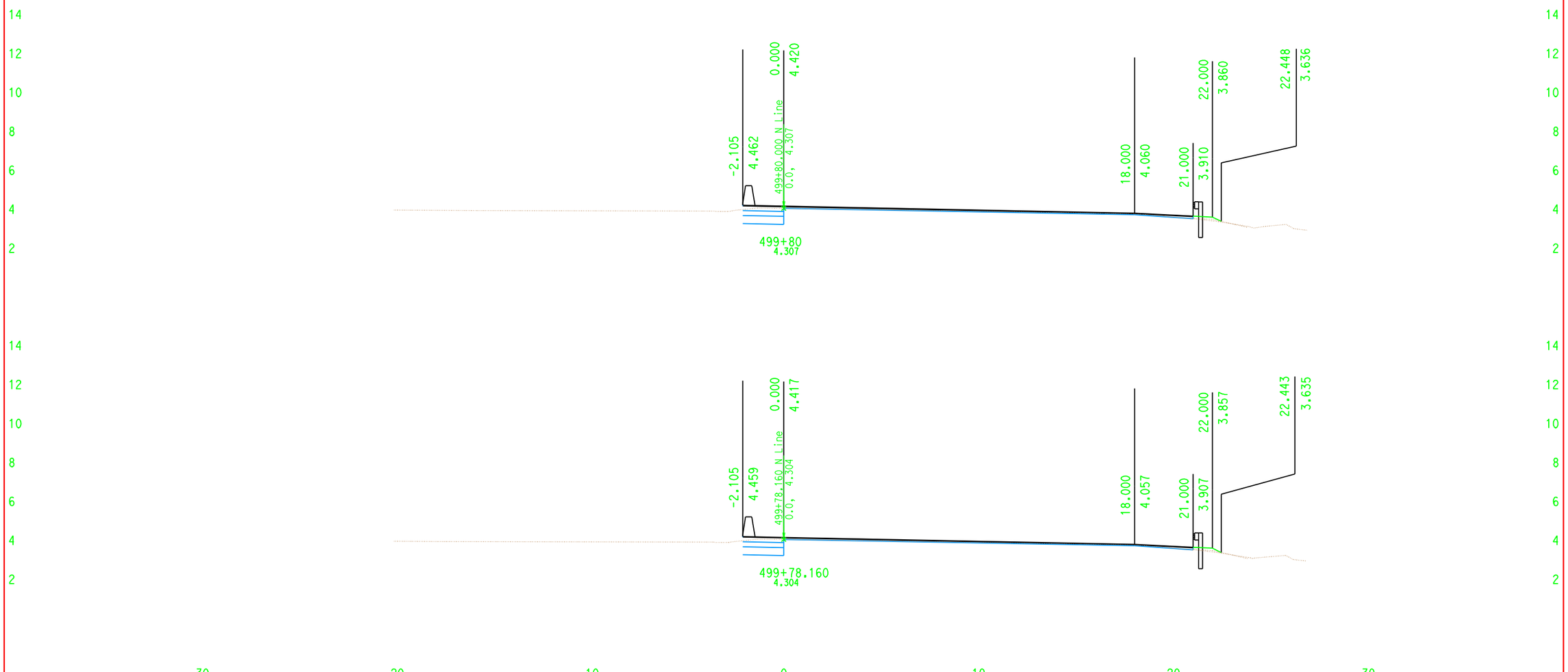

CROSS SECTIONS CREATED BY: JT DATE: 12/11/2007 ALL DIMENSIONS ARE IN METERS

EA: 165421

Scale Ratio: 1:100 Horiz.
1:100 Vert.

Project: 00245 File: D:\USERS\Project\00245\JT_Files\N_Line\DesignX\jt_n2_DES.ear

N Line
CROSS SECTIONS

For Earthwork Development Only

(Sta. 497+66.00 to 502+55.90)

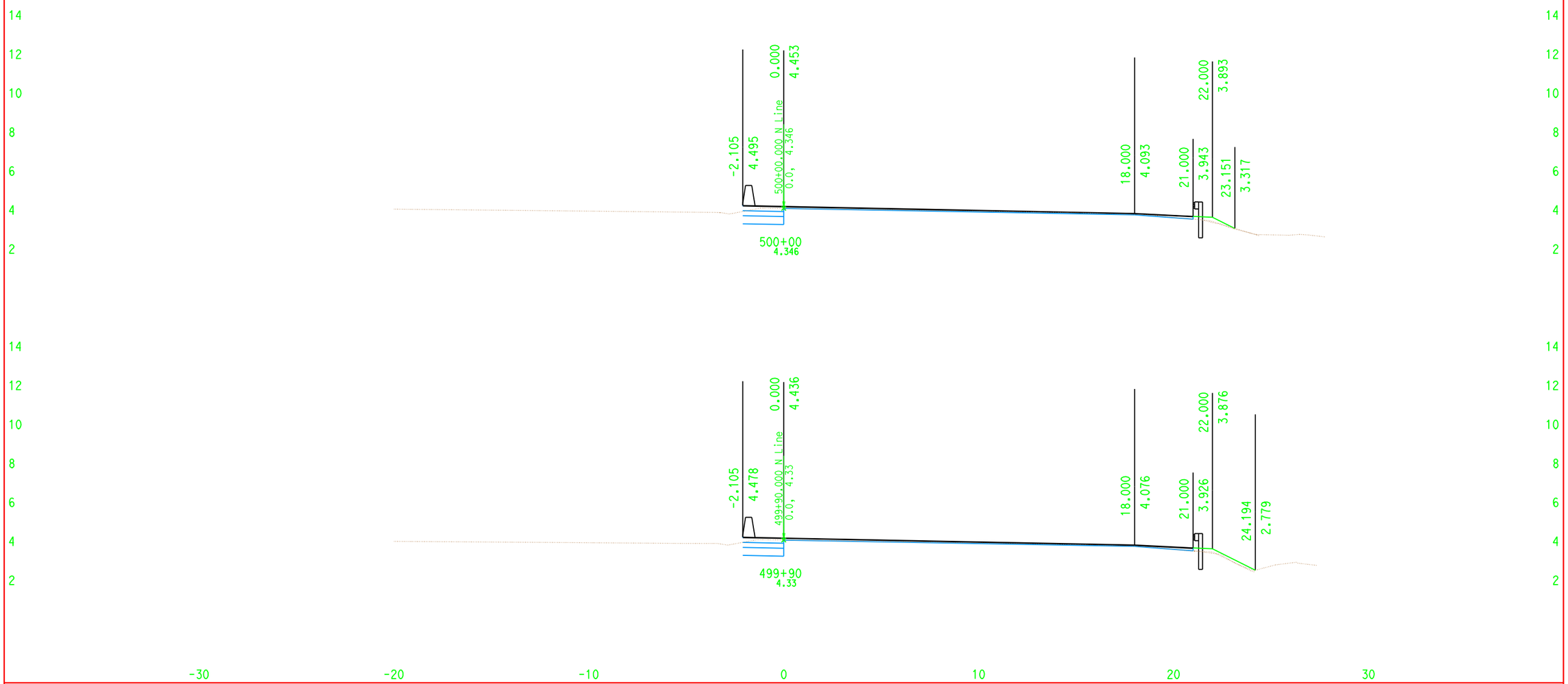

CROSS SECTIONS CREATED BY: JT DATE: 12/11/2007 ALL DIMENSIONS ARE IN METERS

Project: 00245 File: D:\USERS\Project\00245\JT_Files\N_Line\DesignX\jt_n2_DES.ear

EA: 165421

Scale Ratio: 1:100 Horiz.
1:100 Vert.

N Line
CROSS SECTIONS

For Earthwork Development Only

(Sta. 497+66.00 to 502+55.90)

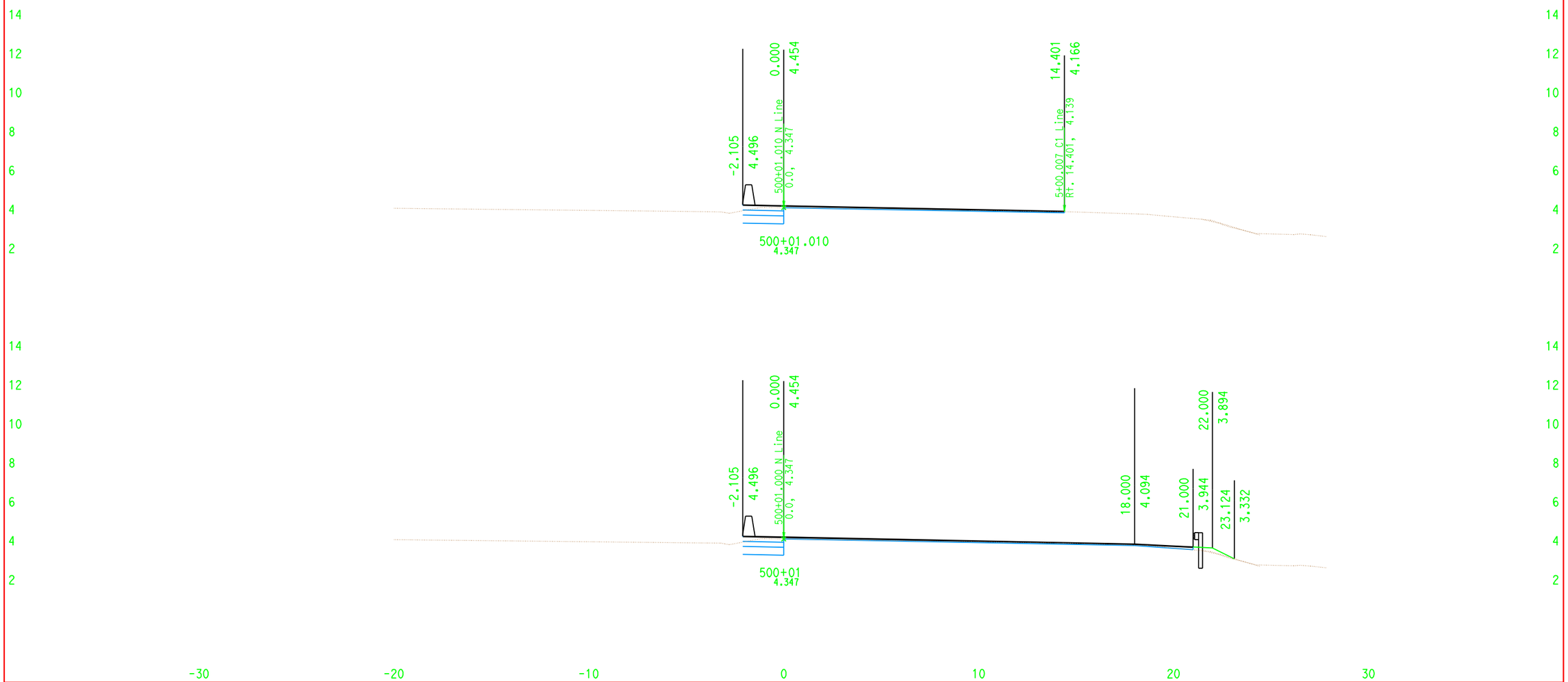

CROSS SECTIONS CREATED BY: JT DATE: 12/11/2007 ALL DIMENSIONS ARE IN METERS

Project: 00245 File: D:\USERS\Project\00245\JT_Files\N_Line\DesignX\jt_n2_DES.ear

EA: 165421

Scale Ratio: 1:100 Horiz.
1:100 Vert.

N Line
CROSS SECTIONS

For Earthwork Development Only

(Sta. 497+66.00 to 502+55.90)

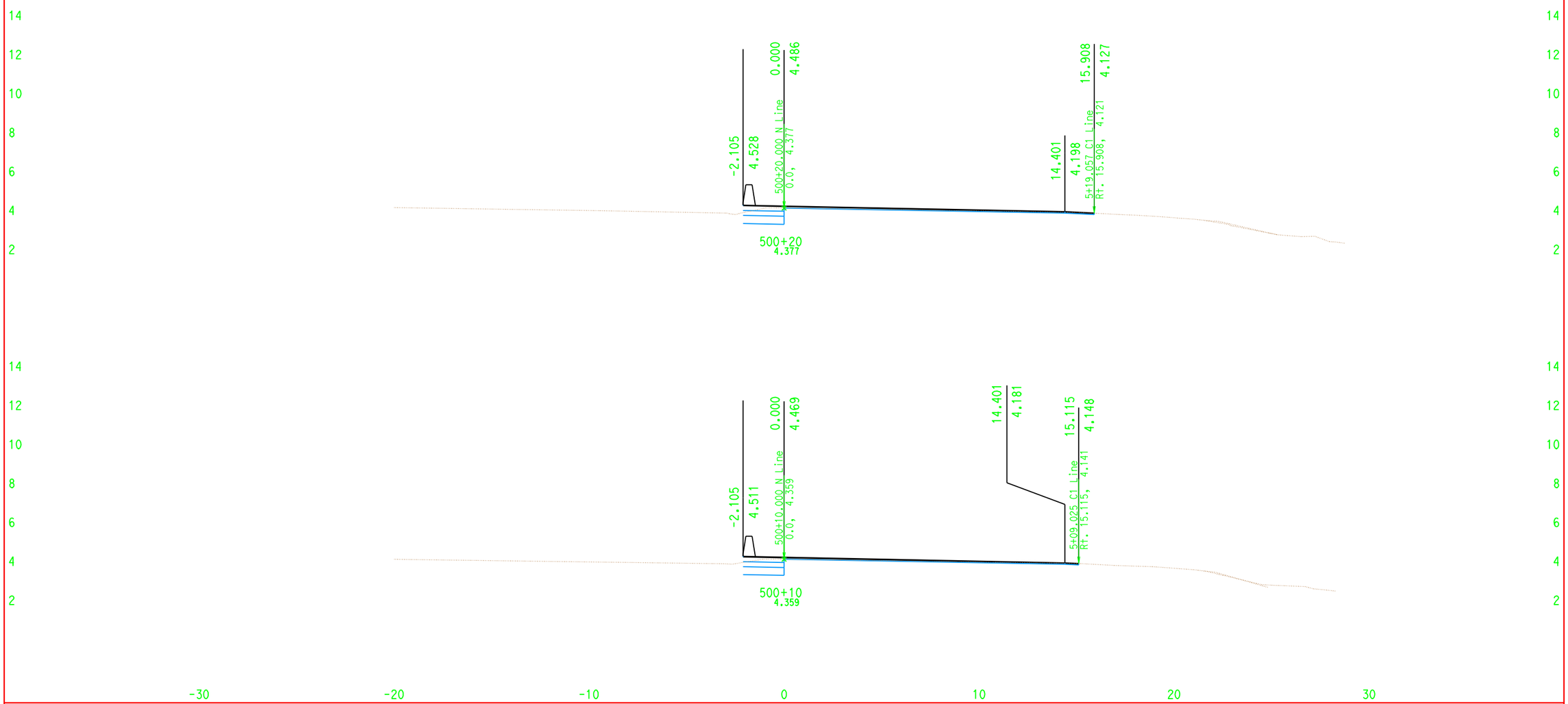

CROSS SECTIONS CREATED BY: JT DATE: 12/11/2007 ALL DIMENSIONS ARE IN METERS

Project: 00245 File: D:\USERS\Project\00245\JT_Files\N_Line\DesignX\jt_n2_DES.ear

EA: 165421

Scale Ratio: 1:100 Horiz.
1:100 Vert.

N Line
CROSS SECTIONS

For Earthwork Development Only

(Sta. 497+66.00 to 502+55.90)

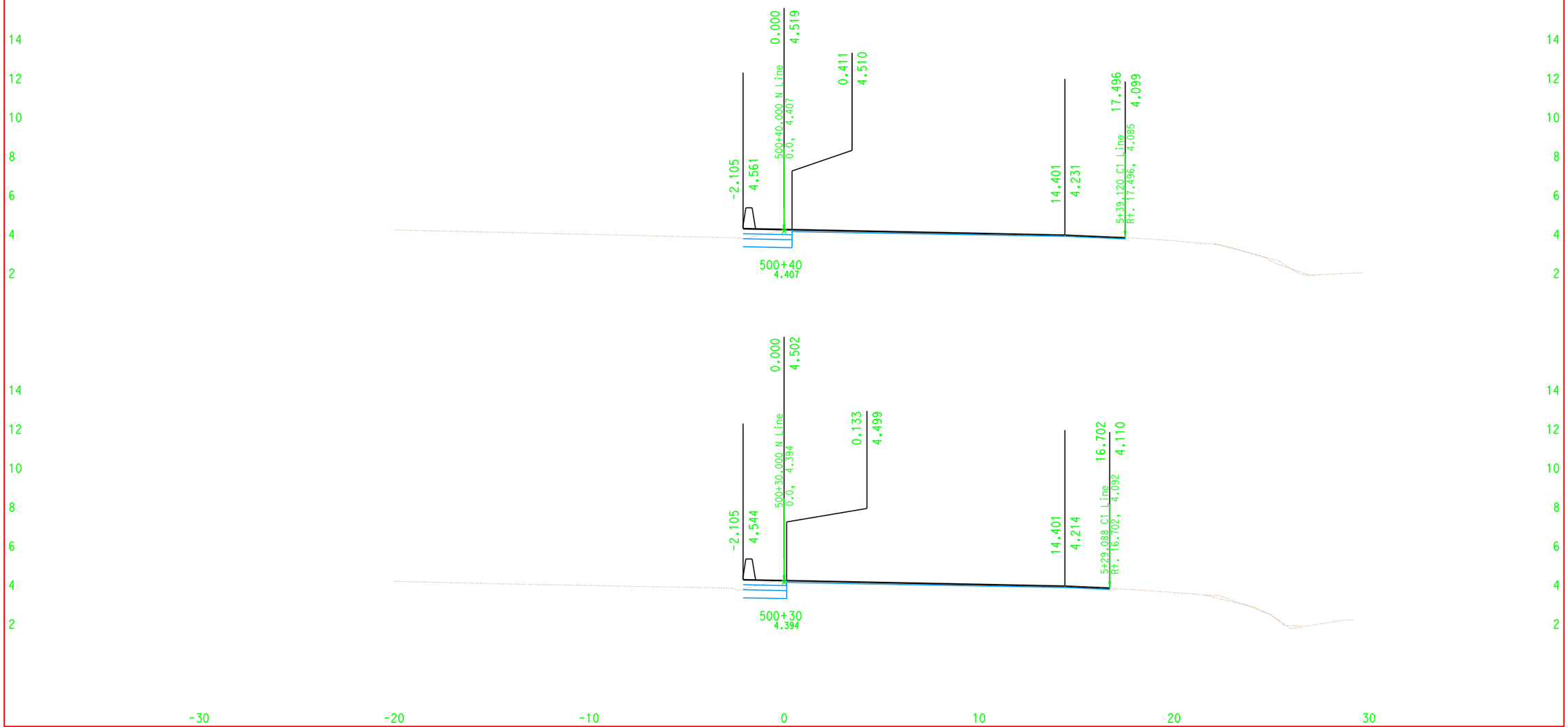

CROSS SECTIONS CREATED BY: JT DATE: 12/11/2007 ALL DIMENSIONS ARE IN METERS

EA: 165421

Scale Ratio: 1:100 Horiz.
1:100 Vert.

Project: 00245 File: D:\USERS\Project\00245\JT_Files\N_Line\DesignX\jt_n2_DES.ear

N Line
CROSS SECTIONS

SHEET 17 OF 33

For Earthwork Development Only

(Sta. 497+66.00 to 502+55.90)

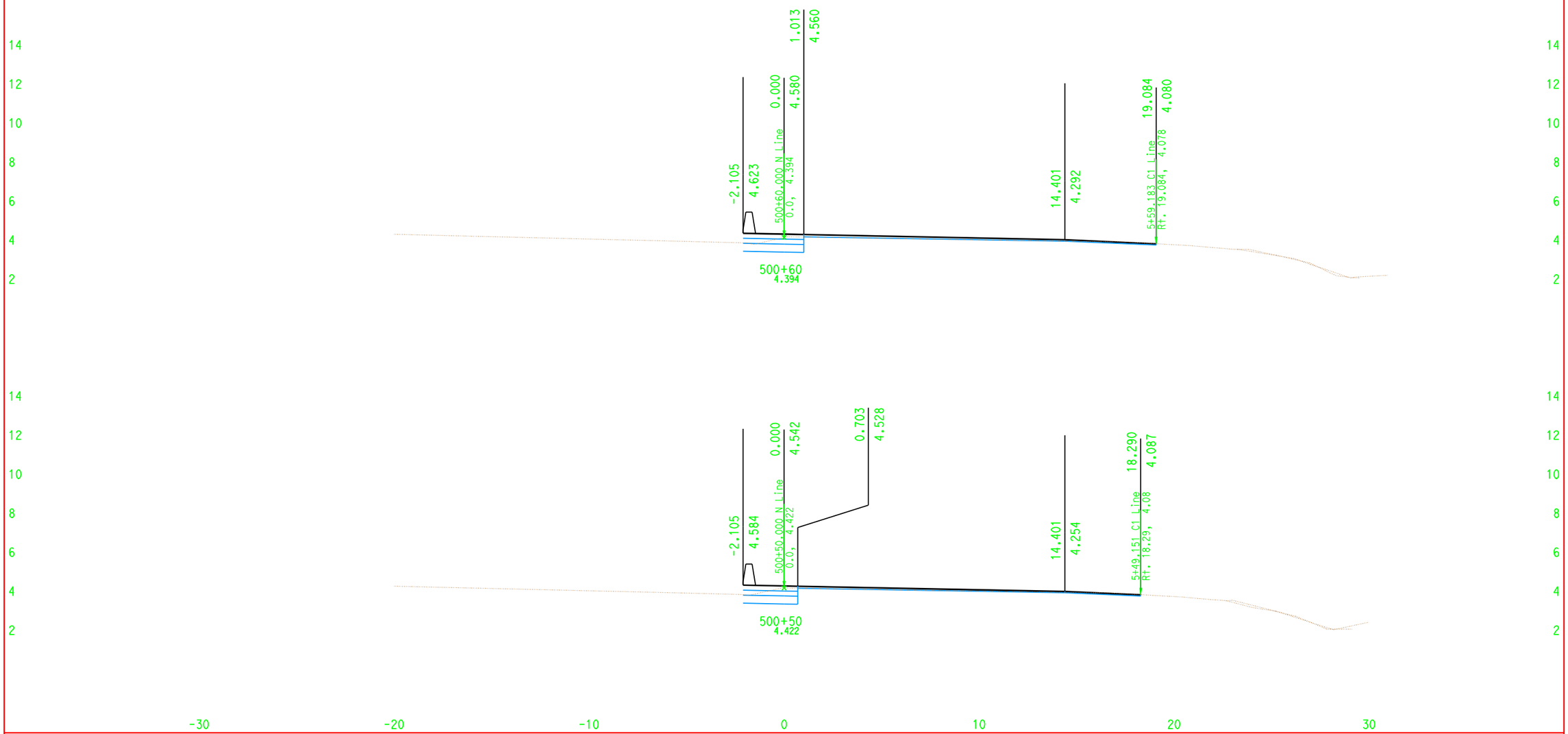

CROSS SECTIONS CREATED BY: JT DATE: 12/11/2007 ALL DIMENSIONS ARE IN METERS

Project: 00245 File: D:\USERS\Project\00245\JT_Files\N_Line\DesignX\jt_n2_DES.ear

EA: 165421

Scale Ratio: 1:100 Horiz.
1:100 Vert.

N Line
CROSS SECTIONS

For Earthwork Development Only

(Sta. 497+66.00 to 502+55.90)

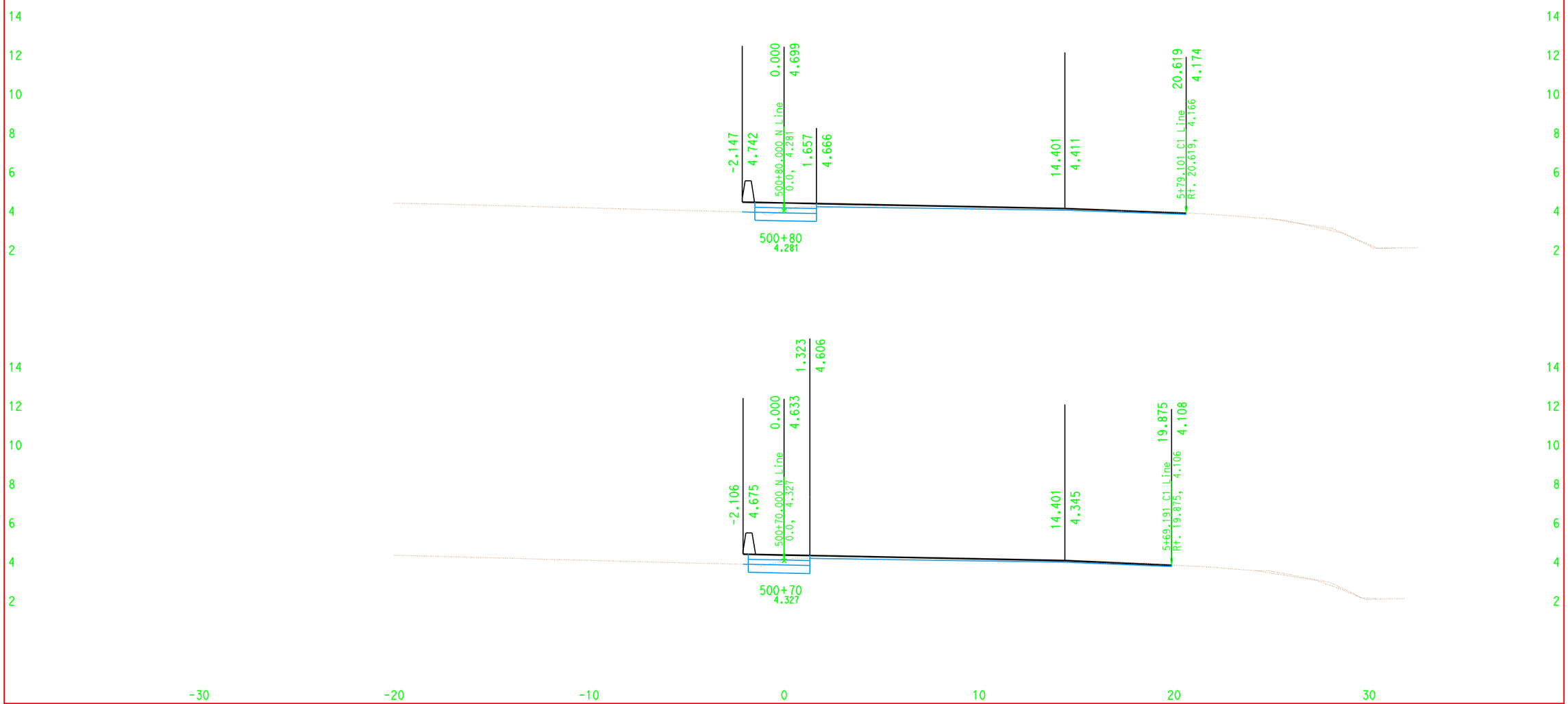

CROSS SECTIONS CREATED BY: JT DATE: 12/11/2007 ALL DIMENSIONS ARE IN METERS

EA: 165421

Scale Ratio: 1:100 Horiz. 1:100 Vert.

N Line
CROSS SECTIONS

SHEET 19 OF 33

Project: 00245 File: D:\USERS\Project\00245\JT_Files\N_Line\DesignX\jt_n2_DES.ear

For Earthwork Development Only

(Sta. 497+66.00 to 502+55.90)

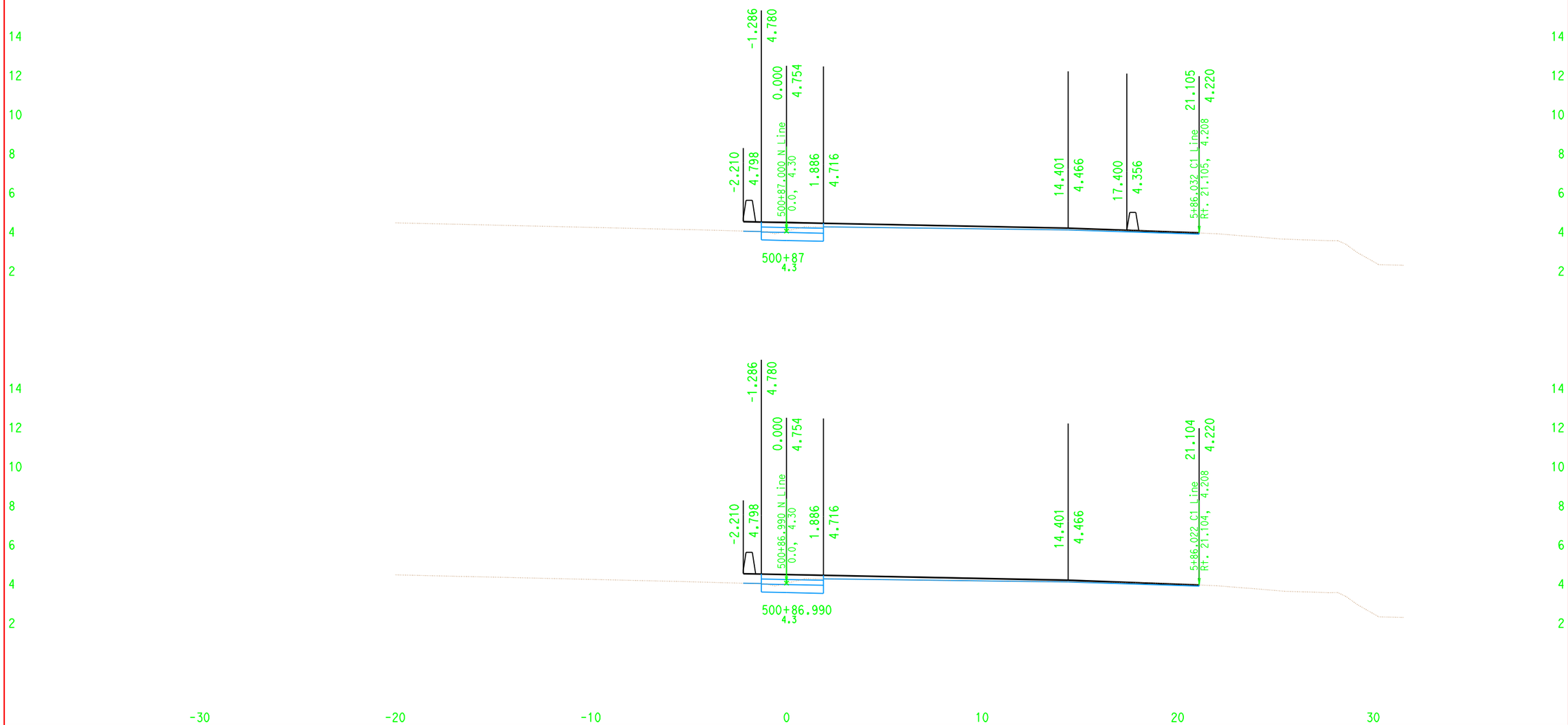

CROSS SECTIONS CREATED BY: JT DATE: 12/11/2007 ALL DIMENSIONS ARE IN METERS

EA: 165421

Scale Ratio: 1:100 Horiz. 1:100 Vert.

Project: 00245 File: D:\USERS\Project\00245\JT_Files\N_Line\DesignX\jt_n2_DES.ear

N Line
CROSS SECTIONS

For Earthwork Development Only

(Sta. 497+66.00 to 502+55.90)

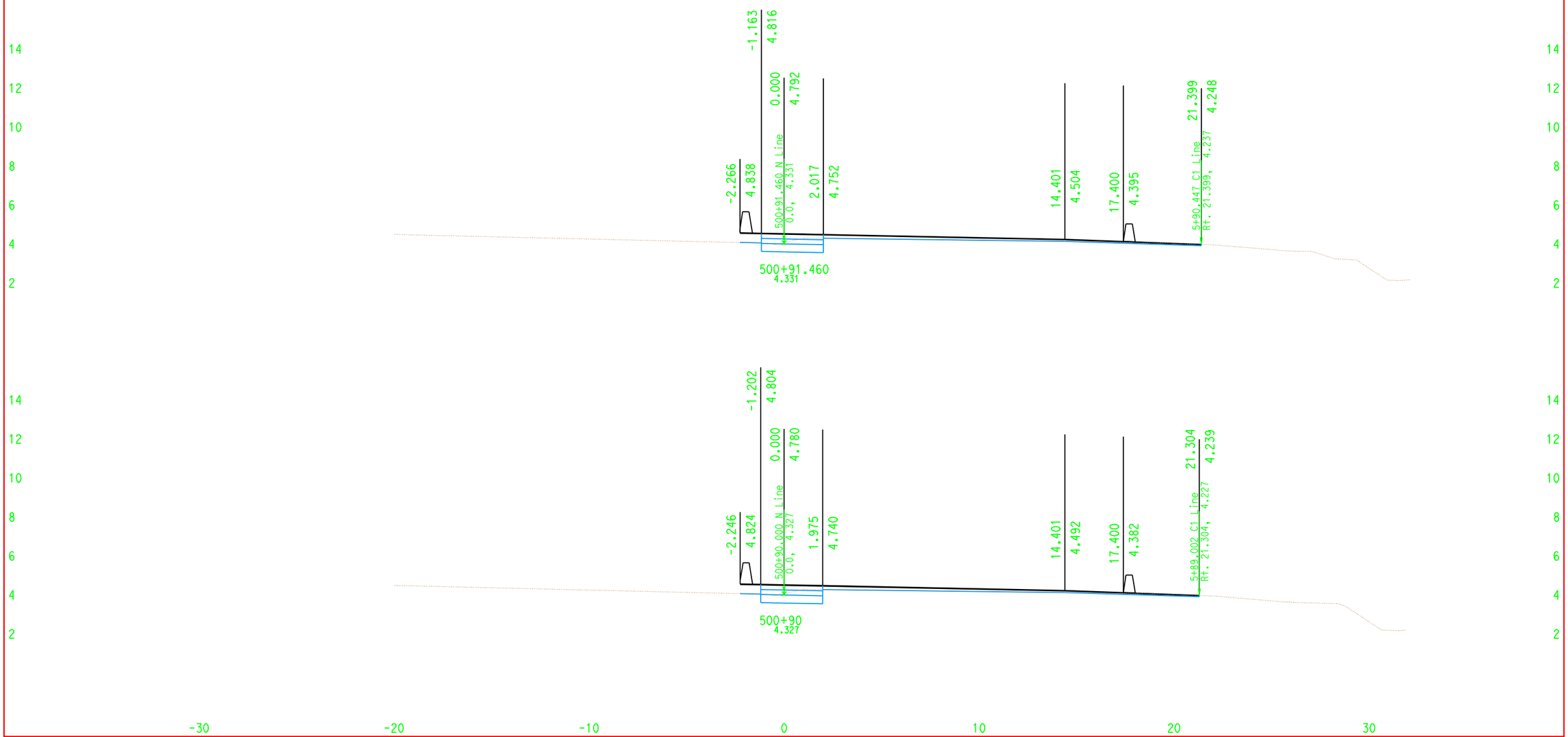

CROSS SECTIONS CREATED BY: JT DATE: 12/11/2007 ALL DIMENSIONS ARE IN METERS

EA: 165421

Scale Ratio: 1:100 Horiz. 1:100 Vert.

Project: 00245 File: D:\USERS\Project\00245\JT_Files\N_Line\DesignX\jt_n2_DES.ear

N Line
CROSS SECTIONS

For Earthwork Development Only

(Sta. 497+66.00 to 502+55.90)

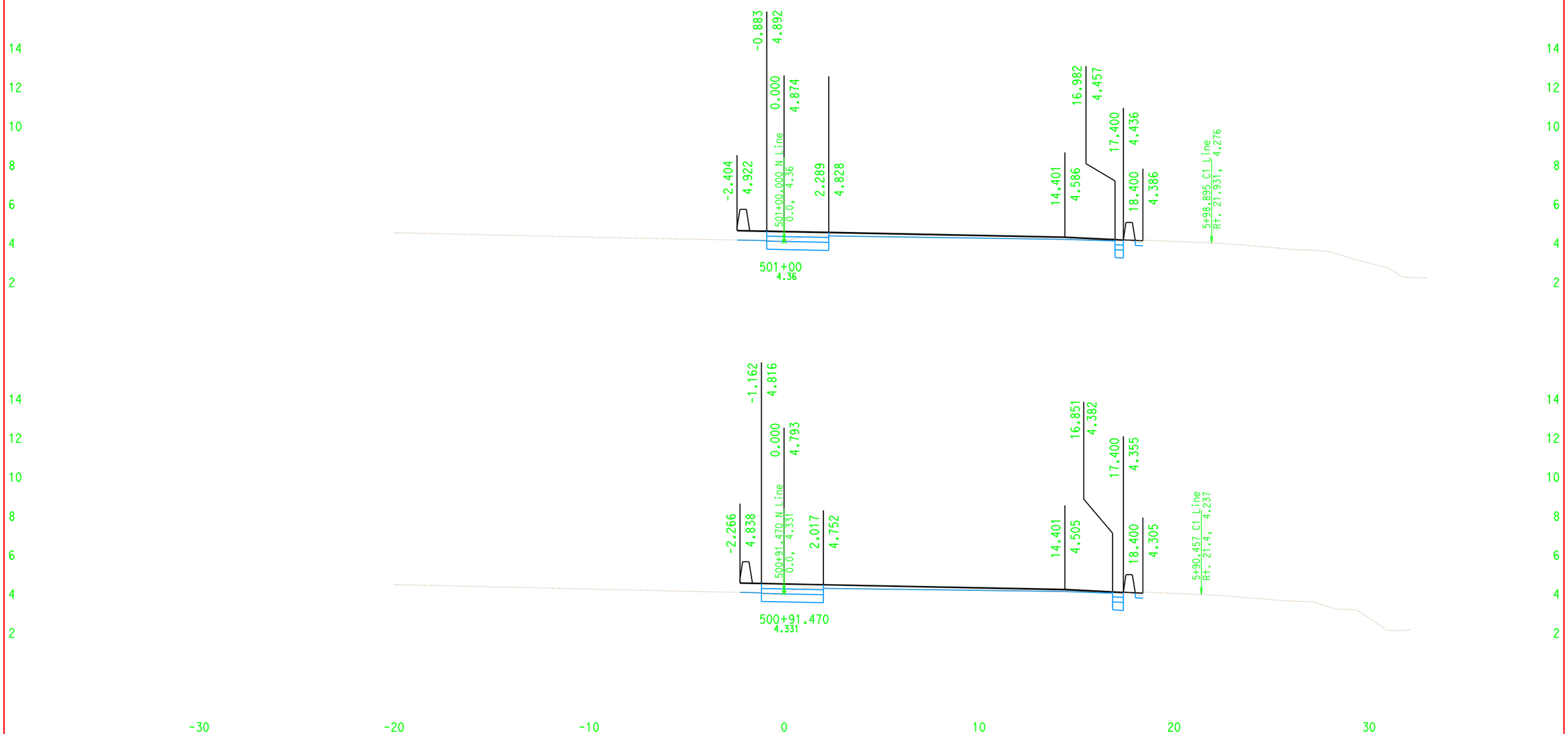

CROSS SECTIONS CREATED BY: JT DATE: 12/11/2007 ALL DIMENSIONS ARE IN METERS

Project: 00245 File: D:\USERS\Project\00245\JT_Files\N_Line\DesignX\jt_n2_DES.ear

EA: 165421

Scale Ratio: 1:100 Horiz.
1:100 Vert.

N Line
CROSS SECTIONS

For Earthwork Development Only

(Sta. 497+66.00 to 502+55.90)

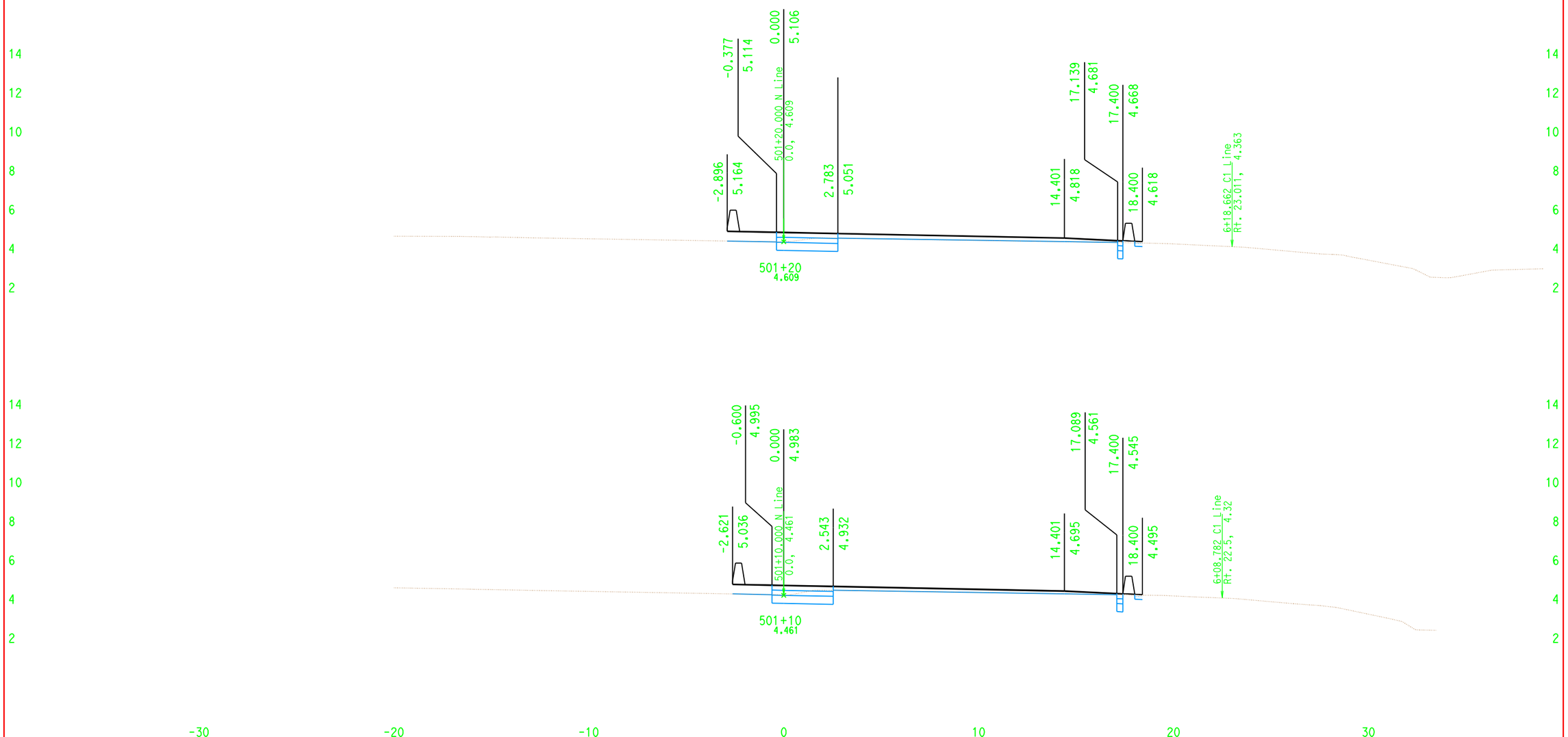

CROSS SECTIONS CREATED BY: JT DATE: 12/11/2007 ALL DIMENSIONS ARE IN METERS

EA: 165421

Scale Ratio: 1:100 Horiz. 1:100 Vert.

Project: 00245 File: D:\USERS\Project\00245\JT_Files\N_Line\DesignX\jt_n2_DES.ear

N Line
CROSS SECTIONS

For Earthwork Development Only

(Sta. 497+66.00 to 502+55.90)

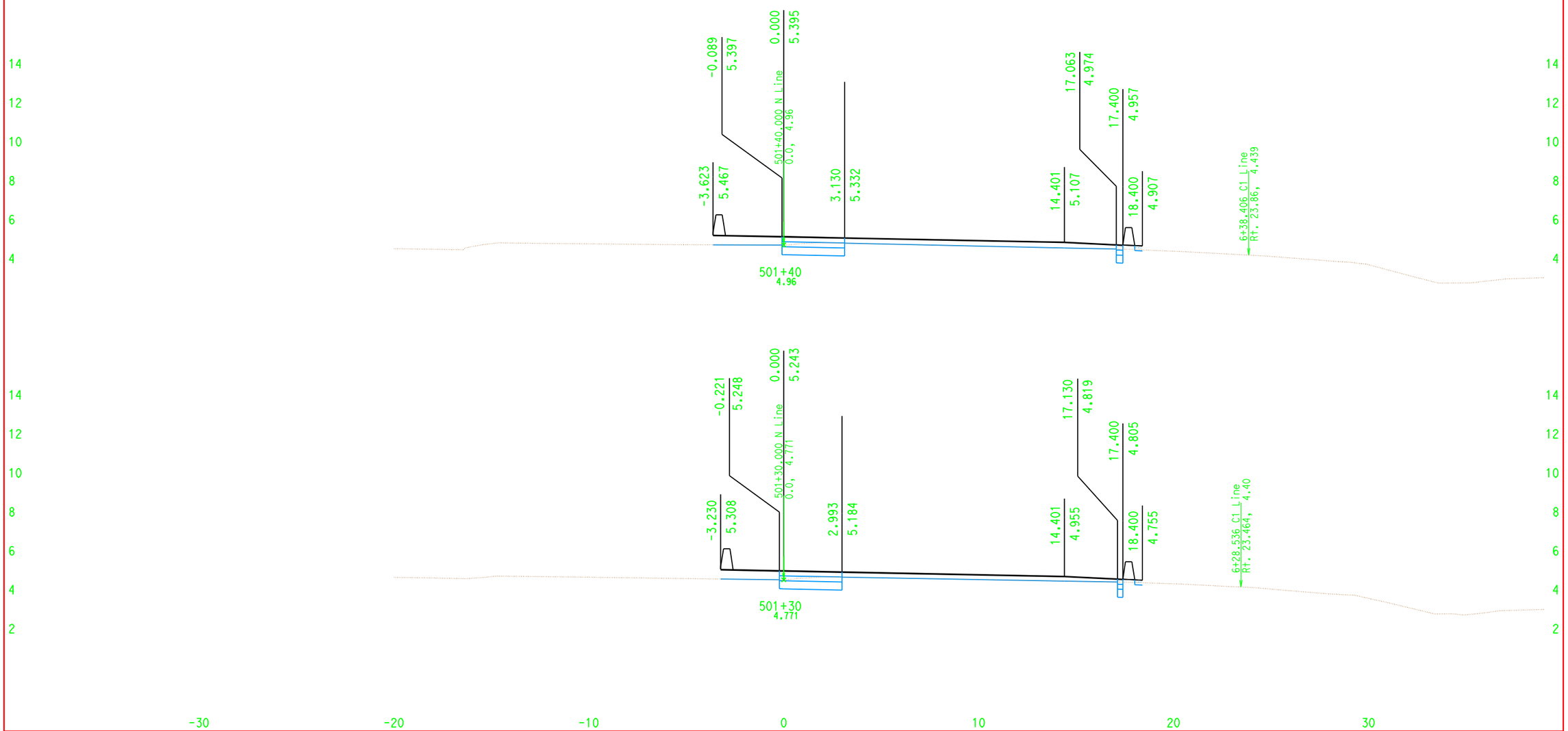

CROSS SECTIONS CREATED BY: JT DATE: 12/11/2007 ALL DIMENSIONS ARE IN METERS

EA: 165421

Scale Ratio: 1:100 Horiz. 1:100 Vert.

Project: 00245 File: D:\USERS\Project\00245\JT_Files\N_Line\DesignX\jt_n2_DES.ear

N Line
CROSS SECTIONS

For Earthwork Development Only

(Sta. 497+66.00 to 502+55.90)

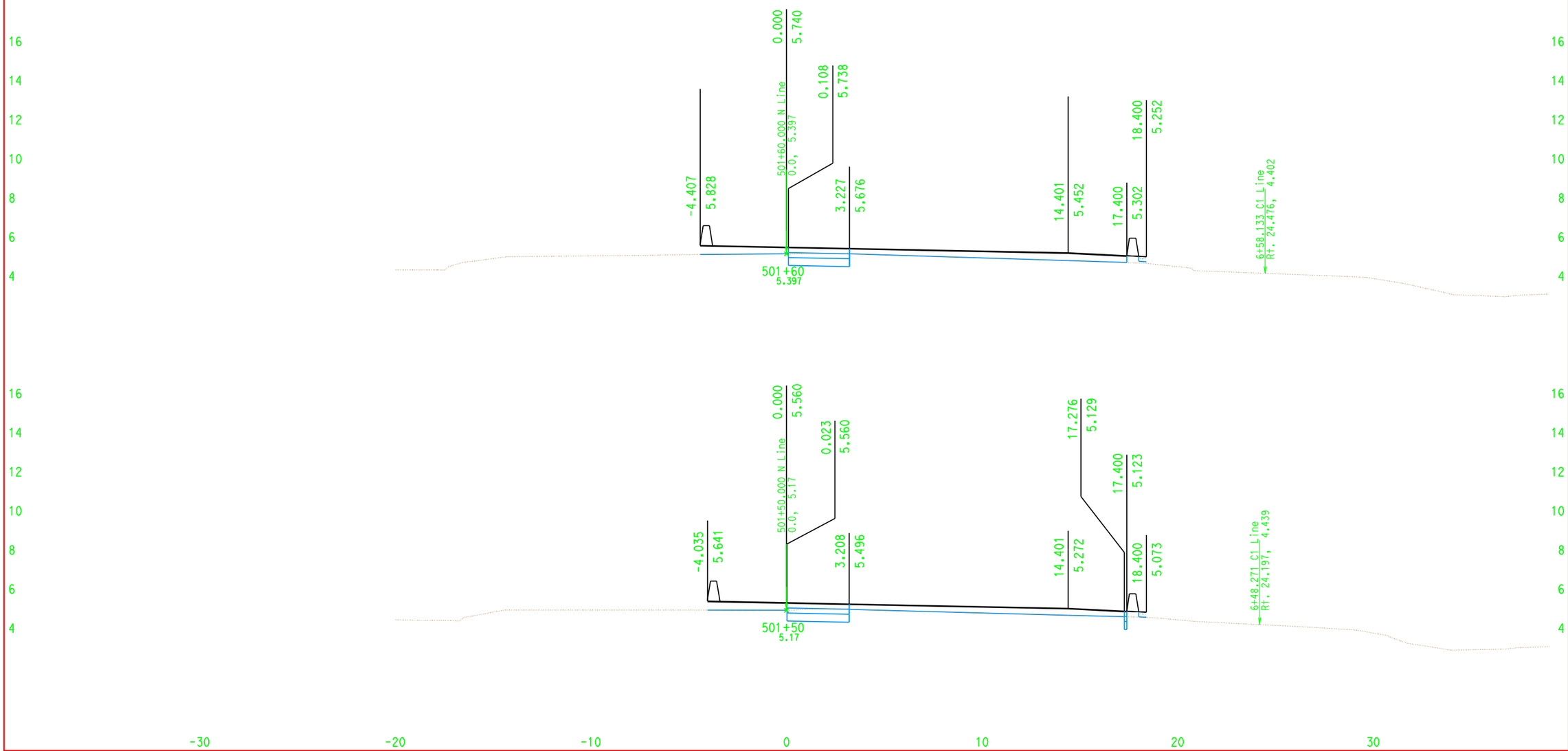

CROSS SECTIONS CREATED BY: JT DATE: 12/11/2007 ALL DIMENSIONS ARE IN METERS

EA: 165421

Scale Ratio: 1:100 Horiz. 1:100 Vert.

Project: 00245 File: D:\USERS\Project\00245\JT_Files\N_Line\DesignX\jt_n2_DES.ear

N Line
CROSS SECTIONS

SHEET 25 OF 33

For Earthwork Development Only

(Sta. 497+66.00 to 502+55.90)

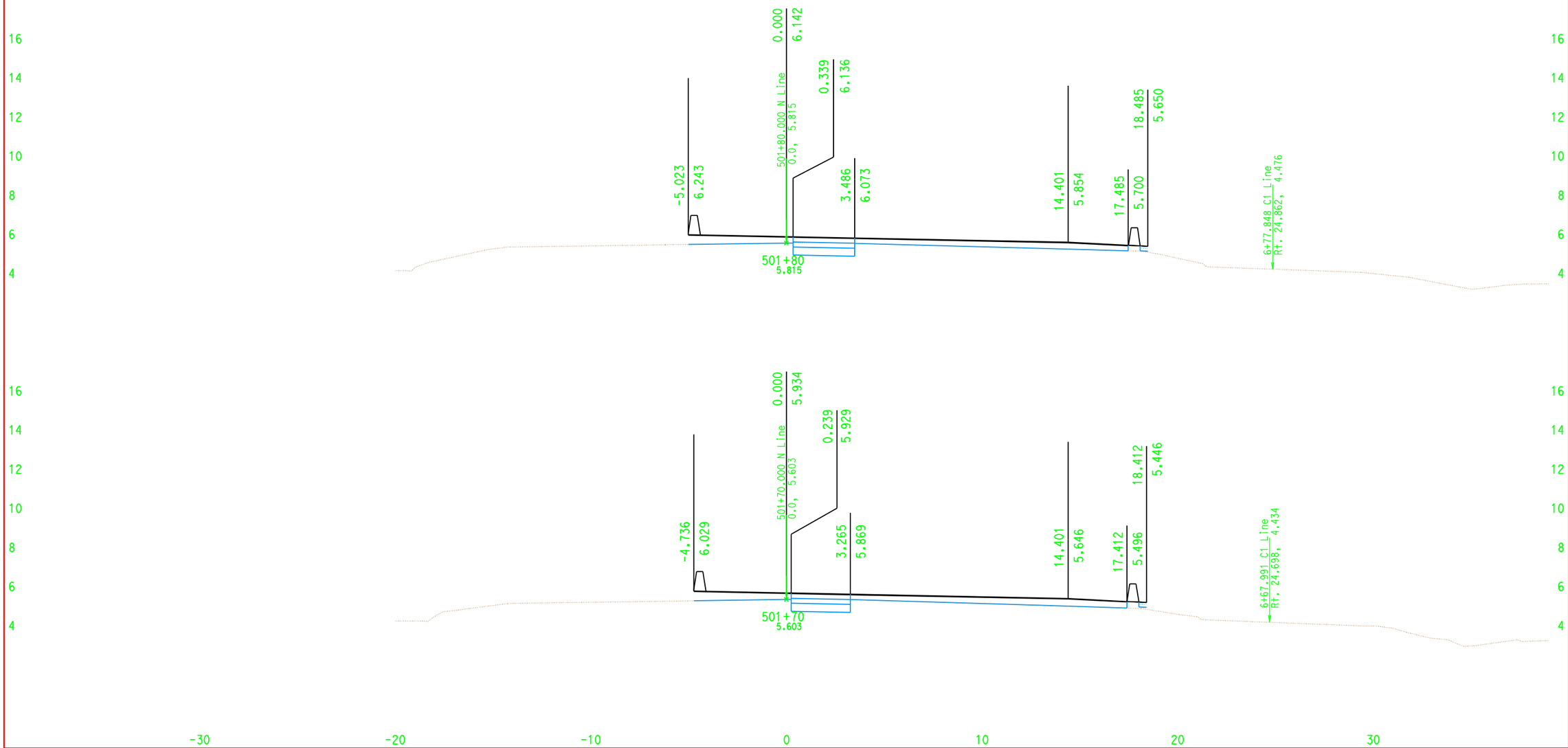

CROSS SECTIONS CREATED BY: JT DATE: 12/11/2007 ALL DIMENSIONS ARE IN METERS

Project: 00245 File: D:\USERS\Project\00245\JT_Files\N_Line\DesignX\jt_n2_DES.ear

EA: 165421

Scale Ratio: 1:100 Horiz.
1:100 Vert.

N Line
CROSS SECTIONS

For Earthwork Development Only

(Sta. 497+66.00 to 502+55.90)

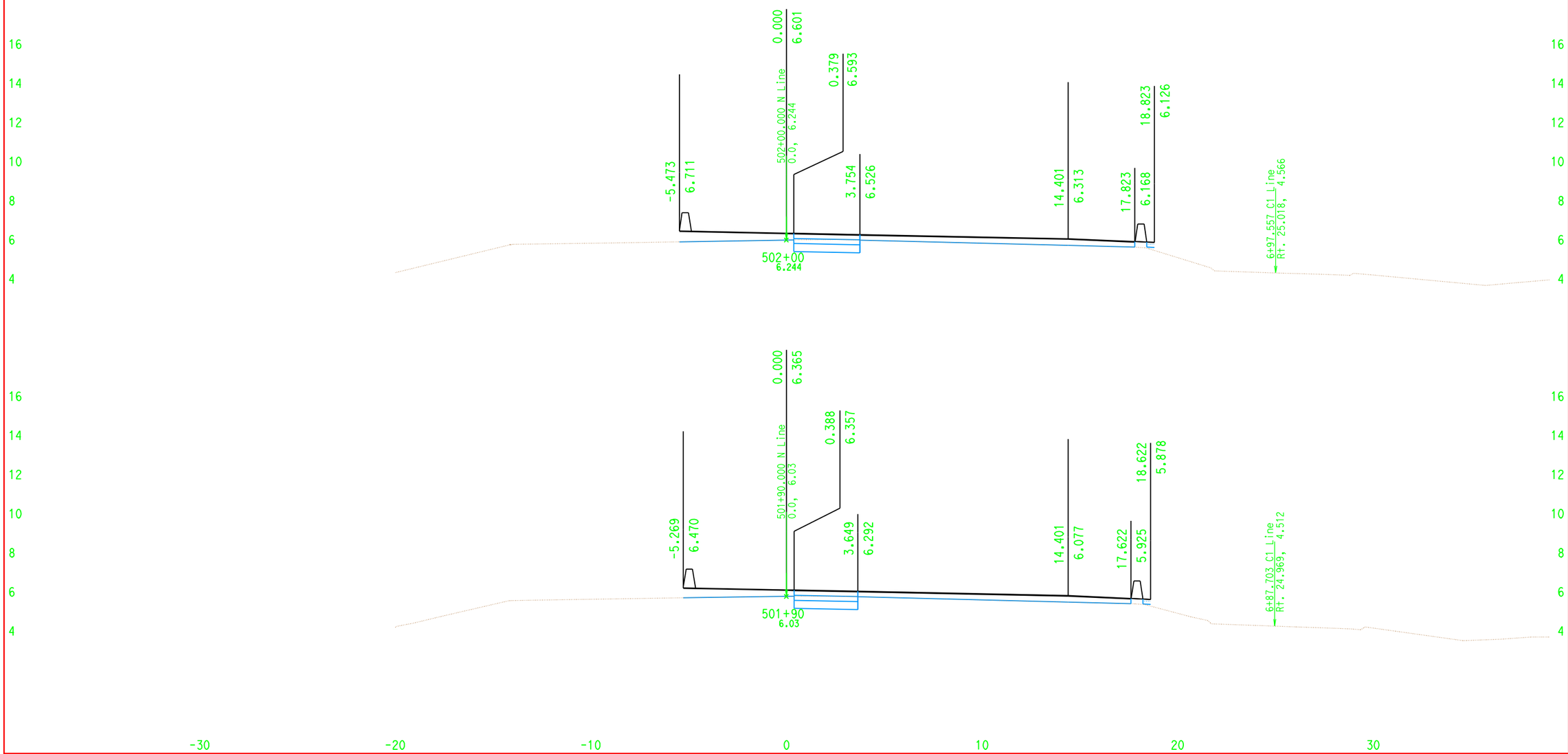

CROSS SECTIONS CREATED BY: JT DATE: 12/11/2007 ALL DIMENSIONS ARE IN METERS

Project: 00245 File: D:\USERS\Project\00245\JT_Files\N_Line\DesignX\jt_n2_DES.ear

EA: 165421

Scale Ratio: 1:100 Horiz.
1:100 Vert.

N Line
CROSS SECTIONS

For Earthwork Development Only

(Sta. 497+66.00 to 502+55.90)

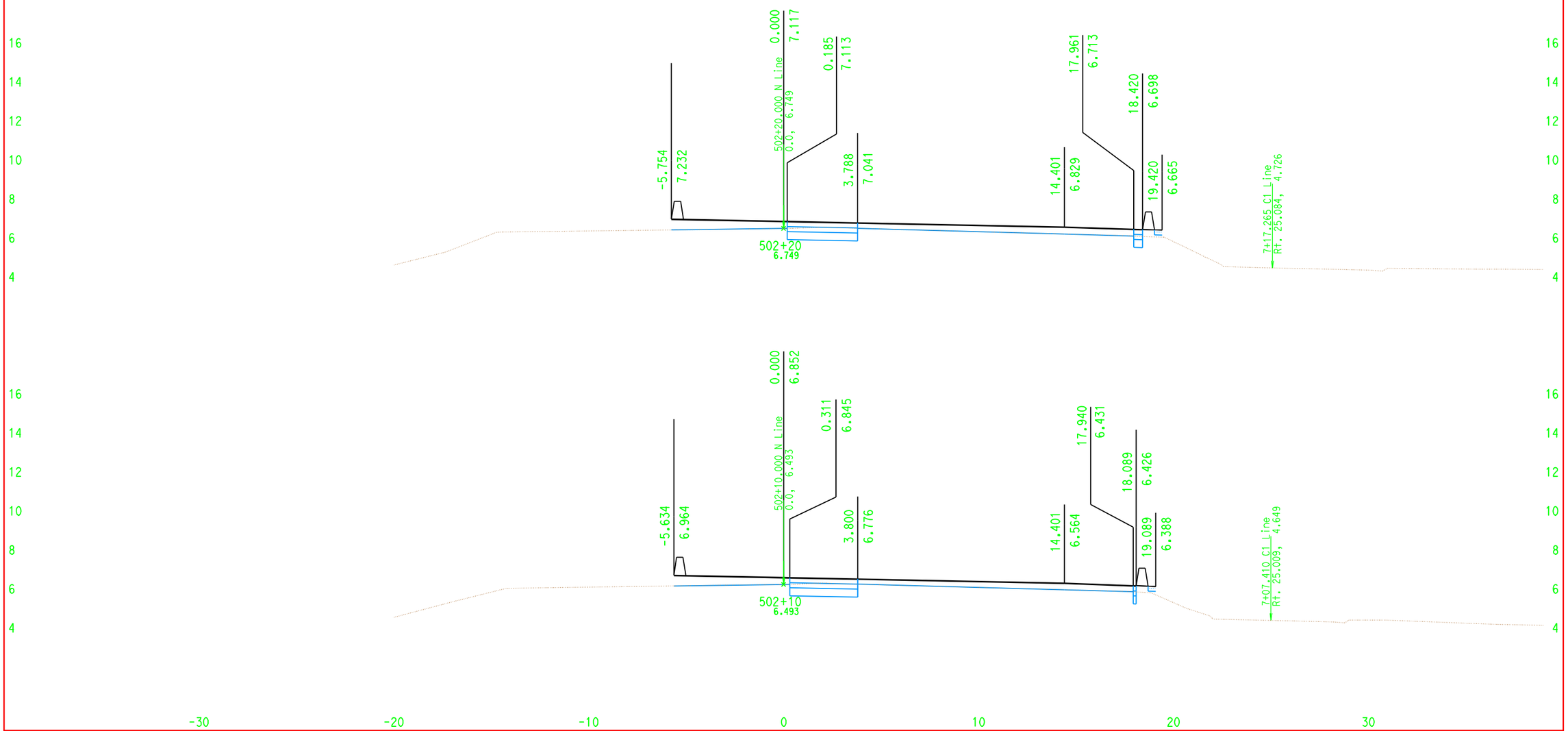

CROSS SECTIONS CREATED BY: JT DATE: 12/11/2007 ALL DIMENSIONS ARE IN METERS

Project: 00245 File: D:\USERS\Project\00245\JT_Files\N_Line\DesignX\jt_n2_DES.ear

EA: 165421

Scale Ratio: 1:100 Horiz.
1:100 Vert.

N Line
CROSS SECTIONS

For Earthwork Development Only

(Sta. 497+66.00 to 502+55.90)

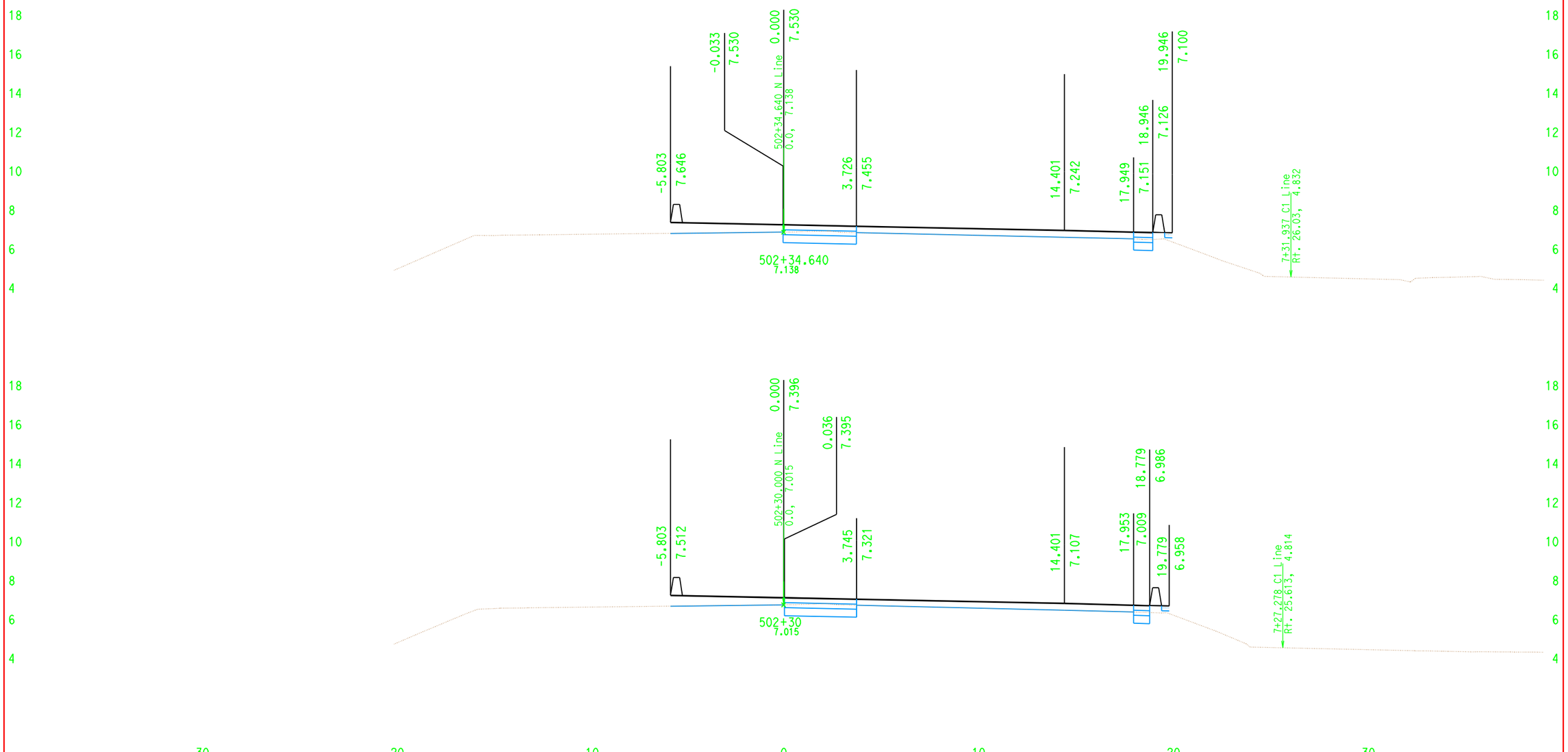

CROSS SECTIONS CREATED BY: JT DATE: 12/11/2007 ALL DIMENSIONS ARE IN METERS

EA: 165421

Scale Ratio: 1:100 Horiz. 1:100 Vert.

Project: 00245 File: D:\USERS\Project\00245\JT_Files\N_Line\DesignX\jt_n2_DES.ear

N Line
CROSS SECTIONS

For Earthwork Development Only

(Sta. 497+66.00 to 502+55.90)

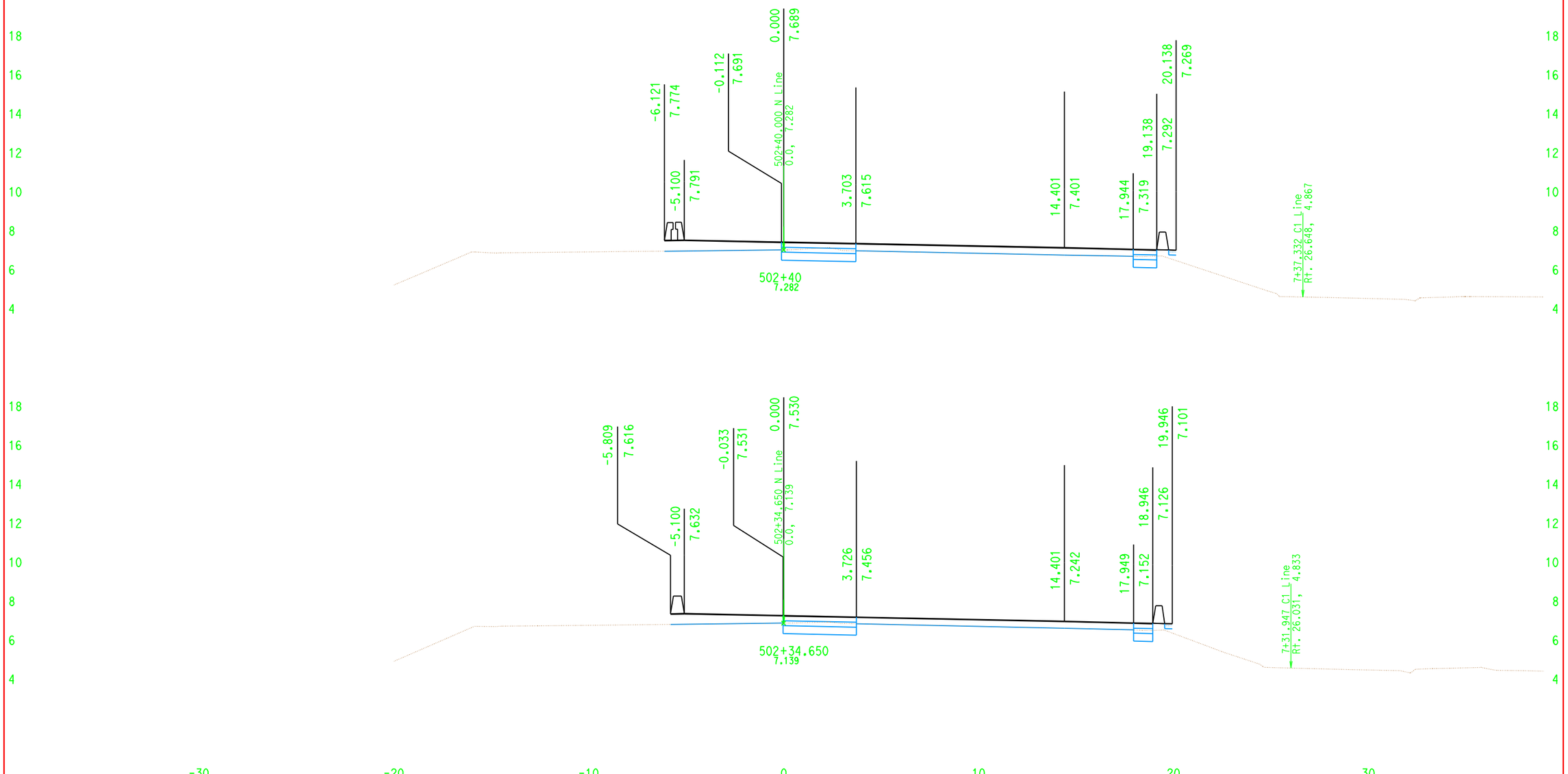

CROSS SECTIONS CREATED BY: JT DATE: 12/11/2007 ALL DIMENSIONS ARE IN METERS

EA: 165421

Scale Ratio: 1:100 Horiz. 1:100 Vert.

N Line
CROSS SECTIONS

SHEET 30 OF 33

Project: 00245 File: D:\USERS\Project\00245\JT_Files\N_Line\DesignX\jt_n2_DES.ear

For Earthwork Development Only

(Sta. 497+66.00 to 502+55.90)

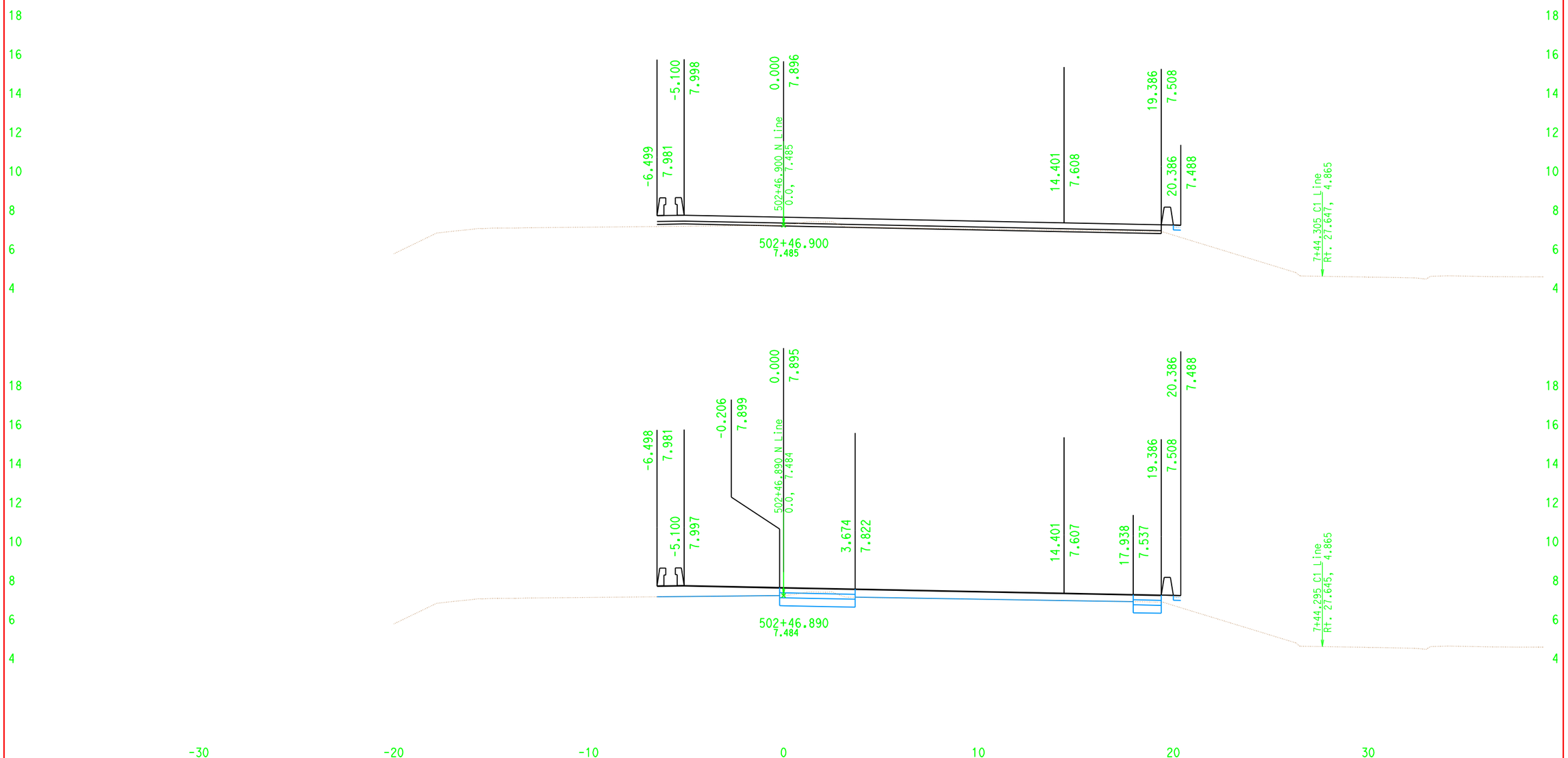

CROSS SECTIONS CREATED BY: JT DATE: 12/11/2007 ALL DIMENSIONS ARE IN METERS

Project: 00245 File: D:\USERS\Project\00245\JT_Files\N_Line\DesignX\jt_n2_DES.ear

EA: 165421

Scale Ratio: 1:100 Horiz.
1:100 Vert.

N Line
CROSS SECTIONS

SHEET 31 OF 33

For Earthwork Development Only

(Sta. 497+66.00 to 502+55.90)

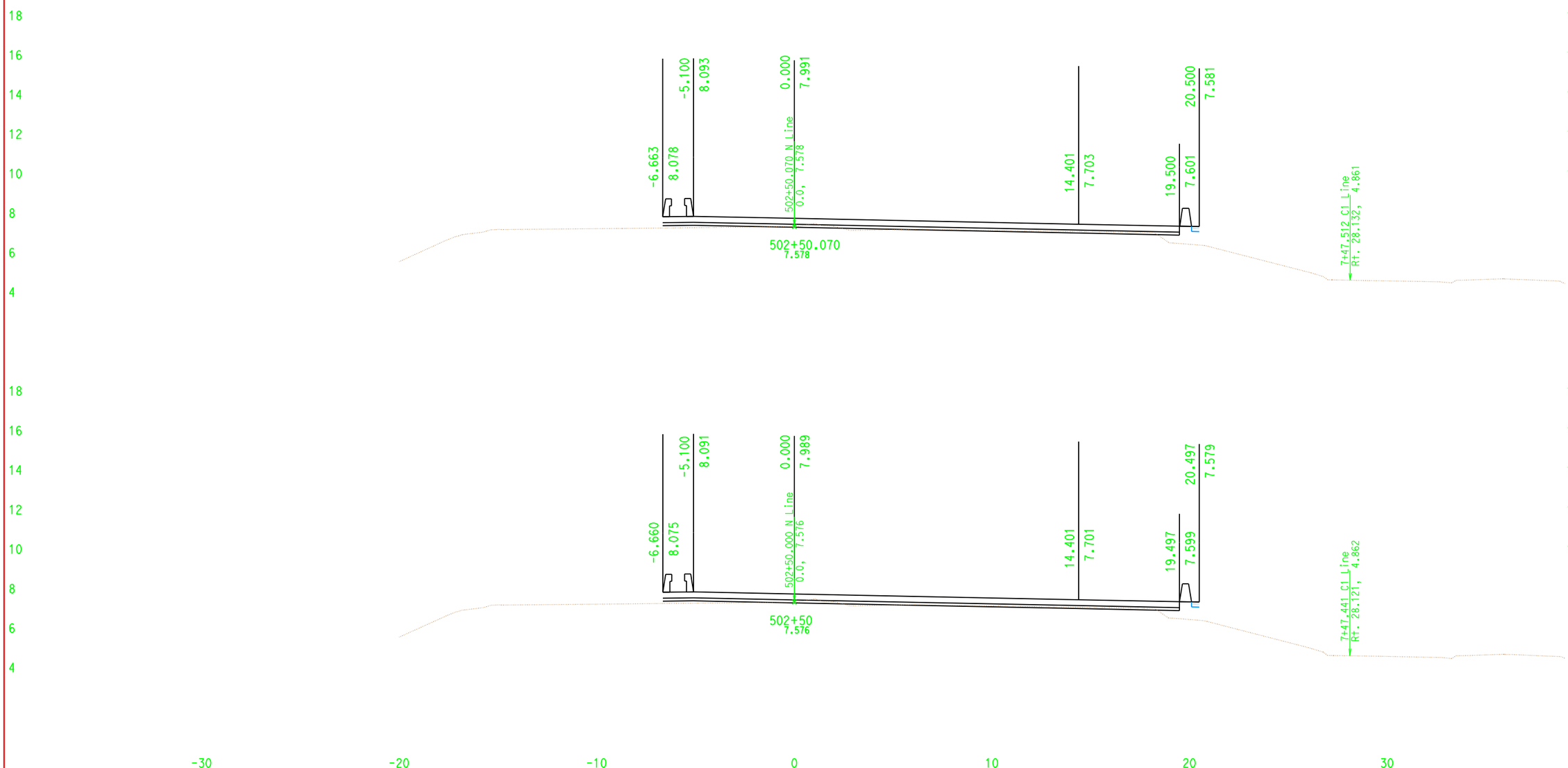

CROSS SECTIONS CREATED BY: JT DATE: 12/11/2007 ALL DIMENSIONS ARE IN METERS

Project: 00245 File: D:\USERS\Project\00245\JT_Files\N_Line\DesignX\jt_n2_DES.ear

EA: 165421

Scale Ratio: 1:100 Horiz.
1:100 Vert.

N Line
CROSS SECTIONS

For Earthwork Development Only

(Sta. 497+66.00 to 502+55.90)

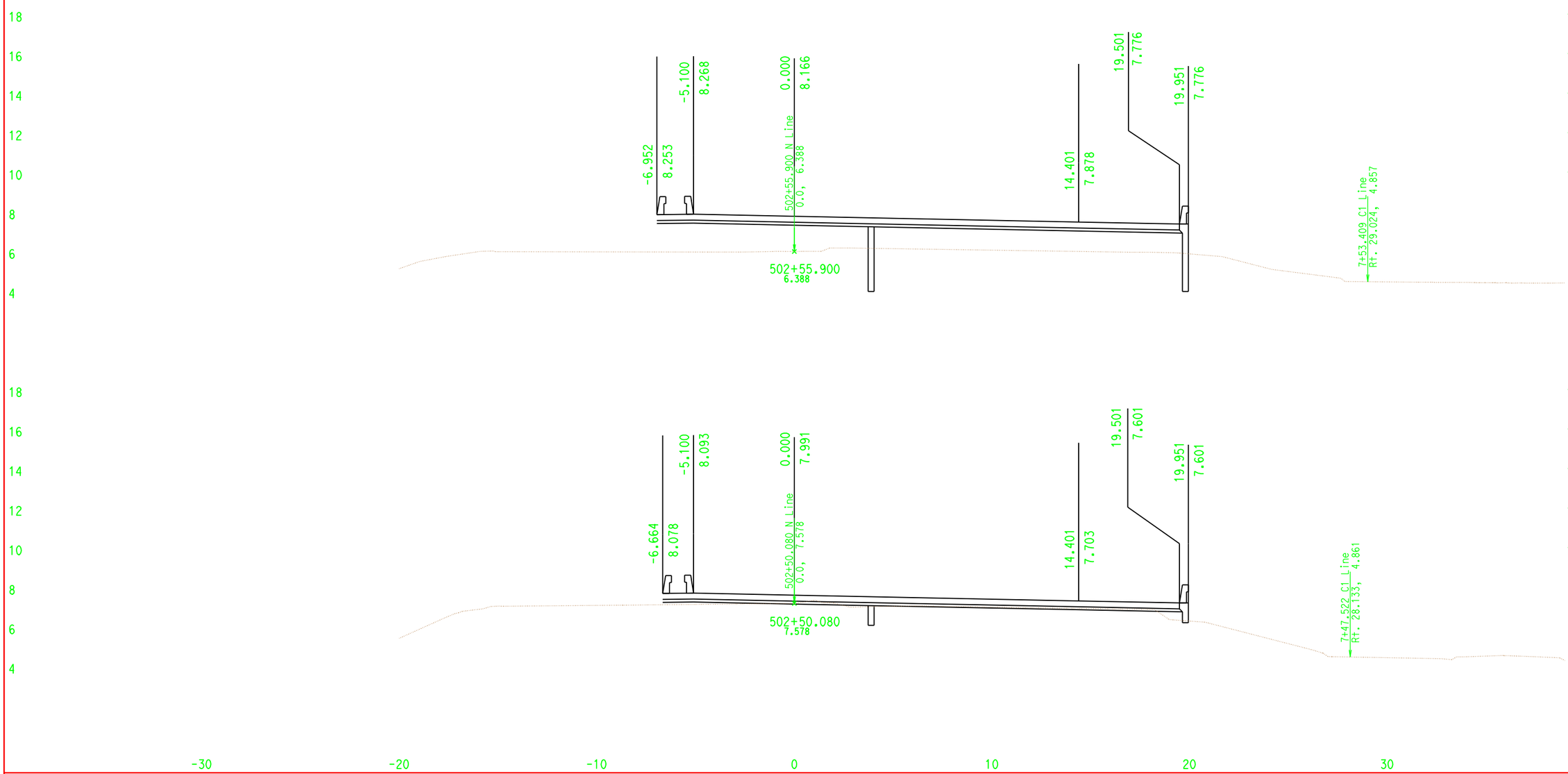

CROSS SECTIONS CREATED BY: JT DATE: 12/11/2007 ALL DIMENSIONS ARE IN METERS

Project: 00245 File: D:\USERS\Project\00245\JT_Files\N_Line\DesignX\jt_n2_DES.ear

EA: 165421

Scale Ratio: 1:100 Horiz.
1:100 Vert.

N Line
CROSS SECTIONS

SHEET 33 OF 33

For Earthwork Development Only

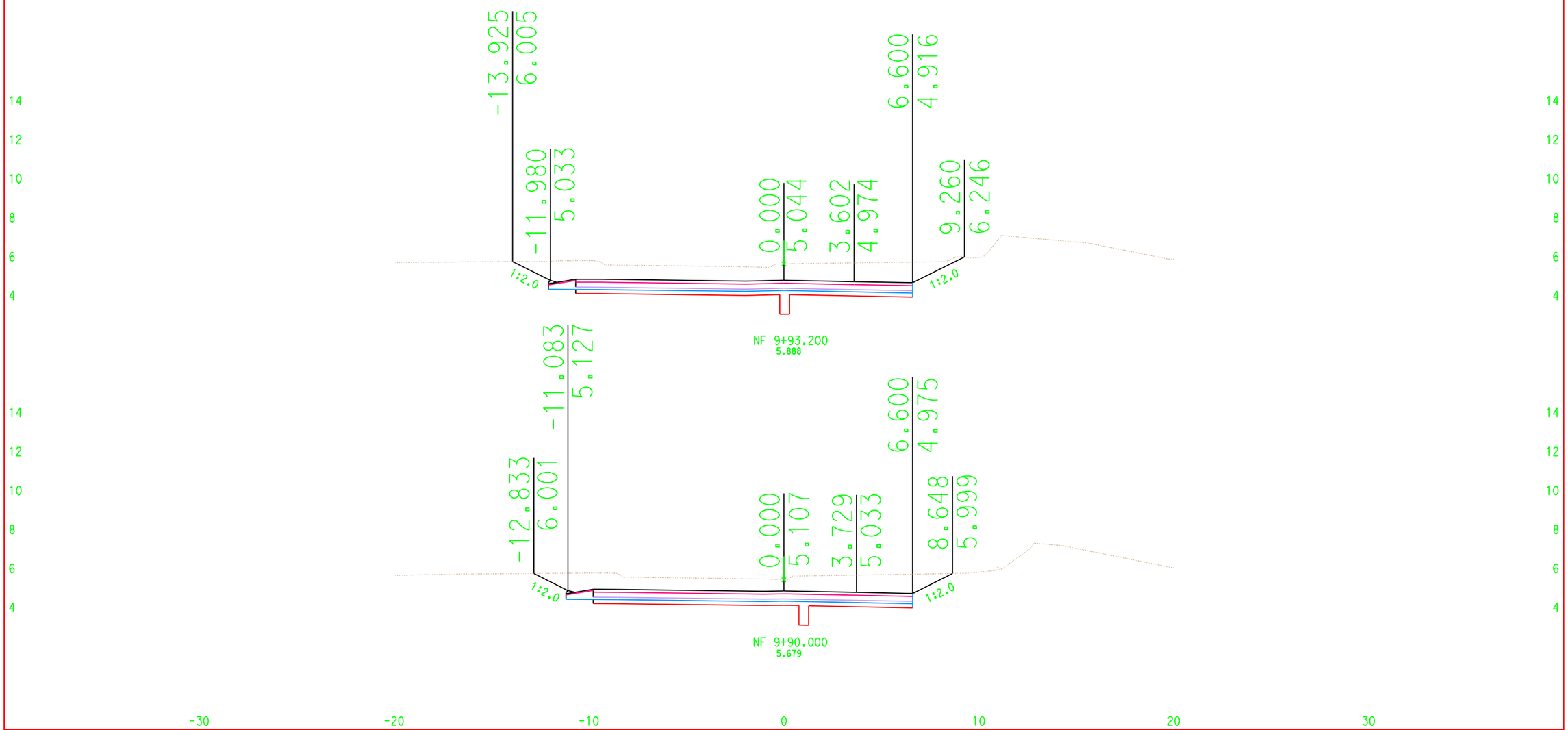

CROSS SECTIONS CREATED BY: JT DATE: 10/13/2007 ALL DIMENSIONS ARE METRIC

Project: 00245 File: D:\USERS\Project\00245\JT_Files\NF_Line\DesignX\jt_nfdes.ear

EA: 165421

Scale Ratio: 1:100 Horiz.
1:100 Vert.

NF LINE CROSS SECTIONS

SHEET 1 OF 40

For Earthwork Development Only

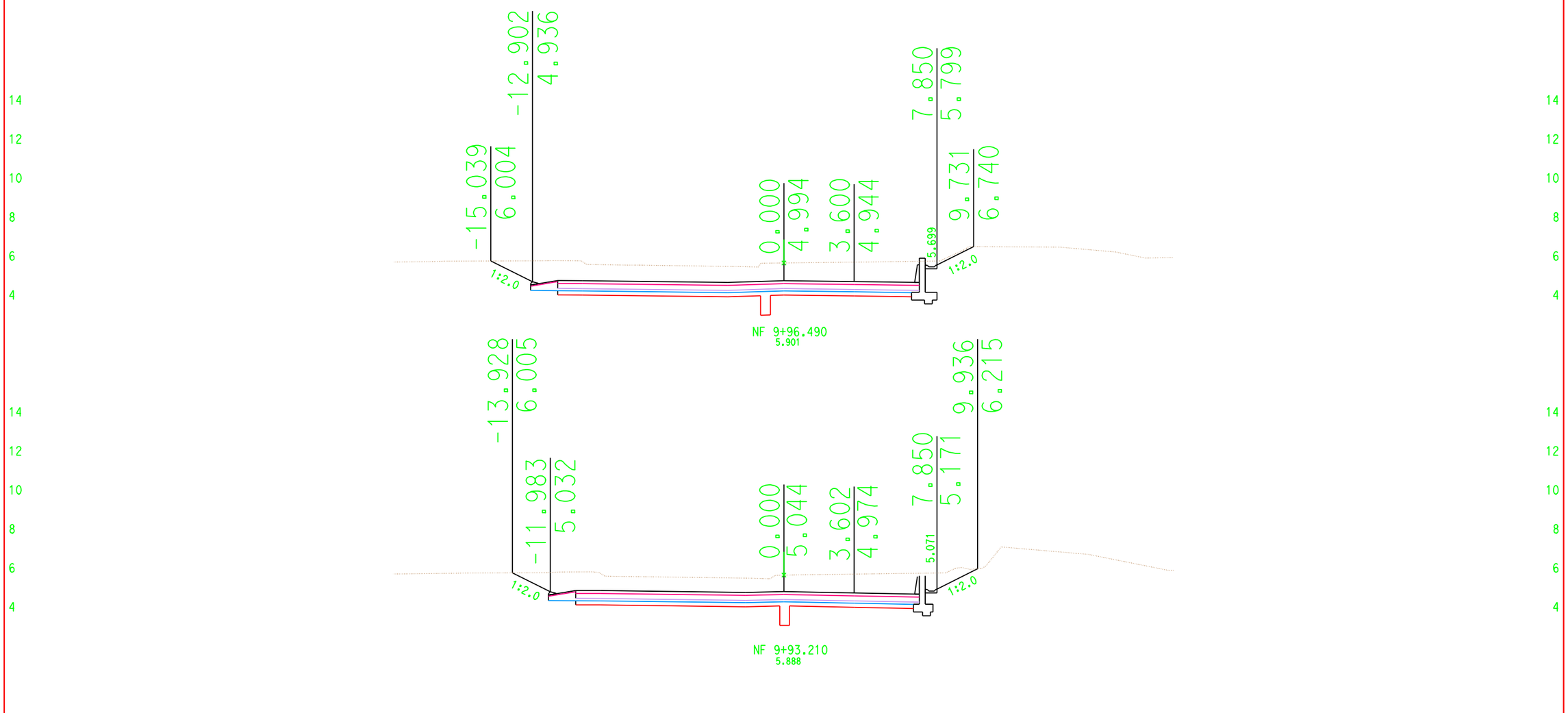

CROSS SECTIONS CREATED BY: JT DATE: 10/13/2007 ALL DIMENSIONS ARE METRIC

Project: 00245 File: D:\USERS\Project\00245\JT_Files\NF_Line\DesignX\jt_nfdes.ear

EA: 165421

Scale Ratio: 1:100 Horiz.
1:100 Vert.

NF LINE CROSS SECTIONS

SHEET 2 OF 40

For Earthwork Development Only

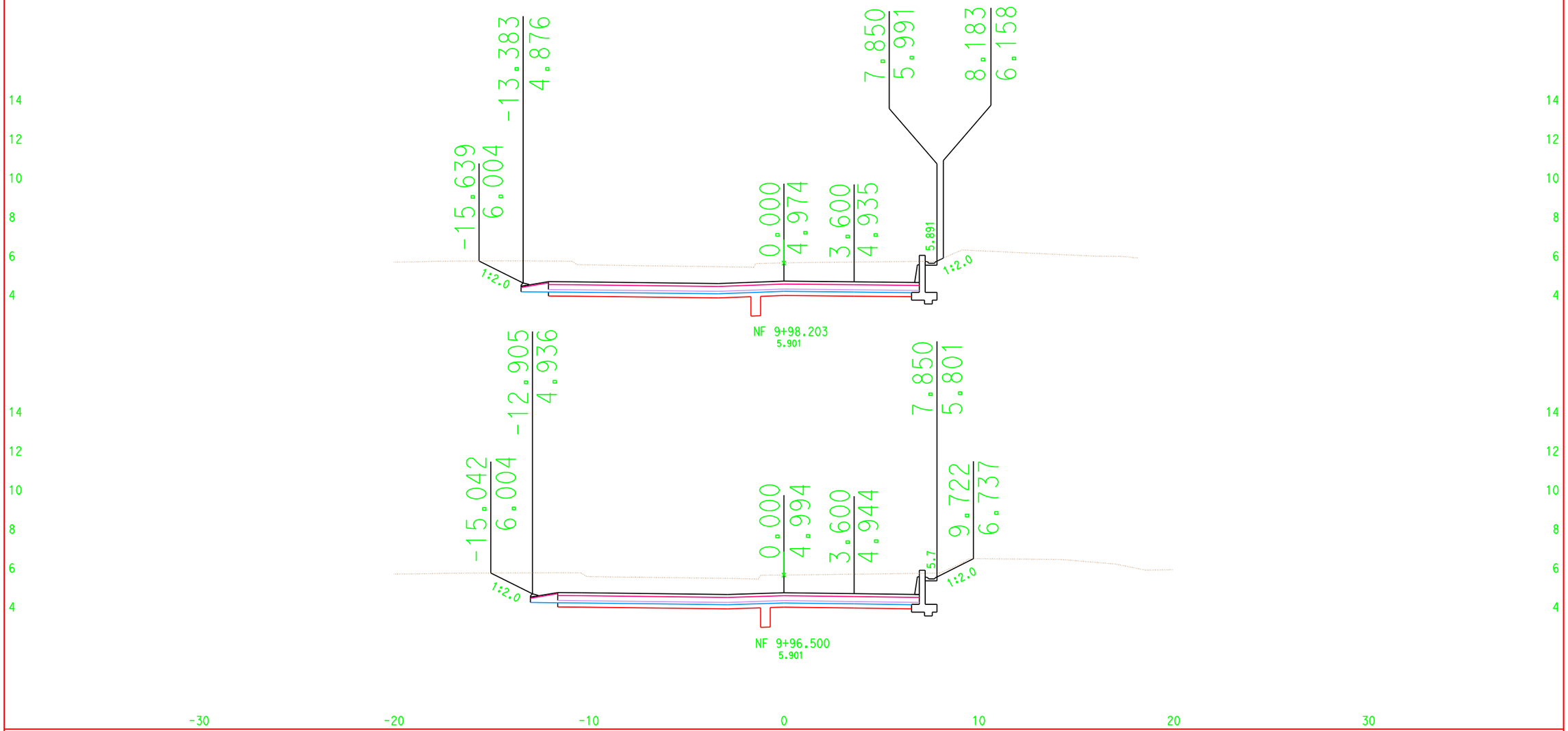

CROSS SECTIONS CREATED BY: JT DATE: 10/13/2007 ALL DIMENSIONS ARE METRIC

Project: 00245 File: D:\USERS\Project\00245\JT_Files\NF_Line\DesignX\jt_nfdes.ear

EA: 165421

Scale Ratio: 1:100 Horiz.
1:100 Vert.

NF LINE CROSS SECTIONS

SHEET 3 OF 40

For Earthwork Development Only

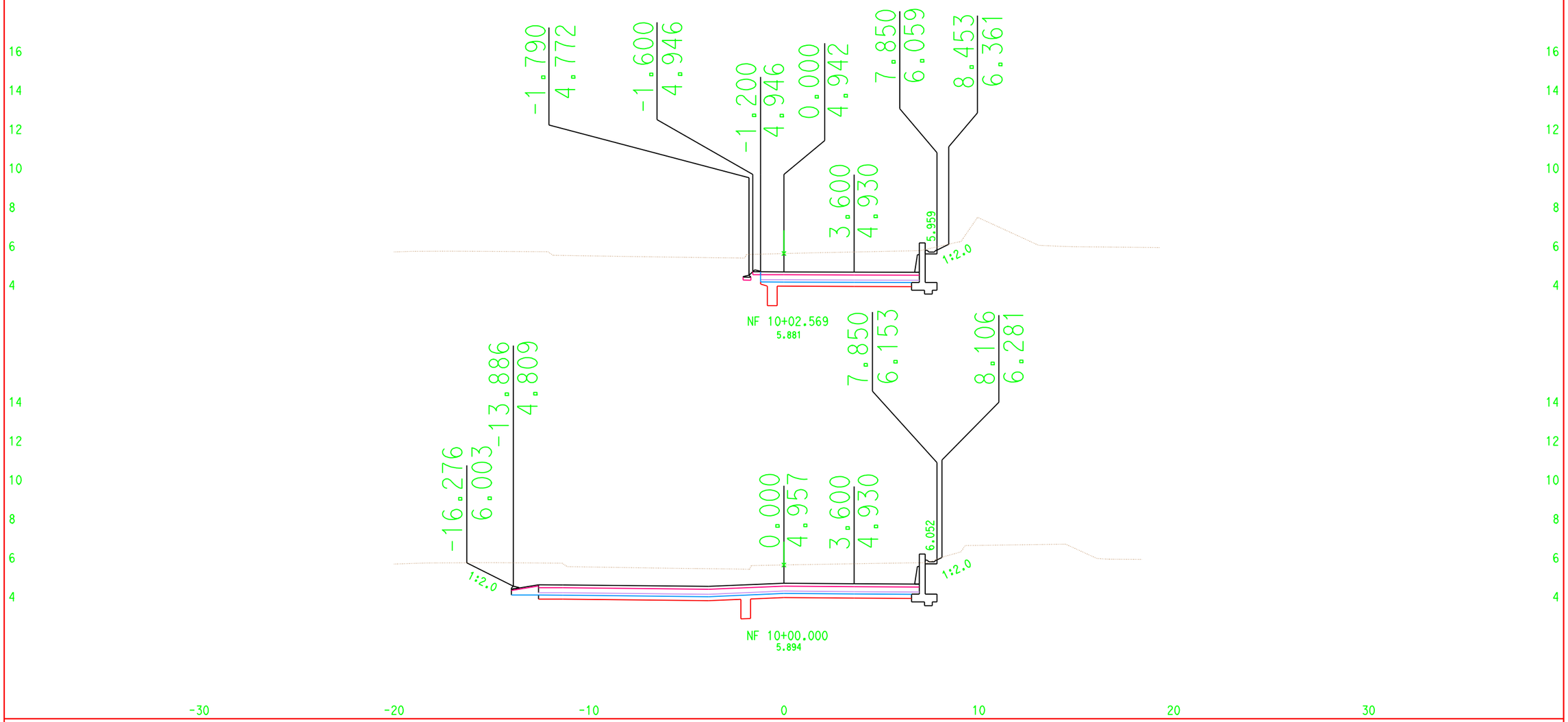

CROSS SECTIONS CREATED BY: JT DATE: 10/13/2007 ALL DIMENSIONS ARE METRIC

Project: 00245 File: D:\USERS\Project\00245\JT_Files\NF_Line\DesignX\jt_nfdes.ear

EA: 165421

Scale Ratio: 1:100 Horiz. 1:100 Vert.

NF LINE CROSS SECTIONS

SHEET 4 OF 40

For Earthwork Development Only

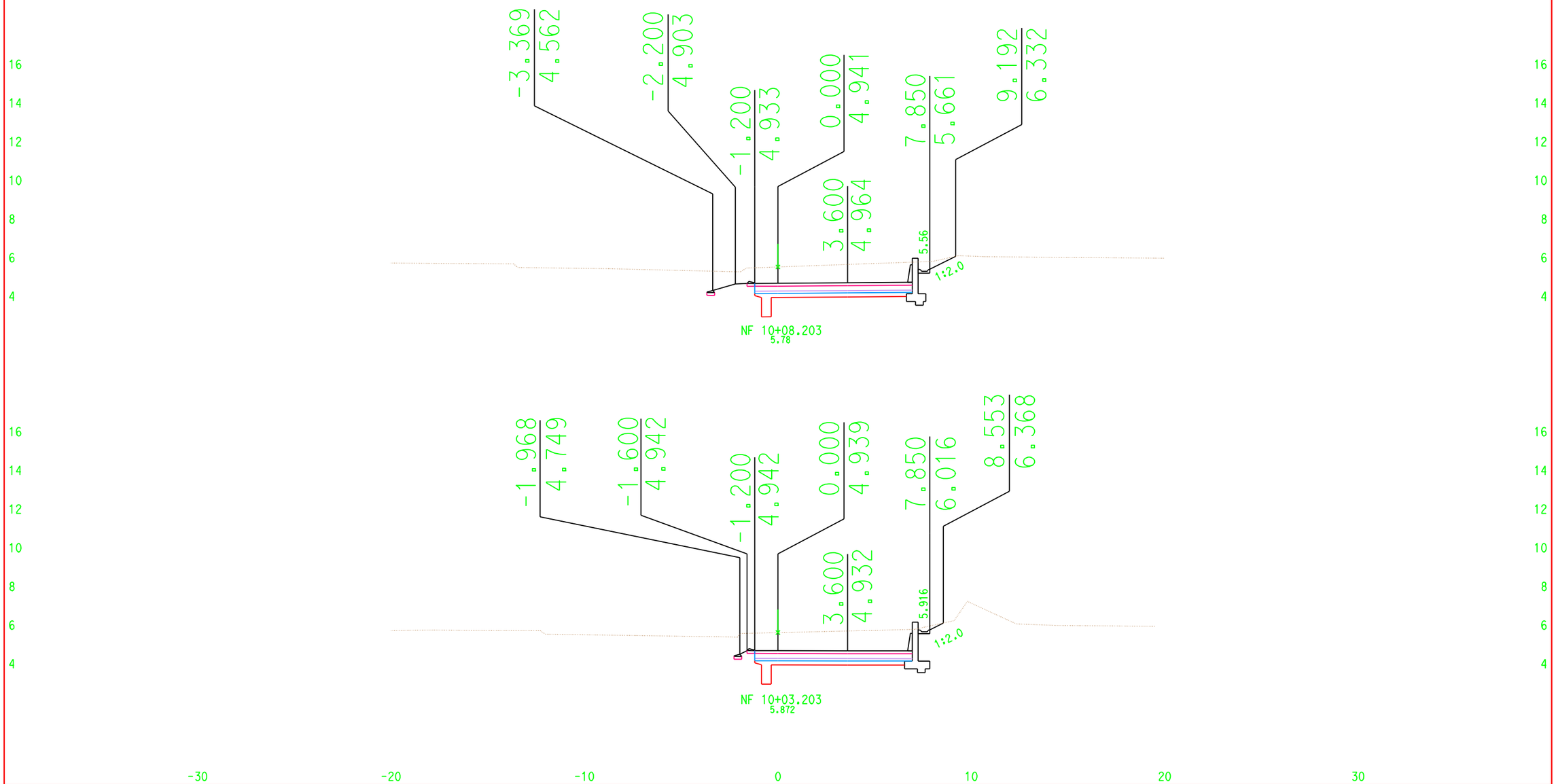

CROSS SECTIONS CREATED BY: JT DATE: 10/13/2007 ALL DIMENSIONS ARE METRIC

Project: 00245 File: D:\USERS\Project\00245\JT_Files\NF_Line\DesignX\jt_nfdes.ear

EA: 165421

Scale Ratio: 1:100 Horiz.
1:100 Vert.

NF LINE
CROSS SECTIONS

SHEET 5 OF 40

For Earthwork Development Only

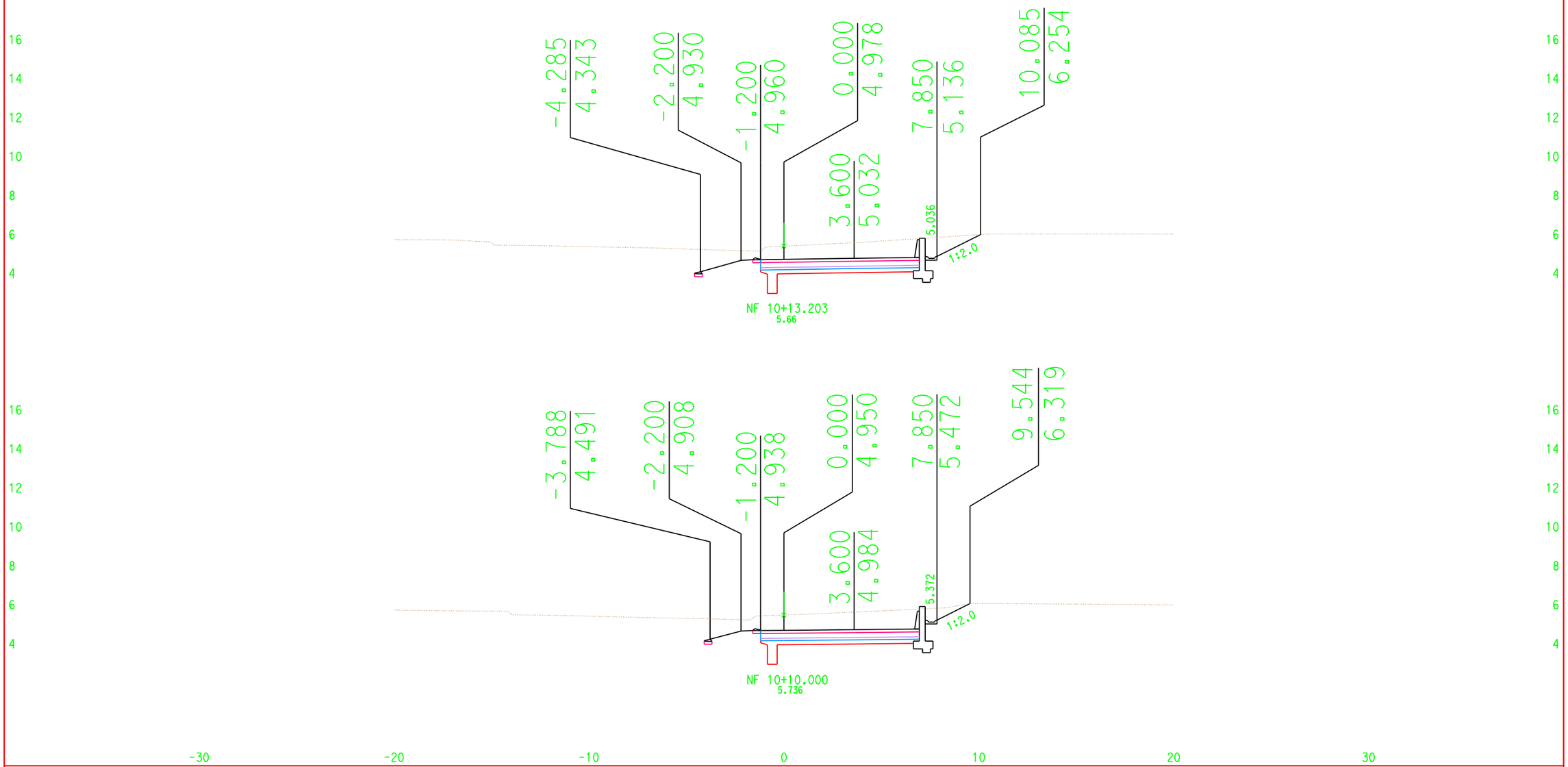

CROSS SECTIONS CREATED BY: JT DATE: 10/13/2007 ALL DIMENSIONS ARE METRIC

Project: 00245 File: D:\USERS\Project\00245\JT_Files\NF_Line\DesignX\jt_nfdes.ear

EA: 165421

Scale Ratio: 1:100 Horiz.
1:100 Vert.

NF LINE
CROSS SECTIONS

For Earthwork Development Only

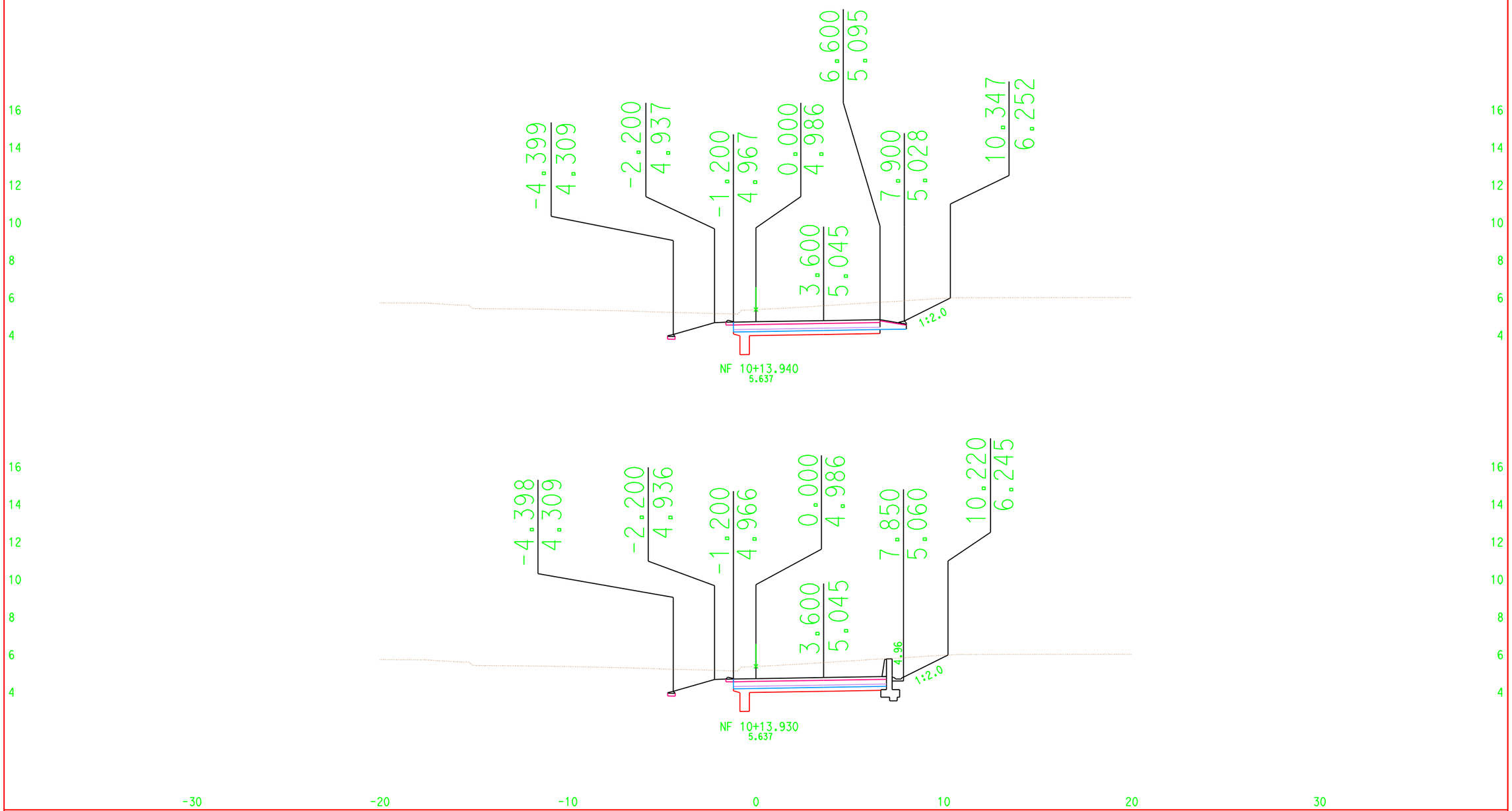

CROSS SECTIONS CREATED BY: JT DATE: 10/13/2007 ALL DIMENSIONS ARE METRIC

Project: 00245 File: D:\USERS\Project\00245\JT_Files\NF_Line\DesignX\jt_nfdes.ear

EA: 165421

Scale Ratio: 1:100 Horiz.
1:100 Vert.

NF LINE
CROSS SECTIONS

For Earthwork Development Only

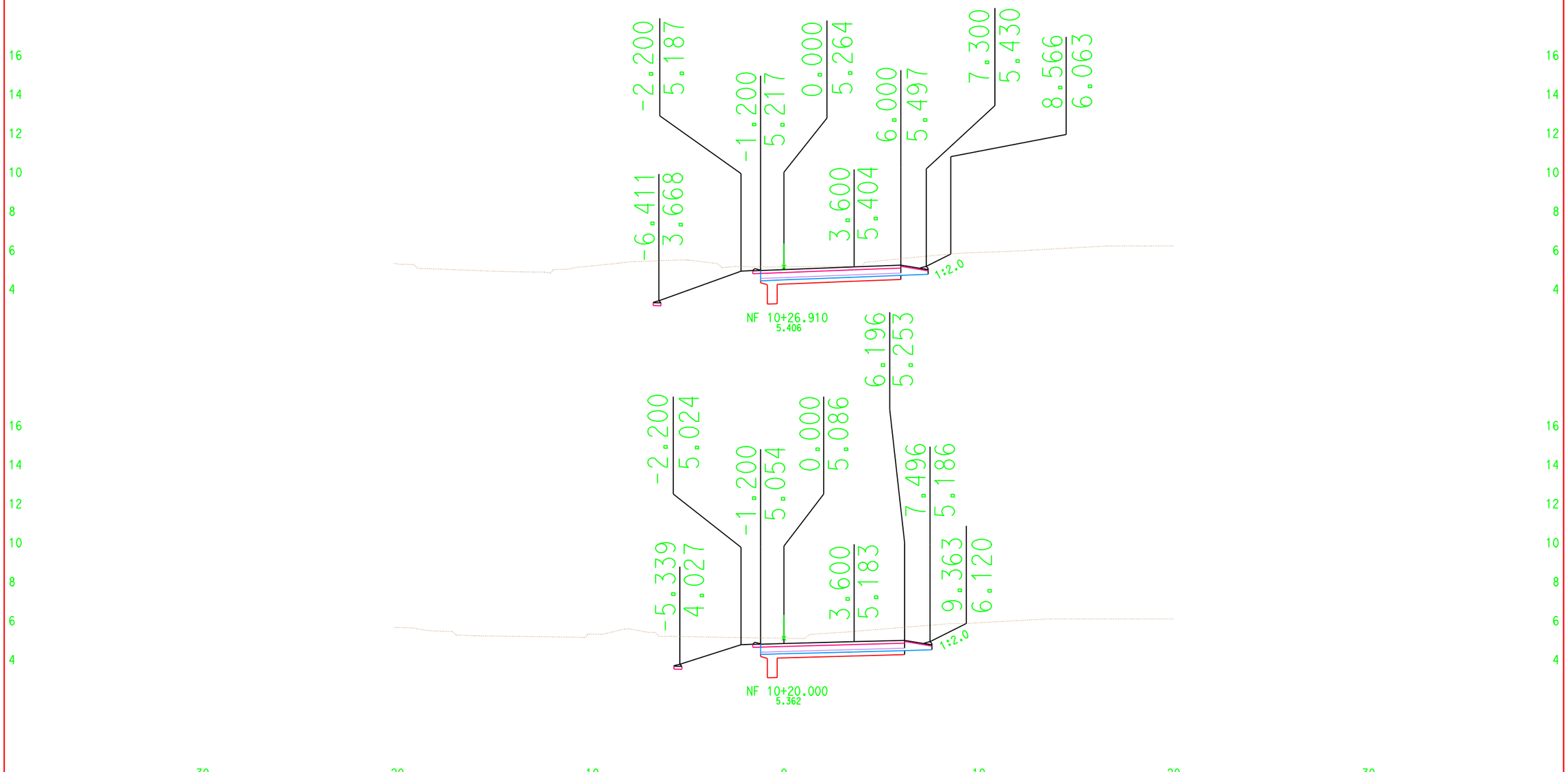

CROSS SECTIONS CREATED BY: JT DATE: 10/13/2007 ALL DIMENSIONS ARE METRIC

Project: 00245 File: D:\USERS\Project\00245\JT_Files\NF_Line\DesignX\jt_nfdes.ear

EA: 165421

Scale Ratio: 1:100 Horiz.
1:100 Vert.

NF LINE
CROSS SECTIONS

For Earthwork Development Only

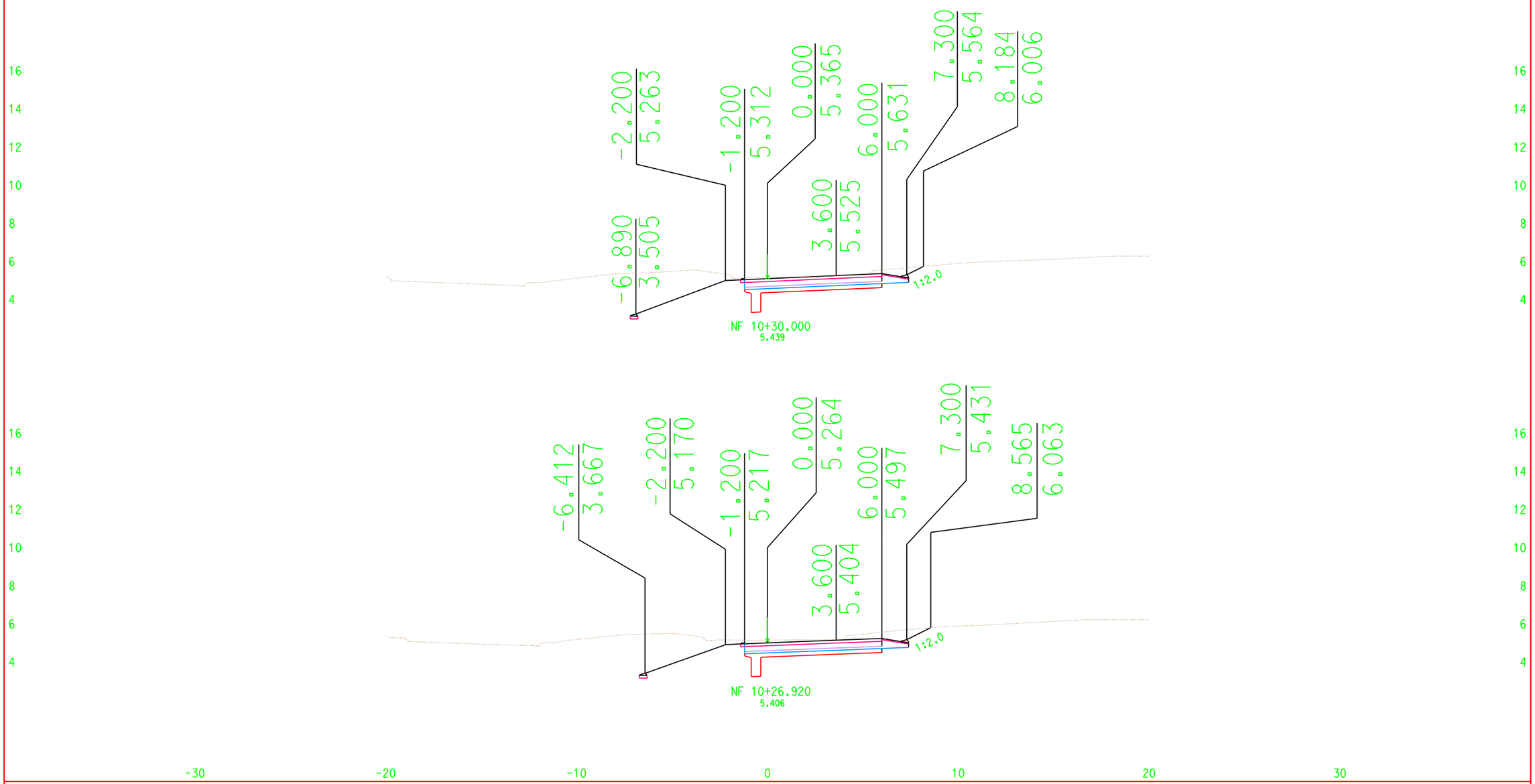

CROSS SECTIONS CREATED BY: JT DATE: 10/13/2007 ALL DIMENSIONS ARE METRIC

Project: 00245 File: D:\USERS\Project\00245\JT_Files\NF_Line\DesignX\jt_nfdes.ear

EA: 165421

Scale Ratio: 1:100 Horiz. 1:100 Vert.

NF LINE CROSS SECTIONS

SHEET 9 OF 40

For Earthwork Development Only

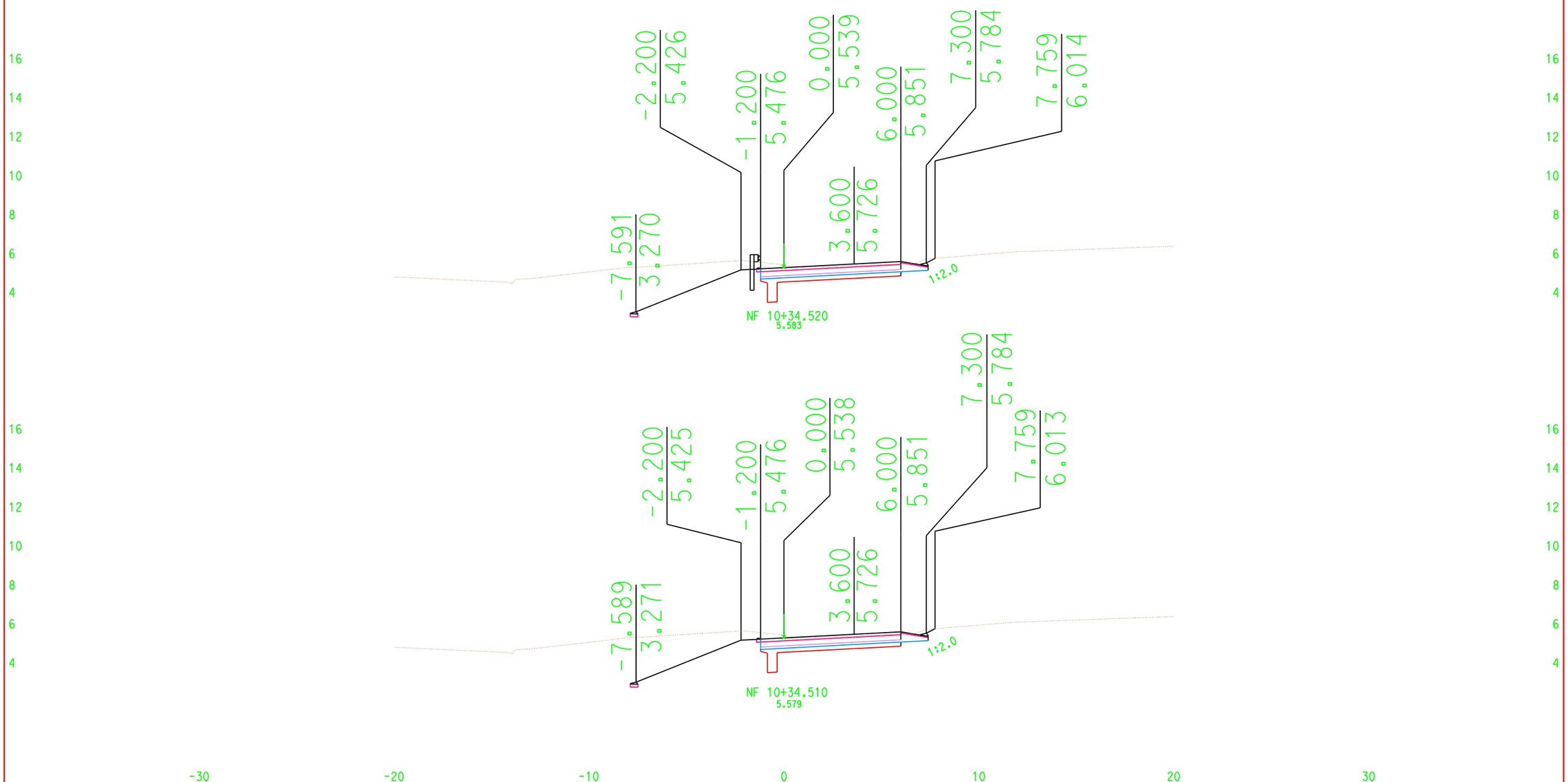

CROSS SECTIONS CREATED BY: JT DATE: 10/13/2007 ALL DIMENSIONS ARE METRIC

Project: 00245 File: D:\USERS\Project\00245\JT_Files\NF_Line\DesignX\jt_nfdes.ear

EA: 165421

Scale Ratio: 1:100 Horiz. 1:100 Vert.

NF LINE CROSS SECTIONS

SHEET 10 OF 40

For Earthwork Development Only

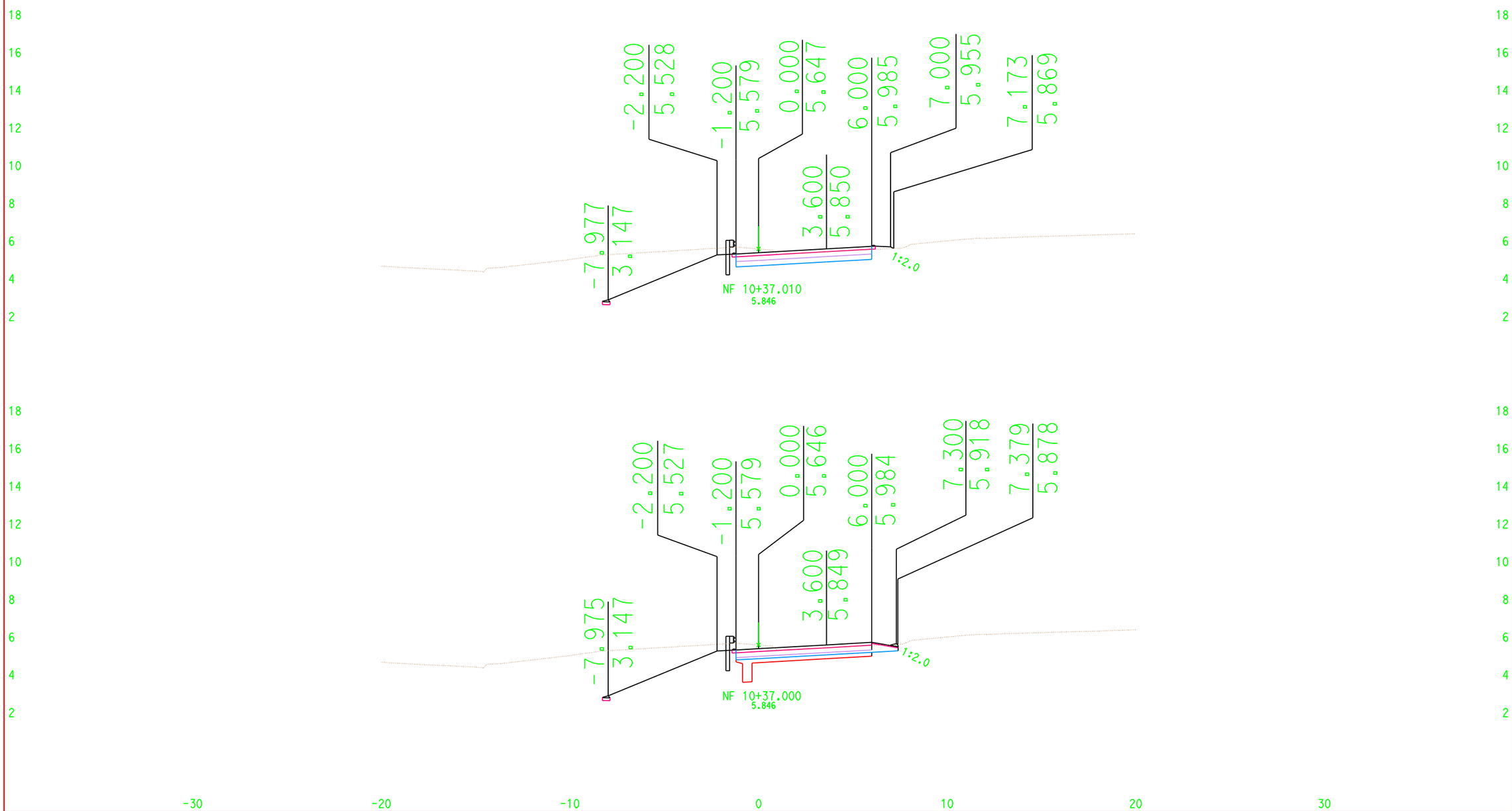

CROSS SECTIONS CREATED BY: JT DATE: 10/13/2007 ALL DIMENSIONS ARE METRIC

EA: 165421

Scale Ratio: 1:100 Horiz. 1:100 Vert.

Project: 00245 File: D:\USERS\Project\00245\JT_Files\NF_Line\DesignX\jt_nfdes.ear

NF LINE CROSS SECTIONS

SHEET 11 OF 40

For Earthwork Development Only

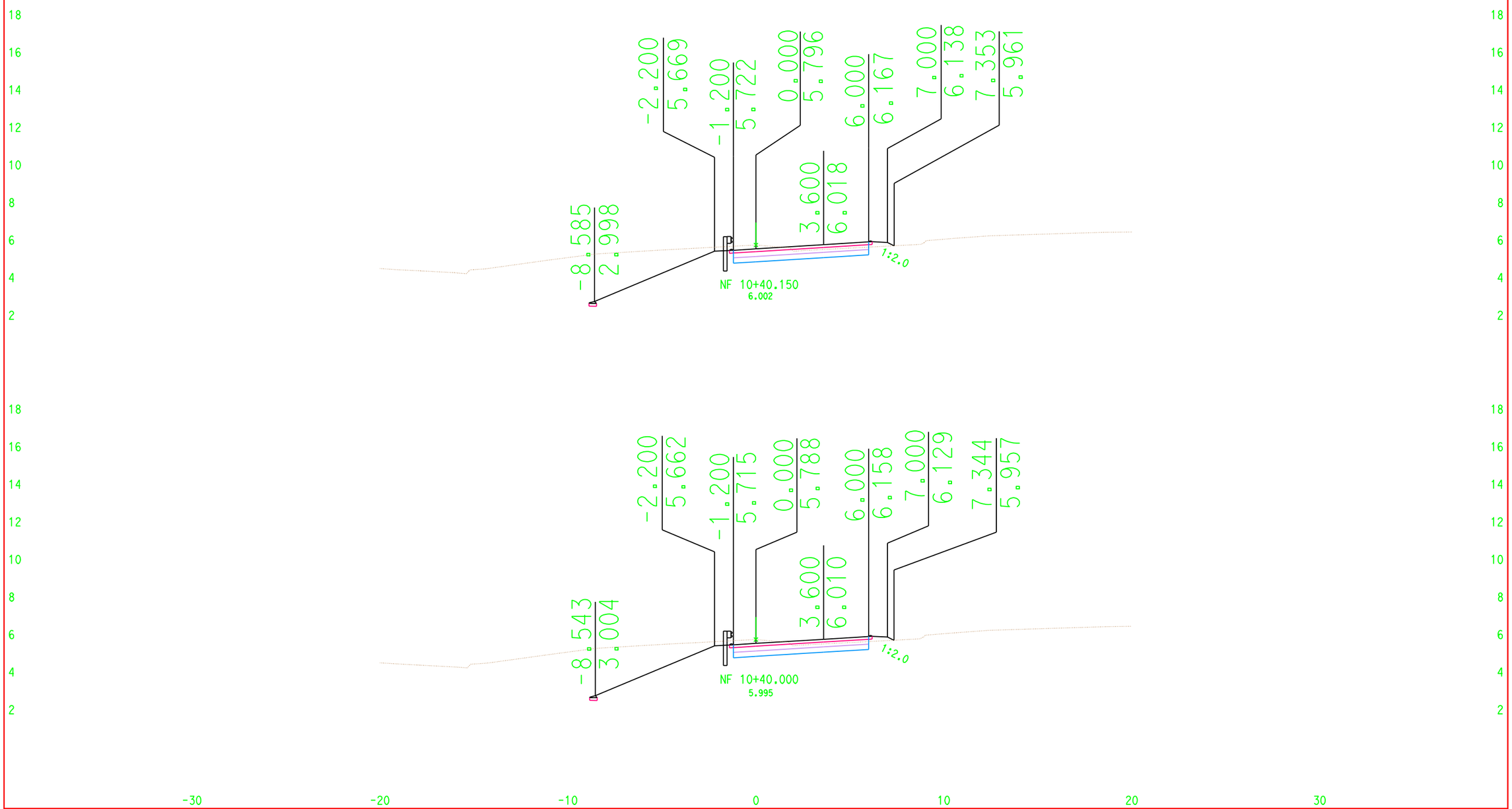

CROSS SECTIONS CREATED BY: JT DATE: 10/13/2007 ALL DIMENSIONS ARE METRIC

Project: 00245 File: D:\USERS\Project\00245\JT_Files\NF_Line\DesignX\jt_nfdes.ear

EA: 165421

Scale Ratio: 1:100 Horiz.
1:100 Vert.

NF LINE
CROSS SECTIONS

For Earthwork Development Only

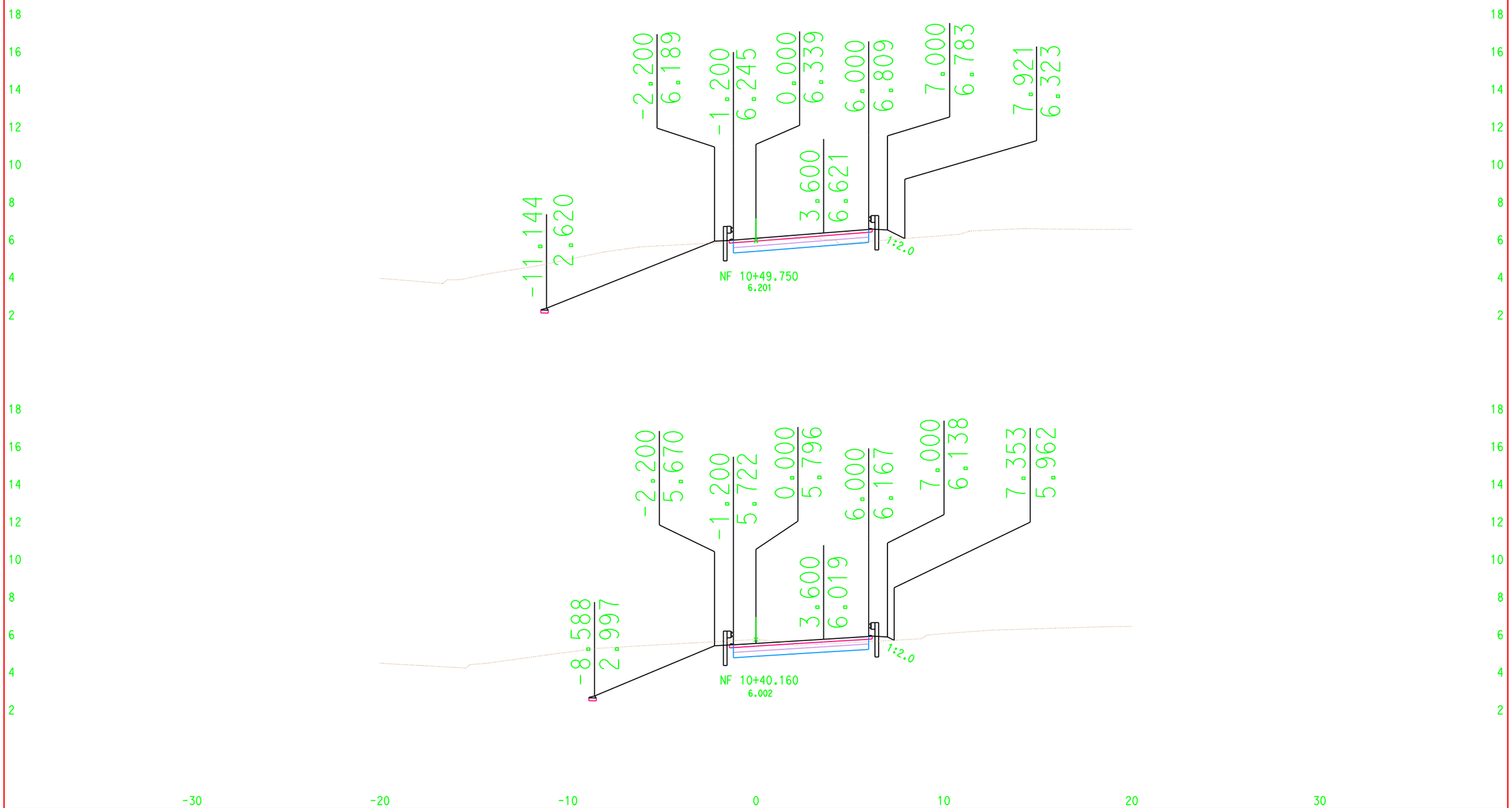

CROSS SECTIONS CREATED BY: JT DATE: 10/13/2007 ALL DIMENSIONS ARE METRIC

Project: 00245 File: D:\USERS\Project\00245\JT_Files\NF_Line\DesignX\jt_nfdes.ear

EA: 165421

Scale Ratio: 1:100 Horiz.
1:100 Vert.

NF LINE
CROSS SECTIONS

For Earthwork Development Only

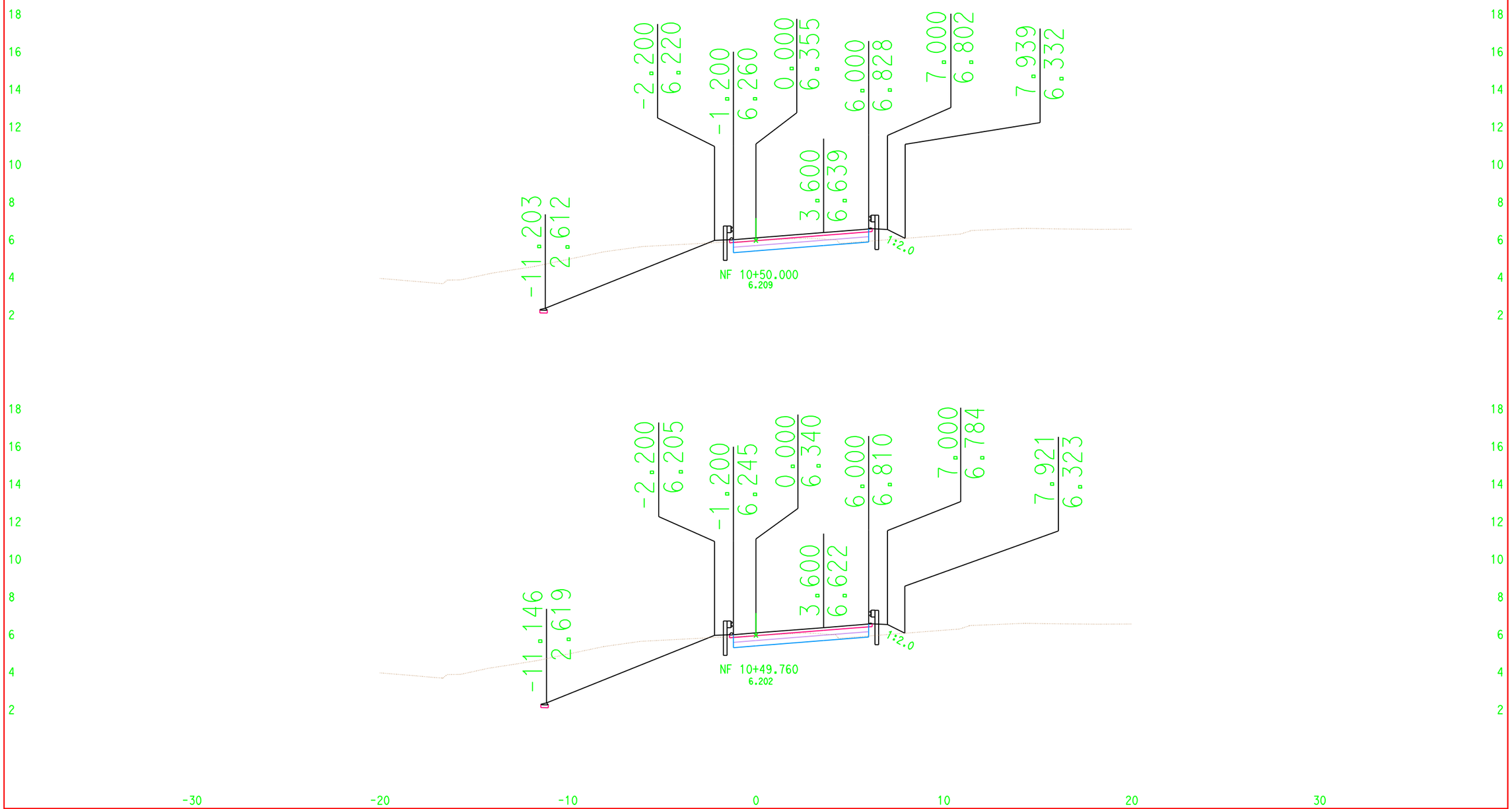

CROSS SECTIONS CREATED BY: JT DATE: 10/13/2007 ALL DIMENSIONS ARE METRIC

Project: 00245 File: D:\USERS\Project\00245\JT_Files\NF_Line\DesignX\jt_nfdes.ear

EA: 165421

Scale Ratio: 1:100 Horiz.
1:100 Vert.

NF LINE
CROSS SECTIONS

For Earthwork Development Only

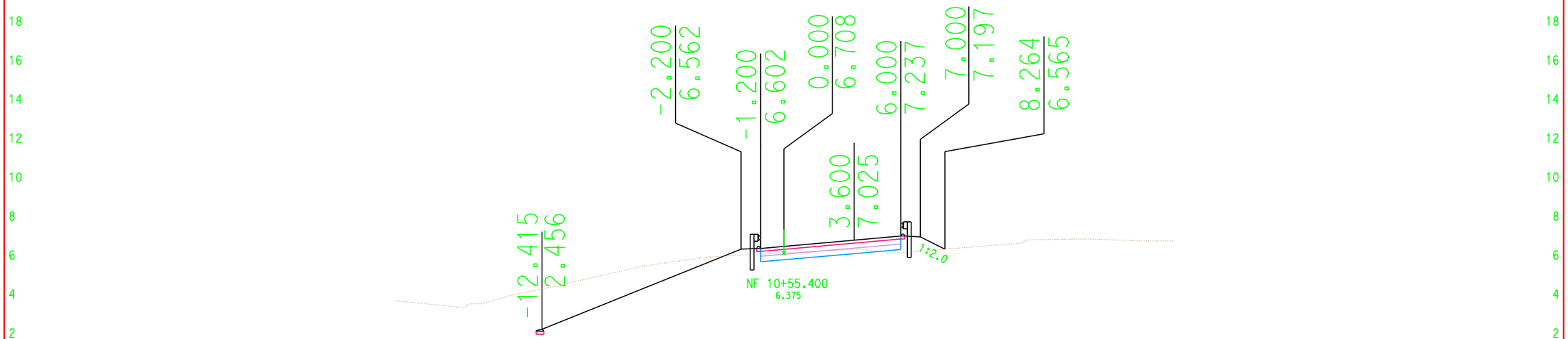

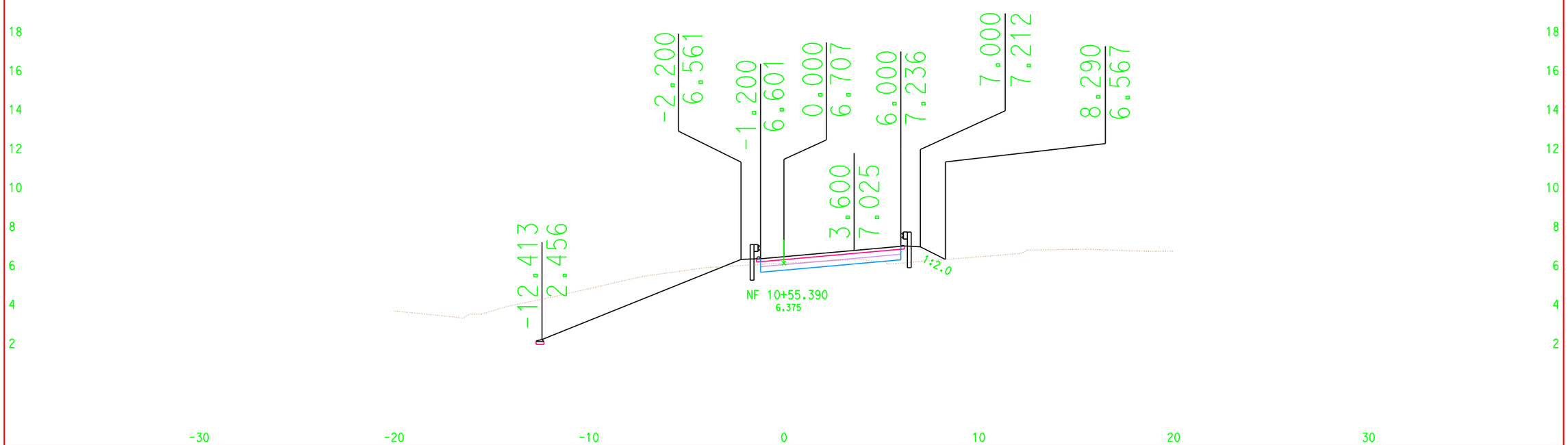

CROSS SECTIONS CREATED BY: JT DATE: 10/13/2007 ALL DIMENSIONS ARE METRIC

EA: 165421

Scale Ratio: 1:100 Horiz. 1:100 Vert.

NF LINE CROSS SECTIONS

SHEET 15 OF 40

Project: 00245 File: D:\USERS\Project\00245\JT_Files\NF_Line\DesignX\jt_nfdes.ear

For Earthwork Development Only

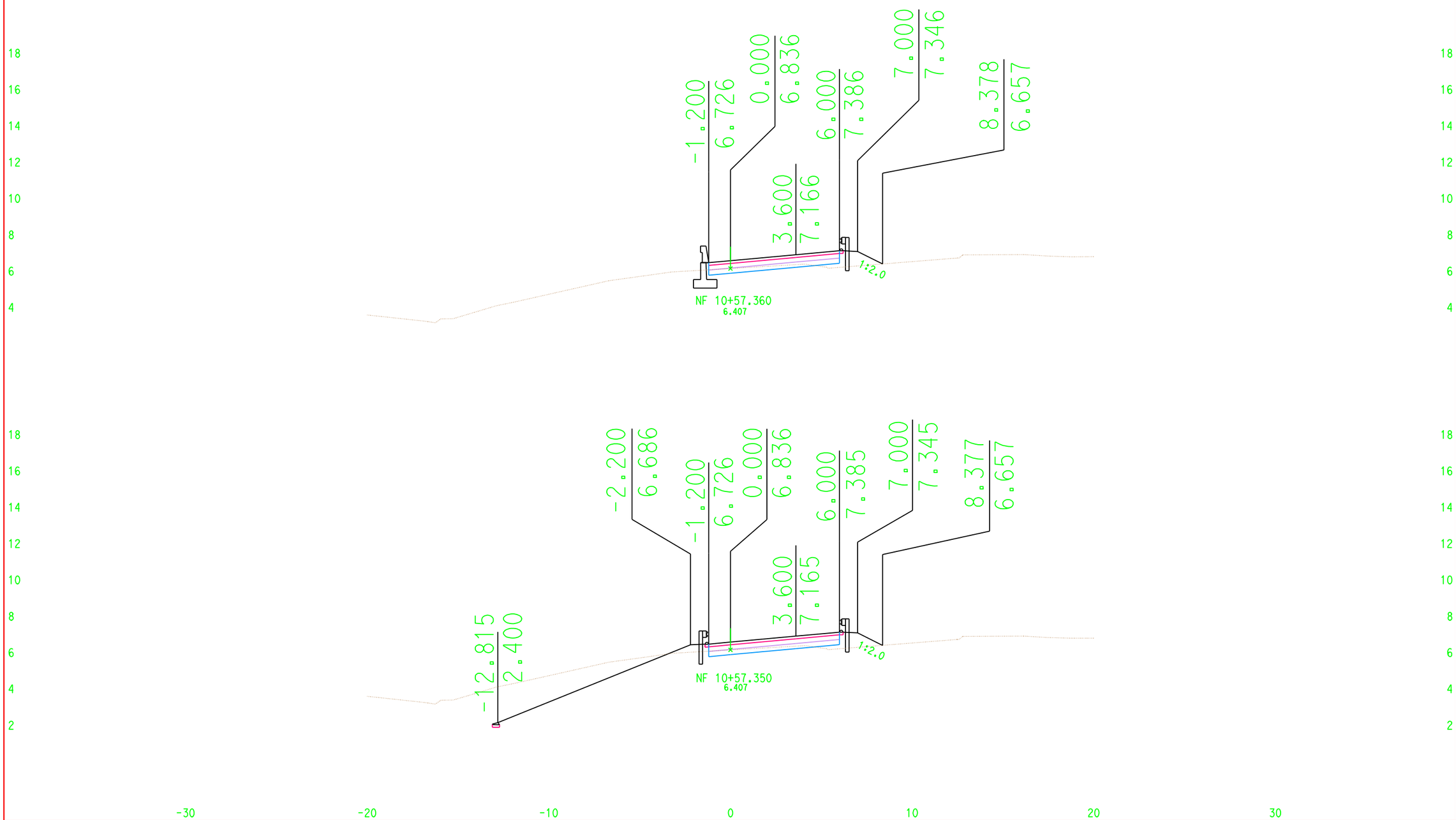

CROSS SECTIONS CREATED BY: JT DATE: 10/13/2007 ALL DIMENSIONS ARE METRIC

Project: 00245 File: D:\USERS\Project\00245\JT_Files\NF_Line\DesignX\jt_nfdes.ear

EA: 165421

Scale Ratio: 1:100 Horiz.
1:100 Vert.

NF LINE
CROSS SECTIONS

For Earthwork Development Only

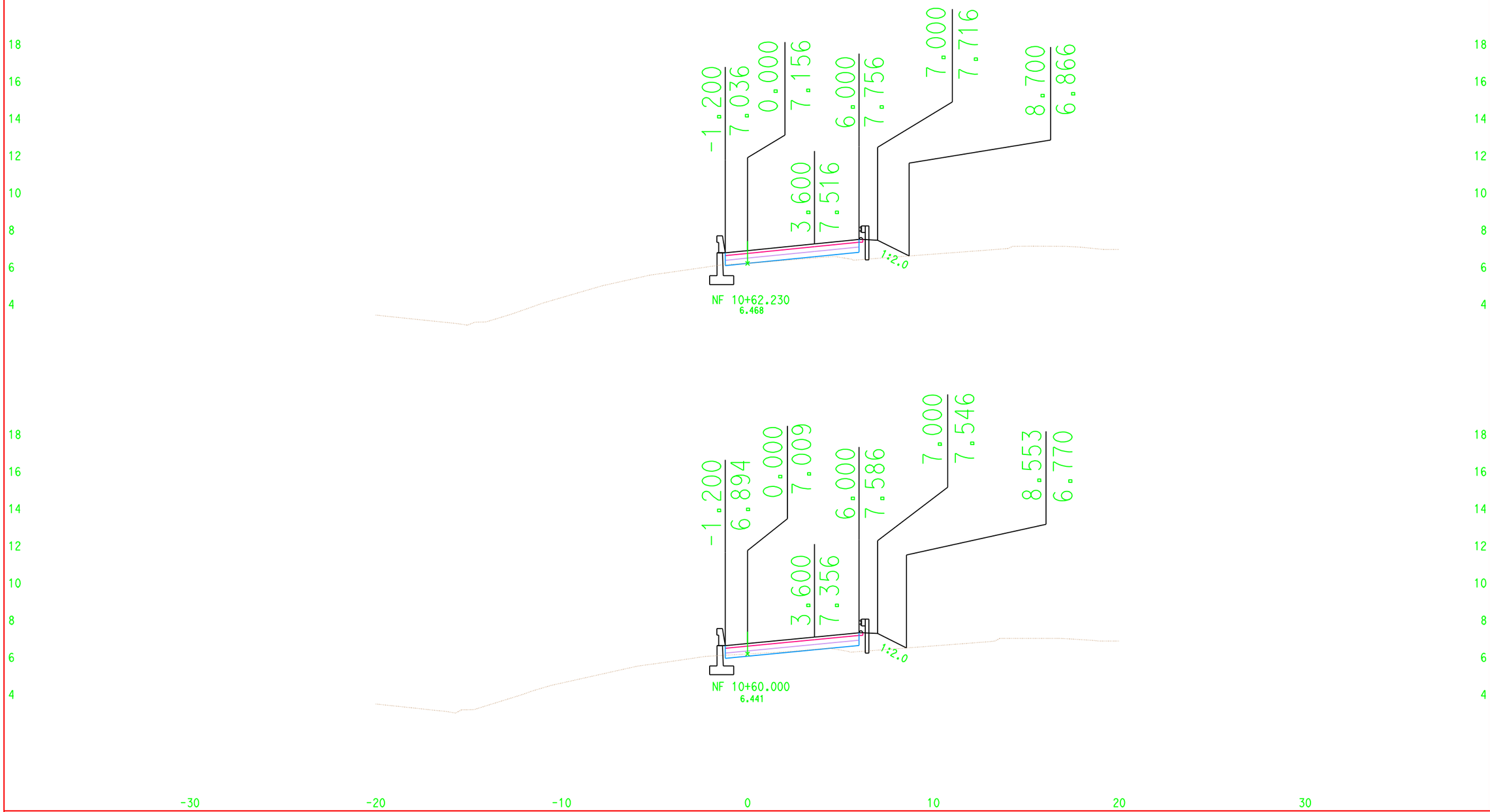

CROSS SECTIONS CREATED BY: JT DATE: 10/13/2007 ALL DIMENSIONS ARE METRIC

Project: 00245 File: D:\USERS\Project\00245\JT_Files\NF_Line\DesignX\jt_nfdes.ear

EA: 165421

Scale Ratio: 1:100 Horiz.
1:100 Vert.

NF LINE
CROSS SECTIONS

For Earthwork Development Only

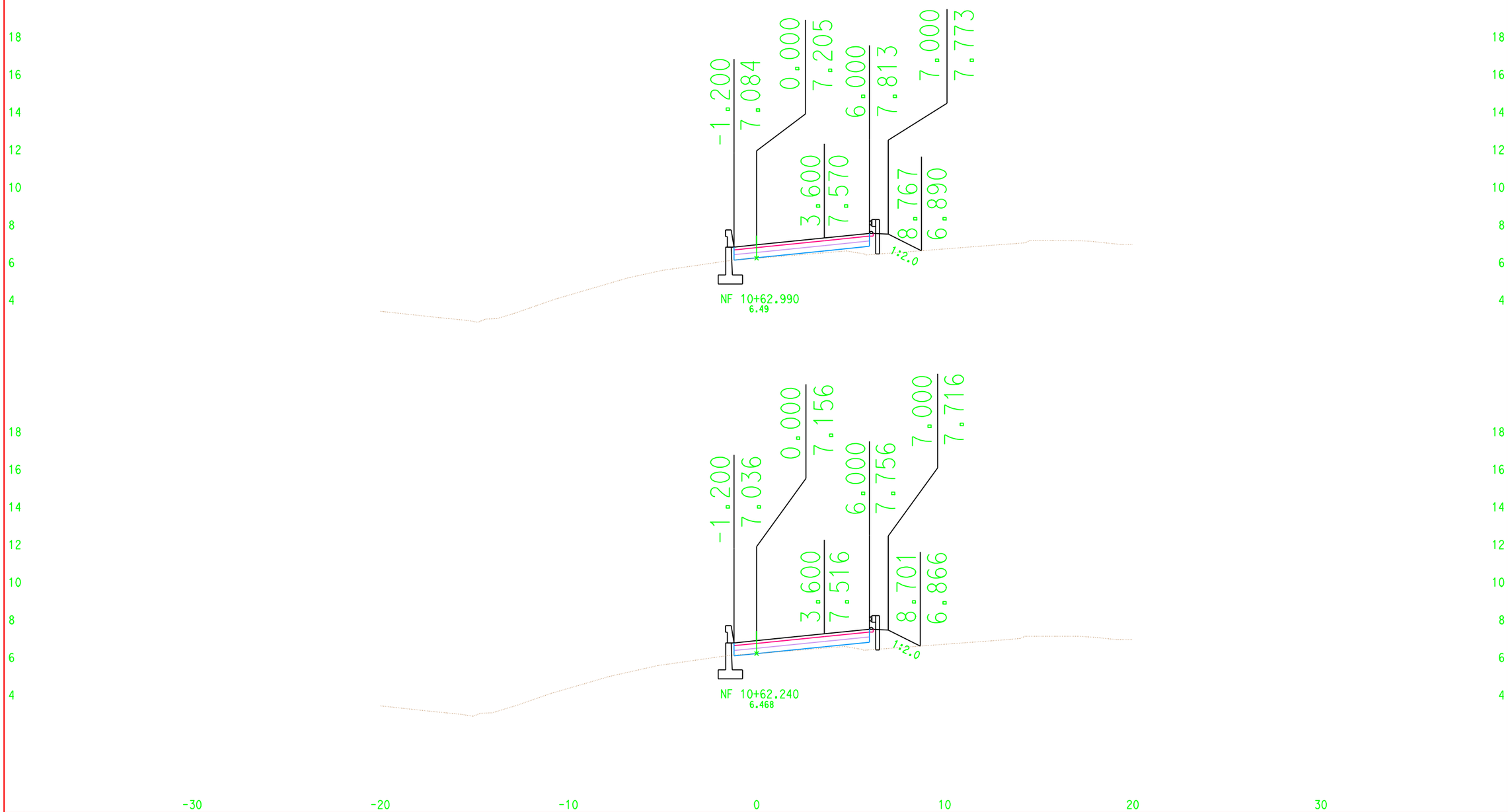

CROSS SECTIONS CREATED BY: JT DATE: 10/13/2007 ALL DIMENSIONS ARE METRIC

Project: 00245 File: D:\USERS\Project\00245\JT_Files\NF_Line\DesignX\jt_nfdes.ear

EA: 165421

Scale Ratio: 1:100 Horiz.
1:100 Vert.

NF LINE
CROSS SECTIONS

For Earthwork Development Only

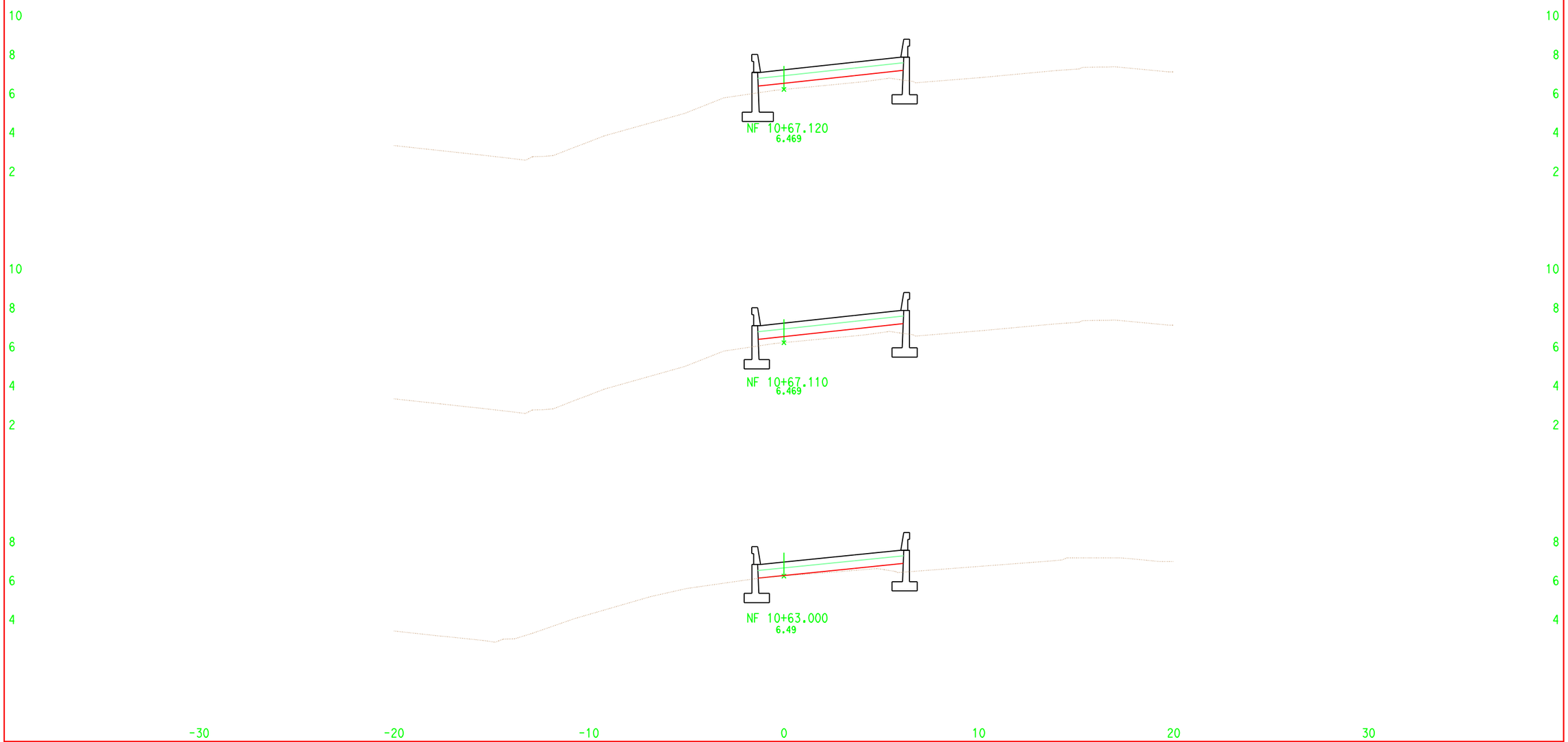

CROSS SECTIONS CREATED BY: JT DATE: 10/13/2007 ALL DIMENSIONS ARE METRIC

Project: 00245 File: D:\USERS\Project\00245\JT_Files\NF_Line\DesignX\jt_nfdes.ear

EA: 165421

Scale Ratio: 1:100 Horiz. 1:100 Vert.

NF LINE CROSS SECTIONS

SHEET 19 OF 40

For Earthwork Development Only

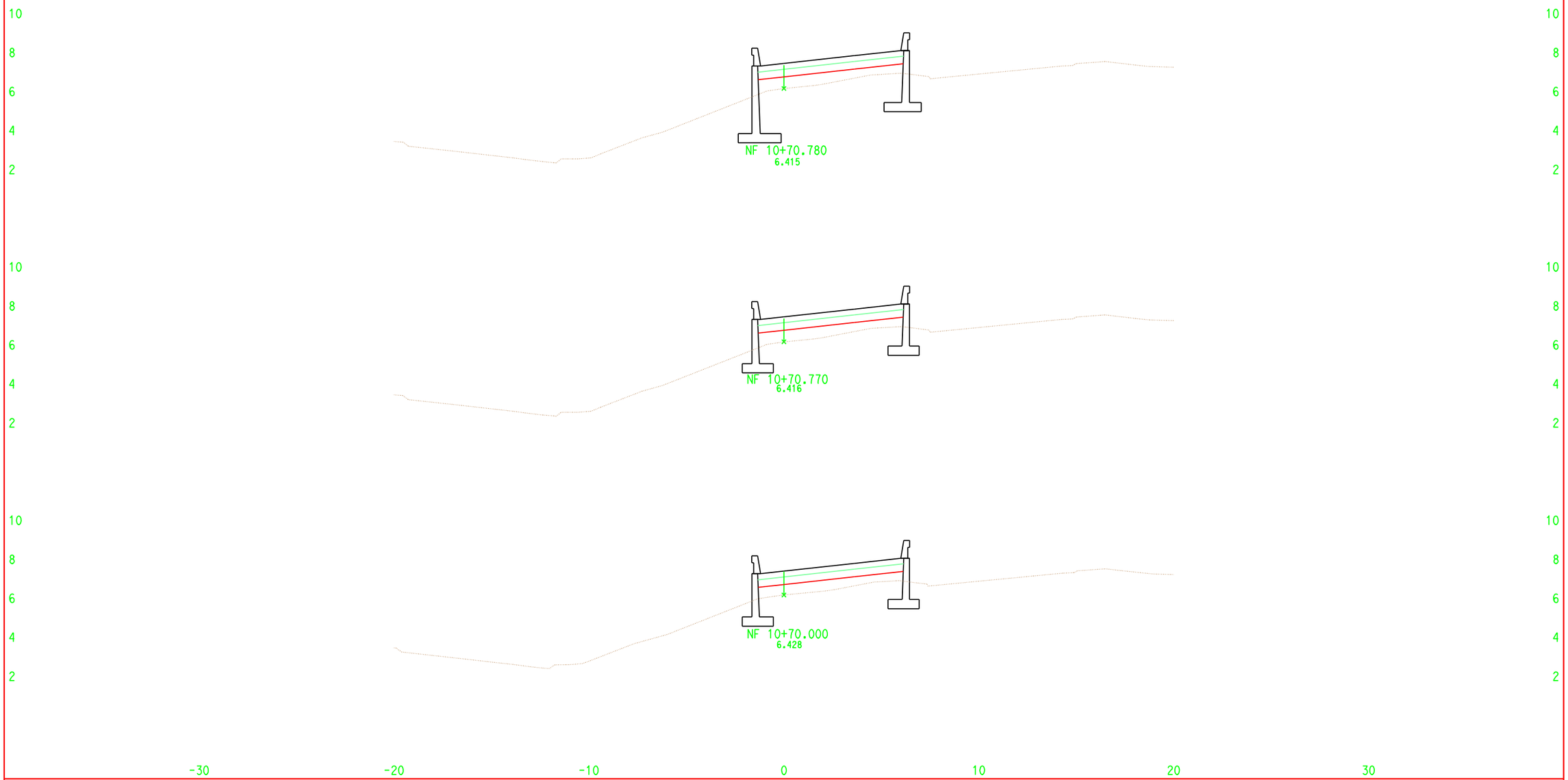

CROSS SECTIONS CREATED BY: JT DATE: 10/13/2007 ALL DIMENSIONS ARE METRIC

Project: 00245 File: D:\USERS\Project\00245\JT_Files\NF_Line\DesignX\jt_nfdes.ear

EA: 165421

Scale Ratio: 1:100 Horiz. 1:100 Vert.

NF LINE CROSS SECTIONS

SHEET 20 OF 40

For Earthwork Development Only

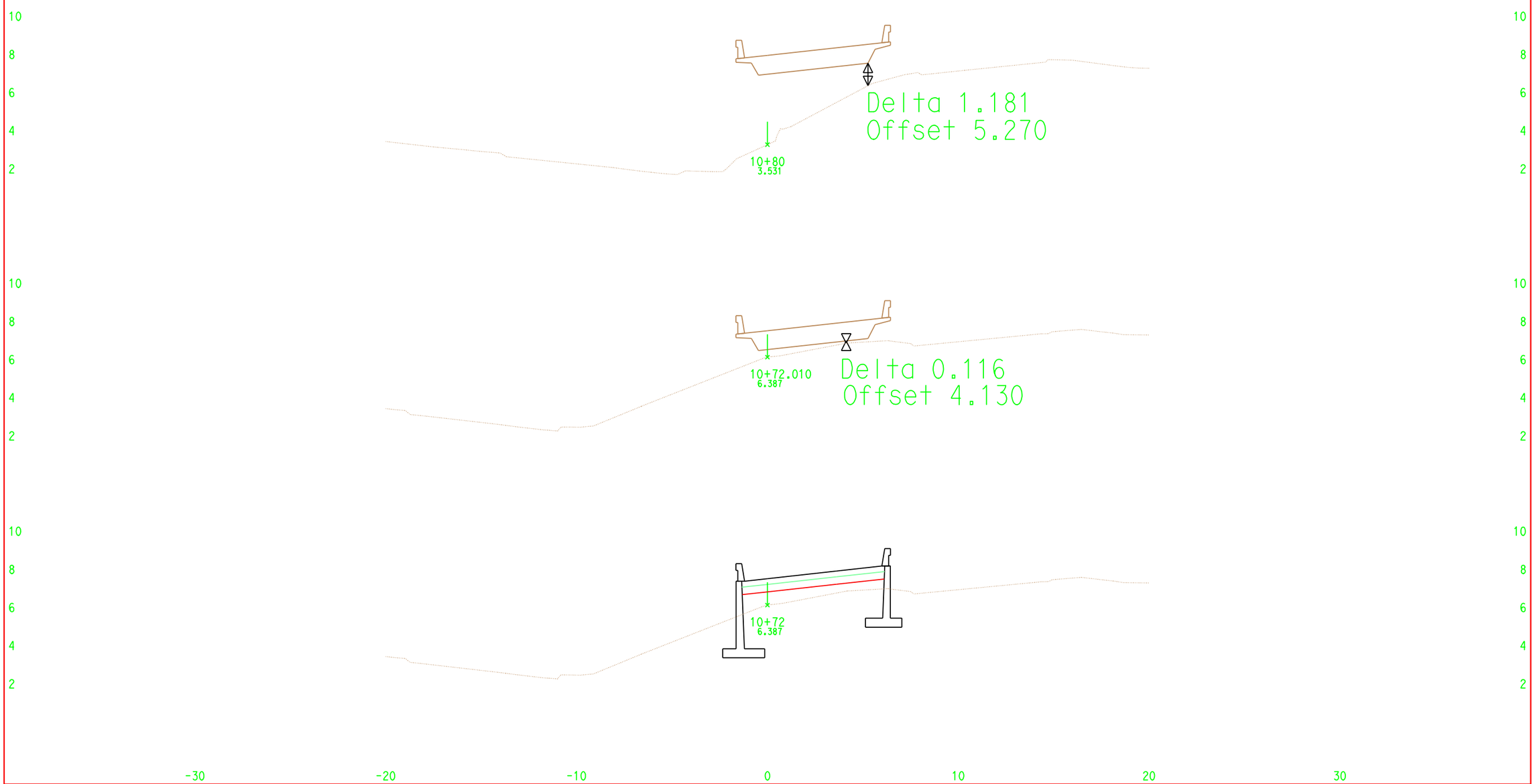

CROSS SECTIONS CREATED BY: JT DATE: 10/13/2007 ALL DIMENSIONS ARE METRIC

Project: 00245 File: D:\USERS\Project\00245\JT_Files\NF_Line\DesignX\jt_nfdes.ear

EA: 165421

Scale Ratio: 1:100 Horiz. 1:100 Vert.

NF LINE CROSS SECTIONS

SHEET 21 OF 40

For Earthwork Development Only

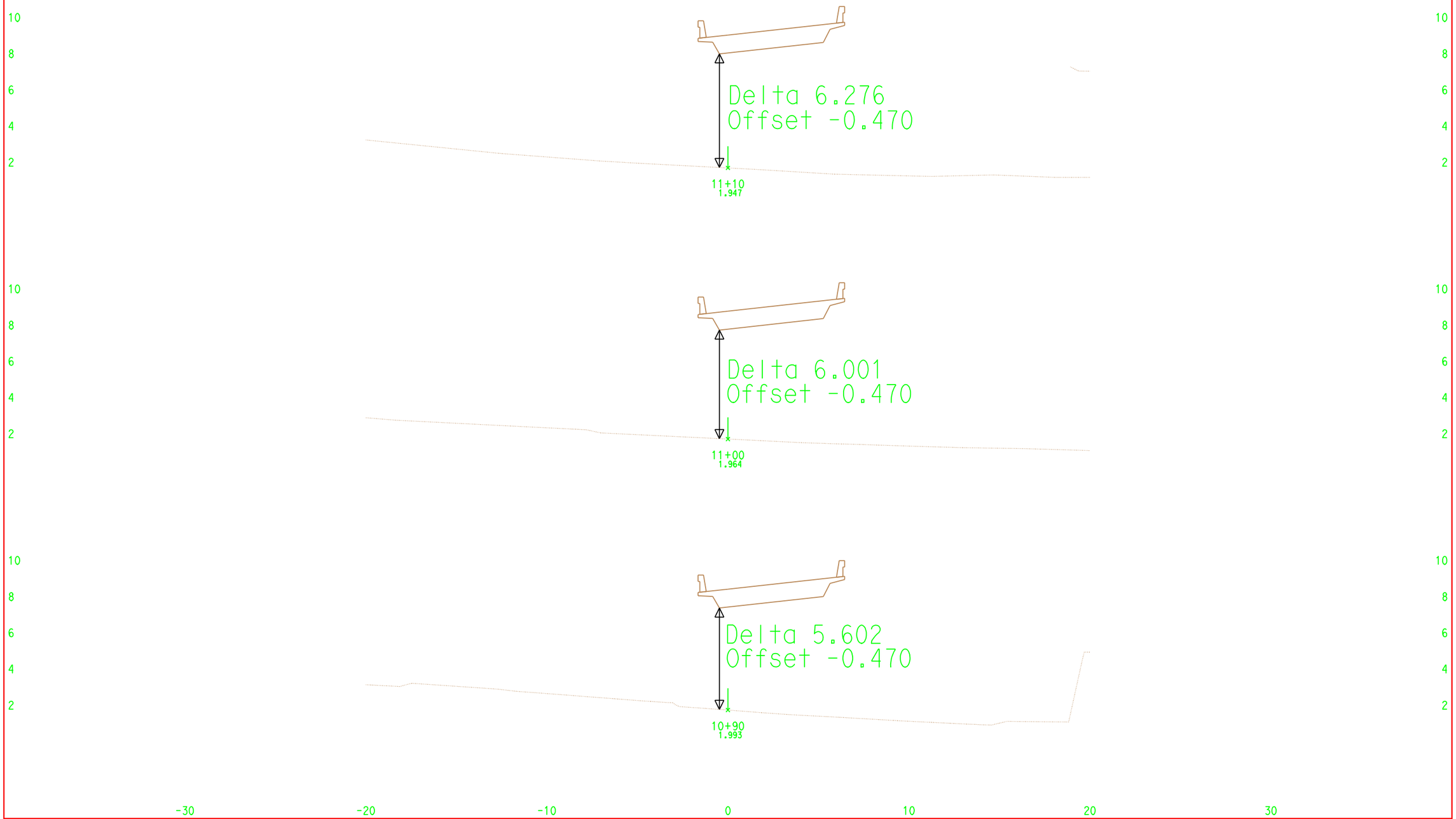

CROSS SECTIONS CREATED BY: JT DATE: 10/13/2007 ALL DIMENSIONS ARE METRIC

Project: 00245 File: D:\USERS\Project\00245\JT_Files\NF_Line\DesignX\jt_nfdes.ear

EA: 165421

Scale Ratio: 1:100 Horiz. 1:100 Vert.

NF LINE CROSS SECTIONS

SHEET 22 OF 40

For Earthwork Development Only

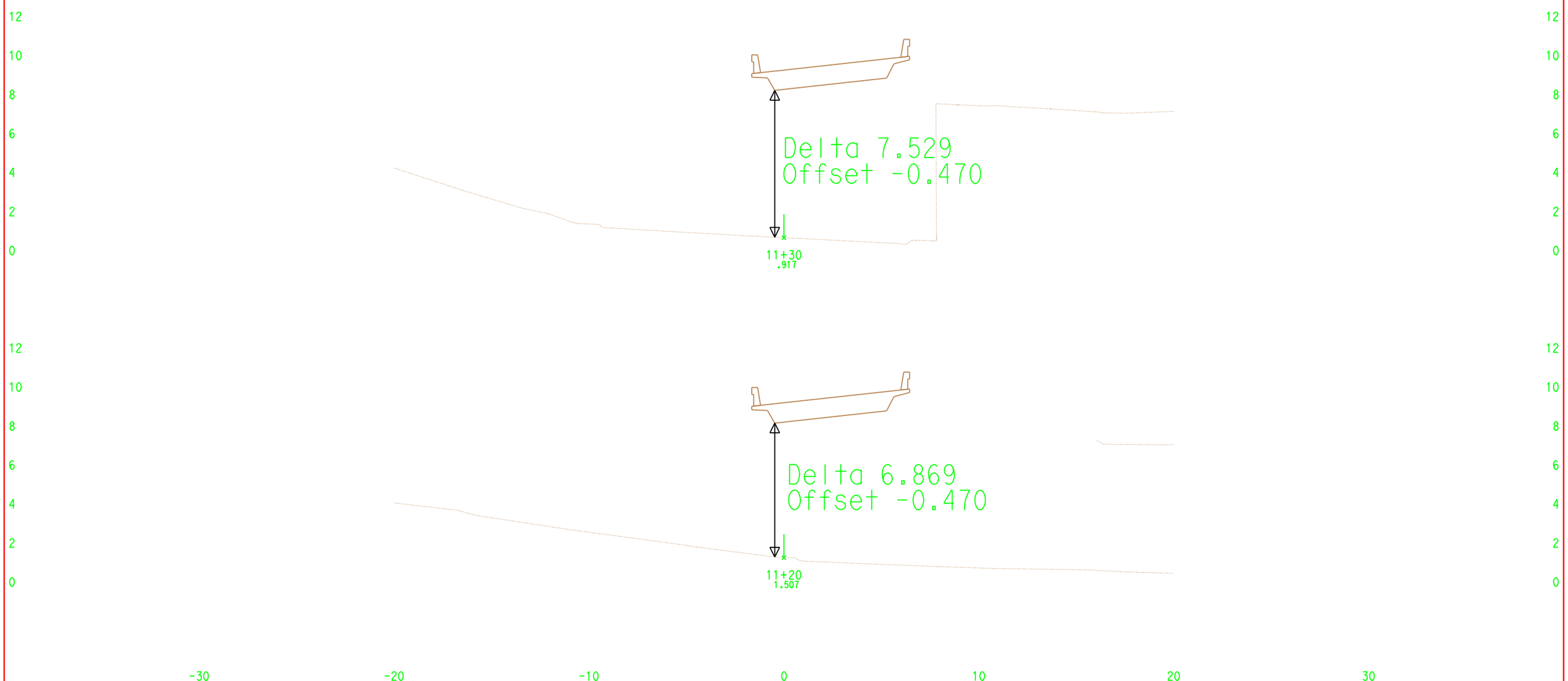

CROSS SECTIONS CREATED BY: JT DATE: 10/13/2007 ALL DIMENSIONS ARE METRIC

Project: 00245 File: D:\USERS\Project\00245\JT_Files\NF_Line\DesignX\jt_nfdes.ear

EA: 165421

Scale Ratio: 1:100 Horiz.
1:100 Vert.

NF LINE
CROSS SECTIONS

For Earthwork Development Only

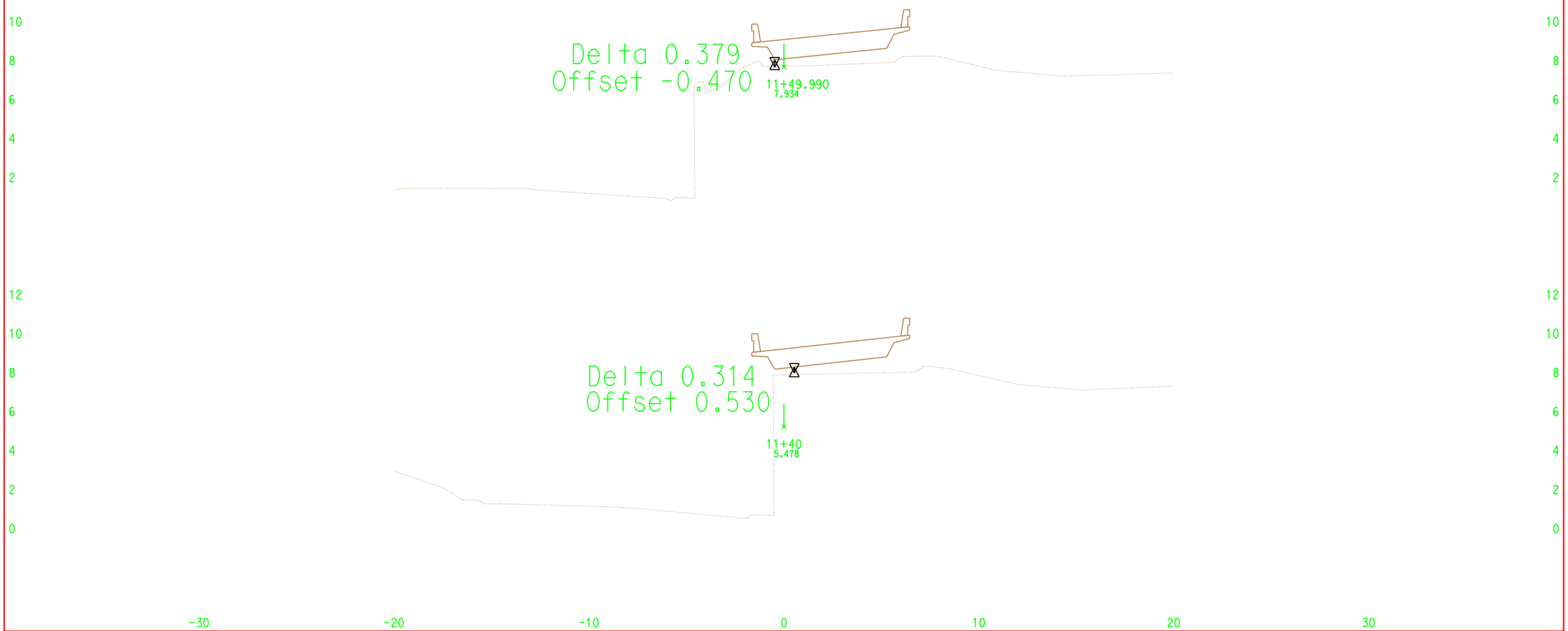

CROSS SECTIONS CREATED BY: JT DATE: 10/13/2007 ALL DIMENSIONS ARE METRIC

Project: 00245 File: D:\USERS\Project\00245\JT_Files\NF_Line\DesignX\jt_nfdes.ear

EA: 165421

Scale Ratio: 1:100 Horiz. 1:100 Vert.

NF LINE CROSS SECTIONS

SHEET 24 OF 40

For Earthwork Development Only

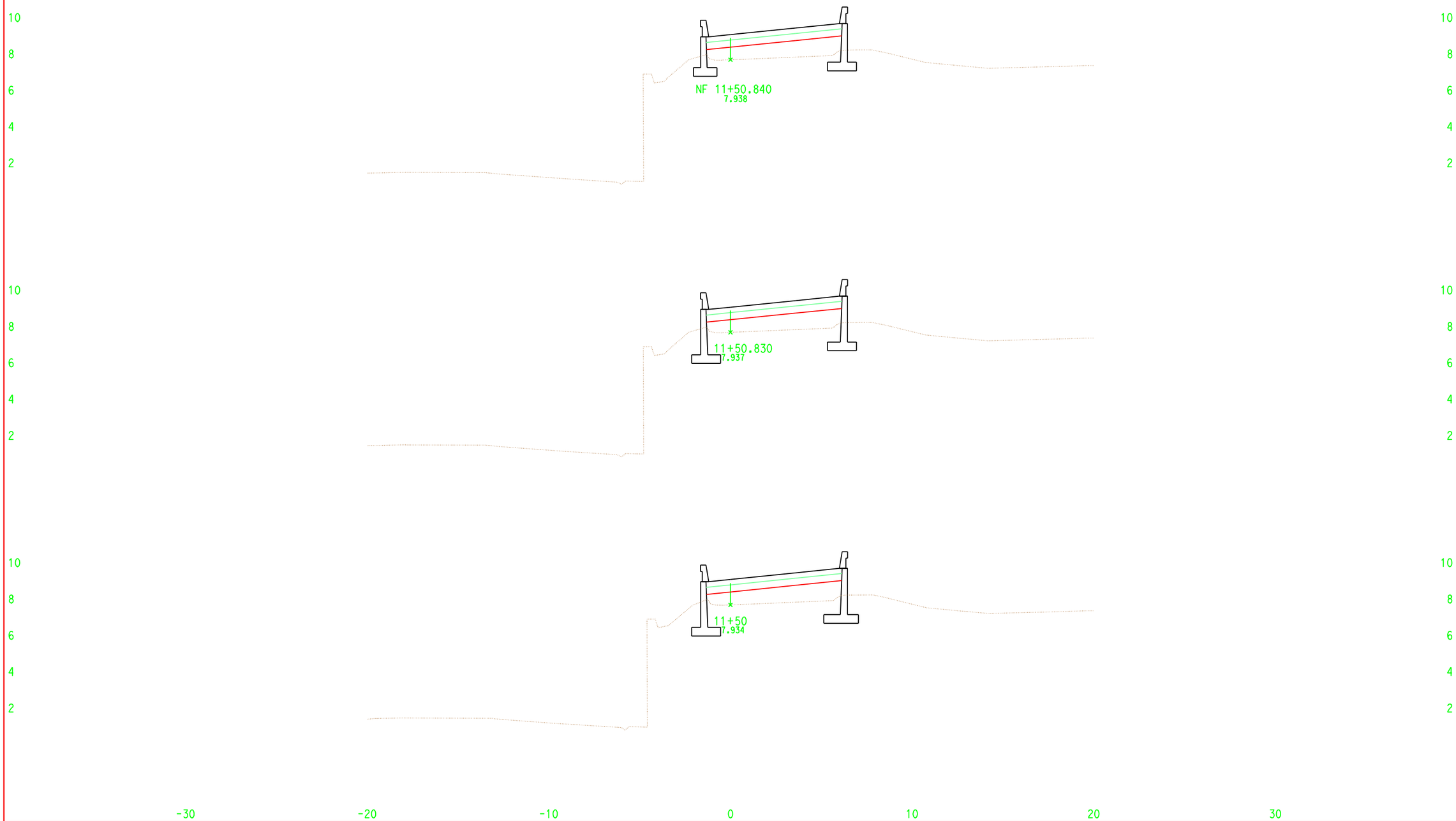

CROSS SECTIONS CREATED BY: JT DATE: 10/13/2007 ALL DIMENSIONS ARE METRIC

Project: 00245 File: D:\USERS\Project\00245\JT_Files\NF_Line\DesignX\jt_nfdes.ear

EA: 165421

Scale Ratio: 1:100 Horiz. 1:100 Vert.

NF LINE CROSS SECTIONS

SHEET 25 OF 40

For Earthwork Development Only

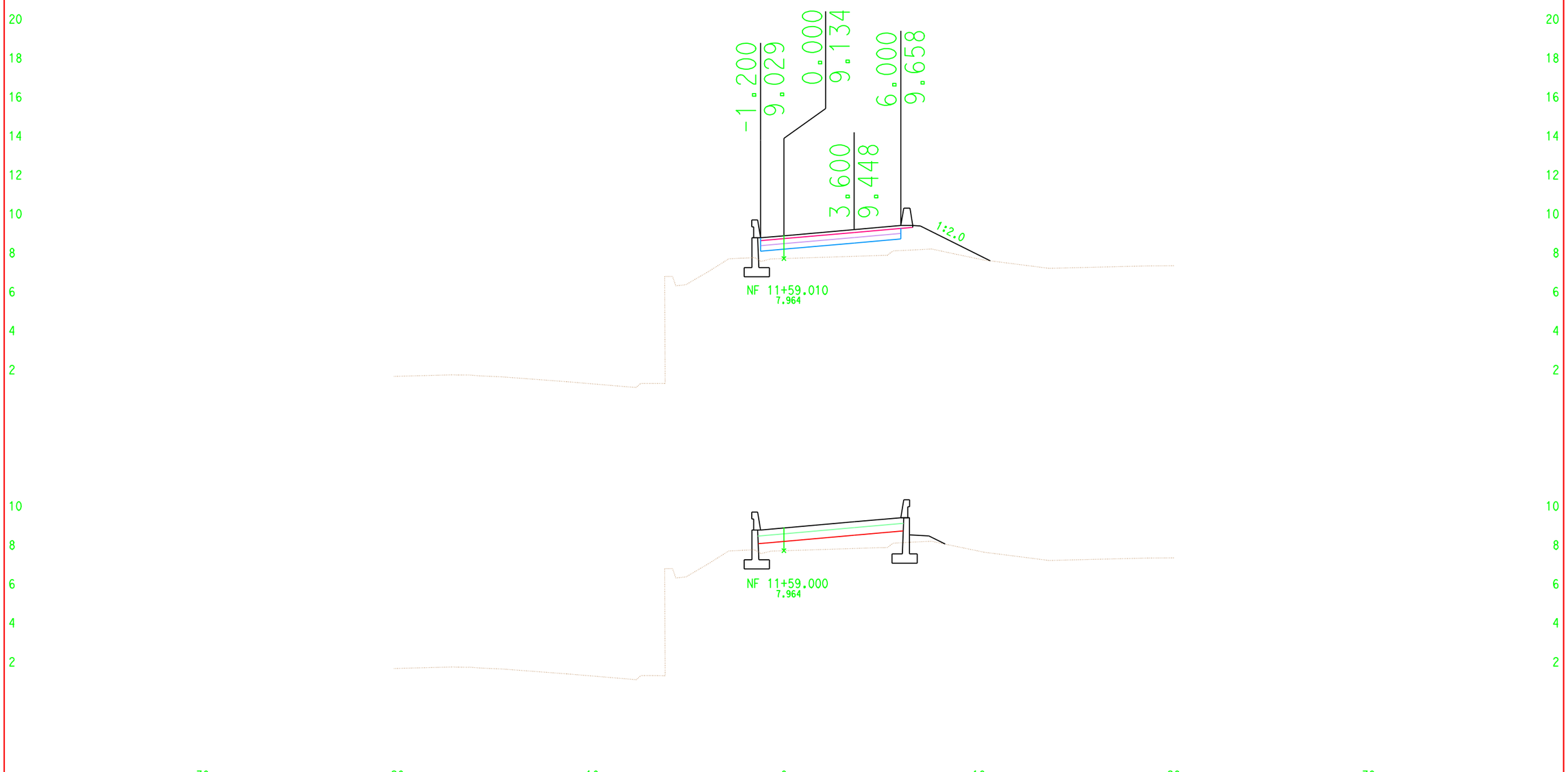

CROSS SECTIONS CREATED BY: JT DATE: 10/13/2007 ALL DIMENSIONS ARE METRIC

Project: 00245 File: D:\USERS\Project\00245\JT_Files\NF_Line\DesignX\jt_nfdes.ear

EA: 165421

Scale Ratio: 1:100 Horiz. 1:100 Vert.

NF LINE CROSS SECTIONS

SHEET 26 OF 40

For Earthwork Development Only

CROSS SECTIONS CREATED BY: JT

DATE: 10/13/2007

ALL DIMENSIONS ARE METRIC

EA: 165421

Scale Ratio: 1:100 Horiz.
1:100 Vert.

Project: 00245 File: D:\USERS\Project\00245\JT_Files\NF_Line\DesignX\jt_nfdes.ear

NF LINE
CROSS SECTIONS

For Earthwork Development Only

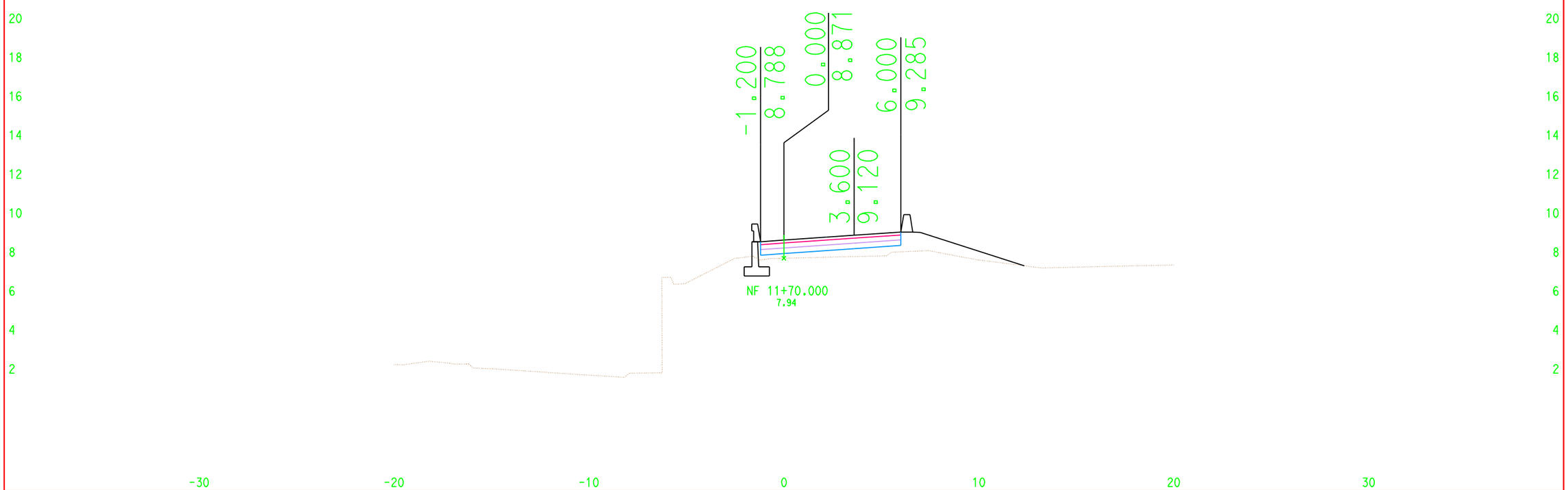

CROSS SECTIONS CREATED BY: JT DATE: 10/13/2007 ALL DIMENSIONS ARE METRIC

Project: 00245 File: D:\USERS\Project\00245\JT_Files\NF_Line\DesignX\jt_nfdes.ear

EA: 165421

Scale Ratio: 1:100 Horiz. 1:100 Vert.

NF LINE CROSS SECTIONS

SHEET 28 OF 40

For Earthwork Development Only

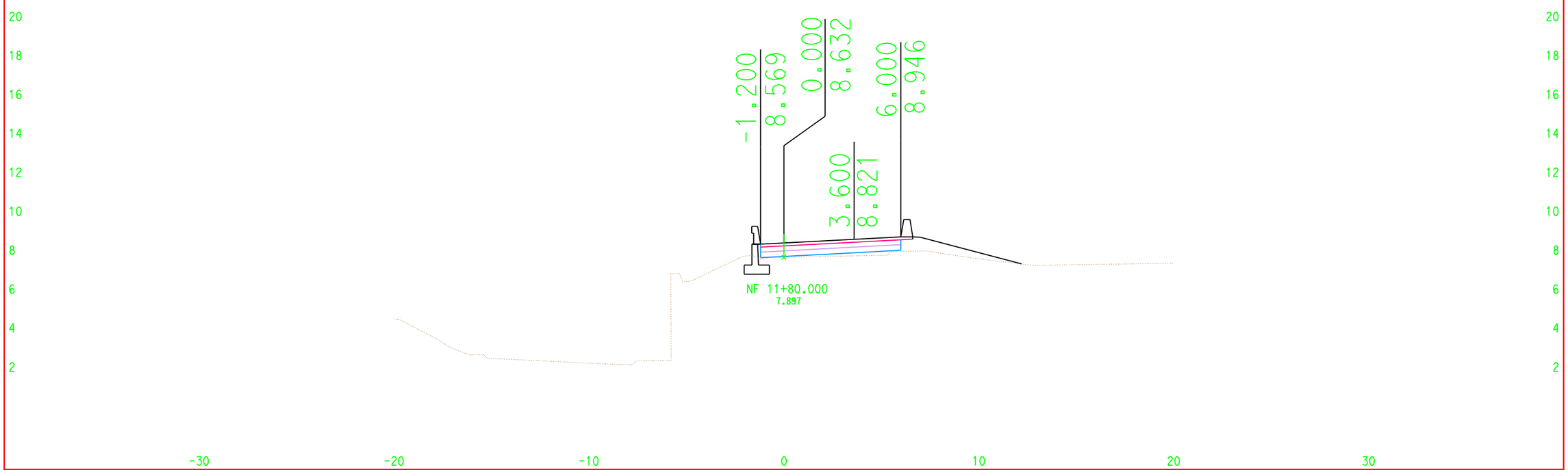

CROSS SECTIONS CREATED BY: JT DATE: 10/13/2007 ALL DIMENSIONS ARE METRIC

Project: 00245 File: D:\USERS\Project\00245\JT_Files\NF_Line\DesignX\jt_nfdes.ear

EA: 165421

Scale Ratio: 1:100 Horiz.
1:100 Vert.

NF LINE
CROSS SECTIONS

For Earthwork Development Only

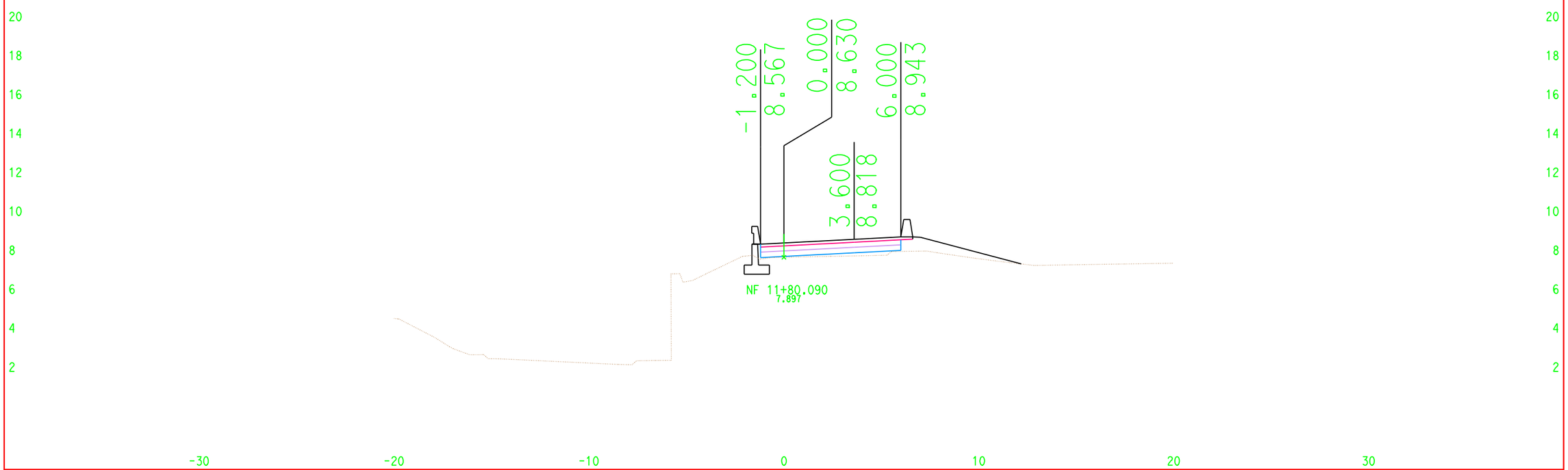

CROSS SECTIONS CREATED BY: JT DATE: 10/13/2007 ALL DIMENSIONS ARE METRIC

Project: 00245 File: D:\USERS\Project\00245\JT_Files\NF_Line\DesignX\jt_nfdes.ear

EA: 165421

Scale Ratio: 1:100 Horiz. 1:100 Vert.

NF LINE CROSS SECTIONS

SHEET 30 OF 40

For Earthwork Development Only

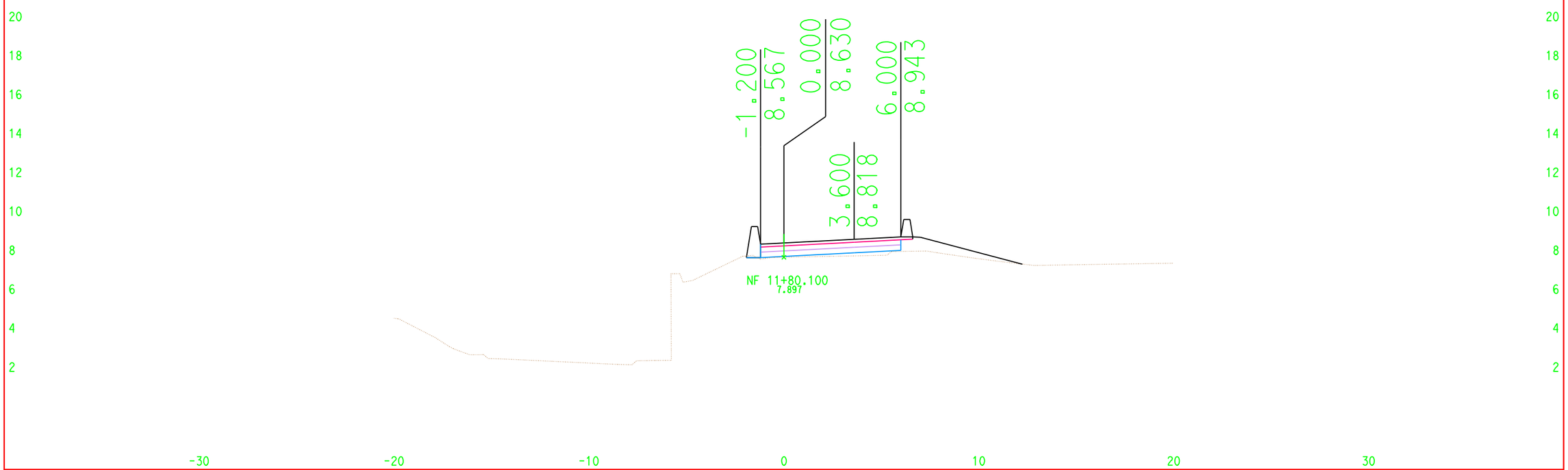

CROSS SECTIONS CREATED BY: JT DATE: 10/13/2007 ALL DIMENSIONS ARE METRIC

Project: 00245 File: D:\USERS\Project\00245\JT_Files\NF_Line\DesignX\jt_nfdes.ear

EA: 165421

Scale Ratio: 1:100 Horiz. 1:100 Vert.

NF LINE CROSS SECTIONS

SHEET 31 OF 40

For Earthwork Development Only

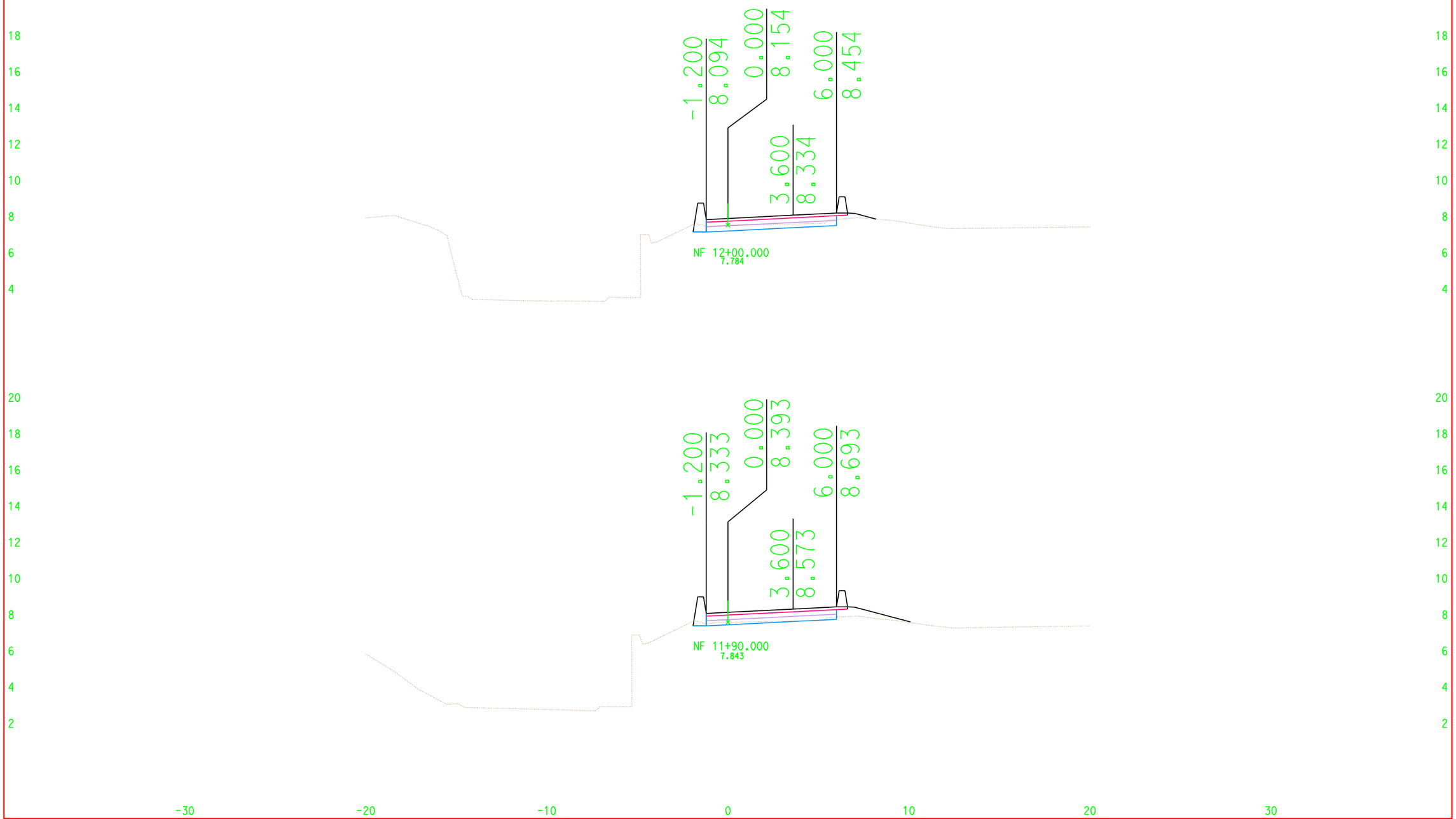

CROSS SECTIONS CREATED BY: JT DATE: 10/13/2007 ALL DIMENSIONS ARE METRIC

Project: 00245 File: D:\USERS\Project\00245\JT_Files\NF_Line\DesignX\jt_nfdes.ear

EA: 165421

Scale Ratio: 1:100 Horiz.
1:100 Vert.

NF LINE
CROSS SECTIONS

SHEET 32 OF 40

For Earthwork Development Only

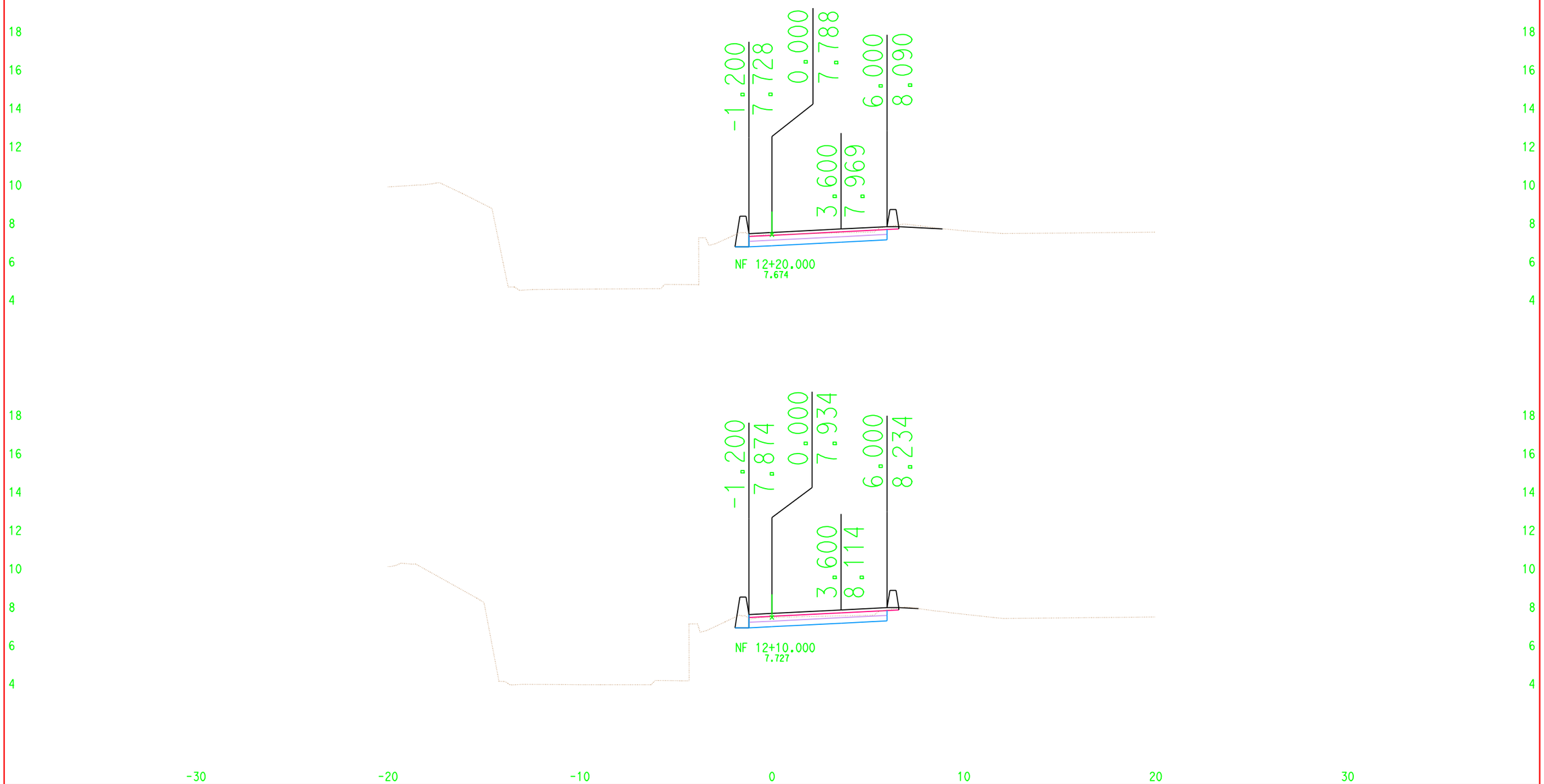

CROSS SECTIONS CREATED BY: JT DATE: 10/13/2007 ALL DIMENSIONS ARE METRIC

Project: 00245 File: D:\USERS\Project\00245\JT_Files\NF_Line\DesignX\jt_nfdes.ear

EA: 165421

Scale Ratio: 1:100 Horiz.
1:100 Vert.

NFLINE
CROSS SECTIONS

For Earthwork Development Only

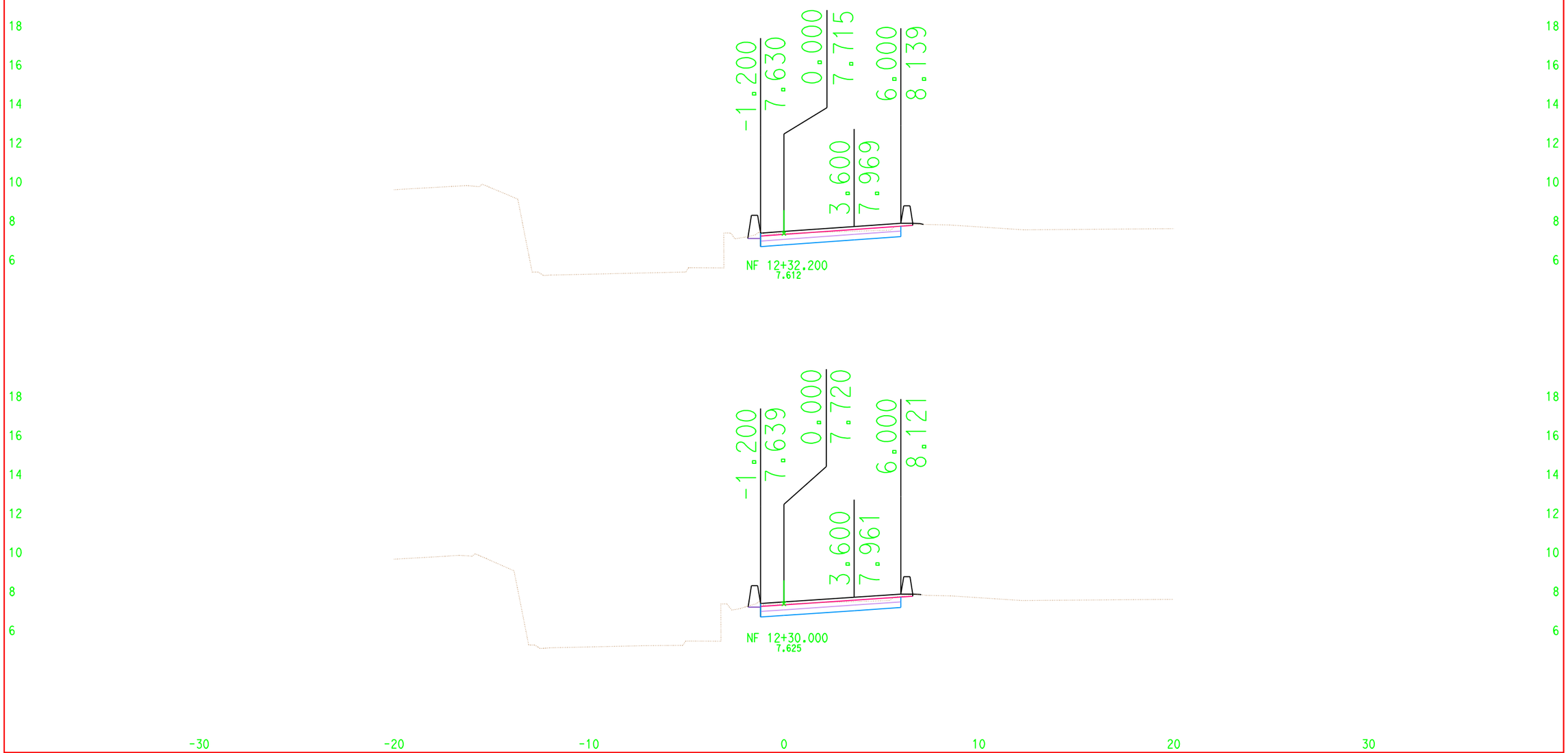

CROSS SECTIONS CREATED BY: JT DATE: 10/13/2007 ALL DIMENSIONS ARE METRIC

Project: 00245 File: D:\USERS\Project\00245\JT_Files\NF_Line\DesignX\jt_nfdes.ear

EA: 165421

Scale Ratio: 1:100 Horiz. 1:100 Vert.

NF LINE CROSS SECTIONS

SHEET 34 OF 40

For Earthwork Development Only

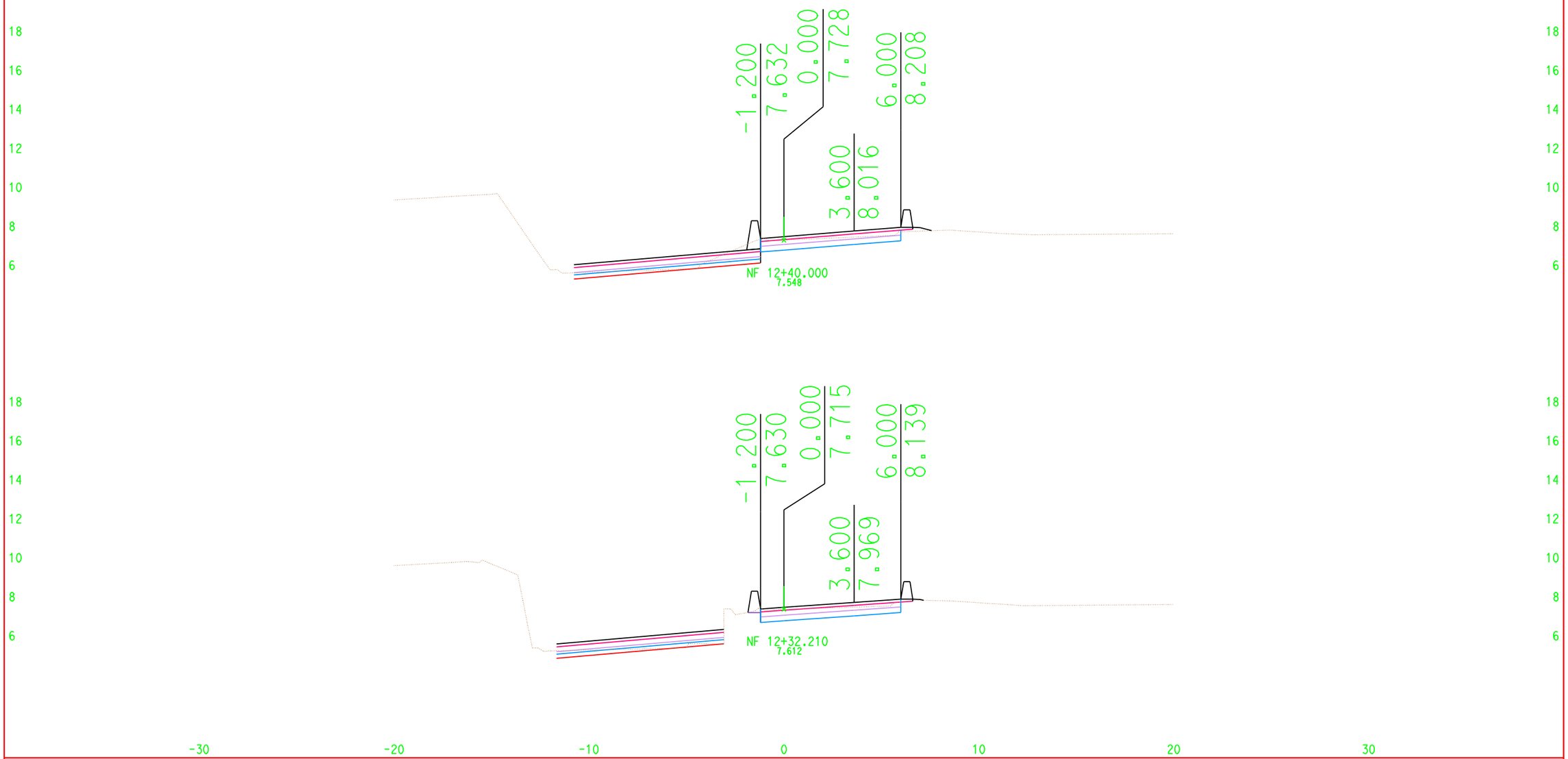

CROSS SECTIONS CREATED BY: JT DATE: 10/13/2007 ALL DIMENSIONS ARE METRIC

Project: 00245 File: D:\USERS\Project\00245\JT_Files\NF_Line\DesignX\jt_nfdes.ear

EA: 165421

Scale Ratio: 1:100 Horiz.
1:100 Vert.

NF LINE CROSS SECTIONS

SHEET 35 OF 40

For Earthwork Development Only

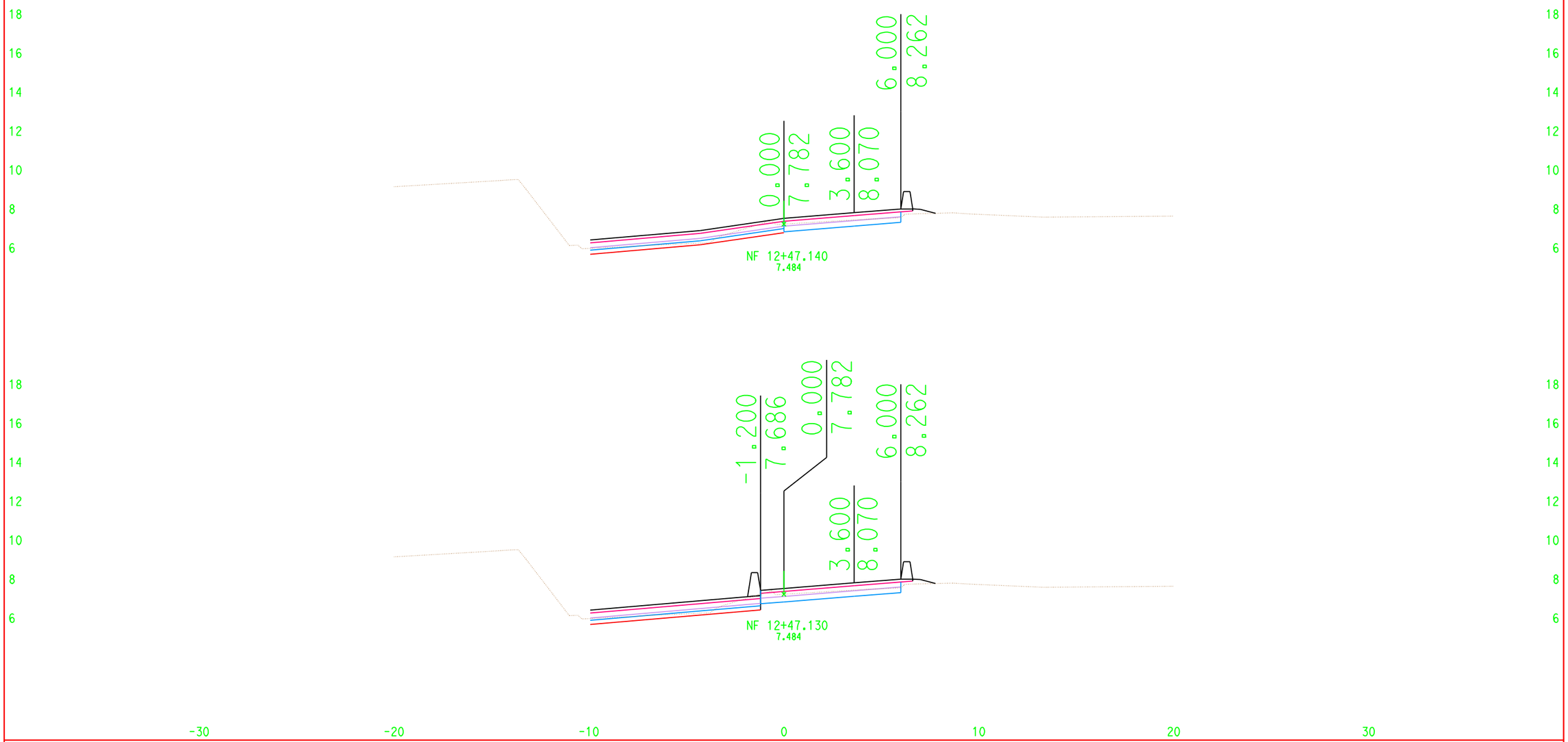

CROSS SECTIONS CREATED BY: JT DATE: 10/13/2007 ALL DIMENSIONS ARE METRIC

Project: 00245 File: D:\USERS\Project\00245\JT_Files\NF_Line\DesignX\jt_nfdes.ear

EA: 165421

Scale Ratio: 1:100 Horiz. 1:100 Vert.

NF LINE CROSS SECTIONS

SHEET 36 OF 40

For Earthwork Development Only

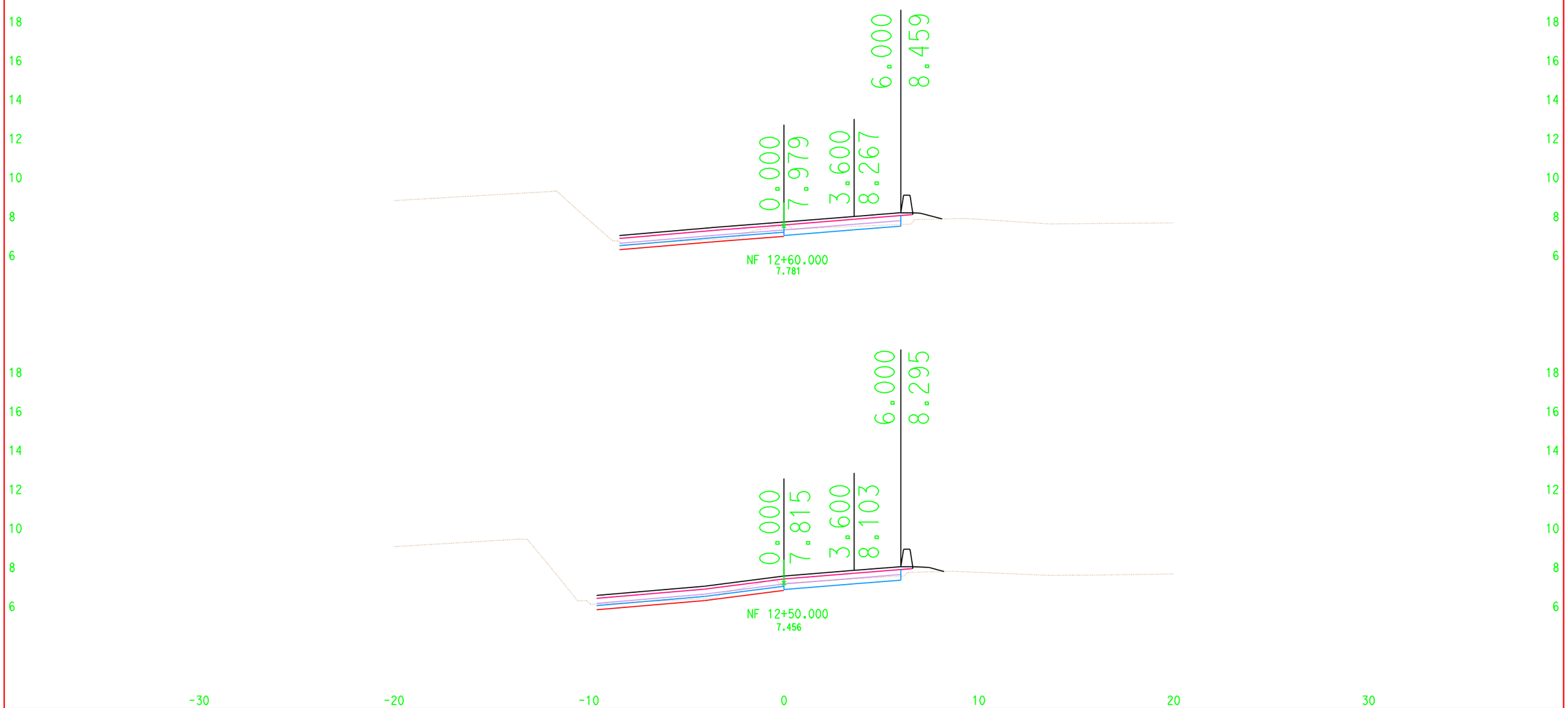

CROSS SECTIONS CREATED BY: JT DATE: 10/13/2007 ALL DIMENSIONS ARE METRIC

Project: 00245 File: D:\USERS\Project\00245\JT_Files\NF_Line\DesignX\jt_nfdes.ear

EA: 165421

Scale Ratio: 1:100 Horiz.
1:100 Vert.

NF LINE CROSS SECTIONS

SHEET 37 OF 40

For Earthwork Development Only

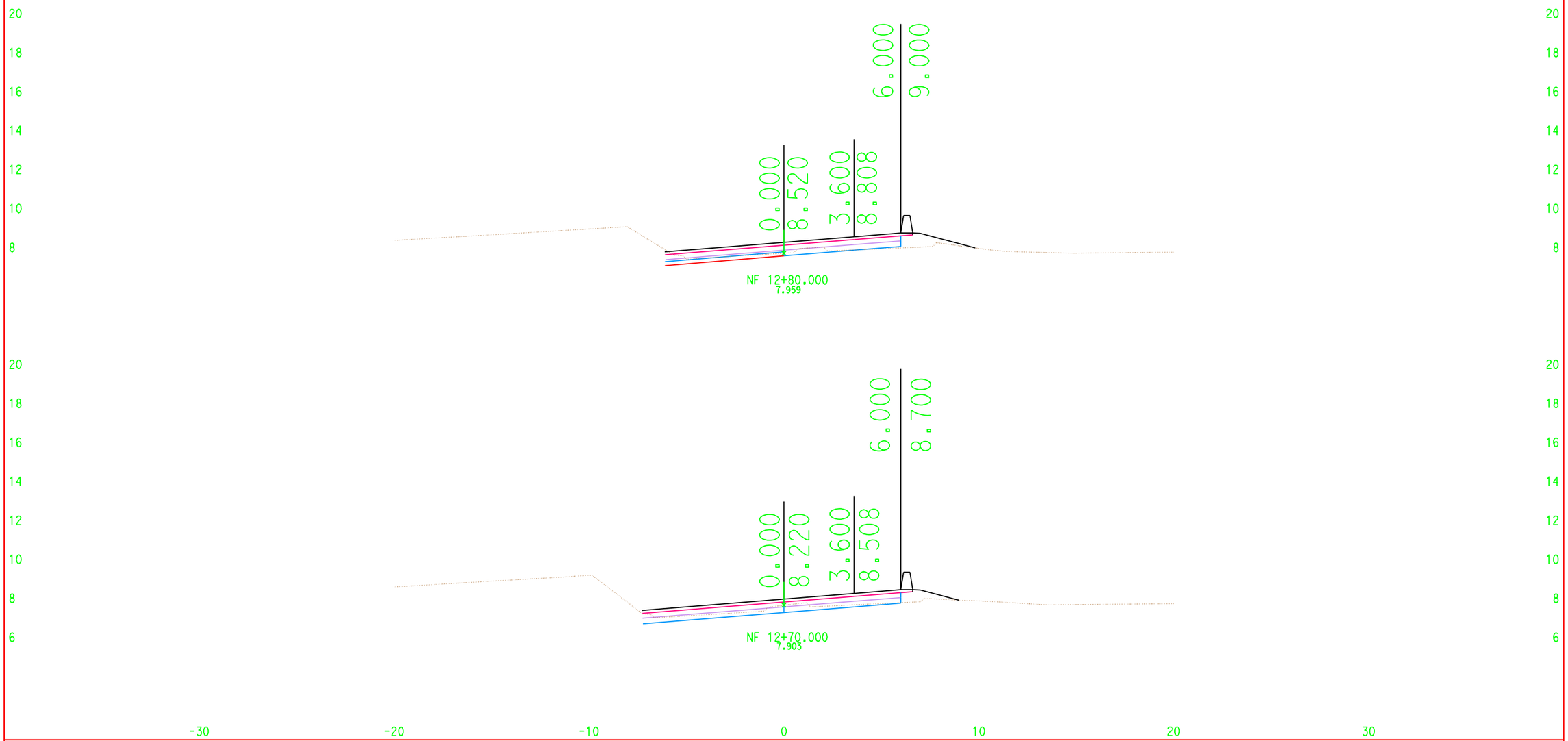

CROSS SECTIONS CREATED BY: JT DATE: 10/13/2007 ALL DIMENSIONS ARE METRIC

Project: 00245 File: D:\USERS\Project\00245\JT_Files\NF_Line\DesignX\jt_nfdes.ear

EA: 165421

Scale Ratio: 1:100 Horiz.
1:100 Vert.

NF LINE CROSS SECTIONS

SHEET 38 OF 40

For Earthwork Development Only

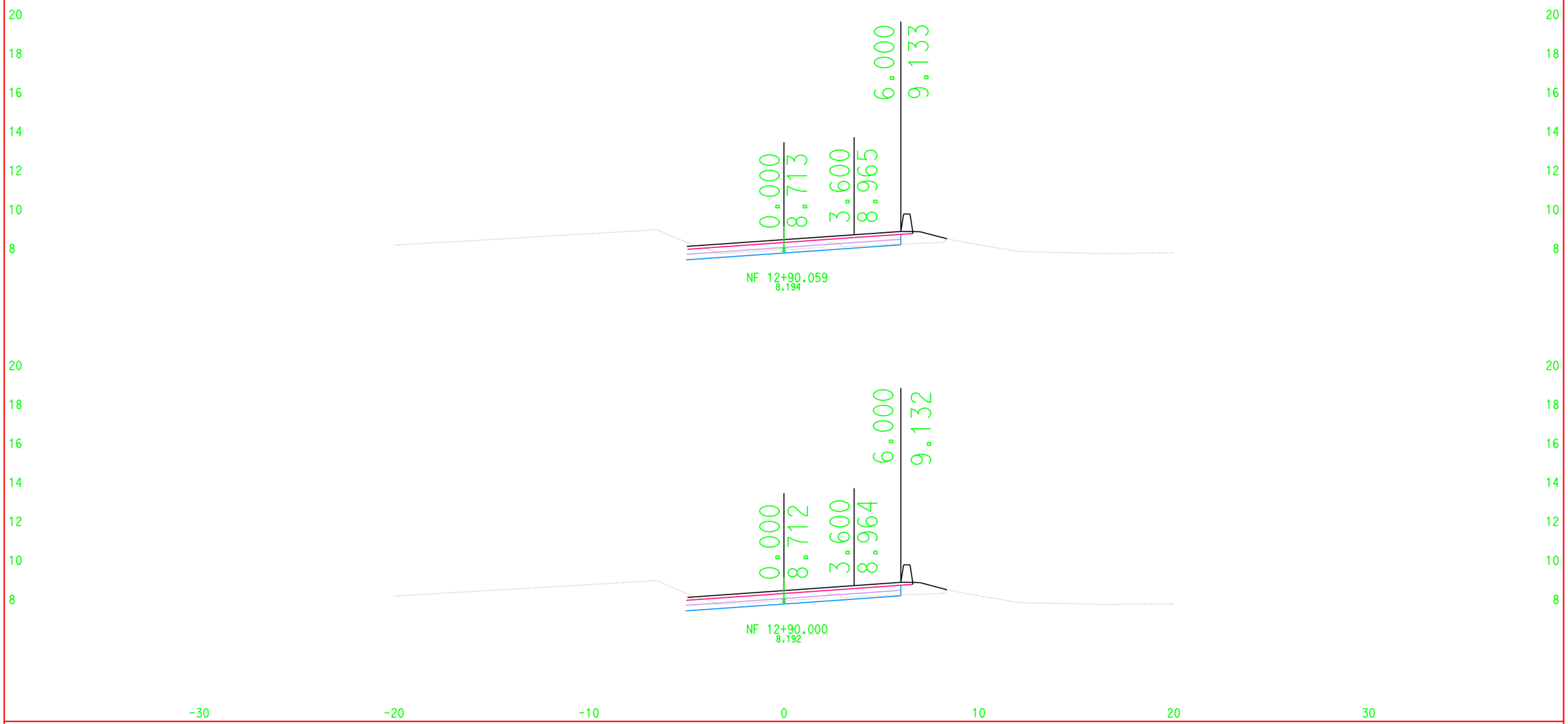

CROSS SECTIONS CREATED BY: JT DATE: 10/13/2007 ALL DIMENSIONS ARE METRIC

Project: 00245 File: D:\USERS\Project\00245\JT_Files\NF_Line\DesignX\jt_nfdes.ear

EA: 165421

Scale Ratio: 1:100 Horiz. 1:100 Vert.

NF LINE CROSS SECTIONS

For Earthwork Development Only

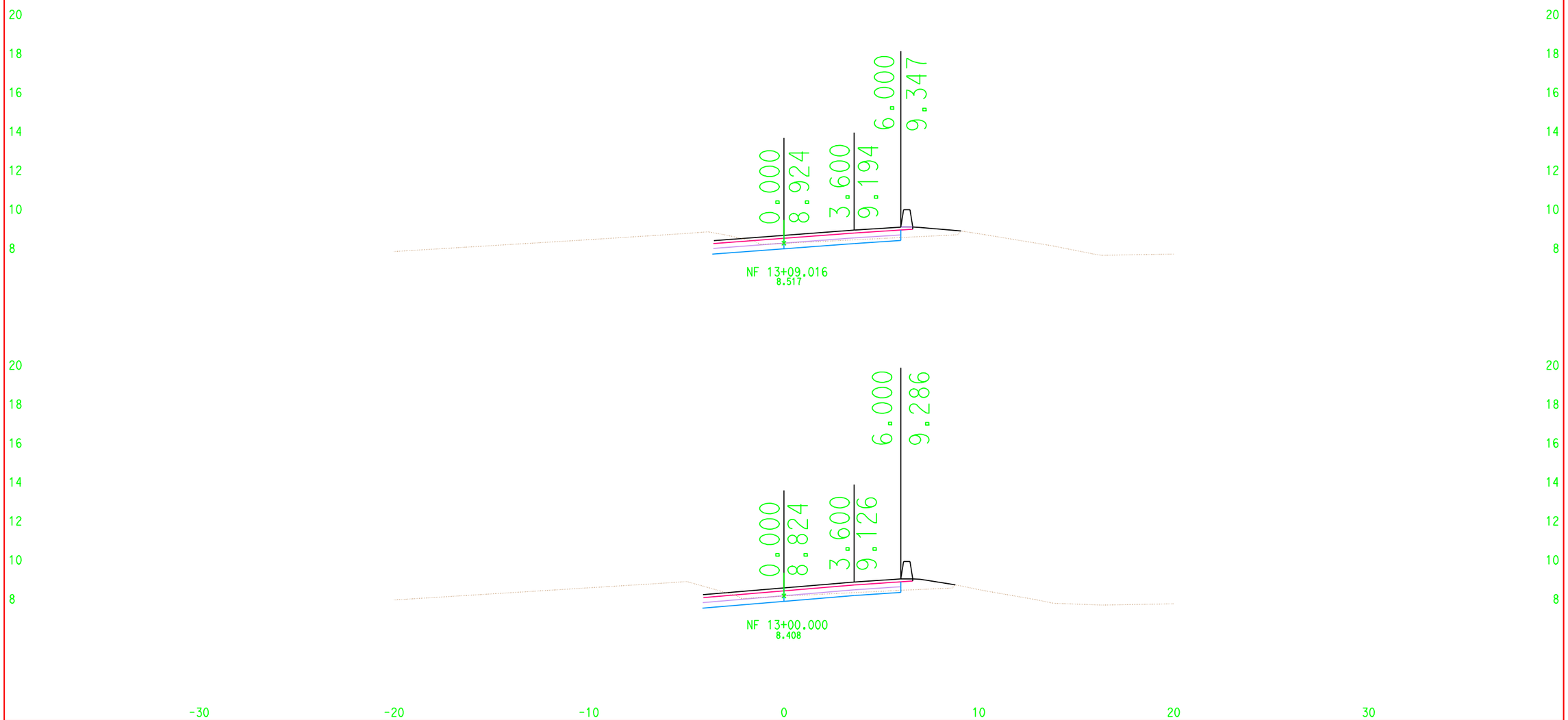

CROSS SECTIONS CREATED BY: JT DATE: 10/13/2007 ALL DIMENSIONS ARE METRIC

Project: 00245 File: D:\USERS\Project\00245\JT_Files\NF_Line\DesignX\jt_nfdes.ear

EA: 165421

Scale Ratio: 1:100 Horiz.
1:100 Vert.

NF LINE CROSS SECTIONS

SHEET 40 OF 40

For Earthwork Development Only

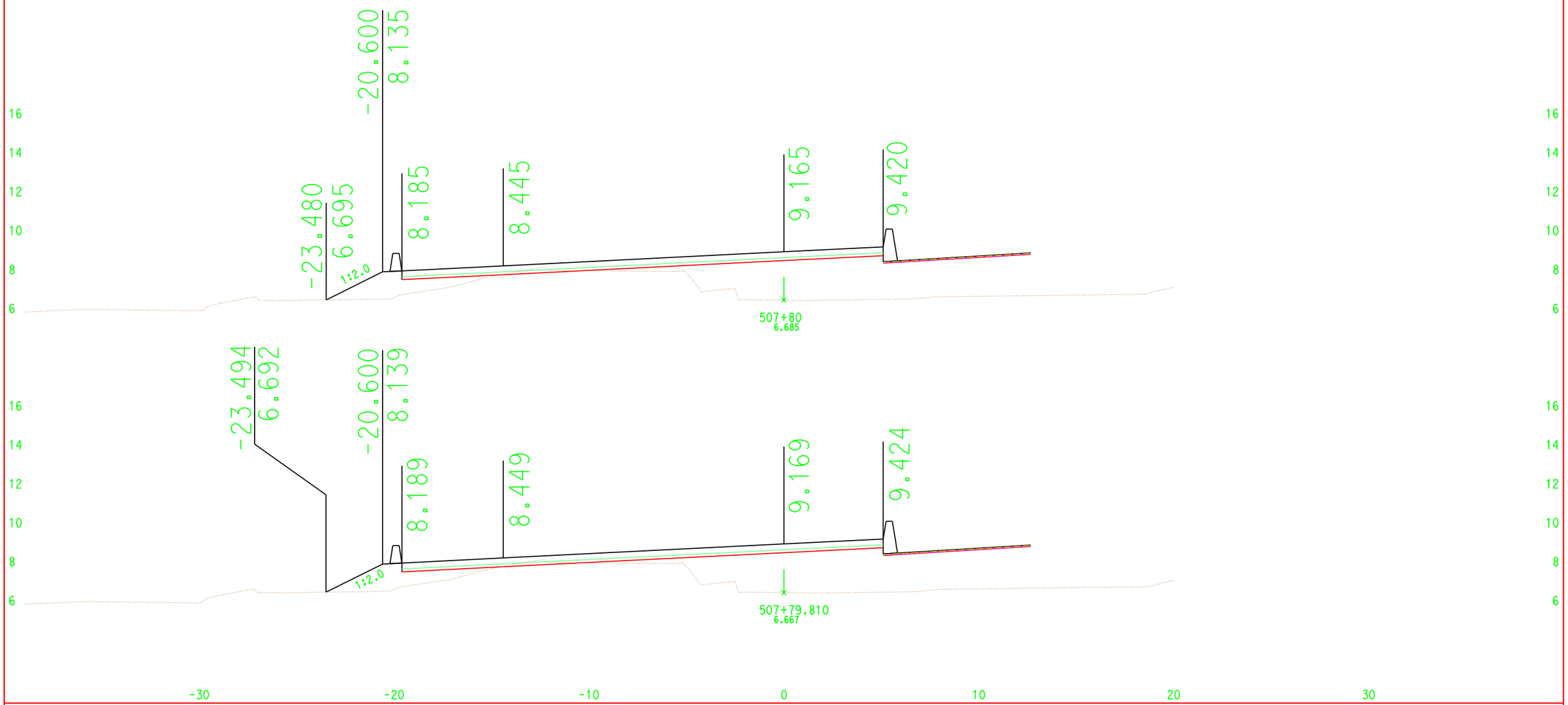

CROSS SECTIONS CREATED BY: JT DATE: 10/17/2007 ALL DIMENSIONS ARE METRIC

Project: 00245 File: D:\USERS\Project\00245\JT_Files\S_Line\DesignX\jt_s1des.ear

EA: 165421

Scale Ratio: 1:100 Horiz.
1:100 Vert.

S Line
CROSS SECTIONS
SHEET 1 OF XXX

For Earthwork Development Only

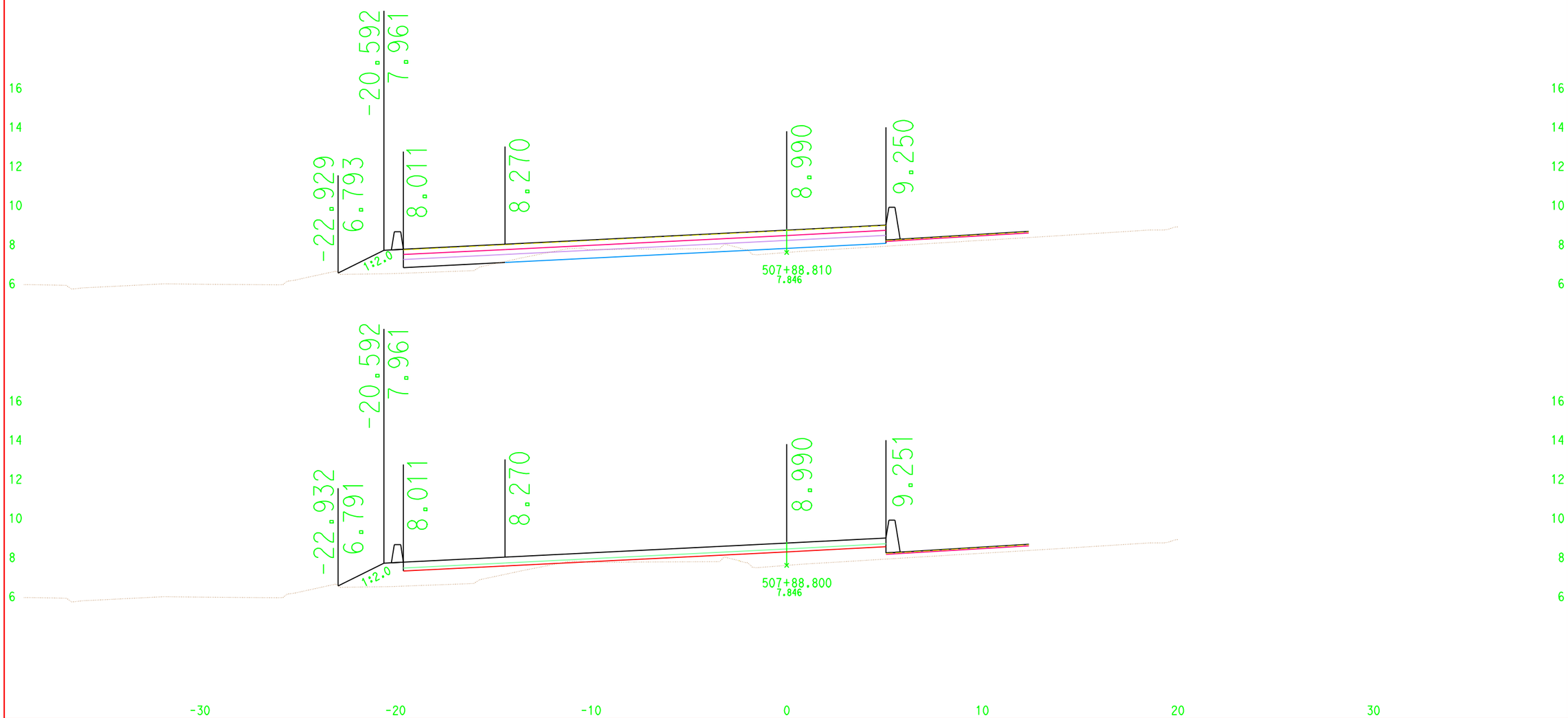

CROSS SECTIONS CREATED BY: JT DATE: 10/17/2007 ALL DIMENSIONS ARE METRIC

Project: 00245 File: D:\USERS\Project\00245\JT_Files\S_Line\DesignX\jt_s1des.ear

EA: 165421

Scale Ratio: 1:100 Horiz.
1:100 Vert.

S Line
CROSS SECTIONS

SHEET 2 OF XXX

For Earthwork Development Only

CROSS SECTIONS CREATED BY: JT DATE: 10/17/2007 ALL DIMENSIONS ARE METRIC

Project: 00245 File: D:\USERS\Project\00245\JT_Files\S_Line\DesignX\jt_s1des.ear

EA: 165421

Scale Ratio: 1:100 Horiz.
1:100 Vert.

S Line
CROSS SECTIONS

SHEET 3 OF XXX

For Earthwork Development Only

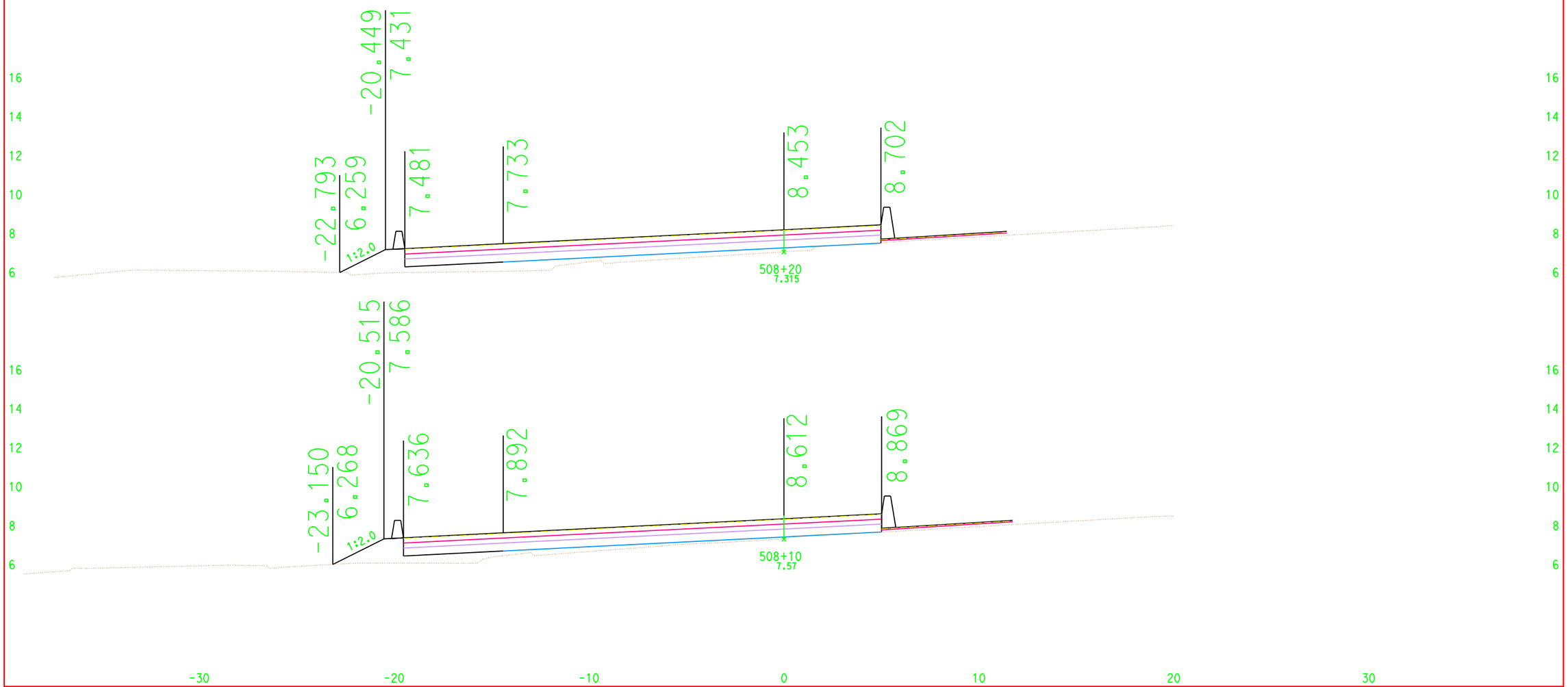

CROSS SECTIONS CREATED BY: JT DATE: 10/17/2007 ALL DIMENSIONS ARE METRIC

Project: 00245 File: D:\USERS\Project\00245\JT_Files\S_Line\DesignX\jt_s1des.ear

EA: 165421

Scale Ratio: 1:100 Horiz.
1:100 Vert.

S Line
CROSS SECTIONS

SHEET 4 OF XXX

For Earthwork Development Only

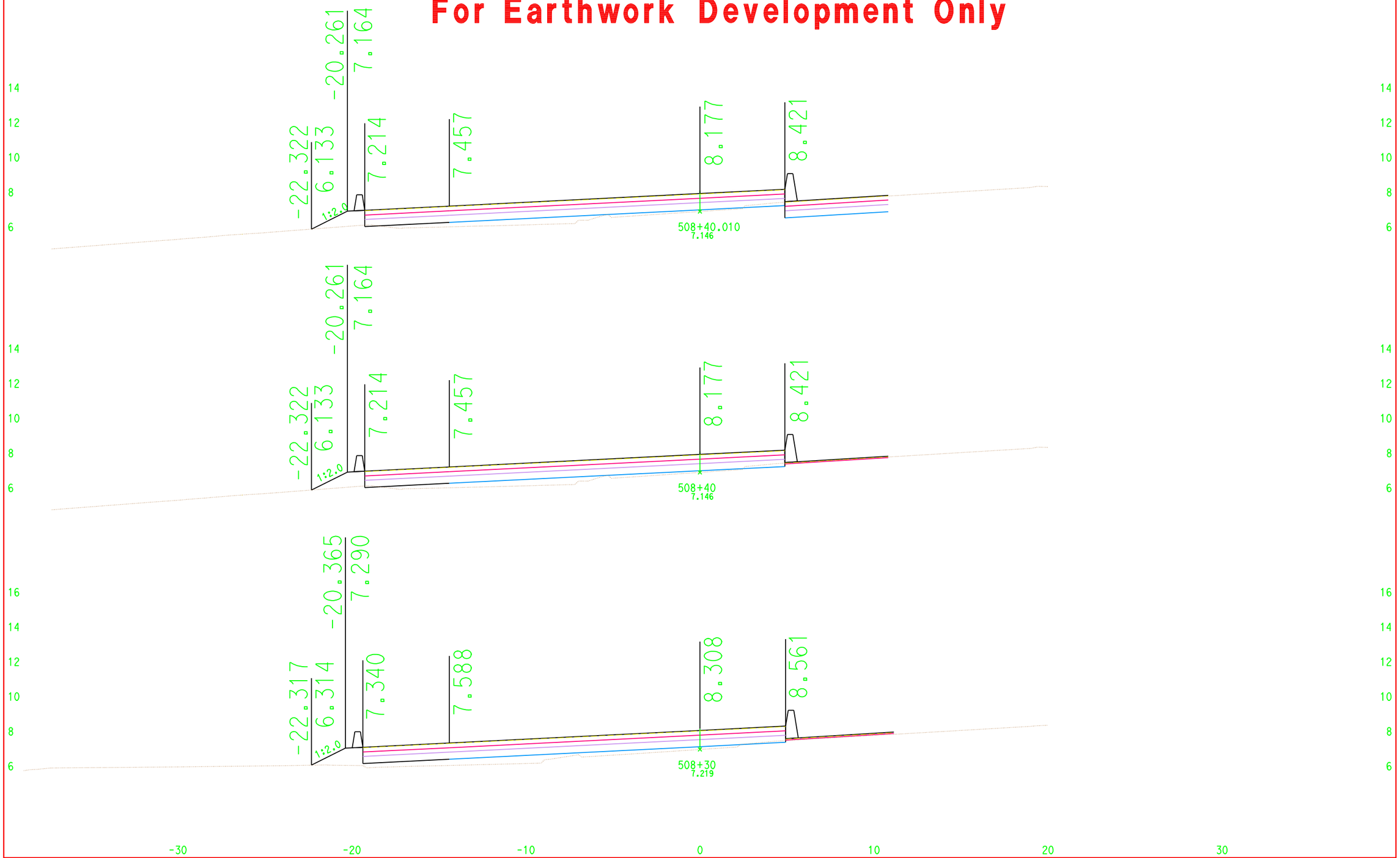

CROSS SECTIONS CREATED BY: JT DATE: 10/17/2007 ALL DIMENSIONS ARE METRIC

Project: 00245 File: D:\USERS\Project\00245\JT_Files\S_Line\DesignX\jt_s1des.ear

EA: 165421

Scale Ratio: 1:100 Horiz.
1:100 Vert.

S Line
CROSS SECTIONS

SHEET 5 OF XXX

For Earthwork Development Only

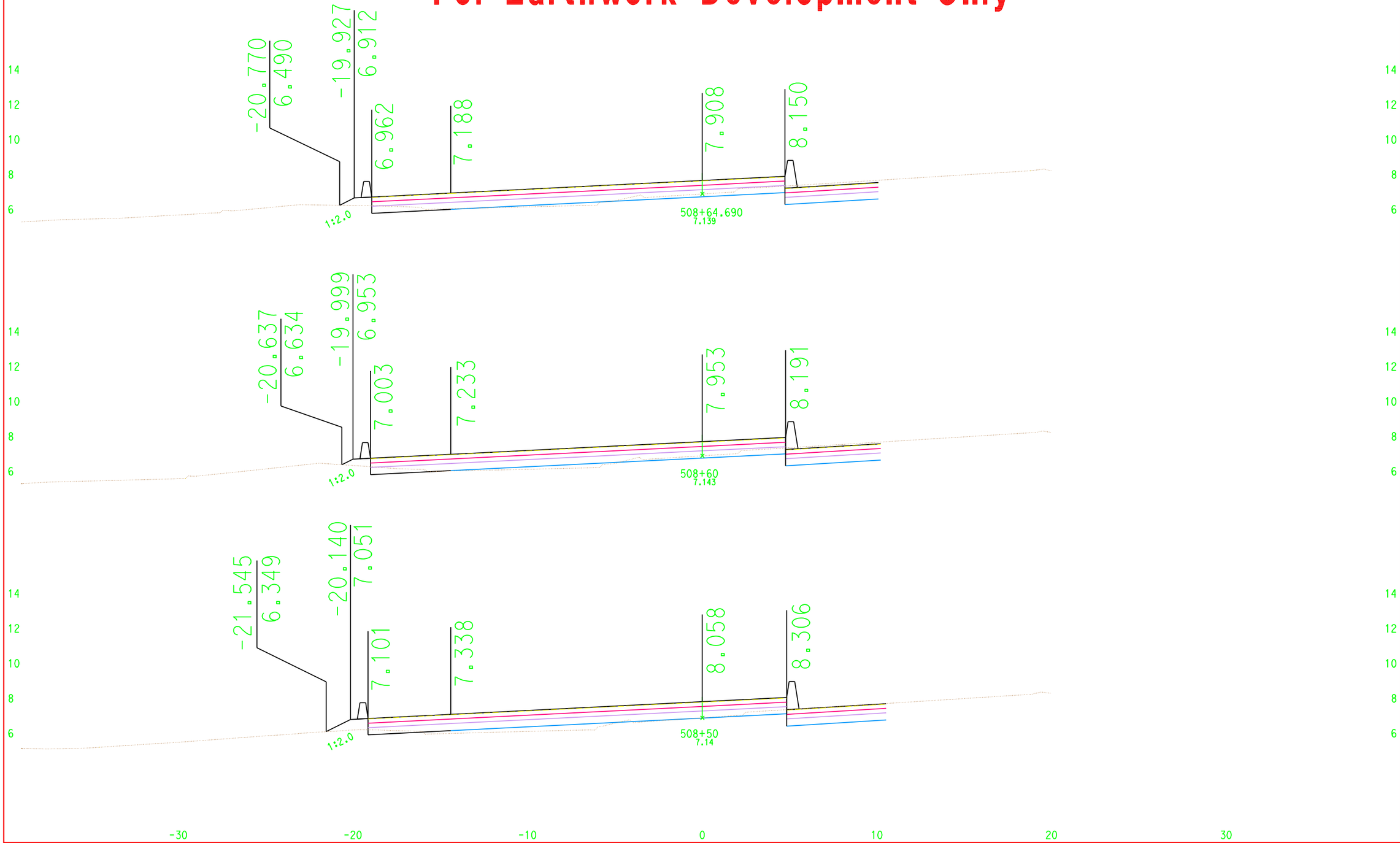

CROSS SECTIONS CREATED BY: JT DATE: 10/17/2007 ALL DIMENSIONS ARE METRIC

Project: 00245 File: D:\USERS\Project\00245\JT_Files\S_Line\DesignX\jt_s1des.ear

EA: 165421

Scale Ratio: 1:100 Horiz. 1:100 Vert.

S Line
CROSS SECTIONS

SHEET 6 OF XXX

For Earthwork Development Only

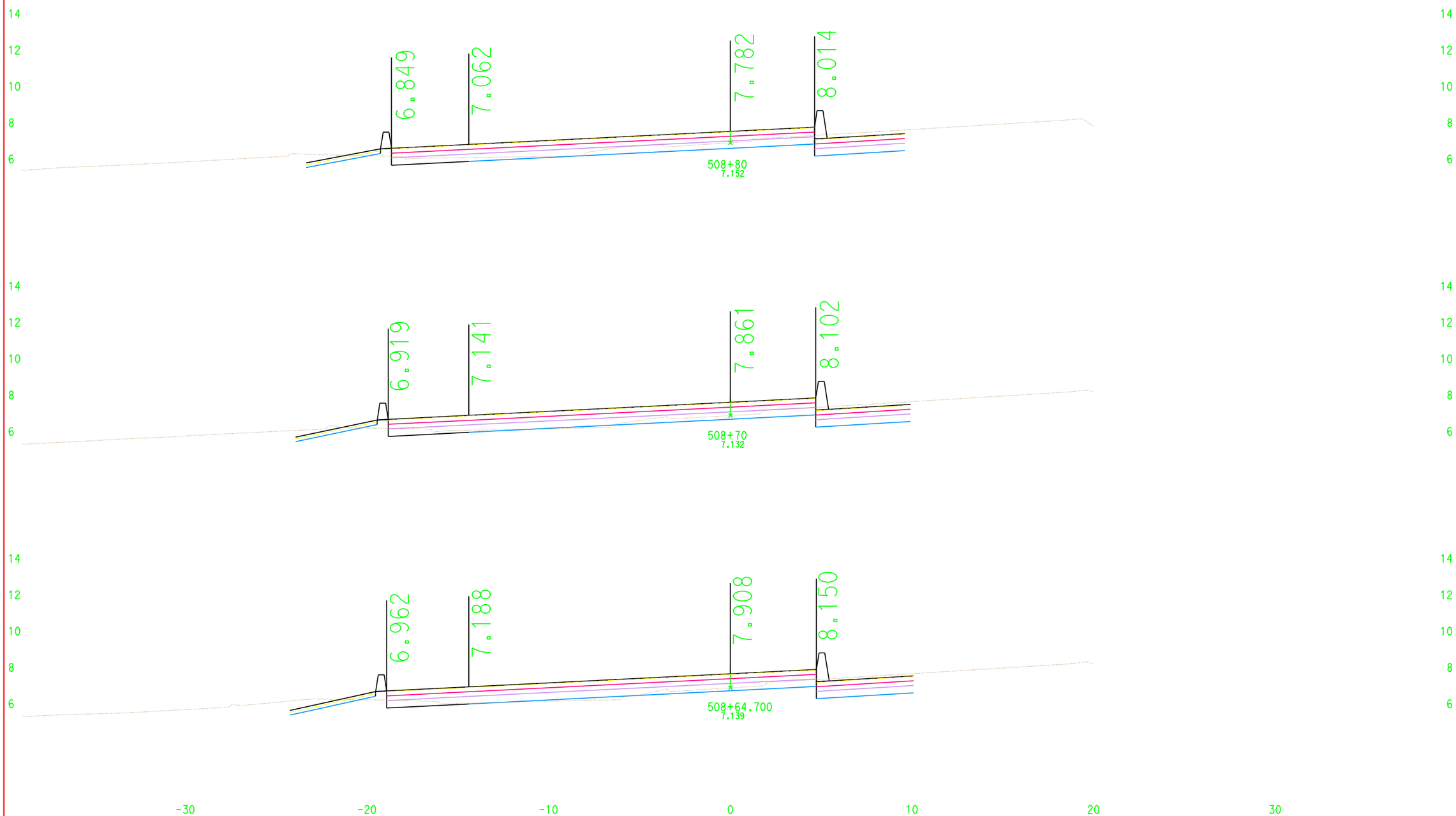

CROSS SECTIONS CREATED BY: JT

DATE: 10/17/2007

ALL DIMENSIONS ARE METRIC

EA: 165421

Scale Ratio: 1:100 Horiz.
1:100 Vert.

Project: 00245 File: D:\USERS\Project\00245\JT_Files\S_Line\DesignX\jt_s1des.ear

S Line
CROSS SECTIONS

SHEET 7 OF XXX

For Earthwork Development Only

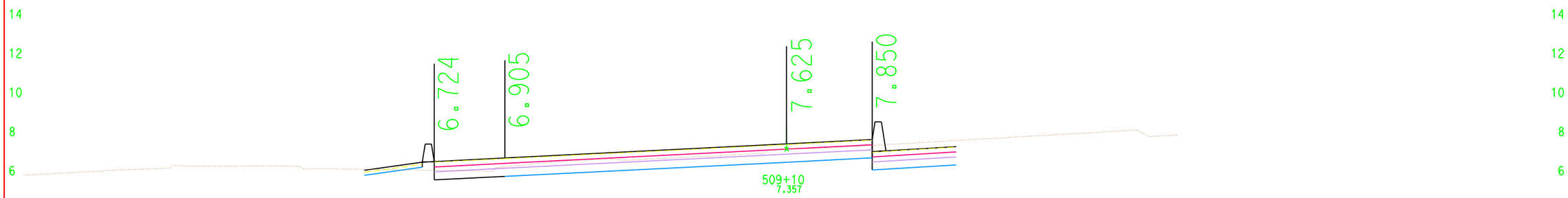

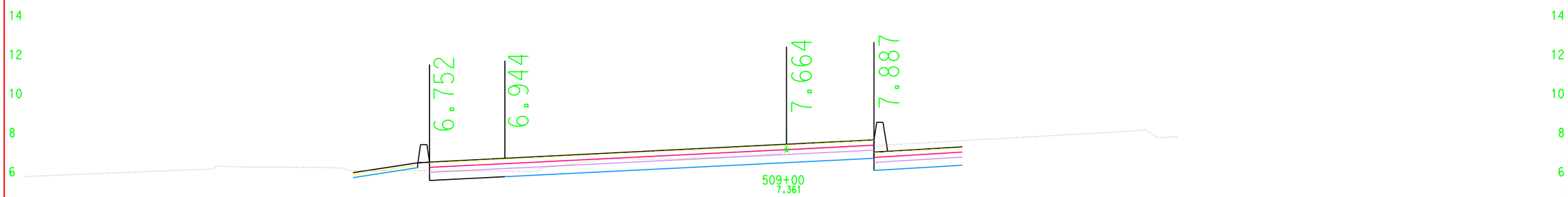

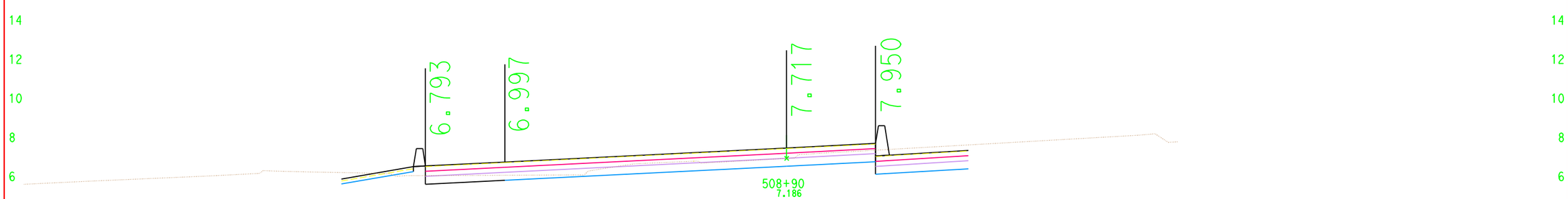

-30 -20 -10 0 10 20 30

CROSS SECTIONS CREATED BY: JT DATE: 10/17/2007 ALL DIMENSIONS ARE METRIC

EA: 165421

Scale Ratio: 1:100 Horiz. 1:100 Vert.

Project: 00245 File: D:\USERS\Project\00245\JT_Files\S_Line\DesignX\jt_s1des.ear

S Line
CROSS SECTIONS
SHEET 8 OF XXX

For Earthwork Development Only

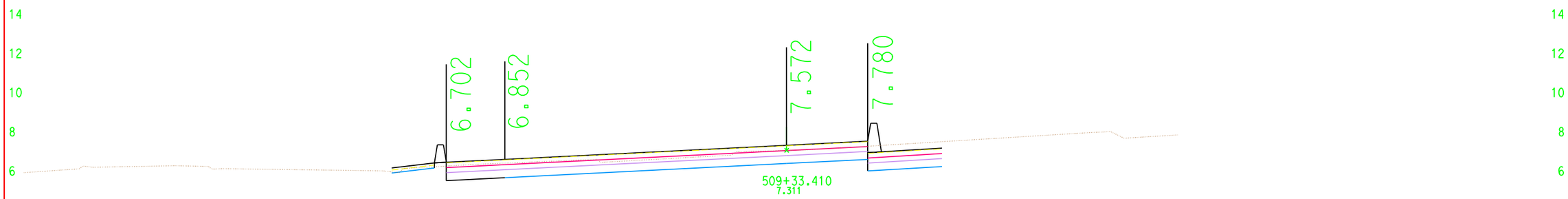

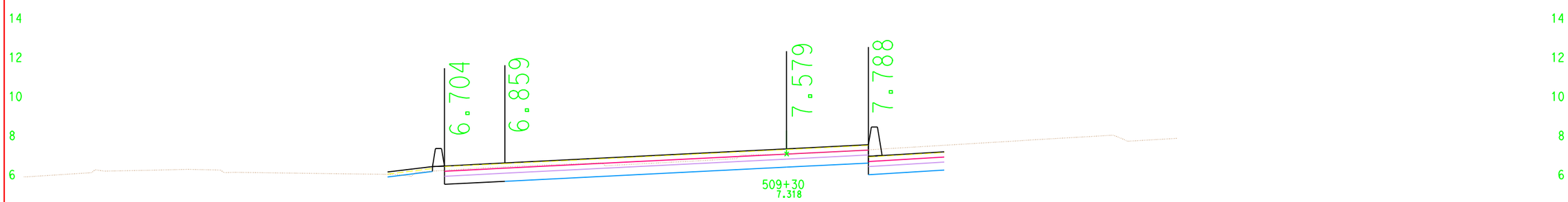

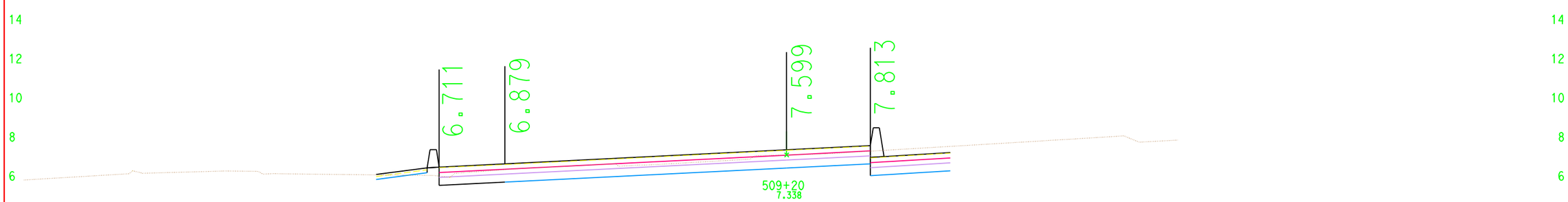

-30 -20 -10 0 10 20 30

CROSS SECTIONS CREATED BY: JT DATE: 10/17/2007 ALL DIMENSIONS ARE METRIC

Project: 00245 File: D:\USERS\Project\00245\JT_Files\S_Line\DesignX\jt_s1des.ear

EA: 165421

Scale Ratio: 1:100 Horiz.
1:100 Vert.

S Line
CROSS SECTIONS

For Earthwork Development Only

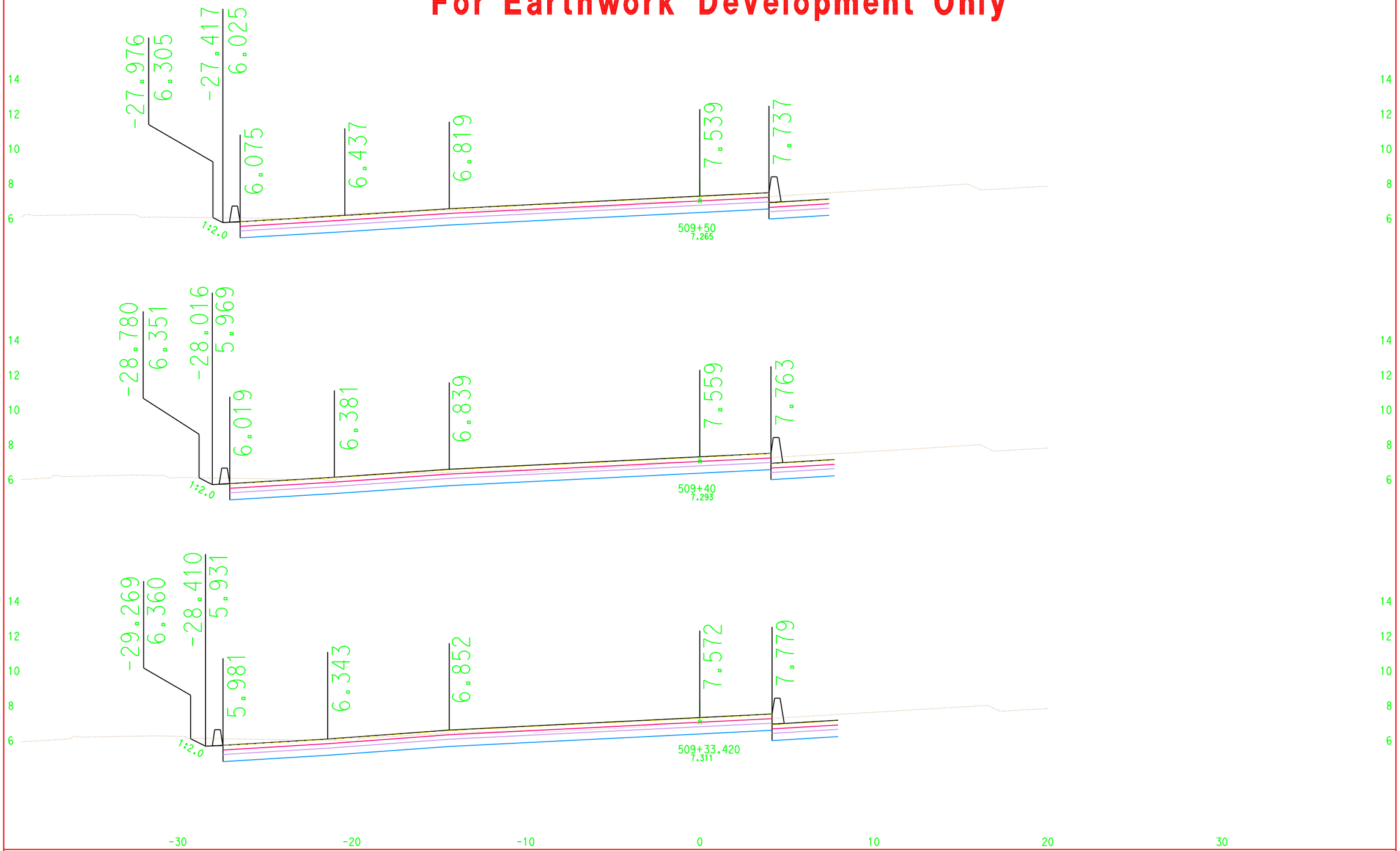

CROSS SECTIONS CREATED BY: JT DATE: 10/17/2007 ALL DIMENSIONS ARE METRIC

EA: 165421

Scale Ratio: 1:100 Horiz. 1:100 Vert.

S Line
CROSS SECTIONS
SHEET 10 OF XXX

Project: 00245 File: D:\USERS\Project\00245\JT_Files\S_Line\DesignX\jt_s1des.ear

For Earthwork Development Only

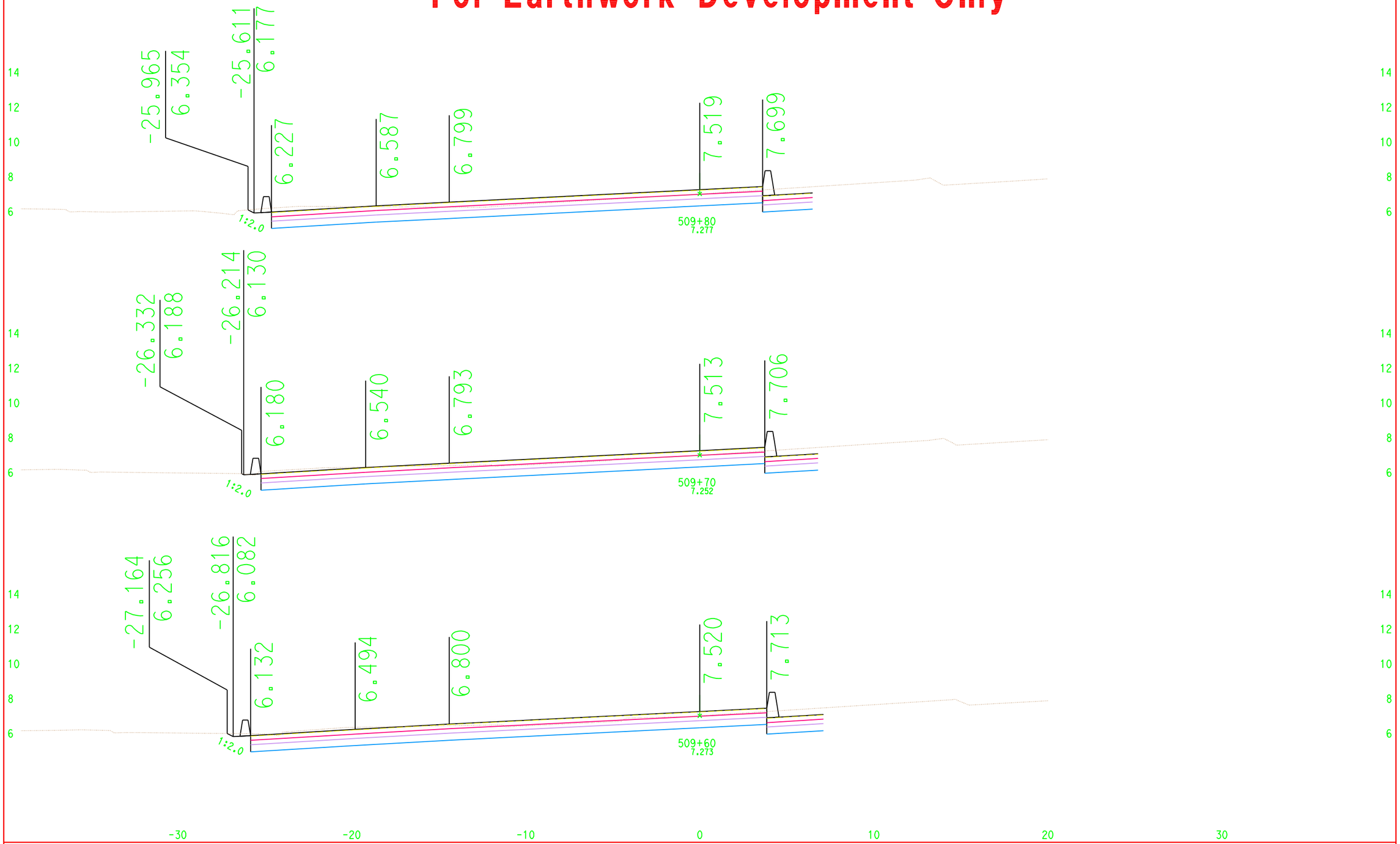

CROSS SECTIONS CREATED BY: JT DATE: 10/17/2007 ALL DIMENSIONS ARE METRIC

Project: 00245 File: D:\USERS\Project\00245\JT_Files\S_Line\DesignX\jt_s1des.ear

EA: 165421

Scale Ratio: 1:100 Horiz.
1:100 Vert.

S Line
CROSS SECTIONS

SHEET 11 OF XXX

For Earthwork Development Only

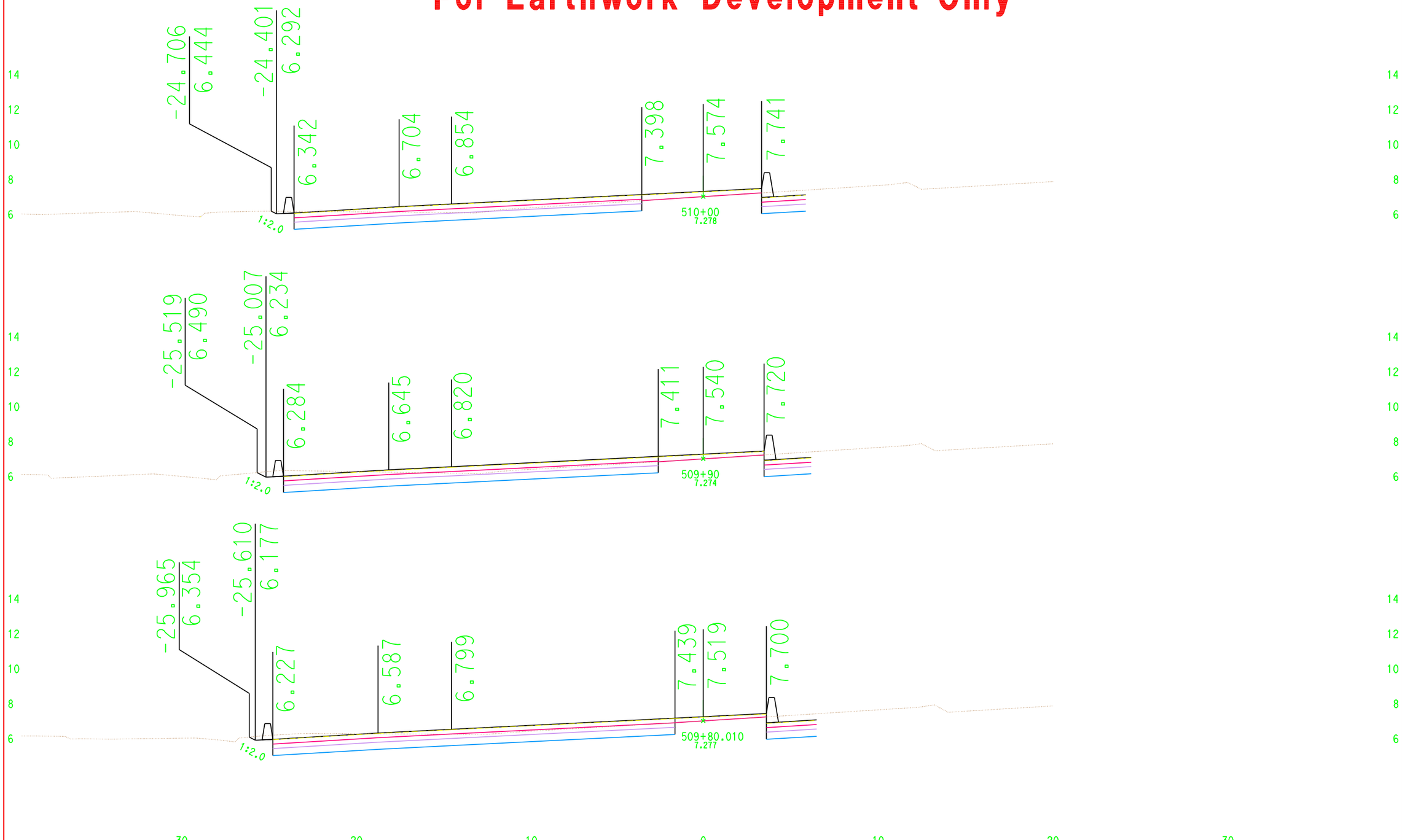

CROSS SECTIONS CREATED BY: JT DATE: 10/17/2007 ALL DIMENSIONS ARE METRIC

Project: 00245 File: D:\USERS\Project\00245\JT_Files\S_Line\DesignX\jt_s1des.ear

EA: 165421

Scale Ratio: 1:100 Horiz.
1:100 Vert.

S Line
CROSS SECTIONS

SHEET 12 OF XXX

For Earthwork Development Only

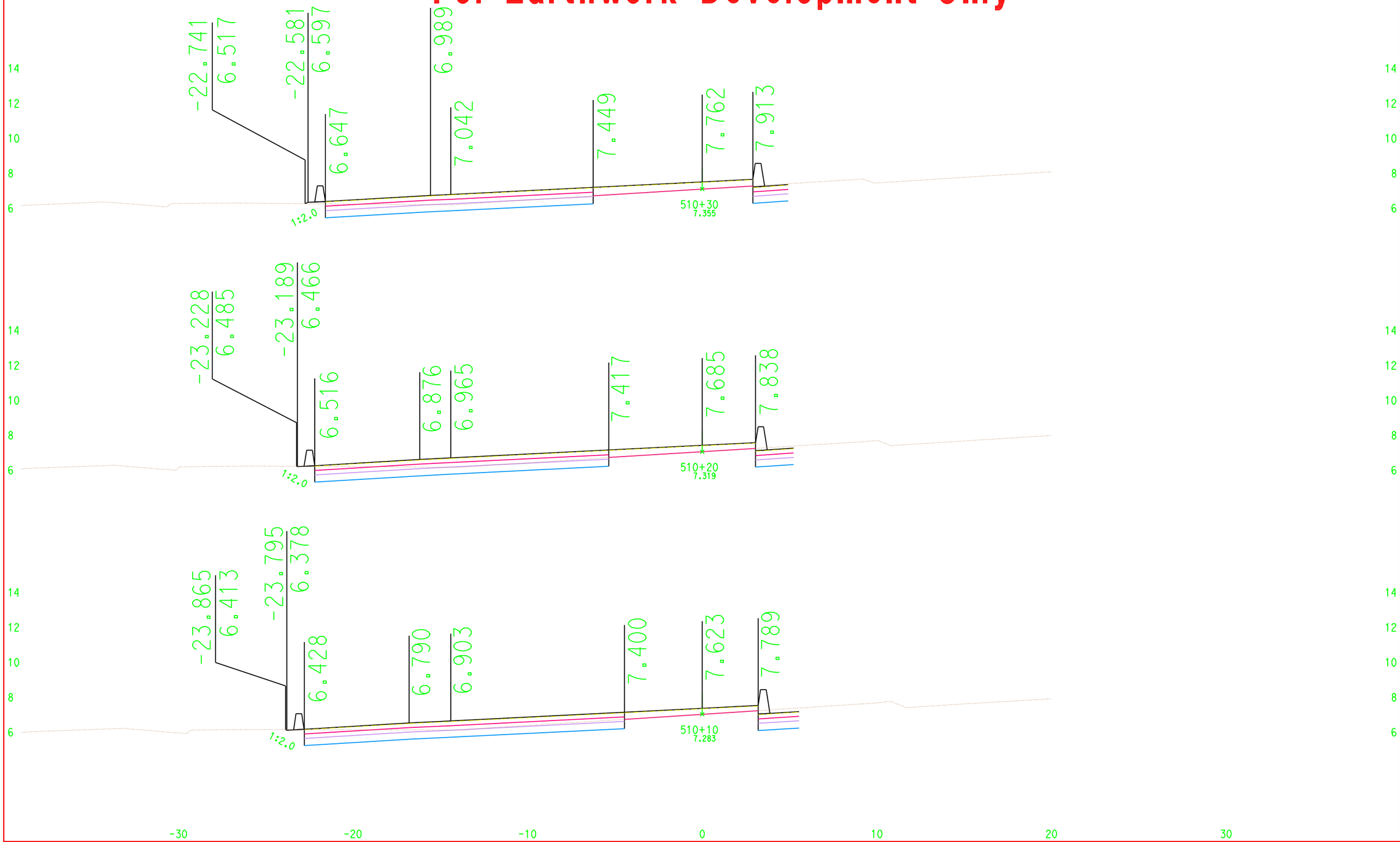

CROSS SECTIONS CREATED BY: JT DATE: 10/17/2007 ALL DIMENSIONS ARE METRIC

Project: 00245 File: D:\USERS\Project\00245\JT_Files\S_Line\DesignX\jt_s1des.ear

EA: 165421

Scale Ratio: 1:100 Horiz.
1:100 Vert.

S Line
CROSS SECTIONS

SHEET 13 OF XXX

For Earthwork Development Only

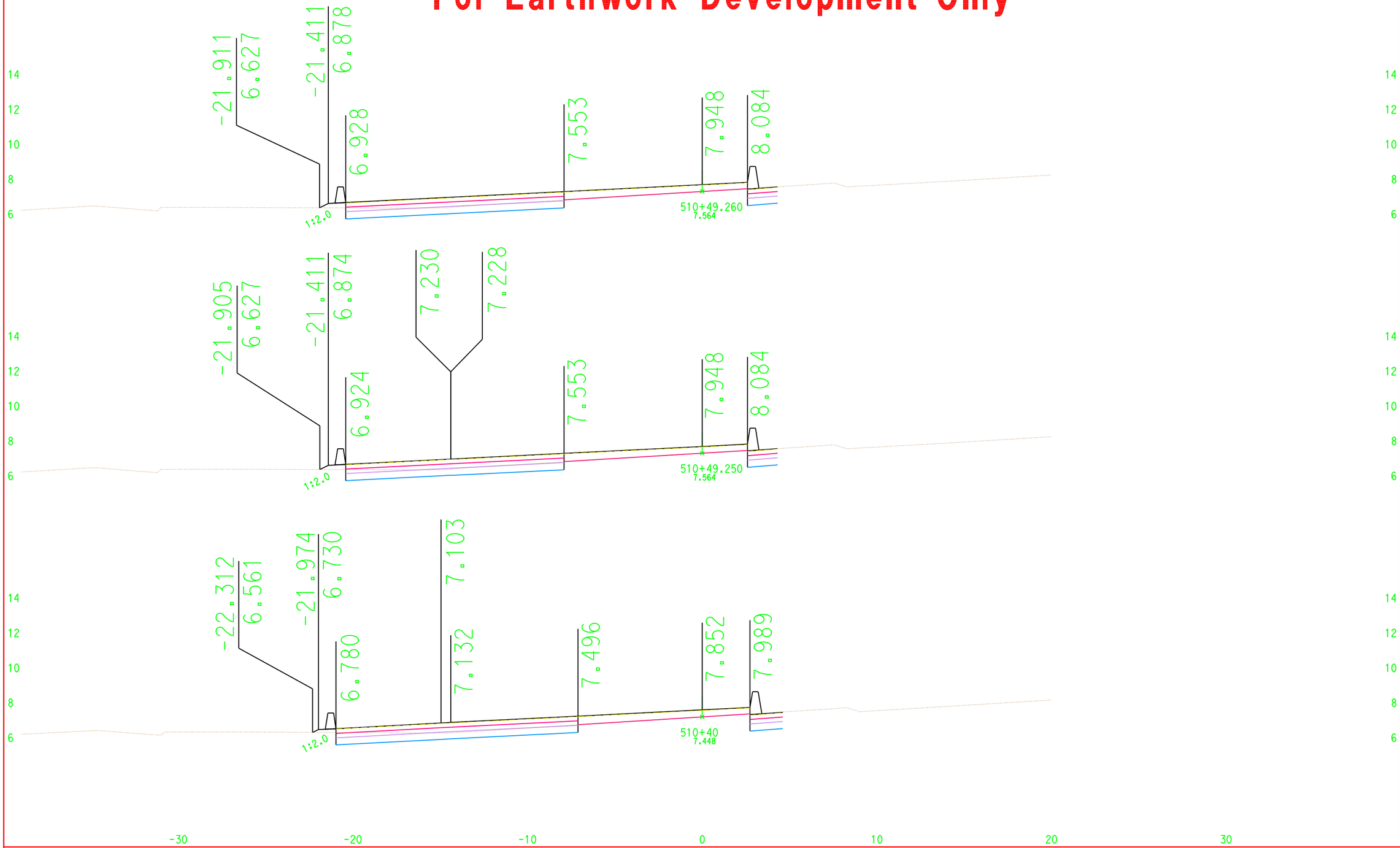

CROSS SECTIONS CREATED BY: JT DATE: 10/17/2007 ALL DIMENSIONS ARE METRIC

Project: 00245 File: D:\USERS\Project\00245\JT_Files\S_Line\DesignX\jt_s1des.ear

EA: 165421

Scale Ratio: 1:100 Horiz.
1:100 Vert.

S Line
CROSS SECTIONS

For Earthwork Development Only

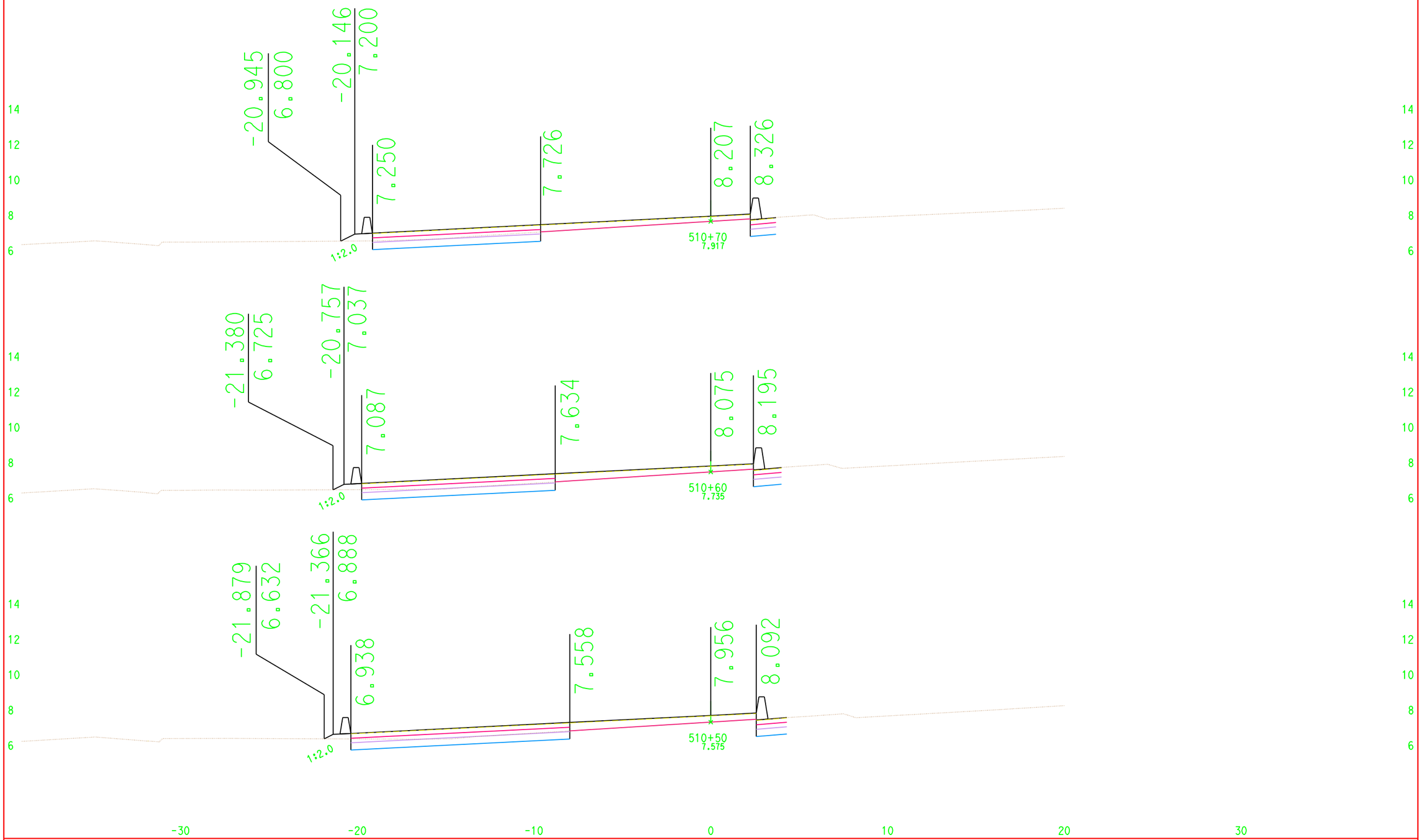

CROSS SECTIONS CREATED BY: JT DATE: 10/17/2007 ALL DIMENSIONS ARE METRIC

EA: 165421

Scale Ratio: 1:100 Horiz. 1:100 Vert.

S Line
CROSS SECTIONS
SHEET 15 OF XXX

Project: 00245 File: D:\USERS\Project\00245\JT_Files\S_Line\DesignX\jt_sides.ear

For Earthwork Development Only

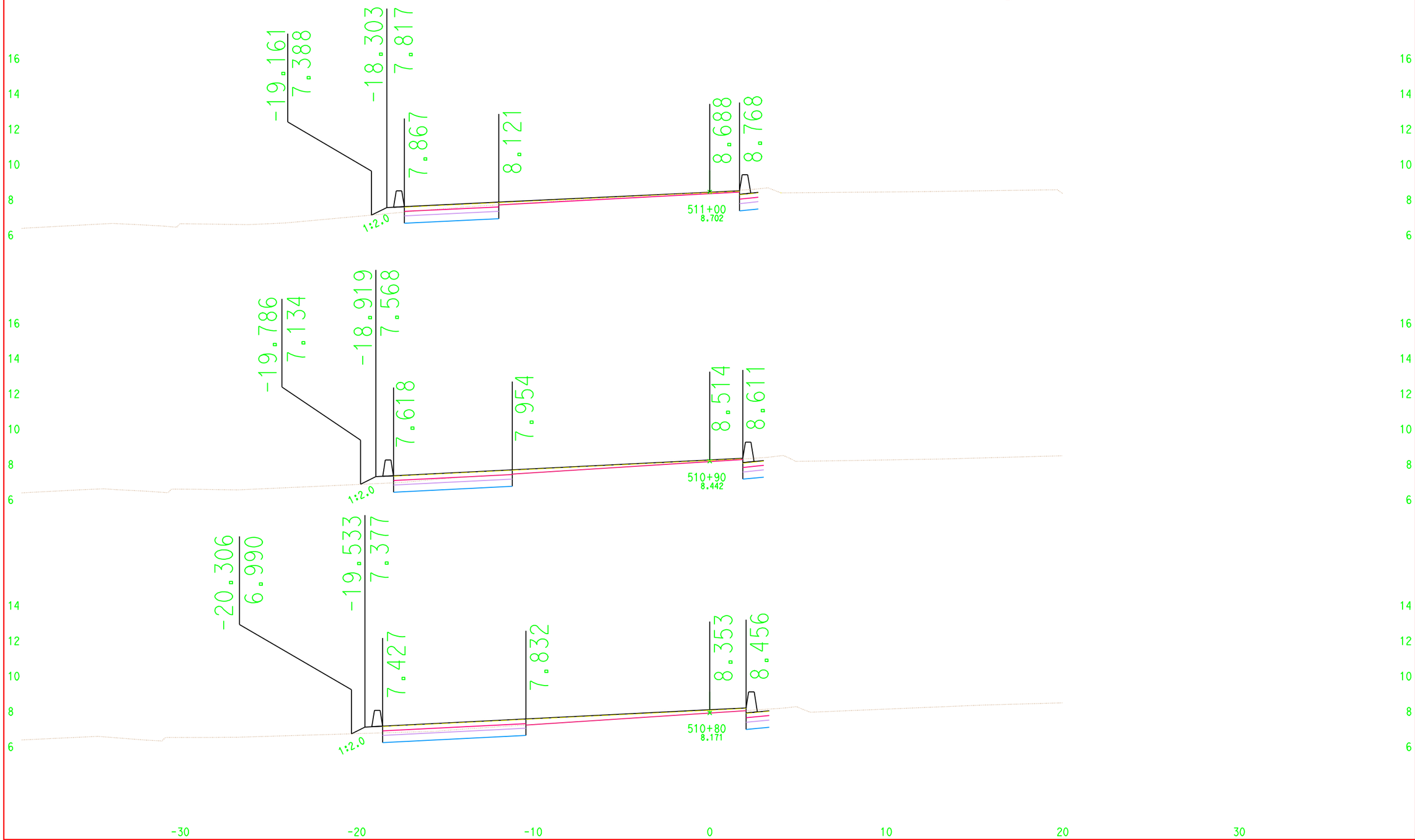

CROSS SECTIONS CREATED BY: JT DATE: 10/17/2007 ALL DIMENSIONS ARE METRIC

Project: 00245 File: D:\USERS\Project\00245\JT_Files\S_Line\DesignX\jt_s1des.ear

EA: 165421

Scale Ratio: 1:100 Horiz.
1:100 Vert.

S Line
CROSS SECTIONS

For Earthwork Development Only

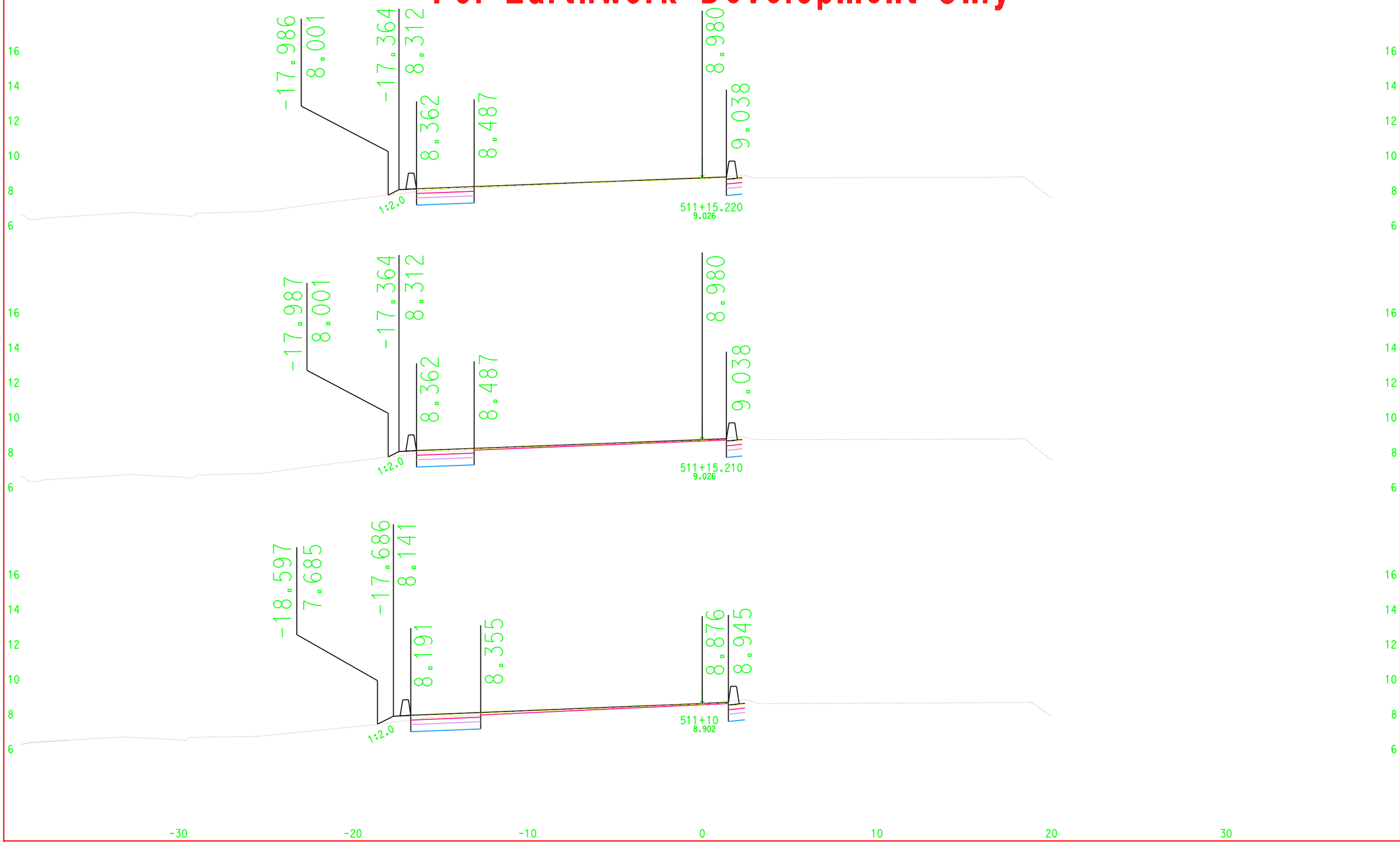

CROSS SECTIONS CREATED BY: JT DATE: 10/17/2007 ALL DIMENSIONS ARE METRIC

Project: 00245 File: D:\USERS\Project\00245\JT_Files\S_Line\DesignX\jt_s1des.ear

EA: 165421

Scale Ratio: 1:100 Horiz. 1:100 Vert.

S Line
CROSS SECTIONS

SHEET 17 OF XXX

For Earthwork Development Only

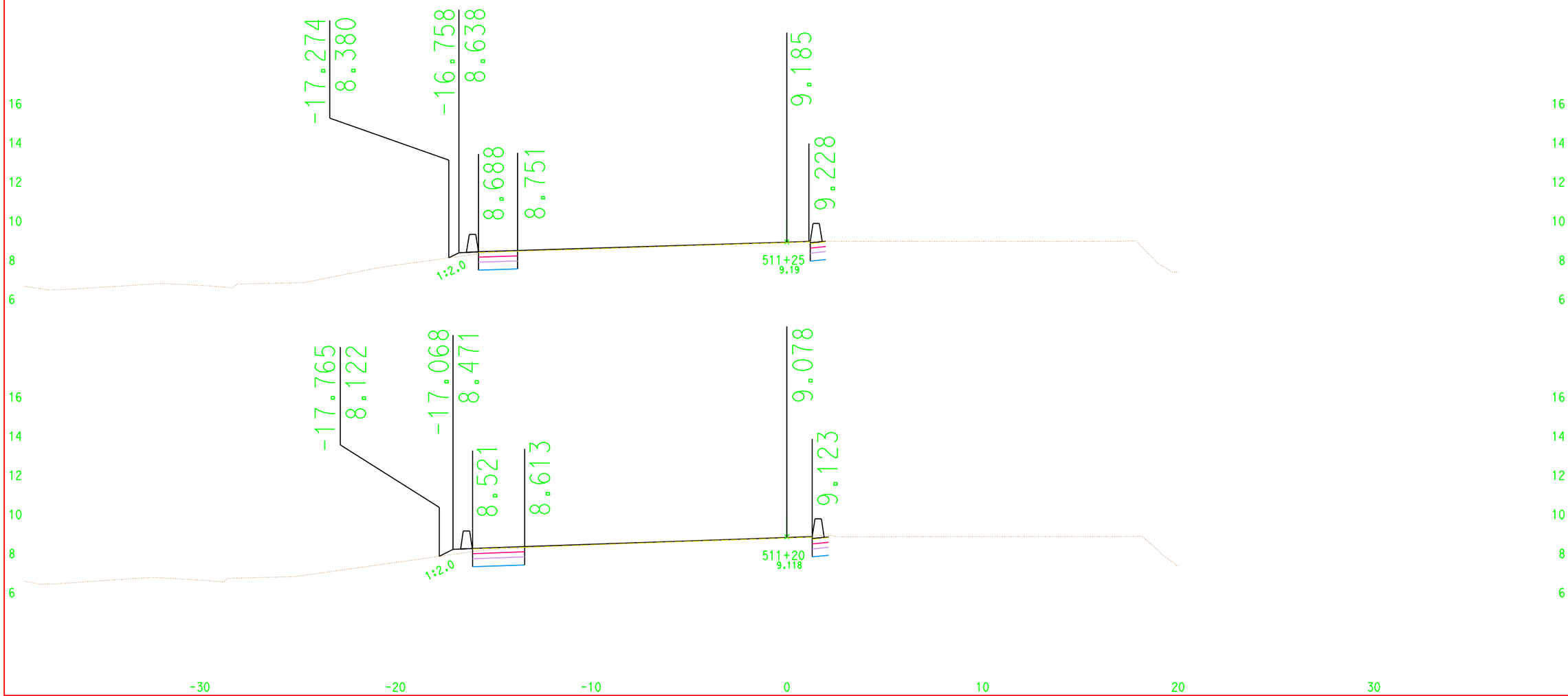

CROSS SECTIONS CREATED BY: JT DATE: 10/17/2007 ALL DIMENSIONS ARE METRIC

Project: 00245 File: D:\USERS\Project\00245\JT_Files\S_Line\DesignX\jt_s1des.ear

EA: 165421

Scale Ratio: 1:100 Horiz.
1:100 Vert.

S Line
CROSS SECTIONS

For Earthwork Development Only

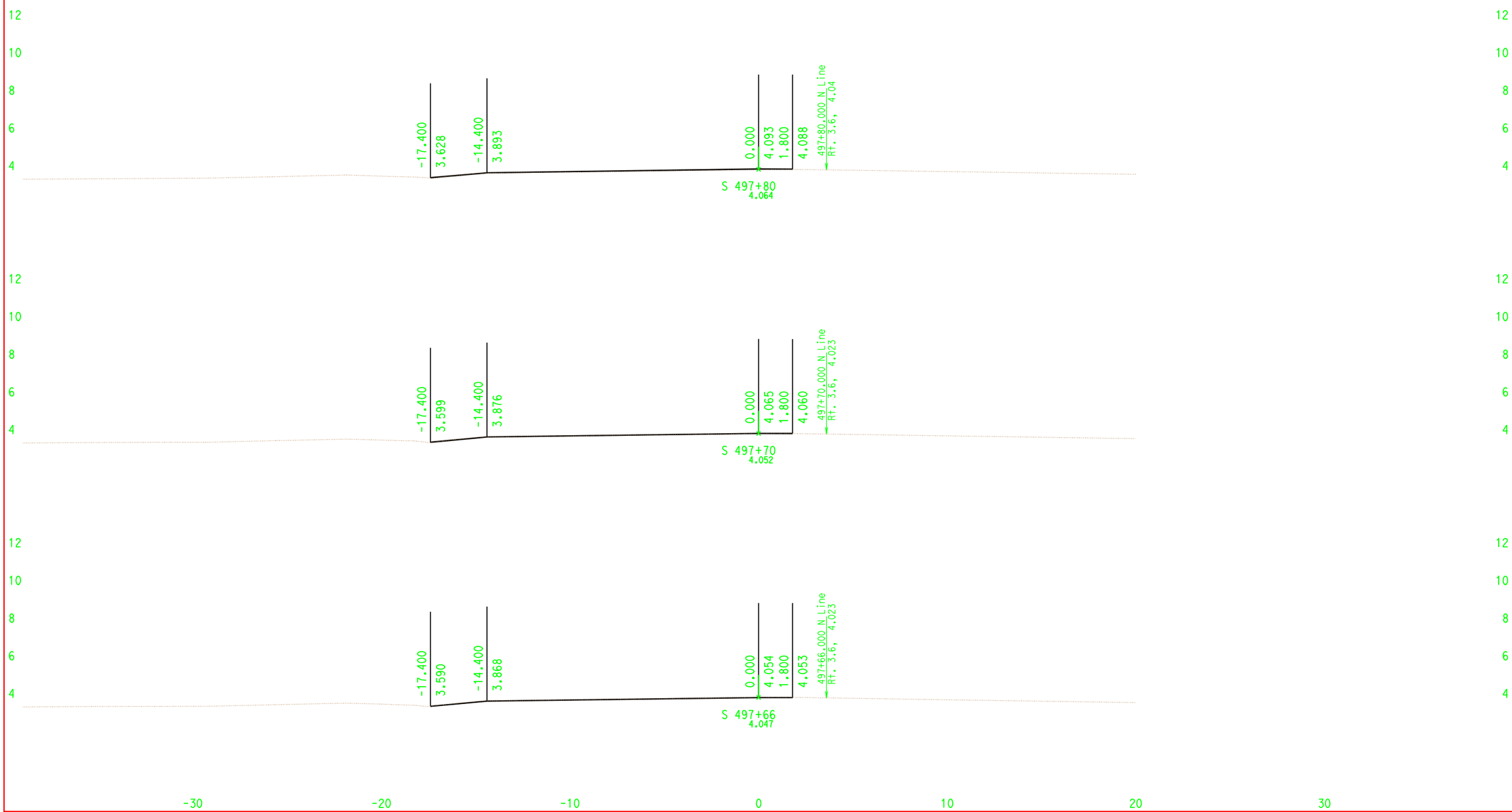

CROSS SECTIONS CREATED BY: JT DATE: 12/3/2007 ALL DIMENSIONS ARE METRIC

EA: 165421

Scale Ratio: 1:100 Horiz. 1:100 Vert.

S Line
CROSS SECTIONS
SHEET 1 OF XXX

Project: 00245 File: D:\USERS\Project\00245\JT_Files\S_Line\DesignX\JT_S2des.ear

For Earthwork Development Only

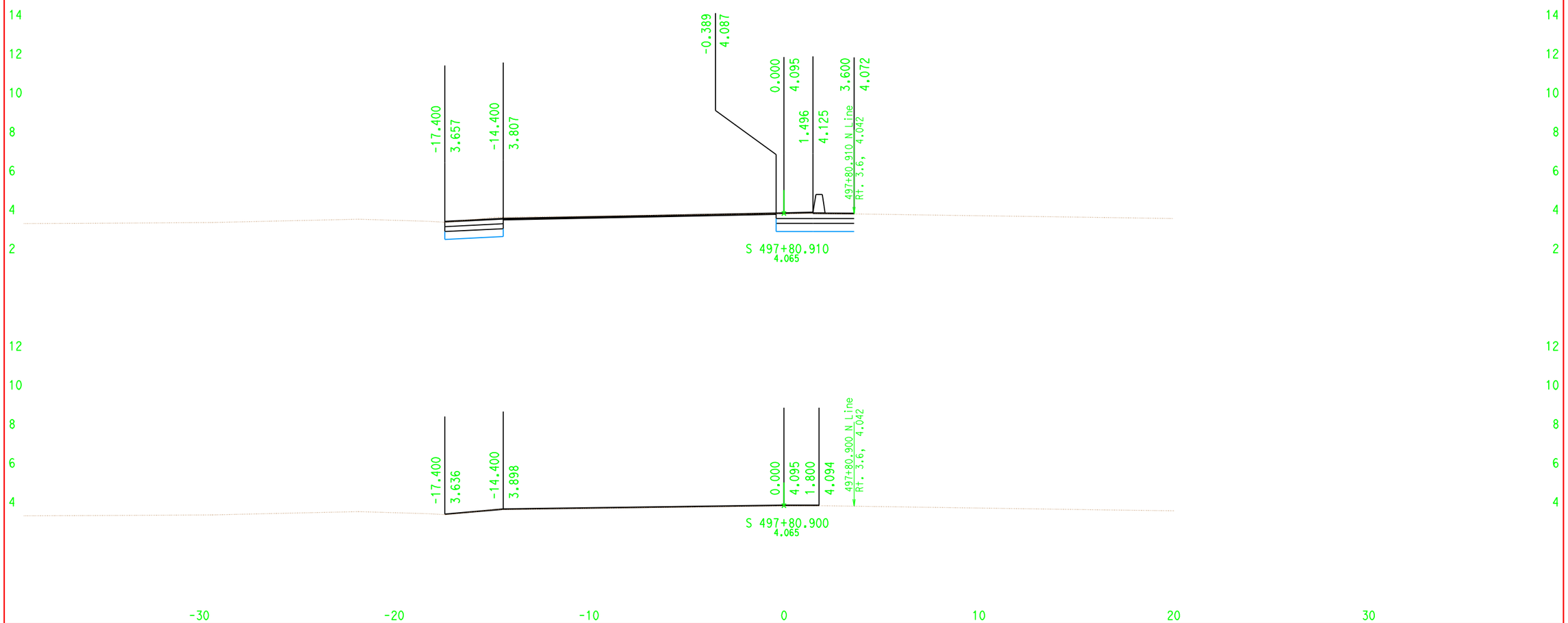

CROSS SECTIONS CREATED BY: JT DATE: 12/3/2007 ALL DIMENSIONS ARE METRIC

Project: 00245 File: D:\USERS\Project\00245\JT_Files\S_Line\DesignX\JT_S2des.ear

EA: 165421

Scale Ratio: 1:100 Horiz.
1:100 Vert.

S Line
CROSS SECTIONS
SHEET 2 OF XXX

For Earthwork Development Only

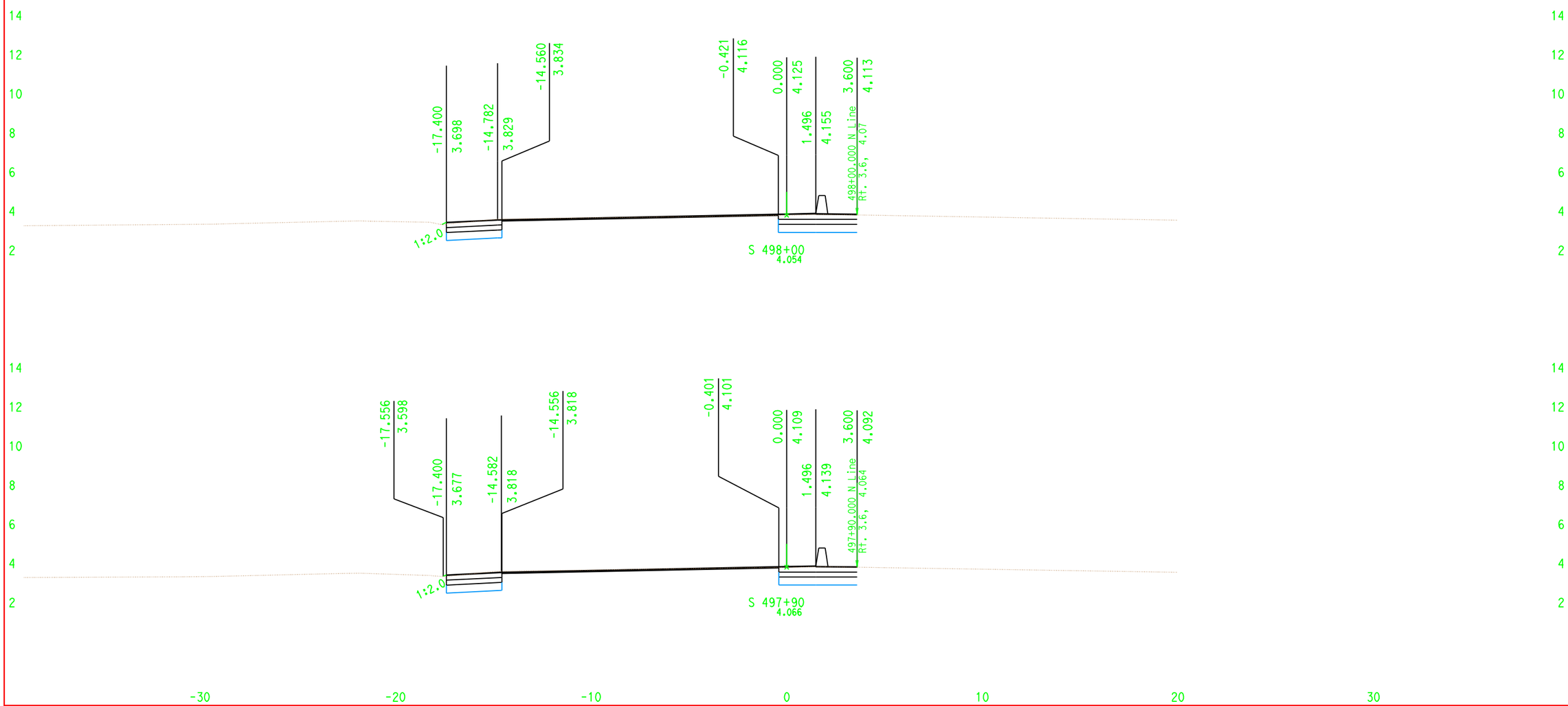

CROSS SECTIONS CREATED BY: JT DATE: 12/3/2007 ALL DIMENSIONS ARE METRIC

Project: 00245 File: D:\USERS\Project\00245\JT_Files\S_Line\DesignX\JT_S2des.ear

EA: 165421

Scale Ratio: 1:100 Horiz.
1:100 Vert.

S Line
CROSS SECTIONS

SHEET 3 OF XXX

For Earthwork Development Only

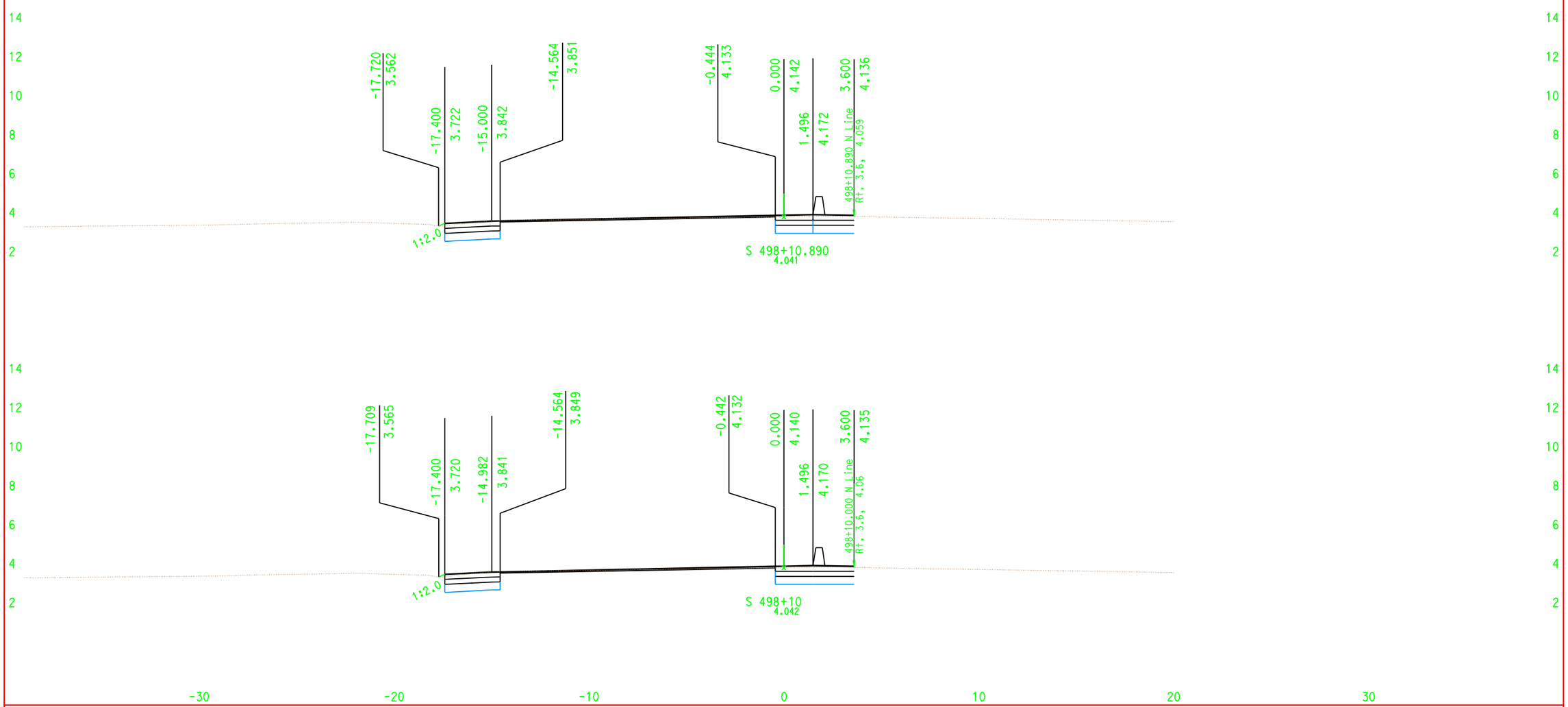

CROSS SECTIONS CREATED BY: JT DATE: 12/3/2007 ALL DIMENSIONS ARE METRIC

Project: 00245 File: D:\USERS\Project\00245\JT_Files\S_Line\DesignX\JT_S2des.ear

EA: 165421

Scale Ratio: 1:100 Horiz.
1:100 Vert.

S Line
CROSS SECTIONS

SHEET 4 OF XXX

For Earthwork Development Only

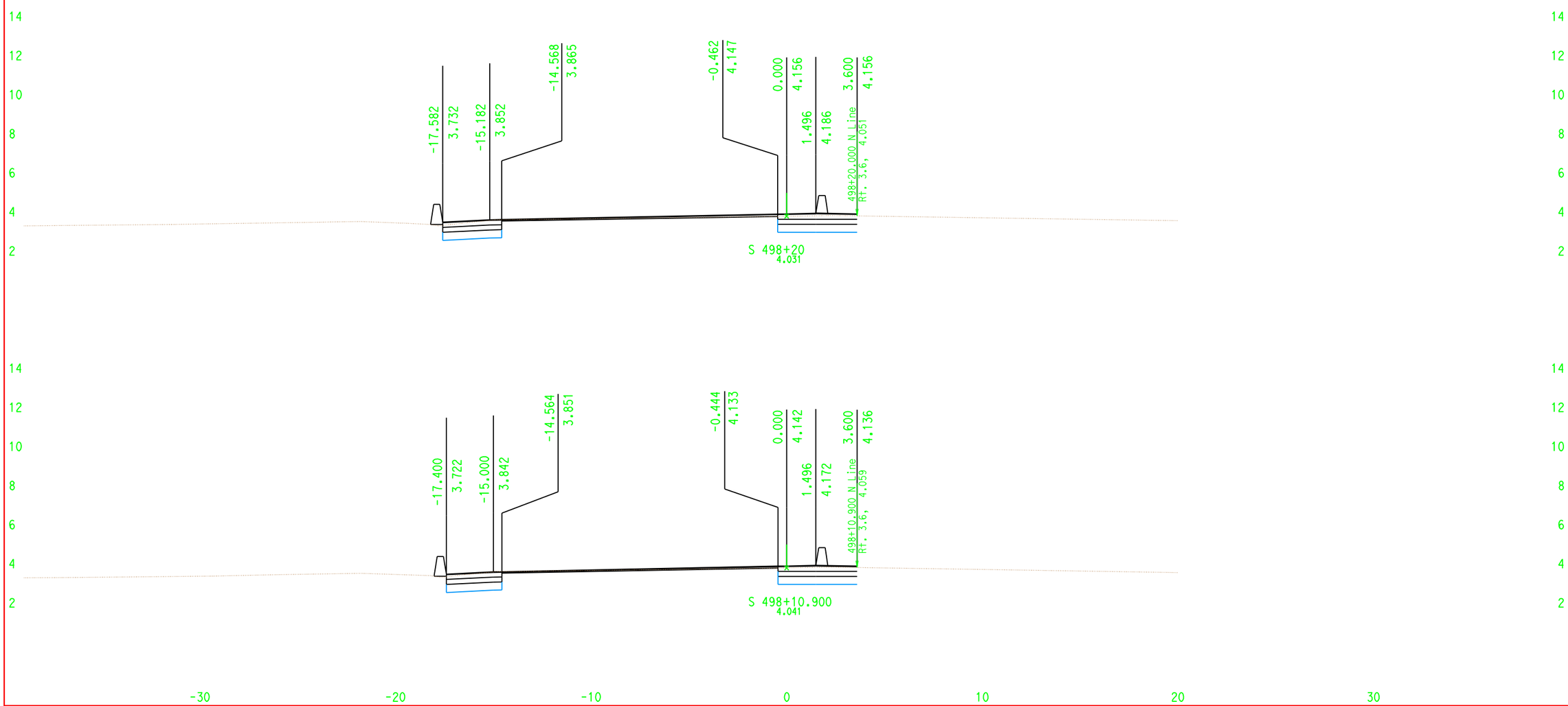

CROSS SECTIONS CREATED BY: JT DATE: 12/3/2007 ALL DIMENSIONS ARE METRIC

EA: 165421

Scale Ratio: 1:100 Horiz. 1:100 Vert.

Project: 00245 File: D:\USERS\Project\00245\JT_Files\S_Line\DesignX\JT_S2des.ear

S Line
CROSS SECTIONS

For Earthwork Development Only

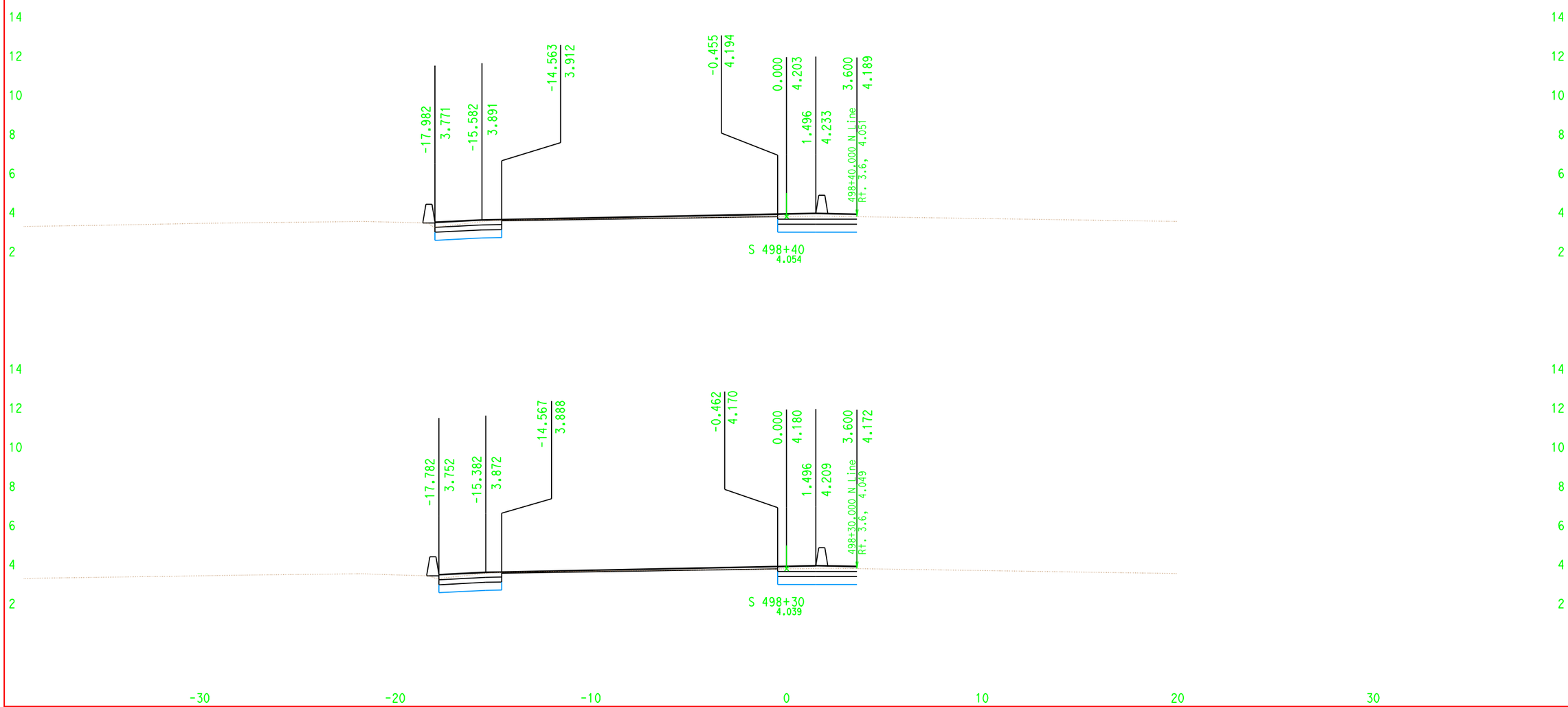

CROSS SECTIONS CREATED BY: JT DATE: 12/3/2007 ALL DIMENSIONS ARE METRIC

EA: 165421

Scale Ratio: 1:100 Horiz. 1:100 Vert.

Project: 00245 File: D:\USERS\Project\00245\JT_Files\S_Line\DesignX\JT_S2des.ear

S Line
CROSS SECTIONS

SHEET 6 OF XXX

For Earthwork Development Only

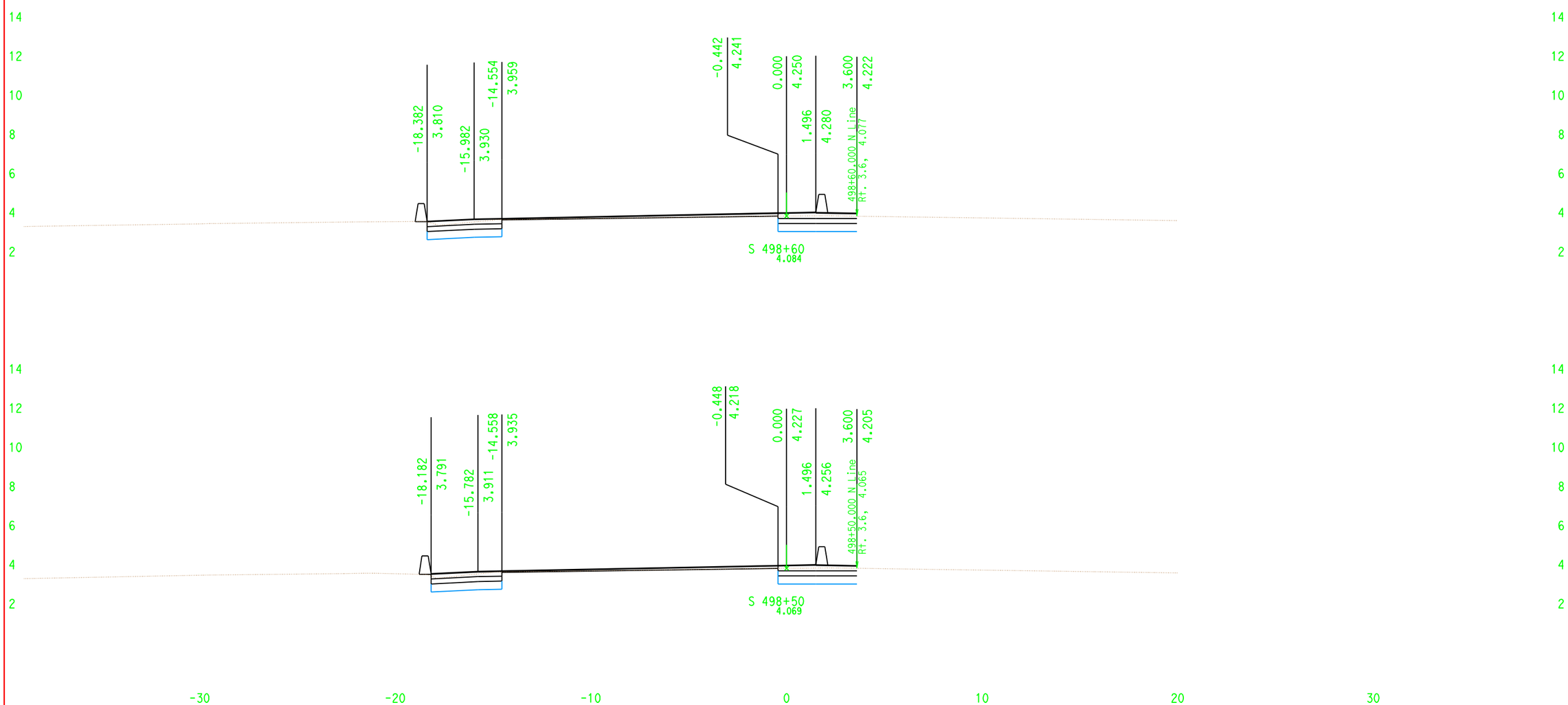

CROSS SECTIONS CREATED BY: JT DATE: 12/3/2007 ALL DIMENSIONS ARE METRIC

Project: 00245 File: D:\USERS\Project\00245\JT_Files\S_Line\DesignX\JT_S2des.ear

EA: 165421

Scale Ratio: 1:100 Horiz.
1:100 Vert.

S Line
CROSS SECTIONS

For Earthwork Development Only

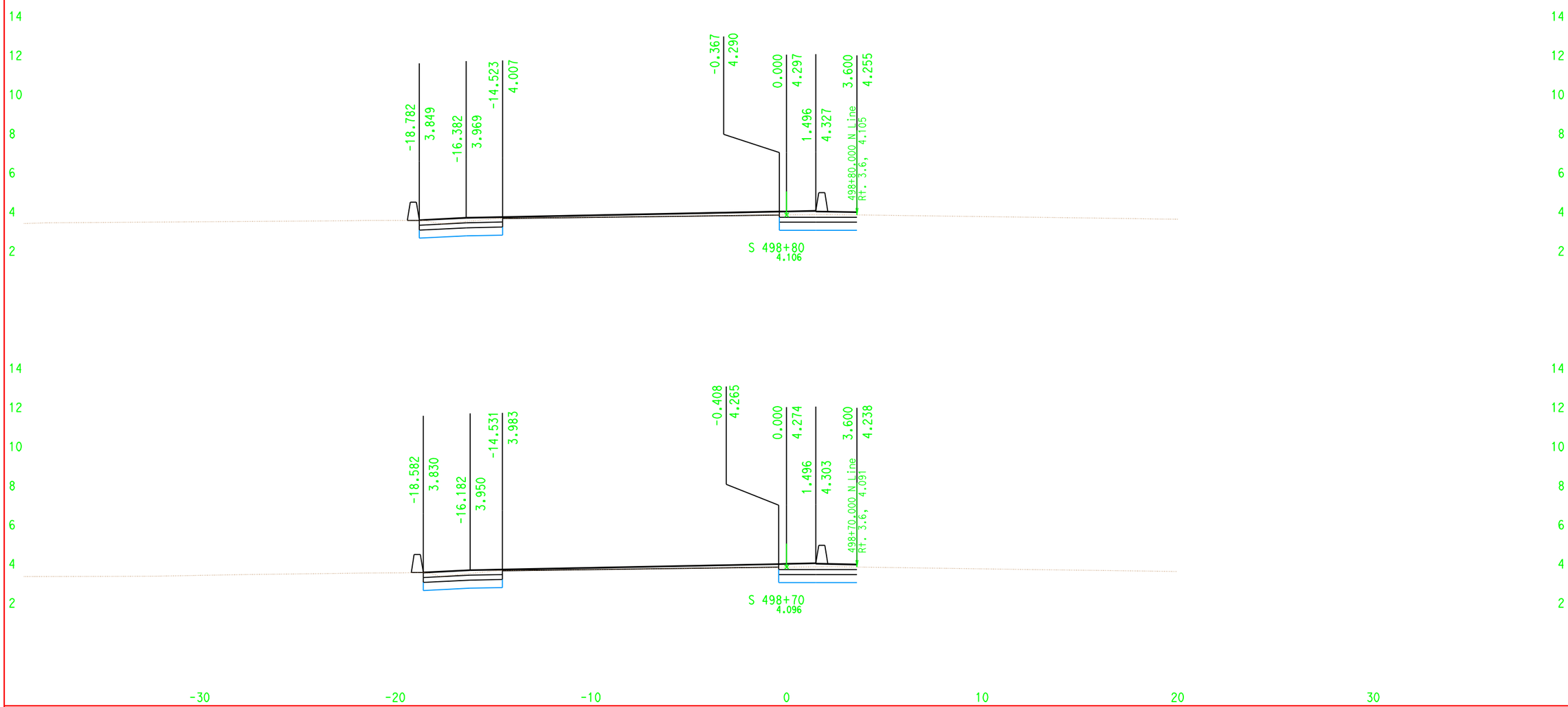

CROSS SECTIONS CREATED BY: JT DATE: 12/3/2007 ALL DIMENSIONS ARE METRIC

Project: 00245 File: D:\USERS\Project\00245\JT_Files\S_Line\DesignX\JT_S2des.ear

EA: 165421

Scale Ratio: 1:100 Horiz.
1:100 Vert.

S Line
CROSS SECTIONS

SHEET 8 OF XXX

For Earthwork Development Only

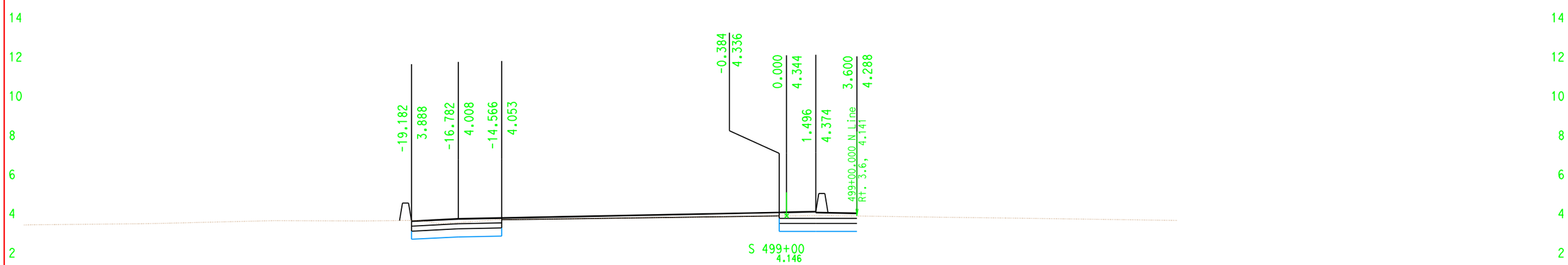

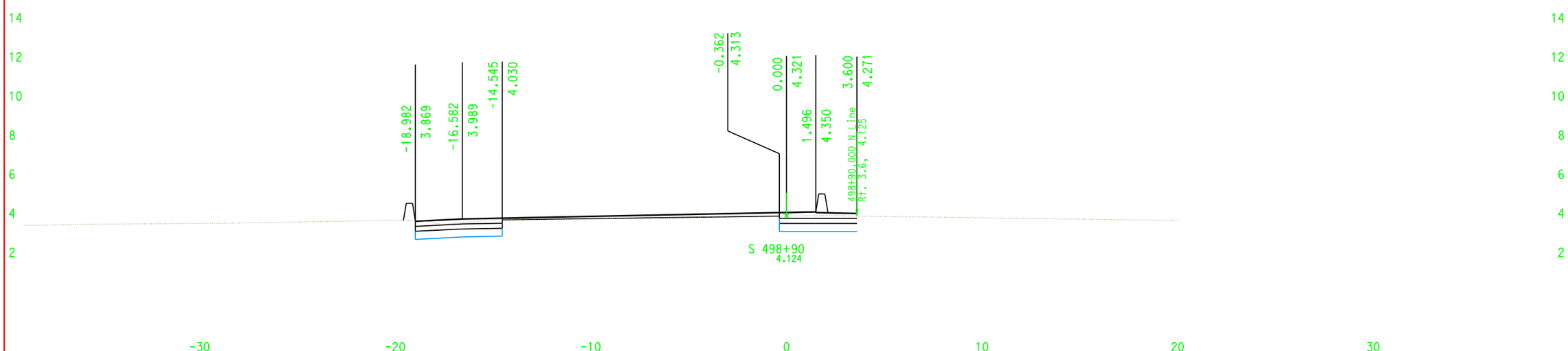

CROSS SECTIONS CREATED BY: JT DATE: 12/3/2007 ALL DIMENSIONS ARE METRIC

Project: 00245 File: D:\USERS\Project\00245\JT_Files\S_Line\DesignX\JT_S2des.ear

EA: 165421

Scale Ratio: 1:100 Horiz.
1:100 Vert.

S Line
CROSS SECTIONS

For Earthwork Development Only

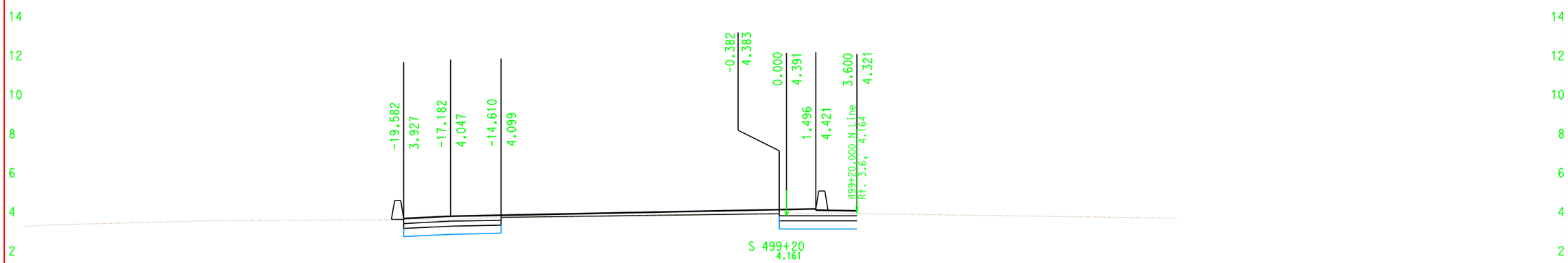

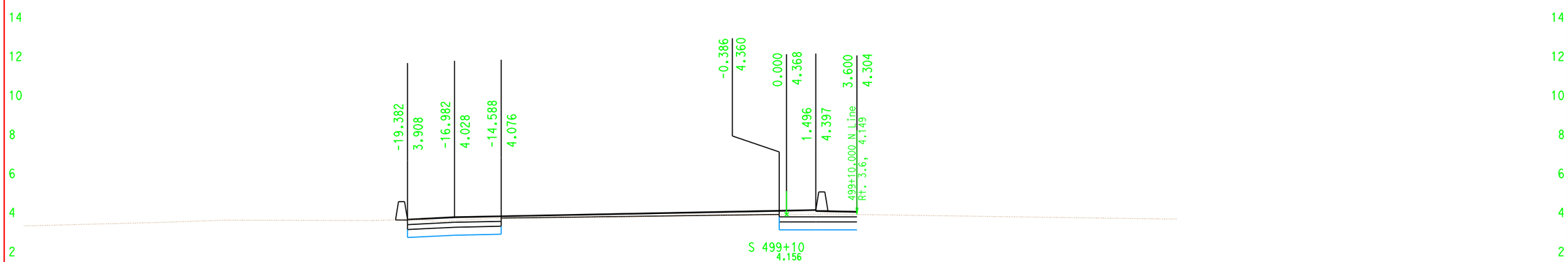

-30 -20 -10 0 10 20 30

CROSS SECTIONS CREATED BY: JT DATE: 12/3/2007 ALL DIMENSIONS ARE METRIC

EA: 165421

Scale Ratio: 1:100 Horiz. 1:100 Vert.

Project: 00245 File: D:\USERS\Project\00245\JT_Files\S_Line\DesignX\JT_S2des.ear

S Line
CROSS SECTIONS

For Earthwork Development Only

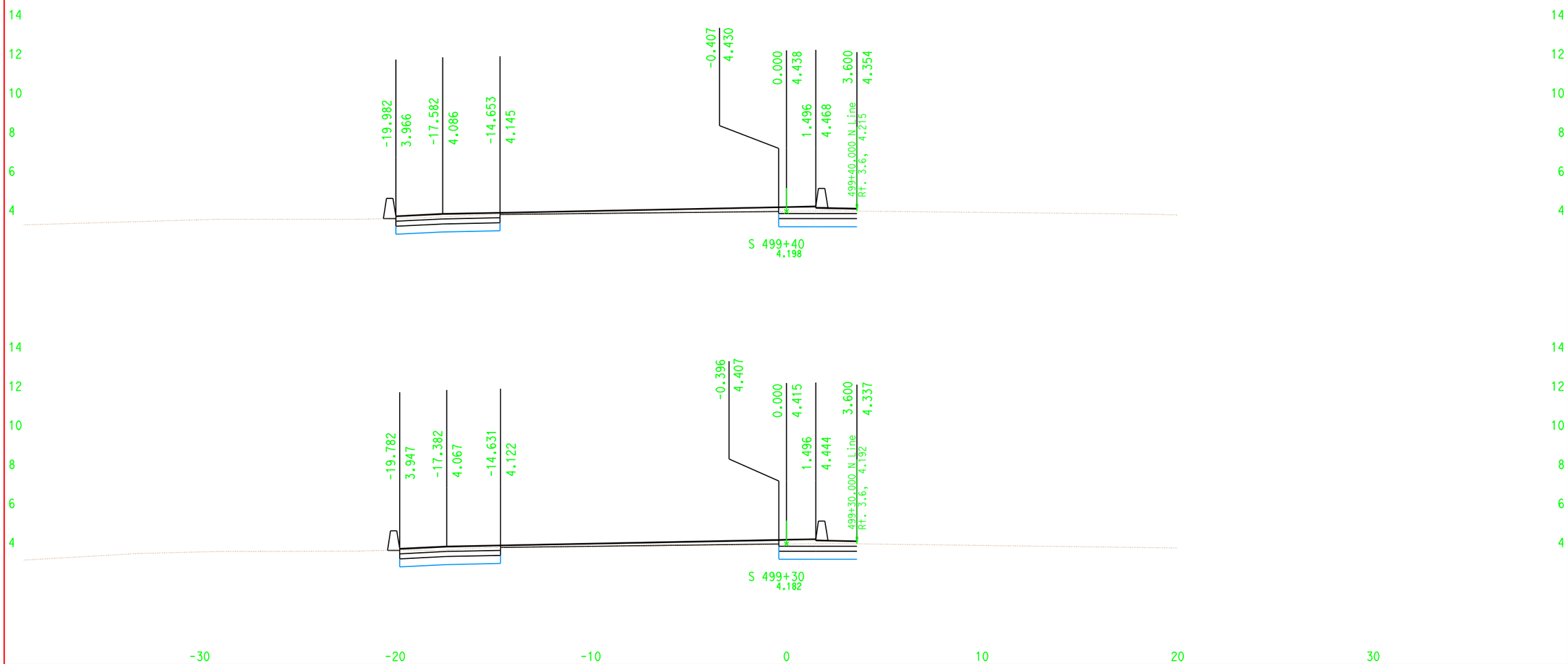

CROSS SECTIONS CREATED BY: JT DATE: 12/3/2007 ALL DIMENSIONS ARE METRIC

EA: 165421

Scale Ratio: 1:100 Horiz.
1:100 Vert.

S Line
CROSS SECTIONS
SHEET 11 OF XXX

Project: 00245 File: D:\USERS\Project\00245\JT_Files\S_Line\DesignX\JT_S2des.ear

For Earthwork Development Only

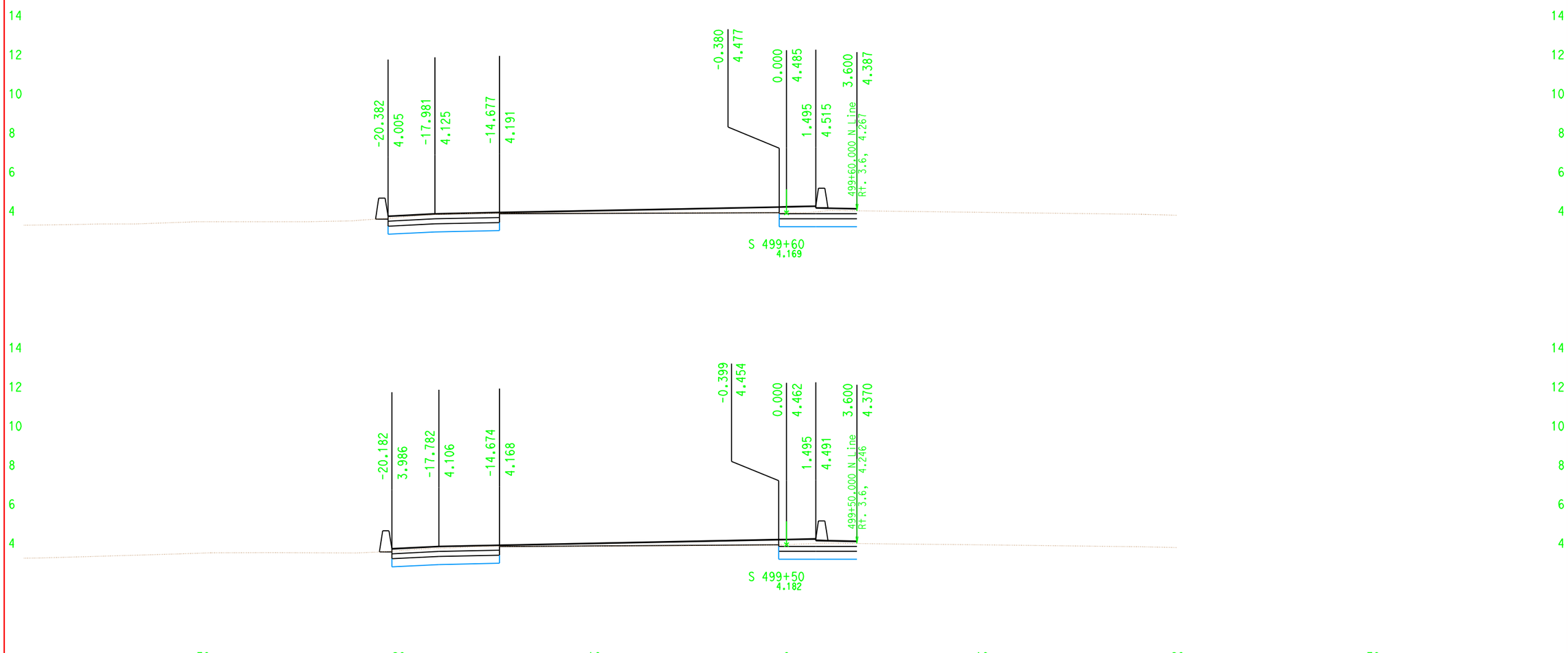

CROSS SECTIONS CREATED BY: JT DATE: 12/3/2007 ALL DIMENSIONS ARE METRIC

Project: 00245 File: D:\USERS\Project\00245\JT_Files\S_Line\DesignX\JT_S2des.ear

EA: 165421

Scale Ratio: 1:100 Horiz.
1:100 Vert.

S Line
CROSS SECTIONS

For Earthwork Development Only

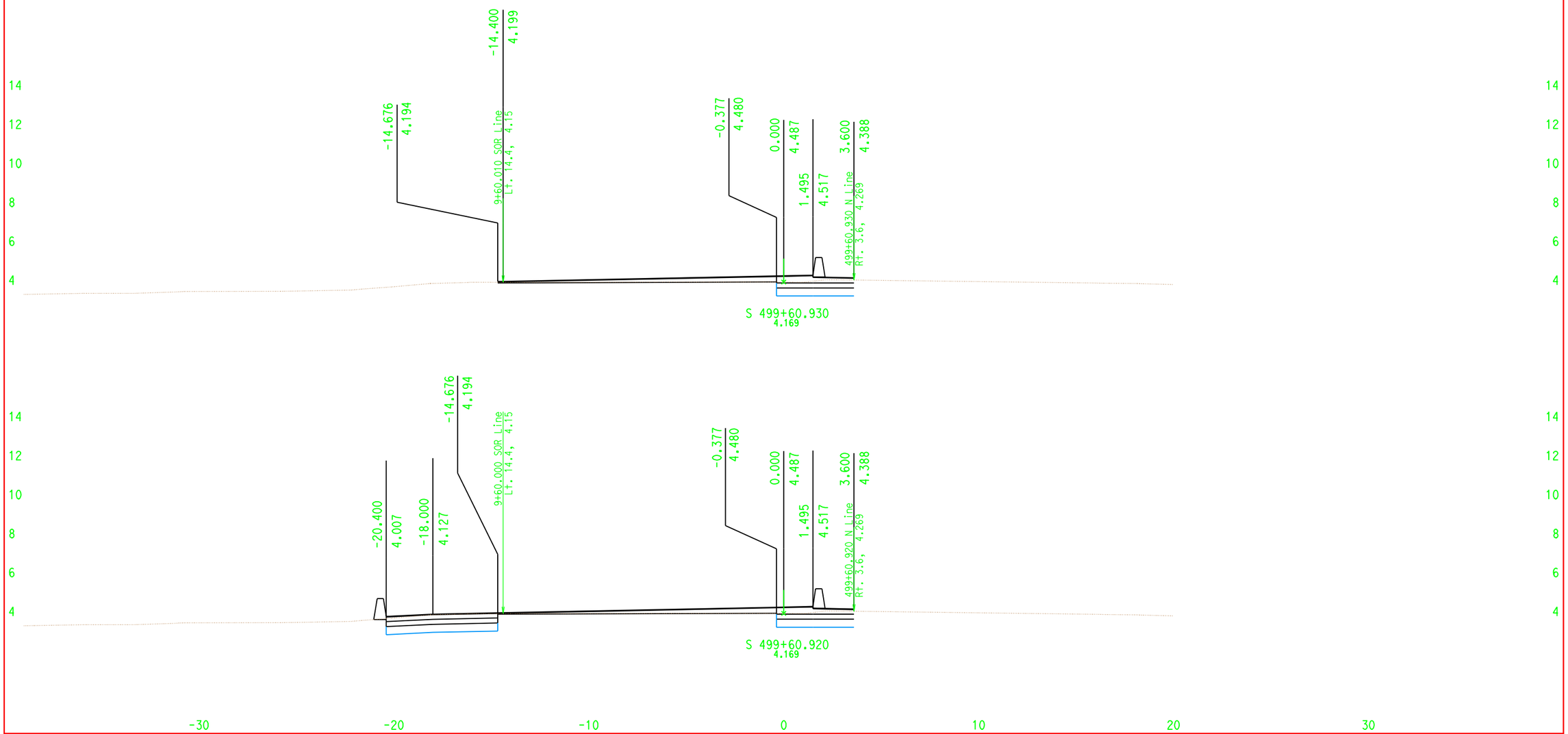

CROSS SECTIONS CREATED BY: JT DATE: 12/3/2007 ALL DIMENSIONS ARE METRIC

Project: 00245 File: D:\USERS\Project\00245\JT_Files\S_Line\DesignX\JT_S2des.ear

EA: 165421

Scale Ratio: 1:100 Horiz.
1:100 Vert.

S Line
CROSS SECTIONS

SHEET 13 OF XXX

For Earthwork Development Only

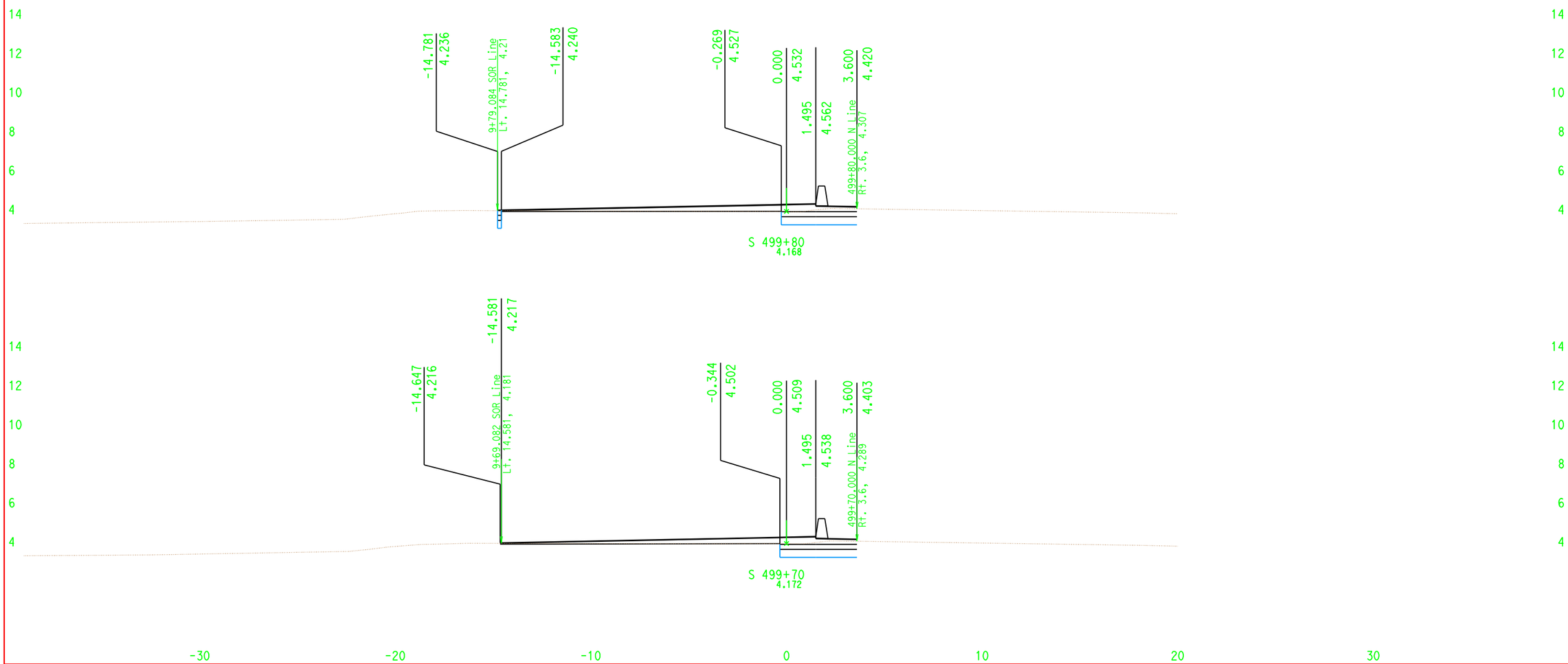

CROSS SECTIONS CREATED BY: JT DATE: 12/3/2007 ALL DIMENSIONS ARE METRIC

EA: 165421

Scale Ratio: 1:100 Horiz. 1:100 Vert.

S Line
CROSS SECTIONS
SHEET 14 OF XXX

Project: 00245 File: D:\USERS\Project\00245\JT_Files\S_Line\DesignX\JT_S2des.ear

For Earthwork Development Only

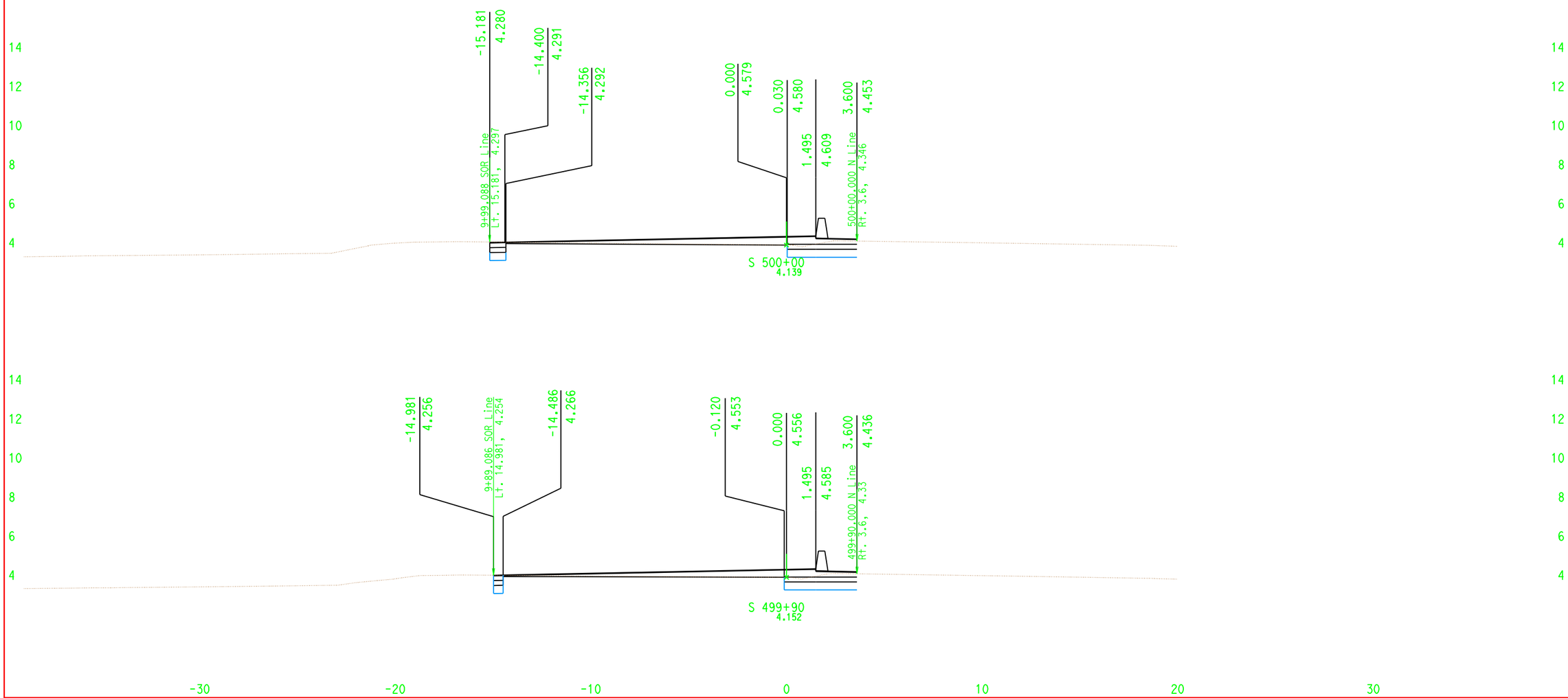

CROSS SECTIONS CREATED BY: JT DATE: 12/3/2007 ALL DIMENSIONS ARE METRIC

EA: 165421

Scale Ratio: 1:100 Horiz. 1:100 Vert.

Project: 00245 File: D:\USERS\Project\00245\JT_Files\S_Line\DesignX\JT_S2des.ear

S Line
CROSS SECTIONS

SHEET 15 OF XXX

For Earthwork Development Only

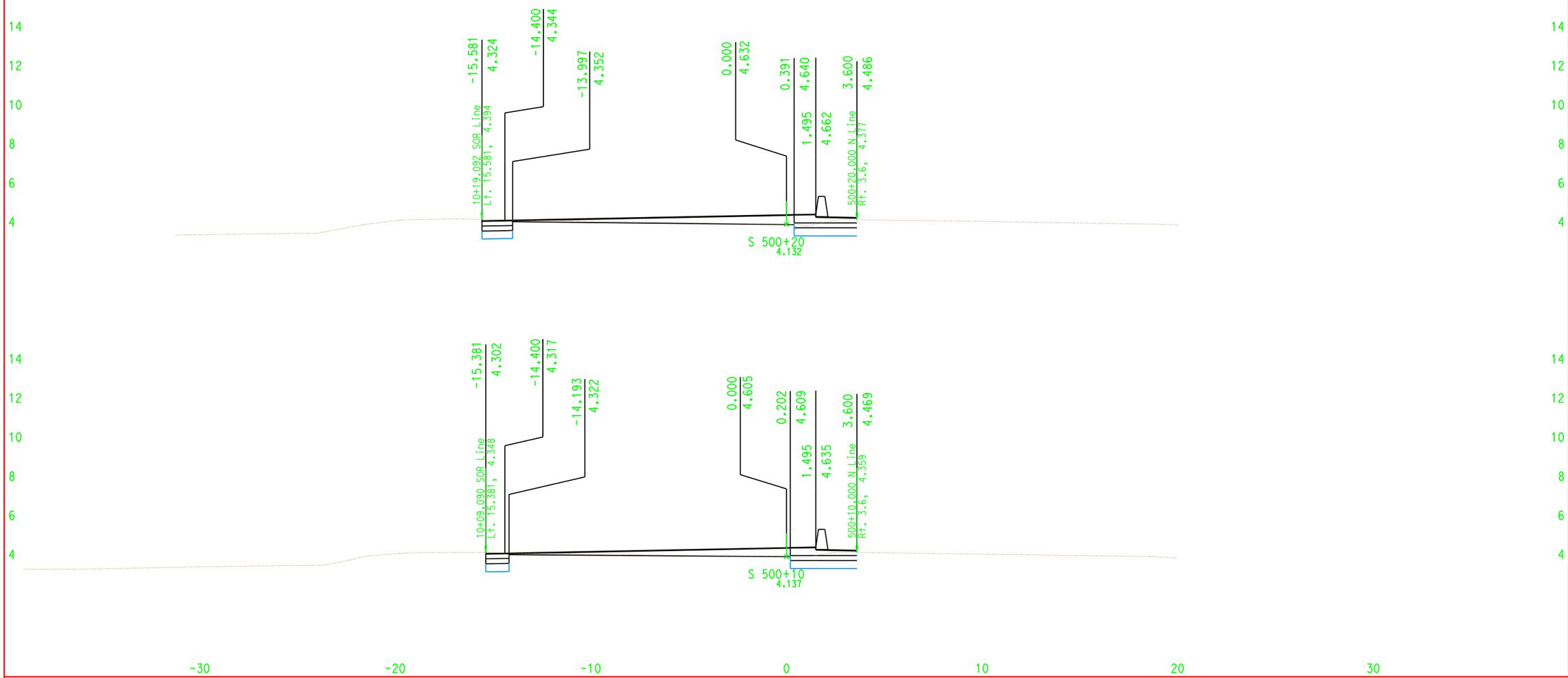

CROSS SECTIONS CREATED BY: JT DATE: 12/3/2007 ALL DIMENSIONS ARE METRIC

EA: 165421

Scale Ratio: 1:100 Horiz.
1:100 Vert.

Project: 00245 File: D:\USERS\Project\00245\JT_Files\S_Line\DesignX\JT_S2des.ear

S Line
CROSS SECTIONS

For Earthwork Development Only

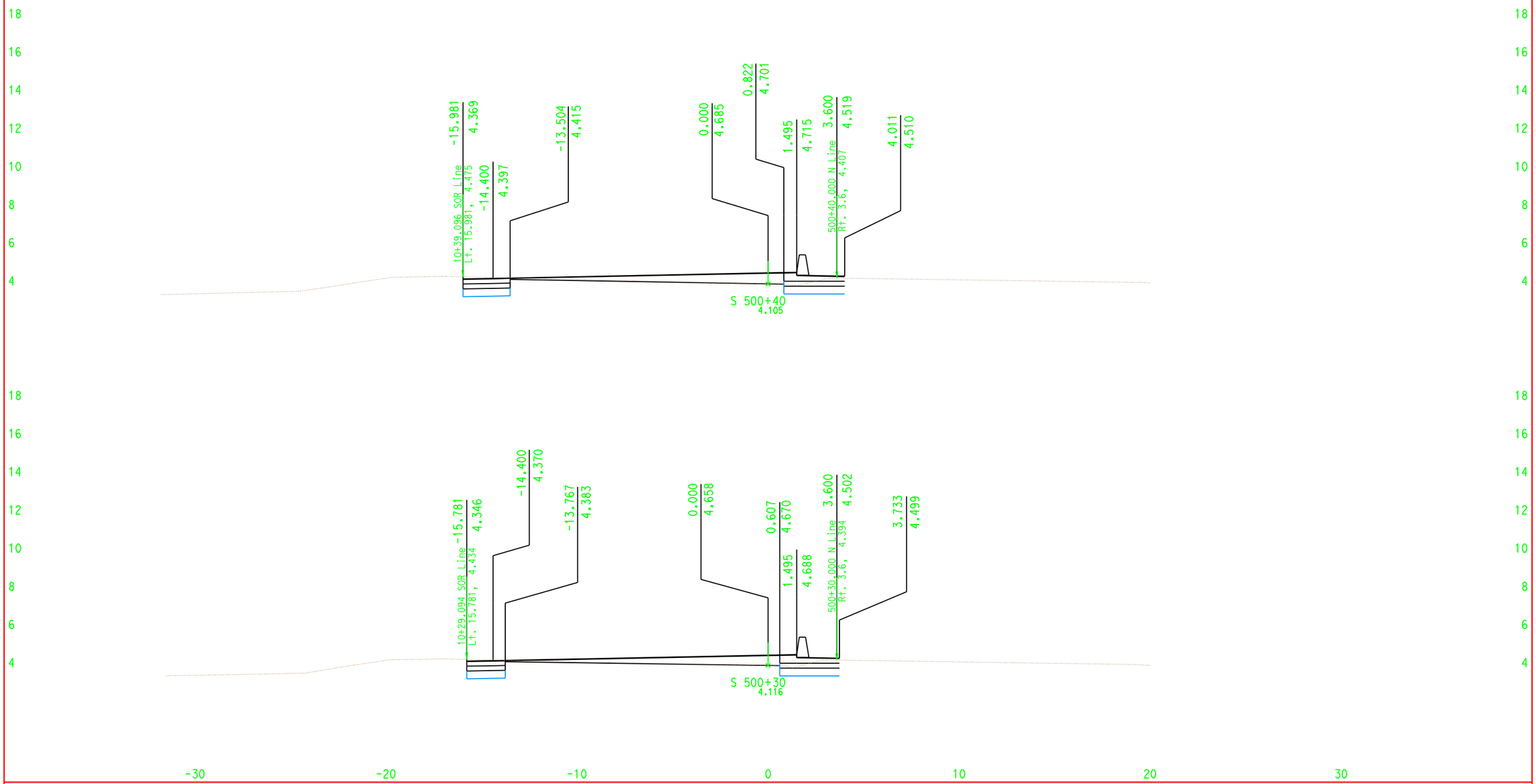

CROSS SECTIONS CREATED BY: JT DATE: 12/3/2007 ALL DIMENSIONS ARE METRIC

Project: 00245 File: D:\USERS\Project\00245\JT_Files\S_Line\DesignX\JT_S2des.ear

EA: 165421

Scale Ratio: 1:100 Horiz. 1:100 Vert.

S Line
CROSS SECTIONS

SHEET 17 OF XXX

For Earthwork Development Only

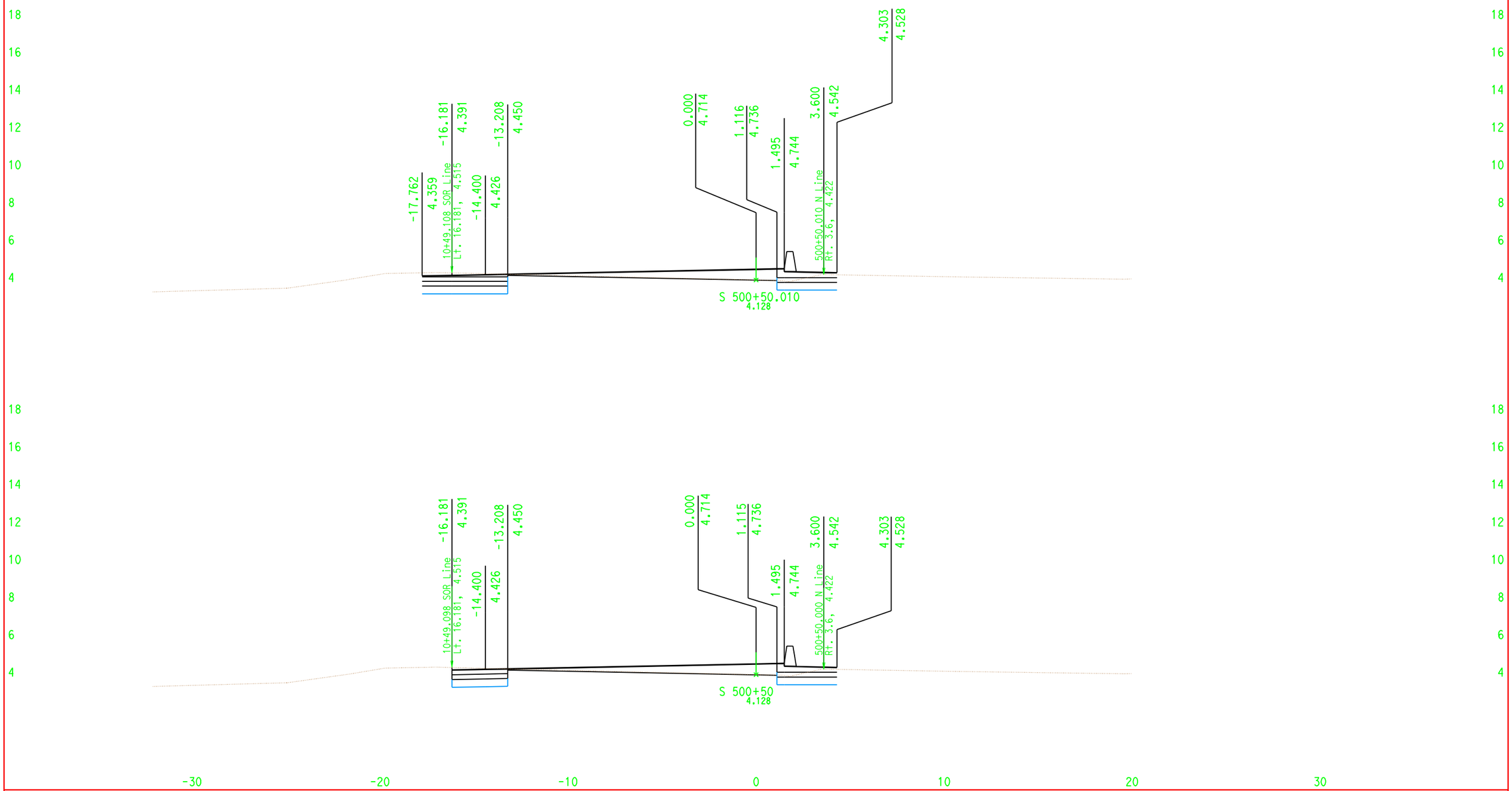

CROSS SECTIONS CREATED BY: JT DATE: 12/3/2007 ALL DIMENSIONS ARE METRIC

Project: 00245 File: D:\USERS\Project\00245\JT_Files\S_Line\DesignX\JT_S2des.ear

EA: 165421

Scale Ratio: 1:100 Horiz.
1:100 Vert.

S Line
CROSS SECTIONS

For Earthwork Development Only

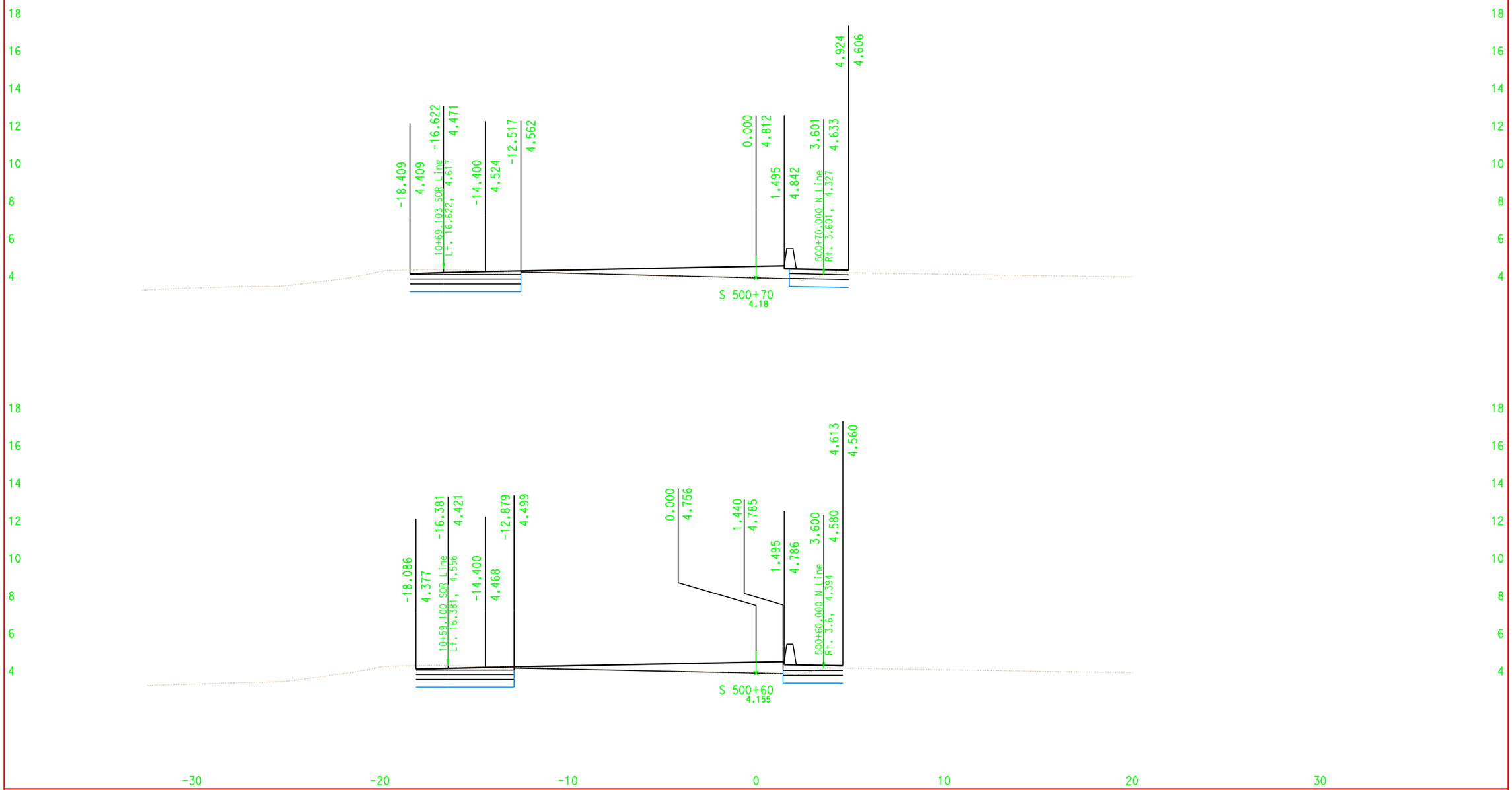

CROSS SECTIONS CREATED BY: JT DATE: 12/3/2007 ALL DIMENSIONS ARE METRIC

Project: 00245 File: D:\USERS\Project\00245\JT_Files\S_Line\DesignX\JT_S2des.ear

EA: 165421

Scale Ratio: 1:100 Horiz.
1:100 Vert.

S Line
CROSS SECTIONS

For Earthwork Development Only

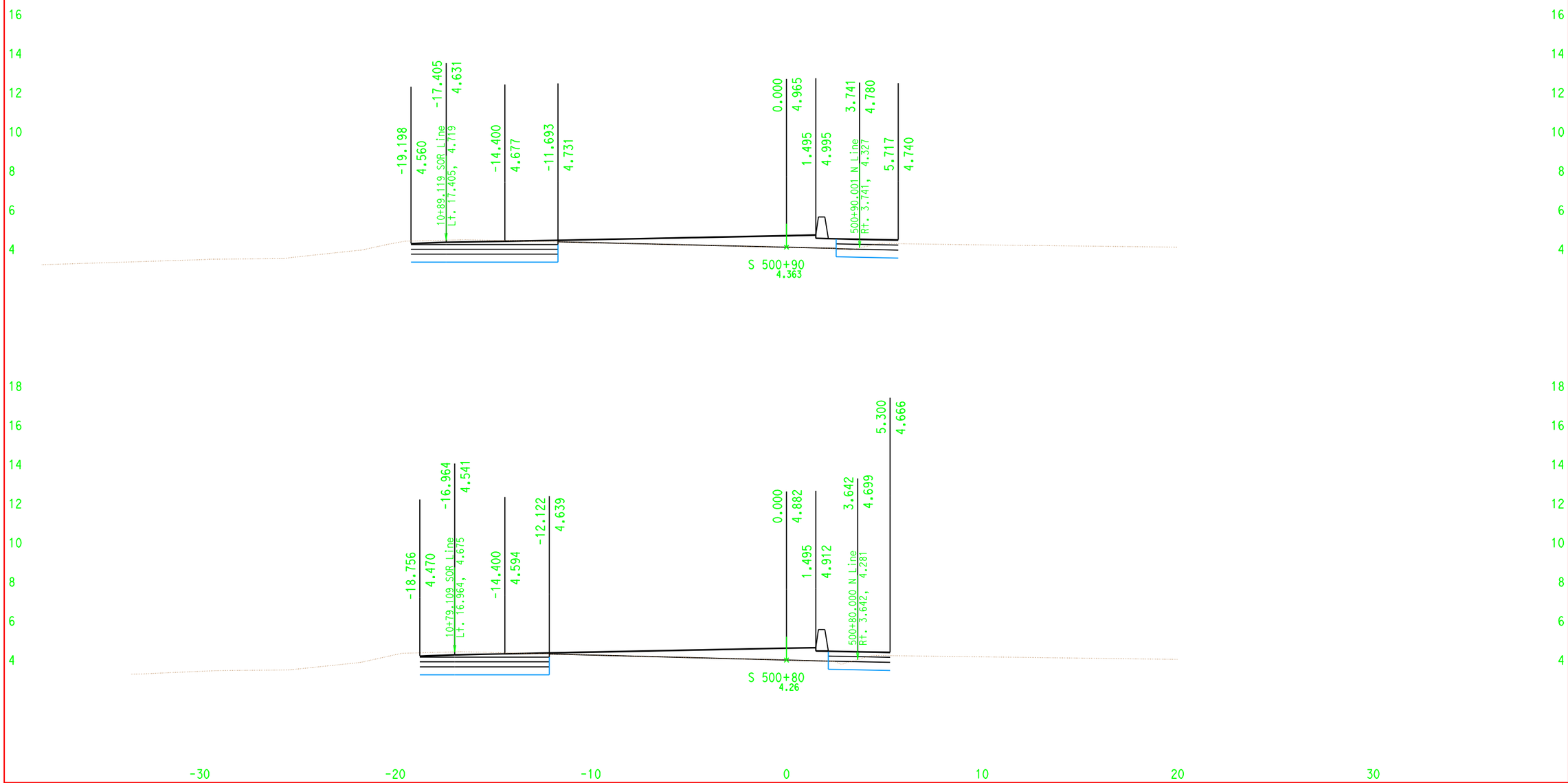

CROSS SECTIONS CREATED BY: JT DATE: 12/3/2007 ALL DIMENSIONS ARE METRIC

Project: 00245 File: D:\USERS\Project\00245\JT_Files\S_Line\DesignX\JT_S2des.ear

EA: 165421

Scale Ratio: 1:100 Horiz.
1:100 Vert.

S Line
CROSS SECTIONS

SHEET 20 OF XXX

For Earthwork Development Only

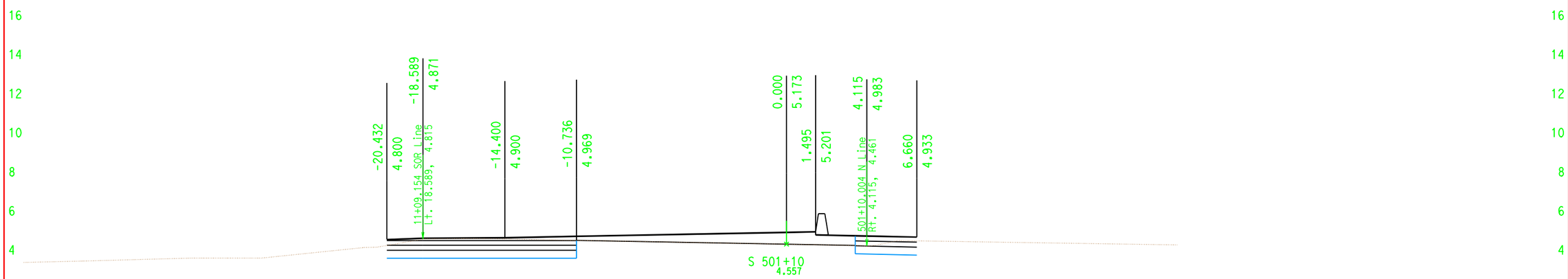

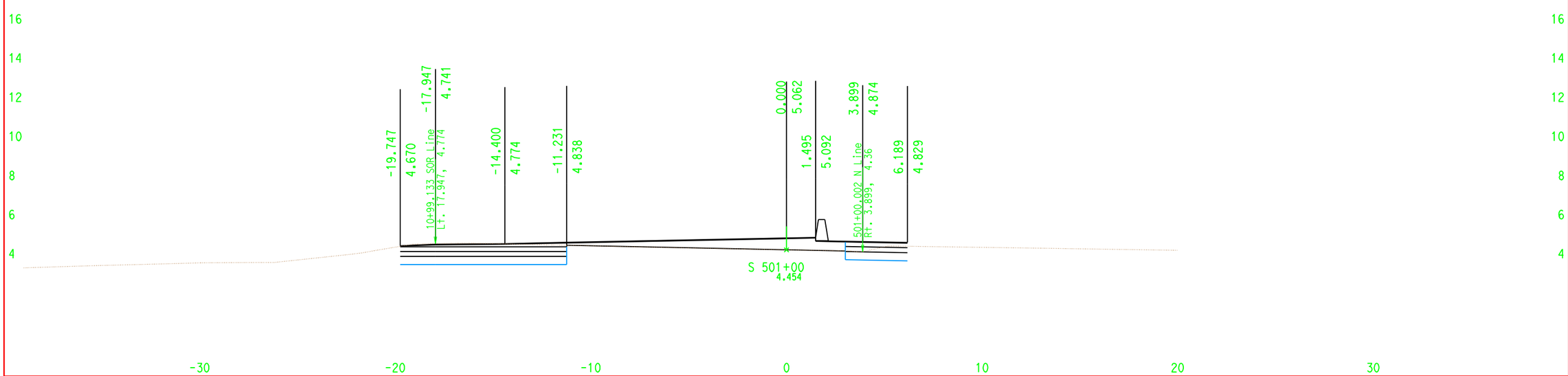

CROSS SECTIONS CREATED BY: JT DATE: 12/3/2007 ALL DIMENSIONS ARE METRIC

Project: 00245 File: D:\USERS\Project\00245\JT_Files\S_Line\DesignX\JT_S2des.ear

EA: 165421

Scale Ratio: 1:100 Horiz.
1:100 Vert.

S Line
CROSS SECTIONS

For Earthwork Development Only

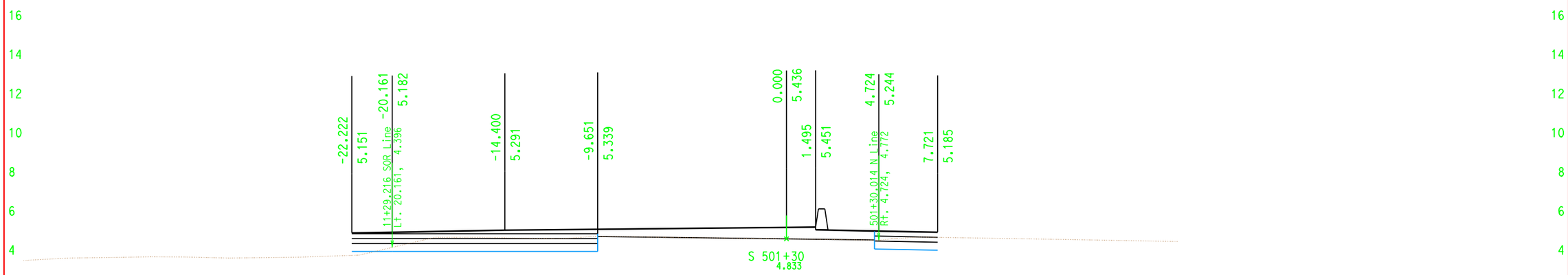

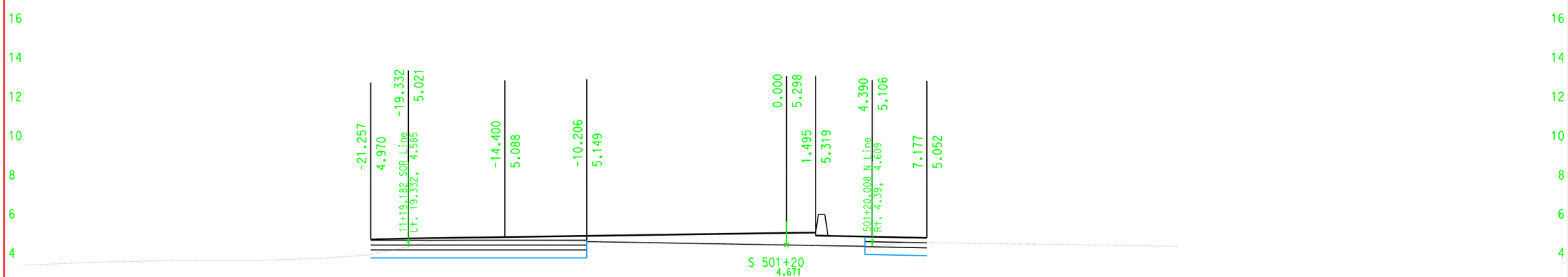

-30 -20 -10 0 10 20 30

CROSS SECTIONS CREATED BY: JT DATE: 12/3/2007 ALL DIMENSIONS ARE METRIC

EA: 165421

Scale Ratio: 1:100 Horiz.
1:100 Vert.

Project: 00245 File: D:\USERS\Project\00245\JT_Files\S_Line\DesignX\JT_S2des.ear

S Line
CROSS SECTIONS

For Earthwork Development Only

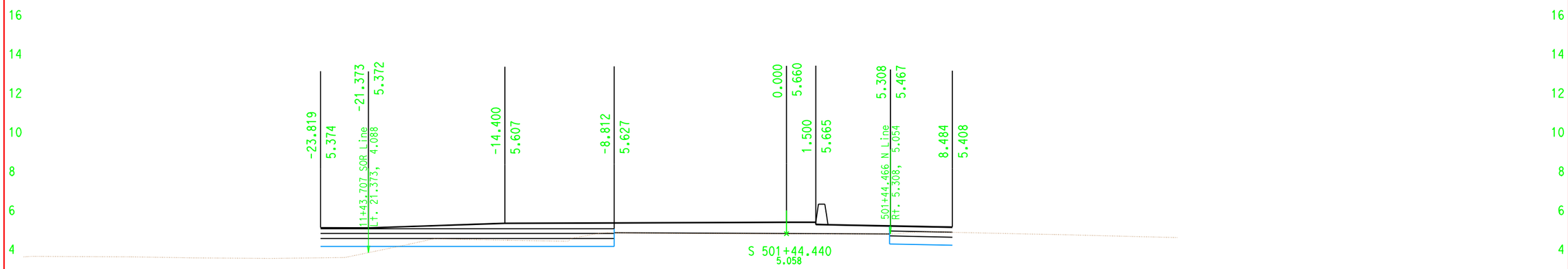

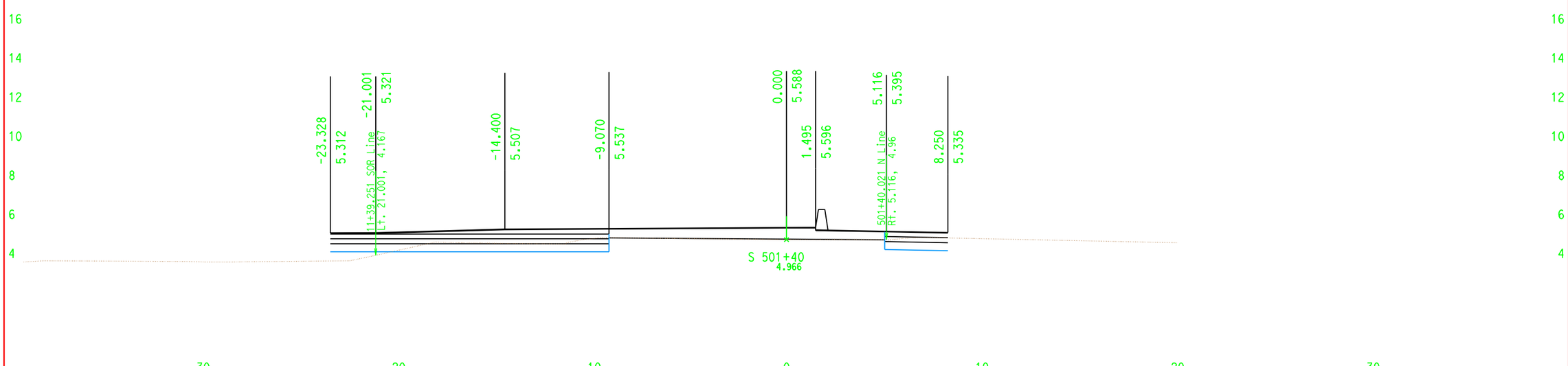

CROSS SECTIONS CREATED BY: JT DATE: 12/3/2007 ALL DIMENSIONS ARE METRIC

Project: 00245 File: D:\USERS\Project\00245\JT_Files\S_Line\DesignX\JT_S2des.ear

EA: 165421

Scale Ratio: 1:100 Horiz.
1:100 Vert.

S Line
CROSS SECTIONS

For Earthwork Development Only

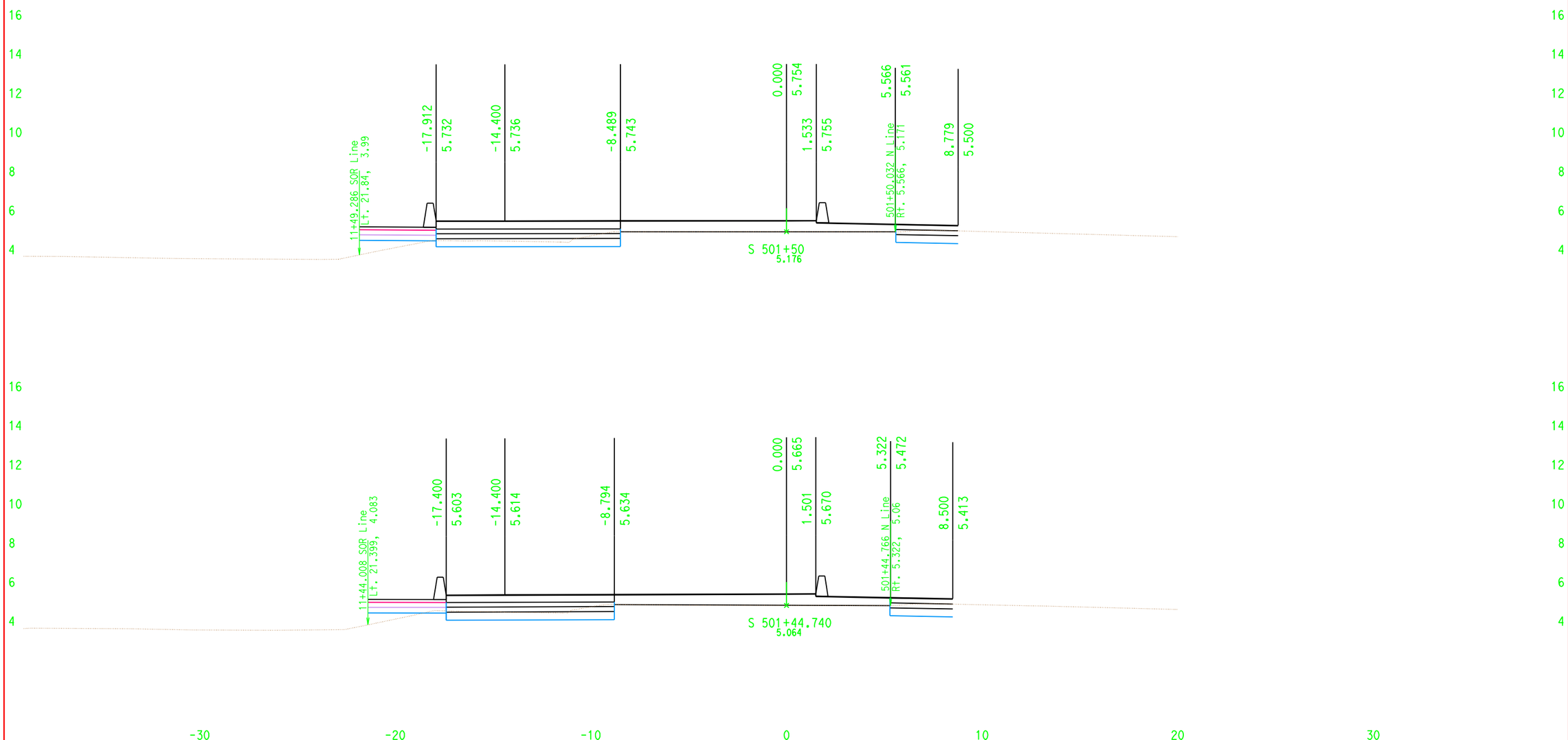

CROSS SECTIONS CREATED BY: JT DATE: 12/3/2007 ALL DIMENSIONS ARE METRIC

EA: 165421

Scale Ratio: 1:100 Horiz. 1:100 Vert.

Project: 00245 File: D:\USERS\Project\00245\JT_Files\S_Line\DesignX\JT_S2des.ear

S Line
CROSS SECTIONS

SHEET 24 OF XXX

For Earthwork Development Only

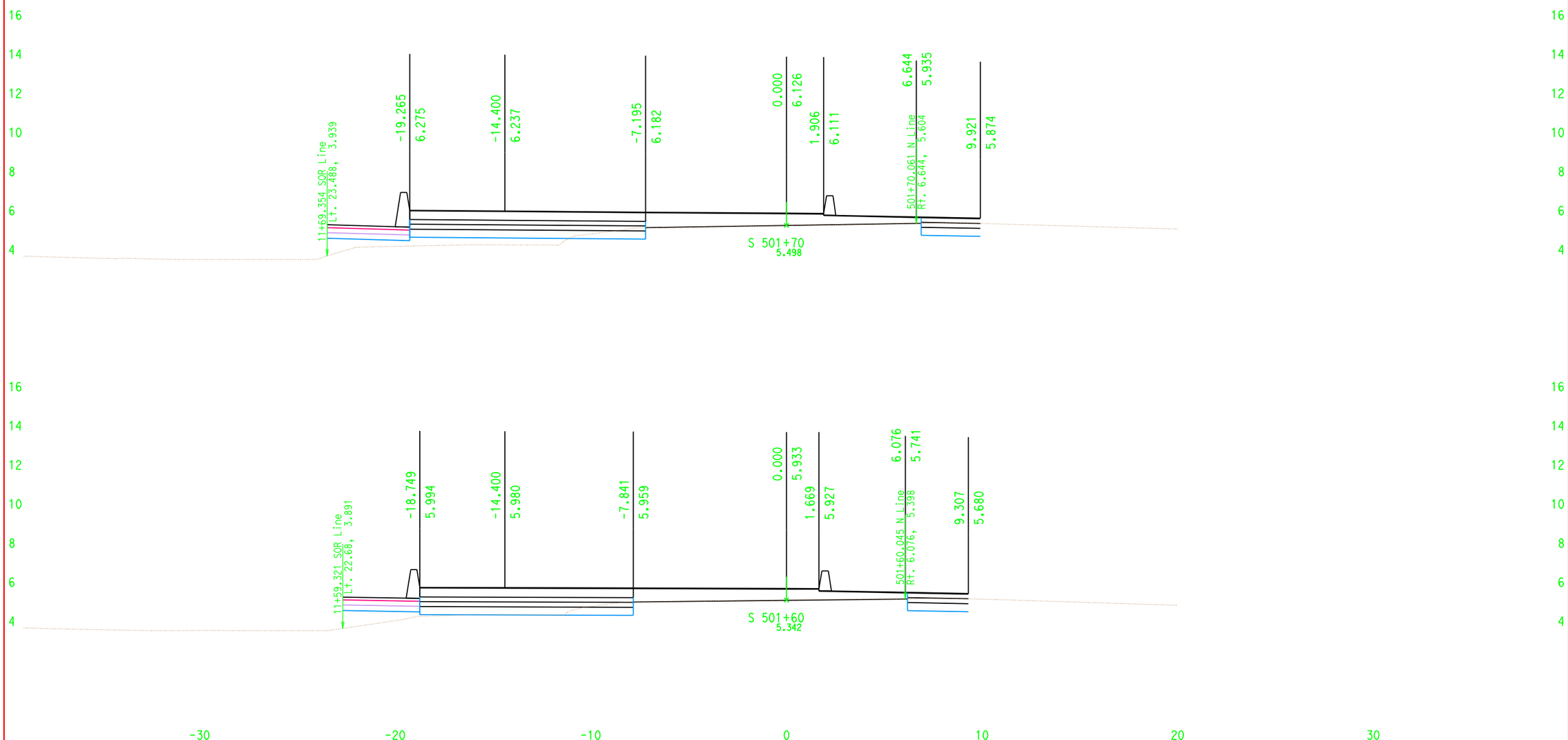

CROSS SECTIONS CREATED BY: JT DATE: 12/3/2007 ALL DIMENSIONS ARE METRIC

EA: 165421

Scale Ratio: 1:100 Horiz.
1:100 Vert.

Project: 00245 File: D:\USERS\Project\00245\JT_Files\S_Line\DesignX\JT_S2des.ear

S Line
CROSS SECTIONS

SHEET 25 OF XXX

For Earthwork Development Only

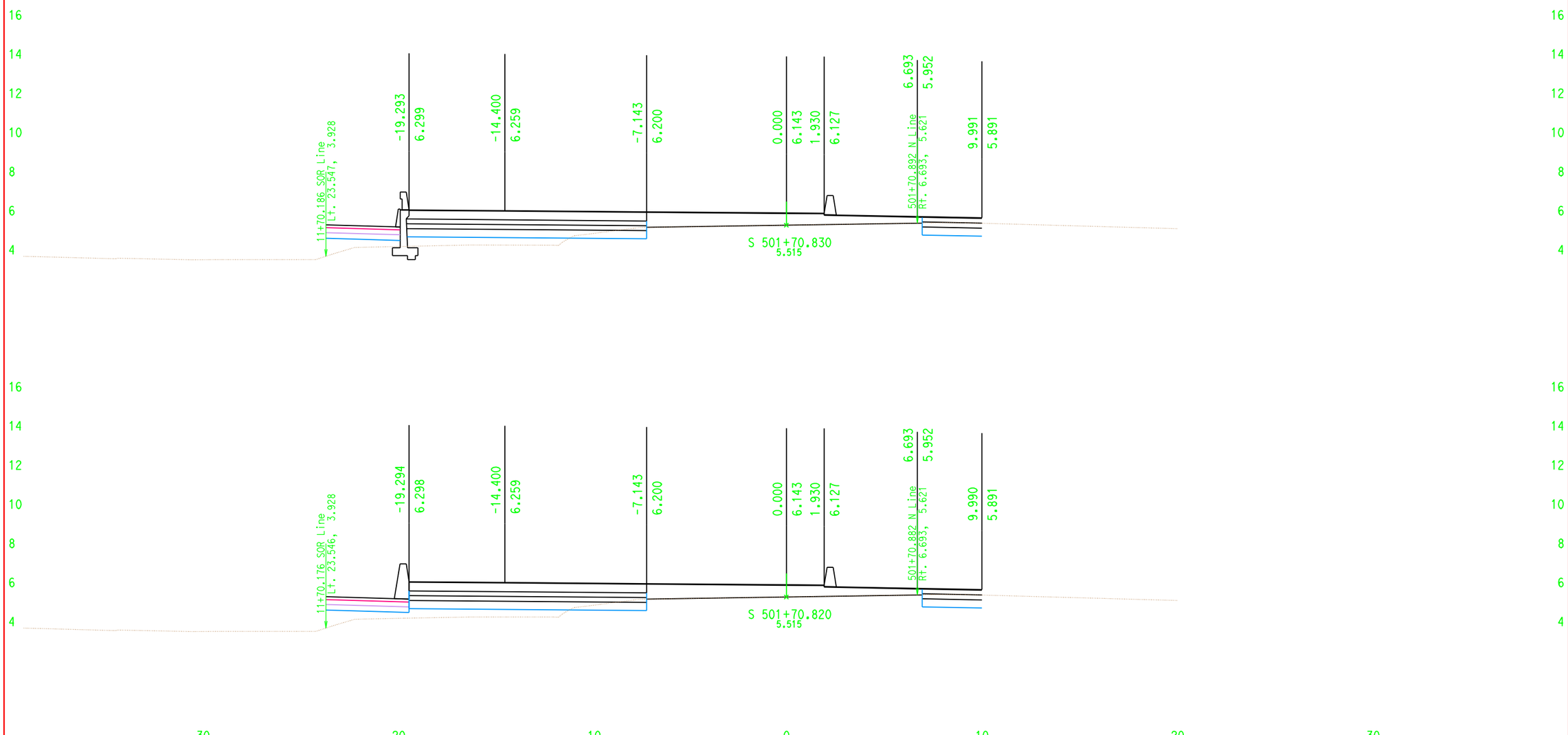

CROSS SECTIONS CREATED BY: JT DATE: 12/3/2007 ALL DIMENSIONS ARE METRIC

Project: 00245 File: D:\USERS\Project\00245\JT_Files\S_Line\DesignX\JT_S2des.ear

EA: 165421

Scale Ratio: 1:100 Horiz.
1:100 Vert.

S Line
CROSS SECTIONS

For Earthwork Development Only

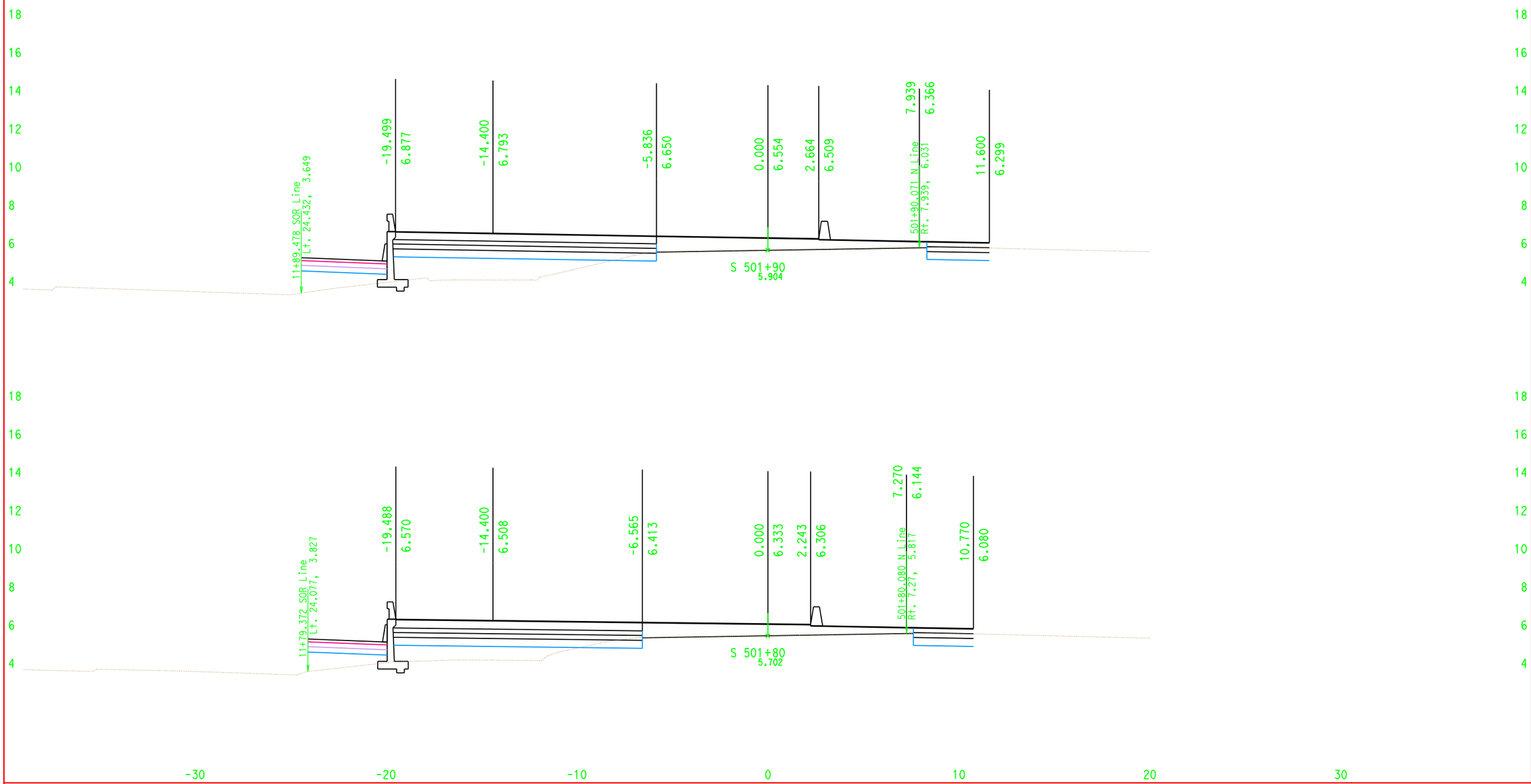

CROSS SECTIONS CREATED BY: JT DATE: 12/3/2007 ALL DIMENSIONS ARE METRIC

Project: 00245 File: D:\USERS\Project\00245\JT_Files\S_Line\DesignX\JT_S2des.ear

EA: 165421

Scale Ratio: 1:100 Horiz.
1:100 Vert.

S Line
CROSS SECTIONS

For Earthwork Development Only

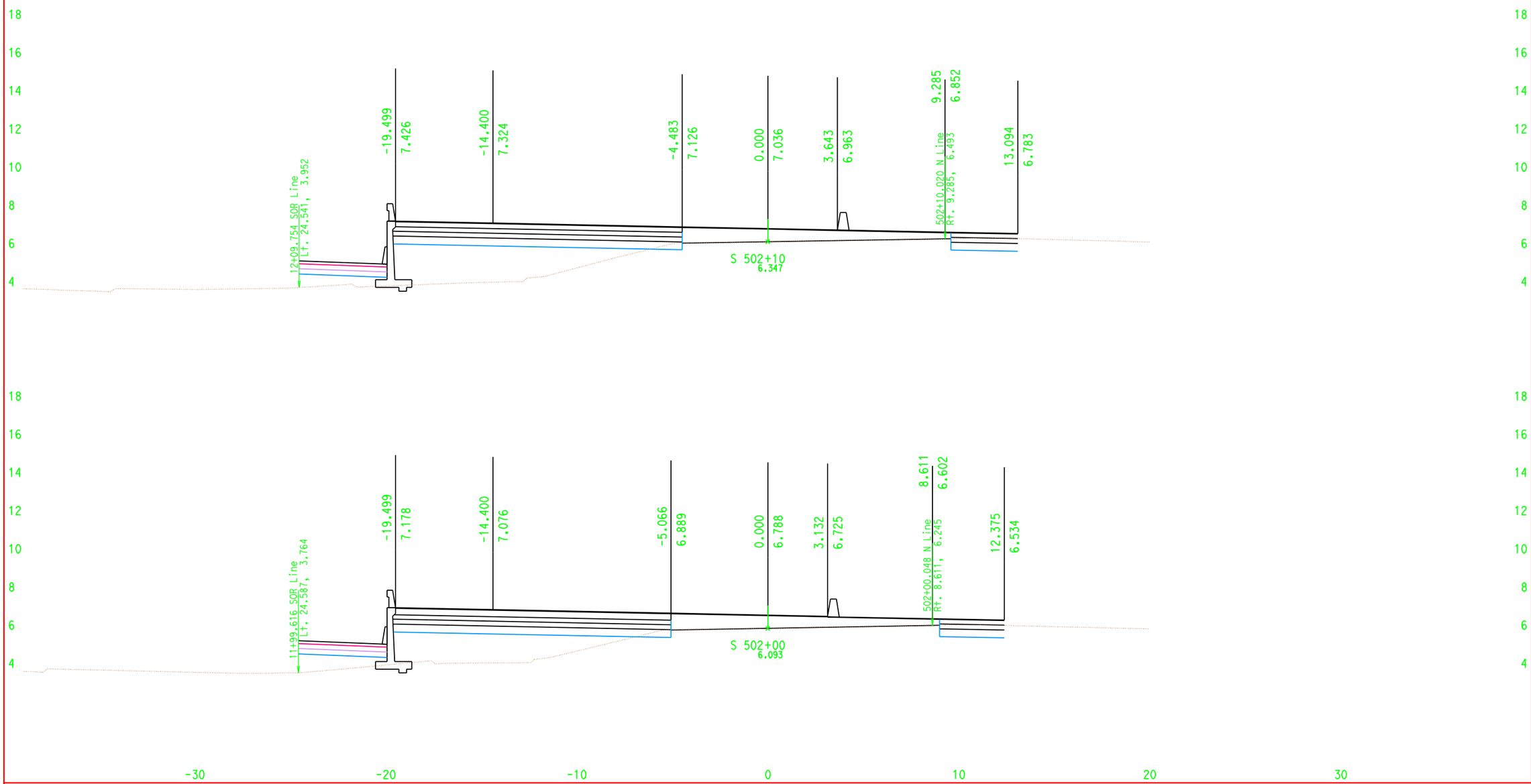

CROSS SECTIONS CREATED BY: JT DATE: 12/3/2007 ALL DIMENSIONS ARE METRIC

Project: 00245 File: D:\USERS\Project\00245\JT_Files\S_Line\DesignX\JT_S2des.ear

EA: 165421

Scale Ratio: 1:100 Horiz.
1:100 Vert.

S Line
CROSS SECTIONS

For Earthwork Development Only

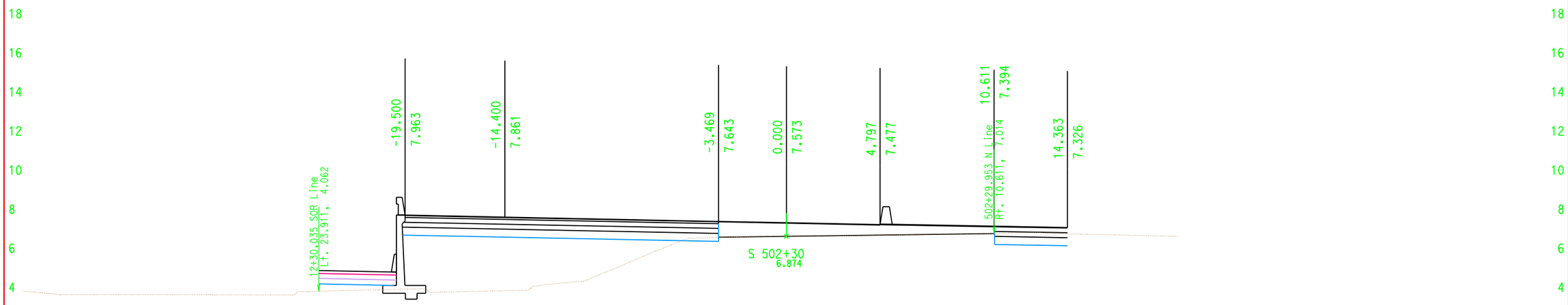

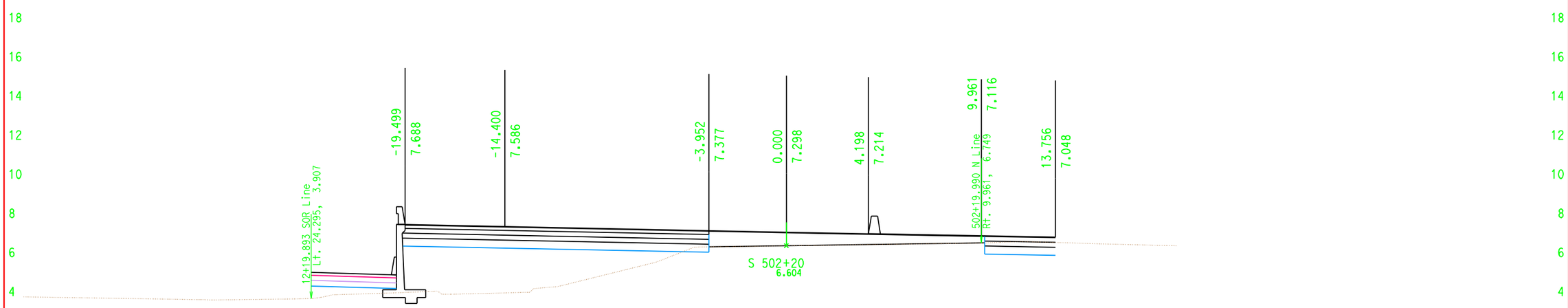

-30 -20 -10 0 10 20 30

CROSS SECTIONS CREATED BY: JT DATE: 12/3/2007 ALL DIMENSIONS ARE METRIC

Project: 00245 File: D:\USERS\Project\00245\JT_Files\S_Line\DesignX\JT_S2des.ear

EA: 165421

Scale Ratio: 1:100 Horiz.
1:100 Vert.

S Line
CROSS SECTIONS

For Earthwork Development Only

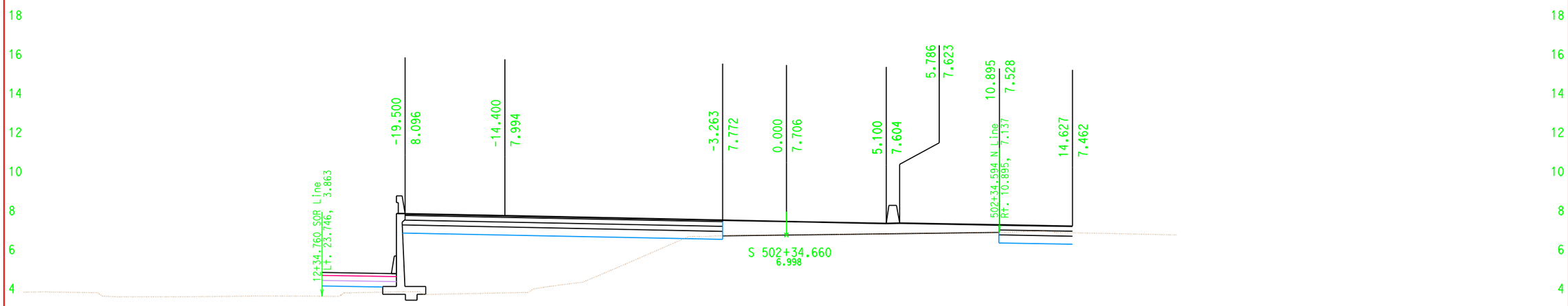

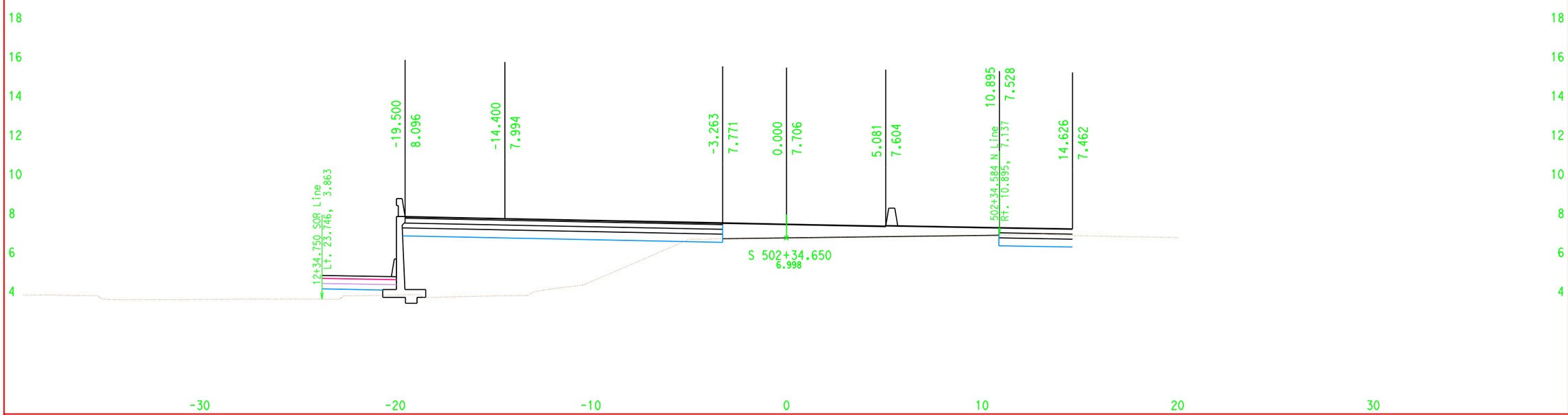

CROSS SECTIONS CREATED BY: JT DATE: 12/3/2007 ALL DIMENSIONS ARE METRIC

Project: 00245 File: D:\USERS\Project\00245\JT_Files\S_Line\DesignX\JT_S2des.ear

EA: 165421

Scale Ratio: 1:100 Horiz.
1:100 Vert.

S Line
CROSS SECTIONS

For Earthwork Development Only

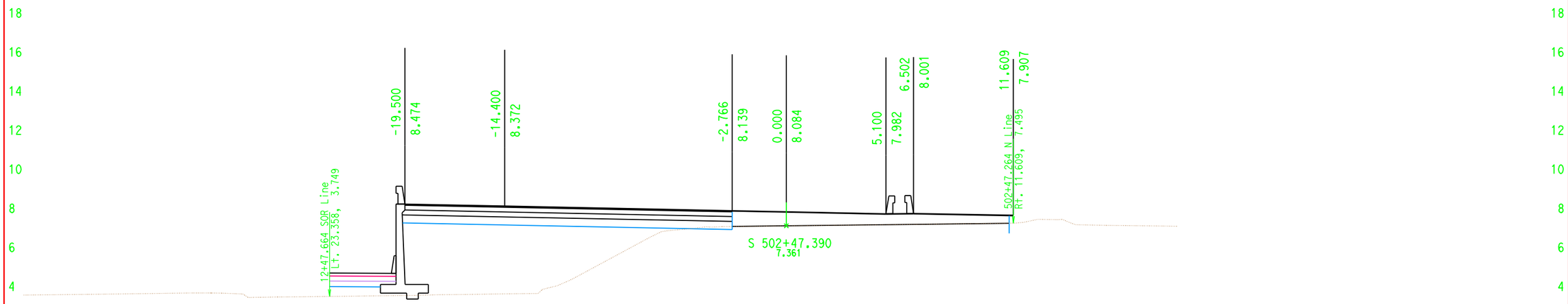

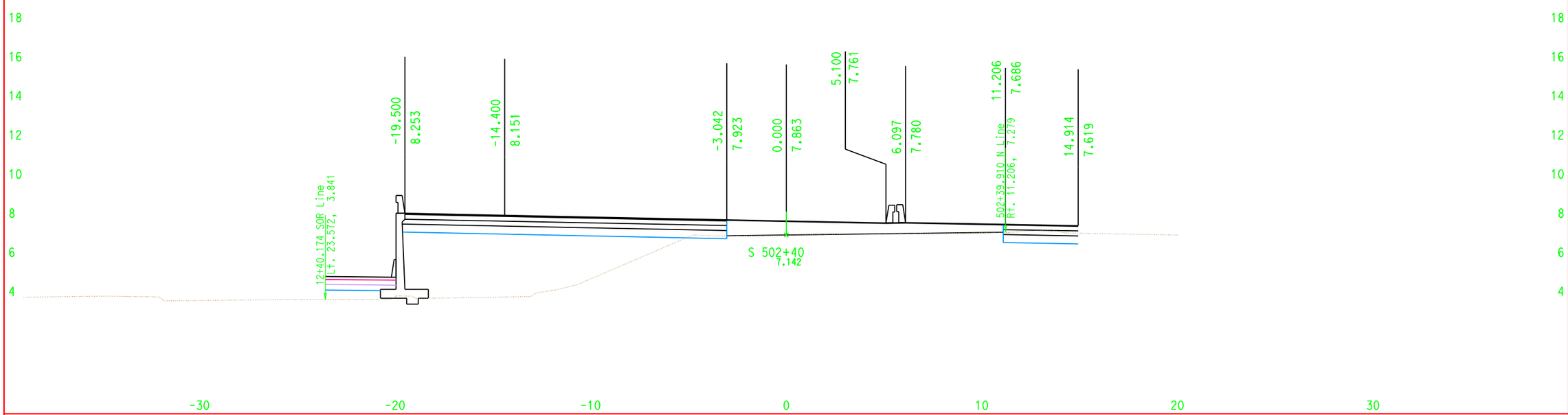

CROSS SECTIONS CREATED BY: JT DATE: 12/3/2007 ALL DIMENSIONS ARE METRIC

Project: 00245 File: D:\USERS\Project\00245\JT_Files\S_Line\DesignX\JT_S2des.ear

EA: 165421

Scale Ratio: 1:100 Horiz.
1:100 Vert.

S Line
CROSS SECTIONS

For Earthwork Development Only

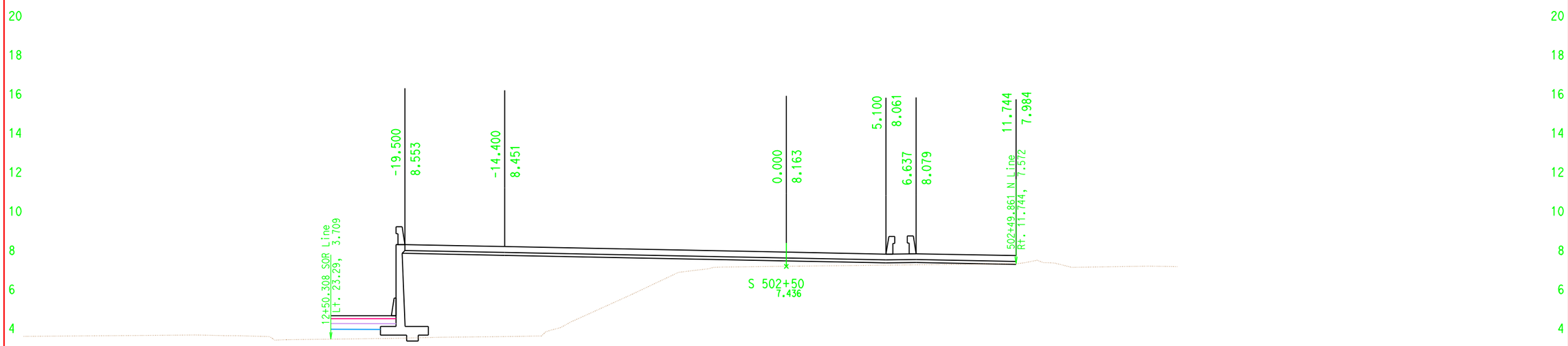

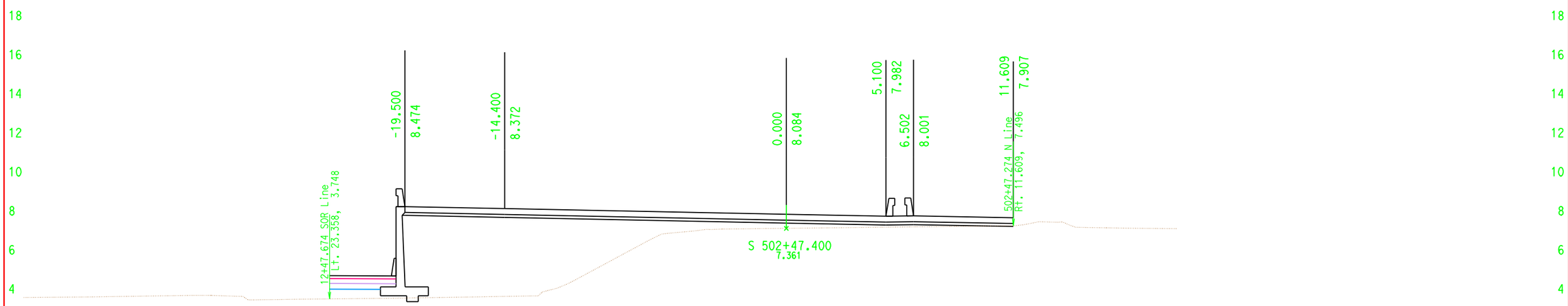

CROSS SECTIONS CREATED BY: JT DATE: 12/3/2007 ALL DIMENSIONS ARE METRIC

Project: 00245 File: D:\USERS\Project\00245\JT_Files\S_Line\DesignX\JT_S2des.ear

EA: 165421

Scale Ratio: 1:100 Horiz.
1:100 Vert.

S Line
CROSS SECTIONS

For Earthwork Development Only

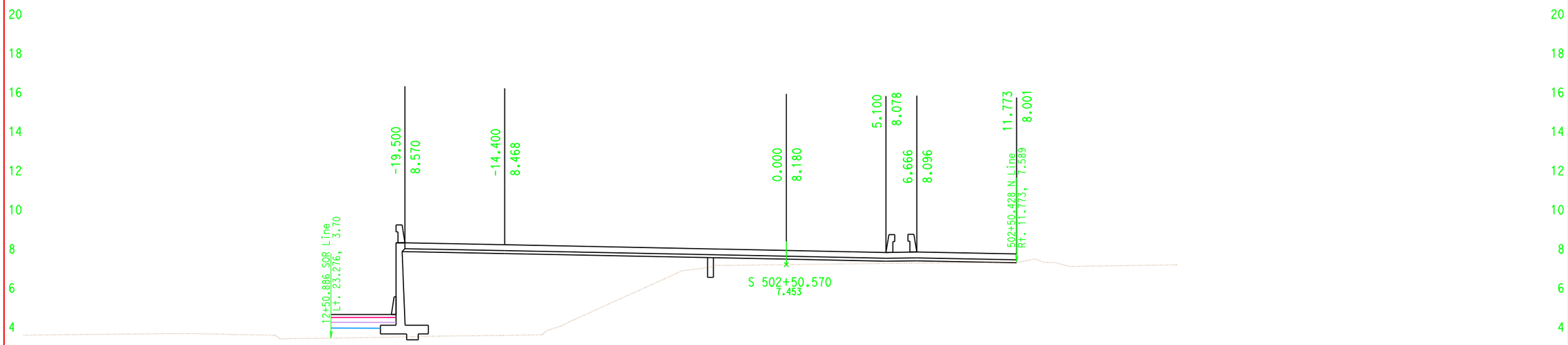

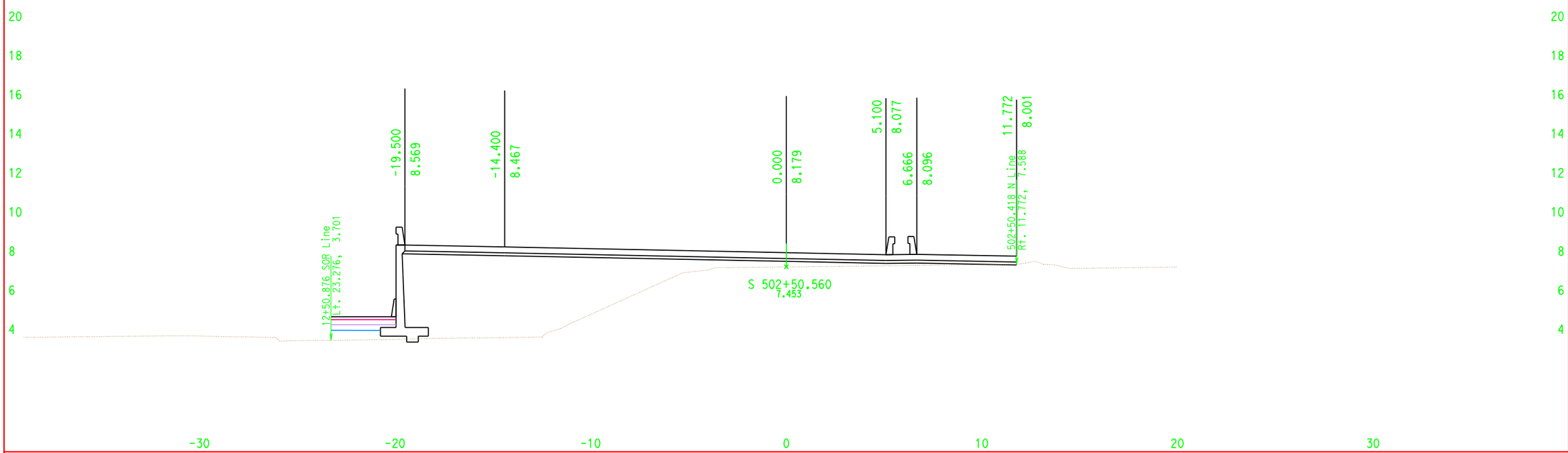

CROSS SECTIONS CREATED BY: JT DATE: 12/3/2007 ALL DIMENSIONS ARE METRIC

Project: 00245 File: D:\USERS\Project\00245\JT_Files\S_Line\DesignX\JT_S2des.ear

EA: 165421

Scale Ratio: 1:100 Horiz.
1:100 Vert.

S Line
CROSS SECTIONS

For Earthwork Development Only

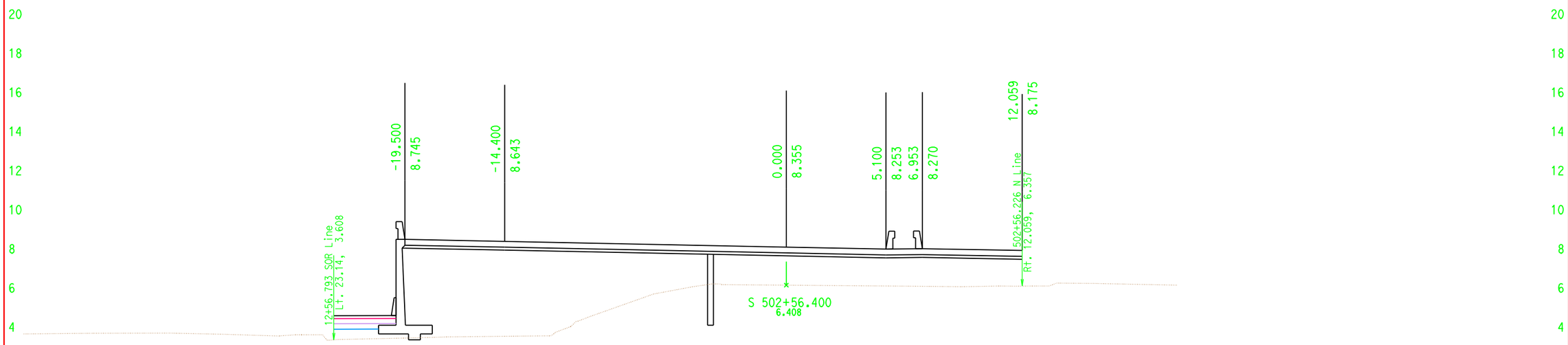

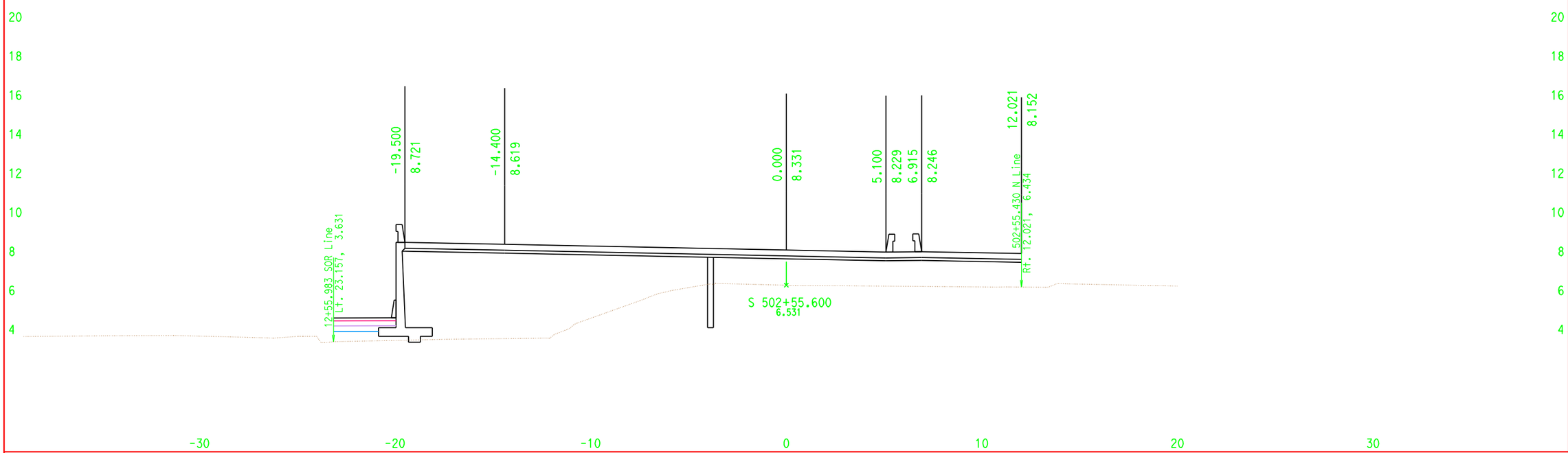

CROSS SECTIONS CREATED BY: JT DATE: 12/3/2007 ALL DIMENSIONS ARE METRIC

Project: 00245 File: D:\USERS\Project\00245\JT_Files\S_Line\DesignX\JT_S2des.ear

EA: 165421

Scale Ratio: 1:100 Horiz.
1:100 Vert.

S Line
CROSS SECTIONS