FOR EARTHWORK DEVELOPMENT ONLY

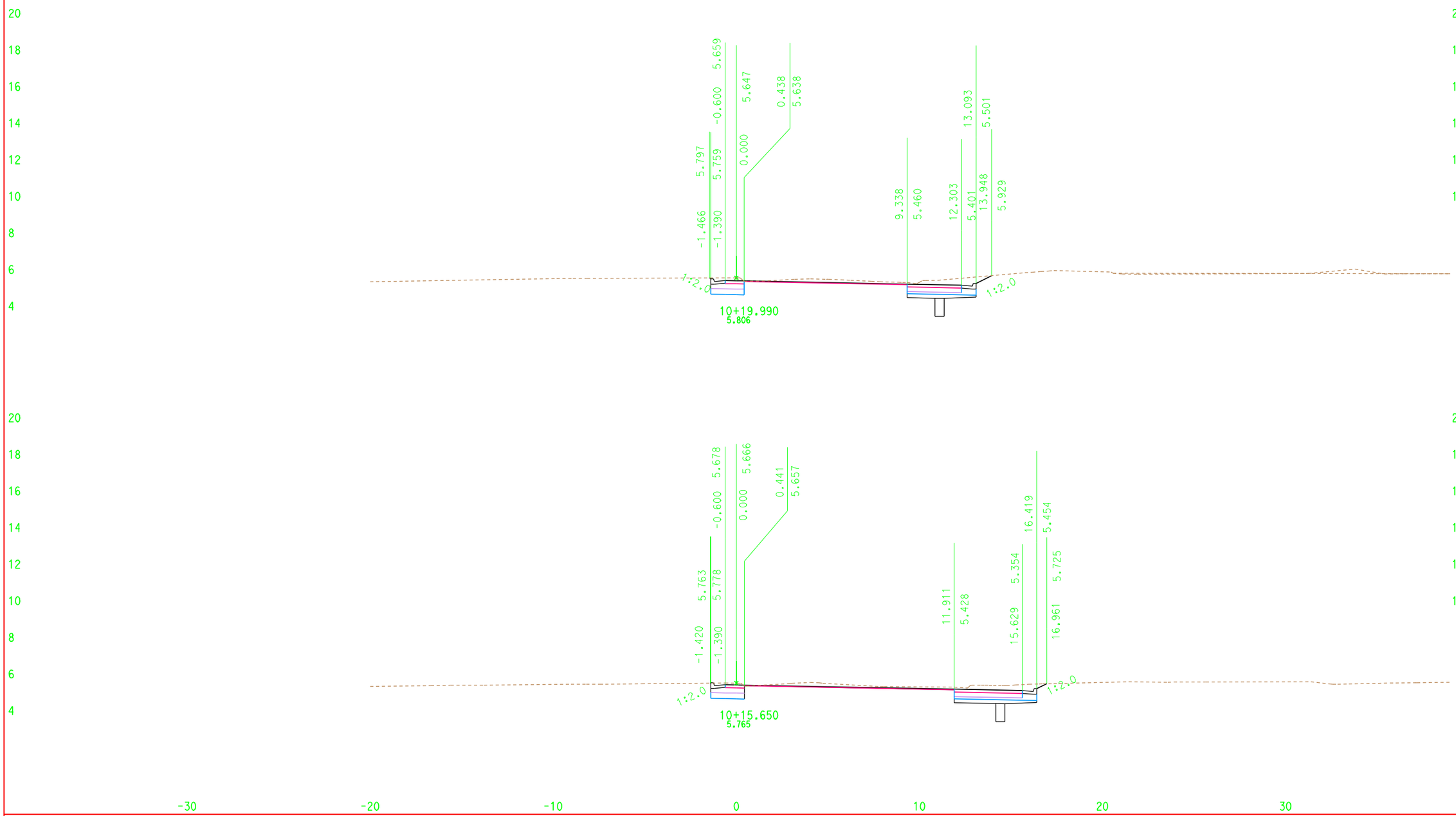

DATE: 6/2/2009

ALL DIMENSIONS ARE IN METERS

Scale Ratio: 1:100 Horiz.
1:100 Vert.

KC Project: 00245 File: D:\highSt\052909\NER_DES_R_1.ear

NER1
CROSS SECTIONS

FOR EARTHWORK DEVELOPMENT ONLY

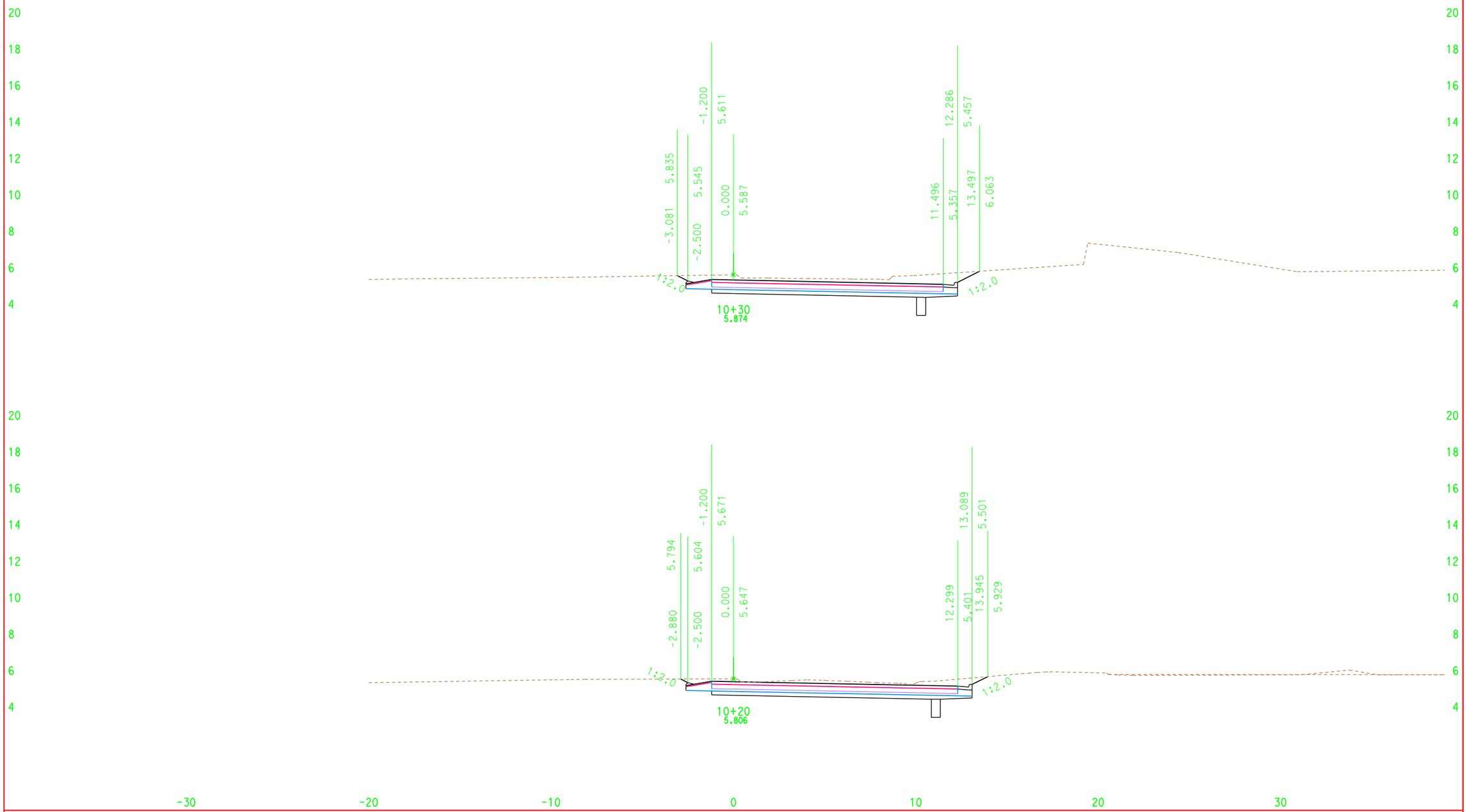

DATE: 6/2/2009

ALL DIMENSIONS ARE IN METERS

Scale Ratio: 1:100 Horiz.
1:100 Vert.

KC Project: 00245 File: D:\highSt\052909\NER_DES_R_1.ear

NER1
CROSS SECTIONS

SHEET 2 OF 34

FOR EARTHWORK DEVELOPMENT ONLY

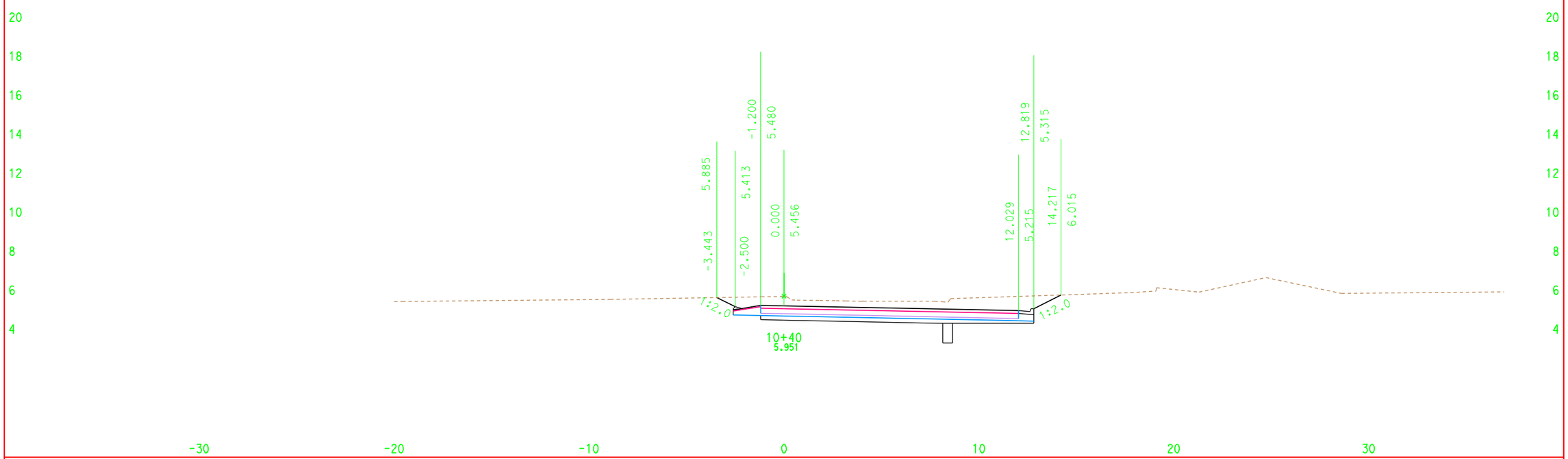

DATE: 6/2/2009

ALL DIMENSIONS ARE IN METERS

Scale Ratio: 1:100 Horiz.
1:100 Vert.

KC Project: 00245 File: D:\highSt\052909\NER_DES_R_1.ear

NER1
CROSS SECTIONS

SHEET 3 OF 34

FOR EARTHWORK DEVELOPMENT ONLY

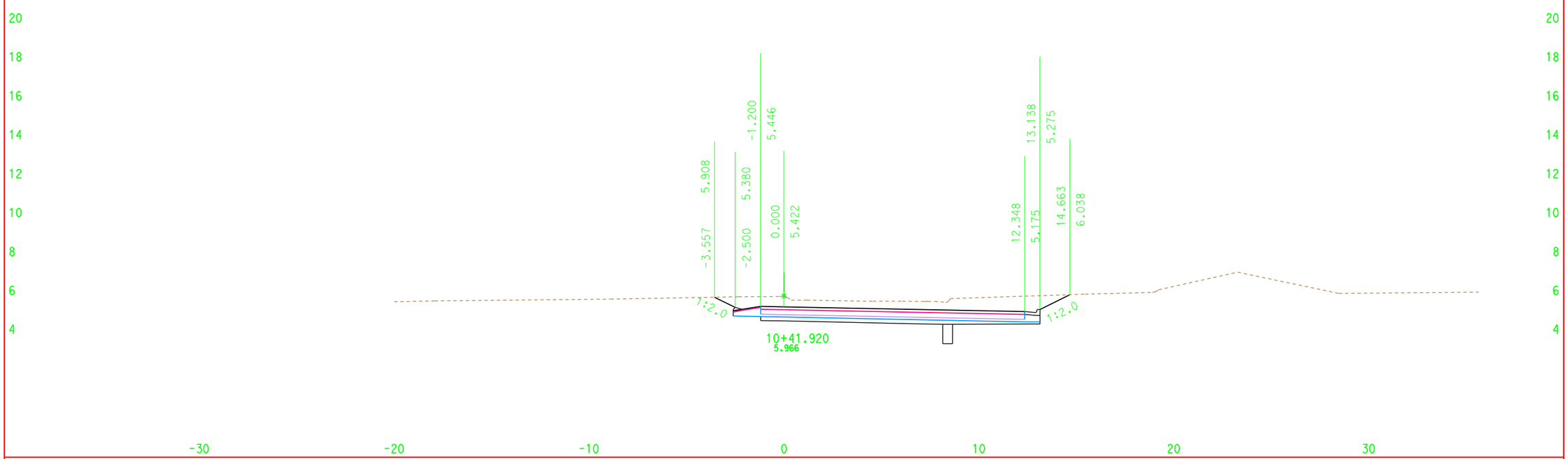

DATE: 6/2/2009

ALL DIMENSIONS ARE IN METERS

Scale Ratio: 1:100 Horiz.
1:100 Vert.

KC Project: 00245 File: D:\highSt\052909\NER_DES_R_1.ear

NER1
CROSS SECTIONS
SHEET 4 OF34

FOR EARTHWORK DEVELOPMENT ONLY

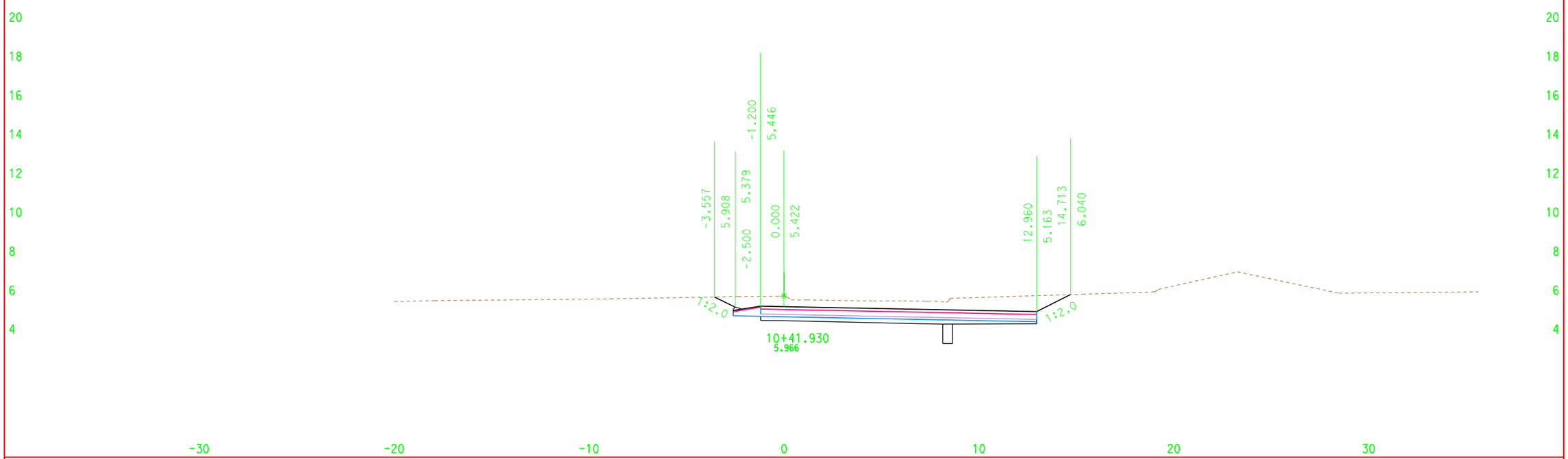

DATE: 6/2/2009

ALL DIMENSIONS ARE IN METERS

Scale Ratio: 1:100 Horiz.
1:100 Vert.

KC Project: 00245 File: D:\highSt\052909\NER_DES_R_1.ear

NER1
CROSS SECTIONS

FOR EARTHWORK DEVELOPMENT ONLY

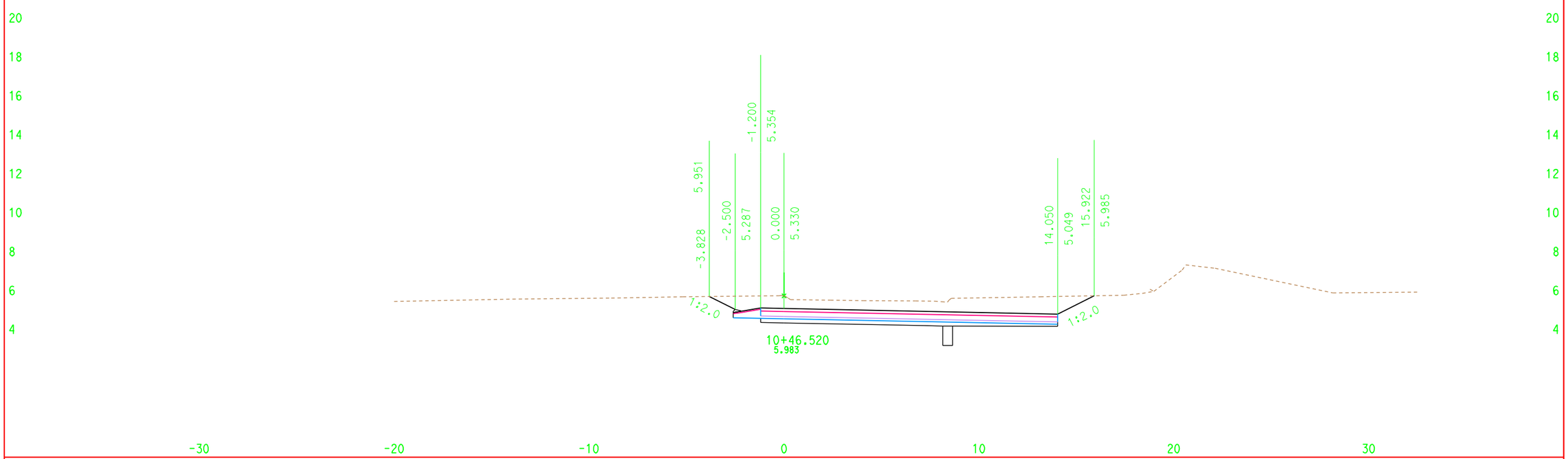

DATE: 6/2/2009

ALL DIMENSIONS ARE IN METERS

Scale Ratio: 1:100 Horiz.
1:100 Vert.

KC Project: 00245 File: D:\highSt\052909\NER_DES_R_1.ear

NER1
CROSS SECTIONS

FOR EARTHWORK DEVELOPMENT ONLY

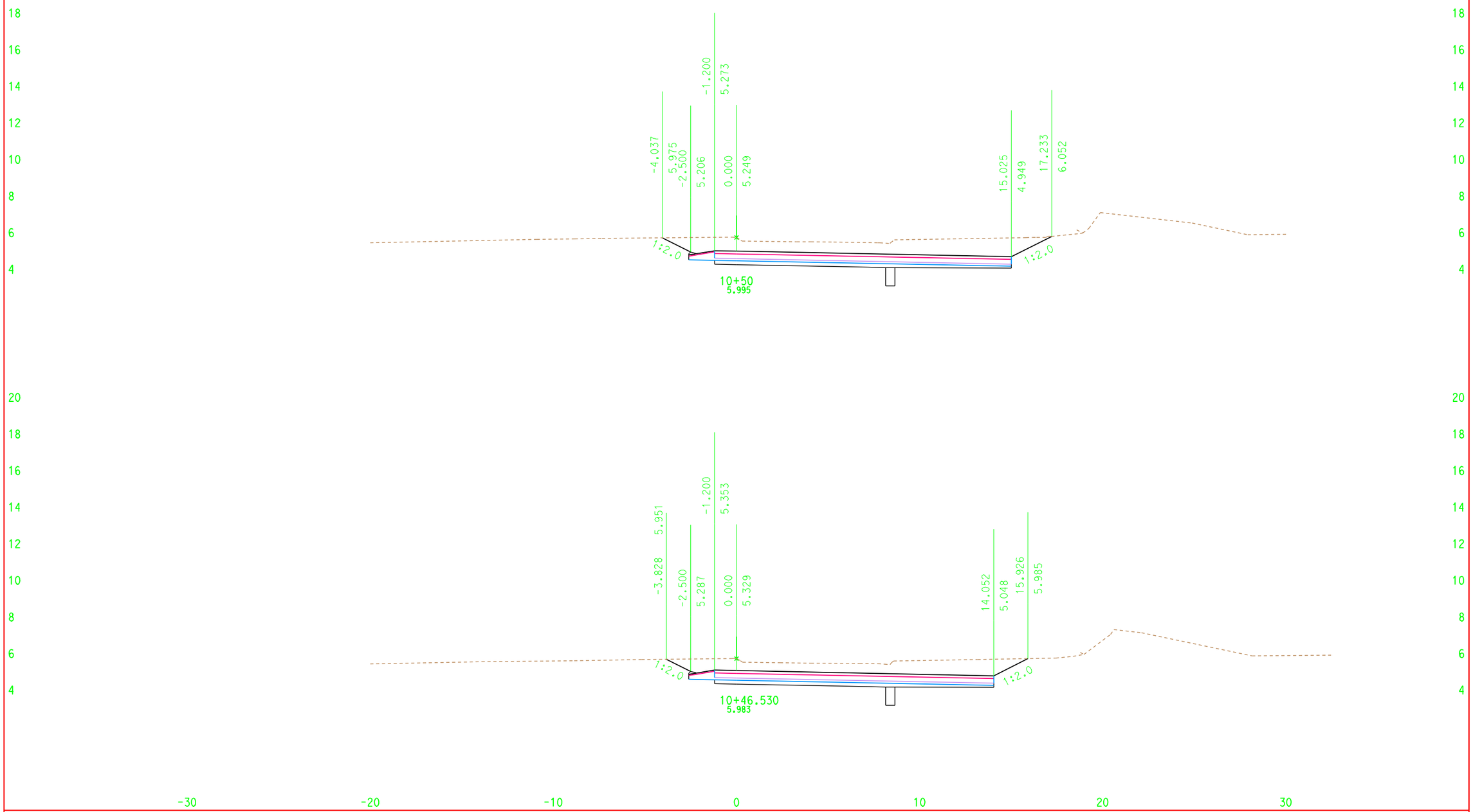

DATE: 6/2/2009

ALL DIMENSIONS ARE IN METERS

Scale Ratio: 1:100 Horiz.
1:100 Vert.

KC Project: 00245 File: D:\highSt\052909\NER_DES_R_1.ear

NER1
CROSS SECTIONS

SHEET 7 OF34

FOR EARTHWORK DEVELOPMENT ONLY

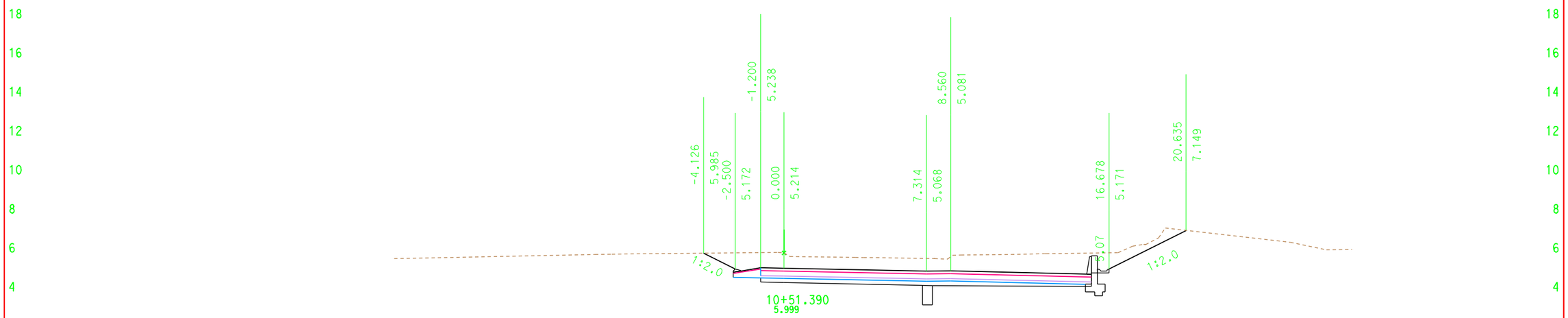

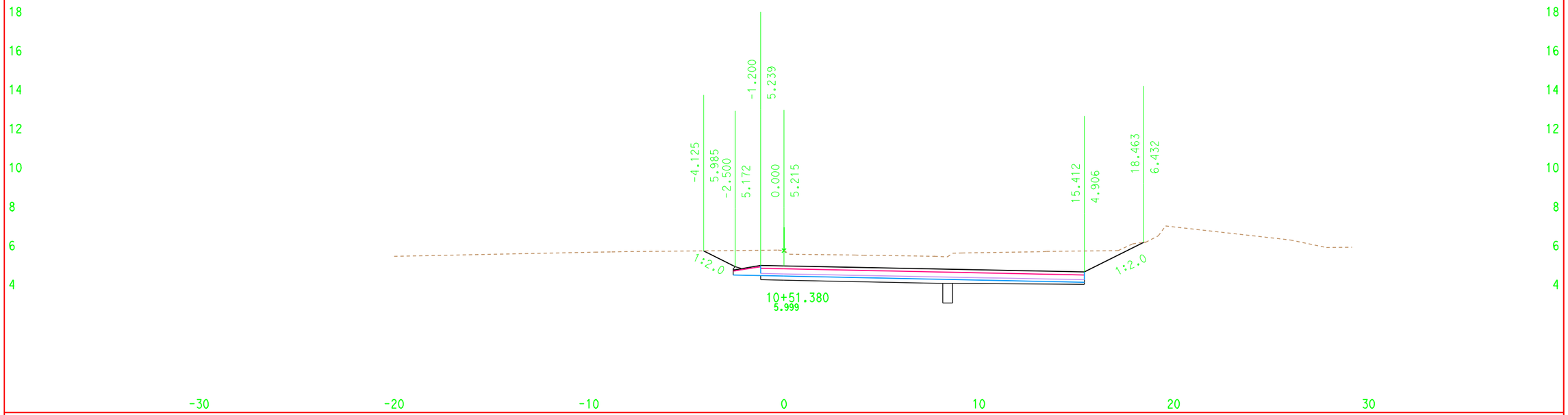

DATE: 6/2/2009

ALL DIMENSIONS ARE IN METERS

Scale Ratio: 1:100 Horiz.
1:100 Vert.

KC Project: 00245 File: D:\highSt\052909\NER_DES_R_1.ear

NER1
CROSS SECTIONS

FOR EARTHWORK DEVELOPMENT ONLY

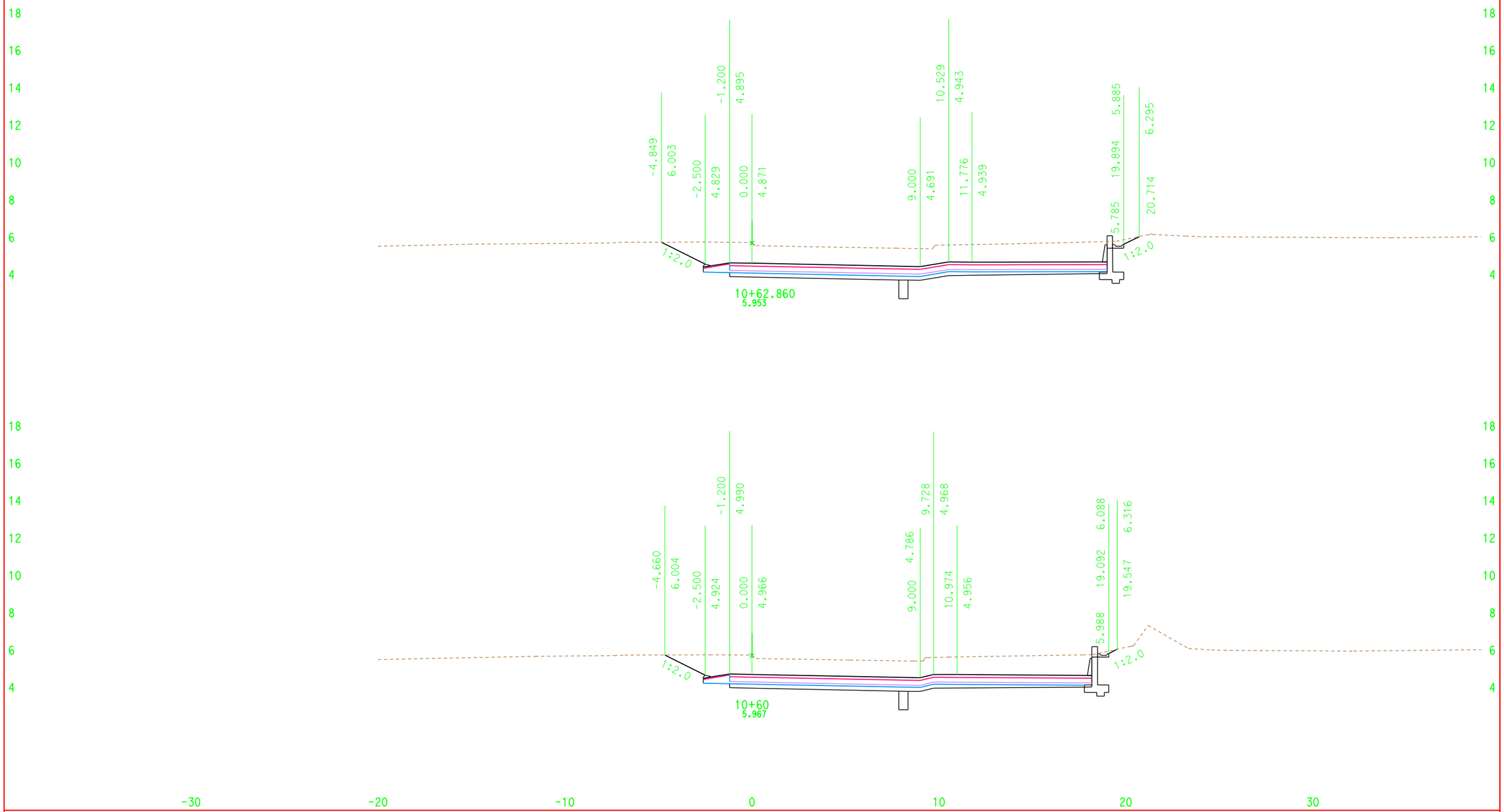

DATE: 6/2/2009

ALL DIMENSIONS ARE IN METERS

Scale Ratio: 1:100 Horiz.
1:100 Vert.

KC Project: 00245 File: D:\highSt\052909\NER_DES_R_1.ear

NER1
CROSS SECTIONS

SHEET 9 OF34

FOR EARTHWORK DEVELOPMENT ONLY

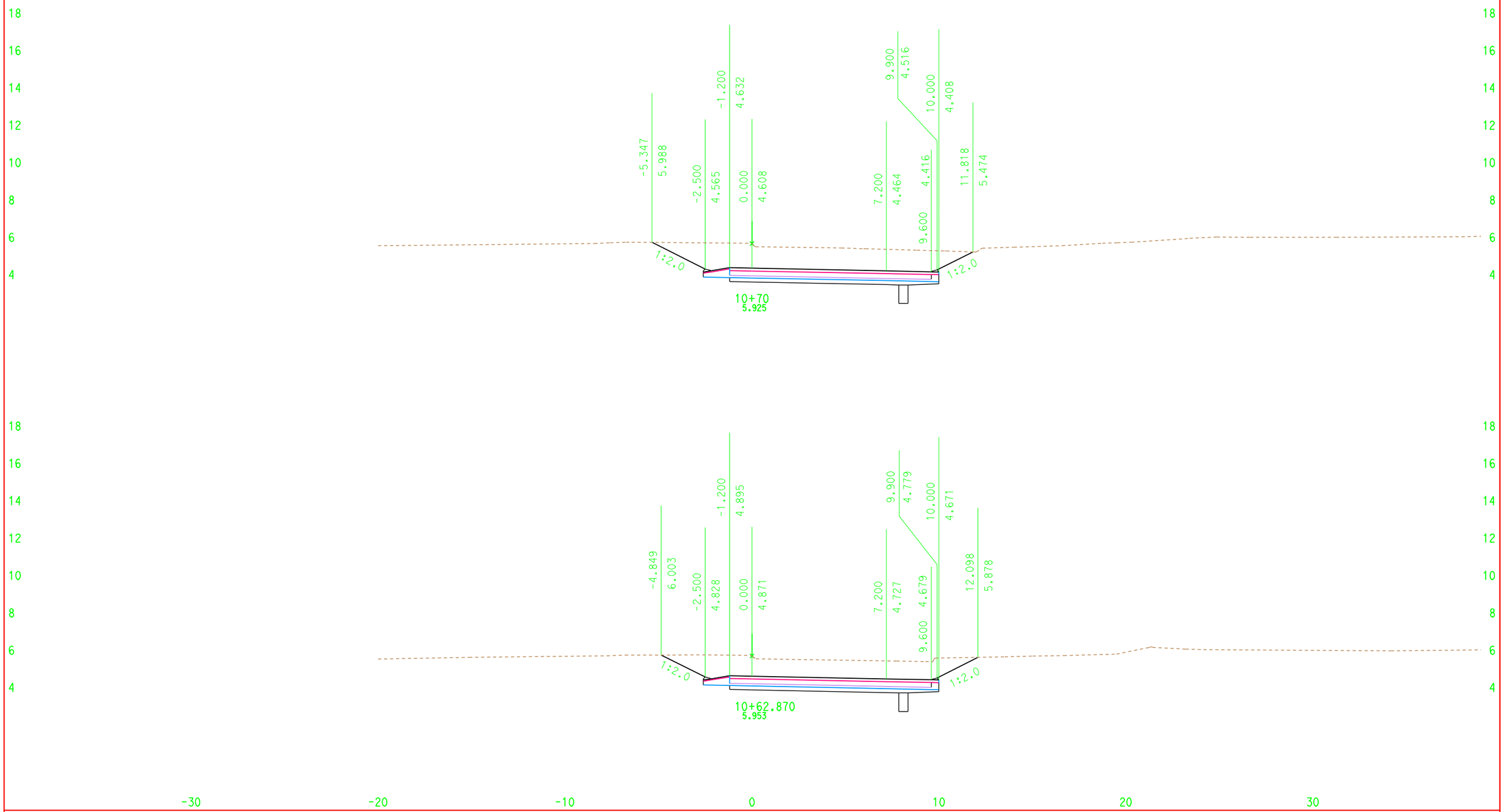

DATE: 6/2/2009

ALL DIMENSIONS ARE IN METERS

Scale Ratio: 1:100 Horiz.
1:100 Vert.

KC Project: 00245 File: D:\highSt\052909\NER_DES_R_1.ear

NER1
CROSS SECTIONS

FOR EARTHWORK DEVELOPMENT ONLY

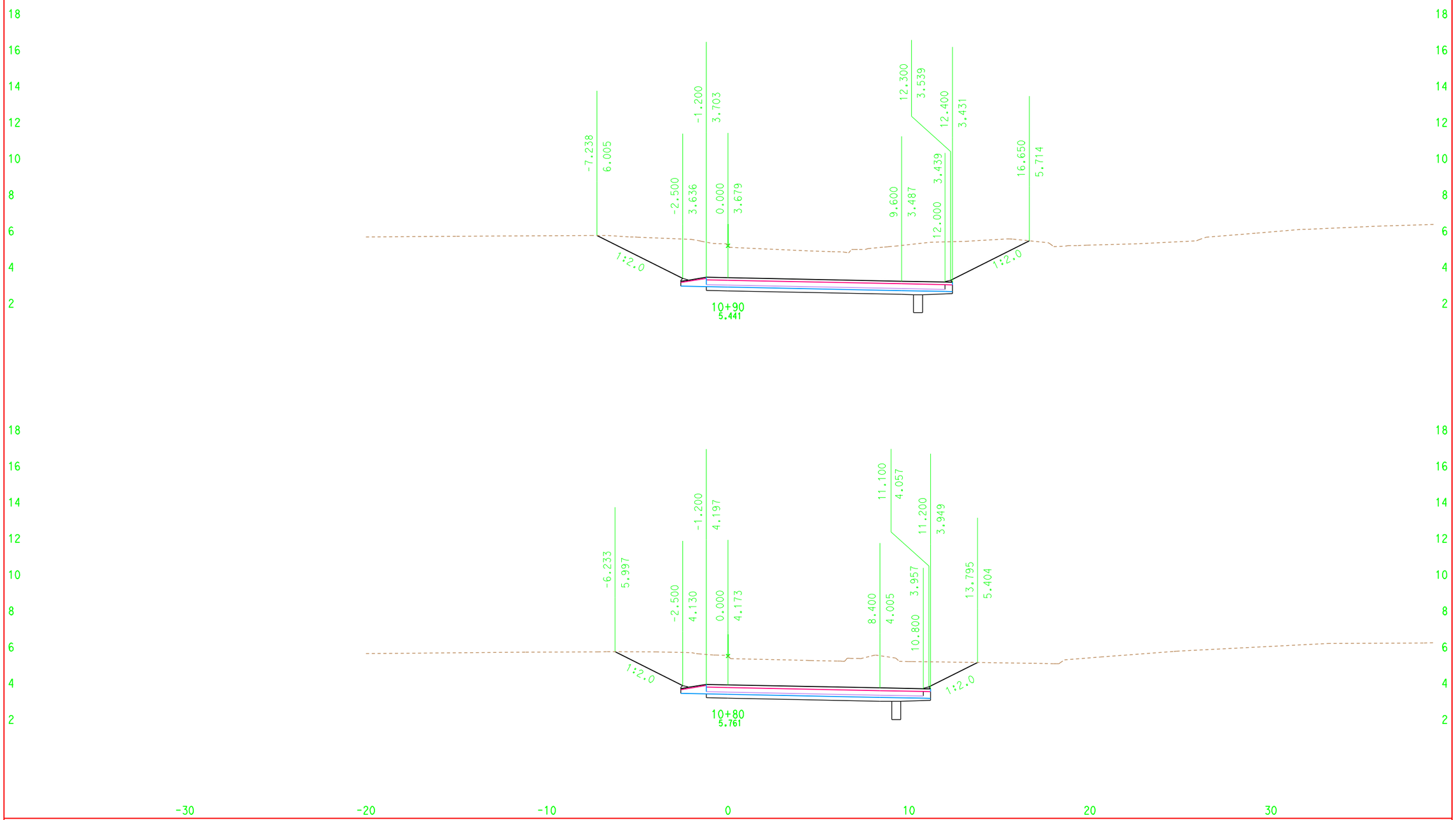

DATE: 6/2/2009

ALL DIMENSIONS ARE IN METERS

Scale Ratio: 1:100 Horiz.
1:100 Vert.

KC Project: 00245 File: D:\highSt\052909\NER_DES_R_1.ear

NER1
CROSS SECTIONS

SHEET 11 OF34

FOR EARTHWORK DEVELOPMENT ONLY

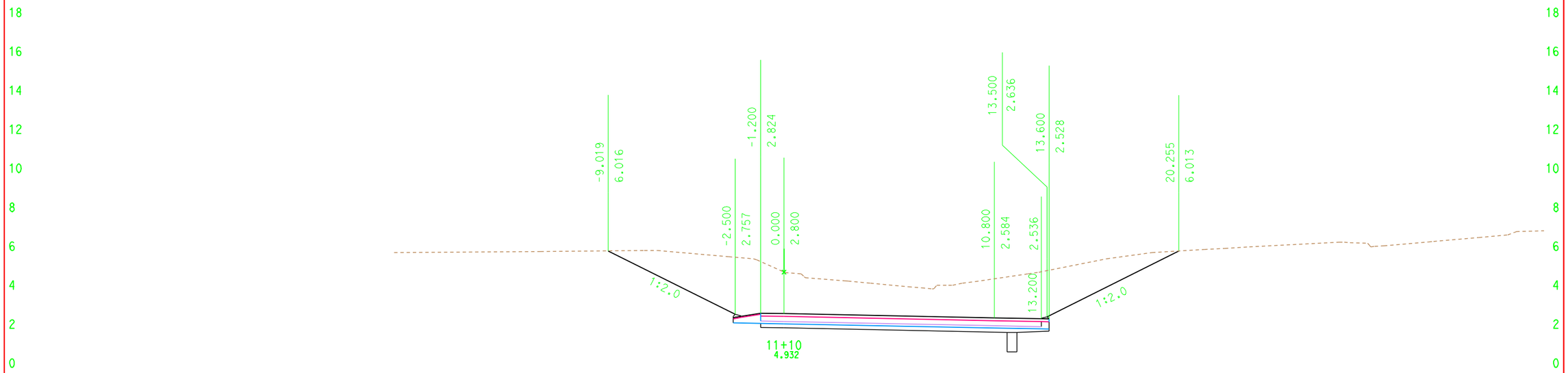

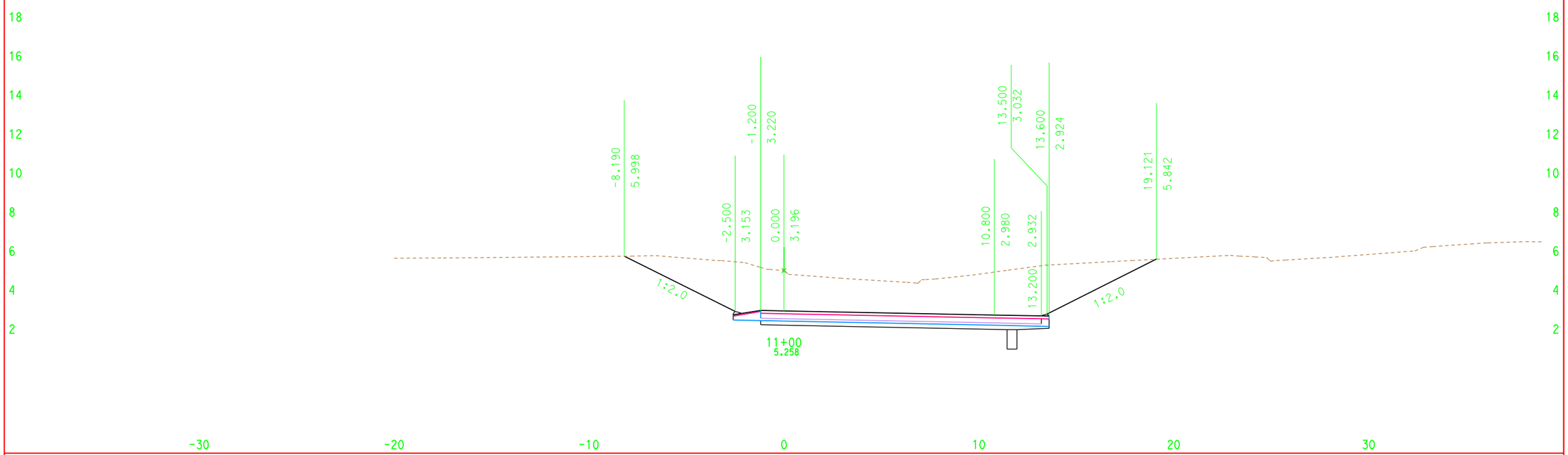

DATE: 6/2/2009

ALL DIMENSIONS ARE IN METERS

Scale Ratio: 1:100 Horiz.
1:100 Vert.

KC Project: 00245 File: D:\highSt\052909\NER_DES_R_1.ear

NER1
CROSS SECTIONS

FOR EARTHWORK DEVELOPMENT ONLY

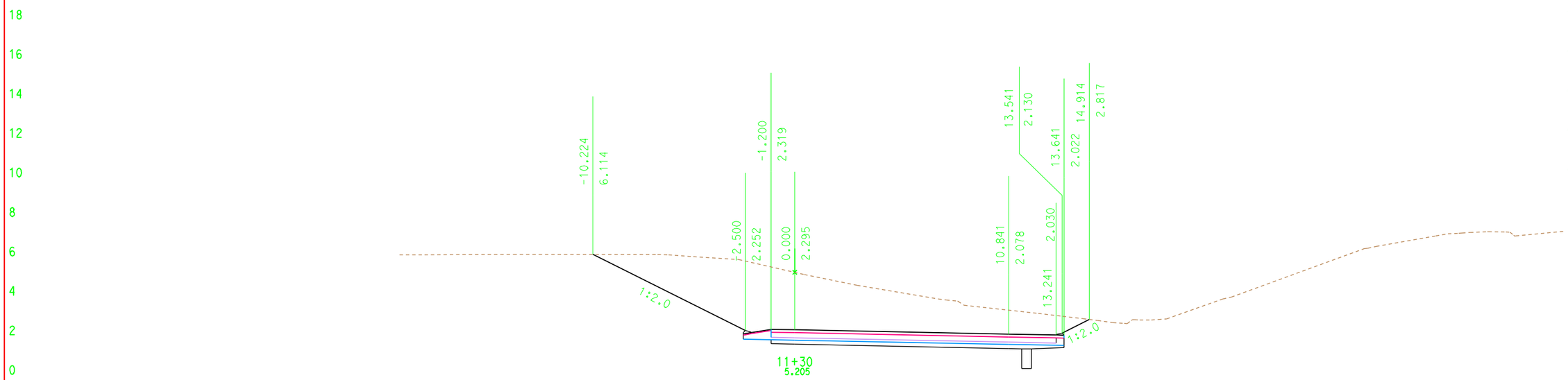

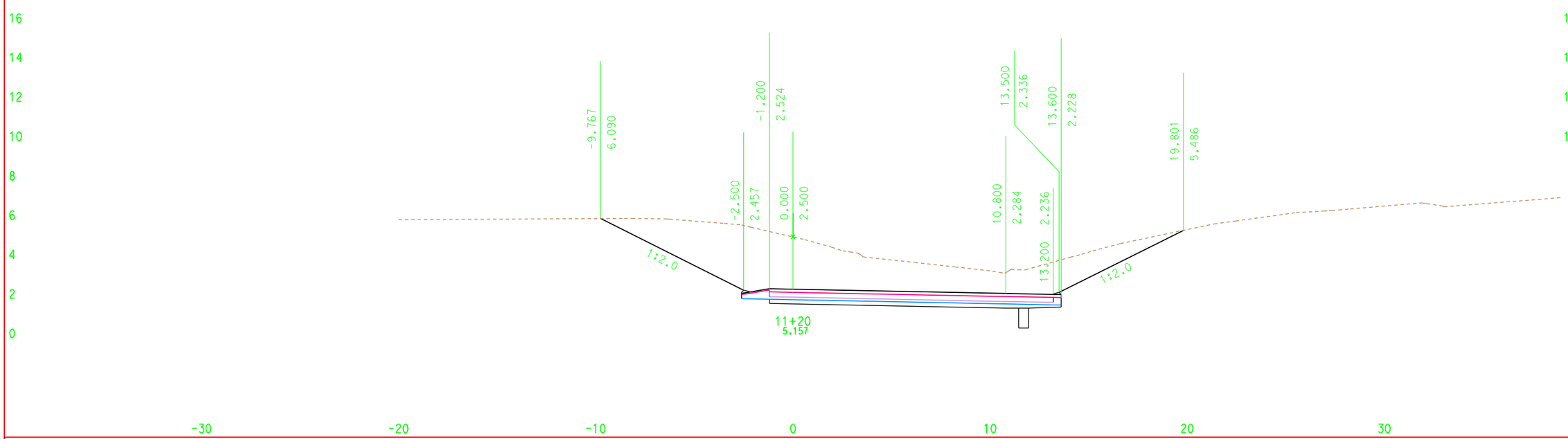

DATE: 6/2/2009

ALL DIMENSIONS ARE IN METERS

Scale Ratio: 1:100 Horiz.
1:100 Vert.

KC Project: 00245 File: D:\highSt\052909\NER_DES_R_1.ear

NER1
CROSS SECTIONS

FOR EARTHWORK DEVELOPMENT ONLY

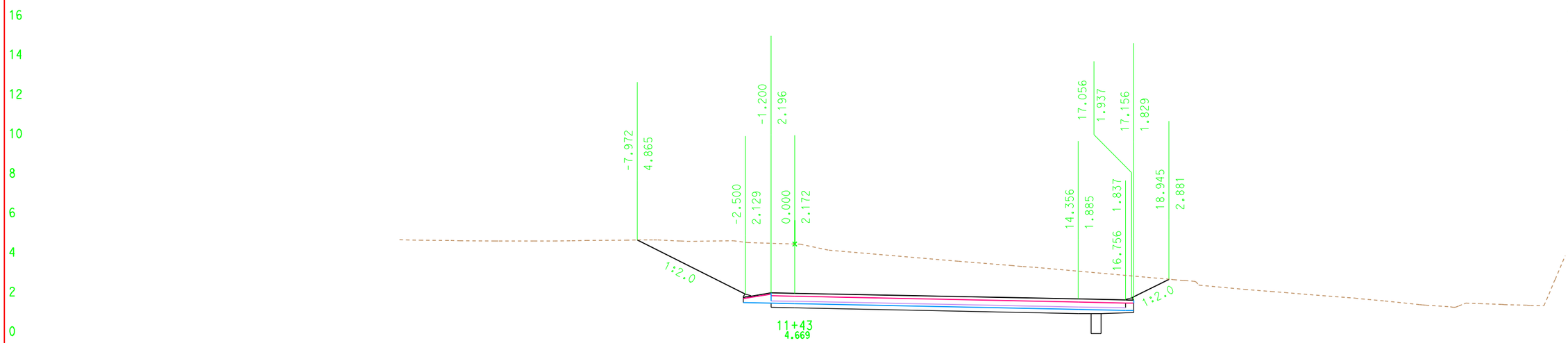

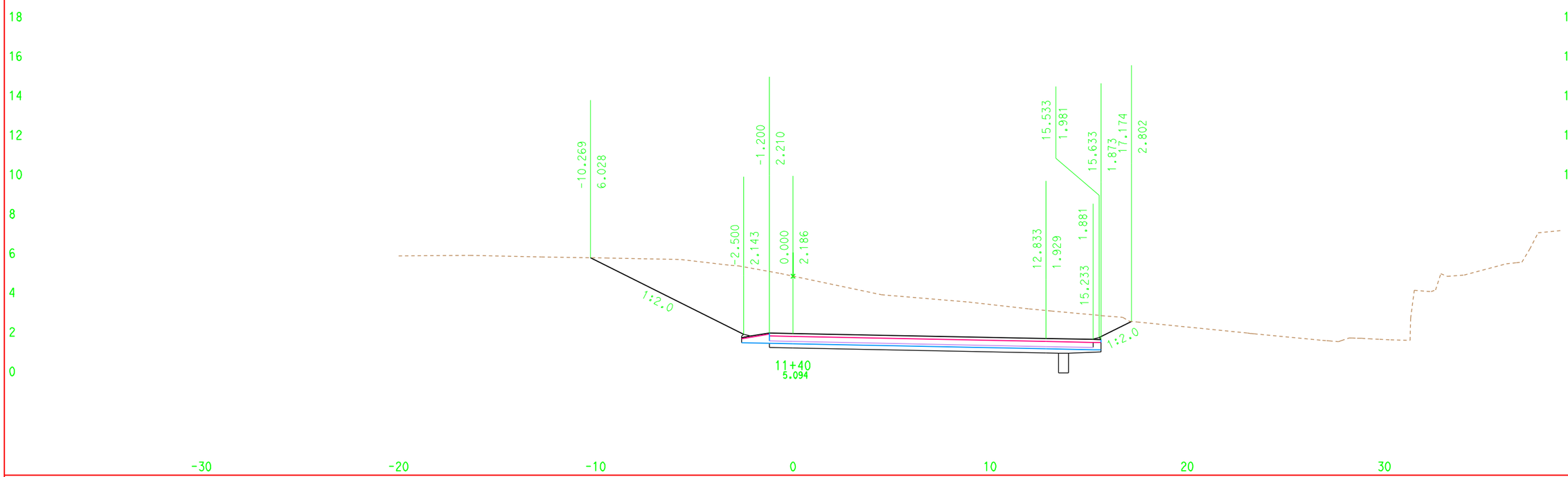

DATE: 6/2/2009

ALL DIMENSIONS ARE IN METERS

Scale Ratio: 1:100 Horiz.
1:100 Vert.

KC Project: 00245 File: D:\highSt\052909\NER_DES_R_1.ear

NER1
CROSS SECTIONS

FOR EARTHWORK DEVELOPMENT ONLY

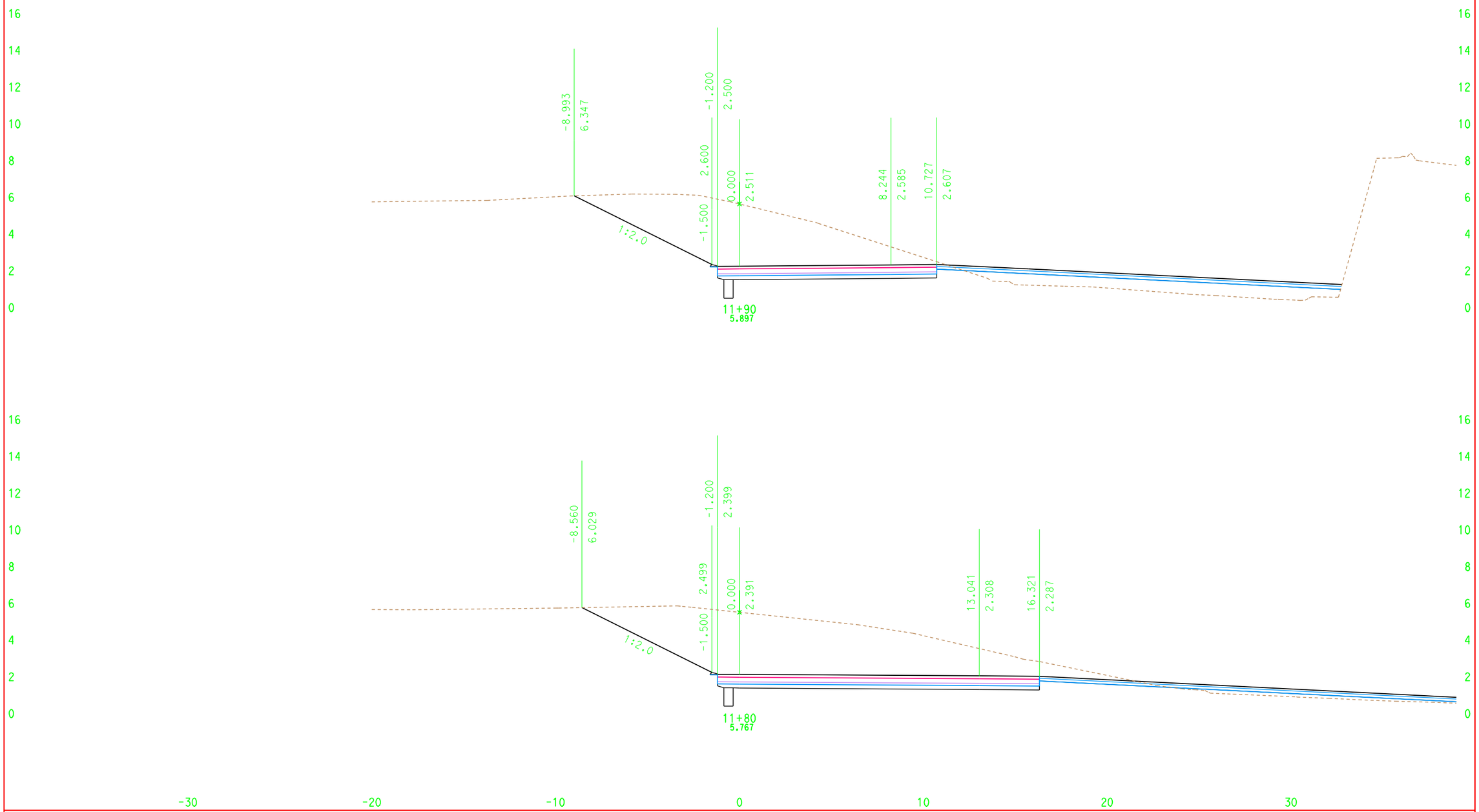

DATE: 6/2/2009

ALL DIMENSIONS ARE IN METERS

Scale Ratio: 1:100 Horiz.
1:100 Vert.

KC Project: 00245 File: D:\highSt\052909\NER_DES_R_1.ear

NER1
CROSS SECTIONS

FOR EARTHWORK DEVELOPMENT ONLY

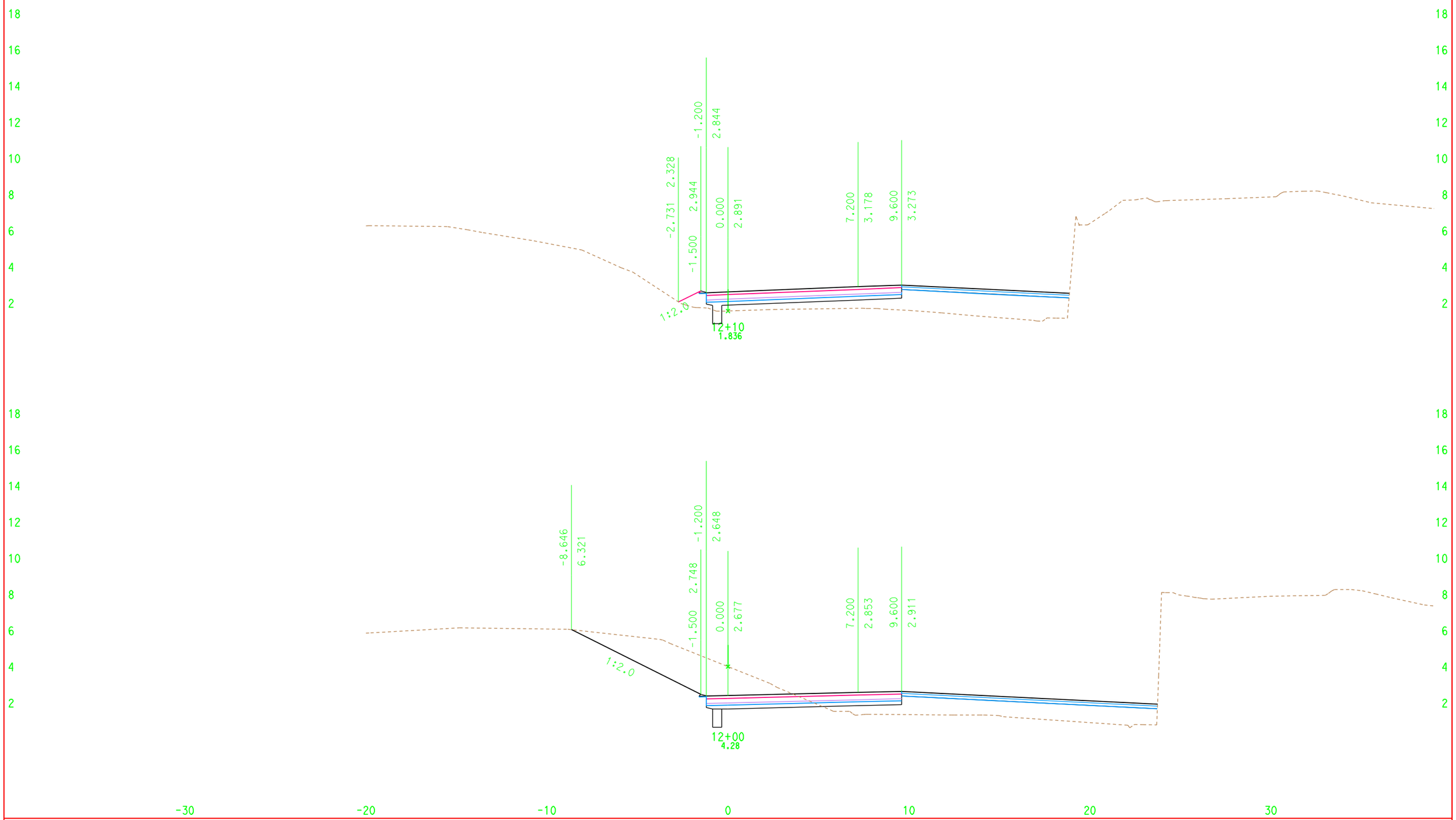

DATE: 6/2/2009

ALL DIMENSIONS ARE IN METERS

Scale Ratio: 1:100 Horiz.
1:100 Vert.

KC Project: 00245 File: D:\highSt\052909\NER_DES_R_1.ear

NER1
CROSS SECTIONS

FOR EARTHWORK DEVELOPMENT ONLY

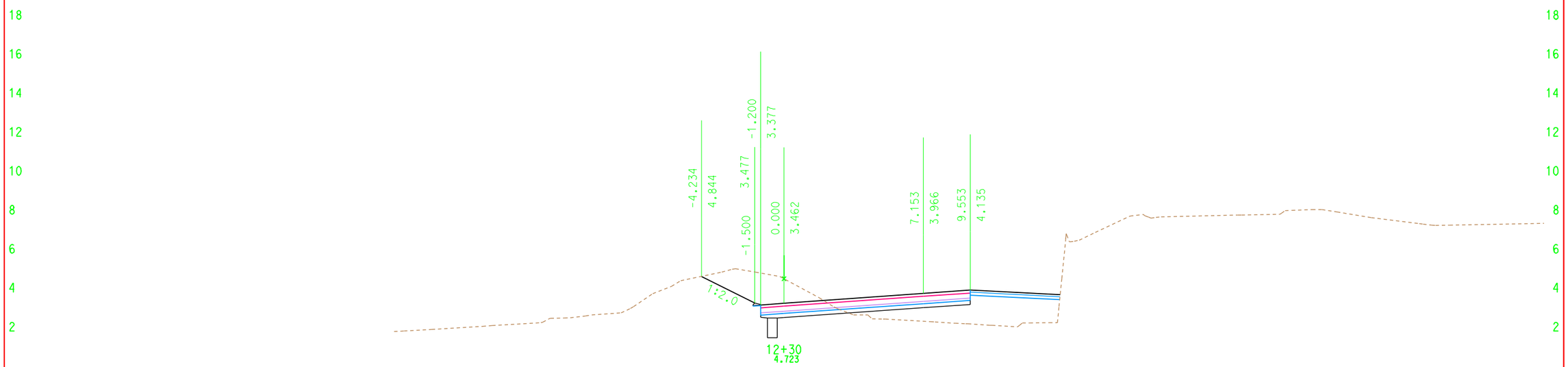

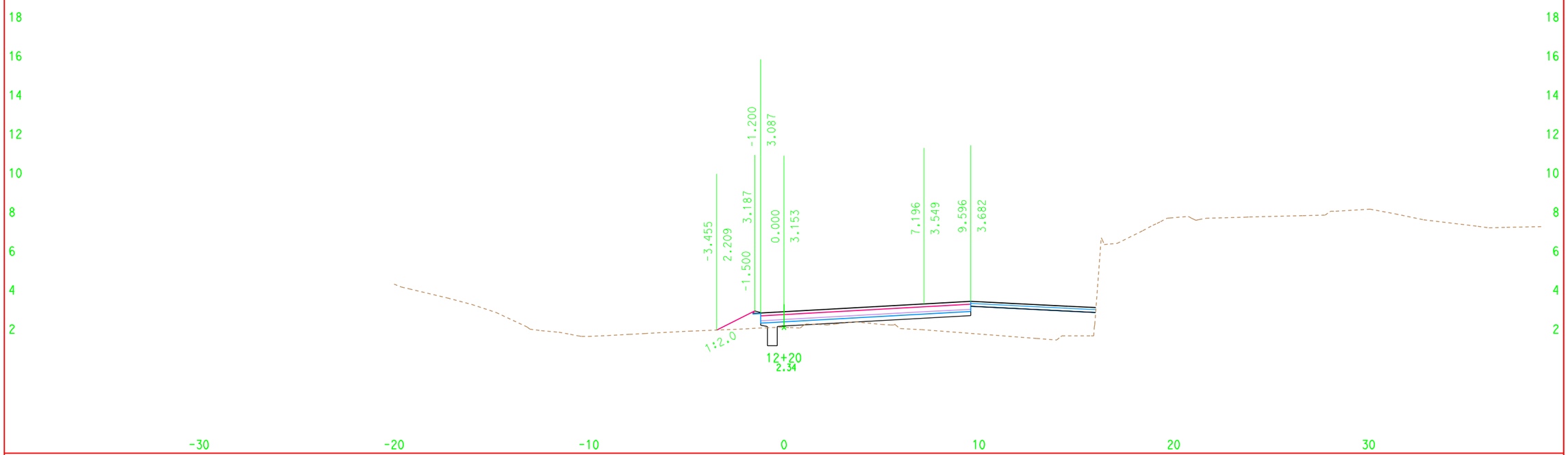

DATE: 6/2/2009

ALL DIMENSIONS ARE IN METERS

Scale Ratio: 1:100 Horiz.
1:100 Vert.

KC Project: 00245 File: D:\highSt\052909\NER_DES_R_1.ear

NER1
CROSS SECTIONS

FOR EARTHWORK DEVELOPMENT ONLY

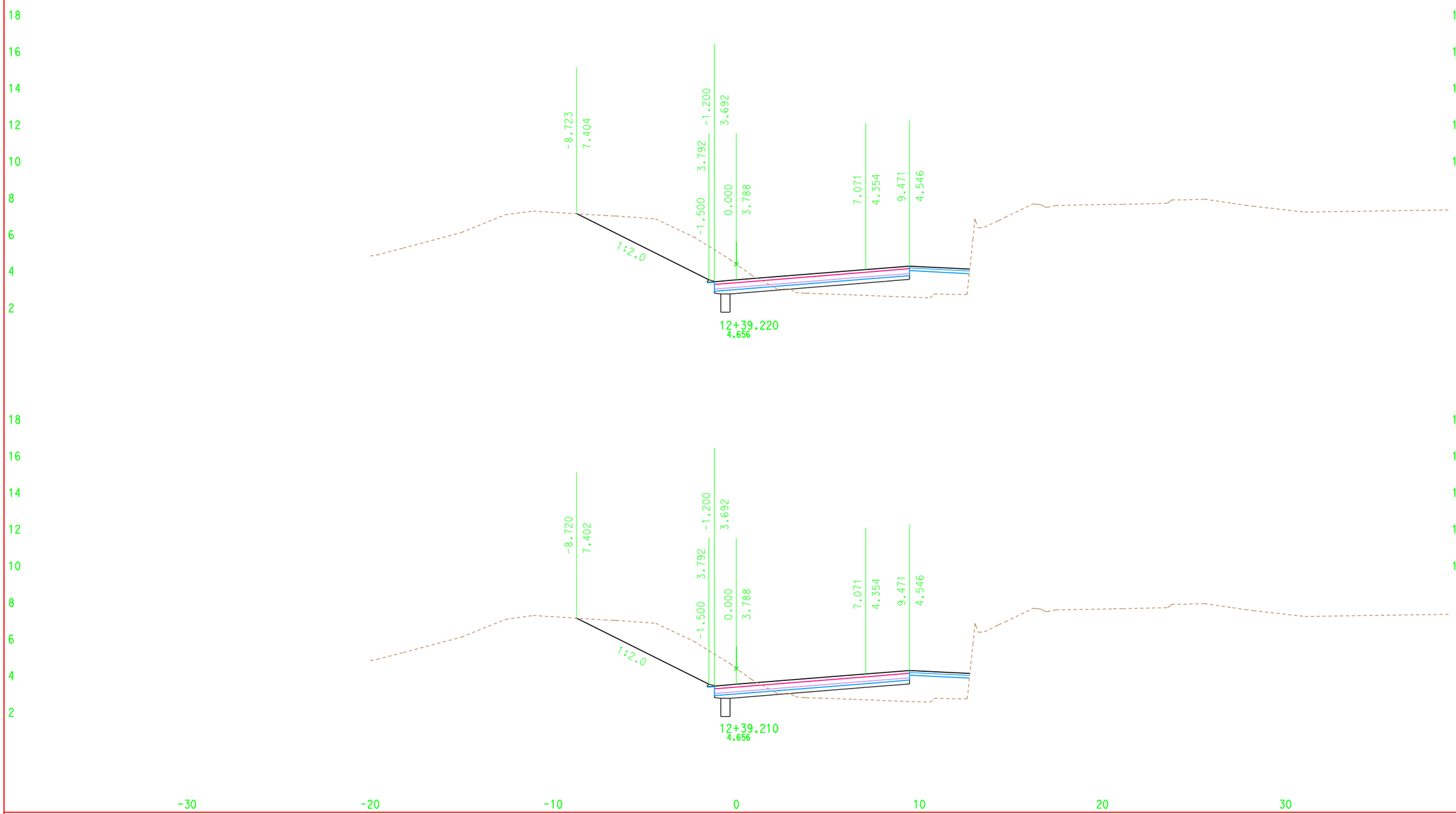

DATE: 6/2/2009

ALL DIMENSIONS ARE IN METERS

Scale Ratio: 1:100 Horiz.
1:100 Vert.

KC Project: 00245 File: D:\highSt\052909\NER_DES_R_1.ear

NER1
CROSS SECTIONS

FOR EARTHWORK DEVELOPMENT ONLY

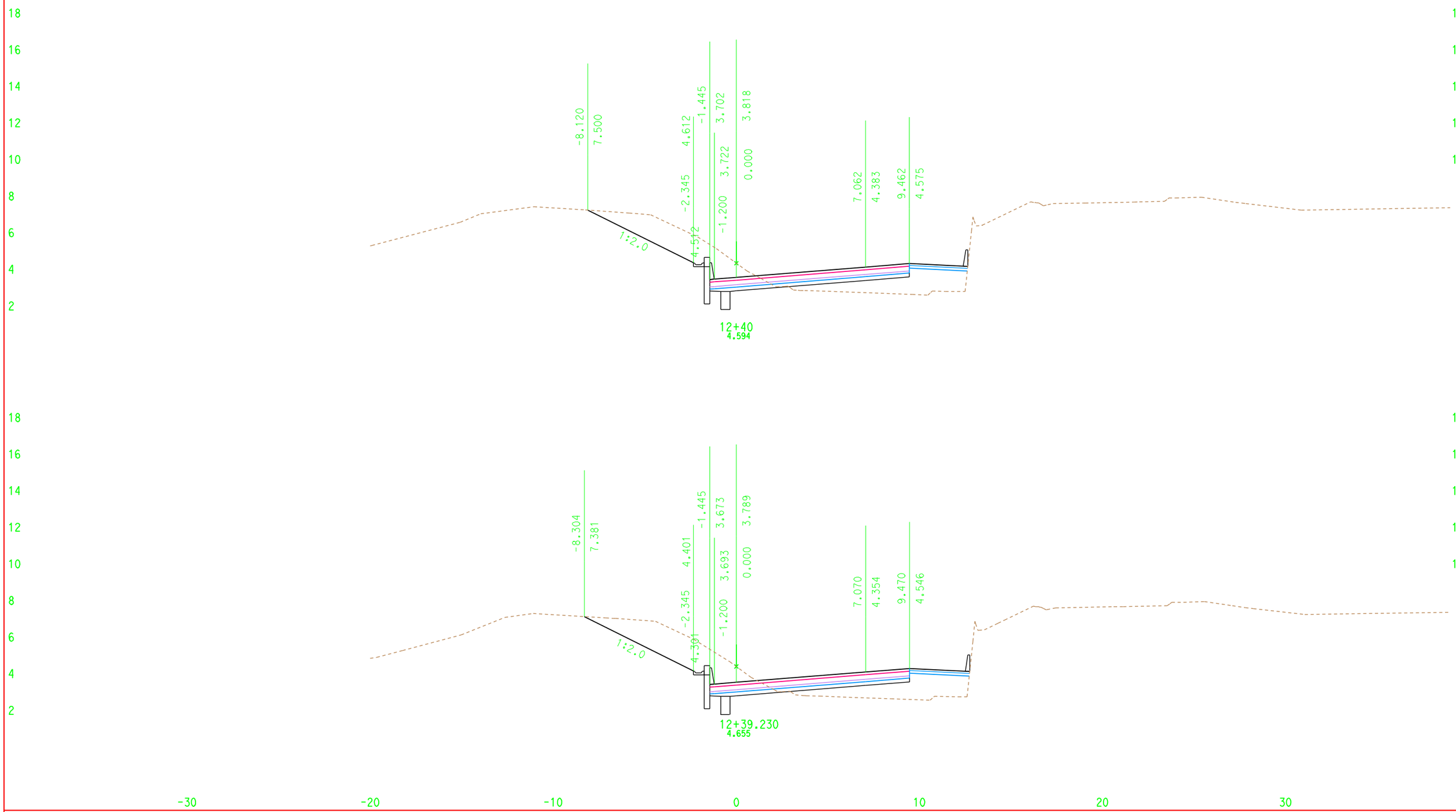

DATE: 6/2/2009

ALL DIMENSIONS ARE IN METERS

Scale Ratio: 1:100 Horiz.
1:100 Vert.

KC Project: 00245 File: D:\highSt\052909\NER_DES_R_1.ear

NER1
CROSS SECTIONS

FOR EARTHWORK DEVELOPMENT ONLY

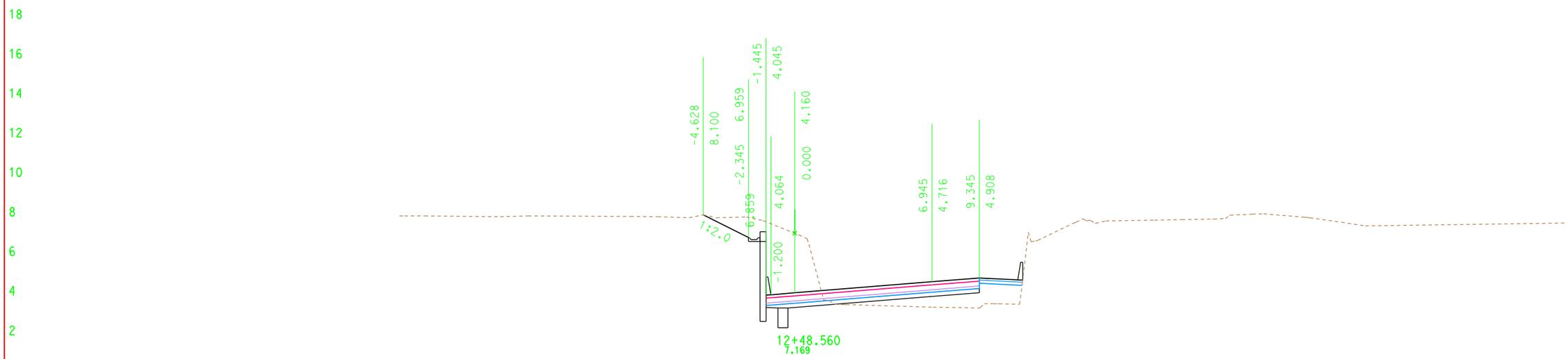

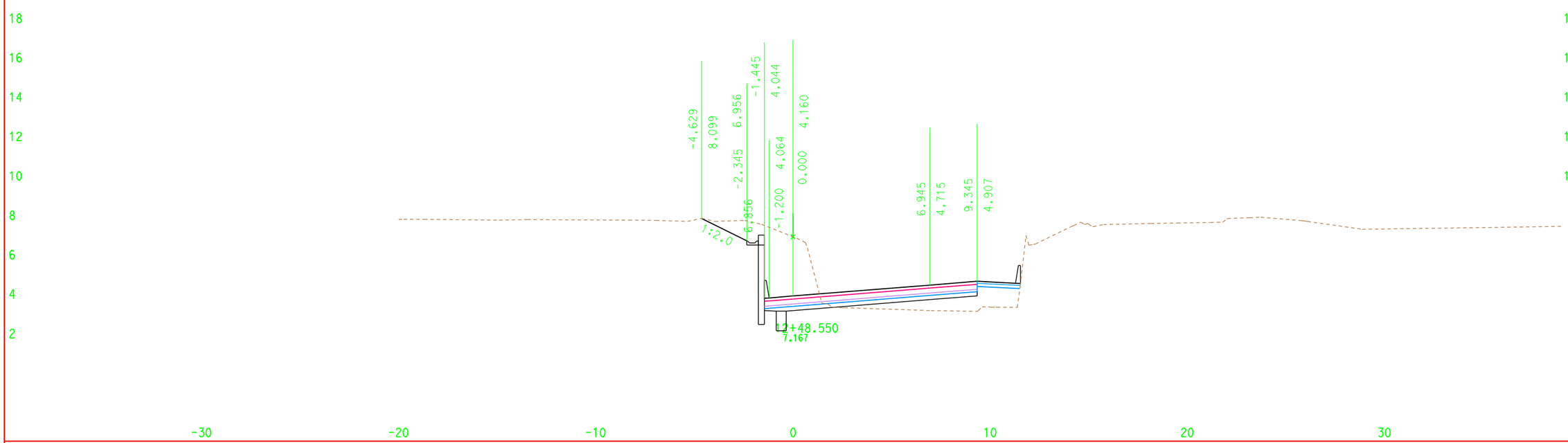

DATE: 6/2/2009

ALL DIMENSIONS ARE IN METERS

Scale Ratio: 1:100 Horiz.
1:100 Vert.

KC Project: 00245 File: D:\highSt\052909\NER_DES_R_1.ear

NER1
CROSS SECTIONS

FOR EARTHWORK DEVELOPMENT ONLY

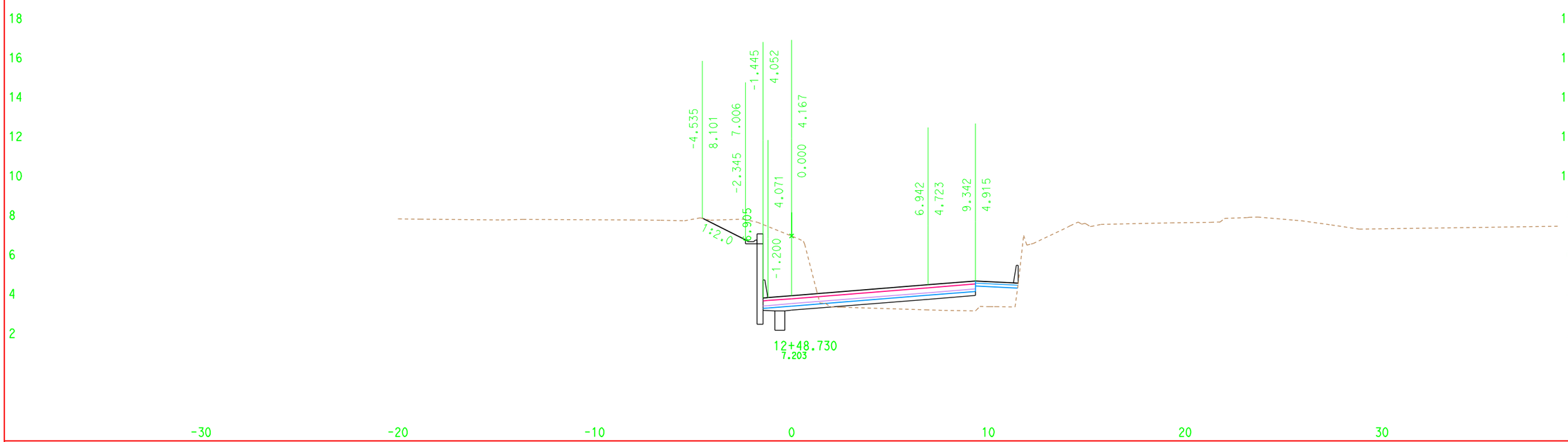

DATE: 6/2/2009

ALL DIMENSIONS ARE IN METERS

Scale Ratio: 1:100 Horiz.
1:100 Vert.

KC Project: 00245 File: D:\highSt\052909\NER_DES_R_1.ear

NER1
CROSS SECTIONS

FOR EARTHWORK DEVELOPMENT ONLY

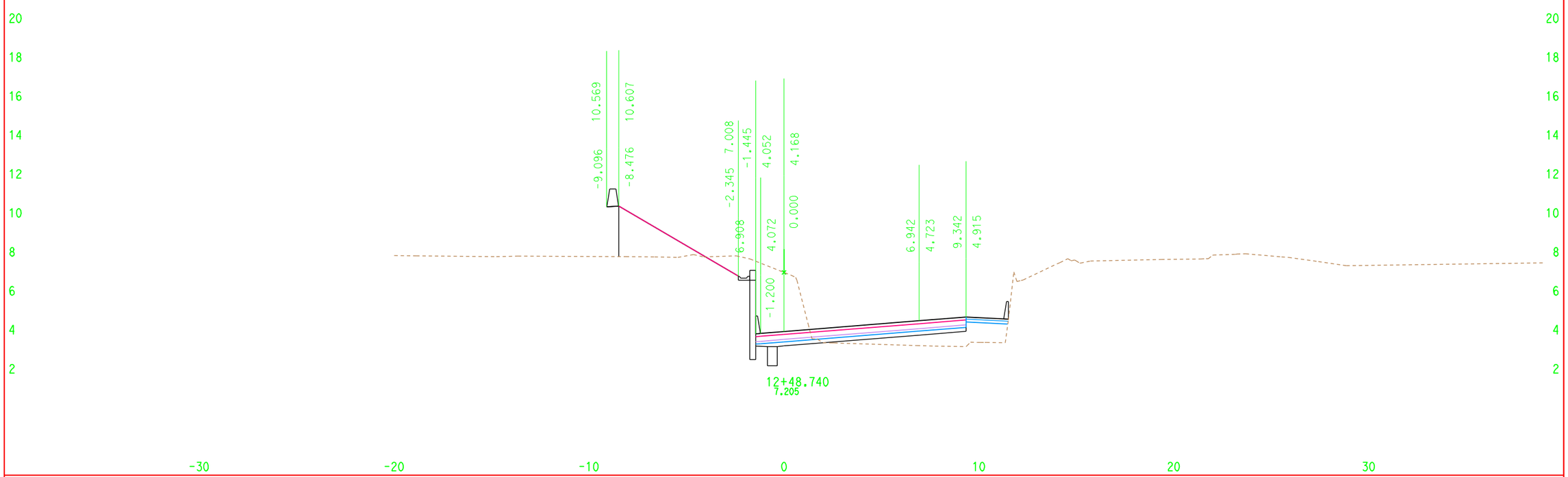

DATE: 6/2/2009

ALL DIMENSIONS ARE IN METERS

Scale Ratio: 1:100 Horiz.
1:100 Vert.

KC Project: 00245 File: D:\highSt\052909\NER_DES_R_1.ear

NER1
CROSS SECTIONS

FOR EARTHWORK DEVELOPMENT ONLY

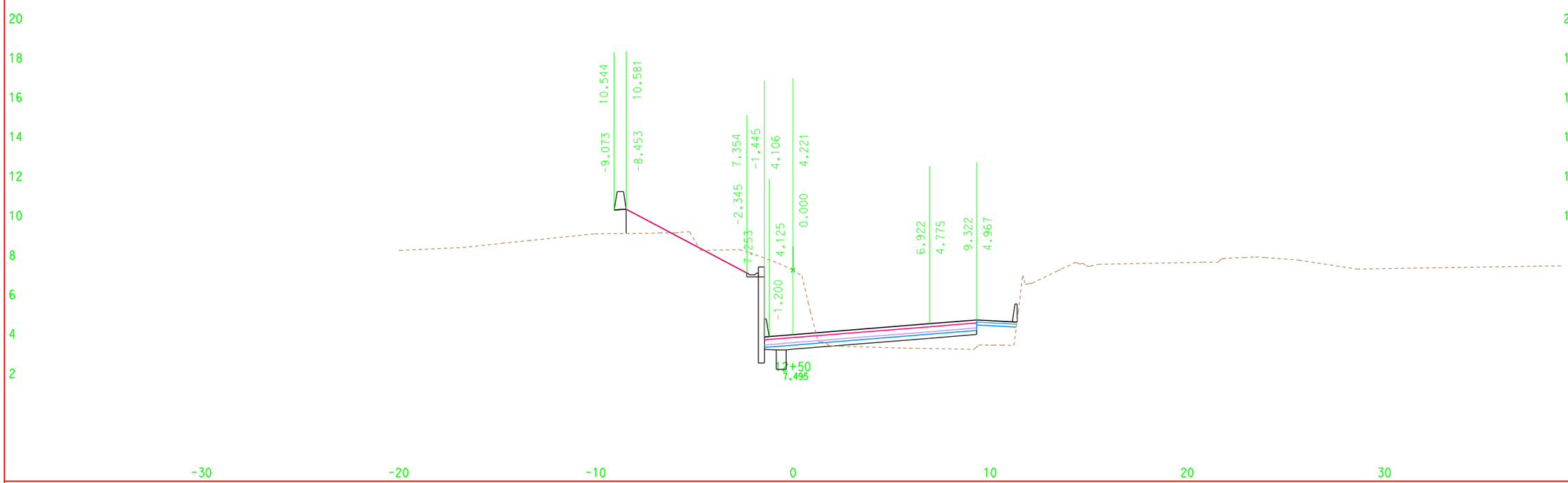

DATE: 6/2/2009

ALL DIMENSIONS ARE IN METERS

Scale Ratio: 1:100 Horiz.
1:100 Vert.

KC Project: 00245 File: D:\highSt\052909\NER_DES_R_1.ear

NER1
CROSS SECTIONS

FOR EARTHWORK DEVELOPMENT ONLY

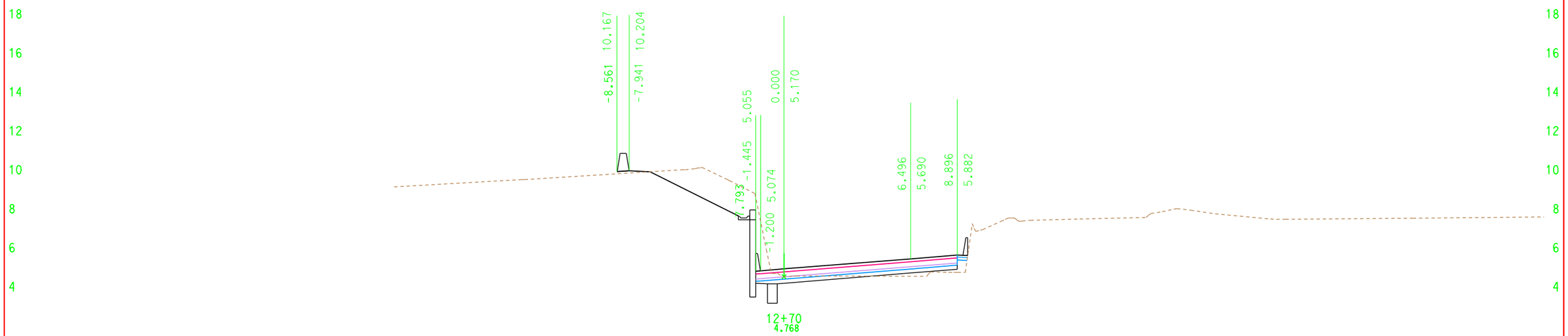

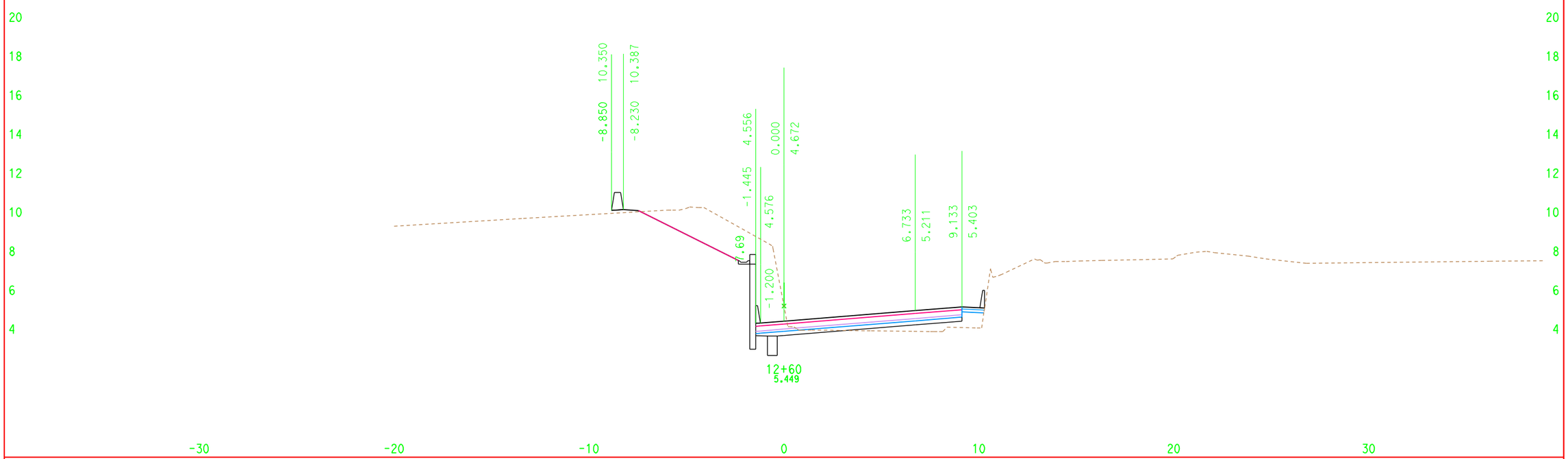

DATE: 6/2/2009

ALL DIMENSIONS ARE IN METERS

Scale Ratio: 1:100 Horiz.
1:100 Vert.

KC Project: 00245 File: D:\highSt\052909\NER_DES_R_1.ear

NER1
CROSS SECTIONS

FOR EARTHWORK DEVELOPMENT ONLY

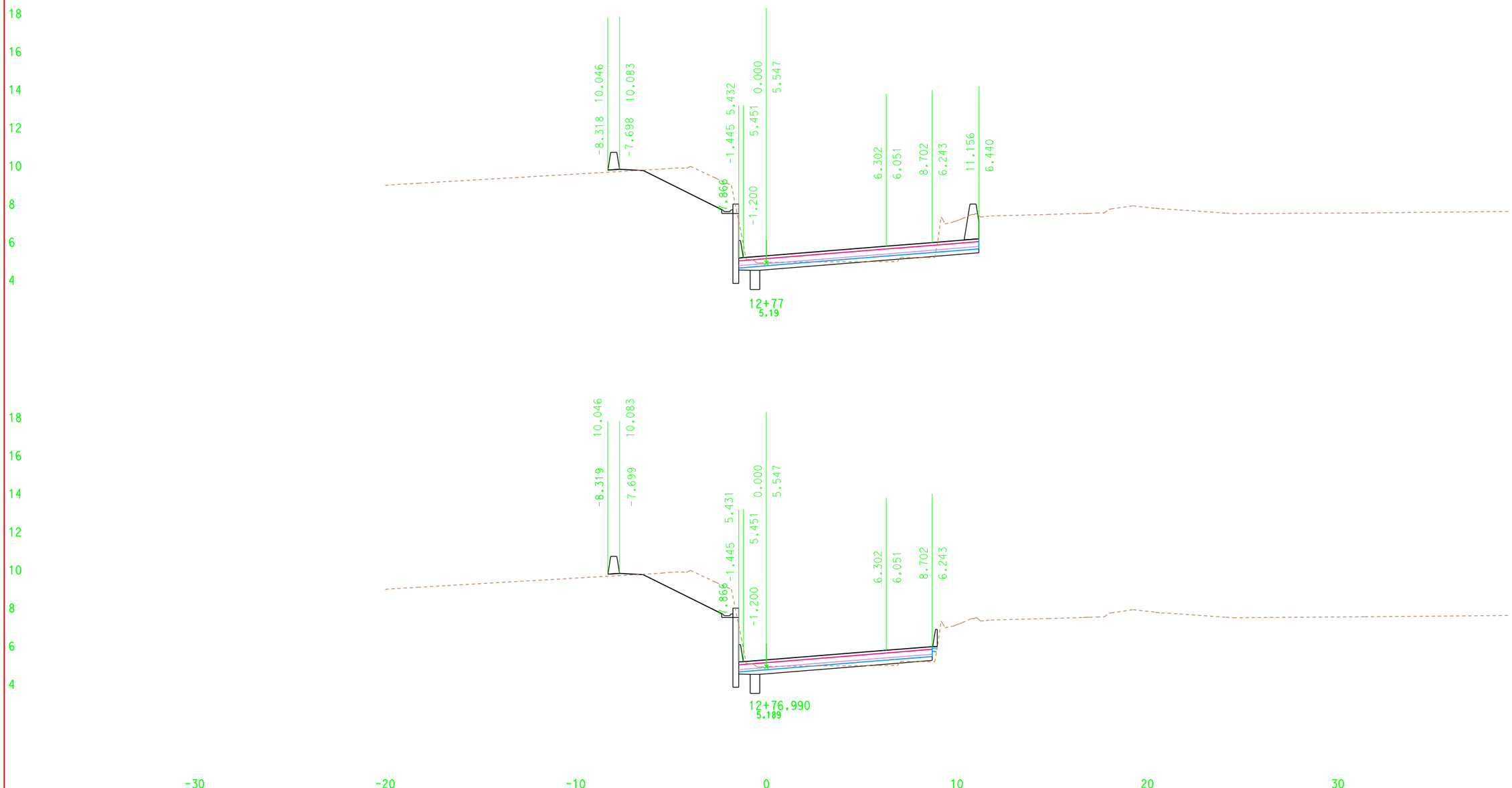

DATE: 6/2/2009

ALL DIMENSIONS ARE IN METERS

Scale Ratio: 1:100 Horiz.
1:100 Vert.

KC Project: 00245 File: D:\highSt\052909\NER_DES_R_1.ear

NER1
CROSS SECTIONS

FOR EARTHWORK DEVELOPMENT ONLY

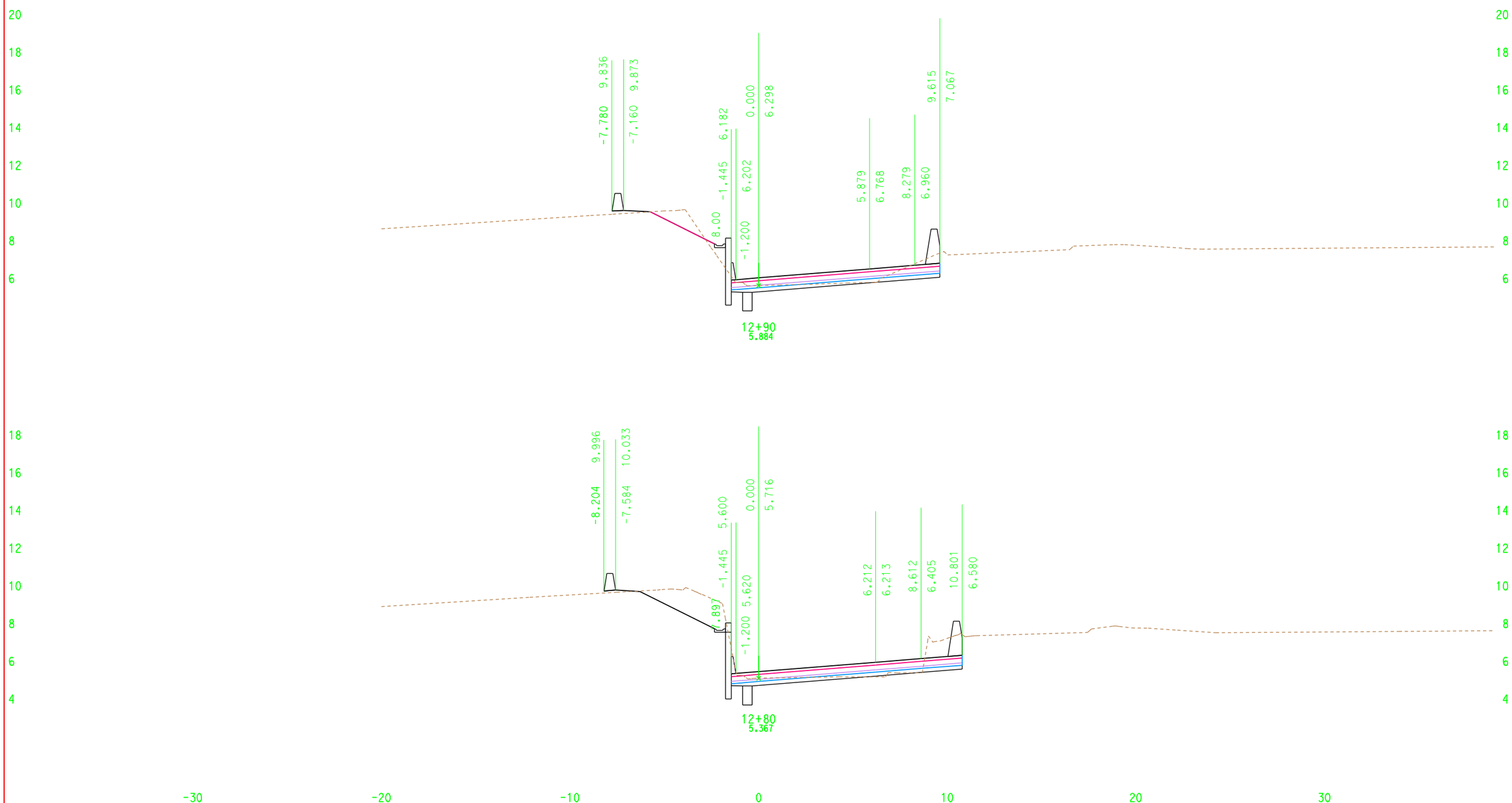

DATE: 6/2/2009

ALL DIMENSIONS ARE IN METERS

Scale Ratio: 1:100 Horiz.
1:100 Vert.

KC Project: 00245 File: D:\highSt\052909\NER_DES_R_1.ear

NER1
CROSS SECTIONS

SHEET 26 OF34

FOR EARTHWORK DEVELOPMENT ONLY

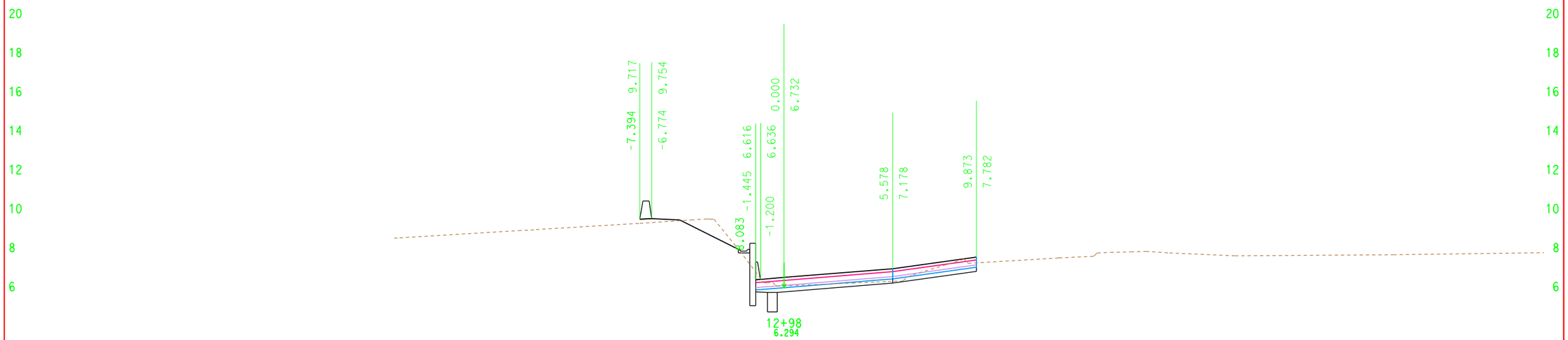

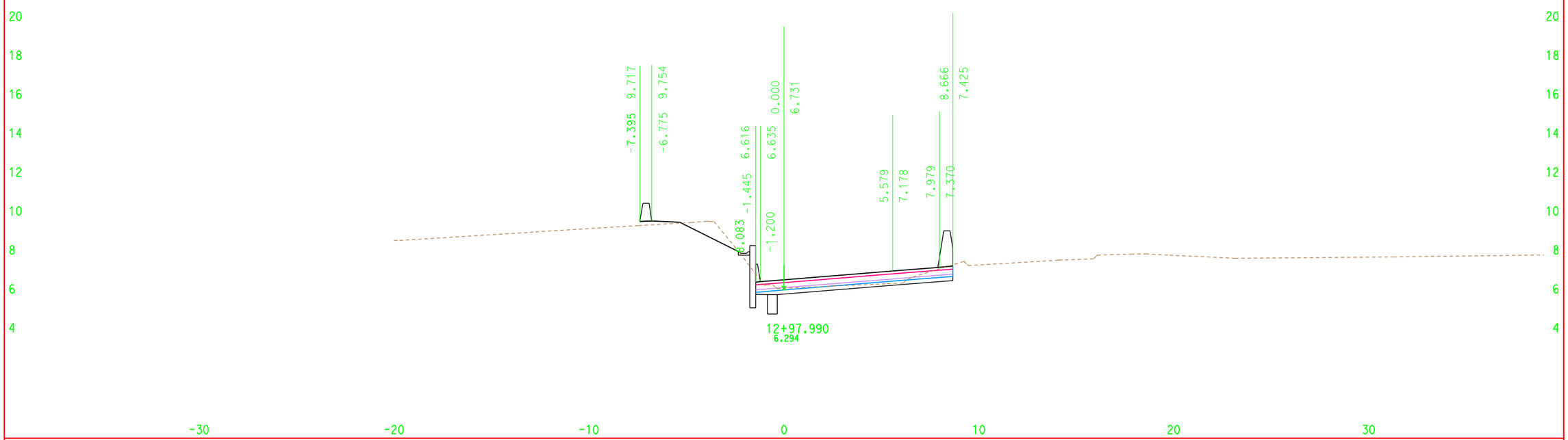

DATE: 6/2/2009

ALL DIMENSIONS ARE IN METERS

Scale Ratio: 1:100 Horiz.
1:100 Vert.

KC Project: 00245 File: D:\highSt\052909\NER_DES_R_1.ear

NER1
CROSS SECTIONS

FOR EARTHWORK DEVELOPMENT ONLY

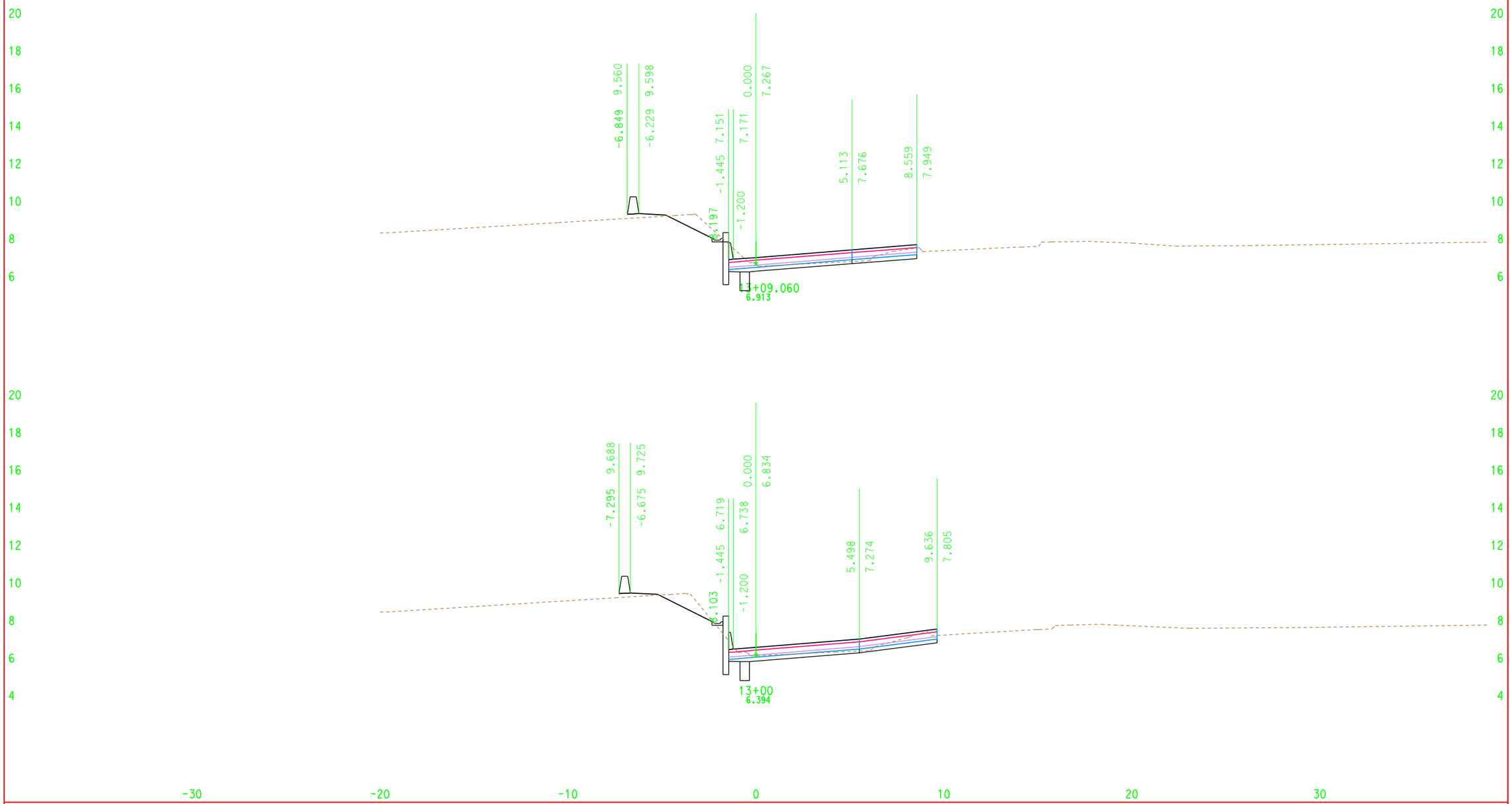

DATE: 6/2/2009

ALL DIMENSIONS ARE IN METERS

Scale Ratio: 1:100 Horiz.
1:100 Vert.

KC Project: 00245 File: D:\highSt\052909\NER_DES_R_1.ear

NER1
CROSS SECTIONS

FOR EARTHWORK DEVELOPMENT ONLY

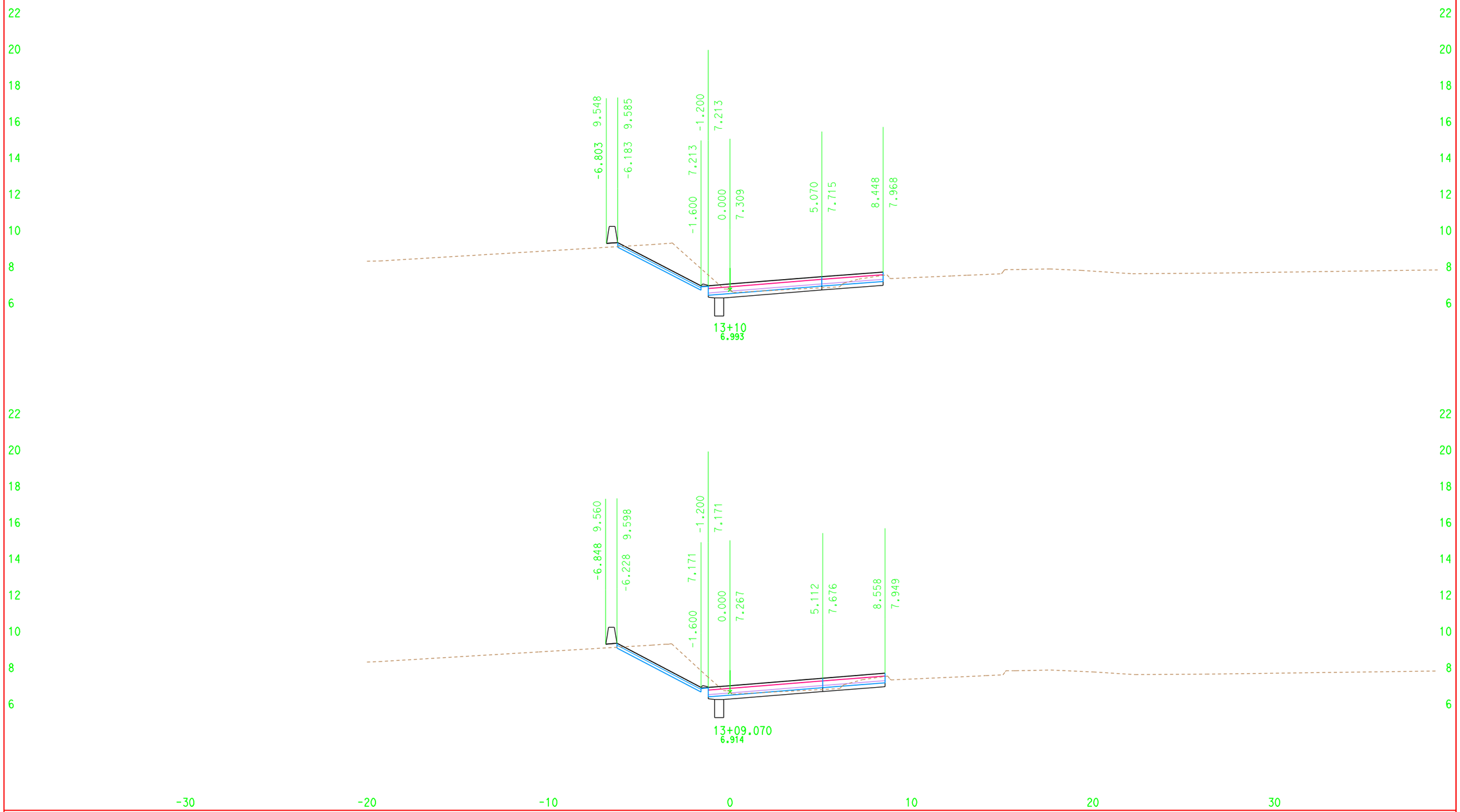

DATE: 6/2/2009

ALL DIMENSIONS ARE IN METERS

Scale Ratio: 1:100 Horiz.
1:100 Vert.

KC Project: 00245 File: D:\highSt\052909\NER_DES_R_1.ear

NER1
CROSS SECTIONS

SHEET 29 OF34

FOR EARTHWORK DEVELOPMENT ONLY

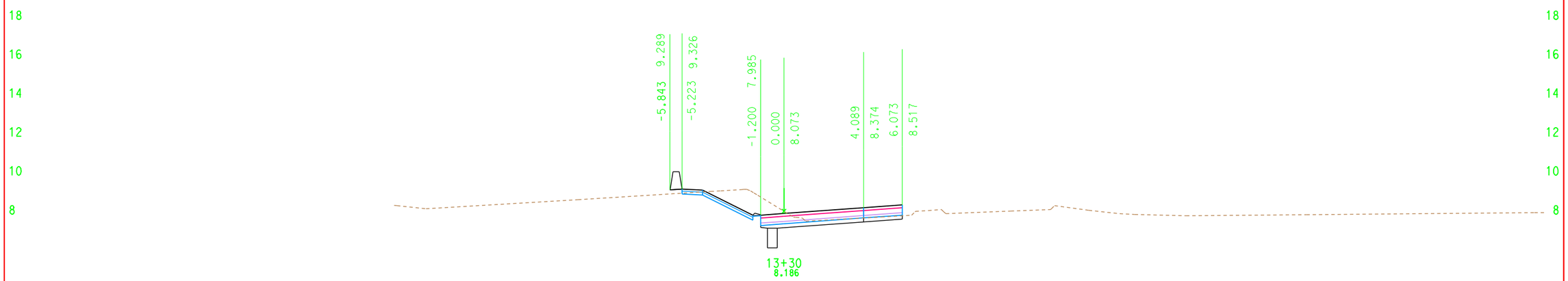

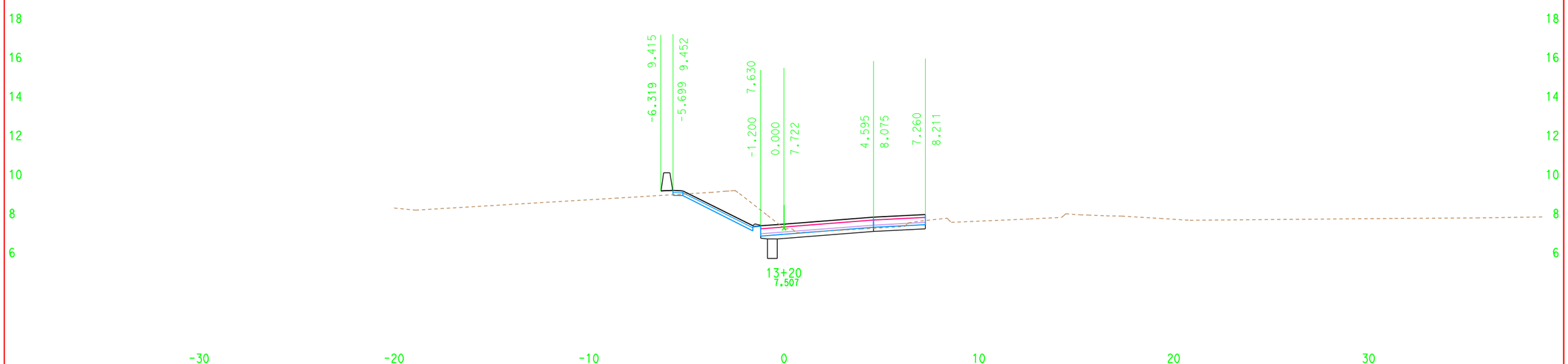

DATE: 6/2/2009

ALL DIMENSIONS ARE IN METERS

Scale Ratio: 1:100 Horiz.
1:100 Vert.

KC Project: 00245 File: D:\highSt\052909\NER_DES_R_1.ear

NER1
CROSS SECTIONS

FOR EARTHWORK DEVELOPMENT ONLY

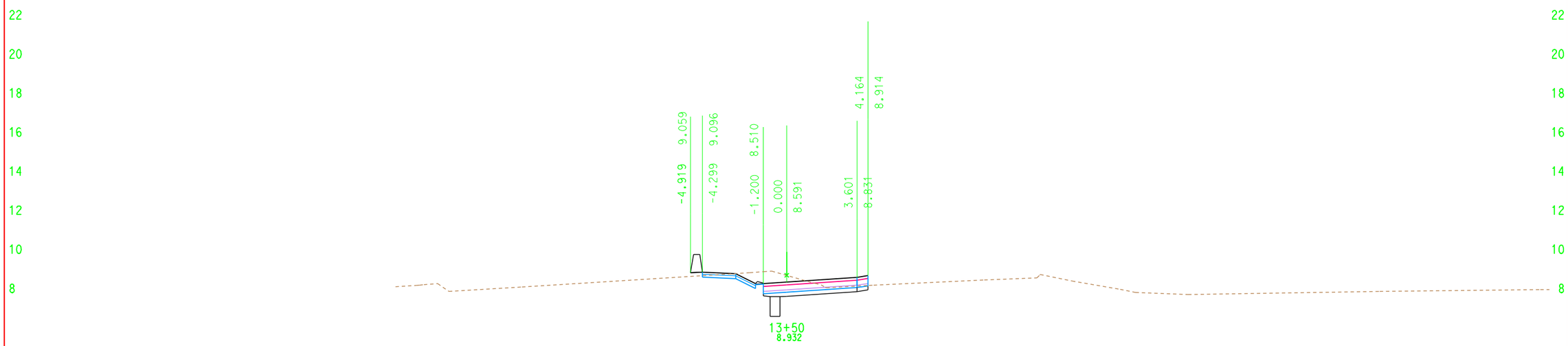

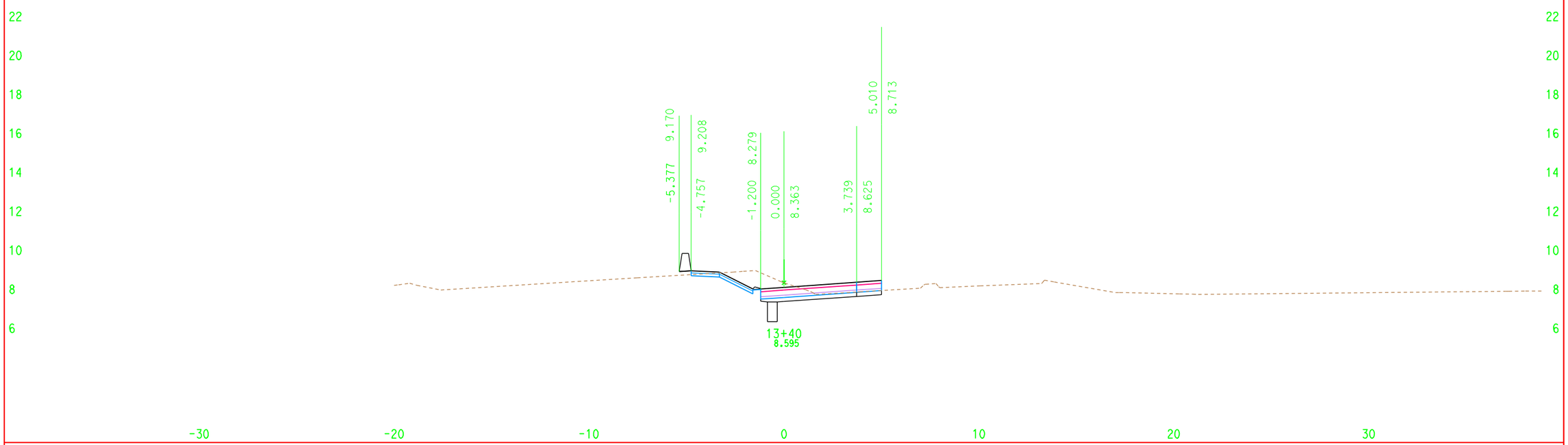

DATE: 6/2/2009

ALL DIMENSIONS ARE IN METERS

Scale Ratio: 1:100 Horiz.
1:100 Vert.

KC Project: 00245 File: D:\highSt\052909\NER_DES_R_1.ear

NER1
CROSS SECTIONS

FOR EARTHWORK DEVELOPMENT ONLY

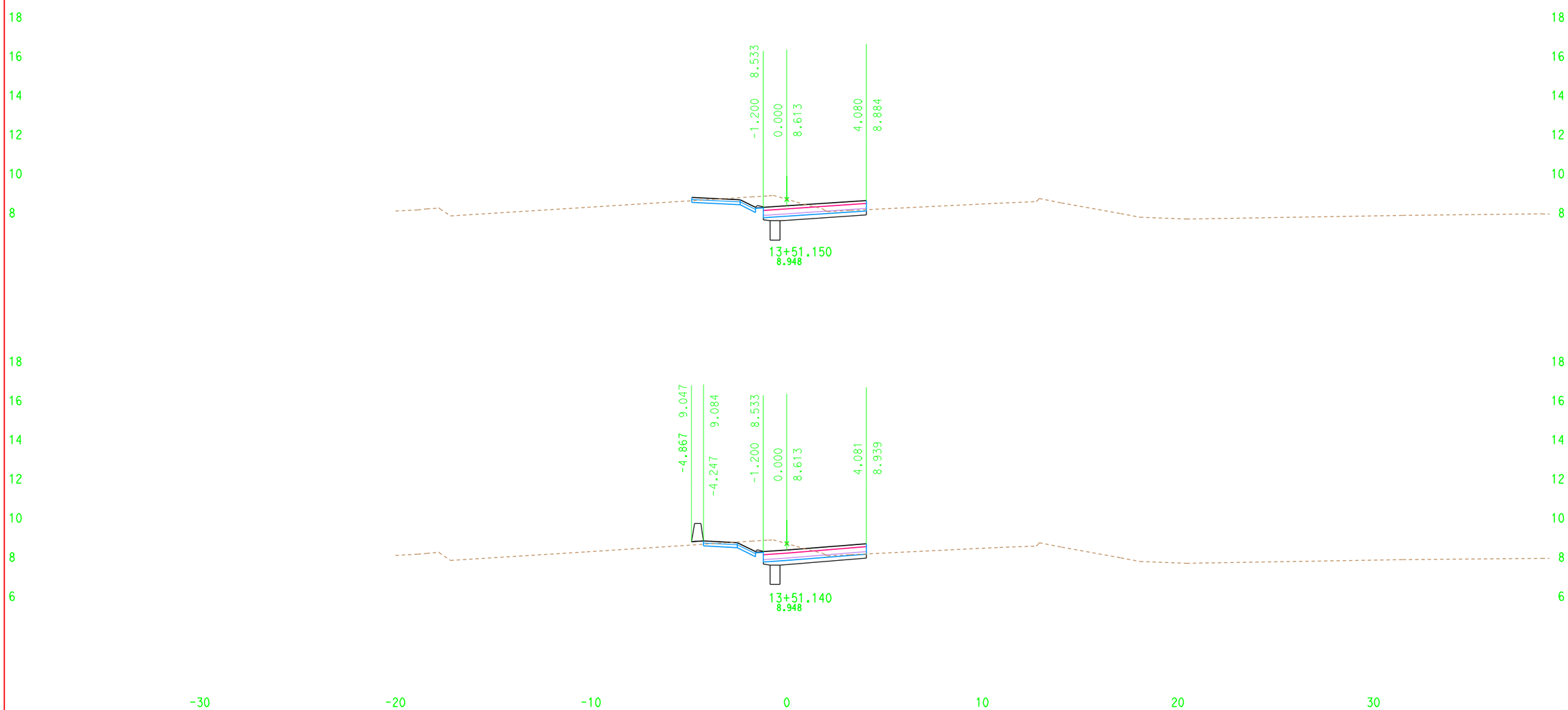

DATE: 6/2/2009

ALL DIMENSIONS ARE IN METERS

Scale Ratio: 1:100 Horiz.
1:100 Vert.

KC Project: 00245 File: D:\highSt\052909\NER_DES_R_1.ear

NER1
CROSS SECTIONS

SHEET 32 OF34

FOR EARTHWORK DEVELOPMENT ONLY

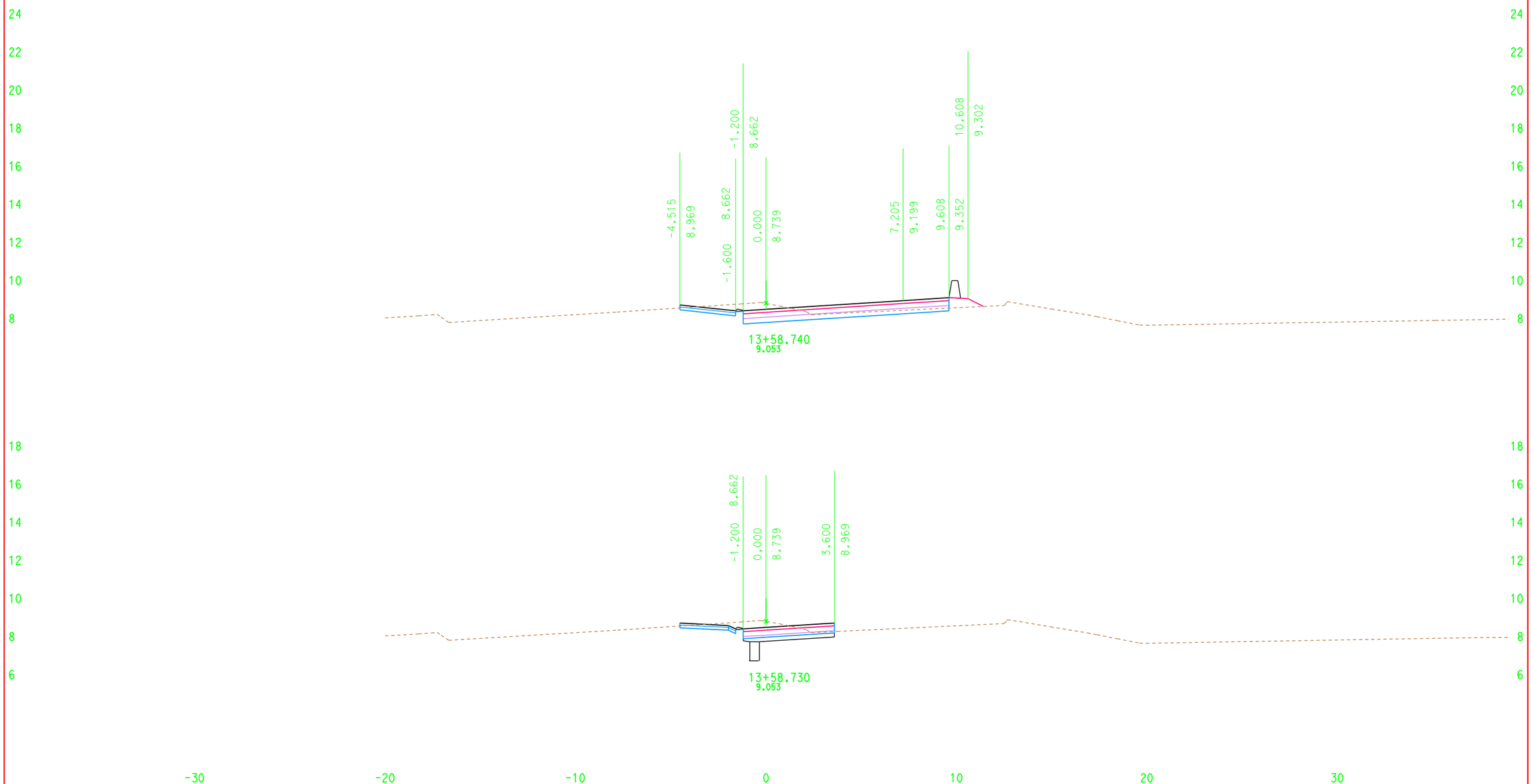

DATE: 6/2/2009

ALL DIMENSIONS ARE IN METERS

Scale Ratio: 1:100 Horiz.
1:100 Vert.

KC Project: 00245 File: D:\highSt\052909\NER_DES_R_1.ear

NER1
CROSS SECTIONS

FOR EARTHWORK DEVELOPMENT ONLY

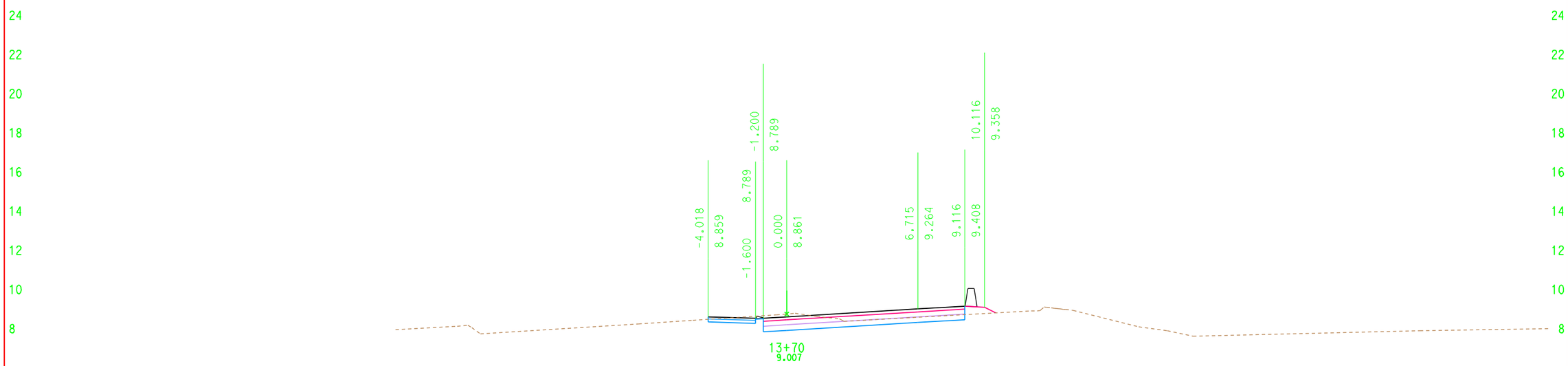

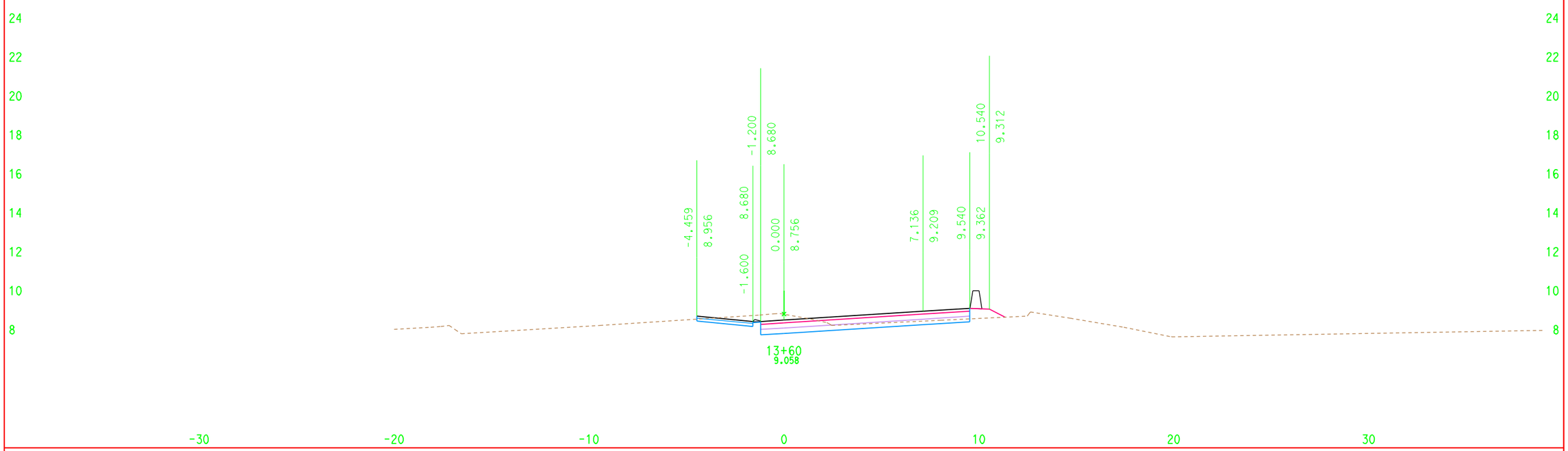

-30 -20 -10 0 10 20 30

DATE: 6/2/2009

ALL DIMENSIONS ARE IN METERS

Scale Ratio: 1:100 Horiz.
1:100 Vert.

KC Project: 00245 File: D:\highSt\052909\NER_DES_R_1.ear

NER1
CROSS SECTIONS