APPENDIX E

Long Form - Storm Water Data Report

Caltrans Metric

Dist-County-Route 04-Ala-880
Kilometer Post (Post Mile) Limits 43.6/45.5
Project Type Seismic Retrofit/Bridge Replacement
EA: 165421
RU: 04247
Program Identification: HA4S2
Phase: ❑ PID ❑ PA/ED X PS&E

Regional Water Quality Control Board(s): Region 2

Is the project required to consider incorporating Treatment BMPs? Yes X No ❑

If yes, can Treatment BMPs be incorporated into the project? Yes X No ❑

If No, a Technical Data Report must be submitted to the RWQCB at least 30 days prior to Advertisement. List submittal date: _____

Total Disturbed Soil Area: 7.8 Hectares

Estimated: Construction Start Date: April, 2008 Construction Completion Date: April, 2013

Notification of Construction (NOC) Date to be submitted: March 2008

Notification of ADL reuse (if Yes, provide date) Yes X Date _____ No o

Separate Dewatering Permit (if Yes, permit number) Yes ❑ Permit # _____ No X

This Report has been prepared under the direction of the following Licensed Person. The Licensed Person attests to the technical information contained herein and the data upon which recommendations, conclusions, and decisions are based. Professional Engineer or Landscape Architect stamp required at PS&E.

Amando R. Vito — April 6, 2006

AMANDO VITO, Registered Project Engineer — *Date*

I have reviewed the storm water quality design issues and find this report to be complete, current, and accurate:

REGISTERED PROFESSIONAL ENGINEER
AMANDO R. VITO
No. 60914
Exp. 12/31/06
CIVIL
STATE OF CALIFORNIA

STAMP
[Required for PS&E only]

Stanley R. Gee — 4/6/06

STANLEY GEE, Project Manager — *Date*

Robert W. Braga — 4/10/06

BOB BRAGA, Designated Maintenance Representative — *Date*

Kathleen Jenkins — 4/12/06

KATHLEEN JENKINS, Designated Landscape Architect Rep. — *Date*

Analette Ochoa — 4/24/06

ANALETTE OCHOA, District/Regional SW Coordinator — *Date*

STORM WATER DATA INFORMATION

1. Project Description

- The proposed project provides for the seismic retrofit (by replacement) of the High Street Overhead on I-880 (BR# 33-0040L/R, KP 43.6/45.5 (PM 27.3/28.2)) in the City of Oakland in Alameda County. The Project Location and Vicinity Maps are included in this report. The project is programmed in the HA4S2 Program and will be performed under one construction contract, except for landscaping, which will be performed under a separate future project. The proposed project consists of replacing the existing I-880 mainline structures with new structures and reconfiguring the I-880/High Street/SR 77 Interchange with at-grade intersections. Frontage roads will be reconstructed as required to accommodate the replacement structures. Six retaining walls will be required for cut and fill issues.
- Two significant cut locations are discussed below:

  A cut for a depressed ramp is proposed at Station Lt. 'S' 506+30 (42nd Street). The maximum depth of this cut is 3 m (9.8 ft) and most of this cut will be retained by Retaining Wall #2. This cut area will be mostly in fill or stiff lean clay and this cut will extend close to the groundwater level at some locations. Saturated unstable sub-grade may be encountered at these locations.

  A 6 m (19.69 ft) deep cut is also being proposed on the east side of the existing embankment from Station 'N' 507+81 to 508+66. This permanent cut will be mostly in the fill material and may extend slightly into native material from Station 'N' 507+81 to 508+40. The fill in this area generally consists of moderately to well-compacted lean clay with sand gravel. All permanent cut slopes be inclined at a maximum slope ratio of 1:2 (V: H).
- Two new fill embankments are proposed in this project as follows:

  Adjacent to and on top of southbound Route 880 from Station Lt. 'S' 501+00 to 502+60, portion of this embankment will be retained by retaining Wall #1 and 4. The subsurface conditions consist of 0 to 1 m (3.28 ft) of fill underlain by 2 to 3 m (6.56 ft to 9.8 ft) of black, soft clay; followed by the 3 to 6.5 m (9.8 ft to 21.33 ft) thick layer of moderately over-consolidated, stiff clay; 0.5 to 4.0 m (1.64 ft to 13.12 ft) thick layer of loose to dense, poorly graded sand; 1.5 to 4.5 m (4.9 ft to 14.76 ft) thick layer of stiff clay, which is underlain by 2 m (6.56 ft) thick layer of dense sand. The material below the sand layer is alluvia material consisting of alternations layer of lean clay and sand to a considerable depth. Groundwater was encountered in the borings from 2.4 to 4.2 m (7.87 ft to 13.78 ft) below the ground surface or between Elev. 0 and –2.0 m (-6.56 ft).

  On top of the existing fill embankment on northbound Route 880 from Station Rt. 'N' 507+81 to 507+90. This fill embankment is located immediately above the proposed 6 m (19.69 ft) cut and Retaining Wall #3. The subsurface conditions consist of 6 m (19.69 ft) of fill over 6.0 to 12 m (19.69 ft to 39.37 ft) if stiff to very stiff, lean and fat clay; followed by the a 5 m (16.4 ft) thick layer of very dense, poorly graded sand and gravel. Groundwater was encountered in the borings at a depth of 6 m (19.69 ft) below the ground surface or at Elev. 2.0 (6.56 ft). All embankment slopes be inclined at a maximum slope ratio of 1:2 (V: H).
- The total disturbed soil area of the project is 7.8 Hectares (19.27 Acres).). This area was conservatively calculated using the proposed structures and roadway geometrics and allowing for all stage construction, haul roads, and stockpiling to be within the cut and fill areas. No construction easements are being proposed.
- The project is within the urbanized MS4 area of Alameda County.

2. Define Site Data and Storm Water Quality Design Issues (refer to Checklists SW-1, SW-2, and SW-3)

- The project is in the South Bay- East Bay Cities Hydrologic Area #204.20, which is under the jurisdiction of the San Francisco Bay Regional Water Quality Control Board. Drainage for the project area is in the southwest direction towards the San Francisco Bay. Runoff drains to the Oakland Inner Harbor- Fruitvale Site, 500 meters (1640 ft) away and eventually the San Francisco Bay, Central.

- The Oakland Inner Harbor (Fruitvale Site) is 303(d) listed for chlordane, chlordane (sediment), DDT, diazinon, dieldrin, dieldrin (sediment), exotic species, furan compounds, mercury, PCBs, PCBs (dioxin-like), PCBs (sediment), selenium.
- The project is not in or near a High Risk Area.
- There are no RWQCB special requirements/concerns regarding TMDLs or effluent limits. There are no local agency requirements or concerns.
- The project is located in a Mediterranean climate characterized by warm dry summers and mild wet winters. The average annual rainfall is approximately 20 inches (508 mm)/year. Rainfall intensity curves are attached. The site is located on the nearly flat San Leandro Bay plain, with existing roadway and other development fills and Tidal Canal drainage providing the topographic relief. Grades adjacent to High Street overhead range from 3m to 6m (9.8 ft to 19.69 ft). Areas surrounding the project area are developed. Therefore, manmade features controlled the drainage. Fill was placed over the native low-lying older deposits. In general, the filled ground surface is lower southwest of the interchange.
- The following are the main geologic units that have been mapped in the immediate vicinity of the site (Graymer, 2000), are as follows: Artificial fill (Historic, af) – Man-made deposit of various materials and ages. Some are compacted and quite firm, but fills made before 1965 are nearly not compacted and consist simply of dumped materials. Alluvial fan and deposits (Holocene, Qhaf) – Alluvial fan deposits, medium dense to dense, gravely sand or sandy gravel that generally grades upward to sandy or silty clay. Subsurface soil conditions consist of artificial fill over alluvia material.
- Based on a site investigation (SI) conducted by Geocon Consultants, Inc., soils samples collected to assess petroleum hydrocarbons from roadside spills did not exhibit hydrocarbon odor and/or visible staining. Aerially Deposited Lead (ADL) was found from lead additives used in gasoline in the soil along the State highway systems. The contaminated soils will be reused in two locations: 1) From Station Lt 'SOR' 11+25+ to 12+70+. 2) From Station Rt. 'NF' 11+40+ to 11+80+. The contaminated soil will be placed a minimum of five (5) feet (1.52 m) above the maximum water table elevation and protected from infiltration by a pavement structure. A lead variance will be required.
- To mitigate against the potential of erosion both during construction and after the project is finished, erosion control measures will be employed. For temporary erosion control the design will incorporate Temporary Erosion Control measures as defined by the SWPPP the contractor will have to develop. For permanent erosion control a design will be developed which will include seeding and planting, mulching, fiber roll, and other erosion control methods.
- This project proposes to minimize erosion from slopes by a) disturbing existing slopes and vegetation only when necessary and minimizing cut and fill areas, b) the use of a retaining wall to provide a more stable slope, c) cut and fill slopes will be made as flat as feasible to allow re-vegetation, and d) new slopes will be rounded to minimize the formation of concentrated flows.
- The rainy season is from October 15 through April 15.

3. Regional Water Quality Control Board Agreements

No agreements have been made with the RWQCB. A Water Quality Certification (401) from the Regional Water Quality Control Board will not be required.

4. Describe Proposed Design Pollution Prevention BMPs to be used on the Project.

Downstream Effects Related to Potentially Increased Flow, Parts 1 and 2

- The project will increase the impermeable surface area and as a result a nominal increase in the volume of downstream flow will occur. Although this project will not discharge into unlined channels, it may increase potential sediment load downstream.
- Peak flow volume will increase; however, since the peak flow comes from the superstructure, effects to the site surface and the resulting change in the time of concentration value will be minimal. Measures to reduce peak volume and velocity such as putting dissipaters on the outfalls are incorporated.

- The project paves some of the existing dirt surface. The overland flow originating from the freeway outfalls will travel over the paved surface or via concrete curbs and gutters to empty into an inlet after the project is built.
- The project will not encroach, cross, realign, or cause other hydraulic changes to a stream that may effect downstream channel stability. The hydrology of the site will not be altered as a result of this project.
- Within the project limits, a portion of the East side of the project is adjacent to an area designated as "Zone B" on the Flood Insurance Rate Map (FIRM) covering the project area (Community Panel Number 065048 0025 B, Effective Date September 30, 1982). "Zone B" is defined as "Area between limits of the 100-year flood and 500-year flood; or certain areas subject to 100-year flooding with average depths less than one (1) foot (0.31 m) or where the contributing drainage area is less than one square mile; or area protected by levees from the base flood." A copy of a portion of the FIRM is attached.

Slope/Surface Protection Systems, Checklist DPP-1, Parts 1 and 3

- There will be cut and fill slopes associated with the construction of this project. Two significant cut are located at Station Lt. "S" 506+30 and Station "N" 507+81+ to 508+66. Two new fill embankments are located at Station Lt. "S" 501+00 to 502+60 and Station Rt. "N" 507+81 to 507+90. All permanent cut and fill slopes be inclined at a maximum slope ratio of 1:2 (V: H). Please refer to the Section 1 Project Description for details.
- A possible slope/surface protection includes the concrete lined v-ditch for the proposed biofiltration swale. See Section 5 for more details on the biofiltration swale.

Concentrated Flow Conveyance Systems, Checklist DPP-1, Parts 1 and 4

- All of the approved Design Pollution Prevention BMPs were considered during the design phase of this project. Several approved BMP items have been incorporated in the contract plans: There will be a total of 1,320 m of dike including type A, E and F. There may also be a concrete lined ditch. Refer to Layout and Drainage Plans for location and detailed information.

Preservation of Existing Vegetation, Checklist DPP-1, Parts 1 and 5

- The existing row of non-native tree will be removed. No ESA areas are required. The project does not fall within a FEMA designated base floodplain. See DPP-1, Part 1 section above.

5. Describe Proposed Permanent Treatment BMPs to be used on the Project

Treatment BMP Strategy, Checklist T-1

- This project will follow the General Purpose Pollutant Removal criteria. The order of Treatment BMPs to be considered is infiltration devices, biofiltration strips, biofiltration swales, Austin sand filters and detention devices.
- Due to project site constraints, the only feasible Treatment BMP for the project was one biofiltration swale that would treat a small portion of the project's overall impervious area, mostly runoff from the superstructure. The tributary area treated by the swale is 0.53 ha (1.3 ac).
- In lieu of constructing the swale within State right of way, the Board has suggested looking for other more effective treatment BMP opportunities. Currently, discussions are underway with the RWQCB. There will be a cooperative agreement and MOU done to address this treatment alternative.
- Dry weather diversion systems were not considered because there is no dry weather flows. Wet basins, Delaware filters, and MCTT were not considered due to vector control issues. Gross solids removal devices were not considered since the receiving water body is not 303 (d) listed for trash. Traction sand trap devices were not considered since sand is not typically applied within the project area.

Infiltration Devices – Checklist T-1, Parts 1 and 4

- Infiltration basins within the project limits were not feasible because the soil type is within the NRCS Hydrologic Soil Group D, the infiltration rate is below 1.3 cm (0.5 in) per hour, the groundwater is to high, and the site is located over contaminated soil.

Biofiltration Swales/Strips, Checklist T-1, Parts 1 and 2

- One biofiltration swale was deemed feasible for the project. It is located 20 m left of Station "S" 505 + 18+ to 505 + 85. The tributary area treated by the swale is 0.53 ha.

Austin Media Filters, Checklist T-1, Parts 1 and 8

- Austin media filters were deemed not practicable because the project site is flat and does not have sufficient hydraulic head through the drainage system to operate by gravity between inflow to the initial chamber and effluent outflow from the second chamber (0.9 meters minimum).

Detention Devices, Checklist T-1, Parts 1 and 5

- Detention basins were not feasible because there were no sufficient hydraulic head and limited right-of-way available. In addition, biofiltration strips/ swales were better Treatment BMP alternatives due to costs since both Treatment systems treated the same pollutants: suspended solids, particulate metals, and litter.

6. Describe Proposed Temporary Construction Site BMPs to be used on Project

Temporary Construction Entrances limit the deposition of sediment on paved public roads at the entrance and exits of projects. The estimate includes 10 construction entrances for access to each new DSA including new berms, borrow site, new re-use/disposal site or major stockpile, and Contractor yard or staging area, access locations from public roads into the project site.

Temporary Concrete Washout Facility prevents pollution by limiting the washout of concrete waste and waste-water to a specific location. Estimated 15 washouts in areas where retaining wall, pump stations, pile foundations, bents and underpass structures are to be constructed.

Temporary Cover is also proposed for use as a wind erosion control measure by limiting the exposure of temporary stockpiles and untreated slopes to the weather conditions.

Temporary Drainage Inlet Protection minimizes the amount of sediment entering storm drain systems. Inlets adjacent to areas of soil disturbance, material transport (soil, concrete, etc.) will be protected. As the project will extend into a second rainy season, the estimate was adjusted to account for repair and reinstalling the BMP.

Linear sediment barriers including silt fence reduce the amount of sediment leaving slopes by filtering sheet runoff. Silt Fence will be deployed at the toe of all embankment slopes, cut slopes and around soil stockpiles. The linear quantity was obtained by scaling off the plans.

Construction activities involving structure excavation activity, i.e. foundation work, drainage system, utility installation, etc., have the potential to encounter ground water, seepage, and involves non-storm water discharges. The groundwater elevation is shown at 1.5 meters below ground surface (bgs) in the geotechnical boring logs. The geotechnical boring logs show moist soil materials with low plasticity and water bearing soil materials are indicated from 1.5 meters bgs at the project site. The structure excavation will include the water bearing zones. Significant quantity of groundwater is expected based on visual estimation of the hydraulic conductivity (1x 10 -4 cm/sec) of soil materials in the water bearing zones and volume of structural excavation.

A Dewatering and Non-storm Water Discharges non-standard special provision has been prepared by our branch and will be forwarded to HQ - Office of Storm Water Design for concurrence. A copy of the request for concurrence will be sent to the Project Engineer. As required in this special provision, the groundwater encountered will be disposed of at a licensed liquid disposal facility, used for dust control or discharged into the storm drain system or a receiving water body based on result of monitoring during construction.

If the groundwater is found to be uncontaminated then it can be discharged to the storm drain system. If the groundwater is found to be contaminated, then it will be either discharged to a sanitary sewer after treatment

for removal of contaminants. The contractor will need to be obtained a permit from the local wastewater treatment facility for authorization to discharge to a sanitary sewer. The Contractor also has the option to dispose of the contaminated groundwater offsite to a permitted recycling facility.

7. Maintenance BMPs (Drain Inlet Stenciling)

All existing and proposed drainage inlets within the project limits located on Oakport Street, High Street, and East 8th Street will be marked with a stencil acceptable to City of Oakland.

ATTACHMENTS

- ⇒ A. Location and Vicinity Map
- ⇒ B. Layout Plans and Cross Section
- ⇒ C. Drainage Plans
- ⇒ D. Water Pollution Control Plans
- ⇒ E. Erosion Control Plans
- ⇒ F. Storm Water Cost Information
- ⇒ G. Quantities for Construction Site BMPs
- ⇒ H. Rainfall Intensity Curves and FIRM
- ⇒ I: Evaluation Documentation Form
- ⇒ J: Construction Site Consideration Form

SUPPLEMENTAL ATTACHMENTS

- ⇒ BEES
- ⇒ Pertinent Correspondence with RWQCB
- ⇒ Checklist SW-1, Site Data Sources
- ⇒ Checklists SW-2, Storm Water Quality Issues Summary
- ⇒ Checklist SW-3, Measures for Avoiding or Reducing Potential Storm Water BMPs
- ⇒ Checklists DPP-1, Parts 1–5 (Design Pollution Prevention BMPs) [only those parts that were applicable]
- ⇒ Checklists T-1, Parts 1–10 (Treatment BMPs) [only those Parts that were applicable]
- ⇒ Checklists CS-1, Parts 1–6 (Construction Site BMPs) [only those Parts that were applicable]
- ⇒ 07-345 – including the schedule of values (if requested or recommended by District/Regional SW Coordinator)
- ⇒ Side Slope Concurrence from Erosion Control
- ⇒ Soil Information for Storm Water Data Report

ATTACHMENT A

LOCATION & VICINITY MAP

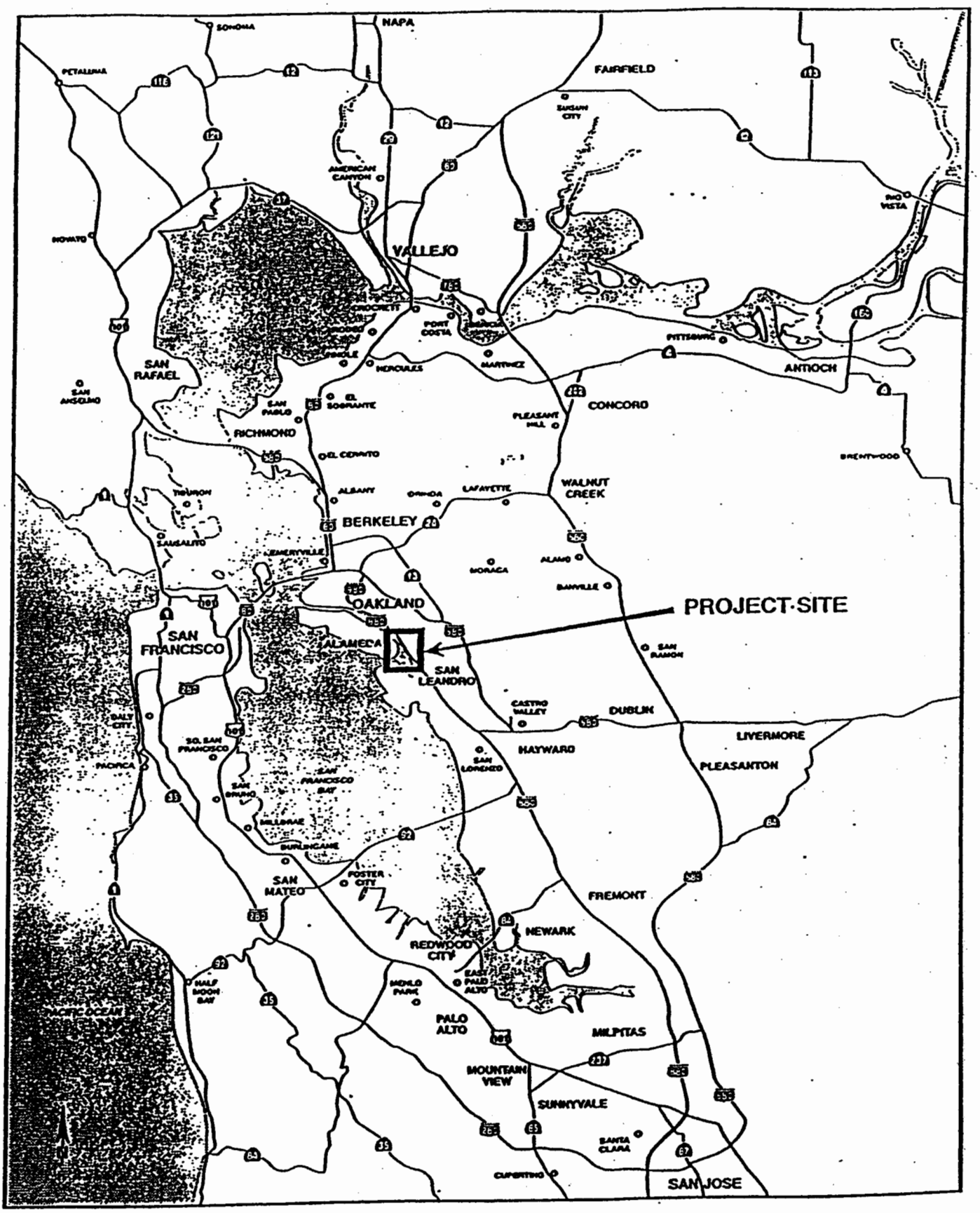

Project Location

High Street Overhead Seismic Retrofit Project

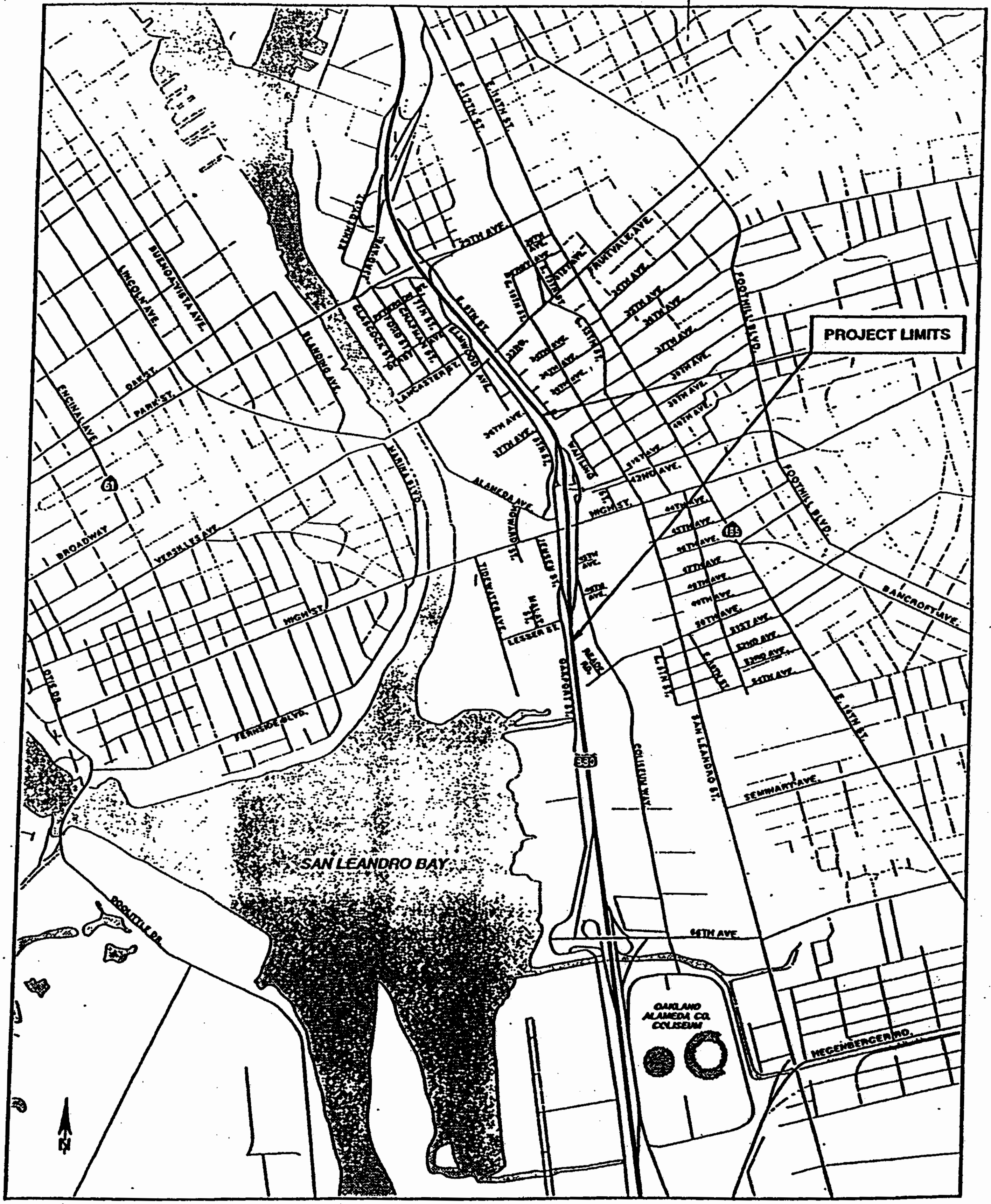

FEET 0 1000 2000 3000 4000 5280 FEET

METERS 0 200 400 600 800 1000 METERS

Project Vicinity

High Street Overhead Seismic Retrofit Project

ATTACHMENT B

LAYOUT PLANS & CROSS SECTION

DIST	COUNTY	ROUTE	KILOMETER POST TOTAL PROJECT	SHEET No	TOTAL SHEETS
04	Ala	880	43.6/45.5		

REGISTERED CIVIL ENGINEER

PLANS APPROVAL DATE

REGISTERED PROFESSIONAL ENGINEER A.R. Vito No. 60914 Exp. 12-31-06 CIVIL STATE OF CALIFORNIA

The State of California or its officers or agents shall not be responsible for the accuracy or completeness of electronic copies of this plan sheet.

Caltrans now has a web site! To get to the web site, go to: http://www.dot.ca.gov

Caltrans Metric

FOR COMPLETE RIGHT OF WAY AND ACCURATE ACCESS DATA, SEE RIGHT OF WAY RECORD MAPS AT DISTRICT OFFICE.

COORDINATE VALUES SHOWN ARE CCS83, ZONE 3

LEGEND

- PLANE AC PAVEMENT
- AC (TYPE A) SURFACING
- REMOVE CONCRETE PAVEMENT
- AC PAVING (Misc AREA)
- No. STRUCTURAL SECTION NUMBER
- No. CURVE ALIGNMENT DATA
- CRASH CUSHION (SAND FILLED)

NOTES

1. TIES TO ISLAND CURB NOSES ARE TO CENTER OF NOSE (RADIUS TO BOTTOM FACE OF CURB).
2. CURB AND DIKE TIES ARE TO BOTTOM FACE OF CURB OR DIKE.
3. AC DIKE TYPE TRANSITIONS ARE 1.2 m LONG UNLESS OTHERWISE SHOWN.
4. CONCRETE BARRIER TIES ARE TO ℄ OF BARRIER.
5. FOR LIMITS OF CURBS, DIKES, MBGR, Conc BARRIER AND FENCES, SEE "SUMMARY OF QUANTITIES" SHEETS.
6. ANY EXCAVATION DEEPER THAN 1.5 m SHALL BE CONSIDERED AS A CONFINED SPACE.

O A K L A N D

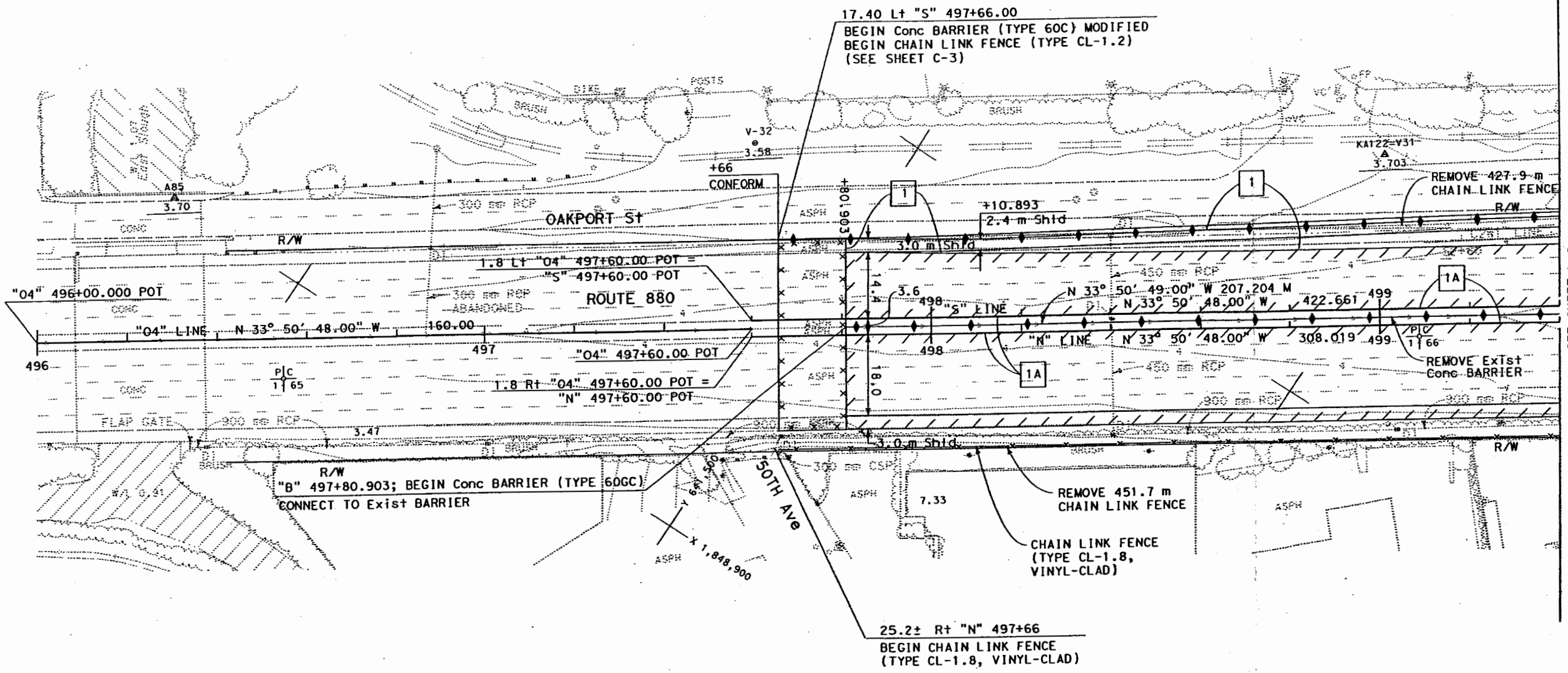

LAYOUT

SCALE: 1:500

ALL DIMENSIONS ARE IN METERS UNLESS OTHERWISE SHOWN

L-1

DATE	REVISED BY	DATE REVISED

CALCULATED/ DESIGNED BY	DT
CHECKED BY	

PROJECT ENGINEER: AMANDO R. VITO

STATE OF CALIFORNIA - DEPARTMENT OF TRANSPORTATION

Caltrans PROJECT DEVELOPMENT

LAST REVISION 02-28-06

DATE PLOTTED => 14-MAR-2006
TIME PLOTTED => 15:28

RELATIVE BORDER SCALE IS IN MILLIMETERS 0 20 40 60 80

USERNAME => dtolosa
DGN FILE => 416542aa1.dgn

CU 04250

EA 165421

DIST	COUNTY	ROUTE	KILOMETER POST TOTAL PROJECT	SHEET No	TOTAL SHEETS
04	Ala	880	43.6/45.5		

REGISTERED CIVIL ENGINEER

PLANS APPROVAL DATE

REGISTERED PROFESSIONAL ENGINEER A.R. Vito No. 60914 Exp. 12-31-06 CIVIL STATE OF CALIFORNIA

The State of California or its officers or agents shall not be responsible for the accuracy or completeness of electronic copies of this plan sheet.

Caltrans now has a web site! To get to the web site, go to: http://www.dot.ca.gov

Caltrans Metric

FOR COMPLETE RIGHT OF WAY AND ACCURATE ACCESS DATA, SEE RIGHT OF WAY RECORD MAPS AT DISTRICT OFFICE.

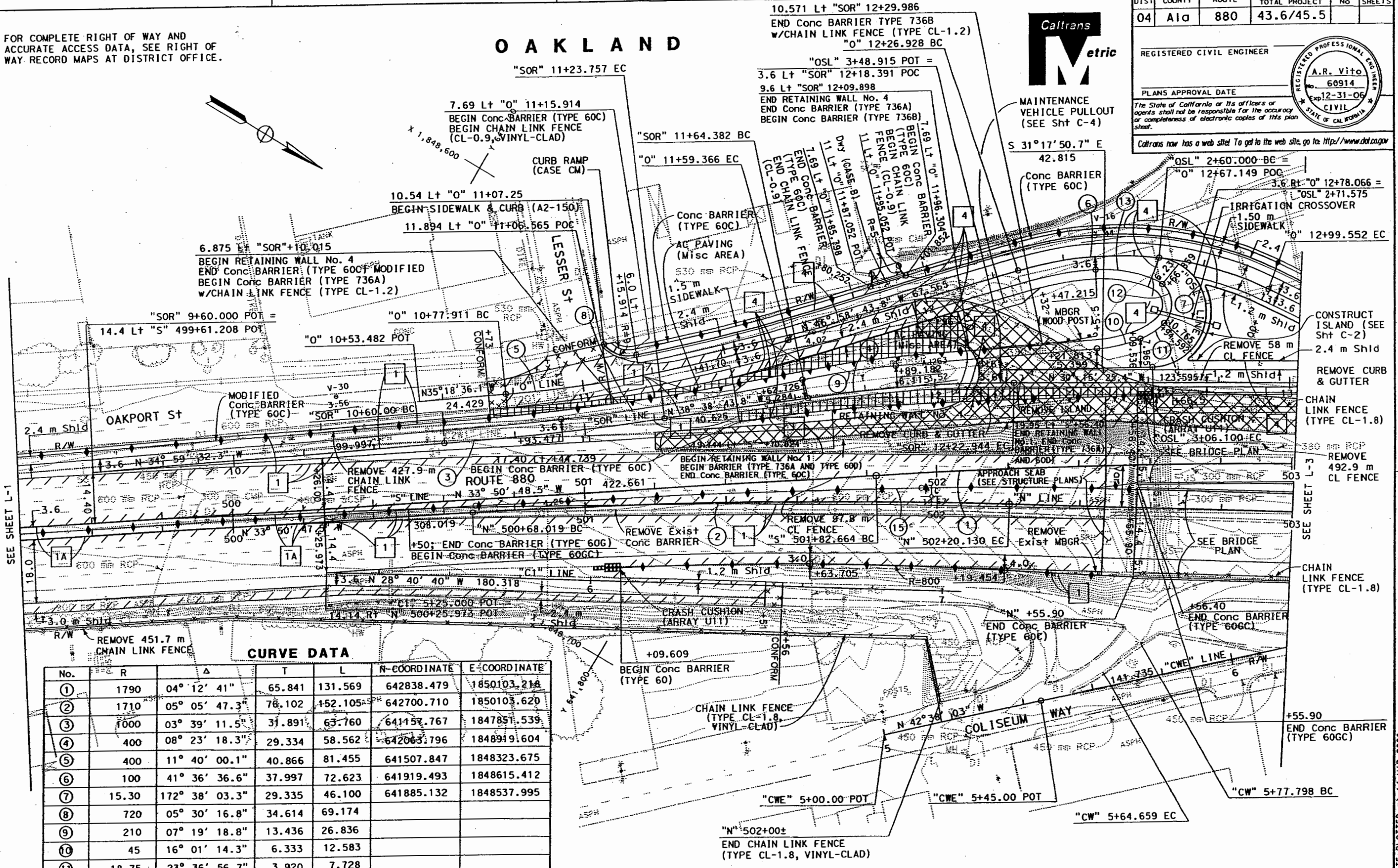

CURVE DATA

No.	R	Δ	T	L	N-COORDINATE	E-COORDINATE
1	1790	04° 12' 41"	65.841	131.569	642838.479	1850103.214
2	1710	05° 05' 47.3"	76.102	152.105	642700.710	1850103.620
3	1000	03° 39' 11.5"	31.891	63.760	641157.767	1847851.539
4	400	08° 23' 18.3"	29.334	58.562	642063.796	1848919.604
5	400	11° 40' 00.1"	40.866	81.455	641507.847	1848323.675
6	100	41° 36' 36.6"	37.997	72.623	641919.493	1848615.412
7	15.30	172° 38' 03.3"	29.335	46.100	641885.132	1848537.995
8	720	05° 30' 16.8"	34.614	69.174		
9	210	07° 19' 18.8"	13.436	26.836		
10	45	16° 01' 14.3"	6.333	12.583		
11	18.75	23° 36' 56.7"	3.920	7.728		
12	7.50	113° 23' 37.8"	11.416	14.843		
13	40	27° 13' 51.7"	9.689	19.011		
14	45	25° 01' 46"	9.988	19.658	641883.884	1848614.483
15	3099.965	2° 21' 36"	63.85	31.634	—	—

FOR NOTES, ABBREVIATIONS &/OR LEGEND, SEE SHEET L-1

ALL DIMENSIONS ARE IN METERS UNLESS OTHERWISE SHOWN

LAYOUT

SCALE: 1:500

L-2

DATE	REVISED BY	DATE REVISED

CALCULATED/DESIGNED BY: DT
CHECKED BY:

PROJECT ENGINEER: AMANDO R. VITO

STATE OF CALIFORNIA - DEPARTMENT OF TRANSPORTATION
Caltrans PROJECT DEVELOPMENT

LAST REVISION 02-28-06
DATE PLOTTED => 14-MAR-2006
TIME PLOTTED => 15:29

RELATIVE BORDER SCALE IS IN MILLIMETERS 0 20 40 60 80

USERNAME => dtoloso
DGN FILE => 416542oo2.dgn

CU 04250

EA 165421

DIST	COUNTY	ROUTE	KILOMETER POST TOTAL PROJECT	SHEET No	TOTAL SHEETS
04	Ala	880	43.6/45.5		

REGISTERED CIVIL ENGINEER

PLANS APPROVAL DATE

REGISTERED PROFESSIONAL ENGINEER A.R. Vito No. 60914 Exp. 12-31-06 CIVIL STATE OF CALIFORNIA

The State of California or its officers or agents shall not be responsible for the accuracy or completeness of electronic copies of this plan sheet.

Caltrans now has a web site! To get to the web site, go to: http://www.dot.ca.gov

Caltrans Metric

FOR COMPLETE RIGHT OF WAY AND ACCURATE ACCESS DATA, SEE RIGHT OF WAY RECORD MAPS AT DISTRICT OFFICE.

OAKLAND

CURVE DATA

No.	R	Δ	T	L	N-COORDINATE	E-COORDINATE
1	1790	04° 12' 41"	65.814	131.569	642838.477	1850103.218
2	100	21° 59' 04.4"	19.424	38.370	641938.809	1848412.715
3	300	09° 35' 15"	25.159	50.200	641917.388	1848198.616
4	122	28° 33' 39.4"	31.053	60.815	642168.267	1848228.986
5	335	19° 06' 00"	56.360	111.675	642212.698	1848828.280

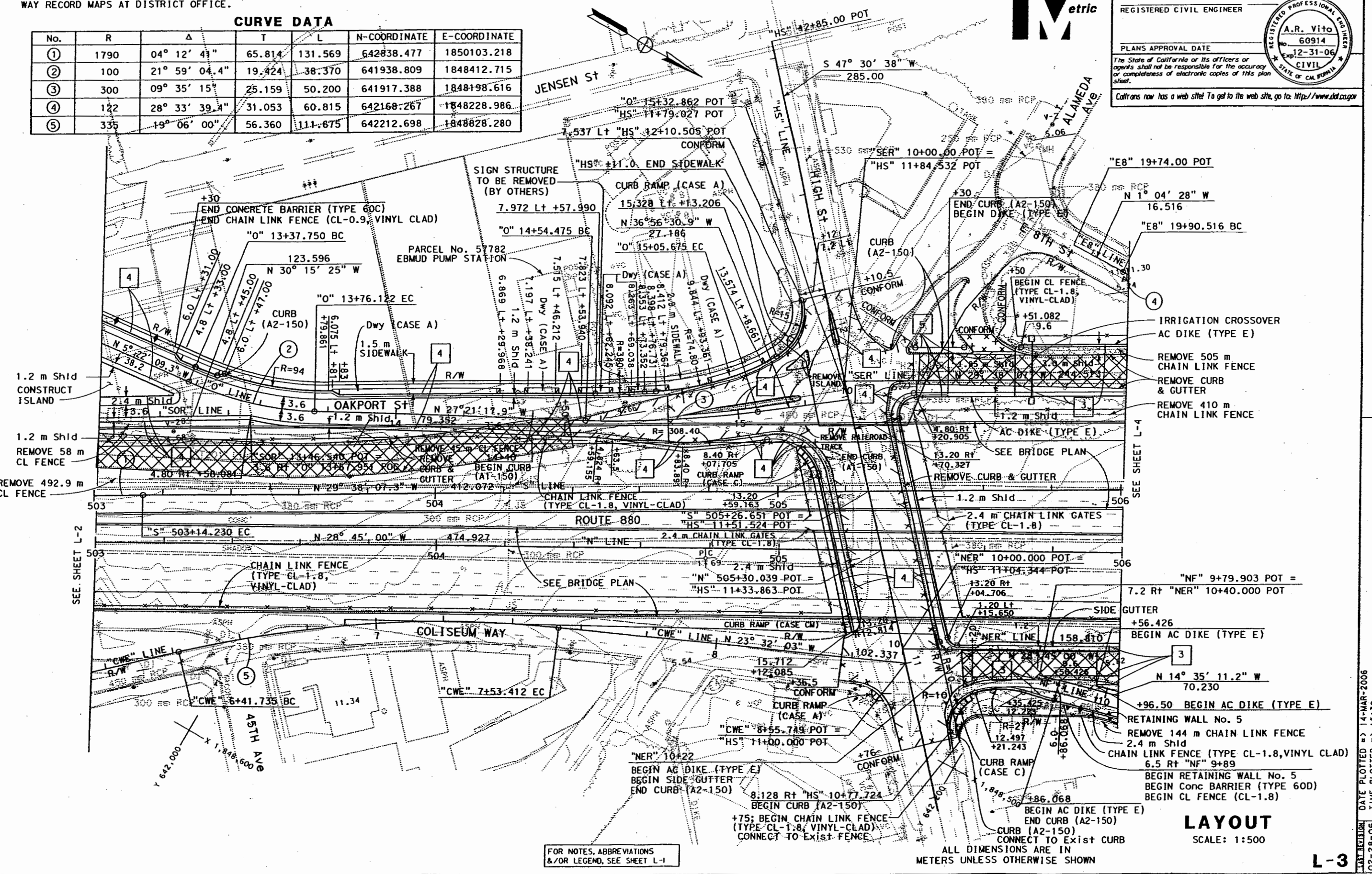

FOR NOTES, ABBREVIATIONS &/OR LEGEND, SEE SHEET L-1

ALL DIMENSIONS ARE IN METERS UNLESS OTHERWISE SHOWN

LAYOUT

SCALE: 1:500

L-3

DATE	REVISED BY	DATE REVISED

CALCULATED/DESIGNED BY: DT

CHECKED BY:

PROJECT ENGINEER: AMANDO R. VITO

STATE OF CALIFORNIA - DEPARTMENT OF TRANSPORTATION

Caltrans PROJECT DEVELOPMENT

LAST REVISION 02-28-06

DATE PLOTTED => 14-MAR-2006
TIME PLOTTED => 15:30

RELATIVE BORDER SCALE IS IN MILLIMETERS 0 20 40 60 80

USERNAME => dtolosa
DGN FILE => 416542aa3.dgn

CU 04250

EA 165421

DIST	COUNTY	ROUTE	KILOMETER POST TOTAL PROJECT	SHEET No.	TOTAL SHEETS
04	Ala	880	43.6/45.5		

REGISTERED CIVIL ENGINEER

PLANS APPROVAL DATE

REGISTERED PROFESSIONAL ENGINEER A.R. Vito No. 60914 Exp. 12-31-06 CIVIL STATE OF CALIFORNIA

The State of California or its officers or agents shall not be responsible for the accuracy or completeness of electronic copies of this plan sheet.

Caltrans now has a web site! To get to the web site, go to: http://www.dot.ca.gov

Caltrans Metric

FOR COMPLETE RIGHT OF WAY AND ACCURATE ACCESS DATA, SEE RIGHT OF WAY RECORD MAPS AT DISTRICT OFFICE.

CURVE DATA

No.	R	Δ	T	L	N-COORDINATE	E-COORDINATE
1	670	37° 27' 46.4"	227.192	438.080	641972.335	1847788.577
2	680	36° 34' 40.5"	224.743	434.115	641975.285	1847752.559
3	200	06° 22' 32.2"	11.139	22.255	642423.588	1848229.914
4	122	28° 33' 39.4"	31.053	60.815	642168.267	1848228.986
5	200	04° 37' 50.1"	8.086	16.164	642387.291	1848474.843
6	722	04° 33' 08"	28.697	57.364	641961.825	1847767.739
7	150	12° 14' 06.6"	16.077	32.032	642203.294	1848503.400
8	488	04° 10' 10.7"	17.765	35.514	642742.114	1848161.170
9	182	01° 41' 23.8"	2.684	5.368	642502.288	1848351.221
10	200	32° 11' 55.2"	57.725	112.395	642225.995	1848252.955

NOTE

1. FOR MORE CURVE DATA, SEE SHEET C-1.

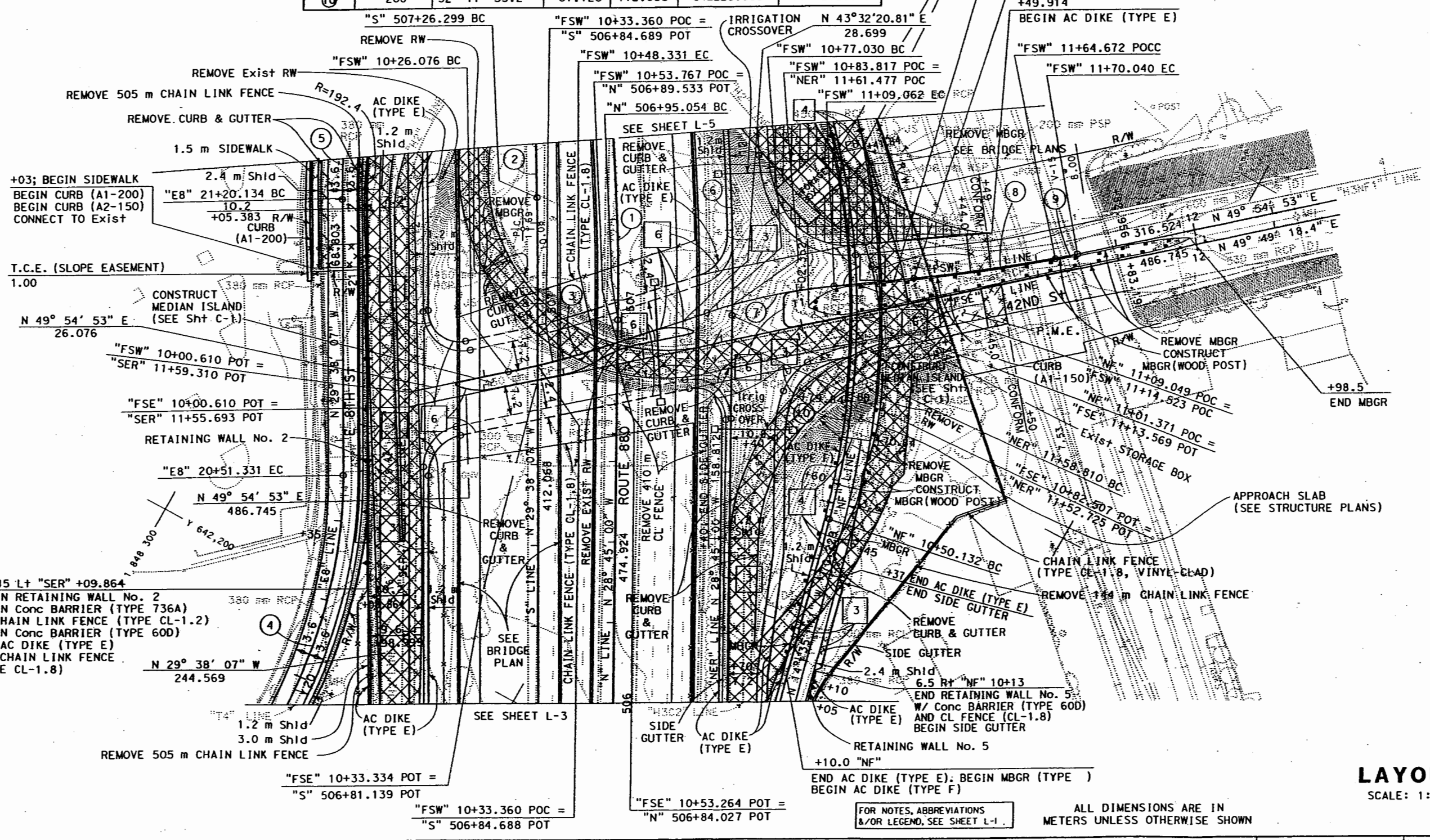

FOR NOTES, ABBREVIATIONS &/OR LEGEND, SEE SHEET L-1.

ALL DIMENSIONS ARE IN METERS UNLESS OTHERWISE SHOWN

LAYOUT

SCALE: 1:500

L-4

DATE	REVISED BY	DATE REVISED

CALCULATED/DESIGNED BY | CHECKED BY | DT

PROJECT ENGINEER: AMANDO R. VITO

STATE OF CALIFORNIA - DEPARTMENT OF TRANSPORTATION

Caltrans PROJECT DEVELOPMENT

LAST REVISION 02-28-06 | DATE PLOTTED => 14-MAR-2006 | TIME PLOTTED => 15:31

RELATIVE BORDER SCALE IS IN MILLIMETERS 0 20 40 60 80

USERNAME => dtoloso
DGN FILE => 416542aa4.dgn

CU 04250 | EA 165421

DIST	COUNTY	ROUTE	KILOMETER POST TOTAL PROJECT	SHEET No	TOTAL SHEETS
04	Ala	880	43.6/45.5		

REGISTERED CIVIL ENGINEER

PLANS APPROVAL DATE

REGISTERED PROFESSIONAL ENGINEER A.R. Vito No. 60914 Exp. 12-31-06 CIVIL STATE OF CALIFORNIA

The State of California or its officers or agents shall not be responsible for the accuracy or completeness of electronic copies of this plan sheet.

Caltrans now has a web site! To get to the web site, go to: http://www.dot.ca.gov

Caltrans Metric

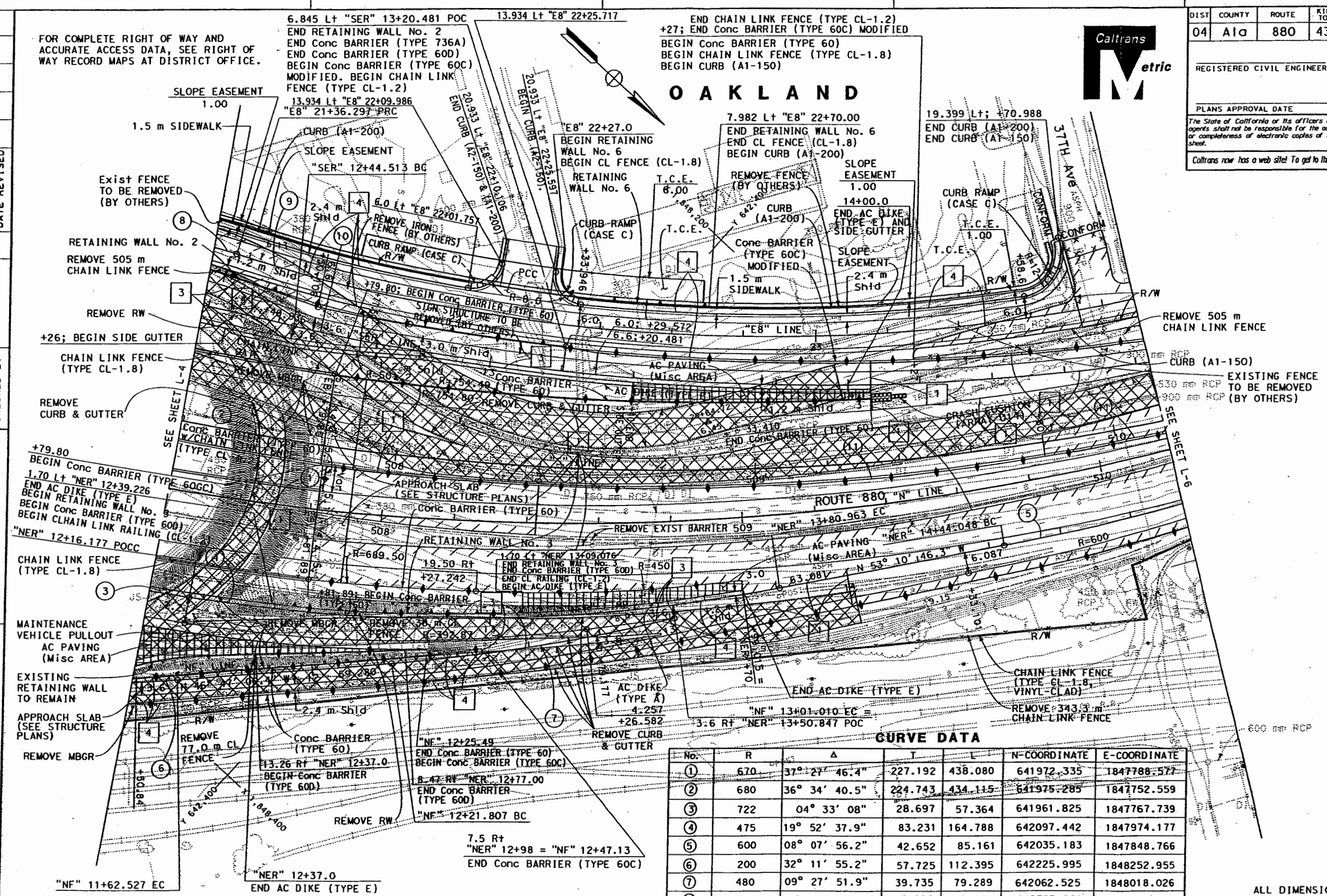

CURVE DATA

No.	R	Δ	T	L	N-COORDINATE	E-COORDINATE
1	670	37° 27' 46.4"	227.192	438.080	641972.335	1847788.577
2	680	36° 34' 40.5"	224.743	434.115	641975.285	1847752.559
3	722	04° 33' 08"	28.697	57.364	641961.825	1847767.739
4	475	19° 52' 37.9"	83.231	164.788	642097.442	1847974.177
5	600	08° 07' 56.2"	42.652	85.161	642035.183	1847848.766
6	200	32° 11' 55.2"	57.725	112.395	642225.995	1848252.955
7	480	09° 27' 51.9"	39.735	79.289	642062.525	1848018.026
8	200	04° 37' 50.1"	8.086	16.164	642387.291	1848474.843
9	500	32° 49' 54.2"	147.308	286.511	642091.406	1847840.452
10	665	24° 26' 42.7"	144.053	283.722	641999.038	1847718.591
11	655.97	32° 04' 13"	188.53	367.17	—	—

FOR NOTES, ABBREVIATIONS &/OR LEGEND, SEE SHEET L-1

ALL DIMENSIONS ARE IN METERS UNLESS OTHERWISE SHOWN

LAYOUT

SCALE: 1:500

L-5

DATE	REVISED BY	DATE REVISED

CALCULATED/ DESIGNED BY	DT	CHECKED BY

PROJECT ENGINEER AMANDO R. VITO

STATE OF CALIFORNIA - DEPARTMENT OF TRANSPORTATION

Caltrans PROJECT DEVELOPMENT

LAST REVISION 02-28-06

DATE PLOTTED => 14-MAR-2006
TIME PLOTTED => 15:32

RELATIVE BORDER SCALE IS IN MILLIMETERS 0 20 40 60 80

USERNAME => dtolosa
DGN FILE => 416542aa5.dgn

CU 04250

EA 165421

DIST	COUNTY	ROUTE	KILOMETER POST TOTAL PROJECT	SHEET No	TOTAL SHEETS
04	Ala	880	43.6/45.5		

REGISTERED CIVIL ENGINEER

PLANS APPROVAL DATE

REGISTERED PROFESSIONAL ENGINEER A.R. Vito No. 60914 Exp. 12-31-06 CIVIL STATE OF CALIFORNIA

The State of California or its officers or agents shall not be responsible for the accuracy or completeness of electronic copies of this plan sheet.

Caltrans now has a web site! To get to the web site, go to: http://www.dot.ca.gov

Caltrans Metric

FOR COMPLETE RIGHT OF WAY AND ACCURATE ACCESS DATA, SEE RIGHT OF WAY RECORD MAPS AT DISTRICT OFFICE.

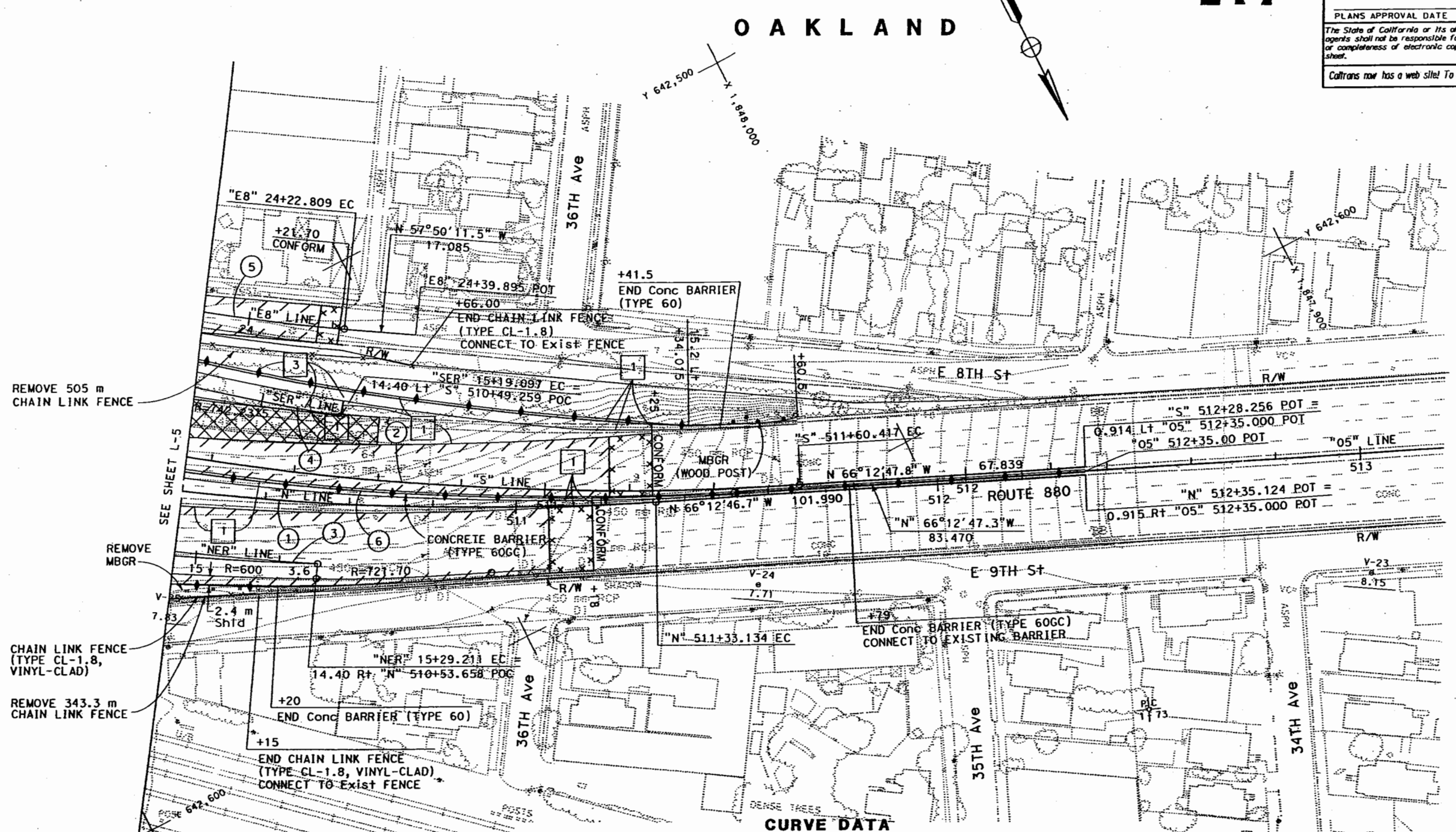

CURVE DATA

No.	R	Δ	T	L	N-COORDINATE	E-COORDINATE
1	670	37° 27' 47"	227.193	438.082	641972.335	1847788.577
2	680	36° 34' 40"	224.742	434.114	641975.284	1847752.561
3	600	08° 07' 54"	42.649	85.155	642035.185	1847848.763
4	665	24° 26' 42"	144.051	283.719	641999.038	1847718.591
5	500	32° 49' 55"	147.309	286.513	642091.406	1847840.452
6	655.97	32° 4' 13"	188.530	367.170		

FOR NOTES, ABBREVIATIONS &/OR LEGEND, SEE SHEET L-1

ALL DIMENSIONS ARE IN METERS UNLESS OTHERWISE SHOWN

LAYOUT

SCALE: 1:500

L-6

STATE OF CALIFORNIA - DEPARTMENT OF TRANSPORTATION

Caltrans PROJECT DEVELOPMENT

PROJECT ENGINEER: AMANDO R. VITO

CALCULATED/DESIGNED BY | DT | DATE | REVISED BY

CHECKED BY | DATE REVISED

LAST REVISION 02-28-06 | DATE PLOTTED => 14-MAR-2006 | TIME PLOTTED => 15:32

RELATIVE BORDER SCALE IS IN MILLIMETERS 0 20 40 60 80

USERNAME => dtoloso
DGN FILE => 416542oa6.dgn

CU 04250

EA 165421

DIST	COUNTY	ROUTE	KILOMETER POST TOTAL PROJECT	SHEET No	TOTAL SHEETS
04	Ala	880	43.6/45.5		

REGISTERED CIVIL ENGINEER

PLANS APPROVAL DATE

REGISTERED PROFESSIONAL ENGINEER A.R. Vito No. 60914 Exp. 12-31-06 CIVIL STATE OF CALIFORNIA

The State of California or its officers or agents shall not be responsible for the accuracy or completeness of electronic copies of this plan sheet.

Caltrans now has a web site! To get to the web site, go to: http://www.dot.ca.gov

Caltrans Metric

NOTES:

1. DIMENSIONS OF THE STRUCTURAL SECTIONS ARE SUBJECT TO TOLERANCES SPECIFIED IN THE STANDARD SPECIFICATIONS.
2. SUPERELEVATIONS AS SHOWN OR AS DIRECTED BY THE ENGINEER.
3. FOR EXACT LOCATION OF RETAINING WALLS, SEE RW-PLANS.
4. FOR EXACT LOCATION OF DIKES, CURBS AND GUTTERS, SIDE GUTTER, CURB RAMP, CONCRETE BARRIER AND MBGR, SEE LAYOUT PLANS.

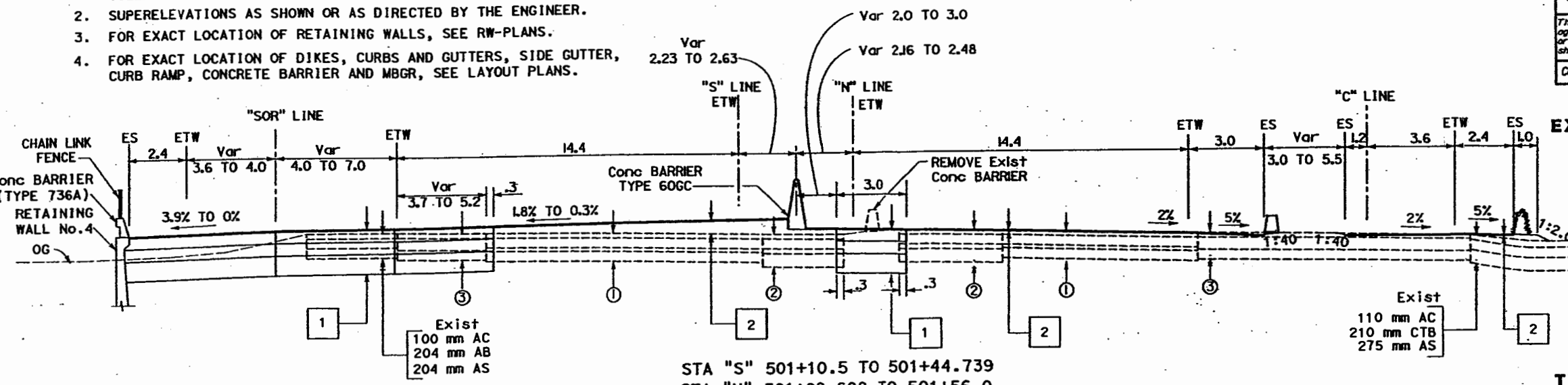

STA "S" 501+10.5 TO 501+44.739
STA "N" 501+09.609 TO 501+56.0

EXISTING STRUCTURAL SECTION

① 100 mm AC
204 mm PCC
75 mm Bit TREATED BASE
204 mm AB

② 100 mm AC
204 mm PCC
100 mm CTB
275 mm AS

③ 100 mm AC
250 mm CTB
204 mm AS

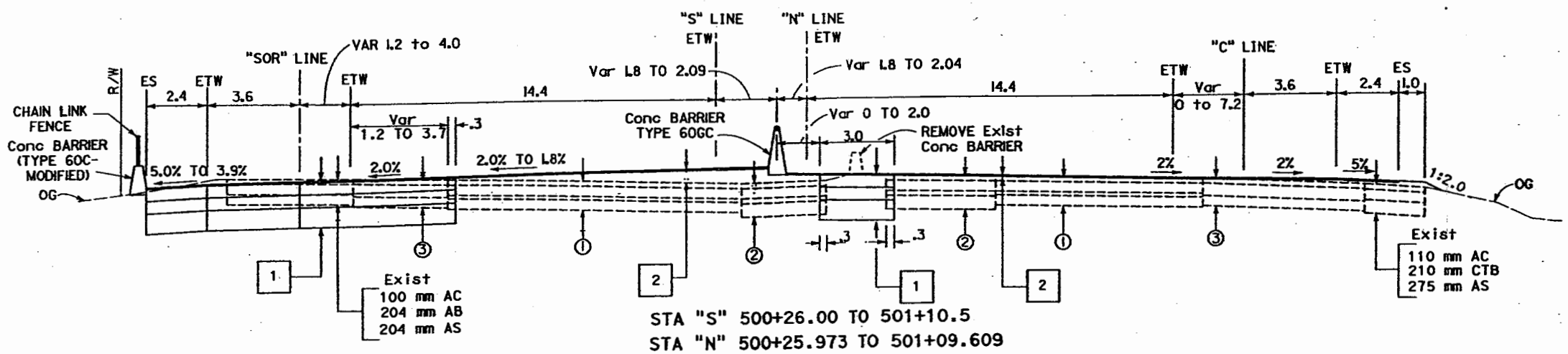

STA "S" 500+26.00 TO 501+10.5
STA "N" 500+25.973 TO 501+09.609

TYPICAL STRUCTURAL SECTION

1
30 mm OGAC
240 mm AC(TYPE A)
255 mm LCB
410 mm Cl 4 AS

1A
30 mm OGAC
240 mm & Var AC(TYPE A)
255 mm LCB
410 mm Cl 4 AS

2
30 mm OGAC
45 mm Min AC(TYPE A)LEVELING

3
150 mm AC(TYPE A)
255 mm AB-3
120 mm Cl 4 AS
210 mm Perm Mtl

4
150 mm AC(TYPE A)
255 mm AB-3
285 mm Cl 4 AS

5
150 mm AC(TYPE A)
255 mm AB-3
120 mm Cl 4 AS

6
180 mm AC(TYPE A)
270 mm AB-3
150 mm Cl 4 AS
210 mm Perm Mtl

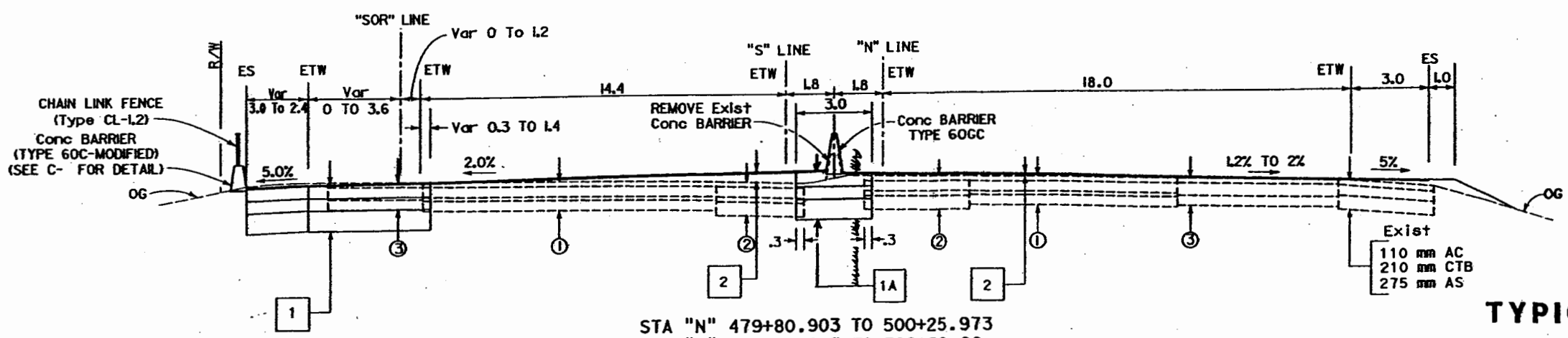

STA "N" 479+80.903 TO 500+25.973
STA "S" 479+80.903 TO 500+26.00

TYPICAL CROSS SECTIONS

NO SCALE

ALL DIMENSIONS ARE IN METERS UNLESS OTHERWISE SHOWN

X-1

DATE	REVISED BY	DATE REVISED

CALCULATED/DESIGNED BY
CHECKED BY

PROJECT ENGINEER AMANDO R. VITO

STATE OF CALIFORNIA - DEPARTMENT OF TRANSPORTATION
Caltrans PROJECT DEVELOPMENT

LAST REVISION 02-11-06
DATE PLOTTED => 06-MAR-2006
TIME PLOTTED => 10:18

RELATIVE BORDER SCALE IS IN MILLIMETERS 0 20 40 60 80

USERNAME => ahuang
DGN FILE => 416542ca001.dgn

CU 04250

EA 165421

CHECK PRINT

DIST	COUNTY	ROUTE	KILOMETER POST TOTAL PROJECT	SHEET No	TOTAL SHEETS
04	Ala	880	43.6/45.5		

REGISTERED CIVIL ENGINEER

PLANS APPROVAL DATE

REGISTERED PROFESSIONAL ENGINEER A.R. Vito No. 60914 Exp. 12-31-06 CIVIL STATE OF CALIFORNIA

The State of California or its officers or agents shall not be responsible for the accuracy or completeness of electronic copies of this plan sheet.

Caltrans now has a web site! To get to the web site, go to: http://www.dot.ca.gov

Caltrans Metric

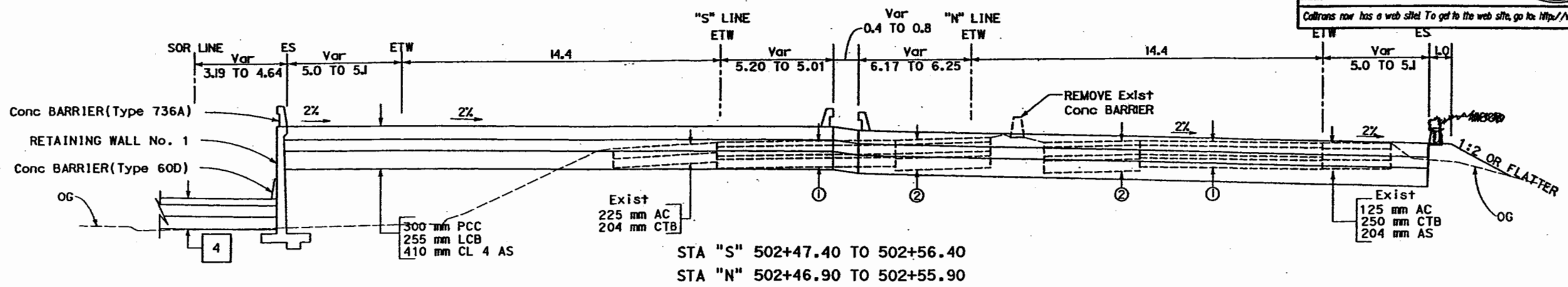

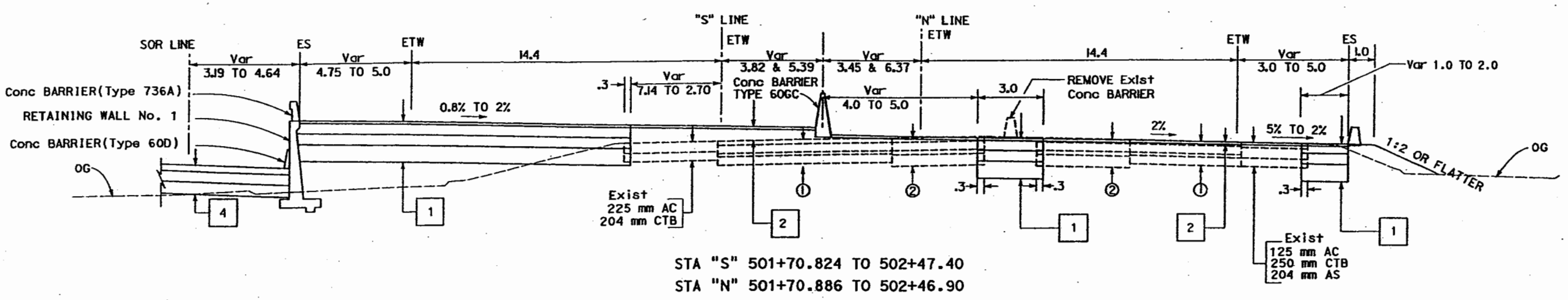

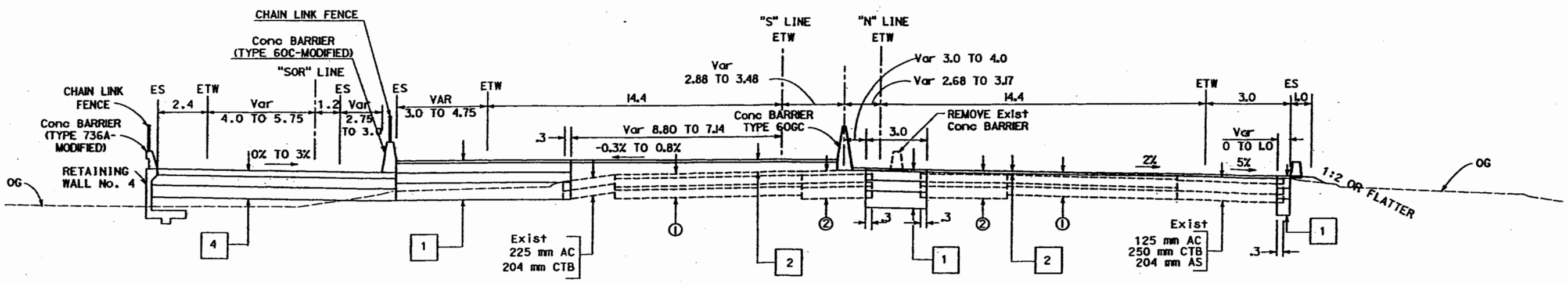

FOR NOTES, ABBREVIATIONS &/OR LEGEND, SEE SHEET X-1

ALL DIMENSIONS ARE IN METERS UNLESS OTHERWISE SHOWN

TYPICAL CROSS SECTIONS

NO SCALE

X-2

STATE OF CALIFORNIA - DEPARTMENT OF TRANSPORTATION

Caltrans PROJECT DEVELOPMENT

PROJECT ENGINEER: AMANDO R. VITO

CALCULATED/DESIGNED BY | CHECKED BY

DATE | REVISED BY | DATE REVISED

DATE PLOTTED => 08-MAR-2006
TIME PLOTTED => 10:19

LAST REVISION 02-11-06

RELATIVE BORDER SCALE IS IN MILLIMETERS 0 20 40 60 80

USERNAME => ahuang
DGN FILE => 416542ca002.dgn

CU 04250

EA 165421

CHECK PRINT

DIST	COUNTY	ROUTE	KILOMETER POST TOTAL PROJECT	SHEET No	TOTAL SHEETS
04	Ala	880	43.6/45.5		

REGISTERED CIVIL ENGINEER

PLANS APPROVAL DATE

REGISTERED PROFESSIONAL ENGINEER A.R. Vito No. 60914 Exp. 12-31-06 CIVIL STATE OF CALIFORNIA

The State of California or its officers or agents shall not be responsible for the accuracy or completeness of electronic copies of this plan sheet.

Caltrans now has a web site! To get to the web site, go to: http://www.dot.ca.gov

Caltrans Metric

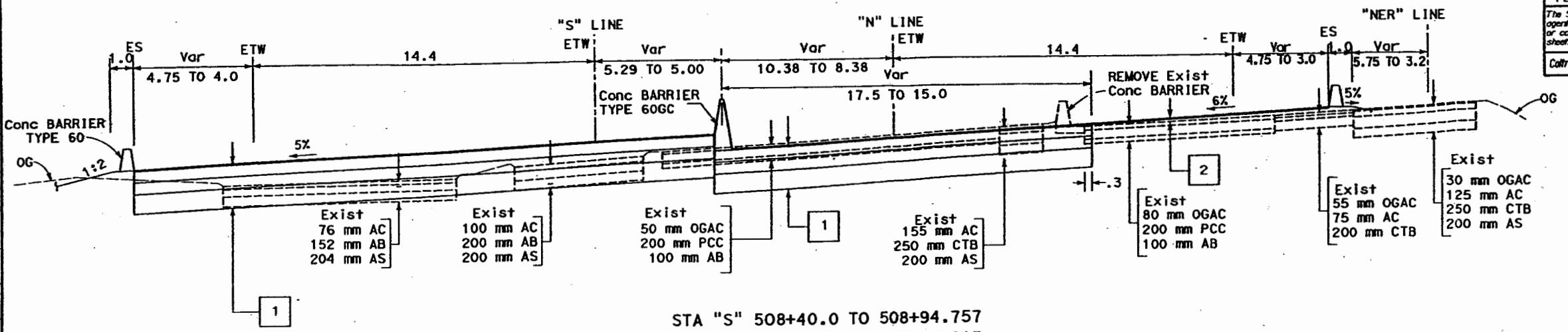

STA "S" 508+40.0 TO 508+94.757
STA "N" 508+42.0 TO 508+99.015

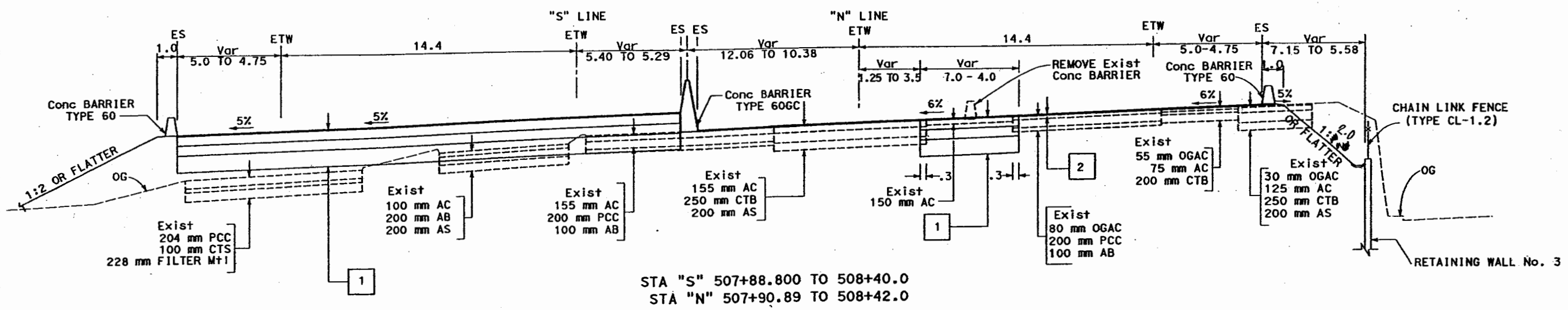

STA "S" 507+88.800 TO 508+40.0
STA "N" 507+90.89 TO 508+42.0

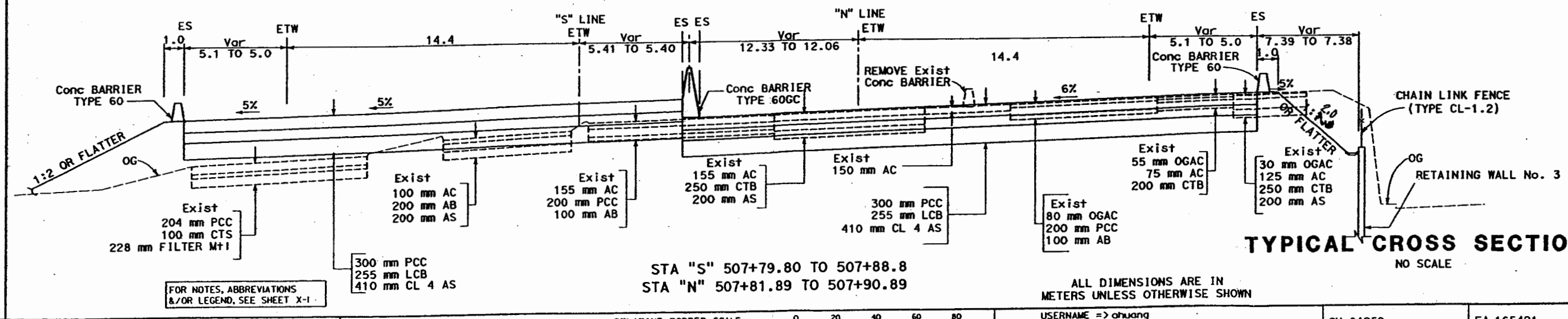

STA "S" 507+79.80 TO 507+88.8
STA "N" 507+81.89 TO 507+90.89

FOR NOTES, ABBREVIATIONS &/OR LEGEND, SEE SHEET X-1

ALL DIMENSIONS ARE IN METERS UNLESS OTHERWISE SHOWN

TYPICAL CROSS SECTIONS

NO SCALE

X-3

DATE	REVISED BY	DATE REVISED

CALCULATED/DESIGNED BY
CHECKED BY

PROJECT ENGINEER AMANDO R. VITO

STATE OF CALIFORNIA - DEPARTMENT OF TRANSPORTATION
Caltrans PROJECT DEVELOPMENT

LAST REVISION 02-11-06
DATE PLOTTED => 08-MAR-2006
TIME PLOTTED => 10:19

RELATIVE BORDER SCALE IS IN MILLIMETERS 0 20 40 60 80

USERNAME => ahuang
DGN FILE => 416542ca003.dgn

CU 04250

EA 165421

CHECK PRINT

DIST	COUNTY	ROUTE	KILOMETER POST TOTAL PROJECT	SHEET No.	TOTAL SHEETS
04	Ala	880	43.6/45.5		

REGISTERED CIVIL ENGINEER

PLANS APPROVAL DATE

REGISTERED PROFESSIONAL ENGINEER A.R. Vito No. 60914 Exp. 12-31-06 CIVIL STATE OF CALIFORNIA

The State of California or its officers or agents shall not be responsible for the accuracy or completeness of electronic copies of this plan sheet.

Caltrans now has a web site! To get to the web site, go to: http://www.dot.ca.gov

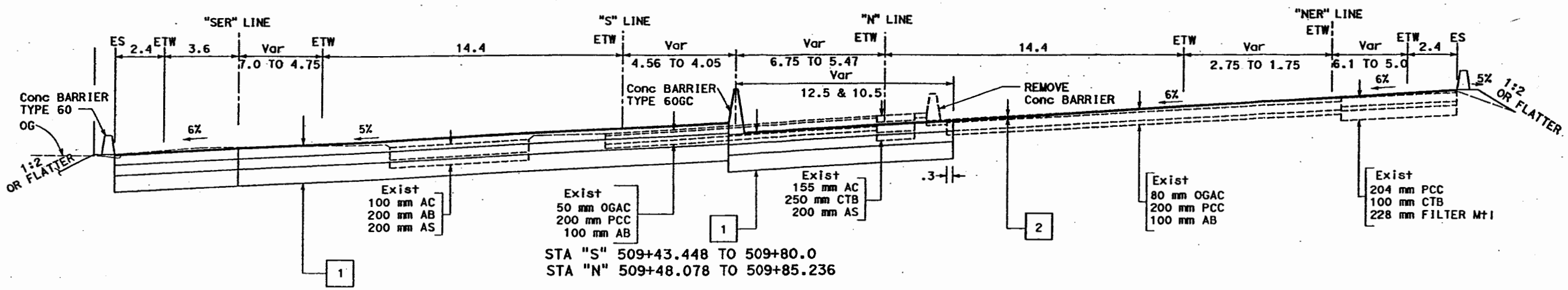

STA "S" 509+43.448 TO 509+80.0
STA "N" 509+48.078 TO 509+85.236

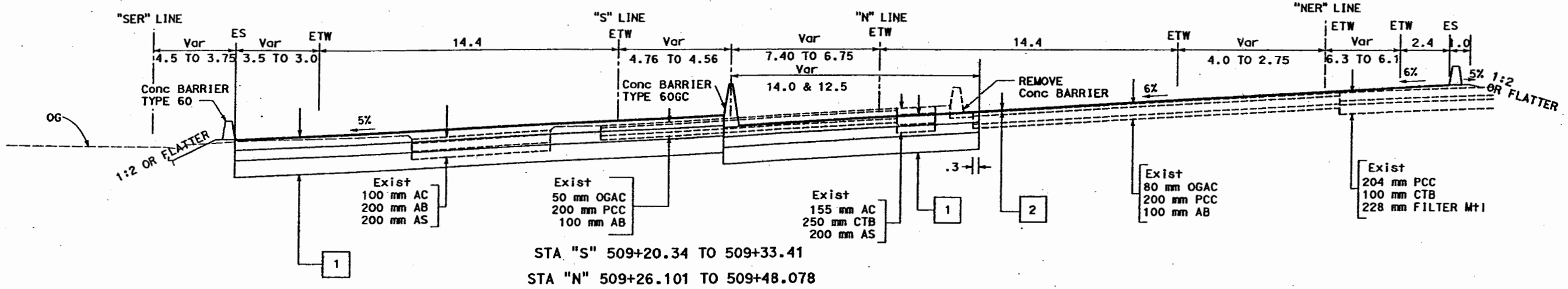

STA "S" 509+20.34 TO 509+33.41
STA "N" 509+26.101 TO 509+48.078

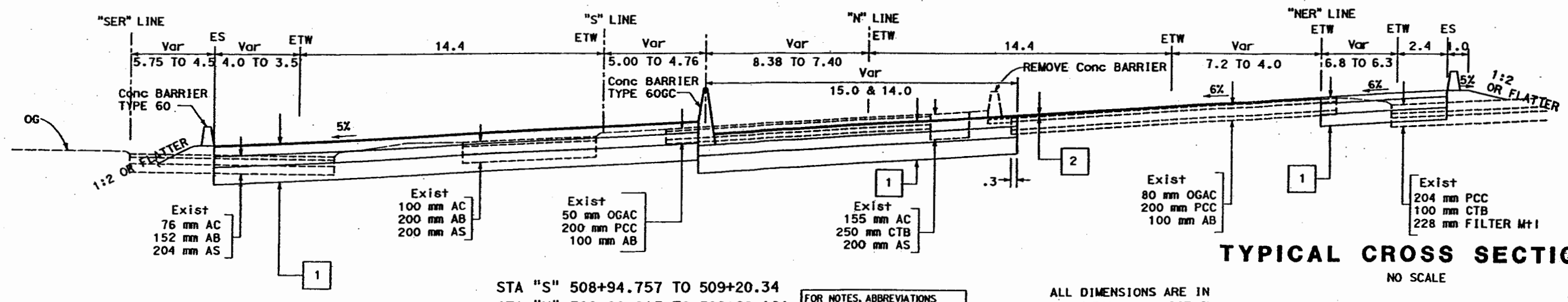

STA "S" 508+94.757 TO 509+20.34
STA "N" 508+99.015 TO 509+26.101

FOR NOTES, ABBREVIATIONS &/OR LEGEND, SEE SHEET X-1

ALL DIMENSIONS ARE IN METERS UNLESS OTHERWISE SHOWN

TYPICAL CROSS SECTIONS

NO SCALE

X-4

STATE OF CALIFORNIA - DEPARTMENT OF TRANSPORTATION
Caltrans PROJECT DEVELOPMENT

PROJECT ENGINEER: AMANDO R. VITO

CALCULATED/DESIGNED BY | CHECKED BY | REVISED BY | DATE REVISED | DATE

LAST REVISION 02-11-06 | DATE PLOTTED => 08-MAR-2006 | TIME PLOTTED => 10:19

RELATIVE BORDER SCALE IS IN MILLIMETERS 0 20 40 60 80

USERNAME => ahuang
DGN FILE => 416542ca004.dgn

CU 04250

EA 165421

DIST	COUNTY	ROUTE	KILOMETER POST TOTAL PROJECT	SHEET No	TOTAL SHEETS
04	Ala	880	43.6/45.5		

REGISTERED CIVIL ENGINEER

PLANS APPROVAL DATE

REGISTERED PROFESSIONAL ENGINEER A.R. Vito No. 60914 12-31-06 CIVIL STATE OF CALIFORNIA

The State of California or its officers or agents shall not be responsible for the accuracy or completeness of electronic copies of this plan sheet.

Caltrans now has a web site! To get to the web site, go to: http://www.dot.ca.gov

Caltrans Metric

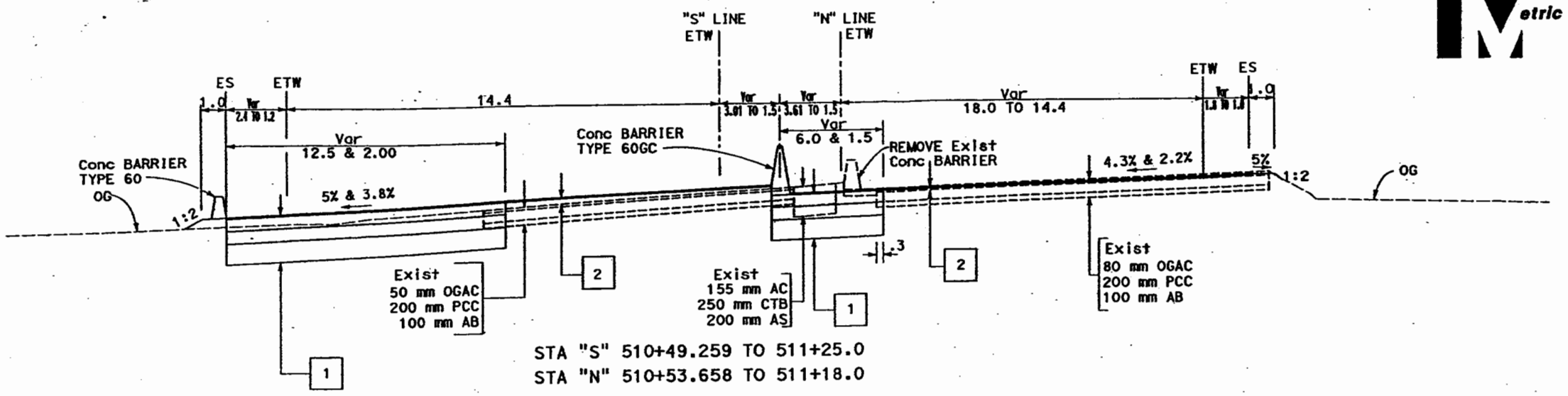

STA "S" 510+49.259 TO 511+25.0
STA "N" 510+53.658 TO 511+18.0

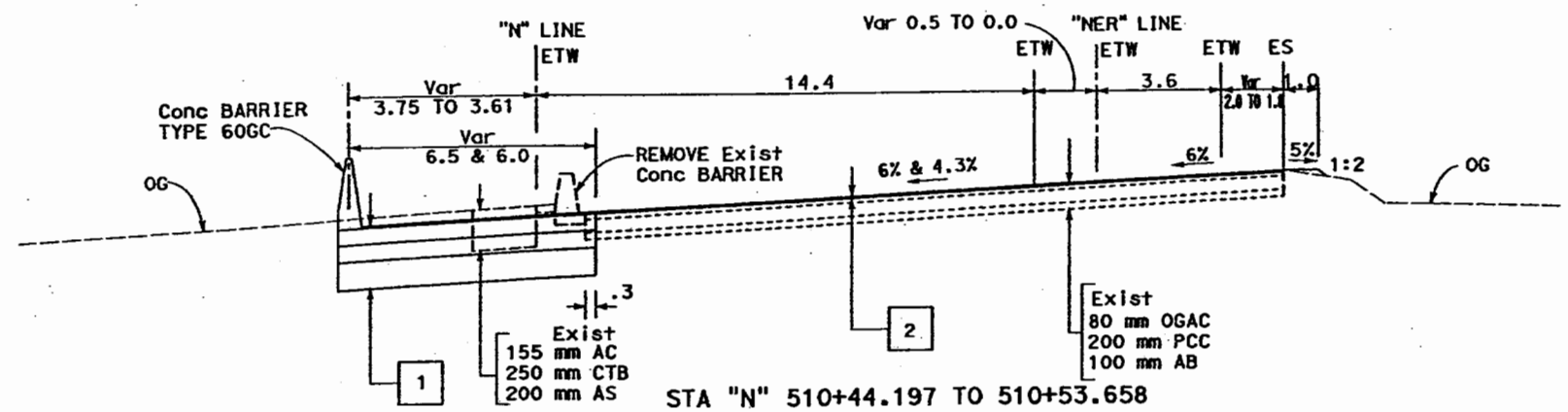

STA "N" 510+44.197 TO 510+53.658

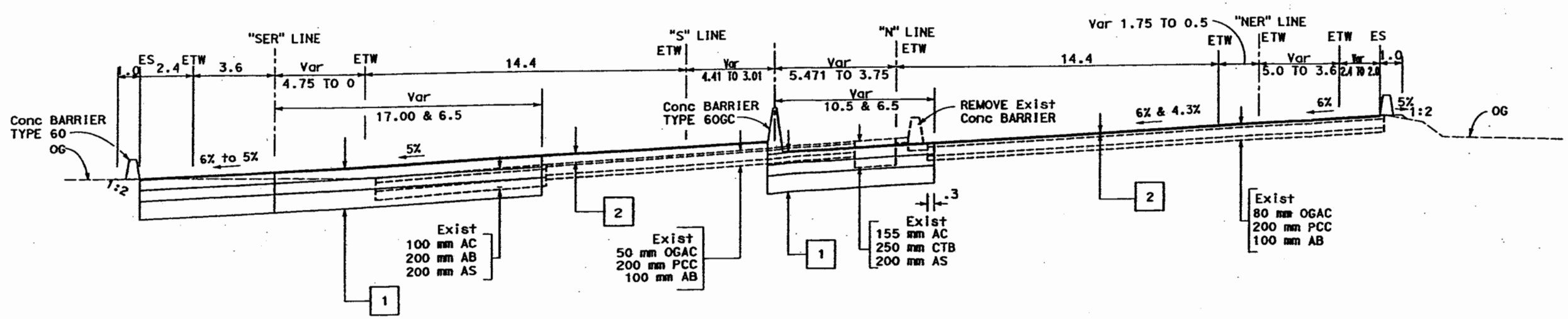

STA "S" 509+80.0 TO 510+49.259
STA "N" 509+85.236 TO 510+44.197

TYPICAL CROSS SECTIONS

NO SCALE

ALL DIMENSIONS ARE IN METERS UNLESS OTHERWISE SHOWN

FOR NOTES, ABBREVIATIONS &/OR LEGEND, SEE SHEET X-1

X-5

REVISED BY	DATE REVISED

CALCULATED/DESIGNED BY	CHECKED BY

PROJECT ENGINEER: AMANDO R. VITO

STATE OF CALIFORNIA - DEPARTMENT OF TRANSPORTATION
Caltrans PROJECT DEVELOPMENT

LAST REVISION 02-11-06 | DATE PLOTTED => 08-MAR-2006 | TIME PLOTTED => 10:20

RELATIVE BORDER SCALE IS IN MILLIMETERS 0 20 40 60 80

USERNAME => ahuang
DGN FILE => 416542ca005.dgn

CU 04250

EA 165421

CHECK PRINT

DIST	COUNTY	ROUTE	KILOMETER POST TOTAL PROJECT	SHEET NO	TOTAL SHEETS
04	Ala	880	43.6/45.5		

REGISTERED CIVIL ENGINEER

PLANS APPROVAL DATE

REGISTERED PROFESSIONAL ENGINEER A.R. Vito No. 60914 Exp. 12-31-06 CIVIL STATE OF CALIFORNIA

The State of California or its officers or agents shall not be responsible for the accuracy or completeness of electronic copies of this plan sheet.

Caltrans now has a web site! To get to the web site, go to: http://www.dot.ca.gov

Caltrans Metric

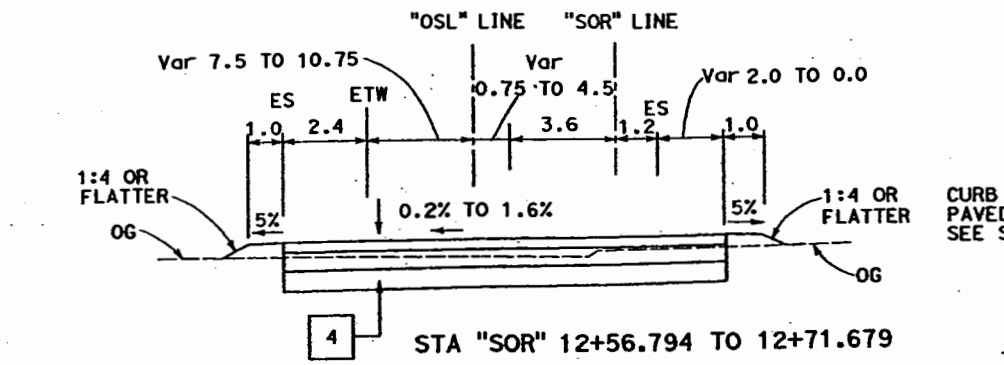

STA "SOR" 12+56.794 TO 12+71.679

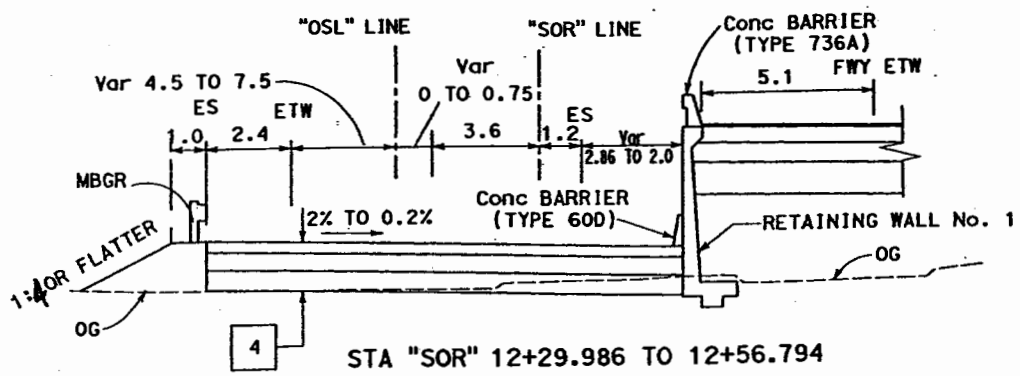

STA "SOR" 12+29.986 TO 12+56.794

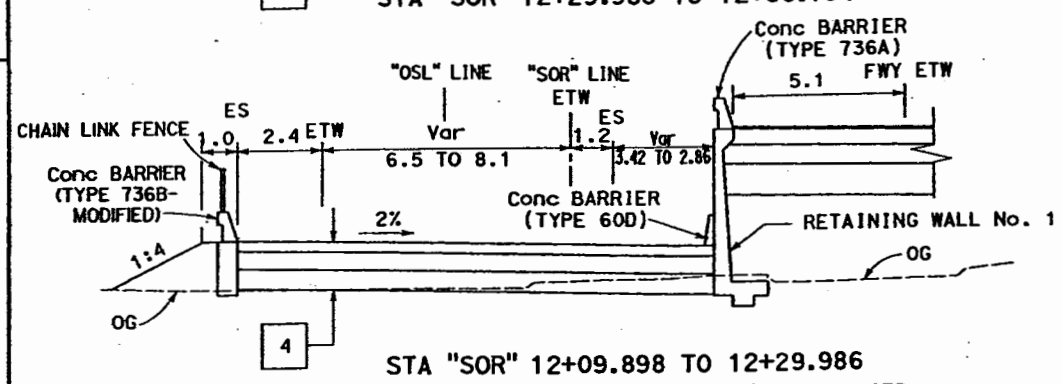

STA "SOR" 12+09.898 TO 12+29.986

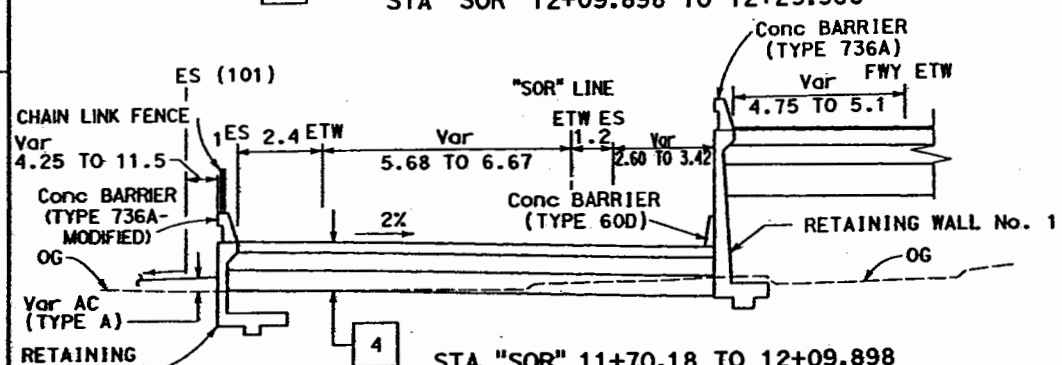

STA "SOR" 11+70.18 TO 12+09.898

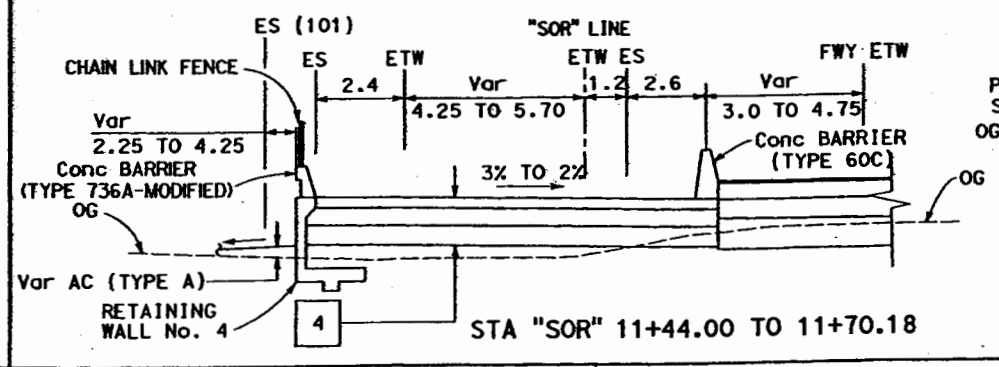

STA "SOR" 11+44.00 TO 11+70.18

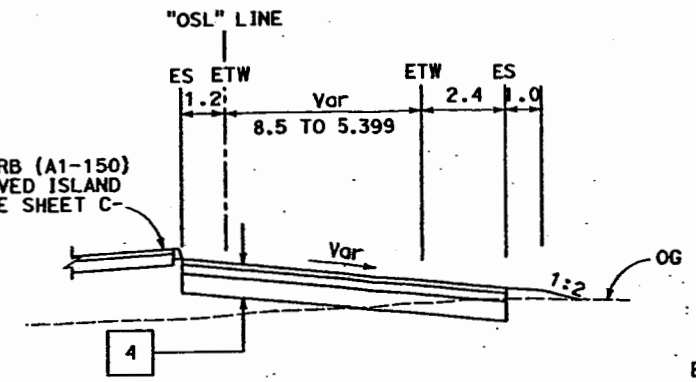

STA "OSL" 2+71.575 TO 2+95.847

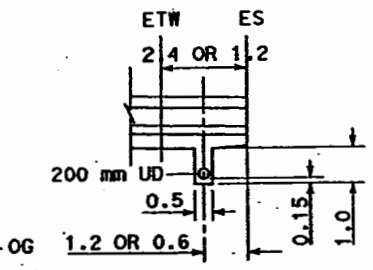

DETAIL F

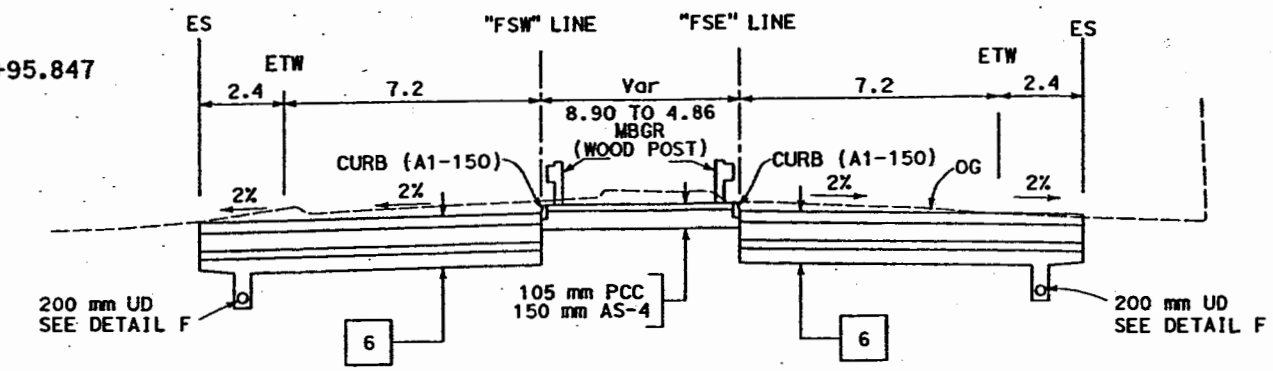

STA "FSE" 10+96.00 TO 11+45.00
"FSW" 10+96.50 TO 11+44.00

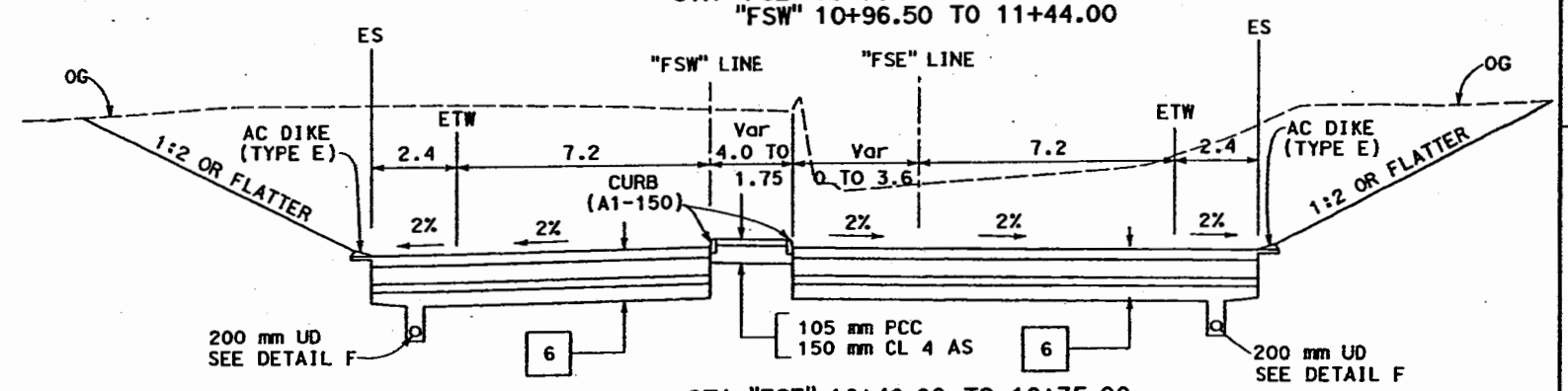

STA "FSE" 10+40.00 TO 10+75.00
"FSW" 10+64.00 TO 10+75.00

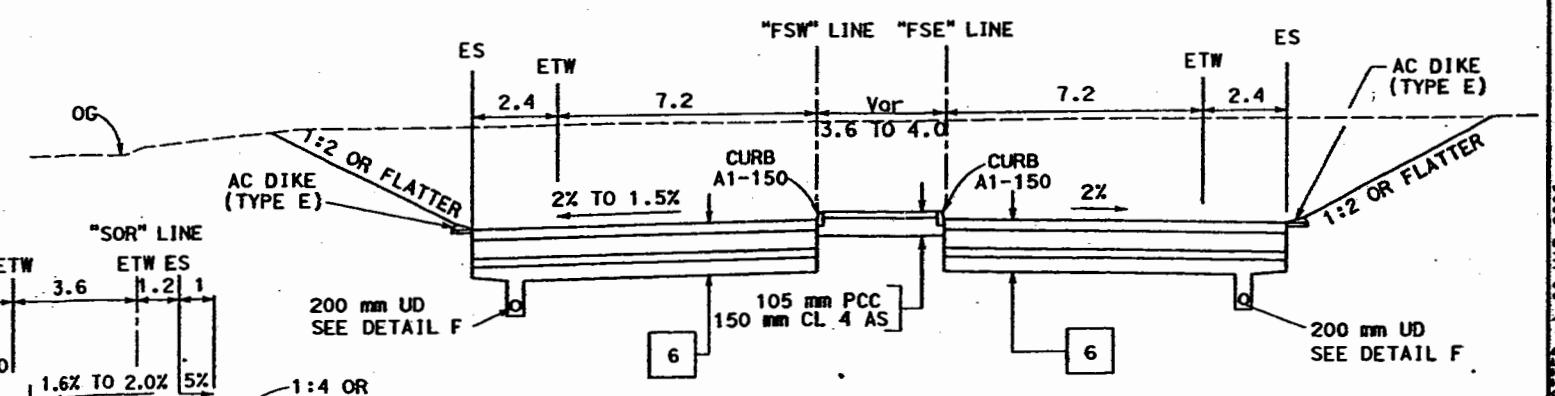

STA "FSE" 10+05.00 TO 10+40.00
"FSW" 10+09.00 TO 10+64.00

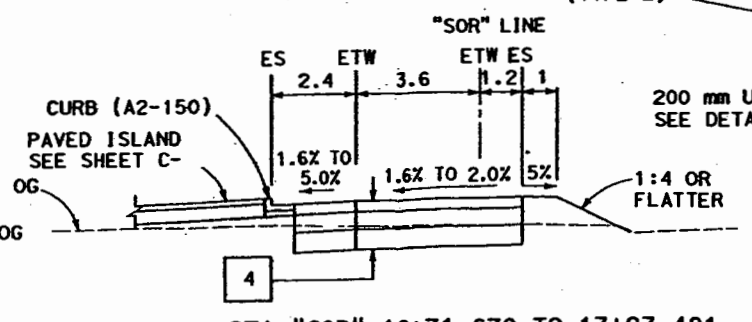

STA "SOR" 12+71.679 TO 13+23.481

FOR NOTES, ABBREVIATIONS &/OR LEGEND, SEE SHEET X-1

ALL DIMENSIONS ARE IN METERS UNLESS OTHERWISE SHOWN

TYPICAL CROSS SECTIONS

NO SCALE

X-6

REVISED BY | DATE REVISED | DATE | CALCULATED/DESIGNED BY | CHECKED BY | PROJECT ENGINEER AMANDO R. VITO

STATE OF CALIFORNIA - DEPARTMENT OF TRANSPORTATION
Caltrans PROJECT DEVELOPMENT

LAST REVISION 02-21-06 | DATE PLOTTED => 08-MAR-2006 | TIME PLOTTED => 10:20

RELATIVE BORDER SCALE IS IN MILLIMETERS 0 20 40 60 80

USERNAME => ahuang
DGN FILE => 416542co006.dgn

CU 04250

EA 165421

DIST	COUNTY	ROUTE	KILOMETER POST TOTAL PROJECT	SHEET No	TOTAL SHEETS
04	Ala	880	43.6/45.5		

REGISTERED CIVIL ENGINEER

PLANS APPROVAL DATE

REGISTERED PROFESSIONAL ENGINEER A.R. Vito No. 60914 Exp. 12-31-06 CIVIL STATE OF CALIFORNIA

The State of California or its officers or agents shall not be responsible for the accuracy or completeness of electronic copies of this plan sheet.

Caltrans now has a web site! To get to the web site, go to: http://www.dot.ca.gov

Caltrans Metric

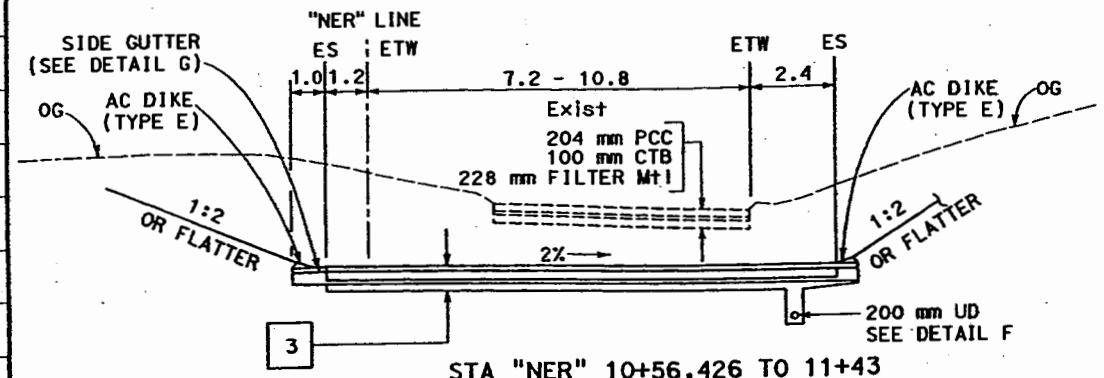

STA "NER" 10+56.426 TO 11+43

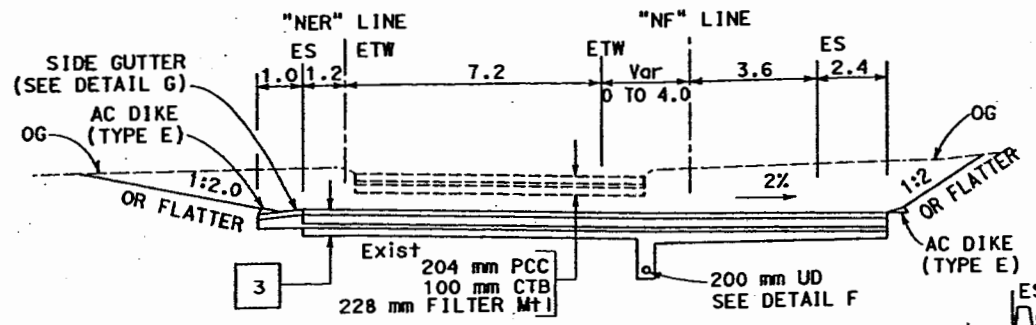

STA "NER" 10+40.0 TO 10+56.426

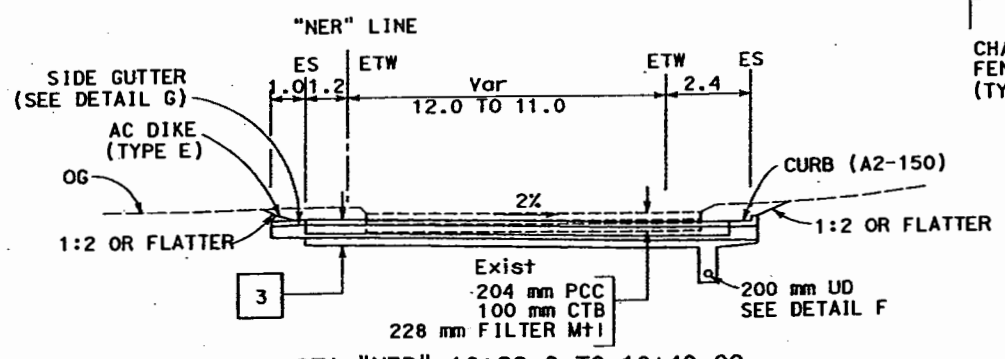

STA "NER" 10+22.0 TO 10+40.00

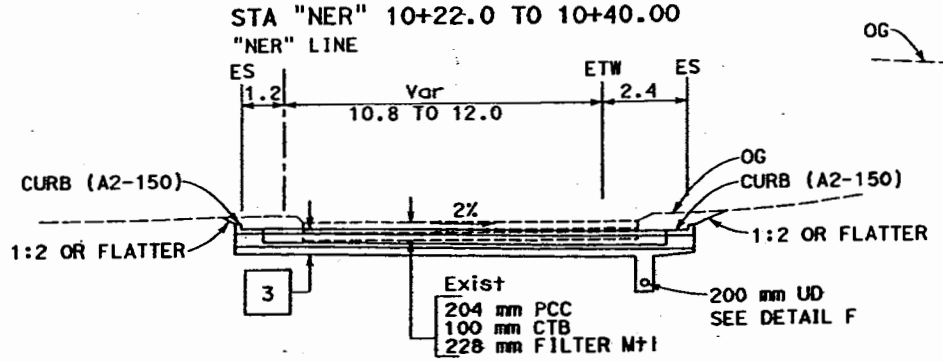

STA "NER" 10+15.65 TO 10+22.0

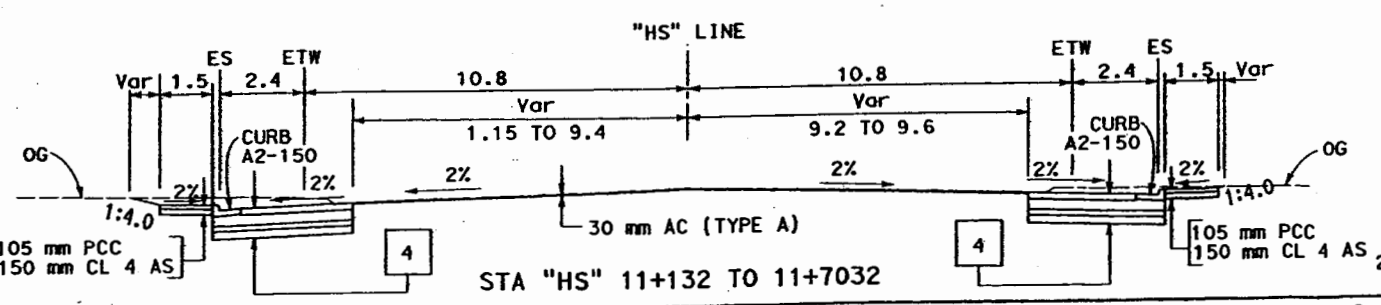

STA "HS" 11+132 TO 11+7032

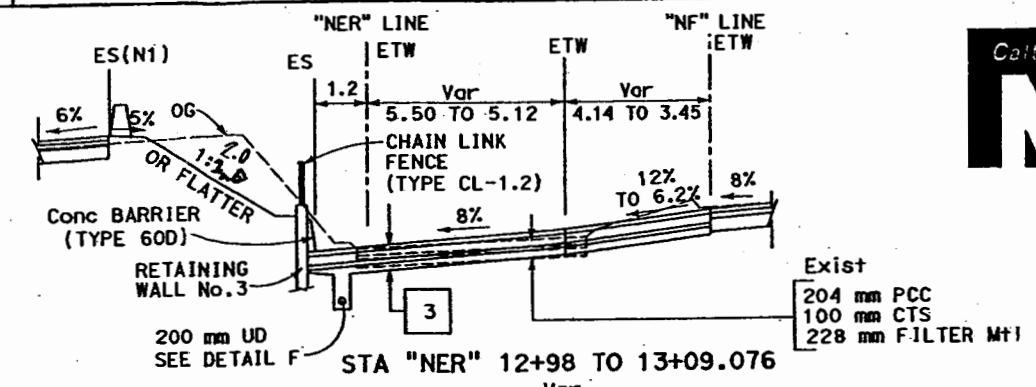

STA "NER" 12+98 TO 13+09.076

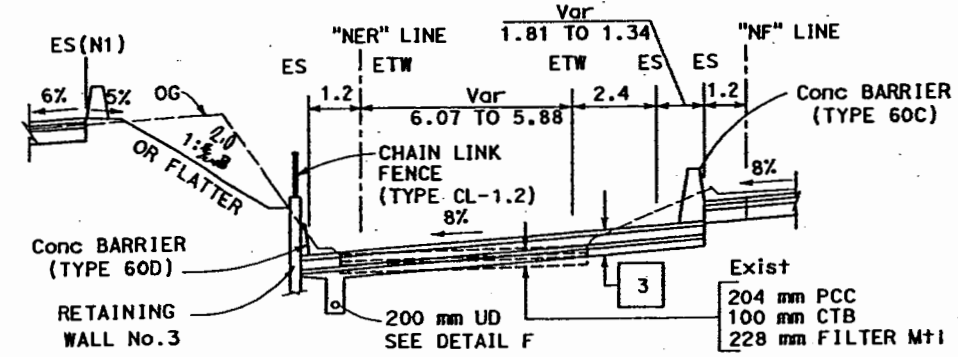

STA "NER" 12+77.0 TO 12+98

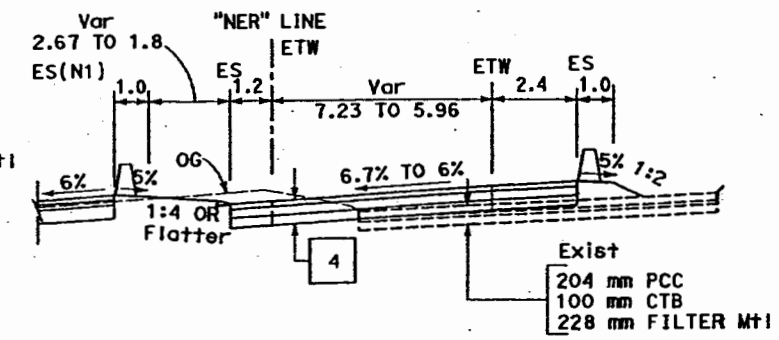

STA "NER" 13+50.847 TO 13+70.452

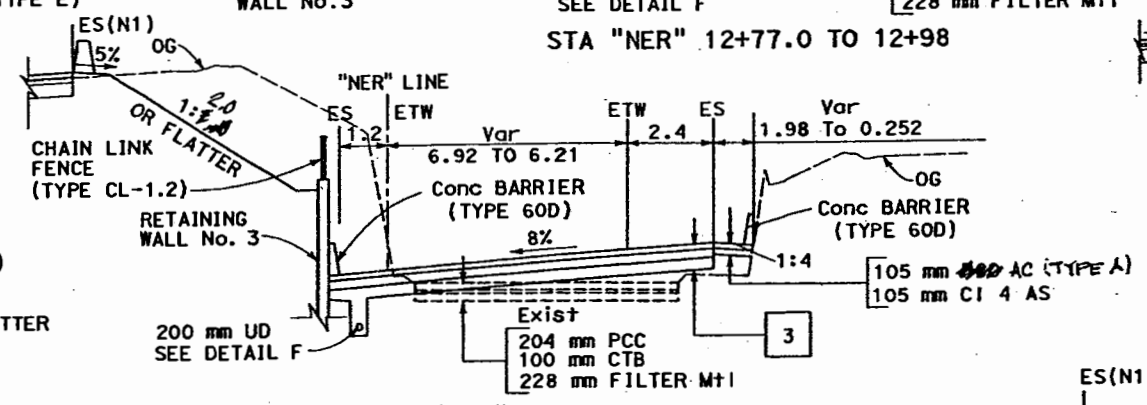

STA "NER" 12+48.567 TO 12+77.0

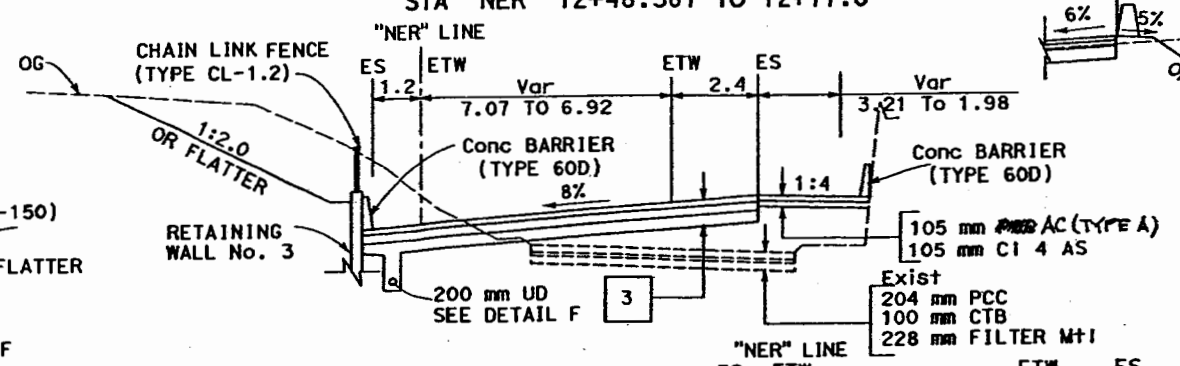

STA "NER" 12+39.226 TO 12+48.567

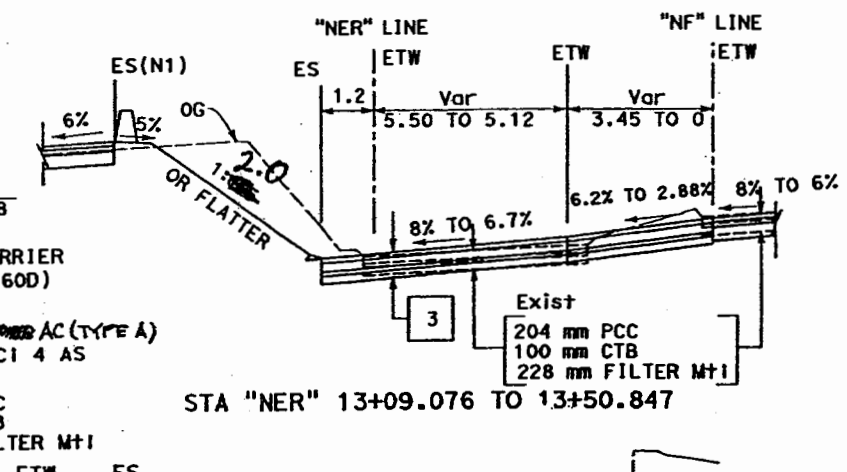

STA "NER" 13+09.076 TO 13+50.847

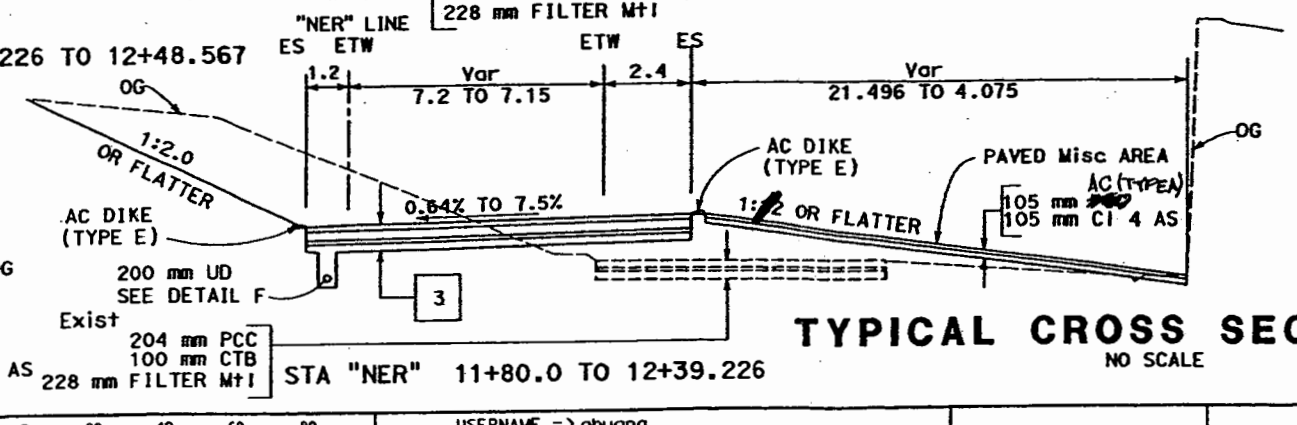

STA "NER" 11+80.0 TO 12+39.226

TYPICAL CROSS SECTIONS

NO SCALE

X-7

STATE OF CALIFORNIA - DEPARTMENT OF TRANSPORTATION

Caltrans PROJECT DEVELOPMENT

PROJECT ENGINEER: AMANDO R. VITO

DATE	REVISED BY	DATE REVISED

CALCULATED/DESIGNED BY | CHECKED BY

DATE PLOTTED => 08-MAR-2006
TIME PLOTTED => 10:21

LAST REVISION 01-2706

RELATIVE BORDER SCALE IS IN MILLIMETERS 0 20 40 60 80

USERNAME => ohuang
DGN FILE => 416542ca007.dgn

CU 04250 | EA 165421

CHECK PRINT

DIST	COUNTY	ROUTE	KILOMETER POST TOTAL PROJECT	SHEET No	TOTAL SHEETS
04	Ala	880	43.6/45.5		

REGISTERED CIVIL ENGINEER

PLANS APPROVAL DATE

REGISTERED PROFESSIONAL ENGINEER No. EXP. CIVIL STATE OF CALIFORNIA

The State of California or its officers or agents shall not be responsible for the accuracy or completeness of electronic copies of this plan sheet.

Caltrans now has a web site! To get to the web site, go to: http://www.dot.ca.gov

Caltrans Metric

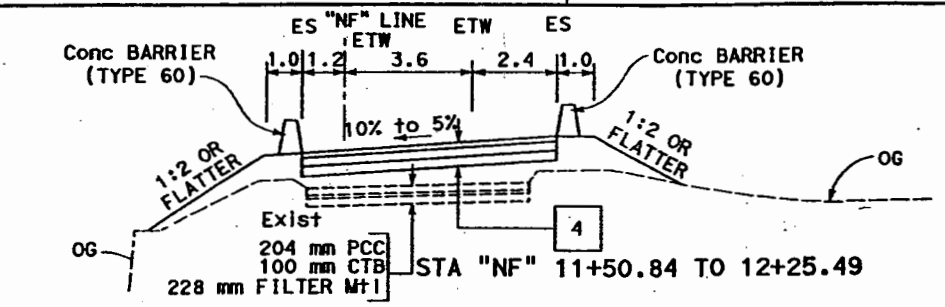

STA "NF" 11+50.84 TO 12+25.49

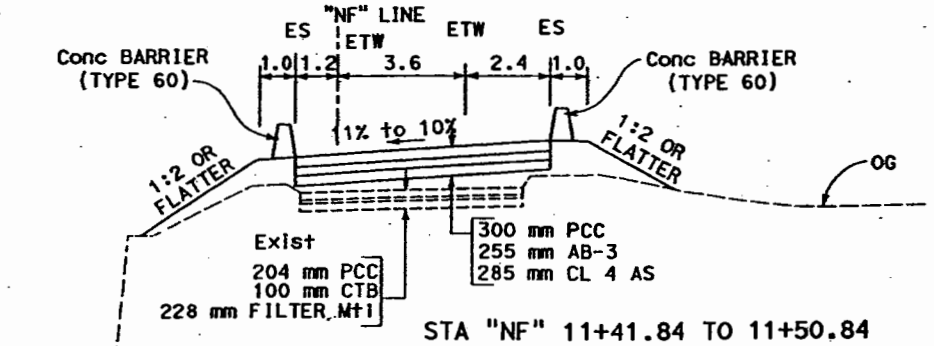

STA "NF" 11+41.84 TO 11+50.84

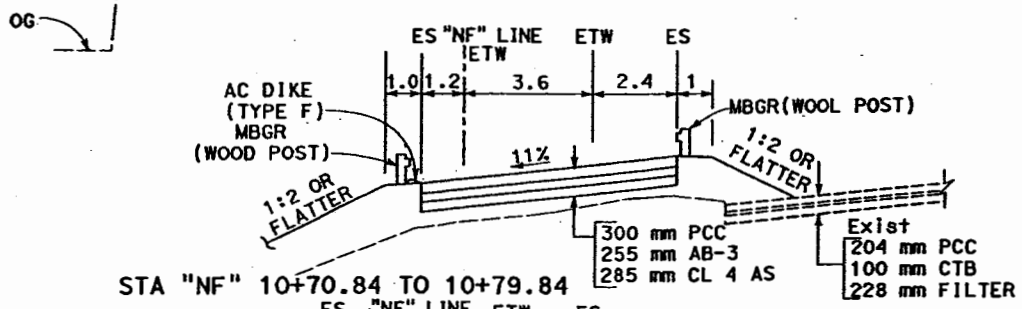

STA "NF" 10+70.84 TO 10+79.84

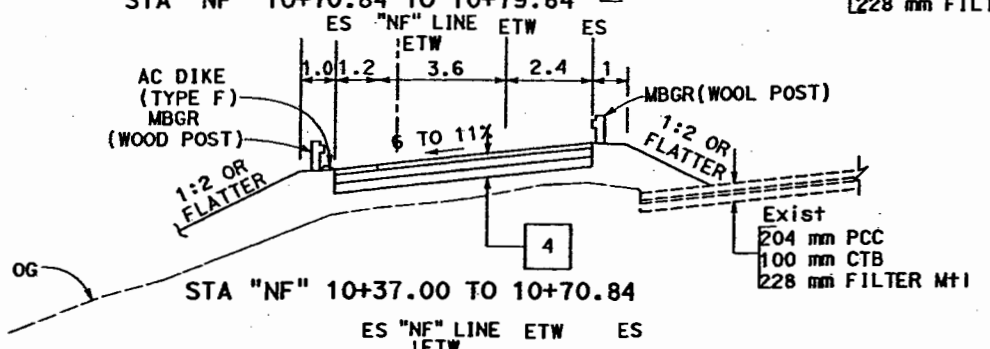

STA "NF" 10+37.00 TO 10+70.84

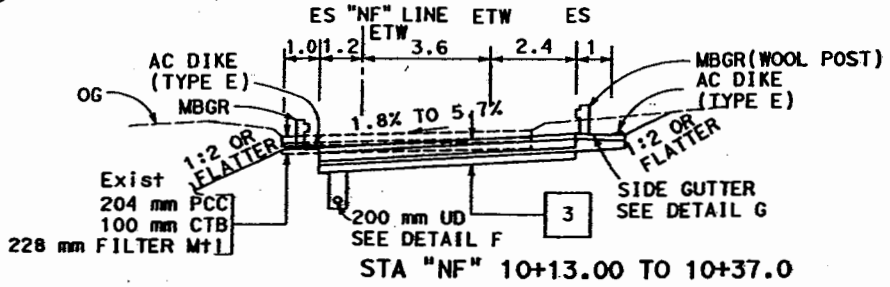

STA "NF" 10+13.00 TO 10+37.0

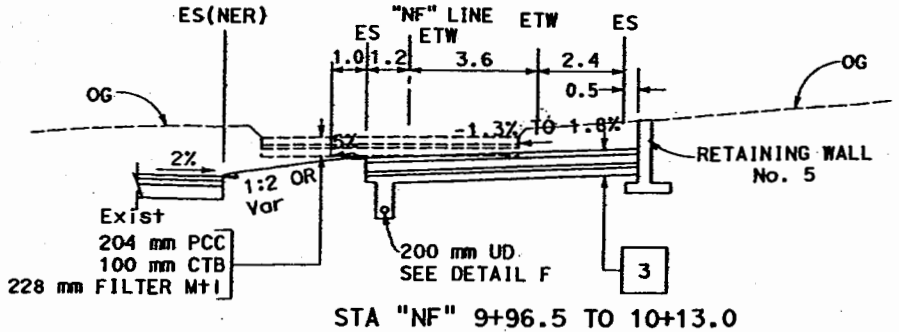

STA "NF" 9+96.5 TO 10+13.0

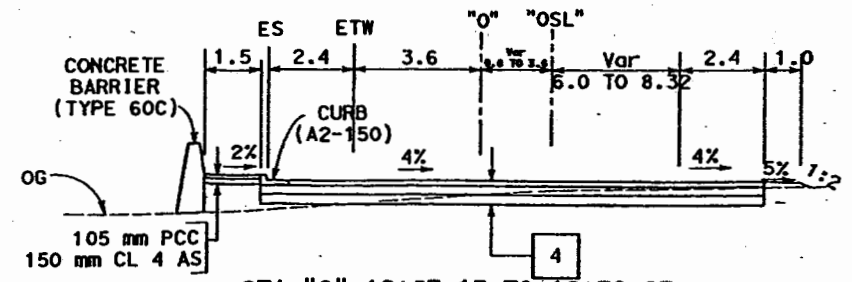

STA "O" 12+67.15 TO 12+78.07

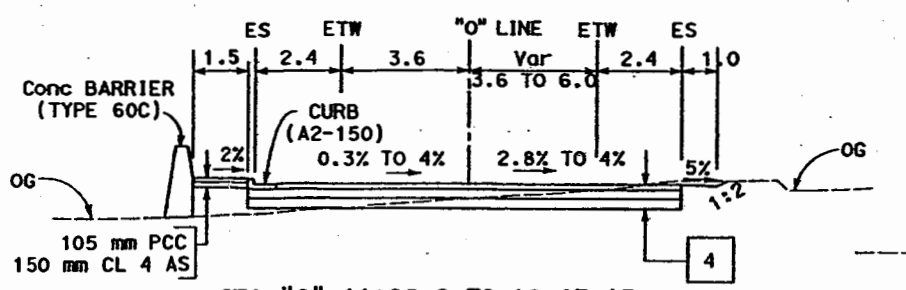

STA "O" 11+96.0 TO 12+67.15

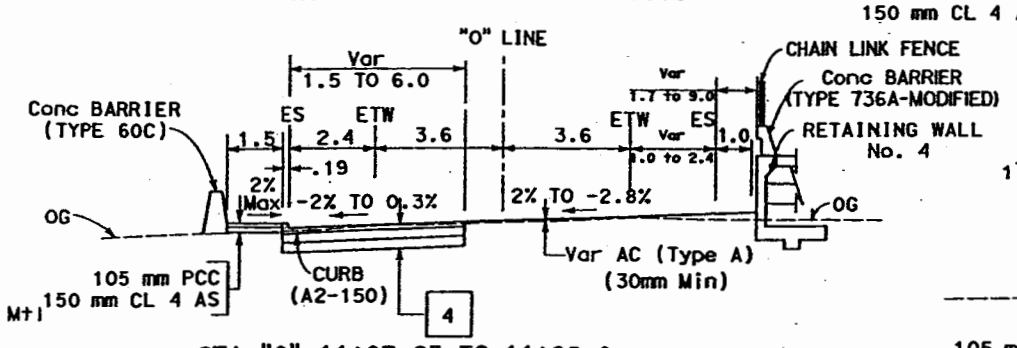

STA "O" 11+07.25 TO 11+96.0

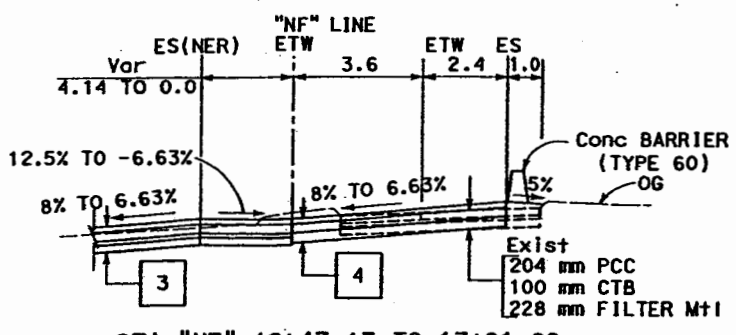

STA "NF" 12+47.13 TO 13+01.09

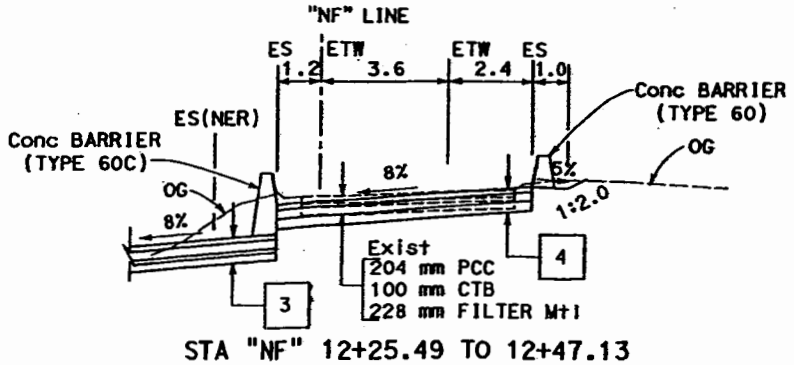

STA "NF" 12+25.49 TO 12+47.13

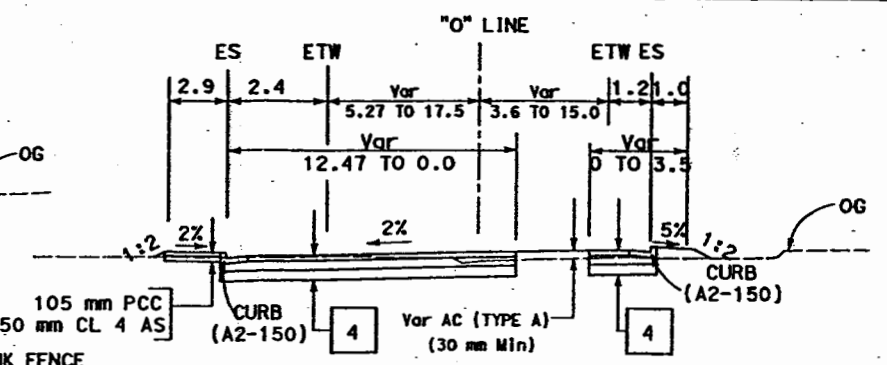

STA "O" 14+40.0 TO 15+19.0

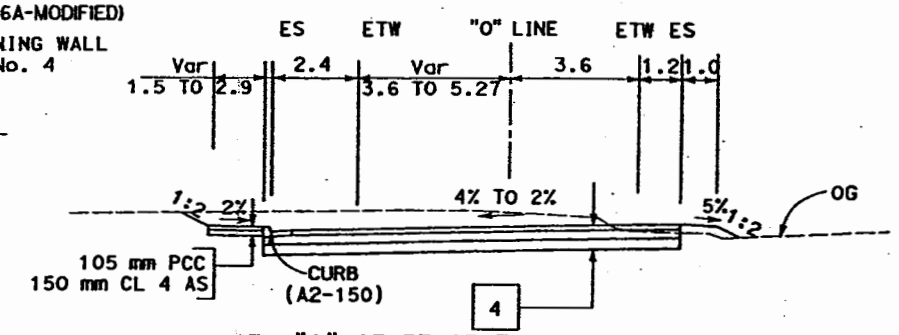

STA "O" 13+57.95 TO 14+40.0

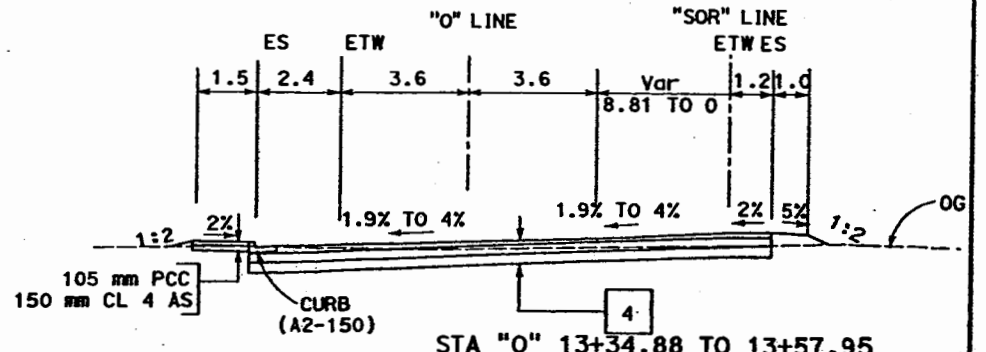

STA "O" 13+34.88 TO 13+57.95

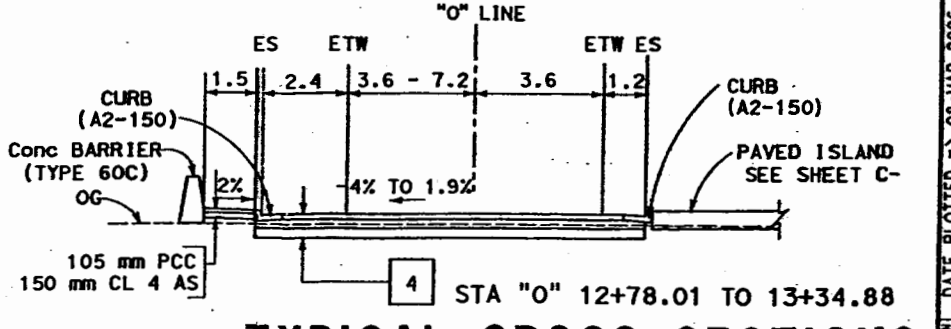

STA "O" 12+78.01 TO 13+34.88

TYPICAL CROSS SECTIONS

NO SCALE

X-8

STATE OF CALIFORNIA - DEPARTMENT OF TRANSPORTATION

Caltrans PROJECT DEVELOPMENT

PROJECT ENGINEER AMANDO R. VITO

CALCULATED/DESIGNED BY | CHECKED BY

DATE REVISED BY | DATE REVISED

LAST REVISION 02-16-06 | DATE PLOTTED => 08-MAR-2006 | TIME PLOTTED => 10:21

RELATIVE BORDER SCALE IS IN MILLIMETERS 0 20 40 60 80

USERNAME => ahuang
DGN FILE => 416542co008.dgn

CU 04250 | EA 165421

DIST	COUNTY	ROUTE	KILOMETER POST TOTAL PROJECT	SHEET No	TOTAL SHEETS
04	Ala	880	43.6/45.5		

REGISTERED CIVIL ENGINEER

PLANS APPROVAL DATE

REGISTERED PROFESSIONAL ENGINEER No. EXP. CIVIL STATE OF CALIFORNIA

The State of California or its officers or agents shall not be responsible for the accuracy or completeness of electronic copies of this plan sheet.

Caltrans now has a web site! To get to the web site, go to: http://www.dot.ca.gov

Caltrans Metric

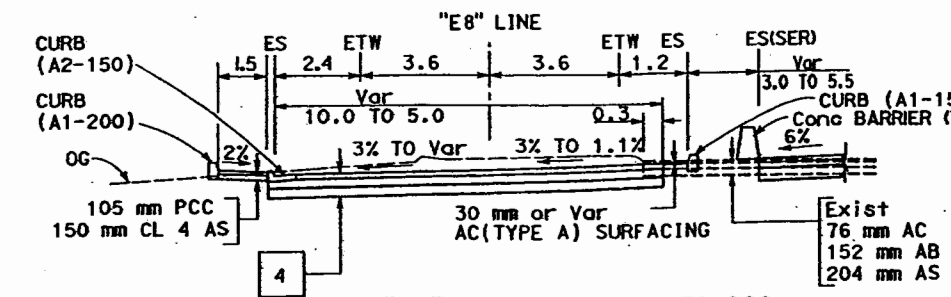

STA "E8" 23+27.0 TO 23+70.988

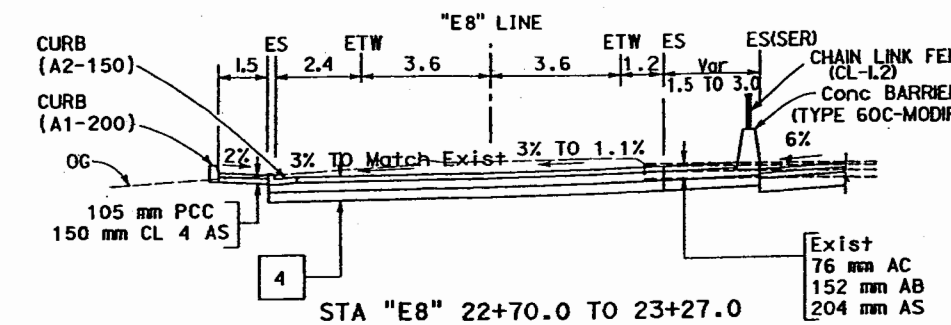

STA "E8" 22+70.0 TO 23+27.0

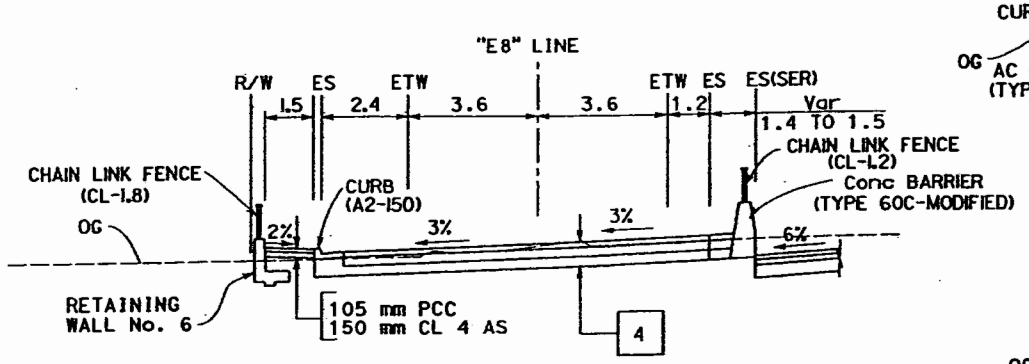

STA "E8" 22+27.0 TO 22+70.0

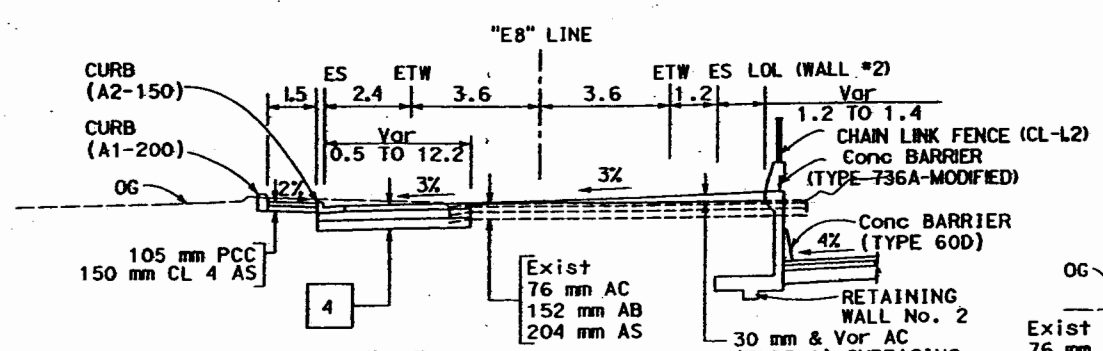

STA "E8" 21.03 TO 22+27.0

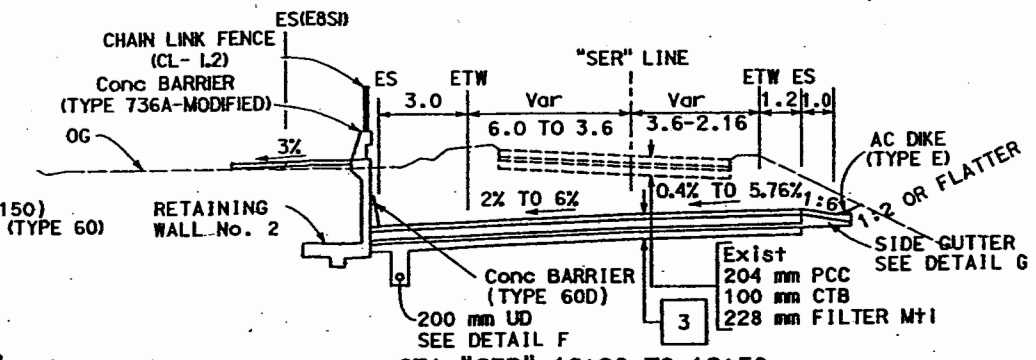

STA "SER" 12+26 TO 12+58

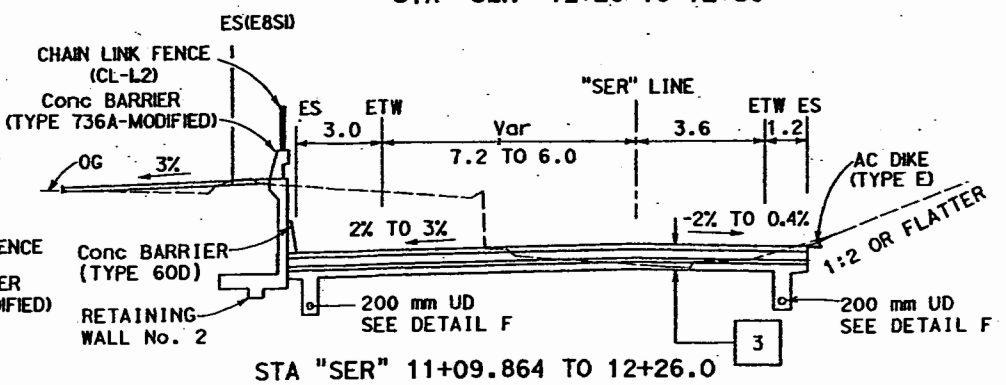

STA "SER" 11+09.864 TO 12+26.0

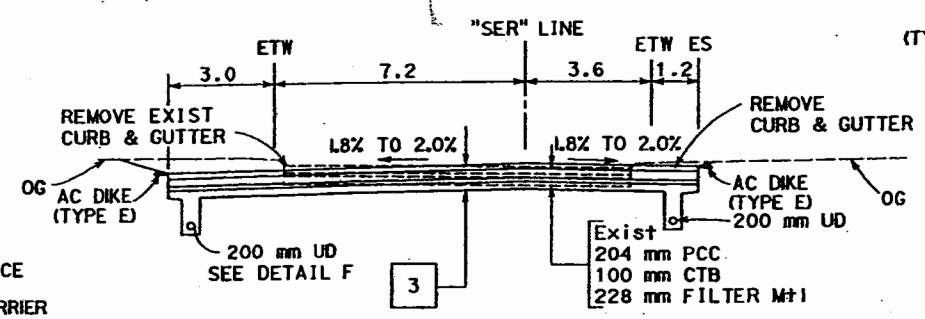

STA "SER" 10+50.00 TO 11+09.864

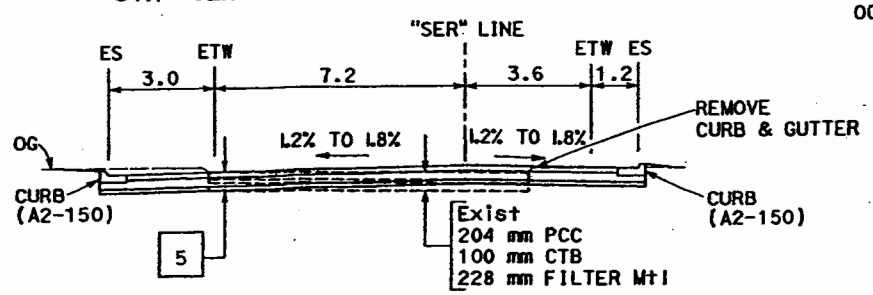

STA "SER" 10+16.00 TO 10+50.00

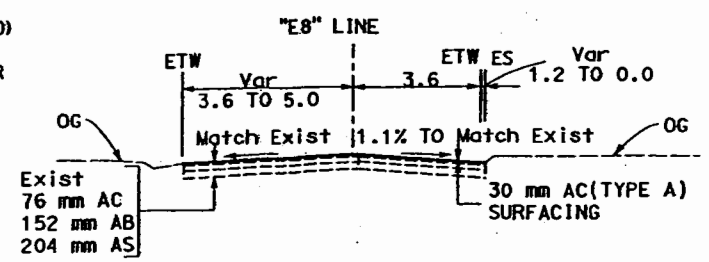

STA "E8" 23+70.988 TO 24+21.7

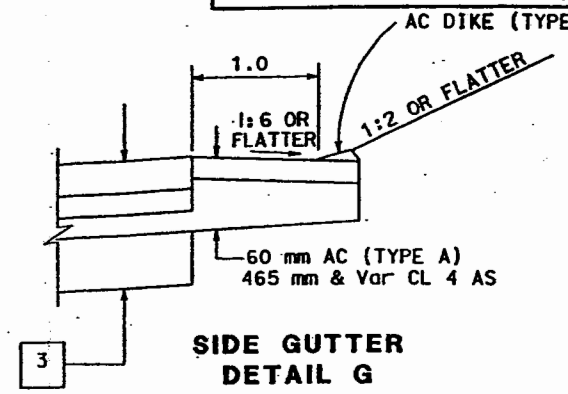

SIDE GUTTER DETAIL G

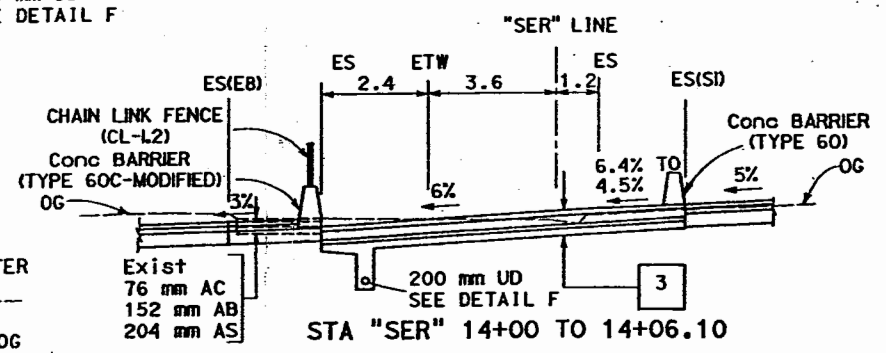

STA "SER" 14+00 TO 14+06.10

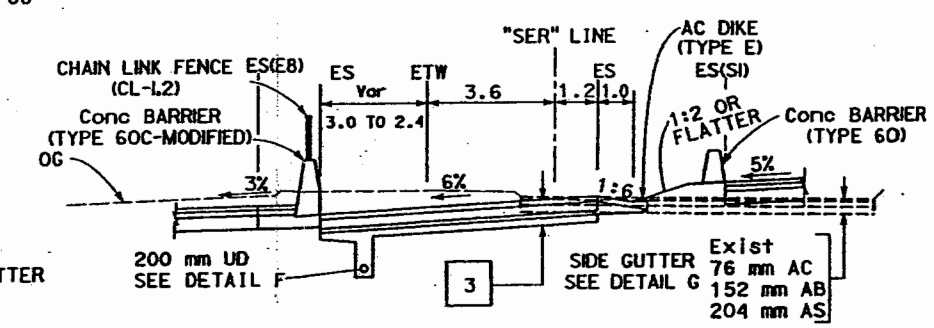

STA "SER" 13+20.481 TO 14+00

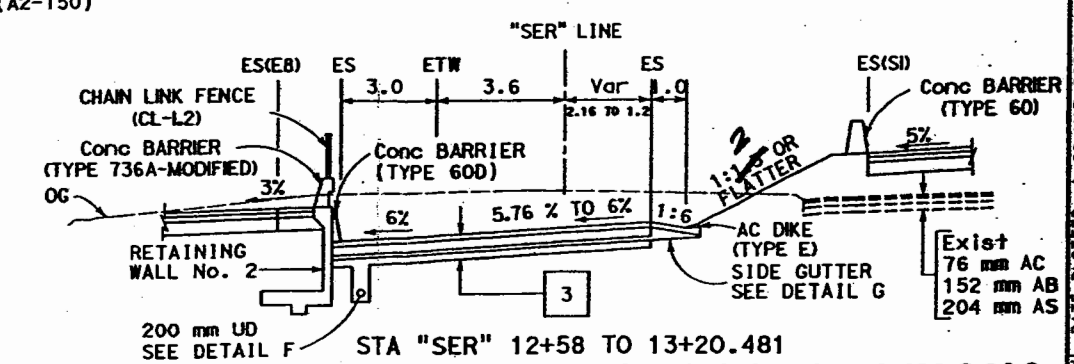

STA "SER" 12+58 TO 13+20.481

TYPICAL CROSS SECTIONS

NO SCALE

X-9

DATE	REVISED BY	DATE REVISED

CALCULATED/DESIGNED BY | CHECKED BY

PROJECT ENGINEER: AMANDO R. VITO

STATE OF CALIFORNIA - DEPARTMENT OF TRANSPORTATION

Caltrans PROJECT DEVELOPMENT

REV. REVISION DATE: 02-22-06

DATE PLOTTED => 08-MAR-2006
TIME PLOTTED => 10:18

RELATIVE BORDER SCALE IS IN MILLIMETERS 0 20 40 60 80

USERNAME => ghuang
DGN FILE => 416542ca009.dgn

CU 04250

EA 165421

ATTACHMENT C

DRAINAGE PLANS

DIST	COUNTY	ROUTE	KILOMETER POST TOTAL PROJECT	SHEET No	TOTAL SHEETS
04	Ala	880	43.6/45.5		

REGISTERED CIVIL ENGINEER

PLANS APPROVAL DATE

REGISTERED PROFESSIONAL ENGINEER M.R. Morancy No. 55907 Exp. 12-31-06 CIVIL STATE OF CALIFORNIA

The State of California or its officers or agents shall not be responsible for the accuracy or completeness of electronic copies of this plan sheet.

Caltrans now has a web site! To get to the web site, go to: http://www.dot.ca.gov

Caltrans Metric

NOTES

1. THE PROJECT VERTICAL DATUM IS NAVD 88.
2. ALL OFFSET TIES TO DRAINAGE INLETS, MANHOLES OR JUNCTION STRUCTURES ARE TO THE CENTER OF THE BASE OF THE STRUCTURE.
3. FOR INLETS ADJACENT TO DIKES, CURBS OR BARRIERS, TOP OF GRATE ELEVATIONS ARE AT FLOWLINE. FOR ALL OTHER LOCATIONS, TOP OF GRATE ELEVATIONS ARE AT CENTER OF GRATE.
4. INLET DEPRESSIONS IN AC SHOULDERS SHALL CONFORM TO STANDARD PLAN D78B AND SHALL BE 200 mm THICK. INLET DEPRESSIONS IN SHOULDERS WITH OGAC SURFACING SHALL CONFORM TO THE DETAIL SHOWN ELSEWHERE IN THESE PLANS. CORNERS OF INLET DEPRESSIONS SHALL BE CUT OFF AS SHOWN ON "DETAIL OF ASPHALT CONCRETE PAVEMENT" OF STANDARD PLAN D78A. ISOLATION JOINTS SHALL NOT BE INSTALLED AT INLET DEPRESSIONS.
5. THE LOCATIONS OF EXISTING DRAINAGE FACILITIES ARE APPROXIMATE ONLY. CONTRACTOR SHALL VERIFY LOCATION AND ELEVATION BEFORE MODIFYING EXISTING FACILITIES. DISCREPANCIES SHALL BE BROUGHT TO THE ATTENTION OF THE ENGINEER.
6. CONTRACTOR SHALL VERIFY ALL CONTROLLING FIELD DIMENSIONS BEFORE ORDERING OR FABRICATING ANY MATERIAL.
7. SCSP SHALL HAVE 65 mm TAPERED SPACERS.

ABBREVIATIONS

GD - GUTTER DEPRESSION
InD - INLET DEPRESSION

LEGEND

No. DRAINAGE SYSTEM NUMBER
DRAINAGE UNIT
GRADE TO DRAIN

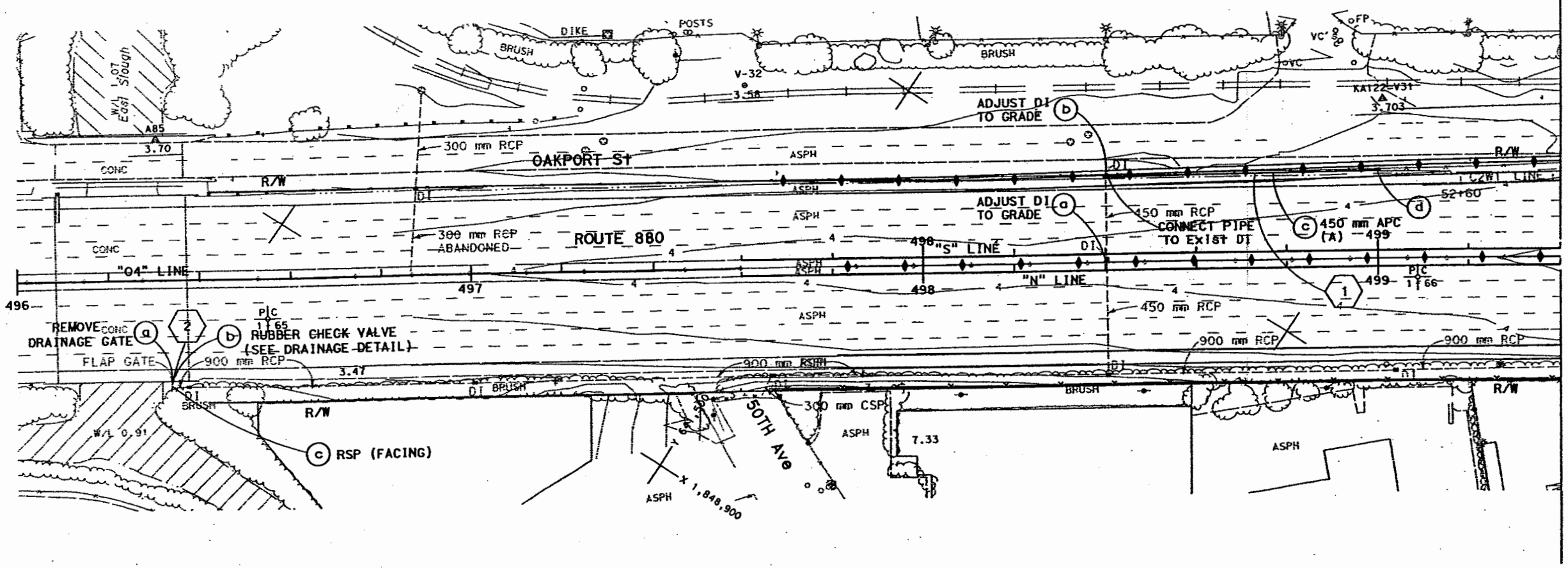

ALL DIMENSIONS ARE IN METERS UNLESS OTHERWISE SHOWN

DRAINAGE PLAN

SCALE: 1:500

THIS PLAN ACCURATE FOR DRAINAGE WORK ONLY

D-1

STATE OF CALIFORNIA - DEPARTMENT OF TRANSPORTATION
Caltrans PROJECT DEVELOPMENT

PROJECT ENGINEER: AMANDO R. VITO

CALCULATED/DESIGNED BY: MM | CHECKED BY: DT | REVISED BY | DATE REVISED | DATE

RELATIVE BORDER SCALE IS IN MILLIMETERS: 0 20 40 60 80

USERNAME => dtolosa
DGN FILE => 416542oo1.dgn

CU 04250 | EA 165421 | CHECK PRINT

MAR 0 2 2006

DATE PLOTTED => 28-FEB-2006
TIME PLOTTED => 08:10

DATE REVISED 12-12-05

DIST	COUNTY	ROUTE	KILOMETER POST TOTAL PROJECT	SHEET No	TOTAL SHEETS
04	Ala	880	43.6/45.5		

REGISTERED CIVIL ENGINEER

PLANS APPROVAL DATE

REGISTERED PROFESSIONAL ENGINEER M.R. Morancy No. 55907 Exp. 12-31-06 CIVIL STATE OF CALIFORNIA

The State of California or its officers or agents shall not be responsible for the accuracy or completeness of electronic copies of this plan sheet.

Caltrans now has a web site! To get to the web site, go to: http://www.dot.ca.gov

Caltrans Metric

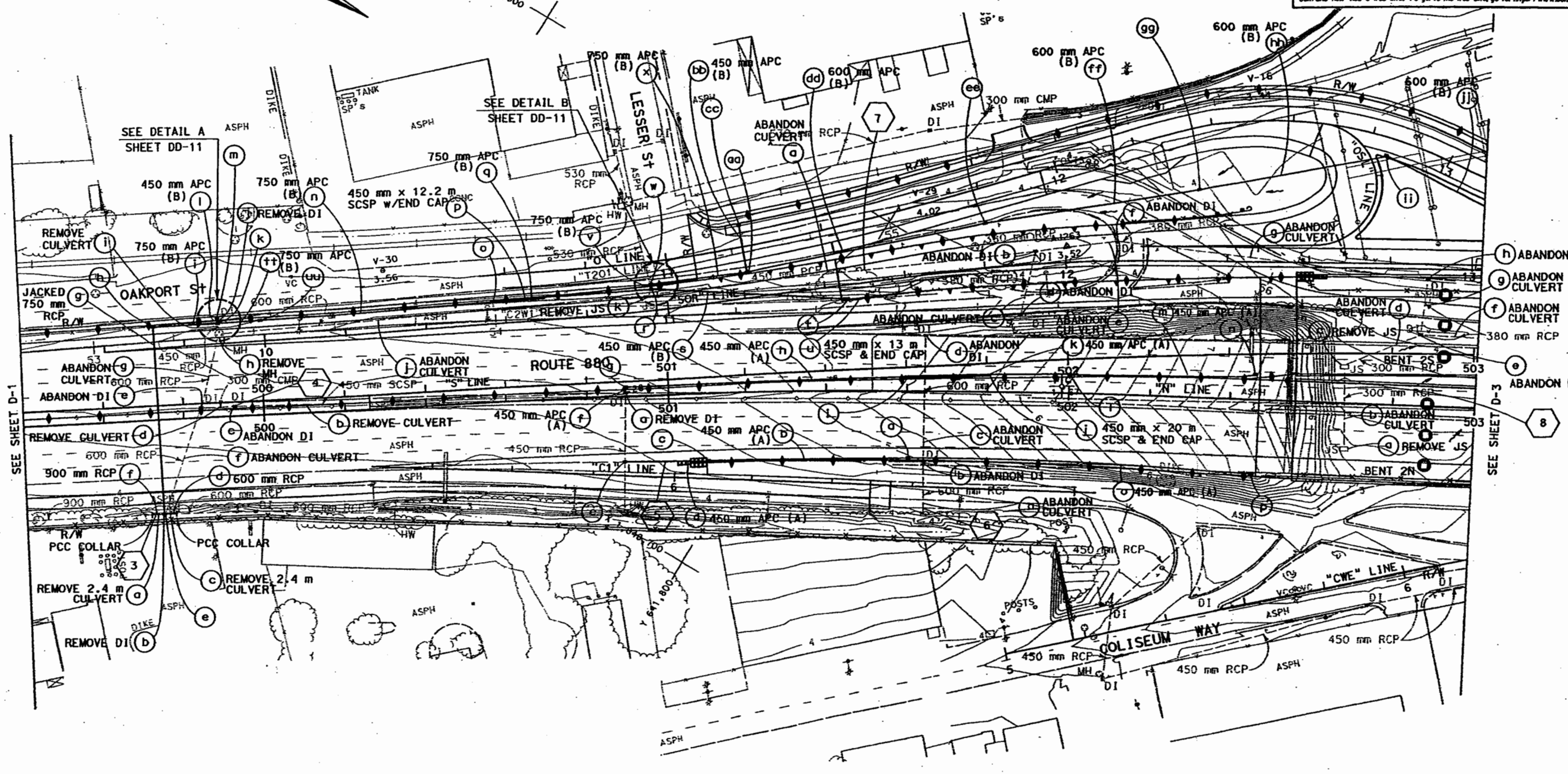

ALL DIMENSIONS ARE IN METERS UNLESS OTHERWISE SHOWN

DRAINAGE PLAN

SCALE: 1:500

D-2

FOR NOTES, ABBREVIATIONS &/OR LEGEND, SEE SHEET D-1

THIS PLAN ACCURATE FOR DRAINAGE WORK ONLY

RELATIVE BORDER SCALE IS IN MILLIMETERS 0 20 40 60 80

USERNAME => dtolosa
DGN FILE => 416542aa2.dgn

CU 04250

EA 165421

CHECK PRINT

LAST REVISION 12-15-05

DATE PLOTTED => 28-FEB-2006
TIME PLOTTED => 08:11

STATE OF CALIFORNIA - DEPARTMENT OF TRANSPORTATION

Caltrans PROJECT DEVELOPMENT

PROJECT ENGINEER AMANDO R. VITO

CALCULATED/DESIGNED BY MM DATE

CHECKED BY DT

REVISED BY

DATE REVISED

DIST	COUNTY	ROUTE	KILOMETER POST TOTAL PROJECT	SHEET No	TOTAL SHEETS
04	Ala	880	43.6/45.5		

REGISTERED CIVIL ENGINEER

PLANS APPROVAL DATE

REGISTERED PROFESSIONAL ENGINEER M.R. Morancy No. 55907 Exp. 12-31-06 CIVIL STATE OF CALIFORNIA

The State of California or its officers or agents shall not be responsible for the accuracy or completeness of electronic copies of this plan sheet.

Caltrans now has a web site! To get to the web site, go to: http://www.dot.ca.gov

Caltrans Metric

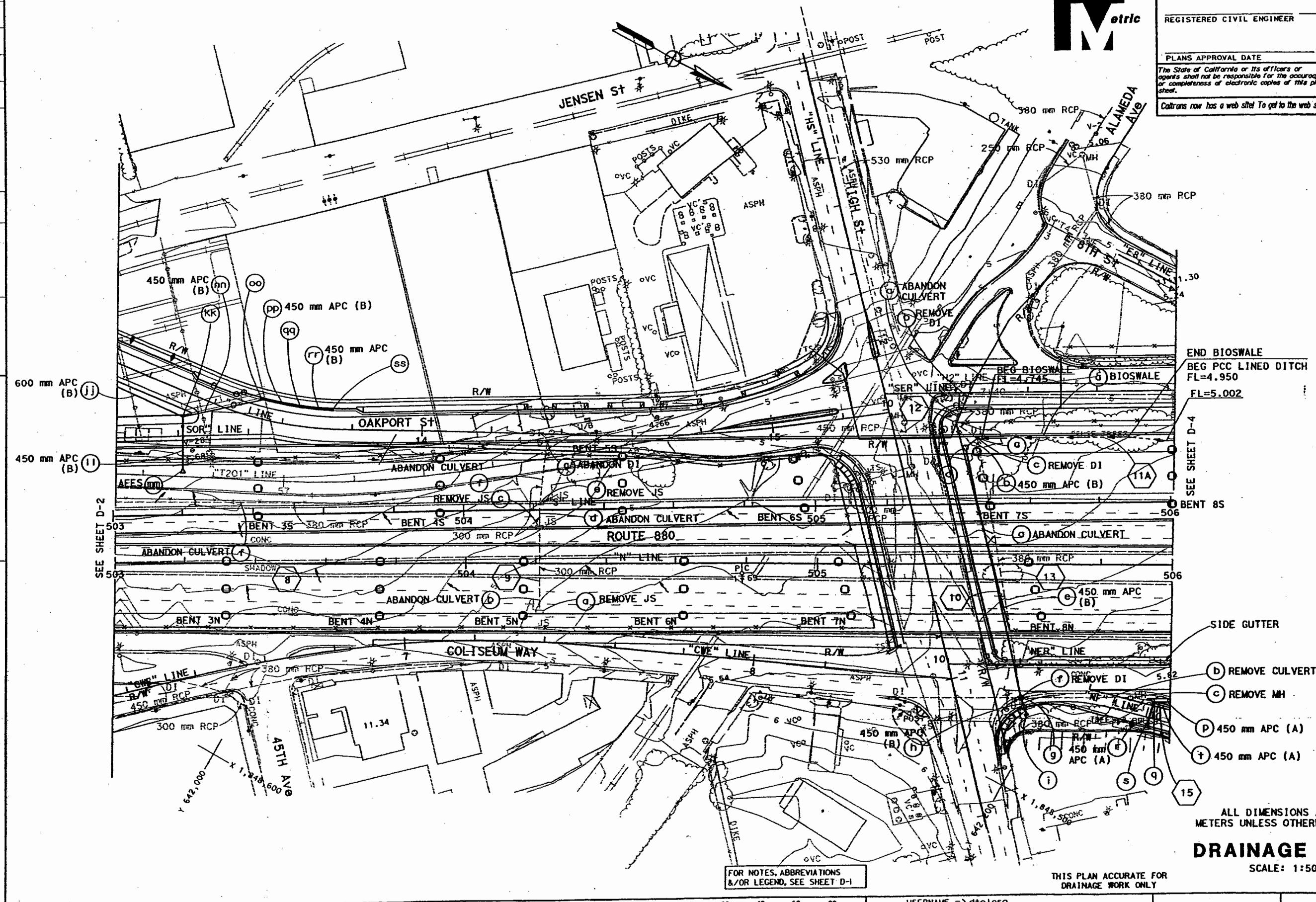

FOR NOTES, ABBREVIATIONS &/OR LEGEND, SEE SHEET D-1

THIS PLAN ACCURATE FOR DRAINAGE WORK ONLY

CHECK PRINT

MAR 0 2 2006

ALL DIMENSIONS ARE IN METERS UNLESS OTHERWISE SHOWN

DRAINAGE PLAN

SCALE: 1:500

D-3

CALCULATED/ DESIGNED BY	MM	DATE	REVISED BY
CHECKED BY	ST		DATE REVISED

PROJECT ENGINEER: AMANDO R. VITO.

STATE OF CALIFORNIA - DEPARTMENT OF TRANSPORTATION

Caltrans PROJECT DEVELOPMENT

LAST REVISION 01-17-06 DATE PLOTTED => 28-FEB-2006 TIME PLOTTED => 08:12

RELATIVE BORDER SCALE IS IN MILLIMETERS 0 20 40 60 80

USERNAME => dtoloso
DGN FILE => 416542aa3.dgn

CU 04247

EA 165421

DIST	COUNTY	ROUTE	KILOMETER POST TOTAL PROJECT	SHEET No	TOTAL SHEETS
04	Ala	880	43.6/45.5		

REGISTERED CIVIL ENGINEER

PLANS APPROVAL DATE

REGISTERED PROFESSIONAL ENGINEER M.R. Morency No. 55907 Exp. 12-31-06 CIVIL STATE OF CALIFORNIA

The State of California or its officers or agents shall not be responsible for the accuracy or completeness of electronic copies of this plan sheet.

Caltrans now has a web site! To get to the web site, go to: http://www.dot.ca.gov

Caltrans Metric

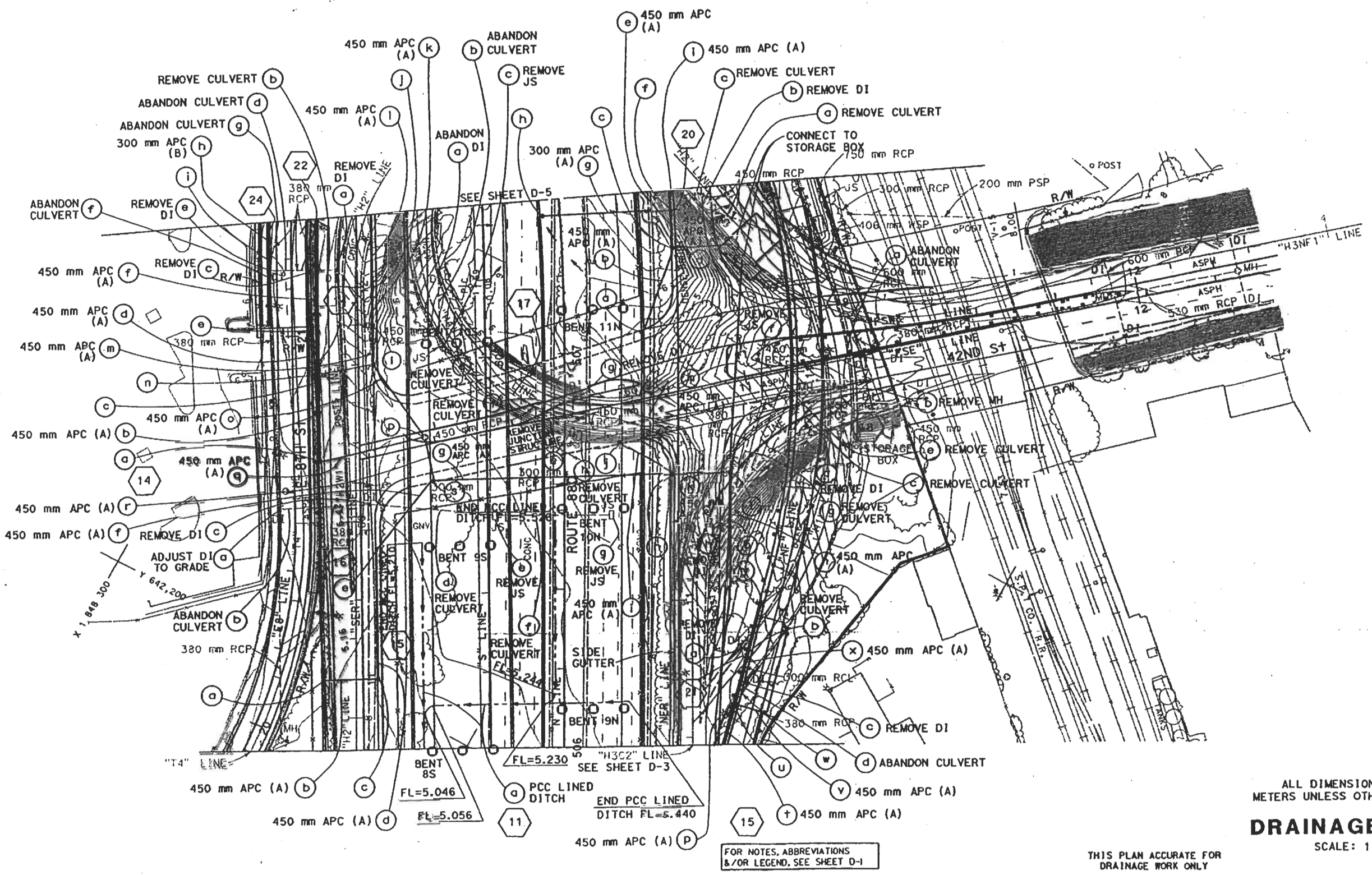

FOR NOTES, ABBREVIATIONS &/OR LEGEND, SEE SHEET D-1

THIS PLAN ACCURATE FOR DRAINAGE WORK ONLY

ALL DIMENSIONS ARE IN METERS UNLESS OTHERWISE SHOWN

DRAINAGE PLAN

SCALE: 1:500

D-4

DATE	REVISED BY	DATE REVISED

CALCULATED/DESIGNED BY

CHECKED BY

PROJECT ENGINEER AMANDO R. VITO

STATE OF CALIFORNIA - DEPARTMENT OF TRANSPORTATION

Caltrans PROJECT DEVELOPMENT

LAST REVISION 02-04-06 DATE PLOTTED => 09-MAR-2006 TIME PLOTTED => 16:10

DIST	COUNTY	ROUTE	KILOMETER POST TOTAL PROJECT	SHEET No	TOTAL SHEETS
04	Ala	880	43.6/45.5		

REGISTERED CIVIL ENGINEER

PLANS APPROVAL DATE

REGISTERED PROFESSIONAL ENGINEER W.R. Morancy No. 55907 Exp. 12-31-06 CIVIL STATE OF CALIFORNIA

The State of California or its officers or agents shall not be responsible for the accuracy or completeness of electronic copies of this plan sheet.

Caltrans now has a web site! To get to the web site, go to: http://www.dot.ca.gov

Caltrans Metric

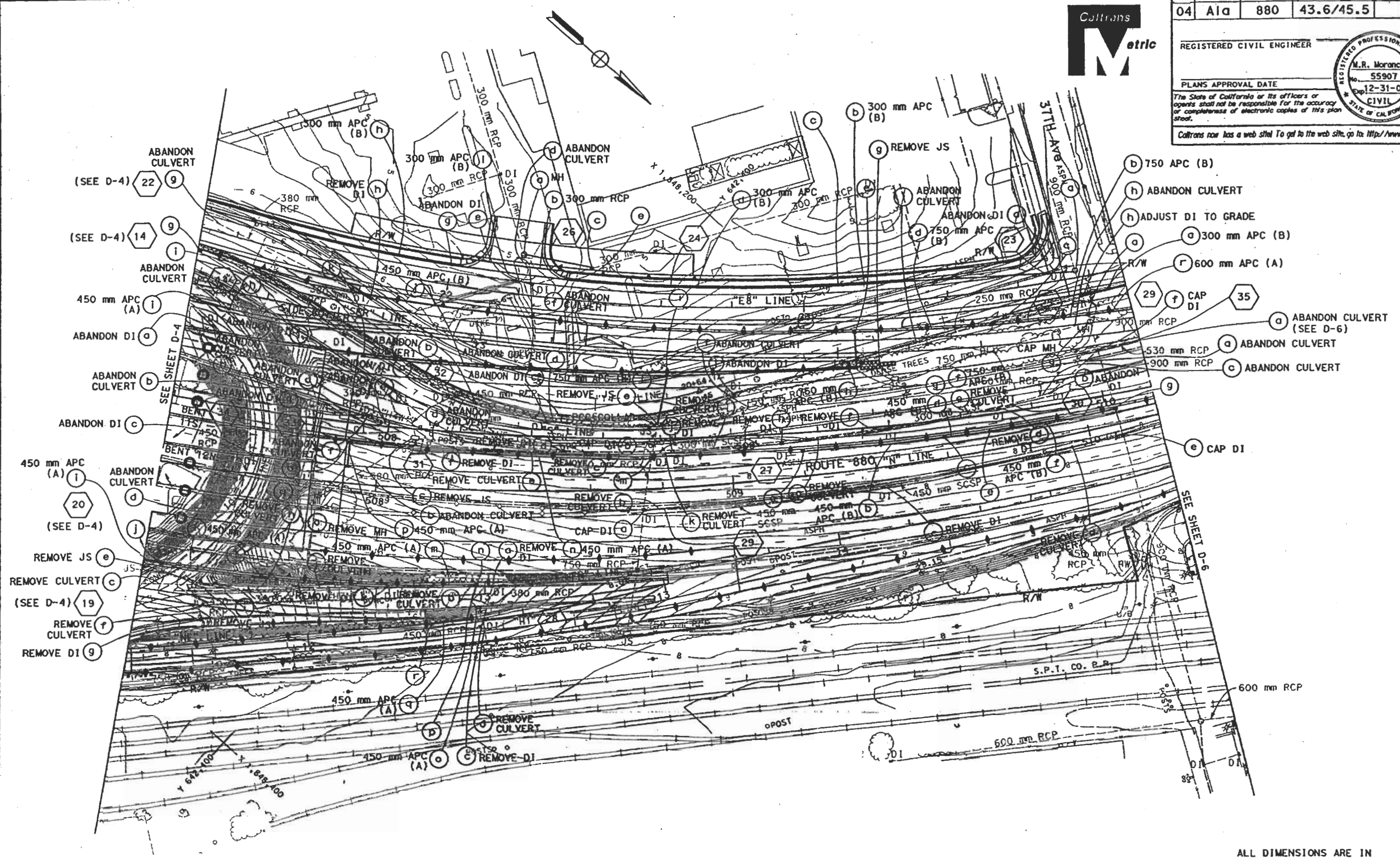

ALL DIMENSIONS ARE IN METERS UNLESS OTHERWISE SHOWN

DRAINAGE PLAN

SCALE: 1:500

D-5

FOR NOTES, ABBREVIATIONS &/OR LEGEND, SEE SHEET D-1

THIS PLAN ACCURATE FOR DRAINAGE WORK ONLY

STATE OF CALIFORNIA - DEPARTMENT OF TRANSPORTATION

Caltrans PROJECT DEVELOPMENT

PROJECT ENGINEER: AMANDO R. VITO

CALCULATED/DESIGNED BY: MM | CHECKED BY: DT

DATE | REVISED BY | DATE REVISED

DATE PLOTTED => 09-MAR-2006
TIME PLOTTED => 15:14

02-04-06

DIST	COUNTY	ROUTE	KILOMETER POST TOTAL PROJECT	SHEET No	TOTAL SHEETS
04	Ala	880	43.6/45.5		

REGISTERED CIVIL ENGINEER

PLANS APPROVAL DATE

M.R. Morancy No. 55907 Exp. 12-31-06 CIVIL STATE OF CALIFORNIA REGISTERED PROFESSIONAL ENGINEER

The State of California or its officers or agents shall not be responsible for the accuracy or completeness of electronic copies of this plan sheet.

Caltrans now has a web site! To get to the web site, go to: http://www.dot.ca.gov

Caltrans Metric

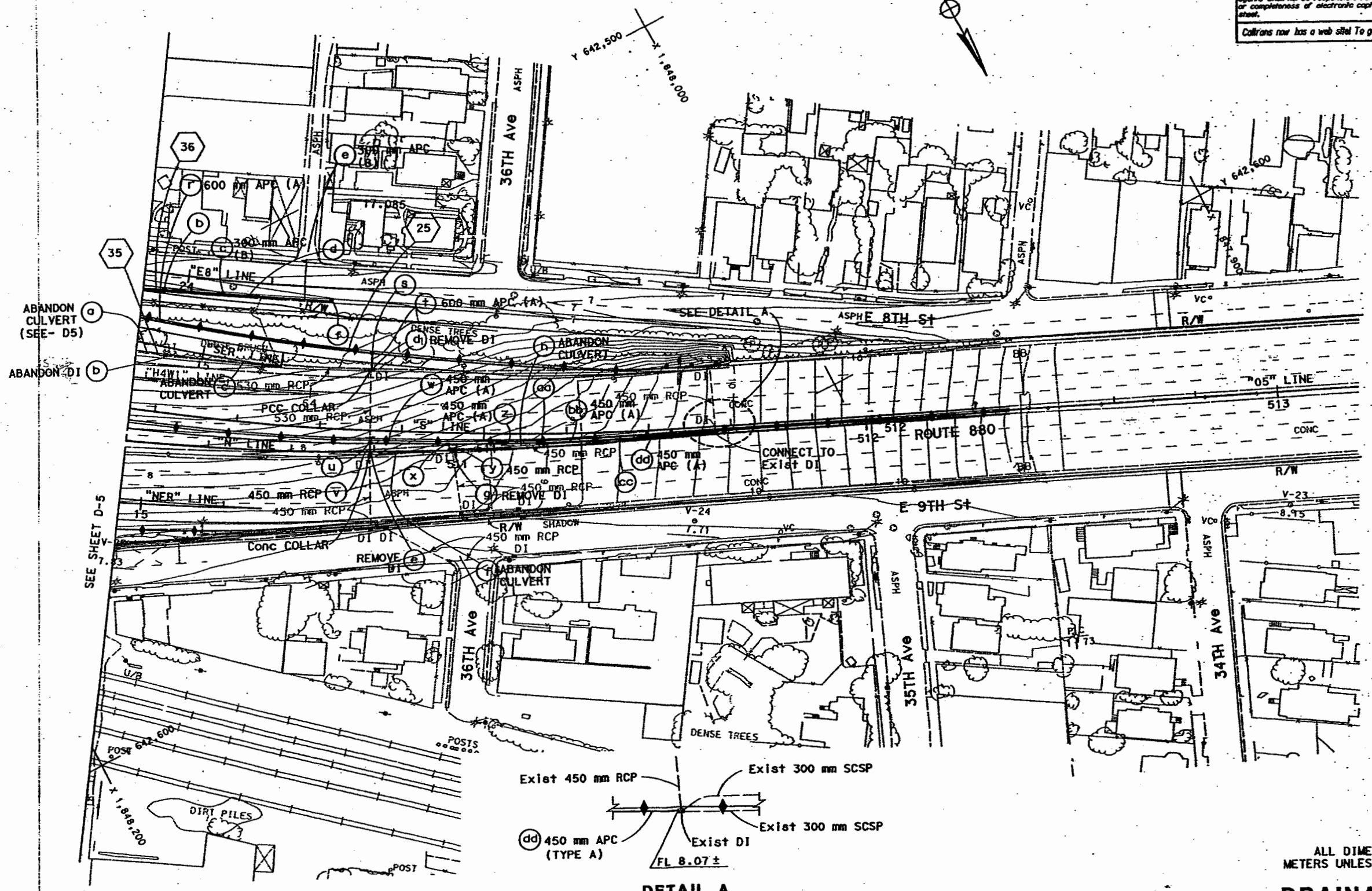

DETAIL A
NO SCALE

CHECK PRINT
MAR 0 2 2006

ALL DIMENSIONS ARE IN METERS UNLESS OTHERWISE SHOWN

DRAINAGE PLAN

SCALE: 1:500

D-6

FOR NOTES, ABBREVIATIONS &/OR LEGEND, SEE SHEET D-1

THIS PLAN ACCURATE FOR DRAINAGE WORK ONLY

STATE OF CALIFORNIA - DEPARTMENT OF TRANSPORTATION
Caltrans PROJECT DEVELOPMENT

PROJECT ENGINEER: AMANDO R. VITO

CALCULATED/DESIGNED BY: MM
CHECKED BY: DT
DATE REVISED BY:
DATE REVISED:

RELATIVE BORDER SCALE IS IN MILLIMETERS: 0 20 40 60 80

USERNAME => dtolosa
DGN FILE => 416542aa6.dgn

CU 04247

EA 165421

LAST REVISION 01-30
DATE PLOTTED => 28-FEB-2006
TIME PLOTTED => 09:03

DIST	COUNTY	ROUTE	KILOMETER POST TOTAL PROJECT	SHEET No	TOTAL SHEETS
04	Ala	880	43.6/45.5		

REGISTERED CIVIL ENGINEER

PLANS APPROVAL DATE

REGISTERED PROFESSIONAL ENGINEER A.R. Vito No. 60914 Exp. 12-31-06 CIVIL STATE OF CALIFORNIA

The State of California or its officers or agents shall not be responsible for the accuracy or completeness of electronic copies of this plan sheet.

Caltrans now has a web site! To get to the web site, go to: http://www.dot.ca.gov

Caltrans Metric

NOTES

1. FOR UNDERDRAIN PLACEMENT, SEE TYPICAL CROSS SECTIONS.
2. LOCATION OF RISERS ARE APPROXIMATE. ACTUAL FIELD CONDITIONS WILL GOVERN.
3. ALL UNDERDRAINS SHALL SLOPE TO DRAIN. Min SLOPE 0.25%.
4. CONTRACTOR TO VERIFY THE LOCATION OF LOW POINT (L.P.) IN FIELD.

LEGEND

(No.) UNDERDRAIN ITEM NUMBER (SEE UNDERDRAIN QUANTITIES, Sht DQ-14)

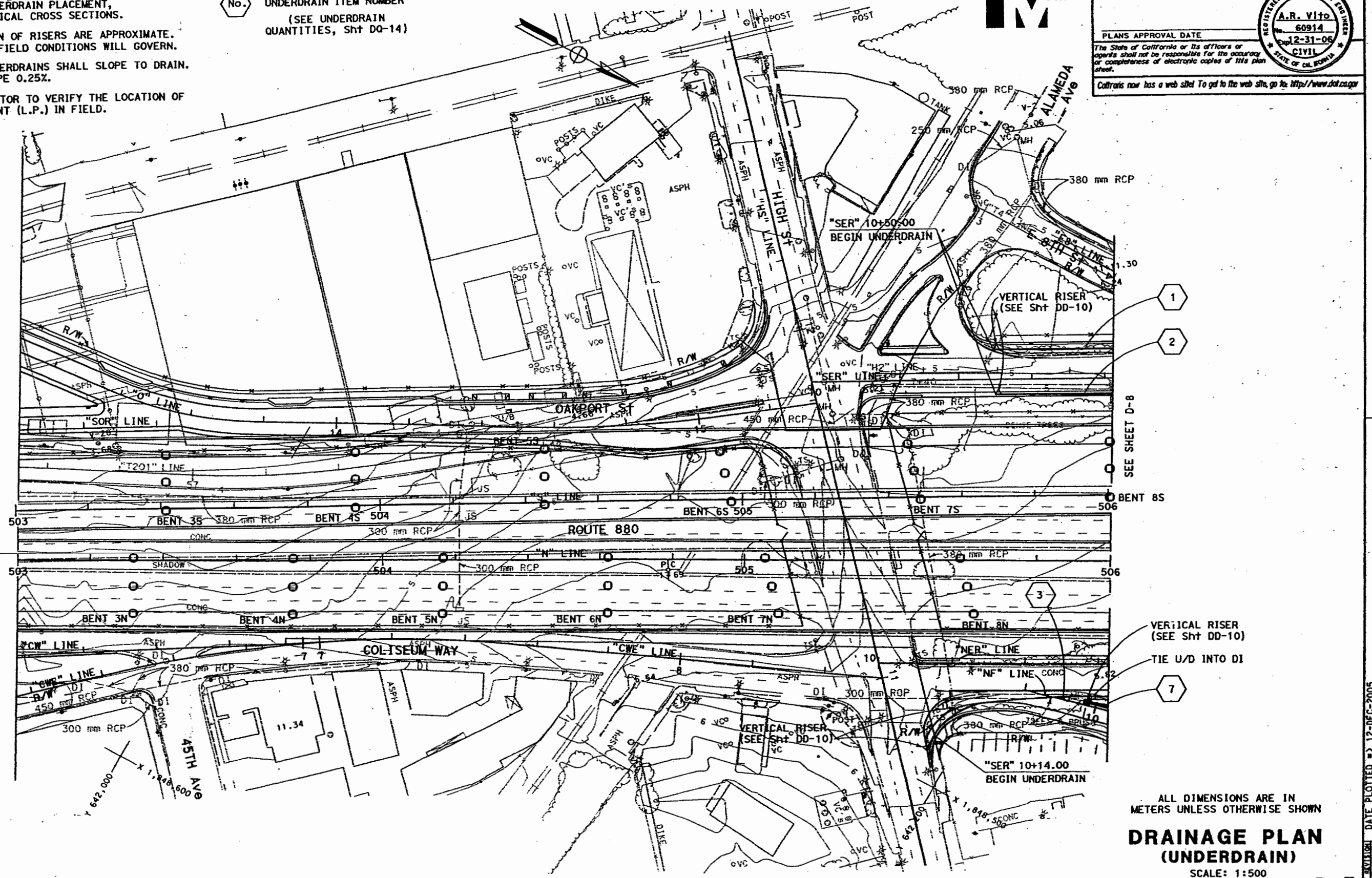

ALL DIMENSIONS ARE IN METERS UNLESS OTHERWISE SHOWN

DRAINAGE PLAN (UNDERDRAIN)

SCALE: 1:500

THIS PLAN ACCURATE FOR UNDERDRAIN WORK ONLY

D-7

STATE OF CALIFORNIA - DEPARTMENT OF TRANSPORTATION	PROJECT ENGINEER	CALCULATED/DESIGNED BY	CHECKED BY	REVISED BY	DATE REVISED	DATE 12-9-04
Caltrans PROJECT DEVELOPMENT	AMANDO R. VITO	AMH				

LAST REVISION 05-12-05 | DATE PLOTTED => 12-DEC-2005 | TIME PLOTTED => 07:12

RELATIVE BORDER SCALE IS IN MILLIMETERS 0 20 40 60 80

USERNAME => gschumoc
DGN FILE => 416542ia007.dgn

CU 04250 | EA 165421

DEC 12 2005

DIST	COUNTY	ROUTE	KILOMETER POST TOTAL PROJECT	SHEET No	TOTAL SHEETS
04	Ala	880	43.6/45.5		

REGISTERED CIVIL ENGINEER

PLANS APPROVAL DATE

REGISTERED PROFESSIONAL ENGINEER A.R. Vito No. 60914 Exp. 12-31-06 CIVIL STATE OF CALIFORNIA

The State of California or its officers or agents shall not be responsible for the accuracy or completeness of electronic copies of this plan sheet.

Caltrans now has a web site! To get to the web site, go to: http://www.dot.ca.gov

Caltrans Metric

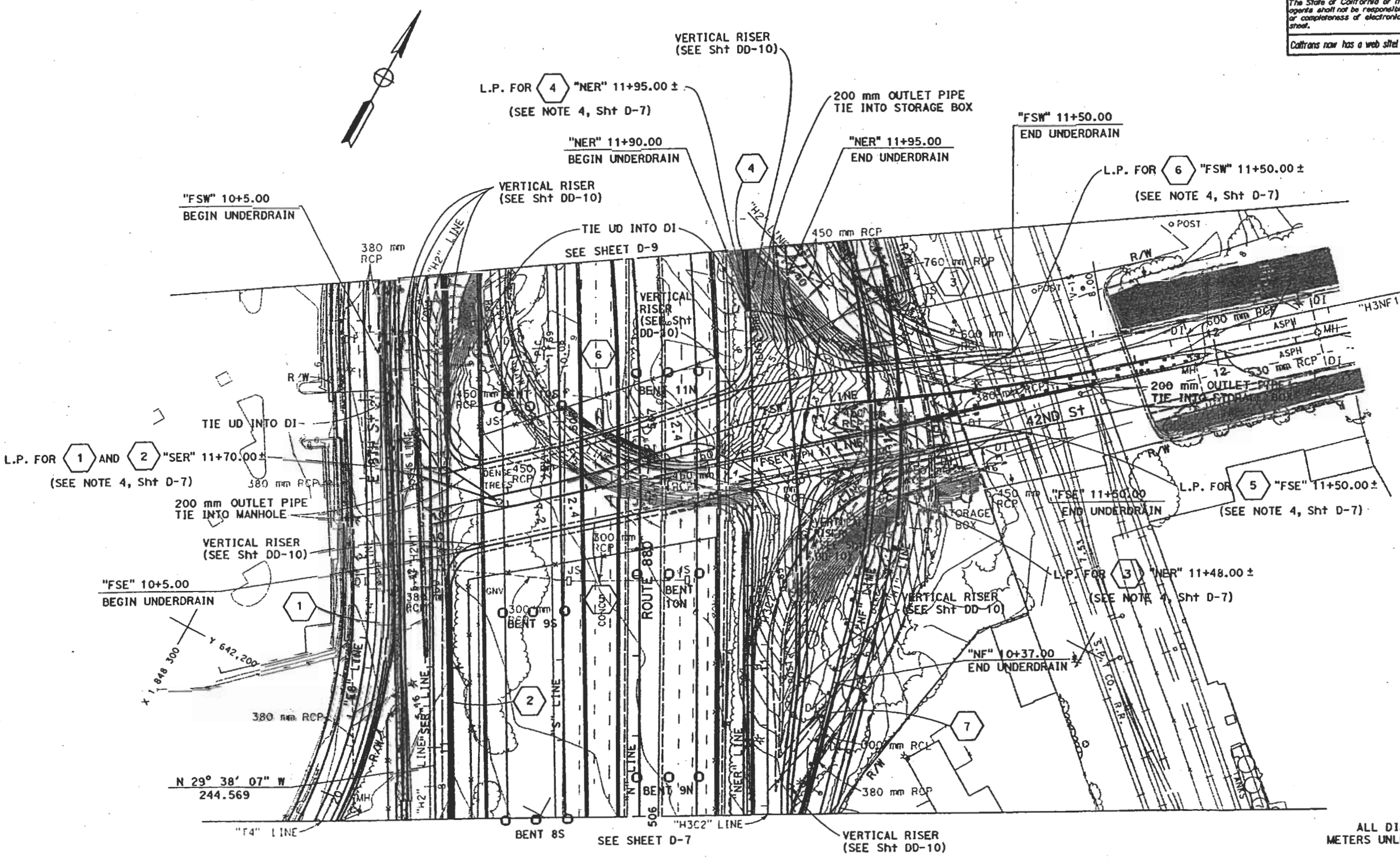

ALL DIMENSIONS ARE IN METERS UNLESS OTHERWISE SHOWN

DRAINAGE PLAN (UNDERDRAIN)

SCALE: 1:500

D-8

FOR NOTES, ABBREVIATIONS &/OR LEGEND, SEE SHEET D-7

THIS PLAN ACCURATE FOR UNDERDRAIN WORK ONLY

CALCULATED/ DESIGNED BY	AMH	DATE 12-9-04	REVISED BY
CHECKED BY			DATE REVISED

PROJECT ENGINEER: AMANDO R. VITO

STATE OF CALIFORNIA - DEPARTMENT OF TRANSPORTATION

Caltrans PROJECT DEVELOPMENT

RELATIVE BORDER SCALE IS IN MILLIMETERS 0 20 40 60 80

USERNAME => gschumoc
DGN FILE => 416542ig008.dgn

CU 04250 | EA 165421 | DEC 12 2005

LAST REVISION 08-30-05 | DATE PLOTTED => 12-DEC-2005 | TIME PLOTTED => 07:12

DIST	COUNTY	ROUTE	KILOMETER POST TOTAL PROJECT	SHEET No	TOTAL SHEETS
04	Ala	880	43.6/45.5		

REGISTERED CIVIL ENGINEER

PLANS APPROVAL DATE

REGISTERED PROFESSIONAL ENGINEER A.R. Vito No. 60914 Exp. 12-31-06 CIVIL STATE OF CALIFORNIA

The State of California or its officers or agents shall not be responsible for the accuracy or completeness of electronic copies of this plan sheet.

Caltrans now has a web site! To get to the web site, go to: http://www.dot.ca.gov

Caltrans Metric

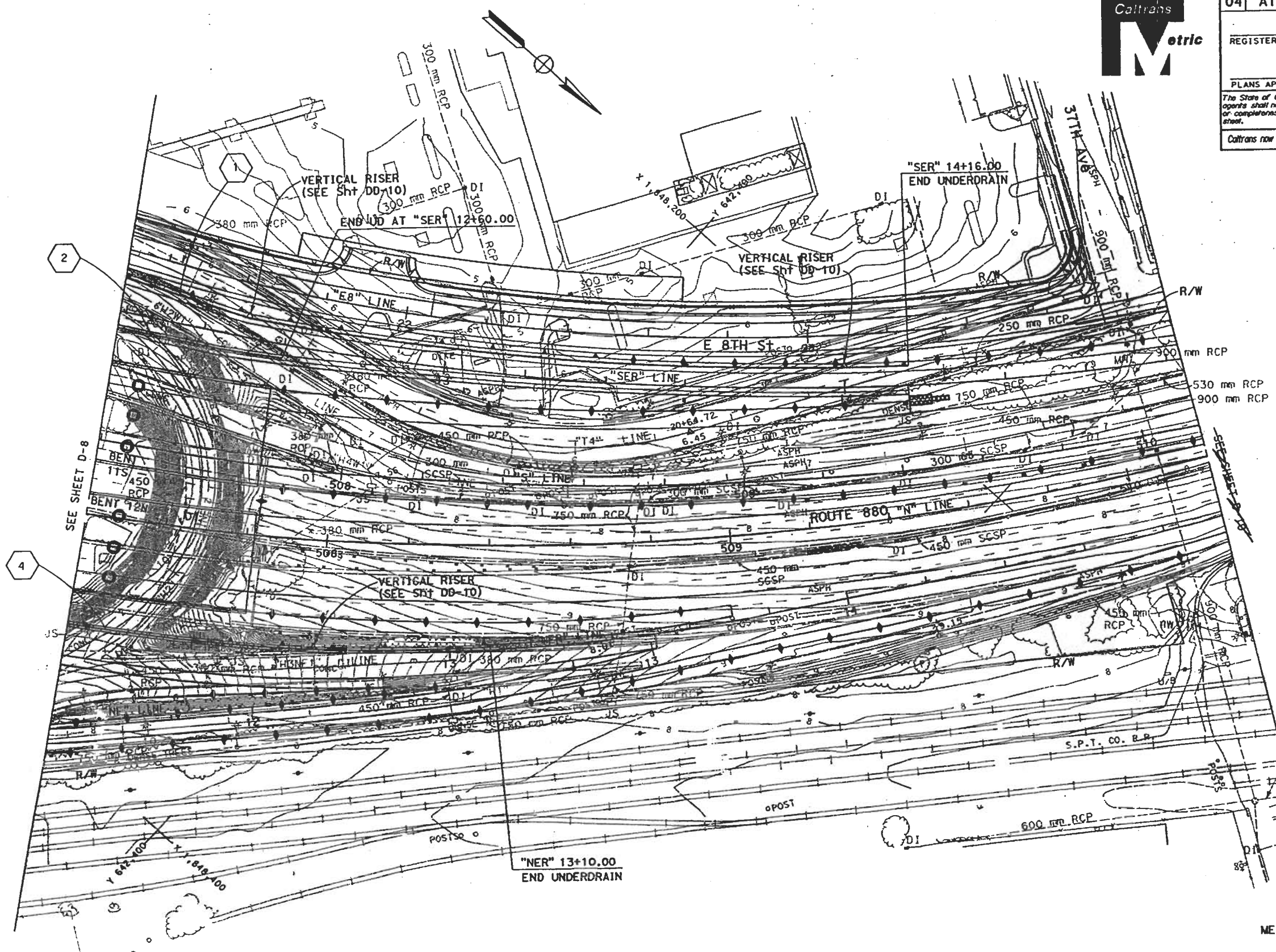

ALL DIMENSIONS ARE IN METERS UNLESS OTHERWISE SHOWN

DRAINAGE PLAN (UNDERDRAIN)

SCALE: 1:500

D-9

FOR NOTES, ABBREVIATIONS &/OR LEGEND, SEE SHEET D-7

THIS PLAN ACCURATE FOR UNDERDRAIN WORK ONLY

STATE OF CALIFORNIA - DEPARTMENT OF TRANSPORTATION

Caltrans PROJECT DEVELOPMENT

PROJECT ENGINEER: AMANDO R. VITO

CALCULATED/DESIGNED BY: AMH

CHECKED BY

REVISED BY

DATE 12-9-04

DATE REVISED

LAST REVISION 05-12-05

DATE PLOTTED => 12-DEC-2005

TIME PLOTTED => 07:12

RELATIVE BORDER SCALE IS IN MILLIMETERS 0 20 40 60 80

USERNAME => gschumac

DGN FILE => 416542io009.dgn

CU 04250

EA 165421

DEC 12 2005

CHECK PRINT

ATTACHMENT D

WATER POLLUTION CONTROL PLANS

DIST	COUNTY	ROUTE	KILOMETER POST TOTAL PROJECT	SHEET No.	TOTAL SHEETS
04	Ala	880	43.6/45.5	N	N

LICENSED LANDSCAPE ARCHITECT

PLANS APPROVAL DATE

11-30-06

The State of California or its officers or agents shall not be responsible for the accuracy or completeness of electronic copies of this plan sheet.

Caltrans now has a web site! To get to the web site, go to: http://www.dot.ca.gov

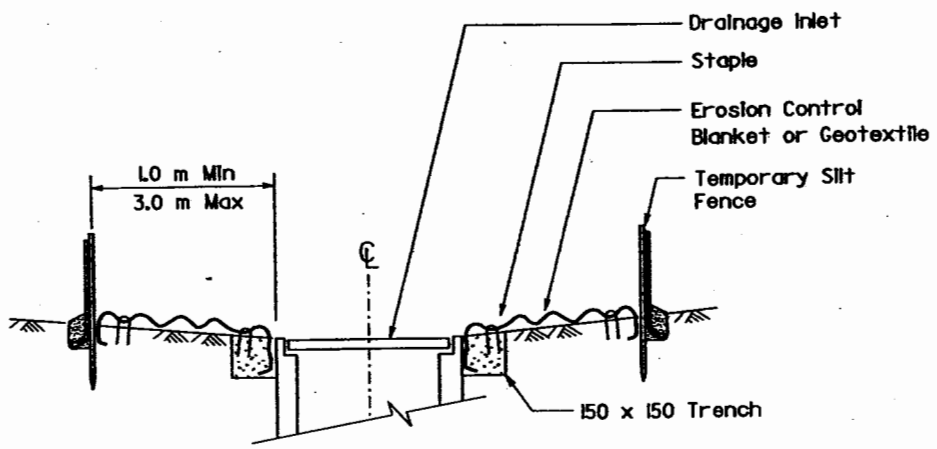

SECTION A-A

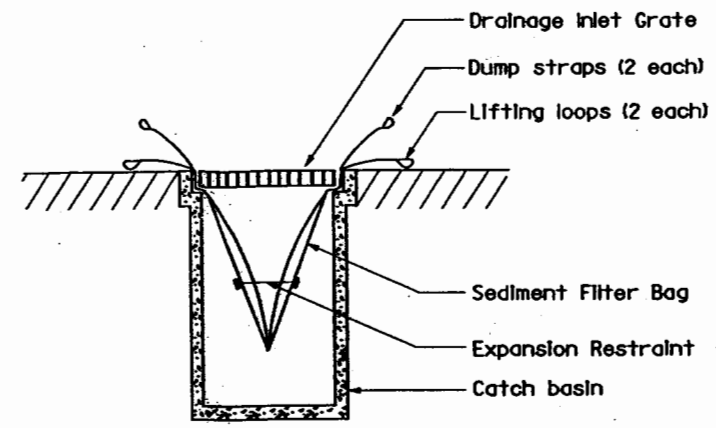

SECTION B-B

SEDIMENT FILTER BAG DETAIL

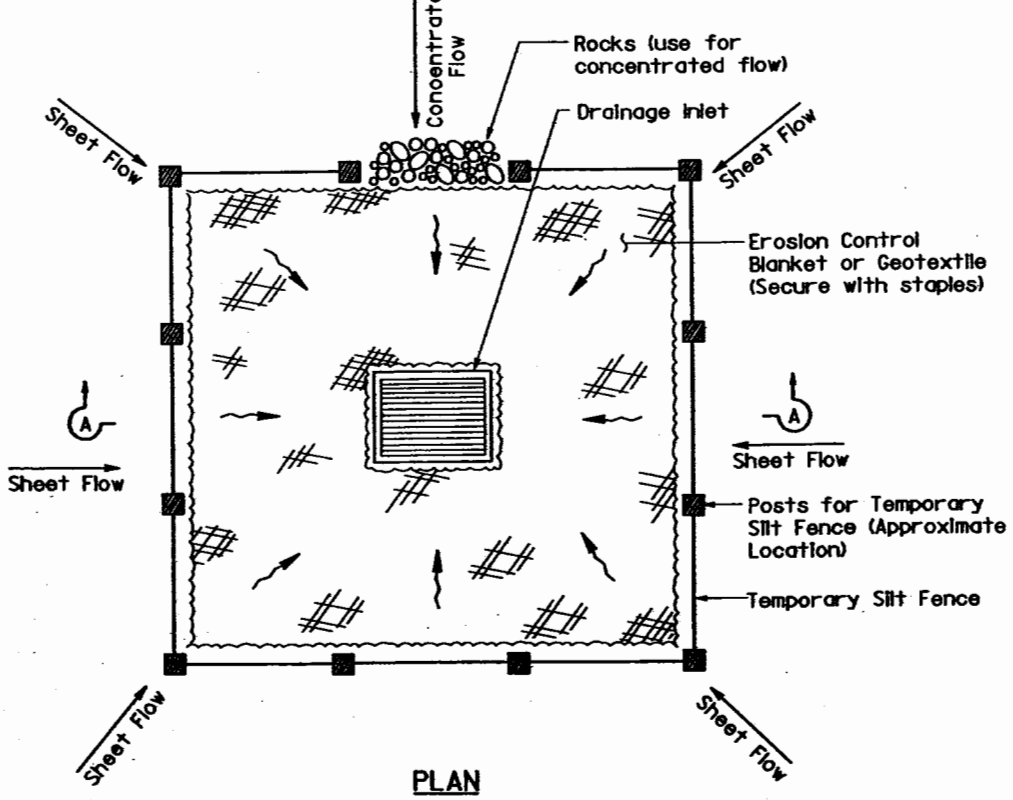

PLAN

TEMPORARY DRAINAGE INLET PROTECTION (TYPE 1) (TEMPORARY SILT FENCE)

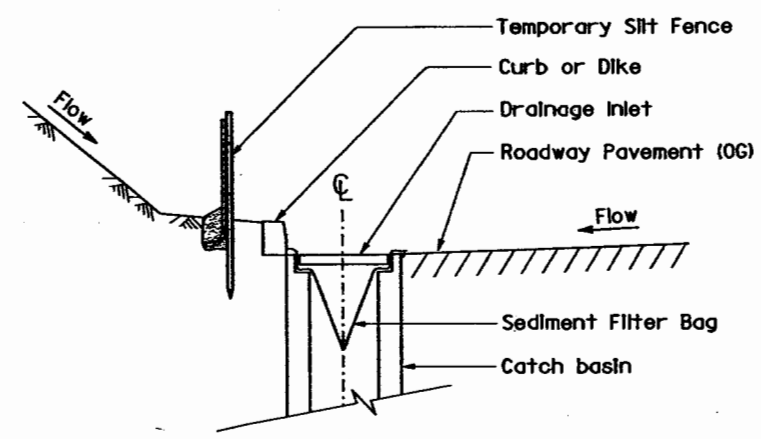

SECTION A-A

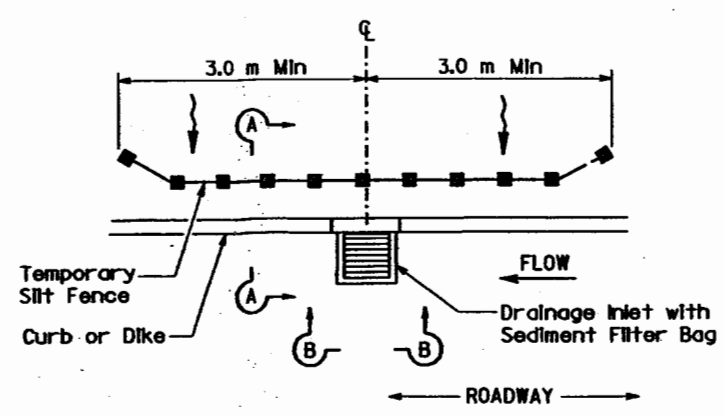

PLAN

TEMPORARY DRAINAGE INLET PROTECTION (TYPE 5) (SEDIMENT FILTER BAG)

All dimensions are in millimeters unless otherwise shown

NOTES

1. Install Temporary Silt Fence by first digging trench, driving posts, placing and securing fabric. Then backfill and tamp.
2. Dimensions may vary to fit field conditions.

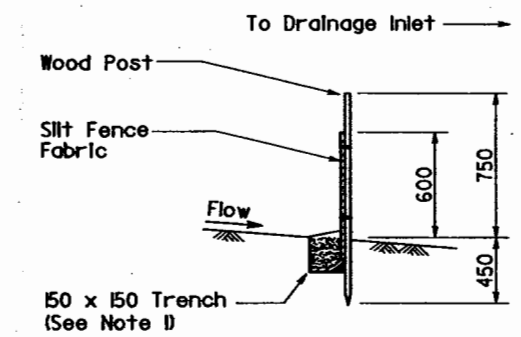

SECTION

TEMPORARY SILT FENCE DETAIL

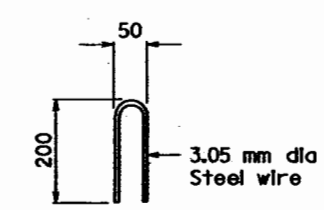

STAPLE DETAIL

All dimensions are in millimeters unless otherwise shown

WATER POLLUTION CONTROL DETAILS (TEMPORARY DRAINAGE INLET PROTECTION)

NO SCALE

WPCD-1

STATE OF CALIFORNIA - DEPARTMENT OF TRANSPORTATION

Caltrans

EROSION AND SEDIMENT CONTROL

PROJECT LANDSCAPE ARCHITECT CHRIS PADRICK

CALCULATED/DESIGNED BY CP DATE 10/29 REVISED BY

CHECKED BY CP 10/29 DATE REVISED

LAST REVISION 10-29-04 DATE PLOTTED => 11-APR-2006 TIME PLOTTED => 13:58

FOR REDUCED PLANS ORIGINAL SCALE IS IN MILLIMETERS 0 20 40 60 80

USERNAME => stran DGN FILE => 416542gc_001.dgn

CU 04343

EA 165421

DIST	COUNTY	ROUTE	KILOMETER POST TOTAL PROJECT	SHEET No	TOTAL SHEETS
04	Ala	880	43.6/45.5	N	N

LICENSED LANDSCAPE ARCHITECT

PLANS APPROVAL DATE

The State of California or its officers or agents shall not be responsible for the accuracy or completeness of electronic copies of this plan sheet.

LICENSED LANDSCAPE ARCHITECT — CHRIS PADICK — No. 2798 — Signature — 11-30-06 — Date — STATE OF CALIFORNIA

Caltrans now has a web site! To get to the web site, go to: http://www.dot.ca.gov

Caltrans Metric

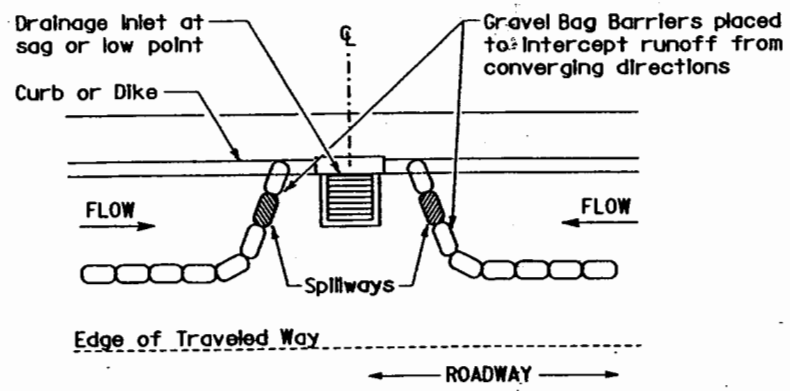

PLAN

CONFIGURATION FOR SAG POINT INLET (GRAVEL BAG BARRIER)

GRAVEL BAG BARRIER (TYPE 3A) SPACING TABLE

SLOPE OF ROADWAY (PERCENT)	1 to 4	4 to 6	6 to 8	8 to 10	10 +
INTERVAL BETWEEN BARRIERS (M)	30.0	22.5	15.0	7.5	4.0

For slope of less than 1%, install barriers only if erosion/sediment is prevalent

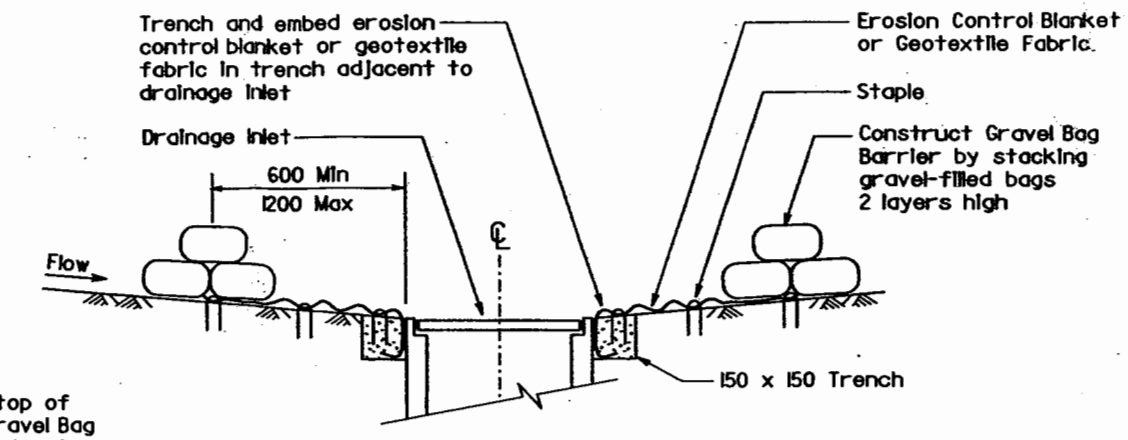

SECTION A-A

NOTES

1. Place safety cones adjacent to drainage inlet protection.
2. Dimensions may vary to fit field conditions.
3. Install a minimum of 3 gravel bag barriers upstream of each drainage inlet to be protected.
4. Position erosion control blanket or geotextile fabric at edge of concrete apron and secure in trench.
5. Erosion control blanket/geotextile fabric is not required if the area adjacent to the drainage inlet is vegetated or paved.

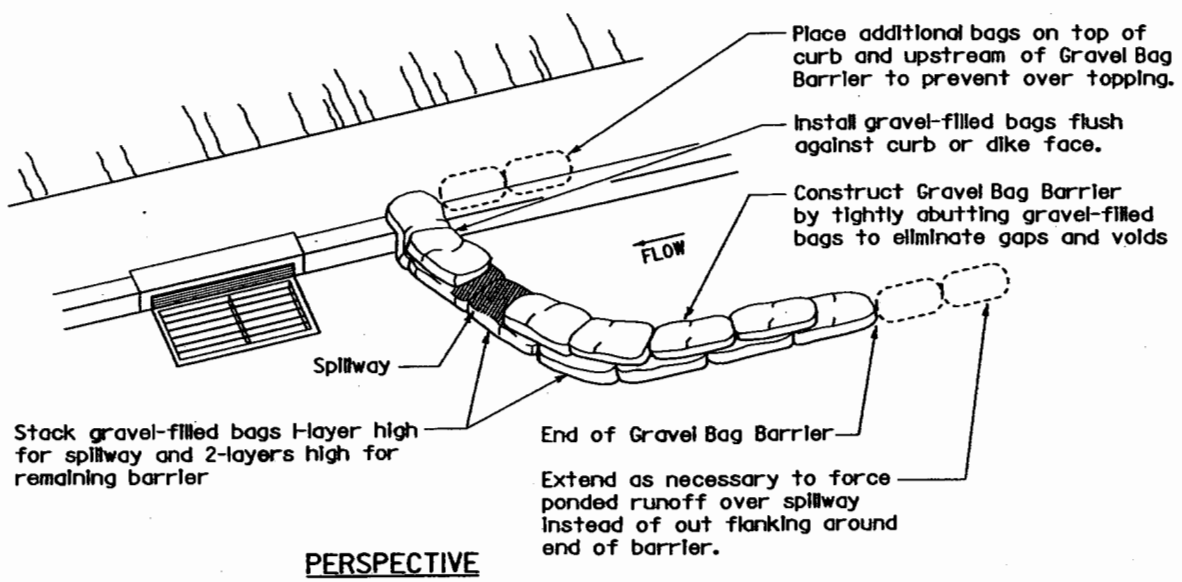

PERSPECTIVE

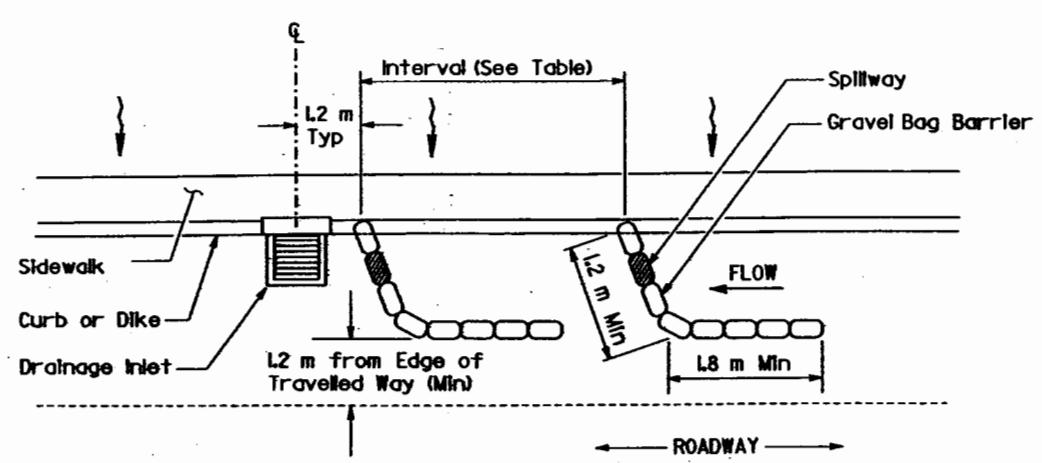

PLAN

TEMPORARY DRAINAGE INLET PROTECTION (TYPE 3A) (GRAVEL BAG BARRIER)

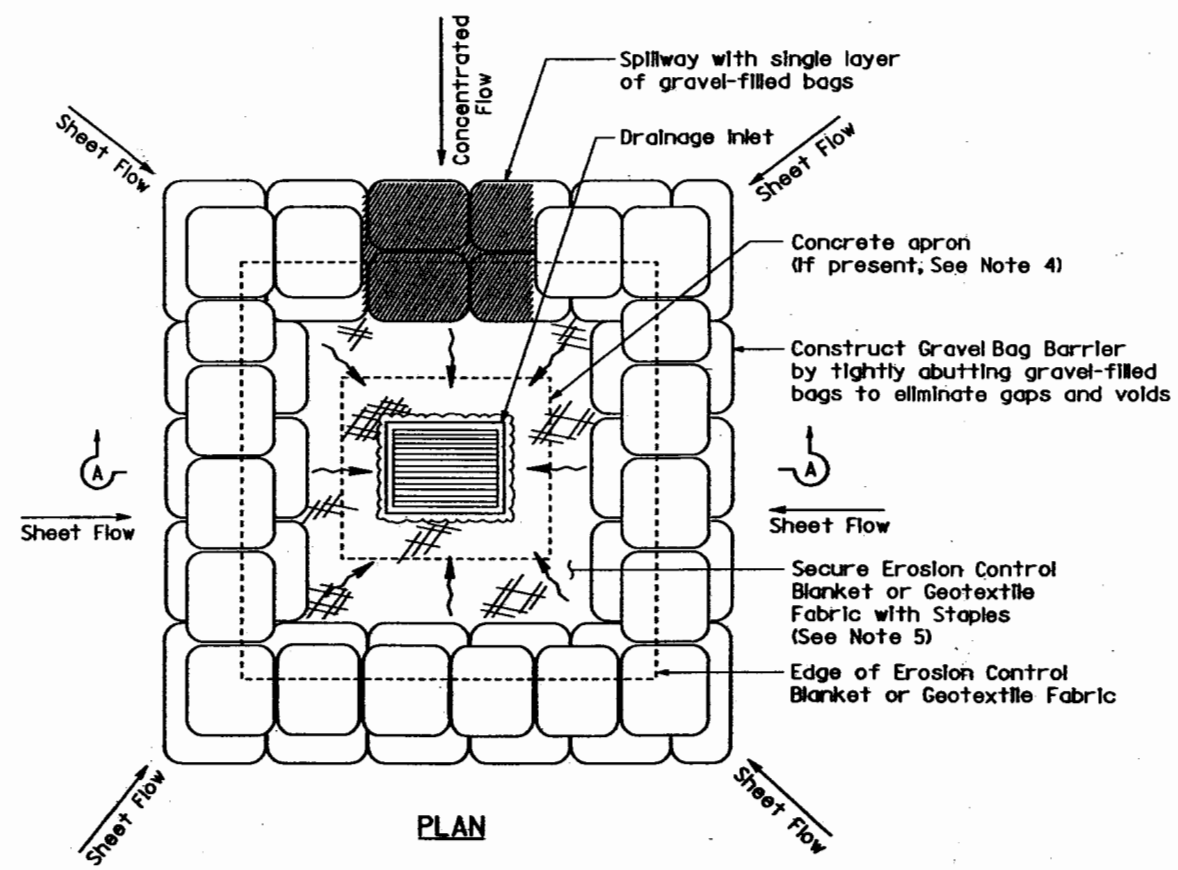

PLAN

TEMPORARY DRAINAGE INLET PROTECTION (TYPE 3B) (GRAVEL BAG BARRIER)

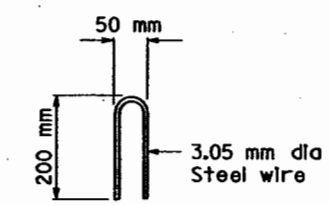

STAPLE DETAIL

WATER POLLUTION CONTROL DETAILS (TEMPORARY DRAINAGE INLET PROTECTION)

NO SCALE

WPCD-2

All dimensions are in millimeters unless otherwise shown

STATE OF CALIFORNIA - DEPARTMENT OF TRANSPORTATION	PROJECT LANDSCAPE ARCHITECT	CALCULATED/ DESIGNED BY	CP	DATE 10/29	REVISED BY
Caltrans	CHRIS PADICK	CHECKED BY	CP	10/29	DATE REVISED
EROSION AND SEDIMENT CONTROL					

LAST REVISION 10-29-04 — DATE PLOTTED => 11-APR-2006 — TIME PLOTTED => 13:42

FOR REDUCED PLANS ORIGINAL SCALE IS IN MILLIMETERS 0 20 40 60 80 — USERNAME => stron — DGN FILE => 416542ac 002.dgn

CU 04343 — EA 165421

DIST	COUNTY	ROUTE	KILOMETER POST TOTAL PROJECT	SHEET No	TOTAL SHEETS
04	Ala	880	43.6/45.5	N	N

LICENSED LANDSCAPE ARCHITECT

PLANS APPROVAL DATE

LICENSED LANDSCAPE ARCHITECT — CHRIS PADICK No. 4758 — Signature — 11-30-06 Renewal Date — Date — STATE OF CALIFORNIA

The State of California or its officers or agents shall not be responsible for the accuracy or completeness of electronic copies of this plan sheet.

Caltrans now has a web site! To get to the web site, go to: http://www.dot.ca.gov

Caltrans Metric

FOAM BARRIER SPACING TABLE

SLOPE OF ROADWAY (PERCENT)	0 to 1	1 to 2	2 to 3	3 to 4	5 +
INTERVAL BETWEEN BARRIERS (M)	15.24	10.67	9.14	7.62	6.10
ANGLE FROM FACE OF CURB (DEGREES)	70°	70°	70°	45°	45°
SUGGESTED BARRIER LENGTH (M)	1.82	1.82	1.82	1.82	1.82

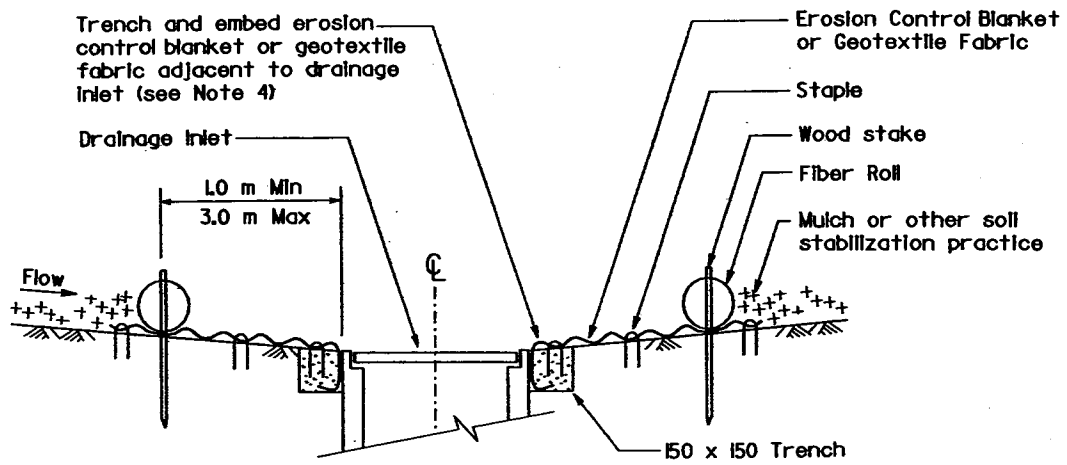

SECTION A-A

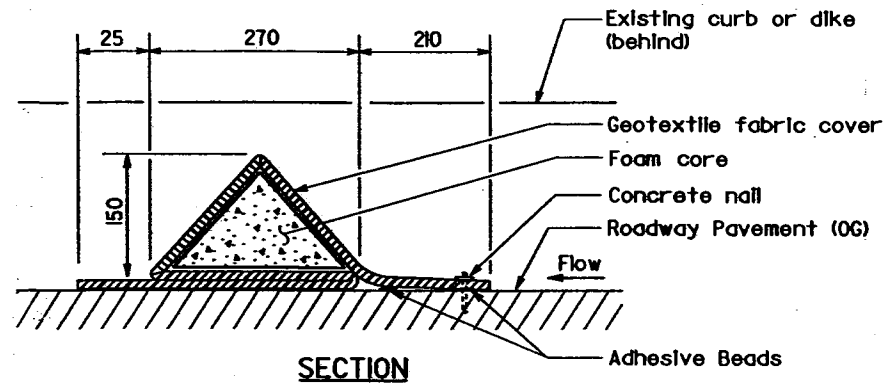

SECTION

FOAM BARRIER DETAIL

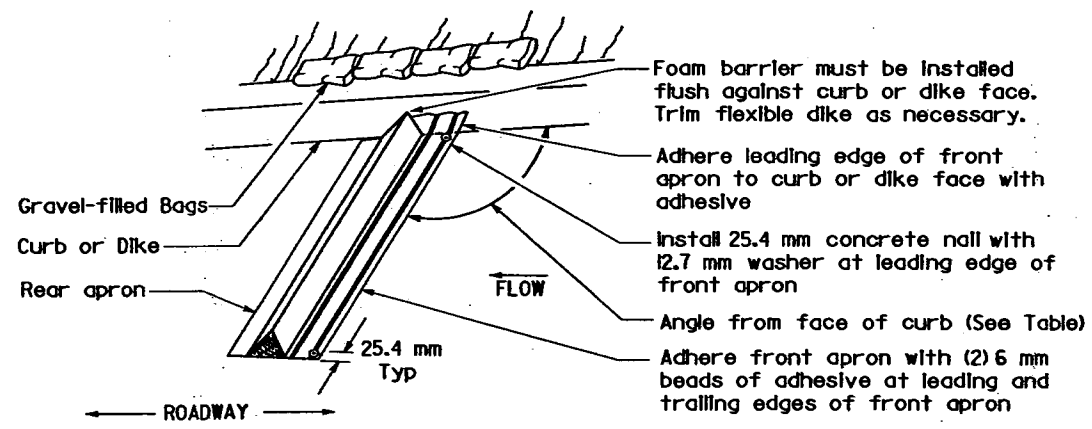

PERSPECTIVE

NOTES

1. Install Temporary Silt Fence by first digging trench, driving posts, placing and securing fabric. Then backfill and tamp.
2. Dimensions may vary to fit field conditions.
3. Install a minimum of 3 foam barriers upstream of each drainage inlet to be protected.
4. Position erosion control blanket or geotextile fabric at edge of concrete apron and secure in trench.
5. Erosion control blanket/geotextile fabric is not required if the area adjacent to the drainage inlet is vegetated.

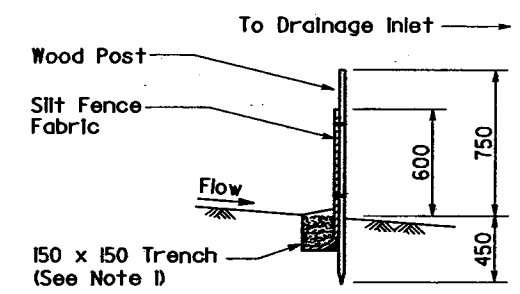

SECTION

TEMPORARY SILT FENCE DETAIL

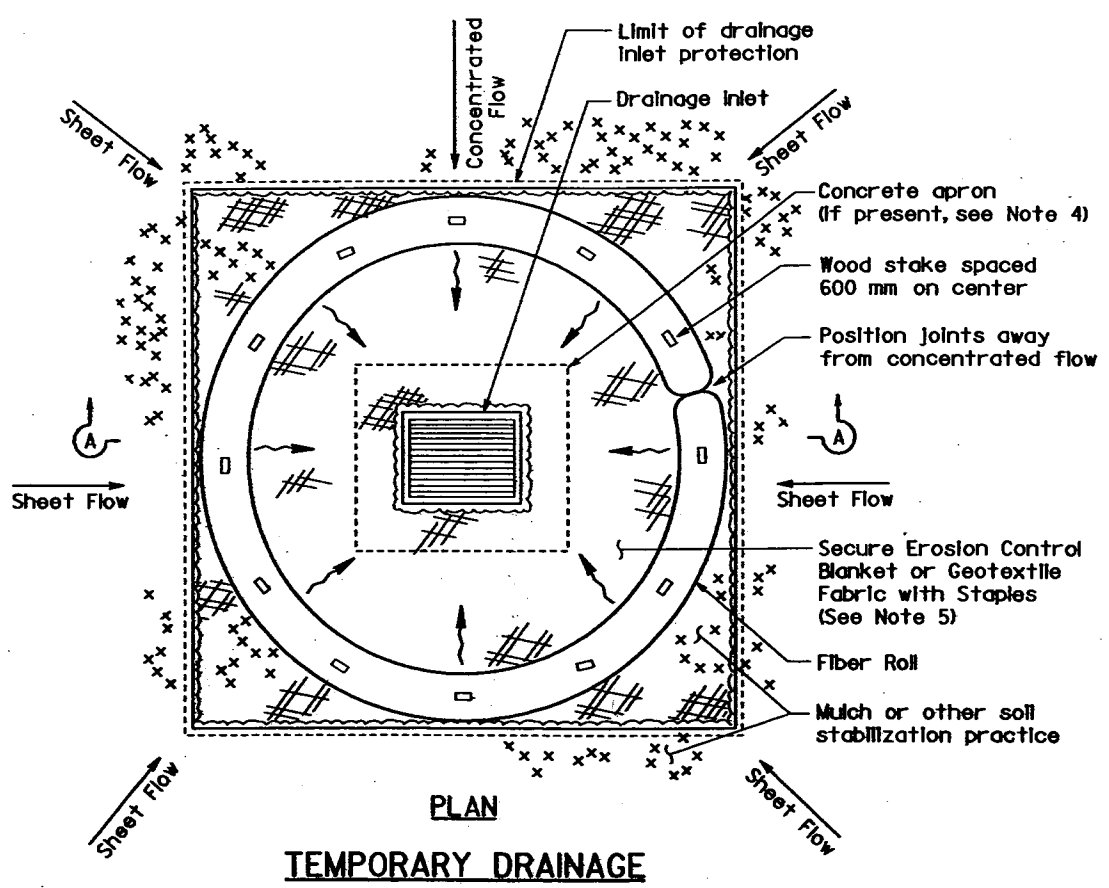

PLAN

TEMPORARY DRAINAGE INLET PROTECTION (TYPE 4A) (FIBER ROLLS)

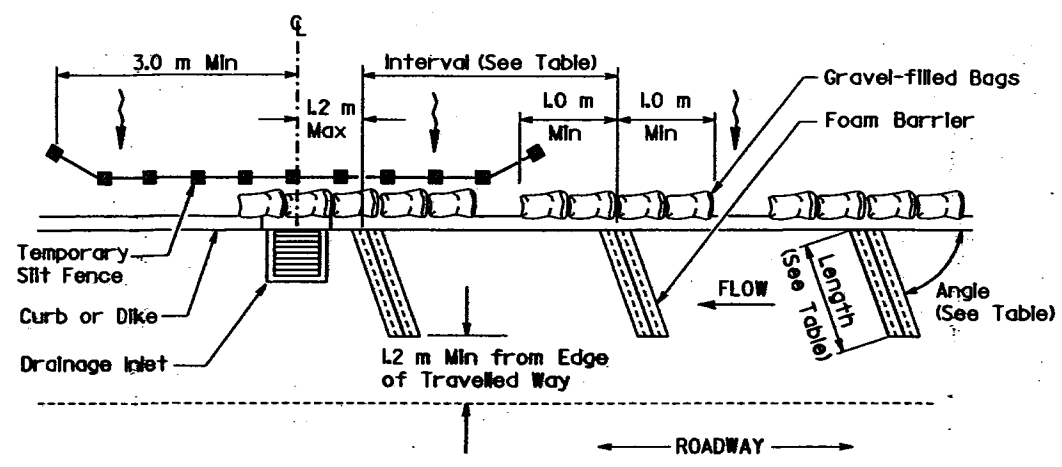

PLAN

TEMPORARY DRAINAGE INLET PROTECTION (TYPE 4B) (FOAM BARRIER)

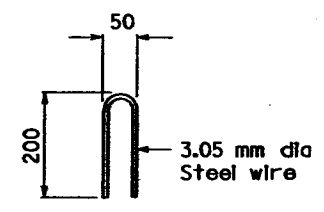

STAPLE DETAIL

All dimensions are in millimeters unless otherwise shown

All dimensions are in millimeters unless otherwise shown

WATER POLLUTION CONTROL DETAILS (TEMPORARY DRAINAGE INLET PROTECTION)

NO SCALE

WPCD-3

STATE OF CALIFORNIA - DEPARTMENT OF TRANSPORTATION
Caltrans
EROSION AND SEDIMENT CONTROL

PROJECT LANDSCAPE ARCHITECT: CHRIS PADICK

CALCULATED/DESIGNED BY | CHECKED BY

CP 10/29 | CP 10/29

DATE | REVISED BY | DATE | REVISED

DATE PLOTTED => 11-APR-2006
TIME PLOTTED => 13:42

LAST REVISION 10-29-04

FOR REDUCED PLANS ORIGINAL 0 20 40 60 80 | USERNAME => stron

DIST	COUNTY	ROUTE	KILOMETER POST TOTAL PROJECT	SHEET NO.	TOTAL SHEETS

Caltrans Metric

REGISTERED CIVIL ENGINEER

PLANS APPROVAL DATE

REGISTERED PROFESSIONAL ENGINEER No. Exp. CIVIL STATE OF CALIFORNIA

The State of California or its officers or agents shall not be responsible for the accuracy or completeness of electronic copies of this plan sheet.

Caltrans now has a web site! To get to the web site, go to: http://www.dot.ca.gov

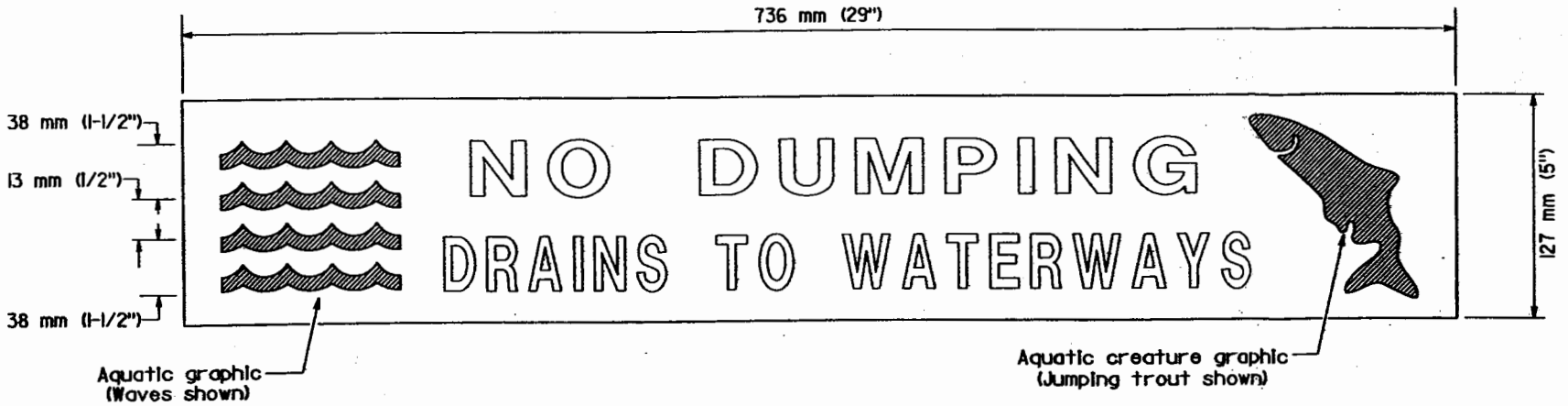

PLAN
DRAINAGE INLET MARKER
(PREFABRICATED THERMOPLASTIC)

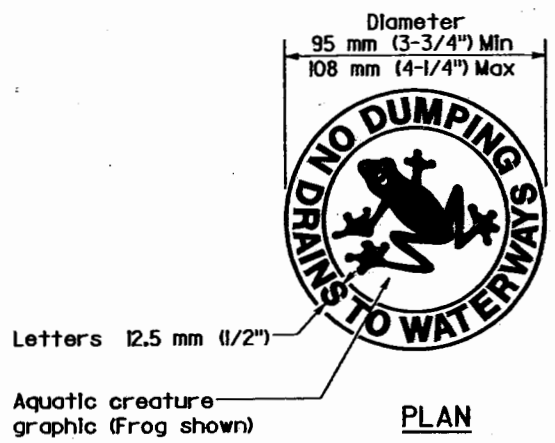

PLAN
DRAINAGE INLET MARKER
(PLASTIC)

NOTES

1. The dimensions of the drainage inlet marker (Prefabricated Thermoplastic) shall vary no more than 25 mm (1") in width and length.
2. The drainage inlet marker shall be centered opposite the drainage facility.
3. The text, graphic and background shall be of contrasting colors for the prefabricated thermoplastic and plastic drainage inlet markers. Colors for text and graphic shall be blue or green.

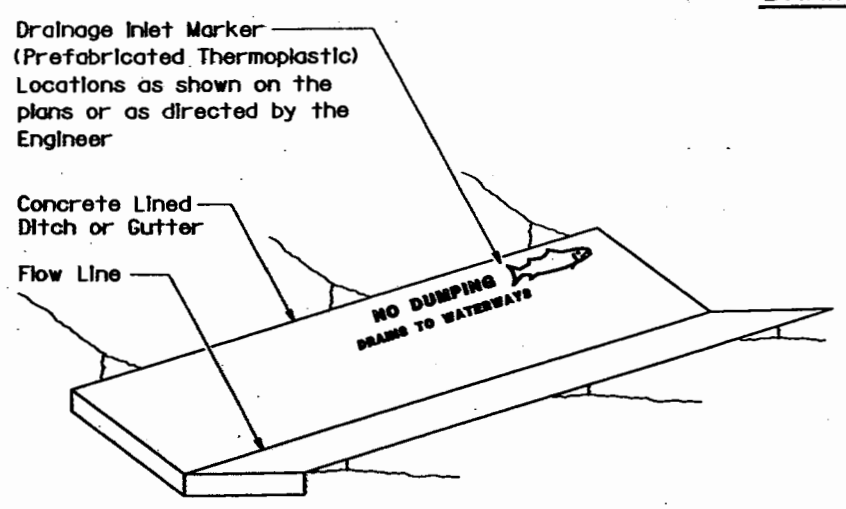

PERSPECTIVE
DRAINAGE INLET MARKER ON
CONCRETE LINED DITCH

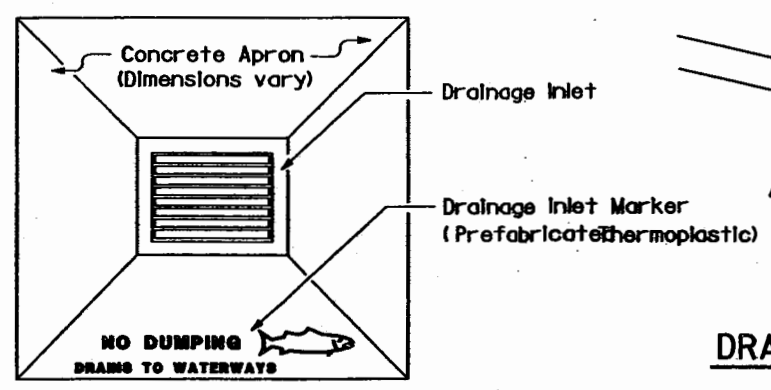

PLAN
DRAINAGE INLET MARKER ON
DRAINAGE INLET APRON

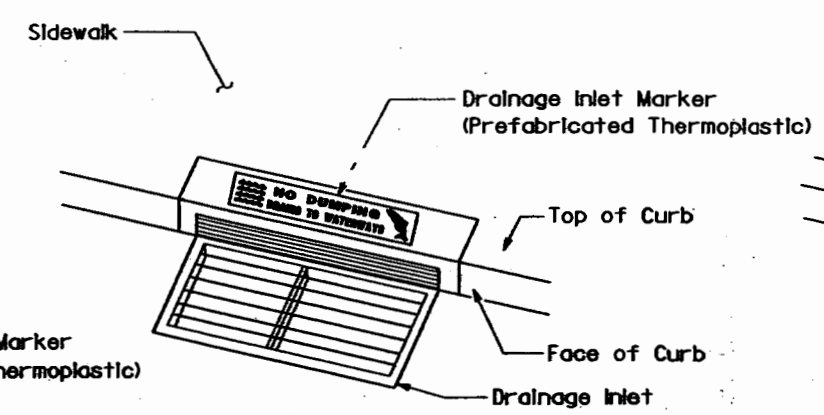

PERSPECTIVE
DRAINAGE INLET MARKER ON
DRAINAGE INLET

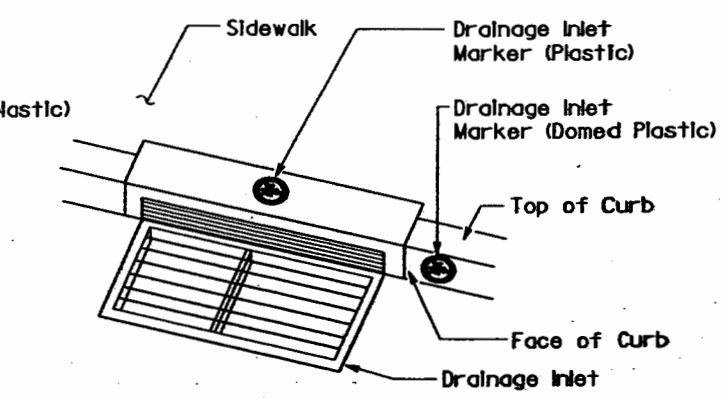

PERSPECTIVE
DRAINAGE INLET MARKER (PLASTIC)
ON DRAINAGE INLET

WATER POLLUTION CONTROL DETAILS (DRAINAGE INLET MARKER)

NO SCALE

ALL DIMENSIONS ARE IN MILLIMETERS UNLESS OTHERWISE SHOWN

WPCD-4

STATE OF CALIFORNIA - DEPARTMENT OF TRANSPORTATION

Caltrans

PROJECT ENGINEER | REVISED BY | DATE REVISED | DATE | CALCULATED/DESIGNED BY | CHECKED BY

LAST REVISION | DATE PLOTTED => 13-APR-2006

FOR REDUCED PLANS 0 20 40 60 80 100

USERNAME => stran

ATTACHMENT E

EROSION CONTROL PLANS

DIST	COUNTY	ROUTE	KILOMETER POST TOTAL PROJECT	SHEET No	TOTAL SHEETS
04	Ala	880	43.6/45.5	N	N

LICENSED LANDSCAPE ARCHITECT

PLANS APPROVAL DATE

LICENSED LANDSCAPE ARCHITECT — CHRIS PADICK No. 2338 — Signature — 11-30-06 Registered Date — Date — STATE OF CALIFORNIA

The State of California or its officers or agents shall not be responsible for the accuracy or completeness of electronic copies of this plan sheet.

Caltrans now has a web site! To get to the web site, go to: http://www.dot.ca.gov

Caltrans Metric

LEGEND

Fiber Roll

Mulch (Erosion Control)

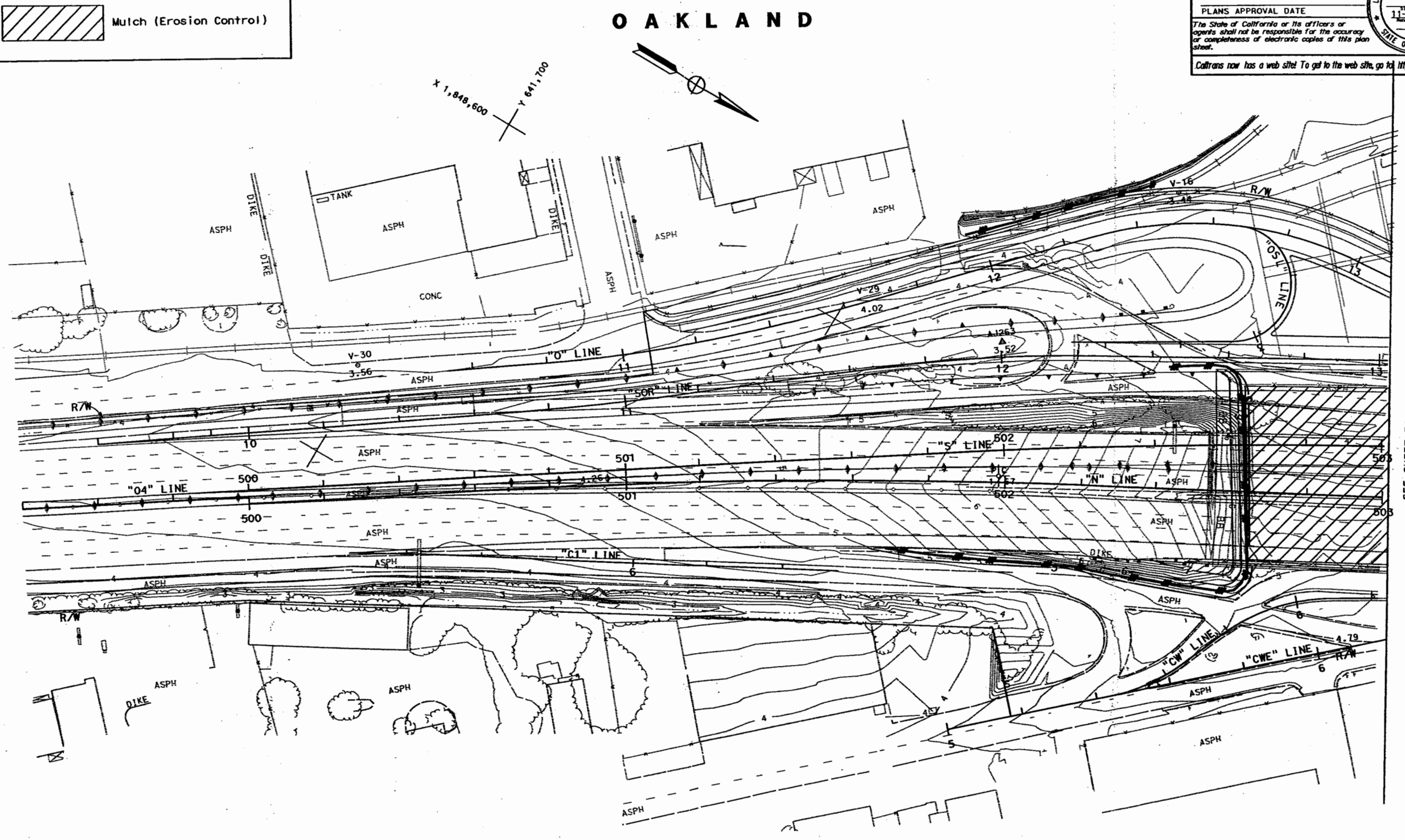

This sheet acurate for erosion control only.

EROSION CONTROL PLAN

SCALE: 1:500

EC-1

All dimensions are in millimeters unless otherwise shown

STATE OF CALIFORNIA - DEPARTMENT OF TRANSPORTATION

Caltrans

EROSION AND SEDIMENT CONTROL

PROJECT LANDSCAPE ARCHITECT: CHRIS PADICK

CALCULATED/DESIGNED BY: CP — DATE: 11/10

CHECKED BY: CP — 11/10

REVISED BY: CP — DATE REVISED: 04/03/06

LAST REVISION 04-03-06 — DATE PLOTTED => 11-APR-2006 — TIME PLOTTED => 14:31

FOR REDUCED PLANS ORIGINAL 0 20 40 60 80 — USERNAME => stron

DIST	COUNTY	ROUTE	KILOMETER POST TOTAL PROJECT	SHEET No	TOTAL SHEETS
04	Ala	880	43.6/45.5	N	N

LICENSED LANDSCAPE ARCHITECT

PLANS APPROVAL DATE

The State of California or its officers or agents shall not be responsible for the accuracy or completeness of electronic copies of this plan sheet.

Caltrans now has a web site! To get to the web site, go to: http://www.dot.ca.gov

LICENSED LANDSCAPE ARCHITECT — CHRIS PADICK No. 4179 — STATE OF CALIFORNIA — 11-30-06

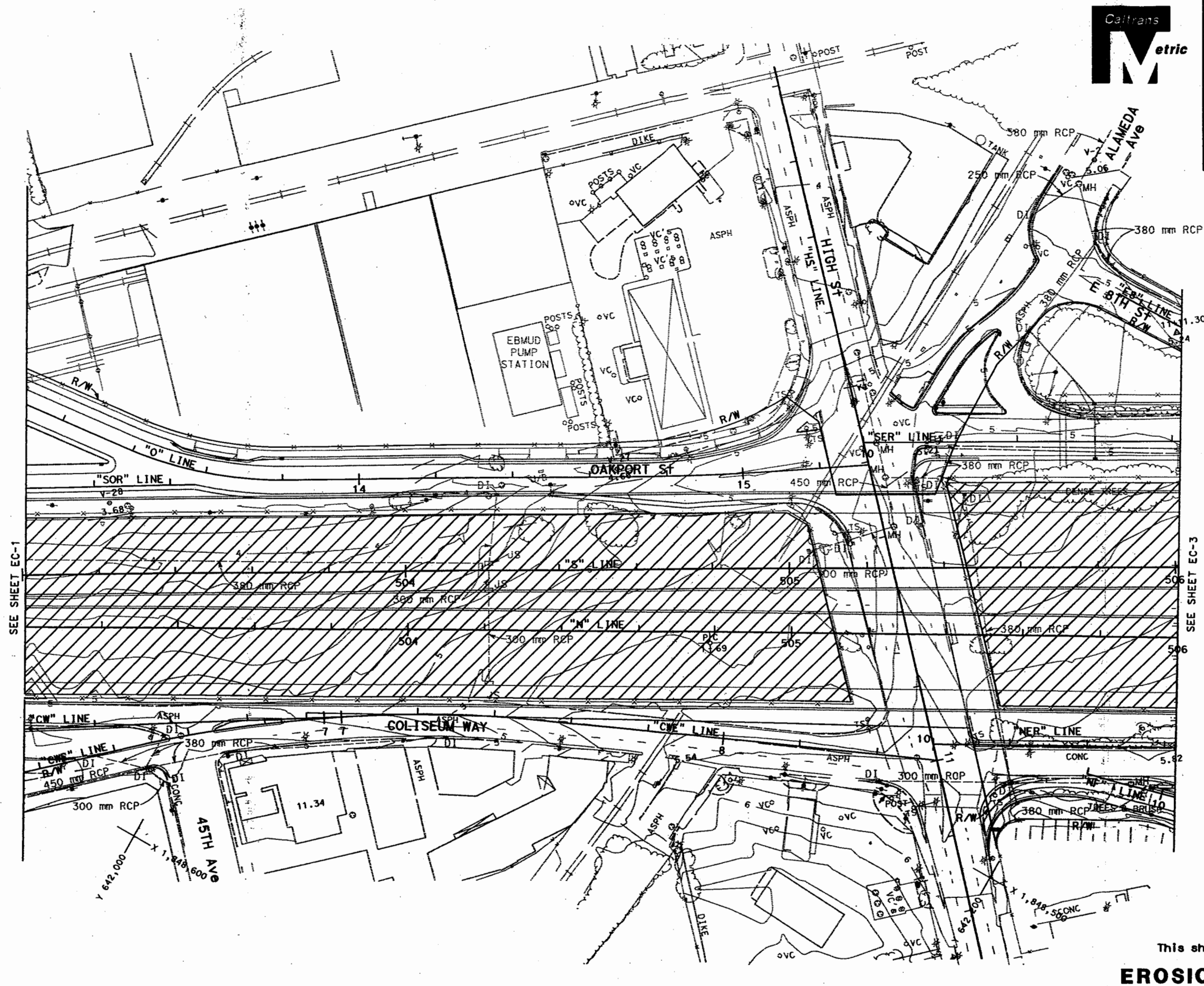

This sheet acurate for erosion control only.

All dimensions are in millimeters unless otherwise shown

EROSION CONTROL PLAN

SCALE: 1:500

EC-2

STATE OF CALIFORNIA - DEPARTMENT OF TRANSPORTATION

Caltrans

EROSION AND SEDIMENT CONTROL

PROJECT LANDSCAPE ARCHITECT: CHRIS PADICK

CALCULATED/DESIGNED BY | CHECKED BY | CP | DATE 11/10 | REVISED BY | DATE REVISED

LAST REVISION: DATE PLOTTED => 11-APR-2006

11-10-04

FOR REDUCED PLANS ORIGINAL SCALE IS IN MILLIMETERS 0 20 40 60 80

USERNAME => strom

CU 04343

EA 165421

DIST	COUNTY	ROUTE	KILOMETER POST TOTAL PROJECT	SHEET No	TOTAL SHEETS
04	Ala	880	43.6/45.5	N	N

LICENSED LANDSCAPE ARCHITECT

PLANS APPROVAL DATE

LICENSED LANDSCAPE ARCHITECT CHRIS PADICK No. 4132 11-30-06 Renewal Date STATE OF CALIFORNIA

The State of California or its officers or agents shall not be responsible for the accuracy or completeness of electronic copies of this plan sheet.

Caltrans now has a web site! To get to the web site, go to: http://www.dot.ca.gov

Caltrans Metric

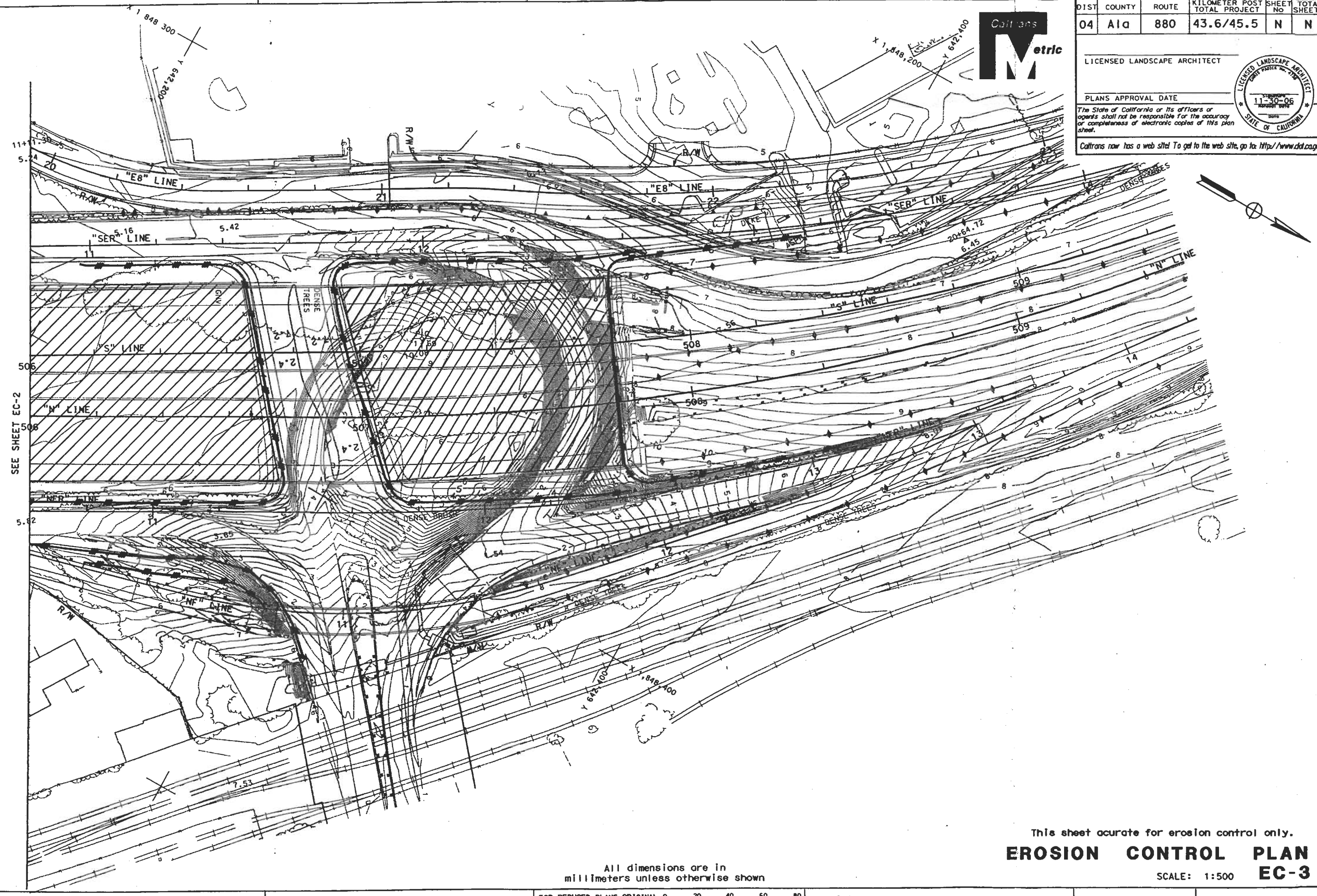

This sheet acurate for erosion control only.

All dimensions are in millimeters unless otherwise shown

EROSION CONTROL PLAN

SCALE: 1:500

EC-3

STATE OF CALIFORNIA - DEPARTMENT OF TRANSPORTATION

Caltrans

EROSION AND SEDIMENT CONTROL

PROJECT LANDSCAPE ARCHITECT: CHRIS PADICK

CALCULATED/DESIGNED BY: CP DATE 11/10

CHECKED BY: CP 11/10

REVISED BY | DATE REVISED

LAST REVISION 04-03-06 DATE PLOTTED => 11-APR-2006 TIME PLOTTED => 14:32

FOR REDUCED PLANS ORIGINAL 0 20 40 60 80 USERNAME =>stem

DIST	COUNTY	ROUTE	KILOMETER POST TOTAL PROJECT	SHEET No	TOTAL SHEETS
04	Ala	880	43.6/45.5	N	N

LICENSED LANDSCAPE ARCHITECT

PLANS APPROVAL DATE

LICENSED LANDSCAPE ARCHITECT — State Public Res. 2791 — Signature — 11-30-06 — Date — STATE OF CALIFORNIA

The State of California or its officers or agents shall not be responsible for the accuracy or completeness of electronic copies of this plan sheet.

Caltrans now has a web site! To get to the web site, go to: http://www.dot.ca.gov

Caltrans Metric

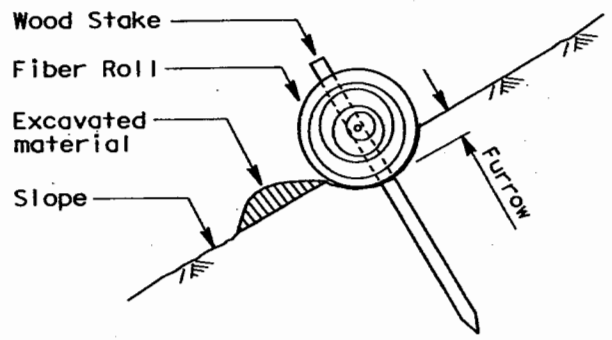

SECTION

FIBER ROLL

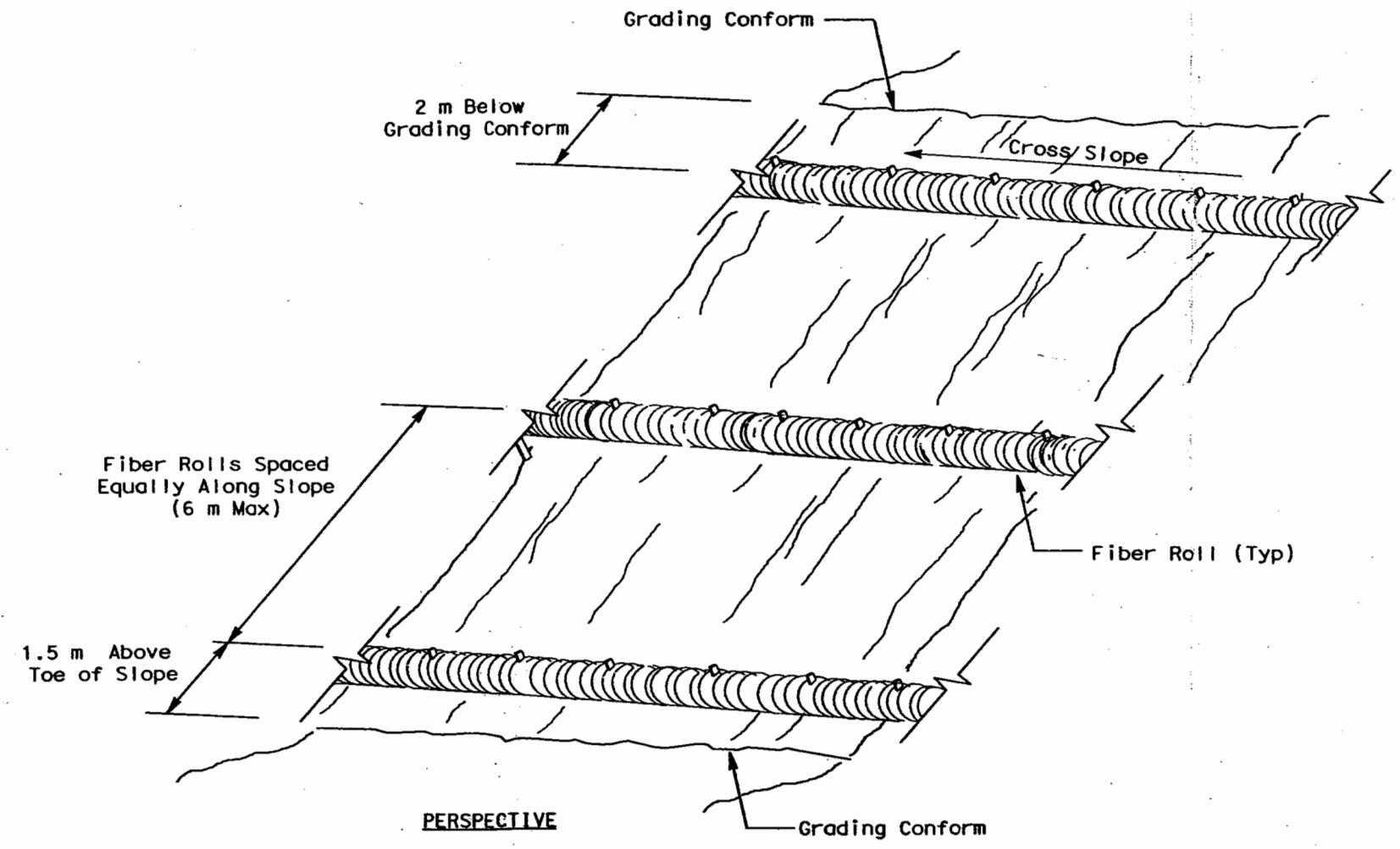

PERSPECTIVE

FIBER ROLL (TYPE I)
(FURROW METHOD)

All dimensions are in millimeters unless otherwise shown

EROSION CONTROL DETAILS

NO SCALE

ECD-1

STATE OF CALIFORNIA - DEPARTMENT OF TRANSPORTATION

Caltrans

EROSION AND SEDIMENT CONTROL

PROJECT LANDSCAPE ARCHITECT: CHRIS PADICK

CALCULATED/DESIGNED BY: CP — DATE: 10/28

CHECKED BY: CP — DATE REVISED: 10/28

REVISED BY

LAST REVISION 10-28-04

DATE PLOTTED => 12-APR-2006
TIME PLOTTED => 09:24

FOR REDUCED PLANS ORIGINAL 0 20 40 60 80

USERNAME => stron

CU 04343

EA 165421

DIST	COUNTY	ROUTE	KILOMETER POST TOTAL PROJECT	SHEET No	TOTAL SHEETS
04	Ala	880	43.6/45.5	N	N

LICENSED LANDSCAPE ARCHITECT

PLANS APPROVAL DATE

LICENSED LANDSCAPE ARCHITECT CHRIS PADICK No. 4798 STATE OF CALIFORNIA 11-10-04

The State of California or its officers or agents shall not be responsible for the accuracy or completeness of electronic copies of this plan sheet.

Caltrans now has a web site! To get to the web site, go to: http://www.dot.ca.gov

Caltrans Metric

EROSION CONTROL QUANTITIES

SHEET No.	EROSION CONTROL (TYPE D)					MULCH (EROSION CONTROL)	FIBER ROLLS
	PURE LIVE SEED (EROSION CONTROL)	FIBER	COMPOST	STRAW	STABILIZING EMULSION		
	kg	kg	M3	Tonne	kg	m3	m
EC-1	27	166	1.1	1.2	37	175	230
EC-2	19	115	0.75	0.81	25	1300	0
EC-3	43	262	1.65	1.8	58	842	776
TOTAL	89	542	3.5	3.82	120	2317	1006

THIS PLAN ACCURATE FOR EROSION CONTROL WORK ONLY

EROSION CONTROL QUANTITIES

NO SCALE

ECQ-1

STATE OF CALIFORNIA - DEPARTMENT OF TRANSPORTATION

Caltrans

EROSION AND SEDIMENT CONTROL

PROJECT LANDSCAPE ARCHITECT

CHRIS PADICK

CALCULATED/DESIGNED BY CP DATE 10/28

CHECKED BY CP 10/28

REVISED BY

DATE REVISED

LAST REVISION 04-03-06

DATE PLOTTED => 11-APR-2006

TIME PLOTTED => 13:39

FOR REDUCED PLANS ORIGINAL 0 20 40 60 80

USERNAME => stron

ATTACHMENT F

STORM WATER COST INFORMATION

04-165421
Storm Water Cost Information

1) TEMPORARY CONSTRUCTION SITE BMPS		
	Temporary Drainage Inlet Protection	$ 18,750.00
	Temporary Silt Fence	$ 24,000.00
	Temporary Cover	$ 4,770.00
	Temporary Concrete Washout Facility	$ 45,000.00
	Temporary Construction Entrance/Exits	$ 25,000.00
	Temporary Hydraulic Mulch (Bonded Fiber Matrix)	
	Temporary Fence (Type ESA)	
	Temporary Soil Stabilizers	$ -
	Non-Storm Water Discharges	$ 120,000.00
	Prepare Storm Water Pollution Prevention Plan	$ 10,000.00
	Water Pollution Control	$ 100,000.00
		$ 347,520.00
2) PERMANENT TREATMENT BMPS		
	Biofiltration Strips and Swales	$ 67,000.00
	Roadway Excavation: (Gutters)	
	Plant (Group M)	
		$ 67,000.00
3) DESIGN POLLUTION PREVENTION BMPS		
CONCENTRATED FLOW CONVEYANCE SYSTEMS		
	450 mm Alternative Flared End Section	$ 750.00
	600 mm Alternative Flared End Section	
	Culverts	
	Ditch Excavation	$ 560.00
	Roadway Excavation: (Gutters)	
	Asphalt Concrete Type A (ACOD)	
	Place Asphalt Concrete (Miscellaneous Area) (ACOD)	
	Place Asphalt Concrete Dike (Type A)	$ 8,700.00
	Place Asphalt Concrete Dike (Type C)	
	Place Asphalt Concrete Dike (Type E)	$ 4,000.00
	Place Asphalt Concrete Dike (Type F)	$ 400.00
	Drain Inlet Protection	
SLOPE/SURFACE PROTECTION SYSTEMS		
Vegetated Surfaces		
	Mulch	$ 69,600.00
	Compost (Erosion Control)	$ 280.00
	Straw (Erosion Control)	$ 2,925.00
	Fiber (Erosion Control)	$ 550.00
	Move in Move out (Erosion Control)	$ 3,500.00
	Fiber Rolls	$ 16,665.00
	Pure Live Seed (Erosion Control)	$ 8,010.00
	Stabilizing Emulsion (Erosion Control)	$ 756.00
Hard Surfaces		
	Slope Paving Concrete and Masonry Block	
	Rock Slope Protection (Backing No. 2, Method B)	$ 320.00
	Rock Slope Protection Fabric	
	Minor Concrete (Broom Finish)	
	Concrete (Gutter Lining)	$ 17,600.00
	Concrete (Ditch Lining)	$ 1,600.00
		$ 136,216.00
4) SUPPLEMENTAL FUNDS		
	Additional Non-Storm Water Discharges	$ 103,000.00
	Additional Water Pollution Control	$ 22,500.00
	Bioswale Swap	$ 250,000.00
		$ 375,500.00
	TOTAL STORM WATER RELATED ITEMS:	**$ 926,236.00**

ATTACHMENT G

QUANTITIES FOR CONSTRUCTION SITE BMPs

04-165421

Quantities for Construction Site BMPs

1) TEMPORARY CONSTRUCTION SITE BMPS		
	Temporary Drainage Inlet Protection	75 EA
	Temporary Silt Fence	2000 M
	Temporary Cover	900 M2
	Temporary Concrete Washout Facility	15 EA
	Temporary Construction Entrance/Exits	10 EA
	Temporary Hydraulic Mulch (Bonded Fiber Matrix)	
	Temporary Fence (Type ESA)	
	Temporary Irrigat'n	LS
	Plant Plug	144 M2
2) PERMANENT TREATMENT BMPS		
	Top Soil	144 M3
	Excavation Haz	117 M3
	Plant Est	LS
3) DESIGN POLLUTION PREVENTION BMPS		
CONCENTRATED FLOW CONVEYANCE SYSTEMS		
	450 mm Alternative Flared End Section	1 EA
	600 mm Alternative Flared End Section	
	Culverts	
	Ditch Excavation	14 M3
	Roadway Excavation: (Gutters)	
	Asphalt Concrete Type A (ACOD)	
	Place Asphalt Concrete (Miscellaneous Area) (ACOD)	
	Place Asphalt Concrete Dike (Type A)	870 M
	Place Asphalt Concrete Dike (Type C)	
	Place Asphalt Concrete Dike (Type E)	400 M
	Place Asphalt Concrete Dike (Type F)	40 M
	Drain Inlet Protection	
SLOPE/SURFACE PROTECTION SYSTEMS		
Vegetated Surfaces		
	Mulch	2320 M3
	Compost (Erosion Control)	3.5 M3
	Straw (Erosion Control)	3.9 TONN
	Fiber (Erosion Control)	550 KG
	Move in Move out (Erosion Control)	5 EA
	Fiber Rolls	1010 M
	Pure Live Seed (Erosion Control)	89 KG
	Stabilizing Emulsion (Erosion Control)	120 KG
Hard Surfaces		
	Slope Paving Concrete and Masonry Block	
	Rock Slope Protection (Backing No. 2, Method B)	2 M3
	Rock Slope Protection Fabric	
	Minor Concrete (Broom Finish)	
	Concrete (Gutter Lining)	11 M3
	Concrete (Ditch Lining)	2 M3

ATTACHMENT H

RAINFALL INTENSITY CURVES & FIRM

WINIDF v. 1.0 REPORT. 8/18/2004

GENERAL INFORMATION:

Input by: Caltrans Hydraulics
Input date: 08/18/2004
Project description: 04-165421 Ala-880-27.1/28.3

SITE DATA:

Latitude: 37.768 deg.
Longitude: 122.219 deg.
Return Period: 25 years

SELECTED STATIONS:

Station Name	Station ID	Elev. ft	Lat. deg.	Long. deg.	Dist. miles
OAKLAND AP NWS	E406335000	3	37.733	122.200	2.63

COMPUTED INTENSITIES (INCHES/HOUR)

Return Period Duration	25-yr	2-yr	10-yr	25-yr	50-yr	100-yr	10,000-yr
5-min	3.185	1.565	2.663	3.196	3.562	3.962	6.325
10-min	2.277	1.119	1.904	2.285	2.547	2.833	4.523
15-min	1.871	0.919	1.565	1.878	2.093	2.328	3.717
30-min	1.338	0.657	1.119	1.343	1.497	1.664	2.657
60-min	0.957	0.470	0.800	0.960	1.070	1.190	1.900
120-min	0.684	0.336	0.572	0.686	0.765	0.851	1.358
4-hr	0.489	0.240	0.409	0.491	0.547	0.608	0.971
8-hr	0.350	0.172	0.292	0.351	0.391	0.435	0.694
16-hr	0.250	0.123	0.209	0.251	0.280	0.311	0.497
24-hr	0.205	0.101	0.172	0.206	0.230	0.256	0.408

OUTPUT COEFFICIENTS

a = 0.9567
b = -0.4840

APPROXIMATE SCALE

1000 0 1000 FEET

NATIONAL FLOOD INSURANCE PROGRAM

FIRM
FLOOD INSURANCE RATE MAP

CITY OF
OAKLAND, CALIFORNIA
ALAMEDA COUNTY

PANEL 25 OF 45
(SEE MAP INDEX FOR PANELS NOT PRINTED)

COMMUNITY-PANEL NUMBER
065048 0025 B

EFFECTIVE DATE:
SEPTEMBER 30, 1982

Federal Emergency Management Agency

This is an official copy of a portion of the above referenced flood map. It was extracted using F-MIT On-Line. This map does not reflect changes or amendments which may have been made subsequent to the date on the title block. For the latest product information about National Flood Insurance Program flood maps check the FEMA Flood Map Store at www.msc.fema.gov

ATTACHMENT I

EVALUATION DOCUMENTATION FORM

DATE: 01-03-2006
EA: 165421

See Figure 4-1, Project Evaluation Process for Consideration of Permanent Treatment BMPS

NO.	CRITERIA	YES ✓	NO ✓	SUPPLEMENTAL INFORMATION FOR EXEMPTION
1.	Begin Project Evaluation regarding requirement for consideration of Treatment BMPs	√		Go to 2
2.	Is this an emergency or Safety project?		√	If **Yes**, go to 12. (Safety Projects must be funded from the 010 SHOPP Program). If **No**, continue to 3.
3.	Have TMDLs been established for surface waters within the project limits?		√	If **Yes**, contact the District/Regional NPDES coordinator to discuss the Department's participation in the TMDL (if Applicable), go to 11 or 4 (as determined by the NPDES Coordinator). _____ *(Dist./Reg. SW Coordinator initials)* If **No**, continue to 4.
4.	Is the project within an urban MS4?	√		If **Yes**, continue to 5. *(Oakland)* If **No**, go to 12. Alameda County
5.	Is the project directly or indirectly discharging to surface waters?	√		If **Yes**, continue to 6. If **No**, go to 12.
6.	Is it a new facility or major reconstruction?	√		If **Yes**, continue to 8. If **No**, go to 7.
7.	Will there be a change in line/grade or hydraulic capacity?			If **Yes**, continue to 8. If **No**, go to 10.
8.	Is the Disturbed Soil Area (DSA) created by the project greater than or equal to 1.2 hectares?	√		If **Yes**, continue to 11. If **No**, go to 9. *7.8 Ha* _____ *(Total DSA quantity)*
9.	Is the project part of a Common Plan of Development?			If **Yes**, continue to 11. If **No**, go to 10.
10.	Are there any Pollution Control Requirements within the project limits? *(Contact your Dist./Reg. SW Coordinator)*			If **Yes**, continue to 11. If **No**, go to 12.
11.	Consider approved Treatment BMPs for the project.	√		See Sections 2.4 and either Section 5.5 or 6.5 for BMP Evaluation and Selection Process. Complete Checklist T-1 in this Appendix E.
12.	Project is not required to consider Treatment BMPs. AO *(Dist./Reg. SW Coord. Initials)* Avith *(Project Engineer Initials)* 04/06/06 *(Date)*			Document for Project Files by completing this form, and attaching it to the SWDR.
13	End of checklist	√		

ATTACHMENT J

CONSTRUCTION SITE CONSIDERATION FORM

DATE: 01-03-06
EA: 165421

Project Evaluation Process for the Consideration of Construction Site BMPs

NO.	CRITERIA	YES ✓	NO ✓	SUPPLEMENTAL INFORMATION
1.	***Will construction of the project result in areas of disturbed soil as defined by the Project Planning and Design Guide (PPDG)?***	X		If **Yes**, Construction Site BMPs for Soil Stabilization (SS) will be required. Complete CS-1, Part 1. Continue to 2. If **No**, Continue to 3.
2.	***Is there a potential for disturbed soil areas within the project to discharge to storm drain inlets, drainage ditches, areas outside the right of way, etc?***	X		If **Yes**, Construction Site BMPs for Sediment Control (SC) will be required. Complete CS-1, Part 2. Continue to 3.
3.	Is there a potential for sediment or construction related materials and wastes to be tracked offsite and deposited on private or public paved roads by construction vehicles and equipment?	X		If **Yes**, Construction Site BMPs for Tracking Control (TC) will be required. Complete CS-1, Part 3. Continue to 4.
4.	Is there a potential for wind to transport soil and dust offsite during the period of construction?	X		If **Yes**, Construction Site BMPs for Wind Erosion Control (WE) will be required. Complete CS-1, Part 4. Continue to 5.
5.	Is dewatering anticipated or will construction activities occur within or adjacent to a live channel or stream?	X		If **Yes**, Construction Site BMPs for Non-Storm Water Management (NS) will be required. Complete CS-1, Part 5. Continue to 6.
6.	Will construction include saw-cutting, grinding, drilling, concrete or mortar mixing, hydro-demolition, blasting, sandblasting, painting, paving, or other activities that produce residues?	X		If **Yes**, Construction Site BMPs for Non-Storm Water Management (NS) will be required. Complete CS-1, Part 5. Continue to 7.
7.	Are stockpiles of soil, construction related materials, and/or wastes anticipated?	X		If **Yes**, Construction Site BMPs for Waste Management and Materials Pollution Control (WM) will be required. Complete CS-1, Part 6. Continue to 8.
8.	Is there a potential for construction related materials and wastes to have direct contact with precipitation; storm water run-on, or stormwater runoff; be dispersed by wind; be dumped and/or spilled into storm drain systems?	X		If **Yes**, Construction Site BMPs for Waste Management and Materials Pollution Control (WM) will be required. Complete CS-1, Part 6. Continue to 9.
9.	End of checklist.			Document for Project Files by completing this form, and attaching it to the SWDR.

Amanda R. Vito — April 6, 06

PE to initialize after concurrence with Construction (PS&E only) — *Date*

DIST-CO-RTE-PM
04-ALA-880-27.4/28.0 HIGHWAY ESTIMATE

ITEM NO	ITEM CODE	ITEM DESCRIPTION	UNIT (ALT)	QUANTITY	PRICE	AMOUNT
27	129100 (S)	TEMPORARY CRASH CUSHION MODULE	EA	200	190.00	38,000.00
28	150206	ABANDON CULVERT	M	1,670	67.00	111,890.00
29	150221	ABANDON INLET	EA	25	1,050.00	26,250.00
30	150608	REMOVE CHAIN LINK FENCE	M	3,100	18.00	55,800.00
31	150609A	REMOVE RAILROAD TRACK	M	62	400.00	24,800.00
32	150662	REMOVE METAL BEAM GUARD RAILING	M	810	25.00	20,250.00
33	150714	REMOVE THERMOPLASTIC TRAFFIC STRIPE	M	3,740	2.00	7,480.00
34	150722	REMOVE PAVEMENT MARKER	EA	2,670	1.00	2,670.00
35	150742	REMOVE ROADSIDE SIGN	EA	31	250.00	7,750.00
36	150747	REMOVE ROADSIDE SIGN (STRAP AND SADDLE BRACKET METHOD)	EA	11	200.00	2,200.00
37	150760	REMOVE SIGN STRUCTURE	EA	3	7,000.00	21,000.00
38	150804A	REMOVE DRAINAGE GATE	EA	1	1,000.00	1,000.00
39	150805	REMOVE CULVERT	M	800	120.00	96,000.00
40	150820	REMOVE INLET	EA	30	690.00	20,700.00
41	150821	REMOVE HEADWALL	EA	1	1,320.00	1,320.00
42	150826	REMOVE MANHOLE	EA	4	1,270.00	5,080.00
43	150828A	REMOVE JUNCTION STRUCTURE	EA	16	900.00	14,400.00

DIST-CO-RTE-PM
04-ALA-880-27.4/28.0 HIGHWAY ESTIMATE

ITEM NO	ITEM CODE	ITEM DESCRIPTION	UNIT (ALT)	QUANTITY	PRICE	AMOUNT
14	074021A	DEWATERING AND NON-STORM WATER DISCHARGE CONTROL	LS	LUMP SUM	200,000.00	200,000.00
15	074029 (S)	TEMPORARY SILT FENCE	M	2,000	12.00	24,000.00
16	074032	TEMPORARY CONCRETE WASHOUT FACILITY	EA	15	3,000.00	45,000.00
17	074033	TEMPORARY CONSTRUCTION ENTRANCE	EA	10	2,500.00	25,000.00
18	074034	TEMPORARY COVER	M2	900	5.30	4,770.00
19	074038	TEMPORARY DRAINAGE INLET PROTECTION	EA	75	250.00	18,750.00
20	120090 (S)	CONSTRUCTION AREA SIGNS	LS	LUMP SUM	30,000.00	30,000.00
21	120100 (S)	TRAFFIC CONTROL SYSTEM	LS	LUMP SUM	500,000.00	500,000.00
22	120149 (S)	TEMPORARY PAVEMENT MARKING (PAINT)	M2	56	24.00	1,344.00
23	120159 (S)	TEMPORARY TRAFFIC STRIPE (PAINT)	M	11,500	2.50	28,750.00
24	120300 (S)	TEMPORARY PAVEMENT MARKER	EA	5,070	8.00	40,560.00
25	128650	PORTABLE CHANGEABLE MESSAGE SIGN	EA	10	5,000.00	50,000.00
26	129000 (S)	TEMPORARY RAILING (TYPE K)	M	8,940	50.00	447,000.00

DIST-CO-RTE-PM
04-ALA-880-27.4/28.0

HIGHWAY ESTIMATE

ITEM NO	ITEM CODE	ITEM DESCRIPTION	UNIT (ALT)	QUANTITY	PRICE	AMOUNT
27	129100 (S)	TEMPORARY CRASH CUSHION MODULE	EA	200	190.00	38,000.00
28	150206	ABANDON CULVERT	M	1,670	67.00	111,890.00
29	150221	ABANDON INLET	EA	25	1,050.00	26,250.00
30	150608	REMOVE CHAIN LINK FENCE	M	3,100	18.00	55,800.00
31	150609A	REMOVE RAILROAD TRACK	M	62	400.00	24,800.00
32	150662	REMOVE METAL BEAM GUARD RAILING	M	810	25.00	20,250.00
33	150714	REMOVE THERMOPLASTIC TRAFFIC STRIPE	M	3,740	2.00	7,480.00
34	150722	REMOVE PAVEMENT MARKER	EA	2,670	1.00	2,670.00
35	150742	REMOVE ROADSIDE SIGN	EA	31	250.00	7,750.00
36	150747	REMOVE ROADSIDE SIGN (STRAP AND SADDLE BRACKET METHOD)	EA	11	200.00	2,200.00
37	150760	REMOVE SIGN STRUCTURE	EA	3	7,000.00	21,000.00
38	150804A	REMOVE DRAINAGE GATE	EA	1	1,000.00	1,000.00
39	150805	REMOVE CULVERT	M	800	120.00	96,000.00
40	150820	REMOVE INLET	EA	30	690.00	20,700.00
41	150821	REMOVE HEADWALL	EA	1	1,320.00	1,320.00
42	150826	REMOVE MANHOLE	EA	4	1,270.00	5,080.00
43	150828A	REMOVE JUNCTION STRUCTURE	EA	16	900.00	14,400.00

DIST-CO-RTE-PM
04-ALA-880-27.4/28.0

HIGHWAY ESTIMATE

ITEM NO	ITEM CODE	ITEM DESCRIPTION	UNIT (ALT)	QUANTITY	PRICE	AMOUNT
44	150829	REMOVE RETAINING WALL	LS	LUMP SUM	25,000.00	25,000.00
45	150846	REMOVE CONCRETE PAVEMENT	M2	11,900	40.00	476,000.00
46	150860	REMOVE BASE AND SURFACING	M2	13,800	40.00	552,000.00
47	152390	RELOCATE ROADSIDE SIGN	EA	2	300.00	600.00
48	152430	ADJUST INLET	EA	2	770.00	1,540.00
49	153103 (S)	COLD PLANE ASPHALT CONCRETE PAVEMENT	M2	1,820	4.00	7,280.00
50	153211	REMOVE CONCRETE SIDEWALK AND DRIVEWAY	M2	1,040	20.00	20,800.00
51	153215	REMOVE CONCRETE (CURB AND GUTTER)	M	4,480	24.00	107,520.00
52	153221	REMOVE CONCRETE BARRIER	M	880	32.00	28,160.00
53	153222A	REMOVE CONCRETE ISLAND	M2	175	26.00	4,550.00
54	155003	CAP INLET	EA	4	1,300.00	5,200.00
55	155007	CAP MANHOLE	EA	1	1,700.00	1,700.00
56	160101	CLEARING AND GRUBBING	LS	LUMP SUM	10,000.00	10,000.00
57	170101	DEVELOP WATER SUPPLY	LS	LUMP SUM	7,500.00	7,500.00
58	190101	ROADWAY EXCAVATION	M3	~~31,180~~ 31,200	20.00	623,000.00
59	190102A	SETTLEMENT INSTRUMENTATION (SURVEY HUBS)	LS	LUMP SUM	25,000.00	25,000.00
60	190105	ROADWAY EXCAVATION (TYPE Z-2) (AERIALLY DEPOSITED LEAD)	M3	8,010	220.00	1,762,200.00

DIST-CO-RTE-PM
04-ALA-880-27.4/28.0 HIGHWAY ESTIMATE

ITEM NO	ITEM CODE	ITEM DESCRIPTION	UNIT (ALT)	QUANTITY	PRICE	AMOUNT
61	190110	LEAD COMPLIANCE PLAN	LS	LUMP SUM	6,000.00	6,000.00
62	192037 (F)	STRUCTURE EXCAVATION (RETAINING WALL)	M3	1,553	64.00	99,392.00
63	193013 (F)	STRUCTURE BACKFILL (RETAINING WALL)	M3	3,727	78.00	290,706.00
64	193114	SAND BACKFILL	M3	280	170.00	47,600.00
65	194001	DITCH EXCAVATION	M3	14	40.00	560.00
66	198001	IMPORTED BORROW	M3	8,800	22.00	193,600.00
67	198007	IMPORTED MATERIAL (SHOULDER BACKING)	TONN	130	50.00	6,500.00
68	203002A	MULCH (EROSION CONTROL)	M3	2,320	30.00	69,600.00
69	203003 (S)	STRAW (EROSION CONTROL)	TONN	3.9	750.00	2,925.00
70	203014 (S)	FIBER (EROSION CONTROL)	KG	550	1.00	550.00
71	203021 (S)	FIBER ROLLS	M	1,010	16.50	16,665.00
72	203024 (S)	COMPOST (EROSION CONTROL)	M3	3.5	80.00	280.00
73	203026 (S)	MOVE-IN/MOVE-OUT (EROSION CONTROL)	EA	5	700.00	3,500.00
74	203045 (S)	PURE LIVE SEED (EROSION CONTROL)	KG	89	90.00	8,010.00

DIST-CO-RTE-PM
04-ALA-880-27.4/28.0 HIGHWAY ESTIMATE

ITEM NO	ITEM CODE	ITEM DESCRIPTION	UNIT (ALT)	QUANTITY	PRICE	AMOUNT
75	203061 (S)	STABILIZING EMULSION (EROSION CONTROL)	KG	120	6.30	756.00
76	208301	IRRIGATION CONTROLLER ENCLOSURE CABINET	EA	2	3,000.00	6,000.00
77	208731	200 MM CORRUGATED HIGH DENSITY POLYETHYLENE PIPE CONDUIT	M	150	210.00	31,500.00
78	250401	CLASS 4 AGGREGATE SUBBASE	M3	10,900	23.00	250,700.00
79	260301	CLASS 3 AGGREGATE BASE	M3	6,030	50.00	301,500.00
80	280000	LEAN CONCRETE BASE	M3	3,630	260.00	943,800.00
81	390104	ASPHALT CONCRETE	TONN	20,200	100.00	2,020,000.00
82	390106	ASPHALT CONCRETE (OPEN GRADED)	TONN	2,800	100.00	280,000.00
83	390107	ASPHALT CONCRETE (LEVELING)	TONN	4,600	100.00	460,000.00
84	394040	PLACE ASPHALT CONCRETE DIKE (TYPE A)	M	870	10.00	8,700.00
85	394048	PLACE ASPHALT CONCRETE DIKE (TYPE E)	M	400	10.00	4,000.00
86	394049	PLACE ASPHALT CONCRETE DIKE (TYPE F)	M	40	10.00	400.00
87	397001	ASPHALTIC EMULSION (PAINT BINDER)	TONN	20	530.00	10,600.00
88	415101	CRACK EXISTING CONCRETE PAVEMENT	M2	1,500	6.00	9,000.00
89	510060 (F)	STRUCTURAL CONCRETE, RETAINING WALL	M3	1,500	540.00	810,000.00

DIST-CO-RTE-PM
04-ALA-880-27.4/28.0 HIGHWAY ESTIMATE

ITEM NO	ITEM CODE	ITEM DESCRIPTION	UNIT (ALT)	QUANTITY	PRICE	AMOUNT
90	510502 (F)	MINOR CONCRETE (MINOR STRUCTURE)	M3	164	1,600.00	262,400.00
91	510526	MINOR CONCRETE (BACKFILL)	M3	80	200.00	16,000.00
92	511046	HEAVY BLAST TEXTURE	M2	1,440	65.00	93,600.00
93	520103 (S-F)	BAR REINFORCING STEEL (RETAINING WALL)	KG	40,000	2.30	92,000.00
94	560218 (F)	FURNISH SIGN STRUCTURE (TRUSS)	KG	23,585	7.00	165,095.00
95	560219 (S-F)	INSTALL SIGN STRUCTURE (TRUSS)	KG	23,585	1.50	35,377.50
96	560233	FURNISH FORMED PANEL SIGN (OVERHEAD)	M2	88	100.00	8,800.00
97	560238	FURNISH SINGLE SHEET ALUMINUM SIGN (1.6 MM-UNFRAMED)	M2	18	50.00	900.00
98	560239	FURNISH SINGLE SHEET ALUMINUM SIGN (2.0 MM-UNFRAMED)	M2	33	55.00	1,815.00
99	560241	FURNISH SINGLE SHEET ALUMINUM SIGN (1.6 MM-FRAMED)	M2	12	60.00	720.00
00	560242	FURNISH SINGLE SHEET ALUMINUM SIGN (2.0 MM-FRAMED)	M2	16	65.00	1,040.00
01	561015	1524 MM CAST-IN-DRILLED-HOLE CONCRETE PILE (SIGN FOUNDATION)	M	14.6	1,500.00	21,900.00
02	566011	ROADSIDE SIGN - ONE POST	EA	37	300.00	11,100.00

DIST-CO-RTE-PM
04-ALA-880-27.4/28.0 HIGHWAY ESTIMATE

ITEM NO	ITEM CODE	ITEM DESCRIPTION	UNIT (ALT)	QUANTITY	PRICE	AMOUNT
03	566012	ROADSIDE SIGN - TWO POST	EA	9	400.00	3,600.00
04	568001	INSTALL SIGN (STRAP AND SADDLE BRACKET METHOD)	EA	2	250.00	500.00
05	568016	INSTALL SIGN PANEL ON EXISTING FRAME	M2	25	200.00	5,000.00
06	620905	300 MM ALTERNATIVE PIPE CULVERT (TYPE A)	M	32	120.00	3,840.00
07	620906	300 MM ALTERNATIVE PIPE CULVERT (TYPE B)	M	310	130.00	40,300.00
08	620910	450 MM ALTERNATIVE PIPE CULVERT (TYPE A)	M	1,210	240.00	290,400.00
09	620911	450 MM ALTERNATIVE PIPE CULVERT (TYPE B)	M	380	240.00	91,200.00
10	620914	600 MM ALTERNATIVE PIPE CULVERT (TYPE A)	M	74	340.00	25,160.00
11	620915	600 MM ALTERNATIVE PIPE CULVERT (TYPE B)	M	210	340.00	71,400.00
12	620921	750 MM ALTERNATIVE PIPE CULVERT (TYPE B)	M	290	340.00	98,600.00
13	650067	300 MM REINFORCED CONCRETE PIPE	M	20	200.00	4,000.00
14	650069	450 MM REINFORCED CONCRETE PIPE	M	5	250.00	1,250.00
15	650075	600 MM REINFORCED CONCRETE PIPE	M	6	250.00	1,500.00
16	650079	900 MM REINFORCED CONCRETE PIPE	M	3	560.00	1,680.00
17	655257	JACKED 750 MM REINFORCED CONCRETE PIPE (CLASS II)	M	47	1,700.00	79,900.00
18	665732	450 MM SLOTTED CORRUGATED STEEL PIPE (1.63 MM THICK)	M	45	320.00	14,400.00

DIST-CO-RTE-PM
04-ALA-880-27.4/28.0

HIGHWAY ESTIMATE

ITEM NO	ITEM CODE	ITEM DESCRIPTION	UNIT (ALT)	QUANTITY	PRICE	AMOUNT
.19	682049	CLASS 3 PERMEABLE MATERIAL (BLANKET)	M3	2,560	56.00	143,360.00
.20	685067	200 MM ALTERNATIVE PIPE UNDERDRAIN	M	1,280	65.00	83,200.00
.21	700617	DRAINAGE INLET MARKER	EA	21	200.00	4,200.00
.22	705336	450 MM ALTERNATIVE FLARED END SECTION	EA	1	750.00	750.00
.23	705954A (S)	RUBBER CHECK VALVE	EA	1	14,000.00	14,000.00
.24	707051	DRAINAGE MANHOLE	EA	3	2,500.00	7,500.00
.25	707133	900 MM PRECAST CONCRETE PIPE INLET	M	2	950.00	1,900.00
.26	721011	ROCK SLOPE PROTECTION (BACKING NO. 2, METHOD B)	M3	2	160.00	320.00
.27	721410	CONCRETE (GUTTER LINING)	M3	11	1,600.00	17,600.00
28	721420	CONCRETE (DITCH LINING)	M3	2	800.00	1,600.00
29	731502 (S)	MINOR CONCRETE (MISCELLANEOUS CONSTRUCTION)	M3	860	700.00	602,000.00
30	750001 (S-F)	MISCELLANEOUS IRON AND STEEL	KG	12,438	4.50	55,971.00
31	800381 (S)	CHAIN LINK FENCE (TYPE CL-0.9)	M	210	30.00	6,300.00
32	800386 (S)	CHAIN LINK FENCE (TYPE CL-1.2, VINYL-CLAD)	M	750	80.00	60,000.00

DIST-CO-RTE-PM
04-ALA-880-27.4/28.0 HIGHWAY ESTIMATE

ITEM NO	ITEM CODE	ITEM DESCRIPTION	UNIT (ALT)	QUANTITY	PRICE	AMOUNT
33	800392 (S)	CHAIN LINK FENCE (TYPE CL-1.8, VINYL-CLAD)	M	2,230	90.00	200,700.00
34	802592 (S)	2.4 M CHAIN LINK GATE (TYPE CL-1.8)	EA	5	1,300.00	6,500.00
35	820107	DELINEATOR (CLASS 1)	EA	74	28.00	2,072.00
36	820131	OBJECT MARKER (TYPE K)	EA	3	50.00	150.00
37	820132	OBJECT MARKER (TYPE L)	EA	5	50.00	250.00
38	820135A	CONCRETE BARRIER MARKER	EA	53	14.00	742.00
39	832003 (S)	METAL BEAM GUARD RAILING (WOOD POST)	M	330	76.00	25,080.00
40	839582	END ANCHOR ASSEMBLY (TYPE CA)	EA	2	1,300.00	2,600.00
41	839584	ALTERNATIVE IN-LINE TERMINAL SYSTEM	EA	2	2,500.00	5,000.00
42	839585	ALTERNATIVE FLARED TERMINAL SYSTEM	EA	3	2,700.00	8,100.00
43	839631	CRASH CUSHION MODULE, SAND FILLED	EA	25	350.00	8,750.00
44	839701	CONCRETE BARRIER (TYPE 60)	M	940	180.00	169,200.00
45	839702A	CONCRETE BARRIER (TYPE 60C MODIFIED)	M	430	200.00	86,000.00
46	839703	CONCRETE BARRIER (TYPE 60C)	M	26	200.00	5,200.00
47	839704	CONCRETE BARRIER (TYPE 60D)	M	440	130.00	57,200.00
48	839706	CONCRETE BARRIER (TYPE 60G)	M	170	280.00	47,600.00

DIST-CO-RTE-PM
04-ALA-880-27.4/28.0

HIGHWAY ESTIMATE

ITEM NO	ITEM CODE	ITEM DESCRIPTION	UNIT (ALT)	QUANTITY	PRICE	AMOUNT
.49	839708	CONCRETE BARRIER (TYPE 60GC)	M	600	230.00	138,000.00
.50	839726	CONCRETE BARRIER (TYPE 736A)	M	86	220.00	18,920.00
.51	839728A	CONCRETE BARRIER (TYPE 736A MODIFIED)	M	360	220.00	79,200.00
.52	840515 (S)	THERMOPLASTIC PAVEMENT MARKING	M2	190	35.00	6,650.00
.53	840561 (S)	100 MM THERMOPLASTIC TRAFFIC STRIPE	M	12,300	1.10	13,530.00
.54	840563 (S)	200 MM THERMOPLASTIC TRAFFIC STRIPE	M	1,020	2.50	2,550.00
.55	850101 (S)	PAVEMENT MARKER (NON-REFLECTIVE)	EA	2,370	2.00	4,740.00
.56	850111 (S)	PAVEMENT MARKER (RETROREFLECTIVE)	EA	1,310	4.00	5,240.00
.57	860251	SIGNAL AND LIGHTING (LOCATION 1)	LS	LUMP SUM	83,000.00	83,000.00
.58	860252	SIGNAL AND LIGHTING (LOCATION 2)	LS	LUMP SUM	18,000.00	18,000.00
.59	860253	SIGNAL AND LIGHTING (LOCATION 3)	LS	LUMP SUM	111,000.00	111,000.00
.60	860254	SIGNAL AND LIGHTING (LOCATION 4)	LS	LUMP SUM	113,000.00	113,000.00
.61	860402	LIGHTING (CITY STREET)	LS	LUMP SUM	51,000.00	51,000.00
.62	860415A	LIGHTING AND SIGN ILLUMINATION (STAGE CONSTRUCTION)	LS	LUMP SUM	40,000.00	40,000.00
.63	860460	LIGHTING AND SIGN ILLUMINATION	LS	LUMP SUM	334,000.00	334,000.00

DIST-CO-RTE-PM
04-ALA-880-27.4/28.0 HIGHWAY ESTIMATE

ITEM NO	ITEM CODE	ITEM DESCRIPTION	UNIT (ALT)	QUANTITY	PRICE	AMOUNT
64	861517A	TRAFFIC OPERATION SYSTEM	LS	LUMP SUM	166,000.00	166,000.00
65	861540A	TRAFFIC OPERATION (LOCATION 1)	LS	LUMP SUM	129,000.00	129,000.00
66	861541A	TRAFFIC OPERATION (LOCATION 2)	LS	LUMP SUM	73,000.00	73,000.00
67	999990	MOBILIZATION 10.0%	LS	LUMP SUM	2,539,000.00	2,539,000.00
				SUBTOTAL		25,395,530.50

SUPPLEMENTAL WORK

	DESCRIPTION		AMOUNT
066001A	VALUE ANALYSIS	LS	10,000.00
066015	FEDERAL TRAINEE PROGRAM	LS	25,000.00
066070	MAINTAIN TRAFFIC	LS	75,000.00
066390	ADDITIONAL ASPHALT CONCRETE	LS	50,000.00
066596	ADDITIONAL WATER POLLUTION CONTROL	LS	22,500.00
066597	STORM WATER SAMPLING AND ANALYSIS	LS	40,000.00
066610	PARTNERING	LS	200,000.00
066620A	ADDITIONAL TEMPORARY DRAINAGE WORK	LS	20,000.00
066666	COMPENSATION ADJUSTMENTS FOR PRICE INDEX FLUCTUATIONS OF PAVING ASPHALT	LS	40,000.00
066920	DISPUTES REVIEW BOARD	LS	45,000.00

DIST-CO-RTE-PM
04-ALA-880-27.4/28.0

HIGHWAY ESTIMATE

SUBTOTAL 527,500.00

STATE FURNISHED MATERIALS AND EXPENSES

DESCRIPTION			AMOUNT
066006A	MITIGATION BMP'S	LS	250,000.00
066008	INCENTIVE PAYMENT	LS	100,000.00
066061	CHP ENHANCED ENFORCEMENT	LS	200,000.00
066062	COZEEP CONTRACT	LS	850,000.00
066063	TRAFFIC MANAGEMENT PLAN PUBLIC INFORMATION	LS	600,000.00
066064A	TRAFFIC CONTINGENCY	LS	500,000.00
066065	TOW TRUCK SERVICE PATROL	LS	500,000.00
066066	PUBLIC TRANSIT SUPPORT	LS	100,000.00
066072	MAINTAIN DETOUR	LS	100,000.00
066074	TRAFFIC CONTROL	LS	100,000.00
066105	RESIDENT ENGINEERS OFFICE	LS	650,000.00
066820A	REFLECTORS AND ADHESIVES FOR TEMPORARY RAILING (TYPE K)	LS	5,000.00
066852	TYPE 334 CONTROLLER CABINET	LS	20,000.00
066865A	HIGHWAY ROUTE SHIELDS	LS	1,000.00
066871	ELECTRICAL SERVICE CONNECTIONS	LS	100,000.00

DIST-CO-RTE-PM
04-ALA-880-27.4/28.0

HIGHWAY ESTIMATE

STATE FURNISHED MATERIALS AND EXPENSES (CONT.)

DESCRIPTION		AMOUNT
066907A L E D MODULES	LS	5,000.00
066916A TIME OF USE METER	LS	10,000.00

SUBTOTAL		4,091,000.00
PROJECT SUBTOTAL		30,014,030.50
CONTINGENCIES	5.0%	1,500,969.50
TOTAL		31,515,000.00

CHECKED BY

Checklist SW-1, Site Data Sources

Prepared by: Bill Wong Date: 01-12-2006 District-Co-Route:04-Ala-880
KP (PM): 43.6/45.5 (27.3/28.2) EA: 165421
RWQCB: Region 2

Information for the following data categories should be obtained, reviewed and referenced as necessary throughout the project planning phase. Collect any available documents pertaining to the category and list them and reference your data source. For specific examples of documents within these categories, refer to Section 5.5 of this document. Example categories have been listed below; add additional categories, as needed. Summarize pertinent information in Section 2 of the SWDR.

DATA CATEGORY/SOURCES	Date
Topographic	
• Layout Plans	December, 2005
•	
•	
Hydraulic	
• Drainage Plans	December, 2005
•	
•	
Soils	
• Geotechnical Design Report	April, 2004
• Initial Site Assessment by Geocon Consulting Firm	February, 1998
•	
Climatic	
• National Weather Service Forecast Office Website	
•	
•	
Water Quality	
• Site Investigation Report	June, 2005
• Asbestos & Paint Survey Report	June, 2005
•	
Other Data Categories	
• Project Study Report/Project Report	December, 1999
•	
•	
•	
•	
•	
•	

Checklist SW-2, Storm Water Quality Issues Summary

Prepared by: Bill Wong Date: 1-23-2006 District-Co-Route:04-Ala-880
KP (PM): 43.6/45.5 (27.3/28.2) EA: 165421
RWQCB: Region 2

The following questions provide a guide to collecting critical information relevant to project storm water quality issues. Complete responses to applicable questions, consulting other Caltrans functional units (Environmental, Landscape Architecture, Maintenance, etc.) and the District/Regional NPDES Coordinator as necessary. Summarize pertinent responses in Section 2 of the SWDR.

1.	Determine the receiving waters that may be affected by the project throughout the project life cycle (i.e., construction, maintenance and operation).	X Complete	❑NA
2.	For the project limits, list the 303(d) impaired receiving water bodies and their constituents of concern.	X Complete	❑NA
3.	Determine if there are any High Risk Areas (municipal or domestic water supply reservoirs or groundwater percolation facilities) within the project limits. Consider appropriate spill contamination and spill prevention control measures for these new areas.	❑ Complete	XNA
4.	Determine the RWQCB special requirements, including TMDLs, effluent limits, etc.	❑ Complete	XNA
5.	Determine regulatory agencies seasonal construction and construction exclusion dates or restrictions required by federal, state, or local agencies.	❑ Complete	XNA
6.	Determine if a 401 certification will be required.	X Complete	oNA
7.	List rainy season dates.	X Complete	❑NA
8.	Determine the general climate of the project area. Identify annual rainfall and rainfall intensity curves.	X Complete	❑NA
9.	If considering Treatment BMPs, determine the soil classification, permeability, erodibility, and depth to groundwater.	X Complete	❑NA
10.	Determine contaminated or hazardous soils within the project area.	X Complete	❑NA
11.	Determine the total disturbed soil area of the project.	X Complete	❑NA
12.	Describe the topography of the project site.	X Complete	❑NA
13.	List any areas outside of the Caltrans right-of-way that will be included in the project (e.g. contractor's staging yard, work from barges, easements for staging, etc.).	X Complete	❑NA
14.	Determine if additional right-of-way acquisition or easements and right-of-entry will be required for design, construction and maintenance of BMPs. If so, how much?	❑ Complete	XNA
15.	Determine if a right-of-way certification is required.	❑ Complete	XNA
16.	Determine the estimated unit costs for right-of-way should it be needed for Treatment BMPs, stabilized conveyance systems, lay-back slopes, or interception ditches.	❑ Complete	XNA
17.	Determine if project area has any slope stabilization concerns.	X Complete	❑NA
18.	Describe the local land use within the project area and adjacent areas.	❑ Complete	XNA
19.	Evaluate the presence of dry weather flow.	X Complete	oNA

Checklist SW-3, Measures for Avoiding or Reducing Potential Storm Water Impacts

Prepared by: Bill Wong Date: 1-23-2006 District-Co-Route:04-Ala-880
KP (PM): 43.6/45.5 (27.3/28.2) EA: 165421
RWQCB: Region 2

The PE must confer with other functional units, such as Landscape Architecture, Hydraulics, Environmental, Materials, Construction and Maintenance, as needed to assess these issues. Summarize pertinent responses in Section 2 of the SWDR.

Options for avoiding or reducing potential impacts during project planning include the following:

1. Can the project be relocated or realigned to avoid/reduce impacts to receiving waters or to increase the preservation of critical (or problematic) areas such as floodplains, steep slopes, wetlands, and areas with erosive or unstable soil conditions?	❑ Yes	X No	❑ NA
2. Can structures and bridges be designed or located to reduce work in live streams and minimize construction impacts?	❑ Yes	X No	❑ NA
3. Can any of the following methods be utilized to minimize erosion from slopes:			
a. Disturbing existing slopes only when necessary?	X Yes	❑ No	❑ NA
b. Minimizing cut and fill areas to reduce slope lengths?	X Yes	❑ No	❑ NA
c. Incorporating retaining walls to reduce steepness of slopes or to shorten slopes?	X Yes	❑ No	❑ NA
d. Acquiring right-of-way easements (such as grading easements) to reduce steepness of slopes?	❑ Yes	❑ No	X NA
e. Avoiding soils or formations that will be particularly difficult to re-stabilize?	❑ Yes	❑ No	X NA
f. Providing cut and fill slopes flat enough to allow re-vegetation and limit erosion to pre-construction rates?	X Yes	❑ No	❑ NA
g. Providing benches or terraces on high cut and fill slopes to reduce concentration of flows?	❑ Yes	❑ No	X NA
h. Rounding and shaping slopes to reduce concentrated flow?	X Yes	❑ No	❑ NA
i. Collecting concentrated flows in stabilized drains and channels?	X Yes	❑ No	❑ NA
4. Does the project design allow for the ease of maintaining all BMPs?	X Yes	❑ No	
5. Can the project be scheduled or phased to minimize soil-disturbing work during the rainy season?	X Yes	❑ No	
6. Can permanent storm water pollution controls such as paved slopes, vegetated slopes, basins, and conveyance systems be installed early in the construction process to provide additional protection and to possibly utilize them in addressing construction storm water impacts?	X Yes	❑ No	❑ NA

Design Pollution Prevention BMPs
Checklist DPP-1, Part 1

Prepared by: Bill Wong Date: 1-23-2006 District-Co-Route: 04-Ala-880
KP (PM): 43.6/45.5 (27.3/28.2) EA: 165421
RWQCB: Region 2

Consideration of Design Pollution Prevention BMPs

1. Consideration of Downstream Effects Related to Potentially Increased Flow [to streams or channels]?

(a) Will project increase velocity or volume of downstream flow?	X Yes	❑ No	❑ NA
(b) Will the project discharge to unlined channels?	❑ Yes	X No	❑ NA
(c) Will project increase potential sediment load of downstream flow?	❑ Yes	X No	❑ NA
(d) Will project encroach, cross, realign, or cause other hydraulic changes to a stream that may affect downstream channel stability?	❑ Yes	X No	❑ NA

If Yes was answered to any of the above questions, consider ***Downstream Effects Related to Potentially Increased Flow***, complete the DPP-1, Part 2 checklist.

2. Slope/Surface Protection Systems

(a) Will project create new slopes or modify existing slopes?	X Yes	❑ No	❑ NA

If Yes was answered to the above question, consider ***Slope/Surface Protection Systems***, complete the DPP-1, Part 3 checklist.

3. Concentrated Flow Conveyance Systems

(a) Will the project create or modify ditches, dikes, berms, or swales?	X Yes	❑ No	❑ NA
(b) Will project create new slopes or modify existing slopes?	X Yes	❑ No	❑ NA
(c) Will it be necessary to direct or intercept surface runoff?	X Yes	❑ No	❑ NA
(d) Will cross drains be modified?	X Yes	❑ No	❑ NA

If Yes was answered to any of the above questions, consider ***Concentrated Flow Conveyance Systems***; complete the DPP-1, Part 4 checklist.

4. Preservation of Existing Vegetation

a) It is the goal of the Storm Water Program to maximize the protection of desirable existing vegetation to provide erosion and sediment control benefits on all projects. X Complete

Consider ***Preservation of Existing Vegetation***, complete the DPP-1, Part 5 checklist.

Design Pollution Prevention BMPs
Checklist DPP-1, Part 2

Prepared by: Bill Wong Date: 1-23-2006 District-Co-Route:04-Ala-880
KP (PM): 43.6/45.5 (27.3/28.2) EA: 165421
RWQCB: Region 2

Downstream Effects Related to Potentially Increased Flow

1. Review total paved area and reduce to the maximum extent possible.	X Complete
2. Review channel lining materials and design for stream bank erosion control.	X Completed
(a) See Chapters 860 and 870 of the HDM.	X Completed
(b) Consider channel erosion control measures within the project limits as well as downstream. Consider scour velocity.	X Completed
3. Include, where appropriate, energy dissipation devices at culvert outlets.	X Completed
4. Ensure all transitions between culvert outlets/headwalls/wingwalls and channels are smooth to reduce turbulence and scour.	X Completed
5. Include, if appropriate, detention facilities to reduce peak discharges.	X Completed

Design Pollution Prevention BMPs
Checklist DPP-1, Part 3

Prepared by: Bill Wong Date: 1-26-2006 District-Co-Route:04-Ala-880
KP (PM): 43.6/45.5 (27.3/28.2) EA: 165421
RWQCB: Region 2

Slope / Surface Protection Systems

1. What are the proposed areas of cut and fill? (attach plan or map) — X Complete
2. Were benches or terraces provided on high cut and fill slopes to reduce concentration of flows? — X Yes ❑ No
3. Were slopes rounded and/or shaped to reduce concentrated flow? — X Yes ❑ No
4. Were concentrated flows collected in stabilized drains or channels? — X Yes ❑ No
5. Are slopes > 1:4 vertical:horizontal (V:H))? — ❑ Yes X No

   If Yes, an erosion control plan must be prepared or approved by the District Landscape Architect.
6. Are slopes > 1:2 (V:H)? — ❑ Yes X No

   If Yes, Geotechnical Services must prepare a Geotechnical Design Report, and the District Landscape Architect should prepare or approve an erosion control plan. Concurrence must be obtained from the District Maintenance Storm Water Coordinator for slopes steeper than 1:2 (V:H).
7. Estimate the change to the impervious areas that will result from this project. 1.29 (3.19) ha (ac) — X Complete

VEGETATED SURFACES

1. Identify existing vegetation. — X Complete
2. Evaluate site to determine soil types, appropriate vegetation and planting strategies. — ❑ Complete
3. How long will it take for permanent vegetation to establish? — ❑ Complete
4. Minimize overland and concentrated flow depths and velocities. — ❑ Complete

HARD SURFACES

1. Are hard surfaces required? — X Yes o No

   If Yes, document purpose (safety, maintenance, soil stabilization, etc.), types, and general locations of the installations. — X Complete

Review appropriate SSPs for Vegetated Surface and Hard Surface Protection Systems. — X Complete

Design Pollution Prevention BMPs
Checklist DPP-1, Part 4

Prepared by: Bill Wong Date: 1-26-2006 District-Co-Route:04-Ala-880
KP (PM): 43.6/45.5 (27.3/28.2) EA: 165421
RWQCB: Region 2

Concentrated Flow Conveyance Systems

Ditches, Berms, Dikes and Swales

1. Consider Ditches, Berms, Dikes, and Swales as per Chapters 813, 836, and 860 of the HDM. — X Complete
2. Evaluate risks due to erosion, overtopping, flow backups or washout. — X Complete
3. Consider outlet protection where localized scour is anticipated. — X Complete
4. Examine the site for run-on from off-site sources. — X Complete
5. Consider channel lining when velocities exceed scour velocity for soil. — X Complete

Overside Drains

1. Consider downdrains, as per Index 834.4 of the HDM. — X Complete
2. Consider paved spillways for side slopes flatter than 1:4 V:H. — X Complete

Flared Culvert End Sections

1. Consider flared end sections on culvert inlets and outlets as per Chapter 827 of the HDM. — X Complete

Outlet Protection/Velocity Dissipation Devices

1. Consider outlet protection/velocity dissipation devices at outlets, including cross drains, as per Chapters 827 and 870 of the HDM. — X Complete

Review appropriate SSPs for Concentrated Flow Conveyance Systems. — X Complete

Design Pollution Prevention BMPs
Checklist DPP-1, Part 5

Prepared by: Bill Wong Date: 1-26-2006 District-Co-Route:04-Ala-880
KP (PM): 43.6/45.5 (27.3/28.2) EA: 165421
RWQCB: Region 2

Preservation of Existing Vegetation

1. Review Preservation of Property, Standard Specifications 16.1.01 and 16-1.02 (Clearing and Grubbing) to reduce clearing and grubbing and maximize preservation of existing vegetation. — X Complete
2. Has all vegetation to be retained been coordinated with Environmental, and identified and defined in the contract plans? — X Yes ❑ No
3. Have steps been taken to minimize disturbed areas, such as locating temporary roadways to avoid stands of trees and shrubs and to follow existing contours to reduce cutting and filling? — X Complete
4. Have impacts to preserved vegetation been considered while work is occurring in disturbed areas? — X Yes ❑ No
5. Are all areas to be preserved delineated on the plans? — X Yes ❑ No

Treatment BMPs
Checklist T-1, Part 1

Prepared by: Bill Wong Date: 02-1-2006 District-Co-Route:04-Ala-880
KP (PM): 43.6/45.5 (27.3/28.2) EA: 165421
RWQCB: Region 2

Consideration of Treatment BMPs

This checklist is used for projects that require the consideration of Approved Treatment BMPs, as determined from the process described in Section 4 (Project Treatment Consideration) and the Evaluation Documentation Form (EDF). This checklist will be used to determine which Treatment BMPs should be considered for each watershed and sub-watersheds within the project. Supplemental data will be needed to verify siting and design applicability for final incorporation into a project.

Complete this checklist for each phase of the project, when considering Treatment BMPs. Use the responses to the questions as the basis when developing the narrative in Section 5 of the Storm Water Data Report to document that Treatment BMPs have been appropriately considered.

Answer all questions, unless otherwise directed.

1. Dry Weather Flow Diversion
   - (a) Are dry weather flows generated by Caltrans anticipated to be persistent? ❑ Yes X No
   - (b) Is a sanitary sewer located on or near the site? ❑ Yes X No
   - (c) Is the domestic wastewater treatment authority willing to accept flow? ❑ Yes X TBD

   If Yes was answered to all of these questions consider Dry Weather Flow Diversion, complete and attach Part 3 of this checklist

2. Is the receiving water on the 303(d) list for litter/trash or has a TMDL been issued for litter/trash? ❑ Yes X No

   If Yes, consider Gross Solids Removal Devices (GSRDs), complete and attach Part 6 of this checklist. Note: Biofiltration Systems, Infiltration Basins, Detention Devices, Media Filters, MCTTs, and Wet Basins also can capture litter – consult with District/Regional NPDES if these devices should be considered to meet litter/trash TMDL.

3. Is project located in an area (e.g., mountain regions) where traction sand is applied more than twice a year? ❑ Yes X No
   If Yes, consider ***Traction Sand Traps***, complete and attach **Part 7** of this checklist.

4. (a) Are there local influent limits for infiltration or Basin Plan restrictions or other local agency prohibitions that would restrict the use of the infiltration devices? ❑ Yes X No

   (b) Would infiltration pose a threat to local groundwater quality as determined by the District/Regional NPDES Storm Water Coordinator? ❑ Yes X No

If the answer to either part of Question 4 is Yes, then Infiltration Devices are infeasible and the consideration of Infiltration Devices should not be made when completing Questions 5 through 17.

5. (a) Does the project discharge to any 303(d) listed water body? X Yes No
   If No, go to Question 17, General Purpose Pollutant Removal

   (b) If Yes, is the identified pollutant(s) considered a Targeted Design Constituent (TDC) (check all that apply):
   ___ phosphorus, ___ nitrogen, ___ total copper, ___ dissolved copper,
   ___ total lead, ___ dissolved lead, ___ total zinc, ___ dissolved zinc,
   ___ sediments, ___ general metals [unspecified metals].

   (c) If only one TDC is checked above, continue to Question 6. ❑ Complete

   (d) If more than one TDC is checked, contact your District/Regional NPDES Coordinator to determine priority before continuing with this checklist. Complete

6. Consult with the District/Regional Storm Water Coordinator to determine whether Treatment BMP selection will be affected by any existing or future TMDL requirements. ❑ Complete

The following questions show the approved Treatment BMPs in order of preference based on load reduction (performance) for the listed constituent and lifetime costs for the device, excluding right of way. Note that a line separates Treatment BMPs into groups of approximately equal effectiveness and within each grouping, any of the Treatment BMPs may be selected for placement if meeting site conditions. In the space provided next to the BMP, use Yes or a check mark to indicate a positive response.

For the SWDRs developed for the PID and PA/ED phases of a project: **Consider all approved Treatment BMPs listed that can be reasonably incorporated into the project for each TDC.**

For the SWDR developed for the PS&E phase: **Indicate (Yes or check mark) only those BMPs that will be incorporated into the project.**

7. Is phosphorus the TDC? [Use this constituent if "eutrophic" or "nutrients" is the TDC for the water body.] If Yes, consider: ❑ Yes X No
   ____ Infiltration Devices
   ____ Austin Sand Filters

8. Is nitrogen the TDC? If Yes, consider: ❑ Yes X No

   ____ Infiltration Devices
   ____ Austin Sand Filter
   ____ Delaware Filter
   ____ Detention Device
   ____ MCTT

9. Is copper (total) the TDC? If Yes for total Copper, consider: Yes X No
   - ____ Infiltration Devices
   - ____ Wet Basins
   - ____ Biolfiltration Strips
   - ____ Detention Devices
   - ____ Biofiltration Swales
   - ____ Austin Sand Filter
   - ____ Delaware Filter
   - ____ MCTT

10. Is copper (dissolved) the TDC? If Yes for dissolved Copper, consider: ❑ Yes X No
   - ____ Infiltration Devices
   - ____ Biofiltration Strips
   - ____ Wet Basin
   - ____ Biofiltration Swale

11. Is lead (total) the TDC? If Yes for total Lead, consider: Yes X No
   - ____ Infiltration Devices
   - ____ Wet Basin
   - ____ Biofiltration Strips
   - ____ Austin Sand Filter
   - ____ Delaware Filter
   - ____ Detention Devices
   - ____ Biofiltration Swales
   - ____ MCTT

12. Is lead (dissolved) the TDC? If Yes for dissolved Lead, consider: ❑ Yes ❑ No
   - ____ Infiltration Devices
   - ____ Biofiltration Strips
   - ____ Wet Basin
   - ____ Detention Device
   - ____ Biofiltration Swales
   - ____ Austin Sand Filters

13. Is zinc (total) the TDC? If Yes for total Zinc, consider: Yes X No
   - ____ Infiltration Devices
   - ____ Delaware Filter
   - ____ Wet Basin
   - ____ Biofiltration Strips
   - ____ Biofiltration Swales
   - ____ Austin Sand Filter
   - ____ MCTT
   - ____ Detention Devices

14. Is zinc (dissolved) the TDC? If Yes for dissolved Zinc, consider: ❑ Yes ❑ No
   - ____ Infiltration Devices
   - ____ Delaware Filter
   - ____ Biofiltration Strip
   - ____ Biofiltration Swale
   - ____ Austin Sand Filter
   - ____ MCTT

15. Is sediment (total suspended solids [TSS]) the TDC? If Yes for TSS, consider: ❑ Yes ❑ No
    - ____ Infiltration Devices
    - ____ Austin Sand Filter
    - ____ Delaware Filter
    - ____ Wet Basin
    - ____ Detention Device
    - ____ Biofiltration Strip
    - ____ MCTT
    - ____ Biofiltration Swale

16. Are "General Metals" or (unspecified) "Metals" the TDC? If Yes for General Metals, consider: ❑ Yes ❑ No
    - ____ Infiltration Devices
    - ____ Biofiltration Strips
    - ____ Wet Basin
    - ____ Biofiltration Swale
    - ____ Austin Sand Filter
    - ____ Delaware Filter
    - ____ MCTT

17. General Purpose Pollutant Removal.: When it is determined that there are no TDCs, consider the Treatment BMPs in the order listed below. X Yes ❑ No
    - __X__ Infiltration Devices
    - __X__ Biofiltration Strips
    - ____ Wet Basin
    - __X_ Biofiltration Swale
    - __X__ Austin Sand Filter
    - __X__ Detention Device
    - ____ Delaware Filter
    - ____ MCTT

18. Biofiltration
    (a) Are site conditions and climate favorable to allow suitable vegetation to be established? X Yes ❑ No

    (b) Have Biofiltration strips and swales been considered to the extent practicable? Note: Biofiltration BMPs should be considered for all projects, even if other Treatment BMPs are placed. X Yes ❑ No

    If No to (a) or (b), document justification in Section 5 of the SWDR.

19. After completing the above, complete and attach the checklists shown below for every Treatment BMP under consideration X Complete

    - __X_ Biofiltration Strips and Biofiltration Swales: Checklist T-1, Part 2
    - ____ Dry Weather Diversion: Checklist T-1, Part 3
    - __X__ Infiltration Devices: Checklist T-1, Part 4
    - __X__ Detention Devices: Checklist T-1, Part 5
    - ____ GSRDs: Checklist T-1, Part 6
    - ____ Traction Sand Traps: Checklist T-1, Part 7
    - __X__ Media Filter [Austin Sand Filter and Delaware Filter]:Checklist T-1,Part 8
    - ____ Multi-Chambered Treatment Train: Checklist T-1, Part 9
    - ____ Wet Basins: Checklist T-1, Part 10

20. (a) Estimate what percentage of WQV/WQF will be treated by the preferred Treatment BMP(s): 100% with EBMUD option, 7% with bio-swale — X Complete

    (b) Have Treatment BMPs been considered for use in parallel or series to increase this percentage? — Yes ❑ No

21. Prepare cost estimate, including right of way, for selected Treatment BMPs and include as supplemental information for SWDR approval. — X Complete

Treatment BMPs
Checklist T-1, Part 2

Prepared by: Bill Wong Date: 02-01-2006 District-Co-Route:04-Ala-880
KP (PM): 43.6/45.5 (27.3/28.2) EA: 165421
RWQCB: Region 2

Biofiltration Swales / Biofiltration Strips

Feasibility

1. Do the climate and site conditions allow vegetation to be established? X Yes ❑ No
2. Are flow velocities < 1.2 m/s (4 fps) (i.e. low enough to prevent scour of the vegetated bioswale as per HDM Table 873.3I)? X Yes ❑ No

   If No to either question above, Biofiltration Swales and Biofiltration Strips are not feasible.

3. Are Biofiltration Swales proposed at sites where known hazardous soils or contaminated groundwater plumes exist? ❑ Yes X No
   If Yes, consult with District/Regional NPDES Coordinator about how to proceed.
4. Does adequate area exist within the right-of-way to place biofiltration device(s)? X Yes ❑ No
   If Yes, continue to the Design Elements section. If No, continue to Question 5.
5. If adequate area does not exist within right-of-way, can suitable, additional right-of-way be acquired to site biofiltration devices and how much right-of way would be needed to treat WQF? _____ ha (ac) ❑ Yes X No
   If Yes, continue to Design Elements section. If No, continue to Question 6.
6. If adequate area cannot be obtained, document in Section 5 of the SWDR that the inability to obtain adequate area prevents the incorporation of these Treatment BMPs into the project. X Complete

Design Elements

* **Required** Design Element – A "Yes" response to these questions is required to further the consideration of this BMP into the project design. Document a "No" response in Section 5 of the SWDR to describe why this Treatment BMP cannot be included into the project design.

** **Recommended** Design Element – A "Yes" response is preferred for these questions, but not required for incorporation into a project design.

1. Has the District Landscape Architect provided vegetation mixes appropriate for climate and location? * X Yes ❑ No

2. Can the bioswale be designed as a conveyance system under any expected flows > the WQF event, as per HDM Chapter 800? * (e.g. freeboard, minimum slope, etc.)	X Yes	❑ No
3. Can the bioswale be designed as a water quality treatment device under the WQF while meeting the required HRT, depth, and velocity criteria? *	X Yes	❑ No
4. Is the maximum length of a biostrip ≤ 91 m (300 ft)? *	X Yes	❑ No
5. Has the minimum width (in the direction of flow) of the invert of the bioswale received the concurrence of Maintenance? *	X Yes	❑ No
6. Can bioswales be located in natural or low cut sections to reduce maintenance problems caused by animals burrowing through the berm of the swale? **	X Yes	❑ No
7. Is the biostrip sized as long as possible in the direction of flow (HRT ≥ 5 minutes)? **	X Yes	❑ No
8. Has biofiltration been considered for locations upstream of other Treatment BMPs, as part of a treatment train? **	X Yes	❑ No

Treatment BMPs
Checklist T-1, Part 3

Prepared by: Bill Wong Date: 02-03-2006 District-Co-Route: 04-Ala-880
KP (PM): 43.6/45.5 (27.3/28.2) EA: 165421
RWQCB: Region 2

Dry Weather Flow Diversion

Feasibility

1. Is dry-weather flow diversion acceptable to a Publicly Owned Treatment Works (POTW)? ❑ Yes ❑ No
2. Would a connection require ordinary (i.e., not extraordinary) plumbing to implement? ❑ Yes ❑ No

   If No to either question above, Dry Weather Flow Diversion is not feasible.
3. Does adequate area exist within the right-of-way to place Dry Weather Flow Diversion devices? ❑ Yes ❑ No
   If Yes, continue to Design Elements section. If No, continue to Question 4.
4. If adequate area does not exist within right-of-way, can suitable, additional right-of-way be acquired to site Dry Weather Flow Diversion devices and how much right-of way would be needed? _____ ha (ac) ❑ Yes ❑ No
   If Yes, continue to the Design Elements section.

   If No, continue to Question 5.
5. If adequate area cannot be obtained, document in Section 5 of the SWDR that the inability to obtain adequate area prevents the incorporation of this Treatment BMP into the project. ❑ Complete

NOT APPLICABLE

Design Elements

* **Required** Design Element – A "Yes" response to these questions is required to further the consideration of this BMP into the project design. Document a "No" response in Section 5 of the SWDR to describe why this Treatment BMP cannot be included into the project design.

** **Recommended** Design Element – A "Yes" response is preferred for these questions, but not required for incorporation into a project design.

1. Does the existing sanitary sewer pipeline have adequate capacity to accept project dry weather flows, or can an upgrade be implemented to handle the anticipated dry weather flows within the project's budget and objectives? * ❑ Yes ❑ No
2. Can the connection be designed to allow for Maintenance vehicle access? * ❑ Yes ❑ No
3. Can gate, weir, or valve be designed to stop diversion during storm events? * ❑ Yes ❑ No
4. Can the inlet be designed to reduce chances of clogging the diversion pipe or channel? * ❑ Yes ❑ No
5. Can a back flow prevention device be designed to prevent sanitary sewage from entering storm drain? * ❑ Yes ❑ No

Treatment BMPs
Checklist T-1, Part 4

Prepared by: Bill Wong Date: 02-03-2006 District-Co-Route:04-Ala-880
KP (PM): 43.6/45.5 (27.3/28.2) EA: 165421
RWQCB: Region 2

Infiltration Devices

Feasibility

1. Does local Basin Plan or other local ordinance provide influent limits on quality of water that can be infiltrated, and would infiltration pose a threat to groundwater quality as determined by the District/Regional NPDES Storm Water Coordinator? ❑ Yes ❑ No
2. Does infiltration at the site compromise the integrity of any slopes in the area? ❑ Yes ❑ No
3. Per survey data or U.S. Geological Survey (USGS) Quad Map, are existing slopes at the proposed device site >15%? ❑ Yes ❑ No
4. At the invert, does the soil type classify as NRCS Hydrologic Soil Group Type D, or does the soil have an infiltration rate < 1.3 cm/hr (0.5 inches/hr)? ❑ Yes ❑ No
5. Is site located over a previously identified contaminated groundwater plume? ❑ Yes ❑ No

   If Yes to any question above, Infiltration Devices are not feasible; stop here and consider other approved treatment BMPs.

6. (a) Does site have groundwater within 3 m (10 ft) of basin invert? ❑ Yes ❑ No

   (b) Does site investigation indicate that the infiltration rate is significantly greater than 6.4 cm/hr (2.5 inches/hr)? ❑ Yes ❑ No

   If Yes to either part of Question 6, the RWQCB must be consulted, and the RWQCB must conclude that the groundwater quality will not be compromised, before approving the site for infiltration. ❑ Yes ❑ No

7. Does adequate area exist within the right-of-way to place infiltration device(s)? If Yes, continue to Design Elements sections. If No, continue to Question 8. ❑ Yes ❑ No
8. If adequate area does not exist within right-of-way, can suitable, additional right-of-way be acquired to site infiltration devices and how much right-of way would be needed to treat WQV? _____ ha (ac) ❑ Yes ❑ No

   If Yes, continue to Design Elements section.

   If No, continue to Question 9.

9. If adequate area cannot be obtained, document in Section 5 of the SWDR that the inability to obtain adequate area prevents the incorporation of this Treatment BMP into the project. ❑ Complete

NOT APPLICABLE

Design Elements – Infiltration Basin

* **Required** Design Element – A "Yes" response to these questions is required to further the consideration of this BMP into the project design. Document a "No" response in Section 5 of the SWDR to describe why this Treatment BMP cannot be included into the project design.

** **Recommended** Design Element – A "Yes" response is preferred for these questions, but not required for incorporation into a project design.

1. Has a detailed investigation been conducted, including subsurface soil investigation, in-hole conductivity testing and groundwater elevation determination? (This report must be completed for PS&E level design.) * ❑ Yes ❑ No
2. Has a flood control spillway with scour protection been provided? * ❑ Yes ❑ No
3. Is the Infiltration Basin size sufficient to capture the WQV while maintaining a 40-48 hour drawdown time? (Note: the WQV must be ≥ 123m³ [0.1 acre-feet]) * ❑ Yes ❑ No
4. Can access be placed to the invert of the Infiltration Basin? * ❑ Yes ❑ No
5. Can the Infiltration Basin be designed with adequate freeboard above the WQV elevation? * ❑ Yes ❑ No
6. Can the Infiltration Basin be designed with interior side slopes no steeper than 1V:3H (with approval by District Maintenance, with 1:4 preferred)? ** ❑ Yes ❑ No
7. Can vegetation be established in the Infiltration Basin? ** ❑ Yes ❑ No
8. Can diversion be designed, constructed, and maintained to bypass flows exceeding the WQV? ** ❑ Yes ❑ No
9. Can a gravity-fed Maintenance/Emergency Drain be placed? ** ❑ Yes ❑ No

NOT APPLICABLE

Design Elements – Infiltration Trench

* **Required** Design Element – (see definition above)

** **Recommended** Design Element – (see definition above)

1. Has a detailed investigation been conducted, including subsurface soil investigation, in-hole conductivity testing and groundwater elevation determination? (This report must be completed for PS&E level design.) * ❑ Yes ❑ No
2. Is the surrounding soil within Hydrologic Soil Groups (HSG) Types A or B? * ❑ Yes ❑ No
3. Is the volume of the Infiltration Trench equal to at least the 3x the WQV, while maintaining a drawdown time of ≤ 72 hours? (Note: the WQV must be ≥ 123m³ [0.1 acre-feet], unless the District/Regional NPDES Coordinator will allow a volume between 80 m³ and 123 m³ to be considered.) * ❑ Yes ❑ No
4. Is the depth of the Infiltration Trench ≤ 4 m, and is the depth < the width? * ❑ Yes ❑ No
5. Can an observation well be placed in the trench? * ❑ Yes ❑ No
6. Can access be provided to the Infiltration Trench? * ❑ Yes ❑ No
7. Can pretreatment be provided to capture sediment in the runoff (such as using biofiltration)? * ❑ Yes ❑ No
8. Can flow diversion be designed, constructed, and maintained to bypass flows exceeding the WQV? ** ❑ Yes ❑ No
9. Can a perimeter curb or similar device be provided (to limit wheel loads upon the trench)? ** ❑ Yes ❑ No

Treatment BMPs
Checklist T-1, Part 5

Prepared by: Bill Wong Date: 02-03-2006 District-Co-Route:04-Ala-880
KP (PM): 43.6/45.5 (27.3/28.2) EA: 165421
RWQCB: Region 2

Detention Devices

Feasibility

1. Is there sufficient head to prevent objectionable backwater conditions in the upstream drainage systems? ❑ Yes ❑ No

2. 2a) Is the volume of the detention device equal to at least the WQV? (Note: the WQV must be ≥ 123m^3 [0.1 acre-feet]) ❑ Yes ❑ No

   Only answer (b) if the detention device is being used also to capture traction sand.

   2b) Is the total volume of the detention device at least equal to the WQV plus the anticipated volume of traction sand, while maintaining a minimum 300 mm (12 in) freeboard (1 ft)? ❑ Yes ❑ No

3. Is basin invert ≥ 3 m above seasonally high groundwater or can it be designed with an impermeable liner? (Note: If an impermeable liner is used, the seasonally high groundwater elevation must not encroach within 300 mm (12 inches) of the invert.) ❑ Yes ❑ No

NOT APPLICABLE

If No to any question above, then Detention Devices are not feasible.

4. Does adequate area exist within the right-of-way to place Detention Device(s)? ❑ Yes ❑ No

   If Yes, continue to the Design Elements section. If No, continue to Question 5.

5. If adequate area does not exist within right-of-way, can suitable, additional right-of-way be acquired to site Detention Device(s) and how much right-of way would be needed to treat WQV? _____ ha (ac) ❑ Yes ❑ No

   If Yes, continue to the Design Elements section. If No, continue to Question 6.

6. If adequate area cannot be obtained, document in Section 5 of the SWDR that the inability to obtain adequate area prevents the incorporation of this Treatment BMP into the project. ❑ Complete

Design Elements

* **Required** Design Element – A "Yes" response to these questions is required to further the consideration of this BMP into the project design. Document a "No" response in Section 5 of the SWDR to describe why this Treatment BMP cannot be included into the project design.

** **Recommended** Design Element – A "Yes" response is preferred for these questions, but not required for incorporation into a project design.

1. Has the geotechnical integrity of the site been evaluated to determine potential impacts to surrounding slopes due to incidental infiltration? If incidental infiltration through the invert of an unlined detention device is a concern, consider using an impermeable liner. * ❑ Yes ❑ No
2. Has the location of the detention device been evaluated for any effects to the adjacent roadway and subgrade? * ❑ Yes ❑ No
3. Can a minimum freeboard of 300 mm (12 in) be provided above the WQV? * ❑ Yes ❑ No
4. Is an emergency outlet provided? * ❑ Yes ❑ No
5. Is the drawdown time of the detention basin within 24 to 72 hours? * ❑ Yes ❑ No
6. Is the basin outlet designed to minimize clogging with a minimum outlet orifice diameter of 13 mm (0.5 inches)? * ❑ Yes ❑ No
7. Are the inlet and outlet structures designed to prevent scour and re-suspension of settled materials, and to enhance quiescent conditions? * ❑ Yes ❑ No
8. Can vegetation be established in an earthen basin at the invert and on the side slopes for erosion control and to minimize re-suspension? * ❑ Yes ❑ No
9. Has sufficient access for Maintenance been provided? * ❑ Yes ❑ No
10. Is the side slope ratio of earthen berms 1V:3H or flatter? ** (Note: If No, District Maintenance must approve.) ❑ Yes ❑ No
11. If significant sediment is expected from nearby slopes, can the detention device be designed with additional volume equal to the expected annual loading? ** ❑ Yes ❑ No
12. Is flow path as long as possible (≥ 2:1 length to width ratio is recommended)? ** ❑ Yes ❑ No

NOT APPLICABLE

Treatment BMPs
Checklist T-1, Part 6

Prepared by: Bill Wong Date: 02-03-2006 District-Co-Route:04-Ala-880
KP (PM): 43.6/45.5 (27.3/28.2) EA: 165421
RWQCB: Region 2

Gross Solids Removal Devices (GSRDs)

Feasibility

1. Is the receiving water body downstream of the tributary area to the proposed GSRD on a 303(d) list or has a TMDL for litter been established? ❑ Yes ❑ No

2. Are the devices sized for peak HDM design flow or can peak flow be diverted? ❑ Yes ❑ No

3. Are the devices sized to contain gross solids (litter and vegetation) for a period of one year? ❑ Yes ❑ No

4. Is there sufficient access for maintenance and large equipment (vacuum truck)? ❑ Yes ❑ No

   If No to any question above, then Gross Solids Removal Devices are not feasible. Note that Biofiltration Systems, Infiltration Devices, Detention Devices, Dry Weather Flow Diversion, MCTT, Media Filters, and Wet Basins may be considered for litter capture, but consult with District/Regional NPDES if proposed to meet a TMDL for litter.

NOT APPLICABLE

4. Does adequate area exist within the right-of-way to place Gross Solids Removal Devices? ❑ Yes ❑ No
   If Yes, continue to Design Elements section. If No, continue to Question 5.

5. If adequate area does not exist within right-of-way, can suitable, additional right-of-way be acquired to site Gross Solids Removal Devices and how much right-of way would be needed? _____ ha (ac) ❑ Yes ❑ No
   If Yes, continue to the Design Elements section. If No, continue to Question 6.

6. If adequate area cannot be obtained, document in Section 5 of the SWDR that the inability to obtain adequate area prevents the incorporation of this Treatment BMP into the project. ❑ Complete

Design Elements – Linear Radial Device

* **Required** Design Element – A "Yes" response to these questions is required to further the consideration of this BMP into the project design. Document a "No" response in Section 5 of the SWDR to describe why this Treatment BMP cannot be included into the project design.

** **Recommended** Design Element – A "Yes" response is preferred for these questions, but not required for incorporation into a project design.

1. Does sufficient hydraulic head exist to place the Linear Radial GSRD? * ❑ Yes ❑ No
2. Was the litter accumulation rate of $0.7m^3/ha/yr$ ($10\ ft^3/ac/yr$) (or a different rate recommended by Maintenance) used to size the device? * ❑ Yes ❑ No
3. Where the standard detail sheets used for the layout of the devices? ** ❑ Yes ❑ No
   If No, consult with Headquarters Office of Storm Water Management and District/Regional NPDES.

NOT APPLICABLE

Design Elements – Inclined Screen

* **Required** Design Element – A "Yes" response to these questions is required to further the consideration of this BMP into the project design. Document a "No" response in Section 5 of the SWDR to describe why this Treatment BMP cannot be included into the project design.

** **Recommended** Design Element – A "Yes" response is preferred for these questions, but not required for incorporation into a project design.

1. Does sufficient hydraulic head exist to place the Inclined Screen GSRD? * ❑ Yes ❑ No
2. Was the litter accumulation rate of $0.7m^3/ha/yr$ ($10\ ft^3/ac/yr$) (or a different rate recommended by Maintenance) used to size the device? * ❑ Yes ❑ No
3. Were the standard details sheets used for the layout of the devices? ** ❑ Yes ❑ No
   If No, consult with Headquarters Office of Storm Water Management and District NPDES.

Treatment BMPs
Checklist T-1, Part 7

Prepared by: Bill Wong Date: 02-03-2006 District-Co-Route:04-Ala-880
KP (PM): 43.6/45.5 (27.3/28.2) EA: 165421
RWQCB: Region 2

Traction Sand Traps

Feasibility

1. Can a Detention Device be sized to capture the estimated traction sand and the WQV from the tributary area?
   If Yes, then a separate Traction Sand Trap may not be necessary. Coordinate with the District/Regional Storm Water Coordinator and also complete Checklist T-1, Part 5. ❑ Yes ❑ No

2. Is the Traction Sand Trap proposed for a site where sand or other traction enhancing substances are applied to the roadway at least twice per year? ❑ Yes ❑ No

3. Is adequate space provided for Maintenance Staff and equipment access for annual cleanout? ❑ Yes ❑ No

   If the answer to either Question 2 or 3 is No, then a Traction Sand Trap is not feasible. ❑ Yes ❑ No

4. Does adequate area exist within the right-of-way to place Traction Sand Traps?
   If Yes, continue to Design Elements section. If No, continue to Question 5.

5. If adequate area does not exist within right-of-way, can suitable, additional right-of-way be acquired to site Traction Sand Traps and how much right-of way would be needed? _____ ha (ac) ❑ Yes ❑ No
   If Yes, continue to the Design Elements section. If No, continue to Question 6.

6. If adequate area cannot be obtained, document in Section 5 of the SWDR that the inability to obtain adequate area prevents the incorporation of this Treatment BMP into the project. ❑ Complete

NOT APPLICABLE

Design Elements

* **Required** Design Element – A "Yes" response to these questions is required to further the consideration of this BMP into the project design. Document a "No" response in Section 5 of the SWDR to describe why this Treatment BMP cannot be included into the project design.

** **Recommended** Design Element – A "Yes" response is preferred for these questions, but not required for incorporation into a project design.

1. Was the local Caltrans Maintenance Station contracted to provide the amount of traction sand used annually at the location? * (Detention Device or CMP type) ❑ Yes ❑ No
   List application rate reported. _____

2. Does the traction sand trap have enough volume to store settled sand over the winter using the formula presented in Appendix B, Section B.5? * (Detention Device or CMP type) ❑ Yes ❑ No

3. Is the invert of the traction sand trap 1 to 2 m (3.3 to 6.6 ft) above seasonal high groundwater? * (CMP type) ❑ Yes ❑ No

4. Is the maximum depth of the storage within 3 m (10 ft) of the ground surface, or another depth as required by District Maintenance? * (CMP type) ❑ Yes ❑ No

5. Has the District/Regional NPDES Storm Water Coordinator been contacted to ensure that the traction sand trap is not classified as a regulated underground injection well? * (CMP type) ❑ Yes ❑ No

6. Can peak flow be diverted around the device? ** (CMP type) ❑ Yes ❑ No

7. Within the tributary area, have the unstabilized areas (that would contribute sediment in addition to traction sand) been minimized as much as possible?** (Detention Device or CMP type) ❑ Yes ❑ No

8. Is 150 mm (6 inches) separation provided between the top of the captured traction sand and the outlet from the device, in order to minimize re-suspension of the solids? ** (CMP type) ❑ Yes ❑ No

NOT APPLICABLE

Treatment BMPs
Checklist T-1, Part 8

Prepared by: Bill Wong Date: 02-03-2006 District-Co-Route:04-Ala-880
KP (PM): 43.6/45.5 (27.3/28.2) EA: 165421
RWQCB: Region 2

Media Filters

Caltrans has approved two types of Media Filter: Austin Sand Filters and Delaware Filters. Austin Sand filters are typically designed for larger drainage areas, while Delaware Filters are typically designed for smaller drainage areas. The Austin Sand Filter is constructed with an open top and may have a concrete or earthen invert, while the Delaware is always constructed in as a vault. See Appendix B, Media Filters, for a further description of Media Filters.

Feasibility – Austin Sand Filter

1. Is the volume of the Austin Sand Filter equal to at least the WQV using a 40 to 48 hour drawdown? (Note: the WQV must be ≥ 123m^3 [0.1 acre-feet]) ❑ Yes ❑ No

2. Is there sufficient hydraulic head to operate the device (minimum 1.9 m [6 ft] between the inflow and outflow chambers)? ❑ Yes ❑ No

   If No to either question above, then an Austin Sand Filter is not feasible.

3. Does adequate area exist within the right-of-way to place an Austin Sand Filter(s)? ❑ Yes ❑ No
   If Yes, continue to Design Elements sections. If No, continue to Question 4.

4. If adequate area does not exist within right-of-way, can suitable, additional right-of-way be acquired to site the device and how much right-of way would be needed to treat WQV? _____ ha (ac) ❑ Yes ❑ No
   If Yes, continue to the Design Elements section.

   If No, continue to Question 5.

5. If adequate area cannot be obtained, document in Section 5 of the SWDR that the inability to obtain adequate area prevents the incorporation of this Treatment BMP into the project. ❑ Complete

   If an Austin Sand Filter meets these feasibility requirements, continue to the Design Elements – Austin Sand Filter below.

NOT APPLICABLE

Feasibility- Delaware Filter

1. Is the volume of the Delaware Filter equal to at least the WQV using a 40 to 48 hour drawdown? (Note: the WQV must be ≥ 123m³ [0.1 acre-feet], consult with District/Regional NPDES if a lesser volume is under consideration.) ❑ Yes ❑ No

2. Is there sufficient hydraulic head to operate the device (minimum 0.9 m [3 ft] between the inflow and outflow chambers)? ❑ Yes ❑ No

3. Would a permanent pool of water be allowed by the local vector control agency? ❑ Yes ❑ No

If No to any question, then a Delaware Filter is not feasible

4. Does adequate area exist within the right-of-way to place a Delaware Filter(s)? ❑ Yes ❑ No
   If Yes, continue to Design Elements sections. If No, continue to Question 5.

5. If adequate area does not exist within right-of-way, can suitable additional right-of-way be acquired to site the device and how much right-of-way would be needed to treat WQV? _____ ha (ac) ❑ Yes ❑ No
   If Yes, continue to the Design Elements section. If No, continue to Question 6.

6. If adequate area cannot be obtained, document in Section 5 of the SWDR that the inability to obtain adequate area prevents the incorporation of this Treatment BMP into the project. ❑ Complete

   If a Delaware Filter is still under consideration, continue to the Design Elements – Delaware Filter section.

NOT APPLICABLE

Design Elements – Austin Sand Filter

* **Required** Design Element – A "Yes" response to these questions is required to further the consideration of this BMP into the project design. Document a "No" response in Section 5 of the SWDR to describe why this Treatment BMP cannot be included into the project design.

** **Recommended** Design Element – A "Yes" response is preferred for these questions, but not required for incorporation into a project design.

1. Is the drawdown time of the 2nd chamber between 40 and 48 hours? * ❑ Yes ❑ No

2. Is access for Maintenance vehicles provided to the Austin Sand Filter? * ❑ Yes ❑ No

3. Is a bypass/overflow provided for storms > WQV? * ❑ Yes ❑ No

4. Is the flow path length to width ratio for the sedimentation chamber of the "full" Austin Sand Filter ≥ 2:1? **

5. Can pretreatment be provided to capture sediment and litter in the runoff (such as using biofiltration)? ** ❑ Yes ❑ No

6. Can the Austin Sand Filter be placed using an earthen configuration? ** ❑ Yes ❑ No
   If No, go to Question 8.

7. Is the Austin Sand Filter invert separated from the seasonally high groundwater table by ≥ 3m? * ❑ Yes ❑ No
   If No, design with an impermeable liner.

8. Can the Austin Sand Filter be placed in an offline configuration? ** ❑ Yes ❑ No

Design Elements – Delaware Filter

* **Required** Design Element – A "Yes" response to these questions is required to further the consideration of this BMP into the project design. Document a "No" response in Section 5 of the SWDR to describe why this Treatment BMP cannot be included into the project design.

** **Recommended** Design Element – A "Yes" response is preferred for these questions, but not required for incorporation into a project design.

NOT APPLICABLE

1. Can the first chamber be sized for the WQV? * ❑ Yes ❑ No
2. Is the drawdown time of the 2nd chamber between 48 and 96 hours? ❑ Yes ❑ No
3. Is access for Maintenance vehicles provided to the Delaware Filter? * ❑ Yes ❑ No
4. Is a bypass/overflow provided for storms > WQV? ** ❑ Yes ❑ No
5. Can pretreatment be provided to capture sediment and litter in the runoff (such as using biofiltration)? * ❑ Yes ❑ No
6. Can the Delaware Filter be placed in an offline configuration? ** ❑ Yes ❑ No

Treatment BMPs
Checklist T-1, Part 9

Prepared by: Bill Wong Date: 02-03-2006 District-Co-Route:04-Ala-880
KP (PM): 43.6/45.5 (27.3/28.2) EA: 165421
RWQCB: Region 2

MCTT (Multi-chambered Treatment Train)

Feasibility

1. Is the proposed location for the MCTT located to serve a "critical source area" (i.e. vehicle service facility, parking area, paved storage area, or fueling station)? ❑ Yes ❑ No
2. Is the WQV ≥123 m³? ❑ Yes ❑ No
3. Would a permanent pool of water be allowed by the local vector control agency? ❑ Yes ❑ No

   If No to any question above, then an MCTT is not feasible.
4. Does adequate area exist within the right-of-way to place an MCTT(s)? ❑ Yes ❑ No
   If Yes, continue to Design Elements sections. If No, continue to Question 5.
5. If adequate area does not exist within right-of-way, can suitable, additional right-of-way be acquired to site the device and how much right-of way would be needed to treat WQV? _____ ha (ac) ❑ Yes ❑ No
   If Yes, continue to Design Elements section. If No, continue to Question 6.
6. If adequate area cannot be obtained, document in Section 5 of the SWDR that the inability to obtain adequate area prevents the incorporation of this Treatment BMP into the project. ❑ Complete

NOT APPLICABLE

Design Elements

* **Required** Design Element – A "Yes" response to these questions is required to further the consideration of this BMP into the project design. Document a "No" response in Section 5 of the SWDR to describe why this Treatment BMP cannot be included into the project design.

** **Recommended** Design Element – A "Yes" response is preferred for these questions, but not required for incorporation into a project design.

1. Is the maximum depth of the 3rd chamber ≤ 4 m below ground surface and has Maintenance accepted this depth? * ❑ Yes ❑ No
2. Is the drawdown time in the 3rd chamber between 40 and 48 hours? * ❑ Yes ❑ No
3. Is access for Maintenance vehicles provided to the MCTT? * ❑ Yes ❑ No
4. Is there sufficient hydraulic head to operate the device? * ❑ Yes ❑ No
5. Has a bypass/overflow been provided for storms > WQV? * ❑ Yes ❑ No
6. Can pretreatment be provided to capture sediment and litter in the runoff (such as using biofiltration)? ** ❑ Yes ❑ No

Treatment BMPs
Checklist T-1, Part 10

Prepared by: Bill Wong Date: 02-03-2006 District-Co-Route: 04-Ala-880
KP (PM): 43.6/45.5 (27.3/28.2) EA: 165421
RWQCB: Region 2

Wet Basin

Feasibility

1. Is the volume of the Wet Basin above the permanent pool equal to at least the WQV using a 40 to 48 hour drawdown? (Note: the WQV must be ≥ 123m³ [0.1 acre-feet] and the permanent pool must be at least 3x the WQV.) ❑ Yes ❑ No

2. Is a permanent source of water available in sufficient quantities to maintain the permanent pool for the wet basin? ❑ Yes ❑ No

Answer either question 3 or question 4:

3. For Wet Basins with a proposed invert above the seasonally high groundwater, Are NRCS Hydrologic Soil Groups [HSG] C and D at the proposed invert elevation, or can an impermeable liner be used? (Note: If an impermeable liner is used, the seasonally high groundwater elevation must not encroach within 300 mm (12 in) of the invert.) ❑ Yes ❑ No

4. For Wet Basins with a proposed invert below the groundwater table: Can written approval from the local Regional Water Quality Control Board be obtained to place the wet basin in direct hydraulic connectivity to the groundwater? ❑ Yes ❑ No

5. Would a permanent pool of water be allowed by the local vector control agency? ❑ Yes ❑ No

If No to any question above, then a Wet Basin is not feasible.

6. Does adequate area exist within the right-of-way to place a Wet Basin? ❑ Yes ❑ No
If Yes, continue to Design Elements section.

If No, continue to Question 7.

7. If adequate area does not exist within right-of-way, can suitable, additional right-of-way be acquired to site the device and how much right-of way would be needed to treat WQV? _____ ha (ac) ❑ Yes ❑ No
If Yes, continue to Design Elements section.

If No, continue to Question 8.

8. If adequate area cannot be obtained, document in Section 5 of the SWDR that the inability to obtain adequate area prevents the incorporation of this Treatment BMP into the project. ❑ Complete

NOT APPLICABLE

Design Elements

* **Required** Design Element – A "Yes" response to these questions is required to further the consideration of this BMP into the project design. Document a "No" response in Section 5 of the SWDR to describe why this Treatment BMP cannot be included into the project design.

** **Recommended** Design Element – A "Yes" response is preferred for these questions, but not required for incorporation into a project design.

1.	Can a controlled outlet and an overflow structure be designed for storm events larger than the WQV? *	❑ Yes	❑ No
2.	Is access for Maintenance vehicles provided? *	❑ Yes	❑ No
3.	Is the drawdown time for WQV events between 24 and 72 hours?	❑ Yes	❑ No
4.	Has appropriate vegetation been selected for each hydrologic zone? *	❑ Yes	❑ No
5.	Can all design elements required by the local vector control agency be incorporated? *	❑ Yes	❑ No
6.	Has a minimum flowpath length-to-width ration of at least 2:1 been provided? **	❑ Yes	❑ No
7.	Has an upstream bypass been provided for storms > WQV? **	❑ Yes	❑ No
8.	Can pretreatment be provided to capture sediment and litter in the runoff (such as using biofiltration, or a forebay)? **	❑ Yes	❑ No
9.	Can public access be restricted using a fence if proposed at locations accessible on foot by the public? **	❑ Yes	❑ No

NOT APPLICABLE

Construction Site BMPs
Checklist CS-1, Part 1

Prepared by: Chris Padick Date: Sept 6 2005 District-Co-Route: 04-ALA-880
KP (PM): 43.6/45.5 EA: 165421
RWQCB: SF Bay Regional Water Quality Control Board 2

Soil Stabilization

General Parameters

1. How many rainy seasons are anticipated between begin and end of construction?	5
2. What is the total disturbed soil area for the project? (ha/ac)	7.8h
(a) How much of the project DSA consists of slopes 1V: 4H or flatter? (ha/ac)	1.59h
(b) How much of the project DSA consists of 1V: 4H < slopes < 1V: 2H? (ha/ac)	N/A
(c) How much of the project DSA consists of slopes 1V: 2H and steeper? (ha/ac)	0.31h
(d) How much of the project DSA consists of slopes with slope lengths longer then 6 m (20 ft)? (ha/ac)	0.1h
3. What rainfall area does the project lie within? (Refer to Table 2-1 of the Construction Site Best Management Practices Manual)	Northern California Area
4. Review the required combination of temporary soil stabilization and temporary sediment controls and barriers for area, slope inclinations, rainy and non-rainy season, and active and non-active disturbed soil areas. (Refer to Tables 2-2, and 2-3 of the Construction Site Best Management Practices Manual for Rainfall Area requirements.)	X Complete

Scheduling (SS-1)

5. Does the project have a duration of more then one rainy season and have disturbed soil area in excess of 10 ha (25 acres)?	❑ Yes X No
(a) Include multiple mobilizations (Move-in/Move-out) as a separate contract bid line item to implement permanent erosion control or revegetation work on slopes that are substantially complete. (Estimate at least 6 mobilizations for each additional rainy season. Designated Construction Representative may suggest an alternate number of mobilizations.)	X Complete
(b) Edit Order of Work specifications for permanent erosion control or revegetation work to be implemented on slopes that are substantially complete.	X Complete
(c) Edit permanent erosion control or revegetation specifications to require seeding and planting work to be performed when optimal.	X Complete

Preservation of Existing Vegetation (SS-2)

6. Do Environmentally Sensitive Areas (ESAs) exist within or adjacent to the project limits? (Verify the completion of DPP-1, Part 5) ❑ Yes **X** No

   (a) Verify the protection of ESAs through delineation on all project plans. ❑ Complete

   (b) Protect from clearing and grubbing and other construction disturbance by enclosing the ESA perimeter with high visibility plastic fence or other BMP. ❑ Complete

7. Are there areas of existing vegetation (mature trees, native vegetation, landscape planting, etc.) that need not be disturbed by project construction? Will areas designated for proposed treatment BMPs need protection (infiltration characteristics, vegetative cover, etc.)? (Coordinate with District Environmental and Construction to determine limits of work necessary to preserve existing vegetation to the maximum extent possible.) ❑ Yes **X** No

   (a) Designate as outside of limits of work (or designate as ESAs) and show on all project plans. **X** Complete

   (b) Protect with high visibility plastic fence or other BMP. **X** Complete

8. If yes for 6, 7, or both, then designate ESA fencing as a separate contract bid line item, *if not already incorporated as part of design pollution prevention work (See DPP-1, Part 5).* **X** Complete

Slope Protection

9. Provide a soil stabilization BMP(s) appropriate for the DSA, slope steepness, slope length, and soil erodibility. (Consult with District/Regional Landscape Architect.)

   (a) Select SS-3 (Hydraulic Mulch), SS-4 (Hydroseeding), SS-5 (Soil Binders), SS-6 (Straw Mulch), SS-7 (Geotextiles, RECPs, Etc.), SS-8 (Wood Mulching), other BMPs or a combination to cover the DSA throughout the project's rainy season. **X** Complete

   (b) Increase the quantities by 25% for each additional rainy season. (Designated Construction Representative may suggest an alternate increase.) **X** Complete

   (c) Designate as a separate contract bid line item. **X** Complete

Slope Interrupter Devices

10. Provide slope interrupter devices for all slopes with slope lengths equal to or greater than of 6 m (20 ft) in length. (Consult with District/Regional Landscape Architect and Designated Construction Representative.)

(a) Select SC-5 (Fiber Rolls) or other BMPs to protect slopes throughout the project's rainy season.	X Complete
(b) For slope inclination of 1V:4H and flatter, SC-5 (Fiber Rolls) or other BMPs shall be placed along the contour and spaced 6.0 m (20 ft) on center.	X Complete
(c) For slope inclination between 1V:4H and 1V:2H, SC-5 (Fiber Rolls) or other BMPs shall be placed along the contour and spaced 4.5 m (15 ft) on center.	X Complete
(d) For slope inclination of 1V:2H and greater, SC-5 (Fiber Rolls) or other BMPs shall be placed along the contour and spaced 3.0 m (10 ft) on center.	X Complete
(e) Increase the quantities by 25% for each additional rainy season. (Designated Construction Representative may suggest alternate increase.)	X Complete
(f) Designate as a separate contract bid line item.	X Complete

Channelized Flow

11. Identify locations within the project site where concentrated flow from stormwater runoff can erode areas of soil disturbance. Identify locations of concentrated flow that enters the site from outside of the right of way (off-site run-on).	X Complete
(a) Utilize SS-7 (Geotextiles, RECPs, etc.), SS-9 (Earth Dikes/Swales, Ditches), SS-10 (Outlet Protection/Velocity Dissipation), SS-11 (Slope Drains), SC-4 (Check Dams), or other BMPs to convey concentrated flows in a non-erosive manner.	X Complete
(b) Designate as a separate contract bid line item.	X Complete

Construction Site BMPs
Checklist CS-1, Part 2

Prepared by: Chris Padick Date: Sept 6 2005 District-Co-Route: 04-ALA-880
KP (PM): 43.6/45.5 EA: 165421
RWQCB: SF Bay Regional Water Quality Control Board 2

Sediment Control

Perimeter Controls - Run-off Control

1. Is there a potential for sediment laden sheet and concentrated flows to discharge offsite from runoff cleared and grubbed areas, below cut slopes, embankment slopes, etc.? — X Yes o No

   (a) Select linear sediment barrier such as SC-1 (Silt Fence), SC-5 (Fiber Rolls), SC-6 (Gravel Bag Berm), SC-8 (Sand Bag Barrier), SC-9 (Straw Bale Barrier), or a combination to protect wetlands, water courses, roads (paved and unpaved), construction activities, and adjacent properties. (Coordinate with District Construction for selection and preference of linear sediment barrier BMPs.) — X Complete

   (b) Increase the quantities by 25% for each additional rainy season. (Designated Construction Representative may suggest an alternate increase.) — X Complete

   (c) Designate as a separate contract bid line item. — X Complete

Perimeter Controls - Run-on Control

2. Do locations exist where sheet flow upslope of the project site and where concentrated flow upstream of the project site may contact DSA and construction activities? — o Yes X No

   (a) Utilize linear sediment barriers such as SS-9 (Earth Dike/Drainage Swales and Lined Ditches), SC-5 (Fiber Rolls), SC-6 (Gravel Bag Berm), SC-8 (Sand Bag Barrier), SC-9 (Straw Bale Barrier), or other BMPs to convey flows through and/or around the project site. (Coordinate with District Construction for selection and preference of perimeter control BMPs.) — X Complete

   (b) Designate as a separate contract bid line item. — X Complete

Storm Drain Inlets

3. Do existing or proposed drainage inlets exist within the project limits?	X Yes o No
(a) Select SC-10 (Storm Drain Inlet Protection) to protect municipal storm drain systems or receiving waters wetlands at each drainage inlet. (Coordinate with District Construction for selection and preference of inlet protection BMPs.)	X Complete
(b) Designate as a separate contract bid line item.	X Complete
4. Can existing or proposed drainage inlets utilize an excavated sediment trap as described in SC-10 (Storm Drain Inlet Protection- Type 2)?	X Yes o No
(a) Include with other types of SC-10 (Storm Drain Inlet Protection).	X Complete

Sediment/Desilting Basin (SC-2)

5. Does the project lie within a Rainfall Area where the required combination of temporary soil stabilization and sediment control BMPs includes desilting basins? (Refer to Tables 2-1, 2-2, and 2-3 of the Construction Site Best Management Practices Manual for Rainfall Area requirements.)	X Yes o No
(a) Consider feasibility for desilting basin allowing for available right-of-way within the project limits, topography, soil type, disturbed soil area within the watershed, and climate conditions. Document if the inclusion of sediment/desilting basins is infeasible. Not Feasible: Limited R/W and high ground water issues	X Complete
(b) If feasible, design desilting basin(s) per the guidance in SC-2 Sediment/ Desilting Basins of the Construction Site BMP Manual to maximize capture of sediment laden runoff.	N/A Complete
Designate as a separate contract bid item.	o Complete
6. Will the project benefit from the early implementation of proposed permanent Treatment BMPs? (Coordinate with District Construction.)	o Yes X No
(a) Edit Order of Work specifications for permanent treatment BMP work to be implemented in a manner that will allow its use as a construction site BMP.	N/A Complete

Sediment Trap (SC-3)

7. Can sediment traps be located within collected or channelized runoff from disturbed soil areas prior to discharge?	N/A Yes o No
(a) Design sediment traps in accordance with the Construction Site BMP Manual.	o Complete
(b) Designate as a separate contract bid line item.	o Complete

Construction Site BMPs
Checklist CS-1, Part 3

Prepared by: Hari Pahwa_____ Date: 09-07-05 District-Co-Route: 04-ALA.-880

KP (PM): PM 27.3/28.2_____ EA: 165421 High Street Retrofit_____

RWQCB: San Francisco Bay Region_____

Tracking Controls

Stabilized Construction Entrance/Exit (TC-1)

1. Are there points of entrance and exit from the project site to paved roads where mud and dirt could be transported offsite by construction equipment? (Coordinate with District Construction for selection and preference of tracking control BMPs.) — X Yes No

   (a) Identify and designate these entrance/exit points as stabilized construction entrances (TC-1). — NA Complete

   (b) Designate as a separate contract bid line item. — X Complete

Tire/Wheel Wash (TC-3)

2. Are site conditions anticipated that would require additional or modified tracking controls such as entrance/outlet tire wash? (Coordinate with District Construction.) — ❑ Yes X No

   Designate as a separate contract bid line item. — NA Complete

Stabilized Construction Roadway (TC-2)

3. Are temporary access roads necessary to access remote construction activity locations or to transport materials and equipment? (In addition to controlling dust and sediment tracking, access roads limit impact to sensitive areas by limiting ingress, and provide enhanced bearing capacity.) (Coordinate with District Construction.) — Yes X No

   (a) Designate these temporary access roads as stabilized construction roadways (TC-2). — NA Complete

   (b) Designate as a separate contract bid line item. — NA Complete

Street Sweeping and Vacuuming (SC-7)

4. Is there a potential for tracked sediment or construction related residues to be transported offsite and deposited on public or private roads? (Coordinate with District Construction for preference of including street sweeping and vacuuming with tracking control BMPs.) — X Yes ❑ No

   Designate as a separate contract bid line item. — NA Complete

Construction Site BMPs
Checklist CS-1, Part 4

Prepared by: Hari Pahwa Date: 09/07/05 District-Co-Route: 04-880

KP (PM): PM 27.3/28.2 EA: 165421 High Street

RWQCB: 2-San Francisco Bay Region

Wind Erosion Controls

Wind Erosion Control (WE-1)

1. Is the project located in an area where standard dust control practices in accordance with Standard Specifications, Section 10: Dust Control, are anticipated to be inadequate during construction to prevent the transport of dust offsite by wind? *(Note: Dust control by water truck application is paid for through the various items of work. Dust palliative, if it is included, is paid for as a separate item.)* — X Yes No

   (a) Select SS-3 (Hydraulic Mulch), SS-4 (Hydroseeding), SS-5 (Soil Binders), SS-7 (Geotextiles, Plastic Covers, & Erosion Control Blankets/Mats), SS-8 (Wood Mulching) or a combination to cover the DSA subject to wind erosion year-round, especially when significant wind and dry conditions are anticipated during project construction. (Coordinate with District Construction for selection and preference of wind erosion control BMPs.) — NA Complete

   (b) Designate as a separate contract bid line item. — NA Complete

Construction Site BMPs
Checklist CS-1, Part 5

Prepared by: Hari Pahwa Date: 09/07/05 District-Co-Route: 04-880

KP (PM): PM 27.3/28.2 EA: 165421 High Street

RWQCB: San Francisco Bay Region

Non-Storm Water Management

Temporary Stream Crossing (NS-4) & *Clear Water Diversion* (NS-5)

1. Will construction activities occur within a waterbody or watercourse such as a lake, wetland, or stream? (Coordinate with District Construction for selection and preference for stream crossing and clear water diversion BMPs.) ❑ Yes X No

   (a) Select from types offered in NS-4 (Temporary Stream Crossing) to provide access through watercourses consistent with permits and agreements.[1] NA Complete

   (b) Select from types offered in NS-5 (Clear Water Diversion) to divert watercourse consistent with permits and agreements.[1] NA Complete

   (c) Designate as a separate contract bid line item(s). NA Complete

Other Non-Storm Water Management BMPs

2. Are construction activities anticipated that will generate wastes or residues with the potential to discharge pollutants? X Yes ❑ No

   (a) Identify potential pollutants associated with the anticipated construction activity and select the corresponding BMP such as NS-1 (Water Conservation Practices), NS-2 (Dewatering Operations), NS-3 (Paving and Grinding Operations), NS-6 Illicit Construction/Illegal Discharge Detection and Reporting NS-7 (Potable Water/Irrigation), NS-8 (Vehicle and Equipment Cleaning), NS-9 (Vehicle and Equipment Fueling), NS-10 (Vehicle and Equipment Maintenance), NS-11 (Pile Driving Operations), NS-12 (Concrete Curing), NS-13 (Material and Equipment Use Over Water), NS-14 (Concrete Finishing), and NS-15 (Structure Demolition/Removal Over or Adjacent to Water).[1] X Complete

   (b) Verify that costs for non-storm water management BMPs are identified in the contract documents. Designate BMP as a separate contract bid line item if requested by Construction. X Complete

1. Coordinate with District Environmental for consistency with US Army Corps of Engineers 404 permit and Dept. of Fish and Game 1601 Streambed alteration Agreements.

Construction Site BMPs
Checklist CS-1, Part 6

Prepared by: Hari Pahwa Date: 09/07/05 District-Co-Route: 04-880

KP (PM): PM 27.3/28.2 EA: 165421 High Street

RWQCB: 2-San Francisco Bay Region

Waste Management & Materials Pollution Control

Concrete Waste Management (WM-8)

1. Does the project include concrete pours or mortar mixing? X Yes ☐ No

   (a) Select from types offered in WM-8 (Concrete Waste Management) to provide concrete washout facilities. In addition, consider portable concrete washouts and vendor supplied concrete waste management services. (Coordinate with District Construction for selection and preference of waste management and materials pollution control BMPs.) X Complete

   (b) Designate as a separate contract bid line item. X Complete

Other Waste Management and Materials Pollution Controls

2. Are construction activities anticipated that will generate wastes or residues with the potential to discharge pollutants? X Yes ☐ No

   (a) Identify potential pollutants associated with the anticipated construction activity and select the corresponding BMP such as WM-1 (Material Delivery and Storage), WM-2 (Material Use), WM-4 (Spill Prevention and Control), WM-5 (Solid Waste Management), WM-6 (Hazardous Waste Management), WM-7 (Contaminated Soil Management), WM-9 (Sanitary/Septic Waste Management) and WM-10 (Liquid Waste Management) X Complete

   (b) Verify that costs for waste management and materials pollution control BMPs are identified in the contract documents. Designate BMP as a separate contract bid line item if requested by Construction. X Complete

Temporary Stockpiles (Soil, Materials, and Wastes)

3. Are stockpiles of soil, etc. anticipated during construction? X Yes No

   (a) Select WM-3 (Stockpile Management), SS-3 (Hydraulic Mulch), SS-4 (Hydroseeding), SS-5 (Soil Binders), SS-7 (Geotextiles, RECPs etc.), or a combination as appropriate to cover temporary stockpiles of soil, etc. X Complete

   (b) Select linear sediment barrier such as SC-1 (Silt Fence), SC-5 (Fiber Rolls), SC-6 (Gravel Bag Berm), SC-8 (Sand Bag Barrier), SC-9 (Straw Bale Barrier), or a combination to encircle temporary stockpiles of soil, etc. (Coordinate with District Construction for selection and preference of BMPs related to stockpiles.) X Complete

   (c) Designate as a separate contract bid line item. X Complete

4. Is there a potential for dust and debris from construction material (fill material, etc.) and waste (concrete, contaminated soil, etc.) stockpiles to be transported offsite by wind? X Yes No

   (a) Select SS-7, temporary cover, plastic sheeting or other BMP to cover stockpiles subject to wind erosion year-round, especially when significant wind and dry conditions are anticipated during project construction. (Coordinate with District Construction for selection and preference of wind erosion control BMPs.) X Complete

   (b) Designate as a separate contract bid line item. NA Complete

STORM WATER POLLUTION PREVENTION PLAN (SWPPP) for use with ALL projects where construction activities, such as clearing, grading, and excavation result in 0.4-hectare (one acre) or more of soil disturbance; for projects considered as part of a larger common plan of development; or for projects where significant water quality impairment will result, as determined by the Regional Water Quality Control Board (RWQCB).

10-1.___ WATER POLLUTION CONTROL

Water pollution control work shall conform to the provisions in Section 7-1.01G, "Water Pollution," of the Standard Specifications and these special provisions.

2*. Insert name of RWQCB in whose jurisdiction the project lies.

JT

This project lies within the boundaries of the Region 2 Regional Water Quality Control Board (RWQCB).

Use Paras 3 & 5 and delete Paras 4 & 6 for projects within the Lake Tahoe Hydrologic Unit. Use Paras 3, 4 & 6 and delete Para 5 for projects regulated under a Regional or project-specific NPDES Permit. Use Paras 3 & 4 and delete Paras 5 & 6 for all other SWPPP projects.

3. Use for all SWPPP projects.

The State Water Resources Control Board (SWRCB) has issued a permit to the Department which governs storm water and non-storm water discharges from its properties, facilities and activities. The Department's Permit is entitled: "Order No. 99-06-DWQ, NPDES No. CAS000003, National Pollutant Discharge Elimination System (NPDES) Permit, Storm Water Permit and Waste Discharge Requirements (WDRs) for the State of California, Department of Transportation Properties, Facilities, and Activities." Copies of the Department's Permit are available for review from the SWRCB, Storm Water Permit Unit, 1001 "I" Street, P.O. Box 1977, Sacramento, California 95812-1977, Telephone: (916) 341-5254, and may also be obtained from the SWRCB Internet website at: http://www.swrcb.ca.gov/stormwtr/caltrans.html.

4. Use for all SWPPP projects outside the Lake Tahoe Hydrologic Unit to specify that both the Caltrans Permit and the General Permit apply, including the Modifications to the General that require Sampling and Analysis Plans. For projects within the Lake Tahoe Hydrologic Unit, delete.

The Department's Permit references and incorporates by reference the current Statewide General Permit issued by the SWRCB entitled "Order No. 99-08-DWQ, National Pollutant Discharge Elimination System (NPDES) General Permit No. CAS000002, Waste Discharge Requirements (WDRs) for Discharges of Storm Water Associated with Construction Activity," which regulates discharges of storm water and non-storm water from construction activities disturbing 0.4-hectare or more of soil in a common plan of development. Sampling and analysis

requirements as specified in SWRCB Resolution No. 2001-46 are added to the Statewide General Permit. Copies of the Statewide General Permit and modifications thereto are available for review from the SWRCB, Storm Water Permit Unit, 1001 "I" Street, P.O. Box 1977, Sacramento, California 95812-1977, Telephone: (916) 341-5254 and may also be obtained from the SWRCB Internet website at: http://www.swrcb.ca.gov/stormwtr/construction.html.

5. Use ONLY for SWPPP projects within the Lake Tahoe Hydrologic Unit and include Para 3. Otherwise, delete.

JT

~~This project includes construction activities that will result in land disturbance within the Lake Tahoe Hydrologic Unit. The Lahontan RWQCB has issued a Regional General Permit which governs storm water and non-storm water discharges resulting from construction activities in the Lake Tahoe Hydrologic Unit. The Lake Tahoe Regional General Permit is entitled: "Board Order No. 6-00-03, National Pollutant Discharge Elimination System General Permit No. CAG616002 for Discharges of Storm Water Runoff Associated with Construction Activity Involving Land Disturbance in the Lake Tahoe Hydrologic Unit – El Dorado, Placer, and Alpine Counties." A copy of the Lake Tahoe Regional General Permit is available for review from the Lahontan Region South Lake Tahoe Office, 2501 Lake Tahoe Blvd., South Lake Tahoe, California 96150, Telephone: (530) 542-5400 and may also be obtained from the SWRCB Internet website at: http://www.swrcb.ca.gov/rwqcb6/files/00-03.pdf.~~

6*. Use ONLY for SWPPP projects where storm water is regulated under a project-specific or RWQCB General Permit (other than the Lake Tahoe General Permit). Insert the RWQCB name that issued the permit, permit title, permit number, and address where a copy of the permit is available. Also, include Para 3 and 4. Otherwise, delete.

To determine if a project-specific or RWQCB General Permit applies to the project, contact the applicable RWQCB. Contact information for the RWQCBs is available on the SWRCB Internet website at http://www.swrcb.ca.gov.

JT

~~The _____ RWQCB has issued a permit which governs storm water and non-storm water discharges resulting from construction activities in the project area. The RWQCB Permit is entitled: "National Pollutant Discharge Elimination System (NPDES) Permit_____, Permit No. _____." Copies of the RWQCB Permit are available for review from _____.~~

7

The NPDES permits that regulate this project, as referenced above, are hereafter collectively referred to as the "Permits."

8

This project shall conform to the Permits and modifications thereto. The Contractor shall maintain copies of the Permits at the project site and shall make the Permits available during construction.

9

The Permits require the preparation of a Storm Water Pollution Prevention Plan (SWPPP). The SWPPP shall be prepared in conformance with the requirements of the Permits, the Department's "Storm Water Pollution Prevention Plan (SWPPP) and Water Pollution Control

Program (WPCP) Preparation Manual," and the Department's "Construction Site Best Management Practices (BMPs) Manual," including addenda to those permits and manuals issued up to and including the date of advertisement of the project. These manuals are hereinafter referred to, respectively, as the "Preparation Manual" and the "Construction Site BMPs Manual," and collectively, as the "Manuals." Copies of the Manuals may be obtained from the Department of Transportation, Material Operations Branch, Publication Distribution Unit, 1900 Royal Oaks Drive, Sacramento, California 95815, Telephone: (916) 445-3520, and may also be obtained from the Department's Internet website at: http://www.dot.ca.gov/hq/construc/stormwater/stormwater1.htm.

10*. Use when the District prepares a Conceptual Storm Water Pollution Prevention Plan (CSWPPP). Insert the location where this document is available for review. Otherwise, delete.

JT

~~A Conceptual Storm Water Pollution Prevention Plan (CSWPPP) has been prepared for this project by the Department and is available for review at _____. This document may be used by the Contractor for developing the contract SWPPP.~~

11

The Contractor shall know and fully comply with applicable provisions of the Permits and all modifications thereto, the Manuals, and Federal, State, and local regulations and requirements that govern the Contractor's operations and storm water and non-storm water discharges from both the project site and areas of disturbance outside the project limits during construction. Attention is directed to Sections 7-1.01, "Laws to be Observed," and 7-1.12, "Indemnification and Insurance," of the Standard Specifications.

12

The Permits shall apply to storm water and certain permitted non-storm water discharges from areas outside the project site which are directly related to construction activities for this contract including, but not limited to, asphalt batch plants, material borrow areas, concrete plants, staging areas, storage yards and access roads. The Contractor shall comply with the Permits and the Manuals for those areas and shall implement, inspect and maintain the required water pollution control practices. The Engineer shall be allowed full access to these areas during construction to assure Contractor's proper implementation of water pollution control practices. Installing, inspecting and maintaining water pollution control practices on areas outside the highway right of way not specifically arranged and provided for by the Department for the execution of this contract, will not be paid for.

13

The Contractor shall be responsible for penalties assessed or levied on the Contractor or the Department as a result of the Contractor's failure to comply with the provisions in this section "Water Pollution Control" including, but not limited to, compliance with the applicable provisions of the Permits, the Manuals, and Federal, State and local regulations and requirements as set forth therein.

14

Penalties as used in this section, "Water Pollution Control," shall include fines, penalties and damages, whether proposed, assessed, or levied against the Department or the Contractor, including those levied under the Federal Clean Water Act and the State Porter-Cologne Water Quality Control Act, by governmental agencies or as a result of citizen suits. Penalties shall also

include payments made or costs incurred in settlement for alleged violations of the Permits, the Manuals, or applicable laws, regulations, or requirements. Costs incurred could include sums spent instead of penalties, in mitigation or to remediate or correct violations.

15

RETENTION OF FUNDS

Notwithstanding any other remedies authorized by law, the Department may retain money due the Contractor under the contract, in an amount determined by the Department, up to and including the entire amount of Penalties proposed, assessed, or levied as a result of the Contractor's violation of the Permits, the Manuals, or Federal or State law, regulations or requirements. Funds may be retained by the Department until final disposition has been made as to the Penalties. The Contractor shall remain liable for the full amount of Penalties until such time as they are finally resolved with the entity seeking the Penalties.

16

Retention of funds for failure to conform to the provisions in this section, "Water Pollution Control," shall be in addition to the other retention amounts required by the contract. The amounts retained for the Contractor's failure to conform to provisions in this section will be released for payment on the next monthly estimate for partial payment following the date when an approved SWPPP has been implemented and maintained, and when water pollution has been adequately controlled, as determined by the Engineer.

17

When a regulatory agency identifies a failure to comply with the Permits and modifications thereto, the Manuals, or other Federal, State or local requirements, the Department may retain money due the Contractor, subject to the following:

A. The Department will give the Contractor 30 days notice of the Department's intention to retain funds from partial payments which may become due to the Contractor prior to acceptance of the contract. Retention of funds from payments made after acceptance of the contract may be made without prior notice to the Contractor.
B. No retention of additional amounts out of partial payments will be made if the amount to be retained does not exceed the amount being withheld from partial payments pursuant to Section 9-1.06, "Partial Payments," of the Standard Specifications.
C. If the Department has retained funds, and it is subsequently determined that the State is not subject to the entire amount of the Costs and Liabilities assessed or proposed in connection with the matter for which the retention was made, the Department shall be liable for interest on the amount retained for the period of the retention. The interest rate payable shall be 6 percent per annum.

18

During the first estimate period that the Contractor fails to conform to the provisions in this section, "Water Pollution Control," the Department may retain an amount equal to 25 percent of the estimated value of the contract work performed.

19

The Contractor shall notify the Engineer immediately upon request from the regulatory agencies to enter, inspect, sample, monitor, or otherwise access the project site or the

Contractor's records pertaining to water pollution control work. The Contractor and the Department shall provide copies of correspondence, notices of violation, enforcement actions or proposed fines by regulatory agencies to the requesting regulatory agency.

20

STORM WATER POLLUTION PREVENTION PLAN PREPARATION, APPROVAL AND AMENDMENTS

As part of the water pollution control work, a Storm Water Pollution Prevention Plan (SWPPP) is required for this contract. The SWPPP shall conform to the provisions in Section 7-1.01G, "Water Pollution," of the Standard Specifications, the requirements in the Manuals, the requirements of the Permits, and these special provisions. Upon the Engineer's approval of the SWPPP, the SWPPP shall be considered to fulfill the provisions in Section 7-1.01G, "Water Pollution," of the Standard Specifications for development and submittal of a Water Pollution Control Program.

21

No work having potential to cause water pollution shall be performed until the SWPPP has been approved by the Engineer. Approval shall not constitute a finding that the SWPPP complies with applicable requirements of the Permits, the Manuals and applicable Federal, State and local laws, regulations, and requirements.

22

The Contractor shall designate a Water Pollution Control Manager. The Water Pollution Control Manager shall be responsible for the preparation of the SWPPP and required modifications or amendments, and shall be responsible for the implementation and adequate functioning of the various water pollution control practices employed. The Contractor may designate different Water Pollution Control Managers to prepare the SWPPP and to implement the water pollution control practices. The Water Pollution Control Managers shall serve as the primary contact for issues related to the SWPPP or its implementation. The Contractor shall submit to the Engineer a statement of qualifications, describing the training, previous work history and expertise of the individual selected by the Contractor to serve as Water Pollution Control Manager. The Water Pollution Control Manager shall have a minimum of 24 hours of formal storm water management training or certification as a Certified Professional in Erosion and Sediment Control (CPESC). The Engineer will reject the Contractor's submission of a Water Pollution Control Manager if the submitted qualifications are deemed to be inadequate.

23

The SWPPP shall apply to the areas within and those outside of the highway right of way that are directly related to construction operations including, but not limited to, asphalt batch plants, material borrow areas, concrete plants, staging areas, storage yards, and access roads.

24

The SWPPP shall incorporate water pollution control practices in the following categories:

A. Soil stabilization.
B. Sediment control.
C. Wind erosion control.
D. Tracking control.
E. Non-storm water management.

F. Waste management and materials pollution control.

25*. Use to specify Temporary Water Pollution Control Practices that are to be included as separate bid items in the project. Otherwise, delete. For each Temporary Water Pollution Control Practice listed, include the applicable special provision, a separate bid item, and at a minimum, a construction detail. In addition, designers shall prepare a Storm Water Information Handout that delineates the location of each Temporary Water Pollution Control Practice item. List the Temporary Water Pollution Control Practices incorporated into the PS&E, e.g., "Temporary Erosion Control" (SSP 07-350), "Temporary Soil Stabilizer" (SSP 07-370), "Temporary Erosion Control Blanket" (SSP 07-390), "Temporary Silt Fence" (SSP 07-430), "Temporary Mulch" (SSP 07-380), etc. Districts that have developed a CSWPPP may not need to prepare a Storm Water Information Handout. If a CSWPPP is available, delete the words "and to the Storm Water Information Handout" from the last sentence.

JT

CP**

The following contract items of work shall be incorporated into the SWPPP as "Temporary Water Pollution Control Practices": Temporary Concrete Washout Facility,Temporary Construction Entrance, Non-Storm Water Discharges, Temporary Silt Fence, Temporary Cover and Temporary Drainage Inlet Protection. The Contractor's attention is directed to the special provisions provided for Temporary Water Pollution Control Practices ~~and to the Storm Water Information Handout that is available at~~ _____.

26*. Use when early construction of one or more permanent controls is necessary. Otherwise, delete. Early construction may be required for slope paving, rock slope protection, ditch lining, and infiltration or detention basins, etc. Identify the schedule in "Order of Work" of these special provisions.

JT
Need Landscape Input
CP**

The following contract items of work, as shown on the project plans or as specified elsewhere in these special provisions, shall be identified in the SWPPP as permanent water pollution control practices: Mulch (Erosion Control), Fiber Rolls and Erosion Control (Type 'D'). These permanent water pollution control practices shall be constructed as specified in "Order of Work" and "Move In/Move Out (Erosion Control)" of these special provisions, and utilized during the construction period. The Contractor shall maintain and protect the permanent water pollution control practices throughout the duration of the project and shall restore these controls to the lines, grades and condition shown on the plans prior to acceptance of the contract.

27*. Insert District requirements; e.g., copies of the "Notification of Construction," related permits obtained by the Department for the project such as Fish & Game Permits, US Army Corps of Engineers Permits, RWQCB 401 Certifications, and RWQCB Waste Discharge Requirements for Aerially Deposited Lead Reuse. Otherwise, delete last sentence.

JT

The SWPPP shall include, but not be limited to, the items described in the Manuals, Permits and related information contained in the contract documents. The SWPPP shall also include a copy of the following: Notification of Construction.

28. Use for projects where storm water discharge is directly into a water body listed pursuant to Clean Water Act Section 303(d) as being impaired due to sedimentation/siltation or turbidity, or when analysis of non-visible pollutants is required. Otherwise, delete.

~~The Contractor shall develop and include in the SWPPP the Sampling and Analysis Plan(s) as required by the Permits, and modifications thereto, and as required in "Sampling and Analytical Requirements" of this section~~.

29

The Contractor shall develop a Water Pollution Control Schedule that describes the timing of grading or other work activities that could affect water pollution. The Water Pollution Control Schedule shall be updated by the Contractor to reflect changes in the Contractor's operations that would affect the necessary implementation of water pollution control practices.

30

The Contractor shall complete the "Construction Site BMPs Consideration Checklist" presented in the Preparation Manual and shall incorporate water pollution control practices into the SWPPP. Water pollution control practices include the "Minimum Requirements" and other Contractor-selected water pollution control practices from the "Construction Site BMPs Consideration Checklist" and the "Project-Specific Minimum Requirements" identified in the Water Pollution Control Cost Break-Down of this section.

31*. For most projects, insert the following: 20 working days for Contractor to submit; 10 working days for the Engineer to review; 10 working days for the Contractor to resubmit revisions; 5 working days for reviewing the revisions. For all projects, insert 4 approved copies. For less complex projects, fast-track schedules or short construction periods, the time needed for submittal, review, and revision of the SWPPP may be reduced. For projects utilizing "delayed start" special provisions, the time needed for the Contractor to submit the SWPPP may be delayed to a date not later than 10 working days after the start of work as defined in the "delayed start" special provisions. Deviation from the timeframes indicated are allowed only with the approval of the District Construction Storm Water Coordinator.

JT

Within 20 working days after the approval of the contract, the Contractor shall submit 3 copies of the draft SWPPP to the Engineer. The Engineer will have 10 working days to review the SWPPP. If revisions are required, as determined by the Engineer, the Contractor shall revise and resubmit the SWPPP within 10 working days of receipt of the Engineer's comments. The Engineer will have 5 working days to review the revisions. Upon the Engineer's approval of the

SWPPP, 4 approved copies of the SWPPP, incorporating the required changes, shall be submitted to the Engineer. In order to allow construction activities to proceed, the Engineer may conditionally approve the SWPPP while minor revisions are being completed. In the event the Engineer fails to complete the review within the time allowed, and if, in the opinion of the Engineer, completion of the work is delayed or interfered with by reason of the Engineer's delay in completing the review, the Contractor will be compensated for resulting losses, and an extension of time will be granted, in the same manner as provided for in Section 8-1.09, "Right of Way Delays," of the Standard Specifications.

32. Include the last sentence for complex multi-year projects, or where multiple construction phases will occur. Otherwise, delete last sentence.

JT

The Contractor shall prepare an amendment to the SWPPP when there is a change in construction activities or operations which may affect the discharge of pollutants to surface waters, ground waters, municipal storm drain systems, or when the Contractor's activities or operations violate a condition of the Permits, or when directed by the Engineer. Amendments shall identify additional water pollution control practices or revised operations, including those areas or operations not identified in the initially approved SWPPP. Amendments to the SWPPP shall be prepared and submitted for review and approval within a time approved by the Engineer, but in no case longer than the time specified for the initial submittal and review of the SWPPP. At a minimum, the SWPPP shall be amended annually and submitted to the Engineer 25 days prior to the defined rainy season.

33

The Contractor shall keep one copy of the approved SWPPP and approved amendments at the project site. The SWPPP shall be made available upon request by a representative of the Regional Water Quality Control Board, State Water Resources Control Board, United States Environmental Protection Agency, or the local storm water management agency. Requests by the public shall be directed to the Engineer.

34. Project-Specific Minimum Requirements are water pollution control practices that are required in addition to the Minimum Requirements identified in the Preparation Manual. Refer to the Construction Site BMPs Manual to select additional minimum water pollution control practices for the project and to determine if Temporary Desilting Basins should be considered.

For projects at or below 1200 m in elevation in either the Lahontan RWQCB areas of Dist. 2, 3, 6, 7, 8, 9, & 10 or the Colorado River Basin RWQCB areas of Dist. 8 & 11: Contact the District NPDES Storm Water Coordinator to identify any Project-Specific Minimum Requirements that apply due to RWQCB requirements.

For each Project-Specific Minimum Requirement selected, list the item and Estimated Quantity in the Water Pollution Control Cost Break-Down in this section. Do not include as a Project-Specific Minimum Requirement any item included as a Temporary Water Pollution Control Practice for which there is a separate bid item.

COST BREAK-DOWN

The Contractor shall include a Water Pollution Control Cost Break-Down in the SWPPP which itemizes the contract lump sum for water pollution control work. The Contractor shall use the Water Pollution Control Cost Break-Down provided in this section as the basis for the cost break-down submitted with the SWPPP. The Contractor shall use the Water Pollution Control Cost Break-Down to identify items, quantities and values for water pollution control work, excluding Temporary Water Pollution Control Practices for which there are separate bid items. The Contractor shall be responsible for the accuracy of the quantities and values used in the cost break-down submitted with the SWPPP. Partial payment for the item of water pollution control will not be made until the Water Pollution Control Cost Break-Down is approved by the Engineer.

35. Delete when SSP 08-017 or 08-018 are NOT included in the project.

JT

Attention is directed to "Time-Related Overhead" of these special provisions regarding compensation for time-related overhead.

36

Line items indicated in the Water Pollution Control Cost Break-Down in this section with a specified Estimated Quantity shall be considered "Project-Specific Minimum Requirements." The Contractor shall incorporate Project-Specific Minimum Requirements with Contractor-designated quantities and values into the Water Pollution Control Cost Break-Down submitted with the SWPPP.

37

Line items indicated in the Water Pollution Control Cost Break-Down in this section without a specified Estimated Quantity shall be considered by the Contractor for selection to meet the applicable "Minimum Requirements" as defined in the Manuals, or for other water pollution control work as identified in the "Construction Site BMPs Consideration Checklist" presented in the Preparation Manual. In the Water Pollution Control Cost Break-Down submitted with the SWPPP, the Contractor shall list only those water pollution control practices selected for the project, including quantities and values required to complete the work for those items.

38. Delete ", except for time-related overhead," when SSP 08-017 or 08-018 are NOT included in the project.

JT

The sum of the amounts for the items of work listed in the Water Pollution Control Cost Break-Down shall be equal to the contract lump sum price bid for water pollution control. Overhead and profit, except for time-related overhead, shall be included in the individual items listed in the cost break-down.

39*. The following Water Pollution Control Cost Break-Down shall be used as the basis for estimating the lump sum item for "Water Pollution Control." Modify the table as follows:

Caution: Do not use "Strike and Hide" to eliminate rows; delete rows. Do not "underline" text in the table.

If a Temporary Water Pollution Control Practice is included as a separate bid item, such as Temporary Silt Fence, delete that Item from the table as it is not to be duplicated in the cost break-down.

For each Project-Specific Minimum Requirement selected, enter the Estimated Quantity required. Do not enter a Value or an Amount for any Item. Value and Amount are to be designated by the Contractor on the cost break-down submitted with the SWPPP.

For all other Items in the table, the Project Engineer may delete those that are not applicable for water pollution control for the specific project as per the Construction Site BMPs Manual. For the Items that remain, do not enter an Estimated Quantity, Value or Amount. The Contractor will select from among the remaining Items per the "Construction Site BMPs Consideration Checklist" in the Preparation Manual and designate an Estimated Quantity, Value, and Amount for each Item selected on the cost break-down submitted with the SWPPP.

JT
CP

WATER POLLUTION CONTROL COST BREAK-DOWN

Contract No. 04-165421

ITEM	ITEM DESCRIPTION	UNIT	ESTIMATED QUANTITY	VALUE	AMOUNT
SC-7	Street Sweeping and Vacuuming	LS	Lump Sum		
WE-1	Wind Erosion Control	LS	Lump Sum		
NS-3	Paving and Grinding Operations	LS	Lump Sum		
NS-6	Illicit Connection/Illegal Discharge Detection and Reporting	LS	Lump Sum		
NS-8	Vehicle and Equipment Cleaning	LS	Lump Sum		
NS-9	Vehicle and Equipment Fueling	LS	Lump Sum		
NS-10	Vehicle and Equipment Maintenance	LS	Lump Sum		
NS-11	Pile Driving Operations	LS	Lump Sum		
NS-12	Concrete Curing	LS	Lump Sum		
NS-14	Concrete Finishing	LS	Lump Sum		
WM-1	Material Delivery and Storage	LS	Lump Sum		
WM-2	Material Use	LS	Lump Sum		
WM-4	Spill Prevention and Control	LS	Lump Sum		

ITEM	ITEM DESCRIPTION	UNIT	ESTIMATED QUANTITY	VALUE	AMOUNT
WM-5	Solid Waste Management	LS	Lump Sum		
WM-6	Hazardous Waste Management	LS	Lump Sum		
WM-7	Contaminated Soil Management	LS	Lump Sum		
WM-8	Concrete Waste Management	LS	Lump Sum		
WM-9	Sanitary/Septic Waste Management	LS	Lump Sum		
WM-10	Liquid Waste Management	LS	Lump Sum		

TOTAL _____

40. Include additional Supplemental Work Funds to cover Extra Work for SWPPP construction for Item 066596 "Additional Water Pollution Control."

Adjustments in the items of work and quantities listed in the approved cost break-down shall be made when required to address amendments to the SWPPP, except when the adjusted items are paid for as extra work.

41

No adjustment in compensation will be made to the contract lump sum price paid for water pollution control due to differences between the quantities shown in the approved cost break-down and the quantities required to complete the work as shown on the approved SWPPP. No adjustment in compensation will be made for ordered changes to correct SWPPP work resulting from the Contractor's own operations or from the Contractor's negligence.

42

The approved cost break-down will be used to determine partial payments during the progress of the work and as the basis for calculating the adjustment in compensation for the item of water pollution control due to increases or decreases of quantities ordered by the Engineer. When an ordered change increases or decreases the quantities of an approved cost break-down item, the adjustment in compensation will be determined in the same manner specified for increases and decreases in the quantity of a contract item of work in conformance with the provisions in Section 4-1.03B, "Increased or Decreased Quantities," of the Standard Specifications. If an ordered change requires a new item which is not on the approved cost break-down, the adjustment in compensation will be determined in the same manner specified for extra work in conformance with Section 4-1.03D, "Extra Work," of the Standard Specifications.

43

If requested by the Contractor and approved by the Engineer, changes to the water pollution control practices listed in the approved cost break-down, including addition of new water pollution control practices, will be allowed. Changes shall be included in the approved amendment of the SWPPP. If the requested changes result in a net cost increase to the lump sum price for water pollution control, an adjustment in compensation will be made without change to

the water pollution control item. The net cost increase to the water pollution control item will be paid for as extra work as provided in Section 4-1.03D, "Extra Work," of the Standard Specifications.

44

SWPPP IMPLEMENTATION

Unless otherwise specified, upon approval of the SWPPP, the Contractor shall be responsible throughout the duration of the project for installing, constructing, inspecting, maintaining, removing, and disposing of the water pollution control practices specified in the SWPPP and in the amendments. Unless otherwise directed by the Engineer, the Contractor's responsibility for SWPPP implementation shall continue throughout temporary suspensions of work ordered in conformance with the provisions in Section 8-1.05, "Temporary Suspension of Work," of the Standard Specifications. Requirements for installation, construction, inspection, maintenance, removal, and disposal of water pollution control practices shall conform to the requirements in the Manuals and these special provisions.

45

If the Contractor or the Engineer identifies a deficiency in the implementation of the approved SWPPP or amendments, the deficiency shall be corrected immediately unless requested by the Contractor and approved by the Engineer in writing, but shall be corrected prior to the onset of precipitation. If the Contractor fails to correct the identified deficiency by the date agreed or prior to the onset of precipitation, the project shall be in nonconformance with this section, "Water Pollution Control." Attention is directed to Section 5-1.01, "Authority of Engineer," of the Standard Specifications, and to "Retention of Funds" of this section for possible nonconformance penalties.

46

If the Contractor fails to conform to the provisions of this section, "Water Pollution Control," the Engineer may order the suspension of construction operations until the project complies with the requirements of this section.

47

Implementation of water pollution control practices may vary by season. The Construction Site BMPs Manual and these special provisions shall be followed for control practice selection of year-round, rainy season and non-rainy season water pollution control practices.

48

Year-Round Implementation Requirements

The Contractor shall have a year-round program for implementing, inspecting and maintaining water pollution control practices for wind erosion control, tracking control, non-storm water management, and waste management and materials pollution control.

49

The National Weather Service weather forecast shall be monitored and used by the Contractor on a daily basis. An alternative weather forecast proposed by the Contractor may be used if approved by the Engineer. If precipitation is predicted, the necessary water pollution control practices shall be deployed prior to the onset of the precipitation.

50

Disturbed soil areas shall be considered active whenever the soil disturbing activities have occurred, continue to occur or will occur during the ensuing 21 days. Non-active areas shall be protected as prescribed in the Construction Site BMPs Manual within 14 days of cessation of soil disturbing activities or prior to the onset of precipitation, whichever occurs first.

51. Use if Erosion Control (Type C or Type D) and Move-In/Move-Out (Erosion Control) are included in the project and if the project extends through the rainy season. Edit to match the type(s) of permanent erosion control (Type C and/or Type D) on the project. Otherwise, delete.

CP**

In order to provide effective erosion control, the Contractor may be directed by the Engineer to apply permanent erosion control in small or multiple units. The Contractor's attention is directed to ~~"Erosion Control (Type C)",~~ "Erosion Control (Type D)" and "Move-In/Move-Out (Erosion Control)" of these special provisions.

52*. Use to include year-round sediment control practices based on the site conditions and the scope of work. The inclusion of year-round sediment control practices is discretionary. Designers may selectively include year-round practices for projects with work in and/or adjacent to water bodies. Insert the selected controls and indicate the locations in the table below. Examples of controls may include combinations of the following: Silt Fence, Straw Bale Barrier, Sandbag Barrier, Desilting Basin, etc. Otherwise, delete Para and Table.

CP**

The Contractor shall implement, maintain and inspect the following temporary sediment control practices on a year-round basis. The listed practices shall remain in place until their use is no longer needed, as determined by the Engineer.

YEAR-ROUND SEDIMENT CONTROL PRACTICES	LOCATION USED
Temporary Silt Fence	Various Locations, at toe of disturbed slopes
Temporary Drainage Inlet Protection	Various Locations as shown on plans

Rainy Season Implementation Requirements

53 & 54. Use Para 53 and delete Para 54 for projects at or below 1200 m in elevation in the Lahontan RWQCB areas of Districts 2, 3, 6, 7, 8, 9, & 10 and Colorado River Basin RWQCB areas of Districts 8 & 11. Use Para 54 and delete Para 53 for all other projects.

53. Consult the District NPDES or Construction Storm Water Coordinator for special soil stabilization and sediment control requirements as required by the RWQCB to be implemented during the rainy season for the project, and add these special requirements as part of Para 53.

JT

~~Soil stabilization and sediment control practices shall be provided throughout the rainy season, defined as between August 1 and October 1, and between November 1 and May 1.~~

54*. Insert designated rainy seasons as defined in Section 2 of the Construction Site BMPs Manual. Delete Para 53. For projects with two rainy seasons, insert the dates of the second rainy season and add the following text to the end of the paragraph: ", and between _____ and _____." The manual is available at: http://www.dot.ca.gov/hq/construc/stormwater/stormwater1.htm.

JT

Soil stabilization and sediment control practices shall be provided throughout the rainy season, defined as between October 15 and April 15.

55. The following text may be added as the last sentence where early assurance of rainy season control practice implementation is deemed critical: "The Contractor shall implement soil stabilization and sediment control practices a minimum of 10 days prior to the start of the rainy season." Contact the appropriate District Construction Storm Water Coordinator to determine if this sentence is necessary due to District policy on this section of the provisions.

JT

An implementation schedule of required soil stabilization and sediment control practices for disturbed soil areas shall be completed no later than 20 days prior to the beginning of each rainy season. The implementation schedule shall identify the soil stabilization and sediment control practices and the dates when the implementation will be 25 percent, 50 percent and 100 percent complete, respectively. For construction activities beginning during the rainy season, the Contractor shall implement applicable soil stabilization and sediment control practices. The Contractor shall implement soil stabilization and sediment control practices a minimum of 10 days prior to the start of the rainy season.

56*. For projects with less than 2 hectares of total disturbed project area, insert the disturbed project area as the active disturbed soil area.

For most projects with 2 hectares or more total disturbed project area, insert 2 hectares as the active disturbed soil area. For sensitive projects, the 2 hectares of active disturbed soil area may be decreased. The active disturbed soil area may be increased if concurrence is obtained from the appropriate District Storm Water Coordinator.

JT

Throughout the defined rainy season, the active disturbed soil area of the project site shall be not more than 2 hectares. The Engineer may approve, on a case-by-case basis, expansions of the active disturbed soil area limit. Soil stabilization and sediment control materials shall be maintained on site sufficient to protect disturbed soil areas. A detailed plan for the mobilization of sufficient labor and equipment shall be maintained to deploy the water pollution control practices required to protect disturbed soil areas prior to the onset of precipitation.

57. Use for all projects located in the Lake Tahoe, Truckee River, East Fork Carson River, or West Fork Carson River Hydrologic Units, and for projects above 1500 m (5,000 ft) in elevation in the portions of Mono County or Inyo County within the Lahontan RWQCB. Otherwise, delete.

JT

~~**Winter Shutdown**~~

~~Unless granted a variance by the RWQCB Executive Officer, there shall be neither removal of vegetation nor disturbance of existing ground surface conditions between October 15 of each year and May 1 of the following year, except when there is an emergency situation that threatens the public health or welfare.~~

58

Non-Rainy Season Implementation Requirements

The non-rainy season shall be defined as days outside the defined rainy season. The Contractor's attention is directed to the Construction Site BMPs Manual for soil stabilization and sediment control implementation requirements on disturbed soil areas during the non-rainy season. Disturbed soil areas within the project shall be protected in conformance with the requirements in the Construction Site BMPs Manual with an effective combination of soil stabilization and sediment control.

59*. For items "D" & "E" below, typically insert "two weeks" and "once every week," respectively. Otherwise, insert time appropriate for project conditions.

MAINTENANCE

JT

To ensure the proper implementation and functioning of water pollution control practices, the Contractor shall regularly inspect and maintain the construction site for the water pollution control practices identified in the SWPPP. The construction site shall be inspected by the Contractor as follows:

A. Prior to a forecast storm.
B. After a precipitation event which causes site runoff.
C. At 24 hour intervals during extended precipitation events.
D. Routinely, a minimum of once every two weeks outside of the defined rainy season.
E. Routinely, a minimum of once every week during the defined rainy season.

60*. Insert "Preparation Manual" or "CSWPPP."

JT

The Contractor shall use the Storm Water Quality Construction Site Inspection Checklist provided in the Preparation Manual or an alternative inspection checklist provided by the Engineer. One copy of each site inspection record shall be submitted to the Engineer within 24 hours of completing the inspection.

61*. Insert "7" days unless a local RWQCB requires a shorter notification period; then insert local Permit requirement.

REPORTING REQUIREMENTS

Report of Discharges, Notices or Orders

JT

If the Contractor identifies discharges into surface waters or drainage systems in a manner causing, or potentially causing, a condition of pollution, or if the project receives a written notice or order from a regulatory agency, the Contractor shall immediately inform the Engineer. The Contractor shall submit a written report to the Engineer within 7 days of the discharge event, notice or order. The report shall include the following information:

A. The date, time, location, nature of the operation, and type of discharge, including the cause or nature of the notice or order.
B. The water pollution control practices deployed before the discharge event, or prior to receiving the notice or order.
C. The date of deployment and type of water pollution control practices deployed after the discharge event, or after receiving the notice or order, including additional measures installed or planned to reduce or prevent reoccurrence.
D. An implementation and maintenance schedule for affected water pollution control practices.

62*. Review project-specific NPDES Non-Storm Water Permit for requirement, if applicable; otherwise, insert "3" days.

Report of First-Time Non-Storm Water Discharge

JT

The Contractor shall notify the Engineer at least 3 days in advance of first-time non-storm water discharge events, excluding exempted discharges. The Contractor shall notify the Engineer of the operations causing non-storm water discharges and shall obtain field approval for first-time non-storm water discharges. Non-storm water discharges shall be monitored at first-time occurrences and routinely thereafter.

63

Annual Certifications

By June 15 of each year, the Contractor shall complete and submit an Annual Certification of Compliance, as contained in the Preparation Manual, to the Engineer.

Paras 64–78 & Para 82. Delete for projects within the Lake Tahoe Hydrologic Unit or for projects that DO NOT discharge to Waters of the United States (e.g. USGS blue line).

64. Use when storm water discharges directly into a water body listed pursuant to Clean Water Act Section 303(d) as being impaired due to sedimentation/siltation or turbidity. Otherwise, delete ", and" in Subparagraph A and delete Subparagraph B,

JT

SAMPLING AND ANALYTICAL REQUIREMENTS

The Contractor is required to implement specific sampling and analytical procedures to determine whether BMPs implemented on the construction site are:

A. preventing pollutants that are known or should be known by permittees to occur on construction sites that are not visually detectable in storm water discharges, to cause or contribute to exceedances of water quality objectives~~, and~~

~~B. preventing further impairment by sediment in storm waters discharged into water bodies listed as impaired due to sediment, siltation or turbidity~~.

Use Paras 65-69 only when there is storm water discharge from the construction site directly into a water body listed pursuant to Clean Water Act Section 303(d) that is identified as being impaired due to sedimentation/siltation or turbidity. Otherwise, delete. A list of water bodies listed pursuant to Section 303(d) is available in an appendix to the General Permit at: http://www.swrcb.ca.gov/stormwtr/construction.html. Paras 65-69 do not apply to discharges that flow directly into tributaries of 303(d) listed water bodies, which are not themselves 303(d) listed; nor to discharges to Municipal Separate Storm Sewer Systems (MS4), including Caltrans drainage systems.

65*. Insert name of Section 303(d) listed water body into which the project will discharge. Specify impairment: sedimentation/siltation or turbidity. Specify monitoring parameter: sedimentation/siltation or turbidity.

JT

~~**Sediment and Turbidity**~~

~~The project discharges directly into , a water body listed as impaired due to sedimentation/siltation or turbidity pursuant to Clean Water Act, Section 303(d), and has the potential to discharge storm water containing sediment. The project SWPPP shall contain a Sampling and Analysis Plan (SAP) that describes the sampling and analysis strategy and schedule to be implemented on the project for monitoring sedimentation/siltation or turbidity in the 303(d) listed water body in conformance with this section. The SAP shall comply with pertinent requirements of the Permits, including modifications thereto, and shall be prepared in conformance with the Department's Guidance Manual: Stormwater Monitoring Protocols~~

~~(July 2000). The Guidance Manual is available on the Department's Internet site at: http://www.dot.ca.gov/hq/env/stormwater/special/index.htm.~~

~~66~~

~~The SAP shall identify the locations where point sources from the construction site discharge directly into the 303(d) listed water body, and the locations of run-on to the project with the potential to combine with runoff that discharges directly from the construction site to the 303(d) listed water body. The discharge and run-on locations shall be shown on the SWPPP Water Pollution Control Drawings.~~

~~67~~

~~The SAP shall identify a sampling schedule that specifies that water quality samples for the parameter shall be collected during the first two hours of discharge from rain events during daylight hours (sunrise to sunset), and shall be collected regardless of the time of year, status of the construction site, or day of the week. A maximum of four sampling events are required within a 30 day period. A minimum of 72 hours of dry weather shall occur between rain events to distinguish separate rain events.~~

~~68~~

~~The SAP shall identify sampling locations for collecting water quality samples and the rationale for their selection. A sampling location shall be designated (1) upstream of direct discharges from the construction site, (2) immediately downstream from the last point of direct discharge from the construction site, and (3) immediately down gradient of run-on point(s) to the right of way. Sampling locations shall be shown on the SWPPP Water Pollution Control Drawings. Only trained personnel shall collect water quality samples and shall be identified in the SAP. Qualifications of designated sampling personnel shall describe training and experience, and shall be included in the SWPPP. The SAP shall state the sampling preparation and collection procedures, quality assurance/quality control, sample labeling procedures, sample collection documentation, sample shipping and chain of custody procedures, sample numbering system, and reference the construction site health and safety plan.~~

~~69~~

~~The SAP shall specify that for discharges to 303(d) water bodies listed as impaired due to Sedimentation/Siltation, water quality samples will be analyzed for both Settleable Solids in conformance with the requirements of EPA Test Method 160.5 or equivalent method and Total Suspended Solids in conformance with EPA Test Method 160.2 or equivalent method, or for Suspended Sediment Concentration in conformance with the requirements in ASTM Designation D3977-97. For discharges to 303(d) water bodies listed as impaired due to Turbidity, the SAP shall specify that water quality samples will be analyzed for turbidity in conformance with the requirements in EPA Test Method 180.1 or equivalent method. For samples analyzed in the field by sampling personnel, collection, analysis, and equipment calibration shall be in conformance with the Manufacturer's specifications. For samples that will be analyzed by a laboratory, sampling, preservation, and analysis shall be performed by a State-certified laboratory in conformance with the requirements in 40 CFR 136. The SAP shall identify the specific State-certified laboratory, sample containers, preservation requirements, holding times, and analysis method to be used. A list of State-certified laboratories that are approved by the Department is available at the following Internet site: http://www.dhs.ca.gov/ps/ls/elap/html/lablist_county.htm.~~

70. Use Paras 70 to 75 if storm water discharges directly to a Water of the United States (e.g. USGS blue line), or discharges to a drainage system that discharges into a Water of the United States. Otherwise, delete.

Non-Visible Pollutants

The project has the potential to discharge non-visible pollutants in storm water from the construction site. The project SWPPP shall contain a Sampling and Analysis Plan (SAP) that describes the sampling and analysis strategy and schedule to be implemented on the project for monitoring non-visible pollutants in conformance with this section.

71

The SAP shall identify potential non-visible pollutants that are known or should be known to occur on the construction site associated with the following: (1) construction materials, wastes or operations; (2) known existing contamination due to historical site usage; or (3) application of soil amendments, including soil stabilization products, with the potential to alter pH or contribute toxic pollutants to storm water. Planned material and waste storage areas, locations of known existing contamination, and areas planned for application of soil amendments shall be shown on the SWPPP Water Pollution Control Drawings.

72

The SAP shall identify a sampling schedule for collecting a sample down gradient from the applicable non-visible pollutant source and a sufficiently large uncontaminated control sample during the first two hours of discharge from rain events during daylight hours which result in a sufficient discharge for sample collection. If run-on occurs onto the non-visible pollutant source, a run-on sample that is immediately down gradient of the run-on to the Department's right of way shall be collected. A minimum of 72 hours of dry weather shall occur between rain events to distinguish separate rain events.

73

The SAP shall state that water quality sampling will be triggered when any of the following conditions are observed during the required storm water inspections conducted before or during a rain event:

A. Materials or wastes containing potential non-visible pollutants are not stored under watertight conditions.
B. Materials or wastes containing potential non-visible pollutants are stored under watertight conditions, but (1) a breach, leakage, malfunction, or spill is observed; and (2) the leak or spill has not been cleaned up prior to the rain event; and (3) there is the potential for discharge of non-visible pollutants to surface waters or drainage system.
C. Construction activities, such as application of fertilizer, pesticide, herbicide, methyl methacrylate concrete sealant, or non-pigmented curing compound have occurred during a rain event or within 24 hours preceding a rain event, and there is the potential for discharge of pollutants to surface waters or drainage system.
D. Soil amendments, including soil stabilization products, with the potential to alter pH levels or contribute toxic pollutants to storm water runoff have been applied, and there is the potential for discharge of pollutants to surface waters or drainage system (unless independent test data are available that demonstrate acceptable concentration levels of non-visible pollutants in the soil amendment).

E. Storm water runoff from an area contaminated by historical usage of the site is observed to combine with storm water, and there is the potential for discharge of pollutants to surface waters or drainage system.

74

The SAP shall identify sampling locations for collecting down gradient and control samples, and the rationale for their selection. The control sampling location shall be selected where the sample does not come into contact with materials, wastes or areas associated with potential non-visible pollutants or disturbed soil areas. Sampling locations shall be shown on the SWPPP Water Pollution Control Drawings. Only trained personnel shall collect water quality samples and be identified in the SAP. Qualifications of designated sampling personnel shall describe training and experience, and shall be included in the SWPPP. The SAP shall state monitoring preparation, sample collection procedures, quality assurance/quality control, sample labeling procedures, sample collection documentation, sample shipping and chain of custody procedures, sample numbering system, and reference the construction site health and safety plan.

75

The SAP shall identify the analytical method to be used for analyzing down gradient and control samples for potential non-visible pollutants on the project. For samples analyzed in the field by sampling personnel, collection, analysis, and equipment calibration shall be in conformance with the Manufacturer's specifications. For samples that will be analyzed by a laboratory, sampling, preservation, and analysis shall be performed by a State-certified laboratory in conformance with 40 CFR 136. The SAP shall identify the specific State-certified laboratory, sample containers, preservation requirements, holding times, and analysis method to be used. A list of State-certified laboratories that are approved by the Department is available at the following internet site: http://www.dhs.ca.gov/ps/ls/elap/html/lablist_county.htm.

Use Paras 76 to 78 and Para 82 when Para 64 to 69 or when Paras 70 to 75 are used. Otherwise, delete.

76

Analytical Results and Evaluation

The Contractor shall submit a hard copy and electronic copy of water quality analytical results and quality assurance/quality control data to the Engineer within 5 days of sampling for field analyses and within 30 days for laboratory analyses. Analytical results shall be accompanied by an evaluation from the Contractor to determine if down gradient samples show elevated levels of the tested parameter relative to levels in the control sample. If down gradient or downstream samples, as applicable, show increased levels, the Contractor will assess the BMPs, site conditions, and surrounding influences to determine the probable cause for the increase. As determined by the assessment, the Contractor will repair or modify BMPs to address increases and amend the SWPPP as necessary. Electronic results (in one of the following file formats: .xls, .txt, .csv, .dbs, or .mdb) shall have at a minimum the following information: sample identification number, contract number, constituent, reported value, method reference, method detection limit, and reported detection limit. The Contractor shall document sample collection during rain events.

77

Water quality sampling documentation and analytical results shall be maintained with the SWPPP on the project site until a Notice of Completion has been submitted and approved.

78

If construction activities or knowledge of site conditions change, such that discharges or sampling locations change, the Contractor shall amend the SAP in conformance with this section, "Water Pollution Control."

79. Include Item 074019 "Prepare Storm Water Pollution Prevention Plan."

PAYMENT

The contract lump sum price paid for prepare storm water pollution prevention plan shall include full compensation for furnishing all labor, materials, tools, equipment, and incidentals for doing all the work involved in developing, preparing, obtaining approval of, revising, and amending the SWPPP, as specified in the Standard Specifications and these special provisions, and as directed by the Engineer.

80

Attention is directed to Section 9-1.06, "Partial Payments," and Section 9-1.07, "Payment After Acceptance," of the Standard Specifications. Payments for prepare storm water pollution prevention plan will be made as follows:

A. After the SWPPP has been approved by the Engineer, 75 percent of the contract item price for prepare storm water pollution prevention plan will be included in the monthly partial payment estimate.
B. After acceptance of the contract in conformance with the provisions in Section 7-1.17, "Acceptance of Contract," of the Standard Specifications, payment for the remaining 25 percent of the contract item price for prepare storm water pollution prevention plan will be made in conformance with the provisions in Section 9-1.07.

81. Include Item 074020 "Water Pollution Control."

The contract lump sum price paid for water pollution control shall include full compensation for furnishing all labor, materials, tools, equipment, and incidentals, and for doing all the work involved in installing, constructing, removing, and disposing of water pollution control practices, including non-storm water management, and waste management and materials pollution water pollution control practices, except those for which there is a contract item of work as specified in the Standard Specifications and these special provisions, and as directed by the Engineer.

82. Include additional Supplemental Work Funds to cover Extra Work for Item 066597 "Storm Water Sampling and Analysis."

Storm water sampling and analysis will be paid for as extra work as provided in Section 4-1.03D, "Extra Work," of the Standard Specifications. No payment will be made for the preparation, collection, analysis, and reporting of storm water samples required where appropriate BMPs are not implemented prior to a rain event, or if a failure of a BMP is not corrected prior to a rain event.

83. Include additional Supplemental Work Funds to cover Extra Work for Item 066595 "Water Pollution Control Maintenance Sharing."

For items identified on the approved Water Pollution Control Cost Break-Down, the cost of maintaining the temporary water pollution control practices shall be divided equally by the State and the Contractor as follows:

84

Soil Stabilization

Temporary water pollution control practices except:
SS-1 Scheduling
SS-2 Preservation of Existing Vegetation

85

Sediment Control

Temporary water pollution control practices except:
SC-7 Street Sweeping and Vacuuming

86

Wind Erosion Control

No sharing of maintenance costs will be allowed.

87

Tracking Control

TC-1 Stabilized Construction Entrance/Exit.

88

Non-Storm Water Management

No sharing of maintenance costs will be allowed.

89

Waste Management & Materials Pollution Control

No sharing of maintenance costs will be allowed.

90

The division of cost will be made by determining the cost of maintaining water pollution control practices in conformance with the provisions in Section 9-1.03, "Force Account Payment," of the Standard Specifications and paying to the Contractor one-half of that cost. Cleanup, repair, removal, disposal, improper installation, and replacement of water pollution control practices damaged by the Contractor's negligence, shall not be considered as included in the cost for performing maintenance.

91

The provisions for sharing maintenance costs shall not relieve the Contractor from the responsibility for providing appropriate maintenance on items with no shared maintenance costs.

92

Full compensation for non-shared maintenance costs of water pollution control practices, as specified in this section, "Water Pollution Control," shall be considered as included in the contract lump sum price paid for water pollution control and no additional compensation will be allowed therefor.

93

Water pollution control practices for which there is a contract item of work, will be measured and paid for as that contract item of work.

State of California **Business, Transportation and Housing Agency**

Memorandum

To : Amando Vito,
Project Engineer

Date : Mar. 27, 2006

File : 04-Ala-880
KP43.6/45.5
PM 27.3/28.2
04-165421

Subject: Final exception approval for Slopes Steeper than 1:4

EROSION CONTROL

The Office of Water Quality and Mitigation, Erosion and Sediment Control Branch has reviewed your request for Final exception approval for Slopes Steeper than 1:4. Erosion and water quality are the primary concerns related to this request. Our branch will be providing PS+E support for this project including appropriate erosion control measures for all of the 1:2 sloped areas. Erosion control measures for these areas will include the use of Type 'D' Erosion Control Seeding and the use of Fiber Rolls. Slope exception is granted specific to erosion control requirements.

In addition, it has been noted that both space constraints and excessive Right of Way costs would be incurred if standard 1:4 slopes were required and that comparable cut and fill slopes already exist with in the project boundaries.

Based on this information, issues relevant to slopes steeper than 1:4 will be properly addressed for this project.

I approve the slope ratios proposed for this project.

David W. Yam
Office Chief, Supervising Environmental Planner
Landscape Architect #1949

3·27·06
Date

State of California
DEPARTMENT OF TRANSPORTATION

Business, Transportation and Housing Agency

Memorandum

Flex your power!
Be energy efficient!

To: MR. ALBERT ZEPEDA
District Branch Chief
Design, Alameda I

Date: April 14, 2006

Attention: A.Vito
B.Wong

File: 04-ALA-880 PM 27.0/28.27
04-16542
High Street Viaduct Seismic Retrofit

From: RIFAAT NASHED RN
Engineering Geologist
Office of Geotechnical Design – West
Geotechnical Services
Division of Engineering Services

GRANT WILCOX GW
Chief, Branch B
Office of Geotechnical Design – West
Geotechnical Services
Division of Engineering Services

Subject: Soils Information for Storm Water Data Report

This memo is in response to your request for soil information for the above-mentioned project. We have determined the following information to be included in the Storm Water Data Report (all data from Soil Survey of Alameda County – Western Part, California, USDA, 1981, except where noted.):

Checklist SW-2, Storm Water Quality Issues Summary

#9. If considering Treatment BMPs, determine the soil classification, permeability, erodibility, and depth to groundwater.

Soils underlying the project area consist of urban land and Urban land-Clear Lake complex soils. The Urban land soils cover the area between 50th Ave and 38th Ave. The Urban land- Clear Lake complex soils cover the area between 38th Ave and Fruitvale Ave. The Urban land- Clear Lake complex soils consists of about 55% Urban land, 35% Clear Lake clay and about 10% of small areas of Omni silty clayloam, drained, and Marvin silt loam, saline-alkali. Urban land consists of areas that are covered by buildings and other related urban structures. The soil material has been altered or mixed during urban development. Clear Lake soil is very deep and poorly drained. It formed in alluvium that derived mainly from sedimentary rock. Typically, the surface layer is very dark gray, alkaline clay; the

underlying material is dark gray and grayish brown, calcareous clay and silty clay.

Log of Test Borings (LOTB's) drilled by Caltrans in 1959 at East Creek Slough Bridge (PM 27.23), Route 77 off-ramp Under- crossing (PM 27.7), and High Street Overhead (PM 27.63) within the project location. These logs indicate that the soils consist mainly of clay, organic clay, silt, organic silty clay, sand, gravel, pebbles and organic materials. Permeability for Clear Lake soils ranges between 0.06 in/hr (0.15 cm/hr) to 0.2 in / hr (0.51 cm/hr) with erosion factor K 0.24;and run-off is slow.

From the boring, groundwater depth rang from 8.1 ft (2.5 m) at East Creek Slough Bridge (PM 27.23) and High street Overhead – Bent 23 to 33 (PM 27.63) to 24.8 ft (7.6 m) at High street Overhead abutment to bent 12 below original ground

12. Describe the Topography of the project site?

The project site is located on the nearly flat San Leandro Bay plain, with existing roadway and other development fills and Tidal Canal providing the only topographic relief. Grades adjacent to site area range from 3.0m to 6.1 m in elevation.

17. Determine if project area has any slope stabilization concern.

No, there is no slope instability concern in the project area.

Treatment BMP's, Checklist T-1, Part 1

#4a. Are there local influent limits for infiltration or Basin Plan restrictions or other local agency prohibitions that would restrict the use of the infiltration devices?

Yes, the Clear Lake soil is classified within NRCS Hydrologic Soil Group D and the infiltration ranges between 0.06 in/hr (0.15 cm/hr) to 0.2 in/ hr (0.51 cm/hr) (Less than 0.5 in/hr and less than 2.5 in/hr).

#4b. Would infiltration pose a threat to local groundwater quality as determined by the District/Regional NPDES Storm Water Coordinator?

Yes, it is our opinion that could be an issue in some places where groundwater depth measured less than 3.0 m (2.5m at PM27.23 & PM 27.63) below the surface elevation. More investigation would be required to verify groundwater depth through the project area.

If you have any questions or need additional information, please call me at (510) 622-1773 or Grant Wilcox at (510) 286-4835.

c: Project File, Daily File, TPokrywka

RNashed/mm

HIGH STREET SEISMIC RETROFIT PROJECT
EA 165421

UPDATED FINAL ROADWAY PS&E PLANS

Dist	COUNTY	ROUTE	KILOMETER POST TOTAL PROJECT	SHEET No.	TOTAL SHEETS
04	Ala	880	43.9/45.4		

REGISTERED CIVIL ENGINEER — DATE 1-7-08

PLANS APPROVAL DATE

Q. Liu No. 64455 Exp. 6-30-09 CIVIL — REGISTERED PROFESSIONAL ENGINEER — STATE OF CALIFORNIA

THE STATE OF CALIFORNIA OR ITS OFFICERS OR AGENTS SHALL NOT BE RESPONSIBLE FOR THE ACCURACY OR COMPLETENESS OF ELECTRONIC COPIES OF THIS PLAN SHEET.

Caltrans Metric

NOTES:

1. DIMENSIONS OF THE STRUCTURAL SECTIONS ARE SUBJECT TO TOLERANCES SPECIFIED IN THE STANDARD SPECIFICATIONS.
2. SUPERELEVATIONS AS SHOWN OR AS DIRECTED BY THE ENGINEER.
3. FOR EXACT LOCATION OF RETAINING WALLS, SEE RETAINING WALL PLANS, FOR RETAINING WALL #3, SEE STRUCTURE PLANS.
4. FOR EXACT LOCATION OF DIKES, CURBS AND GUTTERS, SIDE GUTTER, CURB RAMP, CONCRETE BARRIER AND MBGR, SEE LAYOUT PLANS.
5. FOR EXACT LOCATION OF UNDERDRAINS, SEE UNDERDRAINS PLANS.
6. FOR REMOVE UNSUITABLE MATERIAL DETAILS AND LIMITS, SEE CONSTRUCTION DETAIL PLANS.
7. REMOVE EXISTING OPEN GRADED AC, BEFORE OVERLAYING WITH HMA (TYPE A).
8. DO NOT EXTEND OGFC BELOW DIKES OR CONCRETE BARRIERS. PLACE 60 mm HMA (TYPE A) BELOW DIKES AND CONCRETE BARRIERS.

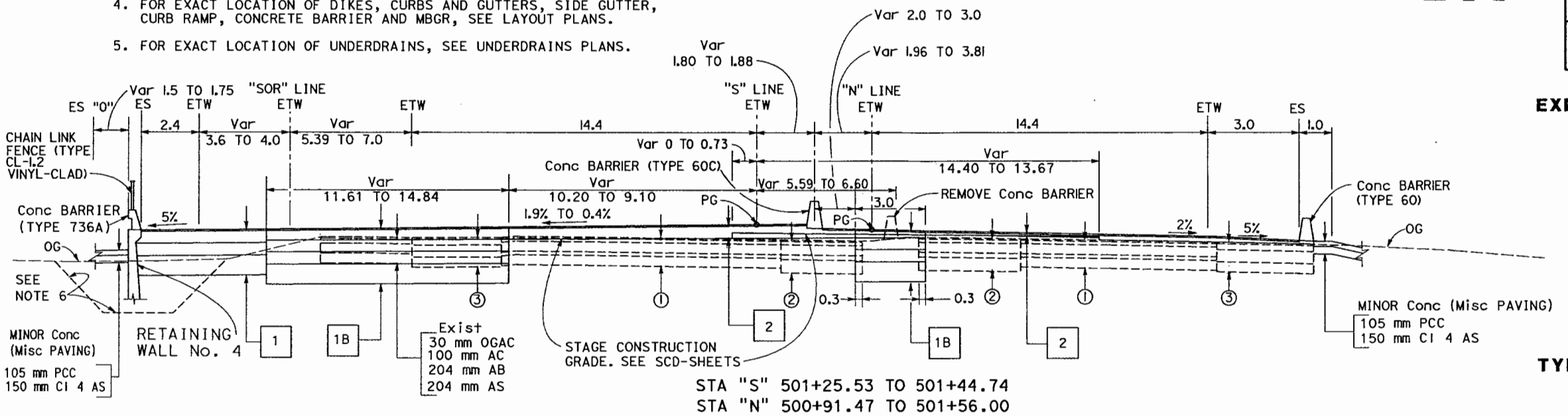

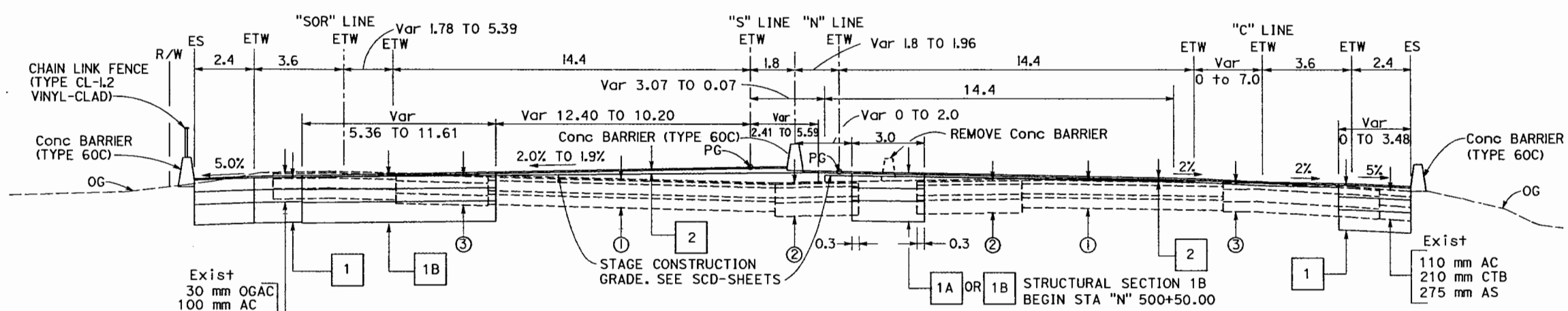

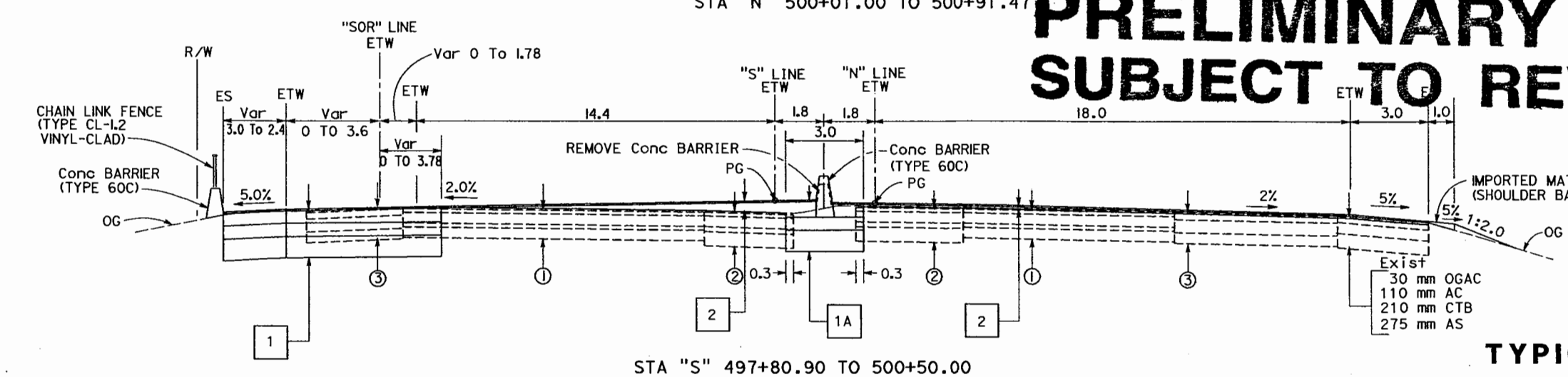

EXISTING STRUCTURAL SECTION

①	30 mm OGAC 70 mm AC 204 mm PCC 75 mm BITUMINOUS TREATED BASE 204 mm AB
②	30 mm OGAC 70 mm AC 204 mm AB 100 mm CTB 275 mm AS
③	30 mm OGAC 125 mm AC 250 mm CTB 204 mm AS

TYPICAL STRUCTURAL SECTION

1	30 mm HMA (OPEN GRADED) 240 mm HMA (TYPE A) 255 mm LCB 410 mm Cl 4 AS
1A	30 mm HMA (OPEN GRADED) 240 mm TO 450 mm HMA (TYPE A) 255 mm LCB 410 mm Cl 4 AS
1B	30 mm HMA (OPEN GRADED) Var 30 mm Min HMA (TYPE A) LEVELING (Max 585 mm) 240 mm HMA (TYPE A) 255 mm LCB 410 mm Cl 4 AS
2	30 mm HMA (OPEN GRADED) 45 mm Min HMA (TYPE A) LEVELING (Max 669 mm)
3	150 mm HMA (TYPE A) 255 mm Cl 3 AB 120 mm Cl 4 AS 210 mm Perm Mtl(BLANKET)
4	150 mm HMA (TYPE A) 255 mm Cl 3 AB 285 mm Cl 4 AS
5	0 mm HMA (TYPE A) 70 mm Cl 3 AB 375 mm Cl 4 AS
6	180 mm HMA (TYPE A) 270 mm Cl 3 AB 150 mm Cl 4 AS 210 mm Perm Mtl(BLANKET)
7	165 mm HMA (TYPE A) 285 mm Cl 3 AB 315 mm Cl 4 AS
8	75 mm HMA (TYPE A) 300 mm MINOR CONCRETE

PRELIMINARY
SUBJECT TO REVISION

TYPICAL CROSS SECTIONS

NO SCALE

ALL DIMENSIONS ARE IN METERS UNLESS OTHERWISE SHOWN

X-1

STATE OF CALIFORNIA - DEPARTMENT OF TRANSPORTATION — Caltrans — DESIGN

FUNCTIONAL SUPERVISOR: ALBERT J. ZEPEDA

CALCULATED-DESIGNED BY: DEL TABANCAY — CHECKED BY: QI LIU

REVISED BY — DATE REVISED

LAST REVISION 01-14-08 — DATE PLOTTED => 31-JAN-2008 — TIME PLOTTED => 10:05

Dist	COUNTY	ROUTE	KILOMETER POST TOTAL PROJECT	SHEET No.	TOTAL SHEETS
04	Ala	880	43.9/45.4		

REGISTERED CIVIL ENGINEER — DATE 1-7-08

PLANS APPROVAL DATE

REGISTERED PROFESSIONAL ENGINEER — Q. Liu — No. 64455 — Exp. 6-30-09 — CIVIL — STATE OF CALIFORNIA

THE STATE OF CALIFORNIA OR ITS OFFICERS OR AGENTS SHALL NOT BE RESPONSIBLE FOR THE ACCURACY OR COMPLETENESS OF ELECTRONIC COPIES OF THIS PLAN SHEET.

Caltrans Metric

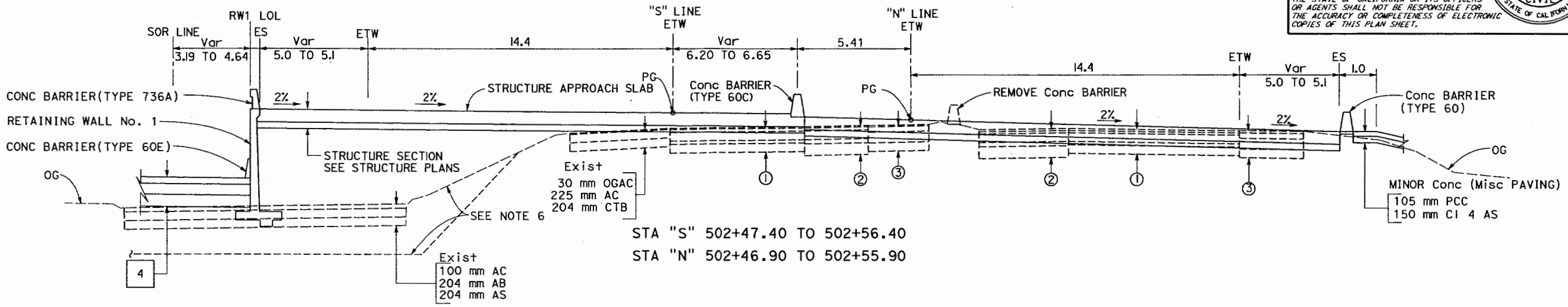

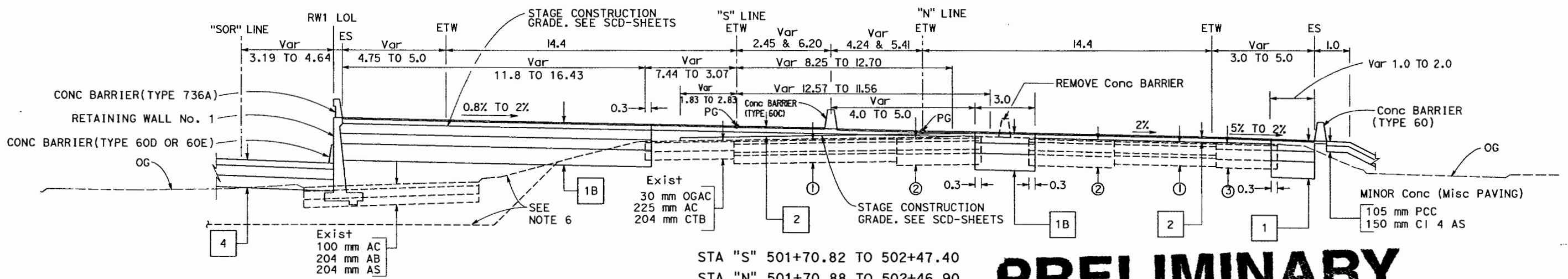

PRELIMINARY
SUBJECT TO REVISION

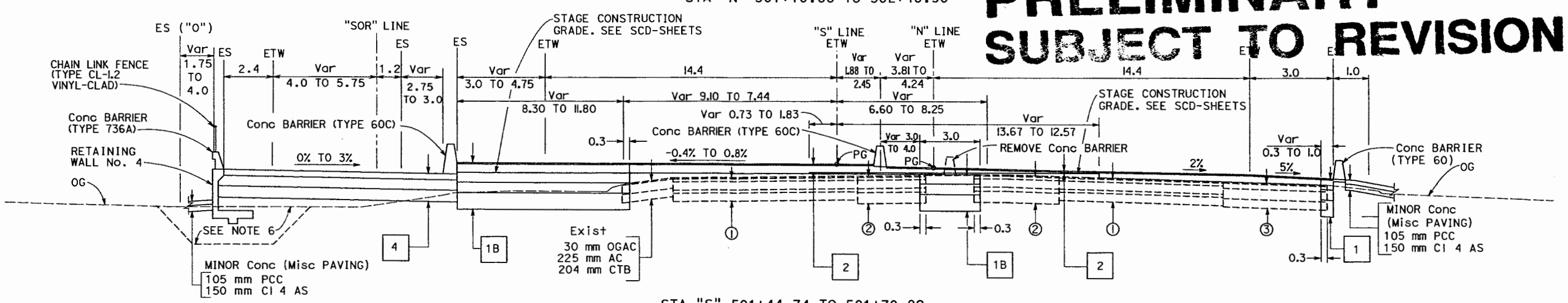

FOR NOTES, ABBREVIATIONS &/OR LEGEND, SEE SHEET X-1

ALL DIMENSIONS ARE IN METERS UNLESS OTHERWISE SHOWN

TYPICAL CROSS SECTIONS

NO SCALE

X-2

STATE OF CALIFORNIA - DEPARTMENT OF TRANSPORTATION
Caltrans DESIGN

FUNCTIONAL SUPERVISOR: ALBERT J. ZEPEDA
CALCULATED-DESIGNED BY: DEL TABANCAY
CHECKED BY: QI LIU
REVISED BY / DATE REVISED

FD => 31-JAN-2008
.D => 10:05

LAST REVISION DATE 01-07-08 TIME

BORDER LAST REVISED 3/1/2007

RELATIVE BORDER SCALE IS IN MILLIMETERS 0 20 40 60 80

USERNAME => s132175
DGN FILE => 416542ca002.dgn

CU 04250

EA 165421

Dist	COUNTY	ROUTE	KILOMETER POST TOTAL PROJECT	SHEET No.	TOTAL SHEETS
04	Ala	880	43.9/45.4		

REGISTERED CIVIL ENGINEER — DATE 1-7-08

PLANS APPROVAL DATE

REGISTERED PROFESSIONAL ENGINEER Q. Liu No. 64455 Exp. 6-30-09 CIVIL STATE OF CALIFORNIA

THE STATE OF CALIFORNIA OR ITS OFFICERS OR AGENTS SHALL NOT BE RESPONSIBLE FOR THE ACCURACY OR COMPLETENESS OF ELECTRONIC COPIES OF THIS PLAN SHEET.

Caltrans Metric

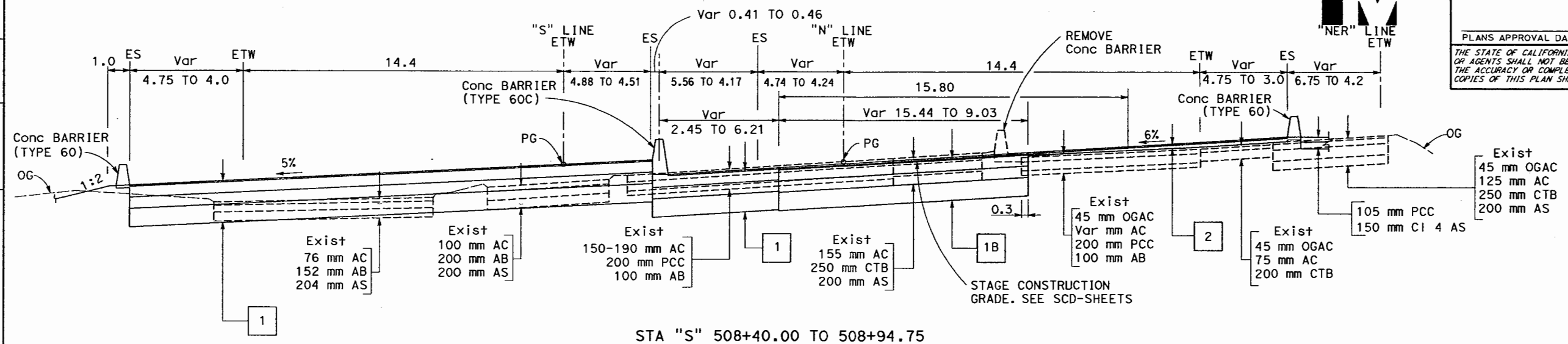

STA "S" 508+40.00 TO 508+94.75
STA "N" 508+42.50 TO 508+99.01

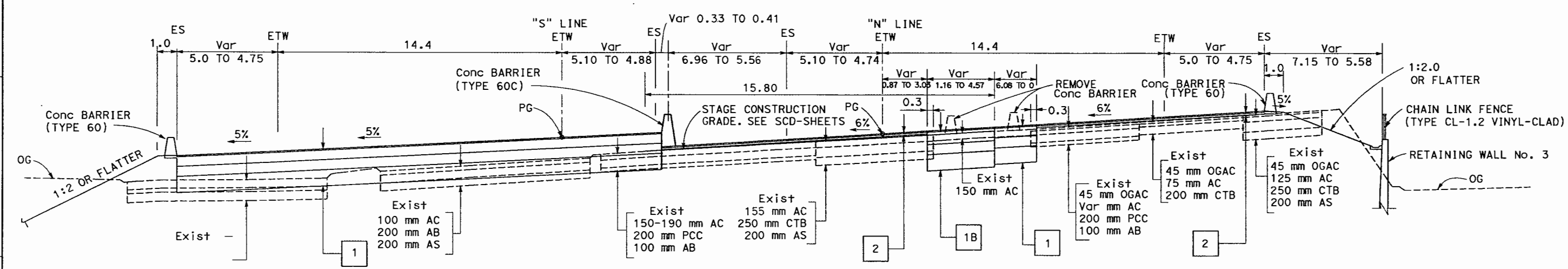

STA "S" 507+88.80 TO 508+40.00
STA "N" 507+89.90 TO 508+42.50

PRELIMINARY
SUBJECT TO REVISION

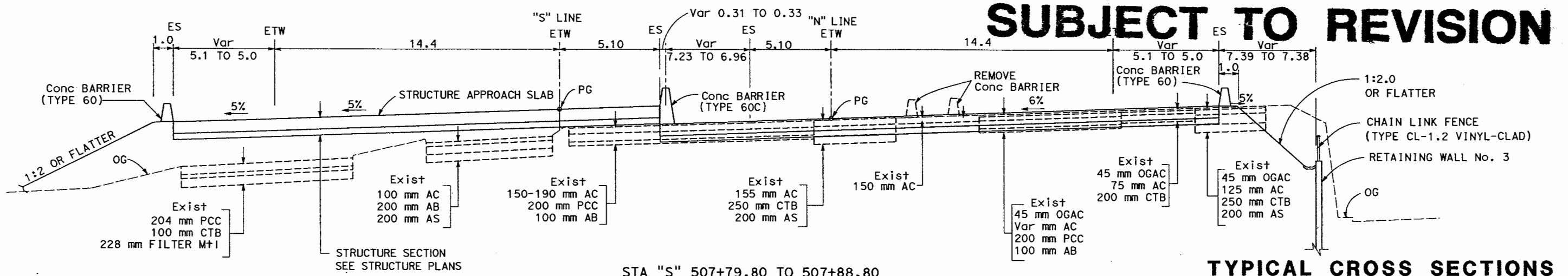

STA "S" 507+79.80 TO 507+88.80
STA "N" 507+80.90 TO 507+89.90

FOR NOTES, ABBREVIATIONS &/OR LEGEND, SEE SHEET X-1

ALL DIMENSIONS ARE IN METERS UNLESS OTHERWISE SHOWN

TYPICAL CROSS SECTIONS

NO SCALE

X-3

REVISED BY	DATE REVISED

CALCULATED-DESIGNED BY	CHECKED BY
DEL TABANCAY	QI LIU

FUNCTIONAL SUPERVISOR: ALBERT J. ZEPEDA

STATE OF CALIFORNIA - DEPARTMENT OF TRANSPORTATION — Caltrans — DESIGN

LAST REVISION 01-07-08 — DATE PLOTTED => 31-JAN-2008 — TIME PLOTTED => 10:05

Dist	COUNTY	ROUTE	KILOMETER POST TOTAL PROJECT	SHEET No.	TOTAL SHEETS
04	Ala	680	43.9/45.4		

REGISTERED CIVIL ENGINEER — DATE 1-7-08

PLANS APPROVAL DATE

REGISTERED PROFESSIONAL ENGINEER — Q. Liu — No. 64455 — Exp. 6-30-09 — CIVIL — STATE OF CALIFORNIA

THE STATE OF CALIFORNIA OR ITS OFFICERS OR AGENTS SHALL NOT BE RESPONSIBLE FOR THE ACCURACY OR COMPLETENESS OF ELECTRONIC COPIES OF THIS PLAN SHEET.

Caltrans Metric

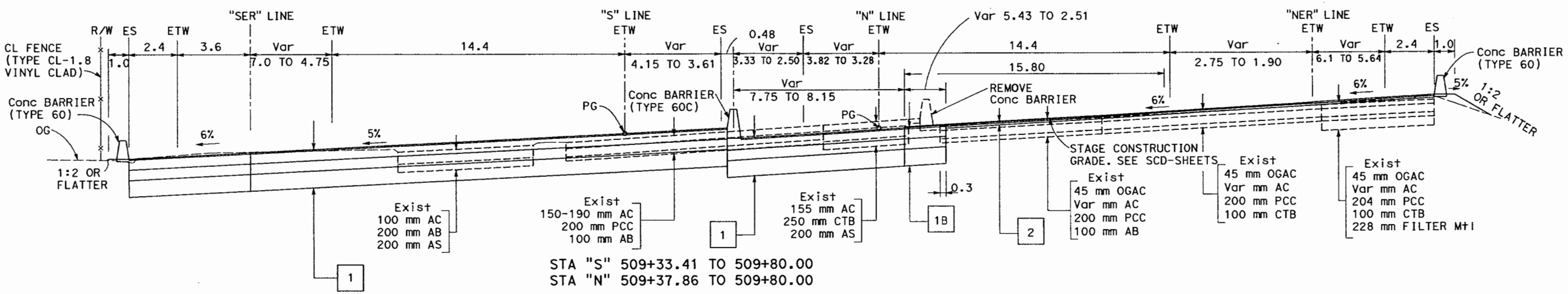

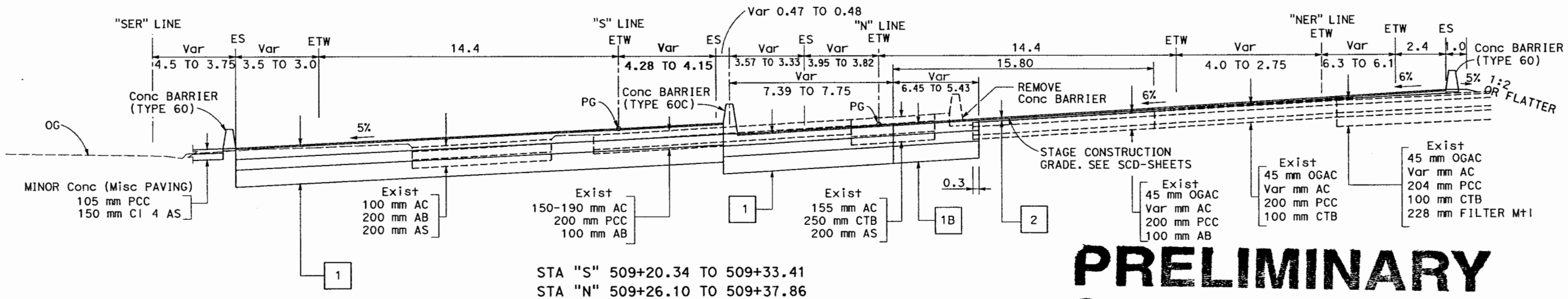

PRELIMINARY
SUBJECT TO REVISION

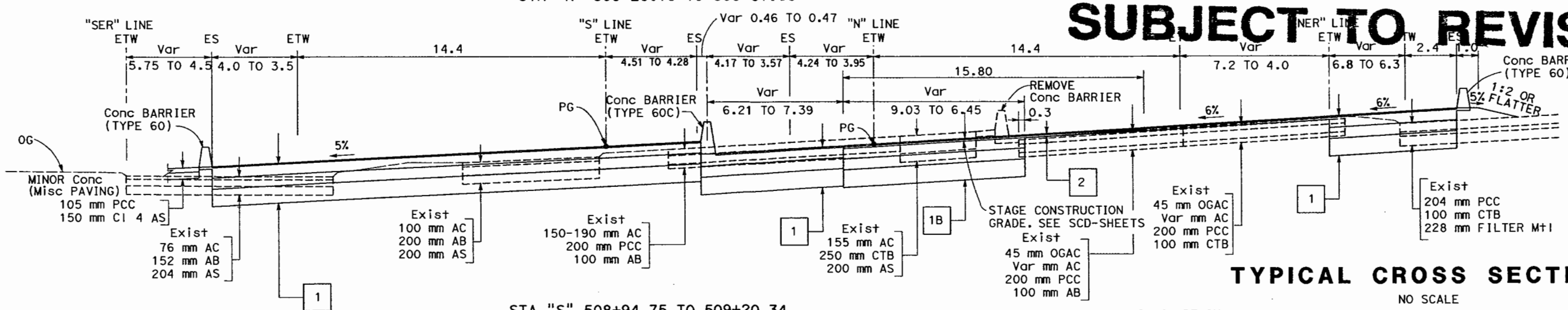

FOR NOTES, ABBREVIATIONS &/OR LEGEND, SEE SHEET X-1

ALL DIMENSIONS ARE IN METERS UNLESS OTHERWISE SHOWN

TYPICAL CROSS SECTIONS

NO SCALE

X-4

REVISED BY	DATE REVISED
DEL TABANCAY	QI LIU
CALCULATED-DESIGNED BY	CHECKED BY
FUNCTIONAL SUPERVISOR	ALBERT J. ZEPEDA

STATE OF CALIFORNIA - DEPARTMENT OF TRANSPORTATION — Caltrans — DESIGN

LAST REVISION 01-07-08 — DATE PLOTTED => 31-JAN-2008 — TIME PLOTTED => 10:05

Dist	COUNTY	ROUTE	KILOMETER POST TOTAL PROJECT	SHEET No.	TOTAL SHEETS
04	Ala	880	43.9/45.4		

REGISTERED CIVIL ENGINEER — DATE 1-7-08

PLANS APPROVAL DATE

REGISTERED PROFESSIONAL ENGINEER — Q. Liu — No. 64455 — Exp. 6-30-09 — CIVIL — STATE OF CALIFORNIA

THE STATE OF CALIFORNIA OR ITS OFFICERS OR AGENTS SHALL NOT BE RESPONSIBLE FOR THE ACCURACY OR COMPLETENESS OF ELECTRONIC COPIES OF THIS PLAN SHEET.

Caltrans Metric

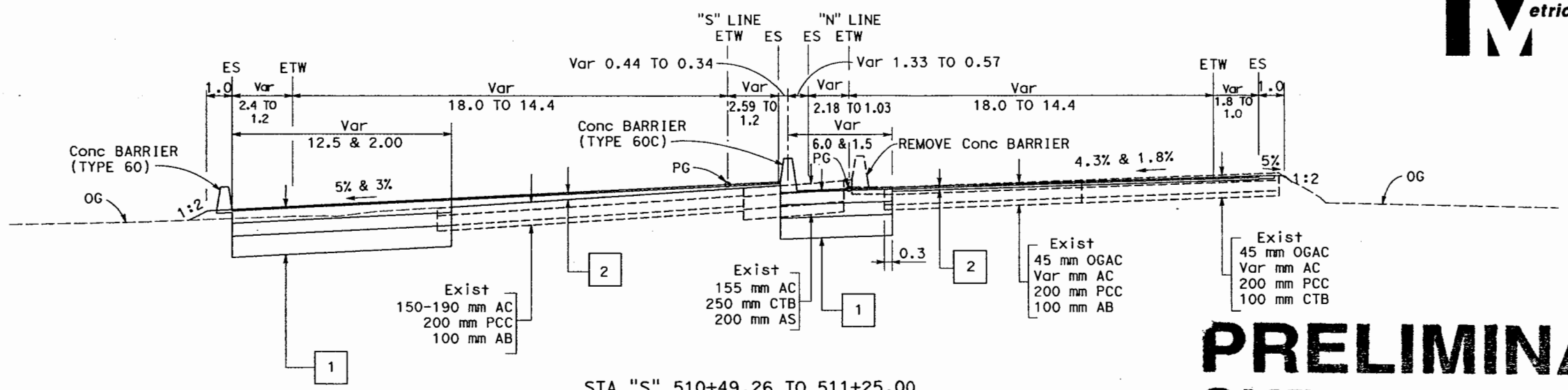

STA "S" 510+49.26 TO 511+25.00
STA "N" 510+53.66 TO 511+18.00

PRELIMINARY
SUBJECT TO REVISION

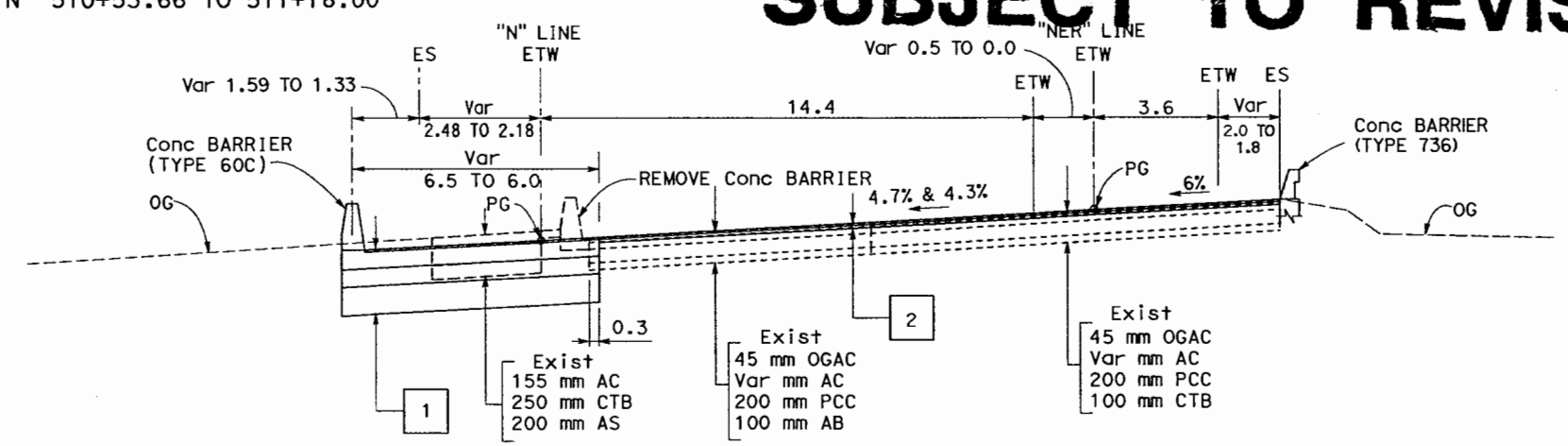

STA "N" 510+34.88 TO 510+53.66

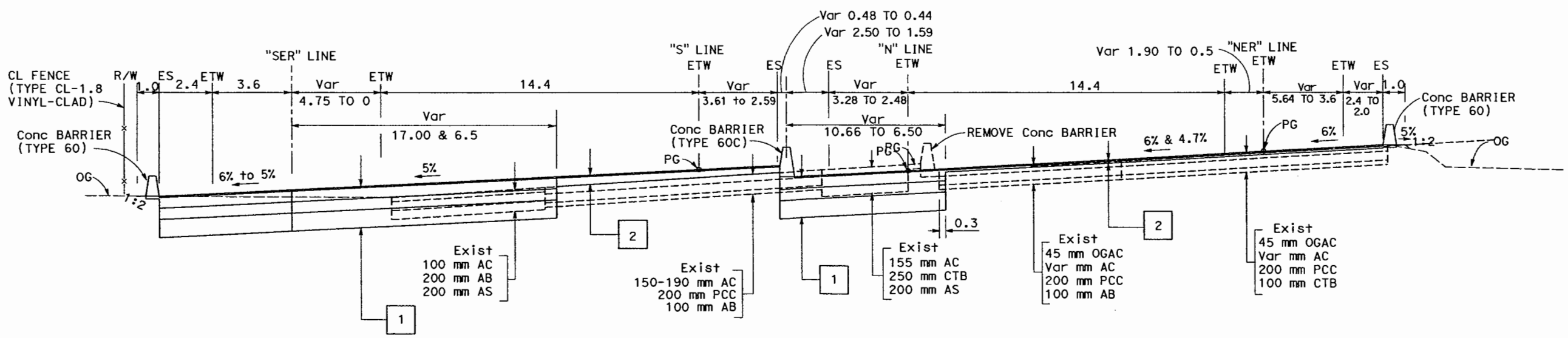

STA "S" 509+80.0 TO 510+49.26
STA "N" 509+80.00 TO 510+34.88

TYPICAL CROSS SECTIONS

NO SCALE

FOR NOTES, ABBREVIATIONS &/OR LEGEND, SEE SHEET X-1

ALL DIMENSIONS ARE IN METERS UNLESS OTHERWISE SHOWN

X-5

REVISED BY	DATE REVISED

DEL TABANCAY	QI LIU
CALCULATED-DESIGNED BY	CHECKED BY
FUNCTIONAL SUPERVISOR	ALBERT J. ZEPEDA

STATE OF CALIFORNIA - DEPARTMENT OF TRANSPORTATION — DESIGN — Caltrans

LAST REVISION 01-07-08 — DATE PLOTTED => 31-JAN-2008 — TIME PLOTTED => 10:05

Dist	COUNTY	ROUTE	KILOMETER POST TOTAL PROJECT	SHEET No.	TOTAL SHEETS
04	Ala	880	43.9/45.4		

REGISTERED CIVIL ENGINEER — DATE 1-7-08

PLANS APPROVAL DATE

REGISTERED PROFESSIONAL ENGINEER — Q. Liu — No. 64455 — Exp. 6-30-09 — CIVIL — STATE OF CALIFORNIA

THE STATE OF CALIFORNIA OR ITS OFFICERS OR AGENTS SHALL NOT BE RESPONSIBLE FOR THE ACCURACY OR COMPLETENESS OF ELECTRONIC COPIES OF THIS PLAN SHEET.

Caltrans Metric

PRELIMINARY SUBJECT TO REVISION

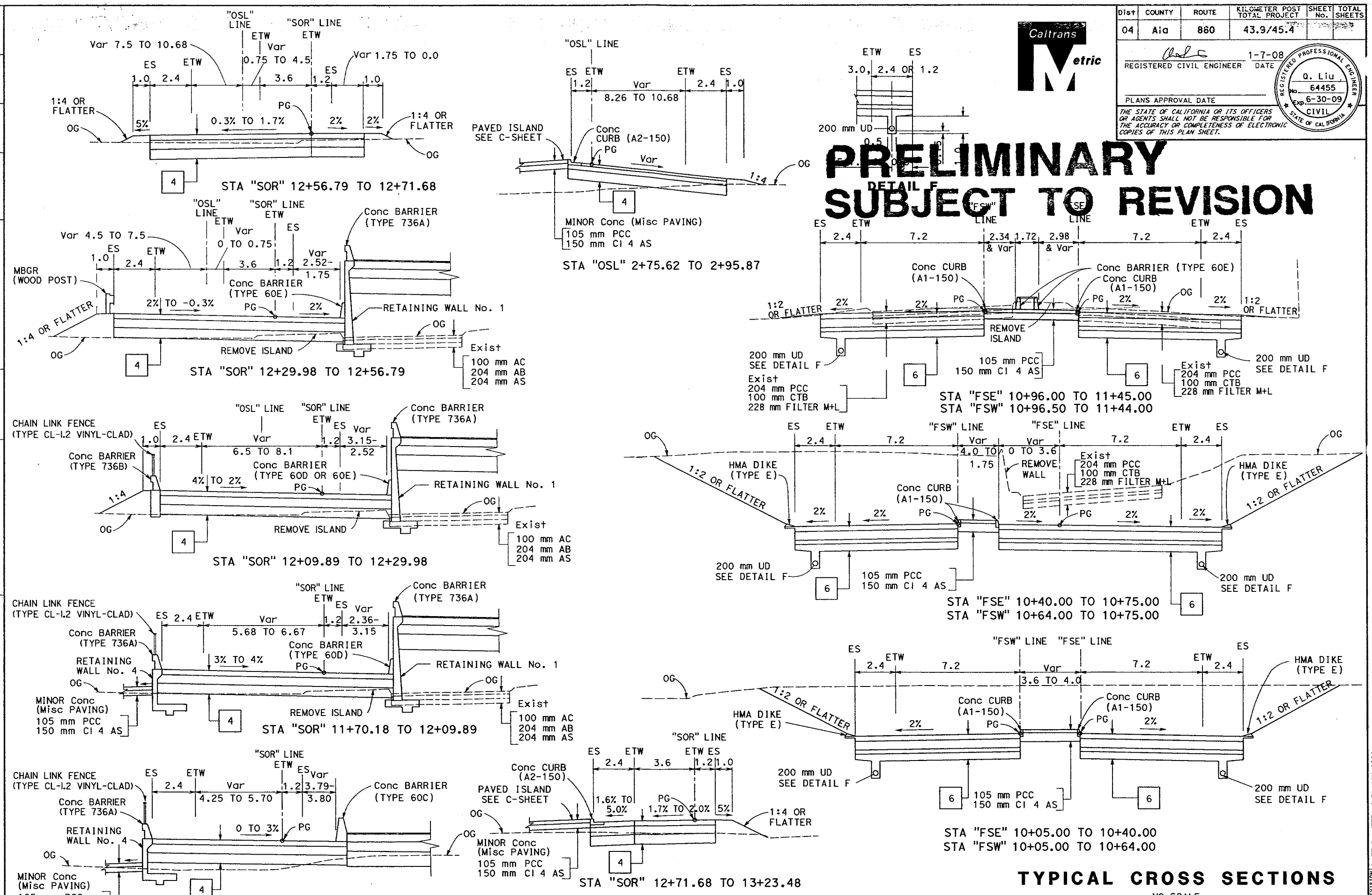

FOR NOTES, ABBREVIATIONS &/OR LEGEND, SEE SHEET X-1

ALL DIMENSIONS ARE IN METERS UNLESS OTHERWISE SHOWN

TYPICAL CROSS SECTIONS

NO SCALE

X-6

REVISED BY	DATE REVISED
DEL TABANCAY	QI LIU
CALCULATED-DESIGNED BY	CHECKED BY
FUNCTIONAL SUPERVISOR	ALBERT J. ZEPEDA

STATE OF CALIFORNIA - DEPARTMENT OF TRANSPORTATION — Caltrans — DESIGN

LAST REVISION 01-07-08 — DATE "ED => 31-JAN-2008 — TIME ID => 10:05

BORDER LAST REVISED 3/1/2007

RELATIVE BORDER SCALE IS IN MILLIMETERS 0 20 40 60 80

USERNAME => s132175
DGN FILE => 416542ca006.dgn

CU 04250 | EA 165421

Dist	COUNTY	ROUTE	KILOMETER POST TOTAL PROJECT	SHEET No.	TOTAL SHEETS
04	Ala	880	43.9/45.4		

REGISTERED CIVIL ENGINEER — DATE 1-7-08

PLANS APPROVAL DATE

REGISTERED PROFESSIONAL ENGINEER — Q. Liu — No. 64455 — Exp. 6-30-09 — CIVIL — STATE OF CALIFORNIA

THE STATE OF CALIFORNIA OR ITS OFFICERS OR AGENTS SHALL NOT BE RESPONSIBLE FOR THE ACCURACY OR COMPLETENESS OF ELECTRONIC DATA OF THIS PLAN SHEET.

Caltrans Metric

PRELIMINARY SUBJECT TO REVISION

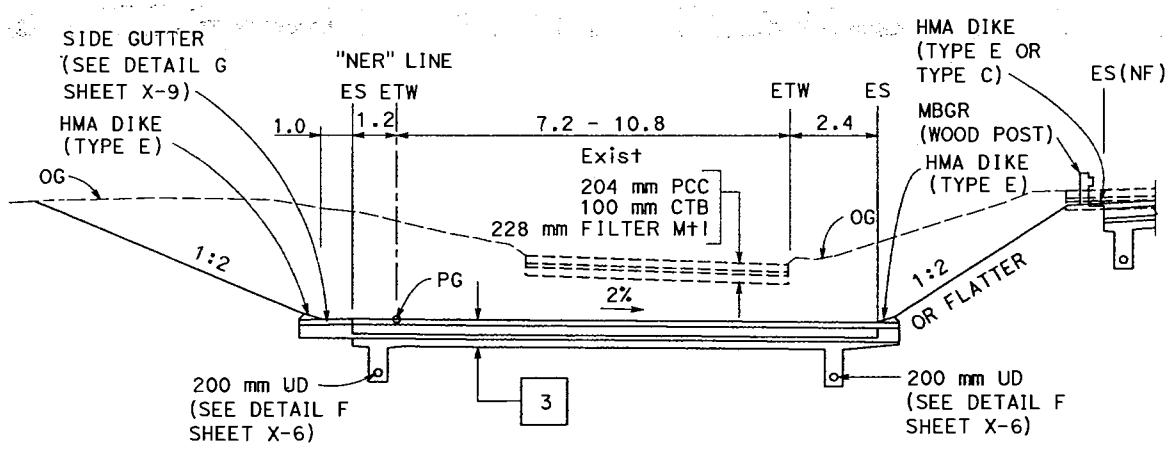

STA "NER" 10+62.87 TO 11+43.00

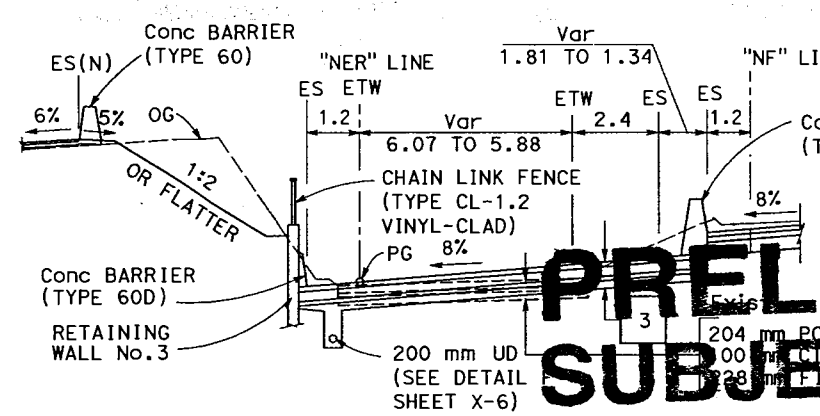

STA "NER" 12+77.00 TO 12+98.00

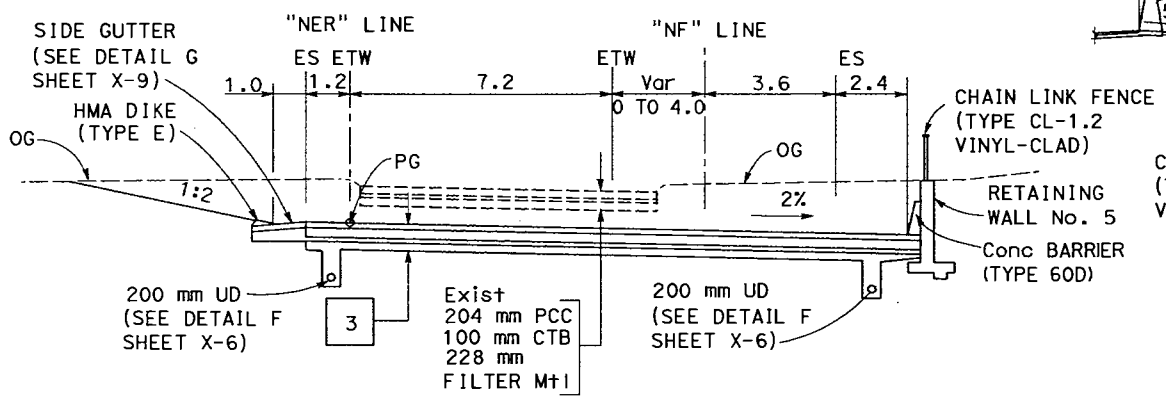

STA "NER" 10+46.53 TO 10+62.87

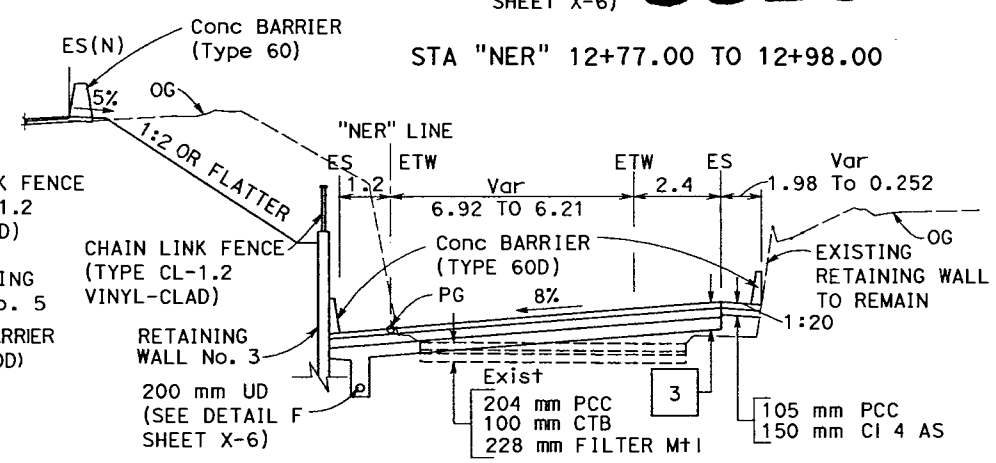

STA "NER" 12+48.56 TO 12+77.00

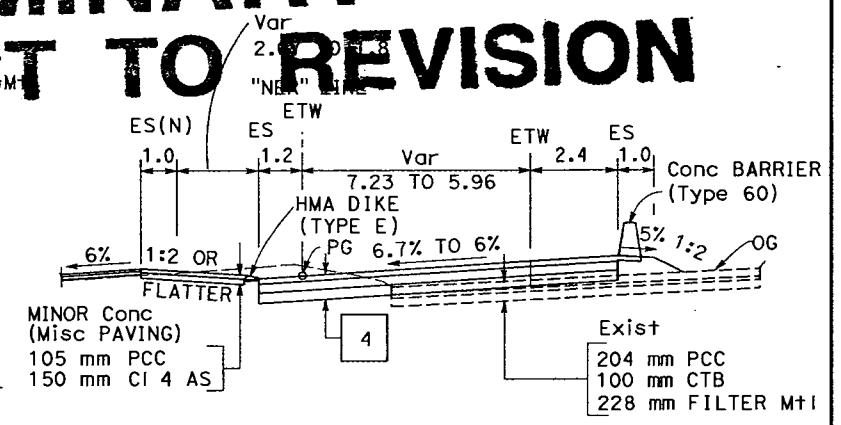

STA "NER" 13+58.74 TO 13+70.00

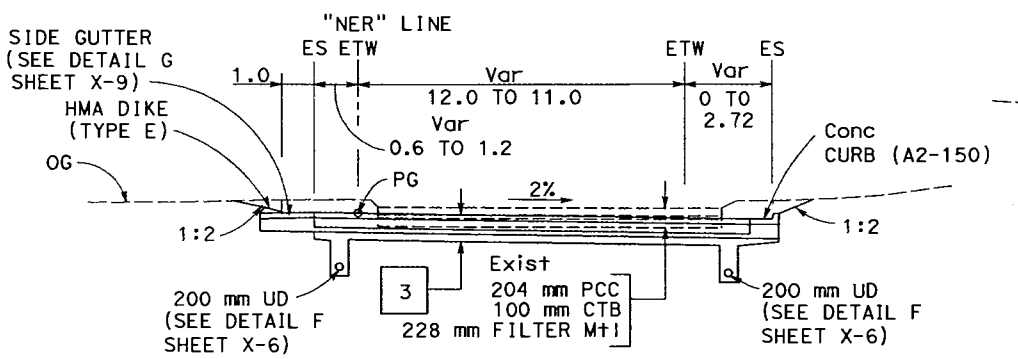

STA "NER" 10+22.00 TO 10+46.53

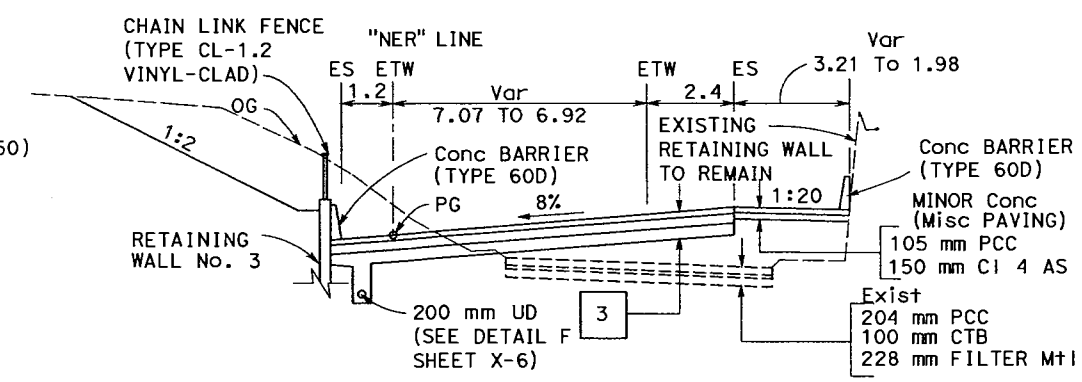

STA "NER" 12+39.22 TO 12+48.56

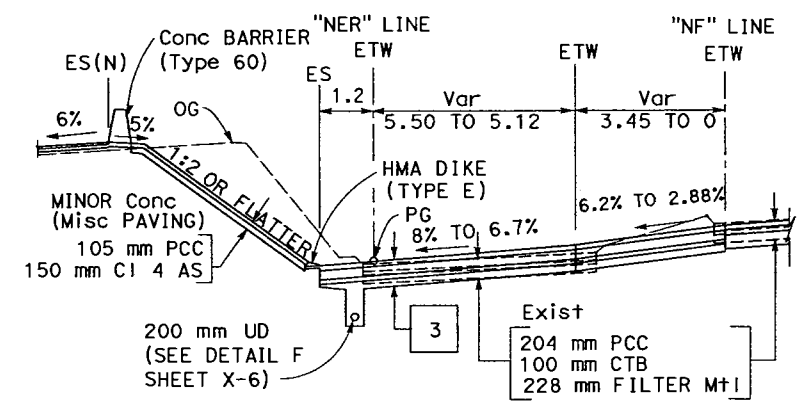

STA "NER" 13+09.07 TO 13+58.74

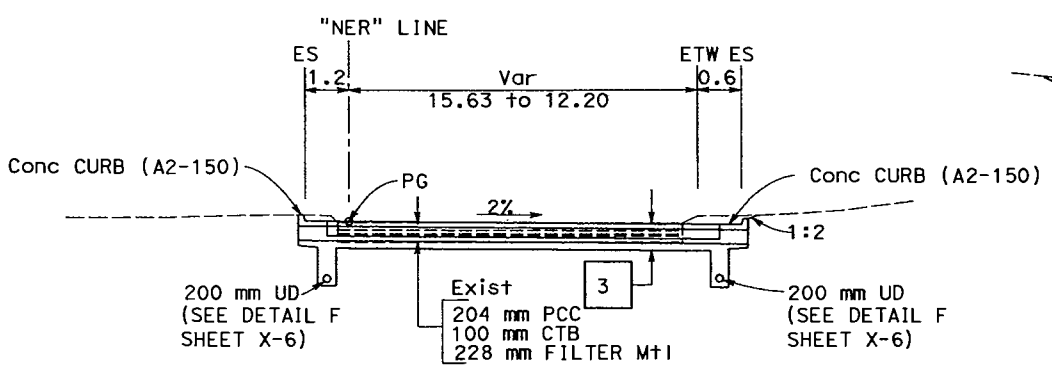

STA "NER" 10+15.65 TO 10+22.00

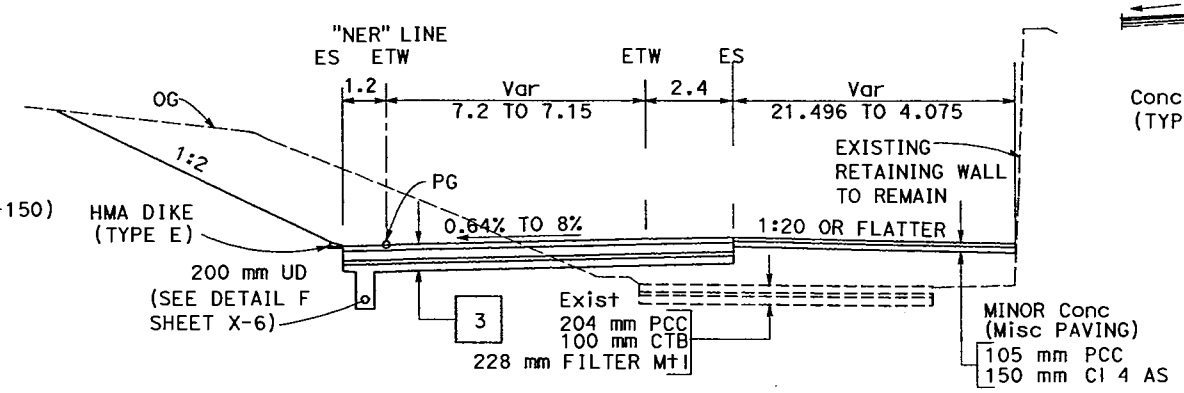

STA "NER" 11+80.00 TO 12+39.22

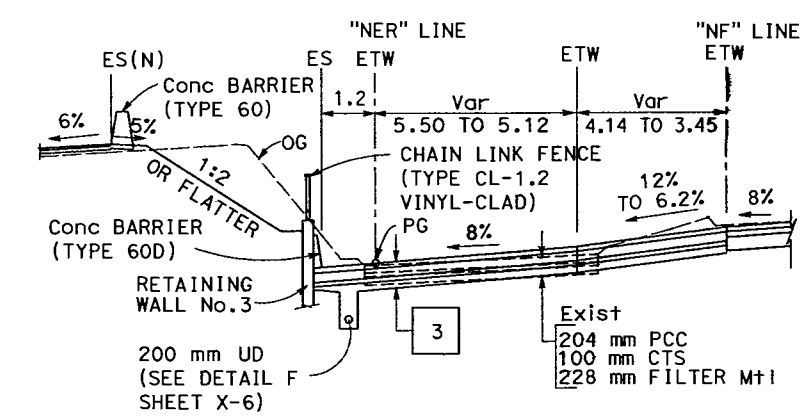

STA "NER" 12+98.00 TO 13+09.07

TYPICAL CROSS SECTIONS

NO SCALE

ALL DIMENSIONS ARE IN METERS UNLESS OTHERWISE SHOWN

X-7

REVISED BY	DATE REVISED

CALCULATED-DESIGNED BY	CHECKED BY
DEL TABANCAY	QI LIU

FUNCTIONAL SUPERVISOR: ALBERT J. ZEPEDA

STATE OF CALIFORNIA - DEPARTMENT OF TRANSPORTATION — Caltrans — DESIGN

LAST REVISION 01-07-08 — DATE PLOTTED => 31-JAN-2008 — TIME PLOTTED => 10:05

Dist	COUNTY	ROUTE	KILOMETER POST TOTAL PROJECT	SHEET No.	TOTAL SHEETS
04	Ala	880	43.9/45.4		

REGISTERED CIVIL ENGINEER 1-7-08 DATE

PLANS APPROVAL DATE

REGISTERED PROFESSIONAL ENGINEER Q. Liu No. 64455 Exp. 6-30-09 CIVIL STATE OF CALIFORNIA

THE STATE OF CALIFORNIA OR ITS OFFICERS OR AGENTS SHALL NOT BE RESPONSIBLE FOR THE ACCURACY OR COMPLETENESS OF ELECTRONIC COPIES OF THIS PLAN SHEET.

Caltrans Metric

PRELIMINARY SUBJECT TO REVISION

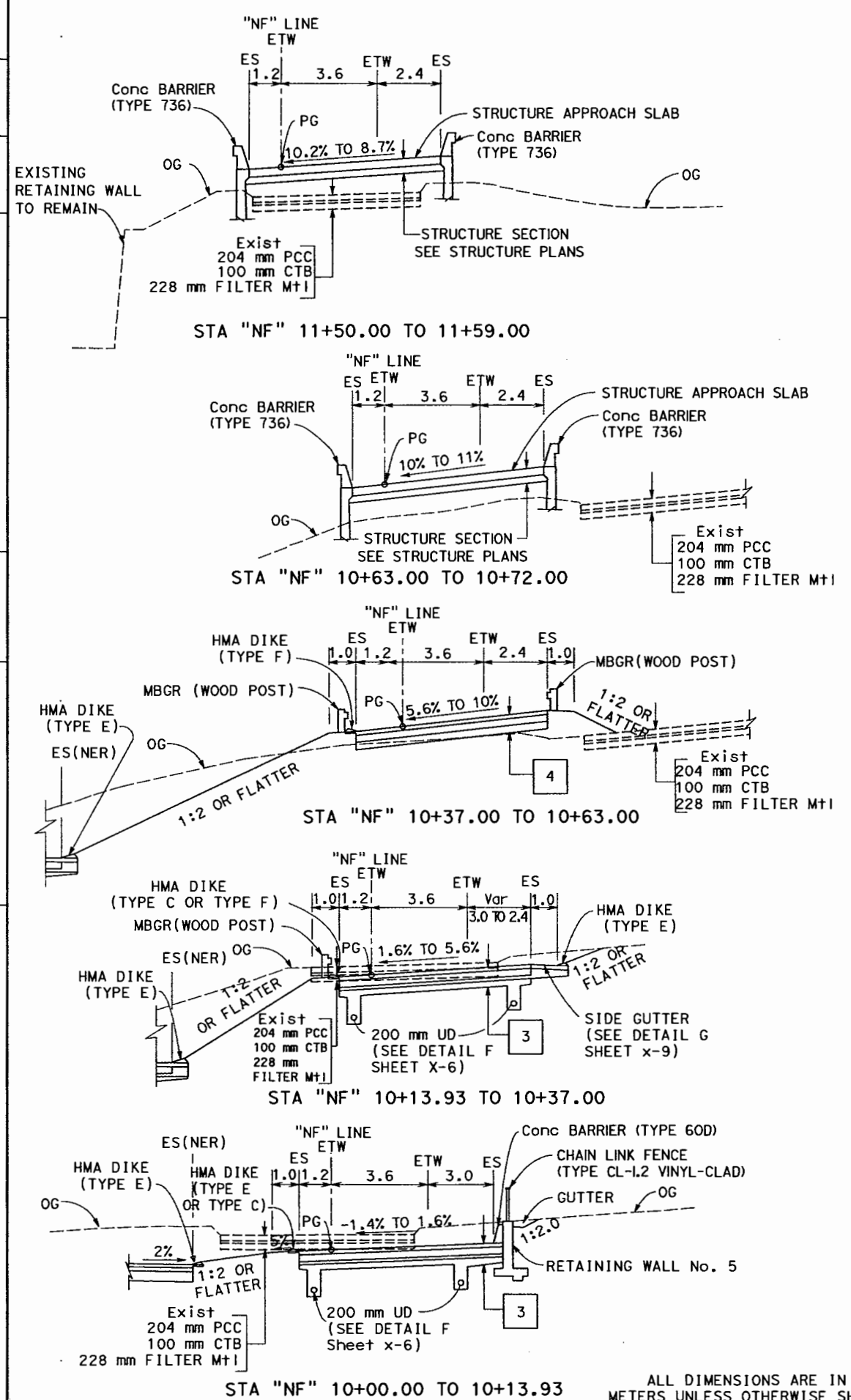

ALL DIMENSIONS ARE IN METERS UNLESS OTHERWISE SHOWN

FOR NOTES, ABBREVIATIONS &/OR LEGEND, SEE SHEET X-1

TYPICAL CROSS SECTIONS

NO SCALE

X-8

REVISED BY	DATE REVISED

DEL TABANCAY — QI LIU — CALCULATED-DESIGNED BY — CHECKED BY

FUNCTIONAL SUPERVISOR: ALBERT J. ZEPEDA

STATE OF CALIFORNIA - DEPARTMENT OF TRANSPORTATION — DESIGN

LAST REVISION 01-07-08 — PLOTTED => 31-JAN-2008 — TIME => 13:41

BORDER LAST REVISED 3/1/2007 — RELATIVE BORDER SCALE IS IN MILLIMETERS 0 20 40 60 80 — USERNAME => s132175 — DGN FILE => 416542ca008.dgn — CU 04250 — EA 165421

Dist	COUNTY	ROUTE	KILOMETER POST TOTAL PROJECT	SHEET No.	TOTAL SHEETS
04	Ala	880	43.9/45.4		

REGISTERED CIVIL ENGINEER 1-7-08 DATE

PLANS APPROVAL DATE

REGISTERED PROFESSIONAL ENGINEER Q. Liu No. 64455 Exp. 6-30-09 CIVIL STATE OF CALIFORNIA

THE STATE OF CALIFORNIA OR ITS OFFICERS OR AGENTS SHALL NOT BE RESPONSIBLE FOR THE ACCURACY OR COMPLETENESS OF ELECTRONIC COPIES OF THIS PLAN SHEET.

Caltrans Metric

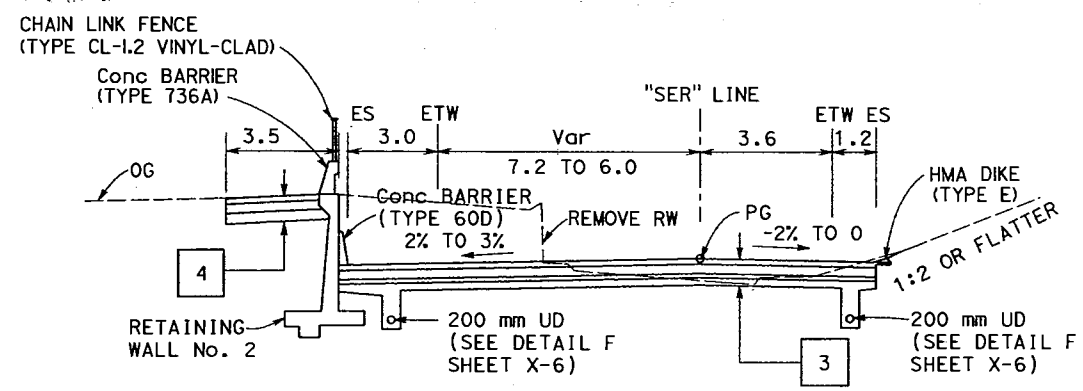

STA "SER" 11+00.21 TO 12+26.00

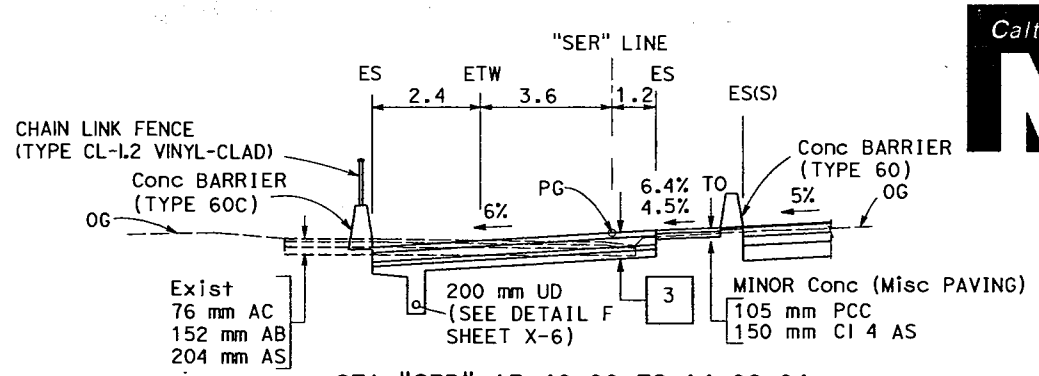

STA "SER" 13+40.00 TO 14+06.04

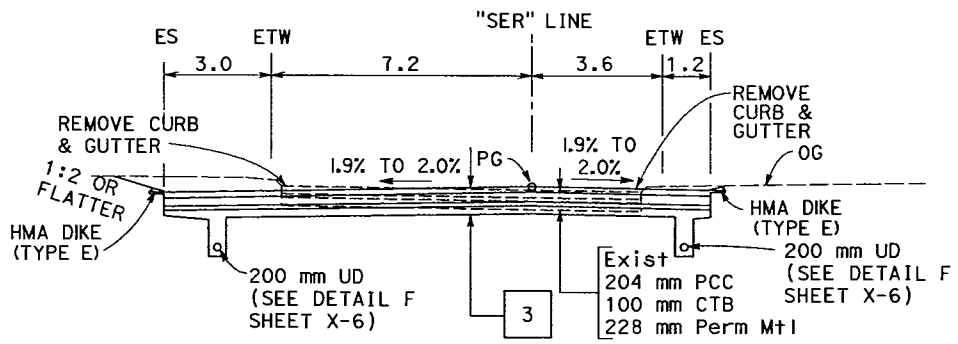

STA "SER" 10+50.00 TO 11+00.21

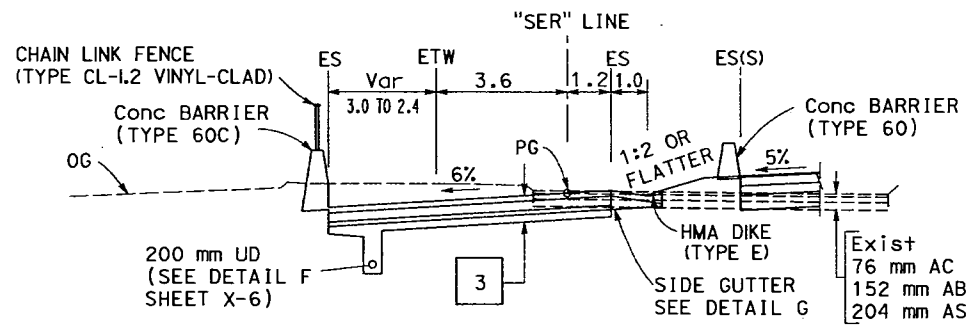

STA "SER" 13+20.48 TO 13+40.00

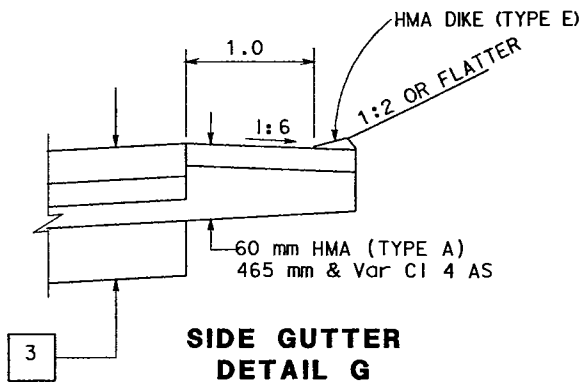

SIDE GUTTER DETAIL G

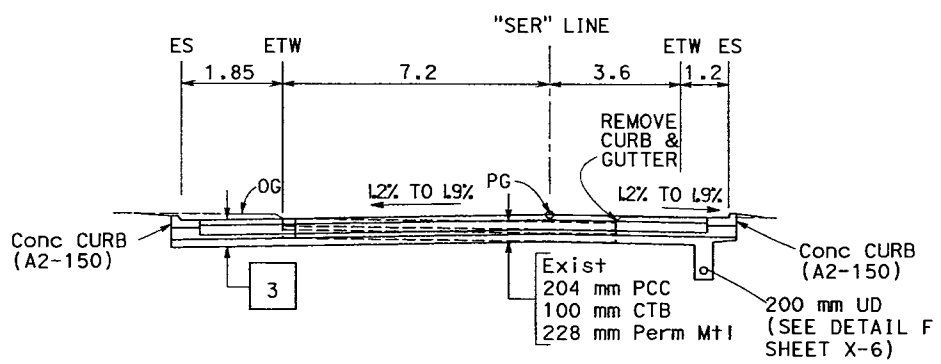

STA "SER" 10+21.00 TO 10+50.00

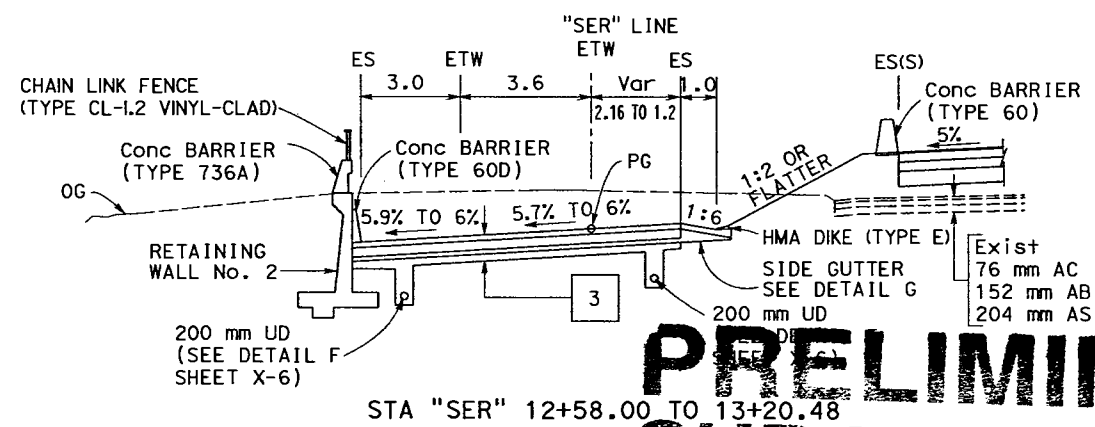

STA "SER" 12+58.00 TO 13+20.48

PRELIMINARY SUBJECT TO REVISION

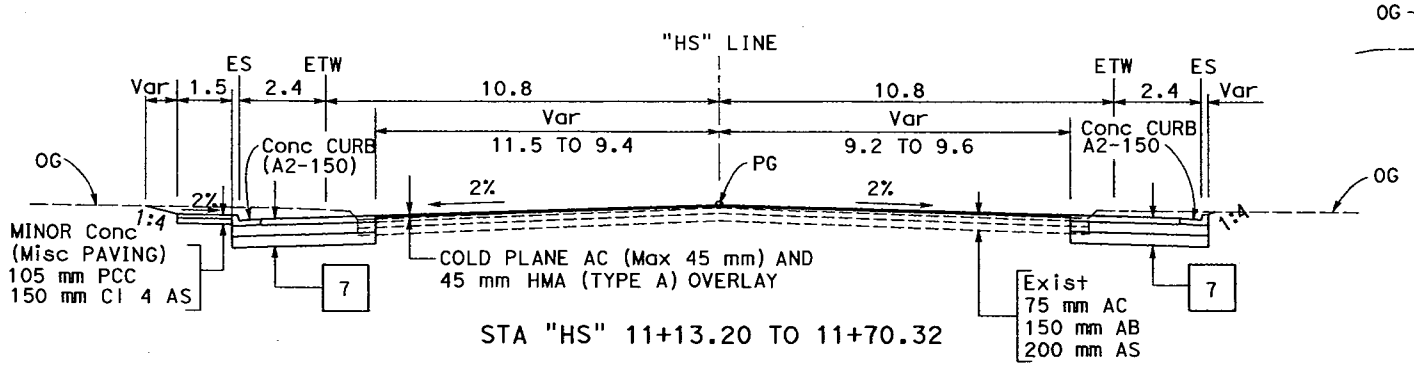

STA "HS" 11+13.20 TO 11+70.32

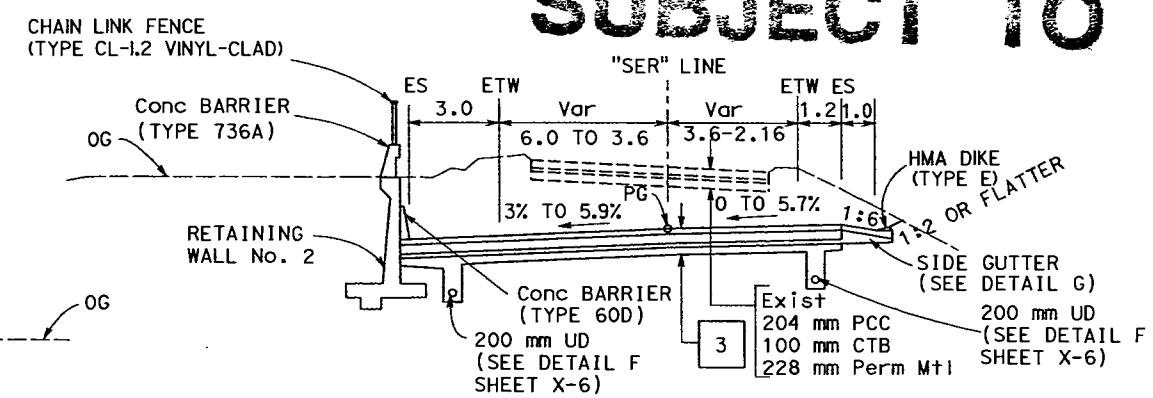

STA "SER" 12+26.00 TO 12+58.00

FOR NOTES, ABBREVIATIONS &/OR LEGEND, SEE SHEET X-1

ALL DIMENSIONS ARE IN METERS UNLESS OTHERWISE SHOWN

TYPICAL CROSS SECTIONS

NO SCALE

X-9

REVISED BY	DATE REVISED

CALCULATED-DESIGNED BY	CHECKED BY
DEL TABANCAY	QI LIU

FUNCTIONAL SUPERVISOR: ALBERT J. ZEPEDA

STATE OF CALIFORNIA - DEPARTMENT OF TRANSPORTATION

Caltrans DESIGN

LAST REVISION 01-07-08 DATE PLOTTED => 31-JAN-2008 TIME PLOTTED => 10:05

Dist	COUNTY	ROUTE	KILOMETER POST TOTAL PROJECT	SHEET No.	TOTAL SHEETS
04	Ala	880	43.9/45.4		

REGISTERED CIVIL ENGINEER — DATE 1-7-08

PLANS APPROVAL DATE

REGISTERED PROFESSIONAL ENGINEER — Q. Liu — No. 64455 — Exp. 6-30-09 — CIVIL — STATE OF CALIFORNIA

THE STATE OF CALIFORNIA OR ITS OFFICERS OR AGENTS SHALL NOT BE RESPONSIBLE FOR THE ACCURACY OR COMPLETENESS OF ELECTRONIC COPIES OF THIS PLAN SHEET.

Caltrans Metric

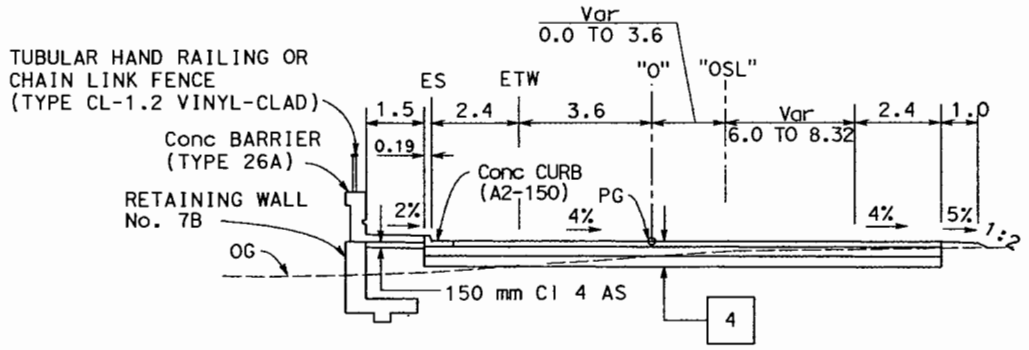

STA "O" 12+67.15 TO 12+82.51

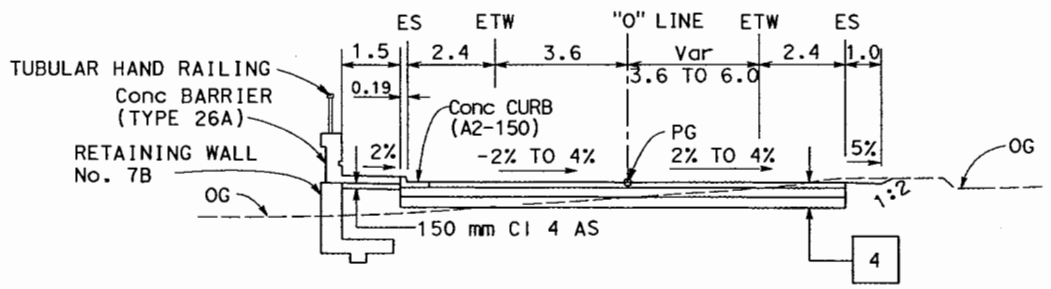

STA "O" 11+96.88 TO 12+67.15

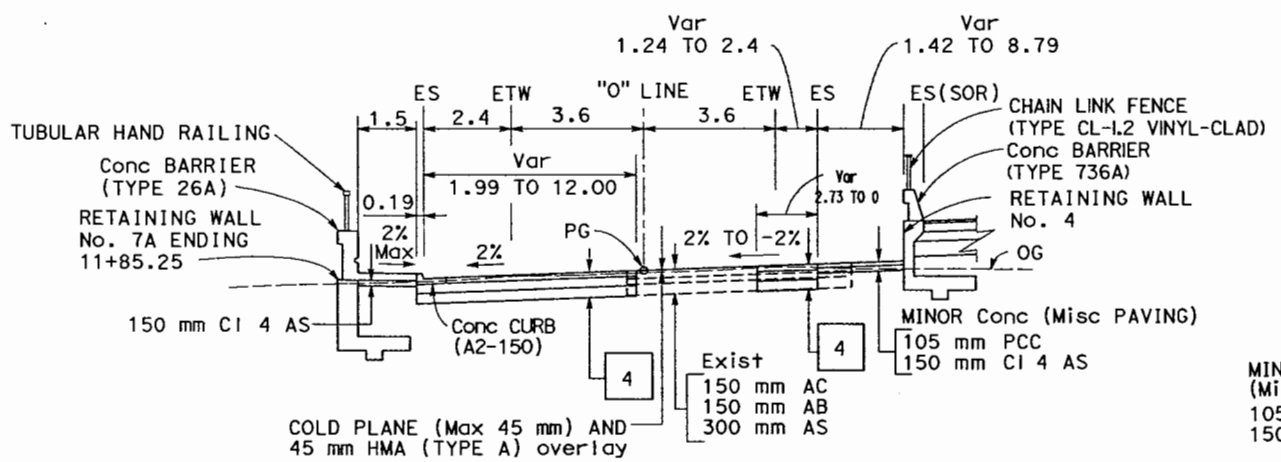

STA "O" 11+16.69 TO 11+96.88

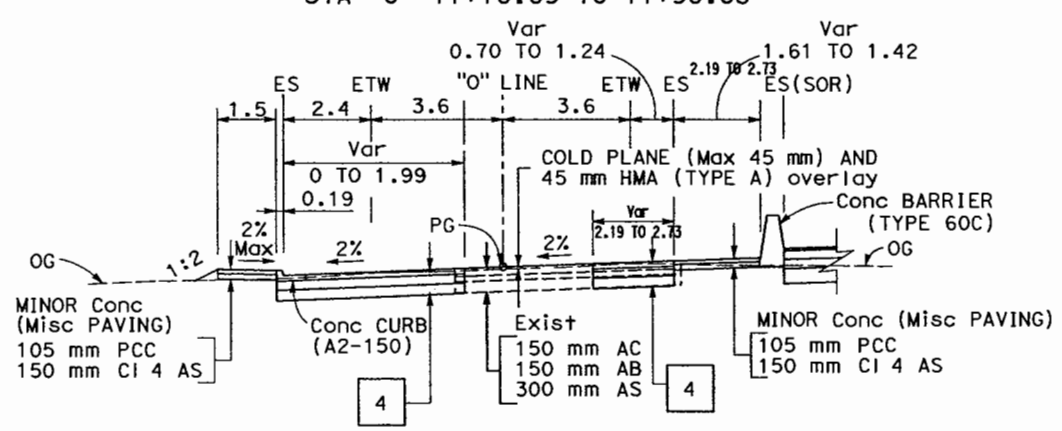

STA "O" 11+07.25 TO 11+16.69

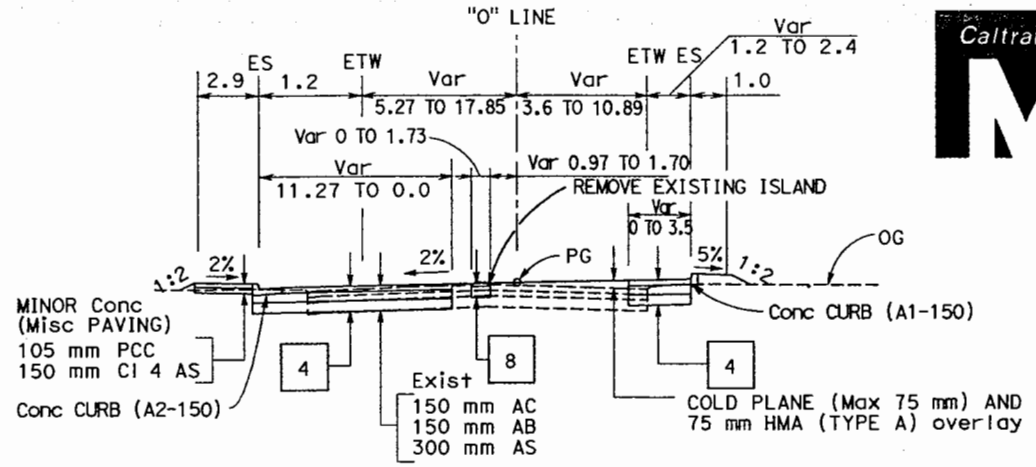

STA "O" 14+40.00 TO 15+19.00

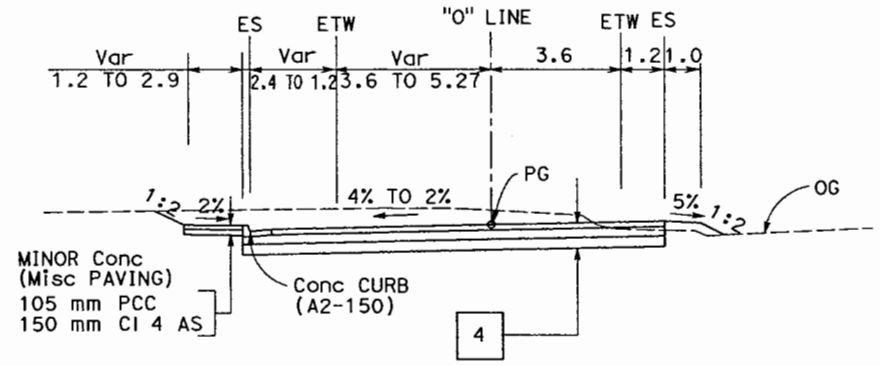

STA "O" 13+57.95 TO 14+40.00

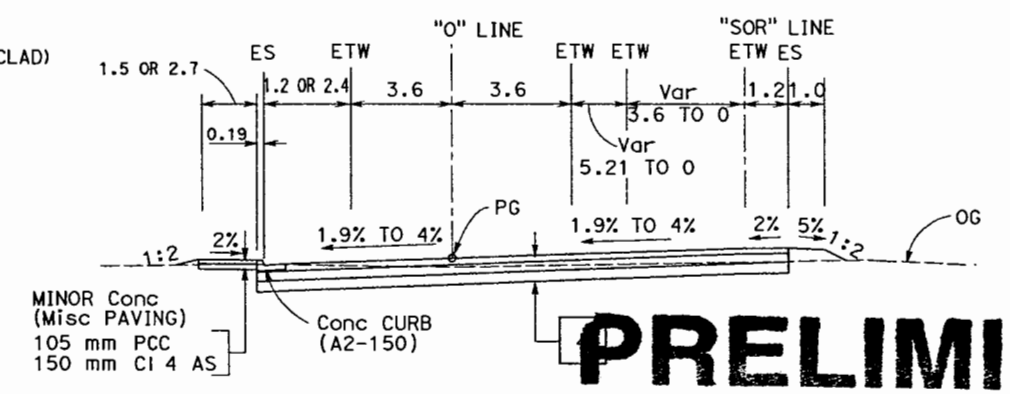

STA "O" 13+34.88 TO 13+57.95

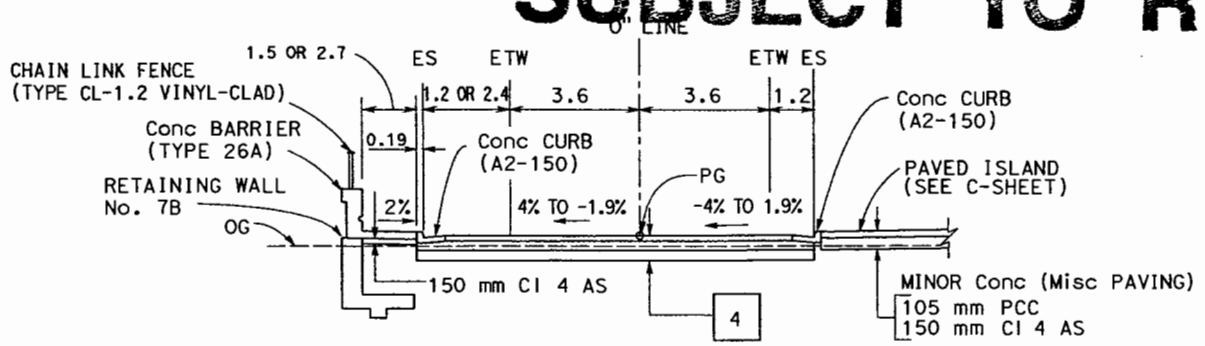

STA "O" 12+82.51 TO 13+34.88

PRELIMINARY
SUBJECT TO REVISION

FOR NOTES, ABBREVIATIONS &/OR LEGEND, SEE SHEET X-1

ALL DIMENSIONS ARE IN METERS UNLESS OTHERWISE SHOWN

TYPICAL CROSS SECTIONS

NO SCALE

X-10

STATE OF CALIFORNIA - DEPARTMENT OF TRANSPORTATION
Caltrans DESIGN

FUNCTIONAL SUPERVISOR: ALBERT J. ZEPEDA
CALCULATED-DESIGNED BY: DEL TABANCAY
CHECKED BY: QI LIU
REVISED BY / DATE REVISED

LAST REVISION 01-07-08 — DATE PLOTTED => 31-JAN-2008 — TIME PLOTTED => 10:05

BORDER LAST REVISED 3/1/2007

RELATIVE BORDER SCALE IS IN MILLIMETERS 0 20 40 60 80

USERNAME => s132175
DGN FILE => 416542ca010.dgn

CU 04250 | EA 165421

Dist	COUNTY	ROUTE	KILOMETER POST TOTAL PROJECT	SHEET No.	TOTAL SHEETS
04	Ala	880	43.9/45.4		

REGISTERED CIVIL ENGINEER — DATE 1-7-08

PLANS APPROVAL DATE

REGISTERED PROFESSIONAL ENGINEER — Jie Yao — No. 54754 — Exp. 12-31-09 — CIVIL — STATE OF CALIFORNIA

THE STATE OF CALIFORNIA OR ITS OFFICERS OR AGENTS SHALL NOT BE RESPONSIBLE FOR THE ACCURACY OR COMPLETENESS OF ELECTRONIC COPIES OF THIS PLAN SHEET.

Caltrans Metric

FOR COMPLETE RIGHT OF WAY AND ACCURATE ACCESS DATA, SEE RIGHT OF WAY RECORD MAPS AT DISTRICT OFFICE.

ABBREVIATIONS:

PTE&C	PERMIT TO ENTRY AND CONSTRUCT
TCE	TEMPORARY CONSTRUCTION EASEMENT
UE	UTILITY EASEMENT
PUE	PUBLIC UTILITY EASEMENT

LEGEND

- COLD PLANE AC PAVEMENT (SEE PAVEMENT CONFORM DETAIL ON C-SHEET)
- MINOR Conc (Misc PAVING)
- COLD PLANE AC PAVEMENT (45 mm Max)AND HMA SURFACING 30 mm OGFC
- No. STRUCTURAL SECTION NUMBER
- No. CURVE ALIGNMENT DATA
- CRASH CUSHION, SAND FILL
- IRRIGATION CROSSOVER
- ARCHAEOLOGICAL STUDY AREA (ASA)

NOTES:

1. COORDINATE VALUES SHOWN ARE CCS83, ZONE 3. VERTICAL DATUM IS NAVD 1988.
2. AC DIKE TYPE TRANSITIONS ARE 1.2 m LONG UNLESS OTHERWISE SHOWN.
3. SEE R-SHEET FOR RETAINING WALLS.
4. SEE C-SHEET FOR LOCATION OF REMOVE CONCRETE PAVEMENT AND REMOVE BASE & SURFACING.
5. WITHIN THE LIMITS OF PLACING HMA LEVELING AND OR SURFACING, THE EXISTING OGAC SHALL BE COMPLETELY COLD PLANED.
6. FOR DETAILS AND LIMIT OF CONCRETE BARRIER TYPE, SEE C- SHEET AND Q-SHEET.

O A K L A N D

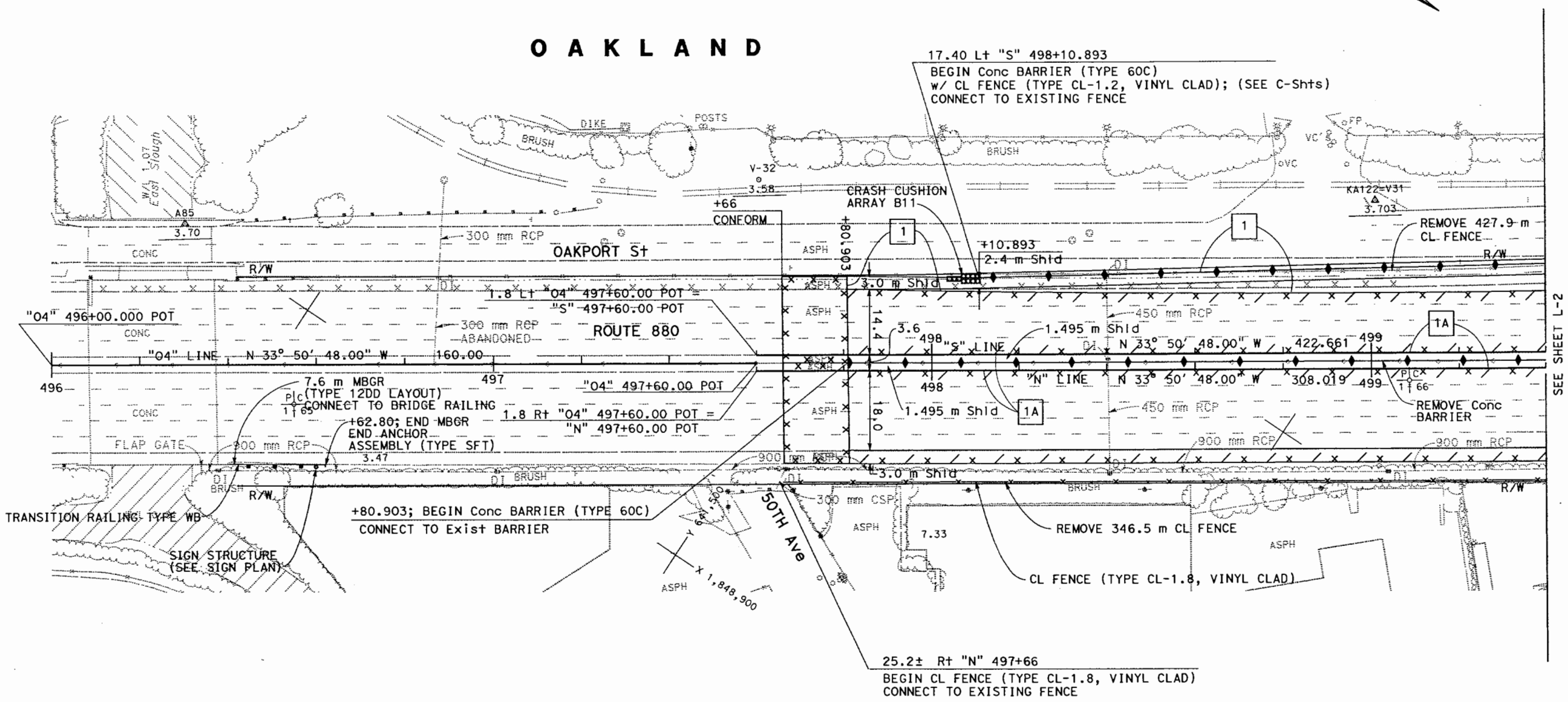

PRELIMINARY
SUBJECT TO REVISION

LAYOUT
SCALE 1:500

ALL DIMENSIONS ARE IN METERS UNLESS OTHERWISE SHOWN

L-1

STATE OF CALIFORNIA - DEPARTMENT OF TRANSPORTATION
Caltrans
DESIGN

FUNCTIONAL SUPERVISOR: ALBERT J. ZEPEDA
CALCULATED-DESIGNED BY: D. TABANCAY
CHECKED BY: JIE YAO
REVISED BY / DATE REVISED

LAST REVISION 01-09-08 — DATE PLOTTED => 31-JAN-2008 — TIME PLOTTED => 10:45

BORDER LAST REVISED 3/1/2007 — RELATIVE BORDER SCALE IS IN MILLIMETERS 0 20 40 60 80 — USERNAME => s132175 — DGN FILE => 416542ed001.dgn — CU 04250 — EA 165421

Dist	COUNTY	ROUTE	KILOMETER POST TOTAL PROJECT	SHEET No.	TOTAL SHEETS
04	Ala	880	43.9/45.4		

REGISTERED CIVIL ENGINEER — DATE 1-7-08

PLANS APPROVAL DATE

REGISTERED PROFESSIONAL ENGINEER — Jie Yao — No. 54754 — Exp. 12-31-09 — CIVIL — STATE OF CALIFORNIA

THE STATE OF CALIFORNIA OR ITS OFFICERS OR AGENTS SHALL NOT BE RESPONSIBLE FOR THE ACCURACY OR COMPLETENESS OF ELECTRONIC COPIES OF THIS PLAN SHEET.

Caltrans Metric

OAKLAND

FOR COMPLETE RIGHT OF WAY AND ACCURATE ACCESS DATA, SEE RIGHT OF WAY RECORD MAPS AT DISTRICT OFFICE.

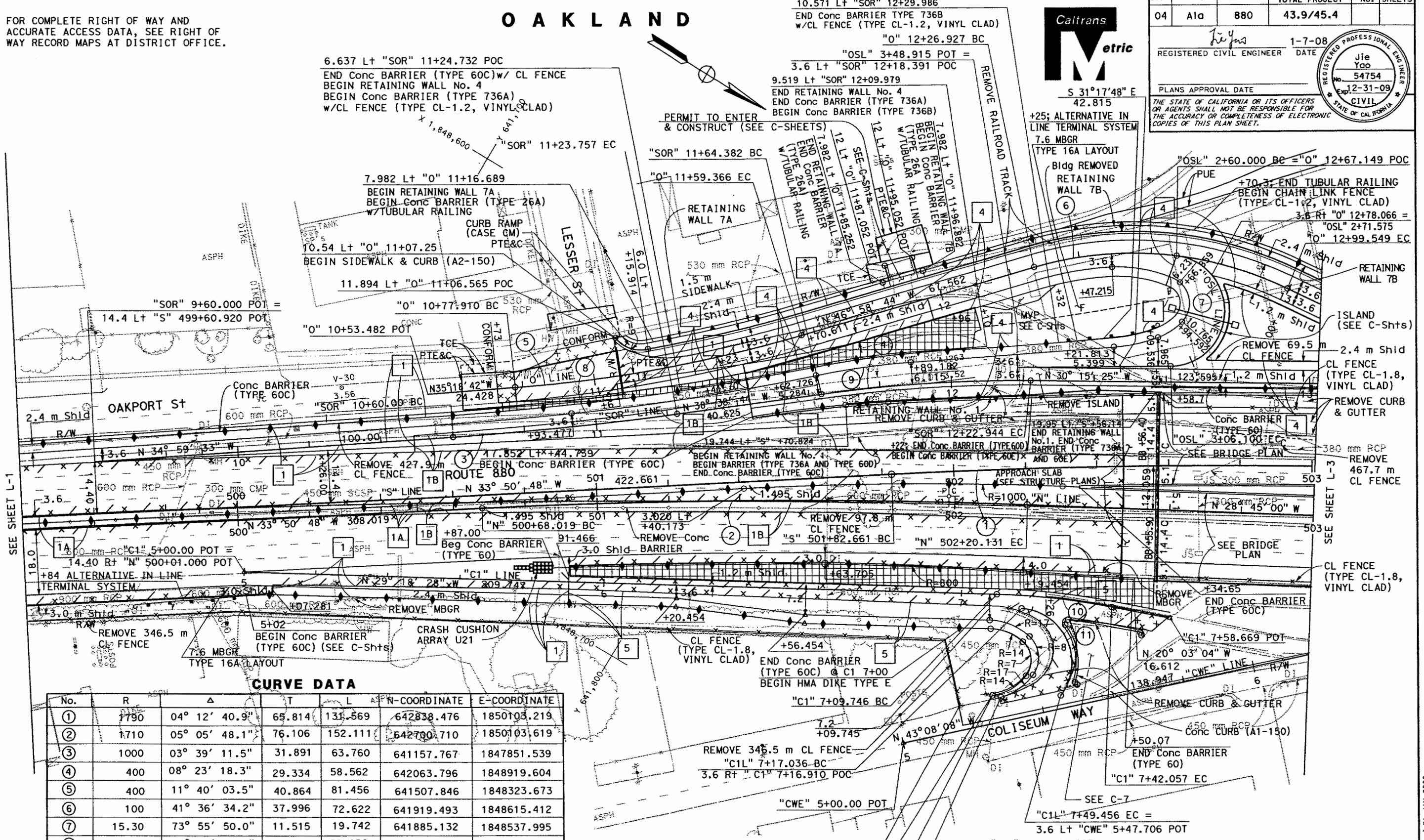

CURVE DATA

No.	R	Δ	T	L	N-COORDINATE	E-COORDINATE
①	1790	04° 12' 40.9"	65.814	131.569	642838.476	1850103.219
②	1710	05° 05' 48.1"	76.106	152.111	642700.710	1850103.619
③	1000	03° 39' 11.5"	31.891	63.760	641157.767	1847851.539
④	400	08° 23' 18.3"	29.334	58.562	642063.796	1848919.604
⑤	400	11° 40' 03.5"	40.864	81.456	641507.846	1848323.673
⑥	100	41° 36' 34.2"	37.996	72.622	641919.493	1848615.412
⑦	15.30	73° 55' 50.0"	11.515	19.742	641885.132	1848537.995
⑧	720	05° 30' 16.3"	34.613	69.172	———	———
⑨	210	07° 19' 22.0"	13.438	26.839	———	———
⑩	200	02° 39' 03.5"	4.628	9.254	641981.449	1848804.427
⑪	15.00	144° 35' 46.6"	46.996	7.855	641898.375	1848643.168

PRELIMINARY SUBJECT TO REVISION

FOR NOTES, ABBREVIATIONS &/OR LEGEND, SEE SHEET L-1

ALL DIMENSIONS ARE IN METERS UNLESS OTHERWISE SHOWN

SCALE 1:500

L-2

REVISED BY	DATE REVISED
DEL TABANCAY	JIE YAO
CALCULATED-DESIGNED BY	CHECKED BY
FUNCTIONAL SUPERVISOR	ALBERT J. ZEPEDA

STATE OF CALIFORNIA - DEPARTMENT OF TRANSPORTATION — Caltrans — DESIGN

LAST REVISION 01-09-08 — PLOTTED => 31-JAN-2008 — PLOTTED => 13:35

Dist	COUNTY	ROUTE	KILOMETER POST TOTAL PROJECT	SHEET No.	TOTAL SHEETS
04	Ala	880	43.9/45.4		

REGISTERED CIVIL ENGINEER — DATE 1-7-08

PLANS APPROVAL DATE

REGISTERED PROFESSIONAL ENGINEER — Jie Yao — No. 54754 — Exp. 12-31-09 — CIVIL — STATE OF CALIFORNIA

THE STATE OF CALIFORNIA OR ITS OFFICERS OR AGENTS SHALL NOT BE RESPONSIBLE FOR THE ACCURACY OR COMPLETENESS OF ELECTRONIC COPIES OF THIS PLAN SHEET.

Caltrans Metric

FOR COMPLETE RIGHT OF WAY AND ACCURATE ACCESS DATA, SEE RIGHT OF WAY RECORD MAPS AT DISTRICT OFFICE.

CURVE DATA

No.	R	Δ	T	L	N-COORDINATE	E-COORDINATE
1	1790	04° 12′ 09″	65.814	131.539	642838.476	1850103.219
2	100	21° 59′ 07.3″	19.425	38.370	641938.810	1848412.715
3	300	09° 35′ 13.4″	25.158	50.198	641917.389	1848198.617
4	335	19° 36′ 05.9″	57.869	114.608	642212.828	1848828.224

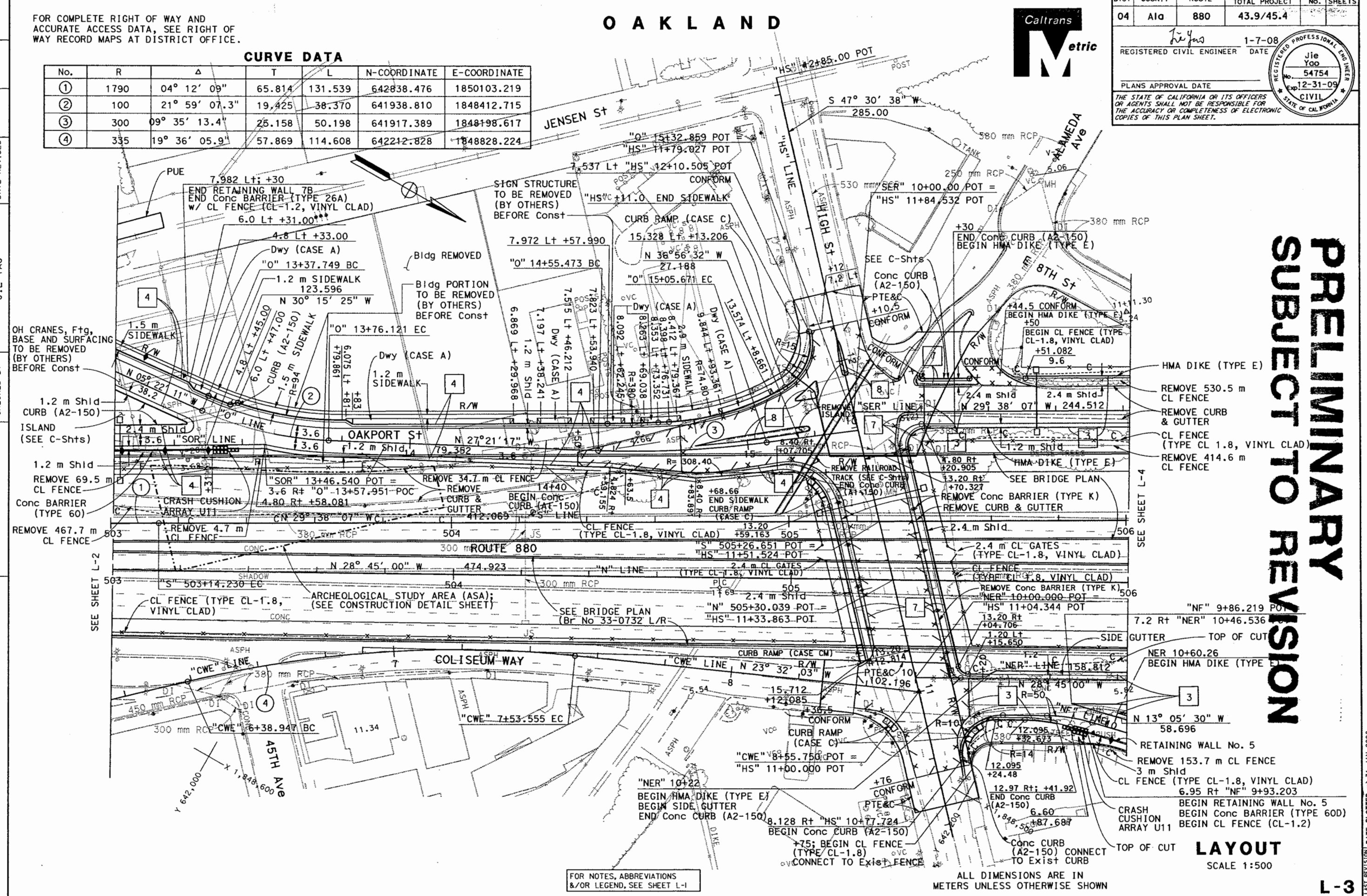

PRELIMINARY SUBJECT TO REVISION

ALL DIMENSIONS ARE IN METERS UNLESS OTHERWISE SHOWN

LAYOUT

SCALE 1:500

L-3

REVISED BY	DATE REVISED
DEL TABANCAY	JIE YAO

CALCULATED-DESIGNED BY — CHECKED BY

FUNCTIONAL SUPERVISOR — ALBERT J. ZEPEDA

STATE OF CALIFORNIA - DEPARTMENT OF TRANSPORTATION — Caltrans — DESIGN

LAST REVISION 01-09-08 — DATE PLOTTED => 31-JAN-2008 — TIME PLOTTED => 10:45

STATE OF CALIFORNIA - DEPARTMENT OF TRANSPORTATION

Caltrans

DESIGN

FUNCTIONAL SUPERVISOR	CALCULATED-DESIGNED BY	CHECKED BY	REVISED BY	DATE REVISED
ALBERT J. ZEPEDA	DEL TABANCAY	JIE YAO		

FOR COMPLETE RIGHT OF WAY AND ACCURATE ACCESS DATA, SEE RIGHT OF WAY RECORD MAPS AT DISTRICT OFFICE.

NOTE

1. FOR MORE CURVE DATA, SEE CONSTRUCTION DETAIL SHEETS.

CURVE DATA

No.	R	Δ	T	L	N-COORDINATE	E-COORDINATE
①	670	37° 27′ 47.4"	227.192	438.083	641972.336	1847788.577
②	680	36° 34′ 39.7"	224.742	434.113	641975.284	1847752.560
③	200	06° 22′ 32.0"	11.139	22.255	642423.587	1848229.914
④	722	04° 33′ 08"	28.697	57.364	641961.825	1847767.739
⑤	150	12° 14′ 07.8"	16.077	32.032	642203.294	1848503.400
⑥	488	04° 10′ 14.0"	17.769	35.521	642742.113	1848161.169
⑦	182	01° 41′ 21.7"	2.683	5.366	642502.288	1848351.221
⑧	200	33° 41′ 36.6"	60.562	117.613	642225.996	1848252.954

Caltrans Metric

Dist	COUNTY	ROUTE	KILOMETER POST TOTAL PROJECT	SHEET No.	TOTAL SHEETS
04	Ala	880	43.9/45.4		

Jie Yao 1-7-08
REGISTERED CIVIL ENGINEER DATE

PLANS APPROVAL DATE

THE STATE OF CALIFORNIA OR ITS OFFICERS OR AGENTS SHALL NOT BE RESPONSIBLE FOR THE ACCURACY OR COMPLETENESS OF ELECTRONIC COPIES OF THIS PLAN SHEET.

REGISTERED PROFESSIONAL ENGINEER Jie Yao No. 54754 Exp. 12-31-09 CIVIL STATE OF CALIFORNIA

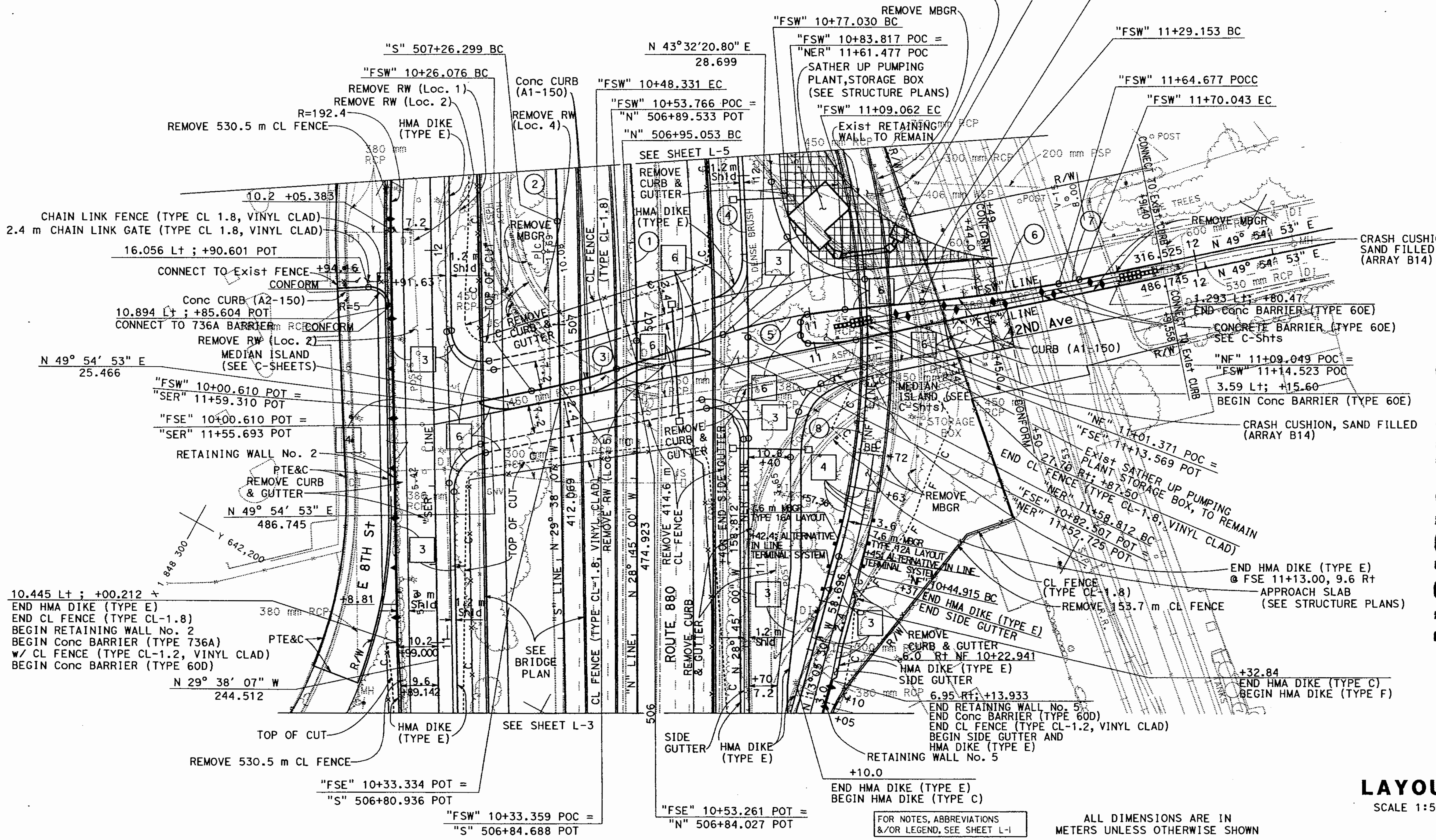

PRELIMINARY SUBJECT TO REVISION

FOR NOTES, ABBREVIATIONS &/OR LEGEND, SEE SHEET L-1

ALL DIMENSIONS ARE IN METERS UNLESS OTHERWISE SHOWN

LAYOUT

SCALE 1:500

L-4

BORDER LAST REVISED 3/1/2007

RELATIVE BORDER SCALE IS IN MILLIMETERS 0 20 40 60 80

USERNAME => s132175
DGN FILE => 416542ea004.dgn

CU 04250 | EA 165421

LAST REVISION 01-09-08 DATE TIME ED => 31-JAN-2008 ED => 10:45

Dist	COUNTY	ROUTE	KILOMETER POST TOTAL PROJECT	SHEET No.	TOTAL SHEETS
04	Ala	880	43.9/45.4		

REGISTERED CIVIL ENGINEER — DATE 1-7-08

PLANS APPROVAL DATE

REGISTERED PROFESSIONAL ENGINEER — Jie Yao — No. 54754 — Exp. 12-31-09 — CIVIL — STATE OF CALIFORNIA

THE STATE OF CALIFORNIA OR ITS OFFICERS OR AGENTS SHALL NOT BE RESPONSIBLE FOR THE ACCURACY OR COMPLETENESS OF ELECTRONIC COPIES OF THIS PLAN SHEET.

Caltrans Metric

FOR COMPLETE RIGHT OF WAY AND ACCURATE ACCESS DATA, SEE RIGHT OF WAY RECORD MAPS AT DISTRICT OFFICE.

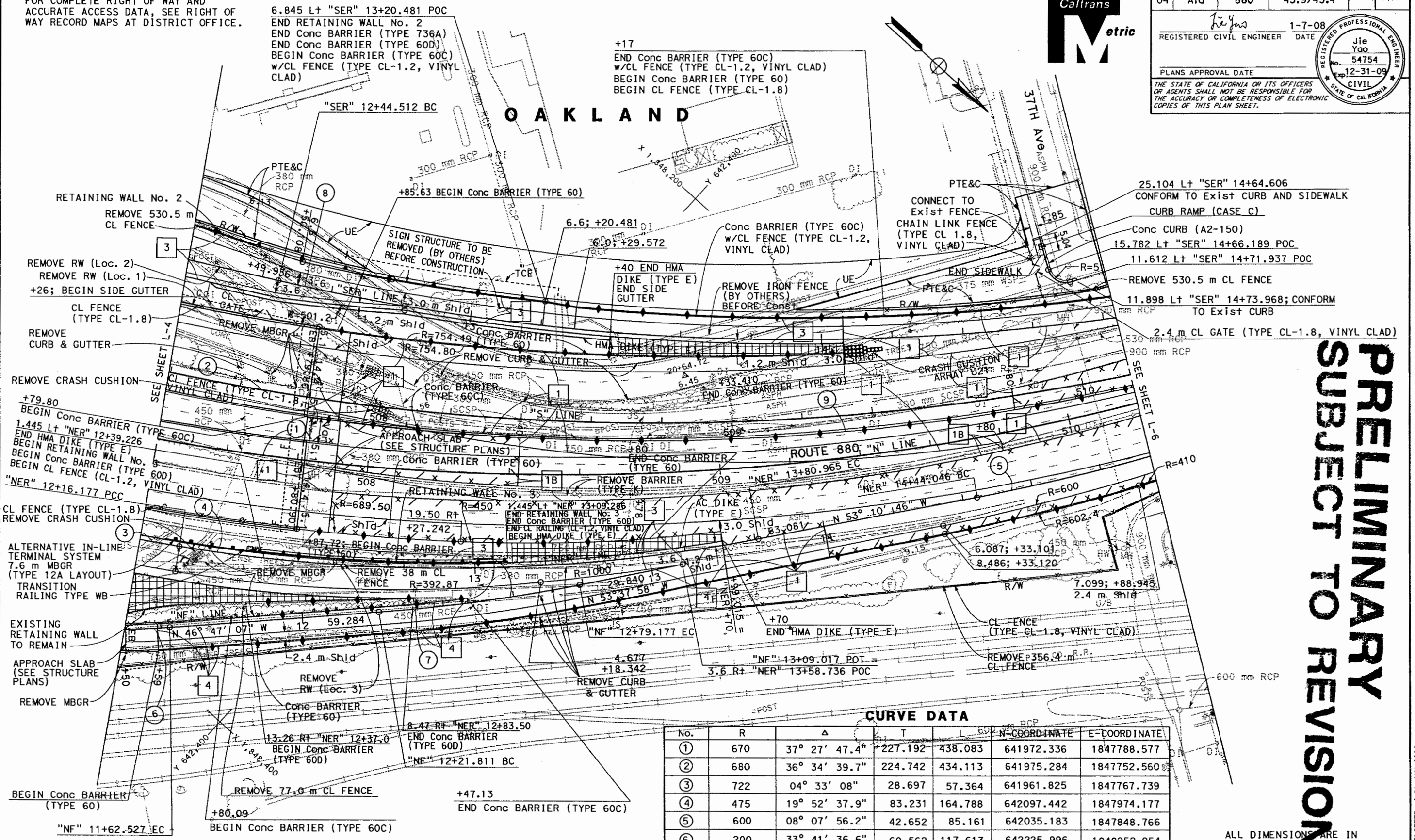

CURVE DATA

No.	R	Δ	T	L	N-COORDINATE	E-COORDINATE
1	670	37° 27′ 47.4″	227.192	438.083	641972.336	1847788.577
2	680	36° 34′ 39.7″	224.742	434.113	641975.284	1847752.560
3	722	04° 33′ 08″	28.697	57.364	641961.825	1847767.739
4	475	19° 52′ 37.9″	83.231	164.788	642097.442	1847974.177
5	600	08° 07′ 56.2″	42.652	85.161	642035.183	1847848.766
6	200	33° 41′ 36.6″	60.562	117.613	642225.996	1848252.954
7	480	06° 50′ 50.9″	28.717	57.365	642062.528	1848018.022
8	665	23° 39′ 29.6″	139.278	274.588	641999.402	1847719.074
9	655.97	32° 04′ 12.7″	188.532	367.169	—	—

FOR NOTES, ABBREVIATIONS &/OR LEGEND, SEE SHEET L-1

ALL DIMENSIONS ARE IN METERS UNLESS OTHERWISE SHOWN

LAYOUT

SCALE 1:500

PRELIMINARY SUBJECT TO REVISION

L-5

REVISED BY	DATE REVISED
DEL TABANCAY	JIE YAO
CALCULATED-DESIGNED BY	CHECKED BY
FUNCTIONAL SUPERVISOR	ALBERT J. ZEPEDA

STATE OF CALIFORNIA - DEPARTMENT OF TRANSPORTATION — Caltrans — DESIGN

LAST REVISION 01-09-08 — DATE PLOTTED => 31-JAN-2008 — TIME PLOTTED => 10:45

FOR COMPLETE RIGHT OF WAY AND ACCURATE ACCESS DATA, SEE RIGHT OF WAY RECORD MAPS AT DISTRICT OFFICE.

Caltrans Metric

Dist	COUNTY	ROUTE	KILOMETER POST TOTAL PROJECT	SHEET No.	TOTAL SHEETS
04	Ala	880	43.9/45.4		

REGISTERED CIVIL ENGINEER — DATE 1-7-08

PLANS APPROVAL DATE

REGISTERED PROFESSIONAL ENGINEER — Jie Yao — No. 54754 — Exp. 12-31-09 — CIVIL — STATE OF CALIFORNIA

THE STATE OF CALIFORNIA OR ITS OFFICERS OR AGENTS SHALL NOT BE RESPONSIBLE FOR THE ACCURACY OR COMPLETENESS OF ELECTRONIC COPIES OF THIS PLAN SHEET.

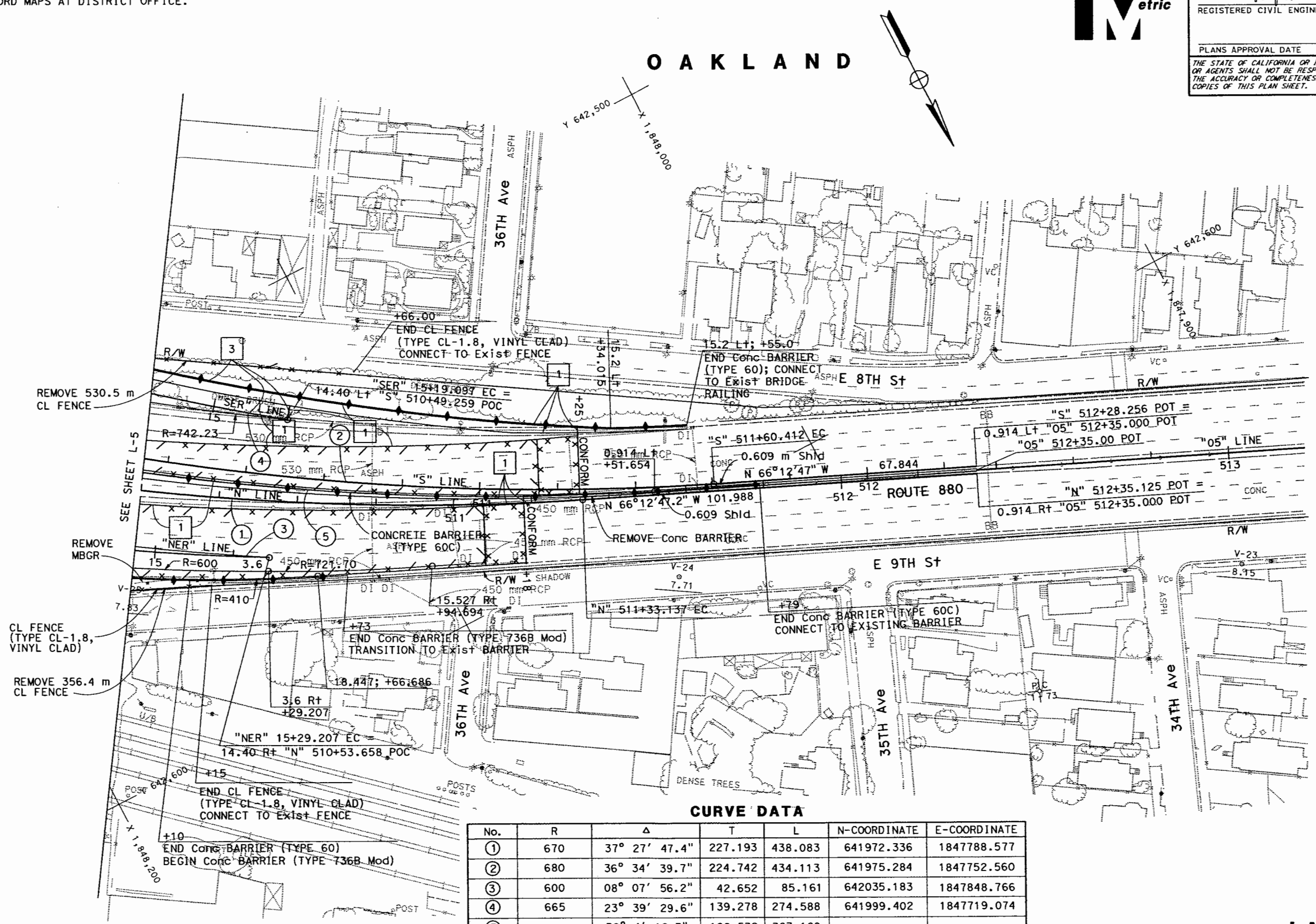

CURVE DATA

No.	R	Δ	T	L	N-COORDINATE	E-COORDINATE
①	670	37° 27′ 47.4"	227.193	438.083	641972.336	1847788.577
②	680	36° 34′ 39.7"	224.742	434.113	641975.284	1847752.560
③	600	08° 07′ 56.2"	42.652	85.161	642035.183	1847848.766
④	665	23° 39′ 29.6"	139.278	274.588	641999.402	1847719.074
⑤	655.97	32° 4′ 12.7"	188.532	367.169	——	——

FOR NOTES, ABBREVIATIONS &/OR LEGEND, SEE SHEET L-1

ALL DIMENSIONS ARE IN METERS UNLESS OTHERWISE SHOWN

PRELIMINARY SUBJECT TO REVISION

LAYOUT

SCALE 1:500

L-6

REVISED BY	DATE REVISED

DEL TABANCAY — JIE YAO

CALCULATED-DESIGNED BY — CHECKED BY

FUNCTIONAL SUPERVISOR — ALBERT J. ZEPEDA

STATE OF CALIFORNIA - DEPARTMENT OF TRANSPORTATION — Caltrans — DESIGN

LAST REVISION 01-28-08 — PLOTTED => 31-JAN-2008 — PLOTTED => 13:35

BORDER LAST REVISED 3/1/2007 — RELATIVE BORDER SCALE IS IN MILLIMETERS 0 20 40 60 80 — USERNAME => s132175 — DGN FILE => 416542ea006.dgn — CU 04250 — EA 165421

Dist	COUNTY	ROUTE	KILOMETER POST TOTAL PROJECT	SHEET No.	TOTAL SHEETS
04	Ala	880	43.9/45.4		

REGISTERED CIVIL ENGINEER — DATE 1-7-08

PLANS APPROVAL DATE

REGISTERED PROFESSIONAL ENGINEER — M.R. Morancy — No. 55907 — Exp. 12-31-08 — CIVIL — STATE OF CALIFORNIA

THE STATE OF CALIFORNIA OR ITS OFFICERS OR AGENTS SHALL NOT BE RESPONSIBLE FOR THE ACCURACY OR COMPLETENESS OF ELECTRONIC COPIES OF THIS PLAN SHEET.

Caltrans Metric

FOR COMPLETE RIGHT OF WAY AND ACCURATE ACCESS DATA, SEE RIGHT OF WAY RECORD MAPS AT DISTRICT OFFICE.

NOTES:

1. THE PROJECT VERTICAL DATUM IS NAVD 1988 METRIC.
2. THE LOCATIONS OF EXISTING DRAINAGE FACILITIES ARE APPROXIMATE ONLY. CONTRACTOR SHALL VERIFY LOCATION AND ELEVATION BEFORE MODIFYING EXISTING FACILITIES. DISCREPANCIES SHALL BE BROUGHT TO THE ATTENTION OF THE ENGINEER.
3. CONTRACTOR SHALL VERIFY ALL CONTROLLING FIELD DIMENSIONS BEFORE ORDERING OR FABRICATING ANY MATERIAL.
4. SCSP SHALL HAVE 65 mm TAPERED SPACERS.
5. DRAINAGE INLET MARKERS. SEE SHEETS DD-12, DQ-1 TO DQ-12.

ABBREVIATIONS:

GD - GUTTER DEPRESSION
APC (A) - APC (TYPE A)
APC (B) - APC (TYPE B)

LEGEND:

- No. — DRAINAGE SYSTEM NUMBER
- DRAINAGE UNIT
- GRADE TO DRAIN
- No. — TEMPORARY DRAINAGE SYSTEM NUMBER
- TEMPORARY DRAINAGE UNIT

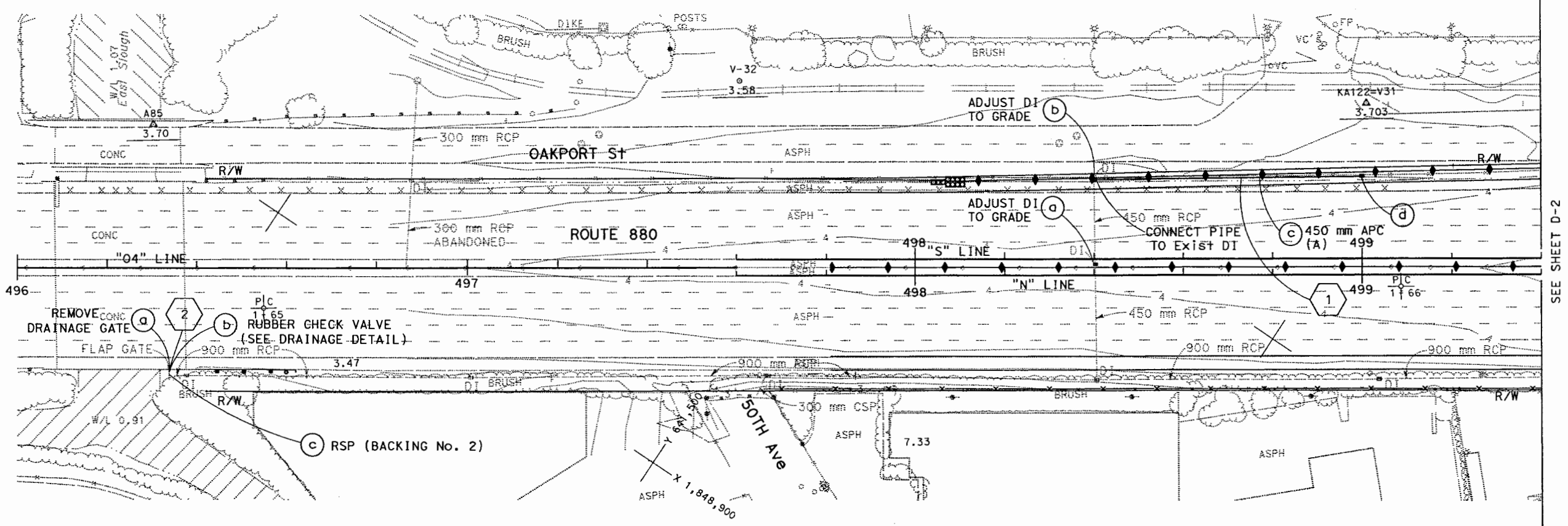

PRELIMINARY
SUBJECT TO REVISION

ALL DIMENSIONS ARE IN METERS UNLESS OTHERWISE SHOWN

THIS PLAN ACCURATE FOR DRAINAGE WORK ONLY

DRAINAGE PLAN

SCALE: 1:500

D-1

STATE OF CALIFORNIA - DEPARTMENT OF TRANSPORTATION
Caltrans
HYDRAULICS

FUNCTIONAL SUPERVISOR: CRAIG TOMIMATSU
CALCULATED-DESIGNED BY: MARK MORANCY
CHECKED BY: CRAIG TOMIMATSU
REVISED BY
DATE REVISED

LAST REVISION DATE 12-20-07 TIME
TED => 31-JAN-2008
ZD => 11:18

BORDER LAST REVISED 3/1/2007
RELATIVE BORDER SCALE IS IN MILLIMETERS 0 20 40 60 80
USERNAME => s132175
DGN FILE => 416542ia001.dgn
CU 04250
EA 165421

FOR COMPLETE RIGHT OF WAY AND ACCURATE ACCESS DATA, SEE RIGHT OF WAY RECORD MAPS AT DISTRICT OFFICE.

Dist	COUNTY	ROUTE	KILOMETER POST TOTAL PROJECT	SHEET No.	TOTAL SHEETS
04	Ala	880	43.9/45.4		

Paul Snyder 1-4-08
REGISTERED CIVIL ENGINEER DATE

PLANS APPROVAL DATE

REGISTERED PROFESSIONAL ENGINEER P. Snyder No. 41128 Exp. 3-31-09 CIVIL STATE OF CALIFORNIA

THE STATE OF CALIFORNIA OR ITS OFFICERS OR AGENTS SHALL NOT BE RESPONSIBLE FOR THE ACCURACY OR COMPLETENESS OF ELECTRONIC COPIES OF THIS PLAN SHEET.

Caltrans Metric

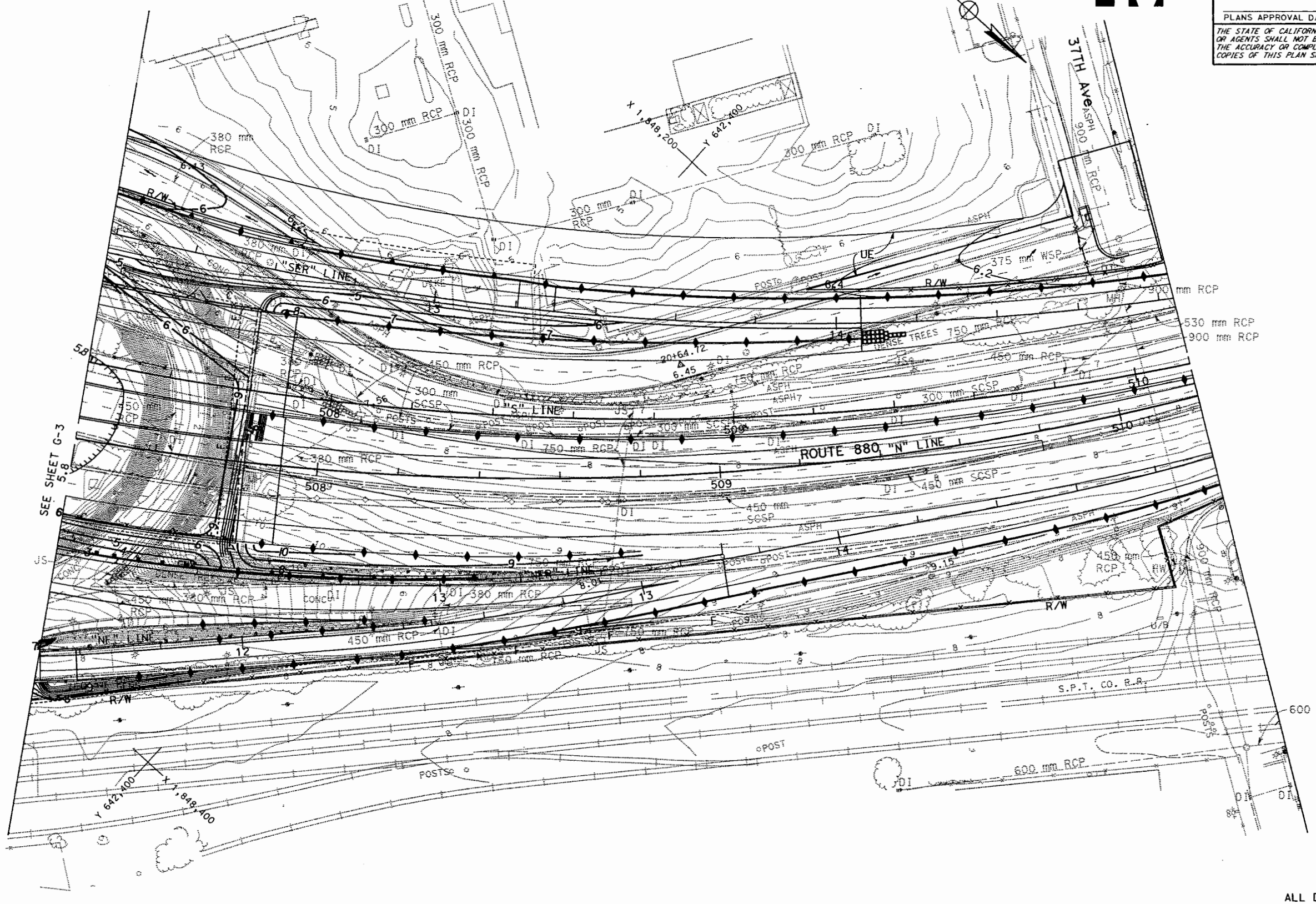

PRELIMINARY SUBJECT TO REVISION

ALL DIMENSIONS ARE IN METERS UNLESS OTHERWISE SHOWN

CONTOUR GRADING

SCALE: 1:500

G-4

THIS PLAN ACCURATE FOR CONTOUR GRADING ONLY

FOR NOTES, ABBREVIATIONS &/OR LEGEND, SEE SHEET G-1

STATE OF CALIFORNIA - DEPARTMENT OF TRANSPORTATION
Caltrans
DESIGN

FUNCTIONAL SUPERVISOR: ALBERT J. ZEPEDA
CALCULATED-DESIGNED BY: SON TRAN
CHECKED BY: PAUL A. SNYDER
REVISED BY 04/06
DATE REVISED 04/06

LAST REVISION 09-12-07
DATE PLOTTED => 31-JAN-2008
TIME PLOTTED => 11:11

Dist	COUNTY	ROUTE	KILOMETER POST TOTAL PROJECT	SHEET No.	TOTAL SHEETS
04	Ala	880	43.9/45.4		

REGISTERED CIVIL ENGINEER — DATE 1-7-08

PLANS APPROVAL DATE

REGISTERED PROFESSIONAL ENGINEER — M.R. Morancy No. 55907 Exp. 12-31-08 CIVIL — STATE OF CALIFORNIA

THE STATE OF CALIFORNIA OR ITS OFFICERS OR AGENTS SHALL NOT BE RESPONSIBLE FOR THE ACCURACY OR COMPLETENESS OF ELECTRONIC COPIES OF THIS PLAN SHEET.

Caltrans Metric

FOR COMPLETE RIGHT OF WAY AND ACCURATE ACCESS DATA, SEE RIGHT OF WAY RECORD MAPS AT DISTRICT OFFICE.

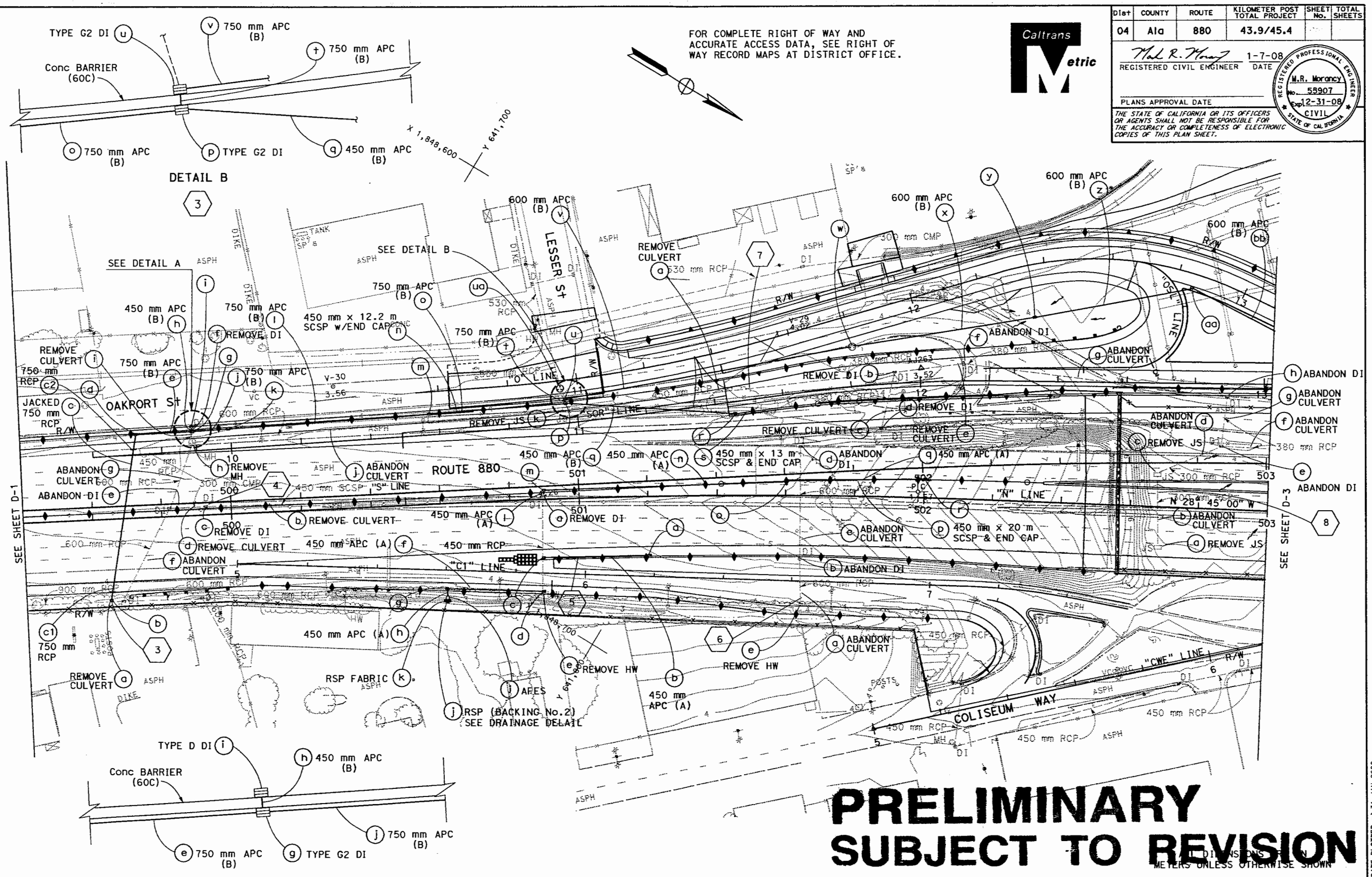

PRELIMINARY
SUBJECT TO REVISION

ALL DIMENSIONS SHOWN IN METERS UNLESS OTHERWISE SHOWN

DRAINAGE PLAN

SCALE 1:500

THIS PLAN ACCURATE FOR DRAINAGE WORK ONLY

FOR NOTES, ABBREVIATIONS &/OR LEGEND, SEE SHEET D-1

D-2

STATE OF CALIFORNIA - DEPARTMENT OF TRANSPORTATION — Caltrans — HYDRAULICS

FUNCTIONAL SUPERVISOR: CRAIG TOMIMATSU

CALCULATED-DESIGNED BY: MARK MORANCY — CHECKED BY: CRAIG TOMIMATSU

REVISED BY — DATE REVISED

LAST REVISION 01-05-08 — DATE PLOTTED => 31-JAN-2008 — TIME PLOTTED => 11:18

BORDER LAST REVISED 3/1/2007 — RELATIVE BORDER SCALE IS IN MILLIMETERS 0 20 40 60 80 — USERNAME => s132175 — DGN FILE => 4165421a002.dgn — CU 04250 — EA 165421

Dist	COUNTY	ROUTE	KILOMETER POST TOTAL PROJECT	SHEET No.	TOTAL SHEETS
04	Ala	880	43.9/45.4		

Mark R. Morancy — REGISTERED CIVIL ENGINEER — 1-7-08 DATE

PLANS APPROVAL DATE

REGISTERED PROFESSIONAL ENGINEER M.R. Morancy No. 55907 Exp. 12-31-08 CIVIL STATE OF CALIFORNIA

THE STATE OF CALIFORNIA OR ITS OFFICERS OR AGENTS SHALL NOT BE RESPONSIBLE FOR THE ACCURACY OR COMPLETENESS OF ELECTRONIC COPIES OF THIS PLAN SHEET.

Caltrans Metric

FOR COMPLETE RIGHT OF WAY AND ACCURATE ACCESS DATA, SEE RIGHT OF WAY RECORD MAPS AT DISTRICT OFFICE.

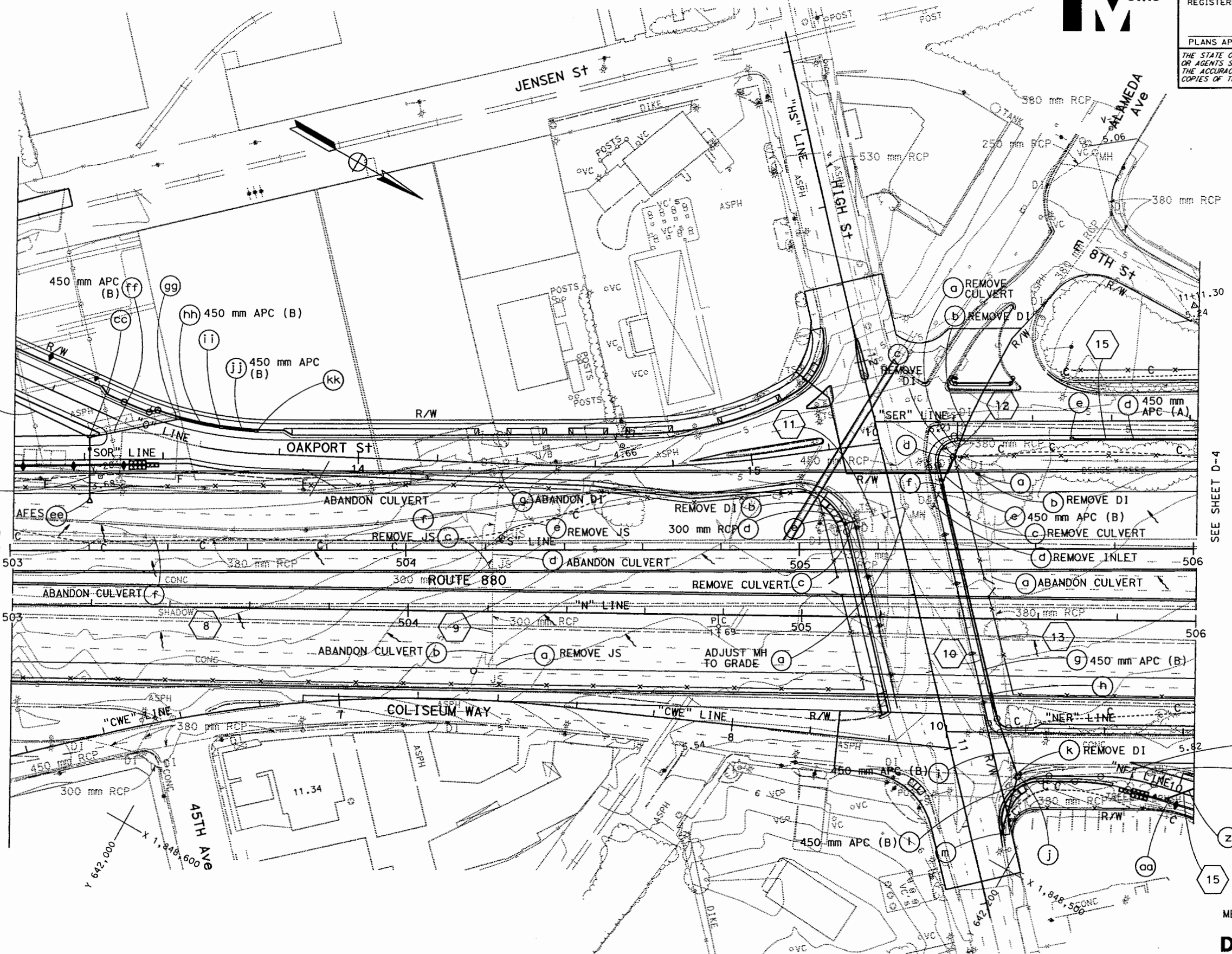

FOR NOTES, ABBREVIATIONS &/OR LEGEND, SEE SHEET D-1

THIS PLAN ACCURATE FOR DRAINAGE WORK ONLY

ALL DIMENSIONS ARE IN METERS UNLESS OTHERWISE SHOWN

PRELIMINARY SUBJECT TO REVISION

DRAINAGE PLAN

SCALE: 1:500

D-3

REVISED BY	DATE REVISED
MARK MORANCY	CRAIG TOMIMATSU

CALCULATED-DESIGNED BY	CHECKED BY

FUNCTIONAL SUPERVISOR: CRAIG TOMIMATSU

STATE OF CALIFORNIA - DEPARTMENT OF TRANSPORTATION — Caltrans — HYDRAULICS

LAST REVISION	DATE	TIME
01-02-08	PLOTTED => 31-JAN-2008	SAVED => 11:18

BORDER LAST REVISED 3/1/2007 — RELATIVE BORDER SCALE IS IN MILLIMETERS 0 20 40 60 80 — USERNAME => s132175 — DGN FILE => 416542ia003.dgn — CU 04250 — EA 165421

Dist	COUNTY	ROUTE	KILOMETER POST TOTAL PROJECT	SHEET No.	TOTAL SHEETS
04	Ala	880	43.9/45.4		

Mark R. Morancy 1-7-08
REGISTERED CIVIL ENGINEER DATE

PLANS APPROVAL DATE

REGISTERED PROFESSIONAL ENGINEER M.R. Morancy No. 55907 Exp. 12-31-08 CIVIL STATE OF CALIFORNIA

THE STATE OF CALIFORNIA OR ITS OFFICERS OR AGENTS SHALL NOT BE RESPONSIBLE FOR THE ACCURACY OR COMPLETENESS OF ELECTRONIC COPIES OF THIS PLAN SHEET.

Caltrans Metric

FOR COMPLETE RIGHT OF WAY AND ACCURATE ACCESS DATA, SEE RIGHT OF WAY RECORD MAPS AT DISTRICT OFFICE.

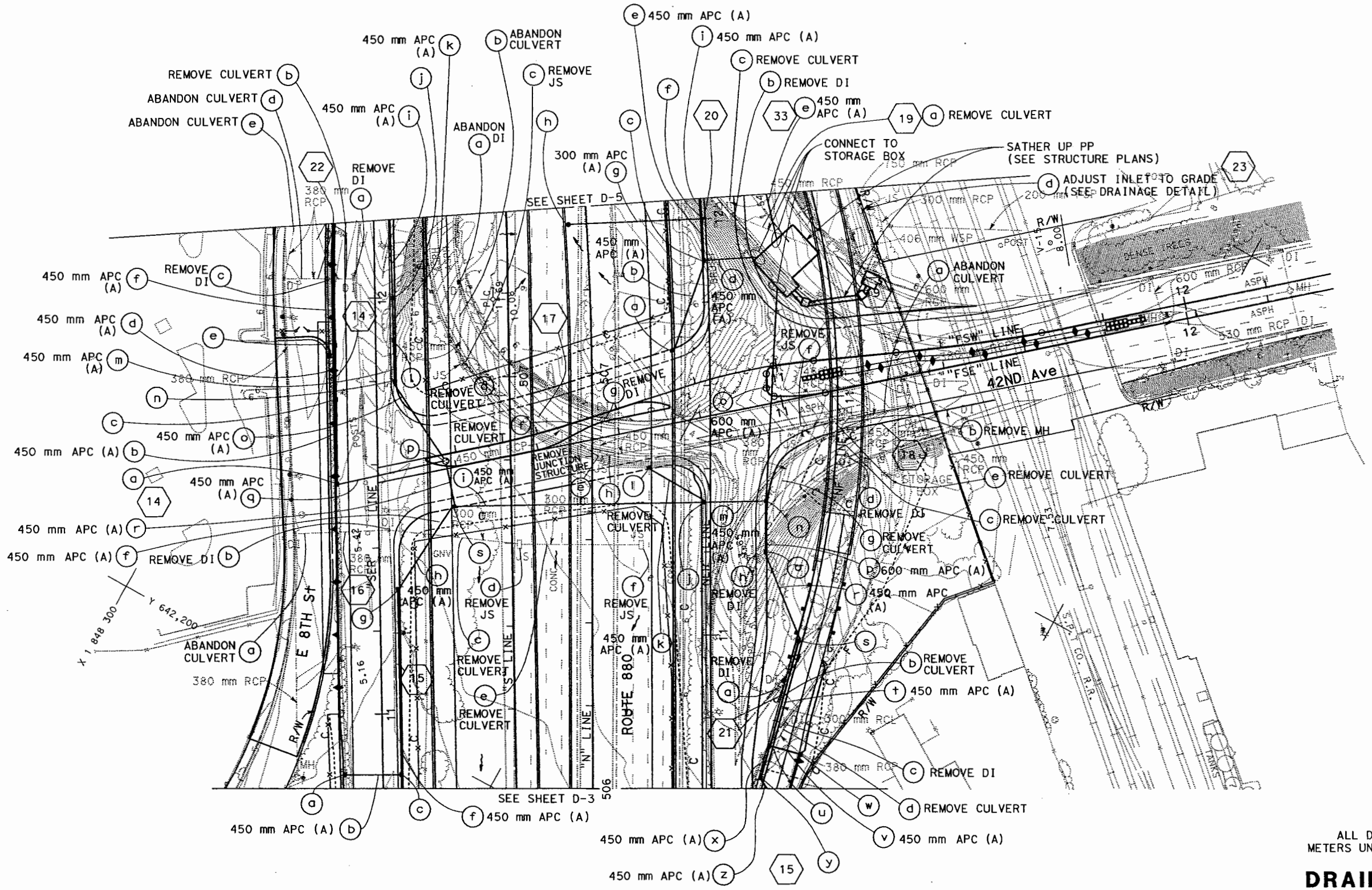

FOR NOTES, ABBREVIATIONS &/OR LEGEND, SEE SHEET D-1

ALL DIMENSIONS ARE IN METERS UNLESS OTHERWISE SHOWN

THIS PLAN ACCURATE FOR DRAINAGE WORK ONLY

DRAINAGE PLAN

SCALE: 1:500

D-4

PRELIMINARY SUBJECT TO REVISION

REVISED BY	DATE REVISED

CALCULATED-DESIGNED BY	MARK MORANCY
CHECKED BY	CRAIG TOMIMATSU
FUNCTIONAL SUPERVISOR	CRAIG TOMIMATSU

STATE OF CALIFORNIA - DEPARTMENT OF TRANSPORTATION
Caltrans
HYDRAULICS

LAST REVISION 01-05-08
DATE PLOTTED => 31-JAN-2008
TIME PLOTTED => 11:16

Dist	COUNTY	ROUTE	KILOMETER POST TOTAL PROJECT	SHEET No.	TOTAL SHEETS
04	Ala	880	43.9/45.4		

REGISTERED CIVIL ENGINEER — DATE 1-7-08

PLANS APPROVAL DATE

REGISTERED PROFESSIONAL ENGINEER M.R. Morancy No. 55907 Exp. 12-31-08 CIVIL STATE OF CALIFORNIA

THE STATE OF CALIFORNIA OR ITS OFFICERS OR AGENTS SHALL NOT BE RESPONSIBLE FOR THE ACCURACY OR COMPLETENESS OF ELECTRONIC COPIES OF THIS PLAN SHEET.

Caltrans Metric

FOR COMPLETE RIGHT OF WAY AND ACCURATE ACCESS DATA, SEE RIGHT OF WAY RECORD MAPS AT DISTRICT OFFICE.

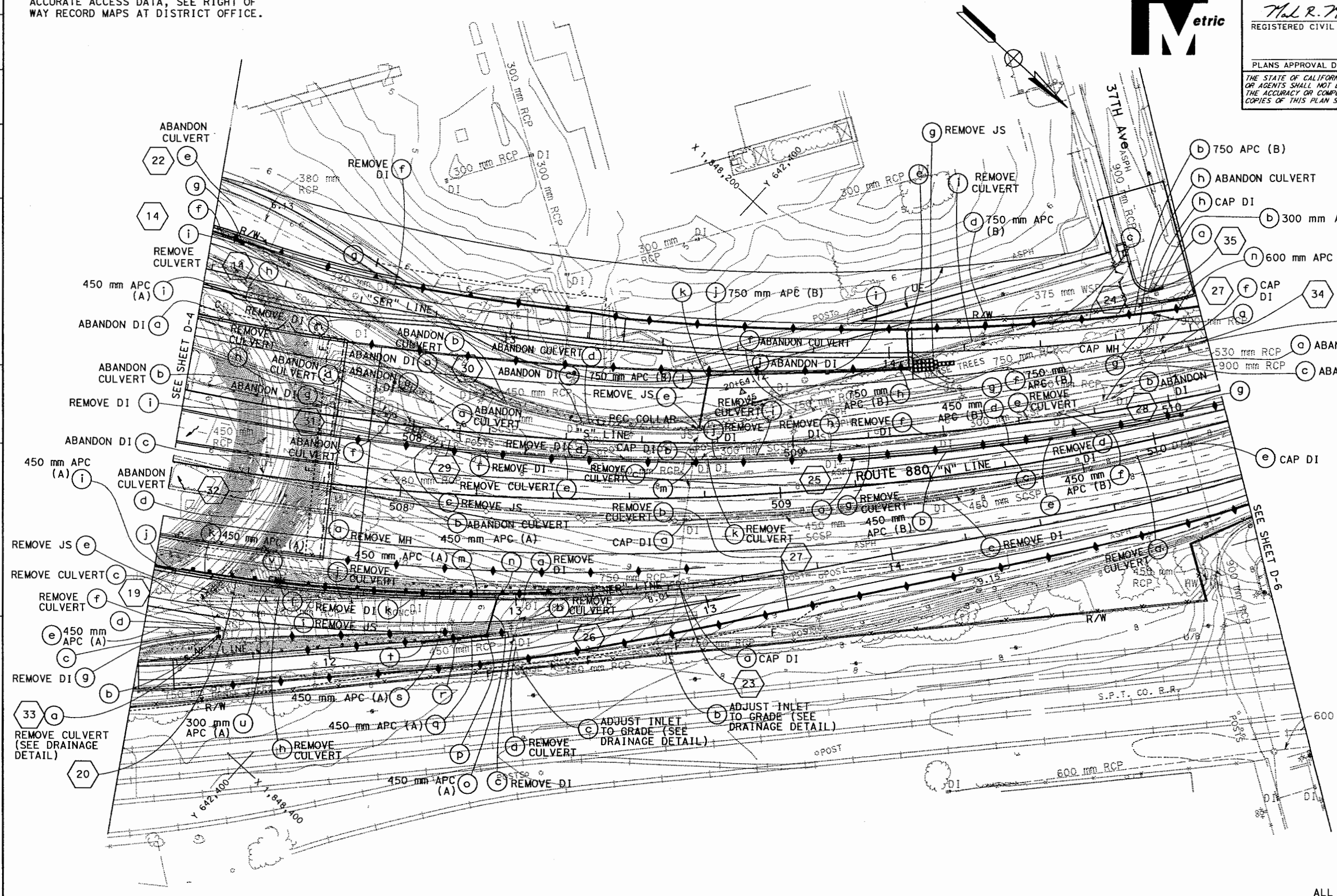

PRELIMINARY SUBJECT TO REVISION

ALL DIMENSIONS ARE IN METERS UNLESS OTHERWISE SHOWN

DRAINAGE PLAN

SCALE: 1:500

D-5

FOR NOTES, ABBREVIATIONS &/OR LEGEND, SEE SHEET D-1

THIS PLAN ACCURATE FOR DRAINAGE WORK ONLY

REVISED BY	DATE REVISED

CALCULATED-DESIGNED BY	CHECKED BY
MARK MORANCY	CRAIG TOMIMATSU

FUNCTIONAL SUPERVISOR
CRAIG TOMIMATSU

STATE OF CALIFORNIA - DEPARTMENT OF TRANSPORTATION

Caltrans HYDRAULICS

LAST REVISION	DATE TIME
01-05-08	ED => 31-JAN-2008 D => 11:18

BORDER LAST REVISED 3/1/2007

RELATIVE BORDER SCALE IS IN MILLIMETERS 0 20 40 60 80

USERNAME => s132175
DGN FILE => 416542ia005.dgn

CU 04250

EA 165421

Dist	COUNTY	ROUTE	KILOMETER POST TOTAL PROJECT	SHEET No.	TOTAL SHEETS
04	Ala	880	43.9/45.4		

Mark R. Morancy 1-7-08
REGISTERED CIVIL ENGINEER DATE

PLANS APPROVAL DATE

REGISTERED PROFESSIONAL ENGINEER M.R. Morancy No. 55907 Exp. 12-31-08 CIVIL STATE OF CALIFORNIA

THE STATE OF CALIFORNIA OR ITS OFFICERS OR AGENTS SHALL NOT BE RESPONSIBLE FOR THE ACCURACY OR COMPLETENESS OF ELECTRONIC COPIES OF THIS PLAN SHEET.

Caltrans Metric

FOR COMPLETE RIGHT OF WAY AND ACCURATE ACCESS DATA, SEE RIGHT OF WAY RECORD MAPS AT DISTRICT OFFICE.

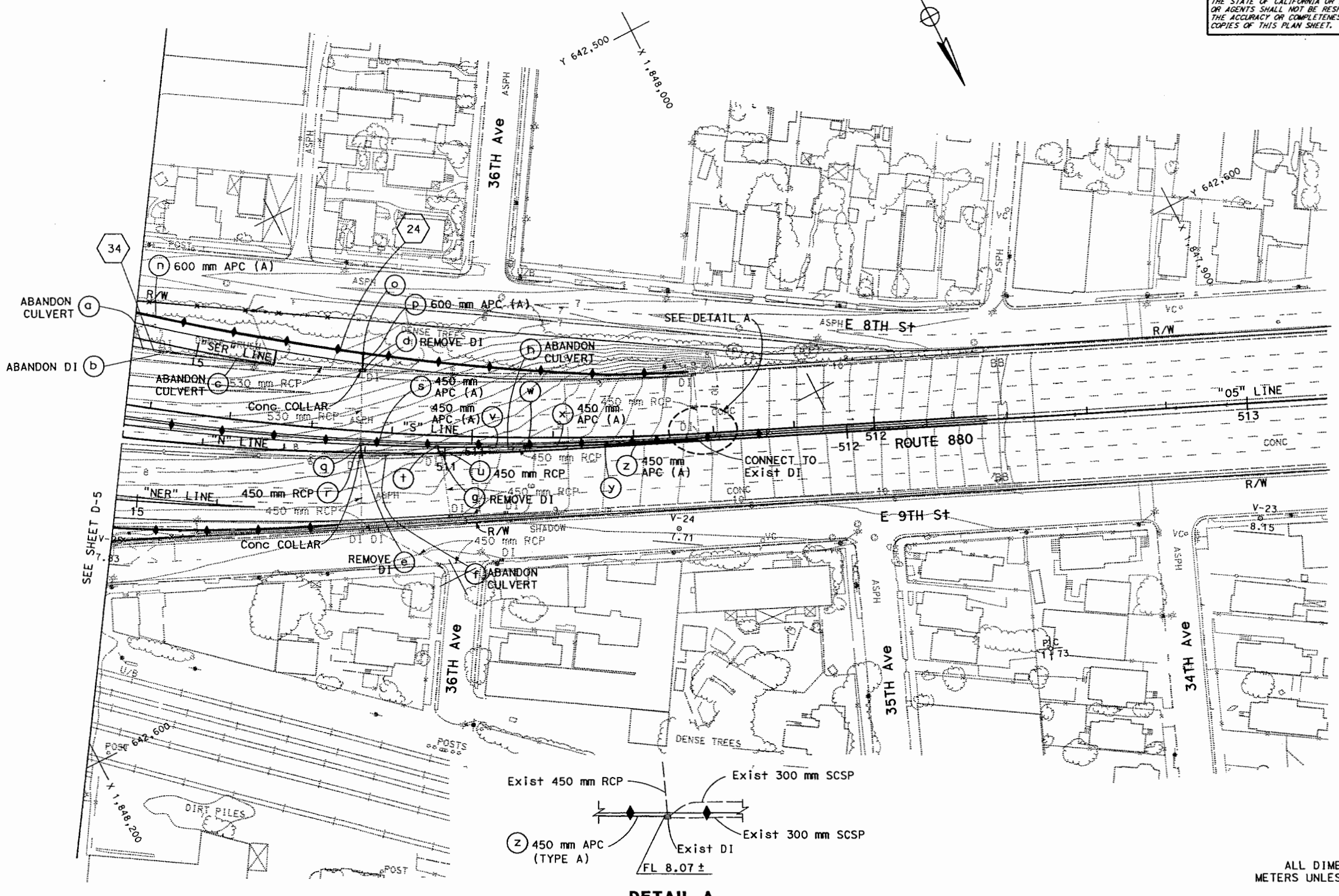

DETAIL A
NO SCALE

PRELIMINARY SUBJECT TO REVISION

ALL DIMENSIONS ARE IN METERS UNLESS OTHERWISE SHOWN

DRAINAGE PLAN

SCALE: 1:500

D-6

FOR NOTES, ABBREVIATIONS &/OR LEGEND, SEE SHEET D-1

THIS PLAN ACCURATE FOR DRAINAGE WORK ONLY

STATE OF CALIFORNIA - DEPARTMENT OF TRANSPORTATION
Caltrans
HYDRAULICS

FUNCTIONAL SUPERVISOR: CRAIG TOMIMATSU
CALCULATED-DESIGNED BY: MARK MORANCY
CHECKED BY: CRAIG TOMIMATSU
REVISED BY
DATE REVISED

LAST REVISION 01-02-08
DATE PLOTTED => 31-JAN-2008
TIME PLOTTED => 11:18

Dist	COUNTY	ROUTE	KILOMETER POST TOTAL PROJECT	SHEET No.	TOTAL SHEETS
04	Ala	880	43.9/45.4		

REGISTERED CIVIL ENGINEER 1-7-08 DATE

PLANS APPROVAL DATE

REGISTERED PROFESSIONAL ENGINEER J.P. Ma No. 36818 Exp. 6-30-08 CIVIL STATE OF CALIFORNIA

THE STATE OF CALIFORNIA OR ITS OFFICERS OR AGENTS SHALL NOT BE RESPONSIBLE FOR THE ACCURACY OR COMPLETENESS OF ELECTRONIC COPIES OF THIS PLAN SHEET.

Caltrans Metric

NOTES

1. FOR UNDERDRAIN PLACEMENT, SEE TYPICAL CROSS SECTIONS.
2. LOCATION OF RISERS ARE APPROXIMATE. ACTUAL FIELD CONDITIONS WILL GOVERN.
3. ALL UNDERDRAINS SHALL SLOPE TO DRAIN. Min SLOPE 0.25%.
4. CONTRACTOR TO VERIFY THE LOCATION OF LOW POINT (L.P.) IN FIELD.
5. UNLESS OTHERWISE NOTED, UNDERDRAIN PIPE SHALL BE 200 mm DIAMETER.
6. FOR VERTICAL AND TERMIAL RISER DETAILS SEE SHEET DD-11

LEGEND

No. UNDERDRAIN SYSTEM NUMBER

RISER

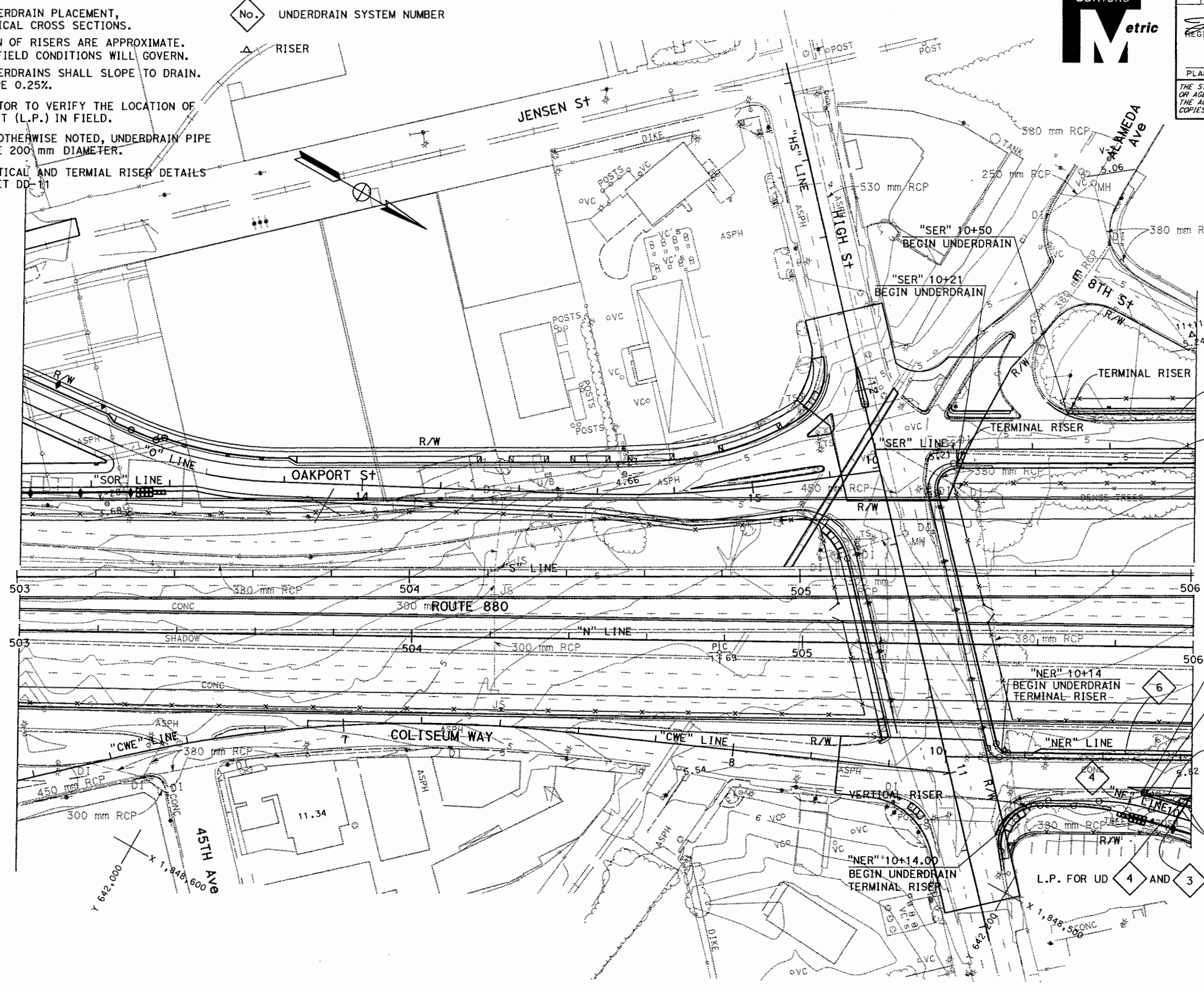

PRELIMINARY SUBJECT TO REVISION

ALL DIMENSIONS ARE IN METERS UNLESS OTHERWISE SHOWN

DRAINAGE PLAN (UNDERDRAIN)

SCALE: 1:500

THIS PLAN ACCURATE FOR UNDERDRAIN WORK ONLY

D-7

REVISED BY	DATE REVISED
SON TRAN	JERRY P. MA

CALCULATED-DESIGNED BY
CHECKED BY

FUNCTIONAL SUPERVISOR: JUDY CHEN

STATE OF CALIFORNIA - DEPARTMENT OF TRANSPORTATION
Caltrans
DESIGN

TED => 31-JAN-2008
ED => 11:18

LAST REVISION 01-08-08 DATE TIME

BORDER LAST REVISED 3/1/2007

RELATIVE BORDER SCALE IS IN MILLIMETERS 0 20 40 60 80

USERNAME => s132175
DGN FILE => 416542ia007.dgn

CU 04250

EA 165421

Dist	COUNTY	ROUTE	KILOMETER POST TOTAL PROJECT	SHEET No.	TOTAL SHEETS
04	Ala	880	43.9/45.4		

REGISTERED CIVIL ENGINEER 1-7-08 DATE

PLANS APPROVAL DATE

REGISTERED PROFESSIONAL ENGINEER J.P. Ma No. 36818 Exp. 6-30-08 CIVIL STATE OF CALIFORNIA

THE STATE OF CALIFORNIA OR ITS OFFICERS OR AGENTS SHALL NOT BE RESPONSIBLE FOR THE ACCURACY OR COMPLETENESS OF ELECTRONIC COPIES OF THIS PLAN SHEET.

Caltrans Metric

PRELIMINARY SUBJECT TO REVISION

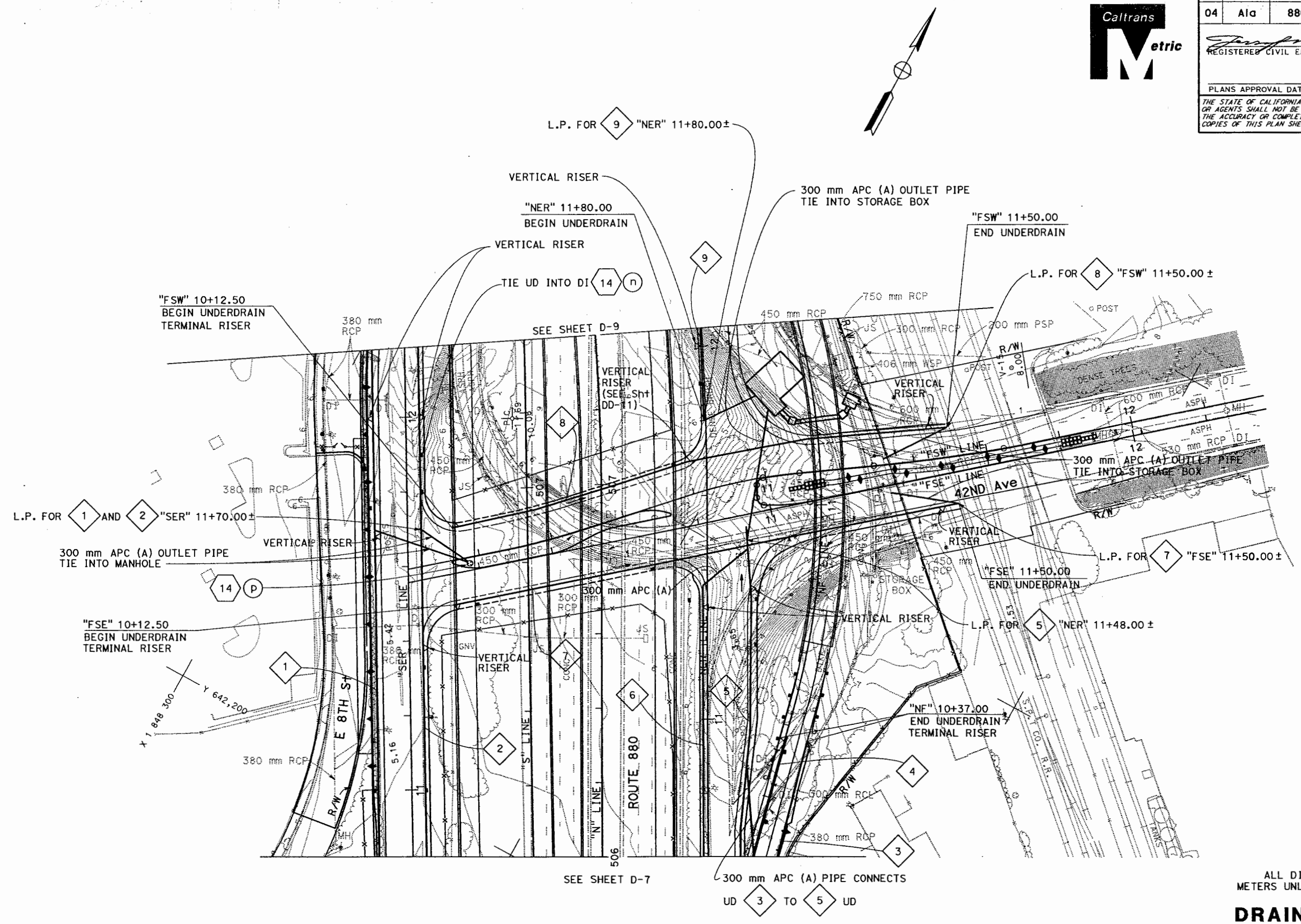

ALL DIMENSIONS ARE IN METERS UNLESS OTHERWISE SHOWN

DRAINAGE PLAN (UNDERDRAIN)

SCALE: 1:500

FOR NOTES, ABBREVIATIONS &/OR LEGEND, SEE SHEET D-7

THIS PLAN ACCURATE FOR UNDERDRAIN WORK ONLY

D-8

STATE OF CALIFORNIA - DEPARTMENT OF TRANSPORTATION	FUNCTIONAL SUPERVISOR	CALCULATED-DESIGNED BY	REVISED BY
Caltrans DESIGN	JUDY CHEN	SON TRAN	
		JERRY P. MA	DATE REVISED
		CHECKED BY	

LAST REVISION 01-08-08 DATE PLOTTED => 31-JAN-2008 TIME PLOTTED => 11:18

BORDER LAST REVISED 3/1/2007 | RELATIVE BORDER SCALE IS IN MILLIMETERS 0 20 40 60 80 | USERNAME => s132175 DGN FILE => 416542ia008.dgn | CU 04250 | EA 165421

Dist	COUNTY	ROUTE	KILOMETER POST TOTAL PROJECT	SHEET No.	TOTAL SHEETS
04	Ala	880	43.9/45.4		

REGISTERED CIVIL ENGINEER 1-7-08 DATE

PLANS APPROVAL DATE

REGISTERED PROFESSIONAL ENGINEER J.P. Ma No. 36818 Exp. 6-30-08 CIVIL STATE OF CALIFORNIA

THE STATE OF CALIFORNIA OR ITS OFFICERS OR AGENTS SHALL NOT BE RESPONSIBLE FOR THE ACCURACY OR COMPLETENESS OF ELECTRONIC COPIES OF THIS PLAN SHEET.

Caltrans Metric

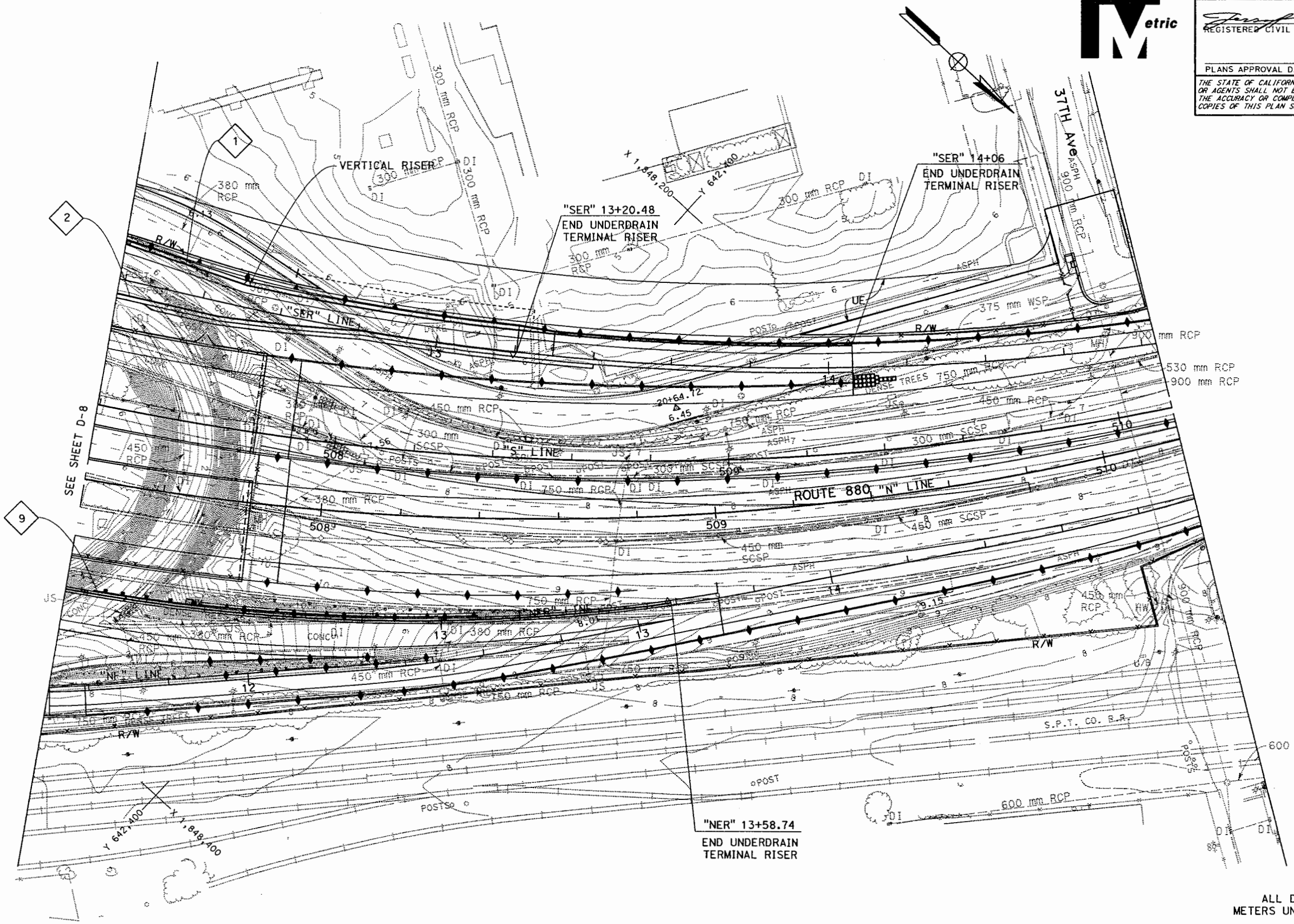

PRELIMINARY
SUBJECT TO REVISION

ALL DIMENSIONS ARE IN METERS UNLESS OTHERWISE SHOWN

DRAINAGE PLAN
(UNDERDRAIN)

SCALE: 1:500

FOR NOTES, ABBREVIATIONS &/OR LEGEND, SEE SHEET D-7

THIS PLAN ACCURATE FOR UNDERDRAIN WORK ONLY

D-9

STATE OF CALIFORNIA - DEPARTMENT OF TRANSPORTATION	FUNCTIONAL SUPERVISOR	CALCULATED-DESIGNED BY	CHECKED BY	REVISED BY	DATE REVISED
Caltrans DESIGN	JUDY CHEN	JERRY P. MA		SON TRAN	

LAST REVISION 12-21-07 DATE TIME

PLOTTED => 31-JAN-2008 TIME => 11:11

BORDER LAST REVISED 3/1/2007

RELATIVE BORDER SCALE IS IN MILLIMETERS 0 20 40 60 80

USERNAME => s132175
DGN FILE => 416542ip009.dgn

CU 04250

EA 165421

Dist	COUNTY	ROUTE	KILOMETER POST TOTAL PROJECT	SHEET No.	TOTAL SHEETS
04	Ala	880	43.9/45.4	N	N

Caltrans Metric

LICENSED LANDSCAPE ARCHITECT

PLANS APPROVAL DATE

THE STATE OF CALIFORNIA OR ITS OFFICERS OR AGENTS SHALL NOT BE RESPONSIBLE FOR THE ACCURACY OR COMPLETENESS OF ELECTRONIC COPIES OF THIS PLAN SHEET.

LICENSED LANDSCAPE ARCHITECT — SALLY BANG — STATE OF CALIFORNIA

11-20-09

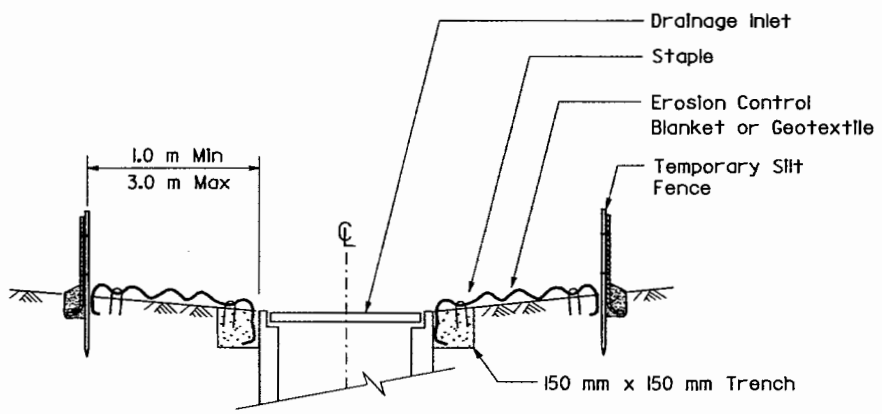

SECTION A-A

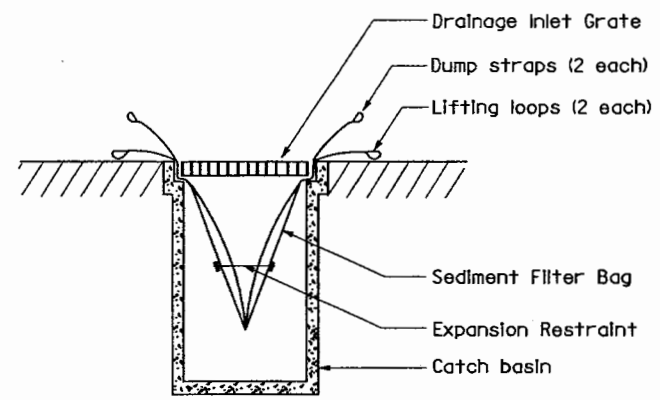

SECTION B-B

SEDIMENT FILTER BAG DETAIL

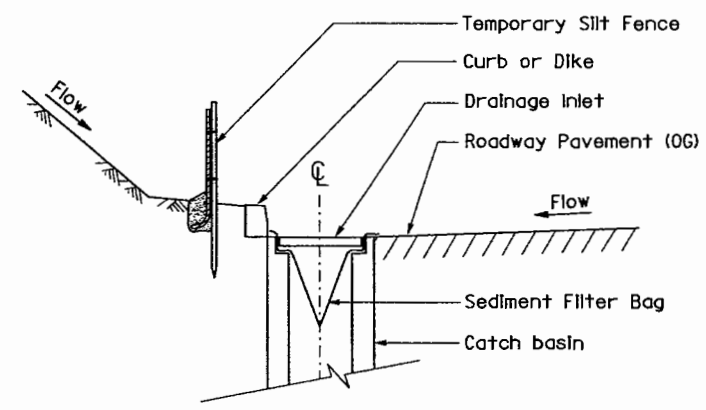

SECTION A-A

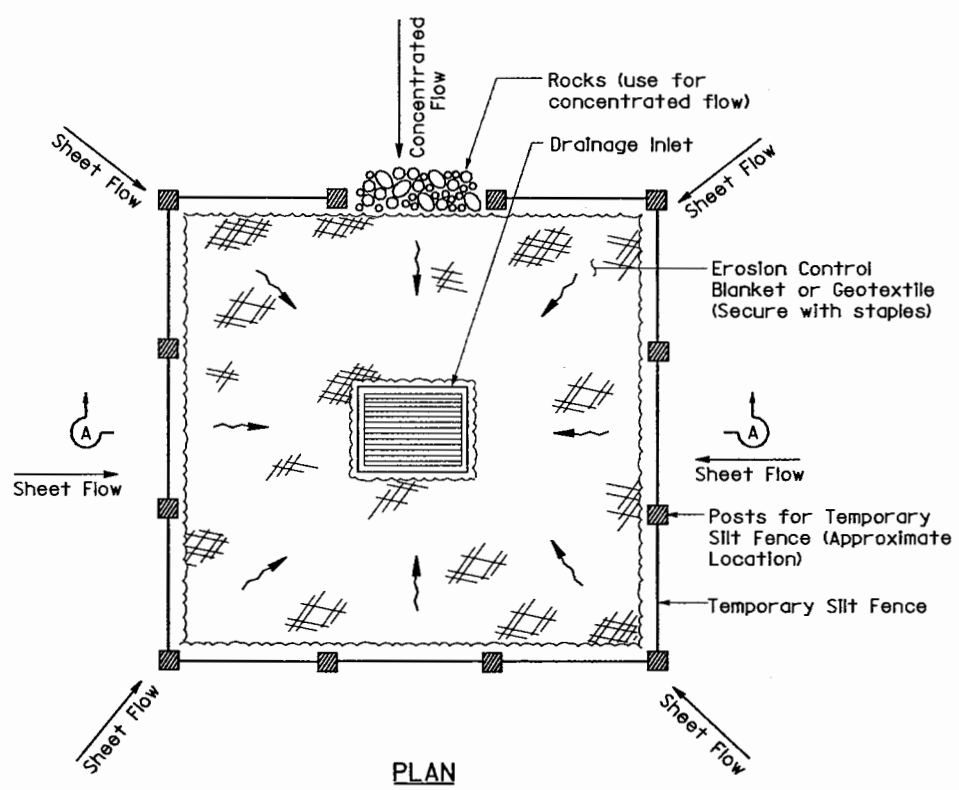

PLAN

TEMPORARY DRAINAGE INLET PROTECTION (TYPE 1) (TEMPORARY SILT FENCE)

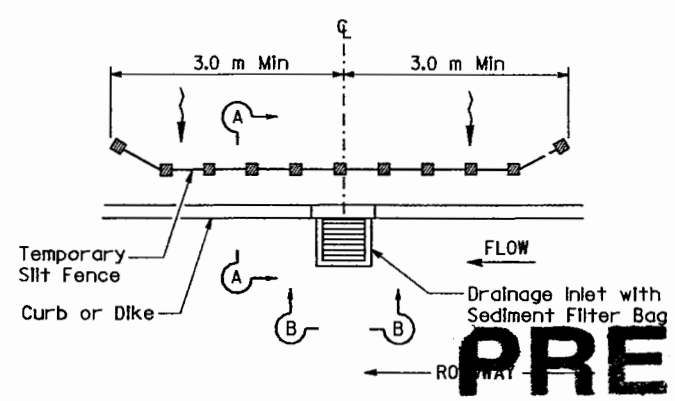

PLAN

TEMPORARY DRAINAGE INLET PROTECTION (TYPE 5) (SEDIMENT FILTER BAG)

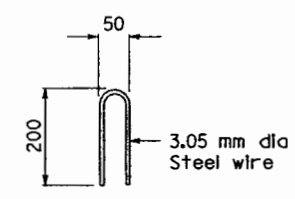

STAPLE DETAIL

NOTES

1. See Std Plan T51 for Temporary Silt Fence.
2. Dimensions may vary to fit field conditions.

PRELIMINARY SUBJECT TO REVISION

All dimensions are in millimeters unless otherwise shown

WATER POLLUTION CONTROL DETAILS

NO SCALE

WPCD-1

STATE OF CALIFORNIA - DEPARTMENT OF TRANSPORTATION
Caltrans OFFICE OF WATER QUALITY

SENIOR LANDSCAPE ARCHITECT: DAVID W. YAM

CALCULATED-DESIGNED BY: SALLY BANG
CHECKED BY: SALLY BANG

REVISED BY
DATE REVISED

LAST REVISION 10-09-07
DATE PLOTTED => 31-JAN-2008
TIME PLOTTED => 11:10

BORDER LAST REVISED 3/1/2007

RELATIVE BORDER SCALE IS IN MILLIMETERS 0 20 40 60 80

USERNAME => s132175
DGN FILE => 416542gc001.dgn

CU 04343

EA 165421

Dist	COUNTY	ROUTE	KILOMETER POST TOTAL PROJECT	SHEET No.	TOTAL SHEETS
04	Ala	880	43.9/45.4		

REGISTERED CIVIL ENGINEER — DATE 1/5/08

PLANS APPROVAL DATE

REGISTERED PROFESSIONAL ENGINEER — A. Naseer No. 55926 Exp. 12-31-08 CIVIL STATE OF CALIFORNIA

THE STATE OF CALIFORNIA OR ITS OFFICERS OR AGENTS SHALL NOT BE RESPONSIBLE FOR THE ACCURACY OR COMPLETENESS OF ELECTRONIC COPIES OF THIS PLAN SHEET.

Caltrans Metric

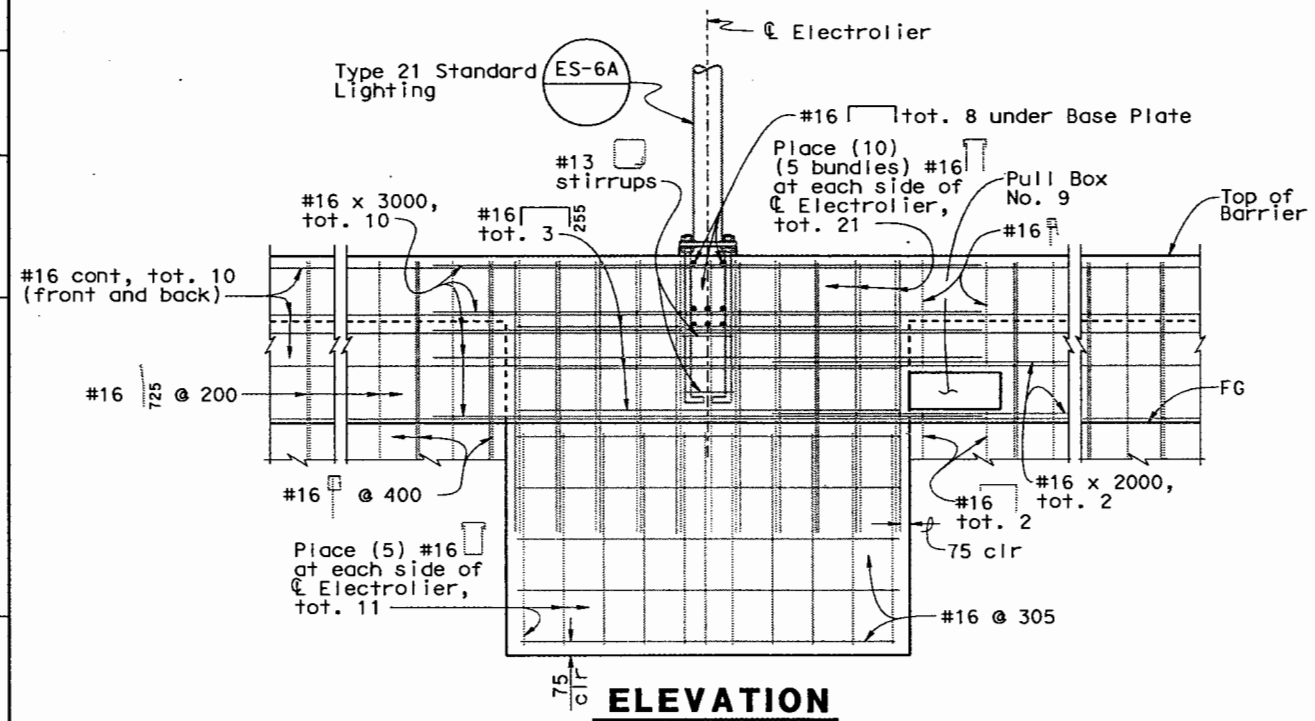

ELEVATION
No Scale

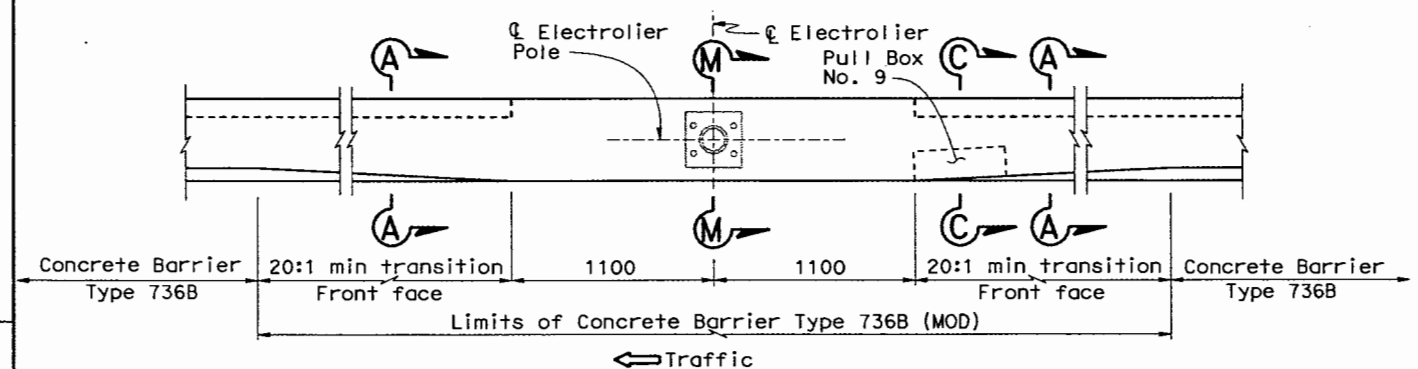

PLAN
No Scale

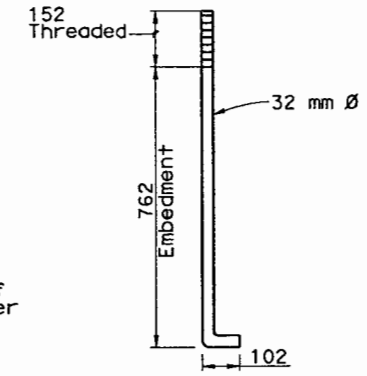

ANCHOR BOLTS
No Scale

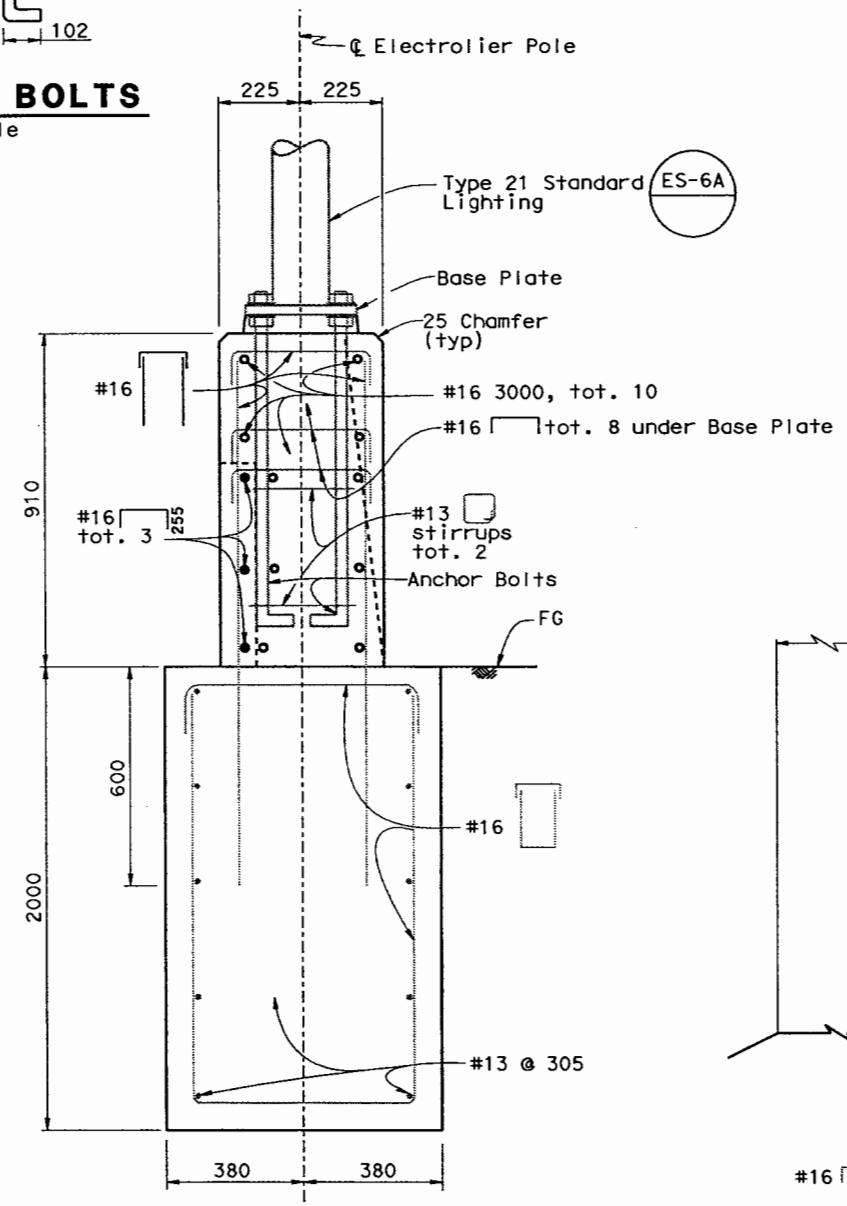

SECTION M-M
No Scale

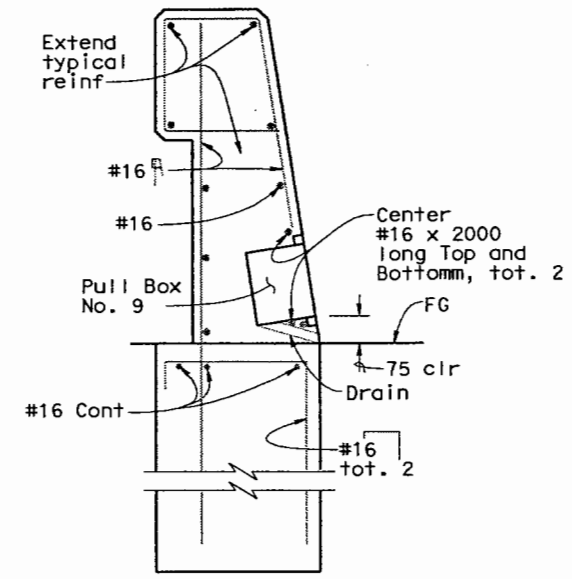

SECTION C-C
No Scale

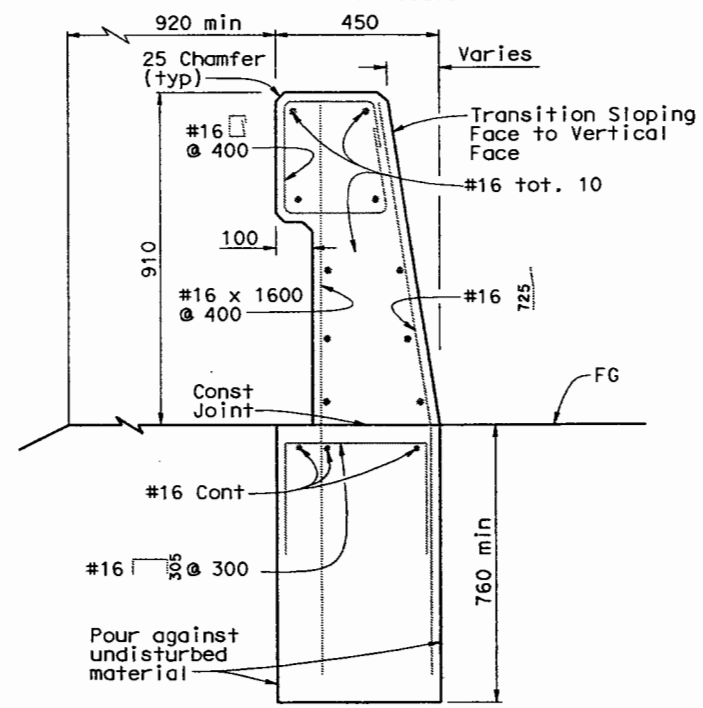

SECTION A-A B11-56
No Scale

DESIGN NOTES:

DESIGN: BRIDGE DESIGN SPECIFICATIONS (1996 AASHTO with Interims and Revisions by CALTRANS)

REINFORCED CONCRETE: Load Factor Design
$f'c$ = 28 MPa
fy = 416 MPa
n = 8

SOIL: Service Load Design
Unit Weight = 19 KN/m³
Rankine's Formula, assumed ϕ' = 30°
Minimum Soil Bearing Capacity assumed 0.2 Mpa (2 Ton/sqft)

NOTES:
1. For Base Plate Details, see Standard PLan ES-6A.
2. For Electrolier Mounting Details, see Standard Plans ES-6B.
3. Concrete Barrier (mounted electrolier) limits and location, see Q-Sheet.

PRELIMINARY
SUBJECT TO REVISION

ALL DIMENSIONS ARE IN MILLIMETERS UNLESS OTHERWISE SHOWN

CONSTRUCTION DETAILS
NO SCALE

C-28

STATE OF CALIFORNIA - DEPARTMENT OF TRANSPORTATION
Caltrans DESIGN

FUNCTIONAL SUPERVISOR: ALBERT J. ZEPEDA
CALCULATED-DESIGNED BY: AMJAD NASEER
CHECKED BY: JIE YAO
REVISED BY
DATE REVISED

LAST REVISION 01-28-08 DATE PLOTTED => 31-JAN-2008 TIME PLOTTED => 11:00

Dist	COUNTY	ROUTE	KILOMETER POST TOTAL PROJECT	SHEET No.	TOTAL SHEETS
04	Ala	880	43.9/45.4	N	N

LICENSED LANDSCAPE ARCHITECT

PLANS APPROVAL DATE

THE STATE OF CALIFORNIA OR ITS OFFICERS OR AGENTS SHALL NOT BE RESPONSIBLE FOR THE ACCURACY OR COMPLETENESS OF ELECTRONIC COPIES OF THIS PLAN SHEET.

LICENSED LANDSCAPE ARCHITECT — STATE OF CALIFORNIA — Signature 11-30-09 — 00-00-00

Caltrans Metric

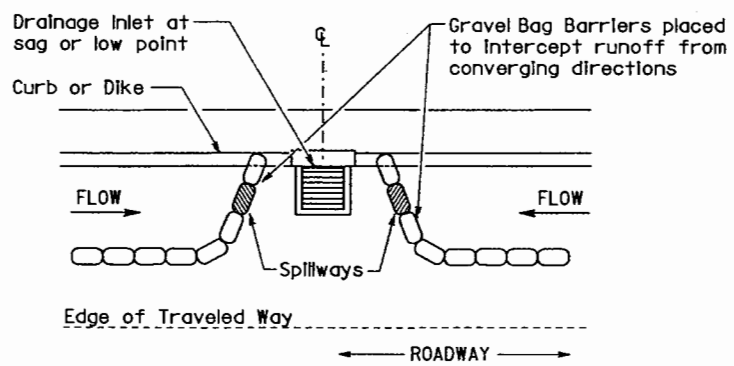

PLAN

CONFIGURATION FOR SAG POINT INLET (GRAVEL BAG BARRIER)

GRAVEL BAG BARRIER (TYPE 3A) SPACING TABLE

SLOPE OF ROADWAY (PERCENT)	1 to 4	4 to 6	6 to 8	8 to 10	10 +
INTERVAL BETWEEN BARRIERS (M)	30.0	22.5	15.0	7.5	4.0

For slope of less than 1%, install barriers only if erosion/sediment is prevalent

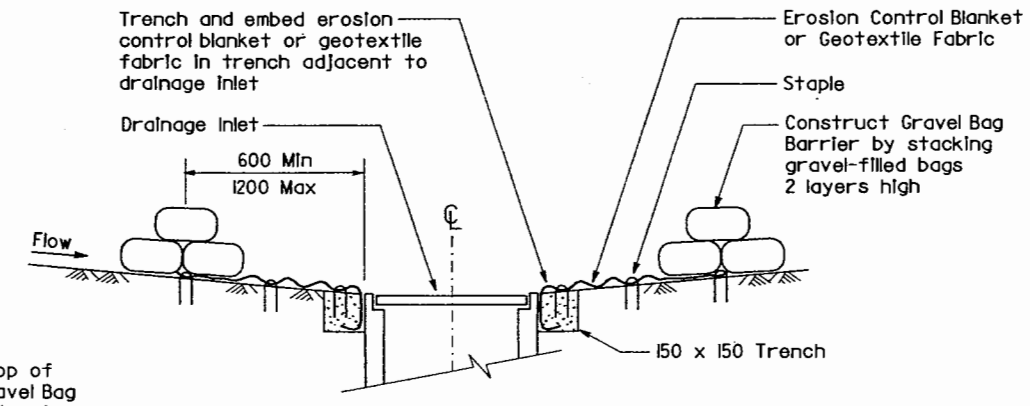

SECTION A-A

NOTES

1. Place safety cones adjacent to drainage inlet protection.
2. Dimensions may vary to fit field conditions.
3. Install a minimum of 3 gravel bag barriers upstream of each drainage inlet to be protected.
4. Position erosion control blanket or geotextile fabric at edge of concrete apron and secure in trench.
5. Erosion control blanket/geotextile fabric is not required if the area adjacent to the drainage inlet is vegetated or paved.

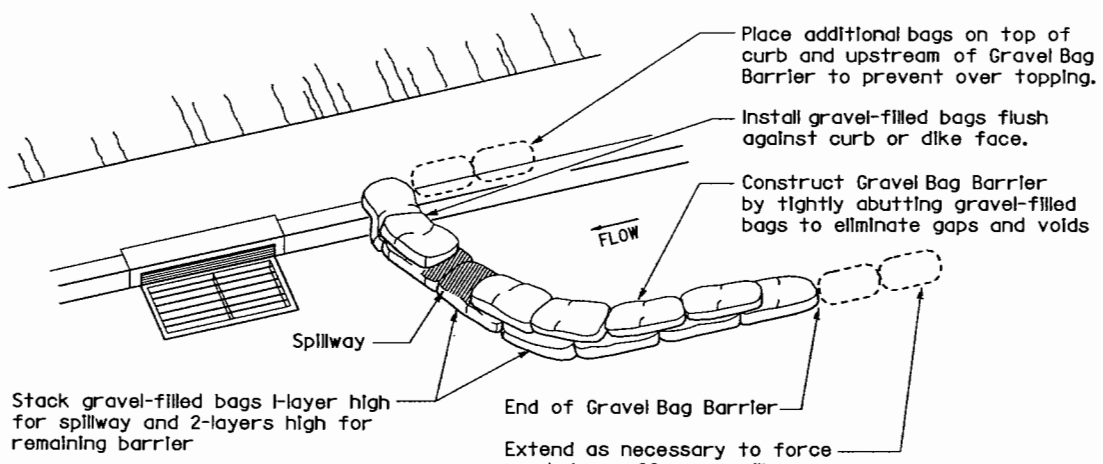

PERSPECTIVE

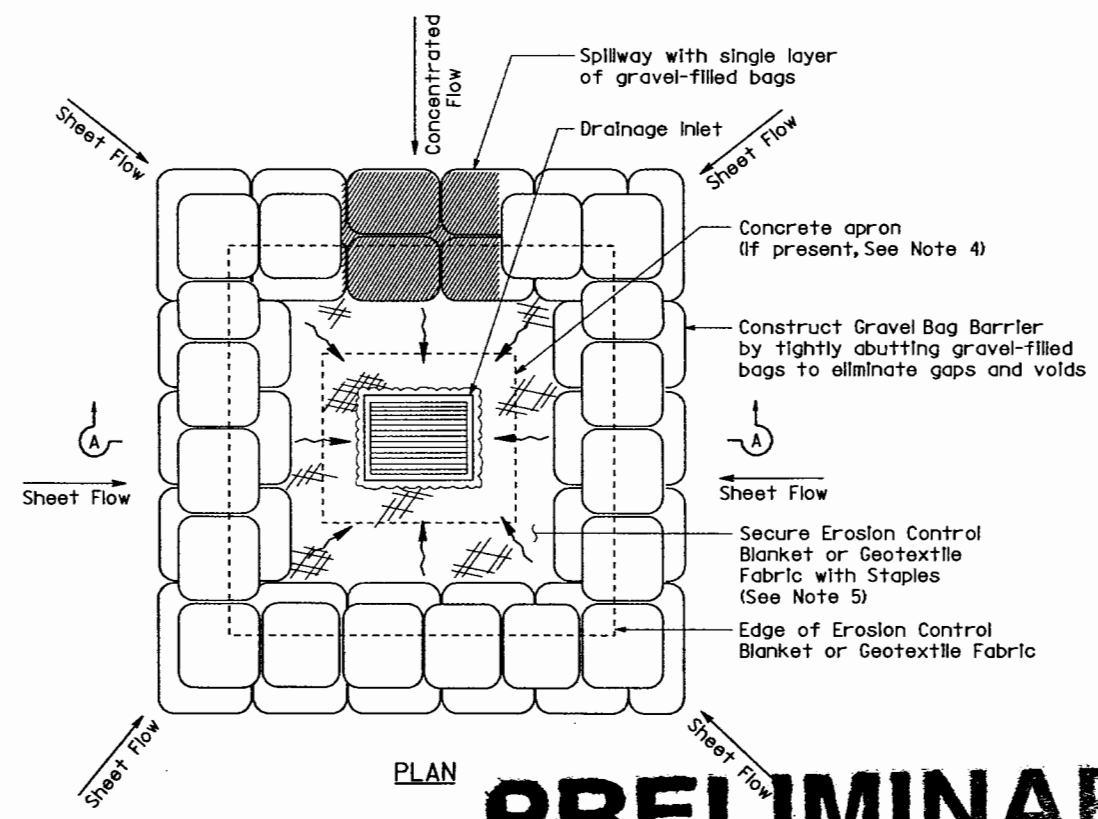

PLAN

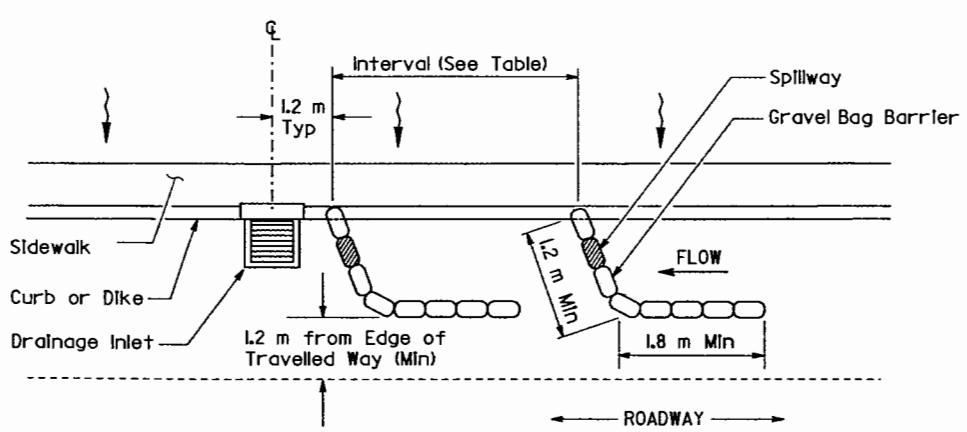

PLAN

TEMPORARY DRAINAGE INLET PROTECTION (TYPE 3A) (GRAVEL BAG BARRIER)

TEMPORARY DRAINAGE INLET PROTECTION (TYPE 3B) (GRAVEL BAG BARRIER)

PRELIMINARY SUBJECT TO REVISION

All dimensions are in millimeters unless otherwise shown

WATER POLLUTION CONTROL DETAILS

NO SCALE

WPCD-2

STATE OF CALIFORNIA - DEPARTMENT OF TRANSPORTATION
Caltrans OFFICE OF WATER QUALITY

SENIOR LANDSCAPE ARCHITECT: DAVID W. YAM

CALCULATED-DESIGNED BY: SALLY BANG
CHECKED BY: SALLY BANG
REVISED BY
DATE REVISED

LAST REVISION 10-09-07
DATE PLOTTED => 31-JAN-2008
TIME PLOTTED => 11:10

Dist	COUNTY	ROUTE	KILOMETER POST TOTAL PROJECT	SHEET No.	TOTAL SHEETS
04	Ala	880	43.9/45.4	N	N

LICENSED LANDSCAPE ARCHITECT

PLANS APPROVAL DATE

THE STATE OF CALIFORNIA OR ITS OFFICERS OR AGENTS SHALL NOT BE RESPONSIBLE FOR THE ACCURACY OR COMPLETENESS OF ELECTRONIC COPIES OF THIS PLAN SHEET.

LICENSED LANDSCAPE ARCHITECT — SALLY BANG No. 3580 — Registered 11-30-09 — Expires 12-31-2012 — 00-00-00 DATE — STATE OF CALIFORNIA

Caltrans Metric

FOAM BARRIER SPACING TABLE

SLOPE OF ROADWAY (PERCENT)	0 to 1	1 to 2	2 to 3	3 to 4	5 +
INTERVAL BETWEEN BARRIERS (M)	15.24	10.67	9.14	7.62	6.10
ANGLE FROM FACE OF CURB (DEGREES)	70°	70°	70°	45°	45°
SUGGESTED BARRIER LENGTH (M)	1.82	1.82	1.82	1.82	1.82

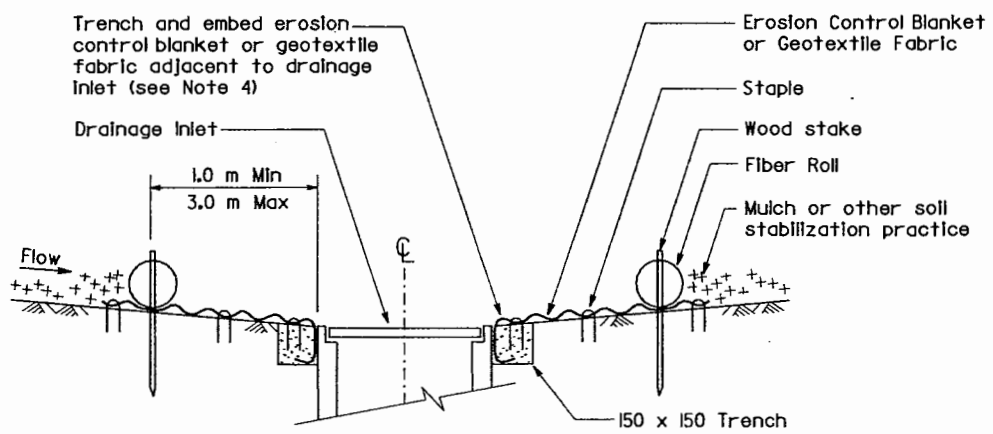

SECTION A-A

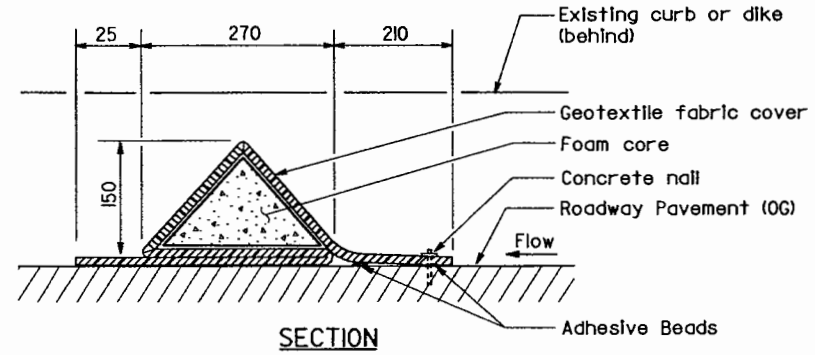

SECTION

FOAM BARRIER DETAIL

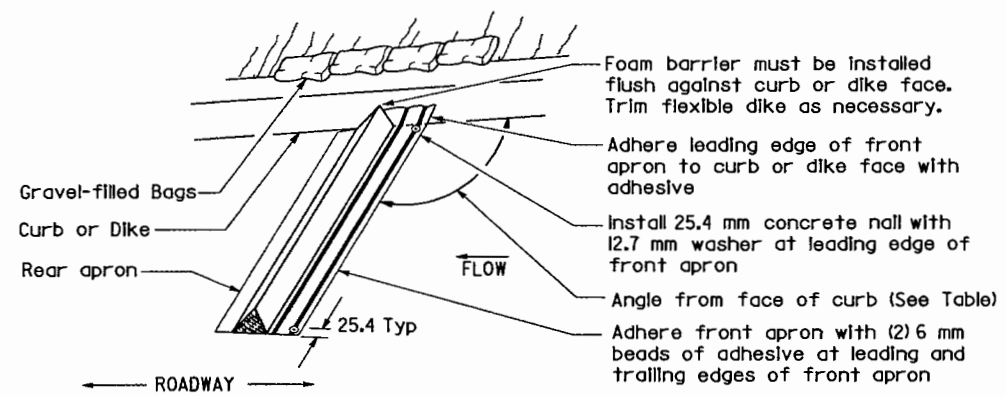

PERSPECTIVE

NOTES

1. See Std Plan T51 for Temporary Silt Fence.
2. Dimensions may vary to fit field conditions.
3. Install a minimum of 3 foam barriers upstream of each drainage inlet to be protected.
4. Position erosion control blanket or geotextile fabric at edge of concrete apron and secure in trench.
5. Erosion control blanket/geotextile fabric is not required if the area adjacent to the drainage inlet is vegetated.

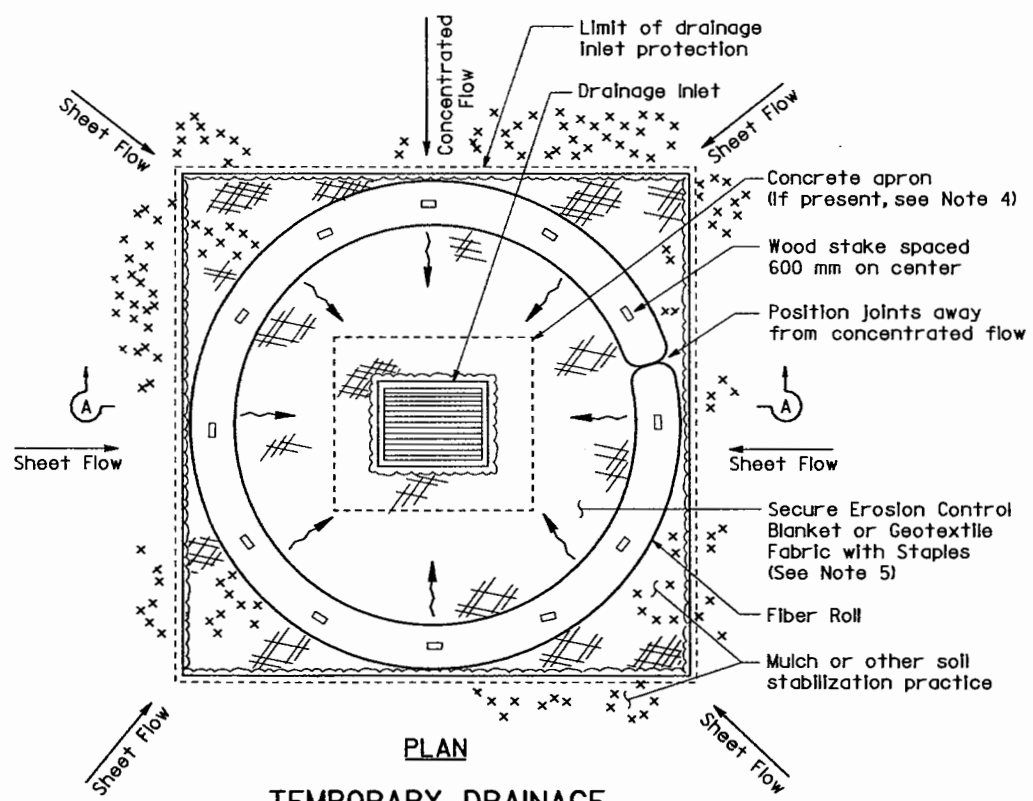

PLAN

TEMPORARY DRAINAGE INLET PROTECTION (TYPE 4A) (FIBER ROLLS)

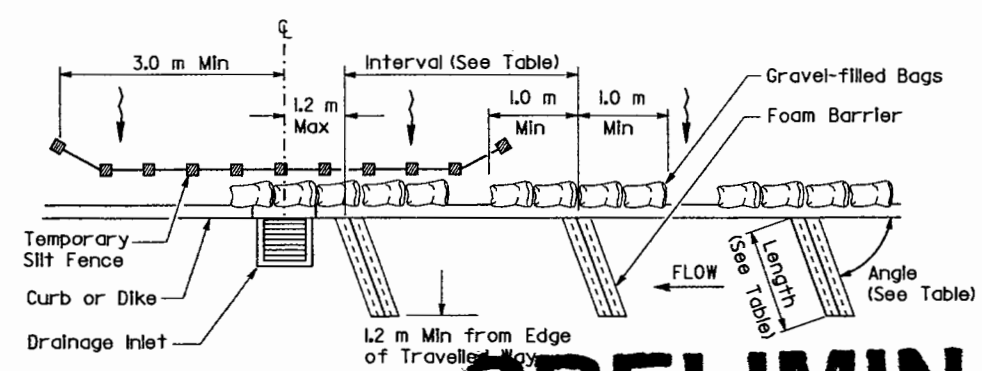

PLAN

TEMPORARY DRAINAGE INLET PROTECTION (TYPE 4B) (FOAM BARRIER)

PRELIMINARY SUBJECT TO REVISION

All dimensions are in millimeters unless otherwise shown

WATER POLLUTION CONTROL DETAILS

NO SCALE

WPCD-3

REVISED BY	DATE REVISED
SALLY BANG	SALLY BANG

CALCULATED-DESIGNED BY: SALLY BANG
CHECKED BY: SALLY BANG
SENIOR LANDSCAPE ARCHITECT: DAVID W. YAM

STATE OF CALIFORNIA - DEPARTMENT OF TRANSPORTATION
Caltrans OFFICE OF WATER QUALITY

LAST REVISION 10-09-07 | DATE PLOTTED => 31-JAN-2008 | TIME PLOTTED => 11:10

Dist	COUNTY	ROUTE	KILOMETER POST TOTAL PROJECT	SHEET No.	TOTAL SHEETS
04	Ala	880	43.9/45.4	N	N

Caltrans Metric

LICENSED LANDSCAPE ARCHITECT

PLANS APPROVAL DATE

LICENSED LANDSCAPE ARCHITECT — SALLY BANG — STATE OF CALIFORNIA — 11-30-09

THE STATE OF CALIFORNIA OR ITS OFFICERS OR AGENTS SHALL NOT BE RESPONSIBLE FOR THE ACCURACY OR COMPLETENESS OF ELECTRONIC COPIES OF THIS PLAN SHEET.

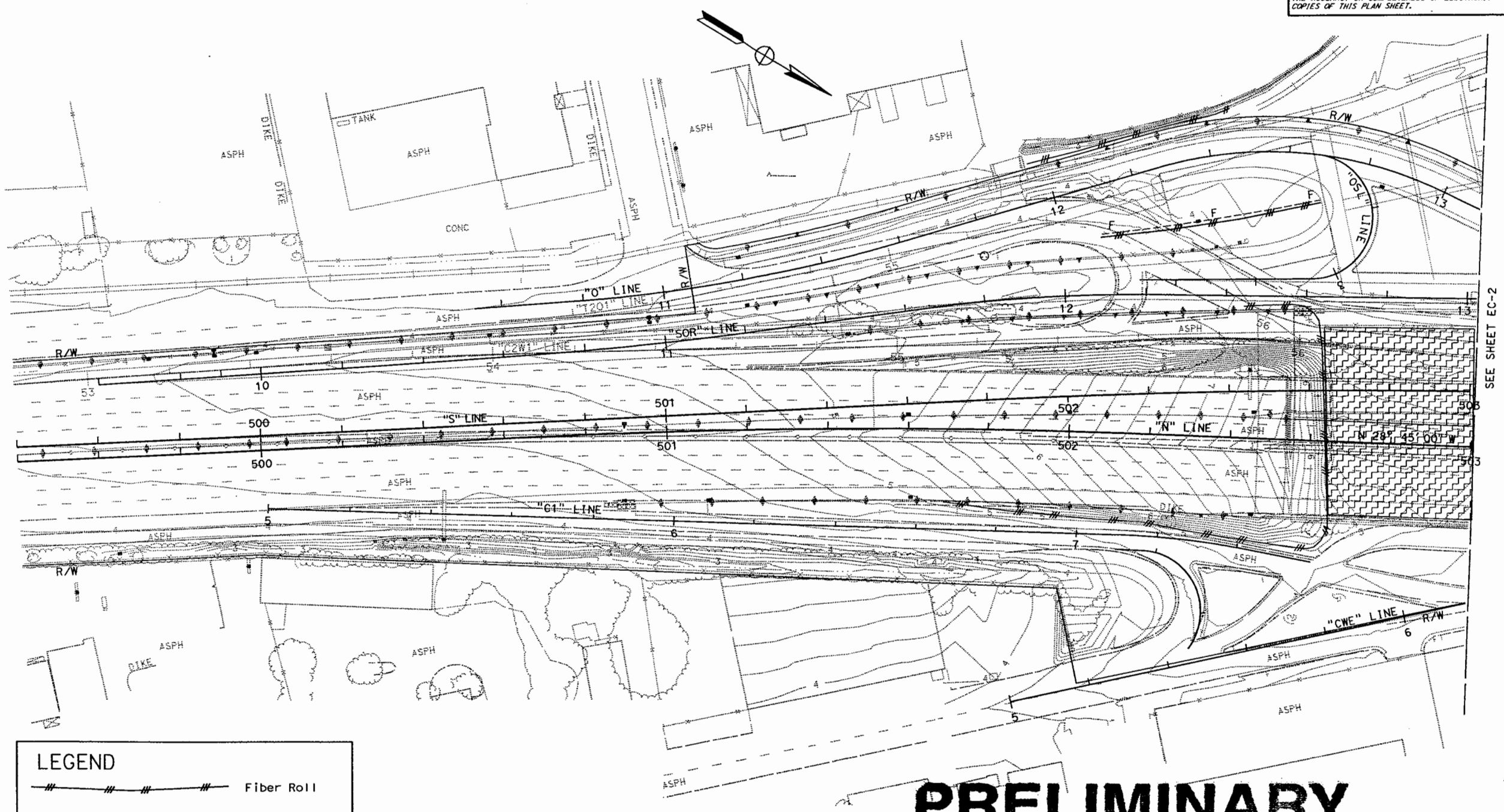

PRELIMINARY
SUBJECT TO REVISION

EROSION CONTROL PLAN

SCALE: 1:500 **EC-1**

All dimensions are in meters unless otherwise shown

STATE OF CALIFORNIA - DEPARTMENT OF TRANSPORTATION
Caltrans OFFICE OF WATER QUALITY

SENIOR LANDSCAPE ARCHITECT: DAVID W. YAM

CALCULATED-DESIGNED BY: SALLY BANG
CHECKED BY: SALLY BANG

REVISED BY
DATE REVISED

LAST REVISION 12-03-07
DATE PLOTTED => 31-JAN-2008
TIME PLOTTED => 11:10

BORDER LAST REVISED 3/1/2007

RELATIVE BORDER SCALE IS IN MILLIMETERS 0 20 40 60 80

USERNAME => s132175
DGN FILE => 416542ge001.dgn

CU 04343

EA 165421

Dist	COUNTY	ROUTE	KILOMETER POST TOTAL PROJECT	SHEET No.	TOTAL SHEETS
04	Ala	880	43.9/45.4	N	N

Sally Bang
LICENSED LANDSCAPE ARCHITECT

PLANS APPROVAL DATE

THE STATE OF CALIFORNIA OR ITS OFFICERS OR AGENTS SHALL NOT BE RESPONSIBLE FOR THE ACCURACY OR COMPLETENESS OF ELECTRONIC COPIES OF THIS PLAN SHEET.

LICENSED LANDSCAPE ARCHITECT SALLY A. BANG NO. 3860 11-30-09 EXPIRATION DATE 00-00-00 DATE STATE OF CALIFORNIA

Caltrans Metric

All dimensions are in meters unless otherwise shown

PRELIMINARY SUBJECT TO REVISION

EROSION CONTROL PLAN

SCALE: 1:500

EC-2

STATE OF CALIFORNIA - DEPARTMENT OF TRANSPORTATION
Caltrans OFFICE OF WATER QUALITY

SENIOR LANDSCAPE ARCHITECT: DAVID W. YAM

CALCULATED-DESIGNED BY: SALLY BANG
CHECKED BY: SALLY BANG

REVISED BY
DATE REVISED

LAST REVISION 12-03-07
DATE PLOTTED => 31-JAN-2008
TIME PLOTTED => 11:10

BORDER LAST REVISED 3/1/2007

RELATIVE BORDER SCALE IS IN MILLIMETERS 0 20 40 60 80

USERNAME => s132175
DGN FILE => 416542ge002.dgn

CU 04343

EA 165421

Dist	COUNTY	ROUTE	KILOMETER POST TOTAL PROJECT	SHEET No.	TOTAL SHEETS
04	Ala	880	43.9/45.4	N	N

Sally Bang
LICENSED LANDSCAPE ARCHITECT

11-30-09
Signature of Licensed Landscape Architect
Date

PLANS APPROVAL DATE

THE STATE OF CALIFORNIA OR ITS OFFICERS OR AGENTS SHALL NOT BE RESPONSIBLE FOR THE ACCURACY OR COMPLETENESS OF ELECTRONIC COPIES OF THIS PLAN SHEET.

LICENSED LANDSCAPE ARCHITECT
SALLY BANG No. 3069
STATE OF CALIFORNIA

Caltrans Metric

PRELIMINARY SUBJECT TO REVISION

All dimensions are in meters unless otherwise shown

EROSION CONTROL PLAN

SCALE: 1:500

EC-3

STATE OF CALIFORNIA - DEPARTMENT OF TRANSPORTATION	
Caltrans OFFICE OF WATER QUALITY	
SENIOR LANDSCAPE ARCHITECT	DAVID W. YAM
CALCULATED-DESIGNED BY	SALLY BANG
CHECKED BY	SALLY BANG
REVISED BY	
DATE REVISED	

ASF REVISION 12-03-07 | DATE PLOTTED => 31-JAN-2008 | TIME PLOTTED => 11:10

Dist	COUNTY	ROUTE	KILOMETER POST TOTAL PROJECT	SHEET No.	TOTAL SHEETS
04	Ala	880	43.9/45.4	N	N

Sally Bang
LICENSED LANDSCAPE ARCHITECT

PLANS APPROVAL DATE

THE STATE OF CALIFORNIA OR ITS OFFICERS OR AGENTS SHALL NOT BE RESPONSIBLE FOR THE ACCURACY OR COMPLETENESS OF ELECTRONIC COPIES OF THIS PLAN SHEET.

LICENSED LANDSCAPE ARCHITECT — SALLY BANG No. 2304 — Sally Bang — Signature — 11-20-09 — Renewal Date — Date — STATE OF CALIFORNIA

Caltrans Metric

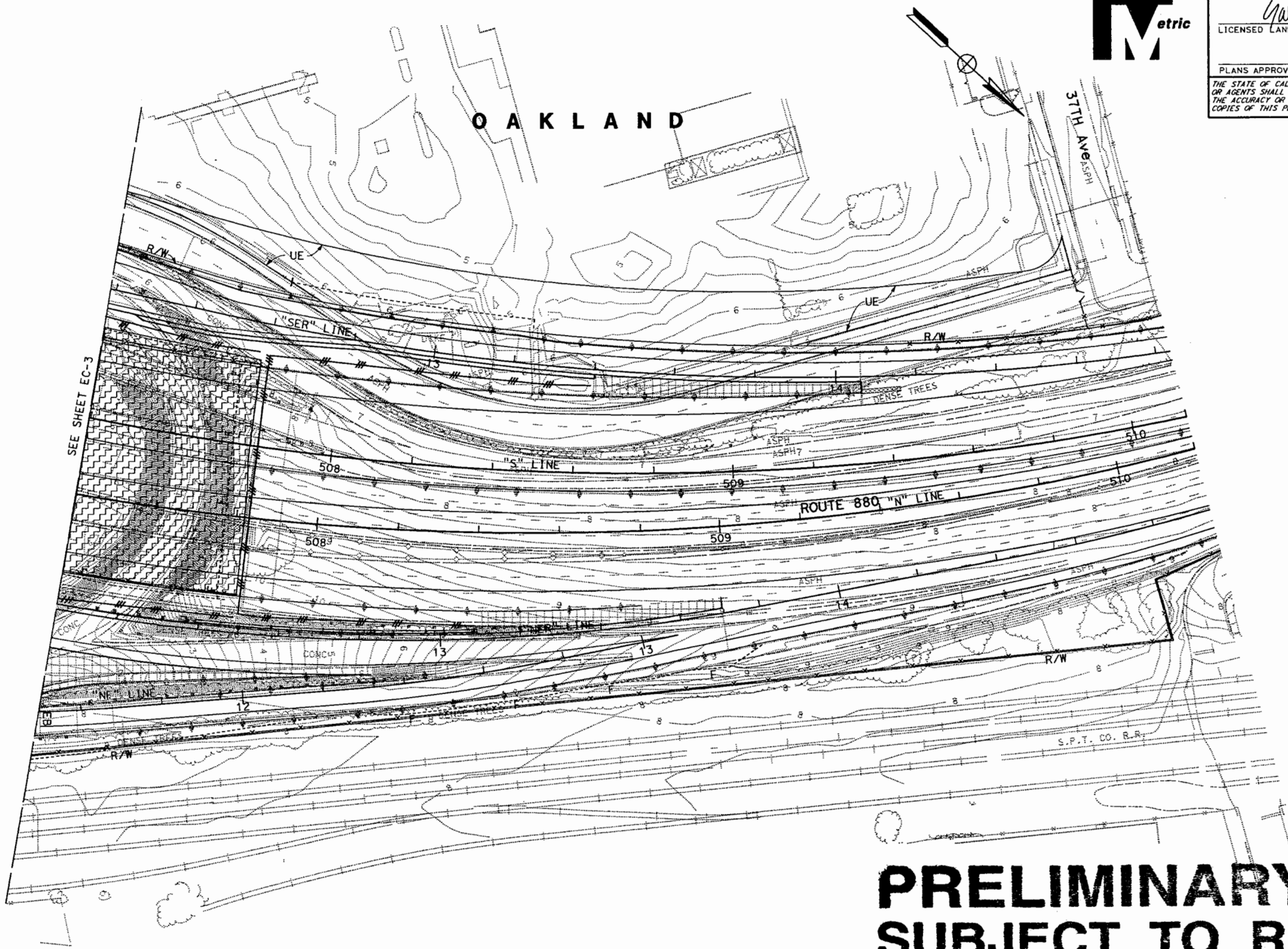

PRELIMINARY
SUBJECT TO REVISION

All dimensions are in meters unless otherwise shown

EROSION CONTROL PLAN
EC-4

SCALE: 1:500

LAST REVISION 12-03-07 | DATE PLOTTED => 31-JAN-2008 | TIME PLOTTED => 11:10

STATE OF CALIFORNIA - DEPARTMENT OF TRANSPORTATION
Caltrans OFFICE OF WATER QUALITY

SENIOR LANDSCAPE ARCHITECT: DAVID W. YAM
CALCULATED-DESIGNED BY: SALLY BANG
CHECKED BY: SALLY BANG
REVISED BY
DATE REVISED

BORDER LAST REVISED 3/1/2007 | RELATIVE BORDER SCALE IS IN MILLIMETERS 0 20 40 60 80 | USERNAME => s132175 | DGN FILE => 416542ge004.dgn | CU 04343 | EA 165421

Dist	COUNTY	ROUTE	KILOMETER POST TOTAL PROJECT	SHEET No.	TOTAL SHEETS
04	Ala	880	43.9/45.4	N	N

LICENSED LANDSCAPE ARCHITECT

PLANS APPROVAL DATE

THE STATE OF CALIFORNIA OR ITS OFFICERS OR AGENTS SHALL NOT BE RESPONSIBLE FOR THE ACCURACY OR COMPLETENESS OF ELECTRONIC COPIES OF THIS PLAN SHEET.

LICENSED LANDSCAPE ARCHITECT SALLY BANG No. 3024 11-30-09 STATE OF CALIFORNIA

EROSION CONTROL & WATER POLLUTION CONTROL QUANTITIES

	UNIT	QTY
MULCH (EROSION CONTROL)	M3	2320
FIBER ROLLS	M	800
EROSION CONTROL (TYPE D)	HA	1
MOVE IN/ MOVE OUT (EROSION CONTROL)	EA	5
TEMPORARY DRAINAGE INLET PROTECTION	EA	75
TEMPORARY COVER	M2	900
TEMPORARY SILT FENCE	M	2000

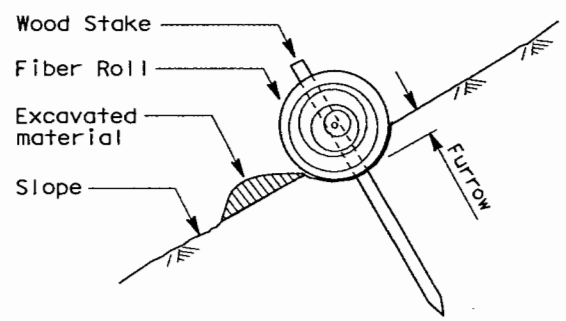

SECTION

FIBER ROLL

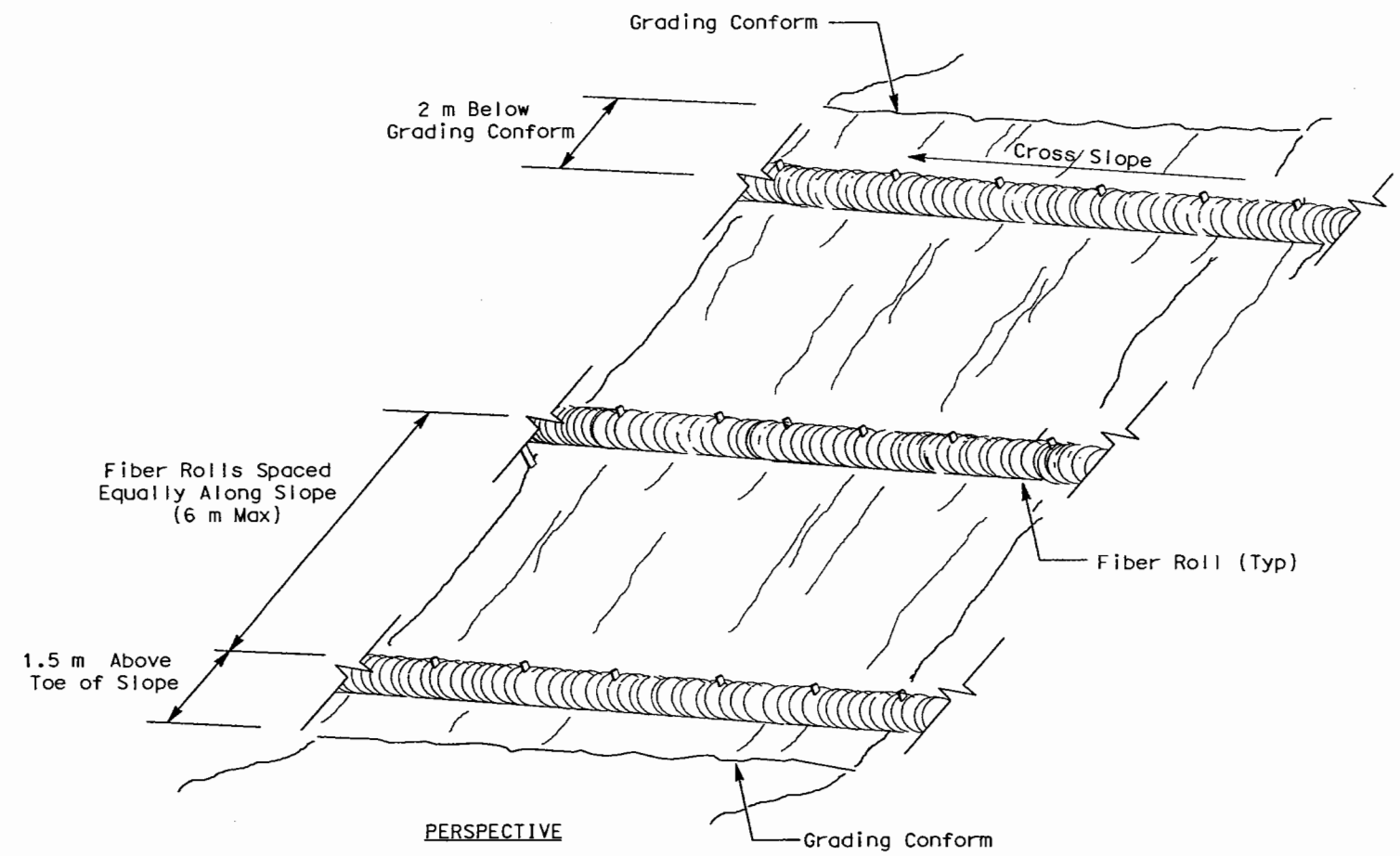

PERSPECTIVE

FIBER ROLL (TYPE I)
(FURROW METHOD)

PRELIMINARY
SUBJECT TO REVISION

All dimensions are in meters unless otherwise shown

EROSION CONTROL DETAILS AND QUANTITIES

NO SCALE

ECD-1

STATE OF CALIFORNIA - DEPARTMENT OF TRANSPORTATION
Caltrans OFFICE OF WATER QUALITY

SENIOR LANDSCAPE ARCHITECT: DAVID W. YAM

CALCULATED-DESIGNED BY: SALLY BANG
CHECKED BY: SALLY BANG

REVISED BY
DATE REVISED

LAST REVISION 10-09-07 DATE PLOTTED => 11-30-2008 TIME PLOTTED => 11:10

Dist	COUNTY	ROUTE	KILOMETER POST TOTAL PROJECT	SHEET No.	TOTAL SHEETS
04	Ala	880	43.9/45.4		

Paul Snyder 1-4-08
REGISTERED CIVIL ENGINEER DATE

PLANS APPROVAL DATE

REGISTERED PROFESSIONAL ENGINEER P. Snyder No. 41128 Exp. 3-31-09 CIVIL STATE OF CALIFORNIA

THE STATE OF CALIFORNIA OR ITS OFFICERS OR AGENTS SHALL NOT BE RESPONSIBLE FOR THE ACCURACY OR COMPLETENESS OF ELECTRONIC COPIES OF THIS PLAN SHEET.

Caltrans Metric

FOR COMPLETE RIGHT OF WAY AND ACCURATE ACCESS DATA, SEE RIGHT OF WAY RECORD MAPS AT DISTRICT OFFICE.

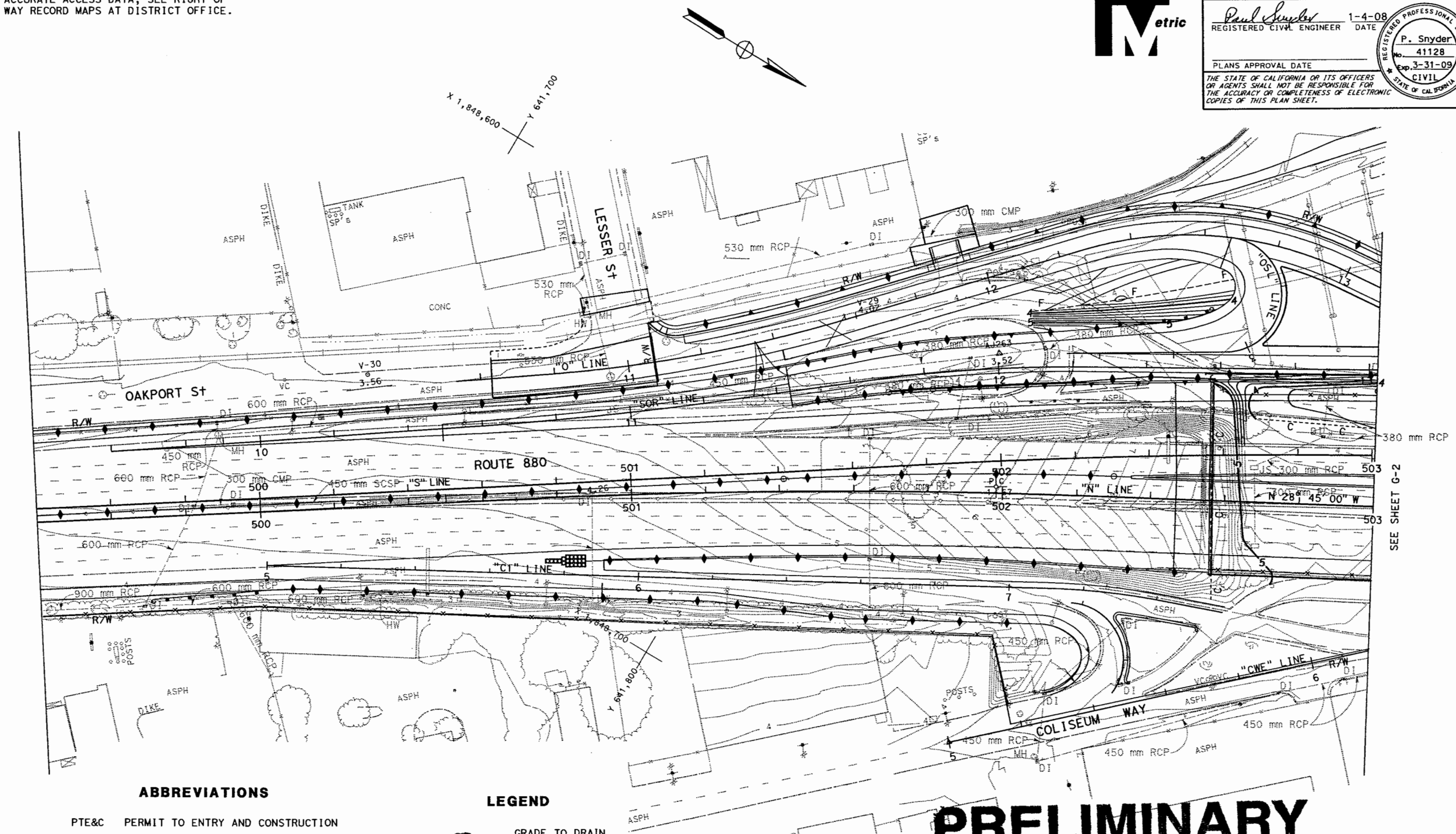

ABBREVIATIONS

PTE&C	PERMIT TO ENTRY AND CONSTRUCTION
TCE	TEMPORARY CONSTRUCTION EASEMENT
UE	UTILITY EASEMENT

LEGEND

→ GRADE TO DRAIN

PRELIMINARY
SUBJECT TO REVISION

ALL DIMENSIONS ARE IN METERS UNLESS OTHERWISE SHOWN

CONTOUR GRADING

SCALE: 1:500

G-1

THIS PLAN ACCURATE FOR CONTOUR GRADING ONLY

STATE OF CALIFORNIA - DEPARTMENT OF TRANSPORTATION
Caltrans
DESIGN

FUNCTIONAL SUPERVISOR: ALBERT J. ZEPEDA
CALCULATED-DESIGNED BY: SON TRAN
CHECKED BY: P. SNYDER
REVISED BY
DATE REVISED

LAST REVISION DATE 09-12-07 TIME
PTED => 31-JAN-2008
PED => 13:52

BORDER LAST REVISED 3/1/2007

RELATIVE BORDER SCALE IS IN MILLIMETERS 0 20 40 60 80

USERNAME => s132175
DGN FILE => 416542ha001.dgn

CU 04250

EA 165421