Dist	COUNTY	ROUTE	KILOMETER POST TOTAL PROJECT	SHEET No.	TOTAL SHEETS
04	Son	101	~~34.9/47.7~~ 22.4/25.0		

REGISTERED CIVIL ENGINEER DATE

PLANS APPROVAL DATE

REGISTERED PROFESSIONAL ENGINEER Jerilyn L. Struven No. 49964 Exp. 12-31-08 CIVIL STATE OF CALIFORNIA

THE STATE OF CALIFORNIA OR ITS OFFICERS OR AGENTS SHALL NOT BE RESPONSIBLE FOR THE ACCURACY OR COMPLETENESS OF ELECTRONIC COPIES OF THIS PLAN SHEET.

Caltrans Metric

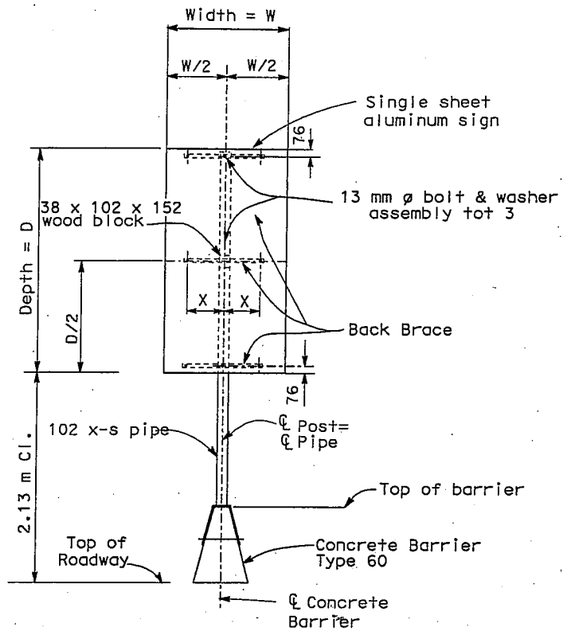

ELEVATION

SIGN POST ON CONCRETE BARRIER

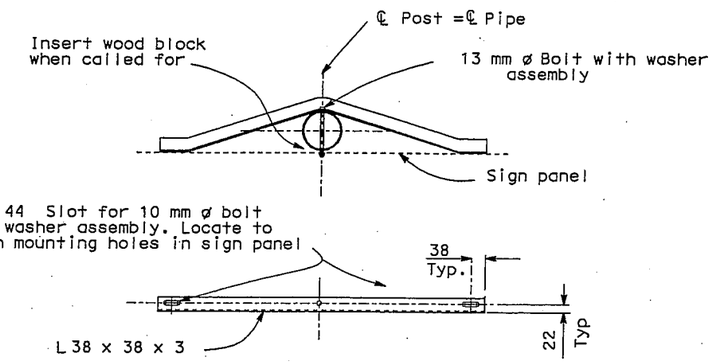

BACK BRACE DETAILS

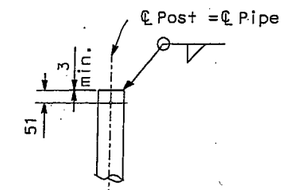

TOP OF POST DETAIL

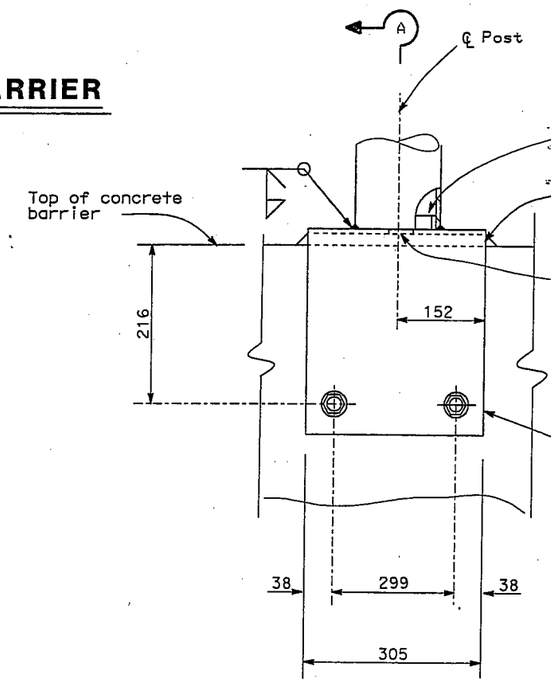

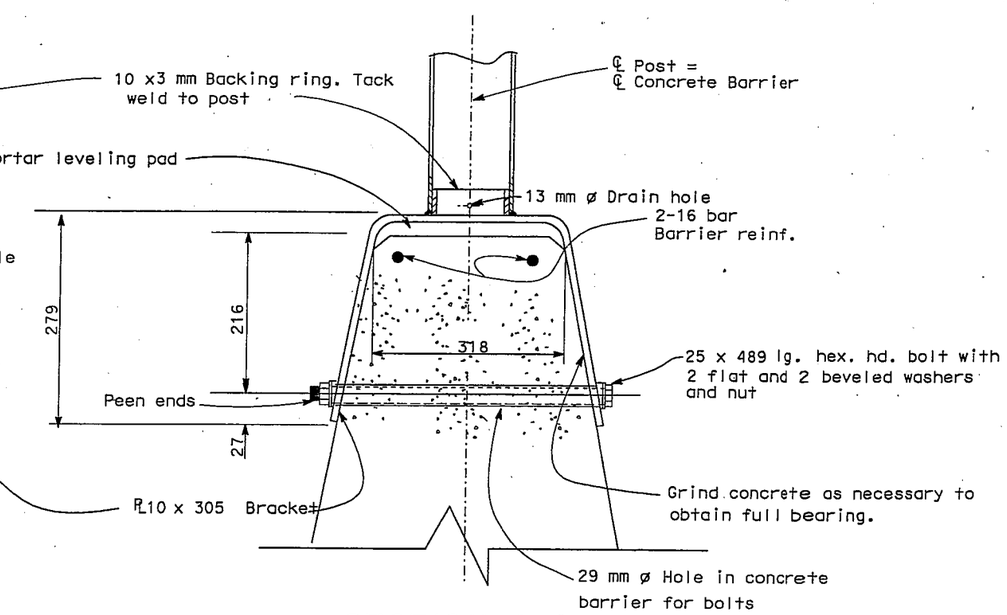

SECTION A-A

SIGN TABLE

Depth = D	Width = W	Back Brace= X
1.8 m	750	300
1.65 m	750	300
1.5 m +.6	750	300

A

ELEVATION

MOUNTING BRACKET

Notes:
1. For details not shown see STANDARD PLANS.
2. Washer assembly consist of two flat washers, nut, fiber washer and jam nut.
3. All sign panels are state furnished.
4. All steel galvanized after fabrication.
5. For location of signs and concrete barrier details see PROJECT PLANS.

ALL DIMENSION ARE IN MILLIMETERS UNLESS OTHERWISE SHOWN

SIGN POST MOUNTING DETAILS ON CONCRETE BARRIER TYPE 60

SD-8

REVISED BY	DATE REVISED
HSR	JLS

CALCULATED-DESIGNED BY / CHECKED BY

FUNCTIONAL SUPERVISOR: JERILYN L. STRUVEN

STATE OF CALIFORNIA - DEPARTMENT OF TRANSPORTATION

Caltrans TRAFFIC

LAST REVISION 07-05-07 | DATE PLOTTED => 05-JUL-2007 | TIME PLOTTED => 10:22