I-080-2 (11) 43

FED. ROAD DIV. NO.	STATE	PROJ. NO.	FISCAL YEAR	SHEET NO.	TOTAL SHEETS
7	CALIF.			151	239

Rte. 80
P.M. 17.7

DIST.	COUNTY	ROUTE	SECTION	SHEET NO.	TOTAL SHEETS
X	SOL	80	H	5	10

ASSISTANT STATE HIGHWAY ENGINEER — CIVIL ENGINEER—LICENSE 7848
BRIDGE DIRECTOR — CIVIL ENGINEER—LICENSE 6555
DATE APPROVED JANUARY 18, 1960
STATE HIGHWAY ENGINEER — CIVIL ENGINEER—LICENSE 5545

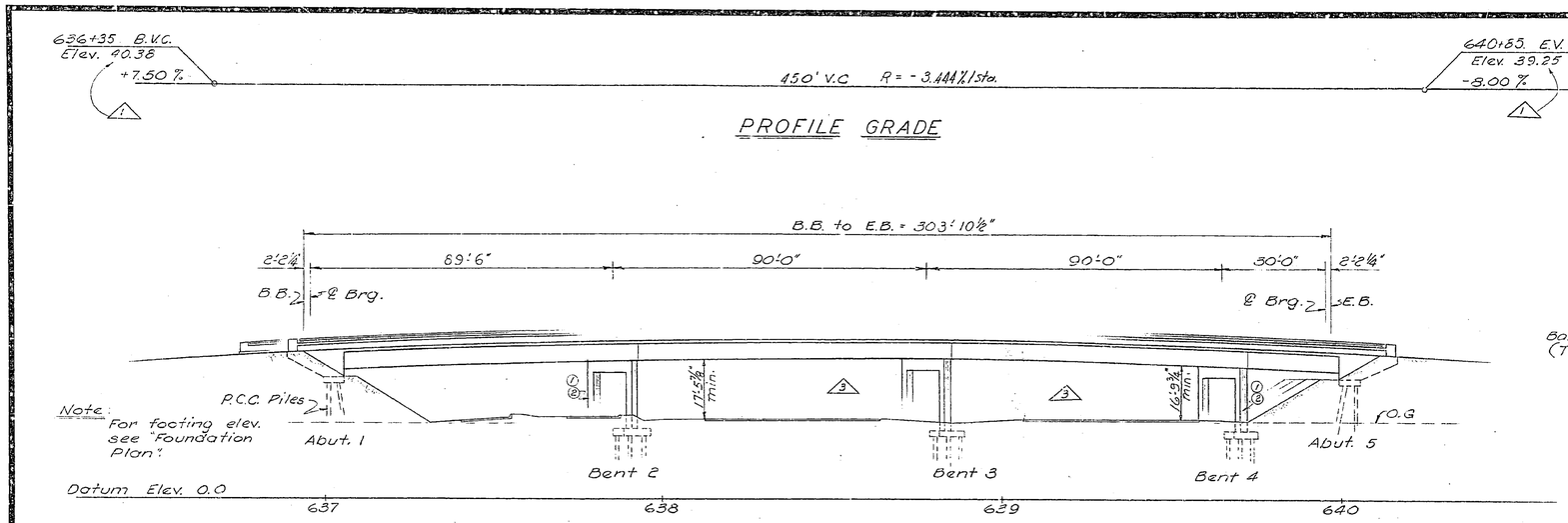

P.C.C. PILES

Location	Spec. Tip Elev
Abutment 1	-23
Bent 2	-23
Bent 3	-23
Bent 4	-13
Abutment 5	-13

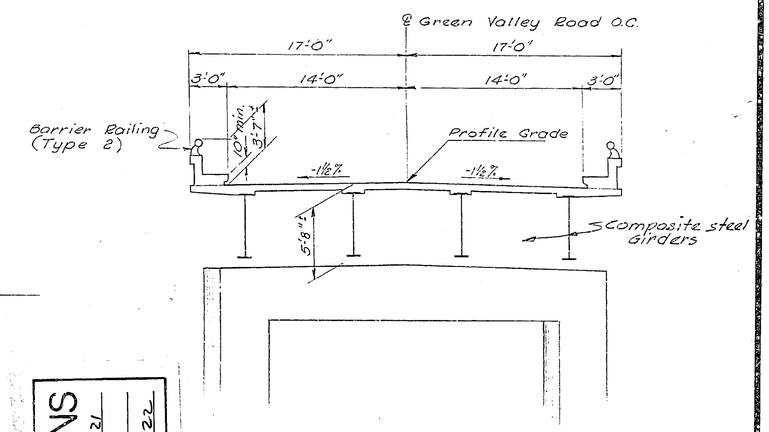

AS BUILT PLANS
Contract No. 60-107621
Date Completed 12-1-61
Document No. 0000122

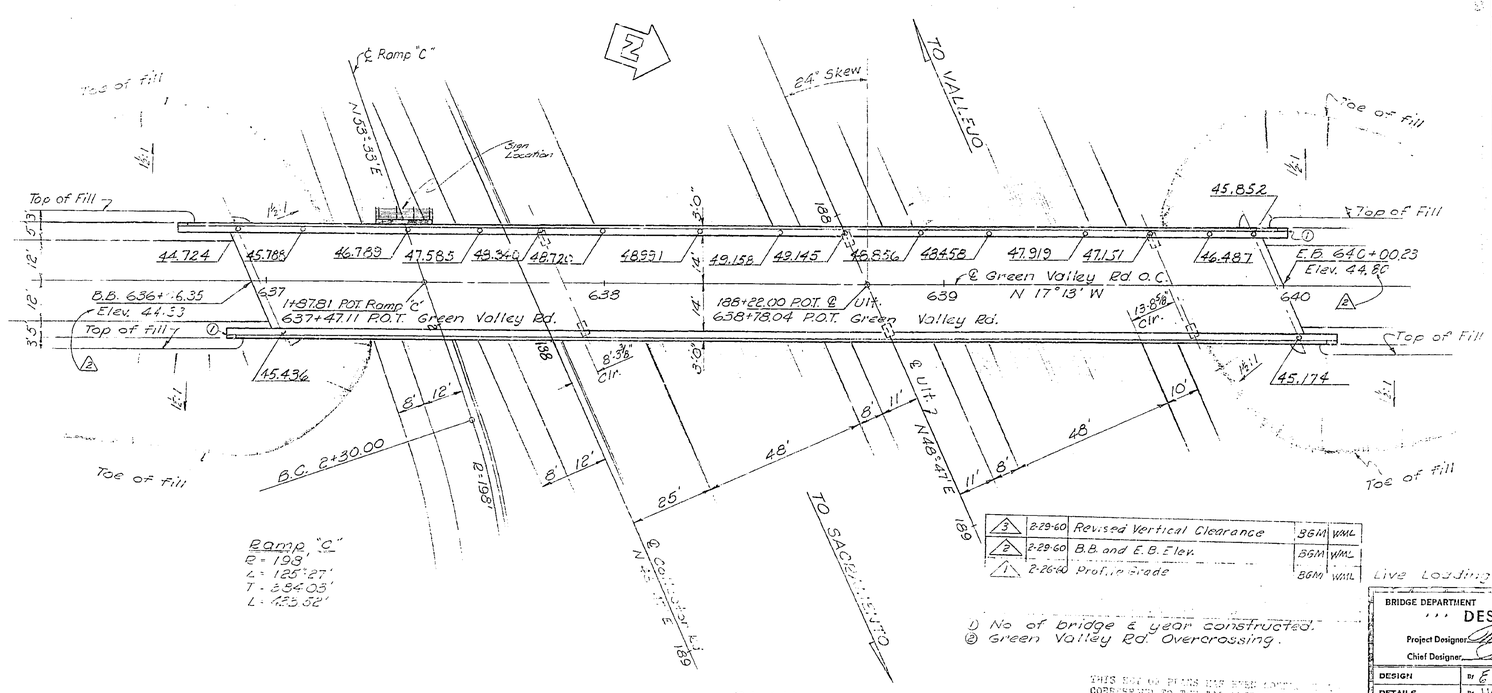

1) No of bridge & year constructed.
2) Green Valley Rd Overcrossing.

3	2-28-60	Revised Vertical Clearance	BGM	WML
2	2-26-60	B.B. and E.B. Elev.	BGM	WML
1	2-26-60	Profile Grade	BGM	WML

Live Loading H20-S16-44 & Alternative. For General Notes See Foundation Plan No. 2

THIS SET OF PLANS HAS BEEN CORRECTED TO THE "AS BUILT" STATE AS SHOWN BY RED PENCIL 12-61
ENGINEER E.L. Boudreau
TRACINGS CORRECTED BY DRAFTING 12-61

BRIDGE DEPARTMENT
"DESIGN SECTION A" 13
Project Designer: Chief Designer:

DESIGN	By E.D. Mory 8-58	Checked	
DETAILS	By W. Louie 4-58	Checked	
QUANTITIES	By	Checked	
SPECIFICATIONS	By	Plans and Specs. Compared	
Approval Recommended by	Partner of Design	Chief Structural Engr.	

STATE OF CALIFORNIA
DEPARTMENT OF PUBLIC WORKS
DIVISION OF HIGHWAYS

60-107621

GREEN VALLEY ROAD OVERCROSSING

LOCATED AT THE EXISTING INTERSECTION OF RTES. 7 & 74
IN SOLANO COUNTY

GENERAL PLAN

SCALE As Noted | BRIDGE 23-138 | FILE | DRAWING S

PREL. DRAWING No. P-5801

INDEX TO PLANS

Sheet No.	Title
1	General Plan
2	Foundation Plan
3	Abutment Details
4	Bent Details
5	Typical Section & Girder Layout
6	Standard Details No. 1
7	Barrier Railing
8	Pile Details
9	Standard Details No. 2
10	Log of Test Borings

APPROXIMATE QUANTITIES

		Final Quantities
STRUCTURE EXCAVATION	220 C.Y.	284.1 c.y.
STRUCTURE BACKFILL	150 C.Y.	165.1 c.y.
*CLASS "A" CONCRETE (BRIDGES)	450 C.Y.	457 c.y.
RUBBER WATERSTOP	175 L.F.	173.5 l.f.
*BAR REINFORCING STEEL (BRIDGES)	83,000 LBS.	83,138 lbs.
FURNISHING CONCRETE PILING	2,435 L.F.	2,533.4 l.f.
DRIVING CONCRETE PILES	58 EA.	58 ea.
*STRUCTURAL STEEL	248,000 LBS.	248,000 lbs.
CLEANING AND PAINTING STRUCTURAL STEEL	LUMP SUM	Lump Sum
BARRIER RAILING, TYPE 2	659 L.F.	659.5 l.f.

*FINAL QUANTITIES

I HEREBY CERTIFY THAT THIS IS A TRUE AND ACCURATE COPY OF THE ABOVE DOCUMENT TAKEN UNDER MY DIRECTION AND CONTROL ON THIS DATE IN SACRAMENTO, CALIFORNIA PURSUANT TO AUTHORIZATION BY THE DIRECTOR OF PUBLIC WORKS.

DATE_____ SIGNATURE_____ TITLE_____

SCALE 1" = 50' MICROFILM - STATE OF CALIFORNIA - DEPARTMENT OF PUBLIC WORKS - MICROFILM SCALE 1" = 20'
SCALE 1" = 10' or 1" = 100' MICROFILM - STATE OF CALIFORNIA - DEPARTMENT OF PUBLIC WORKS - MICROFILM SCALE 1" = 40'

I-080-2 (11) 43

FED. ROAD DIV. No.	STATE	PROJ. No.	FISCAL YEAR	SHEET No.	TOTAL SHEETS
7	CALIF.			152	239

DIST.	COUNTY	ROUTE	SECTION	SHEET No.	TOTAL SHEETS
X	SOL			2	10

BRIDGE ENGINEER CIVIL ENGINEER—LICENSE 5585

DATE APPROVED January 18, 1960

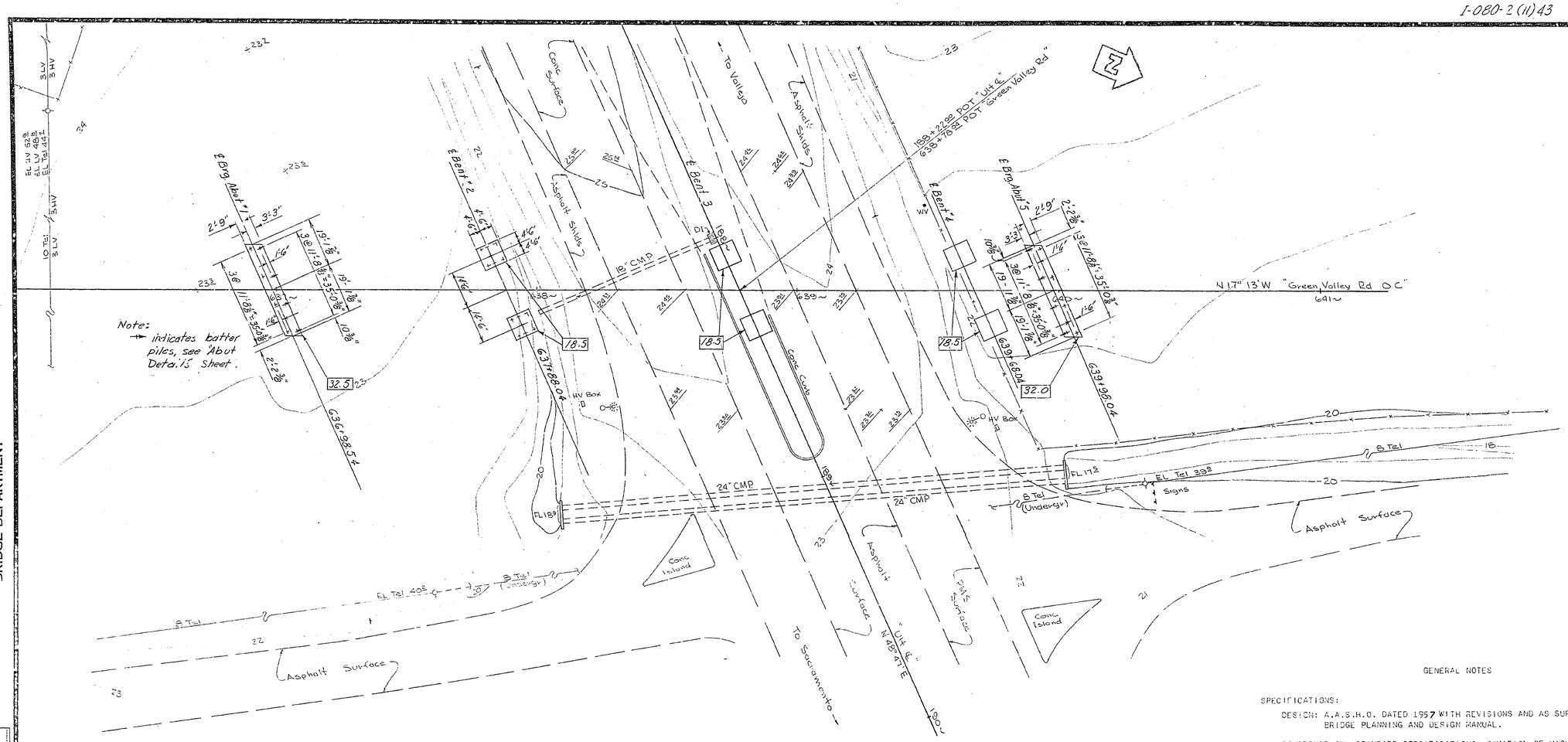

GENERAL NOTES

SPECIFICATIONS:

DESIGN: A.A.S.H.O. DATED 1957 WITH REVISIONS AND AS SUPPLEMENTED BY BRIDGE PLANNING AND DESIGN MANUAL.

CONSTRUCTION: STANDARD SPECIFICATIONS, DIVISION OF HIGHWAYS, DATED JAN. 1960 AND THE SPECIAL PROVISIONS.

LIVE LOADING: H20-S16-44 AND ALTERNATIVE

UNIT STRESSES:

REINFORCED CONCRETE: F_s = 20,000 P.S.I., N = 10

F_c = 1,200 P.S.I. (EXCEPT AS NOTED)

F_c = 1,000 P.S.I. (ROADWAY SLAB ON GIRDERS)

STRUCTURAL STEEL: F_s = 18,000 P.S.I.

PILE LOADING: 45 TONS TYPE: P.C.C.

THIS SET OF PLANS HAS BEEN CORRECTED TO CORRESPOND TO THE AS BUILT CONDITIONS AS PUBLISHED BY RESIDENT ENGINEER [illegible] 10-61 [illegible] RECORDS CORRECTED BY: [illegible] DATE: 12-71

BM
Fd Punched "□" NE cor Intsc! 135' Lt 180+42.24 Sur ℄ Elev 20.88

BM "D"
Painted N.W. corner of porch slab Bridge Department Office - Elev. 26.175

Note:
0.0 indicates bottom of Footing Elev.
Bent "2 typical for all Bents.
See Bent Details" for Bent pile spacing.
Bearing for all ℄ Abuts & Bents = N 48° 47' 00" E

Not [illegible]

AS BUILT PLANS
Contract No. 60-10TC21
Date Completed
Document No. 00001122

BRIDGE DEPARTMENT
DESIGN SECTION
Project Designer [illegible]
DESIGN [illegible] 8/58
DETAILS W McClapon 8/58
QUANTITIES [illegible]
SPECIFICATIONS [illegible]
Approval Recommended by [illegible] Bridge Engineer
Registered Civil Engineer No. 5419

STATE OF CALIFORNIA
DEPARTMENT OF PUBLIC WORKS
DIVISION OF HIGHWAYS

GREEN VALLEY ROAD OVERCROSSING

FOUNDATION PLAN

SCALE 1" = 20' | BRIDGE 23-138 | FILE E-23 | DRAWING C-5801-2

PREL. DWG. 5801 [illegible]

Submitted by: Bridge Engineer
DESIGN
DETAILS
QUANTITIES
SPECIFICATIONS
Approval Recommended by
BY DATE
SURVEY
DRAWN
TRACED

Old Revisions
Date of Revisions
Date of Revisions

152

I HEREBY CERTIFY THAT THIS IS A TRUE AND ACCURATE COPY OF THE ABOVE DOCUMENT TAKEN UNDER MY DIRECTION AND CONTROL ON THIS DATE IN SACRAMENTO, CALIFORNIA PURSUANT TO AUTHORIZATION BY THE DIRECTOR OF PUBLIC WORKS.

DATE 12-8-71 SIGNATURE [illegible] TITLE Sr. [illegible]

MICROFILM - STATE OF CALIFORNIA - DEPARTMENT OF PUBLIC WORKS - MICROFILM

I-080-2 (11) 43

FED. ROAD DIV. No.	STATE	PROJ. No.	FISCAL YEAR	SHEET No.	TOTAL SHEETS
7	CALIF.			153	239

DIST.	COUNTY	ROUTE	SECTION	SHEET No.	TOTAL SHEETS
X	SOL			S-2	70

BRIDGE ENGINEER — CIVIL ENGINEER — LICENSE 5585

DATE APPROVED January 18, 1960.

WINGWALL ELEVATION

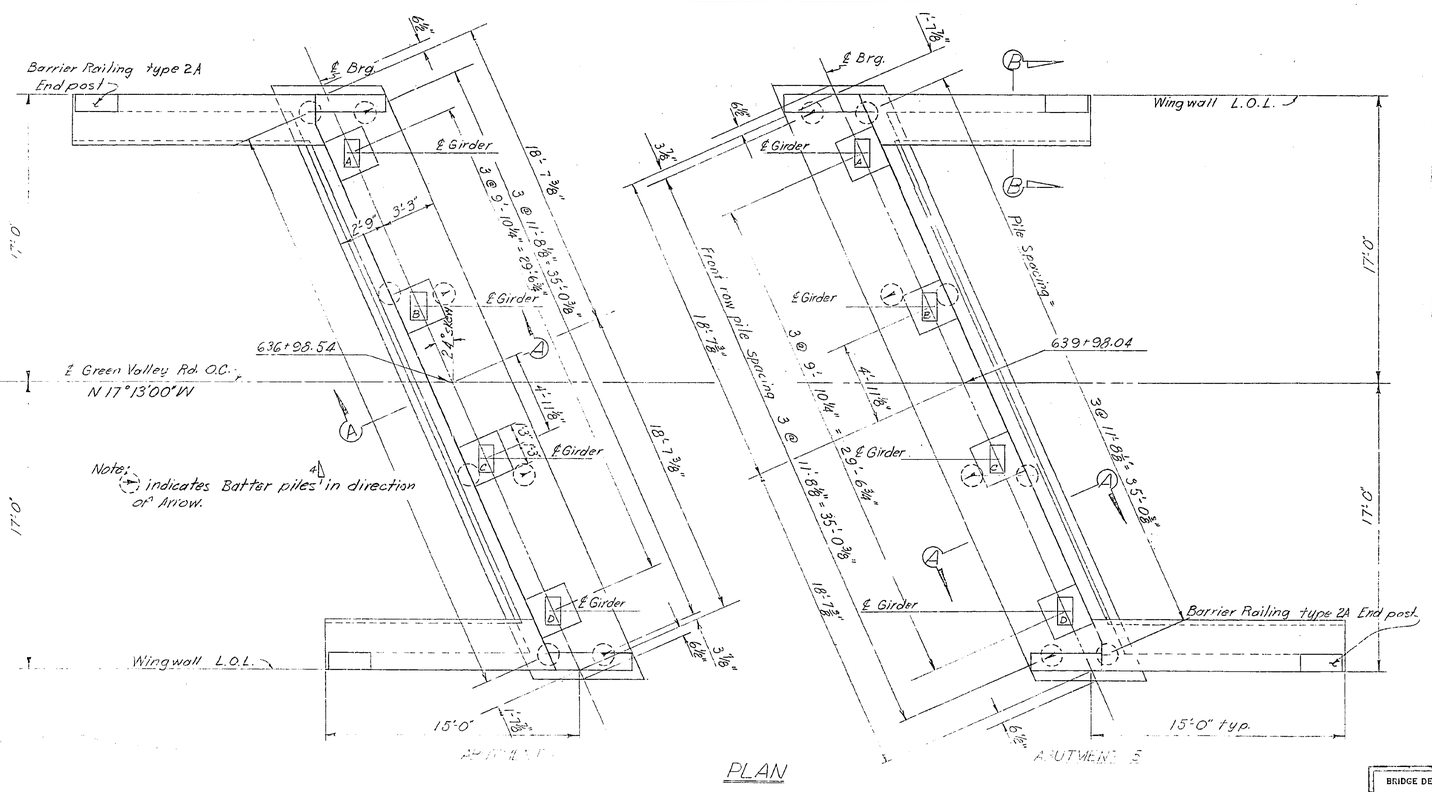

PLAN

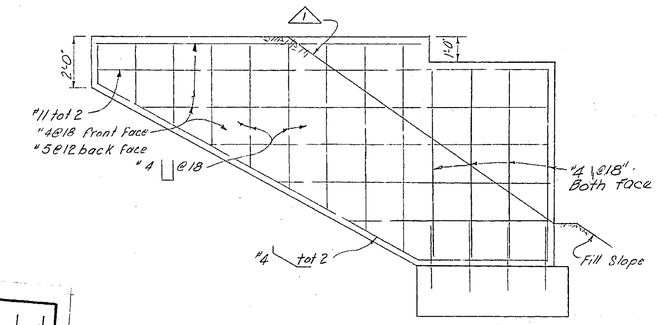

BRACKET DETAILS
3/8" = 1'-0"

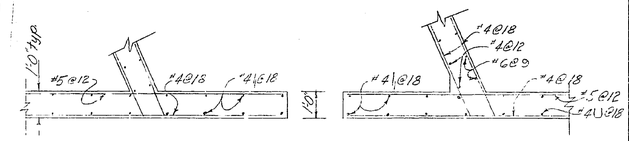

SECTION C-C
3/8" = 1'-0"

SECTION D-D
3/8" = 1'-0"

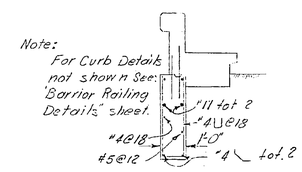

SECTION B-B
3/8" = 1'-0"

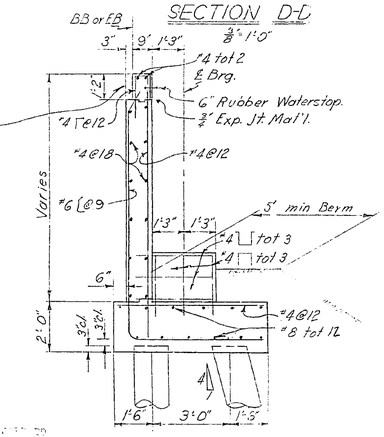

SECTION A-A
3/8" = 1'-0"

TOP OF MASONRY PLATE ELEVATION				
Pier	A	B	C	D
Abut 1	37.70	36.05	38.77	38.34
Abut 5	38.79	36.73	38.33	38.19

2	2-29-60	Top of Masonry Pl. Elev	BGM	WMC
1	2-29-60	Bracket Details, Fill Slope	BGM	WMC

AS BUILT PLANS
Contract No. 60-10T621
Date Completed
Document No. 0000 1122

BRIDGE DEPARTMENT
DESIGN SECTION 13
Project Designer
Chief Designer

DESIGN	By G. D. Tracy 8-58	Checked	
DETAILS	By W. McMahon 9/58	Checked	
QUANTITIES	By	Checked	
SPECIFICATIONS		Plans and Spec. Compared	
Approval Recommended by	Chief of Bridges	Civil Engr. License No. 5585	

STATE OF CALIFORNIA
DEPARTMENT OF PUBLIC WORKS
DIVISION OF HIGHWAYS

GREEN VALLEY ROAD OVERCROSSING

ABUTMENT DETAILS

except as noted SCALE 1/4" = 1'-0" | BRIDGE 23-138 | FILE | DRAWING S-2-01-2

Disregard prints bearing earlier numbers → PREL. DRAWING No. P-5801 13 2

I HEREBY CERTIFY THAT THIS IS A TRUE AND ACCURATE COPY OF THE ABOVE DOCUMENT TAKEN UNDER MY DIRECTION AND CONTROL ON THIS DATE IN SACRAMENTO, CALIFORNIA PURSUANT TO AUTHORIZATION BY THE DIRECTOR OF PUBLIC WORKS.

DATE ____ SIGNATURE ____ TITLE ____

SCALE 1" = 50' MICROFILM - STATE OF CALIFORNIA - DEPARTMENT OF PUBLIC WORKS - MICROFILM SCALE 1" = 50'
SCALE 1" = 20' MICROFILM - STATE OF CALIFORNIA - DEPARTMENT OF PUBLIC WORKS - MICROFILM SCALE 1" = 20'
SCALE 1" = 10' or 1" = 100' MICROFILM - STATE OF CALIFORNIA - DEPARTMENT OF PUBLIC WORKS - MICROFILM SCALE 1" = 10' or 1" = 100'
SCALE 1" = 40' MICROFILM - STATE OF CALIFORNIA - DEPARTMENT OF PUBLIC WORKS - MICROFILM SCALE 1" = 40'

I-080-2 (11) 43

FED. ROAD DIV. NO.	STATE	PROJ. NO.	FISCAL YEAR	SHEET NO.	TOTAL SHEETS
7	CALIF.			154	234

DIST.	COUNTY	ROUTE	SECTION	SHEET NO.	TOTAL SHEETS
X	SOL	[illegible]	[illegible]	53	70

BRIDGE ENGINEER CIVIL ENGINEER—LICENSE 5565

DATE APPROVED January 18, 1960

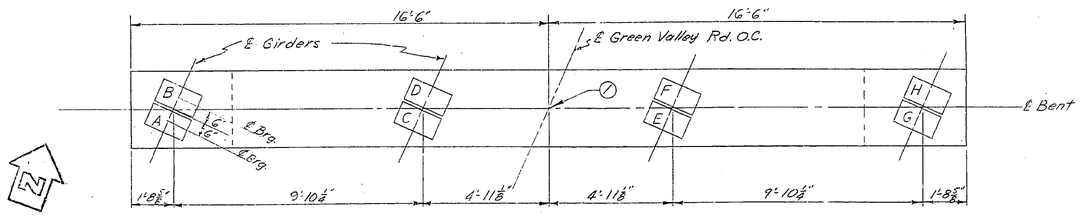

PLAN

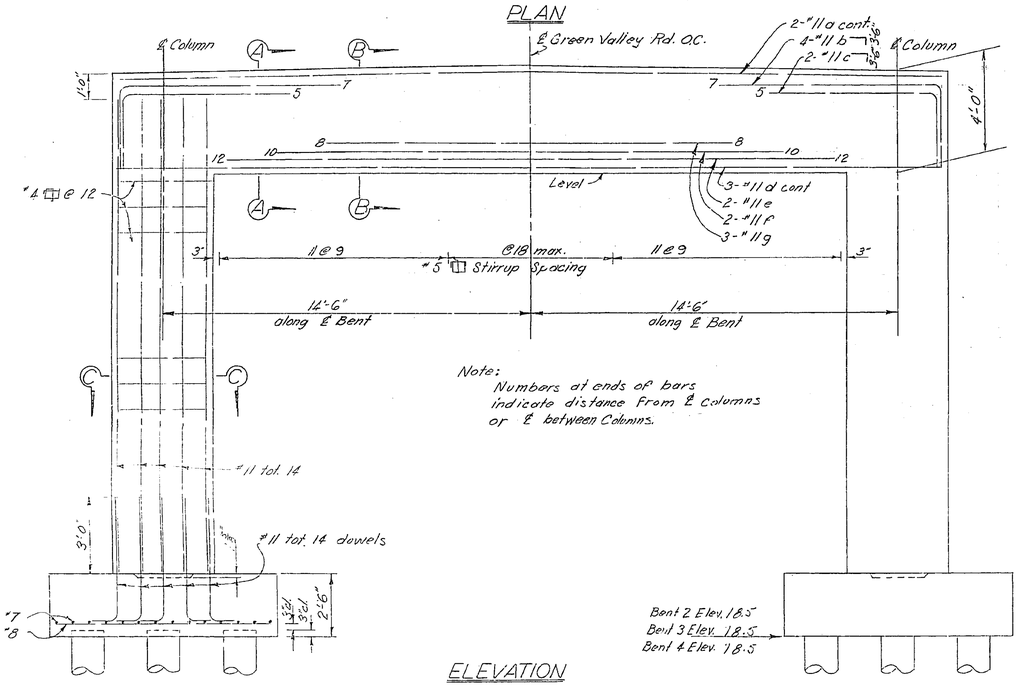

Note:
Numbers at ends of bars indicate distance from ℄ columns or ℄ between Columns.

ELEVATION

① = ℄ Bent #2 = 637+88.04
= ℄ Bent #3 = 638+78.04
= ℄ Bent #4 = 639+68.04

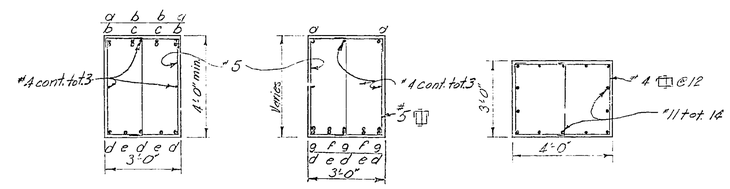

SECTION A-A SECTION B-B SECTION C-C

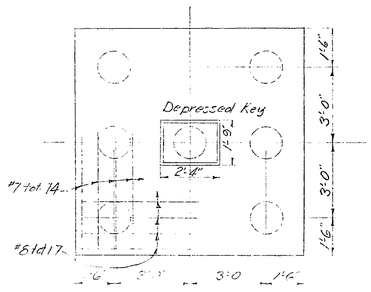

FOOTING PLAN

TOP OF MASONRY PLATE ELEVATION								
Plate	A	B	C	D	E	F	G	H
Bent 2	41.25	41.28	41.48	41.51	41.57	41.59	41.52	41.54
Bent 3	42.07	42.06	42.18	42.17	42.14	42.13	41.97	41.96
Bent 4	40.09	40.06	40.07	40.03	39.91	39.88	39.61	39.58

THIS SET OF PLANS HAS BEEN CORRECTED TO CORRESPOND TO THE "AS BUILT" PRINTS DATED 10-61, AS SUBMITTED BY RESIDENT ENGINEER R.L. Boulware
TRACING CORRECTED BY: GCW DATE: 12-61

AS BUILT PLANS
Contract No. 60-10TC21
Date Completed
Document No. 00001122

1	3-9-60	Top of Masonry Plate Elev.	BGM WML

BRIDGE DEPARTMENT
DESIGN SECTION 13
Project Designer
Chief Designer

DESIGN	By E.D. May 8-58	Checked	10-58
DETAILS	By W. McMahan 8/58	Checked	10-58
QUANTITIES	By 11/58	Checked	10/58
SPECIFICATIONS	By 11/58	Plans and Specs. Compared	

Approval Recommended by: Bridge Engineer Civil Engr. License No. 5455

STATE OF CALIFORNIA
DEPARTMENT OF PUBLIC WORKS
DIVISION OF HIGHWAYS

GREEN VALLEY ROAD OVERCROSSING

BENT DETAILS

SCALE 3/8"=1'-0" | BRIDGE 23-138 | FILE | DRAWING SC-5801-3

Disregard print bearing earlier numbers → PREL. DRAWING No. P-5801

I HEREBY CERTIFY THAT THIS IS A TRUE AND ACCURATE COPY OF THE ABOVE DOCUMENT TAKEN UNDER MY DIRECTION AND CONTROL ON THIS DATE IN SACRAMENTO, CALIFORNIA PURSUANT TO AUTHORIZATION BY THE DIRECTOR OF PUBLIC WORKS.

DATE 2-5-71 SIGNATURE [illegible] TITLE

MICROFILM - STATE OF CALIFORNIA - DEPARTMENT OF PUBLIC WORKS - MICROFILM
SCALE 1" = 50' SCALE 1" = 20' SCALE 1" = 10' or 1" = 100' SCALE 1" = 40'

I-080-2(11)43

FED. ROAD DIV. NO.	STATE	PROJ. No.	FISCAL YEAR	SHEET NO.	TOTAL SHEETS
7	CALIF.			155	229

DIST.	COUNTY	ROUTE	SECTION	SHEET NO.	TOTAL SHEETS
X	SOL			15	10

BRIDGE ENGINEER — CIVIL ENGINEER—LICENSE 5595

DATE APPROVED January 18, 1960

THIS SET OF PLANS HAS BEEN CORRECTED TO CORRESPOND TO THE "AS BUILT" PRINCIPLES DATED 10-61, AS SUBMITTED BY RESIDENT ENGINEER R.L. Boulware. TRACINGS CORRECTED BY: DATE: 12-61

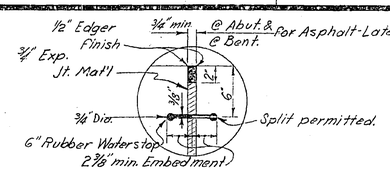

DETAIL B-1
Scale: None

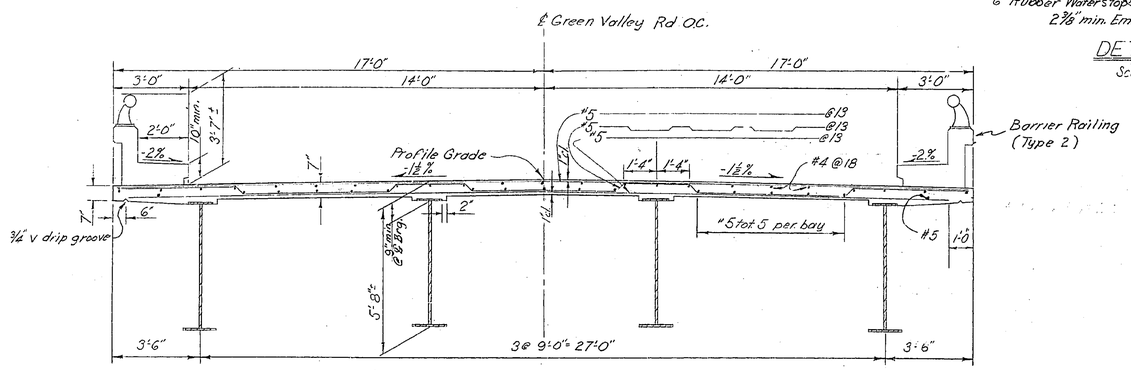

TYPICAL SECTION
3/8" = 1'-0"

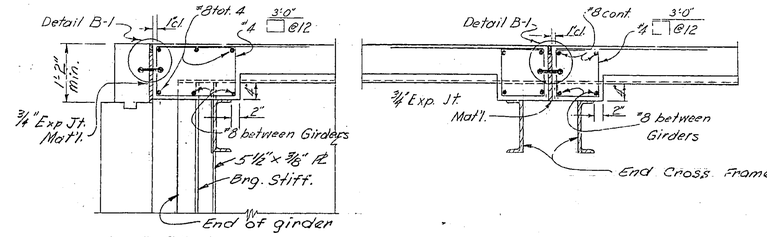

SECTION AT ABUTMENT — SECTION AT BENT
Scale: 3/4" = 1'-0"

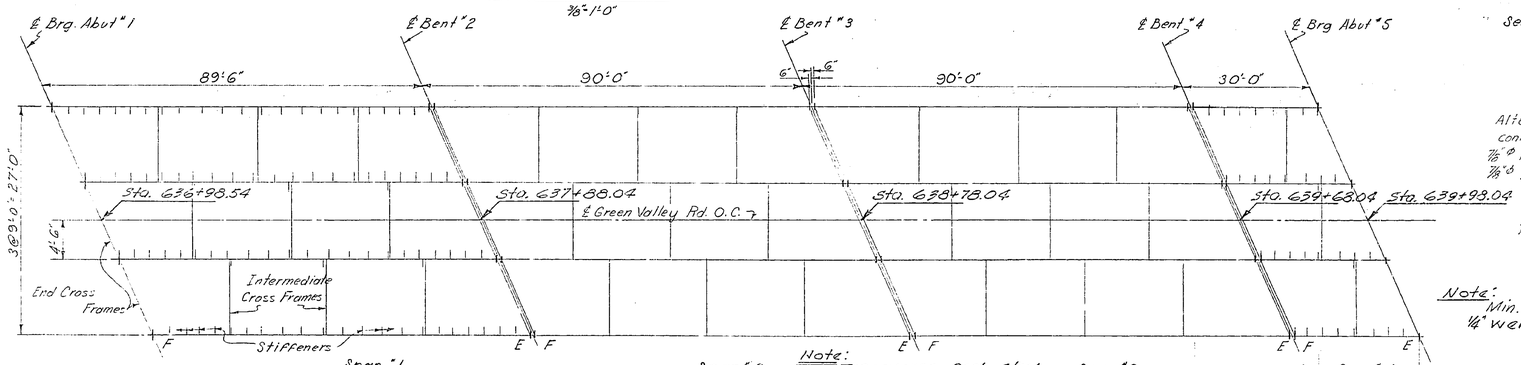

GIRDER LAYOUT
Scale: None

Note: Transverse Deck Steel: Type "a" #5 @ 6 1/2", Type "b" #5 @ 13"

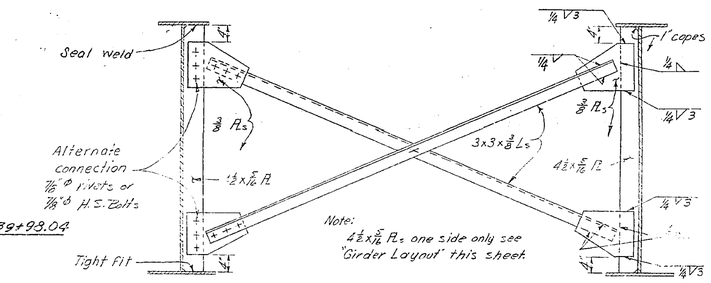

INTERMEDIATE CROSS FRAME

Note: Min. length of 1/4" weld for connections = 1'-6".

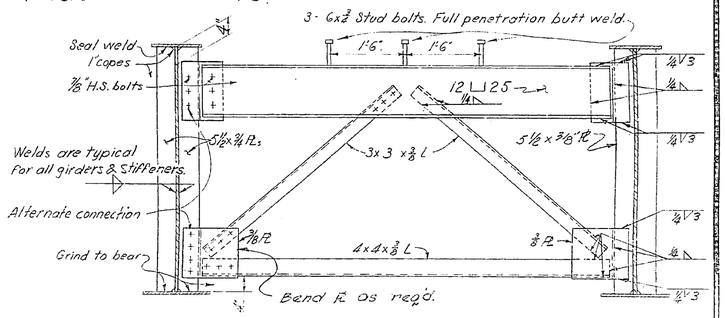

END CROSS FRAME
3/4" = 1'-0"

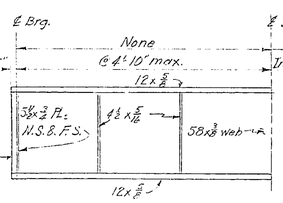

SPAN #4
Scale: None

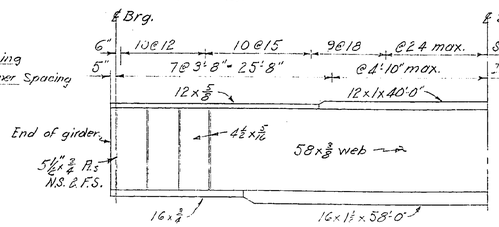

SPANS #1, 2 & 3
Scale: None

Note: Cut Girder web to curve shown. The screed line for Deck construction will be determined by the Engineer. Deflection due to weight of deck slab only = 1.25 x "d".

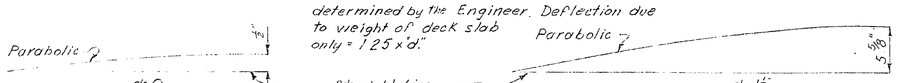

GIRDER CAMBER DIAGRAM
Scale = none

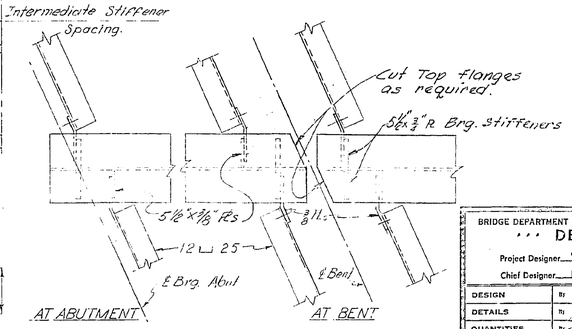

END CROSS FRAME PLAN
1" = 1'-0"

BRIDGE DEPARTMENT
... DESIGN SECTION ... 13
Project Designer
Chief Designer

DESIGN	By E.D. Mercy 3-58	Checked E.P. Stratton	12-58
DETAILS	By	Checked E.P. Stratton	12-58
QUANTITIES	By	Checked	
SPECIFICATIONS	By	Plans and Specs. Compared	
Approval Recommended by	Chief Bridge Design	Calif. Engr. License No. 5595	

STATE OF CALIFORNIA
DEPARTMENT OF PUBLIC WORKS
DIVISION OF HIGHWAYS

GREEN VALLEY ROAD OVERCROSSING

TYPICAL SECTION & GIRDER LAYOUT

SCALE As Noted | BRIDGE 23-138 | FILE | DRAWING C-5801-5

Disregard prints bearing earlier numbers → PREL. DRAWING No. P-5801

AS BUILT PLANS
Contract No. 60-107021
Date Completed
Document No. 0000122

155

I HEREBY CERTIFY THAT THIS IS A TRUE AND ACCURATE COPY OF THE ABOVE DOCUMENT TAKEN UNDER MY DIRECTION AND CONTROL ON THIS DATE IN SACRAMENTO, CALIFORNIA PURSUANT TO AUTHORIZATION BY THE DIRECTOR OF PUBLIC WORKS.

DATE SIGNATURE TITLE

MICROFILM - STATE OF CALIFORNIA - DEPARTMENT OF PUBLIC WORKS - MICROFILM

FED. ROAD DIV. NO.	STATE	PROJ. No.	FISCAL YEAR	SHEET No.	TOTAL SHEETS
7	CALIF.			156	239

1-080-2 (11) 43

DIST.	COUNTY	ROUTE	SECT-PM	SHEET No.	TOTAL SHEETS
X	SOL				10

Bridge Engineer — Civil Engineer—Licensed Bridge

Date Approved: January 18, 1960

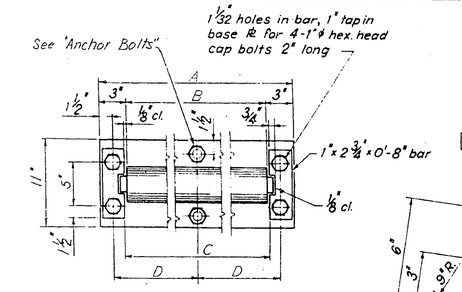

MASONRY PLATE PLAN

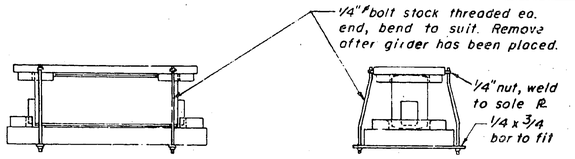

DETAIL OF ERECTION BOLTS

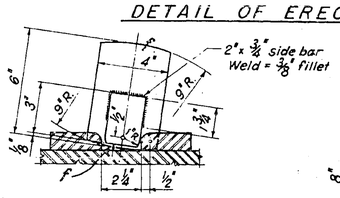

END VIEW OF ROCKER

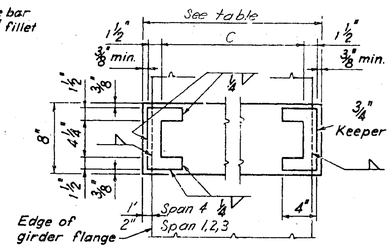

SOLE PLATE PLAN

NOTE:
Sole Plate 3/4" min. thickness
If the girder has a grade of 2% or more, bevel the sole plate to provide a level bearing plane to the nearest 1/16".

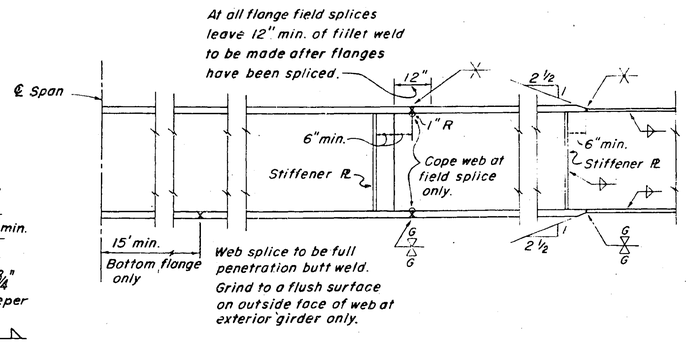

GIRDER SPLICE AND WELDING DETAILS

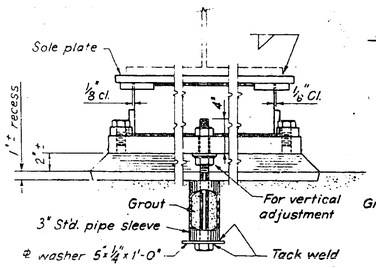

ELEVATION

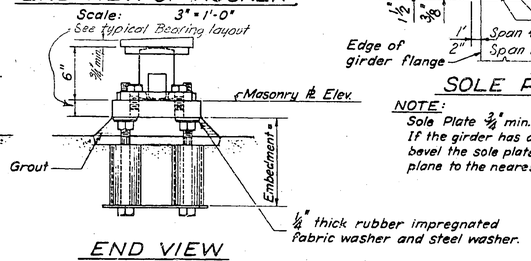

END VIEW

EXPANSION BEARING ASSEMBLY

Scale: 1 1/2" = 1'-0" Except As Noted
-REQUIRED

NOTE:
Sole Plate 3/4" min. thickness.
If the girder has a grade of 2% or more, bevel the sole plate to provide a level bearing plane to the nearest 1/16"

ANCHOR BOLTS			
Size	Length	Location	Size of holes
1 1/2"	1'-5"	Span 1,2,3	1 3/8"
1"	1'-3"	Span 4	1 1/8"
Bolts to have 7" of threads and hex. nuts and washer			

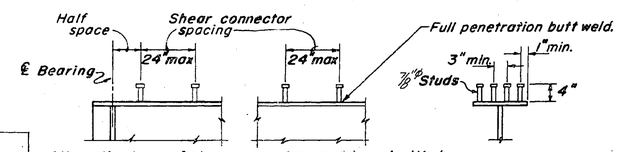

Alternative types of shear connectors may be submitted by the contractor for approval by the Engineer.

SHEAR CONNECTOR DETAILS

SOLE PLATE

LOCATION	THICKNESS	SIZE	REQUIRED
ABUT 1	3/4" Min	8" x 1'-6"	4
BENT 2 SPAN 1	3/4"	8" x 1'-6"	4
BENT 2 SPAN 2	3/4"	8" x 1'-6"	4
BENT 3 SPAN 2	3/4"	8" x 1'-6"	4
BENT 3 SPAN 3	3/4"	8" x 1'-6"	4
BENT 4 SPAN 3	3/4"	8" x 1'-6"	4
BENT 4 SPAN 4	3/4"	8" x 1'-2"	4
ABUT 5	3/4"	8" x 1'-2"	4

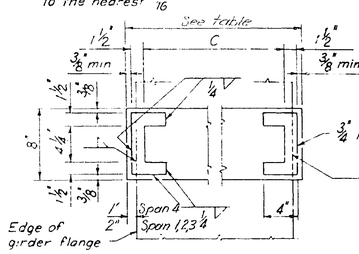

SOLE PLATE PLAN

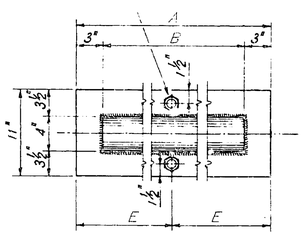

MASONRY PLATE PLAN

MASONRY PLATE

	EXP BEARING		FIXED BEARING	
	11" x 16"	11" x 20"	11" x 16"	11" x 20"
A	1'-4"	1'-8"	1'-4"	1'-8"
B	10"	1'-2"	10"	1'-2"
C	10 1/2"	1'-2 1/2"	10 1/2"	1'-2 1/2"
D	6 1/2"	8 1/2"		
E			8"	10"
REQ'D	4	12	4	12

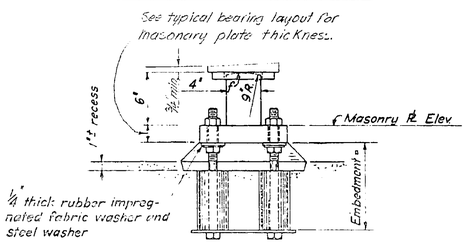

END VIEW

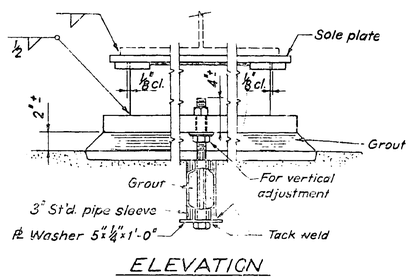

ELEVATION

FIXED BEARING ASSEMBLY

Scale: 1 1/2" = 1'-0"
-REQUIRED

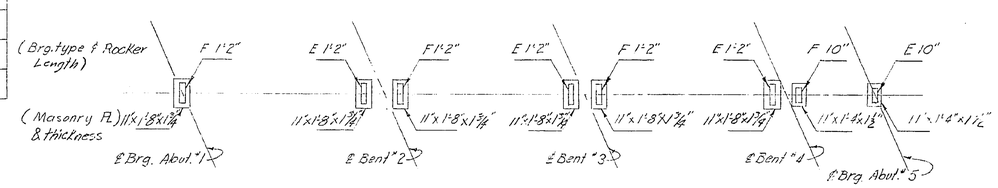

TYPICAL BEARING LAYOUT
No Scale

THIS SET OF PLANS HAS BEEN CORRECTED TO CORRESPOND TO THE "AS BUILT" PLANS DATED 10-6-61 AS SUBMITTED BY RESIDENT ENGINEER [illegible]
TRACINGS CORRECTED BY [illegible] DATE: [illegible]

AS BUILT PLANS
Contract No. 60-10TC21
Date Completed
Document No. 00001122

BRIDGE DEPARTMENT
... DESIGN SECTION ...
Project Designer [illegible]
Chief Designer R. D. Hackett

DESIGN	By E. D. Mills 8-58	Checked [illegible]	
DETAILS	By W. McNaron 7-58	Checked [illegible]	
QUANTITIES	By [illegible] 11-58	Checked [illegible]	
SPECIFICATIONS	By [illegible]	Plans and Specs Designed	
Approval Recommended by [illegible] Engineer of Design		Civil and Structural Engr. License No. 5425	

STATE OF CALIFORNIA
DEPARTMENT OF PUBLIC WORKS
DIVISION OF HIGHWAYS

GREEN VALLEY ROAD OVERCROSSING

STANDARD DETAILS NO. 1

As shown or none — SCALE | BRIDGE 23-138 | XS-16-36 FILE | DRAWING C-5801-6

PREL. DRAWING No. P-5701 | X | 16

I HEREBY CERTIFY THAT THIS IS A TRUE AND ACCURATE COPY OF THE ABOVE DOCUMENT TAKEN UNDER MY DIRECTION AND CONTROL ON THIS DATE IN SACRAMENTO, CALIFORNIA PURSUANT TO AUTHORIZATION BY THE DIRECTOR OF PUBLIC WORKS.

DATE _____ SIGNATURE _____ TITLE _____

MICROFILM - STATE OF CALIFORNIA - DEPARTMENT OF PUBLIC WORKS - MICROFILM

FED. ROAD DIV. NO.	STATE	PROJ. NO.	FISCAL YEAR	SHEET NO.	TOTAL SHEETS
7	CALIF.			157	739

DIST.	COUNTY	ROUTE	SECTION	SHEET NO.	TOTAL SHEETS
X	SOL			7	70

BRIDGE ENGINEER — CIVIL ENGINEER—LICENSE 5985

DATE APPROVED January 18, 1960

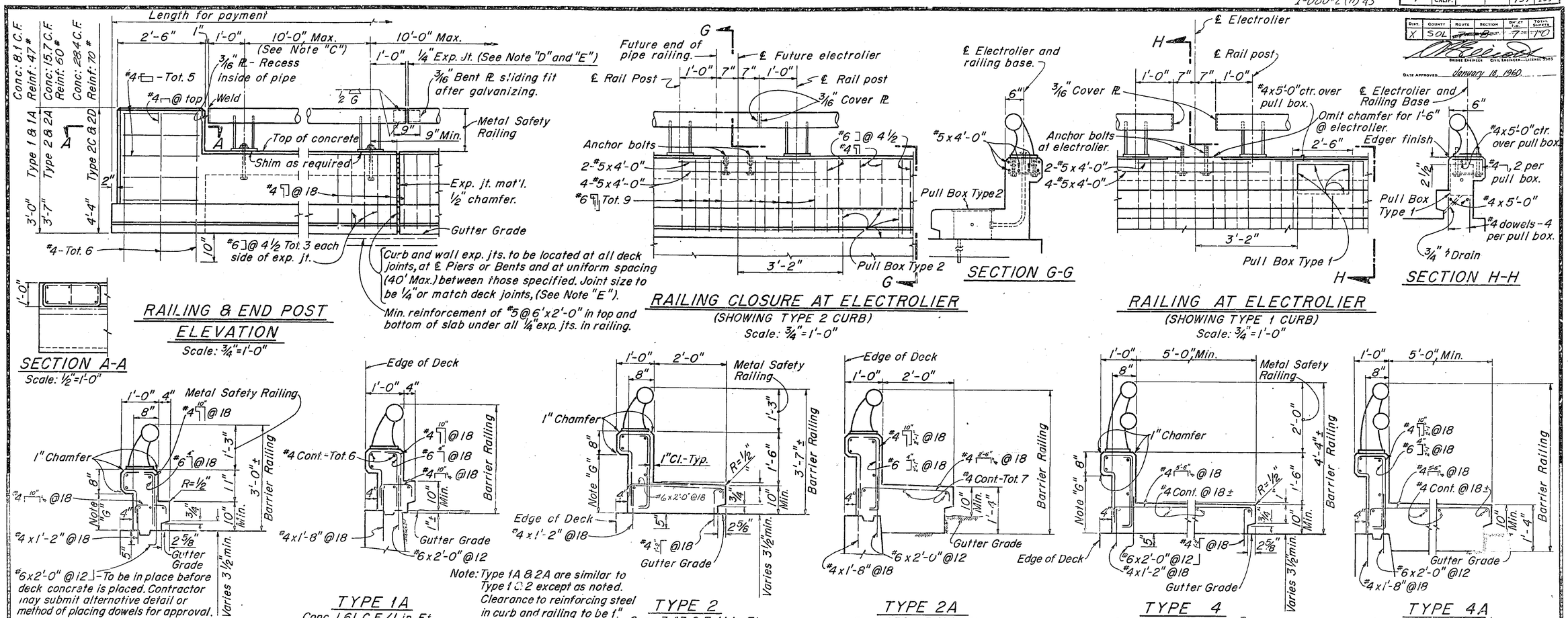

Note: (A) Railing shall conform to horizontal and vertical alignment.
(B) Posts shall be normal to railing.
(C) The exact location of railing posts to be determined from shop plans.
(D) Joints in Metal Safety Railing shall be 20'± max. apart, except as approved by the Engineer.
(E) At expansion joint in deck, rail joint shall be increased to same size.
(F) Steel railing assembly to be galvanized after fabrication.
(G) Dimension will vary with superelevation transition.
(H) Walls are to be backfilled before railing is placed.
(I) Construct 3" deep x 12" wide overflow scupper 2" above deck at low points in grade.

Note: At the option of the Contractor material for the railing may be one of the following:
1. Steel pipe rail and cast steel post.
2. Aluminum pipe rail and cast aluminum post. Shims to be of asbestos sheet packing.
Alternative details may be submitted for approval.

THIS SET OF PLANS HAS BEEN CORRECTED TO CORRESPOND TO THE "AS BUILT" PRINTS DATED 10-61, AS SUBMITTED BY RESIDENT ENGINEER R. L. Sullivan
TRACINGS CORRECTED BY: GCW DATE: 12-61

BRIDGE DEPARTMENT
... DESIGN SECTION ...
Project Designer: W. A. Behrens
Chief Designer: R. P. Hackett

DESIGN	By: F. D. May 8-58	Checked: E. P. Stafflebach 10/58	
DETAILS	By: H. Fiore 10/59	Checked: E. P. Stafflebach 10/59	
QUANTITIES	By: T. P. Dalle 7/58	Checked: W. M. Mahoney 11/58	
SPECIFICATIONS	By:	Plans and Specs Prepared	

Approval Recommended by: Bert H. Johnson — Engineer of Design; Civil and Structural Engr. License No. 4433

10/59

STATE OF CALIFORNIA
DEPARTMENT OF PUBLIC WORKS
DIVISION OF HIGHWAYS

GREEN VALLEY ROAD OVERCROSSING

BARRIER RAILING

SCALE As Noted | BRIDGE 23-138 | XS-9-63 FILE | DRAWING C-5801-7

PREL. DRAWING NO. P-5801

I HEREBY CERTIFY THAT THIS IS A TRUE AND ACCURATE COPY OF THE ABOVE DOCUMENT TAKEN UNDER MY DIRECTION AND CONTROL ON THIS DATE IN SACRAMENTO, CALIFORNIA PURSUANT TO AUTHORIZATION BY THE DIRECTOR OF PUBLIC WORKS.

DATE _____ SIGNATURE _____ TITLE _____

Contract No. 20120 To 4 & 4A.
Date Completed 8-29-59 RTK
Document No. 0000122

STANDARD DRAWING
Submitted by: W. A. Behrens
Approval Recommended by: W. T. Peck
DESIGN: By: F. D. May 8-29-58 Checked: E. P. Stafflebach 10/58
DETAILS: By: H. Fiore 10/59 Checked: E. P. Stafflebach 10/59
Approval Recommended by: W. T. Peck
Chief Bridge Engineer
Chief Bridge Engineer Chrysler Sq. 612.9

MICROFILM - STATE OF CALIFORNIA - DEPARTMENT OF PUBLIC WORKS - MICROFILM
SCALE 1" = 50' — SCALE 1" = 20' — SCALE 1" = 10' or 1" = 100' — SCALE 1" = 40'

1-080-2(11)43

District	State	Route	Fiscal Year	Sheet No.	Total Sheets
2	CAL			158	239

Unit	Estimate	Details	Bridge	Sheet No.	Total Sheets
X	SOL	~~7~~	~~8~~ 9	10	

Approved January 18, 1960

Revised: Longit. reinf. for Alt. "W"
Added: Prestressing Note.
Alt. "X" prestress reinf. for Alt. "X".
J. Becker 4-56
Revised: Modified Prestress Alt. "W"
J. Becker 9-56 Note "F"
Added: Extension Notes "U", "Y" & "Z"
and Sound Line Alt. "U" 2-57

Revised: Note "F" - J. Becker 7-57
Revised: Alternative "U"
7 gage shell
1/4" end Plate - J. Becker 2-59
Revised: Alt. "X" Extension - J. Tamura 3-58
Revised: Standard Pile Hook Detail "Z" J. Becker 5-58

Revised: "Pile notes", Pile Shell dia. (with and without ext.) and Number of bars. D. Lindsay 6-58

STANDARD DRAWING
Submitted by: Chief Designer
DESIGN DETAILS
By: Checked: Checked:
Approval Recommended: Bridge Engineer Design Section Chief Bridge Design

Pile shell min. diameter =
12" inside dia. without extension
16" outside dia. with extension

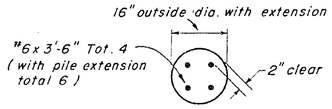

PLAN
Scale: 3/4" = 1'-0"

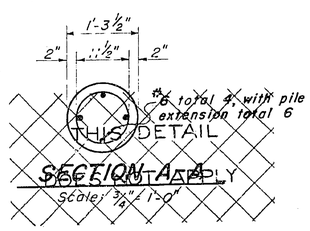

SECTION A-A
Scale: 3/4" = 1'-0"

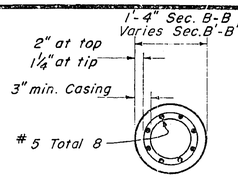

As an alternative to the reinforcement shown, Alternative "W" longitudinal reinforcement may consist of steel strands prestressed to have a total remaining force after losses of not less than 67,000 lbs. At no time shall the stress in the steel exceed 0.7 of its ultimate value.

SECTION B-B
Scale: 3/4" = 1'-0"
Section B'-B' similar except as noted.

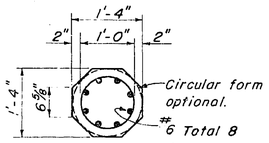

SECTION C-C
Scale: 3/4" = 1'-0"

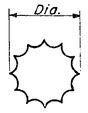

SECTION D-D
Scale: 3/4" = 1'-0"

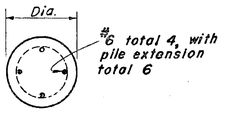

SECTION E-E
Scale: 3/4" = 1'-0"

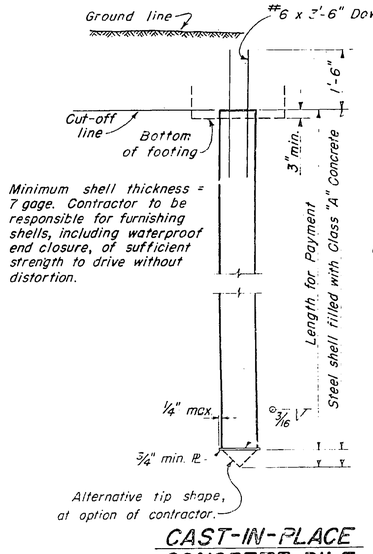

CAST-IN-PLACE CONCRETE PILE ALTERNATIVE "U"

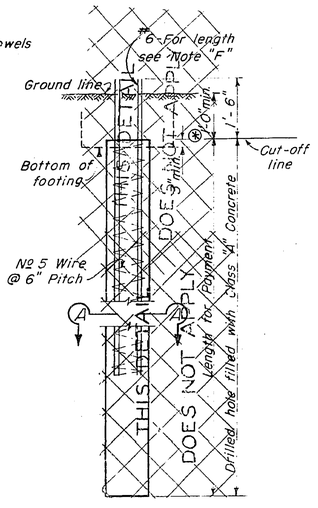

CAST-IN-DRILLED HOLE CONCRETE PILE ALTERNATIVE "V"
DOES NOT APPLY

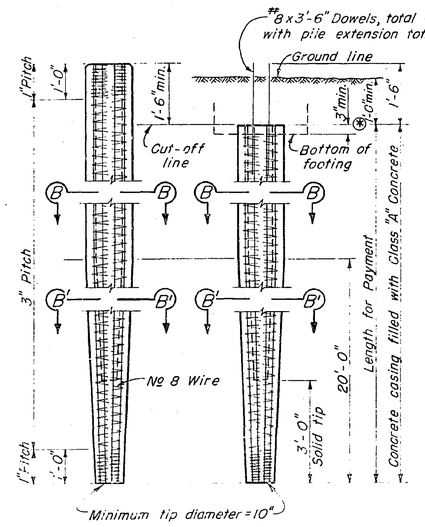

Longitudinal reinforcement in the driven portion of Alternative "W" shall be prestressed to 10,000 lbs. per bar.

CAST-IN-PLACE CONCRETE PILE ALTERNATIVE "W"

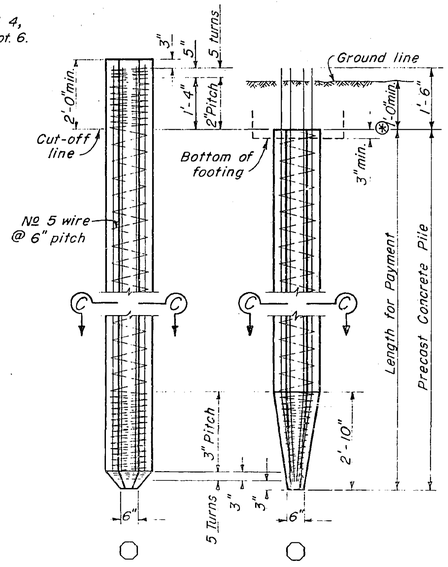

ALTERNATIVE TIP

PRECAST CONCRETE PILE ALTERNATIVE "X"

As an alternative to the reinforcement shown this pile may be prestressed by the use of steel strands to provide a total remaining force after losses of not less than 150,000 lbs. At no time shall the stress in the steel exceed 0.7 of its ultimate value. Place 6-#6 x 8' in top of prestressed pile to provide for pile extension or connection to cap or footing.

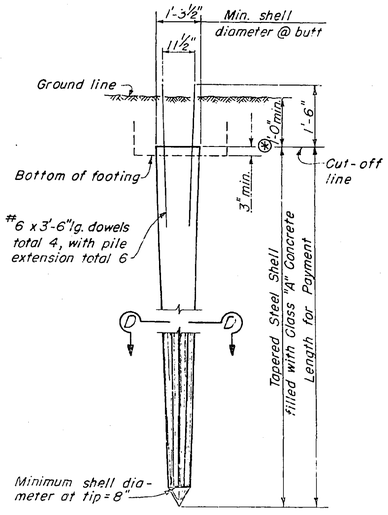

Minimum shell thickness = 9 gage. Contractor to be responsible for furnishing shells of sufficient thickness to drive without distortion.

CAST-IN-PLACE CONCRETE PILE ALTERNATIVE "Y"

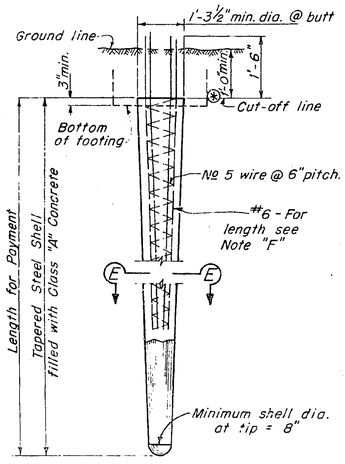

CAST-IN-PLACE CONCRETE PILE ALTERNATIVE "Z"

PILE NOTES

For Alternatives "W" and "X" the piles may be driven full length and cut off without extension or they may be extended as shown at the option of the Contractor. When Alternatives "U", "V", "Y" & "Z" are extended above ground, the Typical Pile Extension shall be used.

⊛ When piles are extended, the bottom of extension shall be located 1'-0" minimum below ground line, unless shown otherwise on the plans.

Note "F": In Alternatives "V" and "Z" the length of #6 bars shall be either a minimum of 1/3 penetration or 12', whichever is the greater. Penetration shall be measured below the lowest of the following controlling elevations:

1. Bottom of footing.
2. Top of final ground surface.
3. Top of original ground surface, when piles are driven through fills.
4. Top of bearing strata, when such strata is shown on the plans.

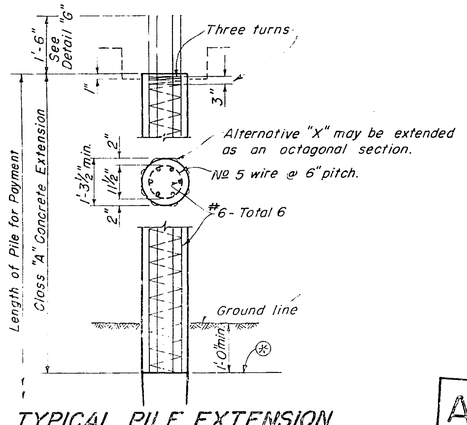

TYPICAL PILE EXTENSION

When depth of concrete above the pile cut off is less than 1'-8" bars shall be bent as shown.

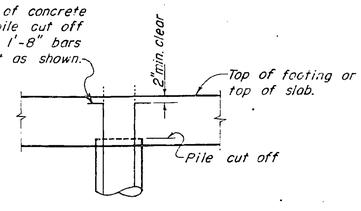

DETAIL "G"

THIS SET OF PLANS HAS BEEN CORRECTED TO CORRESPOND TO THE "AS BUILT" PRINTS DATED 12-61, AS SUBMITTED BY RESIDENT ENGINEER R. Goulmers
TRACINGS CORRECTED BY: GCW DATE: 12-61

AS BUILT PLANS
Contract No. 60-10TC21
Date Completed
Document No. 00001122

BRIDGE DEPARTMENT
DESIGN SECTION
Project Designer
Chief Designer

DESIGN	By E.D. Mary 8-58	Checked
DETAILS	By E.F. Mary 8-58	Checked
QUANTITIES	By J.B. Allen 11/57	Checked
SPECIFICATIONS	By	Plans and Specs. Compared
Approval Recommended by: Engineer of Art Design		Civil and Structural Engr. License No.

STATE OF CALIFORNIA
DEPARTMENT OF PUBLIC WORKS
DIVISION OF HIGHWAYS

GREEN VALLEY ROAD OVERCROSSING

PILE DETAILS

Except as noted SCALE: 1/2" = 1'-0" | BRIDGE 23-138 | XS-10-17 FILE | DRAWING C-5801-8

PREL. DRAWING No. P-

I HEREBY CERTIFY THAT THIS IS A TRUE AND ACCURATE COPY OF THE ABOVE DOCUMENT TAKEN UNDER MY DIRECTION AND CONTROL ON THIS DATE IN SACRAMENTO, CALIFORNIA PURSUANT TO AUTHORIZATION BY THE DIRECTOR OF PUBLIC WORKS.

DATE SIGNATURE TITLE

SCALE 1" = 50' MICROFILM - STATE OF CALIFORNIA - DEPARTMENT OF PUBLIC WORKS - MICROFILM
SCALE 1" = 20' MICROFILM - STATE OF CALIFORNIA - DEPARTMENT OF PUBLIC WORKS - MICROFILM
SCALE 1" = 10' or 1" = 100' MICROFILM - STATE OF CALIFORNIA - DEPARTMENT OF PUBLIC WORKS - MICROFILM
SCALE 1" = 40' MICROFILM - STATE OF CALIFORNIA - DEPARTMENT OF PUBLIC WORKS - MICROFILM

I-080-2 (11) 43

FED. ROAD DIV. NO.	STATE	FED. AID No.	FISCAL YEAR	SHEET NO.	TOTAL SHEETS
7	CALIF.			159	239

DIST.	COUNTY	ROUTE	SHEET NO.	TOTAL SHEETS
X	SOL	[illegible]	9	10

Bridge Engineer — Civil Engineer—Bridges

Date Approved: January 18, 1960

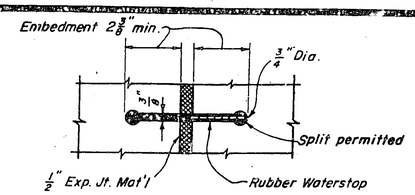

RUBBER WATERSTOP
DETAIL W-1

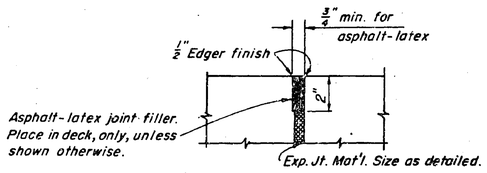

LATEX AT EXPANSION JOINT
DETAIL L-1

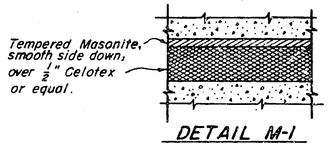

DETAIL M-1

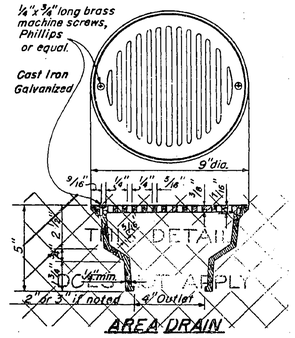

AREA DRAIN
REQUIRED

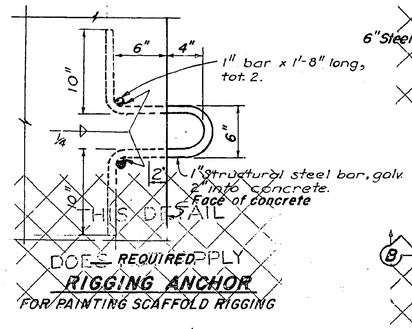

REQUIRED
RIGGING ANCHOR
FOR PAINTING SCAFFOLD RIGGING

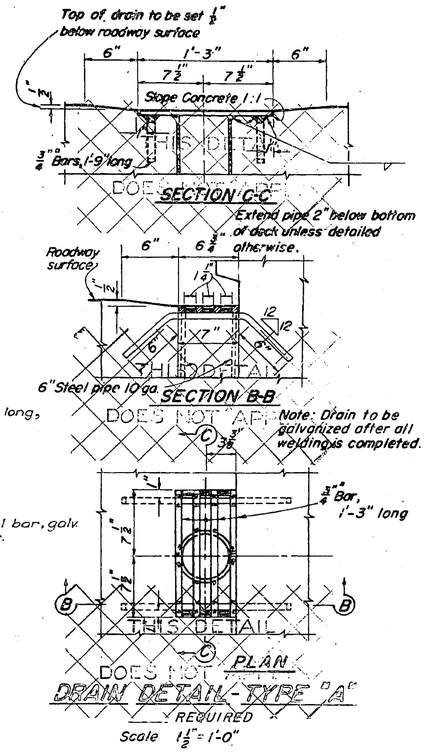

REQUIRED
DRAIN DETAIL-TYPE "A"
Scale 1 1/2" = 1'-0"

GENERAL NOTES

Specifications:
Design: A.A.S.H.O. dated 1957 with revisions and as supplemented by Bridge Planning and Design Manual.
Construction: Standard Specifications, Division of Highways, dated August 1954 and the Special Provisions.

Live Loading: H20-S16-44 and alternative.

Unit Stresses:
Reinforced Concrete
f_s = 20,000 p.s.i.
f_c = 1,200 p.s.i. (Except as noted.)
f_c = 1,000 p.s.i. (Roadway slab on girders.)

Structural Steel:
f_s = 18,000 p.s.i.

Footing Pressure: tons p.s.f.

Pile Loading: tons. Type:

THIS DETAIL DOES NOT APPLY

Welding: The relation between fillet weld size and the maximum thickness of material on which various sizes of fillet weld may be used shall be in accordance with Article 222(b) of the A.W.S. Specifications dated 1956, unless otherwise noted.

"U" Butt welds may be substituted for Vee type shown on the plans.

"J" Butt welds may be substituted for Bevel type shown on the plans.

The methods of joint preparation shown on the plans are based on the use of manual shielded arc welding. In the event that automatic or semi-automatic submerged arc processes are used, the contractor may submit alternative methods of joint preparation for approval by the Engineer.

Shop plans shall indicate welding sequence and the type of steel to be used.

All field splices shall be fitted and matched in the shop.

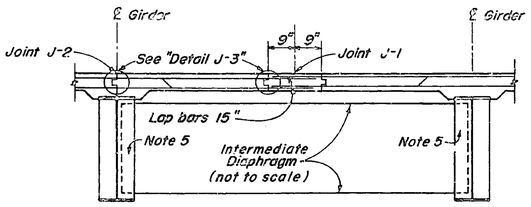

LONGITUDINAL CONSTRUCTION JOINT

1. Longitudinal construction joints in slab, if required, are to be located at edge of traffic lanes except as approved by the Engineer.
2. When a longitudinal construction joint is used, joint "J-1" must be used for simple spans greater than 70' and continuous spans greater than 100'. For shorter spans, either joint "J-1" or "J-2" may be used.
3. In general, transverse deck construction joints will not be permitted.
4. Contractor will submit deck placing schedule for approval by the Engineer.
5. Final connection of intermediate diaphragms below joint "J-1" panel will not be permitted until deck slabs have been placed on both sides of the splice section of joint "J-1".
6. The splice section of joint "J-1" shall not be placed until 1 day after placing of adjacent slabs.
7. Reinforcing will be continuous through all construction joints.

Note: Reinforcement may be spliced as necessary, subject to approval by the Engineer.

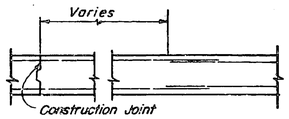

REINFORCEMENT SPLICE IN DECK SLAB
DETAIL S-1

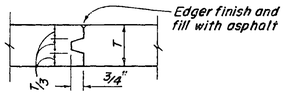

DETAIL J-3

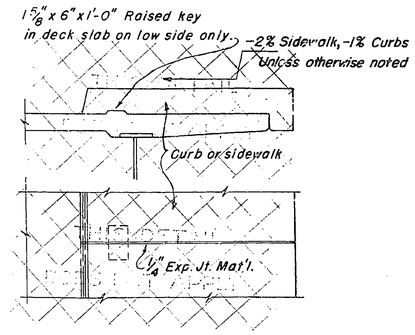

Note: For simple spans joints are to be equally spaced with 35'± max. spacing. For continuous spans joints are to be equally spaced with 35'± max. spacing with additional joints at ℄ piers or bents.

CURB AND SIDEWALK EXPANSION JOINT
DETAIL C-1

AS BUILT PLANS
Contract No. 60-10TC21
Date Completed
Document No. 00001122

THIS SET OF PLANS HAS BEEN CORRECTED TO CORRESPOND TO THE "AS BUILT" PRINTS DATED 10-61, AS SUBMITTED BY RESIDENT ENGINEER R.L. Bowers
TRACINGS CORRECTED BY: GOW DATE: 12 61

DIVISION OF HIGHWAYS
... DESIGN SECTION ...
Project Designer
Chief Designer

DESIGN	E.D. Mc	8-57	Checked
DETAILS	E.D. Mc	6-57	Checked
QUANTITIES	E.D. Mc	11/58	Checked
SPECIFICATIONS		12/61	Plans and Specs. Compared

Approved Recommended by — Bridge Engineer — Chief, Bridge Design — Chief and Functional Corp. Bridge Div. — 5-13-9

STATE OF CALIFORNIA
DEPARTMENT OF PUBLIC WORKS
DIVISION OF HIGHWAYS

GREEN VALLEY ROAD OVERCROSSING

STANDARD DETAILS NO. 2

SCALE	BRIDGE		DRAWING
As noted or none	23-158	XS-16-52 R1.3	C-5801-9

FORM. DRAWING NO. P-5301

I HEREBY CERTIFY THAT THIS IS A TRUE AND ACCURATE COPY OF THE ABOVE DOCUMENT TAKEN UNDER MY DIRECTION AND CONTROL ON THIS DATE IN SACRAMENTO, CALIFORNIA, PURSUANT TO AUTHORIZATION BY THE DIRECTOR OF PUBLIC WORKS.

DATE 22-5-71 SIGNATURE TITLE

MICROFILM - STATE OF CALIFORNIA - DEPARTMENT OF PUBLIC WORKS - MICROFILM

I-080-2(11)43

FED. ROAD DIV. NO.	STATE	PROJ. NO.	FISCAL YEAR	SHEET NO.	TOTAL SHEETS
7	CAL.			160	239

DIST.	COUNTY	ROUTE	SECTION	SHEET NO.	TOTAL SHEETS
X	Sol			10	70

BRIDGE ENGINEER — CIVIL ENGINEER—LICENSE 5565

DATE APPROVED January 18, 1960

BRIDGE DEPARTMENT

FIELD STUDY: W. Shawler
DRAWN: M. Hanby 1-26-58
CHECKED: C. Minnick 2-3-58
Approval Recommended by: Engineering Geologist; Materials Engineer

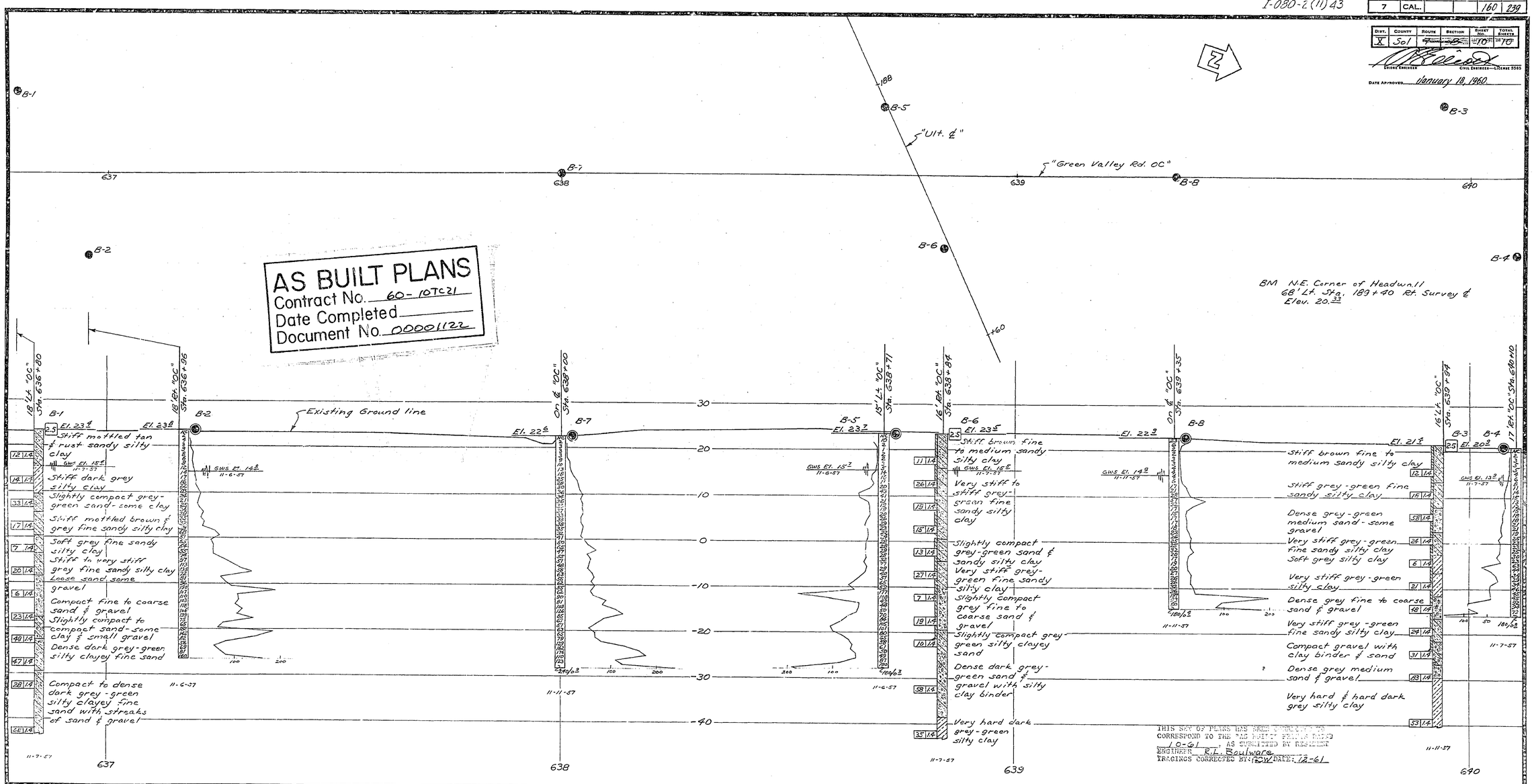

AS BUILT PLANS
Contract No. 60-10TC21
Date Completed
Document No. 00001122

THIS SET OF PLANS HAS BEEN REVISED TO CORRESPOND TO THE AS BUILT FIELD PLANS DATED 10-61, AS SUBMITTED BY RESIDENT ENGINEER R.L. Boulware
TRACINGS CORRECTED BY: ROW DATE: 12-61

CLASSIFICATION OF MATERIAL BASED ON STANDARD GRADE SIZE LIMITS

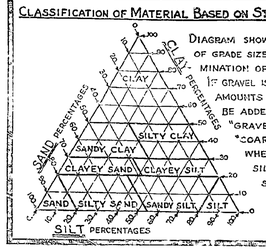

DIAGRAM SHOWING THE BASIS FOR ESTIMATES OF GRADE SIZE DISTRIBUTION USED IN DETERMINATION OF CLASS NAMES. IF GRAVEL IS PRESENT IN APPRECIABLE AMOUNTS THE TERM "GRAVELLY" MAY BE ADDED TO THE CLASS NAME, VIZ. "GRAVELLY SAND." THE TERMS "COARSE", "MEDIUM" AND "FINE" WHEN USED TO DESCRIBE SAND, SILT AND GRAVEL REFER TO STANDARD GRADE SIZE LIMITS.

LEGEND OF EARTH MATERIALS

- GRAVEL
- SAND
- SILT
- CLAY
- SANDY CLAY OR CLAYEY SAND
- SANDY SILT OR SILTY SAND
- SILTY CLAY OR CLAYEY SILT
- PEAT AND/OR ORGANIC MATTER
- FILL MATERIAL
- IGNEOUS ROCK
- SEDIMENTARY ROCK
- METAMORPHIC ROCK

LEGEND OF BORING OPERATIONS

- PLAN OF ANY BORING
- PENETROMETER
- 2½" CONE PENETROMETER
- SAMPLER BORING (LRV)
- ROTARY BORING (WET)
- AUGER BORING (DRY)
- JET BORING
- CORE BORING
- TEST PIT

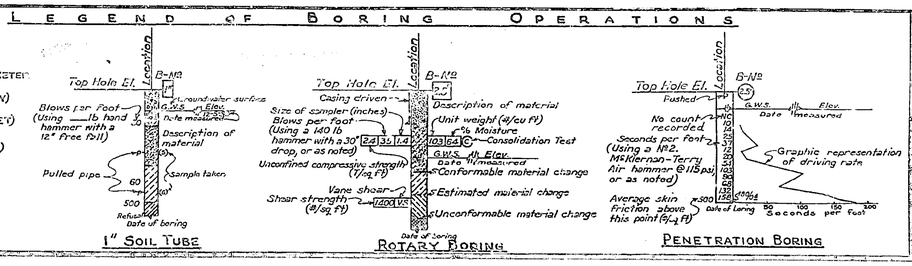

NOTES

Classification of earth material as shown on this sheet is based upon field inspection and is not to be construed to imply mechanical analysis.

STATE OF CALIFORNIA
DEPARTMENT OF PUBLIC WORKS
DIVISION OF HIGHWAYS

GREEN VALLEY ROAD OVERCROSSING

LOG OF TEST BORINGS

SCALE	BRIDGE	FILE	DRAWING
1" = 10'	23-138	E-23	C-5801-10

PREL. DRAWING No. 1-5801 19

I HEREBY CERTIFY THAT THIS IS A TRUE AND ACCURATE COPY OF THE ABOVE DOCUMENT TAKEN UNDER MY DIRECTION AND CONTROL ON THIS DATE IN SACRAMENTO, CALIFORNIA PURSUANT TO AUTHORIZATION BY THE DIRECTOR OF PUBLIC WORKS.

DATE _____ SIGNATURE _____ TITLE _____

SCALE 1" = 50' MICROFILM - STATE OF CALIFORNIA - DEPARTMENT OF PUBLIC WORKS - MICROFILM SCALE 1" = 20'
SCALE 1" = 10' or 1" = 100' MICROFILM - STATE OF CALIFORNIA - DEPARTMENT OF PUBLIC WORKS - MICROFILM SCALE 1" = 40'