Retaining Wall "K1" and "0"
Soil Nail "1" and "2"

DIST	COUNTY	ROUTE	KILOMETER POST TOTAL PROJECT	SHEET No	TOTAL SHEETS
04	Ala	92	3.7/10.3	340	440

Mary L Warrick 7-30-99
REGISTERED CIVIL ENGINEER

1-17-00
PLANS APPROVAL DATE

The State of California or its officers or agents shall not be responsible for the accuracy or completeness of electronic copies of this plan sheet.

REGISTERED PROFESSIONAL ENGINEER
Mary L Warrick
No. 53751
Exp. 6-30-03
CIVIL
STATE OF CALIFORNIA

INDEX TO PLANS

SHEET NO.	TITLE
1	General Plan
2	Retaining Wall Plan No. 1
3	Retaining Wall Plan No. 2
4	Wall Details No. 1
5	Wall Details No. 2
6	Wall Details No. 3
7	Wall Details No. 4
8	Log of Test Borings

STANDARD PLANS dated JULY 1997

	A10A	Abbreviations
RSP	B3-8	Retaining Wall Details No. 1
	B3-9	Retaining Wall Details No. 2
	D73	Drainage Inlets
RSP	D77A	Grate Details

SOIL NAIL RETAINING WALL NO. 1
QUANTITIES

STRUCTURE EXCAVATION (SOIL NAIL WALL)	25	m^3
STRUCTURE BACKFILL (SOIL NAIL WALL)	13	m^3
SOIL NAIL ASSEMBLY	313	m
STRUCTURAL CONCRETE, RETAINING WALL	33	m^3
BAR REINFORCING STEEL (RETAINING WALL)	3,150	kg
SHOTCRETE	14	m^3
CHAIN LINK FENCE (TYPE CL-0.9)	41	m

SOIL NAIL RETAINING WALL NO. 2
QUANTITIES

STRUCTURE EXCAVATION (SOIL NAIL WALL)	20	m^3
STRUCTURE BACKFILL (SOIL NAIL WALL)	12	m^3
SOIL NAIL ASSEMBLY	222	m
STRUCTURAL CONCRETE, RETAINING WALL	27	m^3
BAR REINFORCING STEEL (RETAINING WALL)	2,550	kg
SHOTCRETE	11	m^3
CHAIN LINK FENCE (TYPE CL-0.9)	41	m
SOIL NAIL ASSEBLY (RW1 + RW2)	715.5 m (34% over)	

AS BUILT ROD MACARAEG PAT TREACY
CORRECTIONS BY SANG SON
CONTRACT NO. 04-045034
DATE 02-2001
4 FEB 2002 KN

STANDARD PLAN SHEET NO.
DETAIL NO.

NOTE:
See "Retaining Wall Plan No. 1 & 2" sheets for layout, details and 'General Notes'.

ALL DIMENSIONS ARE IN METERS UNLESS OTHERWISE SHOWN

Joseph E Downing 7-30-99 DESIGN ENGINEER	DESIGN	BY Mary L Warrick	CHECKED Joey Aquino	LOAD FACTOR DESIGN		
	DETAILS	BY nd	CHECKED Joey Aquino	LAYOUT	BY Mary L Warrick	CHECKED Joey Aquino
	QUANTITIES	BY Mary L Warrick	CHECKED Joey Aquino	SPECIFICATIONS	BY Nizar Melehani	PLANS AND SPECS COMPARED Nizar Melehani

STATE OF CALIFORNIA
DEPARTMENT OF TRANSPORTATION

DIVISION OF STRUCTURES
STRUCTURE DESIGN 3

BRIDGE NO.
KILOMETER POST 9.2/9.3 (5.7/5.8)

SOIL NAILED RETAINING WALLS
GENERAL PLAN

STRUCTURES DESIGN GENERAL PLAN SHEET (METRIC) (REV. 3/1/99)

ORIGINAL SCALE IN MILLIMETERS FOR REDUCED PLANS 0 10 20 30 40 50 60 70 80 90 100

CU 04269
EA 045031

DISREGARD PRINTS BEARING EARLIER REVISION DATES

REVISION DATES (PRELIMINARY STAGE ONLY) 5-21-99 7-22-99

SHEET 1 OF 8

FILE => eugp_26083149

USERNAME => strdbnt DATE PLOTTED => 26-Jan-2000 TIME PLOTTED => 08:39

DIST	COUNTY	ROUTE	KILOMETER POST TOTAL PROJECT	SHEET No	TOTAL SHEETS
04	Ala	92	3.7/10.3	341	440

Timothy J. Pokrywka 03-10-99
REGISTERED CIVIL ENGINEER

1-17-00
PLANS APPROVAL DATE

REGISTERED PROFESSIONAL ENGINEER — T. J. Pokrywka No. 46797 Exp. 6-30-03 CIVIL — STATE OF CALIFORNIA

The State of California or its officers or agents shall not be responsible for the accuracy or completeness of electronic copies of this plan sheet.

All Dimensions are in Meters unless otherwise shown

End Soil Nailed Retaining Wall No. 1
SNW 2+75.50 EC=
22.20 Rt NT 162+74.20 POC

Soil Nailed Retaining Wall No. 1 (See Structure Plans)

Begin Soil Nailed Retaining Wall No. 1
SNW 2+34.00 BC=
22.20 Rt NT 162+34.001 POC

Caltrans Metric

GENERAL NOTES

1- The exact location of the Test Soil Nails to be determined by Engineer in the field.
2- The maximum depth of excavation and unsupported cut slope between soil nails shall not exceed 1.5 m for each level of soil nail construction.
3- For details of wall facing, soil nail assembly, test soil nail assembly, concrete drainage gutter return wall and other miscellaneous details see, "Wall Details No. 1 thru 4" sheets.
4- Chain Link Fence (Type CL-0.9) not shown on wall elevation.
5- All Soil Nail profile lines are parallel to top of cut except the bottom row which is parallel to bottom of wall.

LEGEND & SYMBOLS

x = Location of Soil Nail Assembly with No.29 Reinforcement
o = Location of Test Soil Nail Assembly
ST = Vertical distance from top of cut elevation to first row of Soil Nails ST = 0.6 m
SB = Vertical distance from bottom of wall to bottom level of the Soil Nail Assembly SB (min) = 0.6 m SB (max) = 1.05 m
SV = Vertical spacing of Soil Nail Assembly SV (min) = 0.45 m SV (max) = 1.0 m
SH = Horizontal spacing of Soil Nail Assembly SH (min) = 0.45 m SH (max) = 1.0 m
SS = Horizontal distance between the beginning/ end of wall and first/last Soil Nail, SS (min) = 0.45 m SS (max) = 0.75 m
SNW = Soil Nailed Retaining Wall
LE = Length of Soil Nail = 3.8 m

DESIGN : Bridge design specifications (1983 AASHTO with Interims and Revisions by Caltrans)
REINFORCED CONCRETE : fy = 420 MPa f'c = 25 MPa
STRUCTURAL STEEL : ASTM Designation : A709/A709M, Grade 36[250]
SOIL NAILS : ASTM Designation : A615/A615M, Grade 520, fs = 390 MPa
SOIL/ROCK DESIGN PARAMETERS (AVG) : Upper Layer (Above Elev 11.0)
ø = 32 degrees
c = 0 kPa
γ = 18.8 kN/m³
μ = 60 kPa(Ultimate bond stress between soil and grout)
SOIL/ROCK DESIGN PARAMETERS (AVG) : Lower Layer (Below Elev 11.0)
ø = 28 degrees
c = 0 kPa
γ = 15.7 kN/m³
μ = 25 kPa(Ultimate bond stress between soil and grout)

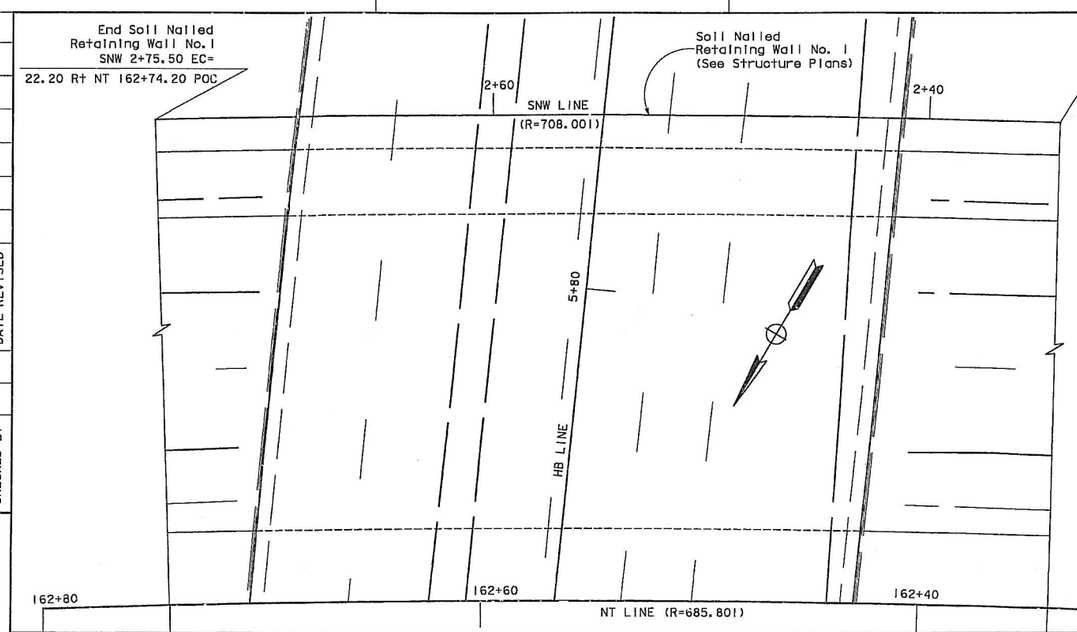

PLAN
Scale 1 : 100

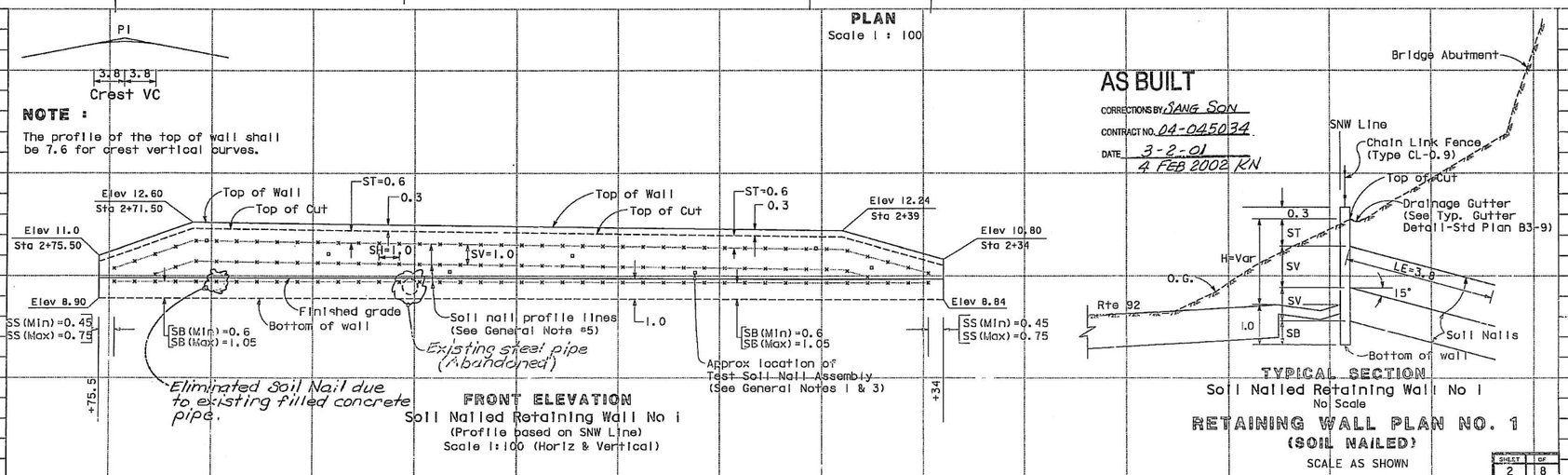

FRONT ELEVATION
Soil Nailed Retaining Wall No 1
(Profile based on SNW Line)
Scale 1:100 (Horiz & Vertical)

AS BUILT
CORRECTIONS BY SANG SON
CONTRACT NO. 04-045034
DATE 3-2-01
4 FEB 2002 RN

TYPICAL SECTION
Soil Nailed Retaining Wall No 1
No Scale

RETAINING WALL PLAN NO. 1
(SOIL NAILED)
SCALE AS SHOWN

SHEET 2 OF 8

PROJECT ENGINEER H. NIKOUI
STATE OF CALIFORNIA - DEPARTMENT OF TRANSPORTATION
OFFICE OF STRUCTURAL FOUNDATIONS
GEOTECHNICAL
Caltrans
REVISED BY | DATE REVISED
CALCULATED/ DESIGNED BY | CHECKED BY
Station
CU
M
Exc Emb

DATE PLOTTED => 26-Jan-2000
TIME PLOTTED => 08:40
LAST REVISION 00-00-00

FOR REDUCED PLANS ORIGINAL SCALE IS IN MILLIMETERS 0 20 40 60 80
USERNAME => trrichf
DGN FILE => edrw01_26083152
CU 04269
EA 045031

DIST	COUNTY	ROUTE	KILOMETER POST TOTAL PROJECT	SHEET No	TOTAL SHEETS
04	Ala	92	3.7/10.3	342	440

Timothy J. Pokrywka 03-10-99
REGISTERED CIVIL ENGINEER

1-17-00
PLANS APPROVAL DATE

REGISTERED PROFESSIONAL ENGINEER — T. J. Pokrywka — No. 46797 — Exp. 6-30-03 — CIVIL — STATE OF CALIFORNIA

The State of California or its officers or agents shall not be responsible for the accuracy or completeness of electronic copies of this plan sheet.

All Dimensions are In Meters unless otherwise shown

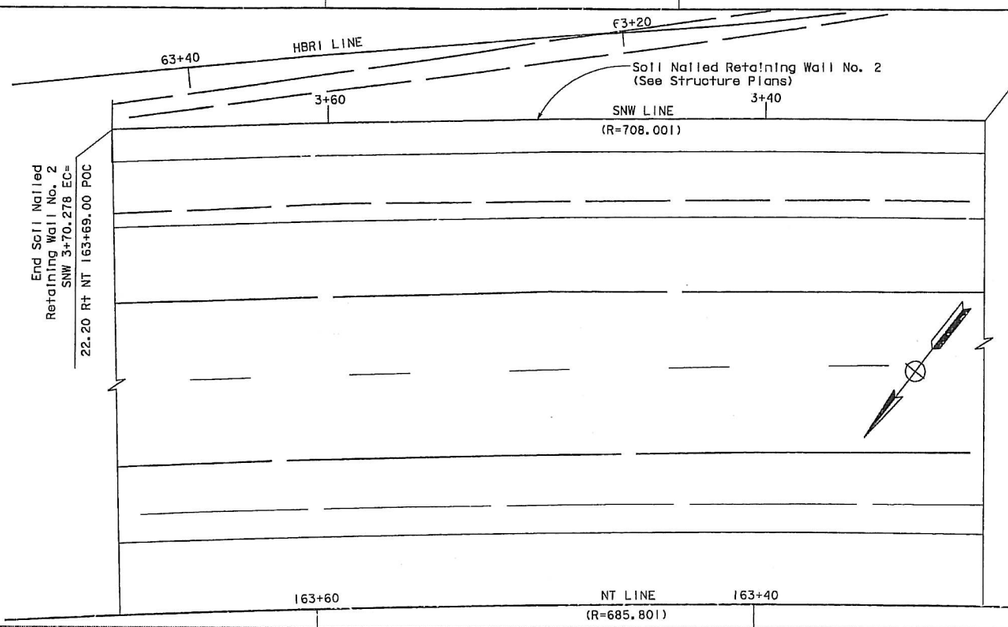

Begin Soil Nailed
Retaining Wall No. 2
SNW 3+29.50 BC=
22.20 Rt NT 163+29.501 POC

GENERAL NOTES

1- The exact location of the Test Soil Nails to be determined by Engineer in the field.

2- The maximum depth of excavation and unsupported cut slope between soil nails shall not exceed 1.6 m for each level of soil nail construction.

3- For details of wall facing, soil nail assembly, test soil nail assembly, concrete drainage gutter return wall and other miscellaneous details see, "Wall Details No. 1 thru 4" sheets.

4- Chain Link Fence (Type CL-0.9) not shown on wall elevation.

5- All Soil Nail profile lines are parallel to top of cut except the bottom row which is parallel to bottom of wall.

LEGEND & SYMBOLS

x = Location of Soil Nail Assembly with No. 29 Reinforcement

▫ = Location of Test Soil Nail Assembly

ST = Vertical distance from top of cut elevation to first row of Soil Nails
ST = 0.6 m

SB = Vertical distance from bottom of wall to bottom level of the Soil Nail Assembly
SB (min) = 0.6 m SB (max) = 1.05 m

SV = Vertical spacing of Soil Nail Assembly
SV (min) = 0.45 m SV (max) = 1.1 m

SH = Horizontal spacing of Soil Nail Assembly
SH (min) = 0.45 m SH (max) = 1.1 m

SS = Horizontal distance between the beginning/ end of nail and first/last Soil Nail,
SS (min) = 0.45 m SS (max) = 0.75 m

SNW = Soil Nailed Retaining Wall

LE = Length of Soil Nail = 3.0 m

DESIGN : Bridge design specifications (1983 AASHTO with Interims and Revisions by Caltrans)

REINFORCED CONCRETE : fy = 420 MPa
f'c = 25 MPa

STRUCTURAL STEEL : ASTM Designation : A709/A709M, Grade 36[250]

SOIL NAILS : ASTM Designation : A615/A615M, Grade 520, fs = 390 MPa

SOIL DESIGN PARAMETERS (AVG):
ϕ = 28 degrees
c = 0 kPa
γ = 15.7 kN/m³
Δ = 25 kPa(Ultimate bond stress between soil and grout)

AS BUILT
CORRECTIONS BY SANG SOH
CONTRACT NO. 04-045034
DATE 3-2-01
5 FEB 2002 KN

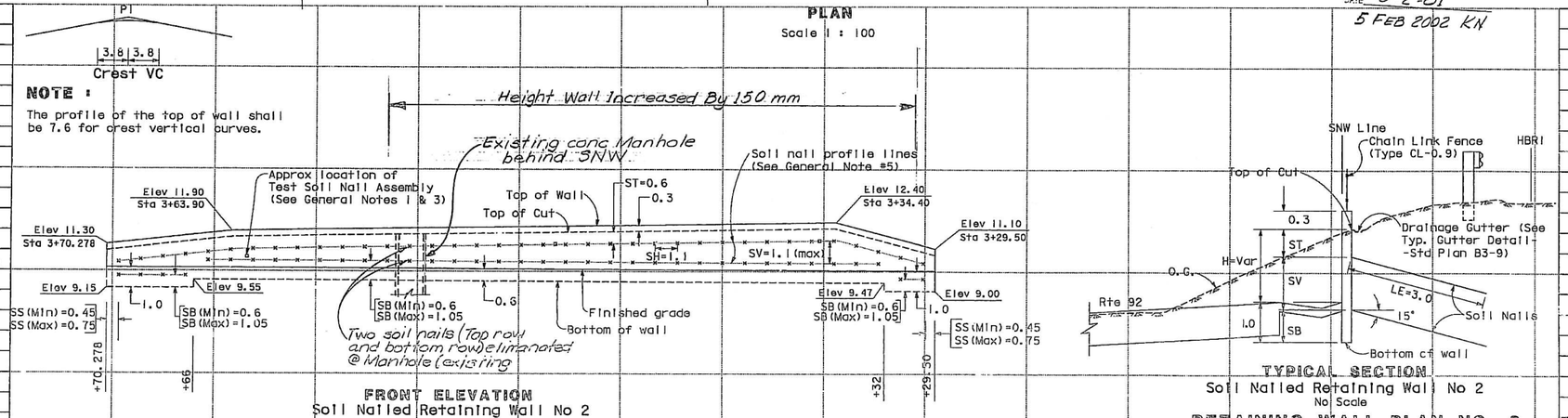

PLAN
Scale 1 : 100

FRONT ELEVATION
Soil Nailed Retaining Wall No 2
(Profile based on SNW Line)
Scale 1:100 (Horiz & Vertical)

TYPICAL SECTION
Soil Nailed Retaining Wall No 2
No Scale

RETAINING WALL PLAN NO. 2
(SOIL NAILED)
SCALE AS SHOWN

SHEET	OF
3	8

STATE OF CALIFORNIA - DEPARTMENT OF TRANSPORTATION
OFFICE OF STRUCTURAL FOUNDATIONS
GEOTECHNICAL
PROJECT ENGINEER H. NIKOUI
CALCULATED/DESIGNED BY
CHECKED BY
DATE REVISED BY
DATE REVISED

LAST REVISION 00-00-00 DATE PLOTTED => 26-Jan-2000 TIME PLOTTED => 08:41

FOR REDUCED PLANS ORIGINAL SCALE IS IN MILLIMETERS 0 20 40 60 80

USERNAME => trrlchf
DGN FILE => edrw02_26083201

CU 04269 EA 045031

DIST	COUNTY	ROUTE	KILOMETER POST TOTAL PROJECT	SHEET No	TOTAL SHEETS
04	Ala	92	3.7/10.3	343	440

Mary L Warrick 7-30-99
REGISTERED CIVIL ENGINEER

1-17-00
PLANS APPROVAL DATE

The State of California or its officers or agents shall not be responsible for the accuracy or completeness of electronic copies of this plan sheet.

REGISTERED PROFESSIONAL ENGINEER
Mary L Warrick
No. 53751
Exp. 6-30-03
CIVIL
STATE OF CALIFORNIA

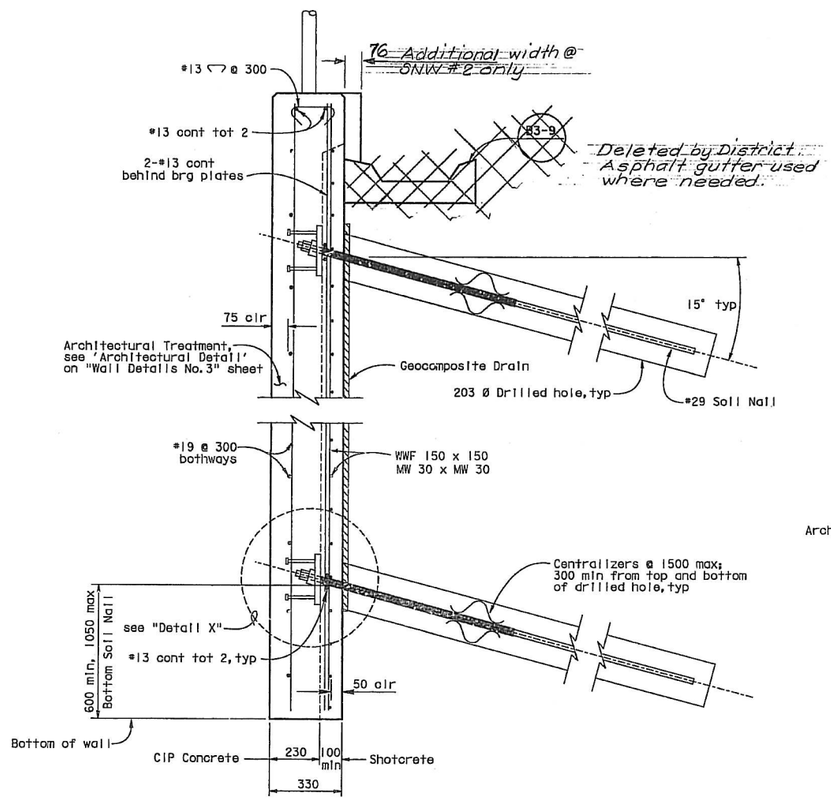

TYPICAL SECTION
1:10

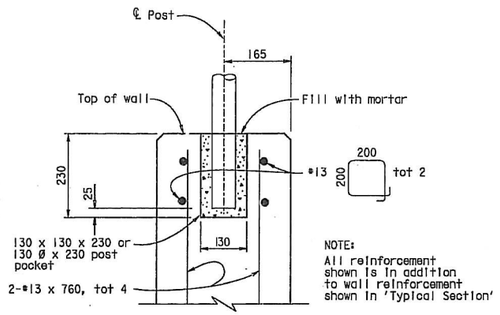

POST POCKET DETAIL
No Scale

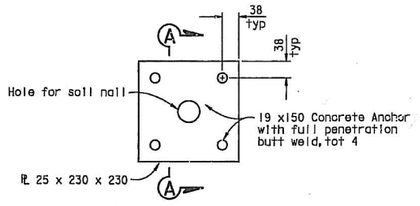

BEARING PLATE DETAIL
1:5

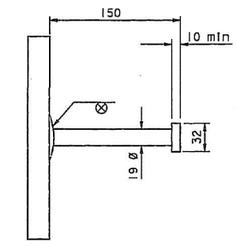

SECTION A - A
1:2.5

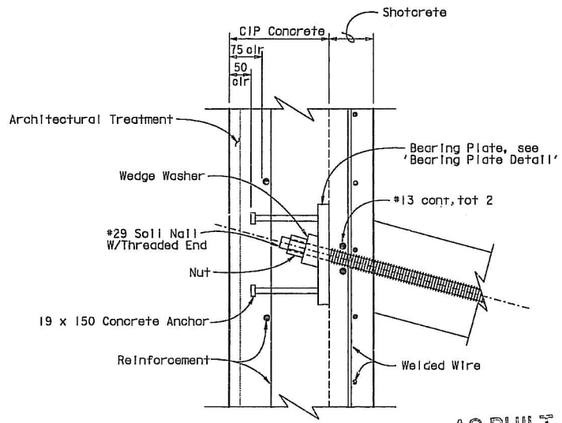

DETAIL "X"
1:5

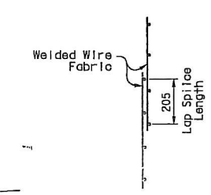

LAP SPLICE
1:10

AS BUILT
CORRECTIONS BY S.T.S
CONTRACT NO. 04-045034
DATE 3-2-01
5 FEB 2002 KN

ALL DIMENSIONS ARE IN MILLIMETERS UNLESS OTHERWISE SHOWN

DESIGN	BY Mary L Warrick	CHECKED Joey Aquino	
DETAILS	BY nd	CHECKED Joey Aquino	
QUANTITIES	BY Mary L Warrick	CHECKED Joey Aquino	

STATE OF CALIFORNIA
DEPARTMENT OF TRANSPORTATION

DIVISION OF STRUCTURES
STRUCTURE DESIGN 3

BRIDGE NO.
KILOMETER POST 9.2/9.3 (5.7/5.6)

SOIL NAILED RETAINING WALLS
WALL DETAILS NO. 1

STRUCTURES DESIGN DETAIL SHEET (METRIC) (REV. 1/1/99)

ORIGINAL SCALE IN MILLIMETERS FOR REDUCED PLANS 0 10 20 30 40 50 60 70 80 90 100

CU 04269
EA 045031

DISREGARD PRINTS BEARING EARLIER REVISION DATES

REVISION DATES (PRELIMINARY STAGE ONLY)

SHEET 4 OF 8

FILE => edrw03_2601.1442

USERNAME => trrichy DATE PLOTTED => 26-Jan-2000 TIME PLOTTED => 09:46

DIST	COUNTY	ROUTE	KILOMETER POST TOTAL PROJECT	SHEET No	TOTAL SHEETS
04	Ala	92	3.7/10.3	344	440

Mary L Warrick 7-30-99
REGISTERED CIVIL ENGINEER

1-17-00
PLANS APPROVAL DATE

The State of California or its officers or agents shall not be responsible for the accuracy or completeness of electronic copies of this plan sheet.

REGISTERED PROFESSIONAL ENGINEER
Mary L Warrick
No. 53751
Exp. 6-30-03
CIVIL
STATE OF CALIFORNIA

Note:
Total length of test soil nail equals embedment length plus the length required for jacking equipment.

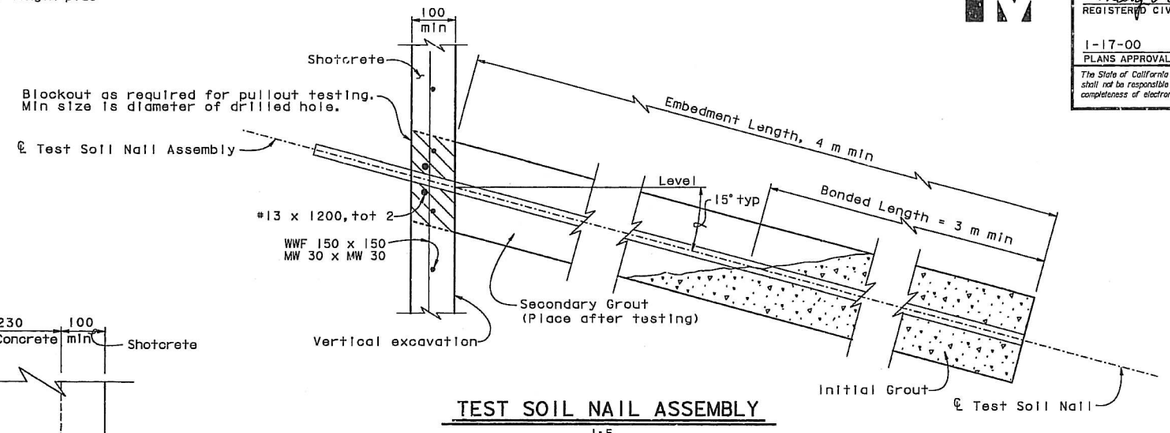

TEST SOIL NAIL ASSEMBLY
1:5

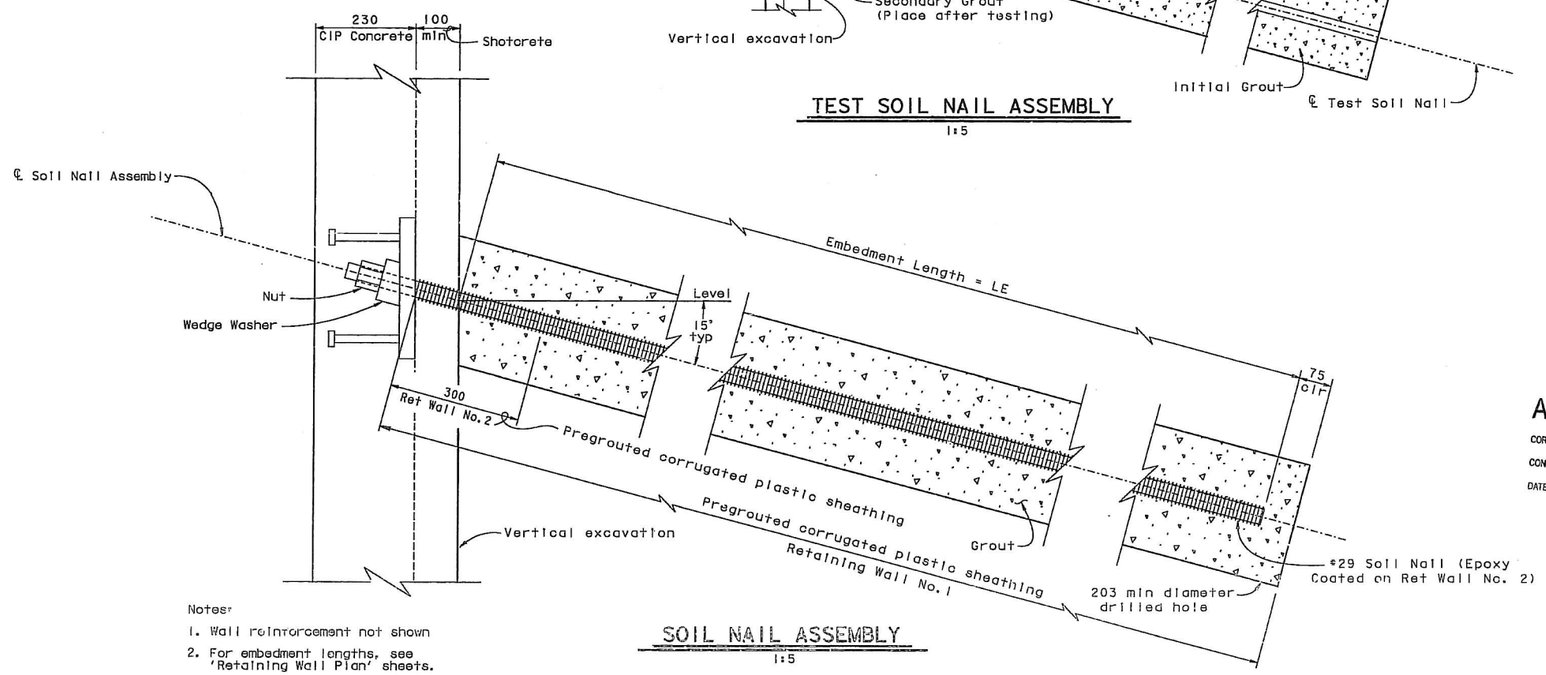

Notes:
1. Wall reinforcement not shown
2. For embedment lengths, see 'Retaining Wall Plan' sheets.

SOIL NAIL ASSEMBLY
1:5

NO AS BUILT CHANGES
AS BUILT
CORRECTIONS BY SANG SON
CONTRACT NO. 04-045034
DATE 3-2-01
5 FEB 2002 KN

ALL DIMENSIONS ARE IN MILLIMETERS UNLESS OTHERWISE SHOWN

DESIGN	BY Mary L Warrick	CHECKED Joey Aquino	
DETAILS	BY nd	CHECKED Joey Aquino	
QUANTITIES	BY Mary L Warrick	CHECKED Joey Aquino	

STATE OF CALIFORNIA
DEPARTMENT OF TRANSPORTATION

DIVISION OF STRUCTURES
STRUCTURE DESIGN 3

BRIDGE NO.
KILOMETER POST 9.2/9.3 (5.7/5.8)

SOIL NAILED RETAINING WALLS
WALL DETAILS NO. 2

STRUCTURES DESIGN DETAIL SHEET (METRIC) (REV. 1/1/99)

ORIGINAL SCALE IN MILLIMETERS FOR REDUCED PLANS 0 10 20 30 40 50 60 70 80 90 100

CU 04269
EA 045031

DISREGARD PRINTS BEARING EARLIER REVISION DATES

REVISION DATES (PRELIMINARY STAGE ONLY) 3-1-99 3-3-99

SHEET 5 OF 8

FILE => edrw04_2c094453

USERNAME => trrichf DATE PLOTTED => 26-Jan-2000 TIME PLOTTED => 09:47

DIST	COUNTY	ROUTE	KILOMETER POST TOTAL PROJECT	SHEET No	TOTAL SHEETS
04	Ala	92	3.7/10.3	345	440

Mary L Warrick 7-30-99
REGISTERED CIVIL ENGINEER

1-17-00
PLANS APPROVAL DATE

REGISTERED PROFESSIONAL ENGINEER Mary L Warrick No. 53751 Exp. 6-30-03 CIVIL STATE OF CALIFORNIA

The State of California or its officers or agents shall not be responsible for the accuracy or completeness of electronic copies of this plan sheet.

Metric

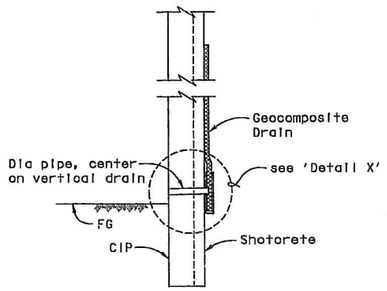

PART TYPICAL SECTION
1:20

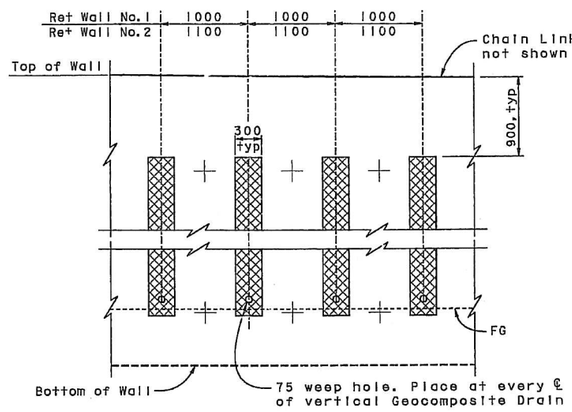

PART ELEVATION - GEOCOMPOSITE DRAIN
1:25

Notes:

1. Center Geocomposite drain between Soil Nail assemblies.
2. ┼ - Indicates Soil Nail Assembly.
3. 75 dia drain pipe to be placed 75 above finished grade at face of CIP wall, typ.

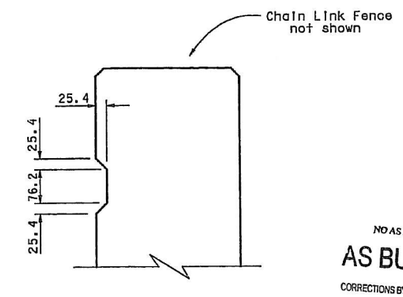

SECTION B - B
1:5

NO AS BUILT CHANGES
AS BUILT
CORRECTIONS BY Sang Son
CONTRACT NO. 04-045034
DATE 3-02-01
5 FEB 2002 KN

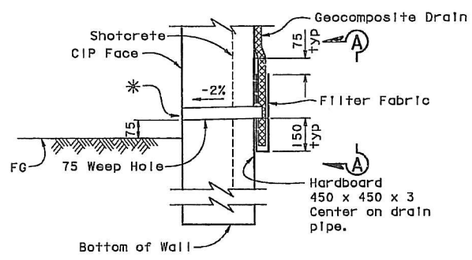

DETAIL "X"
1:10

✻ Place pipe through hardboard. Remove core of geocomposite drain at location of pipe. Do not damage filter fabric on soil side of vertical drain.

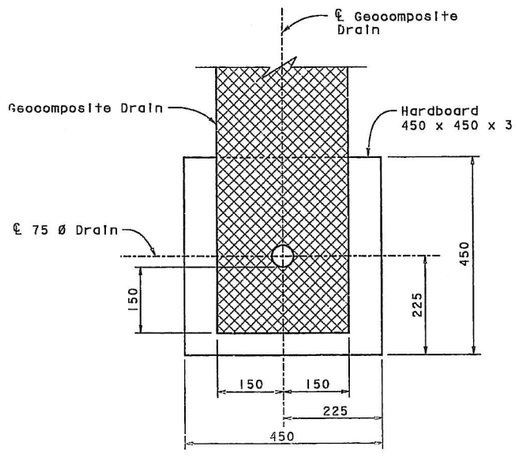

VIEW A - A
1:5

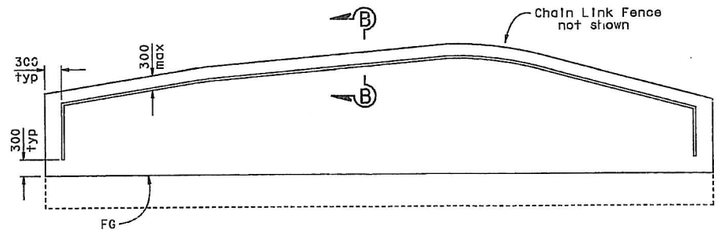

ARCHITECTURAL DETAIL
No Scale

ALL DIMENSIONS ARE IN MILLIMETERS UNLESS OTHERWISE SHOWN

DESIGN	BY Mary L Warrick	CHECKED Joey Aquino	STATE OF CALIFORNIA DEPARTMENT OF TRANSPORTATION	DIVISION OF STRUCTURES STRUCTURE DESIGN 3	BRIDGE NO.
DETAILS	BY nd	CHECKED Joey Aquino			KILOMETER POST 9.2/9.3 (5.7/5.8)
QUANTITIES	BY Mary L Warrick	CHECKED Joey Aquino			

SOIL NAILED RETAINING WALLS
WALL DETAILS NO. 3

STRUCTURES DESIGN DETAIL SHEET (METRIC) (REV. 1/1/99)

ORIGINAL SCALE IN MILLIMETERS FOR REDUCED PLANS 0 10 20 30 40 50 60 70 80 90 100

CU 04269
EA 045031

DISREGARD PRINTS BEARING EARLIER REVISION DATES

REVISION DATES (PRELIMINARY STAGE ONLY) 3-1-99 3-2-99 5-27-99

SHEET 6 OF 8

FILE => edrw05_26083.17

USERNAME => trphi:s DATE PLOTTED => 26-Jan-2000 TIME PLOTTED => 08:32

DIST	COUNTY	ROUTE	KILOMETER POST TOTAL PROJECT	SHEET No	TOTAL SHEETS
04	Ala	92	3.7/10.3	346	440

Mary L Warrick 7-30-99
REGISTERED CIVIL ENGINEER

1-17-00
PLANS APPROVAL DATE

The State of California or its officers or agents shall not be responsible for the accuracy or completeness of electronic copies of this plan sheet.

REGISTERED PROFESSIONAL ENGINEER Mary L Warrick No. 53751 Exp. 6-30-03 CIVIL STATE OF CALIFORNIA

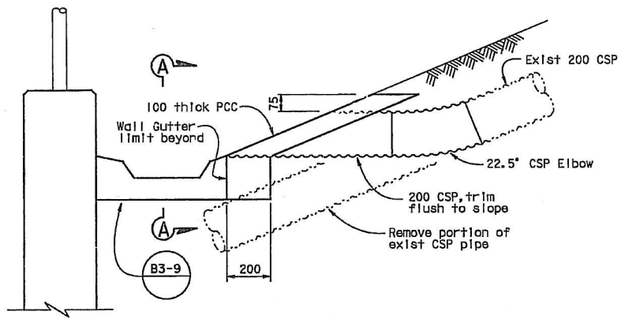

MODIFIED ABUT DRAIN PIPE
(RETAINING WALL NO. 1)
1:10

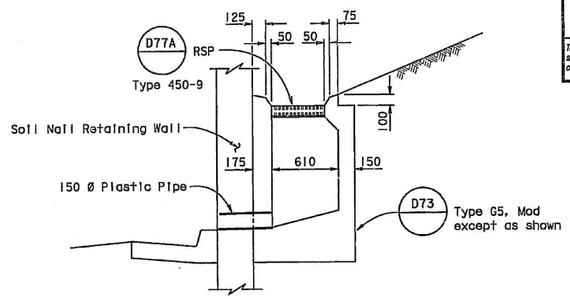

SECTION B - B
1:20

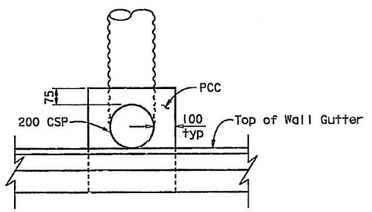

SECTION A - A
1:10

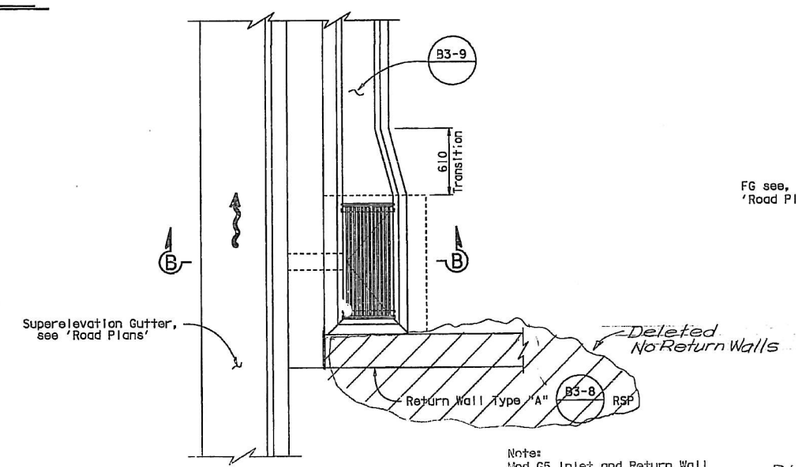

PLAN
(MODIFIED G5 INLET)
1:20

Note:
Mod G5 Inlet and Return Wall @ South end only of Ret Wall No. 2 and [illegible]oth ends of Ret Wall No. 1.

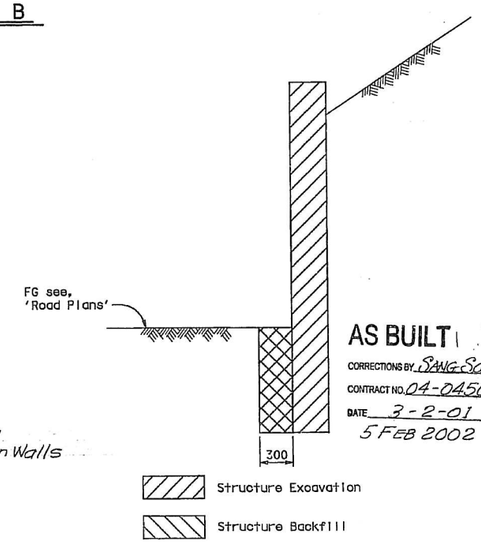

AS BUILT
CORRECTIONS BY SANG SON
CONTRACT NO. 04-045034
DATE 3-2-01
5 FEB 2002 KN

PAY LIMITS STRUCTURE EXCAVATION
No Scale

ALL DIMENSIONS ARE IN MILLIMETERS UNLESS OTHERWISE SHOWN

DESIGN	BY Mary L Warrick	CHECKED Joey Aquino	
DETAILS	BY nd	CHECKED Joey Aquino	
QUANTITIES	BY Mary L Warrick	CHECKED Joey Aquino	

STATE OF CALIFORNIA
DEPARTMENT OF TRANSPORTATION

DIVISION OF STRUCTURES
STRUCTURE DESIGN 3

BRIDGE NO.
KILOMETER POST 9.2/9.3 (5.7/5.8)

SOIL NAILED RETAINING WALLS
WALL DETAILS NO. 4

STRUCTURES DESIGN DETAIL SHEET (METRIC) (REV. 1/1/99)

ORIGINAL SCALE IN MILLIMETERS FOR REDUCED PLANS 0 10 20 30 40 50 60 70 80 90 100

CU 04269
EA 045031

DISREGARD PRINTS BEARING EARLIER REVISION DATES

REVISION DATES (PRELIMINARY STAGE ONLY) 3-1-99 5-21-99

SHEET 7 OF 8

FILE => adrw06_26083152

USERNAME => trphila DATE PLOTTED => 26-Jan-2000 TIME PLOTTED => 08:32

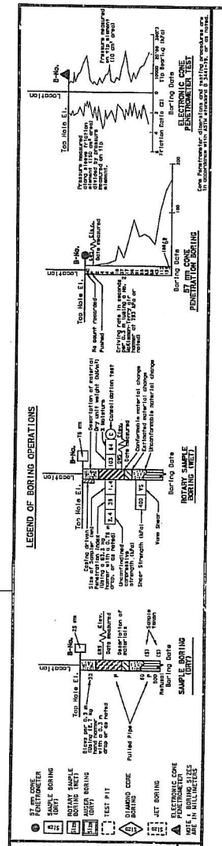

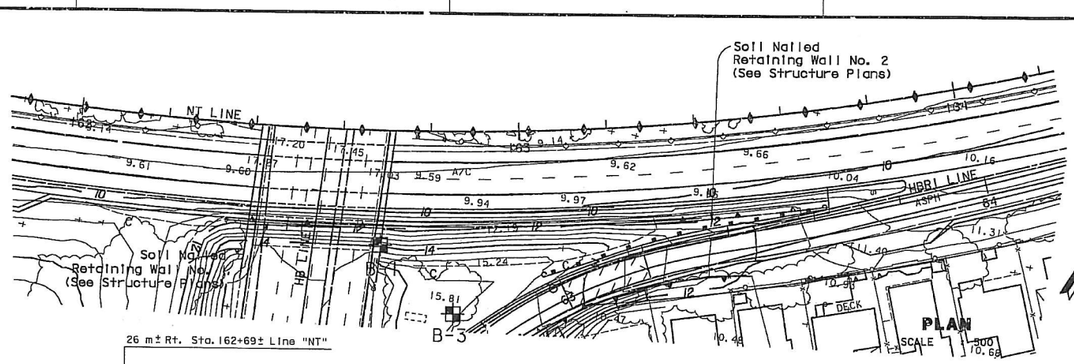

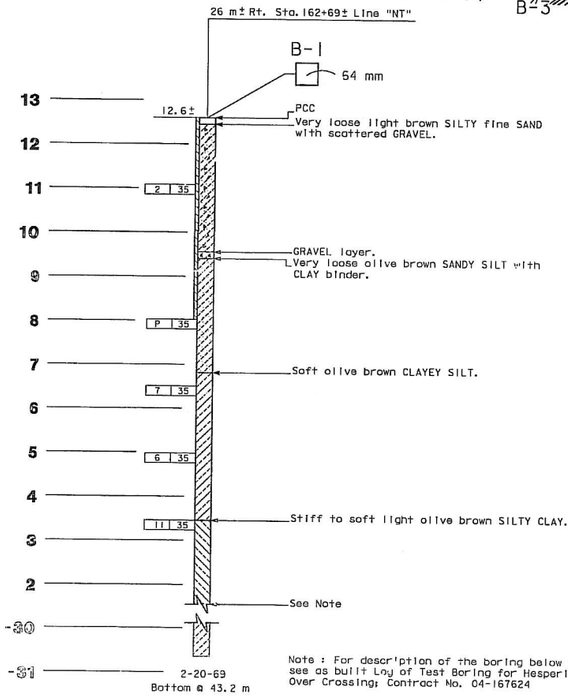

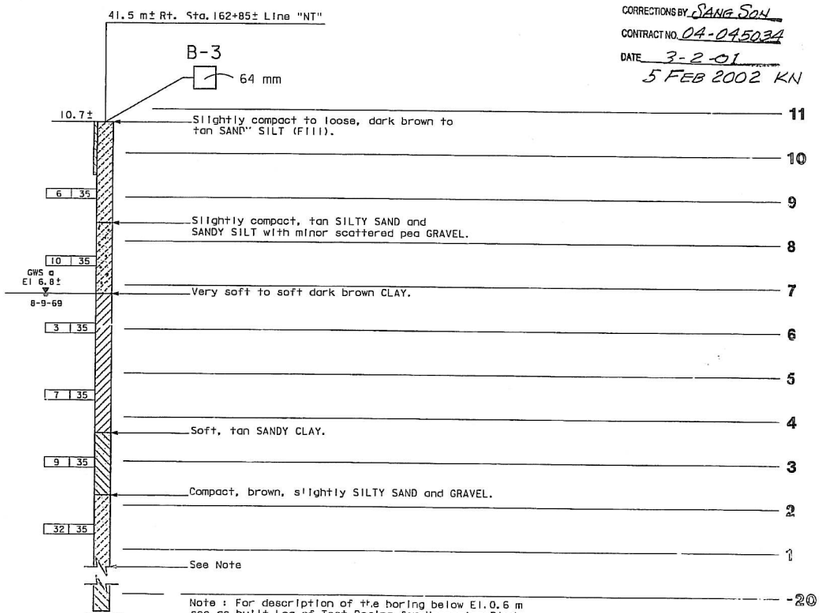

PROFILE
Horiz. No Scale
Vert. 1 : 50

DIST.	COUNTY	ROUTE	KILOMETER POSTS TOTAL PROJECT	SHEET NO.	TOTAL SHEETS
04	Ala	92	3.7/10.3	347	440

Timothy J. Pokrywka 01-29-99
REGISTERED ENGINEER - CIVIL
1-17-00
PLANS APPROVAL DATE
The State of California or its officers or agents shall not be responsible for the accuracy or completeness of electronic copies of this plan sheet.

REGISTERED PROFESSIONAL ENGINEER
T. J. Pokrywka
No. 46797
Exp. 6-30-03
CIVIL
STATE OF CALIFORNIA

All Dimensions are In Meters unless otherwise shown

NO AS BUILT CHANGES
AS BUILT
CORRECTIONS BY Sang Soh
CONTRACT NO. 04-045034
DATE 3-2-01
5 Feb 2002 KN

ENGINEERING SERVICE CENTER	STRUCTURE FOUNDATIONS
DRAWN BY	M. Mehta 1/99
CHECKED BY	T. Pokrywka

FIELD INVESTIGATION BY:

STATE OF CALIFORNIA
DEPARTMENT OF TRANSPORTATION

OFFICE OF STRUCTURAL FOUNDATIONS
ROADWAY GEOTECHNICAL ENGINEERING (NORTH)

BRIDGE NO.
POST MILE 9.2/9.3 (5.7/5.8)

SOIL NAILED RETAINING WALLS
LOG OF TEST BORINGS

CU 04269
EA 045031

DISREGARD PRINTS BEARING EARLIER REVISION DATES

REVISION DATES (PRELIMINARY STAGE ONLY)
7-22-99

SHEET 8 OF 8

TL 6052 (CADD 3/24/97)

ORIGINAL SCALE IN MILLIMETERS FOR REDUCED PLANS 0 10 20 30 40 50 60 70 80 90 100

USERNAME => trphils
DGN FILE => elltb_26083158

DATE PLOTTED => 26-Jan-2000
TIME PLOTTED => 08:33