Retaining Wall "A"

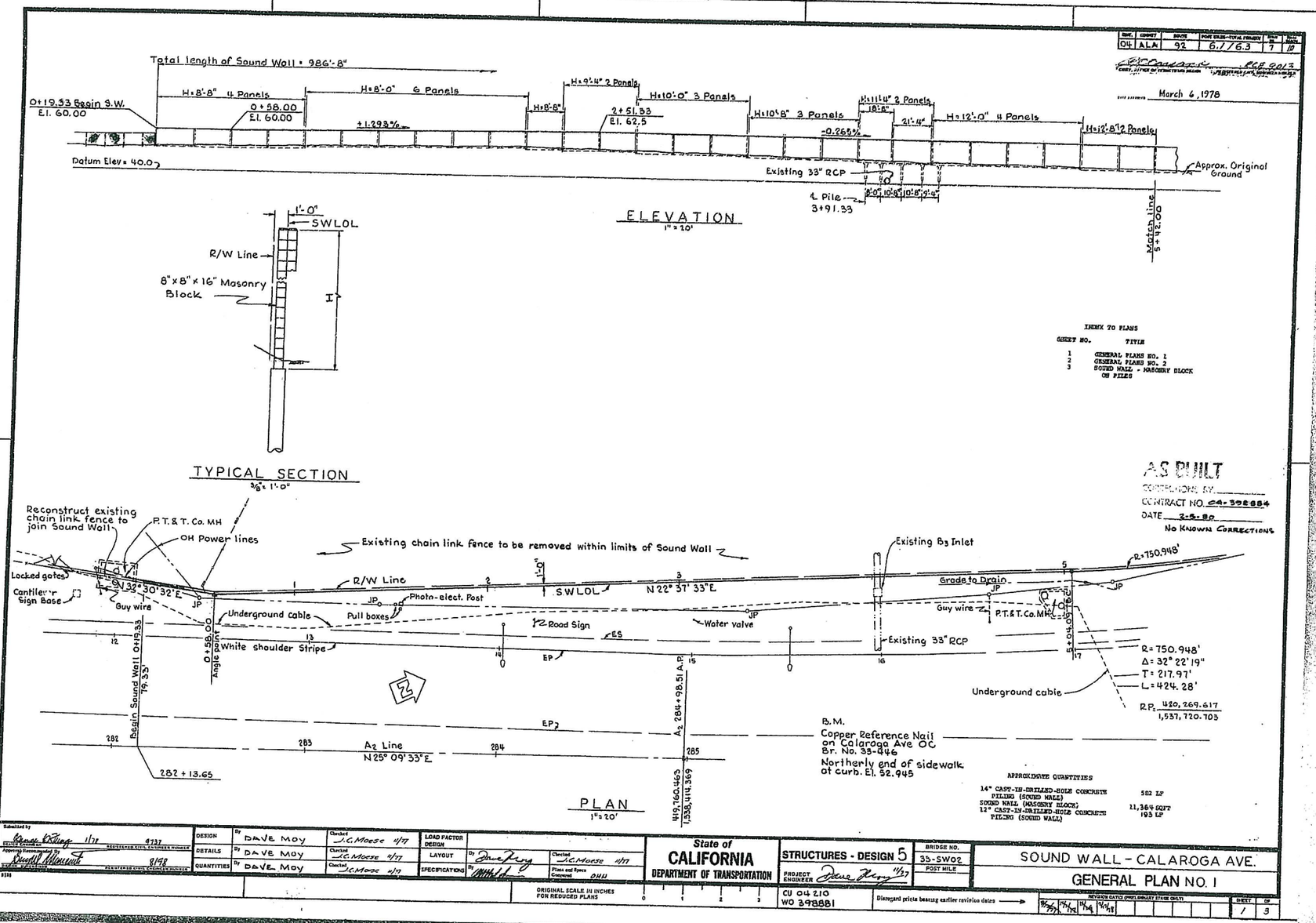

INDEX TO PLANS

SHEET NO.	TITLE
1	GENERAL PLANS NO. 1
2	GENERAL PLANS NO. 2
3	SOUND WALL - MASONRY BLOCK ON PILES

AS BUILT
CORRECTIONS BY
CONTRACT NO. 04-398884
DATE 2-5-80
No Known Corrections

APPROXIMATE QUANTITIES

14" CAST-IN-DRILLED-HOLE CONCRETE PILING (SOUND WALL)	502 LF
SOUND WALL (MASONRY BLOCK)	11,364 SQFT
12" CAST-IN-DRILLED-HOLE CONCRETE PILING (SOUND WALL)	193 LF

Submitted by	Dave Moy 1/77	DESIGN	By DAVE MOY	Checked J.C. Moese 11/77	LOAD FACTOR DESIGN
Approved Recommended By	Donald Monroe 8/98	DETAILS	By DAVE MOY	Checked J.C. Moese 11/77	LAYOUT
		QUANTITIES	By DAVE MOY	Checked J.C. Moese 11/77	SPECIFICATIONS

State of CALIFORNIA DEPARTMENT OF TRANSPORTATION

STRUCTURES - DESIGN 5

PROJECT ENGINEER Dave Moy 11/77

BRIDGE NO. 33-SW02

POST MILE

SOUND WALL - CALAROGA AVE.

GENERAL PLAN NO. 1

ORIGINAL SCALE IN INCHES FOR REDUCED PLANS 0 1 2 3

CU 04 210
WO 398881

Disregard prints bearing earlier revision dates

SHEET 1 OF 3

AS BUILT PLANS
Contract No. 04-398884
Date Completed
Document No. 4000 9248

I HEREBY CERTIFY THAT THIS IS A TRUE AND ACCURATE COPY OF THE ABOVE DOCUMENT TAKEN UNDER MY DIRECTION AND CONTROL ON THIS DATE IN SACRAMENTO, CALIFORNIA PURSUANT TO AUTHORIZATION BY THE DIRECTOR OF TRANSPORTATION.

DATE 1-20-80 SIGNATURE Joseph M. Costa TITLE SUPERVISOR OF MICROFILM SERVICES

DIST.	COUNTY	ROUTE	POST MILES—TOTAL PROJECT	SHEET No.	TOTAL SHEETS
04	ALA	92	61/63	8	10

R.C. Cassano RCE 9013
CHIEF, OFFICE OF STRUCTURES DESIGN — REGISTERED CIVIL ENGINEER NUMBER

DATE APPROVED March 6, 1978

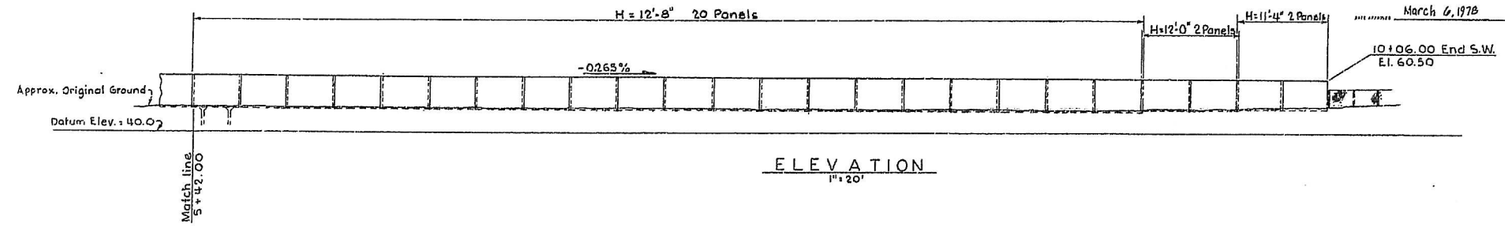

ELEVATION
1" = 20'

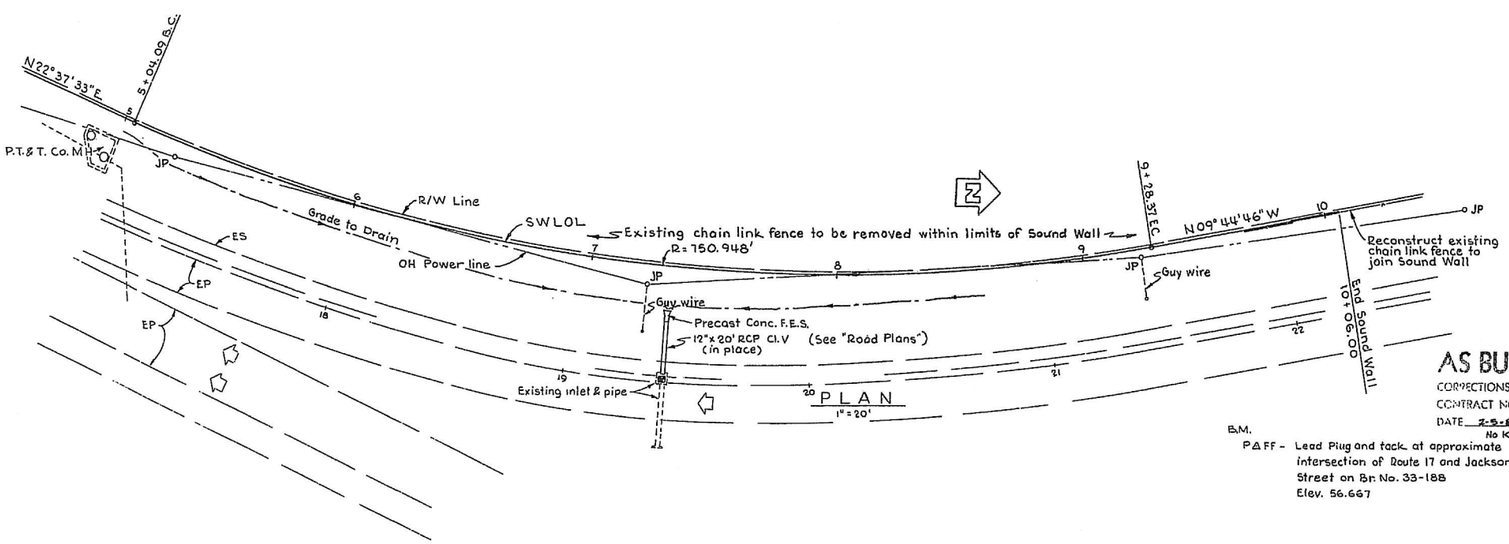

AS BUILT
CORRECTIONS BY
CONTRACT NO. 04-398884
DATE 2-5-80
No Known Corrections

B.M.
PAFF - Lead Plug and tack at approximate intersection of Route 17 and Jackson Street on Br. No. 33-188
Elev. 56.667

Designed by Paul L. Zeng 1/77 9737 — Design Engineer — Registered Civil Engineer Number	DESIGN	By DAVE MOY	Checked J.C. Moose 1/77	LOAD FACTOR DESIGN	
Approved for Recommendation By Russell Mercatt 8198 — Design Supervisor — Registered Civil Engineer Number	DETAILS	By DAVE MOY	Checked J.C. Moose 1/77	LAYOUT	By Dave Moy
	QUANTITIES	By DAVE MOY	Checked J.C. Moose 1/77	SPECIFICATIONS	By Wm H Hatt

Checked J.C. Moose 1/77
Plans and Specs Compared 1/77

State of CALIFORNIA DEPARTMENT OF TRANSPORTATION

STRUCTURES - DESIGN 5
PROJECT ENGINEER Dave Moy 1/77

BRIDGE NO. 33-SW02
POST MILE

SOUND WALL - CALAROGA AVE
GENERAL PLAN NO. 2

AS BUILT

ORIGINAL SCALE IN INCHES FOR REDUCED PLANS 0 1 2 3

CU 04210
WO 398881

Disregard prints bearing earlier revision dates

REVISION DATES (PRELIMINARY STAGE ONLY)

SHEET 2 OF 3

AS BUILT PLANS
Contract No. 04-398884
Date Completed
Document No. 4000 9248

I HEREBY CERTIFY THAT THIS IS A TRUE AND ACCURATE COPY OF THE ABOVE DOCUMENT TAKEN UNDER MY DIRECTION AND CONTROL ON THIS DATE IN SACRAMENTO, CALIFORNIA PURSUANT TO AUTHORIZATION BY THE DIRECTOR OF TRANSPORTATION.

DATE 1-30-80 SIGNED Joseph M. Cuta TITLE SUPERVISOR OF HIGHWAY SERVICES

DIST.	COUNTY	ROUTE	POST MILE—TOTAL PROJECT	SHEET NO.	TOTAL SHEETS
04	ALA.	92	61/63	9	10

Clarence B. Wong 4-1-77
DESIGN ENGINEER — ENGINEERING MANAGER

DATE APPROVED March 9, 1978

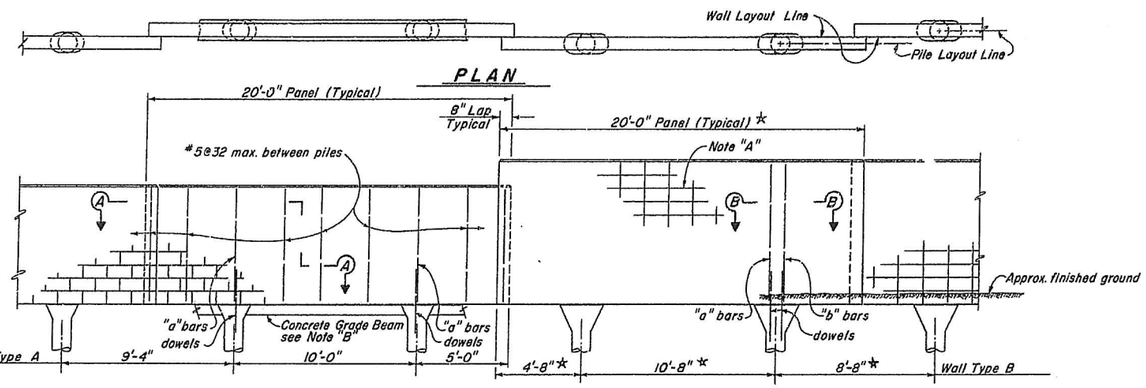

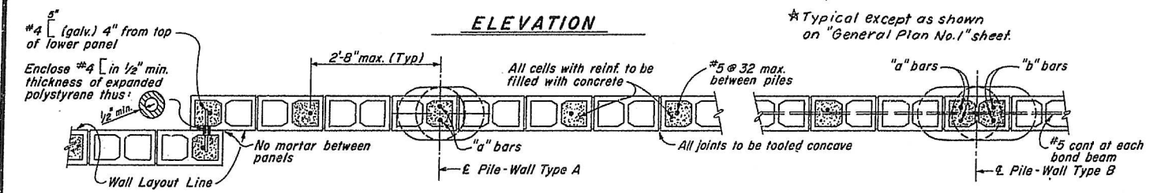

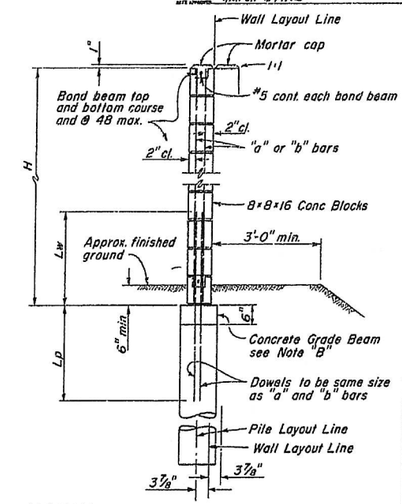

04-398884
2-5-80
No Known Corrections

TYPICAL SECTION

	H	Wall Type	fm	"a" bars	"b" bars	Lp	Lw	W	Pile Dia.	"c" bars	D
RUNNING BOND Concave Joint	6	A	450	2-#5		2'-2"	2'-5"	1'-6"	12"	4-#5	4'-3"
	8	A	450	2-#6		2'-8"	3'-5"	2'-5"	12"	4-#5	5'-3"
	10	B	450	2-#5	2-#5	2'-2"	2'-5"	3'-8"	12"	4-#5	6'-6"
	12	B	900	2-#6	2-#6	2'-8"	3'-5"	2'-10"	14"	5-#5	8'-0"
	13	B	900	2-#7	2-#7	3'-7"	4'-8"	3'-3"	14*	5-#5	8'-6"

STACKED BOND Concave Joint	6	A	450	2-#5		2'-2"	2'-5"	1'-6"	12"	4-#5	4'-3"
	8	A	900	2-#6		2'-8"	3'-5"	1'-5"	12"	4-#5	5'-3"
	10	B	900	2-#5	2-#5	2'-2"	2'-5"	2'-1"	12"	4-#5	6'-6"
	12	B	900	2-#6	2-#6	2'-8"	3'-5"	2'-10"	14"	5-#5	8'-0"
	13	B	900	2-#7	2-#7	3'-7"	4'-8"	3'-3"	14*	5-#5	8'-6"

GENERAL NOTES

Design Wind Load = 15 psf

Reinforced Concrete:
- f'_c = 1300 psi
- f_s = 24,000 psi
- n = 10

Concrete Masonry:

f'_m = 1350 psi		2700 psi
f'_m = 450 psi	or	*900 psi
f_s = 24,000 psi		24,000 psi
n = 22		"

See Table for f'_m required.
*Prism Test required for 900 psi

Allowable Ultimate Lateral Soil Pressure is based on $\phi = 12°$
Cohesion = 650 PSF
Unit Weight = 120 PCF

Note "A": When blocks are laid in stacked bond, galvanized joint reinf. shall be provided. (Min. 2-9ga. wires cont. @ 24 max.)

Note "B": If panels are preassembled;
(1) Concrete Grade Beam need not be placed.
(2) Panel to be set to grade on pile with mortar.

Note "C": When the required wall "H" exceeds the "H" value given in the Table, use the next higher "H" values.

Note "D": The option selected by the Contractor for the Bond type shall be used for the entire project.

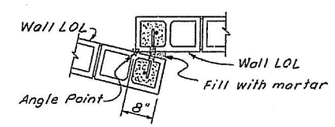

WALL LAYOUT AT ANGLE POINT

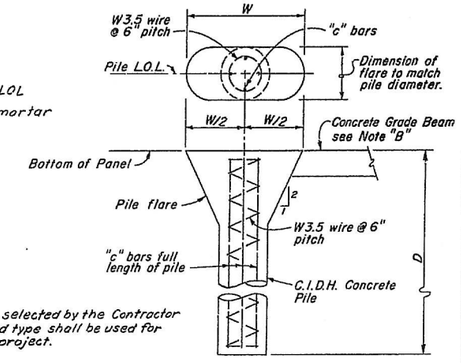

PILE DETAIL

STANDARD DRAWING				
FILE No. XS-3-55	DESIGN	By H. B. Shawver	Checked Dave Hoy	Approved Recommended By
DRAWING DATE 8/77	DETAILS	By K.C. Blechinger	Checked Dave Hoy	Dwight Hillmann 3/78
	SUBMITTED BY	Ramon N. Rios		DATE APPROVED / REGISTERED CIVIL ENGINEER CHIEF

Table revised
General Notes revised
2% Max. slope deleted
Wall Layout detail added

State of CALIFORNIA DEPARTMENT OF TRANSPORTATION

STRUCTURES-DESIGN 5
PROJECT ENGINEER Dave Hoy 11/77

BRIDGE NO. 33-SW02
POST MILE

SOUND WALL - CALAROGA AVE.
SOUND WALL - MASONRY BLOCK ON PILES

ORIGINAL SCALE IN INCHES FOR REDUCED PLANS 0 1 2 3

CU 04210
WO 398881

Disregard prints bearing earlier revision dates →

REVISION DATES (PRELIMINARY STAGE ONLY)

SHEET 3 OF 3

original

9

AS BUILT PLANS
Contract No. 04-398884
Date Completed
Document No. 4100 9248

I HEREBY CERTIFY THAT THIS IS A TRUE AND ACCURATE COPY OF THE ABOVE DOCUMENT TAKEN UNDER MY DIRECTION AND CONTROL, ON THIS DATE IN SACRAMENTO, CALIFORNIA PURSUANT TO AUTHORIZATION BY THE DIRECTOR OF TRANSPORTATION.

DATE 1-. SIGNATURE Joseph M. Cote TITLE SUPERVISOR OF MICROFILM SERVICES

MICROFILM – STATE OF CALIFORNIA – DEPARTMENT OF TRANSPORTATION – MICROFILM