California Department of Transportation
Division of Maintenance
Structure Maintenance and Investigations

Bridge

Inspection

Records

Information

System

The requested documents have been generated by BIRIS.

These documents are the property of the California Department of Transportation and should be handled in accordance with Deputy Directive 55 and the State Administrative Manual.

Records for "Confidential" bridges may only be released outside the Department of Transportation upon the execution of a confidentiality agreement.

ClibPDF - www.fastio.com

DIST	COUNTY	ROUTE	POST MILES TOTAL PROJECT	SHEET NO.	TOTAL SHEETS
04	CC,SOL	80	12.8/14.1, 0.0/0.6	400	555

REGISTERED CIVIL ENGINEER
10-20-97
PLANS APPROVAL DATE

REGISTERED PROFESSIONAL ENGINEER Robert L. Morrison Jr. No. 43693 Exp. 03/31/97 CIVIL STATE OF CALIFORNIA

CH2M HILL
2485 NATOMAS PARK DR, SUITE 600
SACRAMENTO, CALIFORNIA 95833

The State of California or its officers or agents shall not be responsible for the accuracy or completeness of electronic copies of this plan sheet.

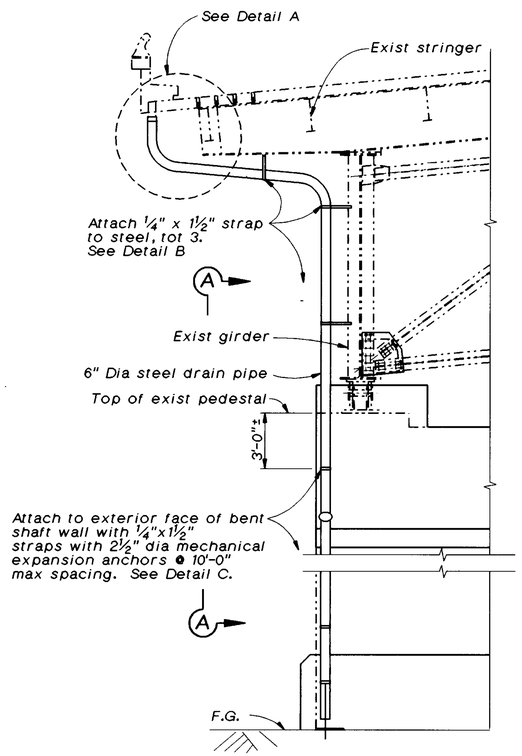

(Bent "A9E" shown, Bent "D5" similar)

ELEVATION - BENT "D5"

1/4"=1'-0"

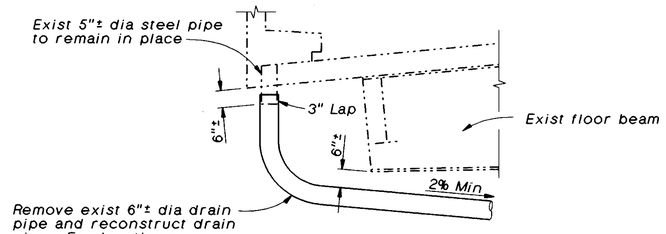

ELBOWS (90°) MAY BE USED AS DIRECTED BY THE ENGINEER TO CLEAR TRAVELER RAILS.

DETAIL A

1/2"=1'-0"

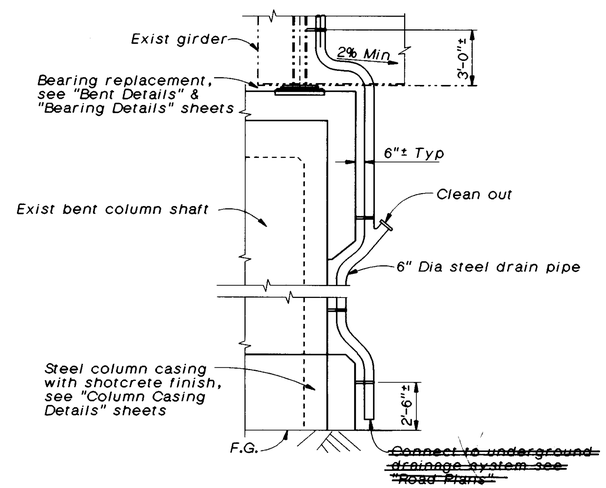

VIEW A-A

1/4"=1'-0"

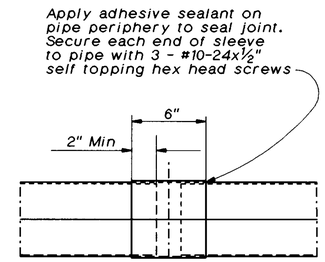

Sleeve inside diameter no greater than pipe outside diameter + 1/16"

SLEEVE CONNECTION

2"=1'-0"

NO AS BUILT CHANGES
AS BUILT
CORRECTION BY BRIAN BEAUDOIN
CONTRACT NO. 04-043934
DATE FEBRUARY, 2002
STRUCTURES REPRESENTATIVE

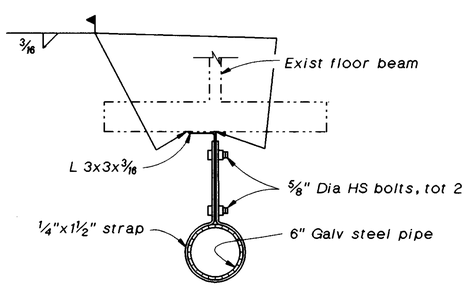

Exist L 3x3x3/16"± to remain where occurs. On vertical leg of drain pipe, omit L 3x3x3/16 and bolt strap to girder bearing stiffener PL.

DETAIL B

1 1/2"=1'-0"

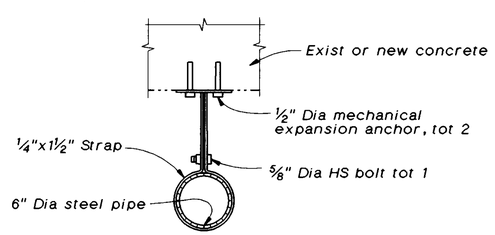

DETAIL C

1 1/2"=1'-0"

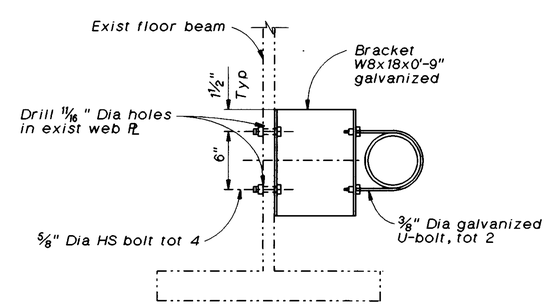

SECTION B-B

1 1/2"=1'-0"

Notes:

1. All pipes to be 6" dia x 0.135" welded steel pipe except as noted. All pipes and steel parts to be galvanized after fabrication. Fitting & bends shall have a minimum thickness of 1/8"
2. All joints or connections to be butt welded or connected by a steel pipe sleeve & to be smooth throughout inside of pipe except as noted.
3. All bends to be on a 1'-6" minimum radius measured along ℄ pipe. All bends to be smooth.
4. Existing brackets where occur to remain in place.
5. Direct drain pipe to down hill side of the column shaft as directed by the Engineer.

The Contractor shall verify all controlling field dimensions before ordering or fabricating any material.

2 REVISED PER ADDENDUM NO. 2 DATED JANUARY 30, 1998

SEISMIC RETROFIT PROJECT NO. 611

CARQUINEZ BRIDGE - "D" LINE

DRAINAGE DETAILS

Vong Toan
DESIGN OVERSIGHT
12/12/97
SIGN OFF DATE

	BY	CHECKED
DESIGN	R. Morrison, Jr.	M. Cooper
DETAILS	J. Law	M. Cooper
QUANTITIES	D. Nguyen-Tan / S. Ismail	L. Shen

PREPARED FOR THE STATE OF CALIFORNIA DEPARTMENT OF TRANSPORTATION

Lee Holloway
PROJECT ENGINEER

BRIDGE NO. 23-15 R
POST MILE CC-13.53

cd-dd.dlv

ORIGINAL SCALE IN INCHES FOR REDUCED PLANS 0 1 2 3

CU 04-268
EA 043931

DISREGARD PRINTS BEARING EARLIER REVISION DATES → 10-DEC-1997

REVISION DATES (PRELIMINARY STAGE ONLY)

SHEET 35 OF 70

ClibPDF - www.fastio.com

"A4E" LINE INDEX TO PLANS

Sheet No.	Title
1	Index to Plans
2	General Notes
3	Structure Plan No. 1
4	Structure Plan No. 2
5	Structure Plan No. 3
6	Foundation Plan No. 1
7	Foundation Plan No. 2
8	Foundation Plan No. 3
9	Abutment Details No. 1
10	Abutment Details No. 2
11	Abutment Details No. 3
12	Abutment Details No. 4
13	Pier 5 Details
14	Bent Layout No. 1
15	Bent Layout No. 2
16	Bent Layout No. 3
17	Bent Layout No. 4
18	Bent Footing Schedule
19	Footing Details No. 1
20	Footing Details No. 2
21	Footing Details No. 3
22	Footing Details No. 4
23	Footing Details No. 5
24	Footing Details No. 6
25	Footing Details No. 7
26	Footing Details No. 8
27	Footing Details No. 9
28	Footing Details No. 10
29	Footing Details No. 11
30	Footing Details No. 12
31	Footing Details No. 13
32	Footing Details No. 14
33	Pile Details
34	Load Test Pile Details
35	Column Casing Details No. 1
36	Column Casing Details No. 2
37	Column Temporary Access Details
38	Column Post Tensioning Details
39	Bent A3E and A4E Details
40	Bent A5E, A6E, and A7E Details
41	Bent A8E, A9E, and A10E Details
42	Bent A11E Details No. 1
43	Bent A11E Details No. 2
44	Bent A11E Details No. 3
45	Bent A11E Details No. 4
46	Bent A12E Details
47	Bent A13E Details No. 1
48	Bent A13E Details No. 2
49	As-Built Typical Sections No. 1
50	As-Built Typical Sections No. 2
51	Girder Layout No. 1
52	Girder Layout No. 2
53	Girder Layout No. 3
54	Restrainer Removal Plans A & B
55	Restrainer Removal Plans C & E
56	Restrainer Removal Plan D
57	Restrainer Removal Plans G, P, & Q
58	Restrainer Details No. 1
59	Restrainer Details No. 2
60	Restrainer Details No. 3
61	Restrainer Details No. 4
62	Restrainer Details No. 5
63	Restrainer Plan A & B
64	Restrainer Plan C & E
65	Restrainer Plan D
66	Restrainer Plan G
67	Hinge Details No. 1
68	Hinge Details No. 2
69	End Cross Frame Details No. 1
70	End Cross Frame Details No. 2
71	End Cross Frame Details No. 3
72	End Cross Frame Details No. 4
73	End Cross Frame Details No. 5
74	End Cross Frame Details No. 6
75	Temporary Support Details
76	Bearing Details No. 1
77	Bearing Details No. 2
78	Bearing Details No. 3
79	Bearing Details No. 4
80	Bearing Details No. 5
81	Bearing Details No. 6
82	Bearing Details No. 7
83	Miscellaneous Details No. 1
84	Miscellaneous Details No. 2
85	Drainage Details
86	Log Of Test Borings 1 of 35
87	Log Of Test Borings 2 of 35
88	Log of Test Borings 3 of 35
89	Log of Test Borings 4 of 35
90	Log of Test Borings 5 of 35
91	Log of Test Borings 6 of 35
92	Log of Test Borings 7 of 35
93	Log of Test Borings 8 of 35
94	Log of Test Borings 9 of 35
95	Log of Test Borings 10 of 35
96	Log of Test Borings 11 of 35
97	Log of Test Borings 12 of 35
98	Log of Test Borings 13 of 35
99	Log of Test Borings 14 of 35
100	Log of Test Borings 15 of 35
101	Log of Test Borings 16 of 35
102	Log of Test Borings 17 of 35
103	Log of Test Borings 18 of 35
104	Log of Test Borings 19 of 35
105	Log of Test Borings 20 of 35
106	Log of Test Borings 21 of 35
107	Log of Test Borings 22 of 35
108	Log of Test Borings 23 of 35
109	Log of Test Borings 24 of 35
110	Log of Test Borings 25 of 35
111	Log of Test Borings 26 of 35
112	Log of Test Borings 27 of 35
113	Log of Test Borings 28 of 35
114	Log of Test Borings 29 of 35
115	Log of Test Borings 30 of 35
116	Log of Test Borings 31 of 35
117	Log of Test Borings 32 of 35
118	Log of Test Borings 33 of 35
119	Log of Test Borings 34 of 35
120	Log of Test Borings 35 of 35

INDEX TO STANDARD PLANS
DATED JULY, 1992

A10A	Abbreviations
A10B	Symbols
B0-1	Bridge Details
B0-13	Bridge Details

Standard Plan Sheet No.

Detail No.

DIST	COUNTY	ROUTE	POST MILES TOTAL PROJECT	SHEET NO.	TOTAL SHEETS
04	CC, SOL	80	12.8/14.1, 0.0/0.6	436	555

Robert L. Morrison Jr.
REGISTERED CIVIL ENGINEER

10-20-97
PLANS APPROVAL DATE

REGISTERED PROFESSIONAL ENGINEER
Robert L. Morrison Jr.
No. 43693
Exp. 03/31/97
CIVIL
STATE OF CALIFORNIA

CH2M HILL
2485 NATOMAS PARK DR, SUITE 600
SACRAMENTO, CALIFORNIA 95833

The State of California or its officers or agents shall not be responsible for the accuracy or completeness of electronic copies of this plan sheet.

2

QUANTITIES

SALVAGE AND REINSTALL STRUCTURAL ELEMENT (LOCATION B)	LUMP SUM	
TEMPORARY ACCESS OPENING	25	EA
PERMANENT ACCESS OPENING	9	EA
REMOVE STRUCTURAL STEEL	13,500	LB
BRIDGE REMOVAL (PORTION), LOCATION B	LUMP SUM	
RAISE BRIDGE, LOCATION B	LUMP SUM	
STRUCTURE EXCAVATION (BRIDGE)	282 CY ~~[illegible]~~	
~~STRUCTURE EXCAVATION (SUBD B)~~	~~[illegible]~~	
STRUCTURE EXCAVATION (TYPE DH)	2227 CY ~~[illegible]~~	
STRUCTURE EXCAVATION (TYPE H)	1570 CY ~~[illegible]~~	
STRUCTURE BACKFILL (BRIDGE)	1,400	CY
30" CAST-IN-DRILLED-HOLE CONCRETE PILING	14,470	LF
PRESTRESSING HIGH STRENGTH ROD (LOCATION B)	LUMP SUM	
PRESTRESSING CONCRETE EXTERNAL TENDON (LOCATION B)	LUMP SUM	
STRUCTURAL CONCRETE, BRIDGE FOOTING	4,250	CY
STRUCTURAL CONCRETE, BRIDGE	1,880	CY
DRILL AND BOND DOWEL	8,800	LF
DRILL AND BOND DOWEL (EPOXY CARTRIDGE)	44	EA
INSTALL STUD CONNECTORS	1,315	EA
CORE CONCRETE (4")	340	LF
CORE CONCRETE (7")	140	LF
CORE CONCRETE (2") & PRESSURE GROUT	1,450	LF
CORE CONCRETE (2 1/2") & PRESSURE GROUT	4,300	LF
CORE CONCRETE (4") & PRESSURE GROUT	1,250	LF
PTFE SPHERICAL BEARING	3	EA
BAR REINFORCING STEEL (BRIDGE)	2,860,000	LB
SHOTCRETE	425	CY
COLUMN CASING	580,000	LB
REMOVE RIVET (2 PLY)	392	EA
FURNISH STRUCTURAL STEEL (BRIDGE)	191,000	LB
ERECT STRUCTURAL STEEL (BRIDGE)	191,000	LB
CLEAN AND PAINT STRUCTURAL STEEL (LOCATION B)	LUMP SUM	
SPOT BLAST CLEAN AND PAINT UNDERCOAT	2,400	SQFT
WORK AREA MONITORING (LOCATION B)	LUMP SUM	
MISCELLANEOUS METAL (RESTRAINER - CABLE TYPE)	107,500	LB
MISCELLANEOUS METAL (RESTRAINER - ROD TYPE)	7,100	LB
MISCELLANEOUS METAL (BRIDGE)	13,900	LB
STRUCTURE EX (CONTAMINATED)	1171	CY

The Contractor shall verify all controlling field dimensions before ordering or fabricating any material.

AS BUILT
CORRECTION BY BRIAN BEAUDOIN
CONTRACT NO. 04-043934
DATE FEBRUARY, 2002
STRUCTURES REPRESENTATIVE

Vong Toan
DESIGN OVERSIGHT
April 24, 1997
SIGN OFF DATE

	BY	CHECKED
DESIGN	R. Morrison, Jr.	C. Harrington/ J. Quincy
DETAILS	G. Bazán	J. Quincy
QUANTITIES	D. Nguyen-Tan/ S. Ismail	J. Downing

PREPARED FOR THE STATE OF CALIFORNIA DEPARTMENT OF TRANSPORTATION

Lee Holloway
PROJECT ENGINEER

BRIDGE NO. 23-15 R
POST MILE CC-13.47

SEISMIC RETROFIT PROJECT NO. 611
CARQUINEZ BRIDGE - "A4E" LINE (APPROACH SPAN)
INDEX TO PLANS

a4e-inx.dlv

ORIGINAL SCALE IN INCHES FOR REDUCED PLANS 0 1 2 3

CU 04-268
EA 043931

DISREGARD PRINTS BEARING EARLIER REVISION DATES → 15-MAR-1997

REVISION DATES (PRELIMINARY STAGE ONLY) | SHEET 1 | OF 120

ClibPDF - www.fastio.com

DIST.	COUNTY	ROUTE	POST MILES TOTAL PROJECT	SHEET NO.	TOTAL SHEETS
04	CC/Sol	80	12.8/14.1, 0.0/0.6	401	555

R.W. Fox

REGISTERED GEOLOGIST
R.W. FOX
No. 78
Exp. 9-31-97
CERTIFIED ENGINEERING GEOLOGIST
STATE OF CALIFORNIA

10-20-97
PLANS APPROVAL DATE

THE STATE OF CALIFORNIA OR ITS OFFICERS OR AGENTS SHALL NOT BE RESPONSIBLE FOR THE ACCURACY OR COMPLETENESS OF ELECTRONIC COPIES OF THIS PLAN SHEET.

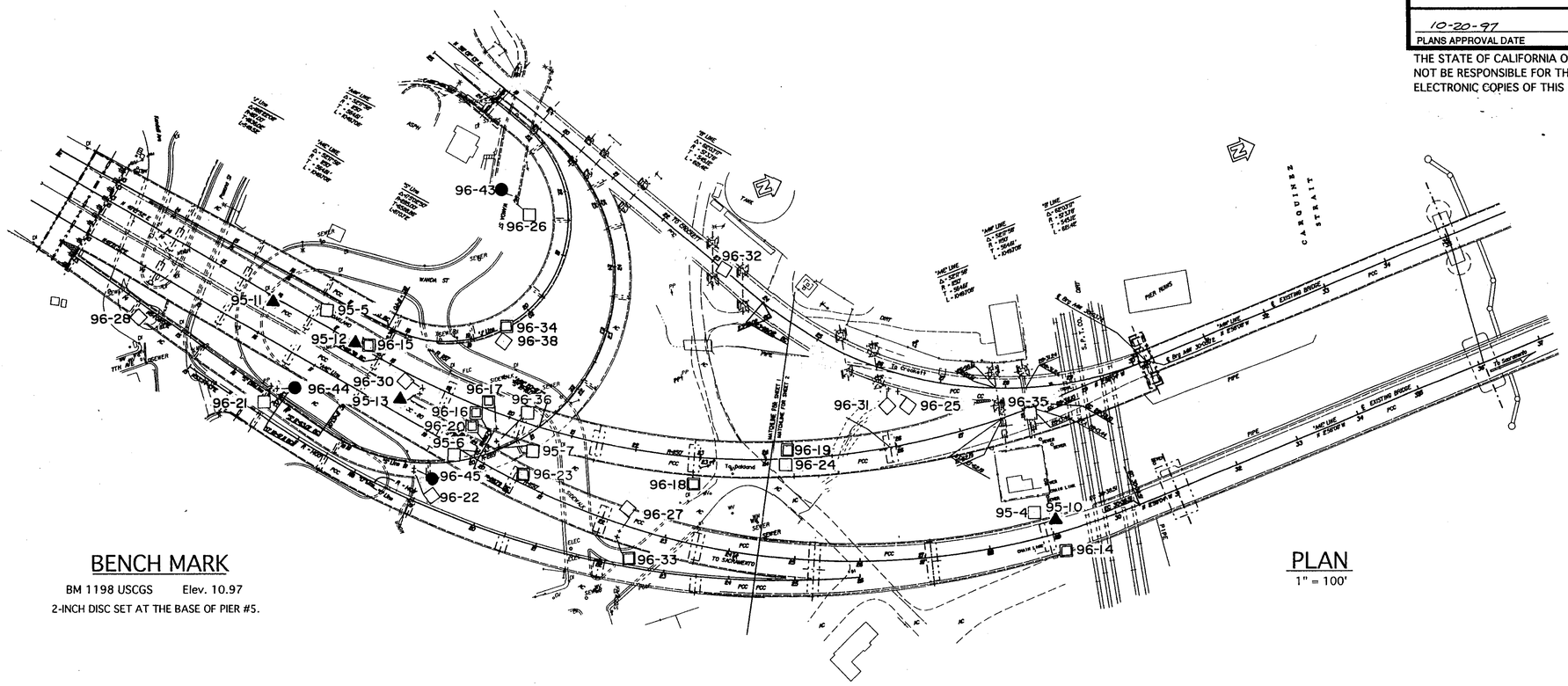

BENCH MARK

BM 1198 USCGS Elev. 10.97

2-INCH DISC SET AT THE BASE OF PIER #5.

PLAN

1" = 100'

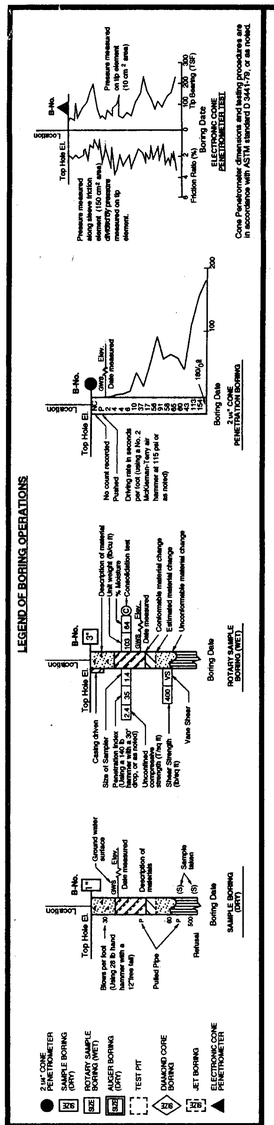

LEGEND OF EARTH MATERIALS

GRAVEL · CLAYEY SILT · SAND · PEAT WITH ORGANIC MATTER · SILT · FILL MATERIAL · CLAY · IGNEOUS ROCK · SANDY CLAY or CLAYEY SAND · SEDIMENTARY ROCK · SANDY SILT or SILTY SAND · METAMORPHIC · SILTY CLAY

CONSISTENCY CLASSIFICATION FOR SOILS

According to the Standard Penetration Test

Penetration Index (Blows / Ft)	Granular	Cohesive
0-4	Very Loose	Very Soft
5-9	Loose	Soft
10-19	Slightly compact	Stiff
20-34	Compact	Very Stiff
35-69	Dense	Hard
>70	Very Dense	Very Hard

NOTE: Classification of earth material as shown on this sheet is based upon field inspection and is not to be construed to imply mechanical analysis.

NO AS BUILT CHANGES
AS BUILT
CORRECTION BY BRIAN BEAUDOIN
CONTRACT NO. 04-043934
DATE FEBRUARY, 2002
STRUCTURES REPRESENTATIVE

EARTHQUAKE RETROFIT PROJECT NO. SR-611

ENGINEERING SERVICE CENTER	STRUCTURE FOUNDATIONS	FIELD INVESTIGATION BY:	State of CALIFORNIA DEPARTMENT OF TRANSPORTATION	DIVISION OF STRUCTURES STRUCTURE DESIGN	BRIDGE NO. 23-15R/L	CARQUINEZ BRIDGE - SOUTH APPROACH
DRAWN BY Ken Wahl 9-96		L. JENSEN			POST MILE CC-13.48 Sol-1.72	LOG OF TEST BORINGS 1 OF 35
CHECKED BY						

ORIGINAL SCALE IN INCHES FOR REDUCED PLANS → 0 1 2 3

CU: 04
EA: 043921/043931

DISREGARD PRINTS BEARING EARLIER REVISION DATES →

REVISION DATES (PRELIMINARY STAGE ONLY)

SHEET 36 OF 70

TL 6051 REV. 5/95

ClibPDF - www.fastio.com

DIST	COUNTY	ROUTE	POST MILES TOTAL PROJECT	SHEET NO.	TOTAL SHEETS
04	CC, SOL	80	12.8/14.1, 0.0/0.6	437	555

Robert L. Morrison Jr.
REGISTERED CIVIL ENGINEER

10-20-97
PLANS APPROVAL DATE

REGISTERED PROFESSIONAL ENGINEER — Robert L. Morrison Jr. — No. 43693 — Exp. 03/31/97 — CIVIL — STATE OF CALIFORNIA

CH2M HILL
2485 NATOMAS PARK DR, SUITE 600
SACRAMENTO, CALIFORNIA 95833

The State of California or its officers or agents shall not be responsible for the accuracy or completeness of electronic copies of this plan sheet.

GENERAL NOTES
LOAD FACTOR DESIGN

DESIGN: BRIDGE DESIGN SPECIFICATIONS
(1983 AASHTO with INTERIMS and REVISIONS by CALTRANS)
(1994 AASHTO with INTERIMS LRFD BRIDGE DESIGN SPECIFICATIONS)

LIVE LOADING: HS20-44 and alternative

SEISMIC LOADING: Site Specific ARS, see below:

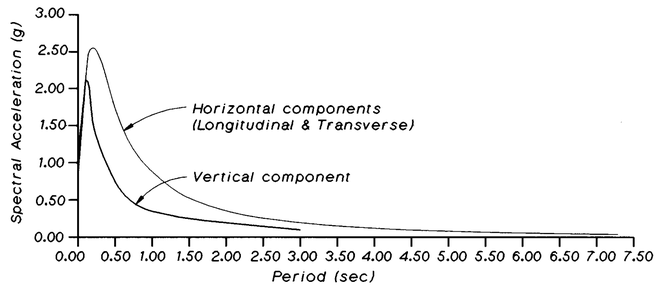

SITE SPECIFIC RESPONSE SPECTRA (SAFETY EARTHQUAKE EVENT)

REINFORCED CONCRETE
(Assumed for retrofit evaluation): Substructure
fy = 44,000 psi
f'c = 5,000 psi
n = 7
Transverse deck slabs (Light Weight Concrete)
fy = 44,000 psi
f'c = 3,500 psi
n = 12
(New): fy = 60,000 psi
f'c = 4,000 psi
n = 8

STRUCTURAL STEEL
(Assumed for retrofit evaluation): Floor Beams, Stringers, Cross Frames, Lateral Bracing
A7-46 fy = 33,000 psi
Girder and components A242, fy = 50,000 psi
3/4" and under, fy = 45,000 psi 3/4"-1 1/2", fy = 40,000 psi over 1 1/2".
(New): Crossframes, Bearings, misc metals, Column Casings A709 Grade 50 (AASHTO M270 Gr. 50) fy = 50,000 psi
Restrainer Anchorage Unit Pins A668 Class D (AASHTO M102) fy = 35,500 psi
Anchor Bolts - A449
HS Structural Bolts - A325N (Unless otherwise noted)

REINFORCING STEEL: Tie every intersection on mats made up of reinforced bars to hold them firmly at the required spacing.

PRESTRESSED CONCRETE: See "Prestressing Notes" on "Column Casing Details No. 2" and and "Column Post Tensioning Details" sheets

PILING: For pile type and tip elevations, see "Pile Details" sheet

UTILITIES: There are air lines, water lines, electrical conduits and wiring, and communication conduits and wiring plus access walkways and ladders installed on the bridge which are not depicted in the plans. The Contractor, may with the approval of the Engineer, relocate or temporarily remove utilities that interfere with the work. The Contractor is responsible for reinstalling all utilities removed and for demonstrating to the Engineer that the reinstalled utilities perform their function.

ABBREVIATIONS

Brg	Bearing
CJP	Complete Joint Penetration
FS	Far Side
LLNL	Lawrence Livermore National Laboratories
NS	Near Side
PG & E	Pacific Gas & Electric Company
SPRR & SPTC	Southern Pacific Railroad
WP	Working Point

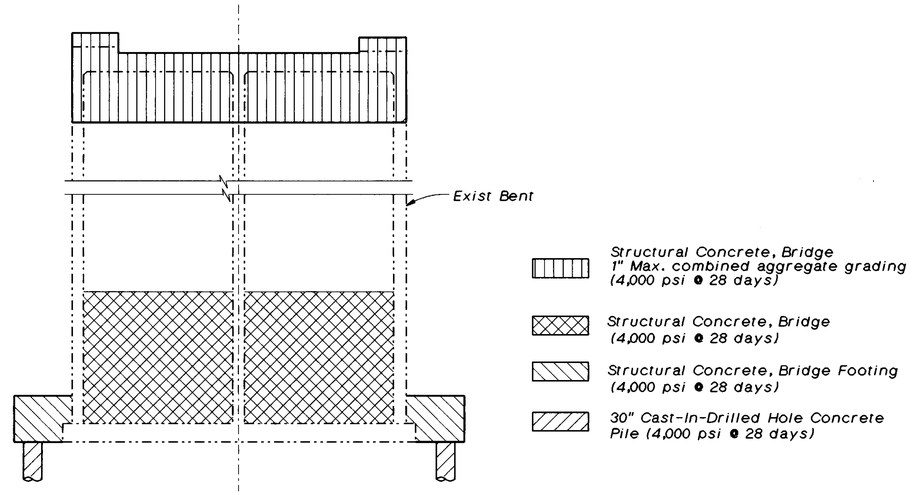

CONCRETE STRENGTH AND TYPE LIMITS DIAGRAM

No scale

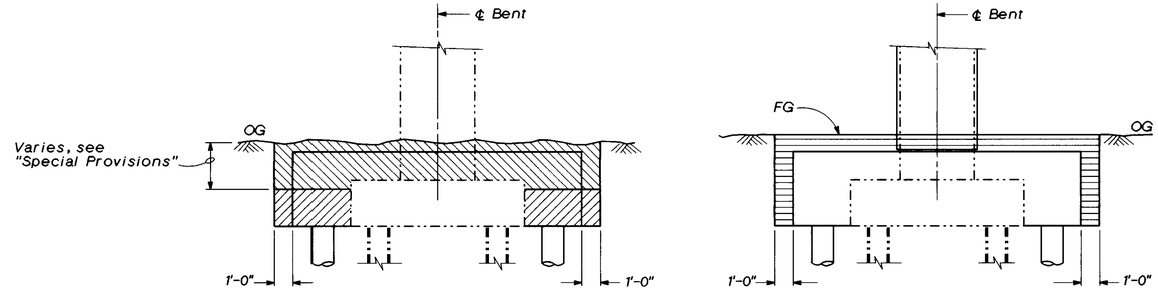

EXCAVATION — BACKFILL

LEGEND

- Indicates existing structure
- Indicates new construction
- Indicates Structure Excavation (Type H) at Bents "A3E" thru "A9E"
  Indicates Structure Excavation (Type DH) at Bents "A10E" thru "A13E"
- Indicates Structure Excavation (Contaminated) at Bents "A3E" thru "A9E"
  Indicates Structure Excavation (Type D - Contaminated) at Bents "A10E" thru "A13E"
- Indicates Structure Backfill (Bridge)

LIMITS OF PAYMENT FOR STRUCTURE EXCAVATION AND BACKFILL

No scale

AS-BUILT CHANGES

WHERE 'AS-BUILT' CHANGES ARE SHOWN WITH COMPUTERIZED LINE WORK AND TEXT, THE CHANGES ARE CLOUDED TO HIGHLIGHT THE CHANGES.
WHERE 'AS-BUILT' CHANGES ARE SHOWN WITH HAND-DONE LINE WORK AND TEXT, THE HAND LETTERING INDICATES THE 'AS BUILT' CHANGES WITH NO CLOUDING.

NO AS BUILT CHANGES
AS BUILT
CORRECTION BY BRIAN BEAUDOIN
CONTRACT NO. 04-043934
DATE FEBRUARY, 2002
STRUCTURES REPRESENTATIVE

The Contractor shall verify all controlling field dimensions before ordering or fabricating any material.

2 REVISED PER ADDENDUM NO. 2 DATED JANUARY 30, 1998

Vong Toan
DESIGN OVERSIGHT
December 23, 1997
SIGN OFF DATE

DESIGN	BY R. Morrison, Jr.	CHECKED C. Harrington/ J. Quincy	
DETAILS	BY G. Bazán	CHECKED J. Quincy	
QUANTITIES	BY D. Nguyen-Tan/ S. Ismail	CHECKED J. Downing	

PREPARED FOR THE STATE OF CALIFORNIA DEPARTMENT OF TRANSPORTATION

Lee Holloway
PROJECT ENGINEER

BRIDGE NO. 23-15 R
POST MILE CC-13.47

SEISMIC RETROFIT PROJECT NO. 611
CARQUINEZ BRIDGE - "A4E" LINE (APPROACH SPAN)
GENERAL NOTES

a4e-gen.dlv

ORIGINAL SCALE IN INCHES FOR REDUCED PLANS 0 1 2 3

CU 04-268
EA 043931

DISREGARD PRINTS BEARING EARLIER REVISION DATES → 22-DEC-1997

REVISION DATES (PRELIMINARY STAGE ONLY) | SHEET 2 | OF 120

ClibPDF - www.fastio.com

DIST.	COUNTY	ROUTE	POST MILES TOTAL PROJECT	SHEET NO.	TOTAL SHEETS
04	CC/Sol	80	12.8/14.1, 0.0/0.6	402	555

R.W. Fox

REGISTERED GEOLOGIST R.W. FOX No. 78 Exp. 8-31-97 CERTIFIED ENGINEERING GEOLOGIST STATE OF CALIFORNIA

10-20-97
PLANS APPROVAL DATE

THE STATE OF CALIFORNIA OR ITS OFFICERS OR AGENTS SHALL NOT BE RESPONSIBLE FOR THE ACCURACY OR COMPLETENESS OF ELECTRONIC COPIES OF THIS PLAN SHEET.

LEGEND OF BORING OPERATIONS

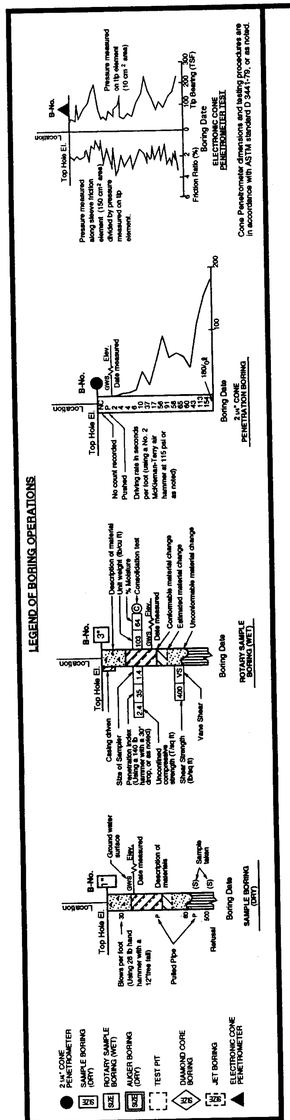

LEGEND OF EARTH MATERIALS

GRAVEL · SAND · SILT · CLAY · SANDY CLAY or CLAYEY SAND · SANDY SILT or SILTY SAND · SILTY CLAY · CLAYEY SILT · PEAT and/or ORGANIC MATTER · FILL MATERIAL · IGNEOUS ROCK · SEDIMENTARY ROCK · METAMORPHIC ROCK

CONSISTENCY CLASSIFICATION FOR SOILS

According to the Standard Penetration Test

Penetration Index (Blows / Ft)	Granular	Cohesive
0-4	Very Loose	Very Soft
5-9	Loose	Soft
10-19	Slightly compact	Very Stiff
20-34	Compact	Hard
35-69	Dense	Very Hard
>70	Very Dense	

NOTE: Classification of earth material as shown on this sheet is based upon field inspection and is not to be construed to imply mechanical analysis.

WEATHERING DESCRIPTORS

Descriptors		Diagnostic features					General characteristic (strength, excavation, etc.) §
		Chemical weathering-Discoloration and/or oxidation		Mechanical weathering-Grain boundary conditions (disaggregation) primarily for granitics and some coarse-grained sediments	Texture and solutioning		
Alphanumeric descriptor	Descriptive term	Body of rock	Fracture surfaces†		Texture	Solutioning	
W1	Fresh	No discoloration, not oxidized	No discoloration or oxidation	No separation, intact (tight)	No change	No solutioning	Hammer rings when crystalline rocks are struck. Almost always rock excavation except for naturally weak or weakly cemented rocks such as siltstones or shales.
W2	Slightly weathered to fresh*						
W3	Slightly weathered	Discoloration or oxidation is limited to surface of, or short distance from, fractures; some feldspar crystals are dull	Minor to complete discoloration or oxidation of most surfaces	No visible separation, intact (tight)	Preserved	Minor leaching of some soluble minerals may be noted	Hammer rings when crystalline rocks are struck. Body of rock not weakened. With few exceptions, such as siltstones or shales, classified as rock excavation.
W4	Moderately to slightly weathered*						
W5	Moderately weathered	Discoloration or oxidation extends from fractures usually throughout; Fe-Mg minerals are "rusty", feldspar crystals are "cloudy".	All fracture surfaces are discolored or oxidized	Partial separation of boundaries visible	Generally preserved	Soluble minerals may be mostly leached	Hammer rings when crystalline rocks are struck. Body of rock is slightly weakened. Depending on fracturing, usually is rock excavation except in naturally weak rocks such as siltstones or shales.
W6	Intensely to moderately weathered*						
W7	Intensely weathered	Discoloration or oxidation throughout; all feldspars and Fe-Mg minerals are altered to clay to some extent; or chemical alteration produces in situ disaggregation, see grain boundary conditions	All fracture surfaces are discolored or oxidized, surfaces friable	Partial separation, rock is friable; in semiarid conditions granitics are disaggregated	Texture altered by chemical disintegration (hydration, argillation)	Leaching of soluble minerals may be complete	Dull sound when struck with hammer, usually can be broken with moderate to heavy manual pressure or by light hammer blow without reference to planes of weakness such as incipient or hairline fractures, or veinlets. Rock is significantly weakened. Usually common excavation.
W8	Very intensely weathered						
W9	Decomposed	Discolored or oxidized throughout, but resistant minerals such as quartz may be unaltered; all feldspars and Fe-Mg minerals are completely altered to clay		Complete separation of grain boundaries (disaggregated)	Resembles a soil, partial or complete remnant rock structure may be preserved; leaching of soluble minerals usually complete		Can be granulated by hand. Always common excavation. Resistant minerals such as quartz may be present as "stringers" or "dikes".

Note: This chart and its horizontal categories are more readily applied to rocks with feldspars and mafic minerals. Weathering in various sedimentary rocks, particularly limestones and poorly indurated sediments, will not always fit the categories established. This chart and weathering categories may have to be modified for particular site conditions or alteration such as hydrothermal effects; however, the basic framework and similar descriptors are to be used.

* Combination descriptors are permissible where equal distribution of both weathering characteristics are present over significant intervals or where characteristics present are "in between" the diagnostic feature. However, dual descriptors should not be used where significant, identifiable zones can be delineated. When given as a range, only two adjacent terms may be combined (i.e., decomposed to lightly weathered or moderately weathered to fresh) are not acceptable.

† Does not include directional weathering along shears or faults and their associated features. For example, a shear zone that carried weathering to great depths into a fresh rock mass would not require the rock mass to be classified as weathered.

§ These are generalizations and should not be used as diagnostic features for weathering or excavation classification. These characteristics vary to a large extent based on naturally weak materials or cementation and type of excavation.

ROCK HARDNESS/ STRENGTH DESCRIPTORS

Alphanumeric descriptor	Descriptor	Criteria
H1	Extremely hard	Core, fragment, or exposure cannot be scratched with knife or sharp pick; can only be chipped with repeated heavy hammer blows.
H2	Very hard	Cannot be scratched with knife or sharp pick. Core of fragment breaks with repeated heavy hammer blows.
H3	Hard	Can be scratched with knife or sharp pick with difficulty (heavy pressure). Heavy hammer blow required to break specimen.
H4	Moderately hard	Can be scratched with knife or sharp pick with light or moderate pressure. Core or fragment breaks with moderate hammer blow.
H5	Moderately soft	Can be grooved 1/16 inch (2 mm) deep by knife or sharp pick with moderate or heavy pressure. Core or fragment breaks with light hammer blow or heavy manual pressure.
H6	Soft	Can be grooved or gouged easily by knife or sharp pick with light pressure, can be scratched with fingernail. Breaks with light to moderate manual pressure.
H7	Very soft	Can be readily indented, grooved or gouged with fingernail, or carved with a knife. Breaks with light manual pressure.

Any bedrock unit softer than H7, very soft, is to be described using USBR 5000 consistency descriptors.

Note: Although "sharp pick" is included in these definitions, descriptions of ability to be scratched, grooved of gouged by a knife is the preferred criteria.

FRACTURE DENSITY

FRACTURE DENSITY - Based on the spacing of all natural fractures in an exposure or core recovery lengths in boreholes; excludes mechanical breaks, shears, and shear zones; however, shear-distributed zones (fracturing outside the shear) are included. Descriptors for fracture density apply to all rock exposures such as tunnel walls, dozer trenches, outcrops, or foundation cut slopes and inverts, as well as boreholes. Descriptive criteria presented below are based on borehole cores where lengths are measured along the core axis, for other exposures the criteria is distance measured between fractures (size of blocks).

UNFRACTURED (FD0) : No fractures.

VERY SLIGHTLY FRACTURED (FD1) : Core recovered mostly in lengths greater than 3 feet (1 m).

SLIGHTLY TO VERY SLIGHTLY FRACTURED (FD2)*

SLIGHTLY FRACTURED (FD3) : Core recovered mostly in lengths from 1 to 3 feet (300 to 1000 mm) with few scattered lengths less than 1 foot (300 mm) or greater than 3 feet (1000 mm).

MODERATELY TO SLIGHTLY FRACTURED (FD4)*

MODERATELY FRACTURED (FD5) : Core recovered mostly in 0.3 to 1.0 foot (100 to 300 mm) lengths with most lengths about 0.6 foot (200 mm)

INTENSELY TO MODERATELY FRACTURED (FD6)*

INTENSELY FRACTURED (FD7) : Lengths average from 0.1 to 0.3 foot (30 to 100 mm) with scattered fragmented intervals. Core recovered mostly in lengths less than 0.3 foot (100 mm).

VERY INTENSELY TO INTENSELY FRACTURED (FD8)*

VERY INTENSELY FRACTURED (FD9) : Core recovered mostly as chips and fragments with a few scattered short core lengths.

* Combinations of fracture densities (e.g. Very Intensely to Intensely Fractured or Moderately to Slightly Fractured) are used where equal distribution of both fracture density characteristics are presently over a significant interval or exposure, or where characteristics are "in between" the descriptor definitions.

BEDDING, FOLIATION, OR FLOW TEXTURE DESCRIPTORS

Descriptors	Thickness / Spacing
Massive	Greater than 10 ft (3 m)
Very thickly (bedded, foliated, or banded)	3 to 10 ft (1 to 3 m)
Thickly	1 to 3 ft (300 mm to 1 m)
Moderately	0.3 to 1 ft (100 to 300 mm)
Thinly	0.1 to 0.3 ft (30 to 100 mm)
Very thinly	0.03 (3/8 in) to 0.1 ft (10 to 30 mm)
Laminated (intensely foliated or banded)	Less than 0.03 ft (3/8 in) (<10 mm)

RQD LOGGING

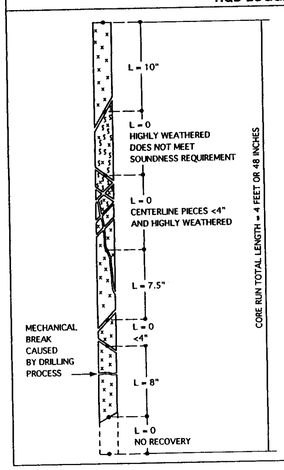

$$RQD = \frac{\sum \text{LENGTH OF SOUND CORE PIECES} > 4 \text{ INCHES (100 mm)}}{\text{TOTAL CORE RUN LENGTH}}$$

$$RQD = \frac{10 + 7.5 + 8}{48} \times 100\%$$

RQD = 53% (FAIR)

RQD (ROCK QUALITY DESIGNATION)	DESCRIPTION OF ROCK QUALITY
0 - 25%	VERY POOR
25 - 50%	POOR
50 - 75%	FAIR
75 - 90%	GOOD
90 - 100%	EXCELLENT

after Deere & Deere, 1989

NOTES:

1. All elevations shown refer to Mean Sea Level (M.S.L.) Datum = 0.0. [illegible]
2. Rock Quality Designation (RQD), Weathering, Hardness, Fracture Density and Bedding Thickness descriptors, as shown on this plate, were used to describe all rock core from borings drilled in 1995 and 1996. Descriptors were determined in the field in accordance with the United States Department of the Interior, Bureau of Reclamation, Engineering Geology, Field Manual.
3. Unconfined compressive strength (qu) determined in field by "Pocket Penetrometer." Units shown are in tons per square foot (TSF).
4. Undrained shear strength (Su) determined in field by "Torvane." Units shown are in tons per square foot (TSF).
5. Penetration Index recorded as "P" when sampler sank under weight of rods. No blow counts recorded.
6. E = Blow count for one foot of penetration extrapolated from blow count for less than one foot of penetration (typically due to a change in material or hard driving).
7. REC = % Rock Recovery.
8. RQD = % Rock Quality Designation.
9. Shear wave velocity data/reports for borings 95-4, 95-5, 95-7, 96-28, 96-31, 96-32, 96-35, and 96-38 are available for review through the Engineering Service Center, Office of Structural Foundations, Geotechnical Support Branch, at the Transportation Laboratory, 5900 Folsom Blvd., Sacramento, CA 95819.
10. A strong motion accelerometer was installed at the bottom of borehole 95-4. This device is being monitored by the Earth Sciences Division of Lawrence Livermore National Laboratory, University of California, Livermore, P.O. Box 808, L-808, Livermore, CA 94551.
11. Additional Laboratory Soil/Rock Test Data is available through the Engineering Service Center, Office of Structural Foundations, Structure Foundations Branch, at 5900 Folsom Blvd. Sacramento, CA 95819.
12. Ground water surface elevations encountered in the 1995/96 foundation investigation are indicated on the Log of Test Boring Sheets and reflect the fluid level in the borehole on the specified date. Ground water surface elevations are subject to seasonal fluctuations and may occur at higher or lower elevations depending on the conditions at any particular time. As a practical consideration, ground water may be encountered frequently during pile construction. For this reason, whenever construction or deep excavation is planned close to previous ground water elevations, the ground water elevations should be determined from observation wells or other means, and provisions should be made for ground water management.

NO AS BUILT CHANGES
AS BUILT
CORRECTION BY BRIAN BEAUDOIN
CONTRACT NO. 04-043934
DATE FEBRUARY, 2002
STRUCTURES REPRESENTATIVE

GENERAL NOTES

EARTHQUAKE RETROFIT - PROJECT No. SR-611

CARQUINEZ BRIDGE - SOUTH APPROACH

LOG OF TEST BORINGS 2 OF 35

ENGINEERING SERVICE CENTER	STRUCTURE FOUNDATIONS
DRAWN BY Irma Guerra 8/96	
CHECKED BY	

FIELD INVESTIGATION BY:

State of CALIFORNIA DEPARTMENT OF TRANSPORTATION

DIVISION OF STRUCTURES
STRUCTURE DESIGN

BRIDGE NO. 23-15 R/L
POST MILE CC-13.48 Sol-1.72

CU: 04
EA: 043921/043931

DISREGARD PRINTS BEARING EARLIER REVISION DATES

REVISION DATES (PRELIMINARY STAGE ONLY)

SHEET 37 OF 70

ORIGINAL SCALE IN INCHES FOR REDUCED PLANS → 0 1 2 3

TL 6051 REV. 5/95

ClibPDF - www.fastio.com

DIST.	COUNTY	ROUTE	POST MILES TOTAL PROJECT	SHEET NO.	TOTAL SHEETS
04	CC/Sol	80	12.8/14.1, 0.0/0.6	403	555

R. W. Fox

REGISTERED GEOLOGIST R. W. FOX No. 78 Exp. 8-31-97 CERTIFIED ENGINEERING GEOLOGIST STATE OF CALIFORNIA

10-20-97
PLANS APPROVAL DATE

THE STATE OF CALIFORNIA OR ITS OFFICERS OR AGENTS SHALL NOT BE RESPONSIBLE FOR THE ACCURACY OR COMPLETENESS OF ELECTRONIC COPIES OF THIS PLAN SHEET.

NO AS BUILT CHANGES
AS BUILT
CORRECTION BY BRIAN BEAUDOIN
CONTRACT NO. 04-043934
DATE FEBRUARY, 2002
STRUCTURES REPRESENTATIVE

FOR PLAN VIEW, SEE "LOG OF TEST BORINGS, SHEET 1 OF 35"

NOTE: FOR FIELD LOGGING NOTATIONS, SEE "LOG OF TEST BORINGS, SHEET 2 OF 35"

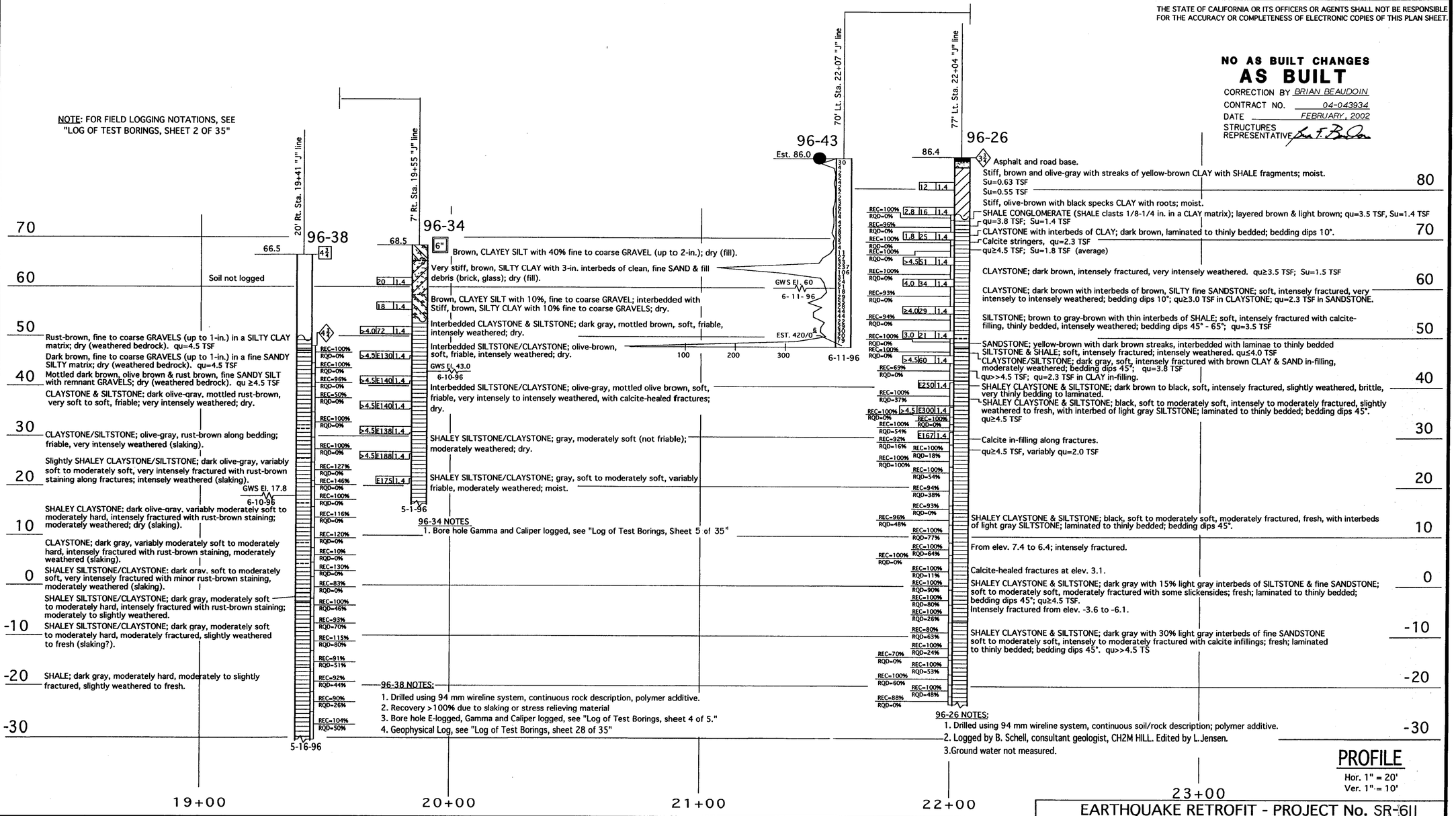

PROFILE
Hor. 1" = 20'
Ver. 1" = 10'

LEGEND OF BORING OPERATIONS

LEGEND OF EARTH MATERIALS: GRAVEL, SAND, SILT, CLAY, SANDY CLAY or CLAYEY SAND, SANDY SILT or SILTY SAND, SILTY CLAY, CLAYEY SILT, PEAT and/or ORGANIC MATTER, FILL MATERIAL, IGNEOUS ROCK, SEDIMENTARY ROCK, METAMORPHIC

CONSISTENCY CLASSIFICATION FOR SOILS
According to the Standard Penetration Test

Penetration Index (Blows / Ft)	Granular	Cohesive
0-4	Very Loose	Very Soft
5-9	Loose	Soft
10-19	Slightly compact	Stiff
20-34	Compact	Very Stiff
35-69	Dense	Hard
>70	Very Dense	Very Hard

NOTE: Classification of earth material as shown on this sheet is based upon field inspection and is not to be construed to imply mechanical analysis.

ENGINEERING SERVICE CENTER	STRUCTURE FOUNDATIONS
DRAWN BY Irma Samarra 9/96	
CHECKED BY	

FIELD INVESTIGATION BY: L. JENSEN & H. VALENCIA

State of CALIFORNIA DEPARTMENT OF TRANSPORTATION

DIVISION OF STRUCTURES STRUCTURE DESIGN

BRIDGE NO. 23-15 R/L
POST MILE CC-13.48 Sol-1.72

EARTHQUAKE RETROFIT - PROJECT No. SR-611
CARQUINEZ BRIDGE SOUTH APPROACH
LOG OF TEST BORINGS 3 OF 35

ORIGINAL SCALE IN INCHES FOR REDUCED PLANS → 0 1 2 3

CU: 04
EA: 043921/043931

DISREGARD PRINTS BEARING EARLIER REVISION DATES →
REVISION DATES (PRELIMINARY STAGE ONLY)
SHEET 38 OF 70

TL 6051 REV. 5/95

ClibPDF - www.fastio.com

DIST	COUNTY	ROUTE	POST MILES TOTAL PROJECT	SHEET NO.	TOTAL SHEETS
04	CC, SOL	80	12.8/14.1, 0.0/0.6	438	555

Robert L. Morrison Jr
REGISTERED CIVIL ENGINEER

10-20-97
PLANS APPROVAL DATE

REGISTERED PROFESSIONAL ENGINEER Robert L. Morrison Jr No. 43693 Exp. 03/31/97 CIVIL STATE OF CALIFORNIA

CH2M HILL
2485 NATOMAS PARK DR, SUITE 600
SACRAMENTO, CALIFORNIA 95833

The State of California or its officers or agents shall not be responsible for the accuracy or completeness of electronic copies of this plan sheet.

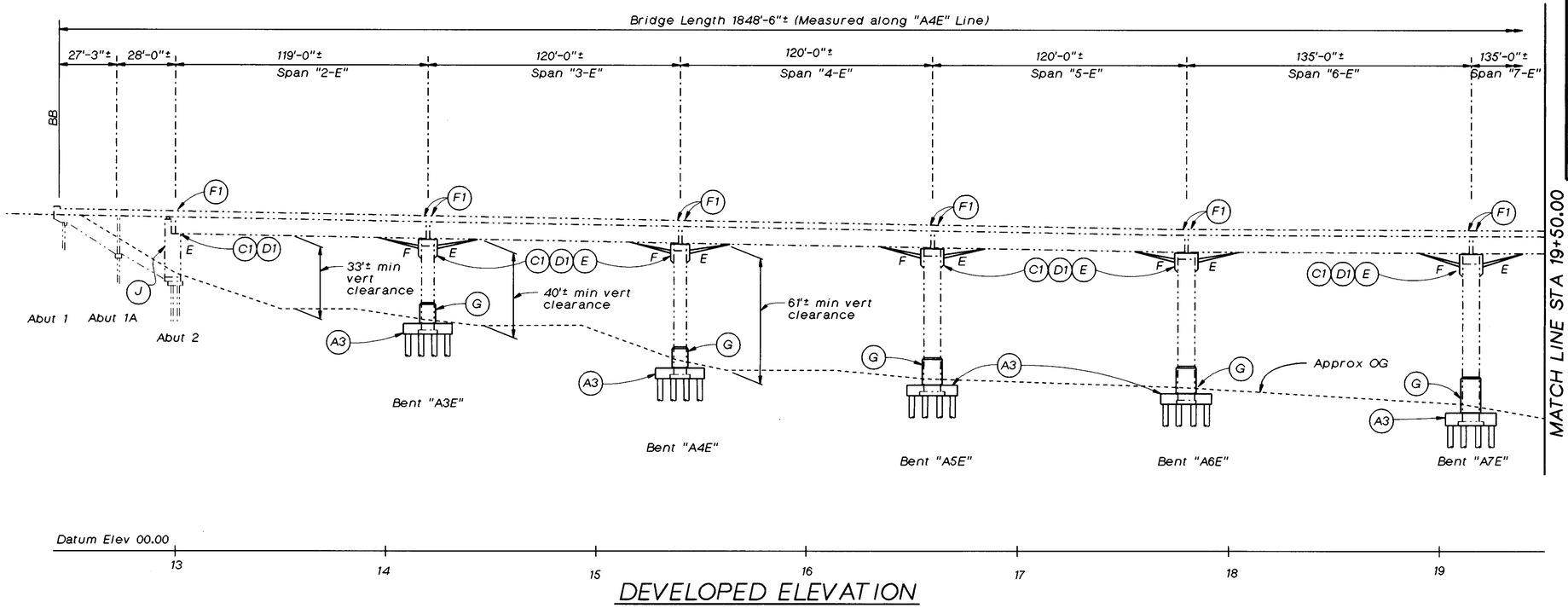

DEVELOPED ELEVATION

1"=30'

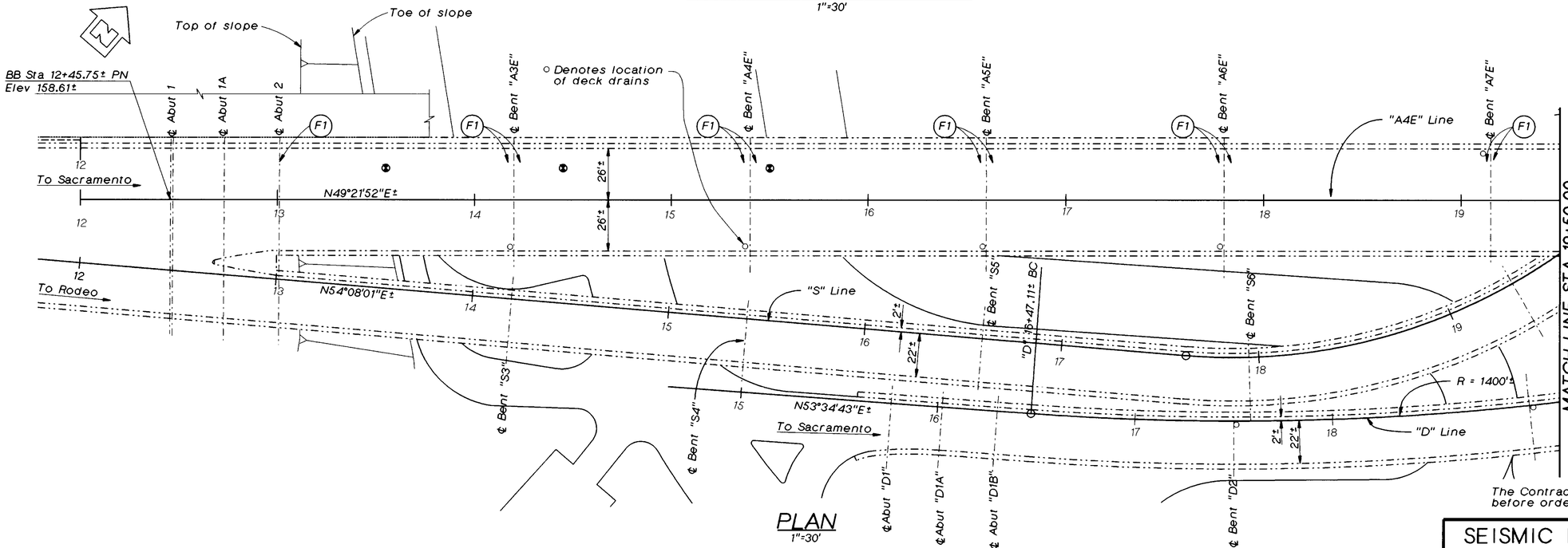

PLAN

1"=30'

RETROFIT LEGEND

- (A3) Pile footing retrofit
- (B) Column post tensioning retrofit
- (C1) End cross frame retrofit
- (D1) Bearing replacement retrofit
- (E) Longitudinal restrainer retrofit
- (F1) Deck to floor beam connection
- (G) Steel column casing retrofit
- (J) Abutment retrofit

LEGEND

- F — Indicates fixed bearing
- E — Indicates expansion bearing
- Indicates existing structure
- Indicates new structure
- Indicates direction of travel
- Indicates point of minimum vertical clearance

Note:
For retrofit of "D" structure, see "Carquinez Bridge - D line" sheets.

NO AS BUILT CHANGES
AS BUILT
CORRECTION BY BRIAN BEAUDOIN
CONTRACT NO. 04-043934
DATE FEBRUARY, 2002
STRUCTURES REPRESENTATIVE

The Contractor shall verify all controlling field dimensions before ordering or fabricating any material.

SEISMIC RETROFIT PROJECT NO. 611

CARQUINEZ BRIDGE - "A4E" LINE (APPROACH SPAN)

STRUCTURE PLAN NO. 1

Vong Toan
DESIGN OVERSIGHT
April 24, 1997
SIGN OFF DATE

	BY	CHECKED
DESIGN	R. Morrison, Jr.	C. Harrington/ J. Quincy
DETAILS	D. Haecker	J. Quincy
QUANTITIES	D. Nguyen-Tan/ S. Ismail	J. Downing

PREPARED FOR THE STATE OF CALIFORNIA DEPARTMENT OF TRANSPORTATION

Lee Holloway
PROJECT ENGINEER

BRIDGE NO. 23-15 R
POST MILE CC-13.47

a4e-sp1.dlv

ORIGINAL SCALE IN INCHES FOR REDUCED PLANS 0 1 2 3

CU 04-268
EA 043931

DISREGARD PRINTS BEARING EARLIER REVISION DATES → 22-APR-1997

REVISION DATES (PRELIMINARY STAGE ONLY) | SHEET 3 | OF 120

ClibPDF - www.fastio.com

DIST.	COUNTY	ROUTE	POST MILES TOTAL PROJECT	SHEET NO.	TOTAL SHEETS
04	CC/Sol	80	12.8/14.1, 0.0/0.6	404	555

The information represented on this drawing title "Carquinez Bridge South Approach" was not the result of any work developed, performed or completed by this Department (Caltrans). All such activity appears to be by those parties presented on this drawing who would bear all such responsibility. This drawing is available and presented only for the convenience of any bidder, contractor or other interested party. It should be expressly understood that Caltrans assumes no responsibility whatsoever in respect to the sufficiency or accuracy, completeness, interpretation set forth therein or any other aspect of the information shown on or represented by this drawing.

Signed By: [illegible] Date: 10-1-96

NO AS BUILT CHANGES
AS BUILT
CORRECTION BY BRIAN BEAUDOIN
CONTRACT NO. 04-043934
DATE FEBRUARY, 2002
STRUCTURES REPRESENTATIVE [illegible]
10-20-97
PLANS APPROVAL DATE

GEO-HYDRO-DATA
INCORPORATED

NATURAL GAMMA LOG

OTHER SERVICES: INVOICE 9950

COMPANY : CAL TRANS
WELL : B 38 NEAR PIER J 7 **96-38**
LOCATION/FIELD : CARQUBNEZ BRIDGE
COUNTY : CONTRA COSTA
STATE : CALIFORNIA
SECTION : . TOWNSHIP : . RANGE : .

DATE : 05/16/96 PERMANENT DATUM : GL ELEVATIONS
DEPTH DRILLER : 98.6 ELEV. PERM. DATUM: KB :
LOG BOTTOM : 97.20 LOG MEASURED FROM: GL DF :
LOG TOP : 0.40 DRL MEASURED FROM: GL GL :

CASING DRILLER : . LOGGING UNIT : 7
CASING TYPE : . FIELD OFFICE : TEHACHAPI
CASING THICKNESS: . RECORDED BY : K. KEMP

BIT SIZE : 4.75 BOREHOLE FLUID : POLY FILE : ORIGINAL
MAGNETIC DECL. : . RM : . TYPE : 9041A
MATRIX DENSITY : . RM TEMPERATURE : . LOG : 1
FLUID DENSITY : . MATRIX DELTA T : . PLOT : 1 57
NEUTRON MATRIX : FLUID DELTA T : . THRESH: 3000
REMARKS :
DRILED BY: CAL TRANS
LOG 5/16/96 OPEN HOLE 9:00 AM
ALL SERVICES PROVIDED SUBJECT TO STANDARD TERMS AND CONDITIONS

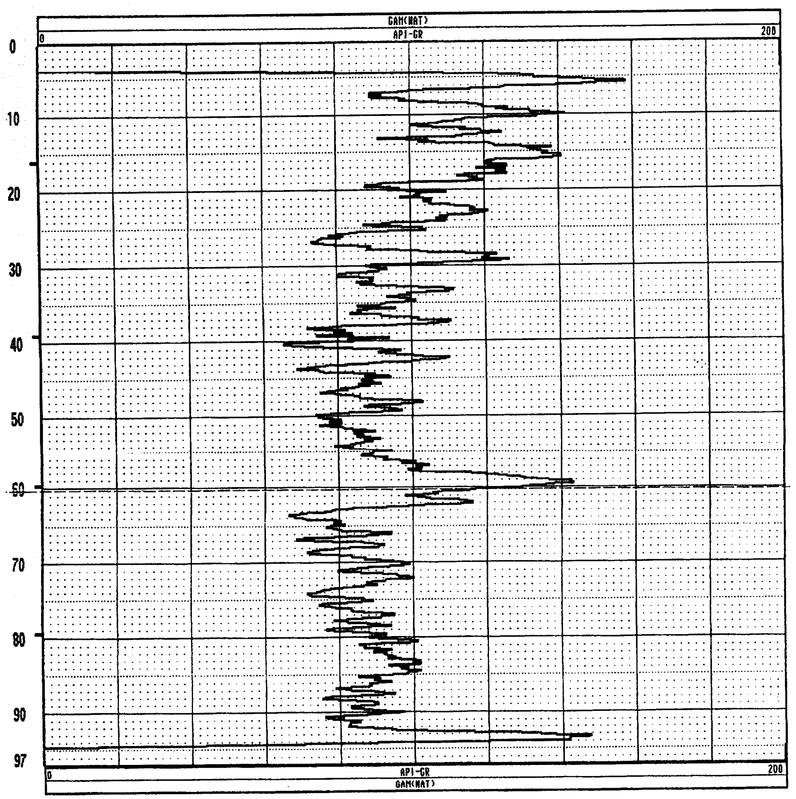

GEO-HYDRO-DATA
INCORPORATED

CALIPER LOG

OTHER SERVICES: INVOICE 9950

COMPANY : CAL TRANS
WELL : B 38 NEAR PIER J 7 **96-38**
LOCATION/FIELD : CARQUBNEZ BRIDGE
COUNTY : CONTRA COSTA
STATE : CALIFORNIA
SECTION : . TOWNSHIP : . RANGE : .

DATE : 05/16/96 PERMANENT DATUM : GL ELEVATIONS
DEPTH DRILLER : 98.6 ELEV. PERM. DATUM: KB :
LOG BOTTOM : 96.80 LOG MEASURED FROM: GL DF :
LOG TOP : 6.20 DRL MEASURED FROM: GL GL :

CASING DRILLER : . LOGGING UNIT : 7
CASING TYPE : . FIELD OFFICE : TEHACHAPI
CASING THICKNESS: . RECORDED BY : K. KEMP

BIT SIZE : 4.75 BOREHOLE FLUID : POLY FILE : PROCESSED
MAGNETIC DECL. : . RM : . TYPE : 9064A1
MATRIX DENSITY : . RM TEMPERATURE : . LOG : 2
FLUID DENSITY : . MATRIX DELTA T : . PLOT : 1 60
NEUTRON MATRIX : FLUID DELTA T : . THRESH: 3000
REMARKS :
DRILED BY: CAL TRANS
LOG 5/16/96 OPEN HOLE 9:00 AM
ALL SERVICES PROVIDED SUBJECT TO STANDARD TERMS AND CONDITIONS

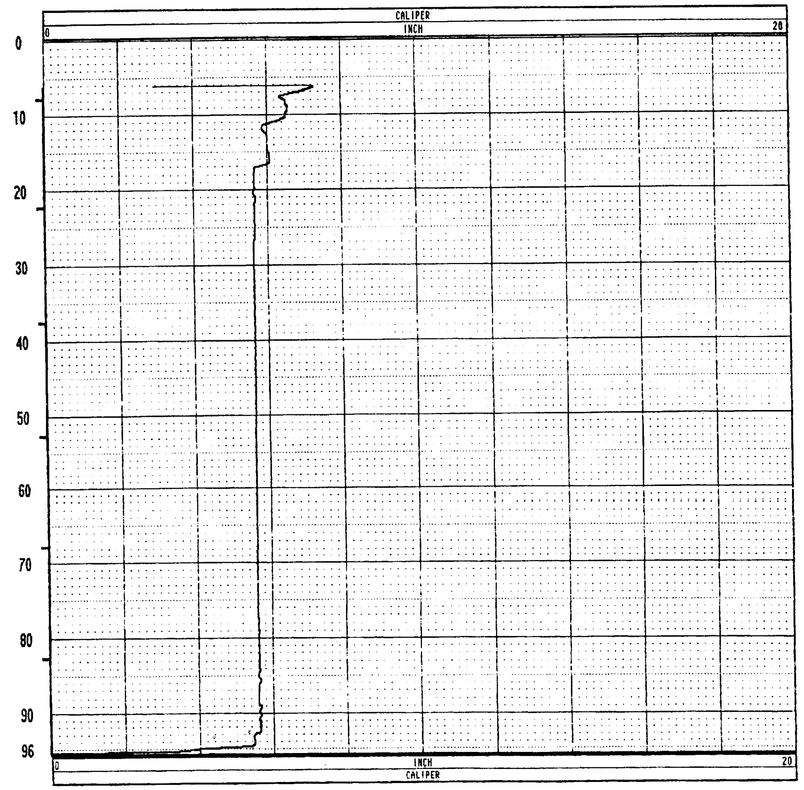

GEO-HYDRO-DATA
INCORPORATED

ELECTRIC WELL LOG

OTHER SERVICES: INVOICE 9950

COMPANY : CAL TRANS
WELL : B 38 NEAR PIER J 7 **96-38**
LOCATION/FIELD : CARQUBNEZ BRIDGE
COUNTY : CONTRA COSTA
STATE : CALIFORNIA
SECTION : . TOWNSHIP : . RANGE : .

DATE : 05/16/96 PERMANENT DATUM : GL ELEVATIONS
DEPTH DRILLER : 98.6 ELEV. PERM. DATUM: KB :
LOG BOTTOM : 97.20 LOG MEASURED FROM: GL DF :
LOG TOP : 0.40 DRL MEASURED FROM: GL GL :

CASING DRILLER : . LOGGING UNIT : 7
CASING TYPE : . FIELD OFFICE : TEHACHAPI
CASING THICKNESS: . RECORDED BY : K. KEMP

BIT SIZE : 4.75 BOREHOLE FLUID : POLY FILE : ORIGINAL
MAGNETIC DECL. : . RM : . TYPE : 9041A
MATRIX DENSITY : . RM TEMPERATURE : . LOG : 1
FLUID DENSITY : . MATRIX DELTA T : . PLOT : 1 0
NEUTRON MATRIX : FLUID DELTA T : . THRESH: 3000
REMARKS :
DRILED BY: CAL TRANS
LOG 5/16/96 OPEN HOLE 9:00 AM
ALL SERVICES PROVIDED SUBJECT TO STANDARD TERMS AND CONDITIONS

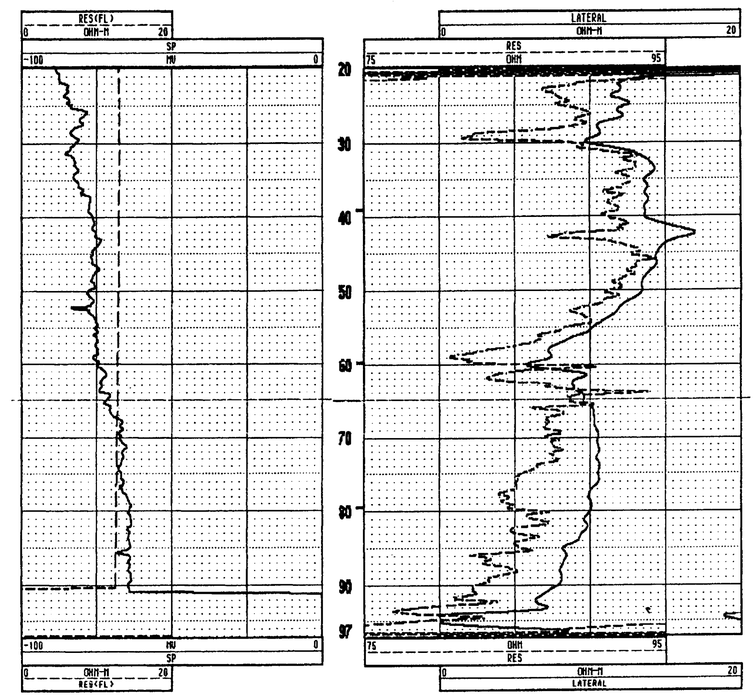

EARTHQUAKE RETROFIT - PROJECT No. SR-611

ENGINEERING SERVICE CENTER	STRUCTURE FOUNDATIONS	FIELD INVESTIGATION BY:	State of CALIFORNIA DEPARTMENT OF TRANSPORTATION	DIVISION OF STRUCTURES STRUCTURE DESIGN	BRIDGE NO. 23-15 R/L	CARQUINEZ BRIDGE - SOUTH APPROACH
PREPARED BY	Irma Gamarra 8/96				POST MILE CC-13.48 Sol-1.72	**LOG OF TEST BORINGS** 4 OF 35
CHECKED BY						

ORIGINAL SCALE IN INCHES FOR REDUCED PLANS → 0 1 2 3

CU: 04
EA: 043921/043931

DISREGARD PRINTS BEARING EARLIER REVISION DATES →

REVISION DATES (PRELIMINARY STAGE ONLY) | SHEET 39 | OF 70

TL 6051 REV. 7/96

ClibPDF - www.fastio.com

DIST	COUNTY	ROUTE	POST MILES TOTAL PROJECT	SHEET NO.	TOTAL SHEETS
04	CC, SOL	80	12.8/14.1, 0.0/0.6	439	555

Robert L. Morrison Jr.
REGISTERED CIVIL ENGINEER

10-20-97
PLANS APPROVAL DATE

REGISTERED PROFESSIONAL ENGINEER — Robert L. Morrison Jr. — No. 43693 — Exp. 03/31/97 — CIVIL — STATE OF CALIFORNIA

CH2M HILL
2485 NATOMAS PARK DR, SUITE 600
SACRAMENTO, CALIFORNIA 95833

The State of California or its officers or agents shall not be responsible for the accuracy or completeness of electronic copies of this plan sheet.

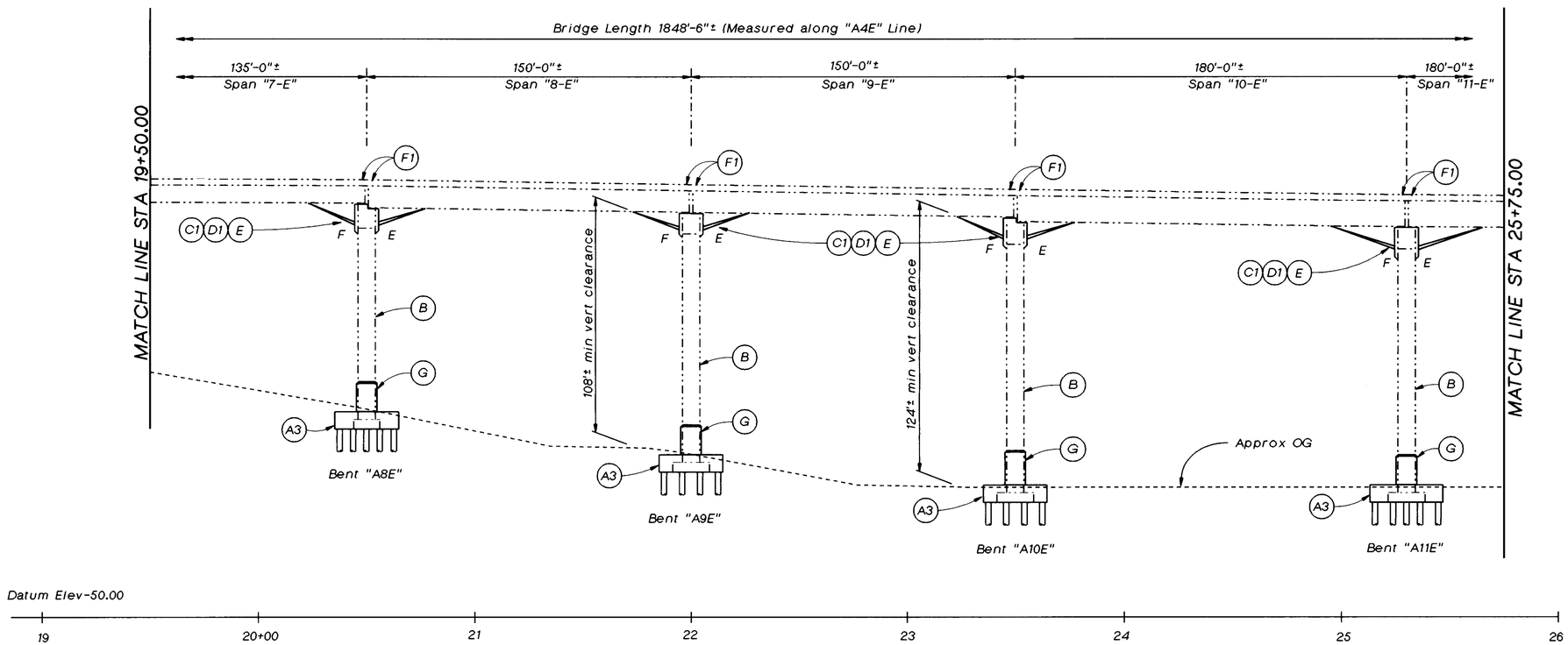

DEVELOPED ELEVATION

1"=30'

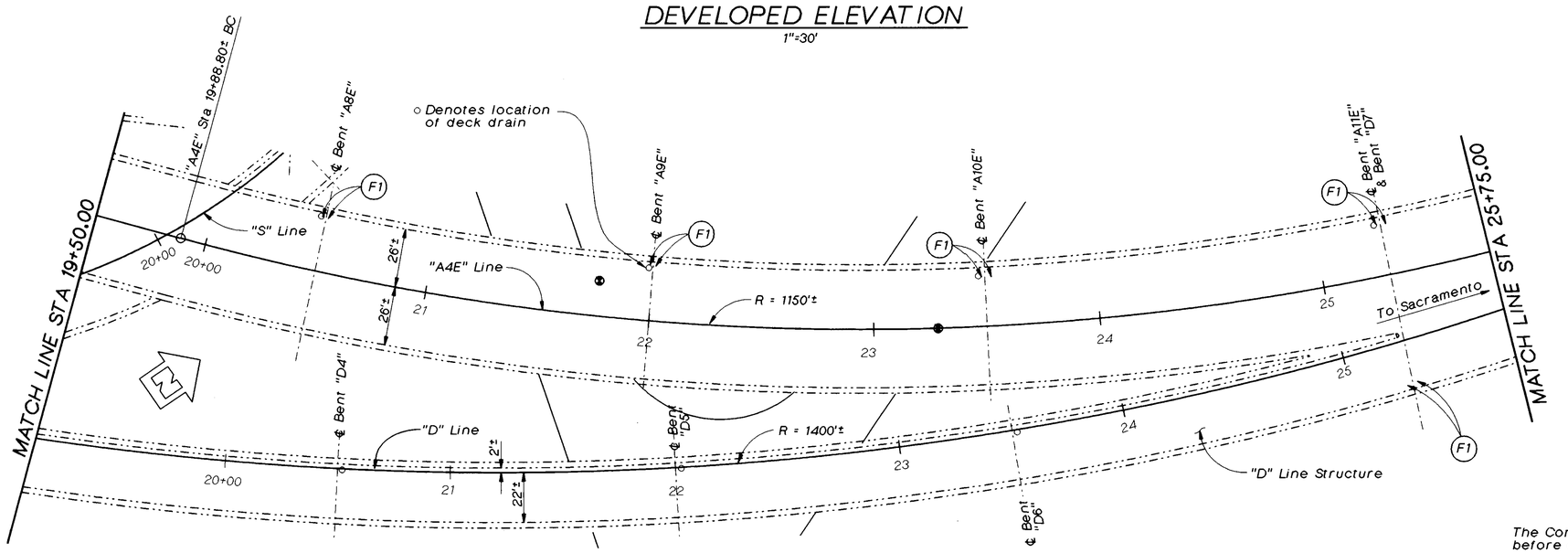

PLAN

1"=30'

RETROFIT LEGEND

- (A3) Pile footing retrofit
- (B) Column post tensioning retrofit
- (C1) End cross frame retrofit
- (D1) Bearing replacement retrofit
- (E) Longitudinal restrainer retrofit
- (F1) Deck to floor beam connection
- (G) Steel column casing retrofit

LEGEND

- F — Indicates fixed bearing
- E — Indicates expansion bearing
- Indicates existing structure
- Indicates new structure
- Indicates direction of travel
- Indicates point of minimum vertical clearance

Note: For retrofit of "D" structure, see "Carquinez Bridge - D line" sheets.

NO AS BUILT CHANGES
AS BUILT
CORRECTION BY BRIAN BEAUDOIN
CONTRACT NO. 04-043934
DATE FEBRUARY, 2002
STRUCTURES REPRESENTATIVE

The Contractor shall verify all controlling field dimensions before ordering or fabricating any material.

SEISMIC RETROFIT PROJECT NO. 611

CARQUINEZ BRIDGE - "A4E" LINE (APPROACH SPAN)

STRUCTURE PLAN NO. 2

Vong Toan
DESIGN OVERSIGHT
April 24, 1997
SIGN OFF DATE

	BY	CHECKED
DESIGN	R. Morrison, Jr.	C. Harrington/ J. Quincy
DETAILS	D. Haecker	J. Quincy
QUANTITIES	D. Nguyen-Tan/ S. Ismail	J. Downing

PREPARED FOR THE STATE OF CALIFORNIA DEPARTMENT OF TRANSPORTATION

Lee Holloway
PROJECT ENGINEER

BRIDGE NO. 23-15 R
POST MILE CC-13.47

CU 04-268
EA 043931

a4e-sp2.dlv

ORIGINAL SCALE IN INCHES FOR REDUCED PLANS 0 1 2 3

DISREGARD PRINTS BEARING EARLIER REVISION DATES → 15-MAR-1997

REVISION DATES (PRELIMINARY STAGE ONLY)

SHEET 4 OF 120

ClibPDF - www.fastio.com

DIST.	COUNTY	ROUTE	POST MILES TOTAL PROJECT	SHEET NO.	TOTAL SHEETS
04	CC/Sol	80	12.8/14.1, 0.0/0.6	405	555

The information represented on this drawing title "Carquinez Bridge South Approach" was not the result of any work developed, performed or completed by this Department (Caltrans). All such activity appears to be by those parties presented on this drawing who would bear all such responsibility. This drawing is available and presented only for the convenience of any bidder, contractor or other interested party. It should be expressly understood that Caltrans assumes no responsibility whatsoever in respect to the sufficiency or accuracy, completeness, interpretation set forth therein or any other aspect of the information shown on or represented by this drawing.

Signed By: R.W. [illegible] Date: 10-1-96

GEO-HYDRO-DATA
INCORPORATED

NATURAL GAMMA LOG

COMPANY : CAL TRANS
WELL : B 34 NEAR BENT J-7
LOCATION/FIELD : CARQUINEZ BRIDGE
COUNTY : CONTRA COSTA
STATE : CALIFORNIA
SECTION : .

96-34

OTHER SERVICES:
INVOICE
9958
RUN 2

TOWNSHIP : .
RANGE : .

DATE : 05/02/96
DEPTH DRILLER : 52
LOG BOTTOM : 48.10
LOG TOP : 8.60

PERMANENT DATUM : CL
ELEV. PERM. DATUM:
LOG MEASURED FROM: CL
DRL MEASURED FROM: CL

ELEVATIONS
KB :
DF :
GL :

CASING DRILLER : .
CASING TYPE : .
CASING THICKNESS: .

LOGGING UNIT : 7
FIELD OFFICE : TEHACHAPI
RECORDED BY : K. KEMP

BIT SIZE : 6
MAGNETIC DECL. : .
MATRIX DENSITY : .
FLUID DENSITY : .
NEUTRON MATRIX :
REMARKS :

BOREHOLE FLUID :
RM : .
RM TEMPERATURE : .
MATRIX DELTA T : .
FLUID DELTA T : .

FILE : ORIGINAL
TYPE : 9041A
LOG : 0
PLOT : 1 57
THRESH: 3000

DRILLED BY: CAL TRANS
RUN IN OPEN HOLE 12:30 PM

ALL SERVICES PROVIDED SUBJECT TO STANDARD TERMS AND CONDITIONS

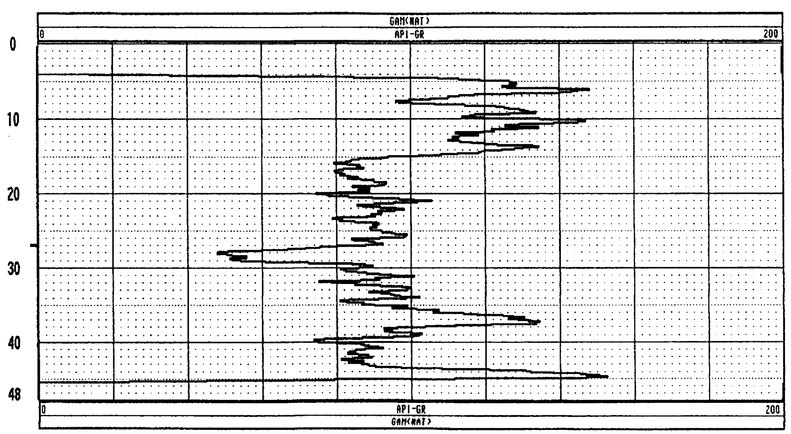

GEO-HYDRO-DATA
INCORPORATED

CALIPER LOG

COMPANY : CAL TRANS
WELL : B 34 NEAR BENT J-7
LOCATION/FIELD : CARQUINEZ BRIDGE
COUNTY : CONTRA COSTA
STATE : CALIFORNIA
SECTION : .

96-34

OTHER SERVICES:
INVOICE
9958
RUN 2

TOWNSHIP : .
RANGE : .

DATE : 05/02/96
DEPTH DRILLER : 52
LOG BOTTOM : 46.90
LOG TOP : 5.70

PERMANENT DATUM : GL
ELEV. PERM. DATUM:
LOG MEASURED FROM: GL
DRL MEASURED FROM: GL

ELEVATIONS
KB :
DF :
GL :

CASING DRILLER : .
CASING TYPE : .
CASING THICKNESS: .

LOGGING UNIT : 7
FIELD OFFICE : TEHACHAPI
RECORDED BY : K. KEMP

BIT SIZE : 6
MAGNETIC DECL. : .
MATRIX DENSITY : .
FLUID DENSITY : .
NEUTRON MATRIX :
REMARKS :

BOREHOLE FLUID :
RM : .
RM TEMPERATURE : .
MATRIX DELTA T : .
FLUID DELTA T : .

FILE : ORIGINAL
TYPE : 9064A1
LOG : 1
PLOT : GHD 60
THRESH: 3000

DRILLED BY: CAL TRANS
RUN IN OPEN HOLE 12:30 PM

ALL SERVICES PROVIDED SUBJECT TO STANDARD TERMS AND CONDITIONS

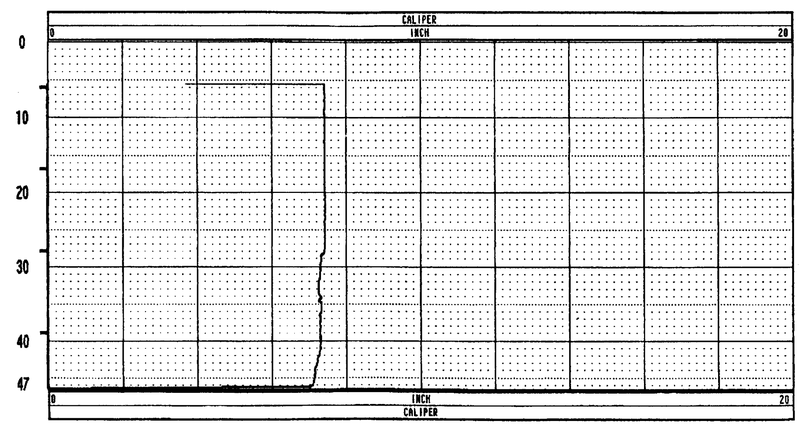

NO AS BUILT CHANGES
AS BUILT
CORRECTION BY BRIAN BEAUDOIN
CONTRACT NO. 04-043934
DATE FEBRUARY, 2002
STRUCTURES REPRESENTATIVE [illegible]

EARTHQUAKE RETROFIT - PROJECT No. SR-611

ENGINEERING SERVICE CENTER	STRUCTURE FOUNDATIONS	FIELD INVESTIGATION BY:	State of CALIFORNIA DEPARTMENT OF TRANSPORTATION	DIVISION OF STRUCTURES STRUCTURE DESIGN	BRIDGE NO. 23-15 R/L	CARQUINEZ BRIDGE - SOUTH APPROACH
PREPARED BY	Irma Gamara 8/96				POST MILE CC-13.48 Sol-1.72	LOG OF TEST BORINGS 5 OF 35
CHECKED BY						

ORIGINAL SCALE IN INCHES FOR REDUCED PLANS → 0 1 2 3

CU: 04
EA: 043921/043931

DISREGARD PRINTS BEARING EARLIER REVISION DATES →

REVISION DATES (PRELIMINARY STAGE ONLY)

SHEET 40 OF 70

TL 6051 REV. 7/96

ClibPDF - www.fastio.com

DIST	COUNTY	ROUTE	POST MILES TOTAL PROJECT	SHEET NO.	TOTAL SHEETS
04	CC, SOL	80	12.8/14.1, 0.0/0.6	440	555

Robert L. Morrison Jr.
REGISTERED CIVIL ENGINEER

10-20-97
PLANS APPROVAL DATE

REGISTERED PROFESSIONAL ENGINEER
Robert L. Morrison Jr.
No. 43693
Exp. 03/31/97
CIVIL
STATE OF CALIFORNIA

CH2M HILL
2485 NATOMAS PARK DR, SUITE 600
SACRAMENTO, CALIFORNIA 95833

The State of California or its officers or agents shall not be responsible for the accuracy or completeness of electronic copies of this plan sheet.

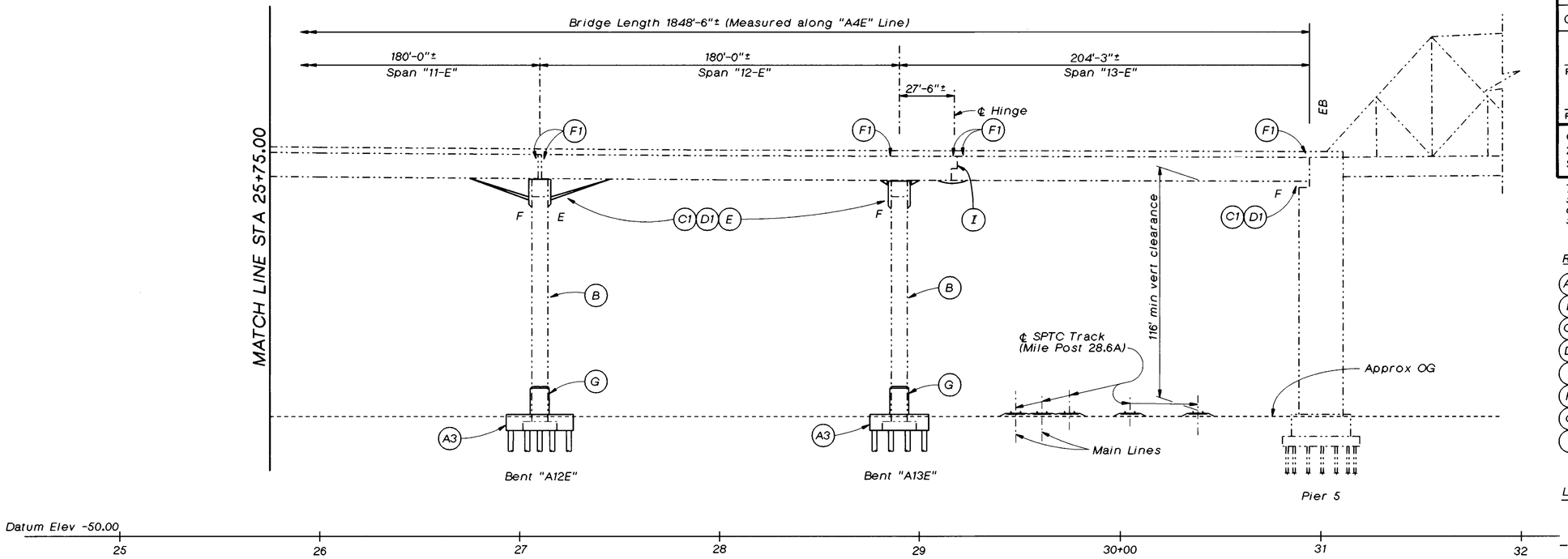

DEVELOPED ELEVATION
1"=30'

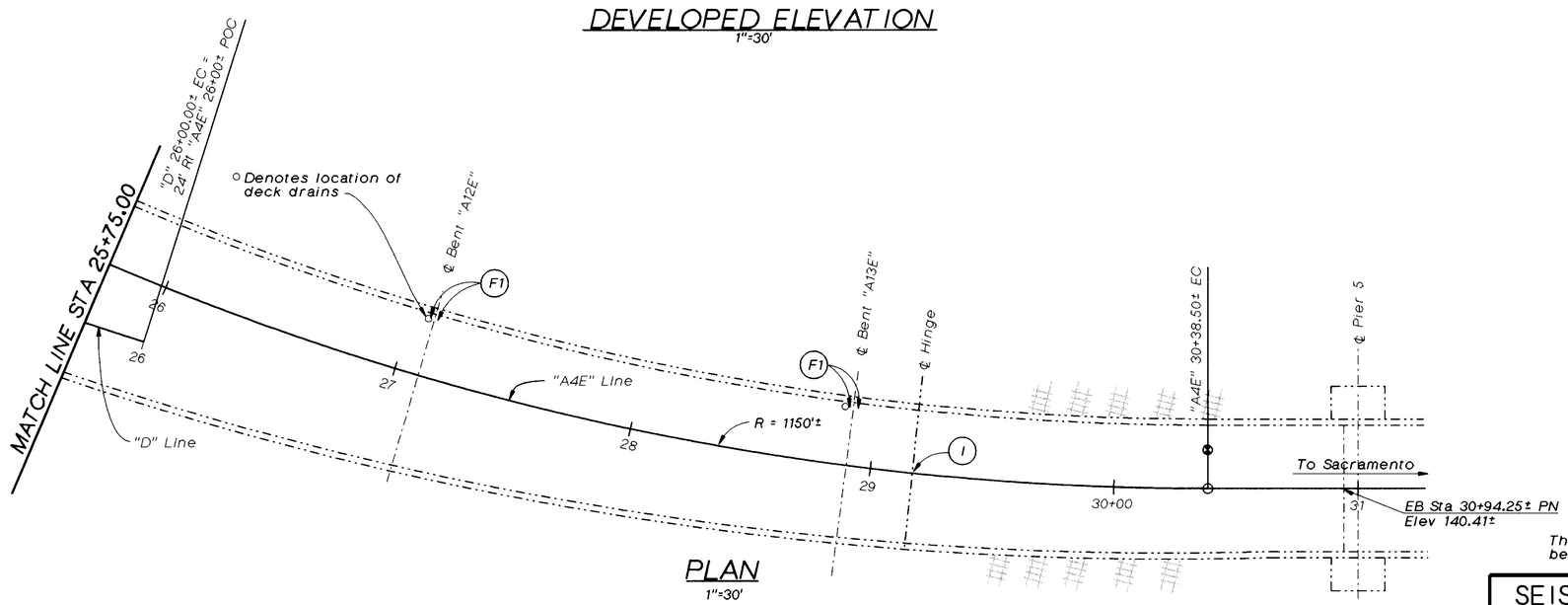

PLAN
1"=30'

RETROFIT LEGEND

- (A3) Pile footing retrofit
- (B) Column post tensioning retrofit
- (C1) End cross frame retrofit
- (D1) Bearing replacement retrofit
- (E) Longitudinal restrainer retrofit
- (F1) Deck to floor beam connection
- (G) Steel column casing retrofit
- (I) Hinge retrofit

LEGEND

- F — Indicates fixed bearing
- E — Indicates expansion bearing
- Indicates existing structure
- Indicates new structure
- Indicates direction of travel
- Indicates point of minimum vertical clearance

Note:

For retrofit of "D" structure, see "Carquinez Bridge - D line" sheets. For retrofit of "A4E" main span structure, see "Carquinez Bridge - A4E Line (Main Span)" sheets

NO AS BUILT CHANGES
AS BUILT
CORRECTION BY BRIAN BEAUDOIN
CONTRACT NO. 04-043934
DATE FEBRUARY, 2002
STRUCTURES REPRESENTATIVE

The Contractor shall verify all controlling field dimensions before ordering or fabricating any material.

Vong Toan
DESIGN OVERSIGHT
April 24, 1997
SIGN OFF DATE

DESIGN	BY R. Morrison, Jr.	CHECKED C. Harrington/ J. Quincy	
DETAILS	BY D. Haecker	CHECKED J. Quincy	
QUANTITIES	BY D. Nguyen-Tan/ S. Ismail	CHECKED J. Downing	

PREPARED FOR THE STATE OF CALIFORNIA DEPARTMENT OF TRANSPORTATION

Lee Holloway
PROJECT ENGINEER

BRIDGE NO. 23-15 R
POST MILE CC-13.47

SEISMIC RETROFIT PROJECT NO. 611
CARQUINEZ BRIDGE - "A4E" LINE (APPROACH SPAN)
STRUCTURE PLAN NO. 3

a4e-sp3.dlv

ORIGINAL SCALE IN INCHES FOR REDUCED PLANS 0 1 2 3

CU 04-268
EA 043931

DISREGARD PRINTS BEARING EARLIER REVISION DATES → 15-MAR-1997

REVISION DATES (PRELIMINARY STAGE ONLY) | SHEET 5 | OF 120

ClibPDF - www.fastio.com

DIST	COUNTY	ROUTE	POST MILES TOTAL PROJECT	SHEET NO.	TOTAL SHEETS
04	CC,SOL	80	12.8/14.1, 0.0/0.6	441	555

Robert L. Morrison Jr
REGISTERED CIVIL ENGINEER

10-20-97
PLANS APPROVAL DATE

REGISTERED PROFESSIONAL ENGINEER — Robert L. Morrison Jr. No. 43693 Exp. 03/31/97 CIVIL — STATE OF CALIFORNIA

CH2M HILL
2485 NATOMAS PARK DR, SUITE 600
SACRAMENTO, CALIFORNIA 95833

The State of California or its officers or agents shall not be responsible for the accuracy or completeness of electronic copies of this plan sheet.

CURVE DATA

"A4E" Line	"D" Line	"J" Line	"A4W" LINE	"S" Line
R = 1150'±	R = 1400'±	R=187.00'±	R = 1150'±	R=285.00'±
Δ= 52°17'56"±	Δ = 38°59'51"±	Δ =188°22'08"±	Δ = 52°17'56"±	Δ =175°02'50"±
T = 564.610'±	T = 495.732'±	T=1836.02'±	T = 564.67'±	T=6588.86'±
L = 1049.706'±	L = 952.889'±	L=549.52'±	L = 1049.706'±	L=870.72'±

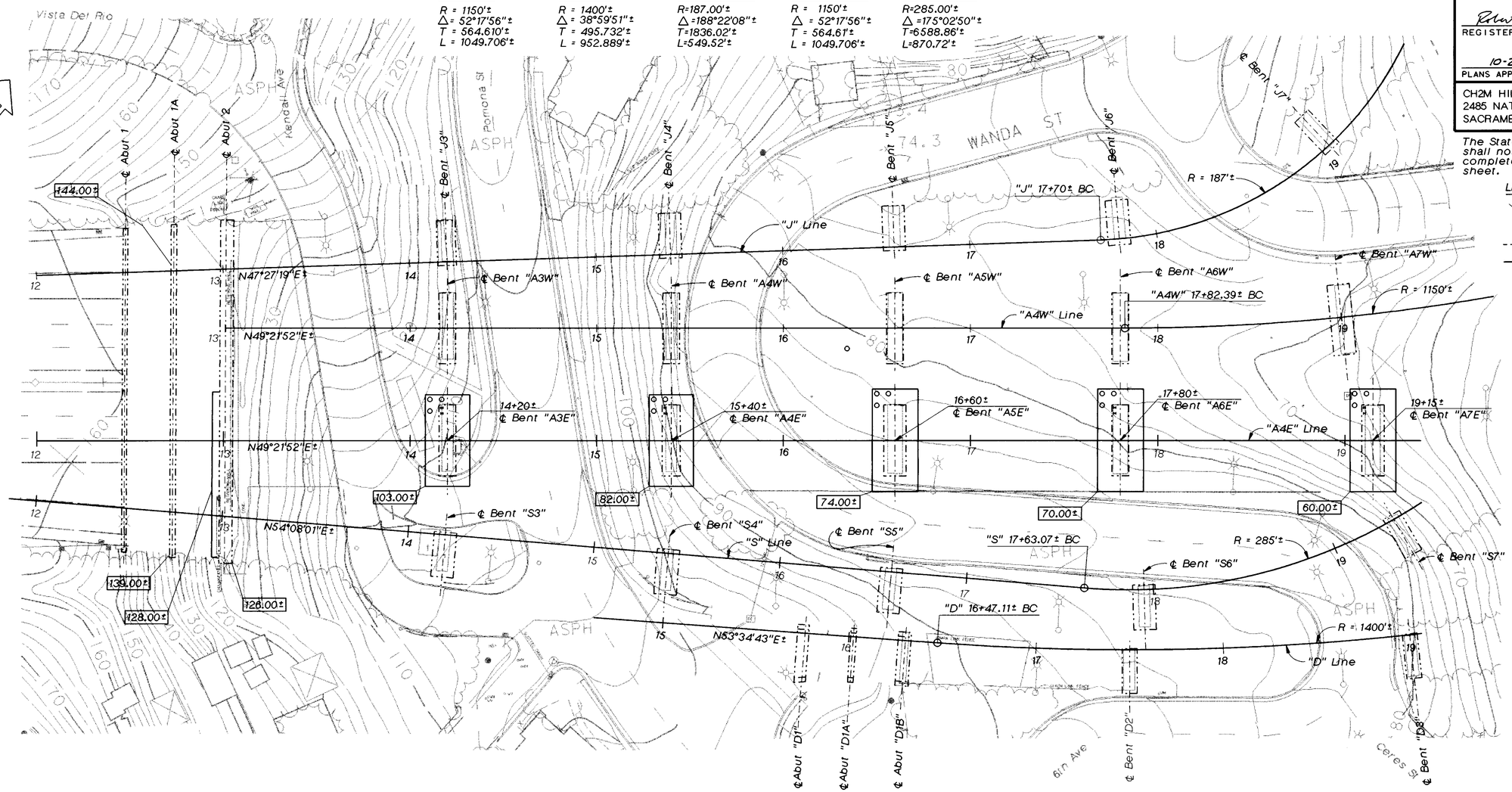

PLAN
1"=30'

LEGEND

- 70.00± — Indicates bottom of footing elevation
- Indicates existing structure
- Indicates new construction
- Indicates 30" CIDH concrete Pile
- Indicates existing steel pile

Notes:

1. For retrofit of "D" structure see "Carquinez Bridge - "D" Line" sheets
2. Not all piles shown
3. ℄ Bents "A3E" through "A7E" tangent
4. ℄ Bents "A8E" through "A13E" radial
5. For utilities, see "Road Plans"

BENCH MARKS

CC - 7

Found 1" iron pipe w/ red plastic plug & tack set in concrete, near parking lot northwest of the intersection of Pomona St. & Wanda St. 6.2' north of the north edge of parking lot.
Elev. = 136.50'

DN - 712

Found PK nail & CalTrans washer in 12 ft. painted tgt. in parking lot just east of C & H Sugar Co. Building. 33.8 ft. north of fire hydrant.
Elev. = 49.34'

NO AS BUILT CHANGES
AS BUILT
CORRECTION BY BRIAN BEAUDOIN
CONTRACT NO. 04-043934
DATE FEBRUARY, 2002
STRUCTURES REPRESENTATIVE

The Contractor shall verify all controlling field dimensions before ordering or fabricating any material.

GEOTECHNICAL PROFESSIONAL — APPROVAL DATE 4-24-97

Vong Toan
DESIGN OVERSIGHT
April 24, 1997
SIGN OFF DATE

PHOTOGRAMMETRY AS OF: 1996		DRAWN	BY Jim Ring	DESIGN	BY R. Morrison, Jr.	CHECKED	C. Harrington
SURVEYED	BY Pat Crites	TRACED	BY Jim Ring	DETAILS	BY G. Bazán	CHECKED	J. Quincy
FIELD CHECKED	BY Jim Ring	CHECKED	BY Pat Crites	QUANTITIES	BY S. Ismail, D. Nguyen-Tan	CHECKED	J. Downing

PREPARED FOR THE STATE OF CALIFORNIA DEPARTMENT OF TRANSPORTATION

Lee Holloway
PROJECT ENGINEER

BRIDGE NO. 23-15 R
POST MILE CC-13.47

SEISMIC RETROFIT PROJECT NO. 611
CARQUINEZ BRIDGE - "A4E" LINE (APPROACH SPAN)
FOUNDATION PLAN NO. 1

ca4-fp1.dlv

ORIGINAL SCALE IN INCHES FOR REDUCED PLANS 0 1 2 3

CU 04-268
EA 043931

DISREGARD PRINTS BEARING EARLIER REVISION DATES → REVISION DATES (PRELIMINARY STAGE ONLY) 15-MAR-1997

SHEET 6 OF 120

ClibPDF - www.fastio.com

DIST.	COUNTY	ROUTE	POST MILES TOTAL PROJECT	SHEET NO.	TOTAL SHEETS
04	CC/Sol	80	12.8/14.1, 0.0/0.6	406	555

R.W. Fox

REGISTERED GEOLOGIST — R.W. FOX No. 78 Exp. 8-31-97 — CERTIFIED ENGINEERING GEOLOGIST — STATE OF CALIFORNIA

10-20-97
PLANS APPROVAL DATE

THE STATE OF CALIFORNIA OR ITS OFFICERS OR AGENTS SHALL NOT BE RESPONSIBLE FOR THE ACCURACY OR COMPLETENESS OF ELECTRONIC COPIES OF THIS PLAN SHEET.

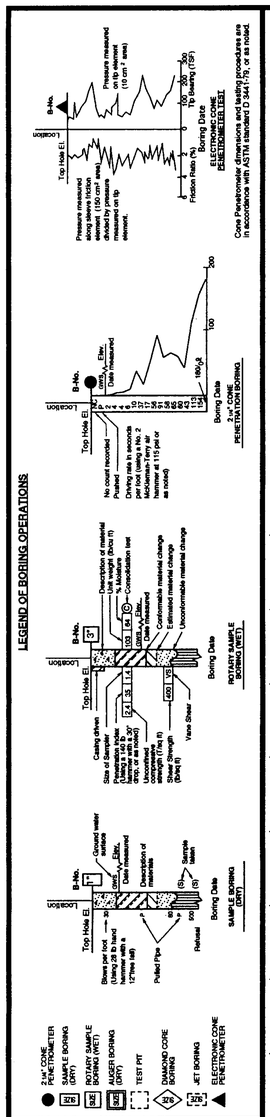

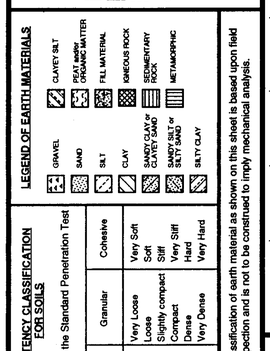

CONSISTENCY CLASSIFICATION FOR SOILS
According to the Standard Penetration Test

Penetration Index (Blows / Ft)	Granular	Cohesive
0-4	Very Loose	Very Soft
5-9	Loose	Soft
10-19	Slightly compact	Stiff
20-34	Compact	Very Stiff
35-69	Dense	Hard
>70	Very Dense	Very Hard

NOTE: Classification of earth material as shown on this sheet is based upon field inspection and is not to be construed to imply mechanical analysis.

FOR PLAN VIEW, SEE "LOG OF TEST BORINGS, SHEET 1 OF 35"

NOTE: FOR FIELD LOGGING NOTATIONS, SEE "LOG OF TEST BORINGS, SHEET 2 OF 35"

NO AS BUILT CHANGES
AS BUILT
CORRECTION BY BRIAN BEAUDOIN
CONTRACT NO. 04-043934
DATE FEBRUARY, 2002
STRUCTURES REPRESENTATIVE

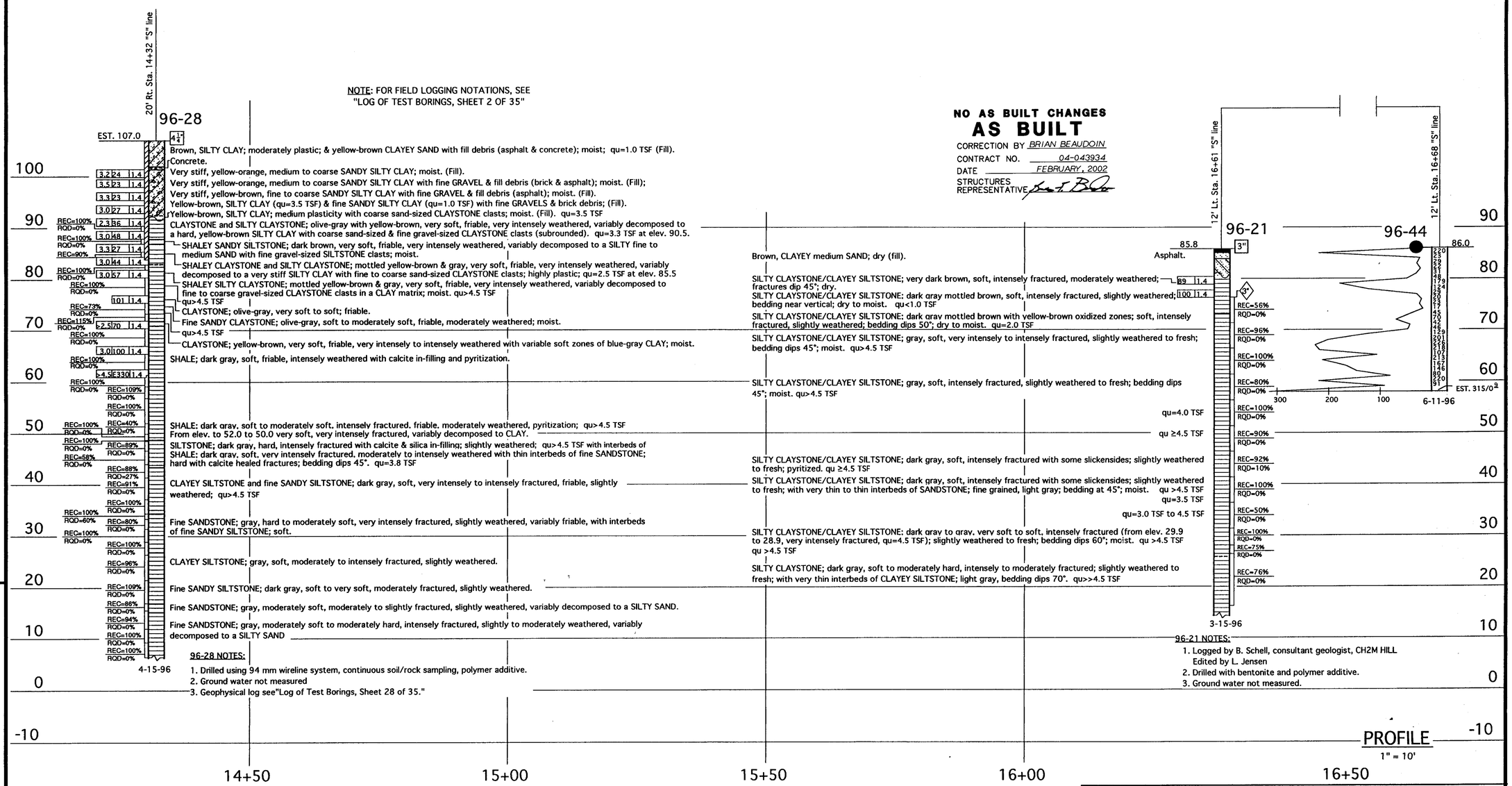

96-28 NOTES:
1. Drilled using 94 mm wireline system, continuous soil/rock sampling, polymer additive.
2. Ground water not measured
3. Geophysical log see"Log of Test Borings, Sheet 28 of 35."

96-21 NOTES:
1. Logged by B. Schell, consultant geologist, CH2M HILL
Edited by L. Jensen
2. Drilled with bentonite and polymer additive.
3. Ground water not measured.

PROFILE
1" = 10'

EARTHQUAKE RETROFIT - PROJECT No. SR-611

ENGINEERING SERVICE CENTER	STRUCTURE FOUNDATIONS	FIELD INVESTIGATION BY:	State of CALIFORNIA DEPARTMENT OF TRANSPORTATION	DIVISION OF STRUCTURES STRUCTURE DESIGN	BRIDGE NO. 23-15 R/L
DRAWN BY Jme Somers 9/96		L. JENSEN, K. AMARU, M. FELBERTI, H. VALENCIA			POST MILE CC-13.48 Sol-1.72
CHECKED BY					

CARQUINEZ BRIDGE SOUTH APPROACH
LOG OF TEST BORINGS 6 OF 35

ORIGINAL SCALE IN INCHES FOR REDUCED PLANS → 0 1 2 3

CU: 04
EA: 04391/043931

DISREGARD PRINTS BEARING EARLIER REVISION DATES →

REVISION DATES (PRELIMINARY STAGE ONLY)

SHEET 41 OF 70

TL 6051 REV. 5/95

ClibPDF - www.fastio.com

DIST	COUNTY	ROUTE	POST MILES TOTAL PROJECT	SHEET NO.	TOTAL SHEETS
04	CC,SOL	80	12.8/14.1,0.0/0.6	442	555

Robert L. Morrison Jr.
REGISTERED CIVIL ENGINEER

10-20-97
PLANS APPROVAL DATE

REGISTERED PROFESSIONAL ENGINEER
Robert L. Morrison Jr.
No. 43693
Exp. 03/31/97
CIVIL
STATE OF CALIFORNIA

CH2M HILL
2485 NATOMAS PARK DR, SUITE 600
SACRAMENTO, CALIFORNIA 95833

The State of California or its officers or agents shall not be responsible for the accuracy or completeness of electronic copies of this plan sheet.

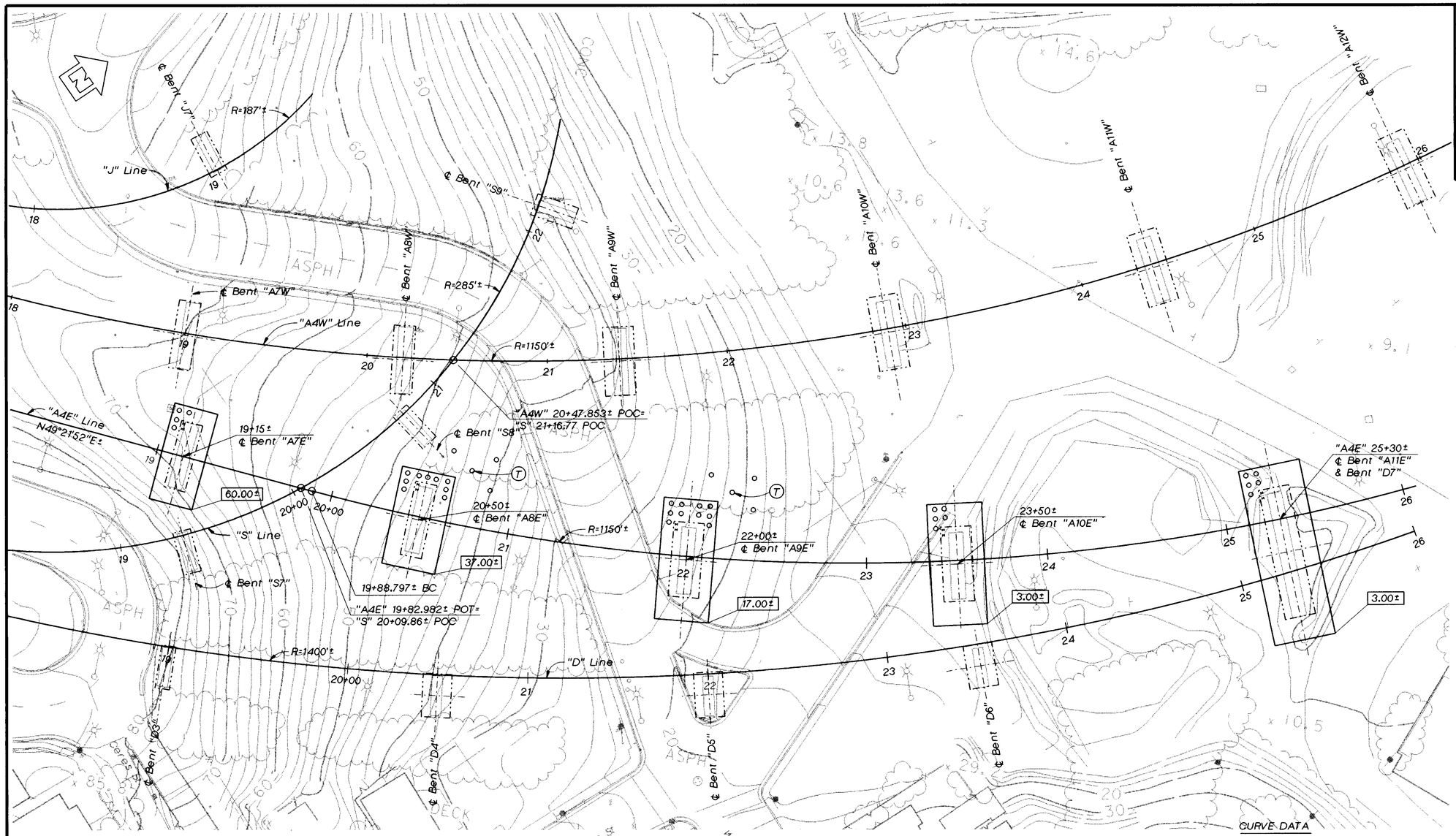

PLAN
1"=30'

LEGEND

- 70.00± — Indicates bottom of footing elevation
- Indicates existing structure
- Indicates new construction
- o — Indicates 30" CIDH concrete Pile
- Indicates existing steel pile
- (T) — Indicates load test pile

Notes:

1. For retrofit of "D" structure see "Carquinez Bridge - "D" Line" sheets
2. Not all piles shown
3. ℄ Bents "A3E" through "A7E" tangent
4. ℄ Bents "A8E" through "A13E" radial
5. For utilities, see "Road Plans"

CURVE DATA

"A4E" Line	"D" Line	"J" Line	"A4W" LINE	"S" Line
R = 1150'±	R = 1400'±	R=187.00'±	R = 1150'±	R=285.00'±
Δ= 52°17'56"±	Δ = 38°59'51"±	Δ =188°22'08"±	Δ = 52°17'56"±	Δ =175°02'50"±
T = 564.610'±	T = 495.732'±	T=1836.02'±	T = 564.61'±	T=6588.86'±
L = 1049.706'±	L = 952.889'±	L=549.52'±	L = 1049.706'±	L=870.72'±

NO AS BUILT CHANGES
AS BUILT
CORRECTION BY BRIAN BEAUDOIN
CONTRACT NO. 04-043934
DATE FEBRUARY, 2002
STRUCTURES REPRESENTATIVE

The Contractor shall verify all controlling field dimensions before ordering or fabricating any material.

GEOTECHNICAL PROFESSIONAL — 4-24-97 APPROVAL DATE

Vong Toan
DESIGN OVERSIGHT
April 24, 1997
SIGN OFF DATE

PHOTOGRAMMETRY AS OF: 1996		DRAWN	BY Jim Ring	DESIGN	BY R. Morrison, Jr.	CHECKED	C. Harrington
SURVEYED	BY Pat Crites	TRACED	BY Jim Ring	DETAILS	BY G. Bazán	CHECKED	J. Quincy
FIELD CHECKED	BY Jim Ring	CHECKED	BY Pat Crites	QUANTITIES	BY S. Ismail D. Nguyen-Tan	CHECKED	J. Downing

PREPARED FOR THE STATE OF CALIFORNIA DEPARTMENT OF TRANSPORTATION

Lee Holloway
PROJECT ENGINEER

CU 04-268
EA 043931

BRIDGE NO. 23-15 R
POST MILE CC-13.47

SEISMIC RETROFIT PROJECT NO. 611
CARQUINEZ BRIDGE - "A4E" LINE (APPROACH SPAN)
FOUNDATION PLAN NO. 2

ca4-fp2.dlv

ORIGINAL SCALE IN INCHES FOR REDUCED PLANS 0 1 2 3

DISREGARD PRINTS BEARING EARLIER REVISION DATES → 21-APR-1997

REVISION DATES (PRELIMINARY STAGE ONLY) | SHEET 7 | OF 120

ClibPDF - www.fastio.com

DIST.	COUNTY	ROUTE	POST MILES TOTAL PROJECT	SHEET NO.	TOTAL SHEETS
04	CC/Sol	80	12.8/14.1, 0.0/0.6	407	555

R. W. Fox

REGISTERED GEOLOGIST R. W. FOX No. 78 Exp. 8-31-97 CERTIFIED ENGINEERING GEOLOGIST STATE OF CALIFORNIA

10-20-97
PLANS APPROVAL DATE

THE STATE OF CALIFORNIA OR ITS OFFICERS OR AGENTS SHALL NOT BE RESPONSIBLE FOR THE ACCURACY OR COMPLETENESS OF ELECTRONIC COPIES OF THIS PLAN SHEET.

NO AS BUILT CHANGES
AS BUILT
CORRECTION BY BRIAN BEAUDOIN
CONTRACT NO. 04-043934
DATE FEBRUARY, 2002
STRUCTURES REPRESENTATIVE

FOR PLAN VIEW, SEE "LOG OF TEST BORINGS, SHEET 1 OF 35"

NOTE: FOR FIELD LOGGING NOTATIONS, SEE "LOG OF TEST BORINGS, SHEET 2 OF 35"

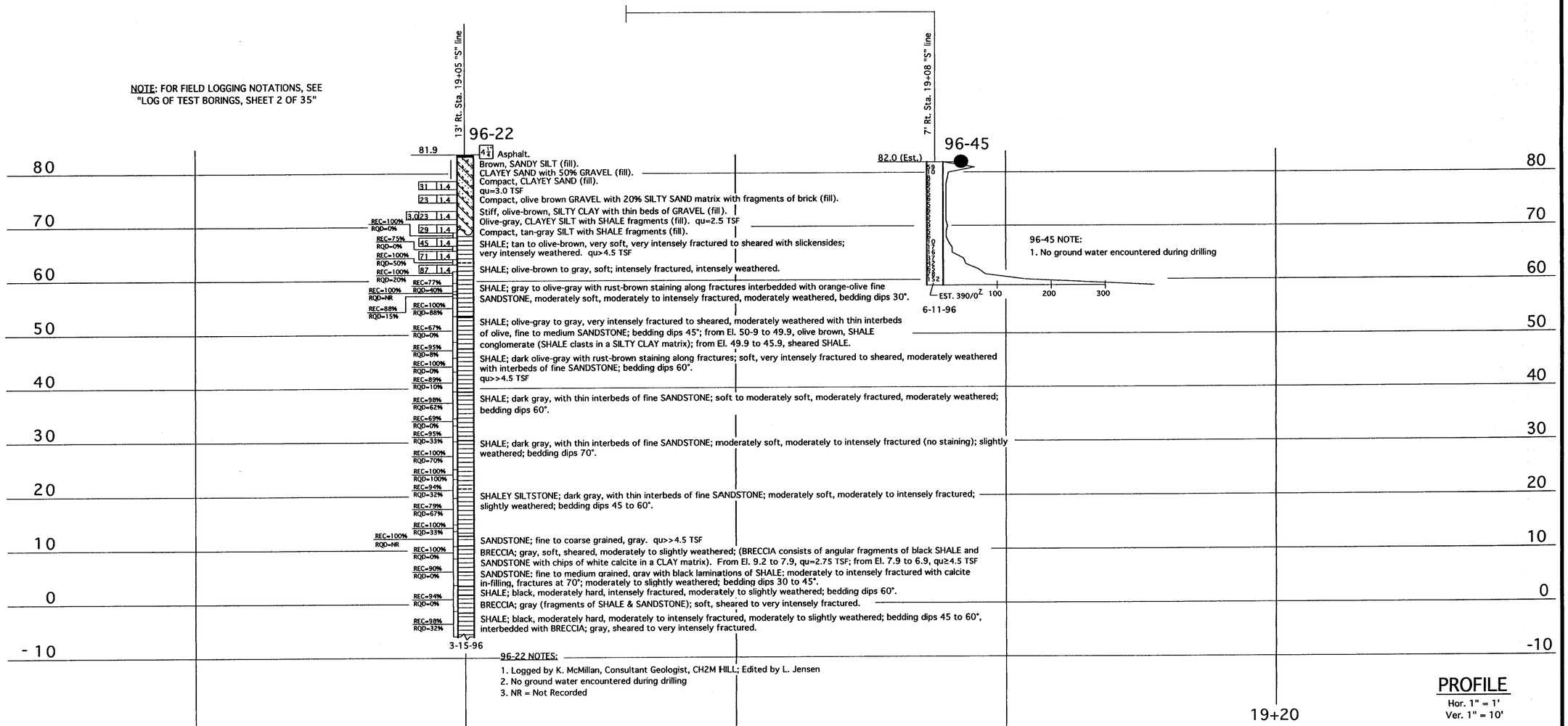

96-22 NOTES:
1. Logged by K. McMillan, Consultant Geologist, CH2M HILL; Edited by L. Jensen
2. No ground water encountered during drilling
3. NR = Not Recorded

PROFILE
Hor. 1" = 1'
Ver. 1" = 10'

LEGEND OF BORING OPERATIONS

LEGEND OF EARTH MATERIALS: GRAVEL, SAND, SILT, CLAY, SANDY CLAY or CLAYEY SAND, SANDY SILT or SILTY SAND, SILTY CLAY, CLAYEY SILT, PEAT and/or ORGANIC MATTER, FILL MATERIAL, IGNEOUS ROCK, SEDIMENTARY ROCK, METAMORPHIC

CONSISTENCY CLASSIFICATION FOR SOILS
According to the Standard Penetration Test

Penetration Index (Blows / Ft)	Granular	Cohesive
0-4	Very Loose	Very Soft
5-9	Loose	Soft
10-19	Slightly compact	Stiff
20-34	Compact	Very Stiff
35-69	Dense	Hard
>70	Very Dense	Very Hard

NOTE: Classification of earth material as shown on this sheet is based upon field inspection and is not to be construed to imply mechanical analysis.

ENGINEERING SERVICE CENTER	STRUCTURE FOUNDATIONS
DRAWN BY Irma Gamarra 8/96	
CHECKED BY	

FIELD INVESTIGATION BY: L. JENSEN & H. VALENCIA

State of CALIFORNIA DEPARTMENT OF TRANSPORTATION

DIVISION OF STRUCTURES
STRUCTURE DESIGN

BRIDGE NO. 23-15 R/L
POST MILE CC-13.48 Sol-1.72

EARTHQUAKE RETROFIT - PROJECT No. SR-611
CARQUINEZ BRIDGE SOUTH APPROACH
LOG OF TEST BORINGS 7 OF 35

ORIGINAL SCALE IN INCHES FOR REDUCED PLANS → 0 1 2 3

CU: 04
EA: 043921/043931

DISREGARD PRINTS BEARING EARLIER REVISION DATES →
REVISION DATES (PRELIMINARY STAGE ONLY)
SHEET 42 OF 70

TL 6051 REV. 5/95

ClibPDF - www.fastio.com

DIST	COUNTY	ROUTE	POST MILES TOTAL PROJECT	SHEET NO.	TOTAL SHEETS
04	CC,SOL	80	12.8/14.1, 0.0/0.6	443	555

REGISTERED CIVIL ENGINEER

10-20-97
PLANS APPROVAL DATE

REGISTERED PROFESSIONAL ENGINEER Robert L. Morrison Jr. No. 43693 Exp. 03/31/97 CIVIL STATE OF CALIFORNIA

CH2M HILL
2485 NATOMAS PARK DR, SUITE 600
SACRAMENTO, CALIFORNIA 95833

The State of California or its officers or agents shall not be responsible for the accuracy or completeness of electronic copies of this plan sheet.

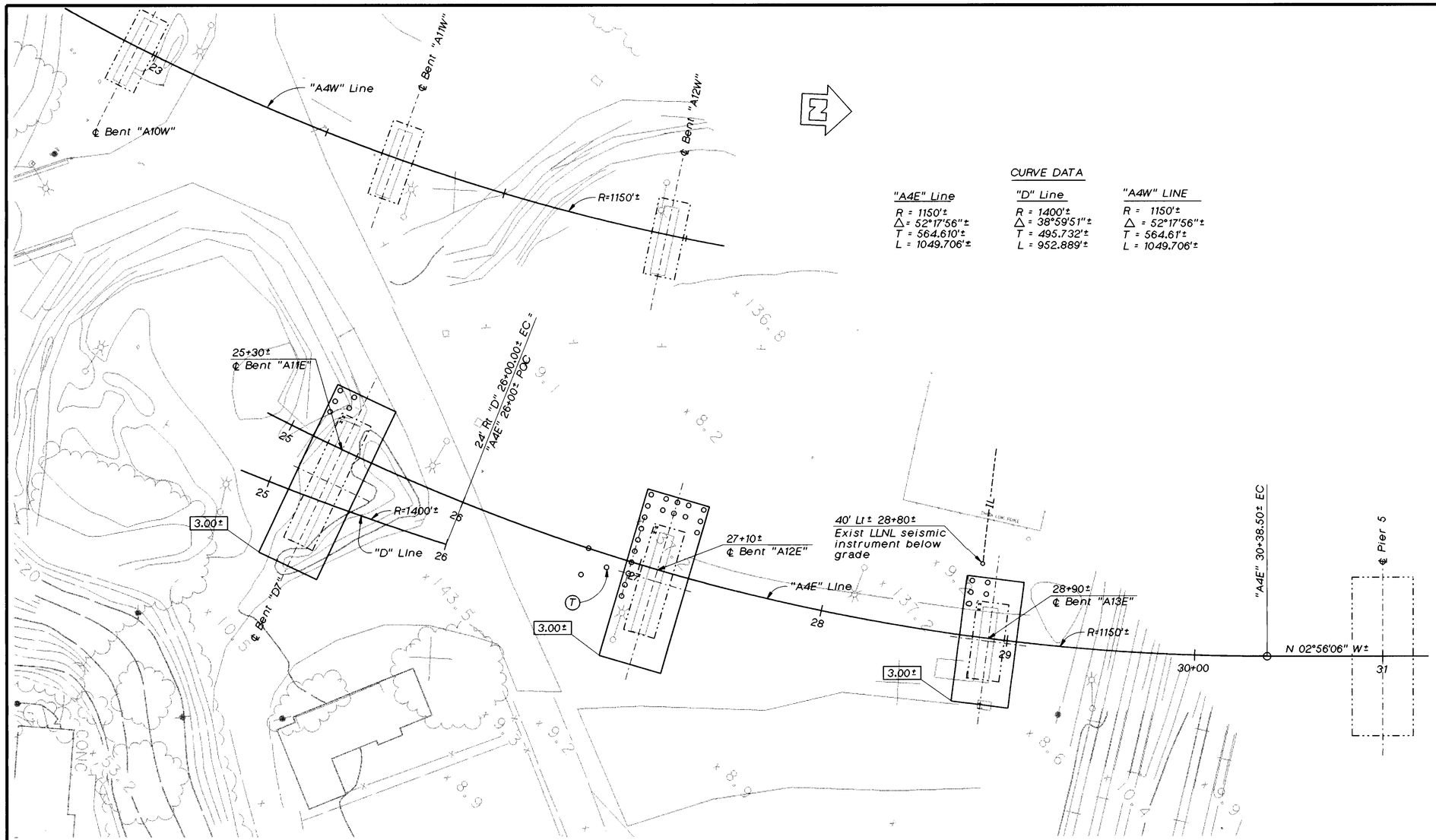

PLAN
1"=30'

CURVE DATA

"A4E" Line	"D" Line	"A4W" LINE
R = 1150'±	R = 1400'±	R = 1150'±
Δ = 52°17'56"±	Δ = 38°59'51"±	Δ = 52°17'56"±
T = 564.610'±	T = 495.732'±	T = 564.61'±
L = 1049.706'±	L = 952.889'±	L = 1049.706'±

LEGEND

- 70.00± — Indicates bottom of footing elevation
- Indicates existing structure
- Indicates new construction
- Indicates 30" CIDH concrete Pile
- Indicates existing steel pile
- (T) Indicates load test pile
- IL — Indicates exist below grade (approx 2' deep) seismic instrument line

Notes:

1. For retrofit of "D" structure see "Carquinez Bridge - "D" Line" sheets
2. Not all piles shown
3. ℄ Bents "A3E" through "A7E" tangent
4. ℄ Bents "A8E" through "A13E" radial
5. For utilities see, "Road Plans"

NO AS BUILT CHANGES
AS BUILT
CORRECTION BY BRIAN BEAUDOIN
CONTRACT NO. 04-043934
DATE FEBRUARY, 2002
STRUCTURES REPRESENTATIVE

The Contractor shall verify all controlling field dimensions before ordering or fabricating any material.

GEOTECHNICAL PROFESSIONAL — APPROVAL DATE 4-24-97

Vong Toan
DESIGN OVERSIGHT
April 24, 1997
SIGN OFF DATE

PHOTOGRAMMETRY AS OF: 1996		DRAWN	BY Jim Ring	DESIGN	BY R. Morrison, Jr.	CHECKED C. Harrington	
SURVEYED	BY Pat Crites	TRACED	BY Jim Ring	DETAILS	BY G. Bazán	CHECKED J. Quincy	
FIELD CHECKED	BY Jim Ring	CHECKED	BY Pat Crites	QUANTITIES	BY S. Ismail D. Nguyen-Tan	CHECKED J. Downing	

PREPARED FOR THE STATE OF CALIFORNIA DEPARTMENT OF TRANSPORTATION

Lee Holloway
PROJECT ENGINEER

ORIGINAL SCALE IN INCHES FOR REDUCED PLANS 0 1 2 3

CU 04-268
EA 043931

BRIDGE NO. 23-15 R
POST MILE CC-13.47

SEISMIC RETROFIT PROJECT NO. 611
CARQUINEZ BRIDGE - "A4E" LINE (APPROACH SPAN)
FOUNDATION PLAN NO. 3

DISREGARD PRINTS BEARING EARLIER REVISION DATES → REVISION DATES (PRELIMINARY STAGE ONLY) 21-APR-1997

SHEET 8 OF 120

ca4-fp3.dlv

ClibPDF - www.fastio.com

DIST.	COUNTY	ROUTE	POST MILES TOTAL PROJECT	SHEET NO.	TOTAL SHEETS
04	CC/Sol	80	12.8/14.1, 0.0/0.6	408	555

R. W. Fox

REGISTERED GEOLOGIST R. W. FOX No. 78 Exp. 8-31-97 CERTIFIED ENGINEERING GEOLOGIST STATE OF CALIFORNIA

10-20-97
PLANS APPROVAL DATE

THE STATE OF CALIFORNIA OR ITS OFFICERS OR AGENTS SHALL NOT BE RESPONSIBLE FOR THE ACCURACY OR COMPLETENESS OF ELECTRONIC COPIES OF THIS PLAN SHEET.

FOR PLAN VIEW, SEE "LOG OF TEST BORINGS", SHEET 1 OF 35.

NOTE: FOR FIELD LOGGING NOTATIONS SEE LOG OF TEST BORINGS, SHEET 2 OF 35.

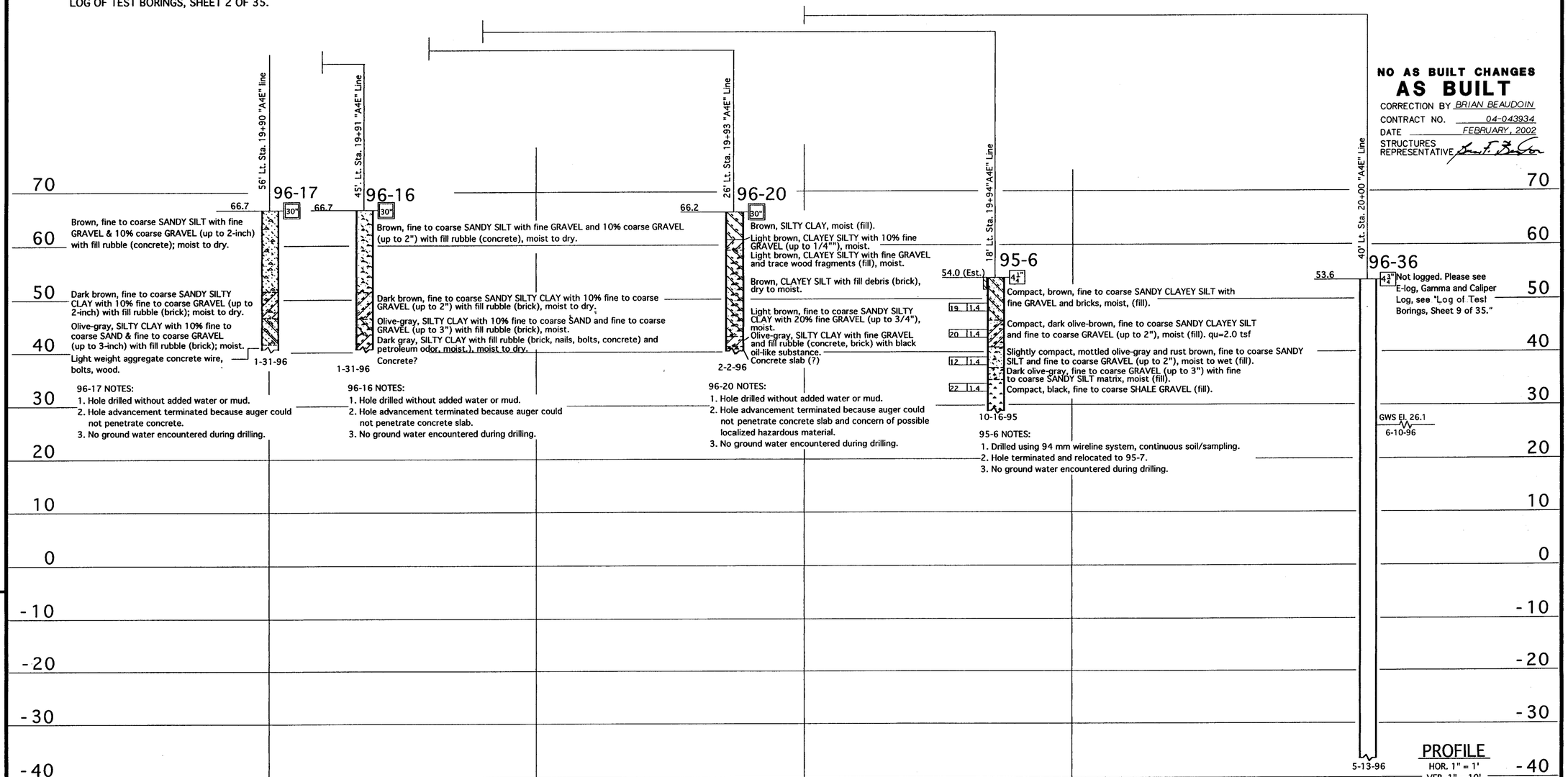

NO AS BUILT CHANGES
AS BUILT
CORRECTION BY BRIAN BEAUDOIN
CONTRACT NO. 04-043934
DATE FEBRUARY, 2002
STRUCTURES REPRESENTATIVE

PROFILE
HOR. 1" = 1'
VER. 1" = 10'

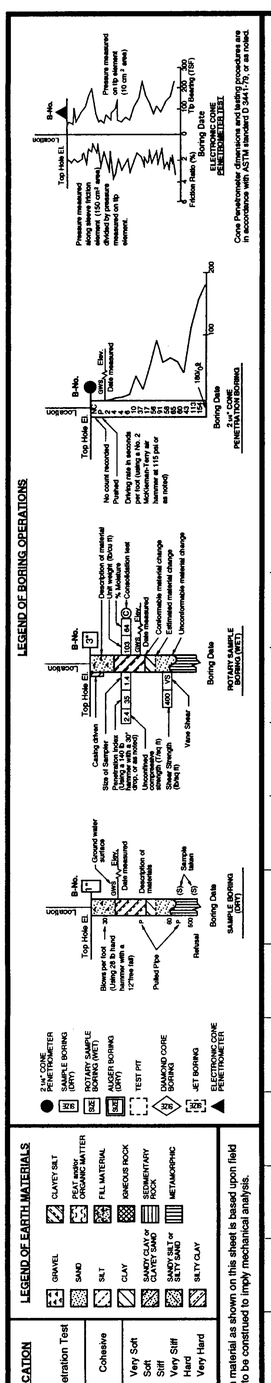

ENGINEERING SERVICE CENTER	STRUCTURE FOUNDATIONS
DRAWN BY Ken Wahl 9-96	
CHECKED BY	

FIELD INVESTIGATION BY: L. JENSEN & H. VALENCIA

State of CALIFORNIA DEPARTMENT OF TRANSPORTATION

DIVISION OF STRUCTURES
STRUCTURE DESIGN

BRIDGE NO. 23-15R/L
POST MILE ~~CC-13.48~~ Sol-1.72

EARTHQUAKE RETROFIT PROJECT No. SR-611

CARQUINEZ BRIDGE - SOUTH APPROACH

LOG OF TEST BORINGS 8 OF 35

ORIGINAL SCALE IN INCHES FOR REDUCED PLANS → 0 1 2 3

CU: 04
EA: 043921/043931

DISREGARD PRINTS BEARING EARLIER REVISION DATES →

REVISION DATES (PRELIMINARY STAGE ONLY)

SHEET 43 OF 70

TL 6051 REV. 5/95

ClibPDF - www.fastio.com

DIST	COUNTY	ROUTE	POST MILES TOTAL PROJECT	SHEET NO.	TOTAL SHEETS
04	CC,SOL	80	12.8/14.1/14.1/00/0.6	444	555

Robert L. Morrison Jr
REGISTERED CIVIL ENGINEER

10-20-97
PLANS APPROVAL DATE

REGISTERED PROFESSIONAL ENGINEER Robert L. Morrison Jr No. 43693 Exp. 03/31/97 CIVIL STATE OF CALIFORNIA

CH2M HILL
2485 NATOMAS PARK DR, SUITE 600
SACRAMENTO, CALIFORNIA 95833

The State of California or its officers or agents shall not be responsible for the accuracy or completeness of electronic copies of this plan sheet.

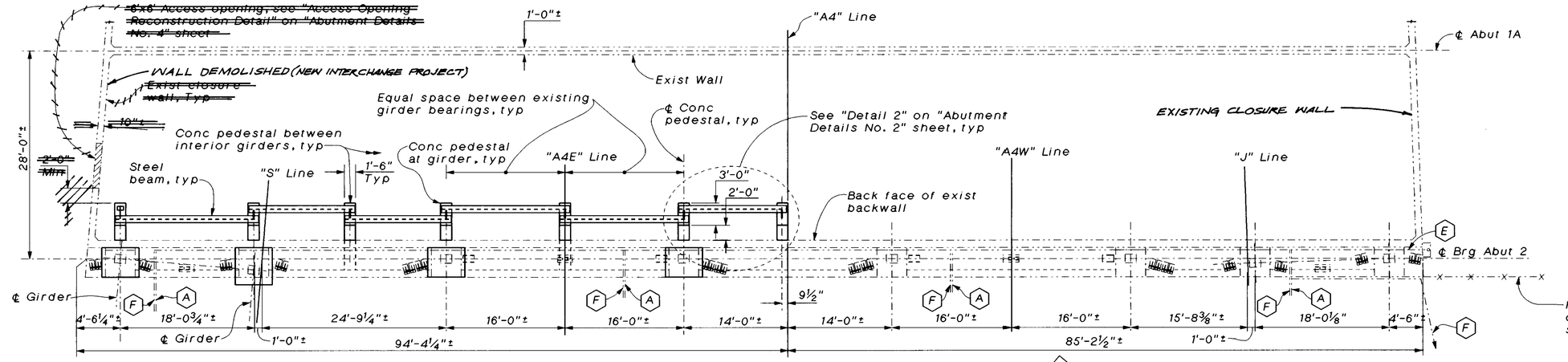

SECTION A-A
⅛" = 1'-0"

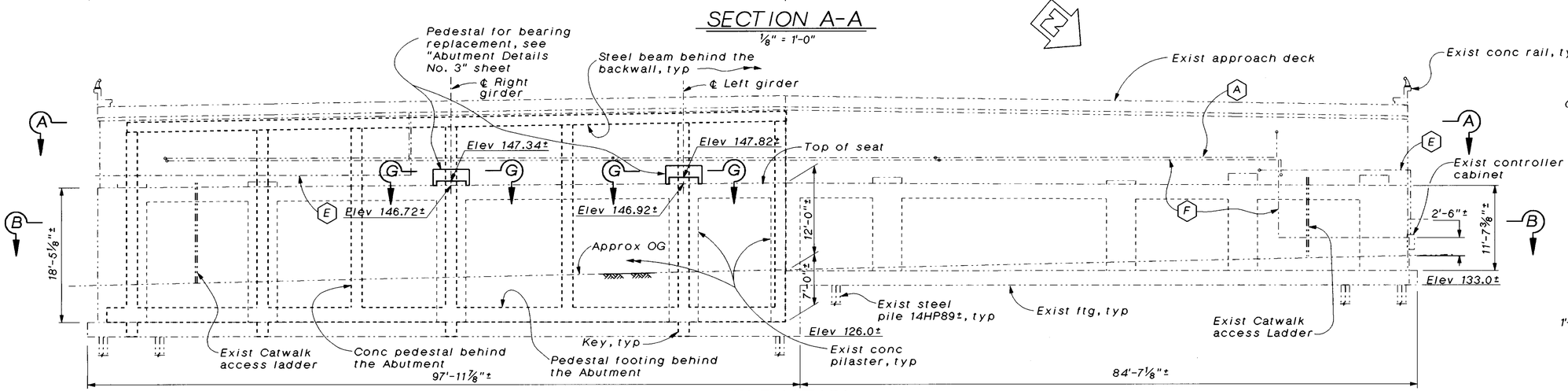

ELEVATION
⅛" = 1'-0"

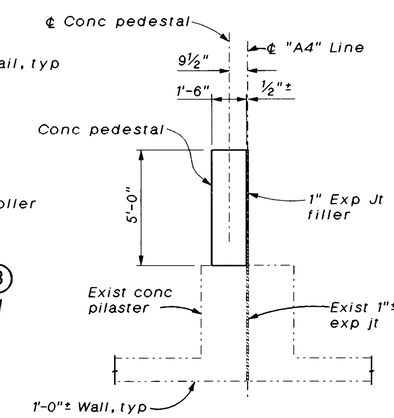

DETAIL 1
No Scale

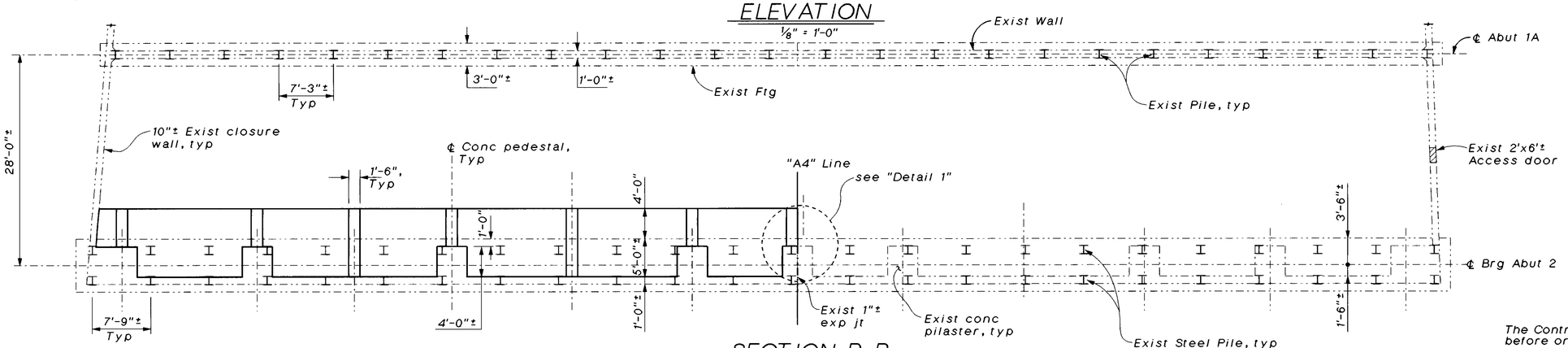

SECTION B-B
⅛" = 1'-0"

LEGEND

- (A) Existing 2" dia ± compressed air line
- (F) Existing 3½" dia ± fire sprinkler line
- (E) Existing 1" dia ± electrical conduit

AS BUILT
CORRECTION BY BRIAN BEAUDOIN
CONTRACT NO. 04-043934
DATE FEBRUARY, 2002
STRUCTURES REPRESENTATIVE

Notes:
1. For "Section G-G" see "Abutment Details No.3" sheet

The Contractor shall verify all controlling field dimensions before ordering or fabricating any material.

SEISMIC RETROFIT PROJECT NO. 611

CARQUINEZ BRIDGE - "A4E" LINE (APPROACH SPAN)

ABUTMENT DETAILS NO. 1

Vong Toan
DESIGN OVERSIGHT
April 24, 1997
SIGN OFF DATE

	BY	CHECKED
DESIGN	V. Trinh	T. J. Chou
DETAILS	G. Buelow	A. Wang
QUANTITIES	J. Lu	J. Chen

PREPARED FOR THE STATE OF CALIFORNIA DEPARTMENT OF TRANSPORTATION

Lee Holloway
PROJECT ENGINEER

BRIDGE NO. 23-15 R
POST MILE CC-13.47

a4e-ab1.dlv

ORIGINAL SCALE IN INCHES FOR REDUCED PLANS 0 1 2 3

CU 04-268
EA 043931

DISREGARD PRINTS BEARING EARLIER REVISION DATES → 15-MAR-1997

REVISION DATES (PRELIMINARY STAGE ONLY)

SHEET 9 OF 120

ClibPDF - www.fastio.com

DIST.	COUNTY	ROUTE	POST MILES TOTAL PROJECT	SHEET NO.	TOTAL SHEETS
04	CC/Sol	80	12.8/14.1, 0.0/0.6	409	555

The information represented on this drawing title "Carquinez Bridge South Approach" was not the result of any work developed, performed or completed by this Department (Caltrans). All such activity appears to be by those parties presented on this drawing who would bear all such responsibility. This drawing is available and presented only for the convenience of any bidder, contractor or other interested party. It should be expressly understood that Caltrans assumes no responsibility whatsoever in respect to the sufficiency or accuracy, completeness, interpretation set forth therein or any other aspect of the information shown on or represented by this drawing.

Signed By: R. W. [illegible] Date: 10-1-96

NO AS BUILT CHANGES
AS BUILT
CORRECTION BY BRIAN BEAUDOIN
CONTRACT NO. 04-043934
DATE FEBRUARY, 2002
STRUCTURES REPRESENTATIVE [illegible]

GEO-HYDRO-DATA
INCORPORATED

NATURAL GAMMA LOG

OTHER SERVICES: INVOICE 9958

96-36

COMPANY	: CAL TRANS				
WELL	: B 36 PIER AW-8				
LOCATION/FIELD	: CARQUINEZ BRIDGE				
COUNTY	: CONTRA COSTA				
STATE	: CALIFORNIA				
SECTION	: .	TOWNSHIP	: .	RANGE	: .
DATE	: 05/14/96	PERMANENT DATUM	: GL	ELEVATIONS	
DEPTH DRILLER	: 98	ELEV. PERM. DATUM:		KB	:
LOG BOTTOM	: 93.30	LOG MEASURED FROM:	GL	DF	:
LOG TOP	: 8.30	DRL MEASURED FROM:	GL	GL	:
CASING DRILLER	: .	LOGGING UNIT	: 7		
CASING TYPE	: .	FIELD OFFICE	: TEHACHAPI		
CASING THICKNESS	: .	RECORDED BY	: K. KEMP		
BIT SIZE	: 4.75	BOREHOLE FLUID	: BENT	FILE	: ORIGINAL
MAGNETIC DECL.	: .	RM	: .	TYPE	: 9041A
MATRIX DENSITY	: .	RM TEMPERATURE	: .	LOG	: 9
FLUID DENSITY	: .	MATRIX DELTA T	: .	PLOT	: 1 57
NEUTRON MATRIX	:	FLUID DELTA T	: .	THRESH	: 3000

REMARKS :
DRILLED BY: CAL TRANS
RUN LOG IN OPEN HOLE 5/14/96 10:30 AM
ALL SERVICES PROVIDED SUBJECT TO STANDARD TERMS AND CONDITIONS

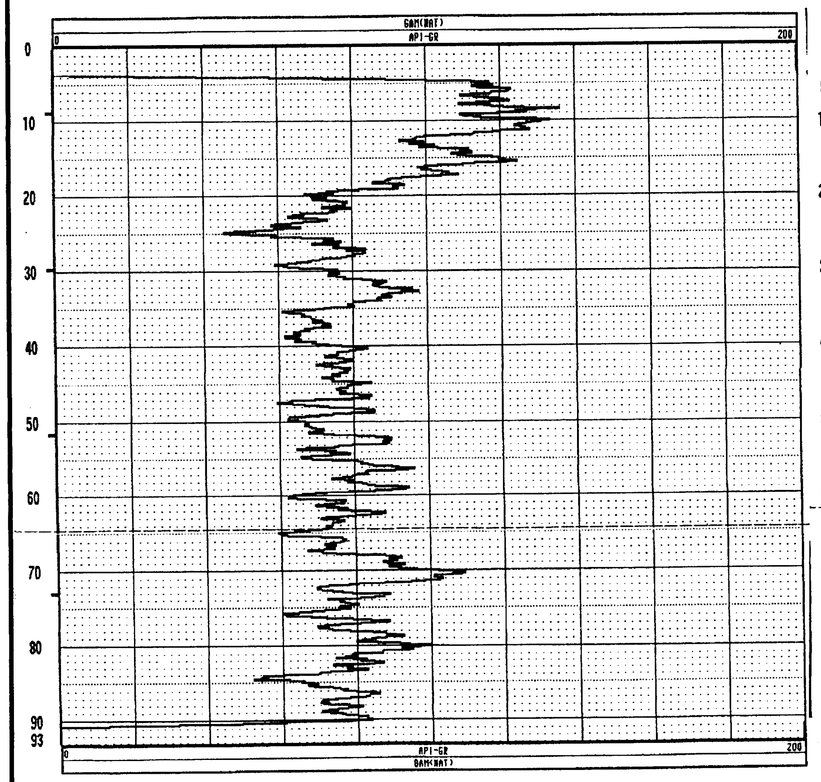

GEO-HYDRO-DATA
INCORPORATED

CALIPER LOG

OTHER SERVICES: INVOICE 9958 RUN 3

96-36

COMPANY	: CAL TRANS				
WELL	: B 36 NEAR PIER AW 8				
LOCATION/FIELD	: CARQUINEZ BRIDGE				
COUNTY	: CONTRA COSTA				
STATE	: CALIFORNIA				
SECTION	: .	TOWNSHIP	: .	RANGE	: .
DATE	: 05/28/96	PERMANENT DATUM	: GL	ELEVATIONS	
DEPTH DRILLER	: 98	ELEV. PERM. DATUM:		KB	:
LOG BOTTOM	: 91.40	LOG MEASURED FROM:	GL	DF	:
LOG TOP	: 5.98	DRL MEASURED FROM:	GL	GL	:
CASING DRILLER	: .	LOGGING UNIT	: 7		
CASING TYPE	: .	FIELD OFFICE	: TEHACHAPI		
CASING THICKNESS	: .	RECORDED BY	: K. KEMP		
BIT SIZE	: 4.75	BOREHOLE FLUID	: .	FILE	: ORIGINAL
MAGNETIC DECL.	: .	RM	: .	TYPE	: 9064A1
MATRIX DENSITY	: .	RM TEMPERATURE	: .	LOG	: 0
FLUID DENSITY	: .	MATRIX DELTA T	: .	PLOT	: 1 60
NEUTRON MATRIX	:	FLUID DELTA T	: .	THRESH	: 3000

REMARKS :
DRILLED BY: CAL TRANS
LOG RUN 3 5/28/96 2:45 PM NOTE MUD VERY THINCK HAD TO WORK TOOL DOWN
ALL SERVICES PROVIDED SUBJECT TO STANDARD TERMS AND CONDITIONS

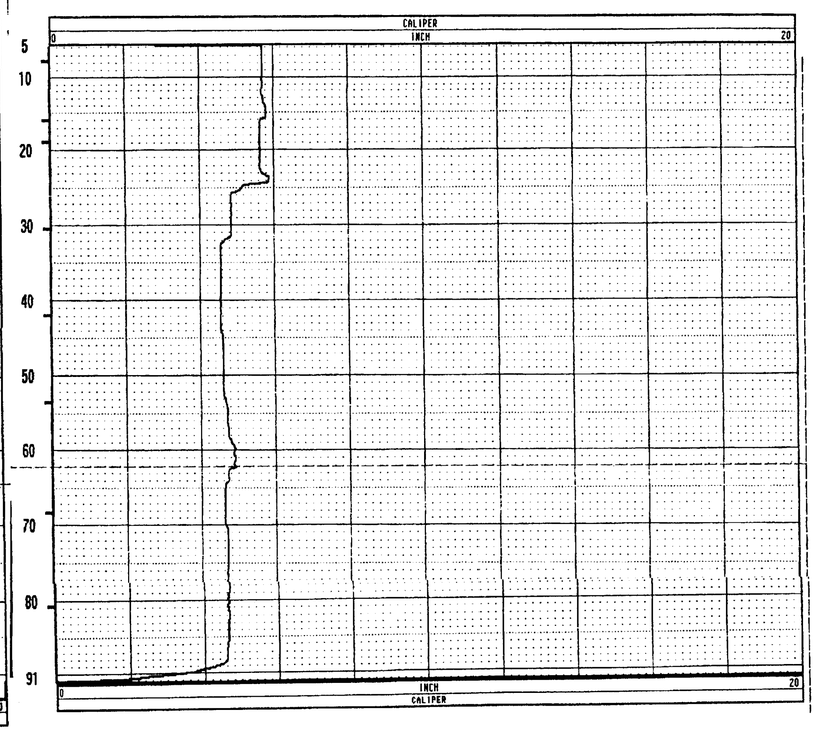

GEO-HYDRO-DATA
INCORPORATED

ELECTRIC WELL LOG

OTHER SERVICES: INVOICE 9958

96-36

COMPANY	: CAL TRANS				
WELL	: B 36 PIER AW-8				
LOCATION/FIELD	: CARQUINEZ BRIDGE				
COUNTY	: CONTRA COSTA				
STATE	: CALIFORNIA				
SECTION	: .	TOWNSHIP	: .	RANGE	: .
DATE	: 05/14/96	PERMANENT DATUM	: GL	ELEVATIONS	
DEPTH DRILLER	: 98	ELEV. PERM. DATUM:		KB	:
LOG BOTTOM	: 93.30	LOG MEASURED FROM:	GL	DF	:
LOG TOP	: 8.30	DRL MEASURED FROM:	CL	CL	:
CASING DRILLER	: .	LOGGING UNIT	: 7		
CASING TYPE	: .	FIELD OFFICE	: TEHACHAPI		
CASING THICKNESS	: .	RECORDED BY	: K. KEMP		
BIT SIZE	: 4.75	BOREHOLE FLUID	: BENT	FILE	: ORIGINAL
MAGNETIC DECL.	: .	RM	: .	TYPE	: 9041A
MATRIX DENSITY	: .	RM TEMPERATURE	: .	LOG	: 9
FLUID DENSITY	: .	MATRIX DELTA T	: .	PLOT	: 1 8
NEUTRON MATRIX	:	FLUID DELTA T	: .	THRESH	: 3000

REMARKS :
DRILED BY: CAL TRANS
RUN LOG IN OPEN HOLE 5/14/96 10:30 AM
ALL SERVICES PROVIDED SUBJECT TO STANDARD TERMS AND CONDITIONS

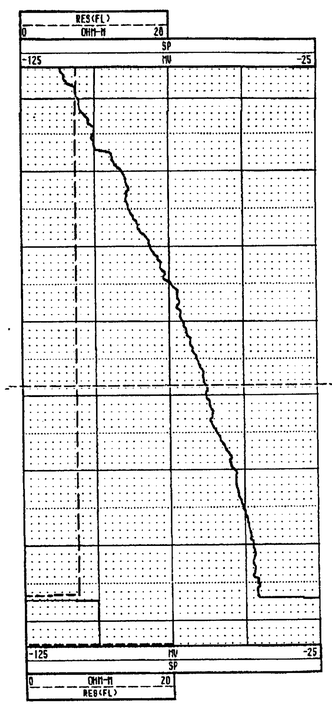

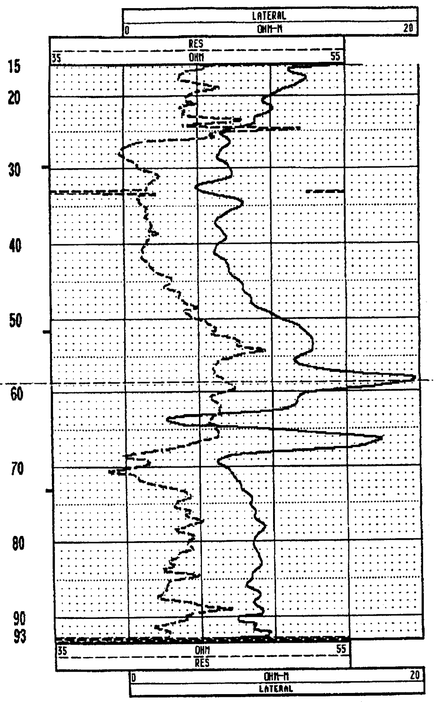

EARTHQUAKE RETROFIT PROJECT NO. SR-611

ENGINEERING SERVICE CENTER	STRUCTURE FOUNDATIONS	FIELD INVESTIGATION BY:	State of CALIFORNIA DEPARTMENT OF TRANSPORTATION	DIVISION OF STRUCTURES STRUCTURE DESIGN	BRIDGE NO. 23-15 R/L	CARQUINEZ BRIDGE - SOUTH APPROACH
PREPARED BY	Ken Wahl 8-96				POST MILE CC-13.48 Sol-1.72	LOG OF TEST BORINGS
CHECKED BY						

ORIGINAL SCALE IN INCHES FOR REDUCED PLANS → 0 1 2 3

CU: 04
EA: 043921/043931

DISREGARD PRINTS BEARING EARLIER REVISION DATES →

REVISION DATES (PRELIMINARY STAGE ONLY)

SHEET 44 OF 70

9 OF 35

TL 6052 REV. 6/95

ClibPDF - www.fastio.com

DIST	COUNTY	ROUTE	POST MILES TOTAL PROJECT	SHEET NO.	TOTAL SHEETS
04	CC, SOL	80	12.8/14.1, 0.0/0.6	445	555

REGISTERED CIVIL ENGINEER

10-20-97
PLANS APPROVAL DATE

REGISTERED PROFESSIONAL ENGINEER — Robert L. Morrison Jr — No. 43693 — Exp. 03/31/97 — CIVIL — STATE OF CALIFORNIA

CH2M HILL
2485 NATOMAS PARK DR, SUITE 600
SACRAMENTO, CALIFORNIA 95833

The State of California or its officers or agents shall not be responsible for the accuracy or completeness of electronic copies of this plan sheet.

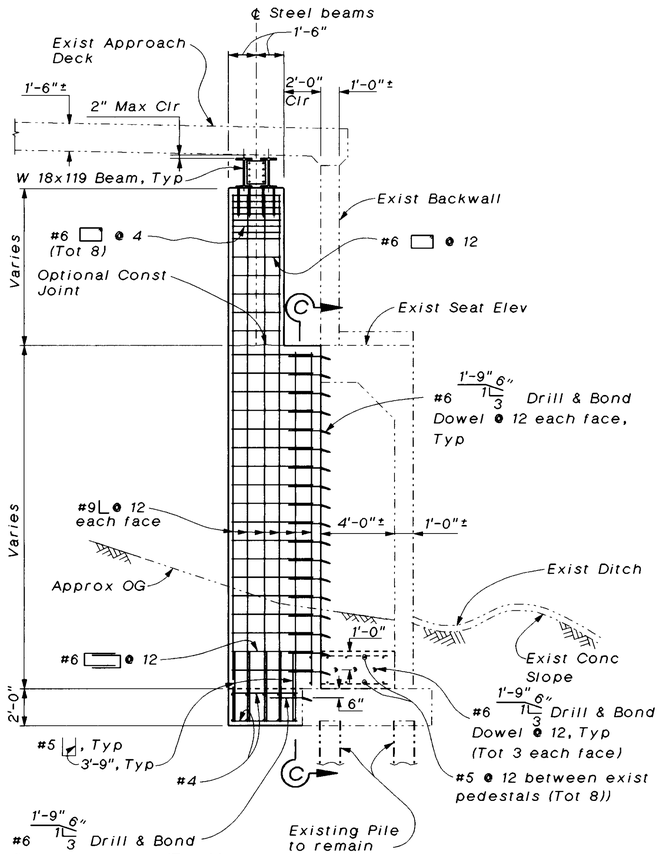

(AT PILASTER)

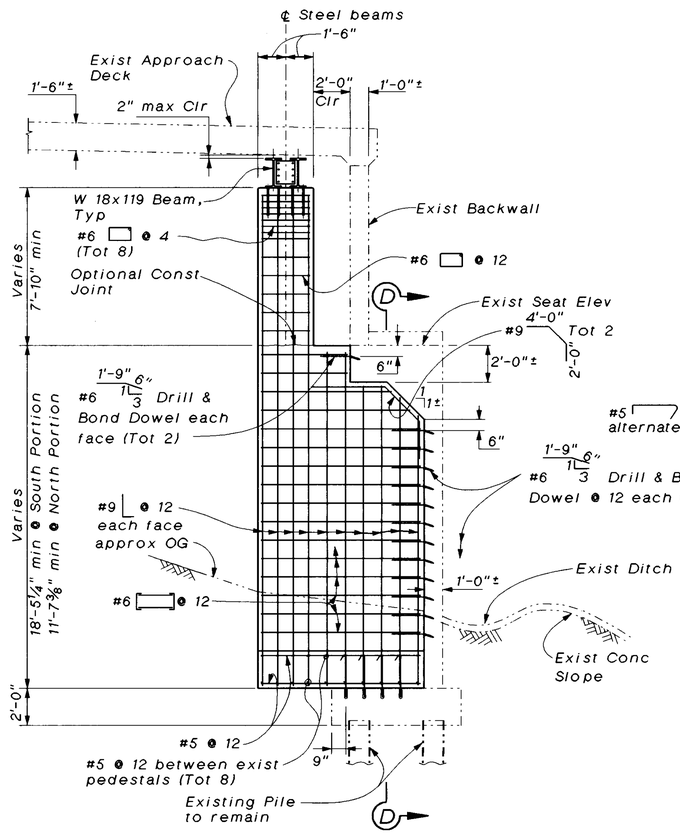

(BETWEEN PILASTERS)

CONCRETE PEDESTAL DETAILS

1/4" = 1'-0"

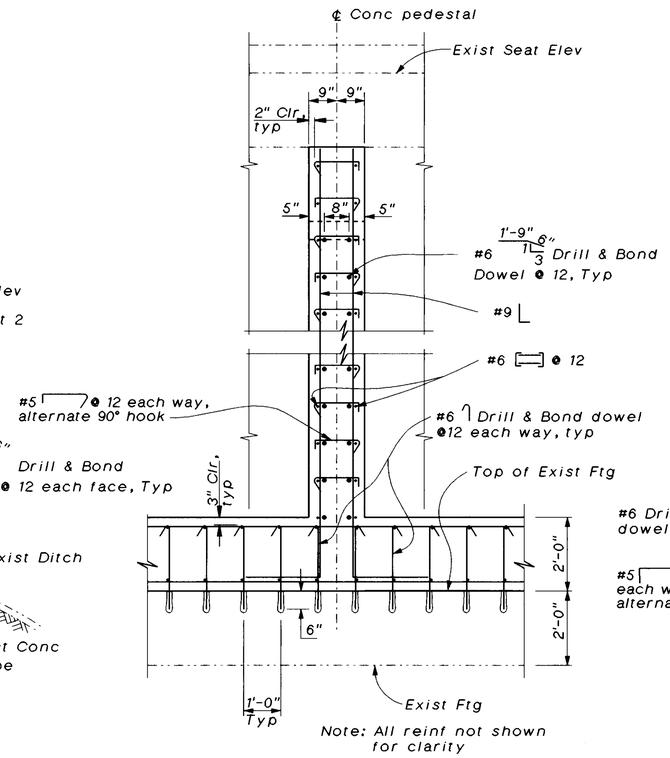

Note: All reinf not shown for clarity

SECTION D-D

1/2" = 1'-0"

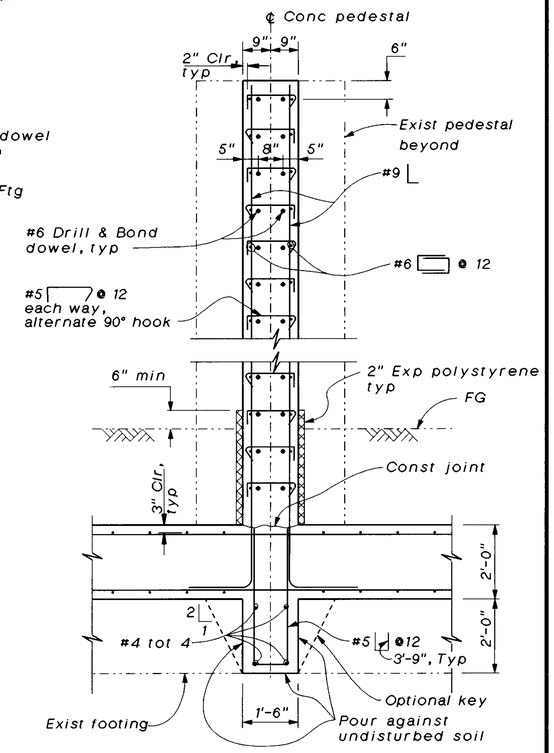

SECTION C-C

1/2" = 1'-0"

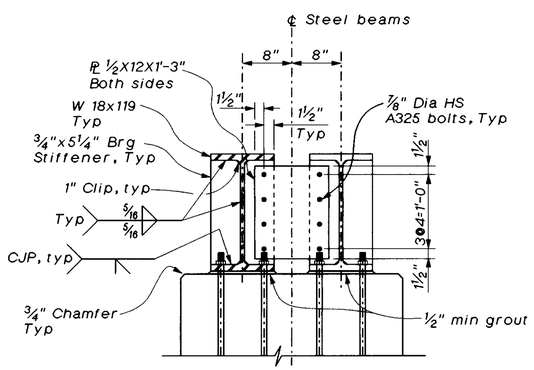

SECTION E-E

1" = 1'-0"

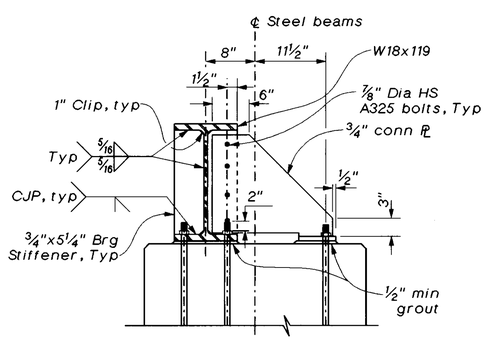

SECTION F-F

1" = 1'-0"

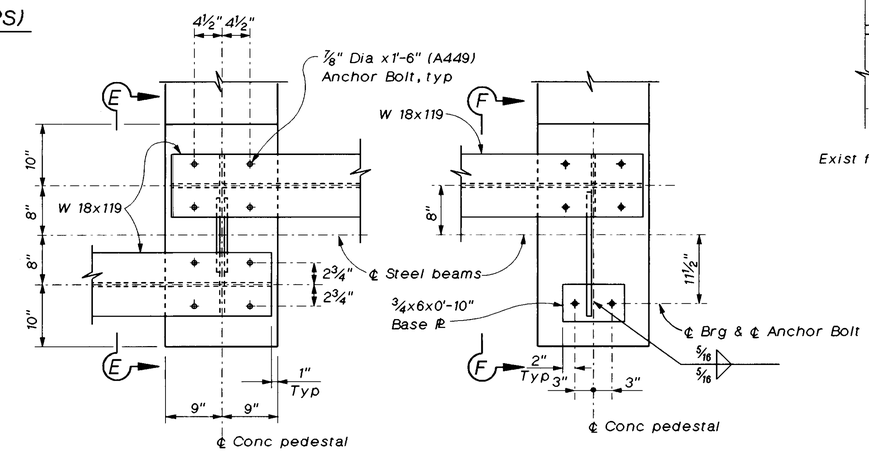

(INTERIOR) (EXTERIOR)

DETAIL 2

1" = 1'-0"

NO AS BUILT CHANGES
AS BUILT
CORRECTION BY BRIAN BEAUDOIN
CONTRACT NO. 04-043934
DATE FEBRUARY, 2002
STRUCTURES REPRESENTATIVE

The Contractor shall verify all controlling field dimensions before ordering or fabricating any material.

SEISMIC RETROFIT PROJECT NO. 611

CARQUINEZ BRIDGE - "A4E" LINE (APPROACH SPAN)

ABUTMENT DETAILS NO. 2

Vong Toan
DESIGN OVERSIGHT
April 24, 1997
SIGN OFF DATE

	BY	CHECKED
DESIGN	V. Trinh	T. J. Chou
DETAILS	G. Buelow	A. Wang
QUANTITIES	J. Lu	J. Chen

PREPARED FOR THE STATE OF CALIFORNIA DEPARTMENT OF TRANSPORTATION

Lee Holloway
PROJECT ENGINEER

BRIDGE NO. 23-15 R
POST MILE CC-13.47

CU 04-268
EA 043931

a4e-ab2.dlv

ORIGINAL SCALE IN INCHES FOR REDUCED PLANS 0 1 2 3

DISREGARD PRINTS BEARING EARLIER REVISION DATES → 17-MAR-1997

REVISION DATES (PRELIMINARY STAGE ONLY)

SHEET 10 OF 120

ClibPDF - www.fastio.com

DIST.	COUNTY	ROUTE	POST MILES TOTAL PROJECT	SHEET NO.	TOTAL SHEETS
04	CC/Sol	80	12.8/14.1, 0.0/0.6	410	555

R.W. Fox

REGISTERED GEOLOGIST — R.W. FOX — No. 78 — Exp. 8-31-97 — CERTIFIED ENGINEERING GEOLOGIST — STATE OF CALIFORNIA

10-20-97
PLANS APPROVAL DATE

THE STATE OF CALIFORNIA OR ITS OFFICERS OR AGENTS SHALL NOT BE RESPONSIBLE FOR THE ACCURACY OR COMPLETENESS OF ELECTRONIC COPIES OF THIS PLAN SHEET.

FOR PLAN VIEW, SEE "LOG OF TEST BORINGS, SHEET 1 OF 35"

NO AS BUILT CHANGES
AS BUILT
CORRECTION BY BRIAN BEAUDOIN
CONTRACT NO. 04-043934
DATE FEBRUARY, 2002
STRUCTURES REPRESENTATIVE

NOTE: FOR FIELD LOGGING NOTATIONS, SEE "LOG OF TEST BORINGS, SHEET 2 OF 35"

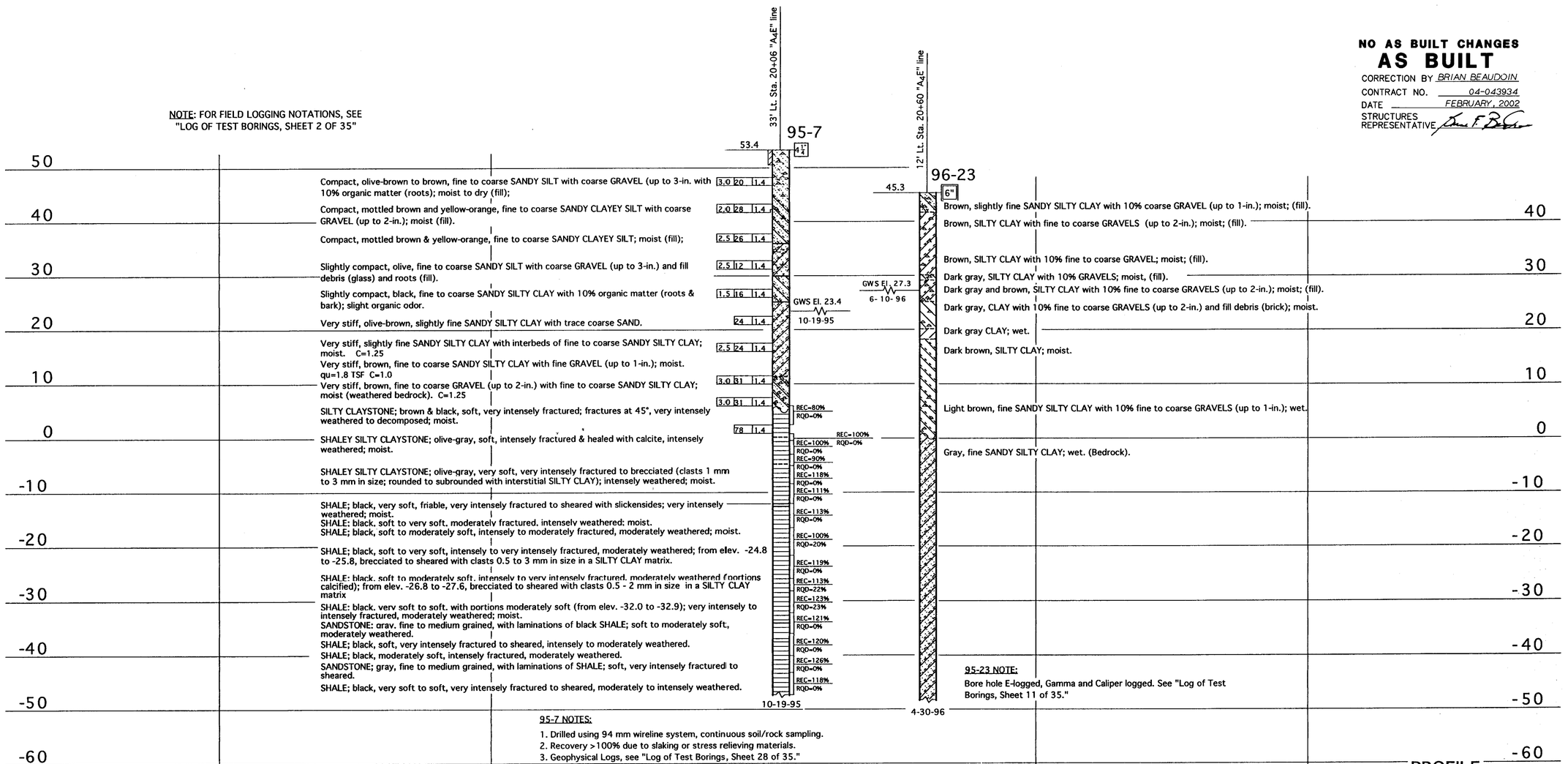

95-7 NOTES:
1. Drilled using 94 mm wireline system, continuous soil/rock sampling.
2. Recovery >100% due to slaking or stress relieving materials.
3. Geophysical Logs, see "Log of Test Borings, Sheet 28 of 35."

PROFILE
Hor. 1" = 20'
Ver. 1" = 10'

LEGEND OF BORING OPERATIONS

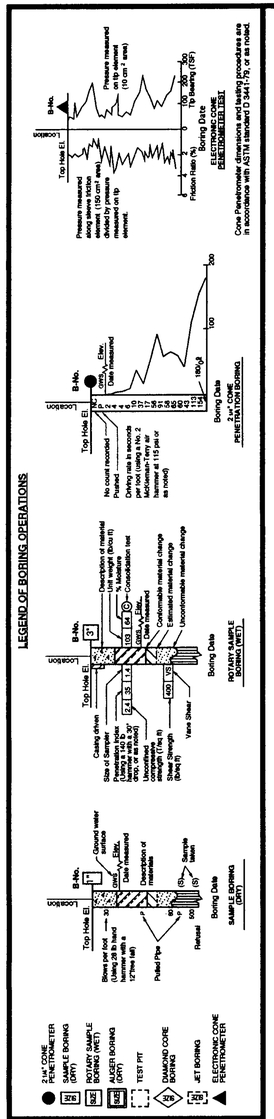

LEGEND OF EARTH MATERIALS

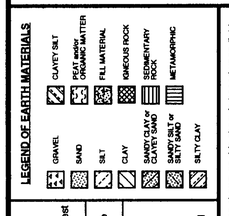

CONSISTENCY CLASSIFICATION FOR SOILS

According to the Standard Penetration Test

Penetration Index (Blows / Ft)	Granular	Cohesive
0-4	Very Loose	Very Soft
5-9	Loose	Soft
10-19	Slightly compact	Stiff
20-34	Compact	Very Stiff
35-69	Dense	Hard
>70	Very Dense	Very Hard

NOTE: Classification of earth material as shown on this sheet is based upon field inspection and is not to be construed to imply mechanical analysis.

ENGINEERING SERVICE CENTER	STRUCTURE FOUNDATIONS
DRAWN BY Jim Somers 8/96	
CHECKED BY	

FIELD INVESTIGATION BY:
L. JENSEN, M. FILBERTI, B. TRINH & J. WITTRY

State of CALIFORNIA
DEPARTMENT OF TRANSPORTATION

DIVISION OF STRUCTURES
STRUCTURE DESIGN

BRIDGE NO. 23-15 R/L
POST MILE CC-13.48 Sol-1.72

EARTHQUAKE RETROFIT - PROJECT No. SR-611
CARQUINEZ BRIDGE - SOUTH APPROACH
LOG OF TEST BORINGS 10 OF 35

ORIGINAL SCALE IN INCHES FOR REDUCED PLANS → 0 1 2 3

CU: 04
EA: 043921/043931

DISREGARD PRINTS BEARING EARLIER REVISION DATES →
REVISION DATES (PRELIMINARY STAGE ONLY)
SHEET 45 OF 70

TL 6051 REV. 5/95

ClibPDF - www.fastio.com

DIST	COUNTY	ROUTE	POST MILES TOTAL PROJECT	SHEET NO.	TOTAL SHEETS
04	CC,SOL	80	12.8/14.1, 0.0/0.6	446	555

Robert L. Morrison Jr
REGISTERED CIVIL ENGINEER

10-20-97
PLANS APPROVAL DATE

REGISTERED PROFESSIONAL ENGINEER
Robert L. Morrison Jr
No. 43693
Exp. 03/31/97
CIVIL
STATE OF CALIFORNIA

CH2M HILL
2485 NATOMAS PARK DR, SUITE 600
SACRAMENTO, CALIFORNIA 95833

The State of California or its officers or agents shall not be responsible for the accuracy or completeness of electronic copies of this plan sheet.

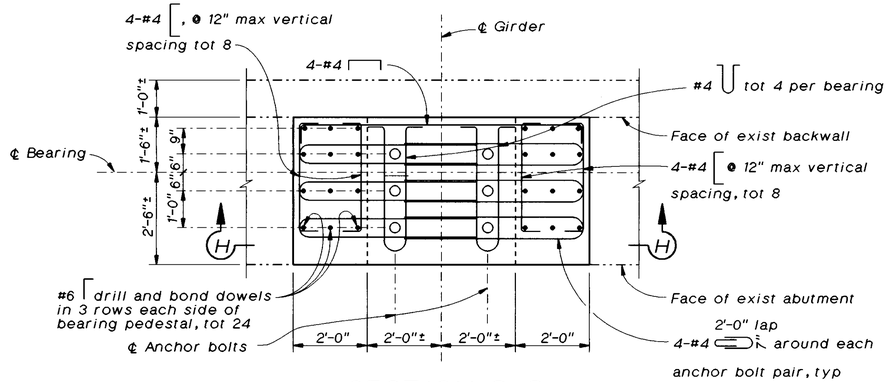

SECTION G-G

½"=1'-0"

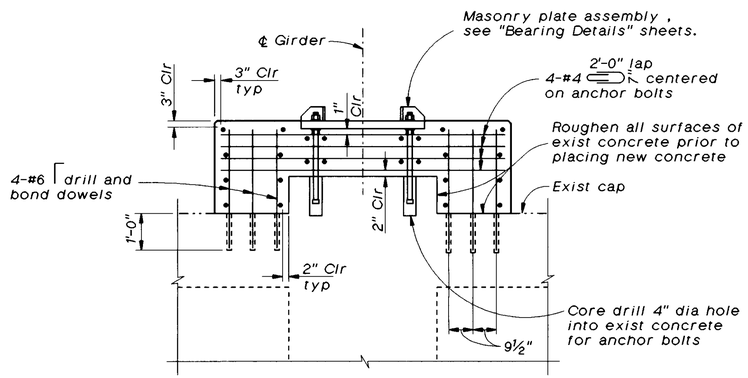

SECTION H-H

½"=1'-0"

NO AS BUILT CHANGES
AS BUILT
CORRECTION BY BRIAN BEAUDOIN
CONTRACT NO. 04-043934
DATE FEBRUARY, 2002
STRUCTURES REPRESENTATIVE

Notes:

1. *For locations of Section G-G, see "Abutment Details No. 1" sheet.*
2. *For anchor bolt locations and core drill depth, see "Bearing Details" sheets.*

The Contractor shall verify all controlling field dimensions before ordering or fabricating any material.

SEISMIC RETROFIT PROJECT NO. 611

CARQUINEZ BRIDGE - "A4E" LINE (APPROACH SPAN)

ABUTMENT DETAILS NO. 3

Vong Toan
DESIGN OVERSIGHT
April 24, 1997
SIGN OFF DATE

	BY	CHECKED
DESIGN	R. Morrison, Jr.	L. Shen, J. Quincy
DETAILS	A. Galbraith	J. Quincy
QUANTITIES	D. Nguyen-Tan, S. Ismail	J. Downing

PREPARED FOR THE STATE OF CALIFORNIA DEPARTMENT OF TRANSPORTATION

Lee Holloway
PROJECT ENGINEER

BRIDGE NO. 23-15 R
POST MILE CC-13.47

ca4-ab2.dlv

ORIGINAL SCALE IN INCHES FOR REDUCED PLANS 0 1 2 3

CU 04-268
EA 043931

DISREGARD PRINTS BEARING EARLIER REVISION DATES → 15-MAR-1997

REVISION DATES (PRELIMINARY STAGE ONLY)

SHEET 11 OF 120

ClibPDF - www.fastio.com

DIST.	COUNTY	ROUTE	POST MILES TOTAL PROJECT	SHEET NO.	TOTAL SHEETS
04	CC/Sol	80	12.8/14.1, 0.0/0.6	411	555

The information represented on this drawing title "Carquinez Bridge South Approach" was not the result of any work developed, performed or completed by this Department (Caltrans). All such activity appears to be by those parties presented on this drawing who would bear all such responsibility. This drawing is available and presented only for the convenience of any bidder, contractor or other interested party. It should be expressly understood that Caltrans assumes no responsibility whatsoever in respect to the sufficiency or accuracy, completeness, interpretation set forth therein or any other aspect of the information shown on or represented by this drawing.

Signed By: R. W. Day Date: 10-1-96

NO AS BUILT CHANGES
AS BUILT
CORRECTION BY BRIAN BEAUDOIN
CONTRACT NO. 04-043934
DATE FEBRUARY, 2002
STRUCTURES REPRESENTATIVE

GEO-HYDRO-DATA
INCORPORATED

NATURAL GAMMA LOG

OTHER SERVICES:
INVOICE
9950

96-23

COMPANY : CAL TRANS
WELL : B 32A NEAR BEND AE-8
LOCATION/FIELD : CARQUINEZ BRIDGE
COUNTY : CONTRA COSTA
STATE : CA.
SECTION : N/A TOWNSHIP : N/A RANGE : N/A

DATE : 04/30/96 PERMANENT DATUM : G.L. ELEVATIONS
DEPTH DRILLER : 95 FEET ELEV. PERM. DATUM: N/A KB : N/A
LOG BOTTOM : 48.30 LOG MEASURED FROM: G.L. DF : N/A
LOG TOP : 4.00 DRL MEASURED FROM: G.L. GL : N/A

CASING DRILLER : - LOGGING UNIT : 10
CASING TYPE : - FIELD OFFICE : CLEMENTS,CA.
CASING THICKNESS: - RECORDED BY : D.SHANHOLTZR

BIT SIZE : 6 BOREHOLE FLUID : AUGER FILE : ORIGINAL
MAGNETIC DECL. : RM : - TYPE : 9041A
MATRIX DENSITY : - RM TEMPERATURE : - LOG : 0
FLUID DENSITY : MATRIX DELTA T : - PLOT : 1 57
NEUTRON MATRIX : N/A FLUID DELTA T : - THRESH: 4000
REMARKS :
DRILLED BY: CAL TRANS

ALL SERVICES PROVIDED SUBJECT TO STANDARD TERMS AND CONDITIONS

GEO-HYDRO-DATA
INCORPORATED

ELECTRIC WELL LOG

OTHER SERVICES:
INVOICE
9950

96-23

COMPANY : CAL TRANS
WELL : B 32A NEAR BEND AE-8
LOCATION/FIELD : CARQUINEZ BRIDGE
COUNTY : CONTRA COSTA
STATE : CA.
SECTION : N/A TOWNSHIP : N/A RANGE : N/A

DATE : 04/30/96 PERMANENT DATUM : G.L. ELEVATIONS
DEPTH DRILLER : 95 FEET ELEV. PERM. DATUM: N/A KB : N/A
LOG BOTTOM : 48.30 LOG MEASURED FROM: G.L. DF : N/A
LOG TOP : 4.00 DRL MEASURED FROM: G.L. GL : N/A

CASING DRILLER : - LOGGING UNIT : 10
CASING TYPE : - FIELD OFFICE : CLEMENTS,CA.
CASING THICKNESS: - RECORDED BY : D.SHANHOLTZR

BIT SIZE : 6 BOREHOLE FLUID : AUGER FILE : ORIGINAL
MAGNETIC DECL. : RM : - TYPE : 9041A
MATRIX DENSITY : - RM TEMPERATURE : - LOG : 0
FLUID DENSITY : MATRIX DELTA T : - PLOT : 1 0
NEUTRON MATRIX : N/A FLUID DELTA T : - THRESH: 4000
REMARKS :
DRILLED BY: CAL TRANS

~~ALL SERVICES PROVIDED SUBJECT TO STANDARD TERMS AND CONDITIONS~~

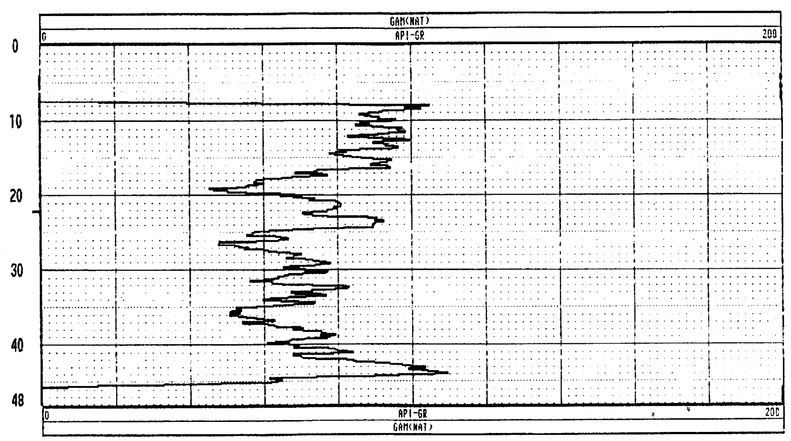

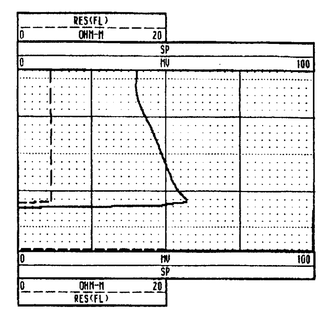

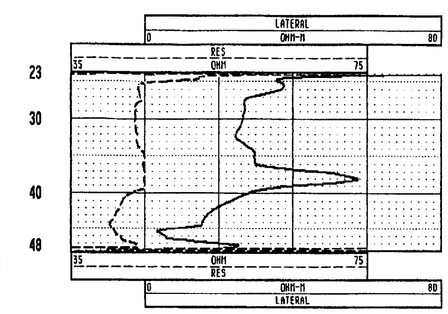

EARTHQUAKE RETROFIT - PROJECT No. SR-611

ENGINEERING SERVICE CENTER	STRUCTURE FOUNDATIONS	FIELD INVESTIGATION BY:	State of CALIFORNIA DEPARTMENT OF TRANSPORTATION	DIVISION OF STRUCTURES STRUCTURE DESIGN	BRIDGE NO. 23-15 R/L	CARQUINEZ BRIDGE - SOUTH APPROACH
PREPARED BY	Irma Zamarra 8/96				POST MILE CC-13.48 Sol-1.72	LOG OF TEST BORINGS 11 OF 35
CHECKED BY						

ORIGINAL SCALE IN INCHES FOR REDUCED PLANS → 0 1 2 3

CU: 04
EA: 043921/043931

DISREGARD PRINTS BEARING EARLIER REVISION DATES →

REVISION DATES (PRELIMINARY STAGE ONLY)

SHEET 46 OF 70

TL 6051 REV. 7/96

ClibPDF - www.fastio.com

DIST	COUNTY	ROUTE	POST MILES TOTAL PROJECT	SHEET NO.	TOTAL SHEETS
04	CC, SOL	80	12.8/14.1, 0.0/0.6	448	553

Robert L. Morrison Jr.
REGISTERED CIVIL ENGINEER

10-20-97
PLANS APPROVAL DATE

REGISTERED PROFESSIONAL ENGINEER
Robert L. Morrison Jr.
No. 43693
Exp. 03/31/97
CIVIL
STATE OF CALIFORNIA

CH2M HILL
2485 NATOMAS PARK DR, SUITE 600
SACRAMENTO, CALIFORNIA 95833

The State of California or its officers or agents shall not be responsible for the accuracy or completeness of electronic copies of this plan sheet.

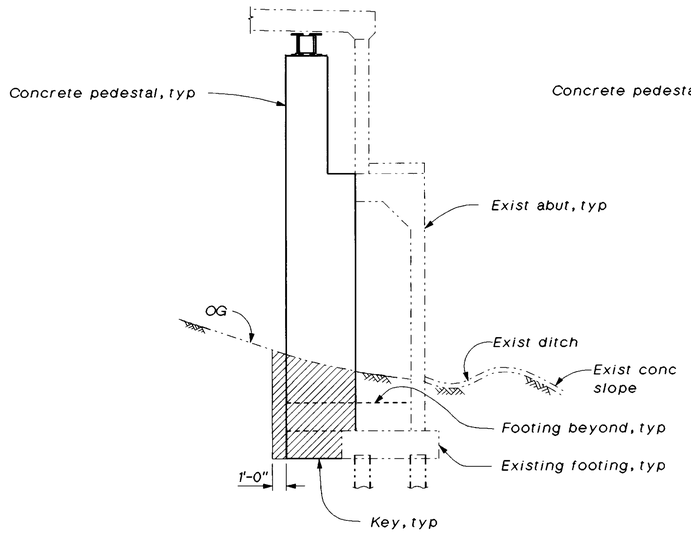

SECTION @ PILASTER

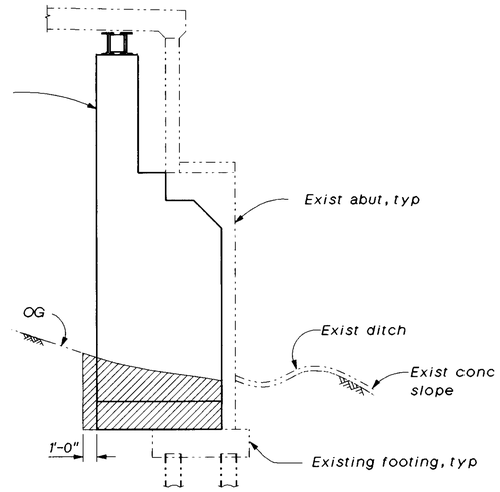

SECTION BETWEEN PILASTERS

EXCAVATION

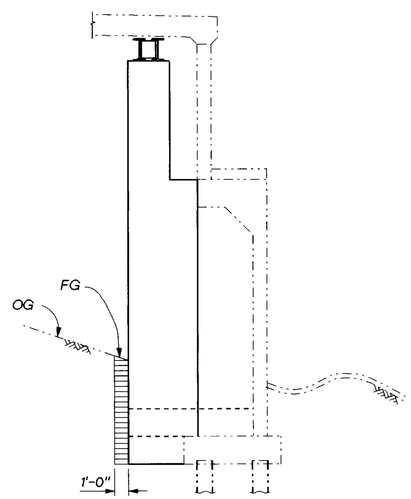

SECTION @ PILASTER

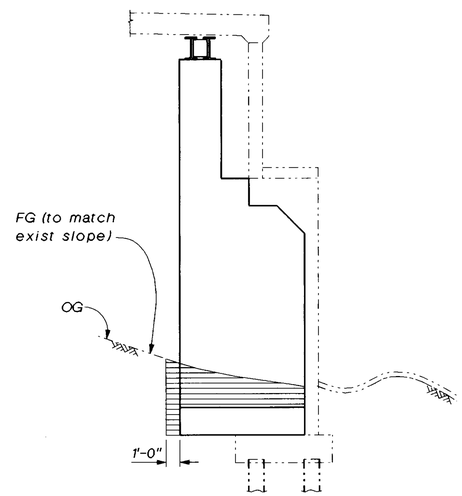

SECTION BETWEEN PILASTERS

BACKFILL

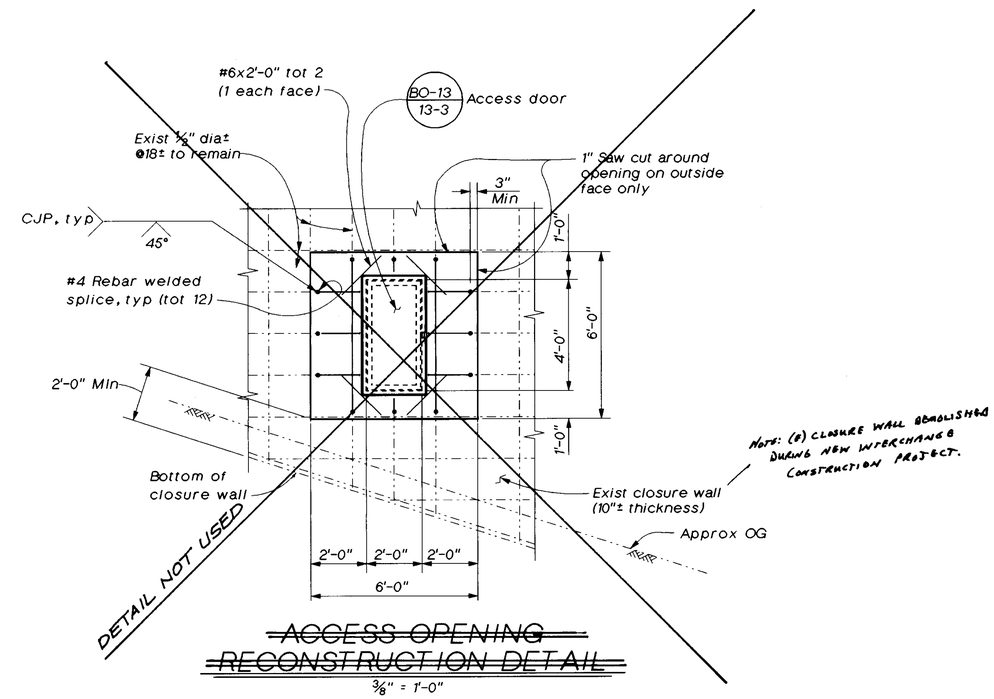

NOTE: (E) CLOSURE WALL ABANDONED DURING NEW INTERCHANGE CONSTRUCTION PROJECT.

~~ACCESS OPENING RECONSTRUCTION DETAIL~~

3/8" = 1'-0"

LEGEND

Structure Excavation

Structure Backfill

AS BUILT
CORRECTION BY BRIAN BEAUDOIN
CONTRACT NO. 04-043934
DATE FEBRUARY, 2002
STRUCTURES REPRESENTATIVE

The Contractor shall verify all controlling field dimensions before ordering or fabricating any material.

LIMITS OF PAYMENT FOR STRUCTURE EXCAVATION AND BACKFILL

No Scale

SEISMIC RETROFIT PROJECT NO. 611

CARQUINEZ BRIDGE - "A4E" LINE (APPROACH SPAN)

ABUTMENT DETAILS NO. 4

Vong Toan
DESIGN OVERSIGHT
April 29, 1997
SIGN OFF DATE

	BY	CHECKED
DESIGN	V. Trinh	T. J. Chou
DETAILS	G. Buelow	A. Wang
QUANTITIES	J. Lu	J. Chen

PREPARED FOR THE STATE OF CALIFORNIA DEPARTMENT OF TRANSPORTATION

Lee Holloway
PROJECT ENGINEER

BRIDGE NO. 23-15 R
POST MILE CC-13.47

CU 04-268
EA 043931

a4e-ab4.dlv

ORIGINAL SCALE IN INCHES FOR REDUCED PLANS 0 1 2 3

DISREGARD PRINTS BEARING EARLIER REVISION DATES → 17-MAR-1997

REVISION DATES (PRELIMINARY STAGE ONLY) | SHEET 12 | OF 120

ClibPDF - www.fastio.com

DIST.	COUNTY	ROUTE	POST MILES TOTAL PROJECT	SHEET NO.	TOTAL SHEETS
04	CC/Sol	80	12.8/14.1, 0.0/0.6	412	555

R. W. FOX
REGISTERED GEOLOGIST
No. 78
Exp. 8-31-97
CERTIFIED ENGINEERING GEOLOGIST
STATE OF CALIFORNIA

10-20-97
PLANS APPROVAL DATE

THE STATE OF CALIFORNIA OR ITS OFFICERS OR AGENTS SHALL NOT BE RESPONSIBLE FOR THE ACCURACY OR COMPLETENESS OF ELECTRONIC COPIES OF THIS PLAN SHEET.

NOTE: FOR FIELD LOGGING NOTATIONS SEE LOG OF TEST BORINGS, SHEET 2 OF 35.

FOR PLAN VIEW, SEE "LOG OF TEST BORINGS", SHEET 1 OF 35.

NO AS BUILT CHANGES
AS BUILT
CORRECTION BY BRIAN BEAUDOIN
CONTRACT NO. 04-043934
DATE FEBRUARY, 2002
STRUCTURES REPRESENTATIVE

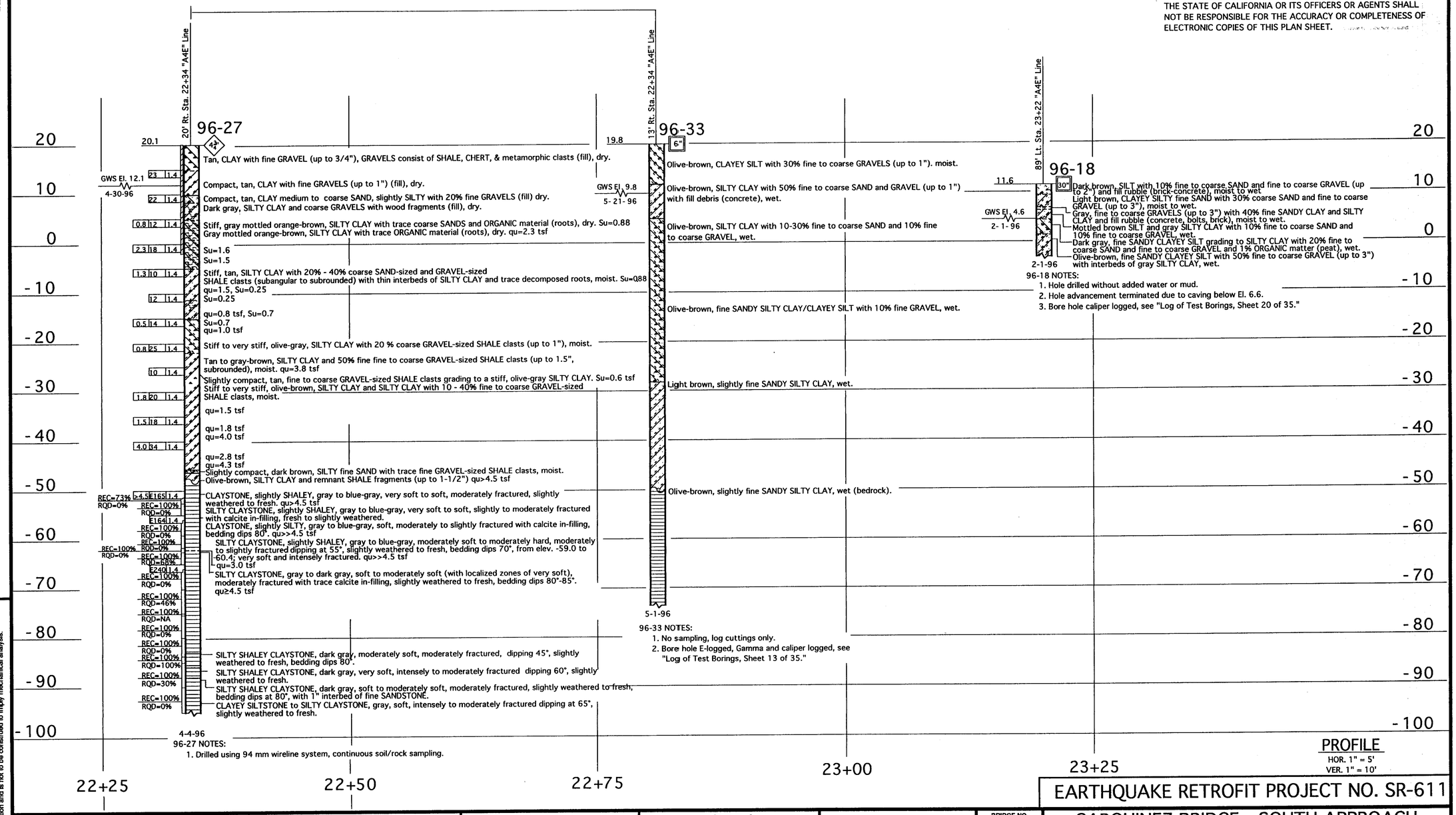

PROFILE
HOR. 1" = 5'
VER. 1" = 10'

LEGEND OF BORING OPERATIONS

LEGEND OF EARTH MATERIALS: GRAVEL, SAND, SILT, CLAY, SANDY CLAY or CLAYEY SAND, SANDY SILT or SILTY SAND, SILTY CLAY, CLAYEY SILT, PEAT and/or ORGANIC MATTER, FILL MATERIAL, IGNEOUS ROCK, SEDIMENTARY ROCK, METAMORPHIC

CONSISTENCY CLASSIFICATION FOR SOILS
According to the Standard Penetration Test

Penetration Index (Blows / Ft)	Granular	Cohesive
0-4	Very Loose	Very Soft
5-9	Loose	Soft
10-19	Slightly compact	Stiff
20-34	Compact	Very Stiff
35-69	Dense	Hard
>70	Very Dense	Very Hard

NOTE: Classification of earth material as shown on this sheet is based upon field inspection and is not to be construed to imply mechanical analysis.

EARTHQUAKE RETROFIT PROJECT NO. SR-611

CARQUINEZ BRIDGE - SOUTH APPROACH

LOG OF TEST BORINGS 12 OF 35

ENGINEERING SERVICE CENTER | STRUCTURE FOUNDATIONS

DRAWN BY Ken Wahl 8-96
CHECKED BY

FIELD INVESTIGATION BY: L. JENSEN & H. VALENCIA

State of CALIFORNIA DEPARTMENT OF TRANSPORTATION

DIVISION OF STRUCTURES
STRUCTURE DESIGN

BRIDGE NO. 23-15 R/L
POST MILE CC-13.48 Sol-1.72

CU: 04
EA: 043921/043931

ORIGINAL SCALE IN INCHES FOR REDUCED PLANS → 0 1 2 3

DISREGARD PRINTS BEARING EARLIER REVISION DATES →

REVISION DATES (PRELIMINARY STAGE ONLY)

SHEET 47 OF 70

TL 6051 REV. 5/95

ClibPDF - www.fastio.com

DIST	COUNTY	ROUTE	POST MILES TOTAL PROJECT	SHEET NO.	TOTAL SHEETS
04	CC, SOL	80	12.8/14.1, 0.0/0.6	448	595

Robert L. Morrison Jr.
REGISTERED CIVIL ENGINEER

10-20-97
PLANS APPROVAL DATE

REGISTERED PROFESSIONAL ENGINEER
Robert L. Morrison Jr.
No. 43693
Exp. 03/31/97
CIVIL
STATE OF CALIFORNIA

CH2M HILL
2485 NATOMAS PARK DR, SUITE 600
SACRAMENTO, CALIFORNIA 95833

The State of California or its officers or agents shall not be responsible for the accuracy or completeness of electronic copies of this plan sheet.

Note:
Pier 5 left girder pedestal shown. Right girder pedestal similar.

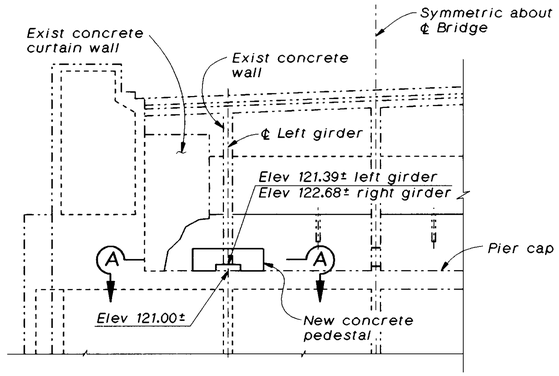

PART ELEVATION - PIER 5

1/8"=1'-0"

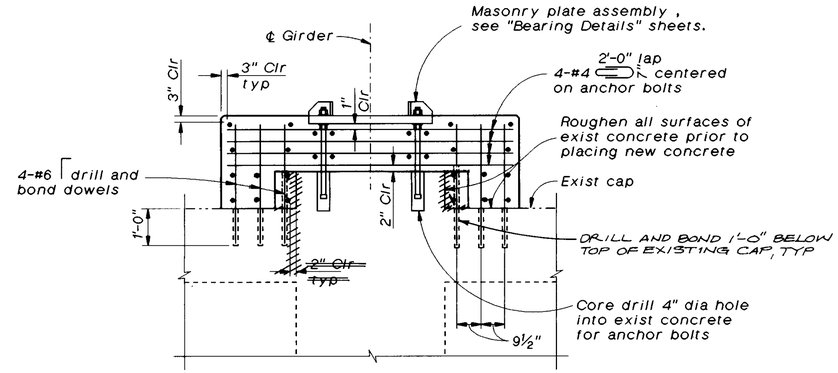

SECTION B-B

1/2"=1'-0"

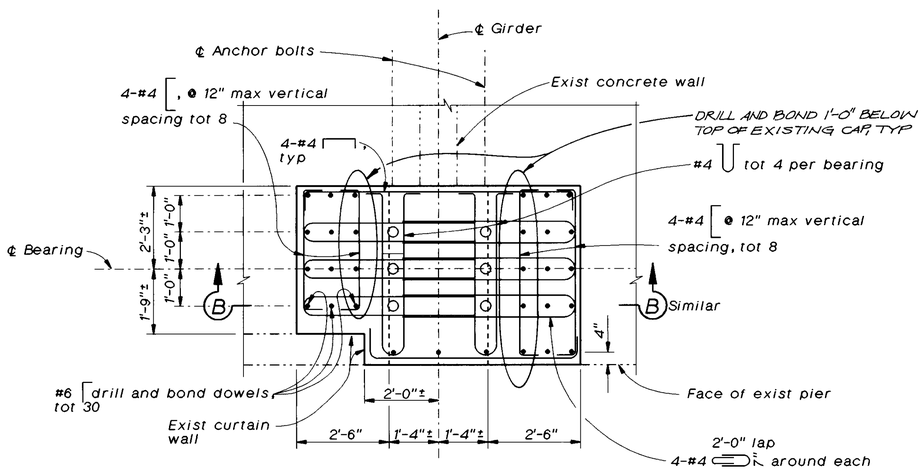

SECTION A-A

1/2"=1'-0"

AS BUILT
CORRECTION BY BRIAN BEAUDOIN
CONTRACT NO. 04-043934
DATE FEBRUARY, 2002
STRUCTURES REPRESENTATIVE

Notes:
1. For anchor bolt locations and core drill depth, see "Bearing Details" sheets.

The Contractor shall verify all controlling field dimensions before ordering or fabricating any material.

SEISMIC RETROFIT PROJECT NO. 611

CARQUINEZ BRIDGE - "A4E" LINE (APPROACH SPAN)

PIER 5 DETAILS

Vong Toan
DESIGN OVERSIGHT
April 24, 1997
SIGN OFF DATE

	BY	CHECKED
DESIGN	R. Morrison, Jr.	L. Shen, J. Quincy
DETAILS	A. Galbraith	J. Quincy
QUANTITIES	D. Nguyen-Tan, S. Ismail	J. Downing

PREPARED FOR THE STATE OF CALIFORNIA DEPARTMENT OF TRANSPORTATION

Lee Holloway
PROJECT ENGINEER

BRIDGE NO. 23-15 R
POST MILE CC-13.47

ca4-p5d.dlv

ORIGINAL SCALE IN INCHES FOR REDUCED PLANS 0 1 2 3

CU 04-268
EA 043931

DISREGARD PRINTS BEARING EARLIER REVISION DATES → 15-MAR-1997

REVISION DATES (PRELIMINARY STAGE ONLY)

SHEET 13 OF 120

ClibPDF - www.fastio.com

DIST.	COUNTY	ROUTE	POST MILES TOTAL PROJECT	SHEET NO.	TOTAL SHEETS
04	CC/Sol	80	12.8/14.1, 0.0/0.6	413	555

The information represented on this drawing title "Carquinez Bridge South Approach" was not the result of any work developed, performed or completed by this Department (Caltrans). All such activity appears to be by those parties presented on this drawing who would bear all such responsibility. This drawing is available and presented only for the convenience of any bidder, contractor or other interested party. It should be expressly understood that Caltrans assumes no responsibility whatsoever in respect to the sufficiency or accuracy, completeness, interpretation set forth therein or any other aspect of the information shown on or represented by this drawing.

Signed By: [illegible] Date: 10-1-96

GEO-HYDRO-DATA

INCORPORATED

NATURAL GAMMA LOG

96-33

OTHER SERVICES: INVOICE 9550 RUN 2

COMPANY : CAL TRANS
WELL : B 33 NEAR BENCH AH-9
LOCATION/FIELD : CARQUINEZ BRIDGE
COUNTY : CONTRA COSTA
STATE : CALIFORNIA
SECTION : . TOWNSHIP : . RANGE : .

DATE : 05/01/96 PERMANENT DATUM : GL ELEVATIONS
DEPTH DRILLER : 93.5 ELEV. PERM. DATUM: KB :
LOG BOTTOM : 84.50 LOG MEASURED FROM: GL DF :
LOG TOP : -1.00 DRL MEASURED FROM: GL GL :

CASING DRILLER : . LOGGING UNIT : 7
CASING TYPE : . FIELD OFFICE : TDMACHAPI
CASING THICKNESS: . RECORDED BY : H. KEMP

BIT SIZE : 6 BOREHOLE FLUID : NATURAL FILE : ORIGINAL
MAGNETIC DECL. : . RM : . TYPE : 9041A
MATRIX DENSITY : . RM TEMPERATURE : . LOG : 1
FLUID DENSITY : . MATRIX DELTA T : . PLOT : 1 57
NEUTRON MATRIX : FLUID DELTA T : . THRESH: 3000
REMARKS :
DRILLED BY: CAL TRANS
LOG IN OPEN HOLE

ALL SERVICES PROVIDED SUBJECT TO STANDARD TERMS AND CONDITIONS

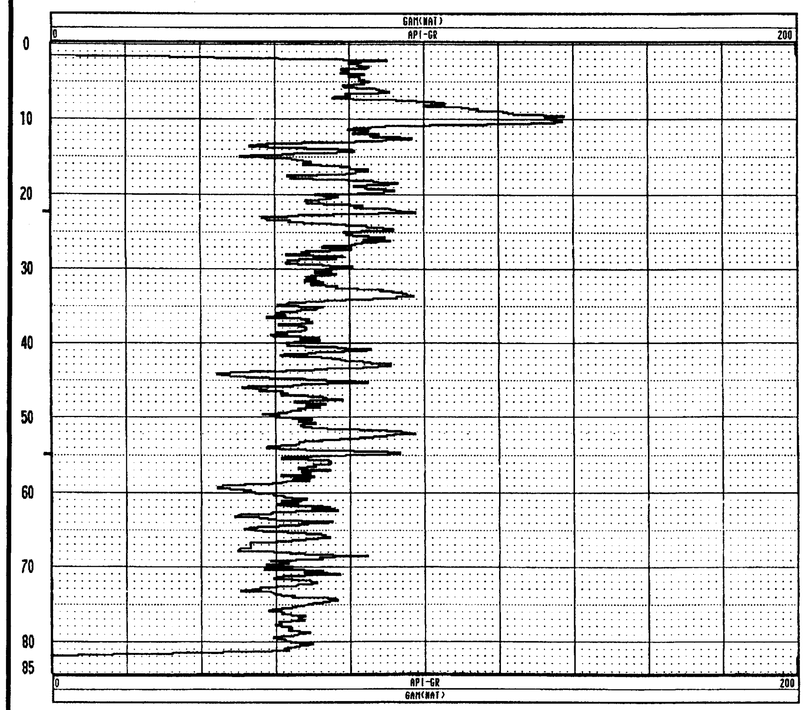

GEO-HYDRO-DATA

INCORPORATED

CALIPER LOG

96-33

OTHER SERVICES: INVOICE 9550 RUN 2

COMPANY : CAL TRANS
WELL : B 33 NEAR BENCH AH-9
LOCATION/FIELD : CARQUINEZ BRIDGE
COUNTY : CONTRA COSTA
STATE : CALIFORNIA
SECTION : . TOWNSHIP : . RANGE : .

DATE : 05/01/96 PERMANENT DATUM : GL ELEVATIONS
DEPTH DRILLER : 93.5 ELEV. PERM. DATUM: KB :
LOG BOTTOM : 47.00 LOG MEASURED FROM: GL DF :
LOG TOP : 3.18 DRL MEASURED FROM: GL GL :

CASING DRILLER : . LOGGING UNIT : 7
CASING TYPE : . FIELD OFFICE : TDMACHAPI
CASING THICKNESS: . RECORDED BY : H. KEMP

BIT SIZE : 6 BOREHOLE FLUID : FILE : ORIGINAL
MAGNETIC DECL. : . RM : . TYPE : 9064A1
MATRIX DENSITY : . RM TEMPERATURE : . LOG : 2
FLUID DENSITY : . MATRIX DELTA T : . PLOT : CHP GR
NEUTRON MATRIX : FLUID DELTA T : . THRESH: 3000
REMARKS :
DRILLED BY: CAL TRANS
LOG IN OPEN HOLE 1:15 PM

ALL SERVICES PROVIDED SUBJECT TO STANDARD TERMS AND CONDITIONS

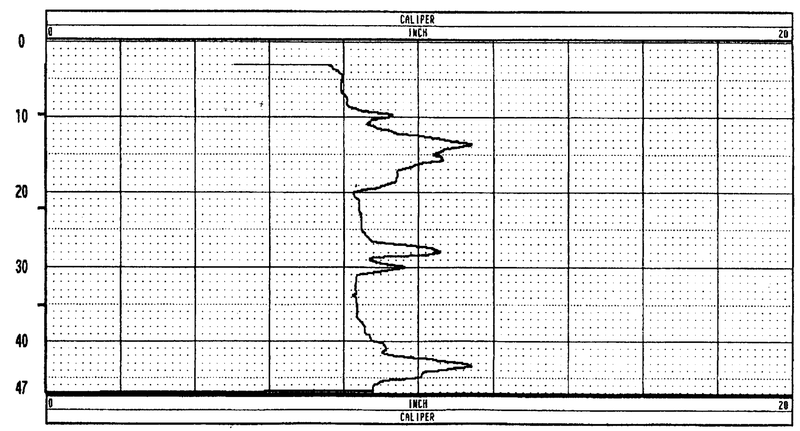

* Note: Instrument could not penetrate below 47.0' depth in bore hole due to heavy mud.

GEO-HYDRO-DATA

INCORPORATED

ELECTRIC WELL LOG

96-33

OTHER SERVICES: INVOICE 9550 RUN 2

COMPANY : CAL TRANS
WELL : B 33 NEAR BENCH AH-9
LOCATION/FIELD : CARQUINEZ BRIDGE
COUNTY : CONTRA COSTA
STATE : CALIFORNIA
SECTION : . TOWNSHIP : . RANGE : .

DATE : 05/01/96 PERMANENT DATUM : GL ELEVATIONS
DEPTH DRILLER : 93.5 ELEV. PERM. DATUM: KB :
LOG BOTTOM : 84.50 LOG MEASURED FROM: GL DF :
LOG TOP : -1.00 DRL MEASURED FROM: GL GL :

CASING DRILLER : . LOGGING UNIT : 7
CASING TYPE : . FIELD OFFICE : TDMACHAPI
CASING THICKNESS: . RECORDED BY : H. KEMP

BIT SIZE : 6 BOREHOLE FLUID : NATURAL FILE : ORIGINAL
MAGNETIC DECL. : . RM : . TYPE : 9041A
MATRIX DENSITY : . RM TEMPERATURE : . LOG : 1
FLUID DENSITY : . MATRIX DELTA T : . PLOT : CHP 8
NEUTRON MATRIX : FLUID DELTA T : . THRESH: 3000
REMARKS :
DRILLED BY: CAL TRANS
LOG IN OPEN HOLE

ALL SERVICES PROVIDED SUBJECT TO STANDARD TERMS AND CONDITIONS

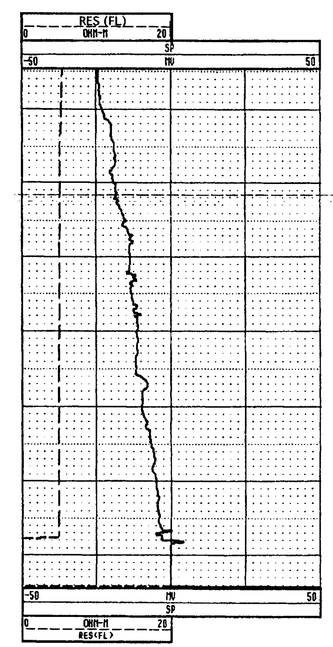

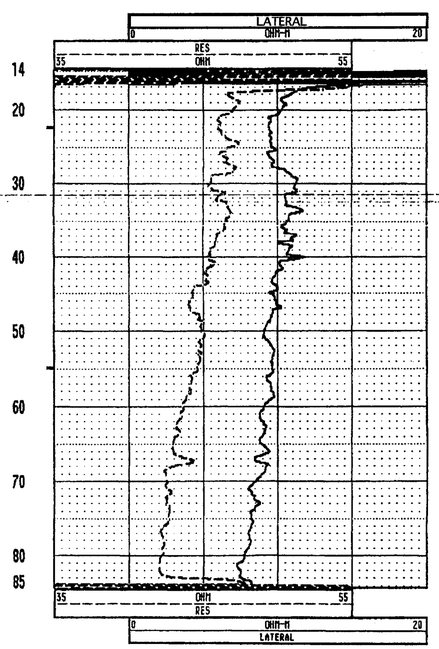

NO AS BUILT CHANGES

AS BUILT

CORRECTION BY BRIAN BEAUDOIN
CONTRACT NO. 04-043934
DATE FEBRUARY, 2002
STRUCTURES REPRESENTATIVE [signature]

EARTHQUAKE RETROFIT PROJECT NO. SR1-611

ENGINEERING SERVICE CENTER	STRUCTURE FOUNDATIONS	FIELD INVESTIGATION BY:	State of CALIFORNIA DEPARTMENT OF TRANSPORTATION	DIVISION OF STRUCTURES STRUCTURE DESIGN	BRIDGE NO. 23-15 R/L	CARQUINEZ BRIDGE - SOUTH APPROACH
PREPARED BY	Ken Wahl 8-96				POST MILE CC-13.48 Sol-1.72	LOG OF TEST BORINGS 13 OF 35
CHECKED BY						

ORIGINAL SCALE IN INCHES FOR REDUCED PLANS → 0 1 2 3

CU: 04
EA: 043921/043931

DISREGARD PRINTS BEARING EARLIER REVISION DATES →

REVISION DATES (PRELIMINARY STAGE ONLY)

SHEET 48 OF 70

TL 6052 REV. 6/95

ClibPDF - www.fastio.com

DIST	COUNTY	ROUTE	POST MILES TOTAL PROJECT	SHEET NO.	TOTAL SHEETS
04	CC, SOL	80	12.8/14.1, 0.0/0.6	449	555

REGISTERED CIVIL ENGINEER

10-20-97

PLANS APPROVAL DATE

REGISTERED PROFESSIONAL ENGINEER Robert L. Morrison Jr. No. 43693 Exp. 03/31/97 CIVIL STATE OF CALIFORNIA

CH2M HILL
2485 NATOMAS PARK DR, SUITE 600
SACRAMENTO, CALIFORNIA 95833

The State of California or its officers or agents shall not be responsible for the accuracy or completeness of electronic copies of this plan sheet.

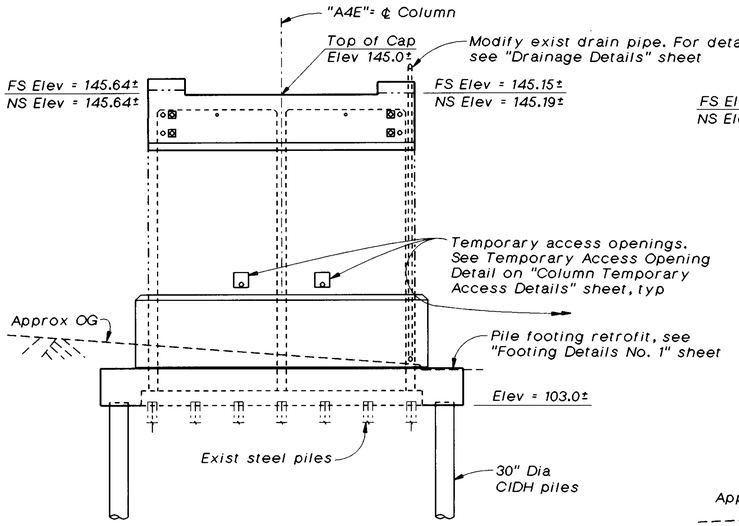

ELEVATION
1"=10'

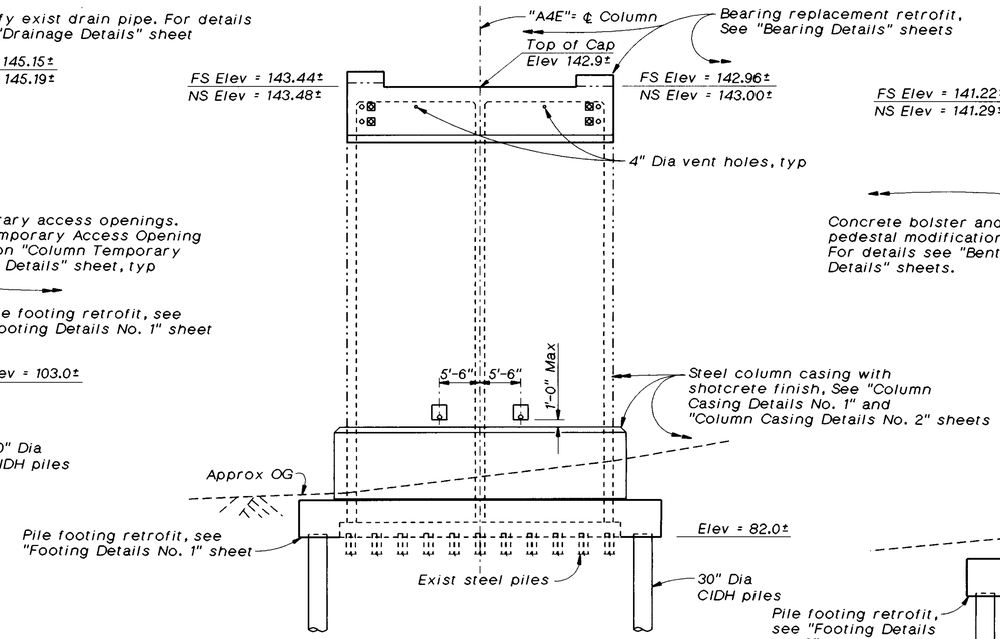

ELEVATION
1"=10'

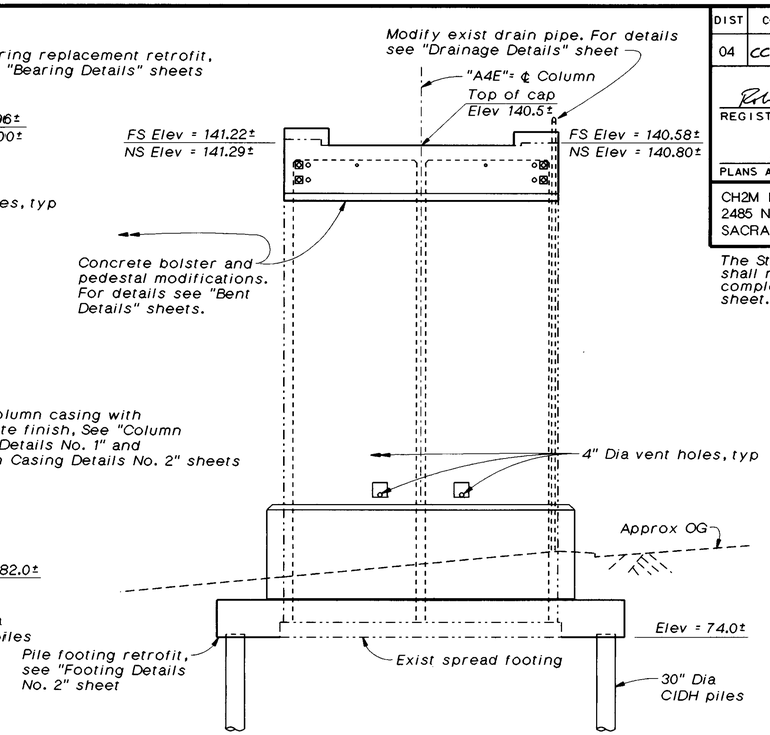

ELEVATION
1"=10'

Datum Elev = 50.0

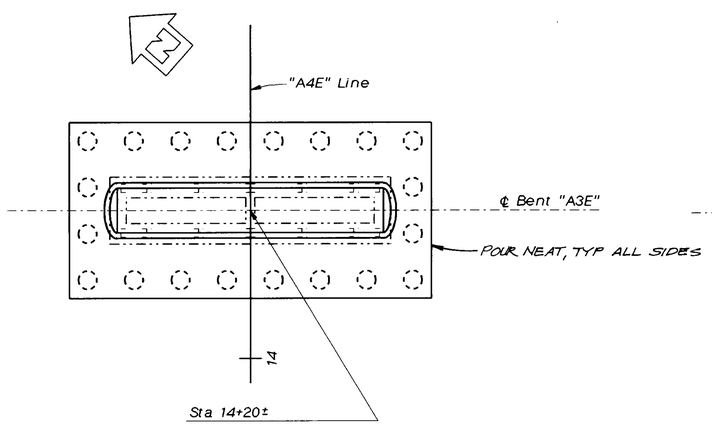

PLAN - BENT NO. "A3E"
1"=10'

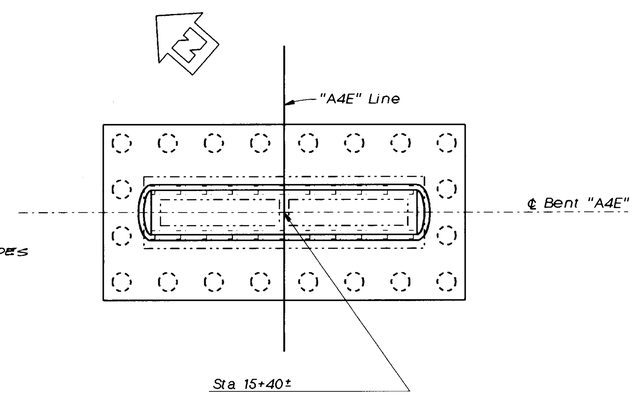

PLAN - BENT NO. "A4E"
1"=10'

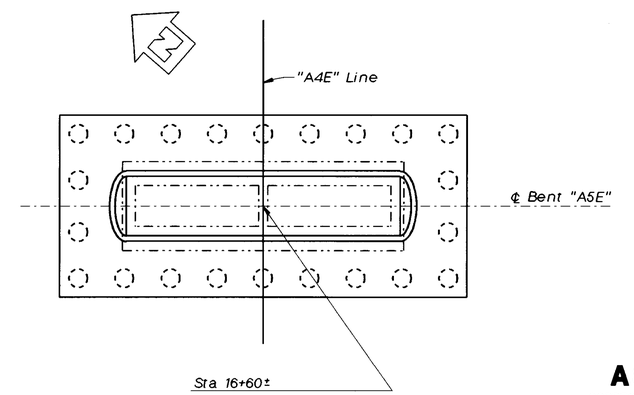

PLAN - BENT NO. "A5E"
1"=10'

AS BUILT
CORRECTION BY BRIAN BEAUDOIN
CONTRACT NO. 04-043934
DATE FEBRUARY, 2002
STRUCTURES REPRESENTATIVE

The Contractor shall verify all controlling field dimensions before ordering or fabricating any material.

SEISMIC RETROFIT PROJECT NO. 611

CARQUINEZ BRIDGE - "A4E" LINE (APPROACH SPAN)

BENT LAYOUT NO. 1

Vong Toan
DESIGN OVERSIGHT
April 29, 1997
SIGN OFF DATE

	BY	CHECKED
DESIGN	R. Morrison, Jr.	J. Downing/ J. Quincy
DETAILS	A. Kayden	J. Quincy
QUANTITIES	D. Nguyen-Tan/ S. Ismail	J. Downing

PREPARED FOR THE STATE OF CALIFORNIA DEPARTMENT OF TRANSPORTATION

Lee Holloway
PROJECT ENGINEER

BRIDGE NO. 23-15 R
POST MILE CC-13.47

ca4-bl1.dlv

ORIGINAL SCALE IN INCHES FOR REDUCED PLANS 0 1 2 3

CU 04-268
EA 043931

DISREGARD PRINTS BEARING EARLIER REVISION DATES → 15-MAR-1997

REVISION DATES (PRELIMINARY STAGE ONLY)

SHEET 14 OF 120

ClibPDF - www.fastio.com

DIST.	COUNTY	ROUTE	POST MILES TOTAL PROJECT	SHEET NO.	TOTAL SHEETS
04	CC/Sol	80	12.8/14.1,0.0/0.6	414	555

R.W. FOX
No. 78
Exp. 8-31-97
CERTIFIED ENGINEERING GEOLOGIST
REGISTERED GEOLOGIST
STATE OF CALIFORNIA

10-20-97
PLANS APPROVAL DATE

THE STATE OF CALIFORNIA OR ITS OFFICERS OR AGENTS SHALL NOT BE RESPONSIBLE FOR THE ACCURACY OR COMPLETENESS OF ELECTRONIC COPIES OF THIS PLAN SHEET.

NOTE: FOR FIELD LOGGING NOTATIONS SEE LOG OF TEST BORINGS, SHEET 2 OF 35.

FOR PLAN VIEW, SEE "LOG OF TEST BORINGS", SHEET 1 OF 35.

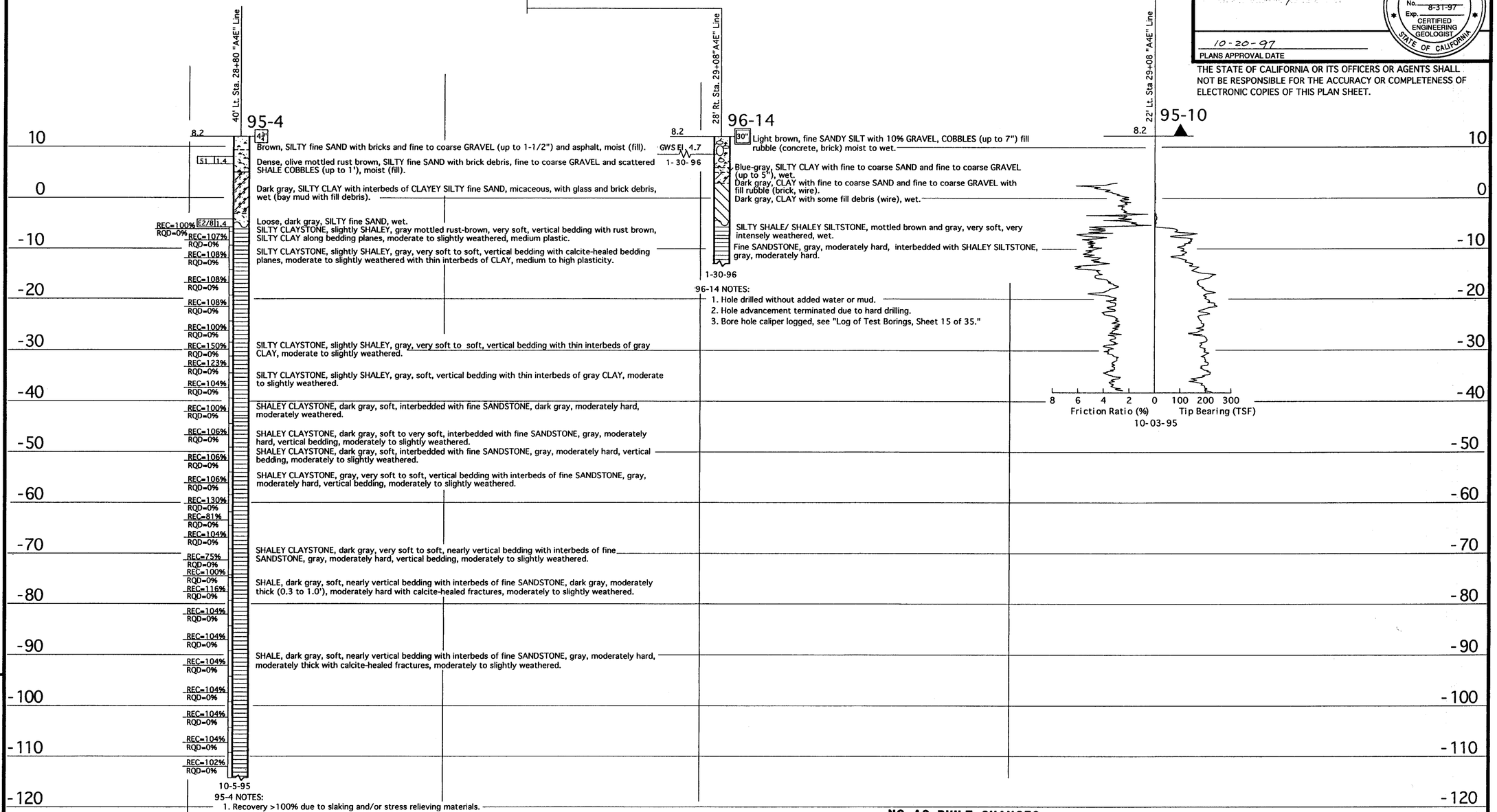

NO AS BUILT CHANGES
AS BUILT
CORRECTION BY BRIAN BEAUDOIN
CONTRACT NO. 04-043934
DATE FEBRUARY, 2002
STRUCTURES REPRESENTATIVE

PROFILE
HOR. 1" = 5'
VER. 1" = 10'

LEGEND OF BORING OPERATIONS

LEGEND OF EARTH MATERIALS: GRAVEL, SAND, SILT, CLAY, SANDY CLAY or CLAYEY SAND, SANDY SILT or SILTY SAND, SILTY CLAY, CLAYEY SILT, PEAT and/or ORGANIC MATTER, FILL MATERIAL, IGNEOUS ROCK, SEDIMENTARY ROCK, METAMORPHIC ROCK

CONSISTENCY CLASSIFICATION FOR SOILS
According to the Standard Penetration Test

Penetration Resis. (Blows / Ft)	Granular	Cohesive
0-4	Very Loose	Very Soft
5-9	Loose	Soft
10-19	Slightly compact	Stiff
20-34	Compact	Very Stiff
35-69	Dense	Hard
>70	Very Dense	Very Hard

NOTE: Classification of earth material as shown on this sheet is based upon field inspection and is not to be construed to imply mechanical analysis.

ENGINEERING SERVICE CENTER	STRUCTURE FOUNDATIONS
DRAWN BY Ken Wahl 9-96	
CHECKED BY	

FIELD INVESTIGATION BY:
R. FITZPATRICK, L. JENSEN, B. TRINH & J, WITTRY

State of CALIFORNIA
DEPARTMENT OF TRANSPORTATION

DIVISION OF STRUCTURES
STRUCTURE DESIGN

BRIDGE NO. 23-15 R/L
POST MILE CC-13.48 Sol-1.72

EARTHQUAKE RETROFIT PROJECT No.SR-611.
CARQUINEZ BRIDGE - SOUTH APPROACH
LOG OF TEST BORINGS 14 OF 35

ORIGINAL SCALE IN INCHES FOR REDUCED PLANS → 0 1 2 3

CU: 04
EA: 043921/043931

DISREGARD PRINTS BEARING EARLIER REVISION DATES →
REVISION DATES (PRELIMINARY STAGE ONLY)
SHEET 49 OF 70

TL 6051 REV. 5/95

ClibPDF - www.fastio.com

DIST	COUNTY	ROUTE	POST MILES TOTAL PROJECT	SHEET NO.	TOTAL SHEETS
04	CC, SOL	80	12.8/14.1, 0.0/0.6	450	555

REGISTERED CIVIL ENGINEER

10-20-97
PLANS APPROVAL DATE

REGISTERED PROFESSIONAL ENGINEER — Robert L. Morrison Jr. — No. 43693 — Exp. 03/31/97 — CIVIL — STATE OF CALIFORNIA

CH2M HILL
2485 NATOMAS PARK DR, SUITE 600
SACRAMENTO, CALIFORNIA 95833

The State of California or its officers or agents shall not be responsible for the accuracy or completeness of electronic copies of this plan sheet.

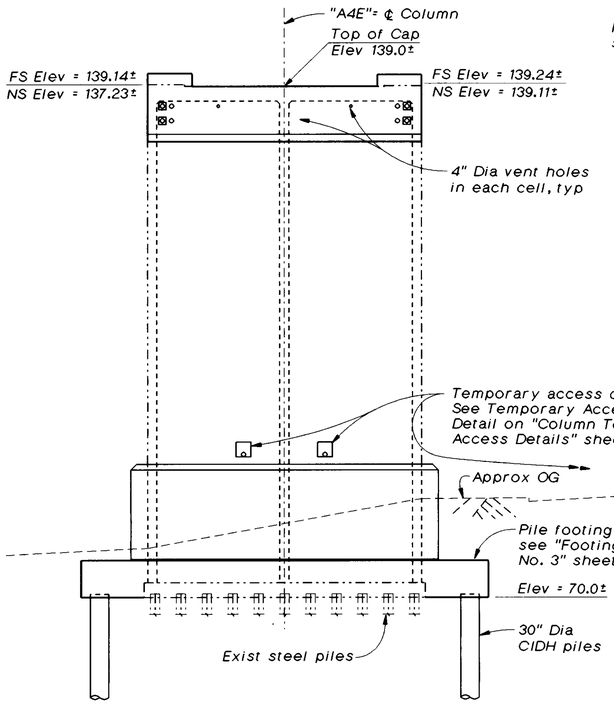

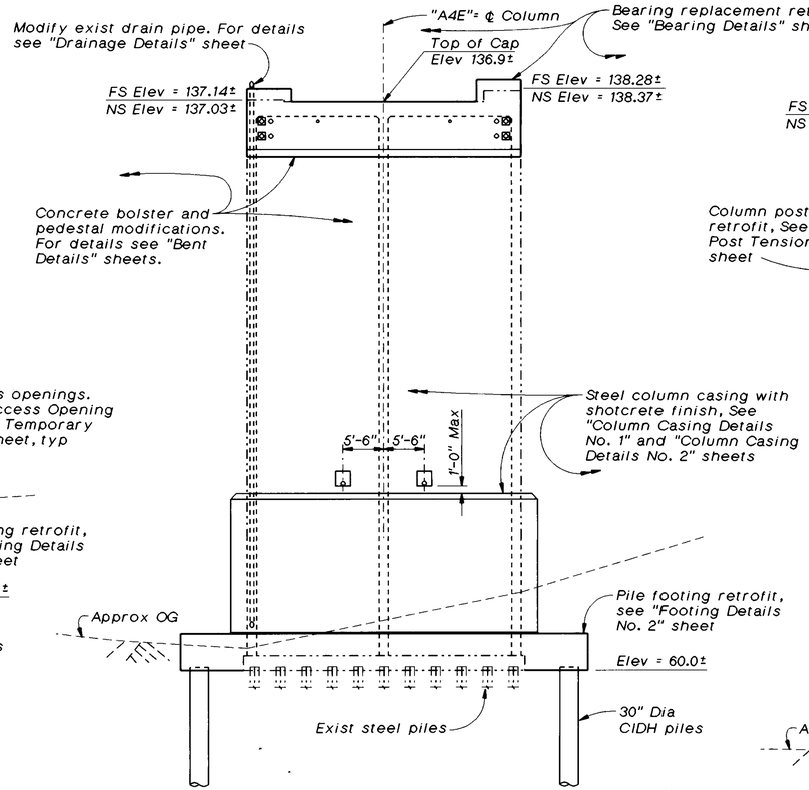

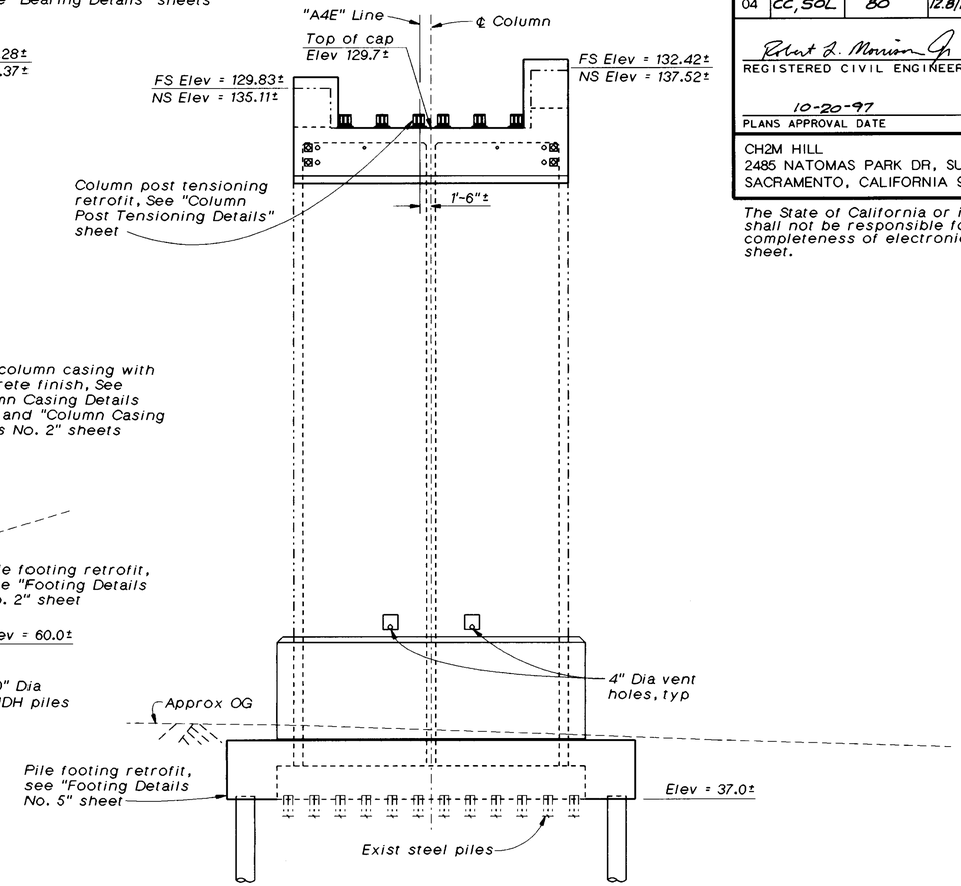

Datum Elev = 25.0

ELEVATION
1"=10'

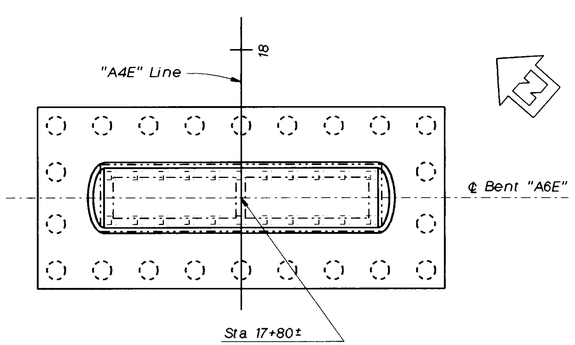

PLAN - BENT NO. "A6E"
1"=10'

ELEVATION
1"=10'

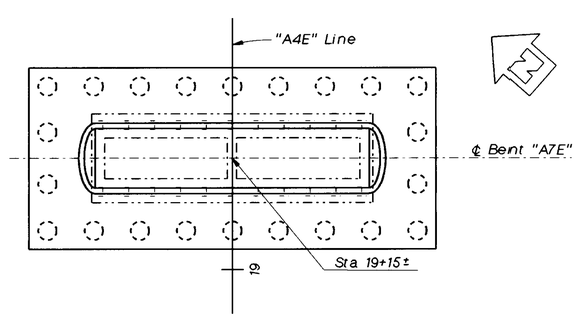

PLAN - BENT NO. "A7E"
1"=10'

ELEVATION
1"=10'

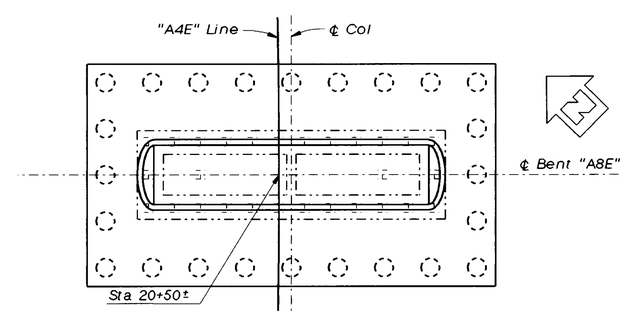

PLAN - BENT NO. "A8E"
1"=10'

NO AS BUILT CHANGES

AS BUILT

CORRECTION BY BRIAN BEAUDOIN
CONTRACT NO. 04-043934
DATE FEBRUARY, 2002
STRUCTURES REPRESENTATIVE

The Contractor shall verify all controlling field dimensions before ordering or fabricating any material.

SEISMIC RETROFIT PROJECT NO. 611

CARQUINEZ BRIDGE - "A4E" LINE (APPROACH SPAN)

BENT LAYOUT NO. 2

Vong Toan
DESIGN OVERSIGHT
April 29, 1997
SIGN OFF DATE

	BY	CHECKED
DESIGN	R. Morrison, Jr.	J. Downing/ J. Quincy
DETAILS	A. Kayden	J. Quincy
QUANTITIES	D. Nguyen-Tan/ S. Ismail	J. Downing

PREPARED FOR THE STATE OF CALIFORNIA DEPARTMENT OF TRANSPORTATION

Lee Holloway
PROJECT ENGINEER

BRIDGE NO. 23-15 R
POST MILE CC-13.47

ca4-bl2.dlv

ORIGINAL SCALE IN INCHES FOR REDUCED PLANS 0 1 2 3

CU 04-268
EA 043931

DISREGARD PRINTS BEARING EARLIER REVISION DATES → 15-MAR-1997

REVISION DATES (PRELIMINARY STAGE ONLY)

SHEET 15 OF 120

ClibPDF - www.fastio.com

DIST.	COUNTY	ROUTE	POST MILES TOTAL PROJECT	SHEET NO.	TOTAL SHEETS
04	CC/Sol	80	12.8/14.1, 20/0.6	415	555

The information represented on this drawing title "Carquinez Bridge South Approach" was not the result of any work developed, performed or completed by this Department (Caltrans). All such activity appears to be by those parties presented on this drawing who would bear all such responsibility. This drawing is available and presented only for the convenience of any bidder, contractor or other interested party. It should be expressly understood that Caltrans assumes no responsibility whatsoever in respect to the sufficiency or accuracy, completeness, interpretation set forth therein or any other aspect of the information shown on or represented by this drawing.

Signed By: R. W. D. Date: 10-1-96

GEO-HYDRO-DATA

INCORPORATED

CALIPER LOG

96-14

OTHER SERVICES:
INVOICE
9857

COMPANY : CAL TRANS
WELL : B-8 RUN TWO
LOCATION/FIELD : CARQU BR AE-13
COUNTY : CONTRA COSTA
STATE : CALIFORNIA
SECTION : TOWNSHIP : RANGE :

DATE : 01/30/96 PERMANENT DATUM : GL ELEVATIONS
DEPTH DRILLER : 25 ELEV. PERM. DATUM: KB :
LOG BOTTOM : 24.90 LOG MEASURED FROM: GL DF :
LOG TOP : 4.70 DRL MEASURED FROM: GL GL :

CASING DRILLER : . LOGGING UNIT : 7
CASING TYPE : . FIELD OFFICE : TEHACHAPI
CASING THICKNESS: . RECORDED BY : K. KEMP

BIT SIZE : 30 BOREHOLE FLUID : BUCKET FILE : ORIGINAL
MAGNETIC DECL. : . RM : . TYPE : 9064A1
MATRIX DENSITY : . RM TEMPERATURE : . LOG : 1
FLUID DENSITY : . MATRIX DELTA T : . PLOT : 1 60
NEUTRON MATRIX : FLUID DELTA T : . THRESH: 3000
REMARKS :
DRILLED BY: CAL TRANS

ALL SERVICES PROVIDED SUBJECT TO STANDARD TERMS AND CONDITIONS

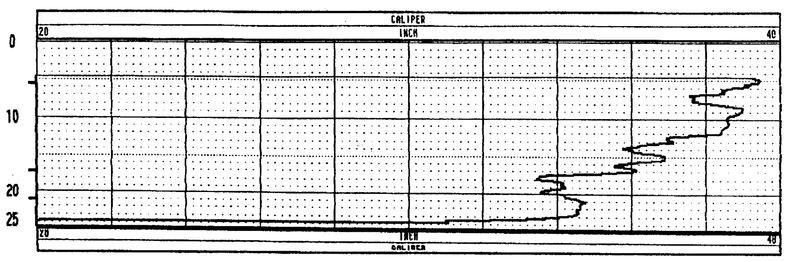

GEO-HYDRO-DATA

INCORPORATED

CALIPER LOG

96-14

OTHER SERVICES:
INVOICE
9857

COMPANY : CAL TRANS
WELL : B-8 RUN FOUR
LOCATION/FIELD : CARQU BR AE-13
COUNTY : CONTRA COSTA
STATE : CALIFORNIA
SECTION : TOWNSHIP : RANGE :

DATE : 01/31/96 PERMANENT DATUM : GL ELEVATIONS
DEPTH DRILLER : 25 ELEV. PERM. DATUM: KB :
LOG BOTTOM : 24.40 LOG MEASURED FROM: GL DF :
LOG TOP : 4.20 DRL MEASURED FROM: GL GL :

CASING DRILLER : . LOGGING UNIT : 7
CASING TYPE : . FIELD OFFICE : TEHACHAPI
CASING THICKNESS: . RECORDED BY : K. KEMP

BIT SIZE : 30 BOREHOLE FLUID : BUCKET FILE : ORIGINAL
MAGNETIC DECL. : . RM : . TYPE : 9064A1
MATRIX DENSITY : . RM TEMPERATURE : . LOG : 5
FLUID DENSITY : . MATRIX DELTA T : . PLOT : 1 60
NEUTRON MATRIX : FLUID DELTA T : . THRESH: 3000
REMARKS :
DRILLED BY: CAL TRANS

ALL SERVICES PROVIDED SUBJECT TO STANDARD TERMS AND CONDITIONS

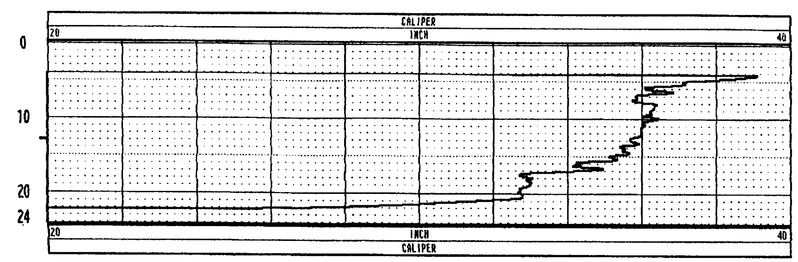

NO AS BUILT CHANGES
AS BUILT
CORRECTION BY BRIAN BEAUDOIN
CONTRACT NO. 04-043934
DATE FEBRUARY, 2002
STRUCTURES REPRESENTATIVE

EARTHQUAKE RETROFIT - PROJECT No. SR-611

CARQUINEZ BRIDGE - SOUTH APPROACH

LOG OF TEST BORINGS 15 OF 35

ENGINEERING SERVICE CENTER	STRUCTURE FOUNDATIONS	FIELD INVESTIGATION BY:	State of CALIFORNIA DEPARTMENT OF TRANSPORTATION	DIVISION OF STRUCTURES STRUCTURE DESIGN	BRIDGE NO. 23-15 R/L
DRAWN BY	Irma Zamora 8/96				POST MILE CC-13.48 Sol-1.72
CHECKED BY					

ORIGINAL SCALE IN INCHES FOR REDUCED PLANS → 0 1 2 3

CU: 04
EA: 043921/043931

DISREGARD PRINTS BEARING EARLIER REVISION DATES →

REVISION DATES (PRELIMINARY STAGE ONLY) | SHEET 50 | OF 70

TL 6051 REV. 7/96

ClibPDF - www.fastio.com

DIST	COUNTY	ROUTE	POST MILES TOTAL PROJECT	SHEET NO.	TOTAL SHEETS
04	CC, SOL	80	12.8/14.1, 0.0/0.6	451	555

REGISTERED CIVIL ENGINEER
10-20-97
PLANS APPROVAL DATE

REGISTERED PROFESSIONAL ENGINEER — Robert L. Morrison Jr — No. 43693 — Exp. 03/31/97 — CIVIL — STATE OF CALIFORNIA

CH2M HILL
2485 NATOMAS PARK DR, SUITE 600
SACRAMENTO, CALIFORNIA 95833

The State of California or its officers or agents shall not be responsible for the accuracy or completeness of electronic copies of this plan sheet.

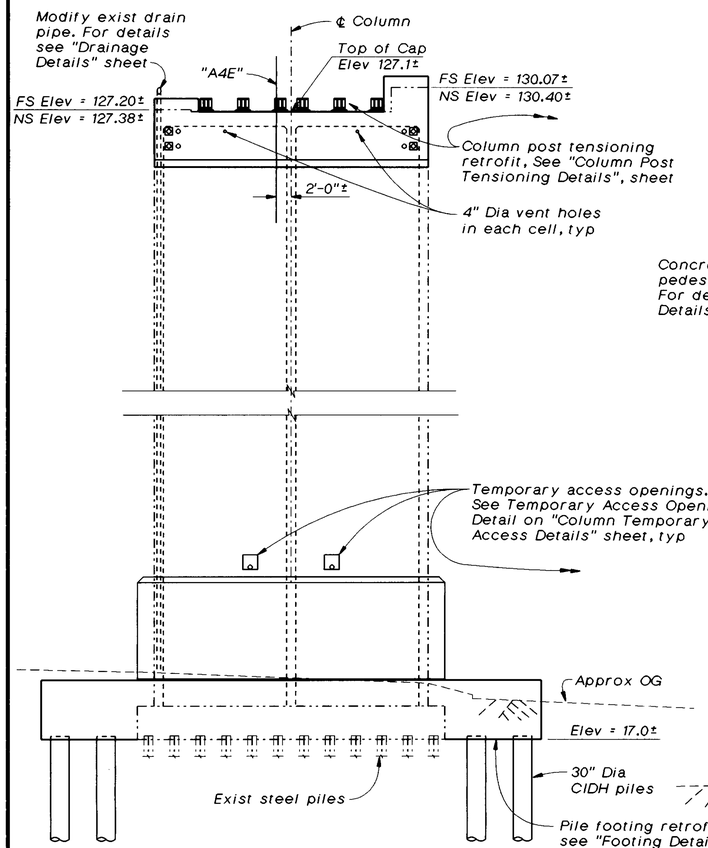

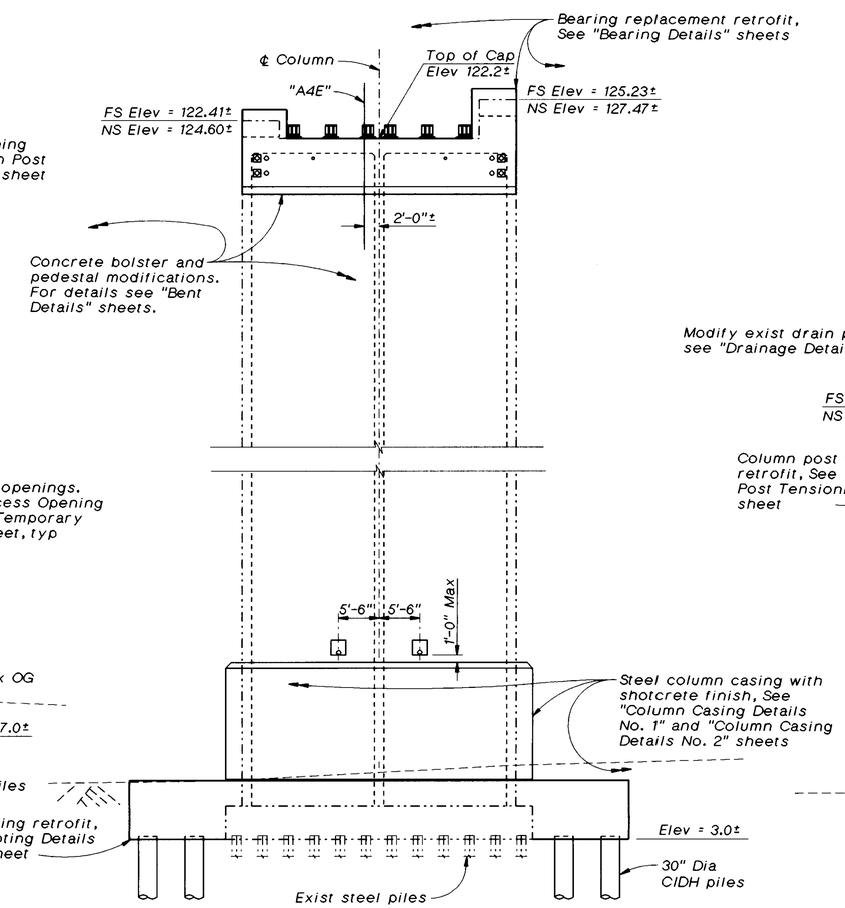

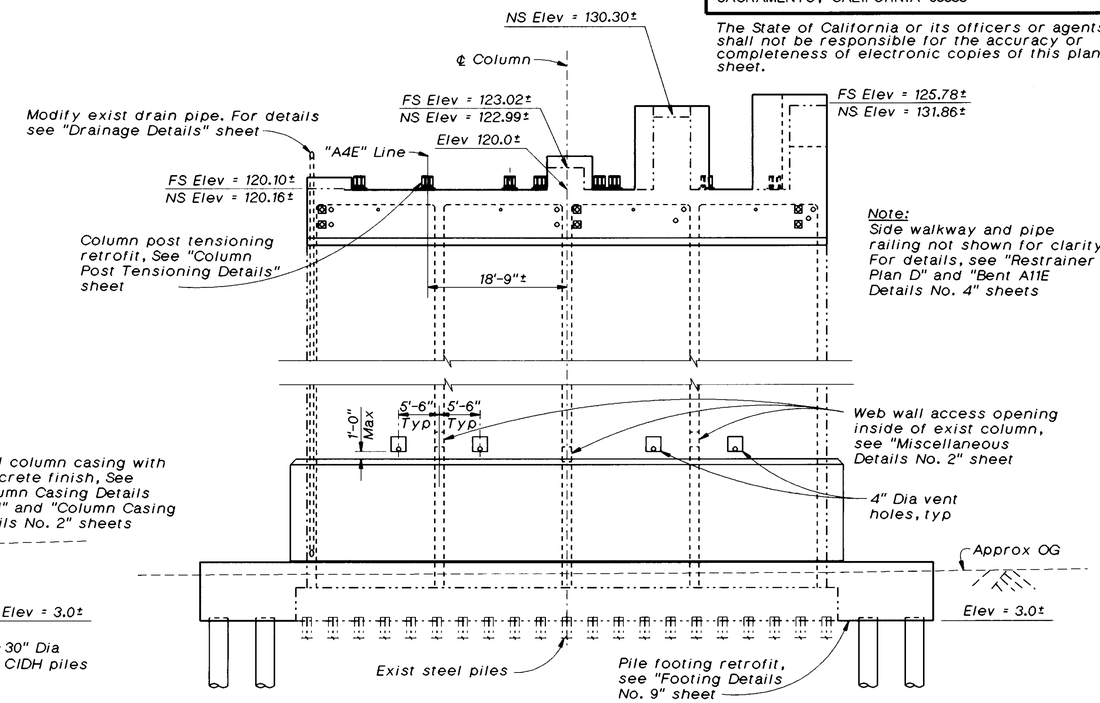

Note:
Side walkway and pipe railing not shown for clarity. For details, see "Restrainer Plan D" and "Bent A11E Details No. 4" sheets

Datum Elev = -10.0

ELEVATION
1"=10'

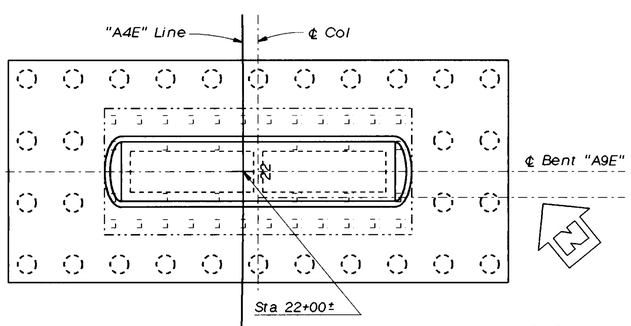

PLAN - BENT NO. "A9E"
1"=10'

ELEVATION
1"=10'

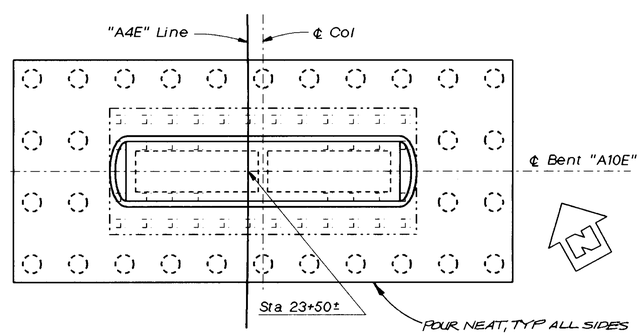

PLAN - BENT NO. "A10E"
1"=10'

ELEVATION
1"=10'

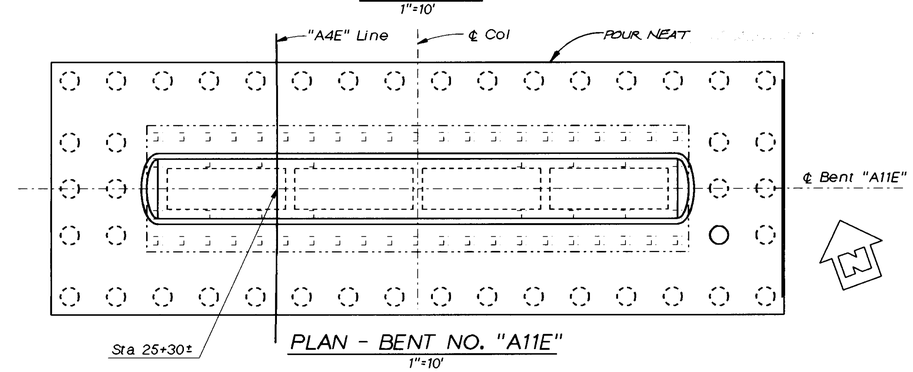

PLAN - BENT NO. "A11E"
1"=10'

AS BUILT
CORRECTION BY BRIAN BEAUDOIN
CONTRACT NO. 04-043934
DATE FEBRUARY, 2002
STRUCTURES REPRESENTATIVE

The Contractor shall verify all controlling field dimensions before ordering or fabricating any material.

SEISMIC RETROFIT PROJECT NO. 611

CARQUINEZ BRIDGE - "A4E" LINE (APPROACH SPAN)

BENT LAYOUT NO. 3

Vong Toan
DESIGN OVERSIGHT
April 29, 1997
SIGN OFF DATE

	BY	CHECKED
DESIGN	R. Morrison, Jr.	J. Downing/ J. Quincy
DETAILS	A. Galbraith	J. Quincy
QUANTITIES	D. Nguyen-Tan/ S. Ismail	J. Downing

PREPARED FOR THE STATE OF CALIFORNIA DEPARTMENT OF TRANSPORTATION

Lee Holloway
PROJECT ENGINEER

BRIDGE NO. 23-15 R
POST MILE CC-13.47

ca4-bl3.dlv

ORIGINAL SCALE IN INCHES FOR REDUCED PLANS 0 1 2 3

CU 04-268
EA 043931

DISREGARD PRINTS BEARING EARLIER REVISION DATES → 15-MAR-1997

REVISION DATES (PRELIMINARY STAGE ONLY)

SHEET 16 OF 120

ClibPDF - www.fastio.com

DIST.	COUNTY	ROUTE	POST MILES TOTAL PROJECT	SHEET NO.	TOTAL SHEETS
04	CC/Sol	80	12.8/14.1, 0.0/0.6	416	555

R.W. Fox

REGISTERED GEOLOGIST R.W. FOX No. 78 Exp. 8-31-97 CERTIFIED ENGINEERING GEOLOGIST STATE OF CALIFORNIA

10-20-97
PLANS APPROVAL DATE

THE STATE OF CALIFORNIA OR ITS OFFICERS OR AGENTS SHALL NOT BE RESPONSIBLE FOR THE ACCURACY OR COMPLETENESS OF ELECTRONIC COPIES OF THIS PLAN SHEET.

NO AS BUILT CHANGES
AS BUILT
CORRECTION BY BRIAN BEAUDOIN
CONTRACT NO. 04-043934
DATE FEBRUARY, 2002
STRUCTURES REPRESENTATIVE

FOR PLAN VIEW, SEE "LOG OF TEST BORINGS 1 OF 35"

NOTE: FOR FIELD LOGGING NOTATIONS SEE LOG OF TEST BORINGS, SHEET 2 OF 35.

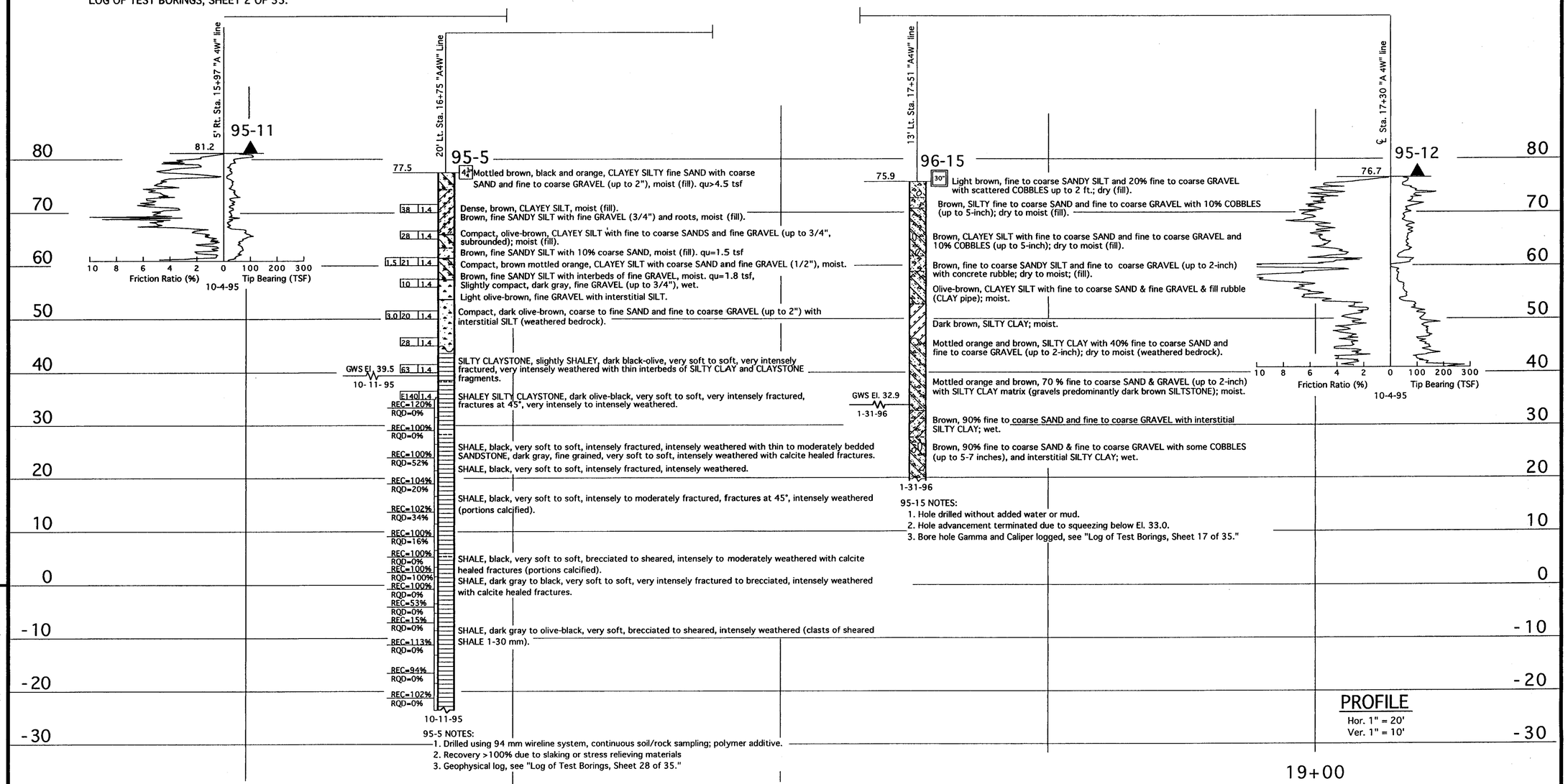

LEGEND OF BORING OPERATIONS

LEGEND OF EARTH MATERIALS: GRAVEL, SAND, SILT, CLAY, SANDY CLAY or CLAYEY SAND, SANDY SILT or SILTY SAND, SILTY CLAY, CLAYEY SILT, PEAT and/or ORGANIC MATTER, FILL MATERIAL, IGNEOUS ROCK, SEDIMENTARY ROCK, METAMORPHIC

CONSISTENCY CLASSIFICATION FOR SOILS
According to the Standard Penetration Test

Penetration Index (Blows / Ft)	Granular	Cohesive
0-4	Very Loose	Very Soft
5-9	Loose	Soft
10-19	Slightly compact	Stiff
20-34	Compact	Very Stiff
35-69	Dense	Hard
>70	Very Dense	Very Hard

NOTE: Classification of earth material as shown on this sheet is based upon field inspection and is not to be construed to imply mechanical analysis.

ENGINEERING SERVICE CENTER	STRUCTURE FOUNDATIONS
DRAWN BY Ken Wahl & J. Gamarra 9-96	
CHECKED BY	

FIELD INVESTIGATION BY: L. JENSEN, R. FITZPATRICK, G. HADSALL & J, WITTRY

State of CALIFORNIA DEPARTMENT OF TRANSPORTATION

DIVISION OF STRUCTURES
STRUCTURE DESIGN

BRIDGE NO. 23-15 R/L
POST MILE CC-13.48 Sol-1.72

EARTHQUAKE RETROFIT - PROJECT No. SR-611
CARQUINEZ BRIDGE SOUTH-APPROACH
LOG OF TEST BORINGS 16 OF 35

ORIGINAL SCALE IN INCHES FOR REDUCED PLANS → 0 1 2 3

CU: 04
EA: 043921/043931

DISREGARD PRINTS BEARING EARLIER REVISION DATES →
REVISION DATES (PRELIMINARY STAGE ONLY)
SHEET 51 OF 70

TL 6051 REV. 5/95

ClibPDF - www.fastio.com

DIST	COUNTY	ROUTE	POST MILES TOTAL PROJECT	SHEET NO.	TOTAL SHEETS
04	CC, SOL	80	12.8/14.1, 0.0/0.6	452	555

REGISTERED CIVIL ENGINEER

10-20-97
PLANS APPROVAL DATE

REGISTERED PROFESSIONAL ENGINEER — Robert L. Morrison Jr — No. 43693 — Exp. 03/31/97 — CIVIL — STATE OF CALIFORNIA

CH2M HILL
2485 NATOMAS PARK DR, SUITE 600
SACRAMENTO, CALIFORNIA 95833

The State of California or its officers or agents shall not be responsible for the accuracy or completeness of electronic copies of this plan sheet.

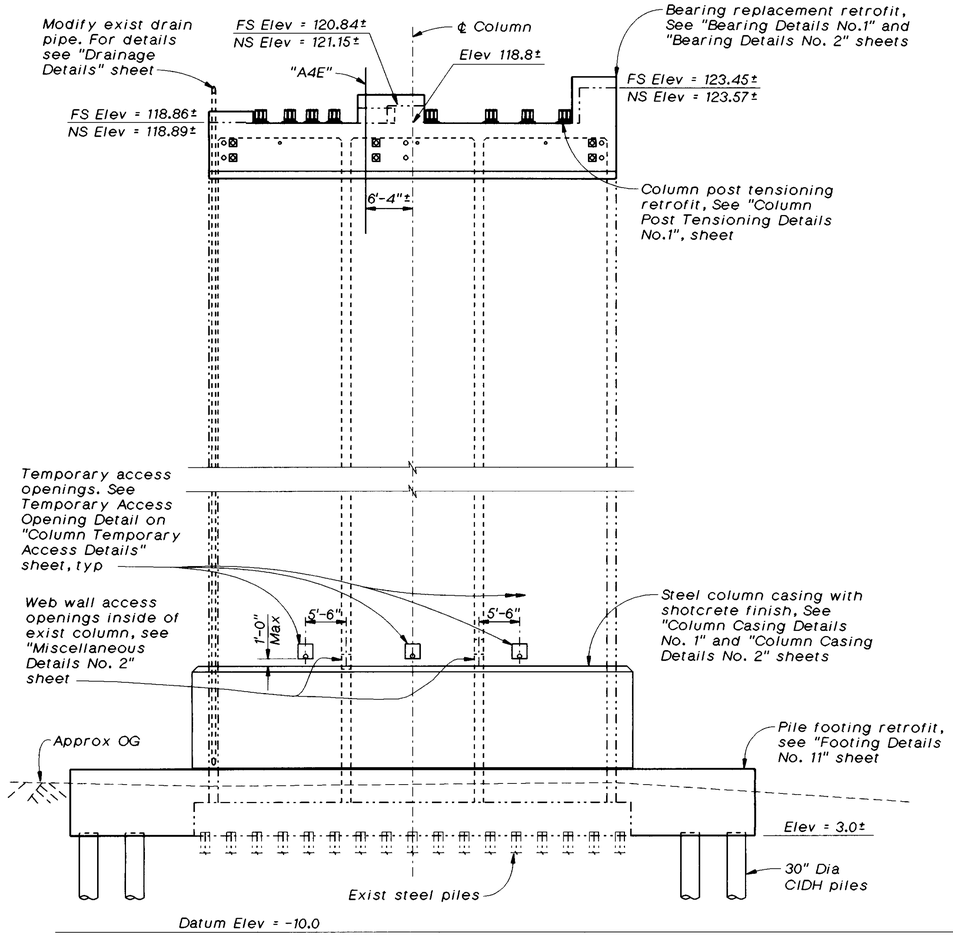

ELEVATION
1"=10'

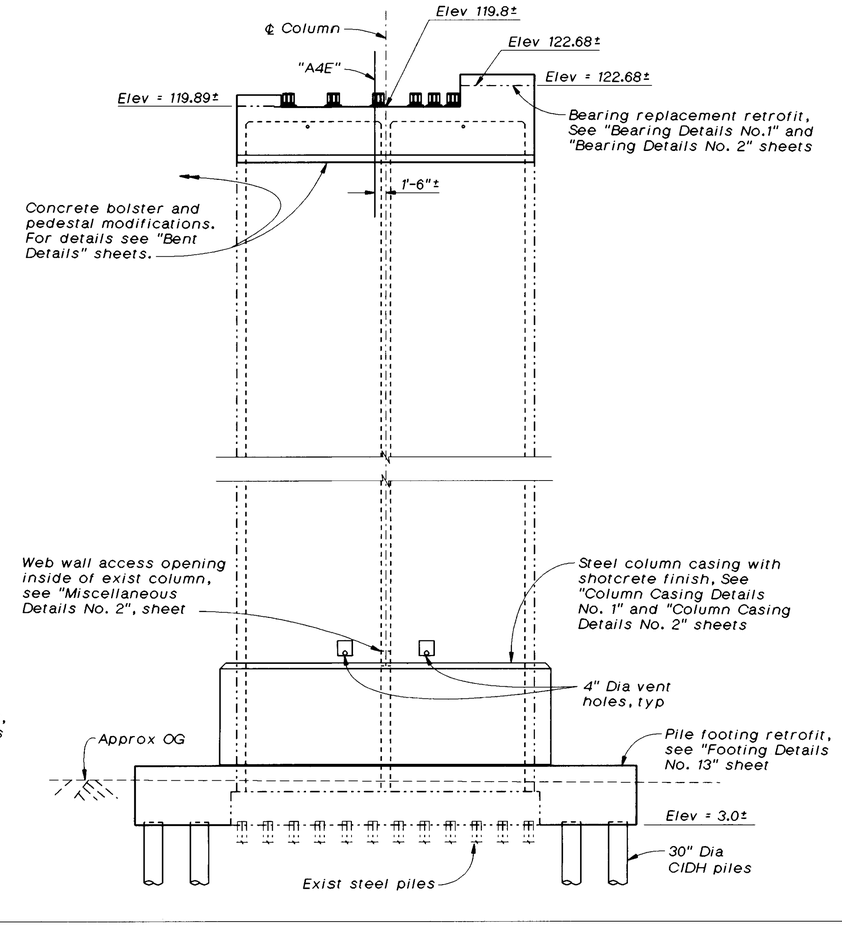

ELEVATION
1"=10'

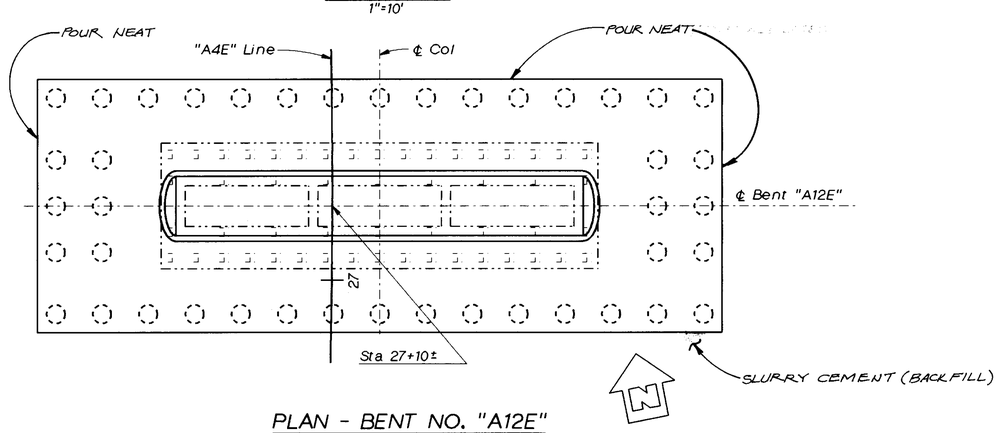

PLAN - BENT NO. "A12E"
1"=10'

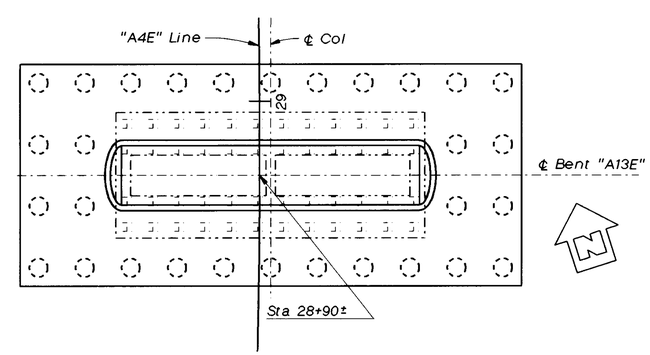

PLAN - BENT NO. "A13E"
1"=10'

AS BUILT
CORRECTION BY BRIAN BEAUDOIN
CONTRACT NO. 04-043934
DATE FEBRUARY, 2002
STRUCTURES REPRESENTATIVE

The Contractor shall verify all controlling field dimensions before ordering or fabricating any material.

SEISMIC RETROFIT PROJECT NO. 611

CARQUINEZ BRIDGE - "A4E" LINE (APPROACH SPAN)

BENT LAYOUT NO. 4

Vong Toan
DESIGN OVERSIGHT
April 29, 1997
SIGN OFF DATE

	BY	CHECKED
DESIGN	R. Morrison, Jr.	J. Downing/ J. Quincy
DETAILS	A. Galbraith	J. Quincy
QUANTITIES	D. Nguyen-Tan/ S. Ismail	J. Downing

PREPARED FOR THE STATE OF CALIFORNIA DEPARTMENT OF TRANSPORTATION

Lee Holloway
PROJECT ENGINEER

BRIDGE NO. 23-15 R
POST MILE CC-13.47

CU 04-268
EA 043931

ca4-bl4.dlv

ORIGINAL SCALE IN INCHES FOR REDUCED PLANS 0 1 2 3

DISREGARD PRINTS BEARING EARLIER REVISION DATES → 15-MAR-1997

REVISION DATES (PRELIMINARY STAGE ONLY)

SHEET 17 OF 120

ClibPDF - www.fastio.com

DIST.	COUNTY	ROUTE	POST MILES TOTAL PROJECT	SHEET NO.	TOTAL SHEETS
04	CC/Sol	80	12.8/14.1, 0.0/10.6	417	555

The information represented on this drawing title "Carquinez Bridge South Approach" was not the result of any work developed, performed or completed by this Department (Caltrans). All such activity appears to be by those parties presented on this drawing who would bear all such responsibility. This drawing is available and presented only for the convenience of any bidder, contractor or other interested party. It should be expressly understood that Caltrans assumes no responsibility whatsoever in respect to the sufficiency or accuracy, completeness, interpretation set forth therein or any other aspect of the information shown on or represented by this drawing.

Signed By: R. W. Dy Date: 10-1-96

GEO-HYDRO-DATA

INCORPORATED

NATURAL GAMMA LOG

COMPANY : CAL TRANS
WELL : B-9 96-15 96-15
LOCATION/FIELD : CARQU BR AW-6
COUNTY : CONTRA COSTA
STATE : CALIFORNIA
SECTION : TOWNSHIP : RANGE :

OTHER SERVICES:
INVOICE
9857

DATE : 01/31/96 PERMANENT DATUM : GL ELEVATIONS
DEPTH DRILLER : 56 ELEV. PERM. DATUM: KB :
LOG BOTTOM : 57.00 LOG MEASURED FROM: GL DF :
LOG TOP : 0.90 DRL MEASURED FROM: GL GL :

CASING DRILLER : . LOGGING UNIT : 7
CASING TYPE : . FIELD OFFICE : TEHACHAPI
CASING THICKNESS: . RECORDED BY : K. KEMP

BIT SIZE : 30 BOREHOLE FLUID : BUCKET FILE : ORIGINAL
MAGNETIC DECL. : . RM : . TYPE : 9041A
MATRIX DENSITY : . RM TEMPERATURE : . LOG : 3
FLUID DENSITY : . MATRIX DELTA T : . PLOT : 1 57
NEUTRON MATRIX : FLUID DELTA T : . THRESH: 3000
REMARKS :
DRILLED BY: CAL TRANS

ALL SERVICES PROVIDED SUBJECT TO STANDARD TERMS AND CONDITIONS

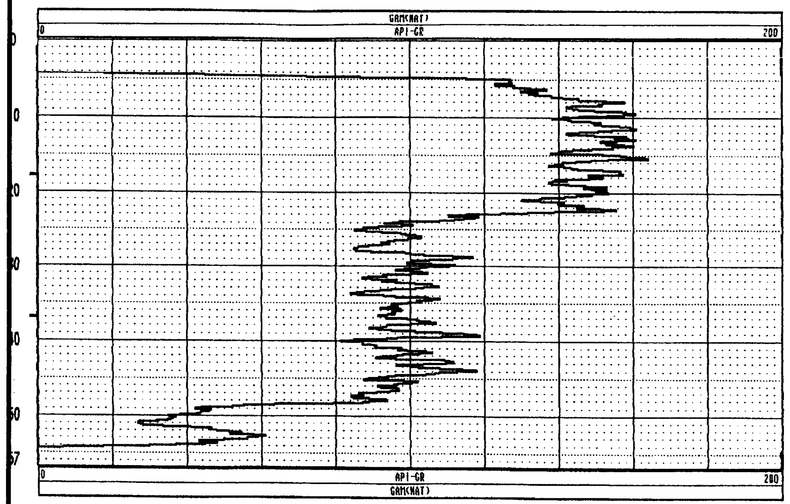

GEO-HYDRO-DATA

INCORPORATED

CALIPER LOG

COMPANY : CAL TRANS
WELL : B-9 96-15 96-15
LOCATION/FIELD : CARQU BR AW-6
COUNTY : CONTRA COSTA
STATE : CALIFORNIA
SECTION : TOWNSHIP : RANGE :

OTHER SERVICES:
INVOICE
9857

DATE : 01/31/96 PERMANENT DATUM : GL ELEVATIONS
DEPTH DRILLER : 56 ELEV. PERM. DATUM: KB :
LOG BOTTOM : 55.40 LOG MEASURED FROM: GL DF :
LOG TOP : 5.00 DRL MEASURED FROM: GL GL :

CASING DRILLER : . LOGGING UNIT : 7
CASING TYPE : . FIELD OFFICE : TEHACHAPI
CASING THICKNESS: . RECORDED BY : K. KEMP

BIT SIZE : 30 BOREHOLE FLUID : BUCKET FILE : ORIGINAL
MAGNETIC DECL. : . RM : . TYPE : 9064A1
MATRIX DENSITY : . RM TEMPERATURE : . LOG : 4
FLUID DENSITY : . MATRIX DELTA T : . PLOT : 1 60
NEUTRON MATRIX : FLUID DELTA T : . THRESH: 3000
REMARKS :
DRILLED BY: CAL TRANS

ALL SERVICES PROVIDED SUBJECT TO STANDARD TERMS AND CONDITIONS

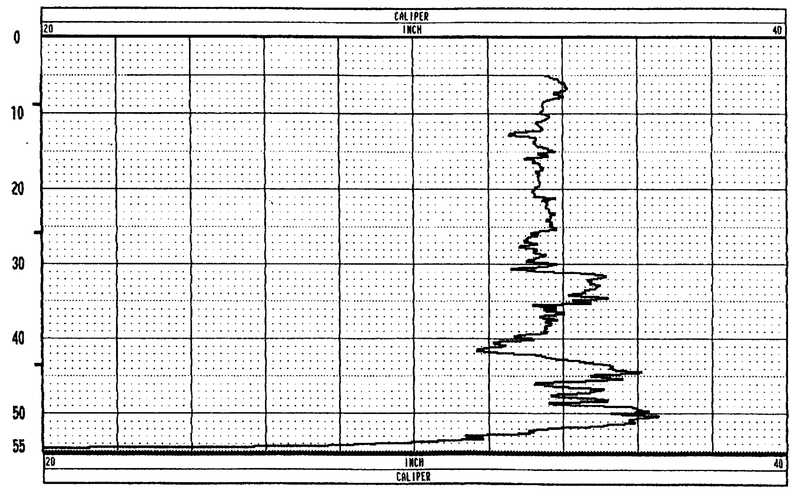

GEO-HYDRO-DATA

INCORPORATED

CALIPER LOG

COMPANY : CAL TRANS
WELL : B-9 RUN FIVE 96-15 96-15
LOCATION/FIELD : CARQU BR AW-6
COUNTY : CONTRA COSTA
STATE : CALIFORNIA
SECTION : TOWNSHIP : RANGE :

OTHER SERVICES:
INVOICE
9857

DATE : 02/02/96 PERMANENT DATUM : GL ELEVATIONS
DEPTH DRILLER : 56 ELEV. PERM. DATUM: KB :
LOG BOTTOM : 52.70 LOG MEASURED FROM: GL DF :
LOG TOP : 4.10 DRL MEASURED FROM: GL GL :

CASING DRILLER : . LOGGING UNIT : 7
CASING TYPE : . FIELD OFFICE : TEHACHAPI
CASING THICKNESS: . RECORDED BY : K. KEMP

BIT SIZE : 30 BOREHOLE FLUID : BUCKET FILE : ORIGINAL
MAGNETIC DECL. : . RM : . TYPE : 9064A1
MATRIX DENSITY : . RM TEMPERATURE : . LOG : 9
FLUID DENSITY : . MATRIX DELTA T : . PLOT : 1 60
NEUTRON MATRIX : FLUID DELTA T : . THRESH: 3000
REMARKS :
DRILLED BY: CAL TRANS

ALL SERVICES PROVIDED SUBJECT TO STANDARD TERMS AND CONDITIONS

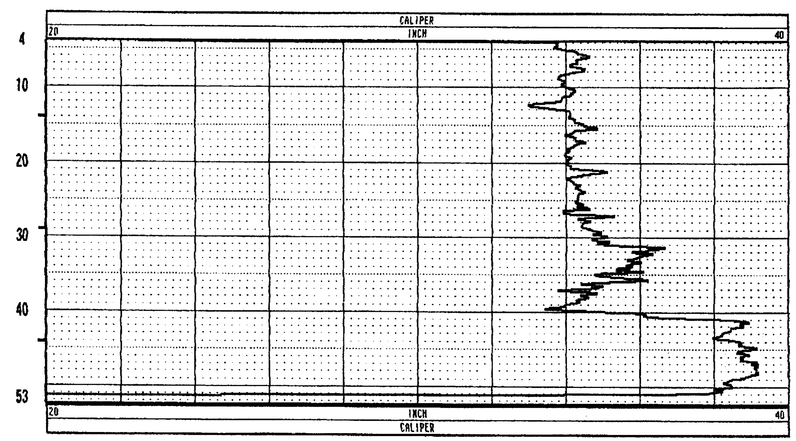

NO AS BUILT CHANGES

AS BUILT

CORRECTION BY BRIAN BEAUDOIN
CONTRACT NO. 04-043934
DATE FEBRUARY, 2002
STRUCTURES REPRESENTATIVE

EARTHQUAKE RETROFIT PROJECT NO. SR-611

ENGINEERING SERVICE CENTER	STRUCTURE FOUNDATIONS	FIELD INVESTIGATION BY:	State of CALIFORNIA DEPARTMENT OF TRANSPORTATION	DIVISION OF STRUCTURES STRUCTURE DESIGN	BRIDGE NO. 23-15 R/L	CARQUINEZ BRIDGE - SOUTH APPROACH
PREPARED BY	Ken Wahl 8-96				POST MILE CC-13.48 Sol-1.72	LOG OF TEST BORINGS
CHECKED BY						

ORIGINAL SCALE IN INCHES FOR REDUCED PLANS → 0 1 2 3

CU: 04
EA: 043921/043931

DISREGARD PRINTS BEARING EARLIER REVISION DATES →

REVISION DATES (PRELIMINARY STAGE ONLY)

SHEET 52 OF 70

TL 6052 REV. 6/95

ClibPDF - www.fastio.com

DIST	COUNTY	ROUTE	POST MILES TOTAL PROJECT	SHEET NO.	TOTAL SHEETS
04	CC,SOL	80	12.8/14.1, 0.0/0.6	453	555

REGISTERED CIVIL ENGINEER — Robert L. Morrison Jr.

10-20-97
PLANS APPROVAL DATE

REGISTERED PROFESSIONAL ENGINEER — Robert L. Morrison Jr. No. 43693 Exp. 03/31/97 CIVIL STATE OF CALIFORNIA

CH2M HILL
2485 NATOMAS PARK DR, SUITE 600
SACRAMENTO, CALIFORNIA 95833

The State of California or its officers or agents shall not be responsible for the accuracy or completeness of electronic copies of this plan sheet.

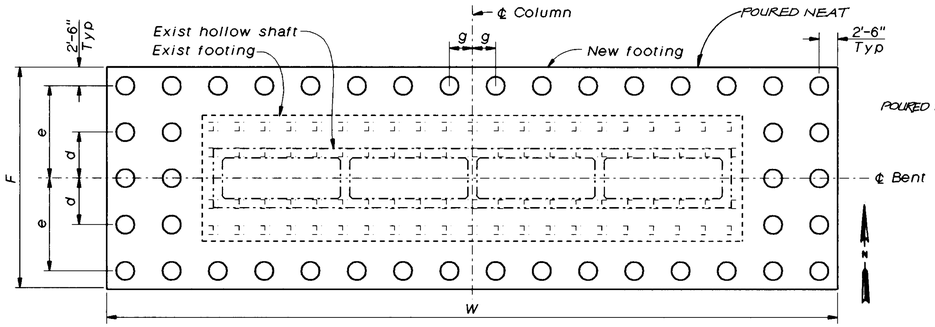

FOOTING PLAN- BENT "A11E"
No Scale

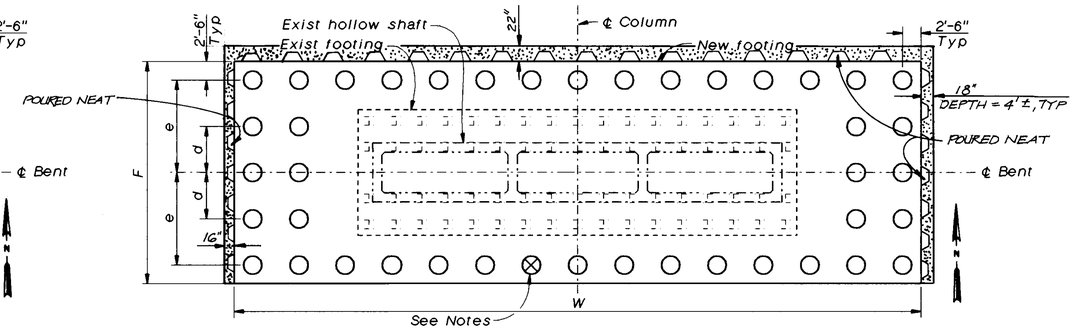

FOOTING PLAN- BENT "A12E"
No Scale

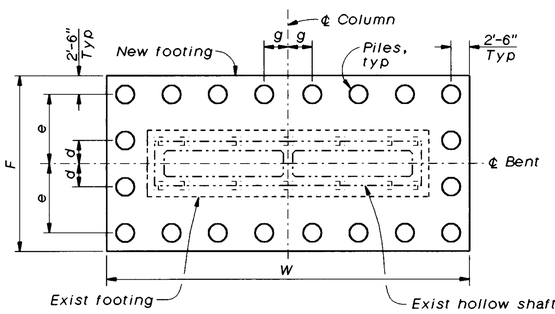

Note:
Bent "A3E" shown, Bents "A4E", "A5E", "A6E", "A7E" similar

FOOTING PLAN- BENT "A3E" THRU "A7E"
No Scale

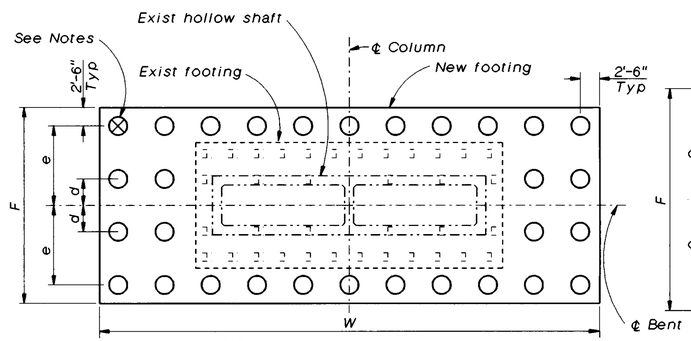

Note:
Bent "A9E" shown, Bents "A10E" and "A13E" similar

FOOTING PLAN- BENT "A9E", A10E" & "A13E"
No Scale

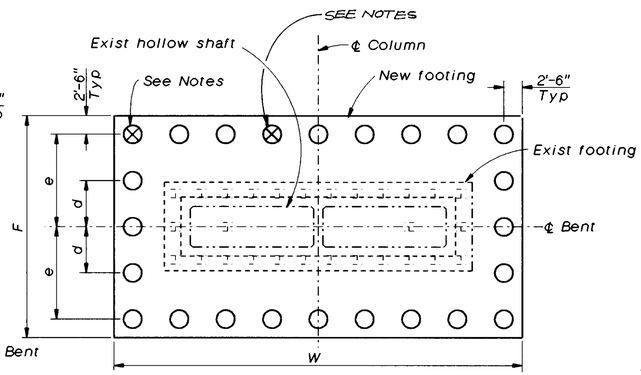

FOOTING PLAN- BENT "A8E"
No Scale

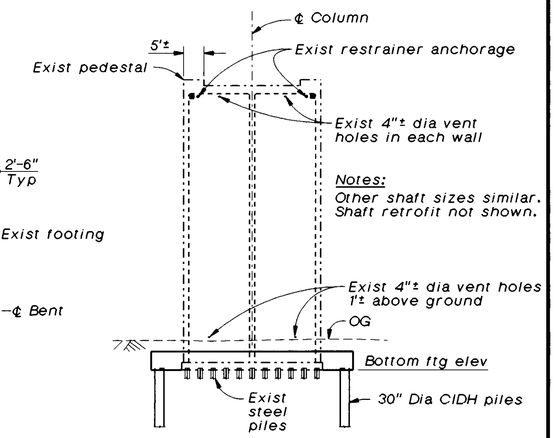

TYPICAL ELEVATION
1"=20'

Bent No	Shaft Size	Exist Footing Size W	Exist Footing Size F	New Footing Size W	New Footing Size F	Existing ftg thickness	New ftg thickness	Bottom ftg elevation	No. in "d" row	"d"	No. in "e" row	"g"	Total new piles
A3E	6' x 36'±	38'±	9'±	49'-0"	23'-9"	2'-0"±	5'-0"	103.0±	2	3'-1½"	8	3'-3"	20
A4E	6' x 36'±	38'±	9'-8"±	49'-0"	23'-9"	2'-0"±	5'-0"	82.0±	2	3'-1½"	8	3'-3"	20
A5E	8' x 37'±	38'±	12'±	55'-0"	24'-6"	2'-0"±	5'-0"	74.0±	2	3'-6"	9	—	22
A6E	8' x 37'±	38'±	9'±	55'-0"	24'-6"	2'-0"±	5'-0"	70.0±	2	3'-6"	9	—	22
A7E	8' x 37'±	38'±	12'±	55'-0"	24'-6"	2'-0"±	6'-0"	60.0±	2	3'-6"	9	—	22
A8E	8' x 37'±	41'-6"±	12'±	55'-0"	30'-0"	4'-6"±	8'-0"	37.0±	2	6'-3"	9	—	24
A9E	8' x 37'±	41'-6"±	17'±	67'-6"	30'-0"	4'-6"±	8'-0"	17.0±	4	4'-2"	11	—	30
A10E	8' x 37'±	41'-6"±	17'±	67'-6"	30'-0"	4'-6"±	8'-0"	3.0±	4	4'-2"	11	—	30
A11E	8' x 70'±	73'±	17'±	99'-5"	34'-2"	4'-6"±	8'-0"	3.0±	4	6'-3"	16	3'-3"	44
A12E	8' x 55'±	59'±	17'±	92'-6"	34'-2"	4'-6"±	9'-0"	3.0±	4	6'-3"	15	—	42
A13E	8' x 40'±	41'-6"±	17'±	67'-6"	30'-0"	4'-6"±	8'-0"	3.0±	4	4'-2"	11	—	30

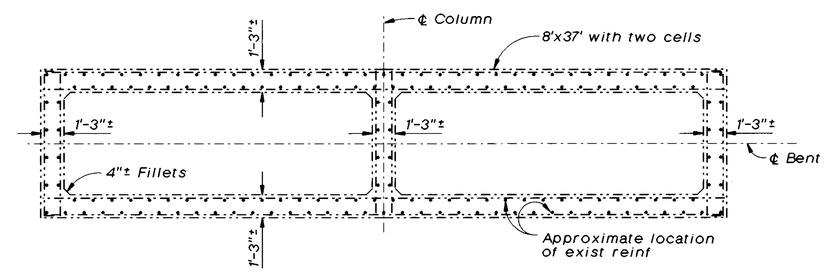

Note: Other shaft sizes similar

8'± x 37'± HOLLOW SHAFT
¼"=1'-0"

NOTES:

Indicates Existing piles.

Indicates CIDH piles.

Indicates anchor pile at Bents "A8E", "A9E", and "A12E". Pile load tests are to be performed at Bents "A8E", "A9E", and A12E".

All piles spaces @ 6'-3" in any row.

Edges of footing shall be 2'-6" from ℄ of exterior piles.

For pile data, see "Pile Details" sheet.

AS BUILT
CORRECTION BY BRIAN BEAUDOIN
CONTRACT NO. 04-043934
DATE FEBRUARY, 2002
STRUCTURES REPRESENTATIVE

The Contractor shall verify all controlling field dimensions before ordering or fabricating any material.

SEISMIC RETROFIT PROJECT NO. 611

CARQUINEZ BRIDGE - "A4E" LINE (APPROACH SPAN)

BENT FOOTING SCHEDULE

Vong Toan
DESIGN OVERSIGHT
May 22, 1997
SIGN OFF DATE

DESIGN	BY R. Morrison, Jr.	CHECKED C Harrington/ J. Quincy
DETAILS	BY A. Kayden	CHECKED J. Quincy
QUANTITIES	BY D. Nguyen-Tan/ S. Ismail	CHECKED J. Downing

PREPARED FOR THE STATE OF CALIFORNIA DEPARTMENT OF TRANSPORTATION

Lee Holloway
PROJECT ENGINEER

BRIDGE NO. 23-15 R
POST MILE CC-13.47

ca4-bt1.dlv

ORIGINAL SCALE IN INCHES FOR REDUCED PLANS 0 1 2 3

CU 04-268
EA 043931

DISREGARD PRINTS BEARING EARLIER REVISION DATES → REVISION DATES (PRELIMINARY STAGE ONLY) 07-MAY-1997

SHEET 18 OF 120

ClibPDF - www.fastio.com

DIST.	COUNTY	ROUTE	POST MILES TOTAL PROJECT	SHEET NO.	TOTAL SHEETS
04	CC/Sol	80	12.8/14.1, 20/06	418	555

R.W. Fox

REGISTERED GEOLOGIST R.W. FOX No. ~~70~~ Exp. ~~8-31-97~~ CERTIFIED ENGINEERING GEOLOGIST STATE OF CALIFORNIA

10-20-97
PLANS APPROVAL DATE

THE STATE OF CALIFORNIA OR ITS OFFICERS OR AGENTS SHALL NOT BE RESPONSIBLE FOR THE ACCURACY OR COMPLETENESS OF ELECTRONIC COPIES OF THIS PLAN SHEET.

FOR PLAN VIEW, SEE "LOG OF TEST BORINGS 1 OF 35."

NOTE: FOR FIELD LOGGING NOTATIONS SEE LOG OF TEST BORINGS, SHEET 2 OF 35.

NO AS BUILT CHANGES
AS BUILT
CORRECTION BY BRIAN BEAUDOIN
CONTRACT NO. 04-043934
DATE FEBRUARY, 2002
STRUCTURES REPRESENTATIVE

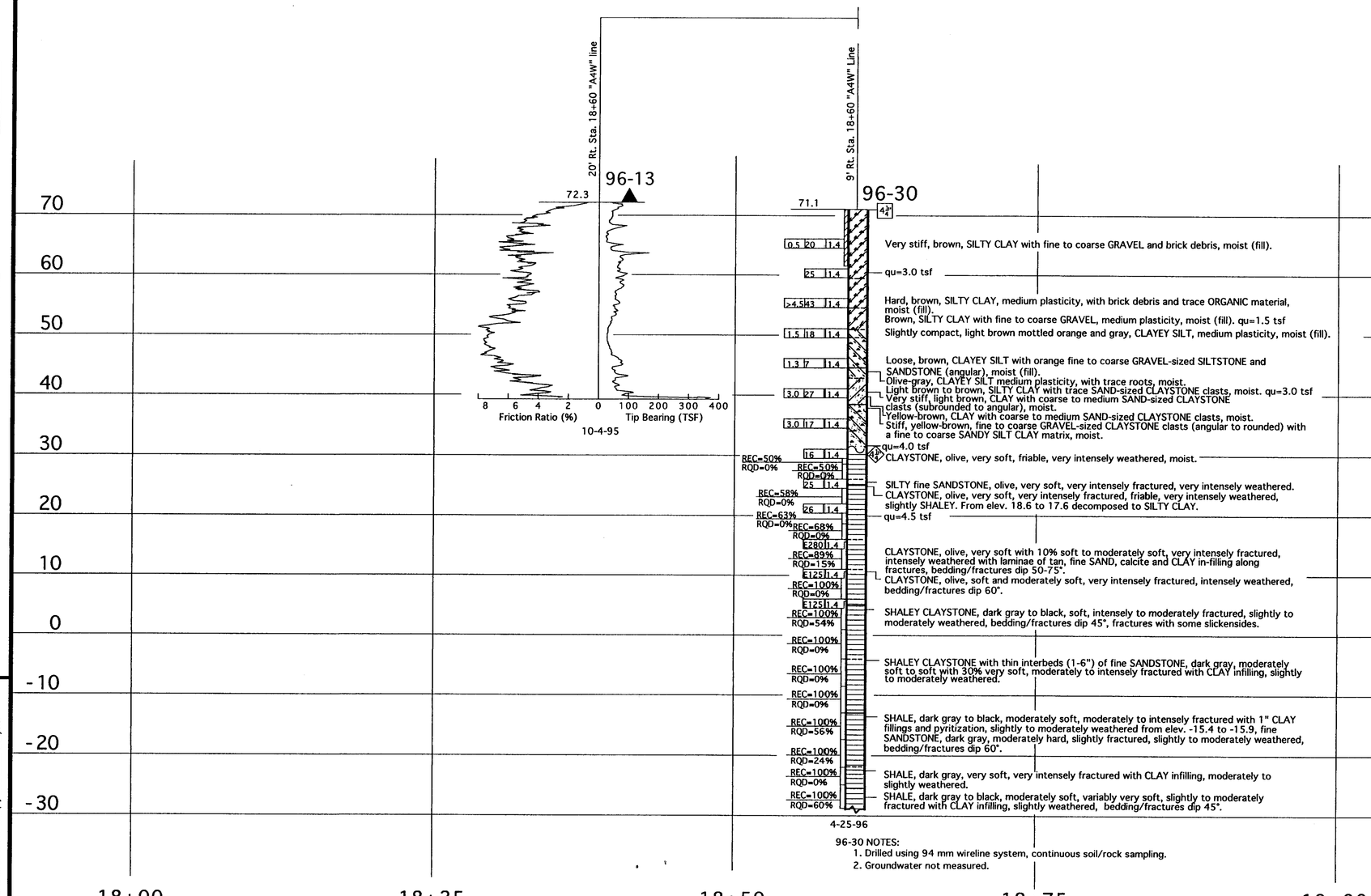

96-30 NOTES:
1. Drilled using 94 mm wireline system, continuous soil/rock sampling.
2. Groundwater not measured.

PROFILE
Hor. 1" = 5'
Ver. 1" = 10'

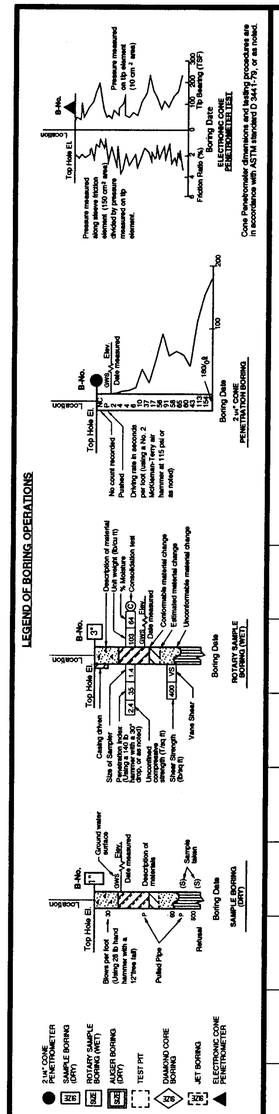

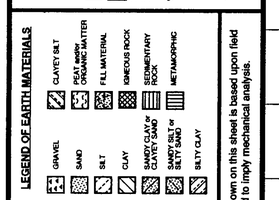

CONSISTENCY CLASSIFICATION FOR SOILS
According to the Standard Penetration Test

Penetration Index (Blows/Ft)	Granular	Cohesive
0-4	Very Loose	Very Soft
5-9	Loose	Soft
10-19	Slightly compact	Stiff
20-34	Compact	Very Stiff
35-69	Dense	Hard
>70	Very Dense	Very Hard

NOTE: Classification of earth material as shown on this sheet is based upon field inspection and is not to be construed to imply mechanical analysis.

ENGINEERING SERVICE CENTER	STRUCTURE FOUNDATIONS
DRAWN BY Ken Wahl 9-96	
CHECKED BY	

FIELD INVESTIGATION BY:
L. JENSEN, R. FITZPATRICK, G. HADSALL
K. AMARU, H. SALIMI & M. FILBERTI

State of CALIFORNIA
DEPARTMENT OF TRANSPORTATION

DIVISION OF STRUCTURES
STRUCTURE DESIGN

BRIDGE NO. ~~23-15 R/L~~
POST MILE ~~CC-13.48~~ Sol-1.72

EARTHQUAKE RETROFIT - PROJECT No. SR-611
CARQUINEZ BRIDGE-SOUTH APPROACH
LOG OF TEST BORINGS
18 OF 35

ORIGINAL SCALE IN INCHES FOR REDUCED PLANS → 0 1 2 3

CU: 04
EA: 043921/043931

DISREGARD PRINTS BEARING EARLIER REVISION DATES →
REVISION DATES (PRELIMINARY STAGE ONLY)
SHEET 53 OF 70

TL 6051 REV. 5/95

ClibPDF - www.fastio.com

DIST	COUNTY	ROUTE	POST MILES TOTAL PROJECT	SHEET NO.	TOTAL SHEETS
04	CC, SOL	80	12.8/14.1, 0.0/0.6	454	555

Robert L. Morrison Jr
REGISTERED CIVIL ENGINEER

10-20-97
PLANS APPROVAL DATE

REGISTERED PROFESSIONAL ENGINEER Robert L. Morrison Jr No. 43693 Exp. 03/31/97 CIVIL STATE OF CALIFORNIA

CH2M HILL
2485 NATOMAS PARK DR, SUITE 600
SACRAMENTO, CALIFORNIA 95833

The State of California or its officers or agents shall not be responsible for the accuracy or completeness of electronic copies of this plan sheet.

Notes:

1. Bent "A3E" shown, Bent "A4E" similar.
2. Locate and determine spacing or pattern of exist column vert reinforcement in each face of column walls prior to coring holes.
3. Roughen all surfaces of existing concrete prior to placing new concrete.
4. For limits of payment for structure excavation and backfill limits see "General Notes" sheet.
5. Column casing retrofit not shown. For details see "Column Casing Details" sheets.

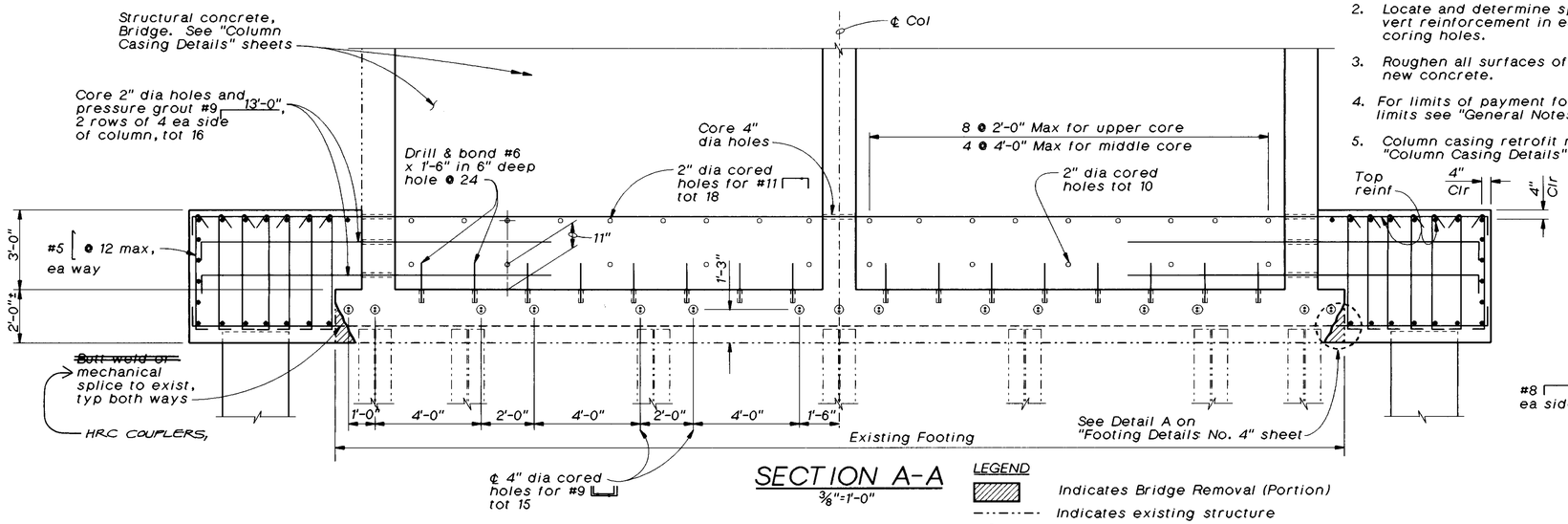

SECTION A-A
3/8"=1'-0"

LEGEND

- Indicates Bridge Removal (Portion)
- Indicates existing structure
- Indicates bundled bar
- Indicates that bar is spliced by either butt weld or mechanical splice. Bars may be spliced at additional locations along their length in order to facilitate placement.

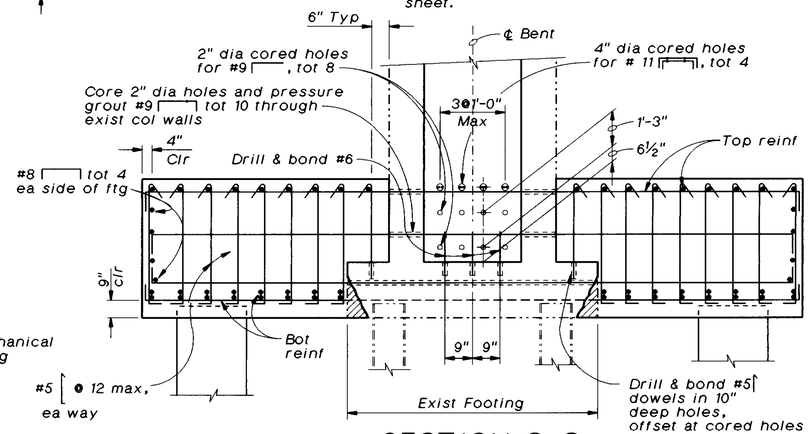

SECTION C-C
3/8"=1'-0"

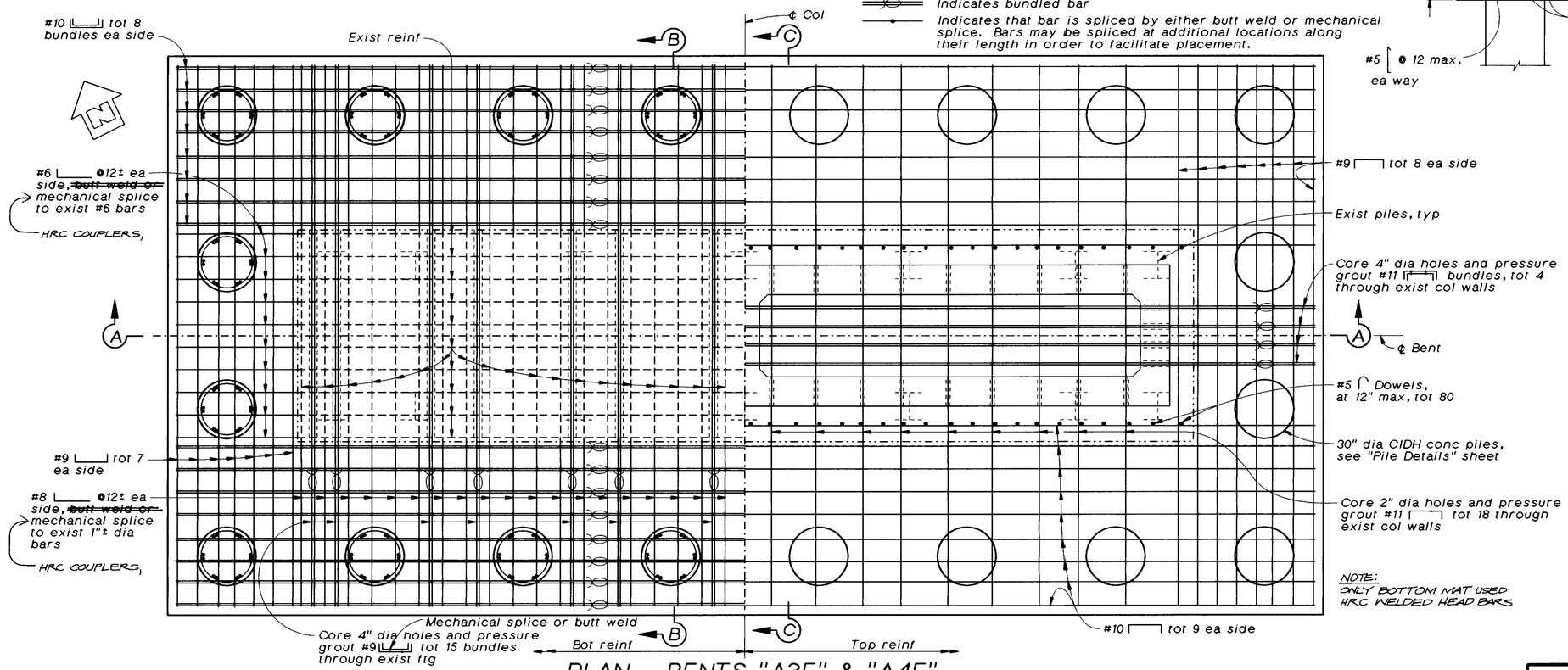

NOTE:
ONLY BOTTOM MAT USED
HRC WELDED HEAD BARS

PLAN - BENTS "A3E" & "A4E"
3/8"=1'-0"

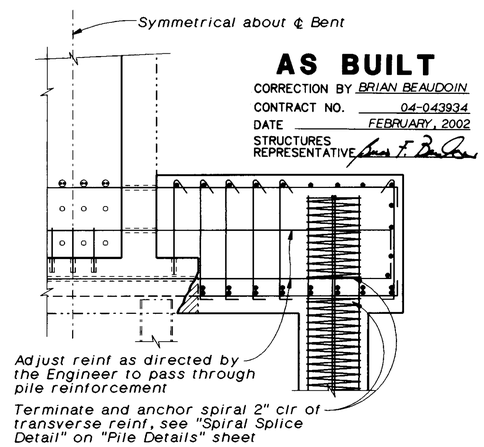

AS BUILT
CORRECTION BY BRIAN BEAUDOIN
CONTRACT NO. 04-043934
DATE FEBRUARY, 2002
STRUCTURES REPRESENTATIVE

PART SECTION B-B
3/8"=1'-0"

The Contractor shall verify all controlling field dimensions before ordering or fabricating any material.

SEISMIC RETROFIT PROJECT NO. 611

CARQUINEZ BRIDGE - "A4E" LINE (APPROACH SPAN)

FOOTING DETAILS NO. 1

Vong Toan
DESIGN OVERSIGHT
April 24, 1997
SIGN OFF DATE

	BY		CHECKED
DESIGN	B. Morrison, Jr.		C. Harrington, J. Quincy
DETAILS	G. Bazań		J. Quincy
QUANTITIES	D. Nguyen-tan, S. Ismail		J. Downing

PREPARED FOR THE STATE OF CALIFORNIA DEPARTMENT OF TRANSPORTATION

Lee Holloway
PROJECT ENGINEER

BRIDGE NO. 23-15 R
POST MILE CC-13.47

ca4-ft3.dlv

ORIGINAL SCALE IN INCHES FOR REDUCED PLANS 0 1 2 3

CU 04-268
EA 043931

DISREGARD PRINTS BEARING EARLIER REVISION DATES → 15-MAR-1997

REVISION DATES (PRELIMINARY STAGE ONLY)

SHEET 19 OF 120

ClibPDF - www.fastio.com

DIST.	COUNTY	ROUTE	POST MILES TOTAL PROJECT	SHEET NO.	TOTAL SHEETS
04	CC/Sol	80	12.8/14.1, 0.0/0.6	419	555

R.W. Fox
PROJECT ENGINEERING GEOLOGIST

REGISTERED GEOLOGIST R.W. FOX No. 78 Exp. 8-31-97 CERTIFIED ENGINEERING GEOLOGIST STATE OF CALIFORNIA

10-20-97
PLANS APPROVAL DATE

THE STATE OF CALIFORNIA OR ITS OFFICERS OR AGENTS SHALL NOT BE RESPONSIBLE FOR THE ACCURACY OR COMPLETENESS OF ELECTRONIC COPIES OF THIS PLAN SHEET.

FOR PLAN VIEW, SEE "LOG OF TEST BORINGS 1 OF 35."

NOTE: FOR FIELD LOGGING NOTATIONS SEE LOG OF TEST BORINGS, SHEET 2 OF 35.

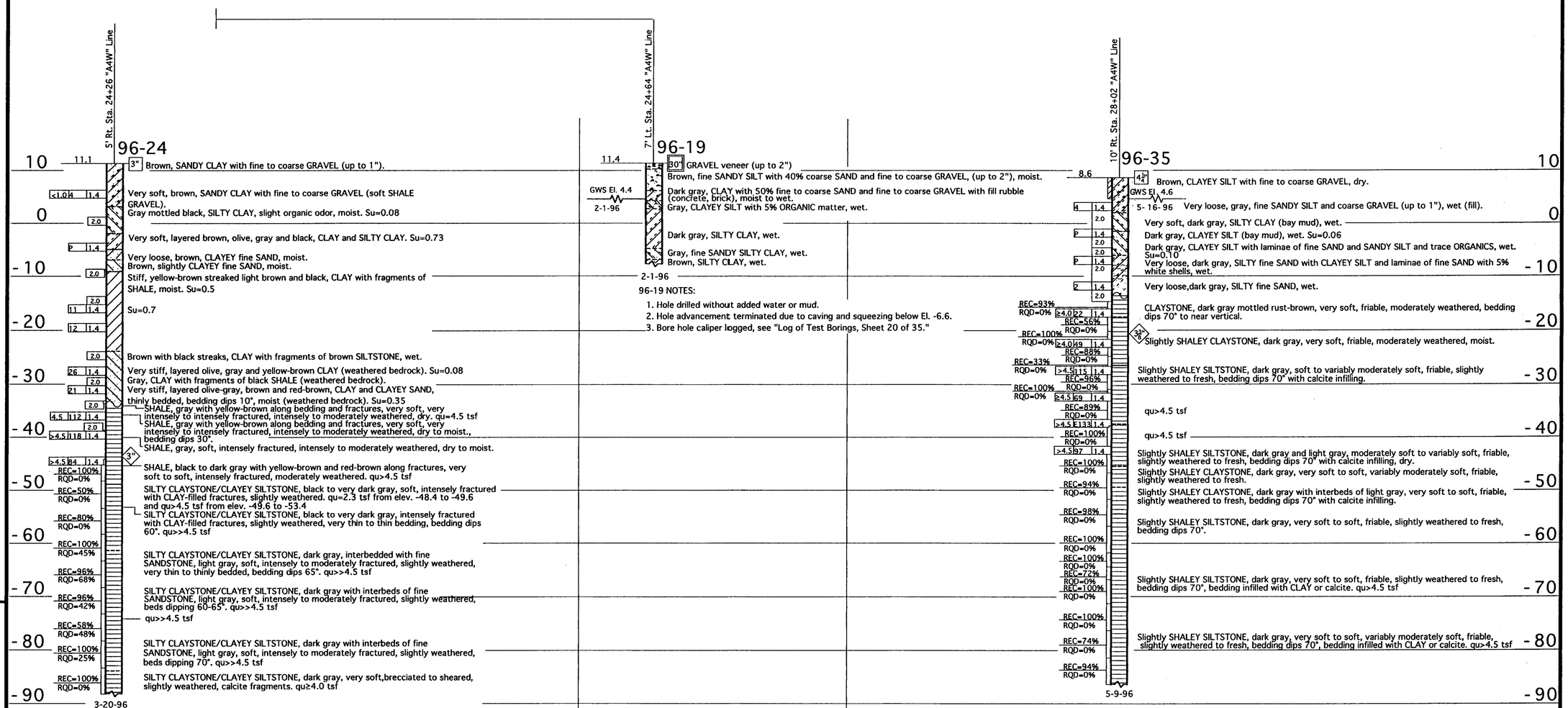

96-24 NOTES:
1. Logged by B. Schell, consultant geologist, CH2M Hill. Edited by L. Jensen
2. Ground water not measured.

96-35 NOTES:
1. Drilled using 94 mm wireline system, continuous soil/rock sampling.
2. AGS consultants, on-site monitoring hazardous materials.
3. Borehole E-logged, Gamma and Caliper logged, see Log of Test Borings, Sheet 21 and 22 of 35.
4. Geophysical log, see Log of Test Borings, Sheet 29 of 35.

PROFILE
Hor. 1" = 50'
Ver. 1" = 10'

NO AS BUILT CHANGES
AS BUILT
CORRECTION BY BRIAN BEAUDOIN
CONTRACT NO. 04-043934
DATE FEBRUARY, 2002
STRUCTURES REPRESENTATIVE

LEGEND OF BORING OPERATIONS

LEGEND OF EARTH MATERIALS: GRAVEL, SAND, SILT, CLAY, SANDY CLAY or CLAYEY SAND, SANDY SILT or SILTY SAND, SILTY CLAY, CLAYEY SILT, PEAT, ROOT OR ORGANIC MATTER, FILL MATERIAL, IGNEOUS ROCK, SEDIMENTARY ROCK, METAMORPHIC ROCK

CONSISTENCY CLASSIFICATION FOR SOILS
According to the Standard Penetration Test

Penetration Index (Blows / Ft)	Granular	Cohesive
0-4	Very Loose	Very Soft
5-9	Loose	Soft
10-19	Slightly compact	Stiff
20-34	Compact	Very Stiff
35-69	Dense	Hard
>70	Very Dense	Very Hard

NOTE: Classification of earth material as shown on this sheet is based upon field inspection and is not to be construed to imply mechanical analysis.

ENGINEERING SERVICE CENTER	STRUCTURE FOUNDATIONS
DRAWN BY Ken Wahl 8-96	
CHECKED BY	

FIELD INVESTIGATION BY: L. JENSEN

State of CALIFORNIA DEPARTMENT OF TRANSPORTATION

DIVISION OF STRUCTURES
STRUCTURE DESIGN

BRIDGE NO. 23-15 R/L
POST MILE CC-13.48 Sol-1.72

EARTHQUAKE RETROFIT - PROJECT No. SR-611
CARQUINEZ BRIDGE-SOUTH APPROACH
LOG OF TEST BORINGS 19 OF 35

ORIGINAL SCALE IN INCHES FOR REDUCED PLANS → 0 1 2 3

CU: 04
EA: 043921/043931

DISREGARD PRINTS BEARING EARLIER REVISION DATES →
REVISION DATES (PRELIMINARY STAGE ONLY)
SHEET 54 OF 70

TL 6051 REV. 5/95

ClibPDF - www.fastio.com

DIST	COUNTY	ROUTE	POST MILES TOTAL PROJECT	SHEET NO.	TOTAL SHEETS
04	CC, SOL	80	12.8/14.1, 0.0/06	455	555

Robert L. Morrison Jr
REGISTERED CIVIL ENGINEER
10-20-9
PLANS APPROVAL DATE

REGISTERED PROFESSIONAL ENGINEER — Robert L. Morrison Jr — No. 43693 — Exp. 03/31/97 — CIVIL — STATE OF CALIFORNIA

CH2M HILL
2485 NATOMAS PARK DR, SUITE 600
SACRAMENTO, CALIFORNIA 95833

The State of California or its officers or agents shall not be responsible for the accuracy or completeness of electronic copies of this plan sheet.

Notes:

1. Bent "A5E" shown, Bent "A7E" similar.
2. For Legend and Notes see "Footing Details No. 1" sheet

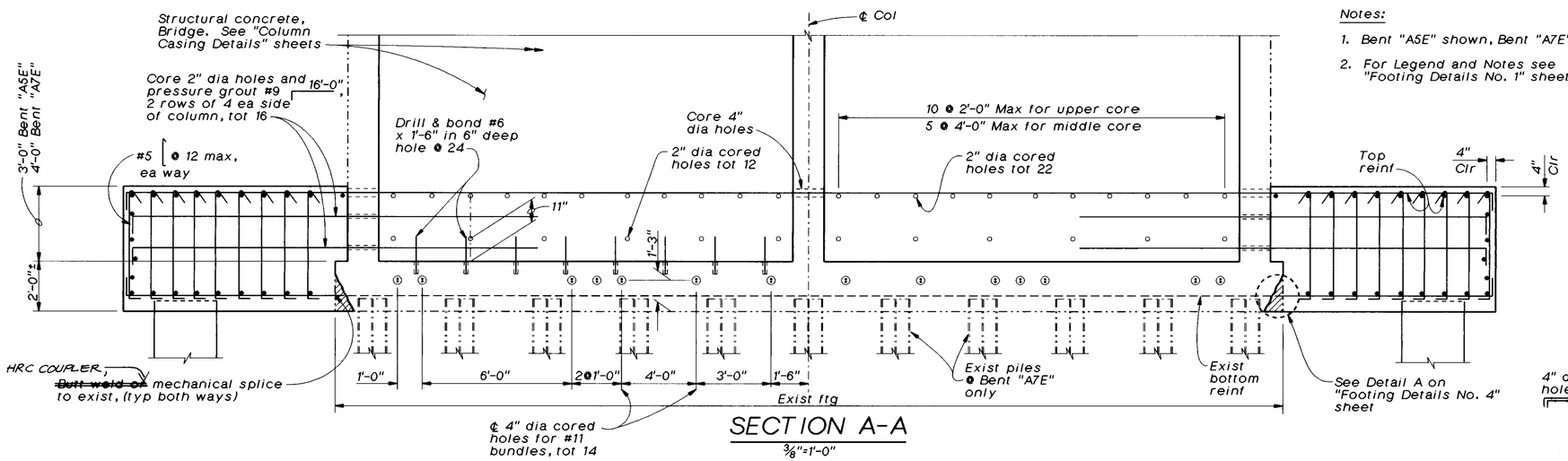

SECTION A-A

3/8"=1'-0"

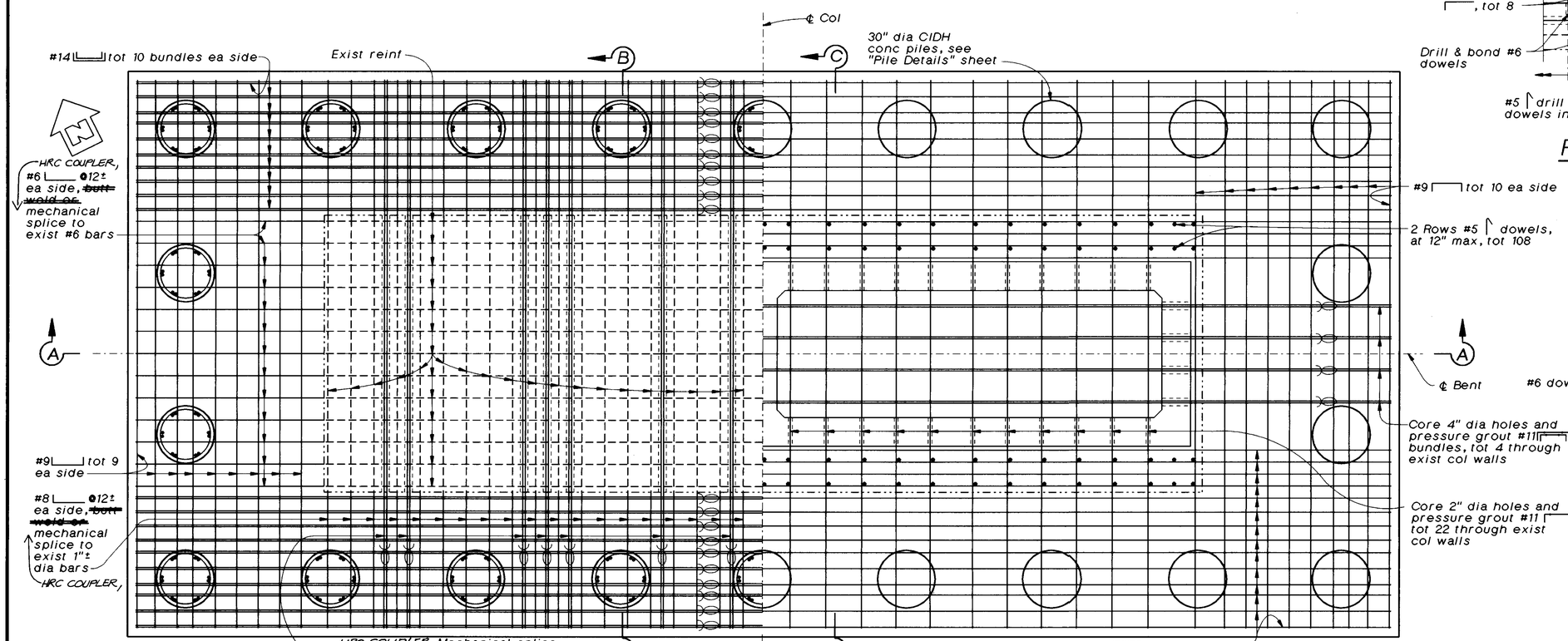

PLAN - BENT "A5E" &"A7E"

3/8"=1'-0"

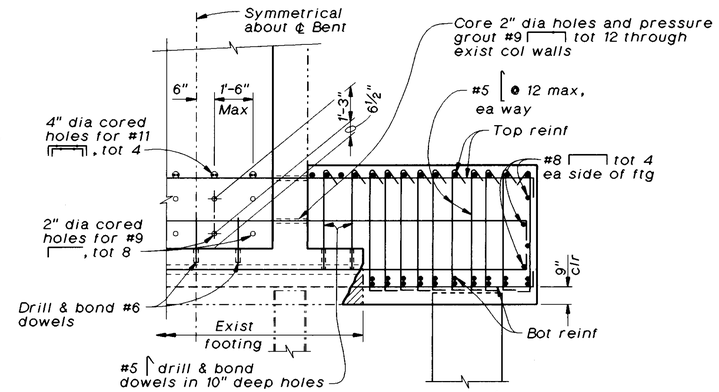

PART SECTION C-C

3/8"=1'-0"

AS BUILT
CORRECTION BY BRIAN BEAUDOIN
CONTRACT NO. 04-043934
DATE FEBRUARY, 2002
STRUCTURES REPRESENTATIVE

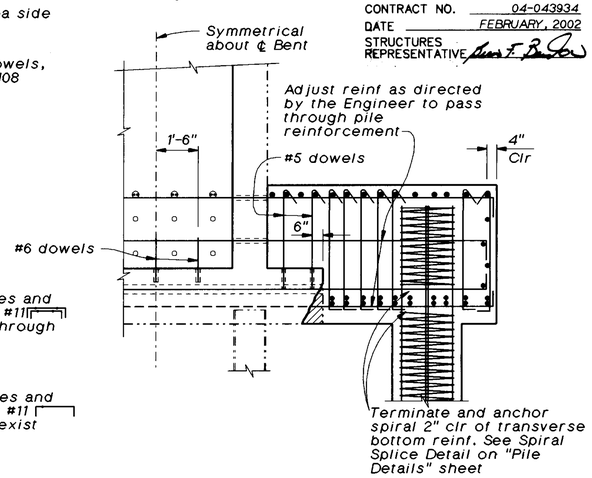

PART SECTION B-B

3/8"=1'-0"

NOTE:
ONLY BOTTOM MAT USED HRC WELDED HEAD BARS.

The Contractor shall verify all controlling field dimensions before ordering or fabricating any material.

Vong Toan — DESIGN OVERSIGHT — April 24, 1997 — SIGN OFF DATE	DESIGN	BY R. Morrison, Jr.	CHECKED C. Harrington/ J. Quincy	PREPARED FOR THE STATE OF CALIFORNIA DEPARTMENT OF TRANSPORTATION	Lee Holloway — PROJECT ENGINEER
	DETAILS	BY G. Bazan / J. Uria	CHECKED J. Quincy		
	QUANTITIES	BY D. Nguyen-Tan/ S. Ismail	CHECKED J. Downing		

BRIDGE NO. 23-15 R
POST MILE CC-13.47

SEISMIC RETROFIT PROJECT NO. 611
CARQUINEZ BRIDGE - "A4E" LINE (APPROACH SPAN)
FOOTING DETAILS NO. 2

ca4-ft5a.dlv

ORIGINAL SCALE IN INCHES FOR REDUCED PLANS 0 1 2 3

CU 04-268
EA 043931

DISREGARD PRINTS BEARING EARLIER REVISION DATES → 15-MAR-1997

REVISION DATES (PRELIMINARY STAGE ONLY) | SHEET 20 | OF 120

ClibPDF - www.fastio.com

DIST.	COUNTY	ROUTE	POST MILES TOTAL PROJECT	SHEET NO.	TOTAL SHEETS
04	CC/Sol	80	12.8/14.1, 0.0/0.6	420	555

The information represented on this drawing title "Carquinez Bridge South Approach" was not the result of any work developed, performed or completed by this Department (Caltrans). All such activity appears to be by those parties presented on this drawing who would bear all such responsibility. This drawing is available and presented only for the convenience of any bidder, contractor or other interested party. It should be expressly understood that Caltrans assumes no responsibility whatsoever in respect to the sufficiency or accuracy, completeness, interpretation set forth therein or any other aspect of the information shown on or represented by this drawing.

Signed By: R. W. [illegible] Date: 10-1-96

GEO-HYDRO-DATA
INCORPORATED

CALIPER LOG

96-18

OTHER SERVICES:
INVOICE
9857

COMPANY : CAL TRANS
WELL : B-12
LOCATION/FIELD : CARQU BR AW-10
COUNTY : CONTRA COSTA
STATE : CALIFORNIA
SECTION : TOWNSHIP : RANGE :

DATE : 02/01/96 PERMANENT DATUM : GL ELEVATIONS
DEPTH DRILLER : 14.5 ELEV. PERM. DATUM: KB :
LOG BOTTOM : 13.90 LOG MEASURED FROM: GL DF :
LOG TOP : 4.10 DRL MEASURED FROM: GL GL :

CASING DRILLER : . LOGGING UNIT : 7
CASING TYPE : . FIELD OFFICE : TEHACHAPI
CASING THICKNESS: . RECORDED BY : K. KEMP

BIT SIZE : 30 BOREHOLE FLUID : BUCKET FILE : ORIGINAL
MAGNETIC DECL. : . RM : . TYPE : 9064A1
MATRIX DENSITY : . RM TEMPERATURE : . LOG : 9
FLUID DENSITY : . MATRIX DELTA T : . PLOT : 1 60
NEUTRON MATRIX : FLUID DELTA T : . THRESH: 3000
REMARKS :
DRILLED BY: CAL TRANS

ALL SERVICES PROVIDED SUBJECT TO STANDARD TERMS AND CONDITIONS

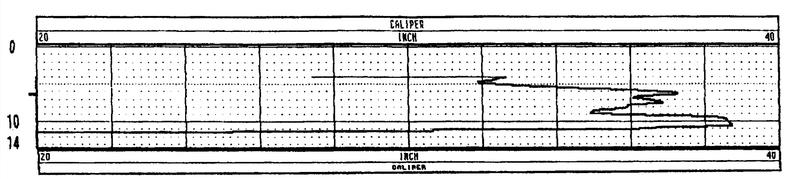

GEO-HYDRO-DATA
INCORPORATED

CALIPER LOG

96-19

OTHER SERVICES:
INVOICE
9857

COMPANY : CAL TRANS
WELL : B-13
LOCATION/FIELD : CARQU BR AW-11
COUNTY : CONTRA COSTA
STATE : CALIFORNIA
SECTION : TOWNSHIP : RANGE :

DATE : 02/01/96 PERMANENT DATUM : GL ELEVATIONS
DEPTH DRILLER : 19 ELEV. PERM. DATUM: KB :
LOG BOTTOM : 17.70 LOG MEASURED FROM: GL DF :
LOG TOP : 5.00 DRL MEASURED FROM: GL GL :

CASING DRILLER : . LOGGING UNIT : 7
CASING TYPE : . FIELD OFFICE : TEHACHAPI
CASING THICKNESS: . RECORDED BY : K. KEMP

BIT SIZE : 30 BOREHOLE FLUID : BUCKET FILE : ORIGINAL
MAGNETIC DECL. : . RM : . TYPE : 9064A1
MATRIX DENSITY : . RM TEMPERATURE : . LOG : 0
FLUID DENSITY : . MATRIX DELTA T : . PLOT : 1 60
NEUTRON MATRIX : FLUID DELTA T : . THRESH: 3000
REMARKS :
DRILLED BY: CAL TRANS

ALL SERVICES PROVIDED SUBJECT TO STANDARD TERMS AND CONDITIONS

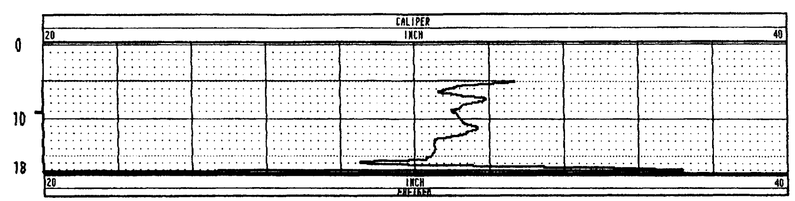

GEO-HYDRO-DATA
INCORPORATED

CALIPER LOG

96-19

OTHER SERVICES:
INVOICE
9857

COMPANY : CAL TRANS
WELL : B-13 RUN TWO
LOCATION/FIELD : CARQU BR AW-11
COUNTY : CONTRA COSTA
STATE : CALIFORNIA
SECTION : TOWNSHIP : RANGE :

DATE : 02/02/96 PERMANENT DATUM : GL ELEVATIONS
DEPTH DRILLER : 19 ELEV. PERM. DATUM: KB :
LOG BOTTOM : 17.30 LOG MEASURED FROM: GL DF :
LOG TOP : 4.50 DRL MEASURED FROM: GL GL :

CASING DRILLER : . LOGGING UNIT : 7
CASING TYPE : . FIELD OFFICE : TEHACHAPI
CASING THICKNESS: . RECORDED BY : K. KEMP

BIT SIZE : 30 BOREHOLE FLUID : BUCKET FILE : ORIGINAL
MAGNETIC DECL. : . RM : . TYPE : 9064A1
MATRIX DENSITY : . RM TEMPERATURE : . LOG : 8
FLUID DENSITY : . MATRIX DELTA T : . PLOT : 1 60
NEUTRON MATRIX : FLUID DELTA T : . THRESH: 3000
REMARKS :
DRILLED BY: CAL TRANS

ALL SERVICES PROVIDED SUBJECT TO STANDARD TERMS AND CONDITIONS

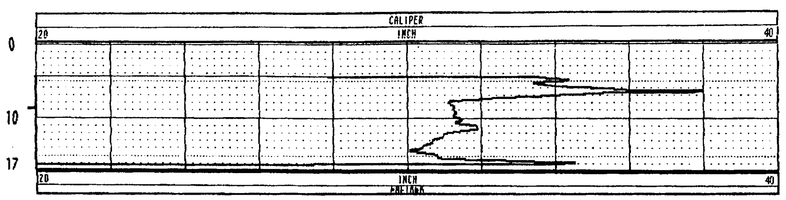

NO AS BUILT CHANGES
AS BUILT
CORRECTION BY BRIAN BEAUDOIN
CONTRACT NO. 04-043934
DATE FEBRUARY, 2002
STRUCTURES REPRESENTATIVE [illegible]

EARTHQUAKE RETROFIT - PROJECT No. SR-611

ENGINEERING SERVICE CENTER	STRUCTURE FOUNDATIONS	FIELD INVESTIGATION BY:	State of CALIFORNIA DEPARTMENT OF TRANSPORTATION	DIVISION OF STRUCTURES STRUCTURE DESIGN	BRIDGE NO. 23-15 R/L	CARQUINEZ BRIDGE - SOUTH APPROACH
DRAWN BY	Irma Zamora 8/96				POST MILE CC-13.48 Sol-1.72	LOG OF TEST BORINGS 20 OF 35
CHECKED BY						

ORIGINAL SCALE IN INCHES FOR REDUCED PLANS → 0 1 2 3

CU: 04
EA: 043921/043931

DISREGARD PRINTS BEARING EARLIER REVISION DATES →

REVISION DATES (PRELIMINARY STAGE ONLY)

SHEET 55 OF 70

TL 6051 REV. 7/96

ClibPDF - www.fastio.com

DIST	COUNTY	ROUTE	POST MILES TOTAL PROJECT	SHEET NO.	TOTAL SHEETS
04	CC,SOL	80	12.8/14.1, 0.0/0.6	456	555

Robert L. Morrison Jr
REGISTERED CIVIL ENGINEER

10-20-97
PLANS APPROVAL DATE

REGISTERED PROFESSIONAL ENGINEER — Robert L. Morrison Jr — No. 43693 — Exp. 03/31/97 — CIVIL — STATE OF CALIFORNIA

CH2M HILL
2485 NATOMAS PARK DR, SUITE 600
SACRAMENTO, CALIFORNIA 95833

The State of California or its officers or agents shall not be responsible for the accuracy or completeness of electronic copies of this plan sheet.

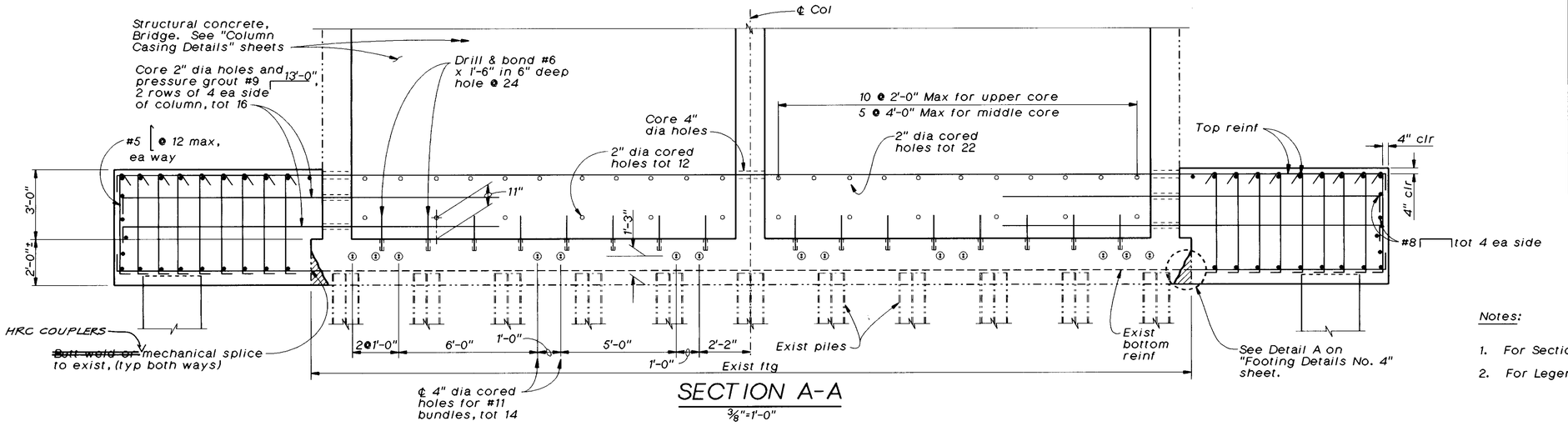

SECTION A-A

3/8"=1'-0"

Notes:

1. For Sections B-B and C-C see "Footing Details No. 4" sheet.
2. For Legend and Notes, see "Footing Details No. 1" sheet.

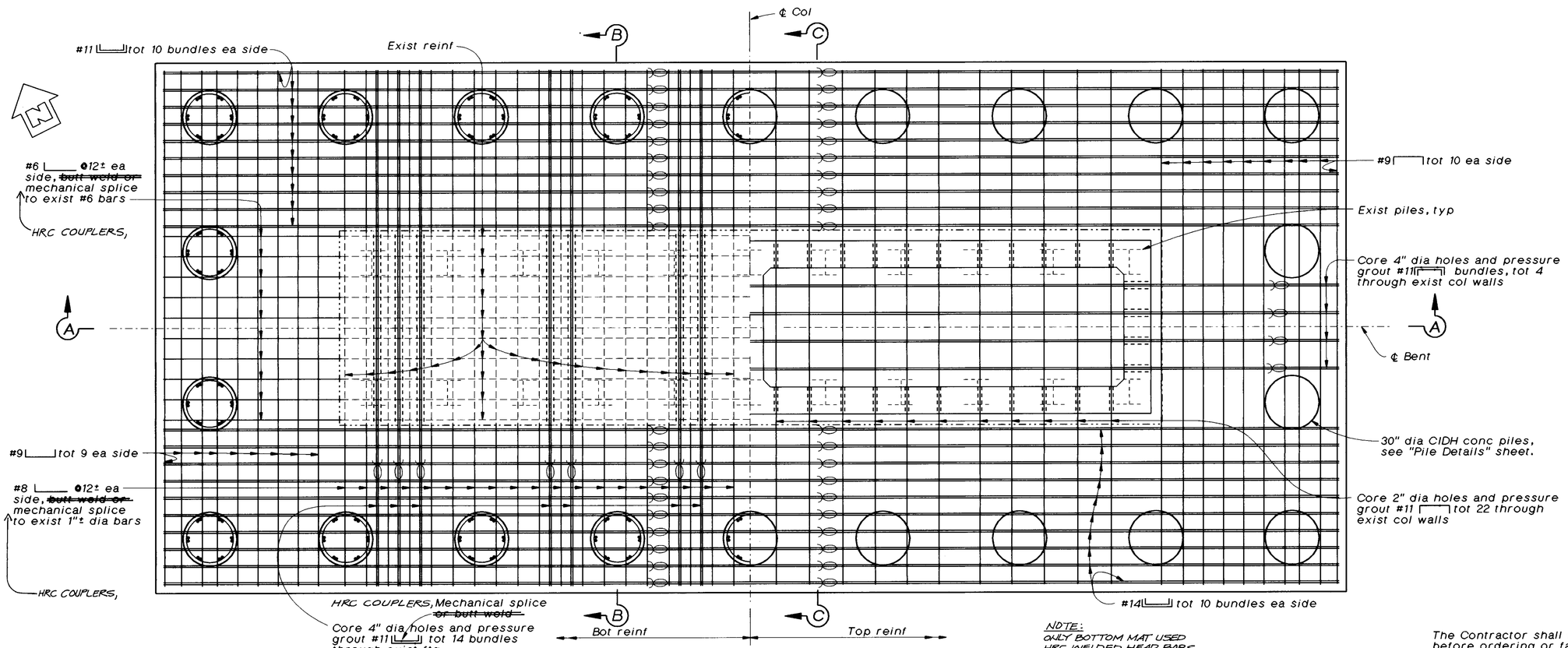

NOTE:
ONLY BOTTOM MAT USED
HRC WELDED HEAD BARS

PLAN - "A6E"

3/8"=1'-0"

AS BUILT
CORRECTION BY BRIAN BEAUDOIN
CONTRACT NO. 04-043934
DATE FEBRUARY, 2002
STRUCTURES REPRESENTATIVE

The Contractor shall verify all controlling field dimensions before ordering or fabricating any material.

SEISMIC RETROFIT PROJECT NO. 611

CARQUINEZ BRIDGE - "A4E" LINE (APPROACH SPAN)

FOOTING DETAILS NO. 3

DESIGN	BY S. Ismail	CHECKED C. Harrington	
DETAILS	BY A. Kayden	CHECKED J. Quincy	
QUANTITIES	BY S. Ismail, D. Nguyen-Tan	CHECKED J. Downing	

Vong Toan
DESIGN OVERSIGHT
Apr. 24, 1997
SIGN OFF DATE

PREPARED FOR THE STATE OF CALIFORNIA DEPARTMENT OF TRANSPORTATION

Lee Holloway
PROJECT ENGINEER

BRIDGE NO. 23-15 R
POST MILE CC-13.47

CU 04-268
EA 043931

ca4-ft6a.dlv

ORIGINAL SCALE IN INCHES FOR REDUCED PLANS 0 1 2 3

DISREGARD PRINTS BEARING EARLIER REVISION DATES → REVISION DATES (PRELIMINARY STAGE ONLY) 15-MAR-1997

SHEET 21 OF 120

ClibPDF - www.fastio.com

DIST.	COUNTY	ROUTE	POST MILES TOTAL PROJECT	SHEET NO.	TOTAL SHEETS
04	CC/Sol	80	12.8/14.1, 0.0/0.6	421	555

The information represented on this drawing title "Carquinez Bridge South Approach" was not the result of any work developed, performed or completed by this Department (Caltrans). All such activity appears to be by those parties presented on this drawing who would bear all such responsibility. This drawing is available and presented only for the convenience of any bidder, contractor or other interested party. It should be expressly understood that Caltrans assumes no responsibility whatsoever in respect to the sufficiency or accuracy, completeness, interpretation set forth therein or any other aspect of the information shown on or represented by this drawing.

Signed By: R. W. [illegible] Date: 10-1-96

GEO-HYDRO-DATA

INCORPORATED

NATURAL GAMMA LOG

96-35

OTHER SERVICES:
INVOICE
9950

COMPANY : CAL TRANS
WELL : B 35 NEAR PIER 6 A
LOCATION/FIELD : CARQUENEZ BRIDGE
COUNTY : CONTRA COSTA
STATE : CALIFORNIA
SECTION : . TOWNSHIP : . RANGE : .

DATE : 05/09/96
DEPTH DRILLER : 95
LOG BOTTOM : 95.40
LOG TOP : 0.80
PERMANENT DATUM : GL
ELEV. PERM. DATUM:
LOG MEASURED FROM: GL
DRL MEASURED FROM: GL
ELEVATIONS
KB :
DF :
GL :

CASING DRILLER : .
CASING TYPE : .
CASING THICKNESS: .
LOGGING UNIT : 7
FIELD OFFICE : TEHACHAPI
RECORDED BY : K. KEMP

BIT SIZE : 3.75
MAGNETIC DECL. : .
MATRIX DENSITY : .
FLUID DENSITY : .
NEUTRON MATRIX :
REMARKS :
BOREHOLE FLUID :
RM : .
RM TEMPERATURE : .
MATRIX DELTA T : .
FLUID DELTA T : .
FILE : ORIGINAL
TYPE : 9041A
LOG : 3
PLOT : 1 57
THRESH: 3000

DRILED BY: CAL TRANS
LOG RUN 5/9/96 1:10 PM

ALL SERVICES PROVIDED SUBJECT TO STANDARD TERMS AND CONDITIONS

GEO-HYDRO-DATA

INCORPORATED

ELECTRIC WELL LOG

96-35

OTHER SERVICES:
INVOICE
9950

COMPANY : CAL TRANS
WELL : B 35 NEAR PIER 6 A
LOCATION/FIELD : CARQUENEZ BRIDGE
COUNTY : CONTRA COSTA
STATE : CALIFORNIA
SECTION : . TOWNSHIP : . RANGE : .

DATE : 05/09/96
DEPTH DRILLER : 95
LOG BOTTOM : 95.40
LOG TOP : 0.80
PERMANENT DATUM : GL
ELEV. PERM. DATUM:
LOG MEASURED FROM: GL
DRL MEASURED FROM: GL
ELEVATIONS
KB :
DF :
GL :

CASING DRILLER : .
CASING TYPE : .
CASING THICKNESS: .
LOGGING UNIT : 7
FIELD OFFICE : TEHACHAPI
RECORDED BY : K. KEMP

BIT SIZE : 3.75
MAGNETIC DECL. : .
MATRIX DENSITY : .
FLUID DENSITY : .
NEUTRON MATRIX :
REMARKS :
BOREHOLE FLUID :
RM : .
RM TEMPERATURE : .
MATRIX DELTA T : .
FLUID DELTA T : .
FILE : ORIGINAL
TYPE : 9041A
LOG : 3
PLOT : 1 0
THRESH: 3000

DRILED BY: CAL TRANS
LOG RUN 5/9/96 1:10 PM

ALL SERVICES PROVIDED SUBJECT TO STANDARD TERMS AND CONDITIONS

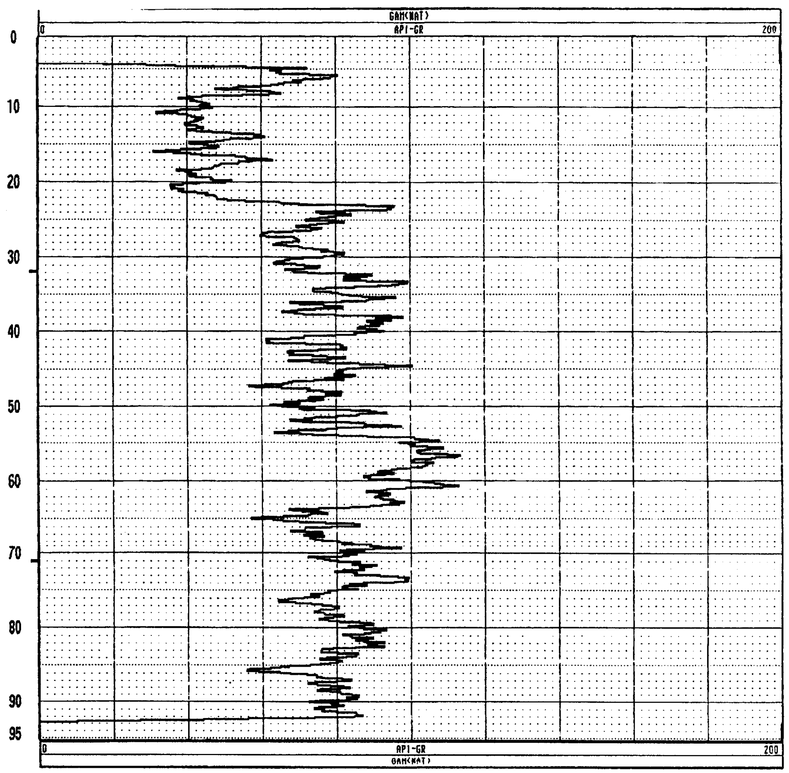

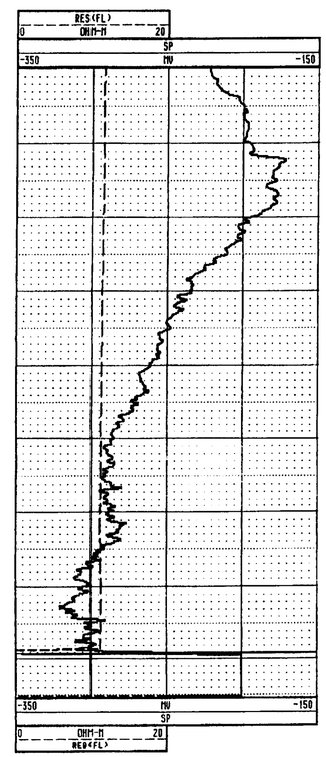

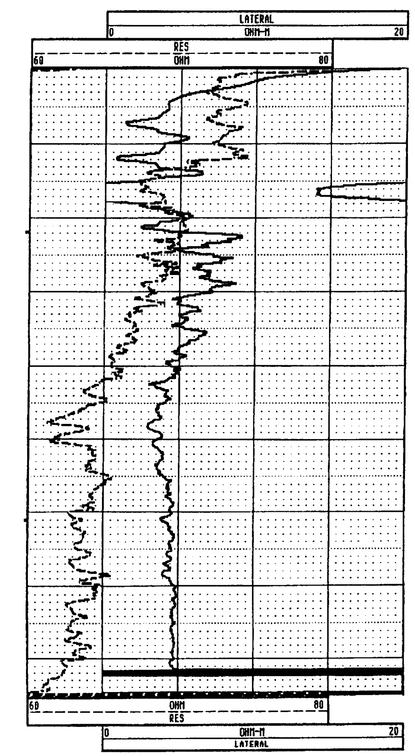

NO AS BUILT CHANGES
AS BUILT
CORRECTION BY BRIAN BEAUDOIN
CONTRACT NO. 04-043934
DATE FEBRUARY, 2002
STRUCTURES REPRESENTATIVE [illegible]

ENGINEERING SERVICE CENTER	STRUCTURE FOUNDATIONS	FIELD INVESTIGATION BY:	State of CALIFORNIA DEPARTMENT OF TRANSPORTATION	DIVISION OF STRUCTURES STRUCTURE DESIGN	BRIDGE NO. 23-15 R/L	EARTHQUAKE RETROFIT - PROJECT No. SR-611
PREPARED BY	[illegible] 8/96				POST MILE CC-13.48 Sol-1.72	CARQUINEZ BRIDGE - SOUTH APPROACH
CHECKED BY						LOG OF TEST BORINGS 21 OF 35

ORIGINAL SCALE IN INCHES FOR REDUCED PLANS → 0 1 2 3

CU: 04
EA: 043921/043931

DISREGARD PRINTS BEARING EARLIER REVISION DATES →

REVISION DATES (PRELIMINARY STAGE ONLY)

SHEET 56 OF 70

TL 6051 REV. 7/96

ClibPDF - www.fastio.com

DIST	COUNTY	ROUTE	POST MILES TOTAL PROJECT	SHEET NO.	TOTAL SHEETS
04	CC, SOL	80	12.8/14.1, 0.0/0.6	457	555

REGISTERED CIVIL ENGINEER

10-20-97

PLANS APPROVAL DATE

REGISTERED PROFESSIONAL ENGINEER Robert L. Morrison Jr. No. 43693 Exp. 03/31/97 CIVIL STATE OF CALIFORNIA

CH2M HILL
2485 NATOMAS PARK DR, SUITE 600
SACRAMENTO, CALIFORNIA 95833

The State of California or its officers or agents shall not be responsible for the accuracy or completeness of electronic copies of this plan sheet.

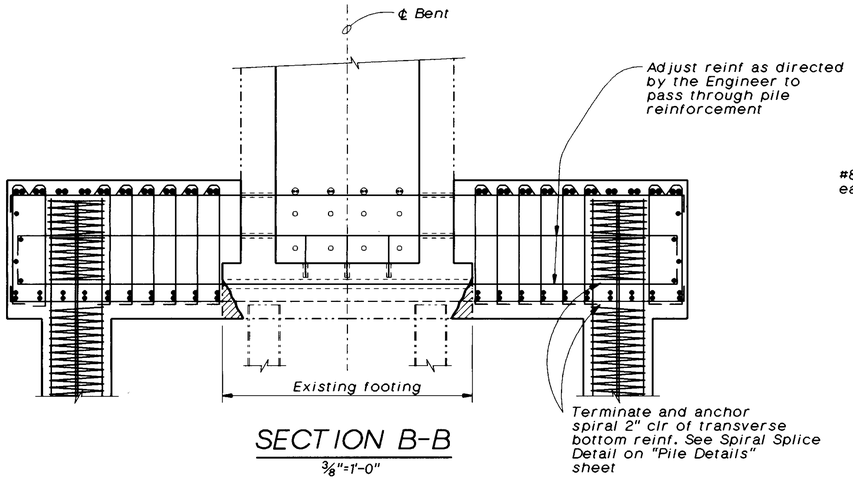

SECTION B-B

3/8"=1'-0"

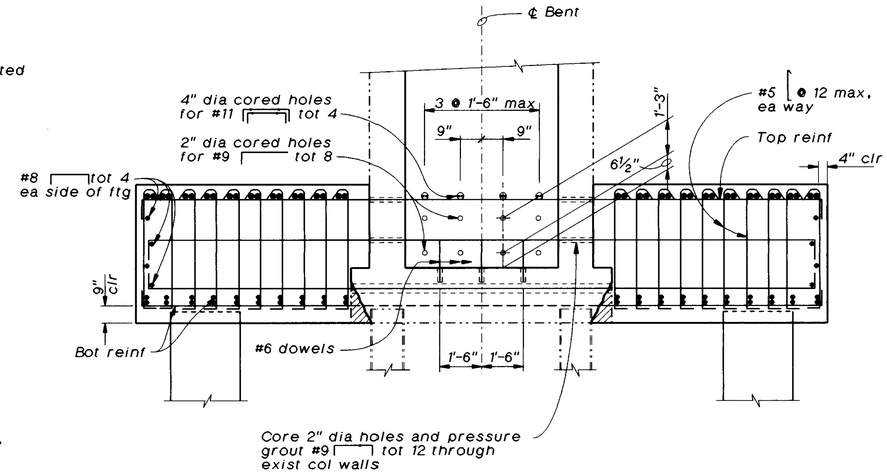

SECTION C-C

3/8"=1'-0"

Notes:

1. *For location of Sections B-B and C-C see "Footing Details No. 3" sheet.*
2. *For Legend and Notes, see "Footing Details No. 1" sheet.*

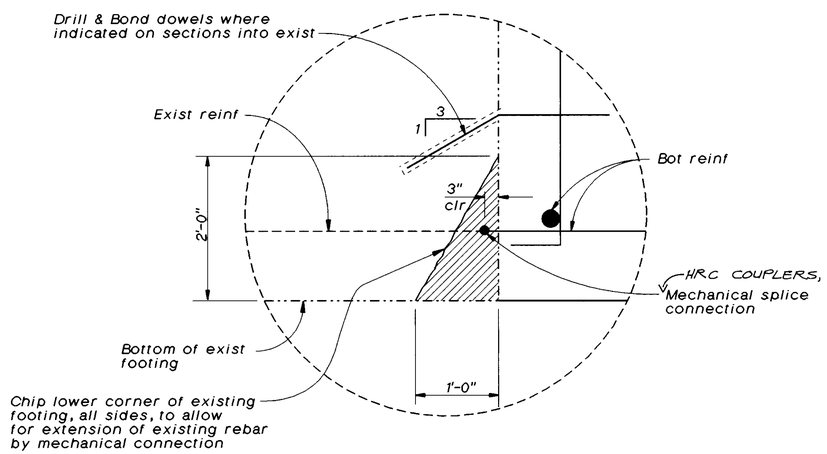

DETAIL A - MECHANICAL SPLICE

No scale

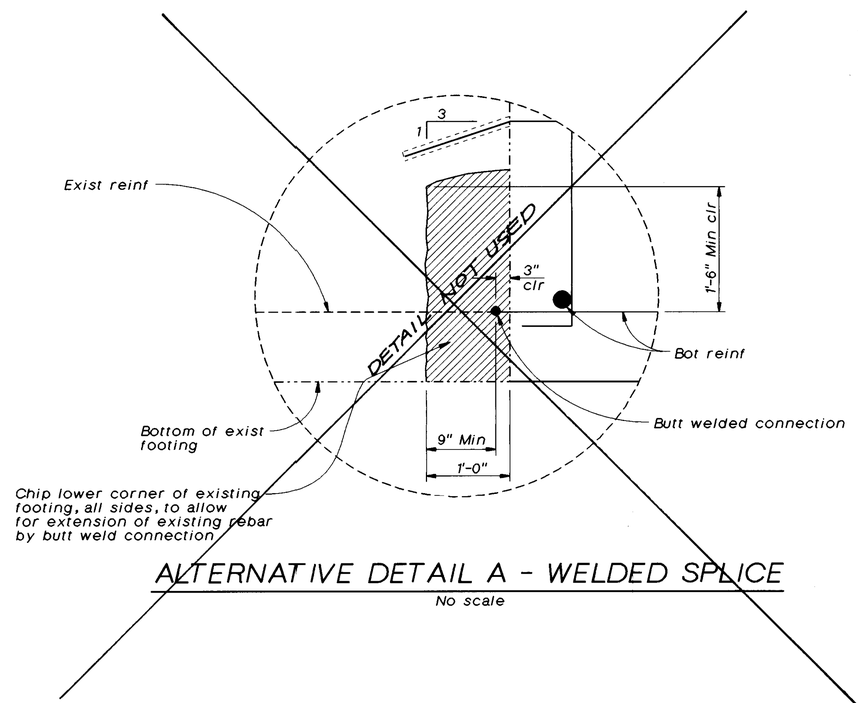

ALTERNATIVE DETAIL A - WELDED SPLICE

No scale

AS BUILT

CORRECTION BY BRIAN BEAUDOIN
CONTRACT NO. 04-043934
DATE FEBRUARY, 2002
STRUCTURES REPRESENTATIVE

The Contractor shall verify all controlling field dimensions before ordering or fabricating any material.

SEISMIC RETROFIT PROJECT NO. 611

CARQUINEZ BRIDGE - "A4E" LINE (APPROACH SPAN)

FOOTING DETAILS NO. 4

Vong Toan
DESIGN OVERSIGHT
April 24, 1997
SIGN OFF DATE

	BY	CHECKED
DESIGN	S. Ismail	C. Harrington
DETAILS	A. Kayden	J. Quincy
QUANTITIES	S. Ismail, D. Nguyen-Tan	J. Downing

PREPARED FOR THE STATE OF CALIFORNIA DEPARTMENT OF TRANSPORTATION

Lee Holloway
PROJECT ENGINEER

BRIDGE NO. 23-15 R
POST MILE CC-13.47

ca4-ft6.dlv

ORIGINAL SCALE IN INCHES FOR REDUCED PLANS 0 1 2 3

CU 04-268
EA 043931

DISREGARD PRINTS BEARING EARLIER REVISION DATES → 15-MAR-1997

REVISION DATES (PRELIMINARY STAGE ONLY)

SHEET 22 OF 120

ClibPDF - www.fastio.com

DIST	COUNTY	ROUTE	POST MILES TOTAL PROJECT	SHEET NO.	TOTAL SHEETS
04	CC, SOL	80	12.8/12.1, 0.0/0.6	503	555

REGISTERED CIVIL ENGINEER

10-20-97
PLANS APPROVAL DATE

REGISTERED PROFESSIONAL ENGINEER Jeffrey S. Aldrich No. 34271 Exp. 09/30/99 CIVIL STATE OF CALIFORNIA

CH2M HILL
2485 NATOMAS PARK DR, SUITE 600
SACRAMENTO, CALIFORNIA 95833

The State of California or its officers or agents shall not be responsible for the accuracy or completeness of electronic copies of this plan sheet.

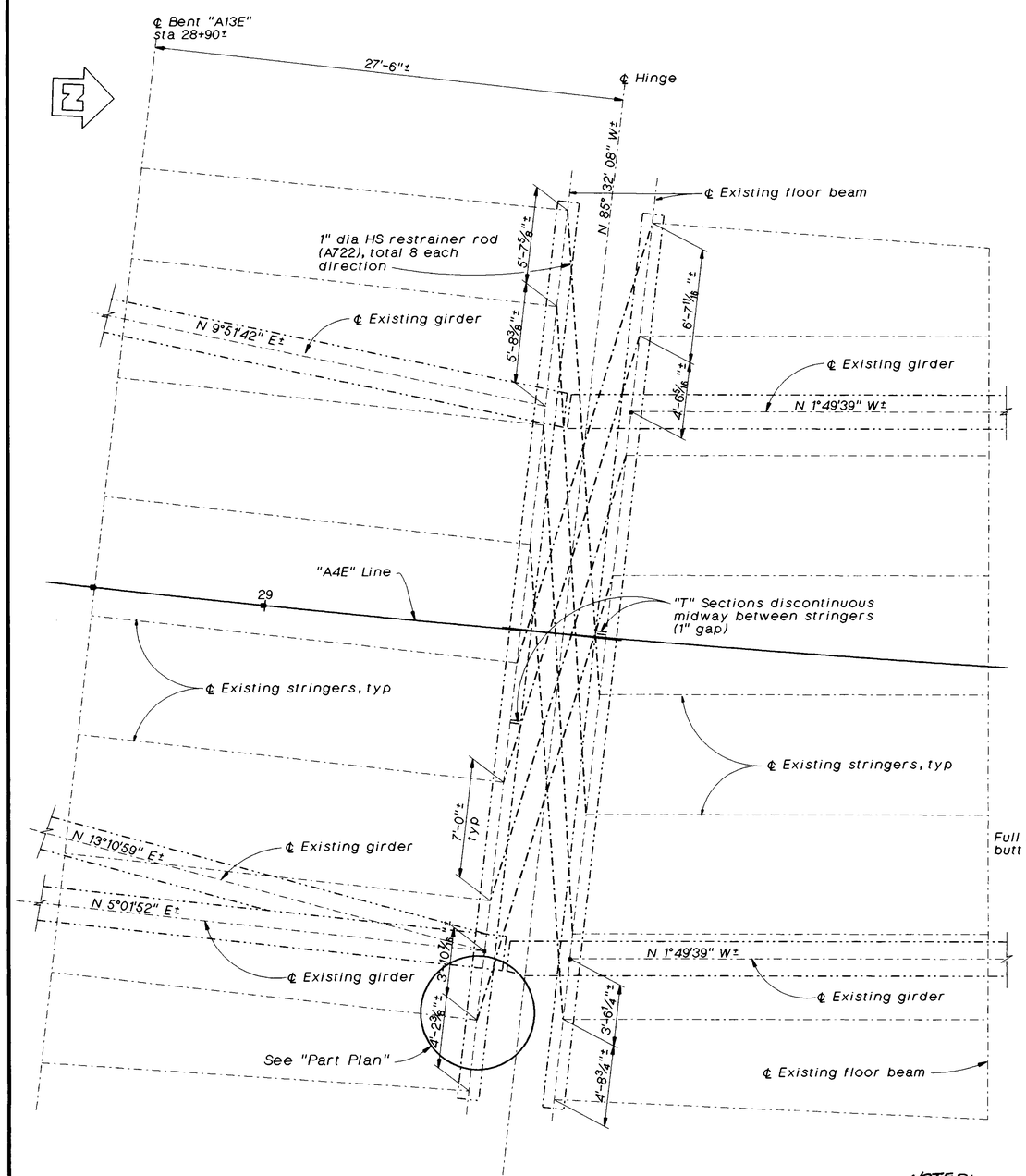

LAYOUT TOP TRANSVERSE HINGE RESTRAINER
1/4"=1'-0"

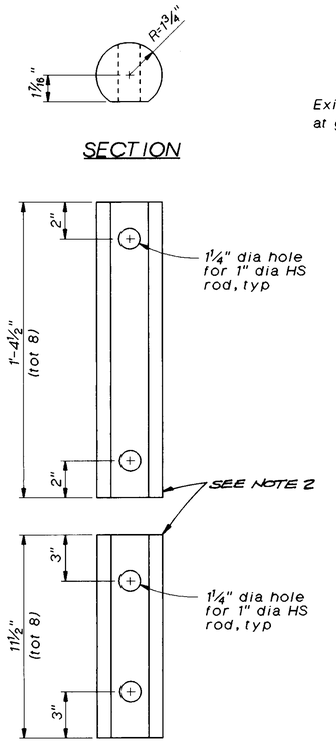

ELEVATION

BEARING BAR DETAIL
3"=1'-0"

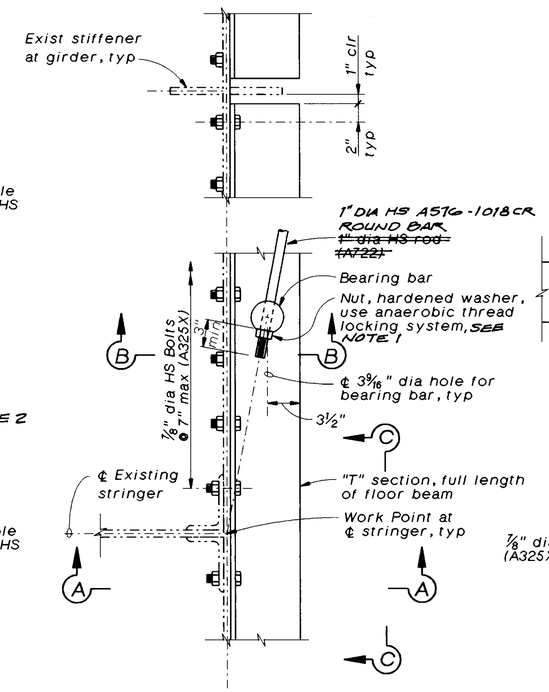

PART PLAN
1 1/2"=1'-0"

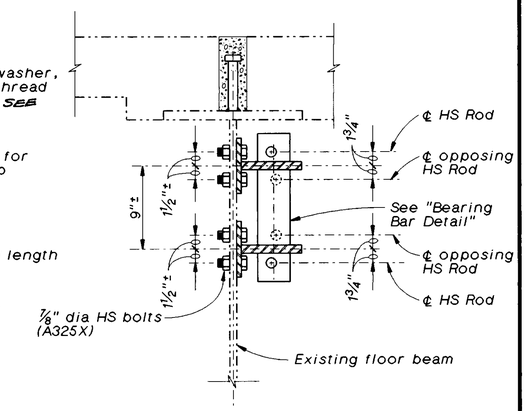

SECTION B-B
1 1/2"=1'-0"

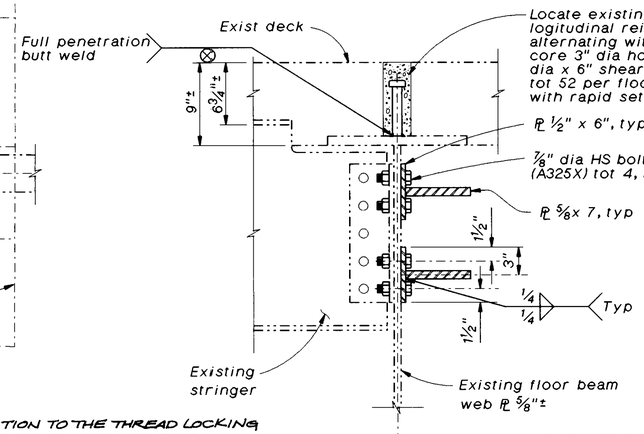

SECTION A-A
1 1/2"=1'-0"

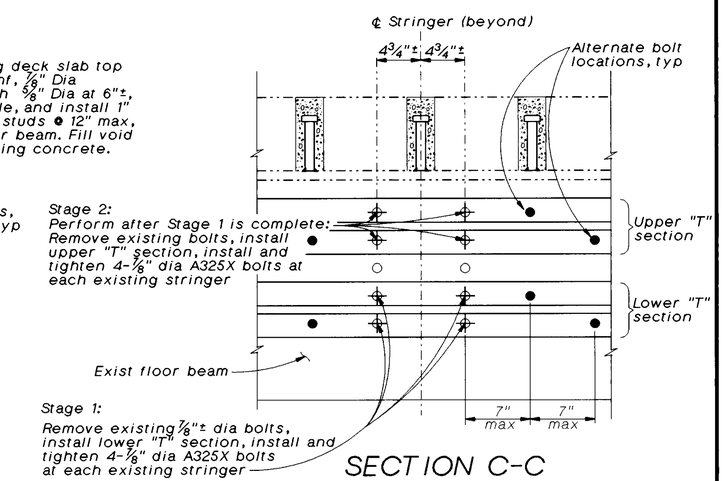

SECTION C-C
1 1/2"=1'-0"

NOTES:
1. IN ADDITION TO THE THREAD LOCKING ADHESIVE COMPOUND, THE CONTRACTOR SHALL INSTALL JAM NUTS.
2. BEARING BARS SHALL BE ASTM A588 GRADE 50.

AS BUILT
CORRECTION BY BRIAN BEAUDOIN
CONTRACT NO. 04-043934
DATE FEBRUARY, 2002
STRUCTURES REPRESENTATIVE

The Contractor shall verify all controlling field dimensions before ordering or fabricating any material.

SEISMIC RETROFIT PROJECT NO. 611

CARQUINEZ BRIDGE - "A4E" LINE (APPROACH SPAN)

HINGE DETAILS NO. 2

Vong Toan
DESIGN OVERSIGHT
April 29, 1997
SIGN OFF DATE

DESIGN	BY J. Aldrich	CHECKED J. Zhang / J. Quincy
DETAILS	BY G. Bazán	CHECKED J. Quincy
QUANTITIES	BY D. Nguyen-Tan, S. Ismail	CHECKED J. Downing

PREPARED FOR THE STATE OF CALIFORNIA DEPARTMENT OF TRANSPORTATION

Lee Holloway
PROJECT ENGINEER

BRIDGE NO. 23-15 R
POST MILE CC-13.47

car-res3.dlv

ORIGINAL SCALE IN INCHES FOR REDUCED PLANS 0 1 2 3

CU 04-268
EA 043931

DISREGARD PRINTS BEARING EARLIER REVISION DATES → 15-MAR-1997

REVISION DATES (PRELIMINARY STAGE ONLY)

SHEET 68 OF 120

ClibPDF - www.fastio.com

DIST.	COUNTY	ROUTE	POST MILES TOTAL PROJECT	SHEET NO.	TOTAL SHEETS
04	CC/Sol	80	12.8/14.1/00/06	422	555

The information represented on this drawing title "Carquinez Bridge South Approach" was not the result of any work developed, performed or completed by this Department (Caltrans). All such activity appears to be by those parties presented on this drawing who would bear all such responsibility. This drawing is available and presented only for the convenience of any bidder, contractor or other interested party. It should be expressly understood that Caltrans assumes no responsibility whatsoever in respect to the sufficiency or accuracy, completeness, interpretation set forth therein or any other aspect of the information shown on or represented by this drawing.

Signed By: _____ Date: 10/1/96

GEO-HYDRO-DATA

INCORPORATED

CALIPER LOG

96-35

OTHER SERVICES:
INVOICE
9950

COMPANY : CAL TRANS
WELL : B 35 NEAR PEIR 6 A
LOCATION/FIELD : CARQUBNEZ BRIDGE
COUNTY : CONTRA COSTA
STATE : CALIFORNIA
SECTION : . TOWNSHIP : . RANGE : .

DATE : 05/09/96 PERMANENT DATUM : GL ELEVATIONS
DEPTH DRILLER : 95 ELEV. PERM. DATUM: KB :
LOG BOTTOM : 93.20 LOG MEASURED FROM: GL DF :
LOG TOP : 5.70 DRL MEASURED FROM: GL GL :

CASING DRILLER : . LOGGING UNIT : 7
CASING TYPE : . FIELD OFFICE : TEHACHAPI
CASING THICKNESS: . RECORDED BY : K. KEMP

BIT SIZE : 3.75 BOREHOLE FLUID : . FILE : ORIGINAL
MAGNETIC DECL. : . RM : . TYPE : 9064A1
MATRIX DENSITY : . RM TEMPERATURE : . LOG : 1
FLUID DENSITY : . MATRIX DELTA T : . PLOT : 1 60
NEUTRON MATRIX : FLUID DELTA T : . THRESH: 3000
REMARKS :
DRILLED BY: CAL TRANS
LOG RUN 5/9/96 1:10 PM

ALL SERVICES PROVIDED SUBJECT TO STANDARD TERMS AND CONDITIONS

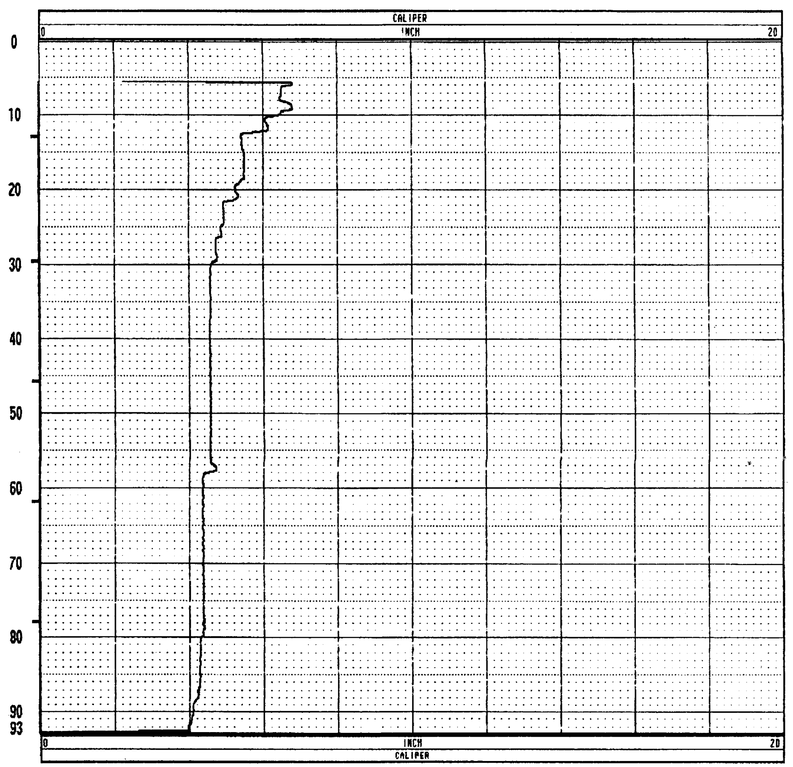

GEO-HYDRO-DATA

INCORPORATED

CALIPER LOG

96-35

OTHER SERVICES:
INVOICE
9950
RUN 3

COMPANY : CAL TRANS
WELL : B 35 NEAR PIER 6 A
LOCATION/FIELD : CARQUINEZ BRIDGE
COUNTY : CONTRA COSTA
STATE : CALIFORNIA
SECTION : . TOWNSHIP : . RANGE : .

DATE : 05/20/96 PERMANENT DATUM : GL ELEVATIONS
DEPTH DRILLER : 95 ELEV. PERM. DATUM: KB :
LOG BOTTOM : 91.70 LOG MEASURED FROM: GL DF :
LOG TOP : 5.60 DRL MEASURED FROM: GL GL :

CASING DRILLER : . LOGGING UNIT : 7
CASING TYPE : . FIELD OFFICE : TEHACHAPI
CASING THICKNESS: . RECORDED BY : K. KEMP

BIT SIZE : 3.75 BOREHOLE FLUID : . FILE : ORIGINAL
MAGNETIC DECL. : . RM : . TYPE : 9064A1
MATRIX DENSITY : . RM TEMPERATURE : . LOG : 1
FLUID DENSITY : . MATRIX DELTA T : . PLOT : 1 60
NEUTRON MATRIX : FLUID DELTA T : . THRESH: 3000
REMARKS :
DRILLED BY: CAL TRANS
LOG RUN 3 5/20/96 4:15 PM

ALL SERVICES PROVIDED SUBJECT TO STANDARD TERMS AND CONDITIONS

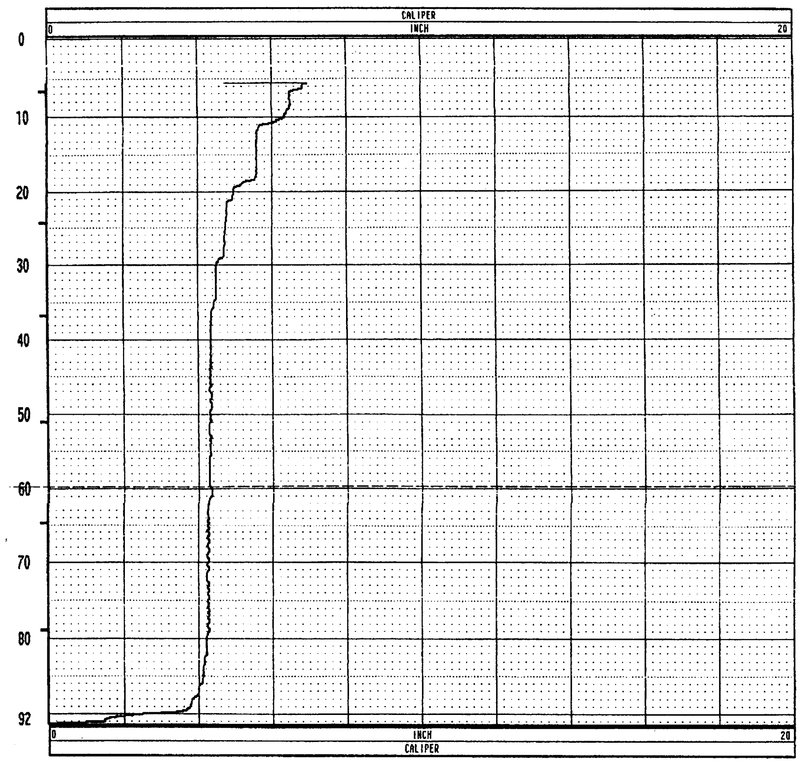

NO AS BUILT CHANGES
AS BUILT
CORRECTION BY BRIAN BEAUDOIN
CONTRACT NO. 04-043934
DATE FEBRUARY, 2002
STRUCTURES REPRESENTATIVE

EARTHQUAKE RETROFIT - PROJECT No. SR-611

CARQUINEZ BRIDGE - SOUTH APPROACH

LOG OF TEST BORINGS 22 OF 35

ENGINEERING SERVICE CENTER	STRUCTURE FOUNDATIONS	FIELD INVESTIGATION BY:	State of CALIFORNIA DEPARTMENT OF TRANSPORTATION	DIVISION OF STRUCTURES STRUCTURE DESIGN	BRIDGE NO. 23-15 R/L
PREPARED BY	Irma Gamarra 8/96				POST MILE CC-13.48 Sol-1.72
CHECKED BY					

ORIGINAL SCALE IN INCHES FOR REDUCED PLANS → 0 1 2 3

CU: 04
EA: 043921/043931

DISREGARD PRINTS BEARING EARLIER REVISION DATES →

REVISION DATES (PRELIMINARY STAGE ONLY)

SHEET 57 OF 70

TL 6051 REV. 7/96

ClibPDF - www.fastio.com

DIST	COUNTY	ROUTE	POST MILES TOTAL PROJECT	SHEET NO.	TOTAL SHEETS
04	CC, SOL	80	12.8/14.1, 0.0/0.6	458	555

REGISTERED CIVIL ENGINEER

10-20-97
PLANS APPROVAL DATE

REGISTERED PROFESSIONAL ENGINEER
Robert L. Morrison Jr
No. 43693
Exp. 03/31/97
CIVIL
STATE OF CALIFORNIA

CH2M HILL
2485 NATOMAS PARK DR, SUITE 600
SACRAMENTO, CALIFORNIA 95833

The State of California or its officers or agents shall not be responsible for the accuracy or completeness of electronic copies of this plan sheet.

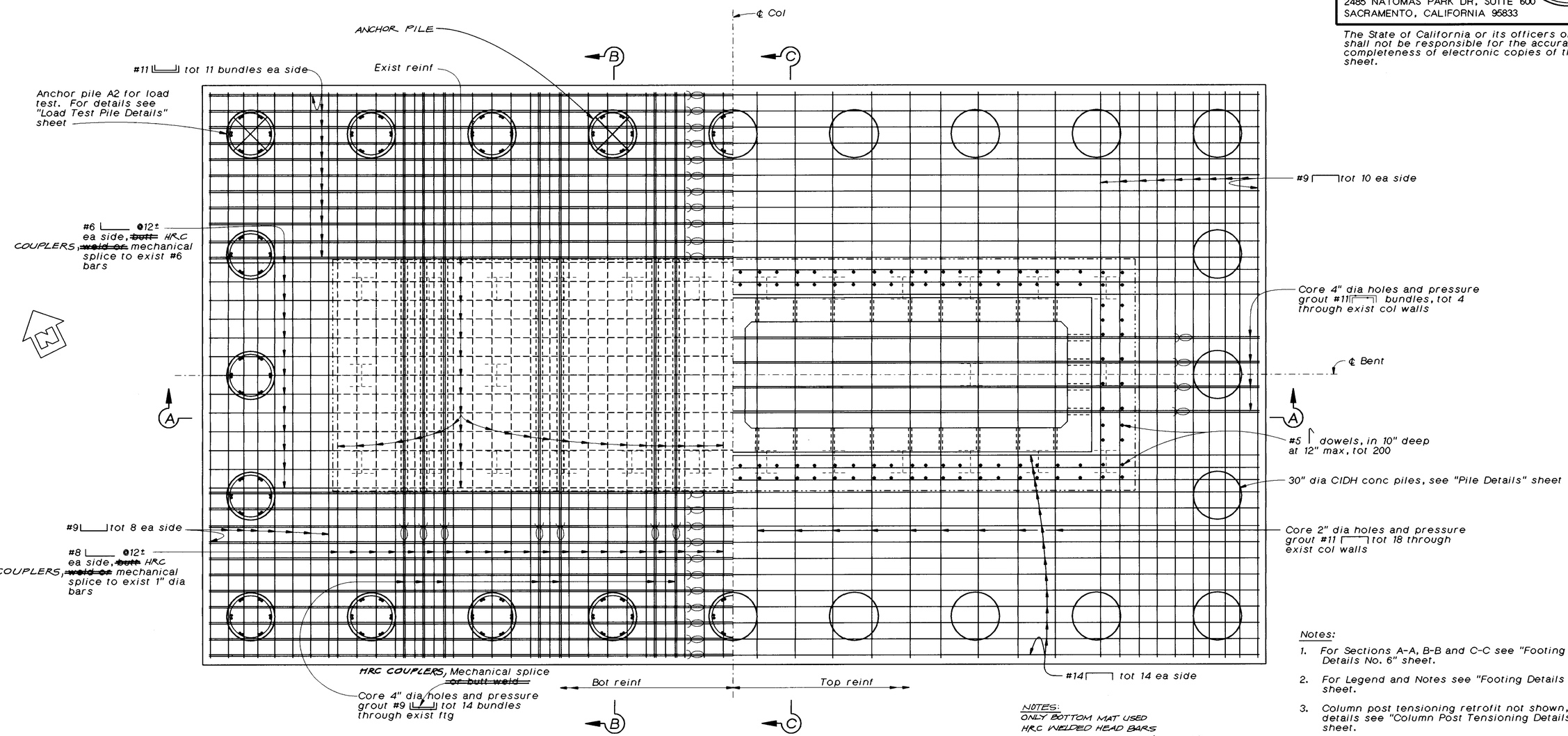

NOTES:
ONLY BOTTOM MAT USED
HRC WELDED HEAD BARS
NOT USED AT BENT 'A9E' AND D5.

PLAN - BENT "A8E"

3/8"=1'-0"

Notes:

1. For Sections A-A, B-B and C-C see "Footing Details No. 6" sheet.
2. For Legend and Notes see "Footing Details No. 1" sheet.
3. Column post tensioning retrofit not shown, for details see "Column Post Tensioning Details" sheet.

AS BUILT
CORRECTION BY BRIAN BEAUDOIN
CONTRACT NO. 04-043934
DATE FEBRUARY, 2002
STRUCTURES REPRESENTATIVE

The Contractor shall verify all controlling field dimensions before ordering or fabricating any material.

SEISMIC RETROFIT PROJECT NO. 611

CARQUINEZ BRIDGE - "A4E" LINE (APPROACH SPAN)

FOOTING DETAILS NO. 5

Vong Toan — DESIGN OVERSIGHT — Apr. 1 24, 1997 — SIGN OFF DATE	DESIGN	BY S. Ismail	CHECKED C. Harrington
	DETAILS	BY A. Kayden	CHECKED J. Quincy
	QUANTITIES	BY S. Ismail, D. Nguyen-Tan	CHECKED J. Downing

PREPARED FOR THE STATE OF CALIFORNIA DEPARTMENT OF TRANSPORTATION

Lee Holloway — PROJECT ENGINEER

BRIDGE NO. 23-15 R
POST MILE CC-13.47

ca4-ft8a.dlv

ORIGINAL SCALE IN INCHES FOR REDUCED PLANS 0 1 2 3

CU 04-268
EA 043931

DISREGARD PRINTS BEARING EARLIER REVISION DATES → 15-MAR-1997

REVISION DATES (PRELIMINARY STAGE ONLY)

SHEET 23 OF 120

ClibPDF - www.fastio.com

DIST.	COUNTY	ROUTE	POST MILES TOTAL PROJECT	SHEET NO.	TOTAL SHEETS
04	CC/Sol	80	12.8/14.1, 0.0/0.6	423	555

R. W. Fox

REGISTERED GEOLOGIST R. W. FOX No. 78 Exp. 8-31-97 CERTIFIED ENGINEERING GEOLOGIST STATE OF CALIFORNIA

10-20-97
PLANS APPROVAL DATE

THE STATE OF CALIFORNIA OR ITS OFFICERS OR AGENTS SHALL NOT BE RESPONSIBLE FOR THE ACCURACY OR COMPLETENESS OF ELECTRONIC COPIES OF THIS PLAN SHEET.

NOTE: FOR FIELD LOGGING NOTATIONS SEE LOG OF TEST BORINGS, SHEET 2 OF 35.

FOR PLAN VIEW, SEE "LOG OF TEST BORINGS", SHEET 1 OF 35.

NO AS BUILT CHANGES
AS BUILT
CORRECTION BY BRIAN BEAUDOIN
CONTRACT NO. 04-043934
DATE FEBRUARY, 2002
STRUCTURES REPRESENTATIVE

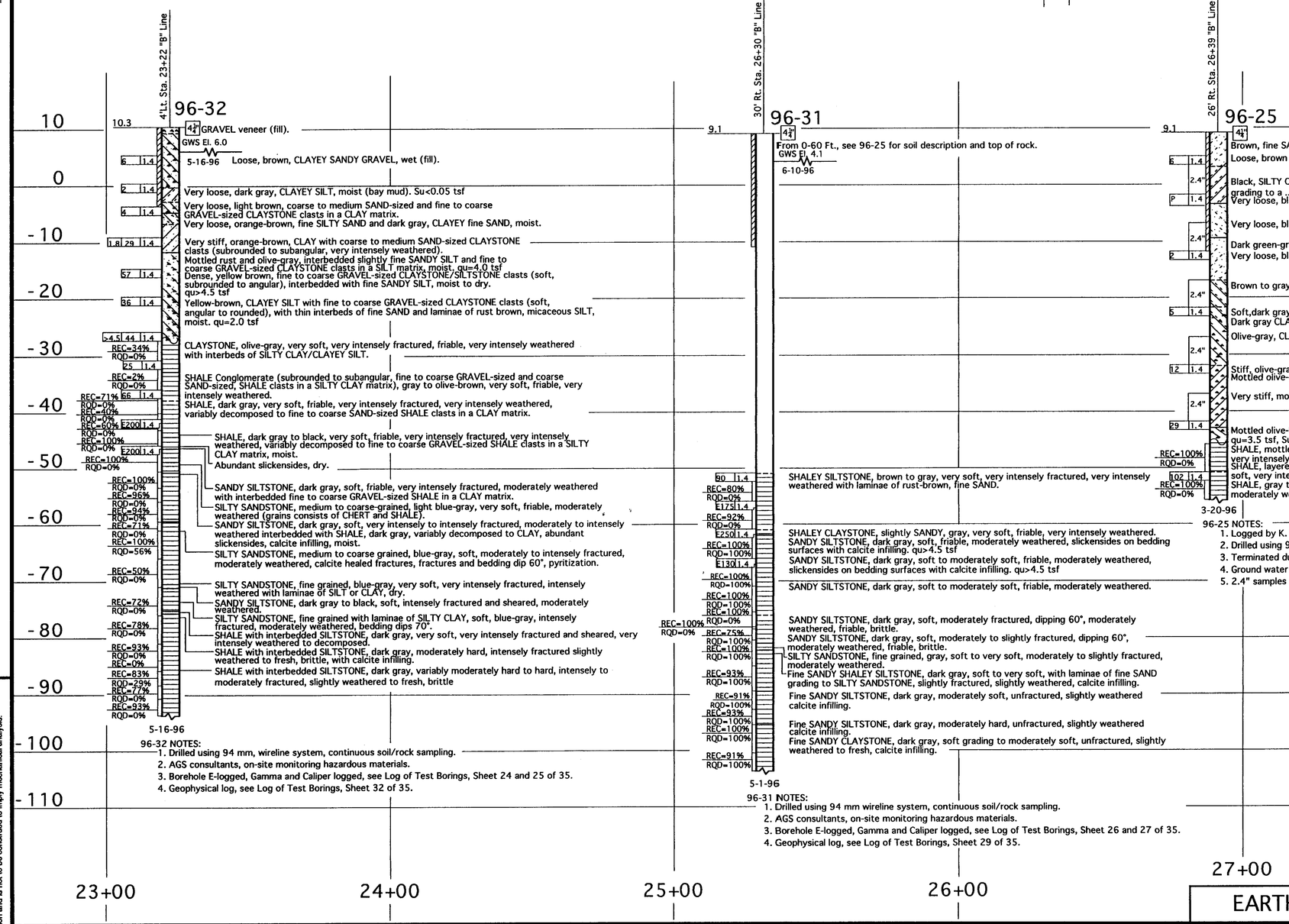

PROFILE
HOR. 1" = 20'
VER. 1" = 10'

LEGEND OF BORING OPERATIONS

LEGEND OF EARTH MATERIALS: GRAVEL, SAND, SILT, CLAY, SANDY CLAY or CLAYEY SAND, SANDY SILT or SILTY SAND, SILTY CLAY, CLAYEY SILT, PEAT, ROCK FRAGMENTS OR ORGANIC MATTER, FILL MATERIAL, IGNEOUS ROCK, SEDIMENTARY ROCK, METAMORPHIC

CONSISTENCY CLASSIFICATION FOR SOILS
According to the Standard Penetration Test

Penetration Index (Blows / Ft)	Granular	Cohesive
0-4	Very Loose	Very Soft
5-9	Loose	Soft
10-19	Slightly compact	Stiff
20-34	Compact	Very Stiff
35-69	Dense	Hard
>70	Very Dense	Very Hard

NOTE: Classification of earth material as shown on this sheet is based upon field inspection and is not to be construed to imply mechanical analysis.

EARTHQUAKE RETROFIT PROJECT No. SR-611

CARQUINEZ BRIDGE - SOUTH APPROACH

LOG OF TEST BORINGS 23 OF 35

ENGINEERING SERVICE CENTER	STRUCTURE FOUNDATIONS	FIELD INVESTIGATION BY:	State of CALIFORNIA DEPARTMENT OF TRANSPORTATION	DIVISION OF STRUCTURES STRUCTURE DESIGN	BRIDGE NO. 23-15R/L
DRAWN BY Ken Wahl 8-96		L. JENSEN, K. AMARU, H. SALIMI &			POST MILE CC-13.48 Sol-1.72
CHECKED BY					

ORIGINAL SCALE IN INCHES FOR REDUCED PLANS → 0 1 2 3

CU: 04
EA: 043921/043931

DISREGARD PRINTS BEARING EARLIER REVISION DATES →

REVISION DATES (PRELIMINARY STAGE ONLY) | SHEET 58 | OF 70

TL 6051 REV. 5/95

ClibPDF - www.fastio.com

DIST	COUNTY	ROUTE	POST MILES TOTAL PROJECT	SHEET NO.	TOTAL SHEETS
04	CC,SOL	80	12.8/14.1, 0.0/0.6	459	555

REGISTERED CIVIL ENGINEER

10-20-97
PLANS APPROVAL DATE

REGISTERED PROFESSIONAL ENGINEER Robert L. Morrison Jr No. 43693 Exp. 03/31/97 CIVIL STATE OF CALIFORNIA

CH2M HILL
2485 NATOMAS PARK DR, SUITE 600
SACRAMENTO, CALIFORNIA 95833

The State of California or its officers or agents shall not be responsible for the accuracy or completeness of electronic copies of this plan sheet.

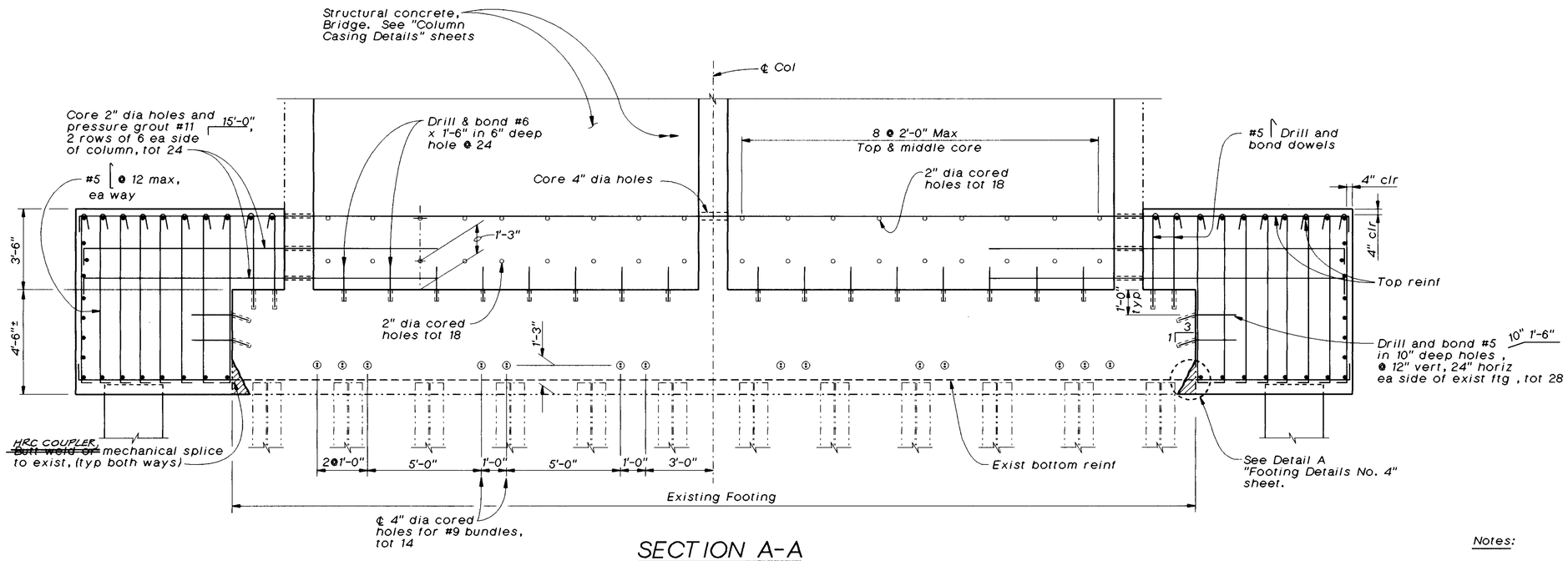

SECTION A-A

3/8"=1'-0"

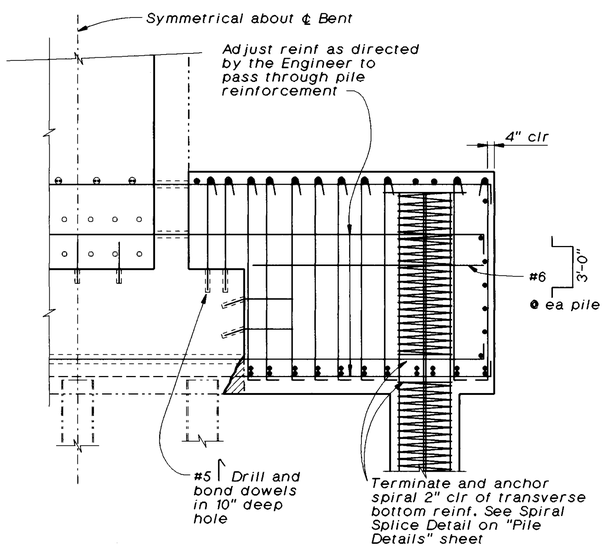

PART SECTION B-B

3/8"=1'-0"

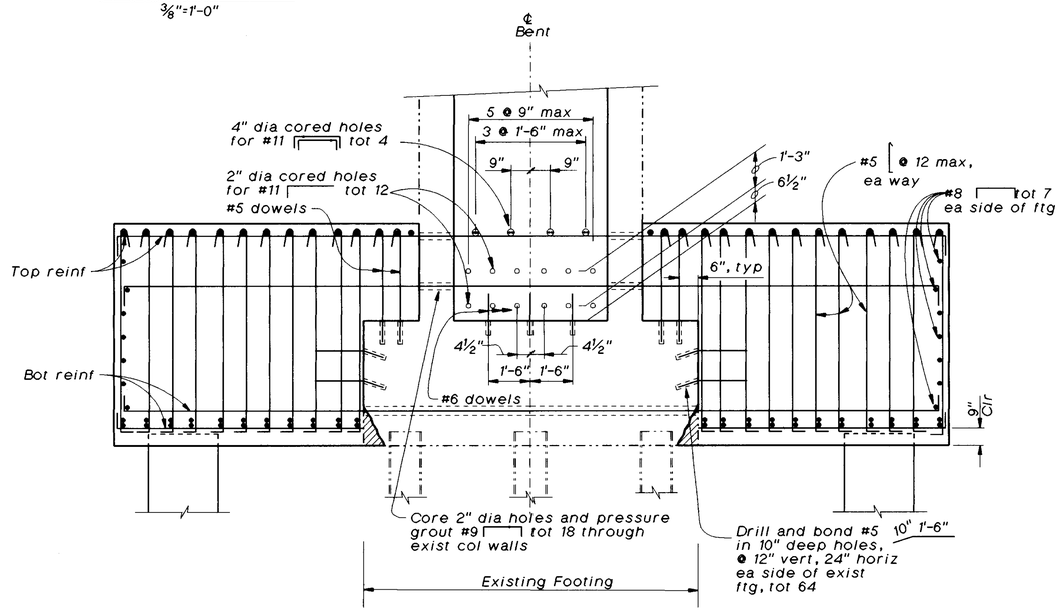

SECTION C-C

3/8"=1'-0"

Notes:

1. For locations of Sections A-A, B-B and C-C see "Footing Details No. 5" sheet.
2. For Legend and Notes see "Footing Details No. 1" sheet.
3. Column post tensioning retrofit not shown. For details see "Column Post Tensioning Details" sheet.

AS BUILT
CORRECTION BY BRIAN BEAUDOIN
CONTRACT NO. 04-043934
DATE FEBRUARY, 2002
STRUCTURES REPRESENTATIVE

The Contractor shall verify all controlling field dimensions before ordering or fabricating any material.

SEISMIC RETROFIT PROJECT NO. 611

Vong Toan
DESIGN OVERSIGHT
April 24, 1997
SIGN OFF DATE

	BY	CHECKED
DESIGN	S. Ismail	C. Harrington
DETAILS	A. Kayden	J. Quincy
QUANTITIES	S. Ismail, D. Nguyen-Tan	J. Downing

PREPARED FOR THE STATE OF CALIFORNIA DEPARTMENT OF TRANSPORTATION

Lee Holloway
PROJECT ENGINEER

BRIDGE NO. 23-15 R
POST MILE CC-13.47

CARQUINEZ BRIDGE - "A4E" LINE (APPROACH SPAN)

FOOTING DETAILS NO. 6

ca4-ft8.dlv

ORIGINAL SCALE IN INCHES FOR REDUCED PLANS 0 1 2 3

CU 04-268
EA 043931

DISREGARD PRINTS BEARING EARLIER REVISION DATES → 15-MAR-1997

REVISION DATES (PRELIMINARY STAGE ONLY) | SHEET 24 | OF 120

ClibPDF - www.fastio.com

DIST.	COUNTY	ROUTE	POST MILES TOTAL PROJECT	SHEET NO.	TOTAL SHEETS
04	CC/Sol	80	12.8/14.1, 0.0/0.6	424	555

The information represented on this drawing title "Carquinez Bridge South Approach" was not the result of any work developed, performed or completed by this Department (Caltrans). All such activity appears to be by those parties presented on this drawing who would bear all such responsibility. This drawing is available and presented only for the convenience of any bidder, contractor or other interested party. It should be expressly understood that Caltrans assumes no responsibility whatsoever in respect to the sufficiency or accuracy, completeness, interpretation set forth therein or any other aspect of the information shown on or represented by this drawing.

Signed By: R. W. [illegible] Date: 10-1-96

GEO-HYDRO-DATA

INCORPORATED

NATURAL GAMMA LOG

96-32

OTHER SERVICES:
INVOICE
9950
RUN #

COMPANY : CAL TRANS
WELL : B 32 NEAR PIER 8 B
LOCATION/FIELD : CARQUENEZ BRIDGE
COUNTY : CONTRA COSTA
STATE : CALIFORNIA
SECTION : . TOWNSHIP : . RANGE : .

DATE : 05/14/96 PERMANENT DATUM : GL ELEVATIONS
DEPTH DRILLER : 104 ELEV. PERM. DATUM: KB :
LOG BOTTOM : 99.70 LOG MEASURED FROM: GL DF :
LOG TOP : 0.10 DRL MEASURED FROM: GL GL :

CASING DRILLER : . LOGGING UNIT : 7
CASING TYPE : . FIELD OFFICE : TEHACHAPI
CASING THICKNESS: . RECORDED BY : K. KEMP

BIT SIZE : 3.75 BOREHOLE FLUID : POLY FILE : ORIGINAL
MAGNETIC DECL. : . RM : . TYPE : 9041A
MATRIX DENSITY : . RM TEMPERATURE : . LOG : 5
FLUID DENSITY : . MATRIX DELTA T : . PLOT : 1 57
NEUTRON MATRIX : FLUID DELTA T : . THRESH: 3000
REMARKS :
DRILED BY: CAL TRANS
RUN LOG IN OPEN HOLE 5/14/96 9:00 AM
ALL SERVICES PROVIDED SUBJECT TO STANDARD TERMS AND CONDITIONS

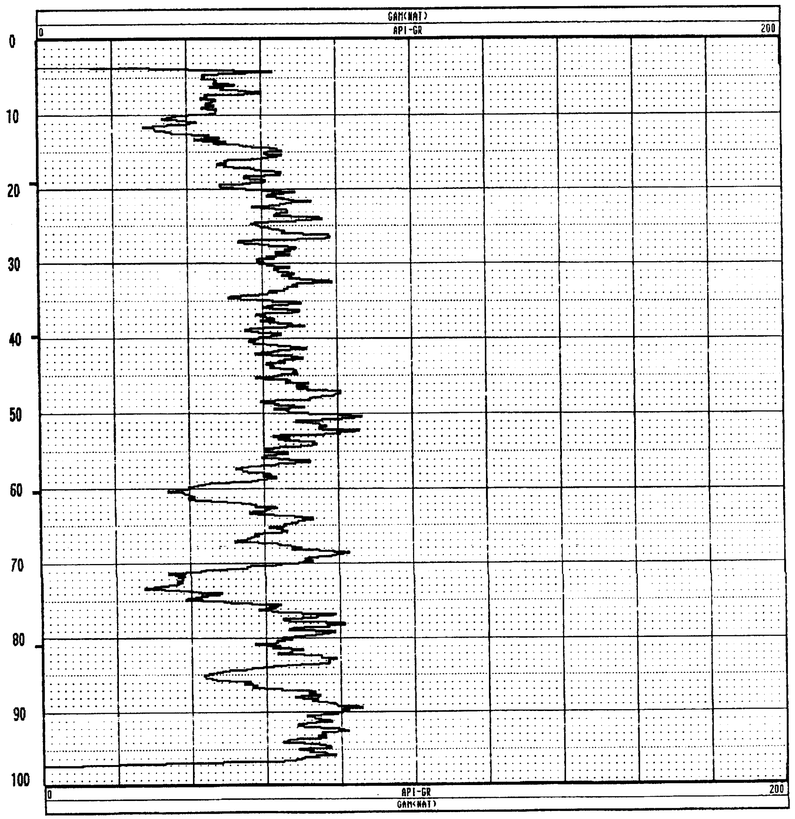

GEO-HYDRO-DATA

INCORPORATED

ELECTRIC WELL LOG

96-32

OTHER SERVICES:
INVOICE
9950
RUN #

COMPANY : CAL TRANS
WELL : B 32 NEAR PIER 8 B
LOCATION/FIELD : CARQUENEZ BRIDGE
COUNTY : CONTRA COSTA
STATE : CALIFORNIA
SECTION : . TOWNSHIP : . RANGE : .

DATE : 05/14/96 PERMANENT DATUM : GL ELEVATIONS
DEPTH DRILLER : 104 ELEV. PERM. DATUM: KB :
LOG BOTTOM : 99.70 LOG MEASURED FROM: GL DF :
LOG TOP : 0.10 DRL MEASURED FROM: GL GL :

CASING DRILLER : . LOGGING UNIT : 7
CASING TYPE : . FIELD OFFICE : TEHACHAPI
CASING THICKNESS: . RECORDED BY : K. KEMP

BIT SIZE : 3.75 BOREHOLE FLUID : POLY FILE : ORIGINAL
MAGNETIC DECL. : . RM : . TYPE : 9041A
MATRIX DENSITY : . RM TEMPERATURE : . LOG : 5
FLUID DENSITY : . MATRIX DELTA T : . PLOT : 1 0
NEUTRON MATRIX : FLUID DELTA T : . THRESH: 3000
REMARKS :
DRILED BY: CAL TRANS
RUN LOG IN OPEN HOLE 5/14/96 9:00 AM
ALL SERVICES PROVIDED SUBJECT TO STANDARD TERMS AND CONDITIONS

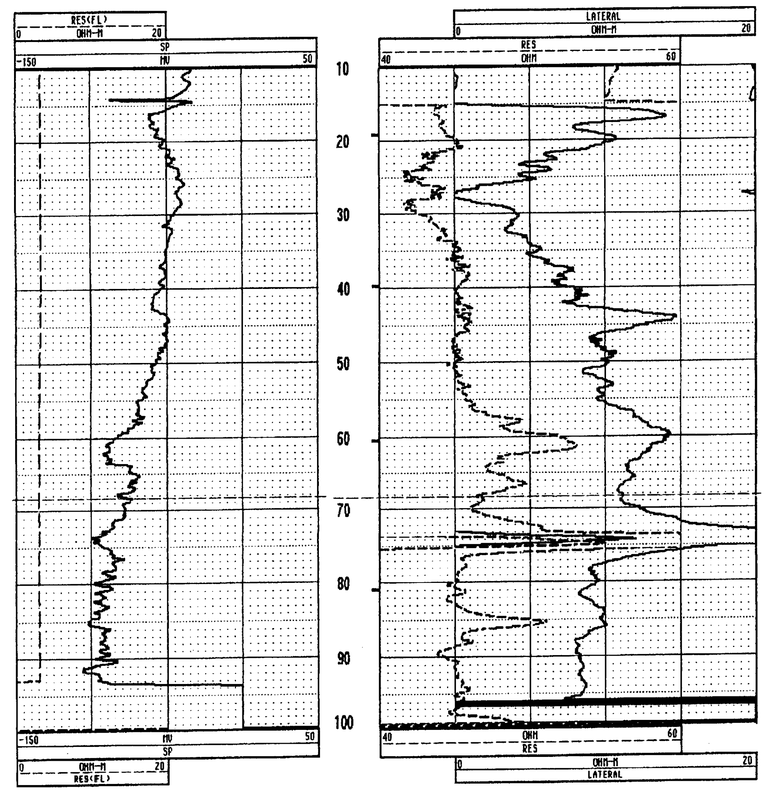

NO AS BUILT CHANGES

AS BUILT

CORRECTION BY BRIAN BEAUDOIN
CONTRACT NO. 04-043934
DATE FEBRUARY, 2002
STRUCTURES REPRESENTATIVE [signature]

EARTHQUAKE RETROFIT - PROJECT No. SR-611

CARQUINEZ BRIDGE - SOUTH APPROACH

LOG OF TEST BORINGS 24 OF 35

ENGINEERING SERVICE CENTER	STRUCTURE FOUNDATIONS	FIELD INVESTIGATION BY:	State of CALIFORNIA DEPARTMENT OF TRANSPORTATION	DIVISION OF STRUCTURES STRUCTURE DESIGN	BRIDGE NO. 23-15 R/L
PREPARED BY	Irma Gamarra 8/96				POST MILE CC-13.48 Sol-1.72
CHECKED BY					

ORIGINAL SCALE IN INCHES FOR REDUCED PLANS → 0 1 2 3

CU: 04
EA: 043921/043931

DISREGARD PRINTS BEARING EARLIER REVISION DATES →

REVISION DATES (PRELIMINARY STAGE ONLY)

SHEET 59 OF 70

TL 6051 REV. 7/96

ClibPDF - www.fastio.com

DIST	COUNTY	ROUTE	POST MILES TOTAL PROJECT	SHEET NO.	TOTAL SHEETS
04	CC,SOL	80	12.8/14.1,0.0/0.6	460	555

Robert L. Morrison Jr
REGISTERED CIVIL ENGINEER

10-20-97
PLANS APPROVAL DATE

REGISTERED PROFESSIONAL ENGINEER
Robert L. Morrison Jr
No. 43693
Exp. 03/31/97
CIVIL
STATE OF CALIFORNIA

CH2M HILL
2485 NATOMAS PARK DR, SUITE 600
SACRAMENTO, CALIFORNIA 95833

The State of California or its officers or agents shall not be responsible for the accuracy or completeness of electronic copies of this plan sheet.

Notes:

1. Bent "A9E" shown, Bent "A10E" similar.
2. For Sections A-A, B-B and C-C see "Footing Details No. 8" sheet.
3. For Legend and Notes see "Footing Details No. 1" sheet.
4. Column post tensioning retrofit not shown. For details see "Column Post Tensioning Details" sheet.

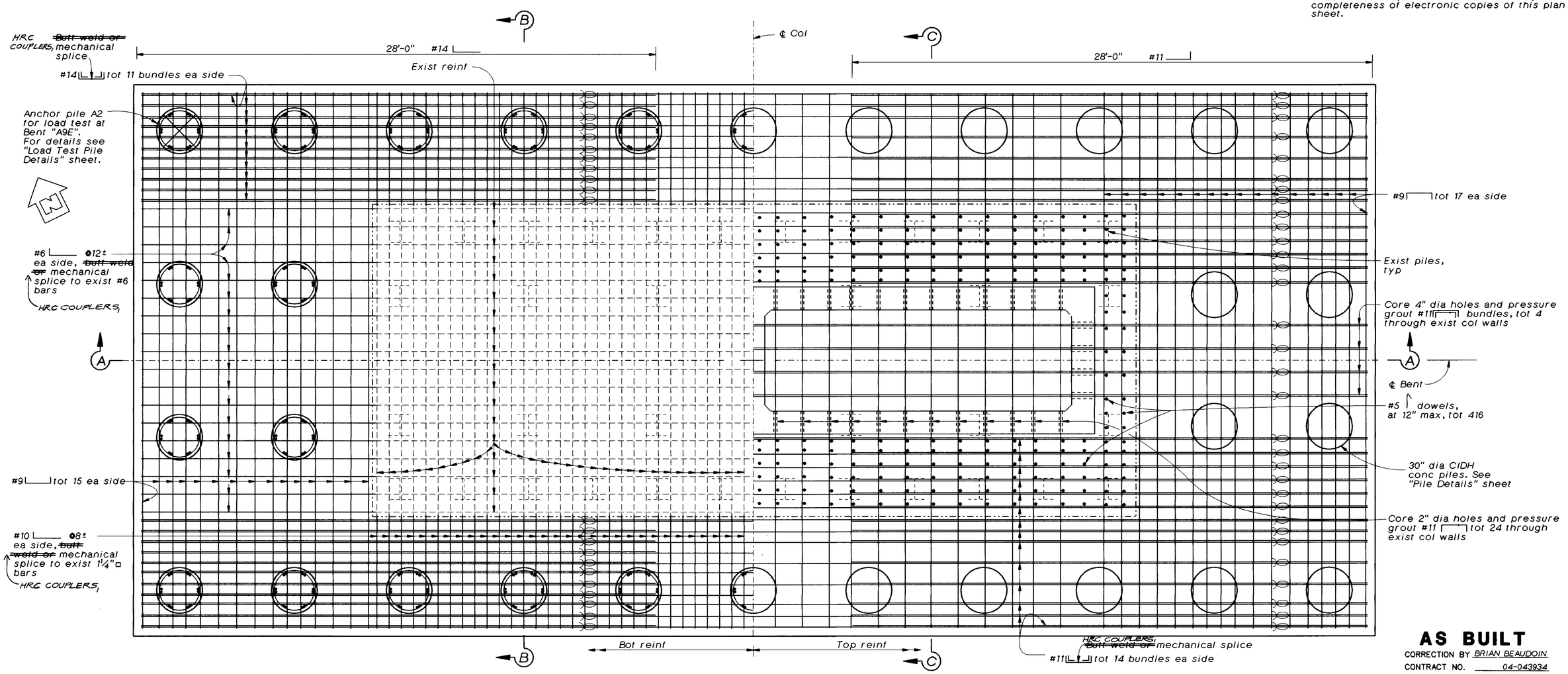

PLAN - BENTS "A9E" & "A10E"

3/8"=1'-0"

AS BUILT
CORRECTION BY BRIAN BEAUDOIN
CONTRACT NO. 04-043934
DATE FEBRUARY, 2002
STRUCTURES REPRESENTATIVE

The Contractor shall verify all controlling field dimensions before ordering or fabricating any material.

SEISMIC RETROFIT PROJECT NO. 611

CARQUINEZ BRIDGE - "A4E" LINE (APPROACH SPAN)

FOOTING DETAILS NO. 7

Vong Toan
DESIGN OVERSIGHT
April 24, 1997
SIGN OFF DATE

	BY	CHECKED
DESIGN	S. Ismail	C. Harrington
DETAILS	A. Kayden	J. Quincy
QUANTITIES	S. Ismail, D. Nguyen-Tan	J. Downing

PREPARED FOR THE STATE OF CALIFORNIA DEPARTMENT OF TRANSPORTATION

Lee Holloway
PROJECT ENGINEER

BRIDGE NO. 23-15 R
POST MILE CC-13.47

ca4-ft9a.dlv

ORIGINAL SCALE IN INCHES FOR REDUCED PLANS 0 1 2 3

CU 04-268
EA 043931

DISREGARD PRINTS BEARING EARLIER REVISION DATES → 15-MAR-1997

REVISION DATES (PRELIMINARY STAGE ONLY)

SHEET 25 OF 120

ClibPDF - www.fastio.com

DIST.	COUNTY	ROUTE	POST MILES TOTAL PROJECT	SHEET NO.	TOTAL SHEETS
04	CC/Sol	80	12.8/14.1, 0.0/0.6	425	555

The information represented on this drawing title "Carquinez Bridge South Approach" was not the result of any work developed, performed or completed by this Department (Caltrans). All such activity appears to be by those parties presented on this drawing who would bear all such responsibility. This drawing is available and presented only for the convenience of any bidder, contractor or other interested party. It should be expressly understood that Caltrans assumes no responsibility whatsoever in respect to the sufficiency or accuracy, completeness, interpretation set forth therein or any other aspect of the information shown on or represented by this drawing.

Signed By: R. W. [signature] Date: 10-1-96

10-20-97
PLANS APPROVAL DATE

GEO-HYDRO-DATA
INCORPORATED

CALIPER LOG

96-32

OTHER SERVICES:
INVOICE
9950
RUN 1

COMPANY	: CAL TRANS				
WELL	: B 32 NEAR PIER 8 B				
LOCATION/FIELD	: CARQUENEZ BRIDGE				
COUNTY	: CONTRA COSTA				
STATE	: CALIFORNIA				
SECTION	: .	TOWNSHIP	: .	RANGE	: .
DATE	: 05/14/96	PERMANENT DATUM	: GL	ELEVATIONS	
DEPTH DRILLER	: 104	ELEV. PERM. DATUM:		KB	:
LOG BOTTOM	: 98.40	LOG MEASURED FROM:	GL	DF	:
LOG TOP	: 5.30	DRL MEASURED FROM:	GL	GL	:
CASING DRILLER	: .	LOGGING UNIT	: 7		
CASING TYPE	: .	FIELD OFFICE	: TEHACHAPI		
CASING THICKNESS:	.	RECORDED BY	: K. KEMP		
BIT SIZE	: 3.75	BOREHOLE FLUID	: POLY	FILE	: ORIGINAL
MAGNETIC DECL.	: .	RM	: .	TYPE	: 9064A1
MATRIX DENSITY	: .	RM TEMPERATURE	: .	LOG	: 7
FLUID DENSITY	: .	MATRIX DELTA T	: .	PLOT	: 1 60
NEUTRON MATRIX	:	FLUID DELTA T	: .	THRESH:	3000
REMARKS	:				

DRILED BY: CAL TRANS
RUN LOG IN OPEN HOLE 5/14/96 9:00 AM
ALL SERVICES PROVIDED SUBJECT TO STANDARD TERMS AND CONDITIONS

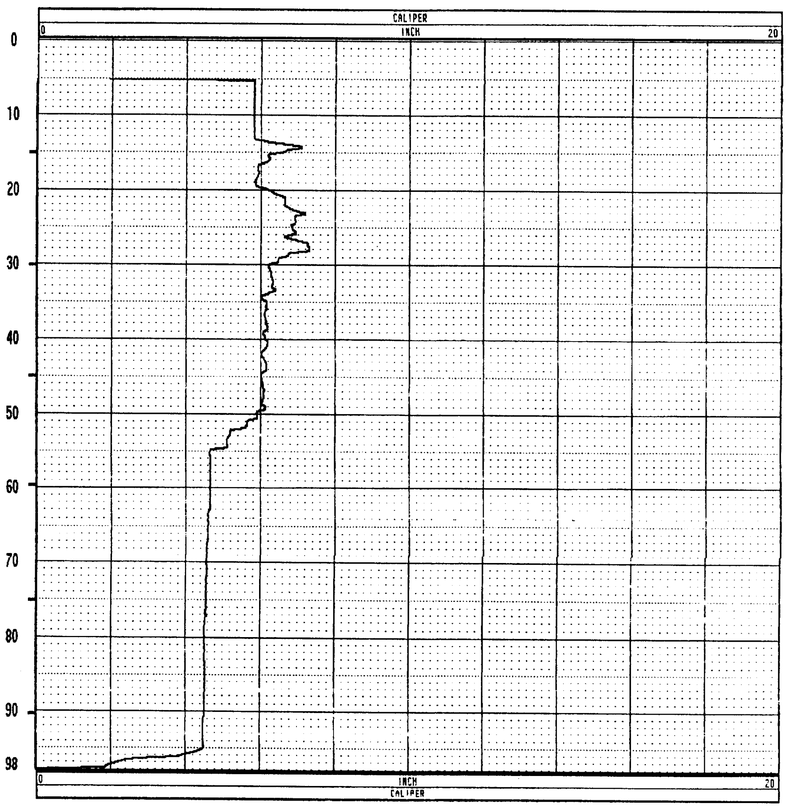

GEO-HYDRO-DATA
INCORPORATED

CALIPER LOG

96-32

OTHER SERVICES:
INVOICE
9950
RUN 2

COMPANY	: CAL TRANS				
WELL	: B 32 NEAR PIER 8 B				
LOCATION/FIELD	: CARQUENEZ BRIDGE				
COUNTY	: CONTRA COSTA				
STATE	: CALIFORNIA				
SECTION	: .	TOWNSHIP	: .	RANGE	: .
DATE	: 05/16/96	PERMANENT DATUM	: GL	ELEVATIONS	
DEPTH DRILLER	: 104	ELEV. PERM. DATUM:		KB	:
LOG BOTTOM	: 95.00	LOG MEASURED FROM:	GL	DF	:
LOG TOP	: 5.70	DRL MEASURED FROM:	GL	GL	:
CASING DRILLER	: .	LOGGING UNIT	: 7		
CASING TYPE	: .	FIELD OFFICE	: TEHACHAPI		
CASING THICKNESS:	.	RECORDED BY	: K. KEMP		
BIT SIZE	: 3.75	BOREHOLE FLUID	:	FILE	: PROCESSED
MAGNETIC DECL.	: .	RM	: .	TYPE	: 9064A1
MATRIX DENSITY	: .	RM TEMPERATURE	: .	LOG	: 9
FLUID DENSITY	: .	MATRIX DELTA T	: .	PLOT	: 1 60
NEUTRON MATRIX	:	FLUID DELTA T	: .	THRESH:	3000
REMARKS	:				

DRILED BY: CAL TRANS
LOG RUN 2 5/16/96 OPEN HOLE 10:AM
ALL SERVICES PROVIDED SUBJECT TO STANDARD TERMS AND CONDITIONS

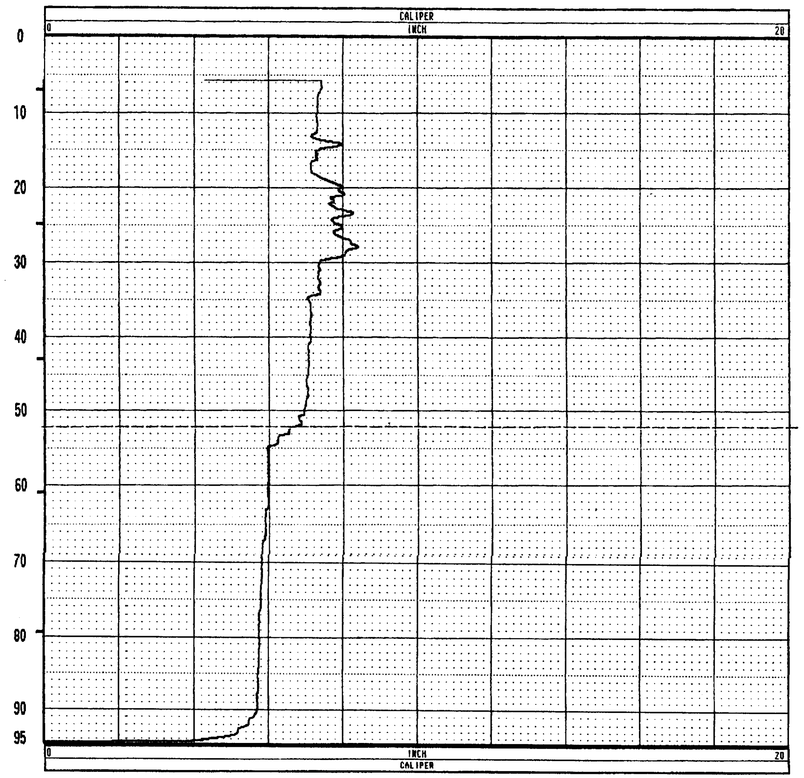

NO AS BUILT CHANGES
AS BUILT
CORRECTION BY BRIAN BEAUDOIN
CONTRACT NO. 04-043934
DATE FEBRUARY, 2002
STRUCTURES REPRESENTATIVE [signature]

ENGINEERING SERVICE CENTER	STRUCTURE FOUNDATIONS	FIELD INVESTIGATION BY:	State of CALIFORNIA DEPARTMENT OF TRANSPORTATION	DIVISION OF STRUCTURES STRUCTURE DESIGN	BRIDGE NO. 23-15 R/L	EARTHQUAKE RETROFIT - PROJECT No. SR-611
PREPARED BY	Irma Gamara 8/96				POST MILE CC-13.48 Sol-1.72	CARQUINEZ BRIDGE - SOUTH APPROACH
CHECKED BY						LOG OF TEST BORINGS 25 OF 35

ORIGINAL SCALE IN INCHES FOR REDUCED PLANS → 0 1 2 3

CU: 04
EA: 043921/043931

DISREGARD PRINTS BEARING EARLIER REVISION DATES →

REVISION DATES (PRELIMINARY STAGE ONLY)

SHEET 60 OF 70

TL 6051 REV. 7/96

ClibPDF - www.fastio.com

DIST	COUNTY	ROUTE	POST MILES TOTAL PROJECT	SHEET NO.	TOTAL SHEETS
04	CC,SOL	80	12.8/14.1,0.0/0.6	461	555

Robert L. Morrison Jr
REGISTERED CIVIL ENGINEER

10-20-97
PLANS APPROVAL DATE

REGISTERED PROFESSIONAL ENGINEER
Robert L. Morrison Jr
No. 43693
Exp. 03/31/97
CIVIL
STATE OF CALIFORNIA

CH2M HILL
2485 NATOMAS PARK DR, SUITE 600
SACRAMENTO, CALIFORNIA 95833

The State of California or its officers or agents shall not be responsible for the accuracy or completeness of electronic copies of this plan sheet.

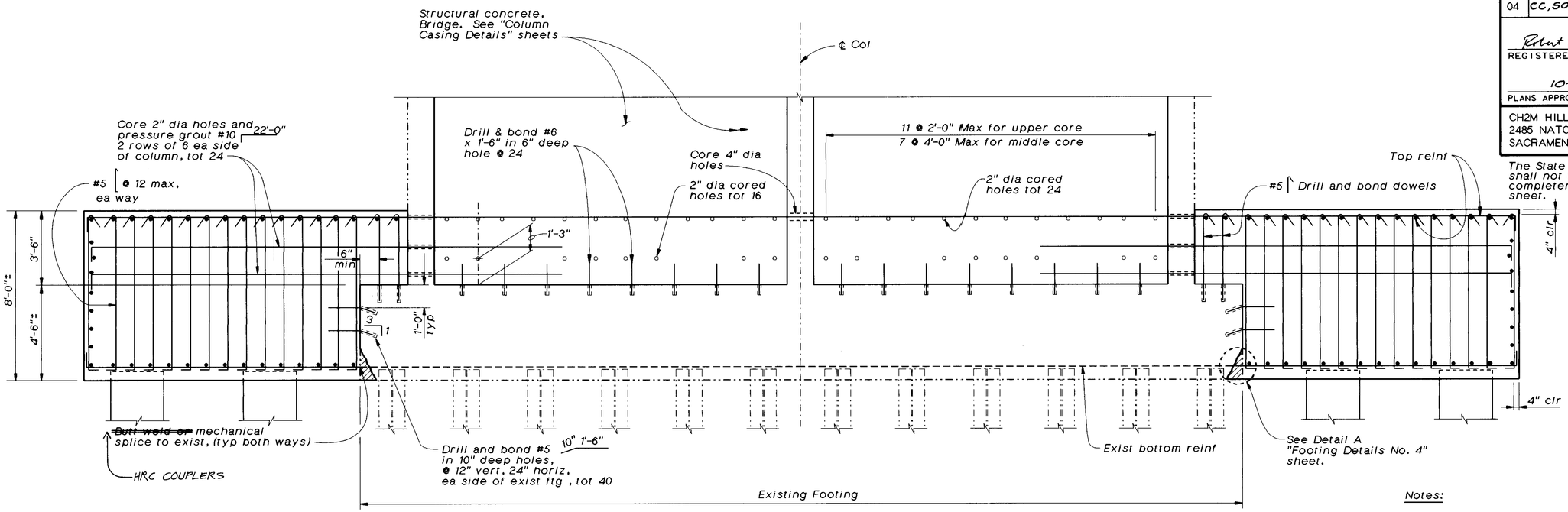

SECTION A-A

3/8"=1'-0"

Notes:

1. For locations of Sections A-A, B-B and C-C see "Footing Details No. 7" sheet.
2. For Legend and Notes, see "Footing Details No. 1" sheet
3. Column post tensioning retrofit not shown. For details see "Column Post Tensioning Details" sheet.

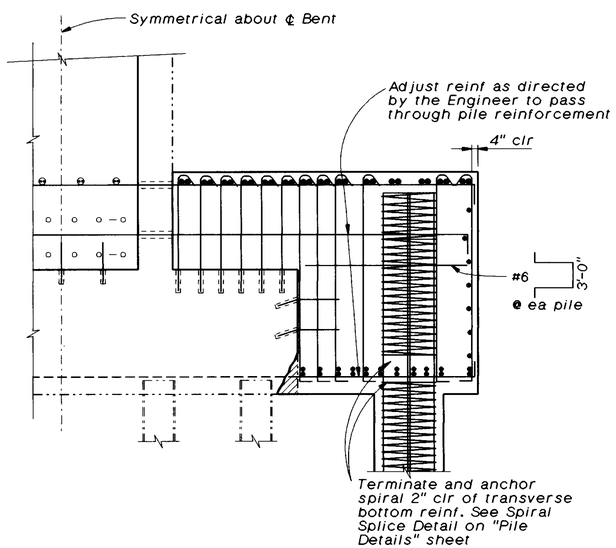

PART SECTION B-B

3/8"=1'-0"

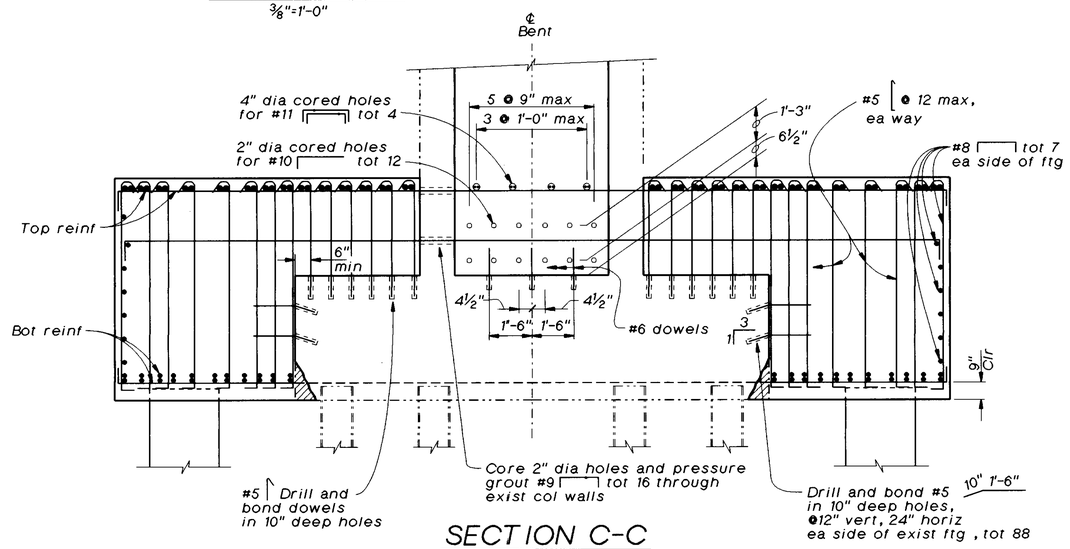

SECTION C-C

3/8"=1'-0"

AS BUILT
CORRECTION BY BRIAN BEAUDOIN
CONTRACT NO. 04-043934
DATE FEBRUARY, 2002
STRUCTURES REPRESENTATIVE

The Contractor shall verify all controlling field dimensions before ordering or fabricating any material.

SEISMIC RETROFIT PROJECT NO. 611

CARQUINEZ BRIDGE - "A4E" LINE (APPROACH SPAN)

FOOTING DETAILS NO. 8

Vong Toan
DESIGN OVERSIGHT
April 24, 1997
SIGN OFF DATE

	BY	CHECKED
DESIGN	S. Ismail	C. Harrington
DETAILS	A. Kayden	J. Quincy
QUANTITIES	S. Ismail, D. Nguyen-Tan	J. Downing

PREPARED FOR THE STATE OF CALIFORNIA DEPARTMENT OF TRANSPORTATION

Lee Holloway
PROJECT ENGINEER

BRIDGE NO. 23-15 R
POST MILE CC-13.47

ca4-ft9.dlv

ORIGINAL SCALE IN INCHES FOR REDUCED PLANS 0 1 2 3

CU 04-268
EA 043931

DISREGARD PRINTS BEARING EARLIER REVISION DATES → 15-MAR-1997

REVISION DATES (PRELIMINARY STAGE ONLY)

SHEET 26 OF 120

ClibPDF - www.fastio.com

DIST.	COUNTY	ROUTE	POST MILES TOTAL PROJECT	SHEET NO.	TOTAL SHEETS
04	CC/Sol	80	12.8/14.1, 0.0/06	426	555

The information represented on this drawing title "Carquinez Bridge South Approach" was not the result of any work developed, performed or completed by this Department (Caltrans). All such activity appears to be by those parties presented on this drawing who would bear all such responsibility. This drawing is available and presented only for the convenience of any bidder, contractor or other interested party. It should be expressly understood that Caltrans assumes no responsibility whatsoever in respect to the sufficiency or accuracy, completeness, interpretation set forth therein or any other aspect of the information shown on or represented by this drawing.

Signed By: R. W. Dy Date: 10-1-96

10-20-97
PLANS APPROVAL DATE

GEO-HYDRO-DATA
INCORPORATED

NATURAL GAMMA LOG

COMPANY : CAL TRANS
WELL : B 31 NEAR PIER 7 A B-LITE
LOCATION/FIELD : CARQUINEZ BRIDGE
COUNTY : CONTRA COSTA
STATE : CALIFORNIA
SECTION : .
TOWNSHIP : .
RANGE : .

96-31

OTHER SERVICES: INVOICE 9958 RUN 3

DATE : 05/01/96
DEPTH DRILLER : 112.5
LOG BOTTOM : 118.40
LOG TOP : -3.30
PERMANENT DATUM : GL
ELEV. PERM. DATUM:
LOG MEASURED FROM: GL
DRL MEASURED FROM: GL
ELEVATIONS
KB :
DF :
GL :

CASING DRILLER : .
CASING TYPE : .
CASING THICKNESS: .
LOGGING UNIT : 7
FIELD OFFICE : TEHACHAPI
RECORDED BY : K. KEMP

BIT SIZE : 3.75
MAGNETIC DECL. : .
MATRIX DENSITY : .
FLUID DENSITY : .
NEUTRON MATRIX :
REMARKS :
BOREHOLE FLUID : POLY
RM : .
RM TEMPERATURE : .
MATRIX DELTA T : .
FLUID DELTA T : .
FILE : ORIGINAL
TYPE : 9041A
LOG : 3
PLOT : GHD 8
THRESH: 3000

DRILLED BY: CAL TRANS
LOG RUN WITH ALL PIPE OUT OF HOLE
ALL SERVICES PROVIDED SUBJECT TO STANDARD TERMS AND CONDITIONS

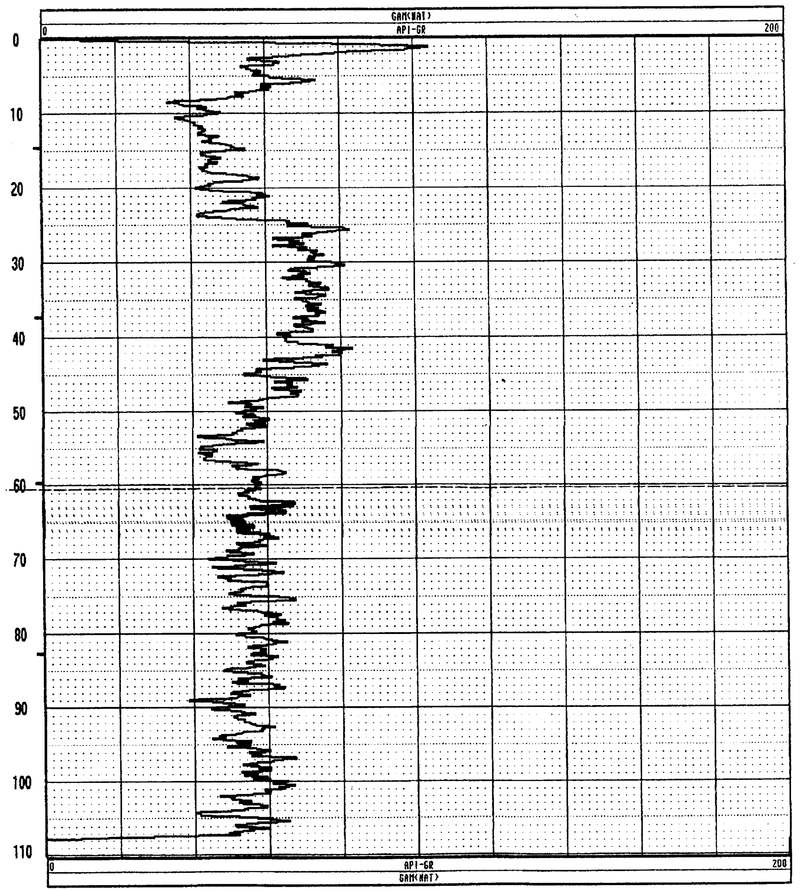

GEO-HYDRO-DATA
INCORPORATED

ELECTRIC WELL LOG

COMPANY : CAL TRANS
WELL : B 31 NEAR PIER 7 A B-LITE
LOCATION/FIELD : CARQUINEZ BRIDGE
COUNTY : CONTRA COSTA
STATE : CALIFORNIA
SECTION : .
TOWNSHIP : .
RANGE : .

96-31

OTHER SERVICES: INVOICE 9958 RUN 3

DATE : 05/01/96
DEPTH DRILLER : 112.5
LOG BOTTOM : 118.40
LOG TOP : -3.30
PERMANENT DATUM : GL
ELEV. PERM. DATUM:
LOG MEASURED FROM: GL
DRL MEASURED FROM: GL
ELEVATIONS
KB :
DF :
GL :

CASING DRILLER : .
CASING TYPE : .
CASING THICKNESS: .
LOGGING UNIT : 7
FIELD OFFICE : TEHACHAPI
RECORDED BY : K. KEMP

BIT SIZE : 3.75
MAGNETIC DECL. : .
MATRIX DENSITY : .
FLUID DENSITY : .
NEUTRON MATRIX :
REMARKS :
BOREHOLE FLUID : POLY
RM : .
RM TEMPERATURE : .
MATRIX DELTA T : .
FLUID DELTA T : .
FILE : ORIGINAL
TYPE : 9041A
LOG : 3
PLOT : GHD 8
THRESH: 3000

DRILLED BY: CAL TRANS
LOG RUN WITH ALL PIPE OUT OF HOLE
ALL SERVICES PROVIDED SUBJECT TO STANDARD TERMS AND CONDITIONS

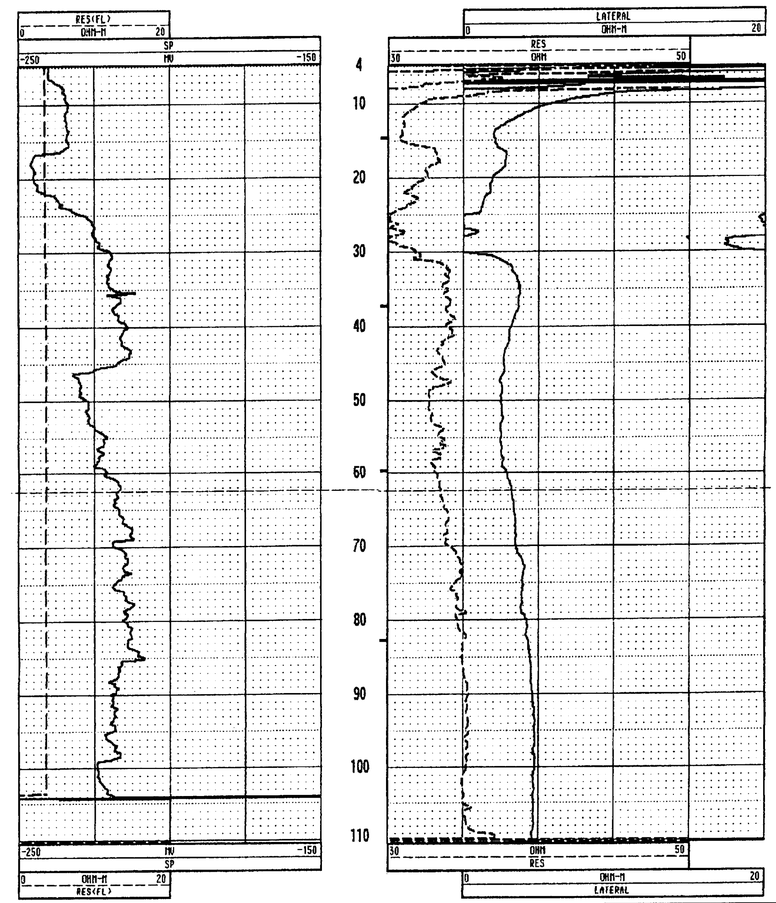

NO AS BUILT CHANGES
AS BUILT
CORRECTION BY BRIAN BEAUDOIN
CONTRACT NO. 04-043934
DATE FEBRUARY, 2002
STRUCTURES REPRESENTATIVE

EARTHQUAKE RETROFIT - PROJECT No. SR-611

ENGINEERING SERVICE CENTER	STRUCTURE FOUNDATIONS	FIELD INVESTIGATION BY:	State of CALIFORNIA DEPARTMENT OF TRANSPORTATION	DIVISION OF STRUCTURES STRUCTURE DESIGN	BRIDGE NO. 23-15 R/L	CARQUINEZ BRIDGE - SOUTH APPROACH
PREPARED BY	Irma Zamarra 8/96				POST MILE CC-13.48 Sol-1.72	LOG OF TEST BORINGS 26 OF 35
CHECKED BY						

ORIGINAL SCALE IN INCHES FOR REDUCED PLANS → 0 1 2 3

CU: 04
EA: 043921/043931

DISREGARD PRINTS BEARING EARLIER REVISION DATES →

REVISION DATES (PRELIMINARY STAGE ONLY)

SHEET 61 OF 70

TL 6051 REV. 7/96

ClibPDF - www.fastio.com

DIST	COUNTY	ROUTE	POST MILES TOTAL PROJECT	SHEET NO.	TOTAL SHEETS
04	CC,SOL	80	12.8/14.1,0.0/0.6	462	555

Robert L. Morrison Jr
REGISTERED CIVIL ENGINEER

10-20-97
PLANS APPROVAL DATE

REGISTERED PROFESSIONAL ENGINEER
Robert L. Morrison Jr
No. 43693
Exp. 03/31/97
CIVIL
STATE OF CALIFORNIA

CH2M HILL
2485 NATOMAS PARK DR, SUITE 600
SACRAMENTO, CALIFORNIA 95833

The State of California or its officers or agents shall not be responsible for the accuracy or completeness of electronic copies of this plan sheet.

Notes:

1. For Sections A-A and B-B, see "Footing Details No. 10" sheet.
2. For Legend and Notes, see "Footing Details No. 1" sheet.
3. Column post tensioning retrofit not shown. For details see "Column Post Tensioning Details" sheet.

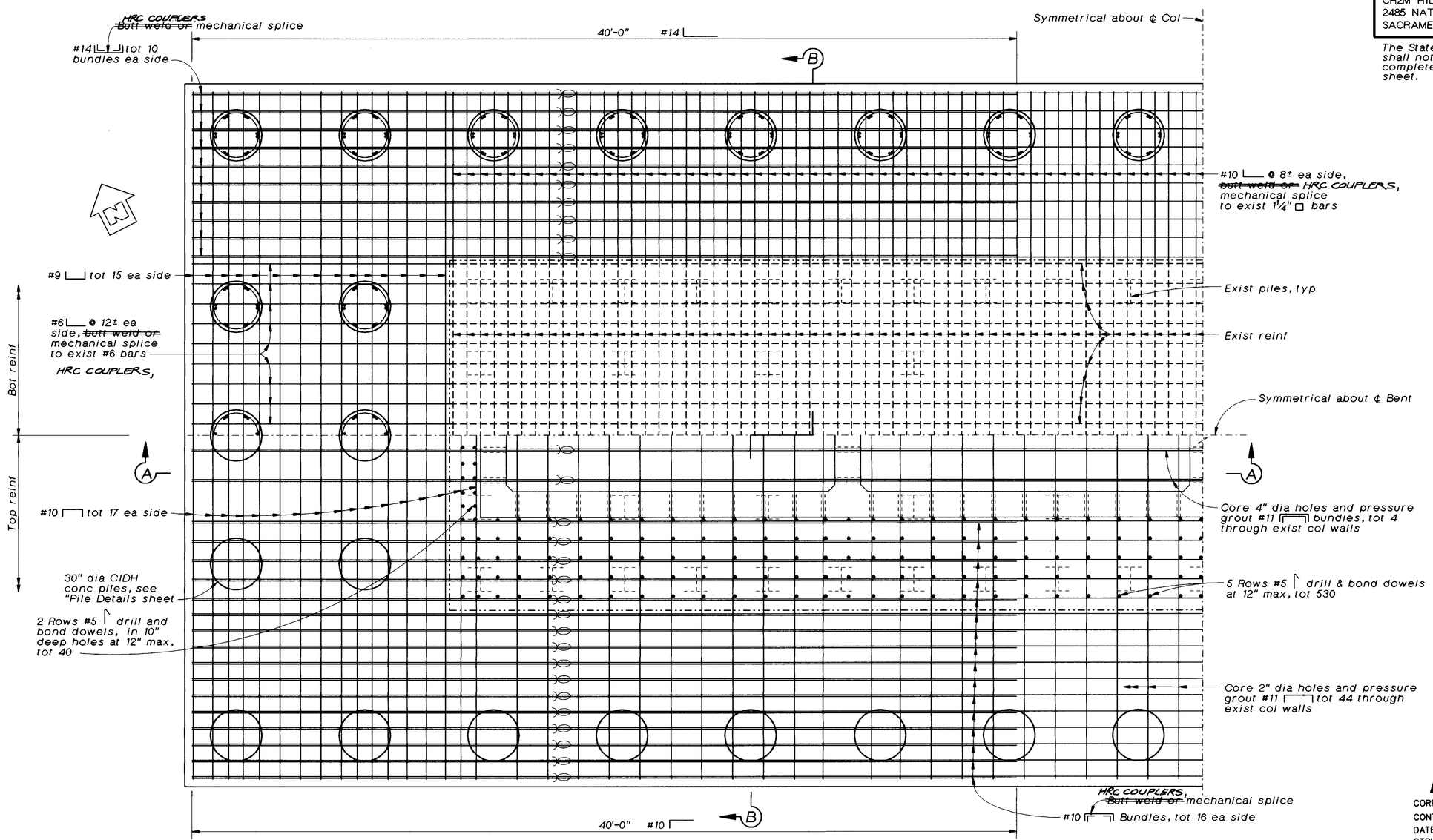

PLAN - BENT "A11E"
⅜"=1'-0"

NOTE:
ONLY BOTTOM MAT USED
HRC WELDED HEAD BARS

AS BUILT
CORRECTION BY BRIAN BEAUDOIN
CONTRACT NO. 04-043934
DATE FEBRUARY, 2002
STRUCTURES REPRESENTATIVE

The Contractor shall verify all controlling field dimensions before ordering or fabricating any material.

SEISMIC RETROFIT PROJECT NO. 611

Vong Toan
DESIGN OVERSIGHT
April 24, 1997
SIGN OFF DATE

DESIGN	BY S. Ismail	CHECKED J. Downing, J. Quincy	
DETAILS	BY A. Galbraith	CHECKED J. Quincy	
QUANTITIES	BY D. Nguyen-Tan, S. Ismail	CHECKED J. Downing	

PREPARED FOR THE STATE OF CALIFORNIA DEPARTMENT OF TRANSPORTATION

Lee Holloway
PROJECT ENGINEER

BRIDGE NO. 23-15 R
POST MILE CC-13.47

CARQUINEZ BRIDGE - "A4E" LINE (APPROACH SPAN)

FOOTING DETAILS NO. 9

ca4ft11a.dlv

ORIGINAL SCALE IN INCHES FOR REDUCED PLANS 0 1 2 3

CU 04-268
EA 043931

DISREGARD PRINTS BEARING EARLIER REVISION DATES → 15-MAR-1997

REVISION DATES (PRELIMINARY STAGE ONLY)

SHEET 27 OF 120

ClibPDF - www.fastio.com

DIST.	COUNTY	ROUTE	POST MILES TOTAL PROJECT	SHEET NO.	TOTAL SHEETS
04	CC/Sol	80	12.8/14.1, 00/0.6	427	555

The information represented on this drawing title "Carquinez Bridge South Approach" was not the result of any work developed, performed or completed by this Department (Caltrans). All such activity appears to be by those parties presented on this drawing who would bear all such responsibility. This drawing is available and presented only for the convenience of any bidder, contractor or other interested party. It should be expressly understood that Caltrans assumes no responsibility whatsoever in respect to the sufficiency or accuracy, completeness, interpretation set forth therein or any other aspect of the information shown on or represented by this drawing.

Signed By: R. W. [illegible] Date: 10-1-96

10-20-97
PLANS APPROVAL DATE

GEO-HYDRO-DATA
INCORPORATED

CALIPER LOG

96-31

OTHER SERVICES:
INVOICE
9958
RUN 3

COMPANY : CAL TRANS
WELL : B 31 NEAR PIER 7A B-LITE
LOCATION/FIELD : CARQUINEZ BRIDGE
COUNTY : CONTRA COSTA
STATE : CALIFORNIA
SECTION : . TOWNSHIP : . RANGE : .

DATE : 05/01/96
DEPTH DRILLER : 112.5
LOG BOTTOM : 111.28
LOG TOP : 4.68
PERMANENT DATUM : GL
ELEV. PERM. DATUM:
LOG MEASURED FROM: GL
DRL MEASURED FROM: GL
ELEVATIONS
KB :
DF :
GL :

CASING DRILLER : .
CASING TYPE : .
CASING THICKNESS: .
LOGGING UNIT : 7
FIELD OFFICE : TEHACHAPI
RECORDED BY : K. KEMP

BIT SIZE : @ 3.75
MAGNETIC DECL. : .
MATRIX DENSITY : .
FLUID DENSITY : .
NEUTRON MATRIX :
REMARKS :
BOREHOLE FLUID :
RM : .
RM TEMPERATURE : .
MATRIX DELTA T : .
FLUID DELTA T : .
FILE : ORIGINAL
TYPE : 9064A1
LOG : 4
PLOT : CHD 60
THRESH: 3000

DRILLED BY: CAL TRANS
LOG RUN IN OPEN HOLE 5/1/96 3:00 PM
ALL SERVICES PROVIDED SUBJECT TO STANDARD TERMS AND CONDITIONS

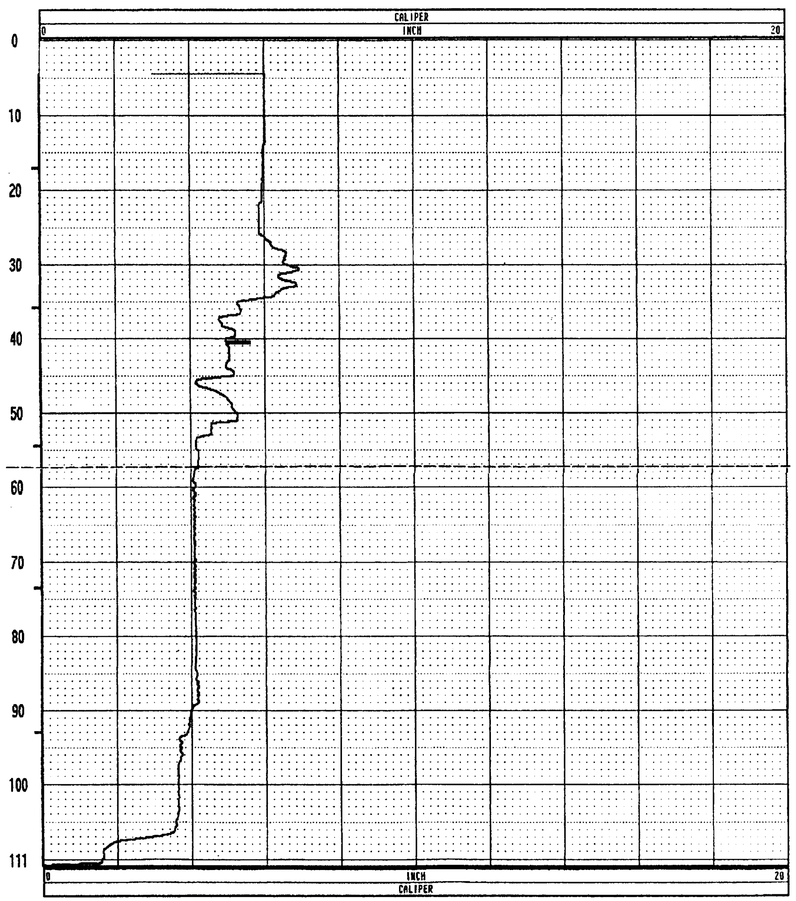

GEO-HYDRO-DATA
INCORPORATED

CALIPER LOG

96-31

OTHER SERVICES:
INVOICE
9958
RUN 6

COMPANY : CAL TRANS
WELL : B 31 NEAR PIER 7 A B-LITE
LOCATION/FIELD : CARQUINEZ BRIDGE
COUNTY : CONTRA COSTA
STATE : CALIFORNIA
SECTION : . TOWNSHIP : . RANGE : .

DATE : 05/14/96
DEPTH DRILLER : 112.0
LOG BOTTOM : 101.40
LOG TOP : 5.80
PERMANENT DATUM : GL
ELEV. PERM. DATUM:
LOG MEASURED FROM: GL
DRL MEASURED FROM: GL
ELEVATIONS
KB :
DF :
GL :

CASING DRILLER : .
CASING TYPE : .
CASING THICKNESS: .
LOGGING UNIT : 7
FIELD OFFICE : TEHACHAPI
RECORDED BY : K. KEMP

BIT SIZE : 3.75
MAGNETIC DECL. : .
MATRIX DENSITY : .
FLUID DENSITY : .
NEUTRON MATRIX :
REMARKS :
BOREHOLE FLUID :
RM : .
RM TEMPERATURE : .
MATRIX DELTA T : .
FLUID DELTA T : .
FILE : ORIGINAL
TYPE : 9064A1
LOG : 6
PLOT : 1 60
THRESH: 3000

DRILED BY: CAL TRANS
LOG RUN 6 5/14/96 OPEN HOLE 11:30 AM
ALL SERVICES PROVIDED SUBJECT TO STANDARD TERMS AND CONDITIONS

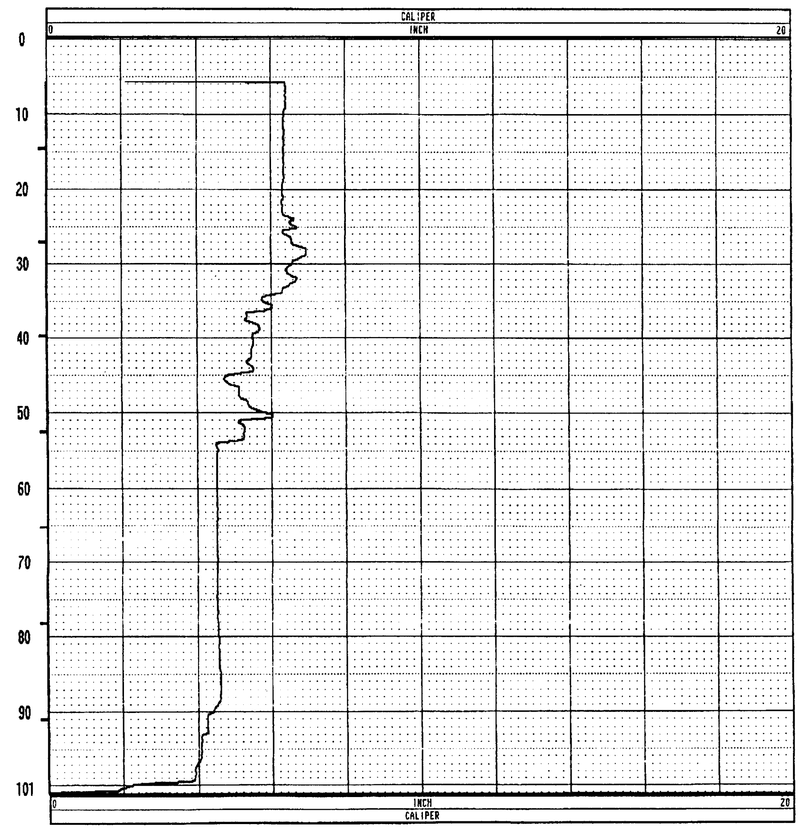

NO AS BUILT CHANGES
AS BUILT
CORRECTION BY BRIAN BEAUDOIN
CONTRACT NO. 04-043934
DATE FEBRUARY, 2002
STRUCTURES REPRESENTATIVE [illegible]

EARTHQUAKE RETROFIT - PROJECT No. SR-611

ENGINEERING SERVICE CENTER	STRUCTURE FOUNDATIONS	FIELD INVESTIGATION BY:	State of CALIFORNIA DEPARTMENT OF TRANSPORTATION	DIVISION OF STRUCTURES STRUCTURE DESIGN	BRIDGE NO. 23-15 R/L	CARQUINEZ BRIDGE - SOUTH APPROACH
PREPARED BY	Irma Gamarra 8/96				POST MILE CC-13.48 Sol-1.72	LOG OF TEST BORINGS 27 OF 35
CHECKED BY						

ORIGINAL SCALE IN INCHES FOR REDUCED PLANS → 0 1 2 3

CU: 04
EA: 043921/043931

DISREGARD PRINTS BEARING EARLIER REVISION DATES →

REVISION DATES (PRELIMINARY STAGE ONLY)

SHEET 62 OF 70

TL 6051 REV. 7/96

ClibPDF - www.fastio.com

DIST	COUNTY	ROUTE	POST MILES TOTAL PROJECT	SHEET NO.	TOTAL SHEETS
04	CC,SOL	80	12.8/14.1, 0.0/0.6	463	555

REGISTERED CIVIL ENGINEER

10-20-97

PLANS APPROVAL DATE

REGISTERED PROFESSIONAL ENGINEER — Robert L. Morrison Jr — No. 43693 — Exp. 03/31/97 — CIVIL — STATE OF CALIFORNIA

CH2M HILL
2485 NATOMAS PARK DR, SUITE 600
SACRAMENTO, CALIFORNIA 95833

The State of California or its officers or agents shall not be responsible for the accuracy or completeness of electronic copies of this plan sheet.

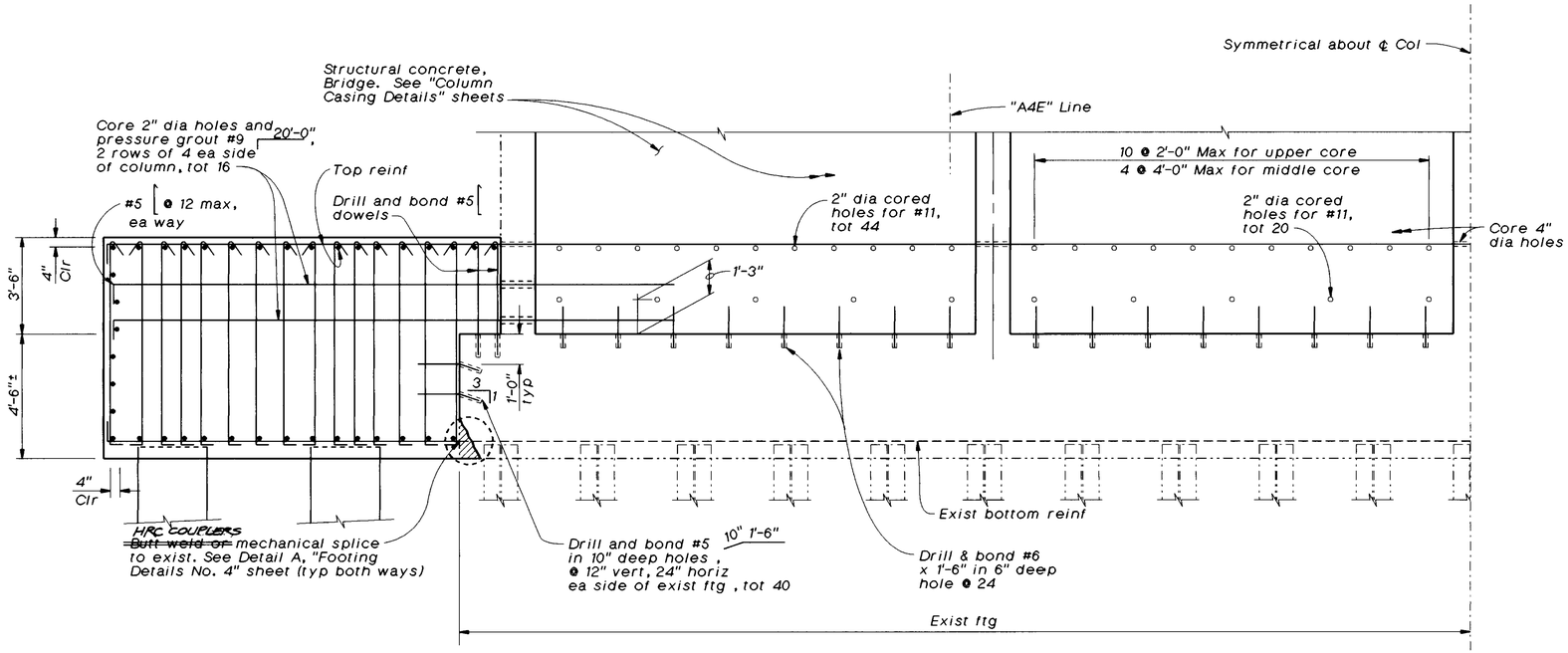

SECTION A-A

3/8"=1'-0"

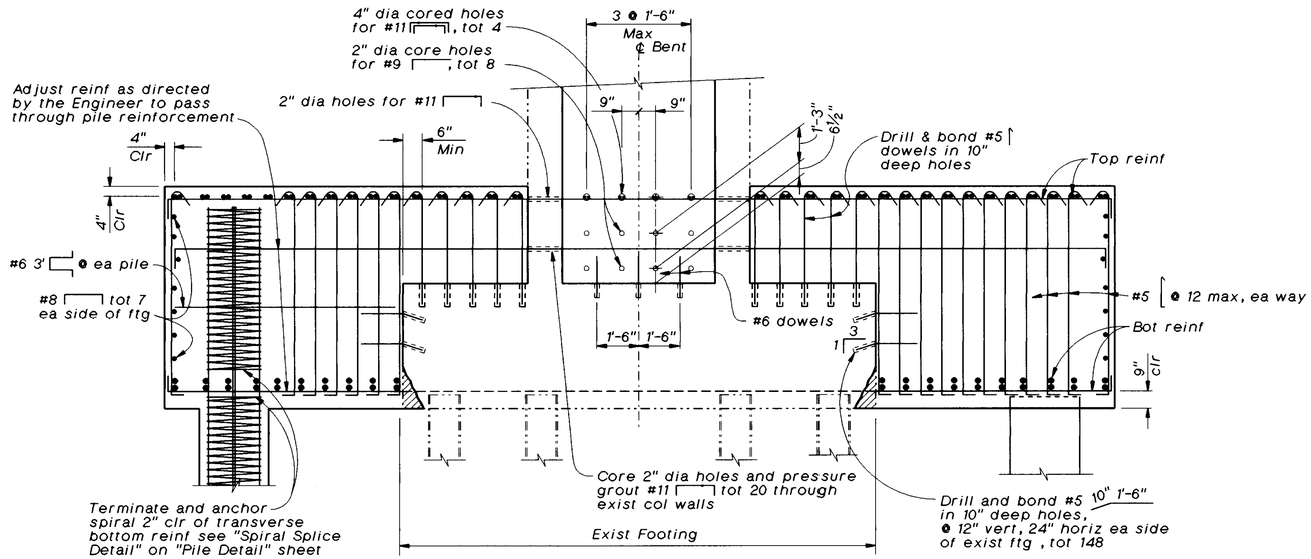

SECTION B-B

3/8"=1'-0"

Notes:

1. *For locations of Sections A-A and B-B, see "Footing Details No. 9" sheet.*
2. *For Legend and Notes see "Footing Details No. 1" sheet.*
3. *Column post tensioning retrofit not shown. For details see "Column Post Tensioning Details" sheet.*

AS BUILT

CORRECTION BY BRIAN BEAUDOIN
CONTRACT NO. 04-043934
DATE FEBRUARY, 2002
STRUCTURES REPRESENTATIVE

The Contractor shall verify all controlling field dimensions before ordering or fabricating any material.

SEISMIC RETROFIT PROJECT NO. 611

Vong Toan
DESIGN OVERSIGHT
Apr. 1 29, 1997
SIGN OFF DATE

	BY	CHECKED
DESIGN	R. Morrison, Jr.	J. Downing/ J. Quincy
DETAILS	A. Galbraith	J. Quincy
QUANTITIES	D. Nguyen-Tan, S. Ismail	J. Downing

PREPARED FOR THE STATE OF CALIFORNIA DEPARTMENT OF TRANSPORTATION

Lee Holloway
PROJECT ENGINEER

BRIDGE NO. 23-15 R
POST MILE CC-13.47

CARQUINEZ BRIDGE - "A4E" LINE (APPROACH SPAN)

FOOTING DETAILS NO. 10

ca4-ft11.dlv

ORIGINAL SCALE IN INCHES FOR REDUCED PLANS 0 1 2 3

CU 04-268
EA 043931

DISREGARD PRINTS BEARING EARLIER REVISION DATES → 15-MAR-1997

REVISION DATES (PRELIMINARY STAGE ONLY)

SHEET 28 OF 120

ClibPDF - www.fastio.com

DIST.	COUNTY	ROUTE	POST MILES TOTAL PROJECT	SHEET NO.	TOTAL SHEETS
04	CC/Sol	80	12.8/14.1, 0.0/0.6	428	555

K.A. Cole

REGISTERED GEOLOGIST K.A. COLE No. 1039 Exp. 6-30-98 CERTIFIED ENGINEERING GEOLOGIST STATE OF CALIFORNIA

10-20-97
PLANS APPROVAL DATE

THE STATE OF CALIFORNIA OR ITS OFFICERS OR AGENTS SHALL NOT BE RESPONSIBLE FOR THE ACCURACY OR COMPLETENESS OF ELECTRONIC COPIES OF THIS PLAN SHEET.

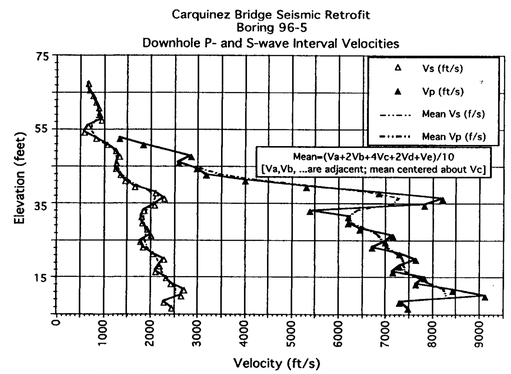

Note: 96-5 Field Log, See Log of Test Borings, Sheet 16 of 35.

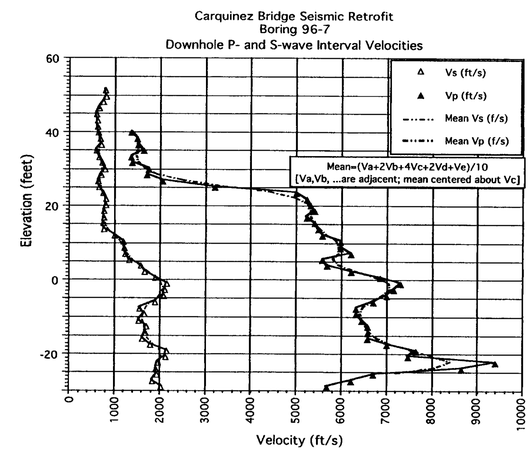

Note: 96-7 Field Log, See Log of Test Borings, Sheet 10 of 35.

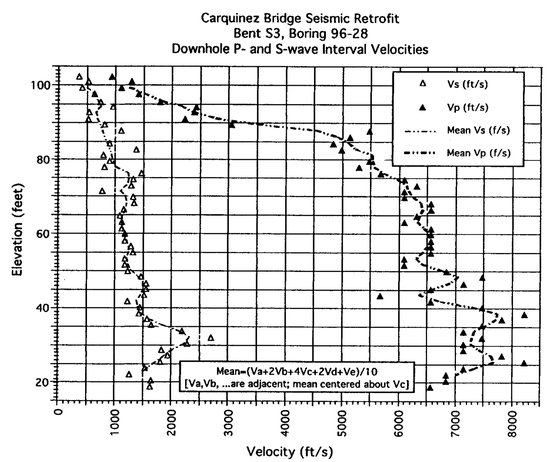

Note: 96-28 Field Log, See Log of Test Borings, Sheet 6 of 35.

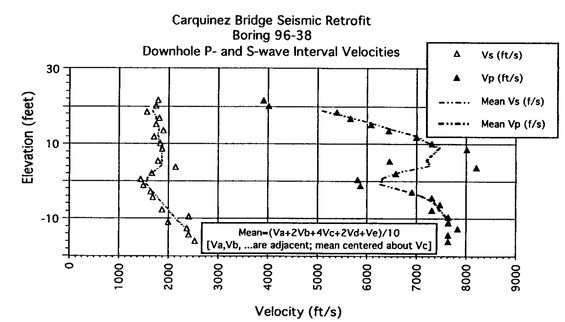

Note: 96-38 Field Log, See Log of Test Borings, Sheet 3 of 35.

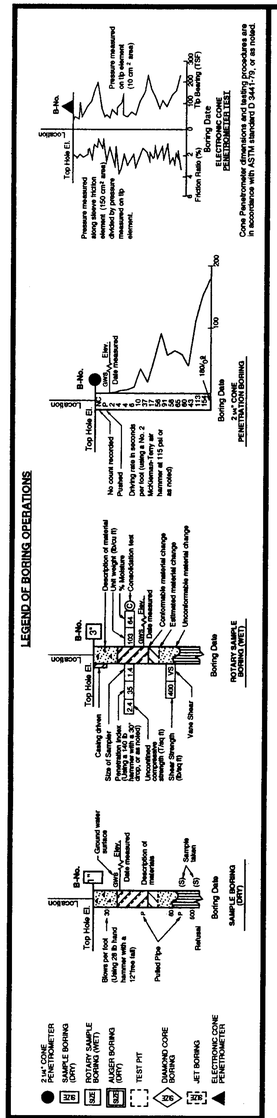

LEGEND OF EARTH MATERIALS: GRAVEL, SAND, SILT, CLAY, SANDY CLAY or CLAYEY SAND, SANDY SILT or SILTY SAND, SILTY CLAY, CLAYEY SILT, SILTY or CLAYEY GRAVEL AND SAND, FILL MATERIAL, IGNEOUS ROCK, SEDIMENTARY ROCK, METAMORPHIC

CONSISTENCY CLASSIFICATION FOR SOILS — According to the Standard Penetration Test

Penetration Index (Blows / Ft)	Granular	Cohesive
0-4	Very Loose	Very Soft
5-9	Loose	Soft
10-19	Slightly compact	Stiff
20-34	Compact	Very Stiff
35-69	Dense	Hard
>70	Very Dense	Very Hard

NOTE: Classification of earth material as shown on this sheet is based upon field inspection and is not to be construed to imply mechanical analysis.

NO AS BUILT CHANGES
AS BUILT
CORRECTION BY BRIAN BEAUDOIN
CONTRACT NO. 04-045934
DATE FEBRUARY, 2002
STRUCTURES REPRESENTATIVE

EARTHQUAKE RETROFIT PROJECT NO. SR-611

ENGINEERING SERVICE CENTER	STRUCTURE FOUNDATIONS	FIELD INVESTIGATION BY:	State of CALIFORNIA DEPARTMENT OF TRANSPORTATION	DIVISION OF STRUCTURES STRUCTURE DESIGN	BRIDGE NO. 23-15 R/L	CARQUINEZ BRIDGE - SOUTH APPROACH
DRAWN BY Ken Wald 8-96		D. VICKERY & W. OWEN			POST MILE CC-13.48 Sol-1.72	LOG OF TEST BORINGS 28 OF 35
CHECKED BY						

ORIGINAL SCALE IN INCHES FOR REDUCED PLANS → 0 1 2 3

CU: 04
EA: 043921/043931

DISREGARD PRINTS BEARING EARLIER REVISION DATES →

REVISION DATES (PRELIMINARY STAGE ONLY)

SHEET 63 OF 70

TL 6051 REV. 5/95

ClibPDF - www.fastio.com

DIST	COUNTY	ROUTE	POST MILES TOTAL PROJECT	SHEET NO.	TOTAL SHEETS
04	CC,SOL	80	12.8/14.1, 0.0/0.6	464	558

Robert L. Morrison Jr
REGISTERED CIVIL ENGINEER

10-20-97
PLANS APPROVAL DATE

REGISTERED PROFESSIONAL ENGINEER
Robert L. Morrison Jr
No. 43693
Exp. 03/31/97
CIVIL
STATE OF CALIFORNIA

CH2M HILL
2485 NATOMAS PARK DR, SUITE 600
SACRAMENTO, CALIFORNIA 95833

The State of California or its officers or agents shall not be responsible for the accuracy or completeness of electronic copies of this plan sheet.

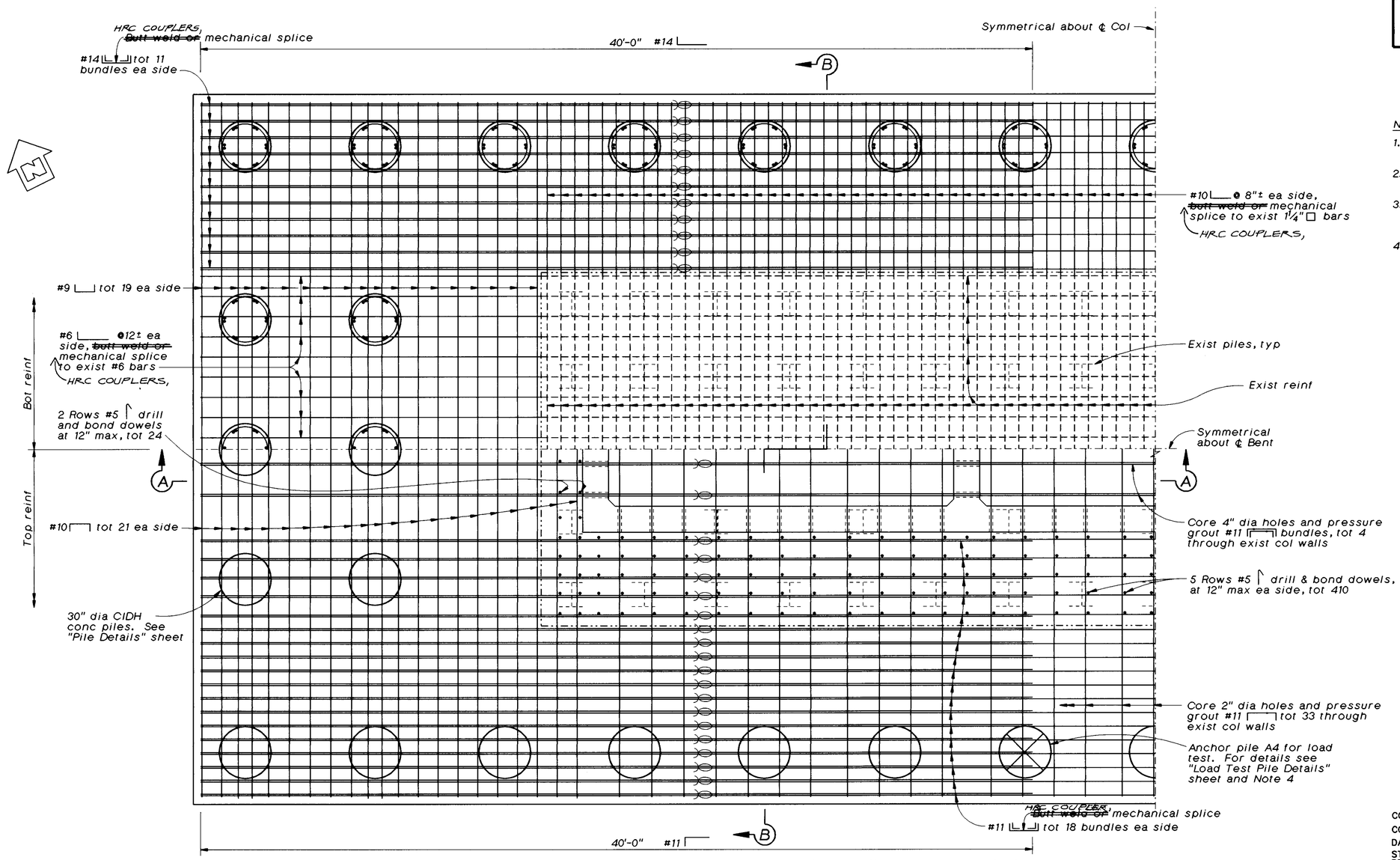

PLAN - BENT "A12E"

3/8"=1'-0"

NOTE:
ONLY BOTTOM MAT USED
HRC WELDED HEAD BARS.

Notes:

1. *For Sections A-A and B-B see "Footing Details No. 12" sheet.*
2. *For Legend and Notes, see "Footing Details No. 1" sheet.*
3. *Column post tensioning retrofit not shown. For details see "Column Post Tensioning Details" sheet.*
4. *The locations of the CIDH piles may be adjusted by the Engineer to accommodate the pile load test set-up.*

AS BUILT
CORRECTION BY BRIAN BEAUDOIN
CONTRACT NO. 04-043934
DATE FEBRUARY, 2002
STRUCTURES REPRESENTATIVE

The Contractor shall verify all controlling field dimensions before ordering or fabricating any material.

SEISMIC RETROFIT PROJECT NO. 611

CARQUINEZ BRIDGE - "A4E" LINE (APPROACH SPAN)

FOOTING DETAILS NO. 11

Vong Toan
DESIGN OVERSIGHT
April 29, 1997
SIGN OFF DATE

	BY	CHECKED
DESIGN	S. Ismail	J. Downing/ J. Quincy
DETAILS	A. Kayden	J. Quincy
QUANTITIES	S. Ismail D. Nguyen-Tan	J. Downing

PREPARED FOR THE STATE OF CALIFORNIA DEPARTMENT OF TRANSPORTATION

Lee Holloway
PROJECT ENGINEER

BRIDGE NO. 23-15 R
POST MILE CC-13.47

CU 04-268
EA 043931

ca4ft12a.dlv

ORIGINAL SCALE IN INCHES FOR REDUCED PLANS 0 1 2 3

DISREGARD PRINTS BEARING EARLIER REVISION DATES → 21-APR-1997

REVISION DATES (PRELIMINARY STAGE ONLY)

SHEET 29 OF 120

ClibPDF - www.fastio.com

DIST	COUNTY	ROUTE	POST MILES TOTAL PROJECT	SHEET NO.	TOTAL SHEETS
04	CC, SOL	80	12.8/14.1, 0.0/0.6	484	555

Robert L. Morrison Jr
REGISTERED CIVIL ENGINEER

10-20-97
PLANS APPROVAL DATE

REGISTERED PROFESSIONAL ENGINEER
Robert L. Morrison Jr
No. 43693
Exp. 03/31/97
CIVIL
STATE OF CALIFORNIA

CH2M HILL
2485 NATOMAS PARK DR, SUITE 600
SACRAMENTO, CALIFORNIA 95833

The State of California or its officers or agents shall not be responsible for the accuracy or completeness of electronic copies of this plan sheet.

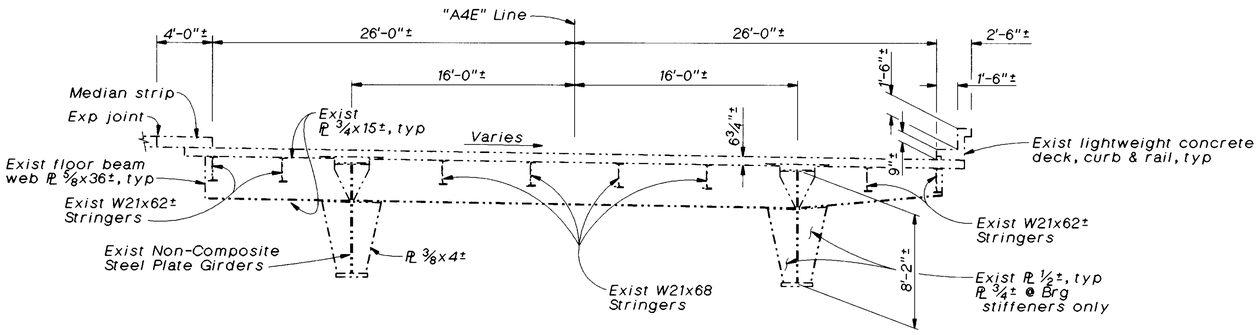

TYPICAL SECTION - SPAN "2-E" THRU "5-E"

3/16"=1'-0"

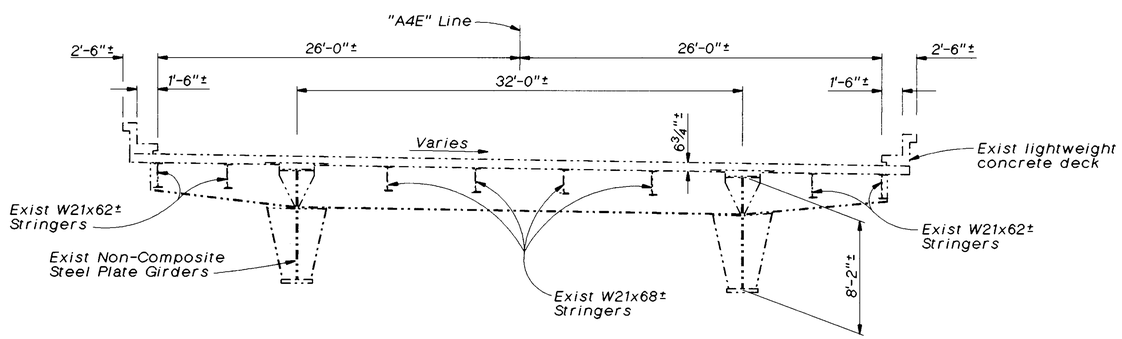

TYPICAL SECTION - SPAN "6-E" & "7-E"

3/16"=1'-0"

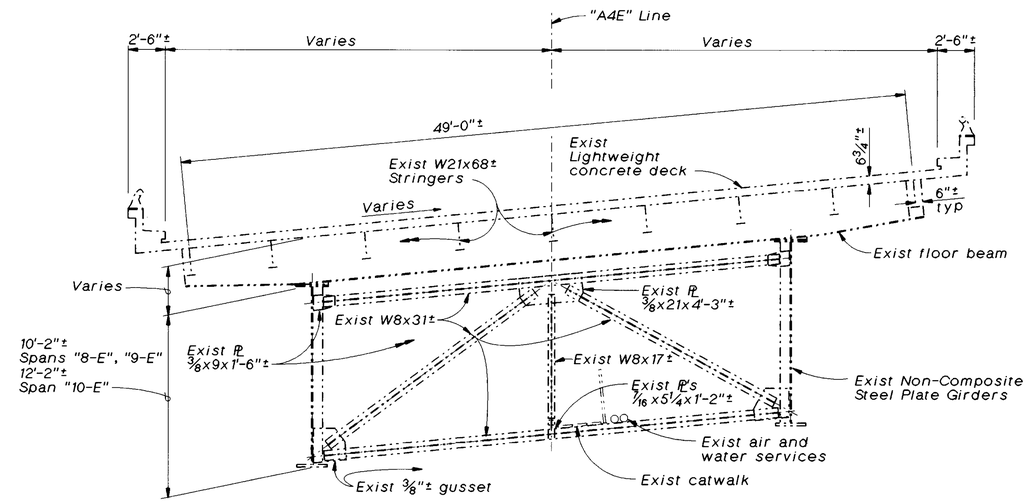

TYPICAL SECTION - SPAN "8-E" THRU "10-E"

3/16"=1'-0"

Notes:

1. *All girder webs vertical. Girders at 32'± centers except at spans "11-E", "12-E" and ramp span "D-6".*
2. *Exist gusset plate dimensions for estimating purposes only..*

NO AS BUILT CHANGES
AS BUILT
CORRECTION BY BRIAN BEAUDOIN
CONTRACT NO. 04-043934
DATE FEBRUARY, 2002
STRUCTURES REPRESENTATIVE

The Contractor shall verify all controlling field dimensions before ordering or fabricating any material.

Vong Toan
DESIGN OVERSIGHT
April 24, 1997
SIGN OFF DATE

	BY	CHECKED
DESIGN	R. Morrison, Jr.	C. Harrington/ J. Quincy
DETAILS	G. Bazán	J. Quincy
QUANTITIES	D. Nguyen-Tan S. Ismail	J. Downing

PREPARED FOR THE STATE OF CALIFORNIA DEPARTMENT OF TRANSPORTATION

Lee Holloway
PROJECT ENGINEER

BRIDGE NO. 23-15 R
POST MILE CC-13.47

SEISMIC RETROFIT PROJECT NO. 611
CARQUINEZ BRIDGE - "A4E" LINE (APPROACH SPAN)
AS-BUILT TYPICAL SECTIONS NO.1

a4e-typ.dlv

ORIGINAL SCALE IN INCHES FOR REDUCED PLANS 0 1 2 3

CU 04-268
EA 043931

DISREGARD PRINTS BEARING EARLIER REVISION DATES → 15-MAR-1997

REVISION DATES (PRELIMINARY STAGE ONLY)

SHEET 49 OF 120

ClibPDF - www.fastio.com

DIST.	COUNTY	ROUTE	POST MILES TOTAL PROJECT	SHEET NO.	TOTAL SHEETS
04	CC/Sol	80	12.8/19.1, 0.0/0.6	429	555

K.A. Cole

REGISTERED GEOLOGIST — K.A. COLE No. 1039 Exp. 6-30-98 CERTIFIED ENGINEERING GEOLOGIST — STATE OF CALIFORNIA

10-20-97
PLANS APPROVAL DATE

THE STATE OF CALIFORNIA OR ITS OFFICERS OR AGENTS SHALL NOT BE RESPONSIBLE FOR THE ACCURACY OR COMPLETENESS OF ELECTRONIC COPIES OF THIS PLAN SHEET.

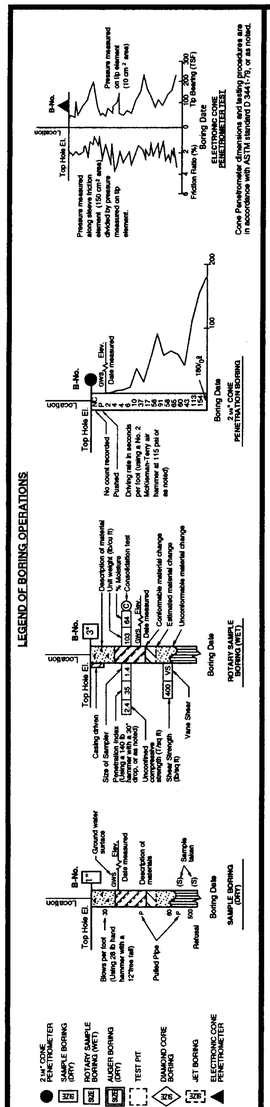

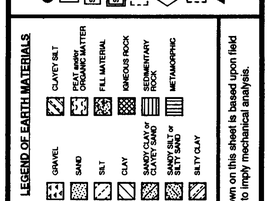

CONSISTENCY CLASSIFICATION FOR SOILS

According to the Standard Penetration Test

Penetration Index (Blows/Ft)	Granular	Cohesive
0-4	Very Loose	Very Soft
5-9	Loose	Soft
10-19	Slightly compact	Stiff
20-34	Compact	Very Stiff
35-69	Dense	Hard
>70	Very Dense	Very Hard

NOTE: Classification of earth material as shown on this sheet is based upon field inspection and is not to be construed to imply mechanical analysis.

Carquinez Bridge Seismic Retrofit
Bent AE 13, Boring 95-4
Downhole P- and S-wave Interval Velocities

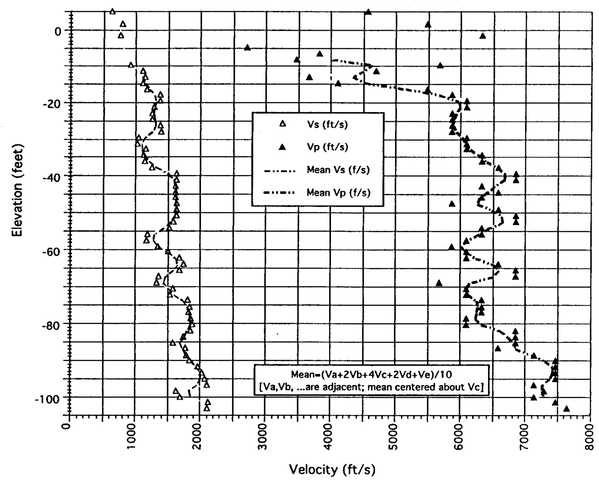

Note: 96-4 Field Log, See Log of Test Borings, Sheet 14 of 35.

Carquinez Bridge Seismic Retrofit
Boring 96-32
Downhole P- and S-wave Interval Velocities

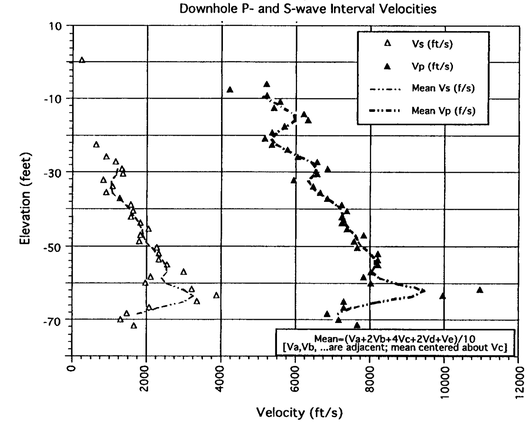

Note: 96-32 Field Log, See Log of Test Borings, Sheet 23 of 35.

Carquinez Bridge Seismic Retrofit
Boring 96-35
Downhole P- and S-wave Interval Velocities

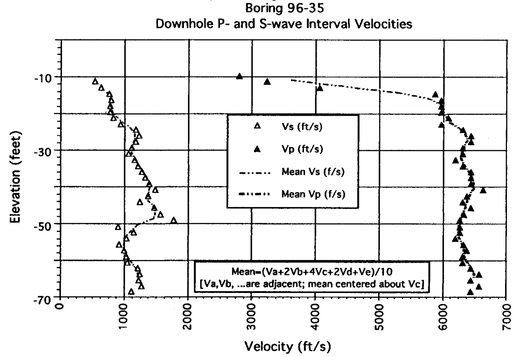

Note: 96-35 Field Log, See Log of Test Borings, Sheet 19 of 35.

Carquinez Bridge Seismic Retrofit
Boring 96-31
Downhole P- and S-wave Interval Velocities

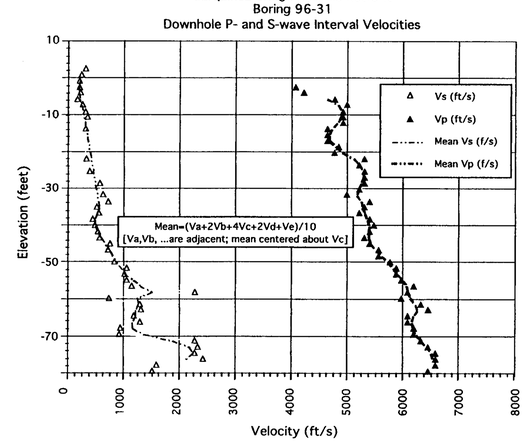

Note: 96-31 Field Log, See Log of Test Borings, Sheet 23 of 35.

NO AS BUILT CHANGES
AS BUILT
CORRECTION BY BRIAN BEAUDOIN
CONTRACT NO. 04-043934
DATE FEBRUARY, 2002
STRUCTURES REPRESENTATIVE

EARTHQUAKE RETROFIT PROJECT NO. SR-611

ENGINEERING SERVICE CENTER	STRUCTURE FOUNDATIONS	FIELD INVESTIGATION BY:	State of CALIFORNIA DEPARTMENT OF TRANSPORTATION	DIVISION OF STRUCTURES STRUCTURE DESIGN	BRIDGE NO. 23-15 R/L
DRAWN BY Ken Wahl 8-96		D. VICKERY & W. OWEN			POST MILE CC-13.48
CHECKED BY					

CARQUINEZ BRIDGE - SOUTH APPROACH

LOG OF TEST BORINGS 29 OF 35

ORIGINAL SCALE IN INCHES FOR REDUCED PLANS → 0 1 2 3

CU: 04
EA: 043921/043931

DISREGARD PRINTS BEARING EARLIER REVISION DATES →

REVISION DATES (PRELIMINARY STAGE ONLY)

SHEET 64 OF 70

TL 6051 REV. 5/95

ClibPDF - www.fastio.com

DIST	COUNTY	ROUTE	POST MILES TOTAL PROJECT	SHEET NO.	TOTAL SHEETS
04	CC, SOL	80	12.8/14.1, 0.0/0.6	465	555

REGISTERED CIVIL ENGINEER

10-20-97

PLANS APPROVAL DATE

REGISTERED PROFESSIONAL ENGINEER Robert L. Morrison Jr No. 43693 Exp. 03/31/97 CIVIL STATE OF CALIFORNIA

CH2M HILL
2485 NATOMAS PARK DR, SUITE 600
SACRAMENTO, CALIFORNIA 95833

The State of California or its officers or agents shall not be responsible for the accuracy or completeness of electronic copies of this plan sheet.

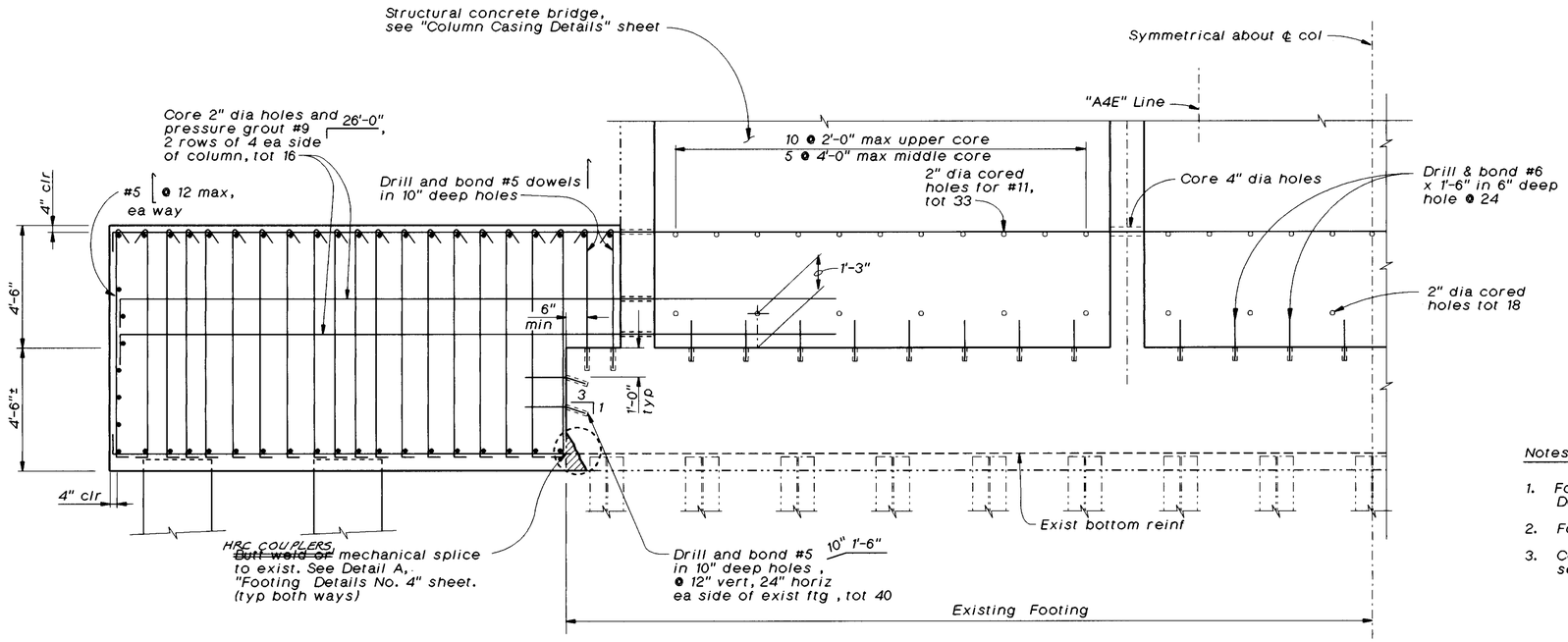

SECTION A-A

3/8"=1'-0"

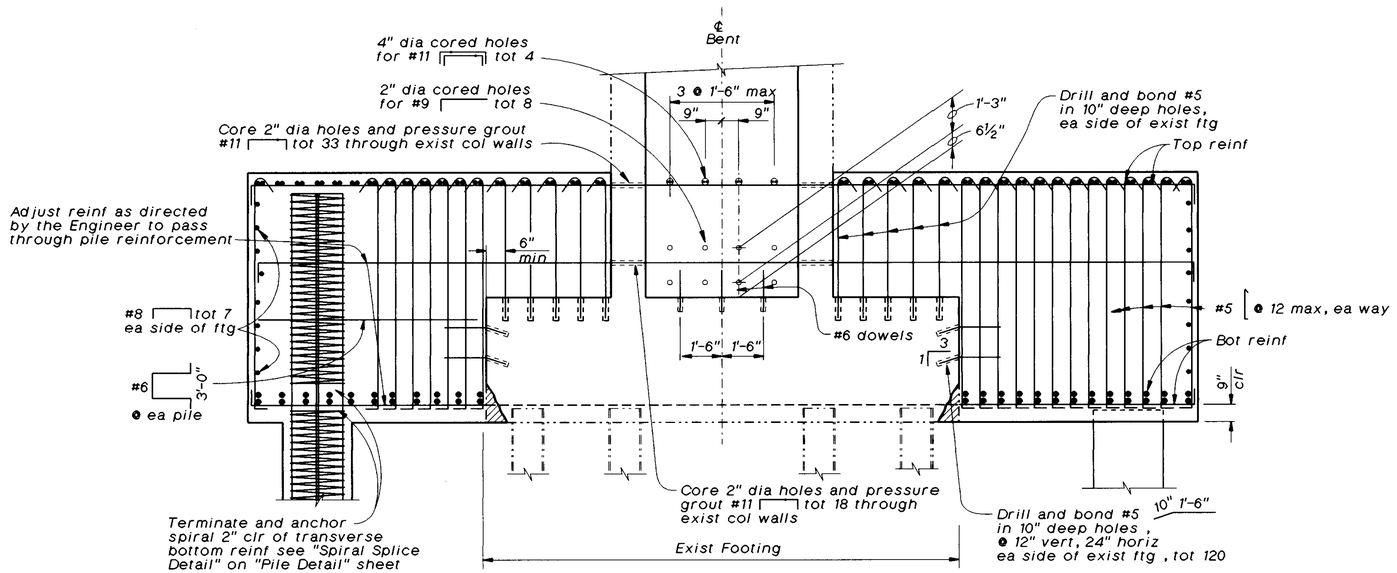

SECTION B-B

3/8"=1'-0"

Notes:

1. *For locations of Sections A-A and B-B see "Footing Details No. 11" sheet.*
2. *For Legend and Notes, see "Footing Details No. 1" sheet.*
3. *Column post tensioning retrofit not shown. For details, see "Column Post Tensioning Details" sheet.*

AS BUILT

CORRECTION BY BRIAN BEAUDOIN
CONTRACT NO. 04-043934
DATE FEBRUARY, 2002
STRUCTURES REPRESENTATIVE

The Contractor shall verify all controlling field dimensions before ordering or fabricating any material.

SEISMIC RETROFIT PROJECT NO. 611

CARQUINEZ BRIDGE - "A4E" LINE (APPROACH SPAN)

FOOTING DETAILS NO. 12

Vong Toan
DESIGN OVERSIGHT
April 24, 1997
SIGN OFF DATE

	BY	CHECKED
DESIGN	S. Ismail	J. Downing, J. Quincy
DETAILS	A. Kayden	J. Quincy
QUANTITIES	S. Ismail, D. Nguyen-Tan	J. Downing

PREPARED FOR THE STATE OF CALIFORNIA DEPARTMENT OF TRANSPORTATION

Lee Holloway
PROJECT ENGINEER

BRIDGE NO. 23-15 R
POST MILE CC-13.47

ca4-ft12.dlv

ORIGINAL SCALE IN INCHES FOR REDUCED PLANS 0 1 2 3

CU 04-268
EA 043931

DISREGARD PRINTS BEARING EARLIER REVISION DATES → 15-MAR-1997

REVISION DATES (PRELIMINARY STAGE ONLY)

SHEET 30 OF 120

ClibPDF - www.fastio.com

DIST.	COUNTY	ROUTE	SECTION	SHEET NO.	TOTAL SHEETS
IV	CC	14	A		

BRIDGE ENGINEER — CIVIL ENGINEER — LICENSE #

DATE APPROVED

NO AS BUILT CHANGES

AS BUILT

CORRECTION BY BRIAN BEAUDOIN

CONTRACT NO. 04-043934

DATE FEBRUARY, 2002

STRUCTURES REPRESENTATIVE

EARTHQUAKE RETROFIT PROJECT NO. SR-611					
DIST.	COUNTY	ROUTE	POST MILES - TOTAL PROJECT	Sheet No.	Total Sheets
04	CC/Sol	80	12.8/ ~~13.18~~ 14.1/0.0/0.6	430	555
STRUCTURAL FOUNDATIONS BRANCH - ENGINEERING SERVICE CENTER					
CERTIFIED ENGINEERING GEOLOGIST - PROJECT GEOLOGIST					
CARQUINEZ BRIDGE - SOUTH APPROACH					
LOG OF TEST BORING 30 OF 35					
NOTE: THIS LOG OF TEST BORINGS IS AVAILABLE ON MICROFILM AT OFFICE OF STRUCTURES DESIGN SACRAMENTO, CALIFORNIA			CU: 04 EA: 043921/ 043931	BRIDGE No. 23-0015 R/L	

REGISTERED GEOLOGIST — R.W. FOX — No. 78 — Exp. 6-30-97 — CERTIFIED ENGINEERING GEOLOGIST — STATE OF CALIFORNIA

The State of California or its officers or agents shall not be responsible for the accuracy or completeness of electronic copies of this plan sheet.

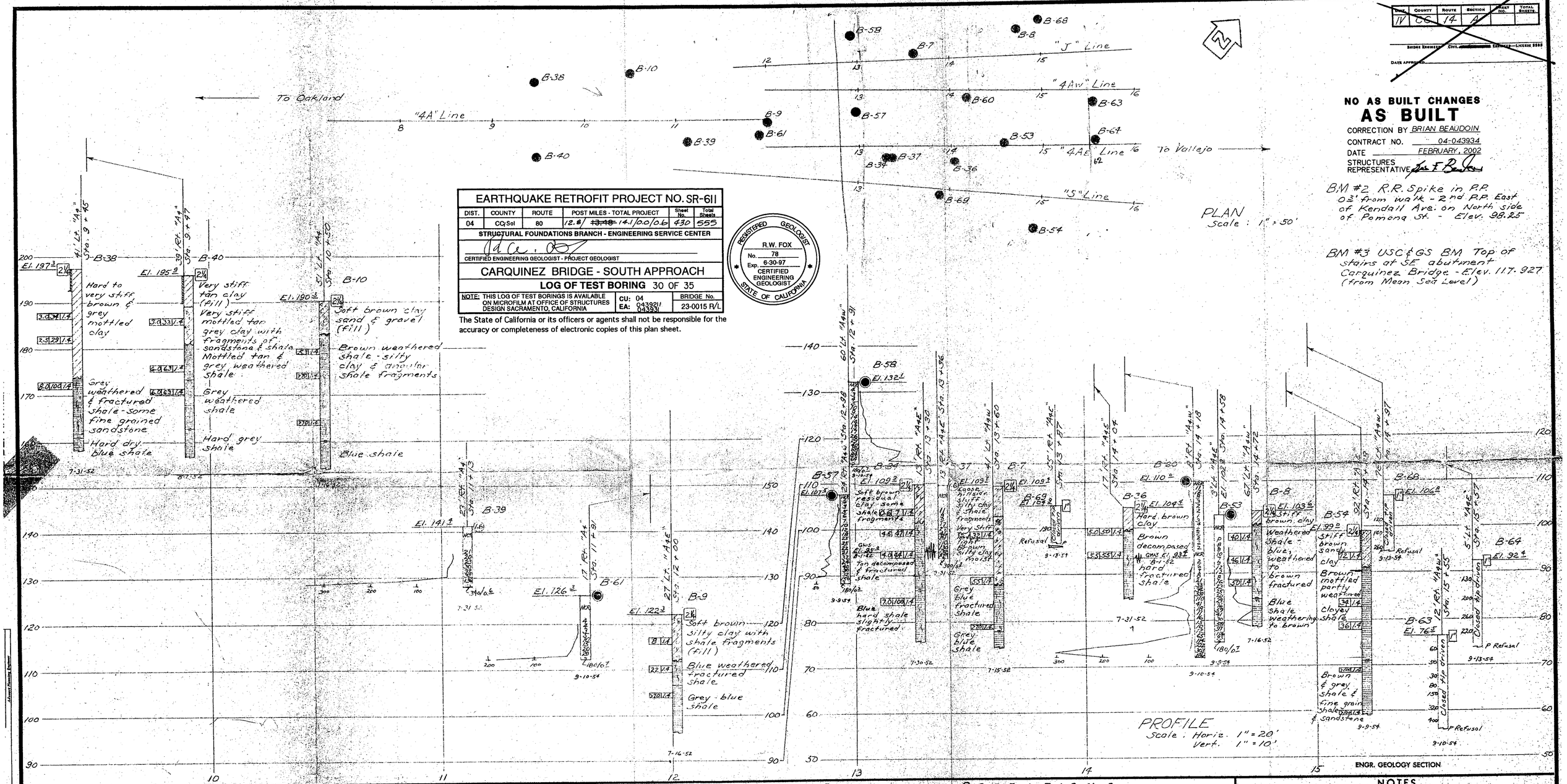

BM #2 R.R. Spike in P.P. 03' from walk - 2nd P.P. East of Kendall Ave. on North side of Pomona St. - Elev. 98.25

BM #3 USC&GS BM Top of stairs at SE abutment Carquinez Bridge - Elev. 117.927 (from Mean Sea Level)

Classification of Material Based on Standard Grade Size Limits

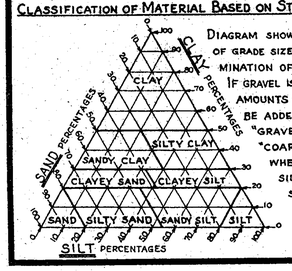

Diagram showing the basis for estimates of grade size distribution used in determination of class names.

If gravel is present in appreciable amounts the term "gravelly" may be added to the class name, viz. "gravelly sand". The terms "coarse", "medium" and "fine" when used to describe sand, silt and gravel refer to standard grade size limits.

Legend of Earth Materials

- Gravel
- Sand
- Silt
- Clay
- Sandy Clay or Clayey Sand
- Sandy Silt or Silty Sand
- Silty Clay or Clayey Silt
- Peat and/or Organic Matter
- Fill Material
- Igneous Rock
- Sedimentary Rock
- Metamorphic Rock

Legend of Boring Operations

- Plan of any boring
- Penetrometer
- 2¼" Cone Penetrometer
- Sampler boring (DRY)
- Rotary boring (WET)
- Auger boring (DRY)
- Jet boring
- Core boring
- Test pit

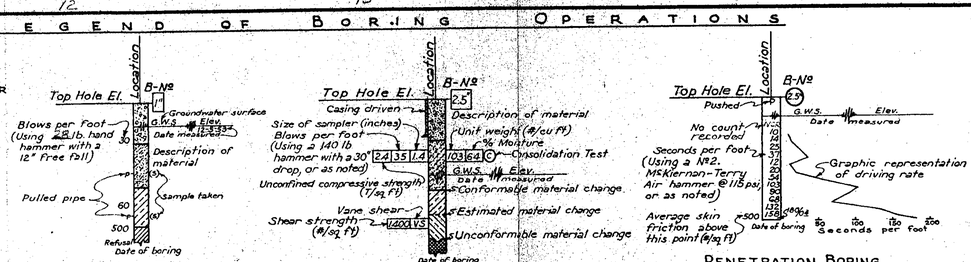

NOTES

The contractor's attention is directed to Section 2, Article (c) of the Standard Specifications and to the Special Provisions accompanying this set of plans.

Classification of earth material as shown on this sheet is based upon field inspection and is not to be construed to imply mechanical analysis.

STATE OF CALIFORNIA
DEPARTMENT OF PUBLIC WORKS
DIVISION OF HIGHWAYS

CARQUINEZ STRAIT BRIDGE

65 OF 70

LOG OF TEST BORINGS

SCALE As Noted	BRIDGE 23-15	FILE	DRAWING PR-1165-20

ClibPDF - www.fastio.com

DIST	COUNTY	ROUTE	POST MILES TOTAL PROJECT	SHEET NO.	TOTAL SHEETS
04	CC, SOL	80	12.8/14.1, 0.0/0.6	466	555

Robert L. Morrison Jr
REGISTERED CIVIL ENGINEER

10-20-97
PLANS APPROVAL DATE

REGISTERED PROFESSIONAL ENGINEER
Robert L. Morrison Jr
No. 43693
Exp. 03/31/97
CIVIL
STATE OF CALIFORNIA

CH2M HILL
2485 NATOMAS PARK DR, SUITE 600
SACRAMENTO, CALIFORNIA 95833

The State of California or its officers or agents shall not be responsible for the accuracy or completeness of electronic copies of this plan sheet.

Notes:

1. For Sections A-A, B-B and C-C see "Footing Details No. 14" sheet.
2. For Legend and Notes, see "Footing Details No. 1" sheet.
3. Column post tensioning retrofit not shown. For details see "Column Post Tensioning Details" sheet.

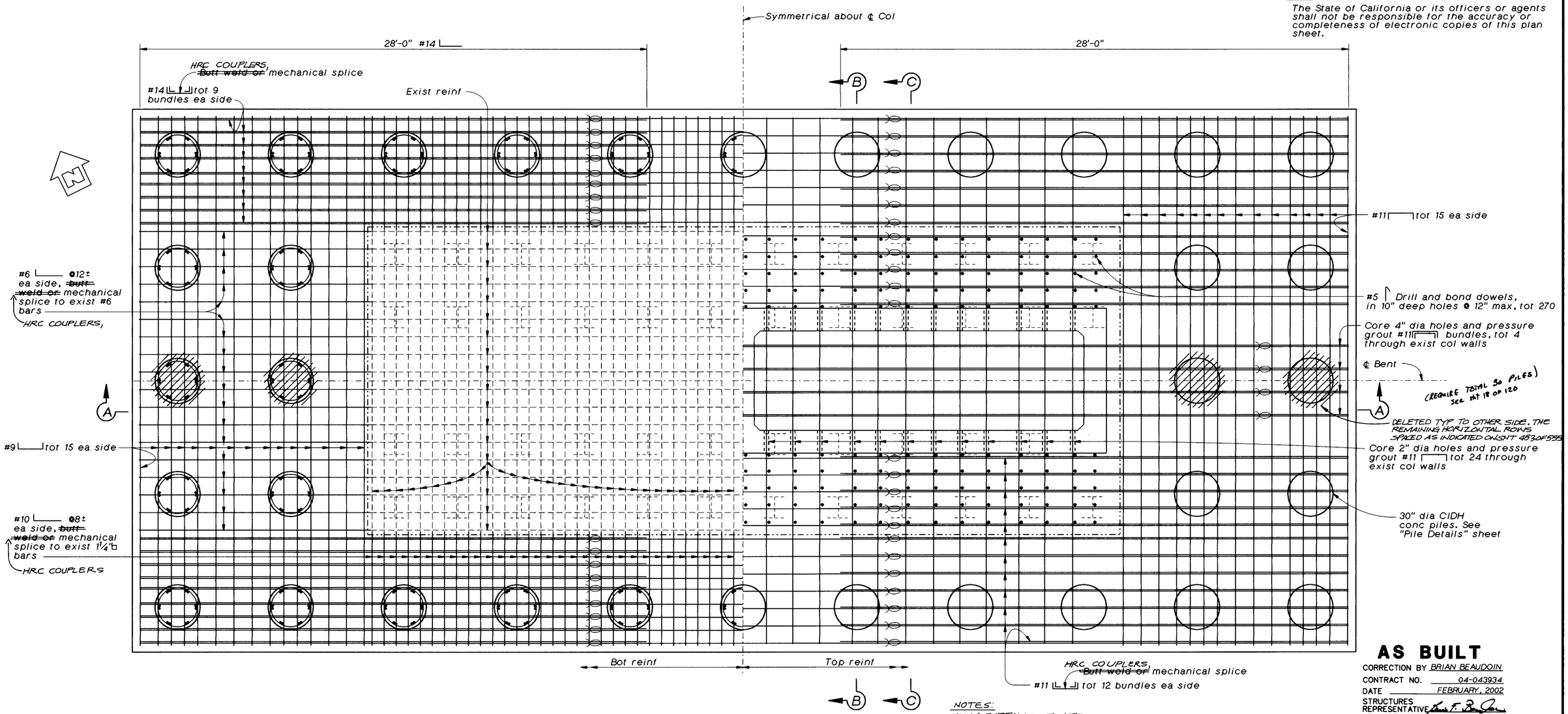

NOTES:
ONLY BOTTOM MAT USED.
HRC WELDED HEAD BARS

PLAN - BENT "A13E"

3/8"=1'-0"

AS BUILT
CORRECTION BY BRIAN BEAUDOIN
CONTRACT NO. 04-043934
DATE FEBRUARY, 2002
STRUCTURES REPRESENTATIVE

The Contractor shall verify all controlling field dimensions before ordering or fabricating any material.

Vong Toan
DESIGN OVERSIGHT
April 24, 1997
SIGN OFF DATE

	BY	CHECKED
DESIGN	S. Ismail	J. Downing, J. Quincy
DETAILS	A. Kayden	J. Quincy
QUANTITIES	S. Ismail, D. Nguyen-Tan	J. Downing

PREPARED FOR THE STATE OF CALIFORNIA DEPARTMENT OF TRANSPORTATION

Lee Holloway
PROJECT ENGINEER

BRIDGE NO. 23-15 R
POST MILE CC-13.47

SEISMIC RETROFIT PROJECT NO. 611
CARQUINEZ BRIDGE - "A4E" LINE (APPROACH SPAN)
FOOTING DETAILS NO. 13

ca4ft13a.dlv

ORIGINAL SCALE IN INCHES FOR REDUCED PLANS 0 1 2 3

CU 04-268
EA 043931

DISREGARD PRINTS BEARING EARLIER REVISION DATES → 15-MAR-1997

REVISION DATES (PRELIMINARY STAGE ONLY)

SHEET 31 OF 120

ClibPDF - www.fastio.com

DIST.	COUNTY	ROUTE	SECTION	SHEET NO.	TOTAL SHEETS
IV	CC	14	A		

BRIDGE ENGINEER CIVIL ENGINEER LICENSE 5595

DATE APPROVED

NO AS BUILT CHANGES

AS BUILT

CORRECTION BY BRIAN BEAUDOIN

CONTRACT NO. 04-043934

DATE FEBRUARY, 2002

STRUCTURES REPRESENTATIVE

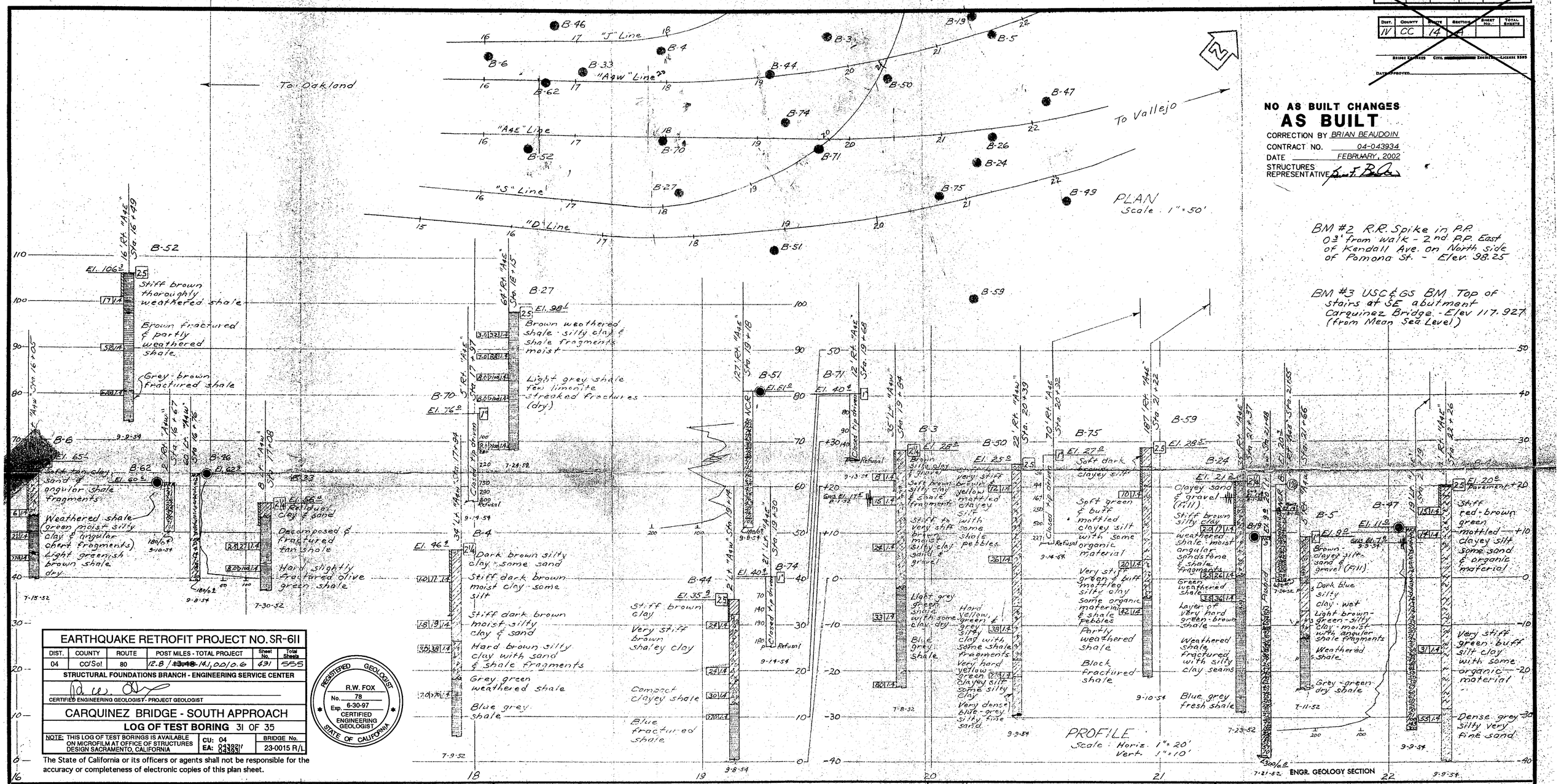

EARTHQUAKE RETROFIT PROJECT NO. SR-611					
DIST.	COUNTY	ROUTE	POST MILES - TOTAL PROJECT	Sheet No.	Total Sheets
04	CC/Sol	80	12.8 / ~~13.48~~ 14.1, 00/0.6	431	555

STRUCTURAL FOUNDATIONS BRANCH - ENGINEERING SERVICE CENTER

CERTIFIED ENGINEERING GEOLOGIST - PROJECT GEOLOGIST

CARQUINEZ BRIDGE - SOUTH APPROACH

LOG OF TEST BORING 31 OF 35

NOTE: THIS LOG OF TEST BORINGS IS AVAILABLE ON MICROFILM AT OFFICE OF STRUCTURES DESIGN SACRAMENTO, CALIFORNIA

CU: 04
EA: 043934/ 043931

BRIDGE No. 23-0015 R/L

REGISTERED GEOLOGIST — R.W. FOX — No. 78 — Exp. 6-30-97 — CERTIFIED ENGINEERING GEOLOGIST — STATE OF CALIFORNIA

The State of California or its officers or agents shall not be responsible for the accuracy or completeness of electronic copies of this plan sheet.

CLASSIFICATION OF MATERIAL BASED ON STANDARD GRADE SIZE LIMITS

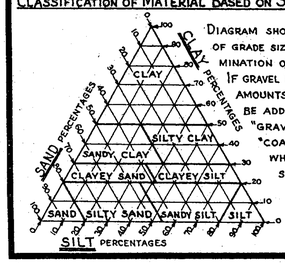

DIAGRAM SHOWING THE BASIS FOR ESTIMATES OF GRADE SIZE DISTRIBUTION USED IN DETERMINATION OF CLASS NAMES.

IF GRAVEL IS PRESENT IN APPRECIABLE AMOUNTS THE TERM "GRAVELLY" MAY BE ADDED TO THE CLASS NAME, VIZ. "GRAVELLY SAND." THE TERMS "COARSE", "MEDIUM" AND "FINE" WHEN USED TO DESCRIBE SAND, SILT AND GRAVEL REFER TO STANDARD GRADE SIZE LIMITS.

LEGEND OF EARTH MATERIALS

- GRAVEL
- SAND
- SILT
- CLAY
- SANDY CLAY OR CLAYEY SAND
- SANDY SILT OR SILTY SAND
- SILTY CLAY OR CLAYEY SILT
- PEAT AND/OR ORGANIC MATTER
- FILL MATERIAL
- IGNEOUS ROCK
- SEDIMENTARY ROCK
- METAMORPHIC ROCK

LEGEND OF BORING OPERATIONS

- PLAN OF ANY BORING
- PENETROMETER
- 2¼" CONE PENETROMETER
- SAMPLER BORING (DRY)
- ROTARY BORING (WET)
- AUGER BORING (DRY)
- JET BORING
- CORE BORING
- TEST PIT

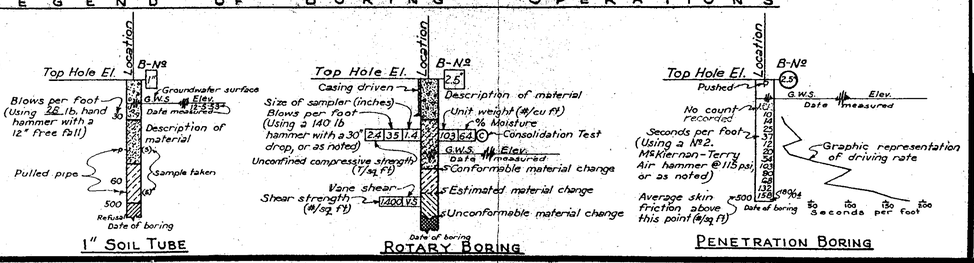

NOTES

The contractor's attention is directed to Section 2, Article (c) of the Standard Specifications and to the Special Provisions accompanying this set of plans.

Classification of earth material as shown on this sheet is based upon field inspection and is not to be construed to imply mechanical analysis.

STATE OF CALIFORNIA
DEPARTMENT OF PUBLIC WORKS
DIVISION OF HIGHWAYS

CARQUINEZ STRAIT BRIDGE

66 of 70

LOG OF TEST BORINGS

SCALE	BRIDGE	FILE	DRAWING
As Noted	23-15		PR-1165-21

ClibPDF - www.fastio.com

DIST	COUNTY	ROUTE	POST MILES TOTAL PROJECT	SHEET NO.	TOTAL SHEETS
04	CC, SOL	80	12.8/14.1, 0.0/0.6	467	555

REGISTERED CIVIL ENGINEER

10-20-97
PLANS APPROVAL DATE

REGISTERED PROFESSIONAL ENGINEER — Robert L. Morrison Jr — No. 43693 — Exp. 03/31/97 — CIVIL — STATE OF CALIFORNIA

CH2M HILL
2485 NATOMAS PARK DR, SUITE 600
SACRAMENTO, CALIFORNIA 95833

The State of California or its officers or agents shall not be responsible for the accuracy or completeness of electronic copies of this plan sheet.

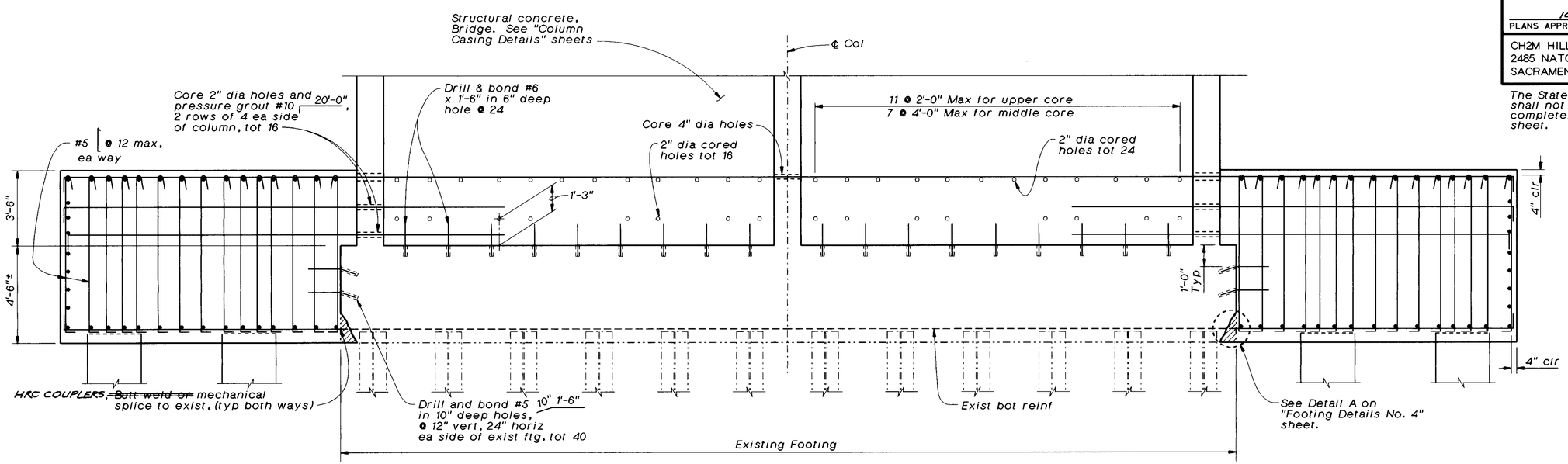

SECTION A-A
3/8"=1'-0"

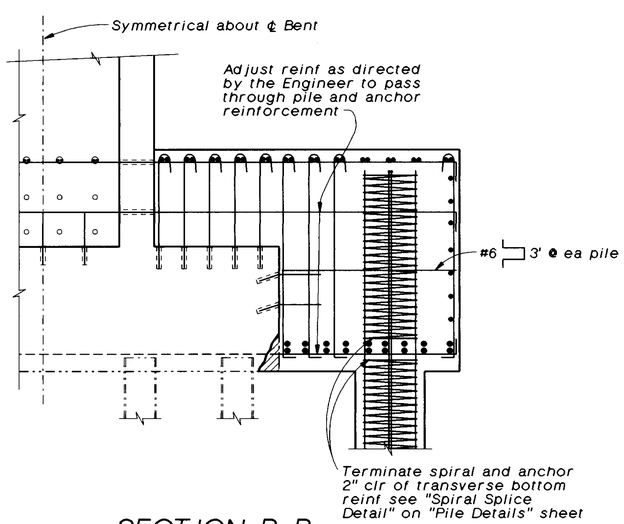

SECTION B-B
3/8"=1'-0"

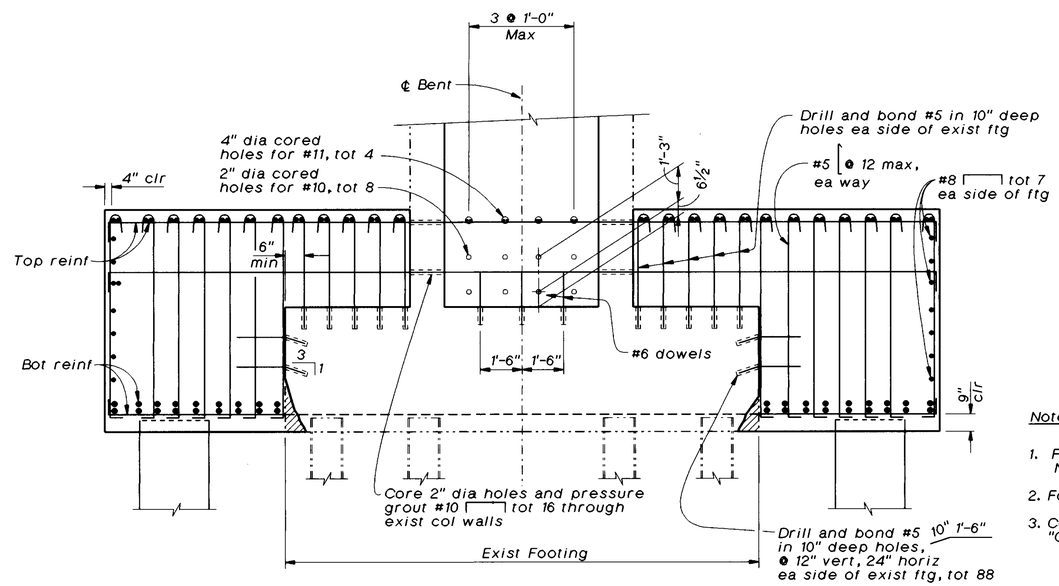

SECTION C-C
3/8"=1'-0"

AS BUILT
CORRECTION BY BRIAN BEAUDOIN
CONTRACT NO. 04-043934
DATE FEBRUARY, 2002
STRUCTURES REPRESENTATIVE

Notes:

1. For locations of Sections A-A, B-B and C-C see "Footing Details No. 13" sheet.
2. For Legend and Notes, see "Footing Details No. 1" sheet.
3. Column post tensioning retrofit not shown. For details see "Column Post Tensioning Details" sheet.

The Contractor shall verify all controlling field dimensions before ordering or fabricating any material.

SEISMIC RETROFIT PROJECT NO. 611

CARQUINEZ BRIDGE - "A4E" LINE (APPROACH SPAN)

FOOTING DETAILS NO. 14

Vong Toan
DESIGN OVERSIGHT
April 24, 1997
SIGN OFF DATE

	BY	CHECKED
DESIGN	S. Ismail	J. Downing, J. Quincy
DETAILS	A. Kayden	J. Quincy
QUANTITIES	S. Ismail, D. Nguyen-Tan	J. Downing

PREPARED FOR THE STATE OF CALIFORNIA DEPARTMENT OF TRANSPORTATION

Lee Holloway
PROJECT ENGINEER

BRIDGE NO. 23-15 R
POST MILE CC-13.47

ca4-ft13.dlv

ORIGINAL SCALE IN INCHES FOR REDUCED PLANS 0 1 2 3

CU 04-268
EA 043931

DISREGARD PRINTS BEARING EARLIER REVISION DATES → 15-MAR-1997

REVISION DATES (PRELIMINARY STAGE ONLY)

SHEET 32 OF 120

ClibPDF - www.fastio.com

FED. ROAD DIST. NO.	STATE	PROJ. NO.	FISCAL YEAR	SHEET NO.	TOTAL SHEETS
7	CAL.				

DIST.	COUNTY	ROUTE	SECTION	SHEET NO.	TOTAL SHEETS
IV	CC	80	A		

BRIDGE ENGINEER CIVIL ENGINEER

DATE APPROVED

EARTHQUAKE RETROFIT PROJECT NO. SR-611

DIST.	COUNTY	ROUTE	POST MILES - TOTAL PROJECT	Sheet No.	Total Sheets
04	CC/Sol	80	12.8 / ~~13.48~~ 14.1,00/0.6	432	555

STRUCTURAL FOUNDATIONS BRANCH - ENGINEERING SERVICE CENTER

CERTIFIED ENGINEERING GEOLOGIST - PROJECT GEOLOGIST

CARQUINEZ BRIDGE - SOUTH APPROACH

LOG OF TEST BORING 32 OF 35

NOTE: THIS LOG OF TEST BORINGS IS AVAILABLE ON MICROFILM AT OFFICE OF STRUCTURES DESIGN SACRAMENTO, CALIFORNIA

CU: 04
EA: 043921/ 043931

BRIDGE No. 23-0015 R/L

The State of California or its officers or agents shall not be responsible for the accuracy or completeness of electronic copies of this plan sheet.

REGISTERED GEOLOGIST R.W. FOX No. 78 Exp. 6-30-97 CERTIFIED ENGINEERING GEOLOGIST STATE OF CALIFORNIA

NO AS BUILT CHANGES

AS BUILT

CORRECTION BY BRIAN BEAUDOIN
CONTRACT NO. 04-043934
DATE FEBRUARY, 2002
STRUCTURES REPRESENTATIVE

10-20-97
PLANS APPROVAL DATE

BM #2 - R.R. Spike in P.P. 6± from walk 2nd pole East of Kendall Ave. on North side of Pomona St. - Elev. 98.25

BM #3 - USC & GS BM - Top of stairs at SE abutment Carquinez Br. - Elev. 117.927 (from mean sea level)

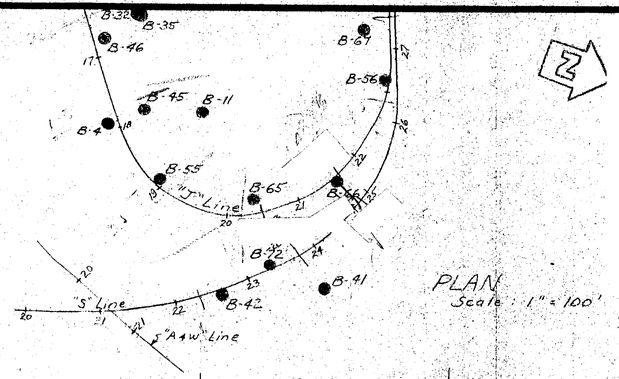

PLAN
Scale: 1" = 100'

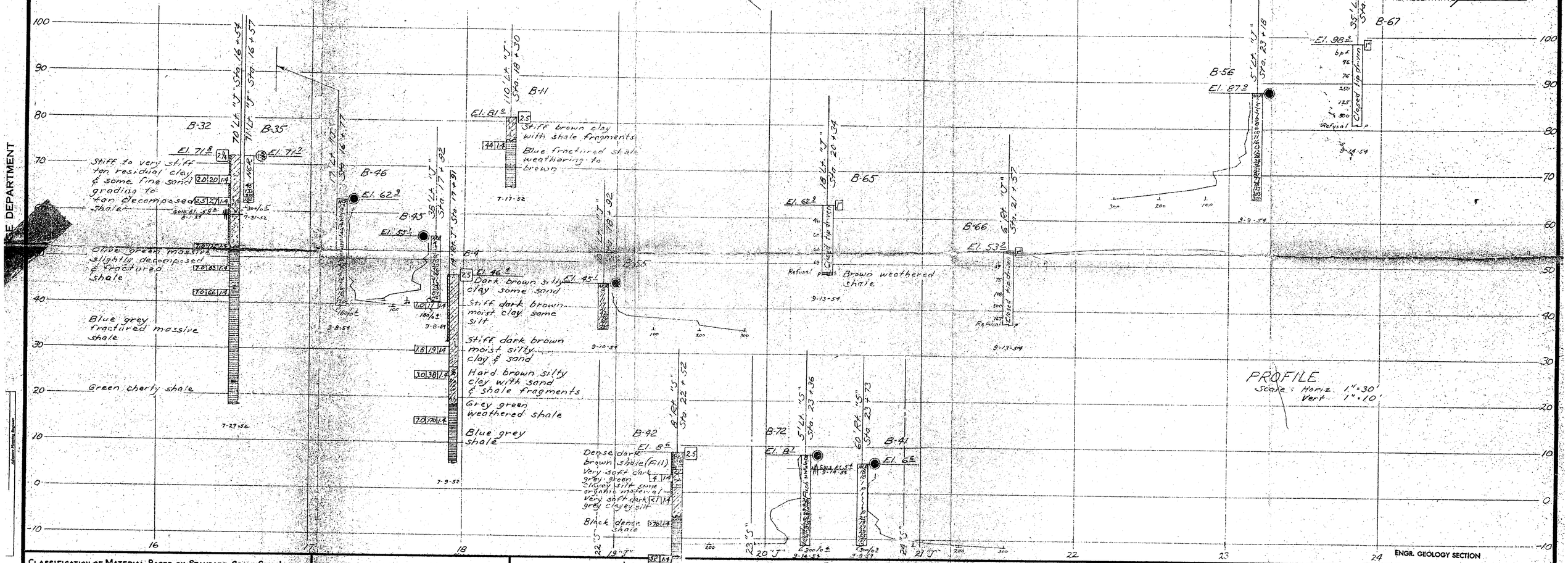

ENGR. GEOLOGY SECTION

CLASSIFICATION OF MATERIAL BASED ON STANDARD GRADE SIZE LIMITS

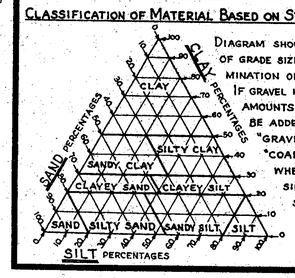

DIAGRAM SHOWING THE BASIS FOR ESTIMATES OF GRADE SIZE DISTRIBUTION USED IN DETERMINATION OF CLASS NAMES.

IF GRAVEL IS PRESENT IN APPRECIABLE AMOUNTS THE TERM "GRAVELLY" MAY BE ADDED TO THE CLASS NAME, VIZ: "GRAVELLY SAND." THE TERMS "COARSE", "MEDIUM" AND "FINE" WHEN USED TO DESCRIBE SAND, SILT AND GRAVEL REFER TO STANDARD GRADE SIZE LIMITS.

LEGEND OF EARTH MATERIALS

- GRAVEL
- SAND
- SILT
- CLAY
- SANDY CLAY OR CLAYEY SAND
- SANDY SILT OR SILTY SAND
- SILTY CLAY OR CLAYEY SILT
- PEAT AND/OR ORGANIC MATTER
- FILL MATERIAL
- IGNEOUS ROCK
- SEDIMENTARY ROCK
- METAMORPHIC ROCK

LEGEND OF BORING OPERATIONS

- PLAN OF ANY BORING
- PENETROMETER
- 2¼" CONE PENETROMETER
- SAMPLER BORING (DRY)
- ROTARY BORING (WET)
- AUGER BORING (DRY)
- JET BORING
- CORE BORING
- TEST PIT

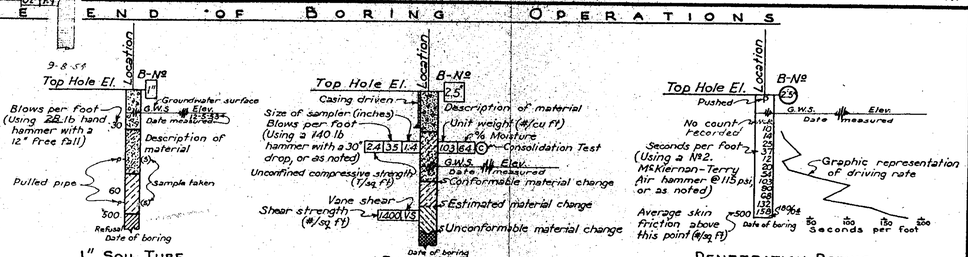

NOTES

The contractor's attention is directed to Section 2, Article (c) of the Standard Specifications and to the Special Provisions accompanying this set of plans.

Classification of earth material as shown on this sheet is based upon field inspection and is not to be construed to imply mechanical analysis.

STATE OF CALIFORNIA
DEPARTMENT OF PUBLIC WORKS
DIVISION OF HIGHWAYS

CARQUINEZ STRAIT BRIDGE

67 OF 70

LOG OF TEST BORINGS

SCALE	BRIDGE	FILE	DRAWING
As Noted	23-15		PR-1165-22

ClibPDF - www.fastio.com

DIST. No.	STATE	PROJ. No.	YEAR	SHEET No.	TOTAL SHEETS
7	CAL.				

DIST.	COUNTY	ROUTE	SECTION	SHEET No.	TOTAL SHEETS
IV	CC	14			

BRIDGE ENGINEER   CIVIL ENGINEER—LICENSE
DATE APPROVED

NO AS BUILT CHANGES

AS BUILT

CORRECTION BY BRIAN BEAUDOIN
CONTRACT NO. 04-043934
DATE FEBRUARY, 2002
STRUCTURES REPRESENTATIVE [signature]

EARTHQUAKE RETROFIT PROJECT NO. SR-611					
DIST.	COUNTY	ROUTE	POST MILES - TOTAL PROJECT	Sheet No.	Total Sheets
04	CC/Sol	80	12.8/ ~~13.48~~ 14.1, 0.0/0.6	433	555

STRUCTURAL FOUNDATIONS BRANCH - ENGINEERING SERVICE CENTER

[signature] 10-20-97

CERTIFIED ENGINEERING GEOLOGIST - PROJECT GEOLOGIST — PLANS APPROVAL DATE

CARQUINEZ BRIDGE - SOUTH APPROACH

LOG OF TEST BORING 33 OF 35

NOTE: THIS LOG OF TEST BORINGS IS AVAILABLE ON MICROFILM AT OFFICE OF STRUCTURES DESIGN SACRAMENTO, CALIFORNIA — CU: 04 EA: 043921/043931 — BRIDGE No. 23-0015 R/L

REGISTERED GEOLOGIST — R.W. FOX — No. 78 — Exp. 6-30-97 — CERTIFIED ENGINEERING GEOLOGIST — STATE OF CALIFORNIA

The State of California or its officers or agents shall not be responsible for the accuracy or completeness of electronic copies of this plan sheet.

Classification of Material Based on Standard Grade Size Limits

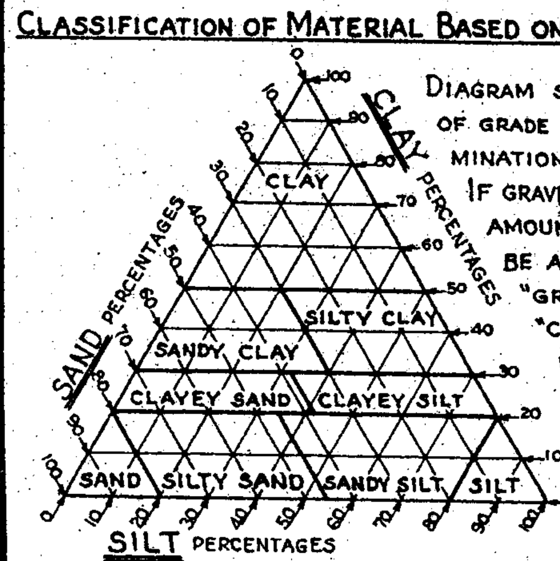

Diagram showing the basis for estimates of grade size distribution used in determination of class names.

If gravel is present in appreciable amounts the term "gravelly" may be added to the class name, viz. "gravelly sand." The terms "coarse", "medium" and "fine" when used to describe sand, silt and gravel refer to standard grade size limits.

Legend of Earth Materials

- Gravel
- Sand
- Silt
- Clay
- Sandy Clay or Clayey Sand
- Sandy Silt or Silty Sand
- Silty Clay or Clayey Silt
- Peat and/or Organic Matter
- Fill Material
- Igneous Rock
- Sedimentary Rock
- Metamorphic Rock

Legend of Boring Operations

- Plan of any boring
- Penetrometer
- 2¼" Cone Penetrometer
- Sampler boring (dry)
- Rotary boring (wet)
- Auger boring (dry)

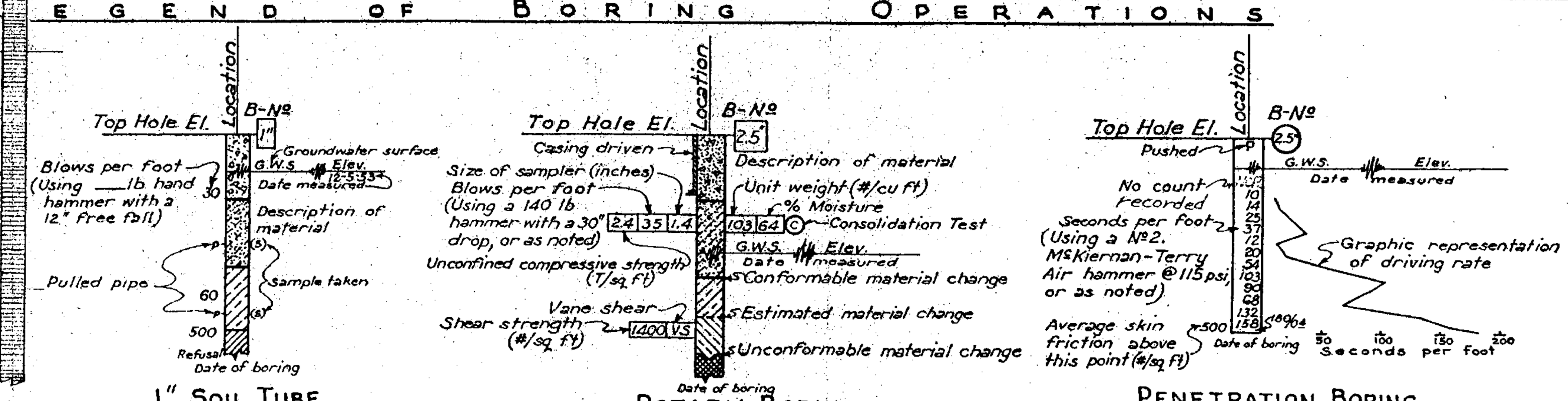

ENGR. GEOLOGY SECTION

NOTES

The contractor's attention is directed to Section 2, Article (c) of the Standard Specifications and to the Special Provisions accompanying this set of plans.

Classification of earth material as shown on this sheet is based upon field inspection and is not to be construed to imply mechanical analysis.

STATE OF CALIFORNIA
DEPARTMENT OF PUBLIC WORKS
DIVISION OF HIGHWAYS

CARQUINEZ STRAIT BRIDGE

68 of 70

LOG OF TEST BORINGS

SCALE As Noted | BRIDGE 23-15 | FILE | DRAWING PR-1165-23

ClibPDF - www.fastio.com

DIST	COUNTY	ROUTE	POST MILES TOTAL PROJECT	SHEET NO.	TOTAL SHEETS
04	CC, SOL	80	12.8/14.1, 0.0/16	468	555

REGISTERED CIVIL ENGINEER

10-20-97
PLANS APPROVAL DATE

REGISTERED PROFESSIONAL ENGINEER — Robert L. Morrison Jr. No. 43693 Exp. 03/31/97 CIVIL — STATE OF CALIFORNIA

CH2M HILL
2485 NATOMAS PARK DR, SUITE 600
SACRAMENTO, CALIFORNIA 95833

The State of California or its officers or agents shall not be responsible for the accuracy or completeness of electronic copies of this plan sheet.

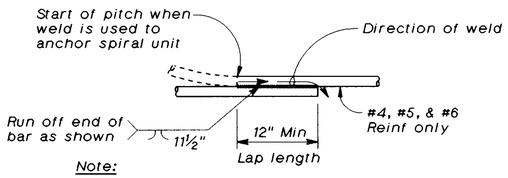

Note:

Flare weld to be made in direction shown.

WELDED LAP SPLICE AND ANCHOR

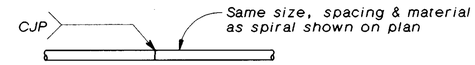

Individual hoops, made continuous with 100% penetration welds, may be substituted for spirals.

BUTT WELDED CONTINUOUS HOOP

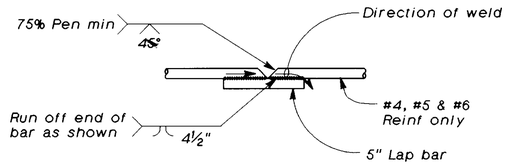

1. Butt weld to be made first.
2. Butt weld to be made in flat or horiz position.
3. Lap bar to be centered on splice.
4. Flare weld to be made in direction shown.
5. Lap bar equal size to spiral bar.

VEE GROOVE WELDED SPLICE

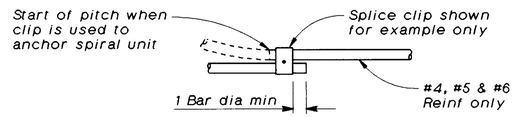

MECHANICAL LAP SPLICE AND ANCHOR

BAR SPIRAL SPLICE & SPIRAL ANCHOR & HOOP DETAIL

No scale

PILE DATA - 30" CIDH CONCRETE PILE					
Bent Location	Nominal Resistance		Design Tip Elevation (ft)	Cut-off Elevation (ft)	Specified Tip Elevation (ft)
	Compression (kips)	Tension (kips)			
A3E	590	520	58 (1), 63 (2)	103.25±	58
A4E	610	530	40 (1), 42 (2)	82.25±	40
A5E	660	570	33 (1), 36 (2)	74.25±	33
A6E	660	590	26 (1), 29 (2)	70.25±	26
A7E	670	600	5 (1), 6 (2)	60.25±	5
A8E	790	660	-32 (1), -25 (2)	37.25±	-32
A9E	680	570	-53 (1), -48 (2)	17.25±	-53
A10E	690	570	-42 (1), -39 (2)	3.25±	-42
A11E	560	420	-34 (1), -30 (2)	3.25±	~~-34~~ -58
A12E	730	580	-31 (1), -27 (2)	3.25±	~~-31~~ -40
A13E	670	540	-29 (1), -26 (2)	3.25±	~~-29~~ -40

Notes:

1. Piles are designed for Group VII (seismic) loading.
2. The design geotechnical capacity of the piles is equal to 1.0 times the nominal compressive or tensile loads shown above.
3. Design tip elevation is controlled by the following demands: (1) Compression and (2) Tension.
4. All pile capacities are in skin friction for the "A4E" Line. No end bearing included in design.

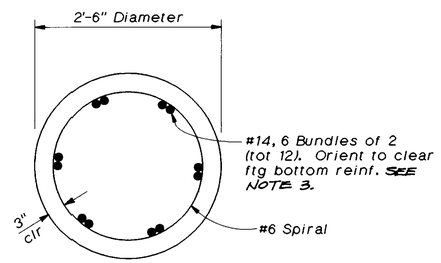

SECTION A-A

1"=1'-0"

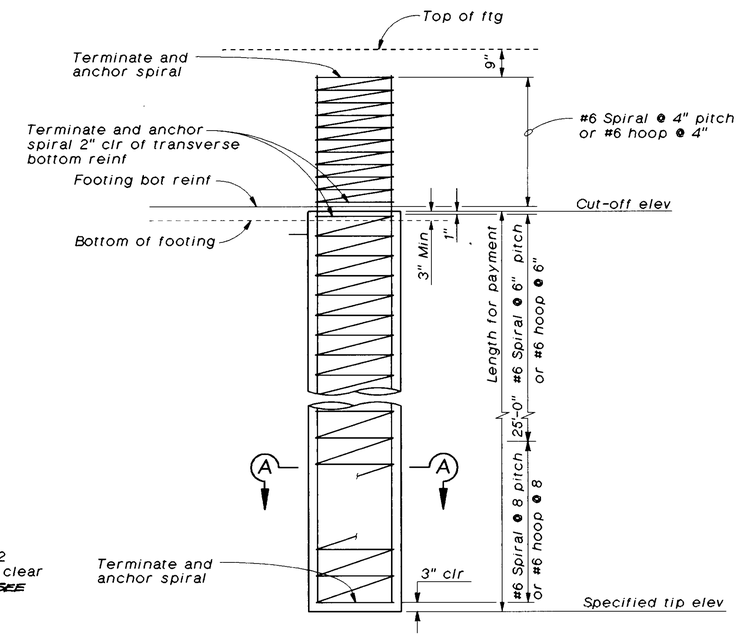

30" DIA CIDH CONCRETE PILE

½"=1'-0"

Notes:

1. Relocate vertical footing stirrups where they interfere with CIDH pile reinforcing as directed by the engineer.
2. Anchorage and splices in spiral reinf shall be made by weld or mechanical splice. See "Bar Spiral Splice & Spiral Anchor & Hoop Detail".
3. WHERE VERTICAL CONSTRUCTION CLEARANCE (HEADROOM) LIMITATIONS REQUIRE MECHANICAL SPLICING OF THE PILE CAGE, THE BUNDLE #14 BARS MAY BE SEPARATED BY ONE-INCH (CLEAR SPACE).

AS BUILT
CORRECTION BY BRIAN BEAUDOIN
CONTRACT NO. 04-043934
DATE FEBRUARY, 2002
STRUCTURES REPRESENTATIVE

The Contractor shall verify all controlling field dimensions before ordering or fabricating any material.

SEISMIC RETROFIT PROJECT NO. 611

CARQUINEZ BRIDGE - "A4E" LINE (APPROACH SPAN)

PILE DETAILS

Vong Toan
DESIGN OVERSIGHT
April 24, 1997
SIGN OFF DATE

	BY	CHECKED
DESIGN	R. Morrison, Jr.	J. Downing/J. Quincy
DETAILS	G. Bazán	J. Quincy
QUANTITIES	D. Nguyen-Tan, S. Ismail	J. Downing

PREPARED FOR THE STATE OF CALIFORNIA DEPARTMENT OF TRANSPORTATION

Lee Holloway
PROJECT ENGINEER

BRIDGE NO. 23-15 R
POST MILE CC-13.47

CU 04-268
EA 043931

a4e-pile.dlv

ORIGINAL SCALE IN INCHES FOR REDUCED PLANS 0 1 2 3

DISREGARD PRINTS BEARING EARLIER REVISION DATES → 21-APR-1997

REVISION DATES (PRELIMINARY STAGE ONLY)

SHEET 33 OF 120

ClibPDF - www.fastio.com

FED. ROAD DIV. No.	STATE	PROJ. No.	FISCAL YEAR	SHEET No.	TOTAL SHEETS
7	CAL.				

DIST.	COUNTY	ROUTE	SECTION	SHEET No.	TOTAL SHEETS
IV	CC	7	A		

BRIDGE ENGINEER — CIVIL ENGINEER LICENSE 5585

DATE APPROVED

NO AS BUILT CHANGES

AS BUILT

CORRECTION BY *BRIAN BEAUDOIN*

CONTRACT NO. *04-043934*

DATE *FEBRUARY, 2002*

STRUCTURES REPRESENTATIVE

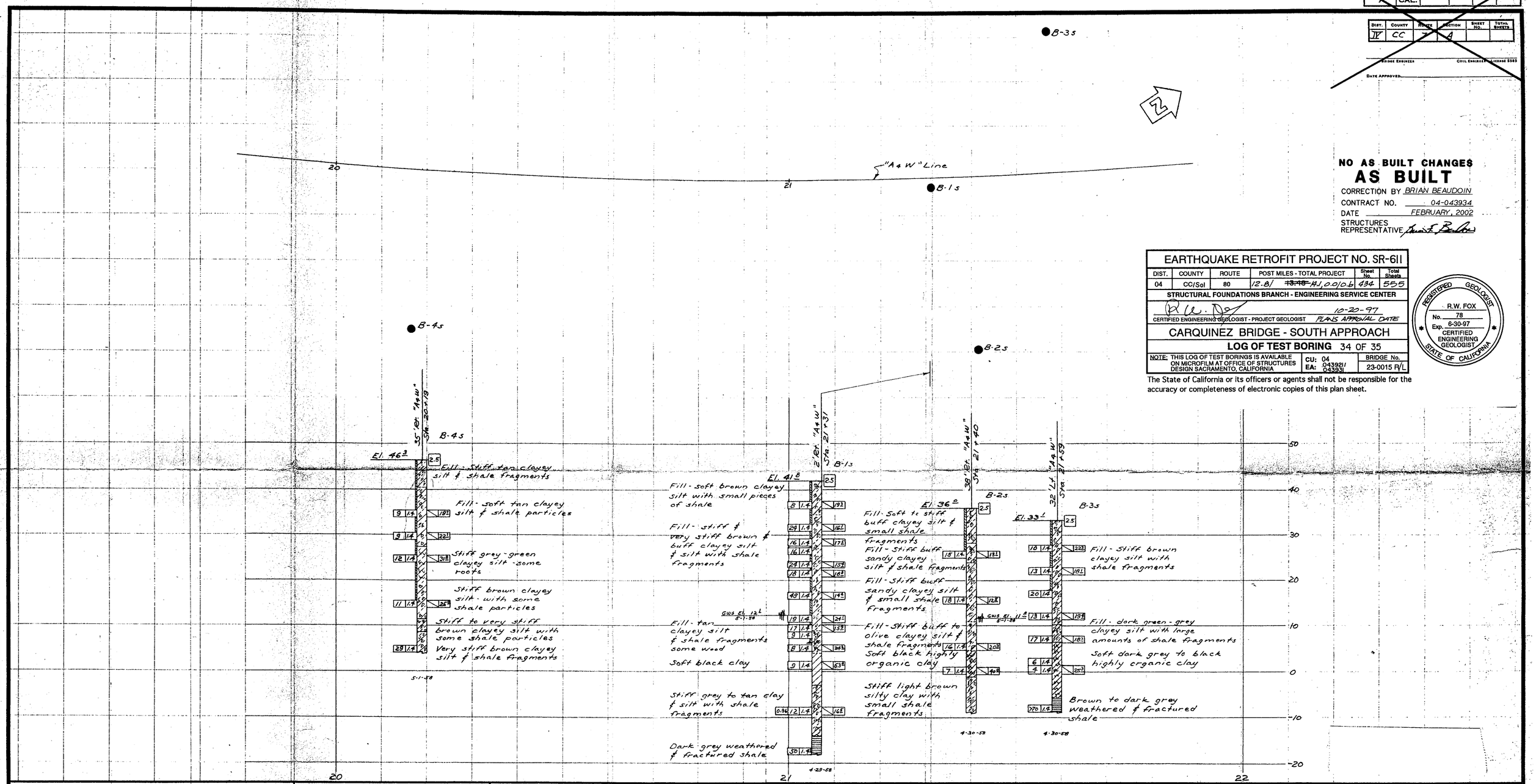

EARTHQUAKE RETROFIT PROJECT NO. SR-611

DIST.	COUNTY	ROUTE	POST MILES - TOTAL PROJECT	Sheet No.	Total Sheets
04	CC/Sol	80	12.8/ ~~13.18~~ 14.1, 0.0/0.6	434	555

STRUCTURAL FOUNDATIONS BRANCH - ENGINEERING SERVICE CENTER

CERTIFIED ENGINEERING GEOLOGIST - PROJECT GEOLOGIST — 10-20-97 PLANS APPROVAL DATE

CARQUINEZ BRIDGE - SOUTH APPROACH

LOG OF TEST BORING 34 OF 35

NOTE: THIS LOG OF TEST BORINGS IS AVAILABLE ON MICROFILM AT OFFICE OF STRUCTURES DESIGN SACRAMENTO, CALIFORNIA

CU: 04
EA: 043921/ 043931

BRIDGE No. 23-0015 R/L

REGISTERED GEOLOGIST — R.W. FOX — No. 78 — Exp. 6-30-97 — CERTIFIED ENGINEERING GEOLOGIST — STATE OF CALIFORNIA

The State of California or its officers or agents shall not be responsible for the accuracy or completeness of electronic copies of this plan sheet.

BRIDGE DEPARTMENT

CLASSIFICATION OF MATERIAL BASED ON STANDARD GRADE SIZE LIMITS

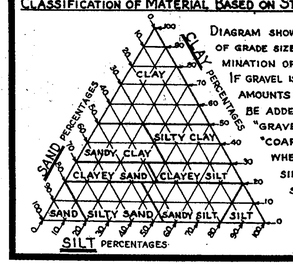

DIAGRAM SHOWING THE BASIS FOR ESTIMATES OF GRADE SIZE DISTRIBUTION USED IN DETERMINATION OF CLASS NAMES.

IF GRAVEL IS PRESENT IN APPRECIABLE AMOUNTS THE TERM "GRAVELLY" MAY BE ADDED TO THE CLASS NAME, VIZ. "GRAVELLY SAND." THE TERMS "COARSE", "MEDIUM" AND "FINE" WHEN USED TO DESCRIBE SAND, SILT AND GRAVEL REFER TO STANDARD GRADE SIZE LIMITS.

LEGEND OF EARTH MATERIALS

- GRAVEL
- SAND
- SILT
- CLAY
- SANDY CLAY OR CLAYEY SAND
- SANDY SILT OR SILTY SAND
- SILTY CLAY OR CLAYEY SILT
- PEAT AND/OR ORGANIC MATTER
- FILL MATERIAL
- IGNEOUS ROCK
- SEDIMENTARY ROCK
- METAMORPHIC ROCK

LEGEND OF BORING OPERATIONS

- PLAN OF ANY BORING
- PENETROMETER
- 2¼" CONE PENETROMETER
- SAMPLER BORING (DRY)
- ROTARY BORING (WET)
- AUGER BORING (DRY)
- JET BORING
- CORE BORING
- TEST PIT

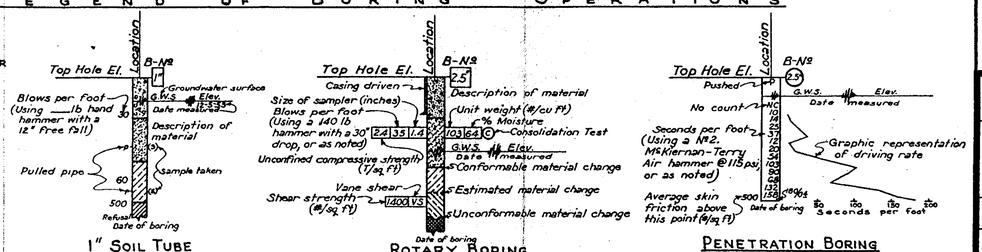

NOTES

The contractor's attention is directed to Section 2, Article (c) of the Standard Specifications and to the Special Provisions accompanying this set of plans.

Classification of earth material as shown on this sheet is based upon field inspection and is not to be construed to imply mechanical analysis.

STATE OF CALIFORNIA
DEPARTMENT OF PUBLIC WORKS
DIVISION OF HIGHWAYS

CARQUINEZ STRAIT BRIDGE (Supplemental Borings)

LOG OF TEST BORINGS

SCALE	BRIDGE	FILE	DRAWING
1" = 10'	23-15		

ClibPDF - www.fastio.com

DIST	COUNTY	ROUTE	POST MILES TOTAL PROJECT	SHEET NO.	TOTAL SHEETS
04	CC SOL	80	12.8/14.1 0.0/0.6	469	555

REGISTERED CIVIL ENGINEER

PLANS APPROVAL DATE

REGISTERED PROFESSIONAL ENGINEER Robert L. Morrison Jr. No. 43693 Exp. 03/31/97 CIVIL STATE OF CALIFORNIA

CH2M HILL
2485 NATOMAS PARK DR, SUITE 600
SACRAMENTO, CALIFORNIA 95833

The State of California or its officers or agents shall not be responsible for the accuracy or completeness of electronic copies of this plan sheet.

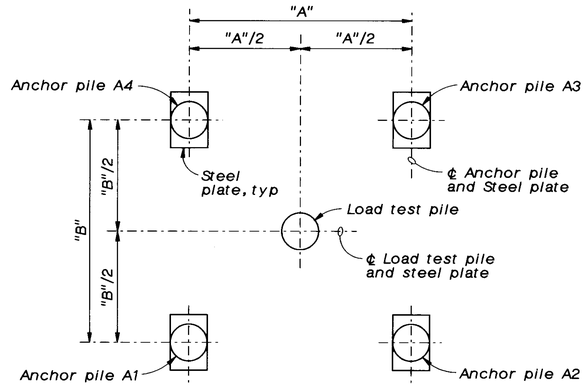

Notes:

1. For location of pile load test, see "Foundation Plan" and "Footing Details" sheets.
2. Spacing between the load test pile and anchor pile shall not be less than five pile diameters or seven feet, whichever is greater. Except that the dimension "A" shall not exceed 17'-6" or be less than 15'-0" and dimension "B" shall be 24'-0".

PLAN

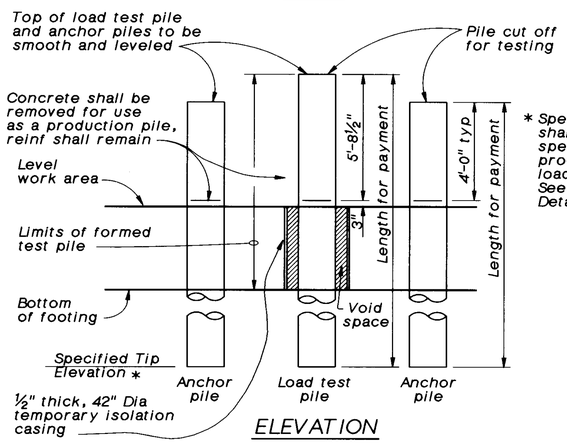

ELEVATION

TENSION LOAD TEST PILE GROUP

No Scale

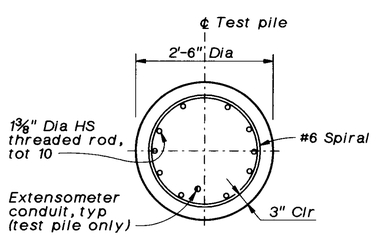

SECTION A-A

¾" = 1'-0"

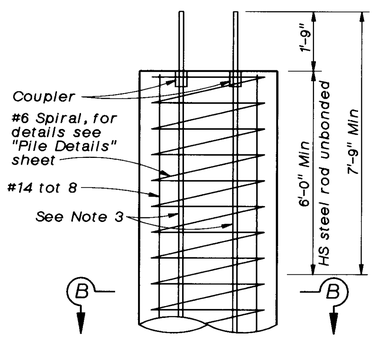

Notes:

1. For pile details not shown, see "Pile Details" sheet.
2. A template shall be used to maintain alignment and position of HS bars during CIDH pile construction. The HS bars shall be oriented to pass through the 4 innermost holes of the anchor pile steel connection plate. See "Anchor Pile Steel Connection Plate" detail for hole pattern.
3. 1⅜" Dia threaded steel rods passing through 2" dia holes in 3'-9"x2'-6"x6" steel connection plate. HS rods shall run full length of CIDH pile and be mechanically coupled at 20' segments (4 total/pile). Bundle with #14 longitudinal reinforcement as shown in Section B-B.

ANCHOR PILE ELEVATION

Not to Scale

* Specified tip elevation shall conform to the specified tip for production piles at the load test pile location. See pile data on "Pile Details" sheet

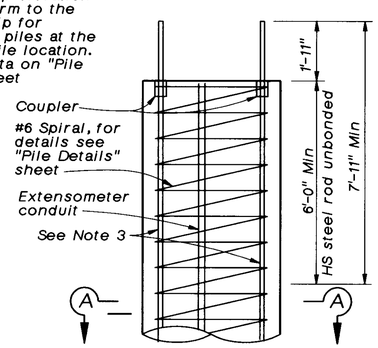

Notes:

1. For pile details not shown, see "Pile Details" sheet.
2. A template shall be used to maintain alignment and position of HS bars during CIDH pile construction. The HS bars shall be oriented to pass through the 10 perimeter holes of the test pile steel connection plate. See "Test Pile Steel Connection Plate" detail for hole pattern.
3. 1⅜" Dia threaded HS rods passing through 2" dia holes in 2'-6"x2'-6"x7" steel connection plate. HS rods shall run full length of CIDH pile and be mechanically coupled at 20' segments (10 total/pile).

TEST PILE ELEVATION

Not to Scale

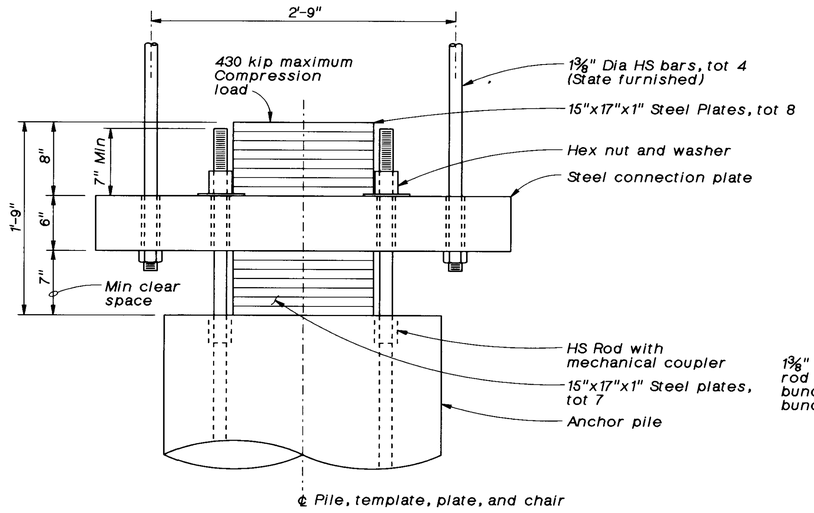

ELEVATION

ANCHOR PILE CONNECTION

1½" = 1'-0"

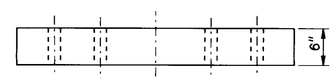

ELEVATION

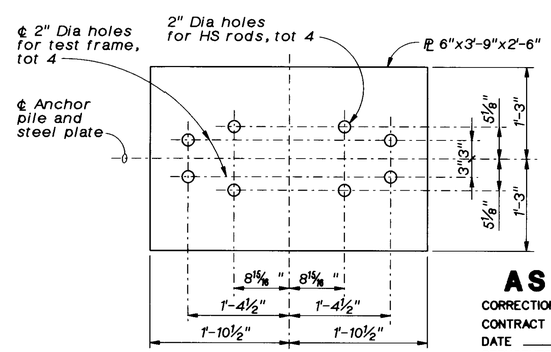

PLAN - ANCHOR PILE

AS BUILT
CORRECTION BY BRIAN BEAUDOIN
CONTRACT NO. 04-043934
DATE FEBRUARY, 2002
STRUCTURES REPRESENTATIVE

Notes:

1. Connection plate designed for a maximum pile tension load of 500 kips.
2. The Contractor shall verify location and dimensions of holes for pile HS rods and test frame (State furnished) prior to fabricating plate.

ANCHOR PILE STEEL CONNECTION PLATE

1" = 1'-0"

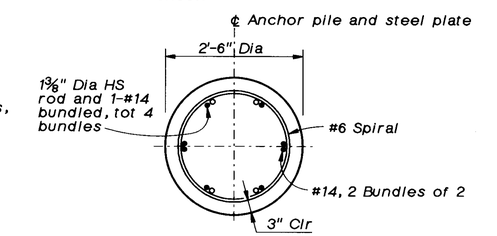

SECTION B-B

¾" = 1'-0"

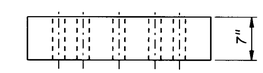

ELEVATION

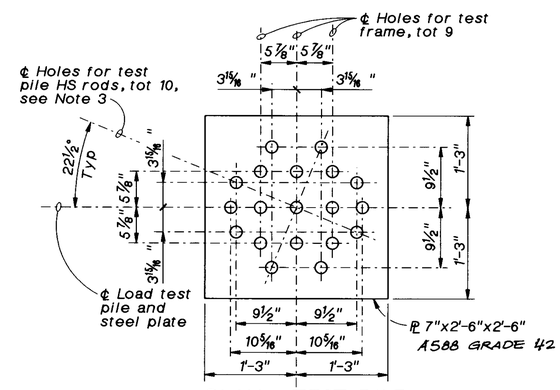

PLAN - TEST PILE

Notes:

1. All holes are 2" dia, 19 total.
2. Connection plate designed for a maximum pile tension load of 1710 kips.
3. The Contractor shall verify location and dimensions of holes for pile HS rods and test frame (State furnished) prior to fabricating plate.

TEST PILE STEEL CONNECTION PLATE

1" = 1'-0"

The Contractor shall verify all controlling field dimensions before ordering or fabricating any material.

SEISMIC RETROFIT PROJECT NO. 611

CARQUINEZ BRIDGE - "A4E" LINE (APPROACH SPAN)

LOAD TEST PILE DETAILS

Vong Toan, DESIGN OVERSIGHT	DESIGN	BY R. Morrison, Jr.	CHECKED M. Cooper
SIGN OFF DATE	DETAILS	BY A. Galbraith	CHECKED M. Cooper
	QUANTITIES	BY S. Ismail, D. Nguyen-Tan	CHECKED J. Downing

PREPARED FOR THE STATE OF CALIFORNIA DEPARTMENT OF TRANSPORTATION

Lee Holloway, PROJECT ENGINEER

BRIDGE NO. 23-15 R
POST MILE CC-13.47

a4e-load.dlv

ORIGINAL SCALE IN INCHES FOR REDUCED PLANS 0 1 2 3

CU 04-268
EA 043931

DISREGARD PRINTS BEARING EARLIER REVISION DATES → REVISION DATES (PRELIMINARY STAGE ONLY) 23-APR-2002

SHEET 34 OF 120

ClibPDF - www.fastio.com

SC 120

EARTHQUAKE RETROFIT PROJECT NO. SR-611

STRUCTURAL FOUNDATIONS BRANCH - ENGINEERING SERVICE CENTER

The information represented on this drawing title "Carquinez Strait Bridge" was not the result of any work developed, performed or completed by this Department (Caltrans). All such activity appears to be by those parties presented on this drawing who would bear all such responsibility. This drawing is available and presented only for the convenience of any bidder, contractor or other interested party. It should be expressly understood that Caltrans assumes no responsibility whatsoever in respect to the sufficiency or accuracy, completeness, interpretation set forth therein or any other aspect of the information shown on or represented by this drawing.

Signed By: R. W. [illegible] Date: 10-1-96

DIST.	COUNTY	ROUTE	POST MILES - TOTAL PROJECT	Sheet No.	Total Sheets
04	CC/Sol	80	12.8 / ~~13.48~~ 14.1, 00/0.6	436	555

CARQUINEZ BRIDGE - SOUTH APPROACH

LOG OF TEST BORING 35 OF 35

The State of California or its officers or agents shall not be responsible for the accuracy or completeness of electronic copies of this plan sheet.

CU: 04 EA: 043921/ 043931

BRIDGE No. 23-0051R/L

10-20-97
PLANS APPROVAL DATE

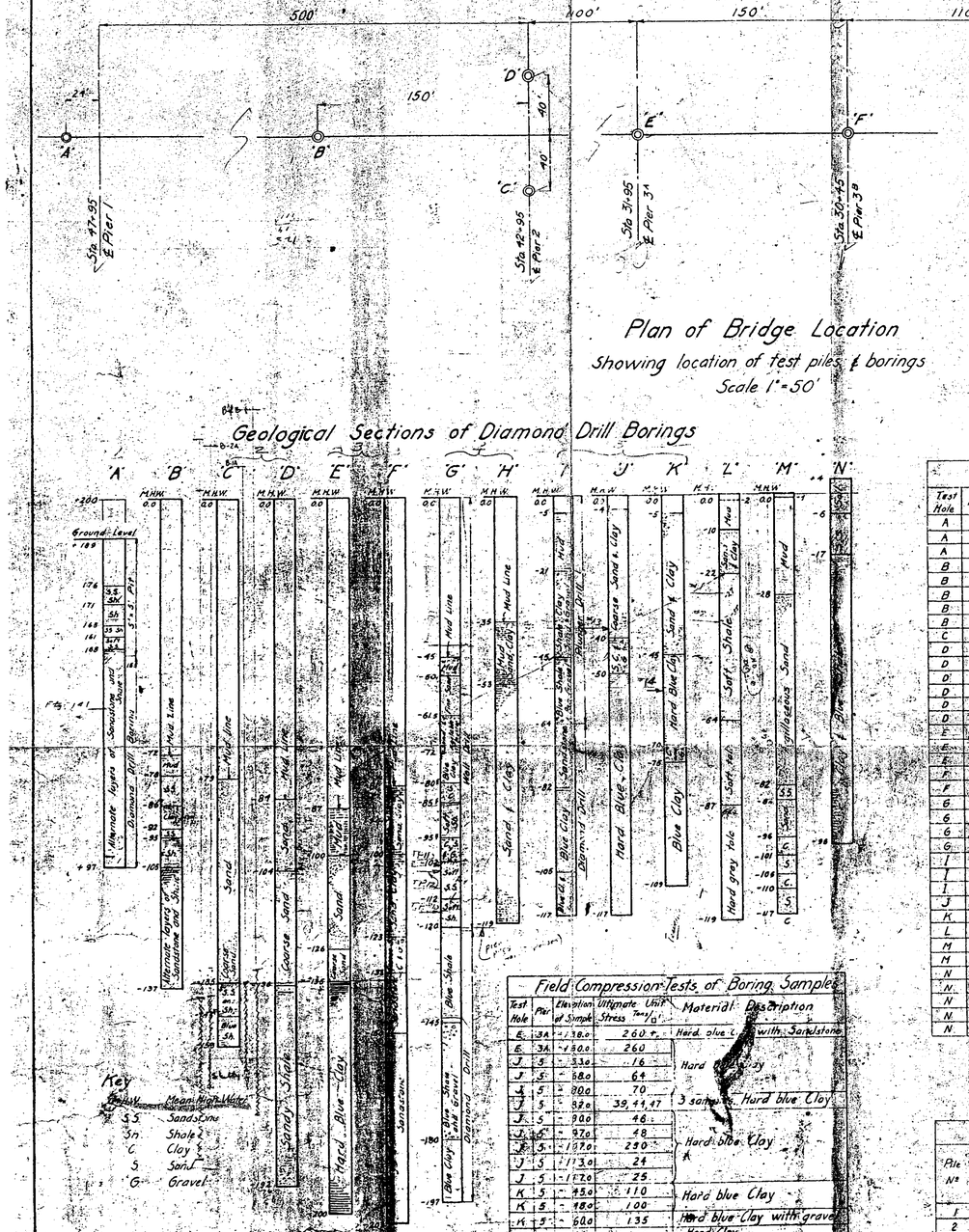

Plan of Bridge Location
Showing location of test piles & borings
Scale 1" = 50'

Geological Sections of Diamond Drill Borings

Key
MHW Mean High Water
SS Sandstone
Sh Shale
C Clay
S Sand
G Gravel

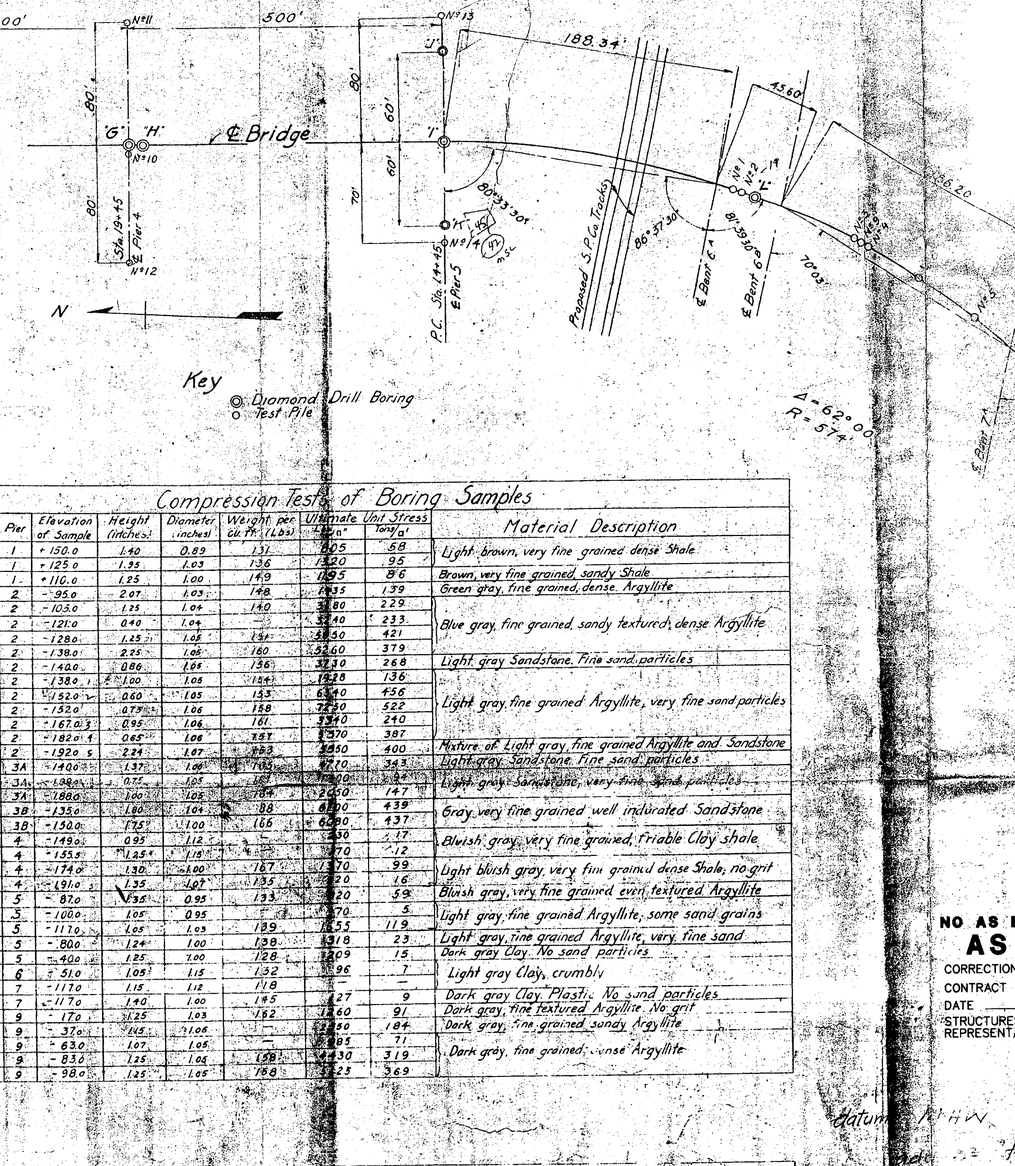

Key
Diamond Drill Boring
Test Pile

Compression Tests of Boring Samples

Test Hole	Pier	Elevation of Sample	Height (inches)	Diameter (inches)	Weight per cu. ft. (Lbs)	Ultimate Unit Stress Lbs/□"	Ultimate Unit Stress Tons/□'	Material Description
A	1	+150.0	1.40	0.89	131	8205	58	Light brown, very fine grained dense Shale
A	1	+125.0	1.35	1.03	136	13420	95	
A	1	+110.0	1.25	1.00	149	12195	86	Brown, very fine grained, sandy Shale
B	2	-95.0	2.07	1.03	148	19535	139	Green gray, fine grained, dense. Argyllite
B	2	-105.0	1.25	1.04	140	32380	229	Blue gray, fine grained, sandy textured, dense Argyllite
B	2	-121.0	0.40	1.04		32840	233	
B	2	-128.0	1.25	1.05	151	58430	421	
B	2	-138.0	2.25	1.05	160	52660	379	
C	2	-140.0	0.86	1.05	136	37930	268	Light gray Sandstone. Fine sand particles
D	2	-138.0	1.00	1.05	144	19228	136	Light gray fine grained Argyllite, very fine sand particles
D	2	-152.0	0.60	1.05	153	64340	456	
D'	2	-152.0	0.79	1.06	158	72750	522	
D	2	-167.0	0.95	1.06	161	33940	240	
D	2	-182.0	0.65	1.06	158	53970	387	
D	2	-192.0	2.24	1.07	153	56550	400	Mixture of Light gray fine grained Argyllite and Sandstone
E	3A	-140.0	1.37	1.00	165	97270	343	Light gray Sandstone. Fine sand particles
E	3A	-168.0	0.75	1.05	[illegible]	[illegible]	[illegible]	Light gray Sandstone, very fine sand particles
E	3A	-188.0	1.00	1.05	154	32650	147	
F	3B	-135.0	1.80	1.04	158	61900	439	Gray very fine grained well indurated Sandstone
F	3B	-152.0	1.75	1.00	166	60890	437	
G	4	-149.0	0.95	1.12	—	2430	17	Bluish gray very fine grained, friable Clay shale
G	4	-155.5	1.25	1.18	—	2770	12	
G	4	-174.0	1.30	1.00	167	13970	99	Light bluish gray very fine grained dense Shale, no grit
G	4	-191.0	1.35	1.07	135	2320	16	
I	5	-87.0	0.35	0.95	133	8420	59	Bluish gray very fine grained even textured Argyllite
I	5	-100.0	1.05	0.95		770	5	Light gray fine grained Argyllite, some sand grains
I	5	-117.0	1.05	1.03	139	16855	119	
J	5	-80.0	1.24	1.00	138	3318	23	Light gray fine grained Argyllite, very fine sand
K	5	-40.0	1.25	1.00	128	2209	15	Dark gray Clay. No sand particles
L	6	-51.0	1.05	1.15	132	1196	7	Light gray Clay, crumbly
M	7	-117.0	1.15	1.12	118	—	—	
M	7	-117.0	1.40	1.00	145	1427	9	Dark gray Clay. Plastic. No sand particles
N	9	-17.0	1.25	1.03	162	12760	91	Dark gray, fine textured Argyllite. No grit
N	9	-37.0	1.15	1.06		12880	184	Dark gray, fine grained sandy Argyllite
N	9	-63.0	1.07	1.05	—	9905	71	
N	9	-83.0	1.25	1.05	158	44430	319	Dark gray, fine grained, dense Argyllite
N	9	-98.0	1.25	1.05	158	51423	369	

Field Compression Tests of Boring Samples

Test Hole	Pier	Elevation of Sample	Ultimate Unit Stress Tons/□'	Material Description
E	3A	-138.0	260 +	Hard blue Clay with Sandstone
E	3A	-180.0	260	
J	5	-33.0	16	Hard blue Clay
J	5	-88.0	64	
J	5	-80.0	70	
J	5	-92.0	39, 41, 47	3 samples Hard blue Clay
J	5	-90.0	46	
J	5	-97.0	48	
J	5	-107.0	290	Hard blue Clay
J	5	-113.0	24	
J	5	-117.0	25	
K	5	-45.0	110	Hard blue Clay
K	5	-48.0	100	
K	5	-60.0	135	Hard blue Clay with gravel
K	5	-66.0	160	Hard Clay
K	5	-75.0	130	Blue Clay
L	6	-20.0	10	Soft Shale
L	6	-34.0	28	
L	6	-73.0	22	Soft decomposed talc
L	6	-83.0	4	
L	6	-100.0	5 to 30	Hard brittle light gray talc
N	9	-23.0	150	Shale with little sandstone
N	9	-31.0	5	Blue Clay
N	9	-50.0	120	Blue Clay and shale
N	9	-68.0	65	Blue shale
N	9	-98.0	325	Blue shale and Clay

Record of Test Piles

Pile Nº	Station	Pile Dimensions Length (feet)	Circumference Butt (ft)	Circumference Point (ft)	Number of Blows	Ground Elevation	Static Penetration (feet)	Dynamic Penetration (feet)	Final Penetration (feet)	Elevation Point of Pile	Elevation Point of Pile to Bearing Power of 5 Tons	10 Tons	15 Tons	Average for last 5 Blows h (feet)	s (inches)	Bearing (Tons)
1	12+45	53.0	3.0	1.9	74	-2.0	13.5	11.7	25.1	-27.2	-14	-17	-20	22.5	2.0	21.8
2	12+40	56.0	3.3	2.1	121	-2.0	15.0	18.7	33.7	-35.7	-20	-23	-27	19.0	0.75	31.0
3	11+45	50.0	3.4	1.9	61	-2.0	12.5	28.9	41.4	-43.4	-30	-36	—	21.0	3.4	13.7
4	11+35	58.0	4.08	1.75	83	-2.0	14.5	36.7	51.2	-53.2	-32	-40	-50	23.0	3.35	16.0
5	10+45	77.0	3.7	2.4	145	-2.0	14.0	55.6	69.6	-71.6	-34	-60	-70	13.0	1.12	17.5
6	9+50	73.0	3.3	2.0	374	-2.0	14.0	62.3	76.3	-78.3	-50	-69	-79	11.0	0.5	21.0
7	8+50	41.0	3.9	2.9	167	-1.0	10.5	39.3	49.8	-50.8	-20	-28	-35	20.4	1.6	22.5
8	10+95	82.0	3.9	2.0	270	-2.0	—	—	69.4	-71.4	-43	-63	-67	13.0	1.1	18.5
9	11+45	76.0	3.4	1.8	160	-2.0	13.4	28.7	42.1	-44.1	-35	-49	—	18.4	0.9	12.5
10	19+45	119.0	5.5	2.8	1060	-3.2	0 to -55	60.3	115.3	-115.3	—	—	—	3.0	0.12	68.0
11	19+45	105.0	5.45	3.3	500	-3.2	0 to -55	47.3	102.3	-102.3				3.0	0.28	40.0
12	19+45	104.0	5.0	3.4	490	-3.2	0 to -57	47.0	104.0	-104.0				3.0	0.4	30.0
13	14+15	65.0	4.3	2.0	520	-2.0	0 to -25.8	41.2	37.0	-39.0				3.0	0.05	100.0
14	14+45	57.0	3.1	1.9	320	-2.0	0 to -34.5	27.8	34.4	-36.4				3.0	0.07	80.0

Note: Piles 1 to 9 incl. 3200 # hammer
Piles 10 to 14 incl. 5000 # hammer with [illegible] stroke

datum MHW

To get El on MSL datum
(MHW: -13.2 + 3.2 = MSL: -40.2)

NO AS BUILT CHANGES
AS BUILT
CORRECTION BY BRIAN BEAUDOIN
CONTRACT NO. 04-043934
DATE FEBRUARY, 2002
STRUCTURES REPRESENTATIVE [signature]

AMERICAN TOLL - BRIDGE COMPANY
SAN FRANCISCO
70 of 70

CARQUINEZ STRAIT BRIDGE

CROCKETT TO VALLEJO, CALIFORNIA

BORINGS AND TEST PILE DATA

Scales as noted. October 24, 1923

[signature] CHIEF ENGINEER

D. B. STEINMAN - DESIGNING ENGINEER

ClibPDF - www.fastio.com

DIST	COUNTY	ROUTE	POST MILES TOTAL PROJECT	SHEET NO.	TOTAL SHEETS
04	CC, SOL	80	12.8/14.1, 0.0/0.6	471	555

REGISTERED CIVIL ENGINEER

10-20-97
PLANS APPROVAL DATE

REGISTERED PROFESSIONAL ENGINEER Robert L. Morrison Jr No. 43693 Exp. 03/31/97 CIVIL STATE OF CALIFORNIA

CH2M HILL
2485 NATOMAS PARK DR, SUITE 600
SACRAMENTO, CALIFORNIA 95833

The State of California or its officers or agents shall not be responsible for the accuracy or completeness of electronic copies of this plan sheet.

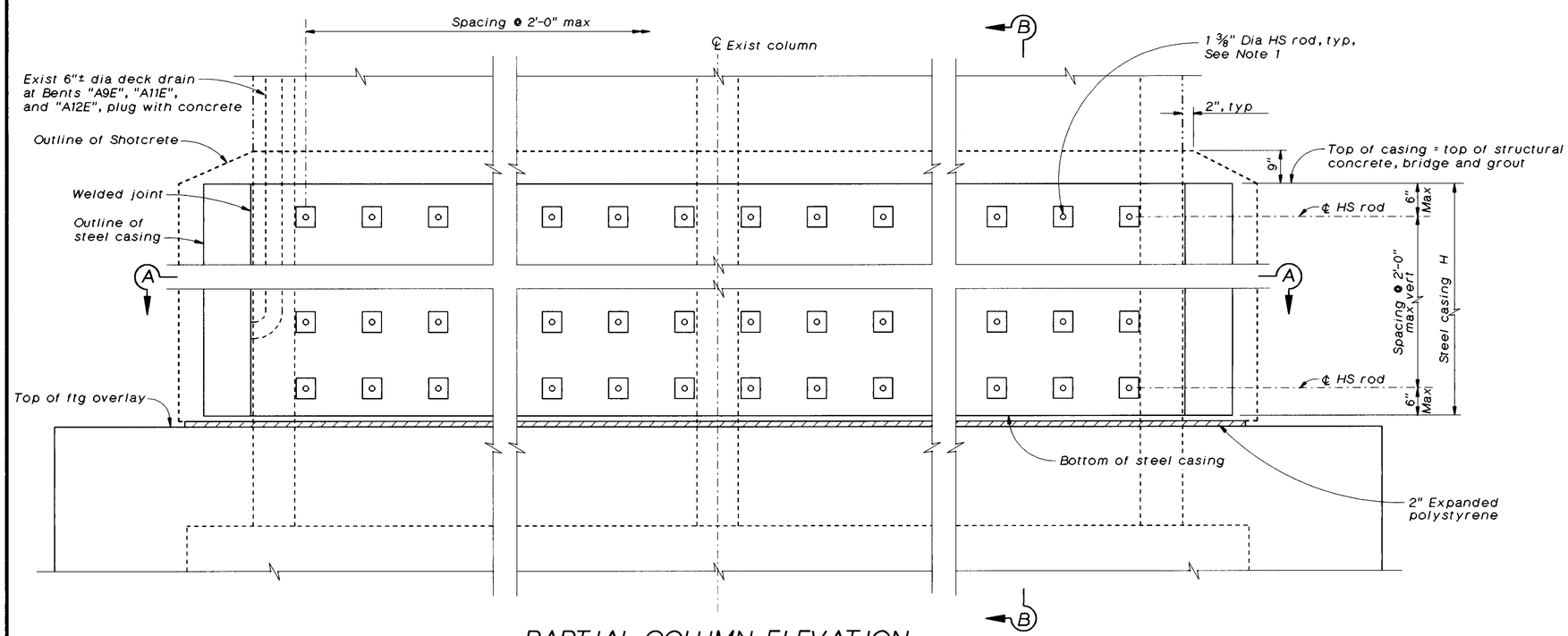

PARTIAL COLUMN ELEVATION

NO SCALE

STEEL CASING TABLE

Bent	H	L	E	W
A3E	9'-0"	36'-0"±	1'-0"	6'-0"±
A4E	9'-0"	36'-0"±	1'-0"	6'-0"±
A5E	12'-0"	37'-0"±	1'-6"	8'-0"±
A6E	12'-0"	37'-0"±	1'-6"	8'-0"±
A7E	18'-0"	37'-0"±	1'-6"	8'-0"±
A8E	13'-0"	37'-0"±	1'-6"	8'-0"±
A9E	13'-0"	37'-0"±	1'-6"	8'-0"±
A10E	15'-0"	37'-0"±	1'-6"	8'-0"±
A11E	13'-0"	70'-0"±	1'-6"	8'-0"±
A12E	13'-0"	55'-0"±	1'-6"	8'-0"±
A13E	13'-0"	40'-0"±	1'-6"	8'-0"±

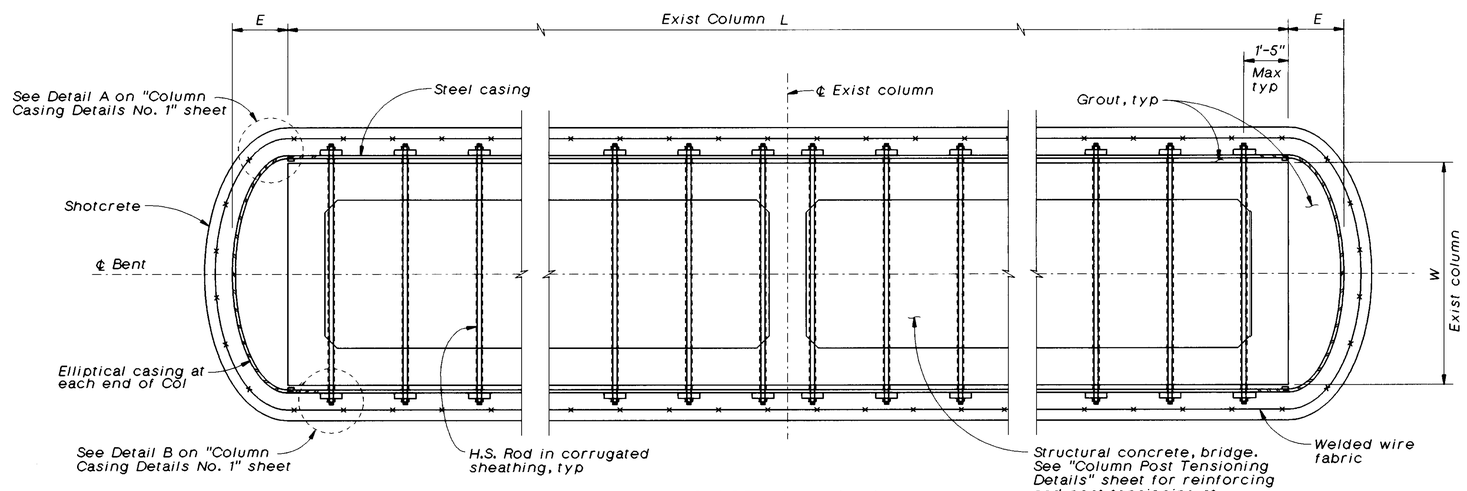

SECTION A-A

No Scale

PRESTRESSING NOTES

150 KSI High strength (HS) rods shall conform to ASTM A-722 Specifications.

Pjack = 150 kips, per each 1 3/8" dia rod

Anchor set = 1/16"

Concrete and Grout: f'c = 4000 psi @ 28 days
f'ci = 3500 psi @ time of stressing

Notes:

1. Location of cored and drilled holes shown in the plans are approximate. Prior to placing holes in concrete the Contractor shall locate all reinforcing steel and adjust the location of the holes to clear all reinforcing bars (except as noted). Final hole locations are subject to the approval of the Engineer.
2. Corrugated sheathing shall be grouted after prestressing the HS rod.
3. For Details A, B, and Section B-B, see "Column Casing Details No. 1" sheet.

NO AS BUILT CHANGES
AS BUILT
CORRECTION BY BRIAN BEAUDOIN
CONTRACT NO. 04-043934
DATE FEBRUARY, 2002
STRUCTURES REPRESENTATIVE

The Contractor shall verify all controlling field dimensions before ordering or fabricating any material.

SEISMIC RETROFIT PROJECT NO. 611

CARQUINEZ BRIDGE - "A4E" LINE (APPROACH SPAN)

COLUMN CASING DETAILS NO. 2

Vong Toan
DESIGN OVERSIGHT
April 24, 1997
SIGN OFF DATE

	BY	CHECKED
DESIGN	R. Morrison, Jr.	C. Harrington, J. Quincy
DETAILS	A. Galbraith	J. Quincy
QUANTITIES	D. Nguyen-Tan, S. Ismail	J. Downing

PREPARED FOR THE STATE OF CALIFORNIA DEPARTMENT OF TRANSPORTATION

Lee Holloway
PROJECT ENGINEER

BRIDGE NO. 23-15 R
POST MILE CC-13.47

CA4-CC2.DLV

ORIGINAL SCALE IN INCHES FOR REDUCED PLANS 0 1 2 3

CU 04-268
EA 043931

DISREGARD PRINTS BEARING EARLIER REVISION DATES 15-MAR-1997

REVISION DATES (PRELIMINARY STAGE ONLY)

SHEET 36 OF 120

ClibPDF - www.fastio.com

DIST	COUNTY	ROUTE	POST MILES TOTAL PROJECT	SHEET NO.	TOTAL SHEETS
04	CC, SOL	80	12.8/14.1, 0.0/0.6	470	555

REGISTERED CIVIL ENGINEER

10-20-97

PLANS APPROVAL DATE

REGISTERED PROFESSIONAL ENGINEER Robert L. Morrison Jr. No. 43693 Exp. 03/31/97 CIVIL STATE OF CALIFORNIA

CH2M HILL
2485 NATOMAS PARK DR, SUITE 600
SACRAMENTO, CALIFORNIA 95833

The State of California or its officers or agents shall not be responsible for the accuracy or completeness of electronic copies of this plan sheet.

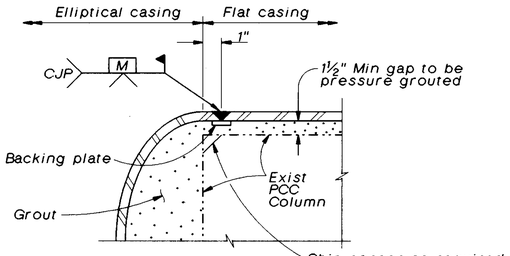

DETAIL A

1½"=1'-0"

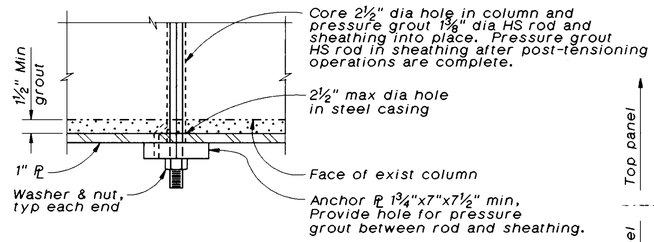

DETAIL B

1½"=1'-0"

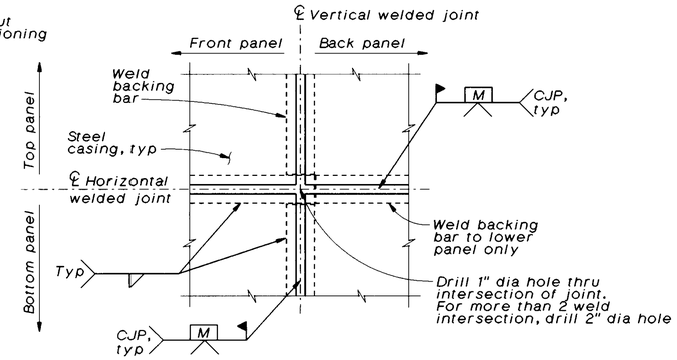

(TWO WELDED INTERSECTION JOINT)

DETAIL C

No Scale

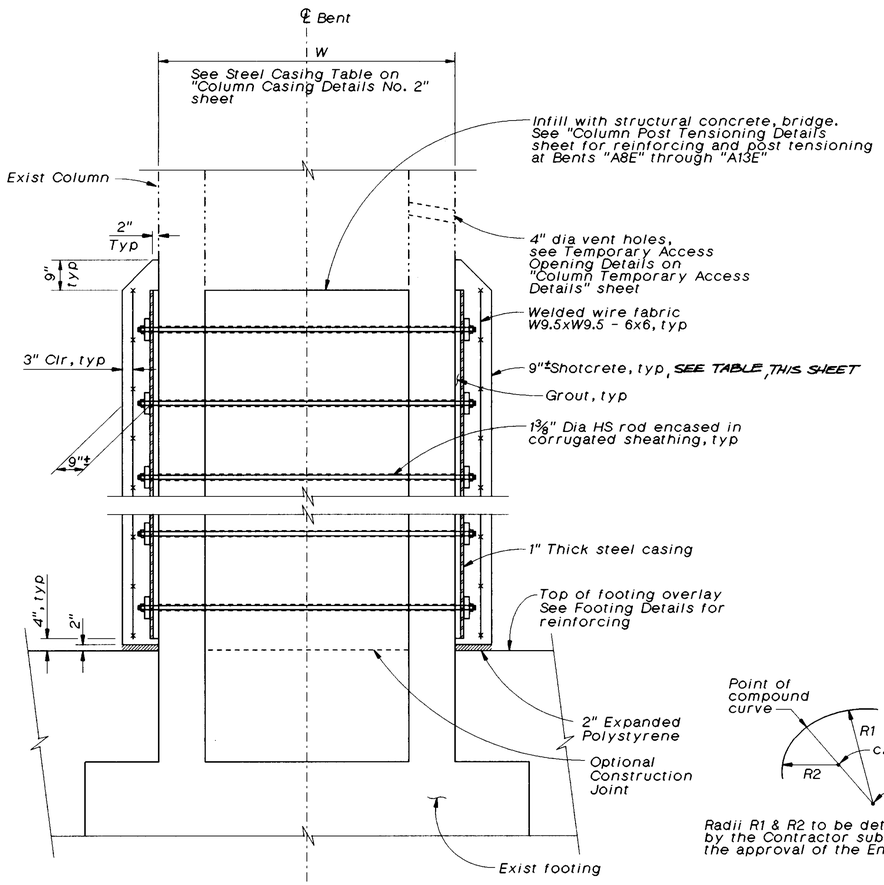

SECTION B-B

No Scale

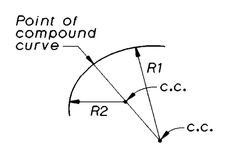

Radii R1 & R2 to be determined by the Contractor subject to the approval of the Engineer.

ELLIPTICAL CASING DETAIL

No scale

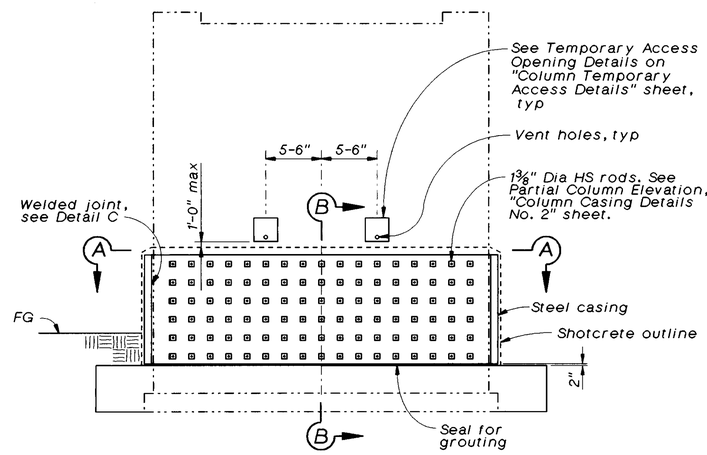

COLUMN CASING

No Scale

SHOTCRETE THICKNESS		
BENT	NORTH SIDE OF BENT	SOUTH SIDE OF BENT
A3E	11"	7"
A4E	11"	7"
A5E	11"	7"
A6E	11"	7"
A7E	11"	7"
A8E	11"	7"
A9E	11"	7"
A10E	11"	7"
A11E	11"	7"
A12E	11"	7"
A13E	11"	7"

Notes:

1. *Minimum clearance from Exist PCC column to casing shall be maintained.*
2. *Appropriate injection nozzles to be provided on casing, but removed and ground flush following completion of grouting operation.*
3. *All voids between steel casing and Exist PCC column to be filled with grout.*
4. *Location and number of vertical and horizontal welds to be determined by the Contractor, and subject to the approval of the Engineer. The location of casing welds are for illustration. No skip welds allowed.*
5. *Backing plates to be maximum ½" thick.*
6. *For Section A-A, see "Column Casing Details No. 2" sheet.*
7. *For location of Details A and B, see "Column Casing Details No. 2" sheet.*

AS BUILT

CORRECTION BY BRIAN BEAUDOIN
CONTRACT NO. 04-043934
DATE FEBRUARY, 2002
STRUCTURES REPRESENTATIVE

The Contractor shall verify all controlling field dimensions before ordering or fabricating any material.

SEISMIC RETROFIT PROJECT NO. 611

CARQUINEZ BRIDGE - "A4E" LINE (APPROACH SPAN)

COLUMN CASING DETAILS NO. 1

Vong Toan
DESIGN OVERSIGHT
April 24, 1997
SIGN OFF DATE

	BY	CHECKED
DESIGN	R. Morrison, Jr.	C. Harrington, J. Quincy
DETAILS	A. Galbraith	J. Quincy
QUANTITIES	D. Nguyen-Tan, S. Ismail	J. Downing

PREPARED FOR THE STATE OF CALIFORNIA DEPARTMENT OF TRANSPORTATION

Lee Holloway
PROJECT ENGINEER

BRIDGE NO. 23-15 R
POST MILE CC-13.47

CA4-CC1.DLV

ORIGINAL SCALE IN INCHES FOR REDUCED PLANS 0 1 2 3

CU 04-268
EA 043931

DISREGARD PRINTS BEARING EARLIER REVISION DATES → 15-MAR-1997

REVISION DATES (PRELIMINARY STAGE ONLY)

SHEET 35 OF 120

ClibPDF - www.fastio.com

DIST	COUNTY	ROUTE	POST MILES TOTAL PROJECT	SHEET NO.	TOTAL SHEETS
04	CC, SOL	80	12.8/14.1, 0.0/0.6	472	555

Robert L. Morrison Jr
REGISTERED CIVIL ENGINEER

10-20-97
PLANS APPROVAL DATE

REGISTERED PROFESSIONAL ENGINEER Robert L. Morrison Jr No. 43693 Exp. 03/31/97 CIVIL STATE OF CALIFORNIA

CH2M HILL
2485 NATOMAS PARK DR, SUITE 600
SACRAMENTO, CALIFORNIA 95833

The State of California or its officers or agents shall not be responsible for the accuracy or completeness of electronic copies of this plan sheet.

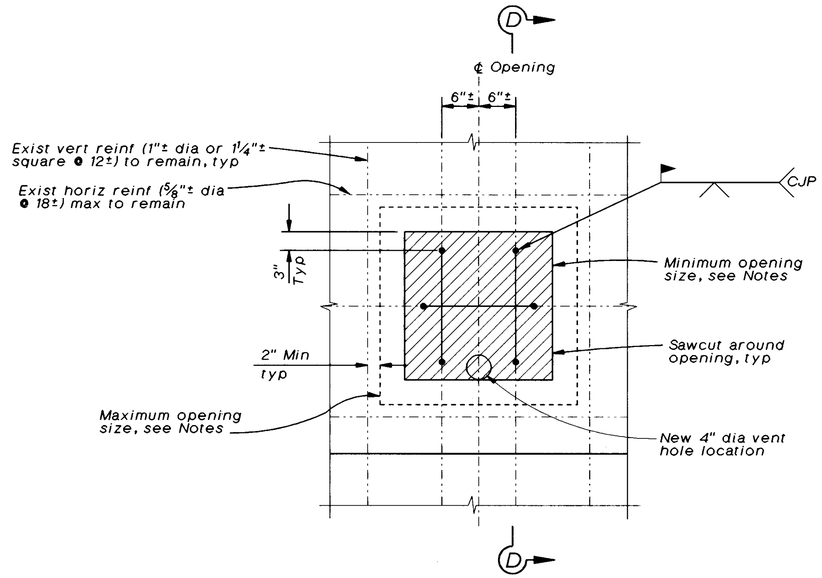

ELEVATION

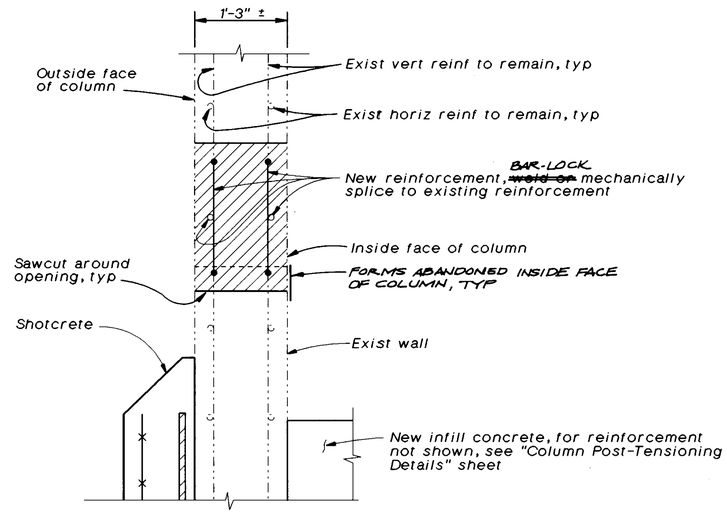

SECTION D-D

TEMPORARY ACCESS OPENING DETAIL

1" = 1'-0"

LEGEND:

- • Full penetration (FP) welded rebar splice or approved mechanical splice
- —·—·— Indicates exist structure
- ▨ Limits of opening

Notes:

1. The Contractor shall locate the existing reinforcement before concrete removal.
2. The maximum number of existing bars to be cut at each face are 2 bars for vertical reinforcement and 3 bars for horizontal reinforcement, opening size shall be made large enough for access and appropriate ventilation.
3. The edges of the opening shall be 2" minimum clear from the adjacent existing bars not cut.
4. The temporary access opening shall be located away from the traffic side and as shown on plans. Any deviation from the plans shall be submited to the Engineer for approval.
5. New reinforcement to be welded or mechanically spliced to the existing reinforcement shall be A706 grade 60 and with the cross section of the same or larger size than the existing reinforcement.
6. Roughen sides of opening and fill the access opening with concrete after completing work inside the column shaft.
7. THE OPENING CAN BE 5'-8" HIGH x 2'-8" WIDE (CONCRETE TO CONCRETE).

AS BUILT
CORRECTION BY BRIAN BEAUDOIN
CONTRACT NO. 04-043934
DATE FEBRUARY, 2002
STRUCTURES REPRESENTATIVE

The Contractor shall verify all controlling field dimensions before ordering or fabricating any material.

SEISMIC RETROFIT PROJECT NO. 611

Vong Toan
DESIGN OVERSIGHT
May 1, 1997
SIGN OFF DATE

	BY		CHECKED
DESIGN	R. Morrison, Jr.		C. Harrington, J. Quincy
DETAILS	J. Law		J. Quincy
QUANTITIES	D. Nguyen-Tan, S. Ismail		J. Downing

PREPARED FOR THE STATE OF CALIFORNIA DEPARTMENT OF TRANSPORTATION

Lee Holloway
PROJECT ENGINEER

BRIDGE NO. 23-15 R
POST MILE CC-13.47

CARQUINEZ BRIDGE - "A4E" LINE (APPROACH SPAN)
COLUMN TEMPORARY ACCESS DETAILS

CA4-CC3.DLV

ORIGINAL SCALE IN INCHES FOR REDUCED PLANS 0 1 2 3

CU 04-268
EA 043931

DISREGARD PRINTS BEARING EARLIER REVISION DATES → 29-APR-1997

REVISION DATES (PRELIMINARY STAGE ONLY)

SHEET 37 OF 120

ClibPDF - www.fastio.com

DIST	COUNTY	ROUTE	POST MILES TOTAL PROJECT	SHEET NO.	TOTAL SHEETS
04					

REGISTERED CIVIL ENGINEER

PLANS APPROVAL DATE

REGISTERED PROFESSIONAL ENGINEER Jeffrey S. Aldrich No. 34271 Exp. 09/30/99 CIVIL STATE OF CALIFORNIA

CH2M HILL
2485 NATOMAS PARK DR, SUITE 600
SACRAMENTO, CALIFORNIA 95833

The State of California or its officers or agents shall not be responsible for the accuracy or completeness of electronic copies of this plan sheet.

PRESTRESSING NOTES

270 KSI Low Relaxation Strand

Pjack = 434 kips (Ⓐ Tendons)

310 kips (Ⓑ Tendons)

Anchor set = 1/8" *

* Lift off & shim

Distribution of prestress force (Pjack) about both ℄ bent and ℄ bridge shall be balanced at all stages of stressing. Contractor shall stress tendons closest to the centerline of column first, followed by those next closest until stressing is complete.

Stressing shall be from both ends.

For type and number of prestress tendons see "Restrainer Plan" sheets.

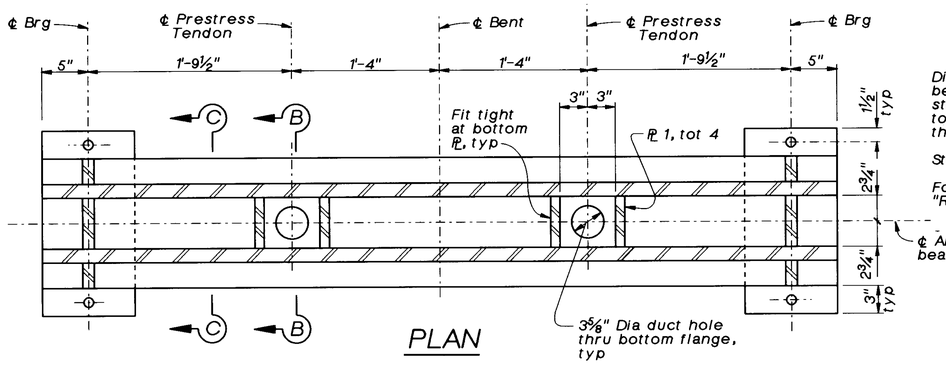

PLAN

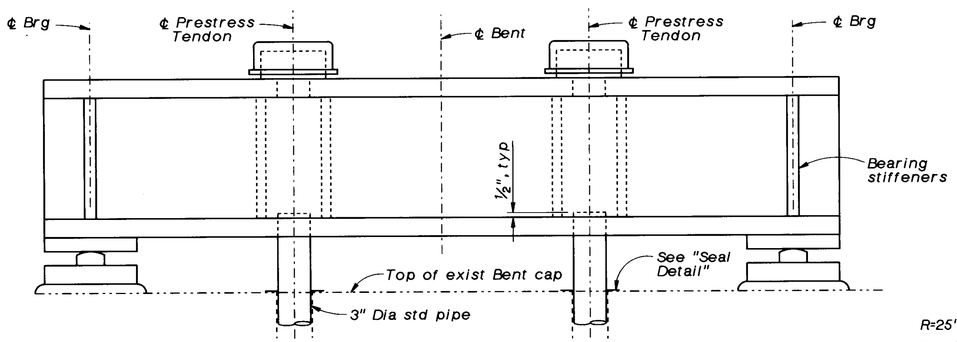

ELEVATION

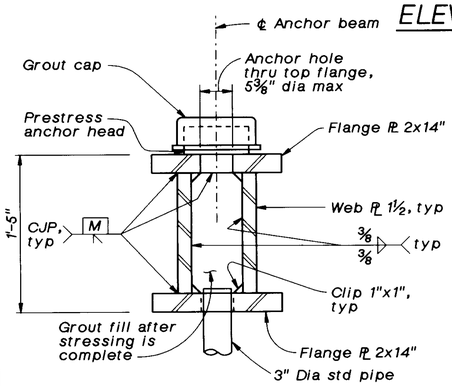

SECTION B-B

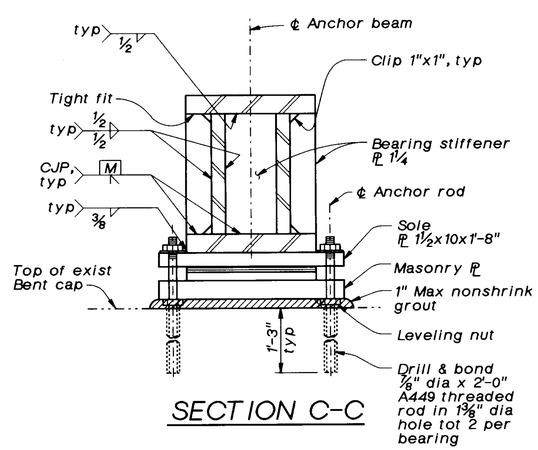

SECTION C-C

PRESTRESS ANCHOR BEAM DETAILS

1½"=1'-0"

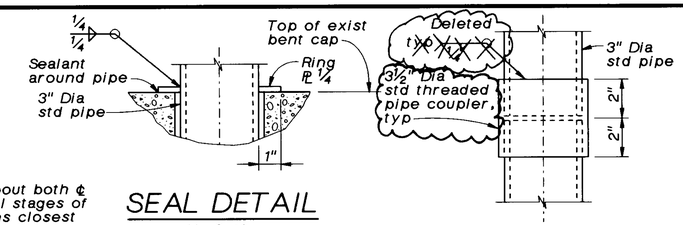

SEAL DETAIL

No Scale

PIPE COUPLER

No Scale

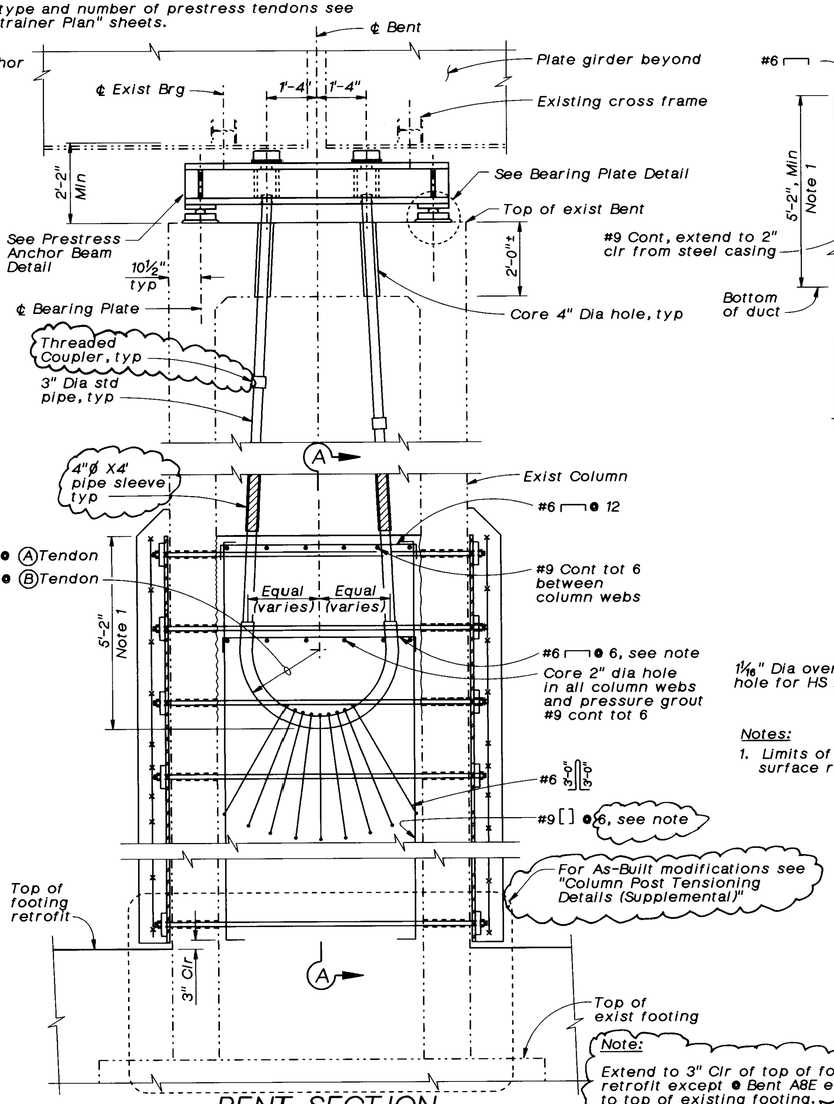

BENT SECTION

½"=1'-0"

Note:
Extend to 3" Clr of top of footing retrofit except ● Bent A8E extend to top of existing footing.

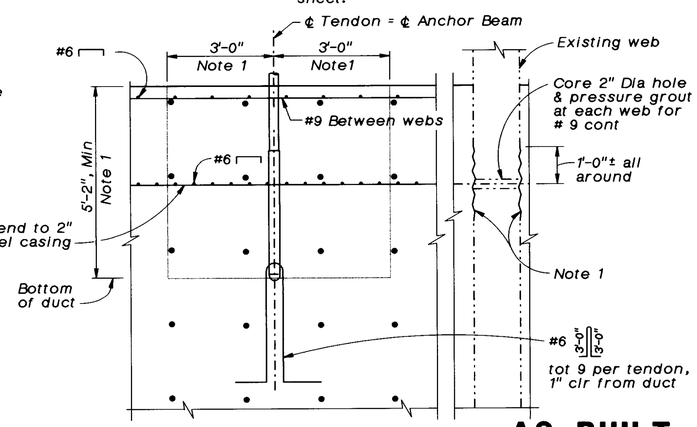

SECTION A-A

½"=1'-0"

AS BUILT
CORRECTION BY BRIAN BEAUDOIN
CONTRACT NO. 04-043934
DATE FEBRUARY, 2002
STRUCTURES REPRESENTATIVE

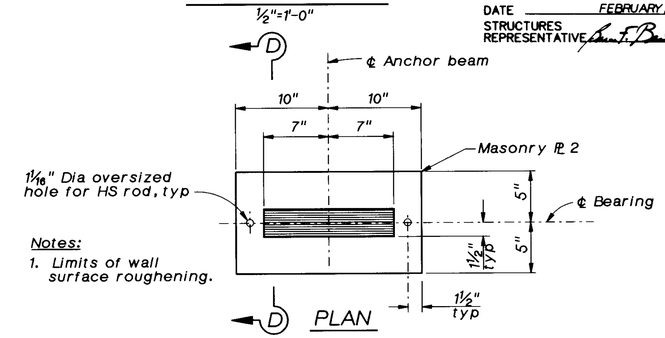

PLAN

Notes:
1. Limits of wall surface roughening.

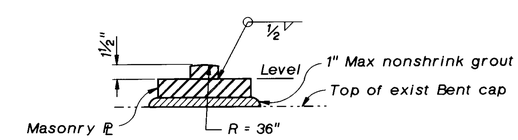

SECTION D-D

BEARING PLATE DETAIL

1½"=1'-0"

The Contractor shall verify all controlling field dimensions before ordering or fabricating any material.

SEISMIC RETROFIT PROJECT NO. 611

CARQUINEZ BRIDGE - "A4E" LINE (APPROACH SPAN)

COLUMN POST TENSIONING DETAILS

Vong Toan, DESIGN OVERSIGHT	DESIGN	BY J. Aldrich	CHECKED C. Harrington, J. Quincy
SIGN OFF DATE	DETAILS	BY J. Law	CHECKED J. Quincy
	QUANTITIES	BY D. Nguyen-Tan, S. Ismail	CHECKED J. Downing

PREPARED FOR THE STATE OF CALIFORNIA DEPARTMENT OF TRANSPORTATION

Lee Holloway, PROJECT ENGINEER

BRIDGE NO. 23-15 R

POST MILE CC-13.47

CU 04-268
EA 043931

CAR-RES6.DLV

ORIGINAL SCALE IN INCHES FOR REDUCED PLANS 0 1 2 3

DISREGARD PRINTS BEARING EARLIER REVISION DATES

REVISION DATES (PRELIMINARY STAGE ONLY): 24-APR-2002

SHEET 38 OF 120

ClibPDF - www.fastio.com

DIST	COUNTY	ROUTE	POST MILES TOTAL PROJECT	SHEET NO.	TOTAL SHEETS
04	CC SOL	80	12.8/14.1 0.0/0.6	473S5	555

REGISTERED CIVIL ENGINEER

PLANS APPROVAL DATE

REGISTERED PROFESSIONAL ENGINEER Jeffrey S. Aldrich No. 34271 Exp. 09/30/99 CIVIL STATE OF CALIFORNIA

CH2M HILL
2485 NATOMAS PARK DR, SUITE 600
SACRAMENTO, CALIFORNIA 95833

The State of California or its officers or agents shall not be responsible for the accuracy or completeness of electronic copies of this plan sheet.

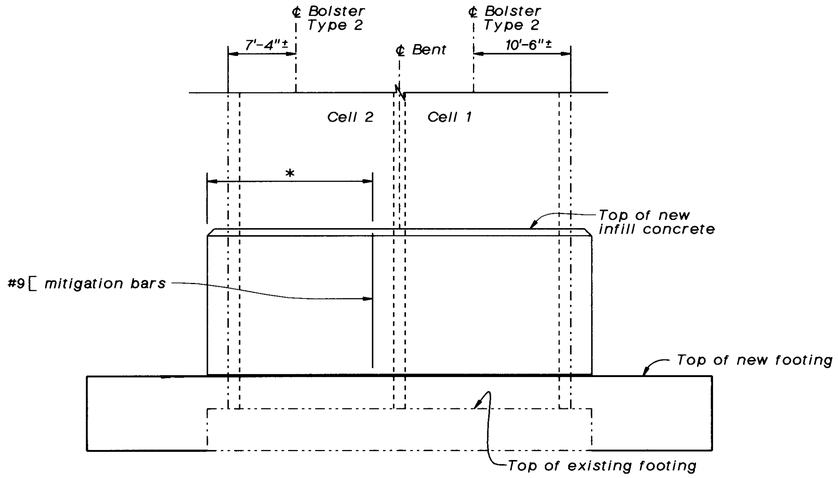

* 34-#9 mitigation bars added, locations not recorded. Extend to 3" Clr of top of new footing

BENT "A10E" NORTH ELEVATION

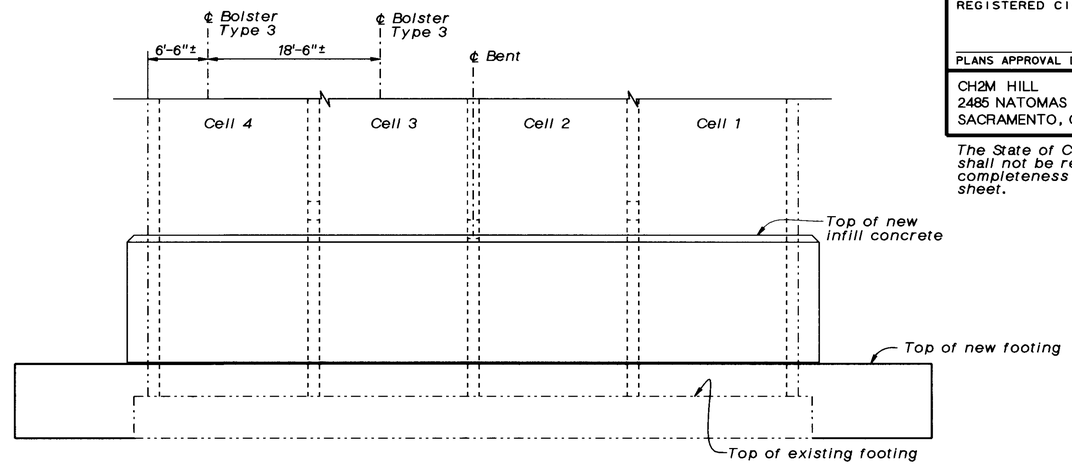

BENT "A11E" NORTH ELEVATION

Bent A10E As-Built Reinforcing Notes:

1. *56-#9 Mitigation bars added, locations not recorded*
2. *4-Bolsters added as shown*

Bent A11E As-Built Reinforcing Notes:

1. *6-Bolsters added as shown*

Notes:

1. *For clarity column casing, shotcrete, & vertical post tensioning not shown; & only partial reinforcement shown.*
2. *Mitigation bars & Bolsters added to replace existing reinforcement which was severed while coring holes for the H.S. rods.*
3. *See 473S7 of 555 for Bolster Details*

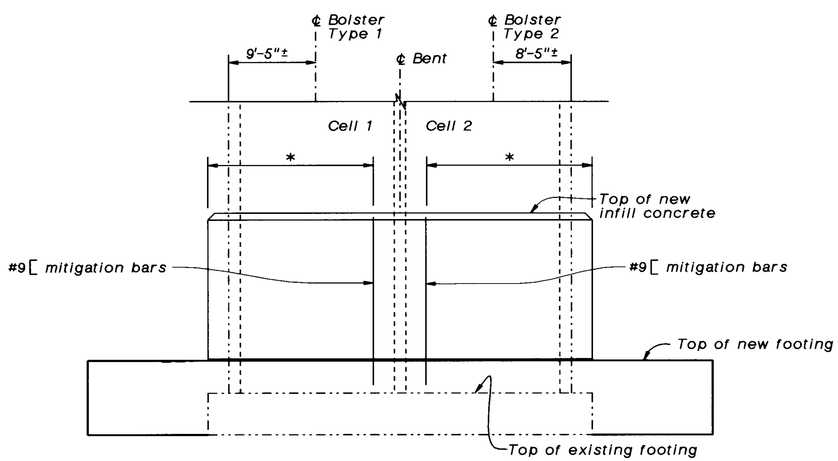

* 22-#9 mitigation bars added, locations not recorded. Extend to 3" Clr of top of existing footing

BENT "A10E" SOUTH ELEVATION

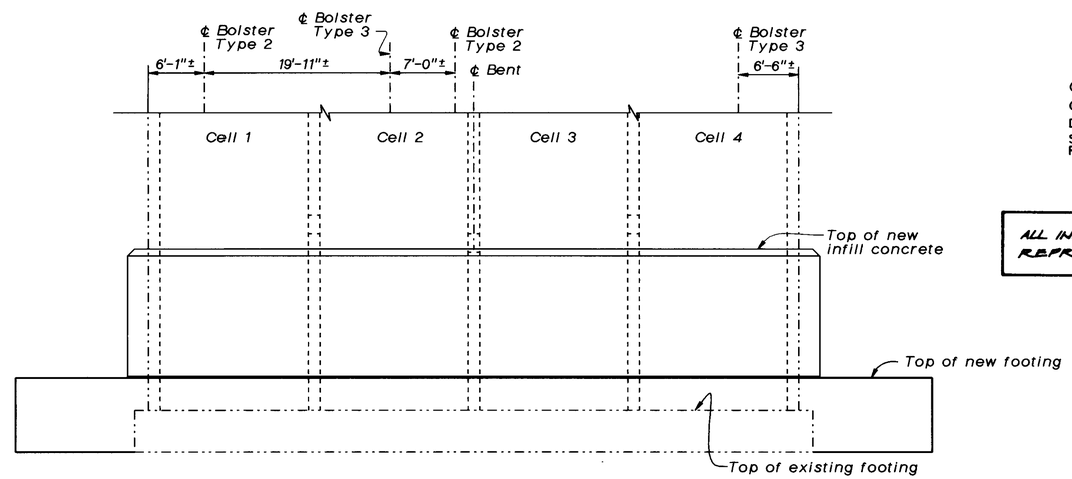

BENT "A11E" SOUTH ELEVATION

AS BUILT
CORRECTION BY BRIAN BEAUDOIN
CONTRACT NO. 04-043934
DATE FEBRUARY, 2002
STRUCTURES REPRESENTATIVE

ALL INFORMATION ON THIS SHEET REPRESENTS 'AS BUILT' CHANGES

The Contractor shall verify all controlling field dimensions before ordering or fabricating any material.

SEISMIC RETROFIT PROJECT NO. 611

CARQUINEZ BRIDGE - "A4E" LINE (APPROACH SPAN)

AS-BUILT REINFORCING NO. 4

Vong Toan
DESIGN OVERSIGHT

SIGN OFF DATE

	BY	CHECKED
DESIGN	J. Aldrich	C. Harrington, J. Quincy
DETAILS	P. Walker	J. Quincy
QUANTITIES	D. Nguyen-Tan, S. Ismail	J. Downing

PREPARED FOR THE STATE OF CALIFORNIA DEPARTMENT OF TRANSPORTATION

Lee Holloway
PROJECT ENGINEER

BRIDGE NO. 23-15 R
POST MILE CC-13.47

CAR-RES6S3.DLV

ORIGINAL SCALE IN INCHES FOR REDUCED PLANS 0 1 2 3

CU 04-268
EA 043931

DISREGARD PRINTS BEARING EARLIER REVISION DATES → 24-APR-2002

REVISION DATES (PRELIMINARY STAGE ONLY)

SHEET 38S5 OF 120

ClibPDF - www.fastio.com

DIST	COUNTY	ROUTE	POST MILES TOTAL PROJECT	SHEET NO.	TOTAL SHEETS
04	CC SOL	80	12.8/14.1 0.0/0.6	473S1	555

REGISTERED CIVIL ENGINEER

PLANS APPROVAL DATE

REGISTERED PROFESSIONAL ENGINEER Jeffrey S. Aldrich No. 34271 Exp. 09/30/99 CIVIL STATE OF CALIFORNIA

CH2M HILL
2485 NATOMAS PARK DR, SUITE 600
SACRAMENTO, CALIFORNIA 95833

The State of California or its officers or agents shall not be responsible for the accuracy or completeness of electronic copies of this plan sheet.

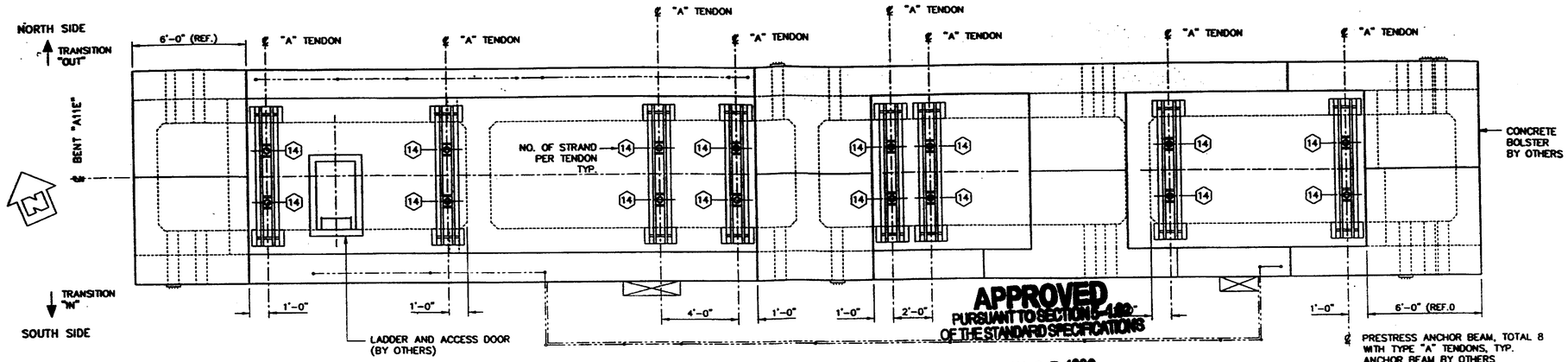

APPROVED PURSUANT TO SECTION 6-1.02 OF THE STANDARD SPECIFICATIONS

MAY 27 1999

PLAN AT BENT "A11E"

WITH MINOR CORRECTIONS FOR THE STATE OF CALIFORNIA DEPARTMENT OF TRANSPORTATION BY: J. Aldrich 2485 NATOMAS PARK DRIVE, SUITE 600 SACRAMENTO, CA 95833

PRESTRESSING CALCULATIONS

USE: 1/2" ø, GRADE 270, LOW-RELAXATION, 7-WIRE STRAND (ASTM A416) GUARANTEED ULTIMATE TENSILE STRENGTH = 41,300 LBS.

GIVEN: $u = 0.20$, $K = 0$; ANCHOR SET = $1/8" {}^{-0}_{+1/8"}$

INITIAL FORCE AT ⊠ = 0.730 TIMES THE JACKING FORCE

PJACK: "A" TENDON: 434 KIPS/TENDON NO. OF STRANDS: 434K/(0.75)(41.3K) = 14 STRANDS/TENDON
USE: 1 – TENDON W/14 STRANDS PJACK = 434 KIPS

PJACK: "B" TENDON: 310 KIPS/TENDON NO. OF STRANDS: 310K/(0.75)(41.3K) = 10 STRANDS/TENDON
USE: 1 – TENDON W/10 STRANDS PJACK = 310 KIPS

ELONGATION: "A8E" SHOWN:

STRESSING FROM ONE END: AT EITHER END

Δ = 10.3"

80% Δ = (0.8)(10.3") = 8.2" USE: 8 1/4"

PRESTRESSING NOTES:

1. ASSUMED A = 0.153 IN^2 AND E = 28,000 KSI USED FOR ELONGATION CALCULATIONS. TO BE VERIFIED ON ACTUAL PRESTRESSING STEEL USED. THESE FIGURES MAY VARY WHICH WOULD RESULT IN A VARIANCE OF THE CALCULATED ELONGATION.
2. SEE DRAWING B1 FOR GENERAL NOTES AND ANCHORAGE DETAILS.

DIMENSION TABLE

BENT	L TOTAL	⊠	80% Δ
"A8E"	116'-6"	0.730	6 1/4"
"A9E"	97'-0"	0.730	6 7/8"
"A10E"	104'-0"	0.730	7 3/8"
"A11E"	103'-10"	0.730	7 3/8"
"A12E"	101'-7"	0.730	7 1/4"
"A13E"	103'-7"	0.730	7 3/8"

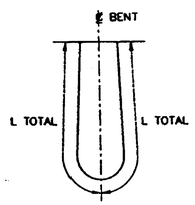

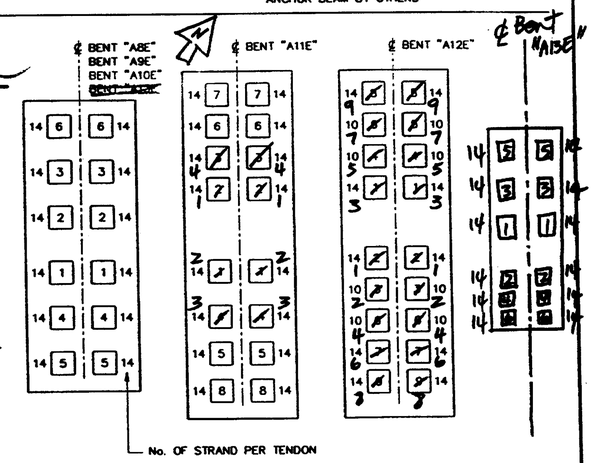

STRESSING SEQUENCE

ISSUED MAR 15 1999 For Approval

FOR INTERNAL USE BY AVAR ONLY

DIMENSION TABLE

LOCATION	NO. OF TENDON		ANCHOR HEAD		GROUT CAP		STEEL PIPE	COUPLER	FIXED END	CEMENT	WEDGE	STRAND
	TYPE "A"(14-0.5"ø)	TYPE "B"(10-0.5"ø)	ACS-19.5	ACS-12.5	ACS-19.5	ACS-12.5	3" STD	3 1/2" STD	ANCHOR	---	1/2" DIA.	1/2" DIA.
BENT "A8E"	6 EA	---	12 EA	---	12 EA	---	1,340 FT	24 EA	6 EA	50 SX	168 PR	21,000 FT
BENT "A9E"	6 EA	---	12 EA	---	12 EA	---	1,100 FT	24 EA	6 EA	41 SX	168 PR	17,400 FT
BENT "A10E"	6 EA	---	12 EA	---	12 EA	---	1,180 FT	24 EA	6 EA	44 SX	168 PR	18,700 FT
BENT "A11E"	8 EA	---	16 EA	---	16 EA	---	1,580 FT	32 EA	8 EA	60 SX	224 PR	24,900 FT
BENT "A12E"	5 EA	4 EA	18 EA	--	18 EA	---	1,740 FT	36 EA	9 EA	64 SX	220 PR	24,000 FT
BENT "A13E"	6 EA	---	12 EA	---	12 EA	---	1,180 FT	24 EA	6 EA	45 SX	168 PR	18,700 FT
TOTAL	37 EA	4 EA	82 EA	---	82 EA	---	8 120 FT	164 EA	41 EA	305 SX	1,116 PR	124,700 FT

The use of these plans and specifications shall be restricted to the original site for which they were prepared. Any reproduction or distribution is expressly limited to such use. Any other reproduction, reuse, or disclosure by any method, in whole or in part, is prohibited. These drawings and specifications contain proprietary information and title remains in AVAR.

PRESTRESSING DETAILS
"A4E" LINE (APPROACH SPAN), COLUMN P.T. – BR. 23-15R

PROJECT: CARQUINEZ BRIDGE
PROJECT NO: 04-CC,Sol-80-12.8/14.1
CONTRACT NO: 04-043934
CONTRACTOR: [redacted]

NO.	DATE	REVISION	BY

DESIGN BY: DATE:
DRAWN BY: M.S. DATE: 3/15/99
CHECKED BY: RF DATE: 3/15/99
AVAR JOB NO. 9854

[redacted] AVAR Construction Systems, Inc. 584-F [redacted] Company [redacted] (916) [redacted]

DRAWING NO.: 4-4 REV. 0

AS BUILT
CORRECTION BY BRIAN BEAUDOIN
CONTRACT NO. 04-043934
DATE FEBRUARY, 2002
STRUCTURES REPRESENTATIVE

The Contractor shall verify all controlling field dimensions before ordering or fabricating any material.

SEISMIC RETROFIT PROJECT NO. 611

Vong Toan
DESIGN OVERSIGHT
SIGN OFF DATE

	BY	CHECKED
DESIGN	J. Aldrich	C. Harrington, J. Quincy
DETAILS	P. Walker	J. Quincy
QUANTITIES	D. Nguyen-Tan, S. Ismail	J. Downing

PREPARED FOR THE STATE OF CALIFORNIA DEPARTMENT OF TRANSPORTATION

Lee Holloway
PROJECT ENGINEER

BRIDGE NO. 23-15 R
POST MILE CC-13.47

CARQUINEZ BRIDGE – "A4E" LINE (APPROACH SPAN)
COLUMN POST TENSIONING DETAILS (SUPPLEMENTAL)

CAR-RES6S6.DLV

ORIGINAL SCALE IN INCHES FOR REDUCED PLANS 0 1 2 3

CU 04-268
EA 043931

DISREGARD PRINTS BEARING EARLIER REVISION DATES → 25-APR-2002

REVISION DATES (PRELIMINARY STAGE ONLY)

SHEET 38S1 OF 120

ClibPDF - www.fastio.com

DIST	COUNTY	ROUTE	POST MILES TOTAL PROJECT	SHEET NO.	TOTAL SHEETS
04	CC SOL	80	12.8/14.1 0.0/0.6	473S2	555

REGISTERED CIVIL ENGINEER

PLANS APPROVAL DATE

REGISTERED PROFESSIONAL ENGINEER Jeffrey S. Aldrich No. 34271 Exp. 09/30/99 CIVIL STATE OF CALIFORNIA

CH2M HILL
2485 NATOMAS PARK DR, SUITE 600
SACRAMENTO, CALIFORNIA 95833

The State of California or its officers or agents shall not be responsible for the accuracy or completeness of electronic copies of this plan sheet.

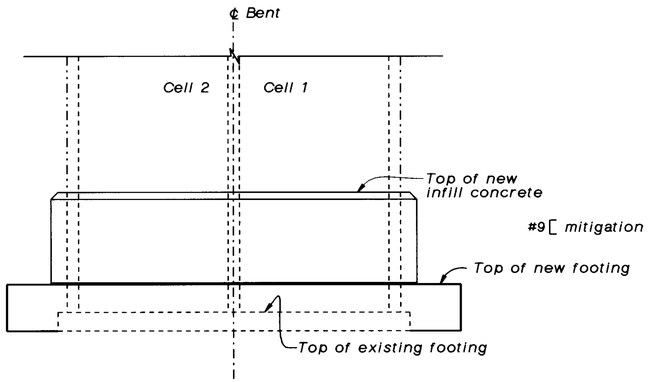

no mitigation bars added on the North elevation

BENT "A3E" NORTH ELEVATION

Bent A3E As-Built Reinforcing Notes:

1. 3-#9 Mitigation bars added, locations not recorded
2. No Bolsters added

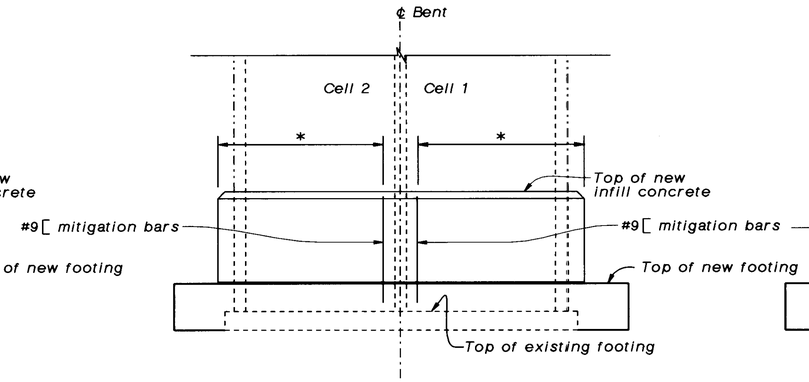

* 4-#9 mitigation bars added, locations not recorded

BENT "A4E" NORTH ELEVATION

Bent A4E As-Built Reinforcing Notes:

1. 9-#9 Mitigation bars added, locations not recorded
2. No Bolsters added

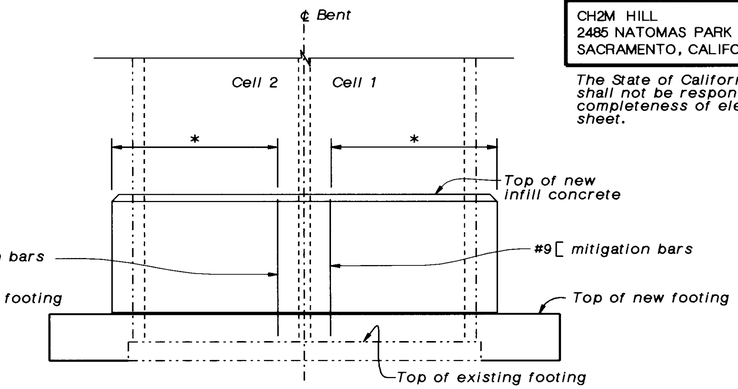

* 7-#9 mitigation bars added, locations not recorded

BENT "A5E" NORTH ELEVATION

ALL INFORMATION ON THIS SHEET REPRESENTS 'AS BUILT' CHANGES

Bent A5E As-Built Reinforcing Notes:

1. 16-#9 Mitigation bars added, locations not recorded
2. No Bolsters added

Notes:

1. For clarity column casing, shotcrete, & vertical post tensioning not shown; & only partial reinforcement shown.
2. Mitigation bars & Bolsters added to replace existing reinforcement which was severed while coring holes for the H.S. rods.
3. See 473S7 of 555 for Bolster Details

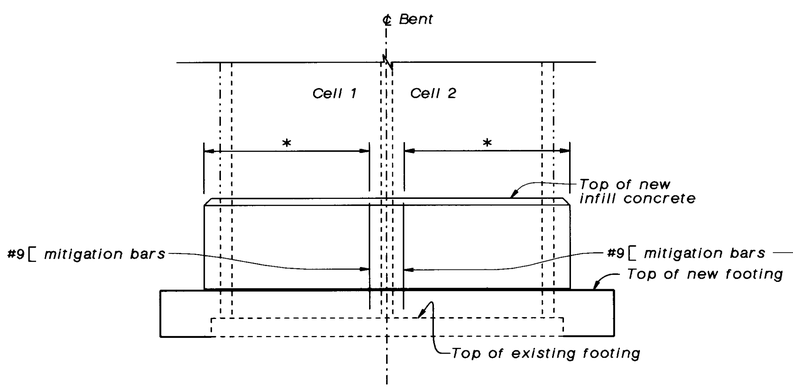

* 3-#9 mitigation bars added, locations not recorded

BENT "A3E" SOUTH ELEVATION

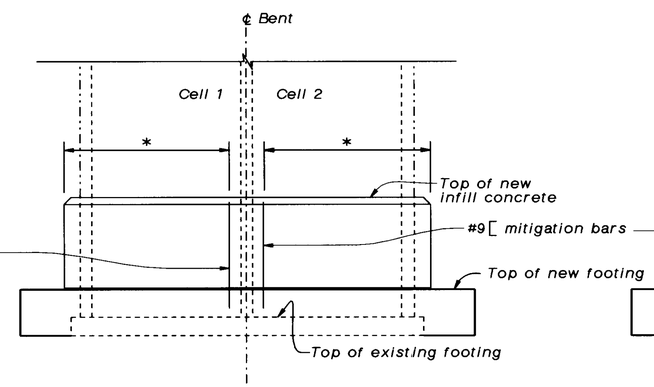

* 5-#9 mitigation bars added, locations not recorded

BENT "A4E" SOUTH ELEVATION

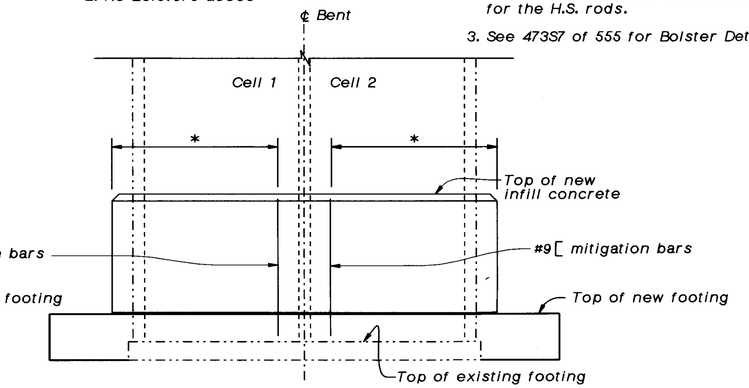

* 9-#9 mitigation bars added, locations not recorded

BENT "A5E" SOUTH ELEVATION

AS BUILT
CORRECTION BY BRIAN BEAUDOIN
CONTRACT NO. 04-043934
DATE FEBRUARY, 2002
STRUCTURES REPRESENTATIVE

The Contractor shall verify all controlling field dimensions before ordering or fabricating any material.

SEISMIC RETROFIT PROJECT NO. 611

CARQUINEZ BRIDGE - "A4E" LINE (APPROACH SPAN)

AS-BUILT REINFORCING NO. 1

Vong Toan, DESIGN OVERSIGHT	DESIGN	BY J. Aldrich	CHECKED C. Harrington, J. Quincy
SIGN OFF DATE	DETAILS	BY P. Walker	CHECKED J. Quincy
	QUANTITIES	BY D. Nguyen-Tan, S. Ismail	CHECKED J. Downing

PREPARED FOR THE STATE OF CALIFORNIA DEPARTMENT OF TRANSPORTATION

Lee Holloway, PROJECT ENGINEER

BRIDGE NO. 23-15 R
POST MILE CC-13.47

CU 04-268
EA 043931

CAR-RES6S11.DLV

ORIGINAL SCALE IN INCHES FOR REDUCED PLANS 0 1 2 3

DISREGARD PRINTS BEARING EARLIER REVISION DATES → REVISION DATES (PRELIMINARY STAGE ONLY) 24-APR-2002

SHEET 38S2 OF 120

ClibPDF - www.fastio.com

DIST	COUNTY	ROUTE	POST MILES TOTAL PROJECT	SHEET NO.	TOTAL SHEETS
04	CC SOL	80	12.8/14.1 0.0/0.6	473S7	555

REGISTERED CIVIL ENGINEER

PLANS APPROVAL DATE

REGISTERED PROFESSIONAL ENGINEER Jeffrey S. Aldrich No. 34271 Exp. 09/30/99 CIVIL STATE OF CALIFORNIA

CH2M HILL
2485 NATOMAS PARK DR, SUITE 600
SACRAMENTO, CALIFORNIA 95833

The State of California or its officers or agents shall not be responsible for the accuracy or completeness of electronic copies of this plan sheet.

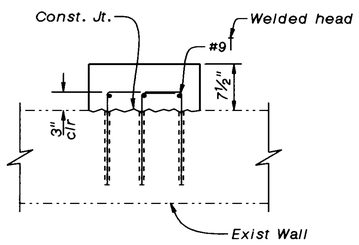

PLAN

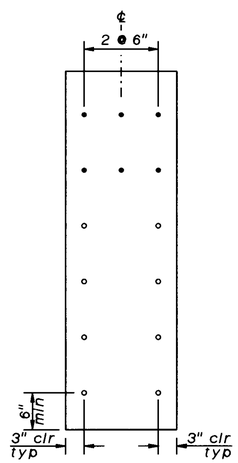

ELEVATION

TYPE 1 BOLSTER

1"=1'-0"

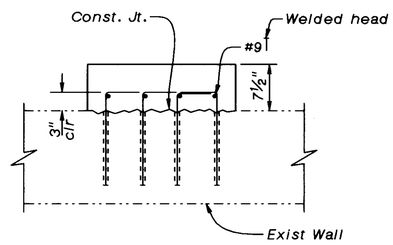

PLAN

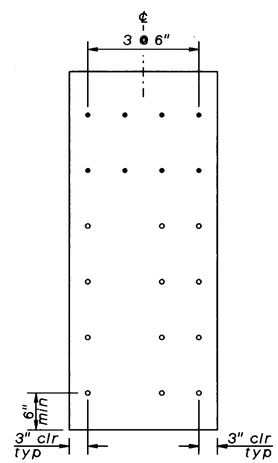

ELEVATION

TYPE 2 BOLSTER

1"=1'-0"

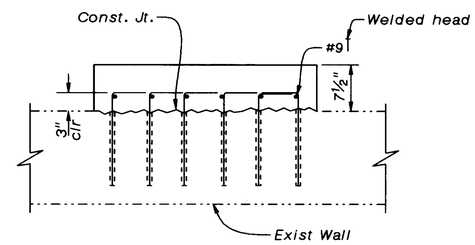

PLAN

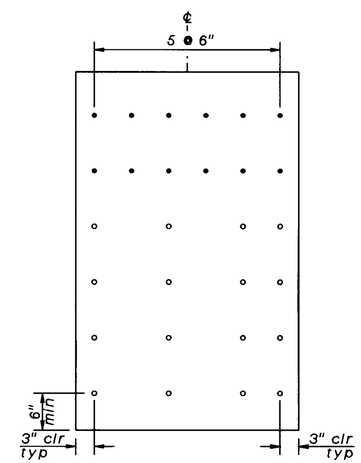

ELEVATION

TYPE 3 BOLSTER

1"=1'-0"

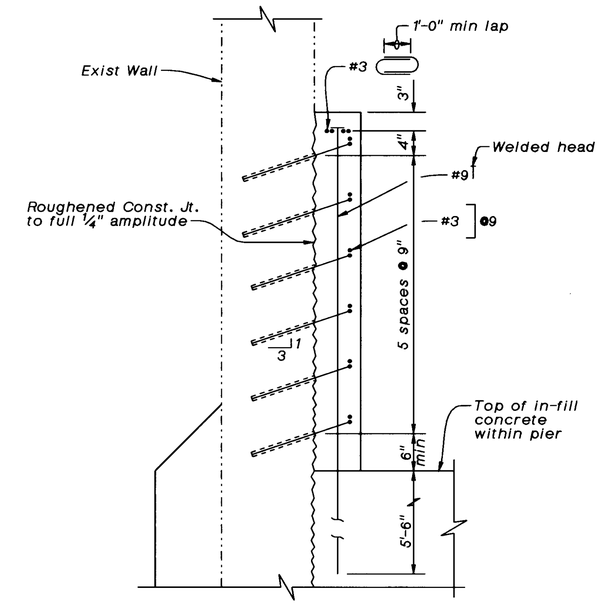

TYPICAL SECTION

1"=1'-0"

Note:

1. Concrete bolsters added to account for cut / damaged rebar during coring for prestressing.

LEGEND FOR ELEVATION VIEWS

- • Drill & Bond #6 ⌈ in 12" deep hole
- ∘ Drill & Bond #5 ⌈ in 10" deep hole

ALL INFORMATION ON THIS SHEET REPRESENTS 'AS BUILT' CHANGES

AS BUILT
CORRECTION BY BRIAN BEAUDOIN
CONTRACT NO. 04-043934
DATE FEBRUARY, 2002
STRUCTURES REPRESENTATIVE

The Contractor shall verify all controlling field dimensions before ordering or fabricating any material.

SEISMIC RETROFIT PROJECT NO. 611

CARQUINEZ BRIDGE - "A4E" LINE (APPROACH SPAN)

AS-BUILT REINFORCING NO. 6

Vong Toan — DESIGN OVERSIGHT	DESIGN	BY J. Aldrich	CHECKED L. Shen/ J. Quincy	PREPARED FOR THE STATE OF CALIFORNIA DEPARTMENT OF TRANSPORTATION
SIGN OFF DATE	DETAILS	BY P. Walker	CHECKED J. Quincy	Lee Holloway — PROJECT ENGINEER
	QUANTITIES	BY D. Nguyen-Tan/ S. Ismail	CHECKED L. Shen	

BRIDGE NO. 23-15 R
POST MILE CC-13.53

D-RES6S5.DGN

ORIGINAL SCALE IN INCHES FOR REDUCED PLANS 0 1 2 3

CU 04-268
EA 043931

DISREGARD PRINTS BEARING EARLIER REVISION DATES → REVISION DATES (PRELIMINARY STAGE ONLY) 24-APR-2002

SHEET 38S7 OF 120

ClibPDF - www.fastio.com

DIST	COUNTY	ROUTE	POST MILES TOTAL PROJECT	SHEET NO.	TOTAL SHEETS
04	CC SOL	80	12.8/14.1 0.0/0.6	473S4	555

REGISTERED CIVIL ENGINEER

PLANS APPROVAL DATE

REGISTERED PROFESSIONAL ENGINEER Jeffrey S. Aldrich No. 34271 Exp. 09/30/99 CIVIL STATE OF CALIFORNIA

CH2M HILL
2485 NATOMAS PARK DR, SUITE 600
SACRAMENTO, CALIFORNIA 95833

The State of California or its officers or agents shall not be responsible for the accuracy or completeness of electronic copies of this plan sheet.

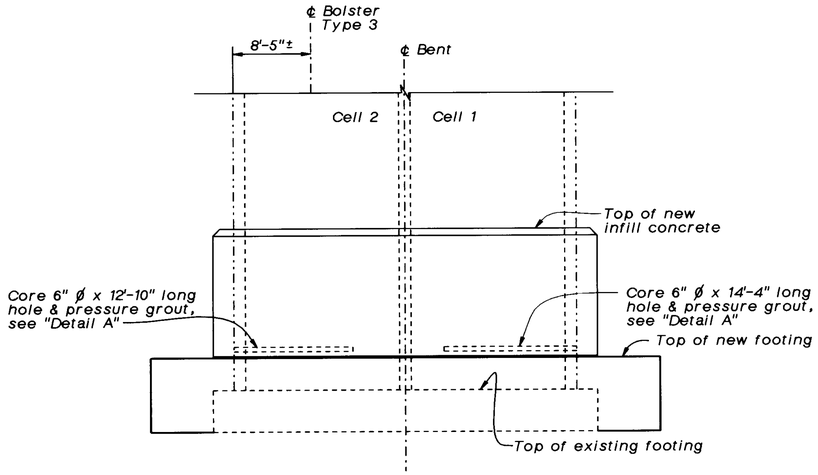

BENT "A8E" NORTH ELEVATION

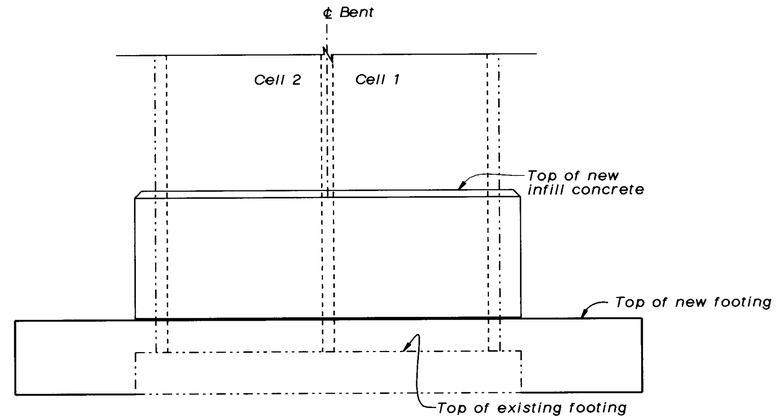

BENT "A9E" NORTH ELEVATION

ALL INFORMATION ON THIS SHEET REPRESENTS 'AS BUILT' CHANGES

Bent A8E As-Built Reinforcing Notes:

1. 1-Bolster added as shown
2. Horizontal coring performed as shown

Bent A9E As-Built Reinforcing Notes:

1. No mitigation @ North elevation
2. 3-Bolsters added as shown

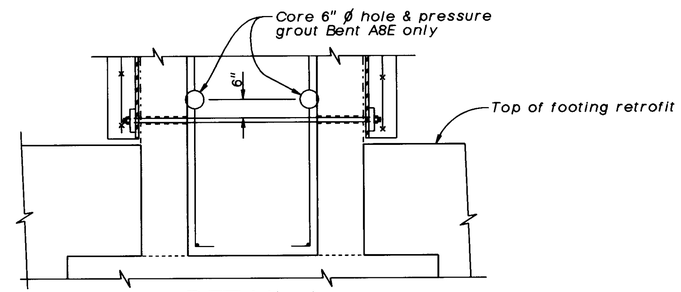

DETAIL A

½"=1'-0"

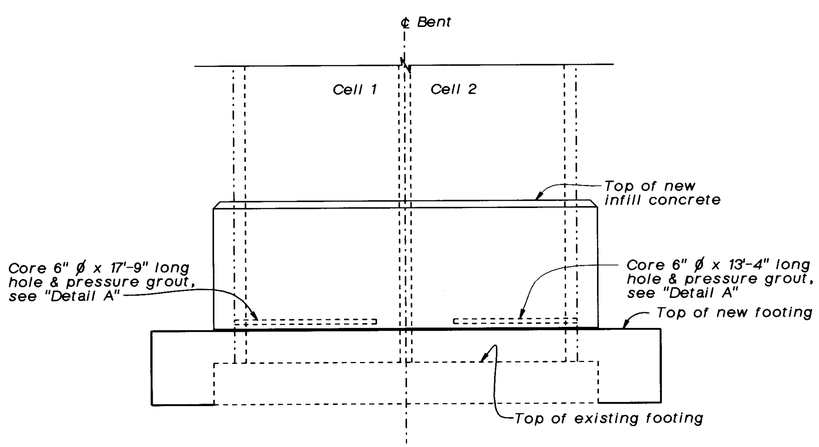

BENT "A8E" SOUTH ELEVATION

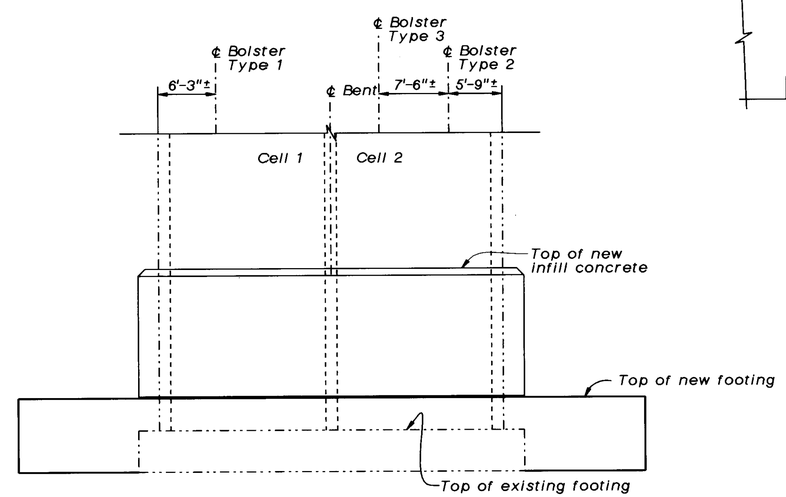

BENT "A9E" SOUTH ELEVATION

AS BUILT

CORRECTION BY BRIAN BEAUDOIN
CONTRACT NO. 04-043934
DATE FEBRUARY, 2002
STRUCTURES REPRESENTATIVE

Notes:

1. For clarity column casing, shotcrete, & vertical post tensioning not shown; & only partial reinforcement shown.
2. Mitigation bars & Bolsters added to replace existing reinforcement which was severed while coring holes for the H.S. rods.
3. Horizontal coring as shown in Detail A was performed at bents where the #9[ ]@ 6" vertical infill reinforcement was mistakenly placed to top of existing footing.
4. See 473S7 of 555 for Bolster Details

The Contractor shall verify all controlling field dimensions before ordering or fabricating any material.

SEISMIC RETROFIT PROJECT NO. 611

CARQUINEZ BRIDGE - "A4E" LINE (APPROACH SPAN)

AS-BUILT REINFORCING NO. 3

Vong Toan
DESIGN OVERSIGHT

SIGN OFF DATE

	BY	CHECKED
DESIGN	J. Aldrich	C. Harrington, J. Quincy
DETAILS	P. Walker	J. Quincy
QUANTITIES	D. Nguyen-Tan, S. Ismail	J. Downing

PREPARED FOR THE STATE OF CALIFORNIA DEPARTMENT OF TRANSPORTATION

Lee Holloway
PROJECT ENGINEER

BRIDGE NO. 23-15 R
POST MILE CC-13.47

CAR-RES6S2.DLV

ORIGINAL SCALE IN INCHES FOR REDUCED PLANS 0 1 2 3

CU 04-268
EA 043931

DISREGARD PRINTS BEARING EARLIER REVISION DATES → REVISION DATES (PRELIMINARY STAGE ONLY) 24-APR-2002

SHEET 38S4 OF 120

ClibPDF - www.fastio.com

DIST	COUNTY	ROUTE	POST MILES TOTAL PROJECT	SHEET NO.	TOTAL SHEETS
04	CC SOL	80	12.8/14.1 0.0/0.6	473S6	555

REGISTERED CIVIL ENGINEER

PLANS APPROVAL DATE

REGISTERED PROFESSIONAL ENGINEER Jeffrey S. Aldrich No. 34271 Exp. 09/30/99 CIVIL STATE OF CALIFORNIA

CH2M HILL
2485 NATOMAS PARK DR, SUITE 600
SACRAMENTO, CALIFORNIA 95833

The State of California or its officers or agents shall not be responsible for the accuracy or completeness of electronic copies of this plan sheet.

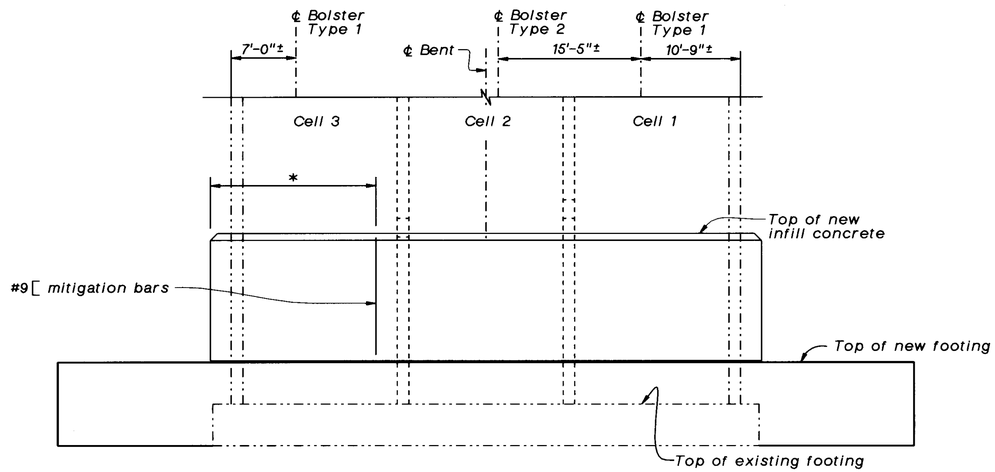

* 9-#9 mitigation bars added, locations not recorded. Extend to 3" Clr of top of new footing

BENT "A12E" NORTH ELEVATION

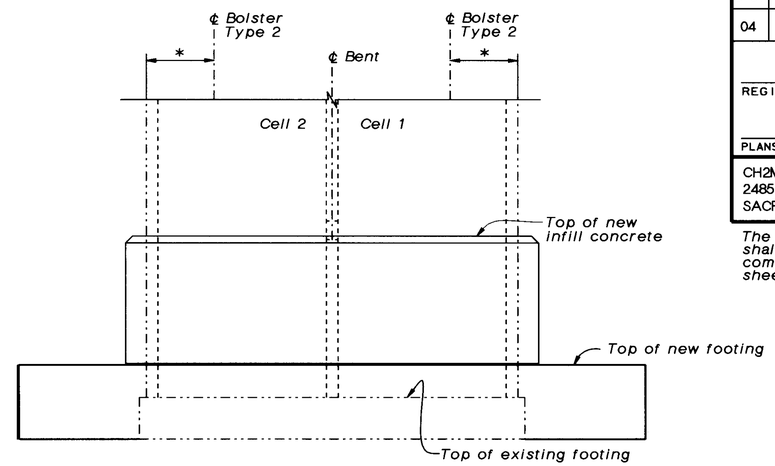

* 2-Bolsters added, locations not recorded

BENT "A13E" NORTH ELEVATION

Bent A12E As-Built Reinforcing Notes:

1. 20-#9 Mitigation bars added, locations not recorded
2. 5-Bolsters added as shown

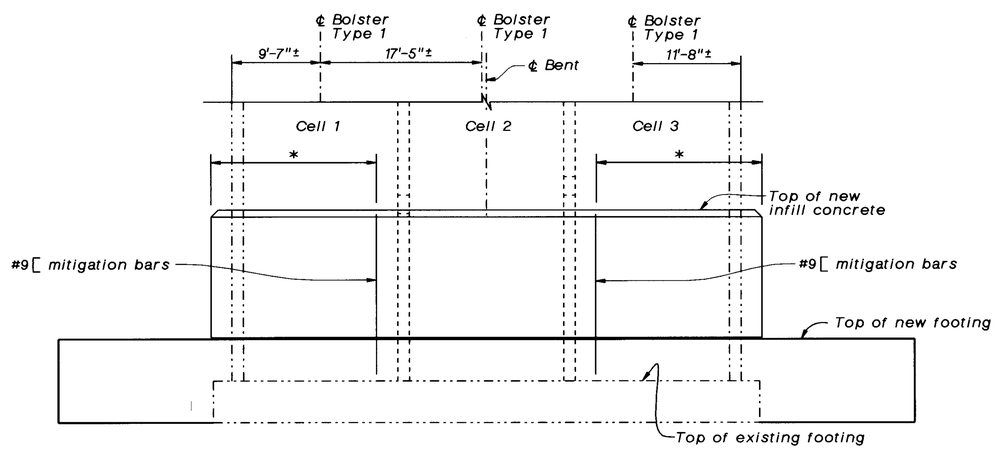

* 11-#9 mitigation bars added, locations not recorded. Extend to 3" Clr of top of existing footing

BENT "A12E" SOUTH ELEVATION

Bent A13E As-Built Reinforcing Notes:

1. Quantity or location of mitigation bars not recorded
2. 6-Bolsters added, locations not recorded

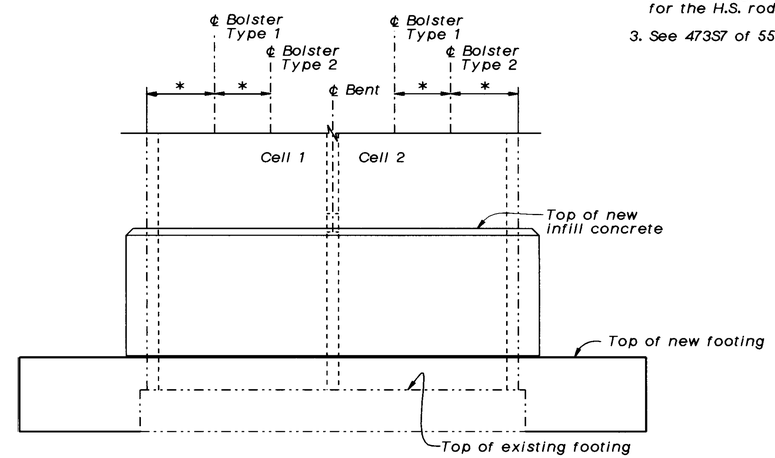

* 4-Bolsters added, locations not recorded

BENT "A13E" SOUTH ELEVATION

Notes:

1. For clarity column casing, shotcrete, & vertical post tensioning not shown; & only partial reinforcement shown.
2. Mitigation bars & Bolsters added to replace existing reinforcement which was severed while coring holes for the H.S. rods.
3. See 473S7 of 555 for Bolster Details

ALL INFORMATION ON THIS SHEET REPRESENTS 'AS BUILT' CHANGES

AS BUILT
CORRECTION BY BRIAN BEAUDOIN
CONTRACT NO. 04-043934
DATE FEBRUARY, 2002
STRUCTURES REPRESENTATIVE

The Contractor shall verify all controlling field dimensions before ordering or fabricating any material.

SEISMIC RETROFIT PROJECT NO. 611

CARQUINEZ BRIDGE - "A4E" LINE (APPROACH SPAN)

AS-BUILT REINFORCING NO. 5

Vong Toan
DESIGN OVERSIGHT
SIGN OFF DATE

	BY	CHECKED
DESIGN	J. Aldrich	C. Harrington, J. Quincy
DETAILS	P. Walker	J. Quincy
QUANTITIES	D. Nguyen-Tan, S. Ismail	J. Downing

PREPARED FOR THE STATE OF CALIFORNIA DEPARTMENT OF TRANSPORTATION

Lee Holloway
PROJECT ENGINEER

BRIDGE NO. 23-15 R
POST MILE CC-13.47

CAR-RES6S4.DLV

ORIGINAL SCALE IN INCHES FOR REDUCED PLANS 0 1 2 3

CU 04-268
EA 043931

DISREGARD PRINTS BEARING EARLIER REVISION DATES → 24-APR-2002

REVISION DATES (PRELIMINARY STAGE ONLY)

SHEET 38S6 OF 120

ClibPDF - www.fastio.com

DIST	COUNTY	ROUTE	POST MILES TOTAL PROJECT	SHEET NO.	TOTAL SHEETS
04	CC SOL	80	12.8/14.1 0.0/0.6	473S3	555

REGISTERED CIVIL ENGINEER

PLANS APPROVAL DATE

REGISTERED PROFESSIONAL ENGINEER Jeffrey S. Aldrich No. 34271 Exp. 09/30/99 CIVIL STATE OF CALIFORNIA

CH2M HILL
2485 NATOMAS PARK DR, SUITE 600
SACRAMENTO, CALIFORNIA 95833

The State of California or its officers or agents shall not be responsible for the accuracy or completeness of electronic copies of this plan sheet.

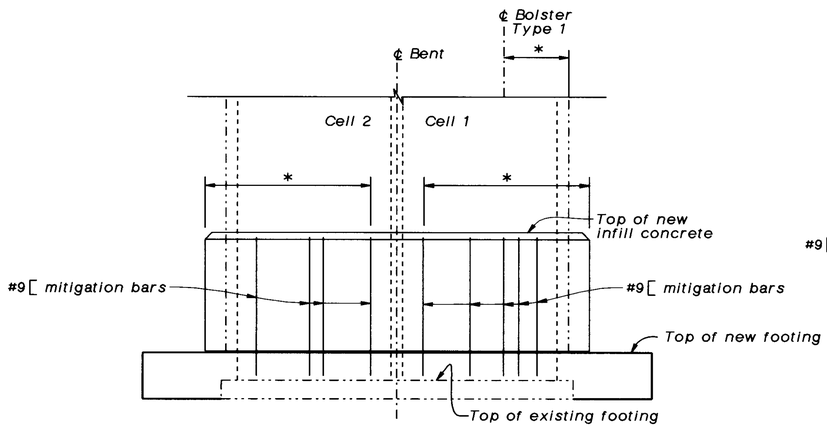

* 1-Bolster & 9-#9 mitigation bars added, locations not recorded

BENT "A6E" NORTH ELEVATION

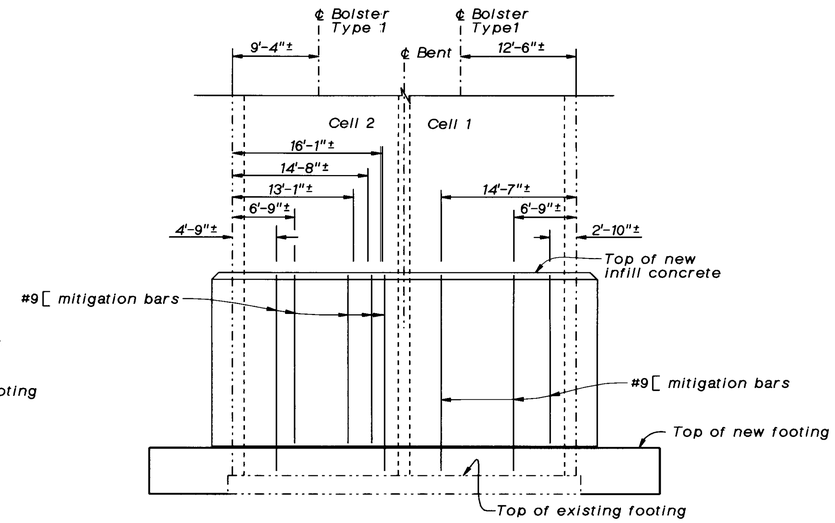

BENT "A7E" NORTH ELEVATION

Bent A6E As-Built Reinforcing Notes:

1. 11-#9 Mitigation bars added as shown, locations not recorded
2. 1-Bolster added as shown, location not recorded

Bent A7E As-Built Reinforcing Notes:

1. 16-#9 Mitigation bars added as shown
2. 4-Bolsters added as shown

Notes:

1. For clarity column casing, shotcrete, & vertical post tensioning not shown; & only partial reinforcement shown.
2. Mitigation bars & Bolsters added to replace existing reinforcement which was severed while coring holes for the H.S. rods.
3. See 473S7 of 555 for Bolster Details

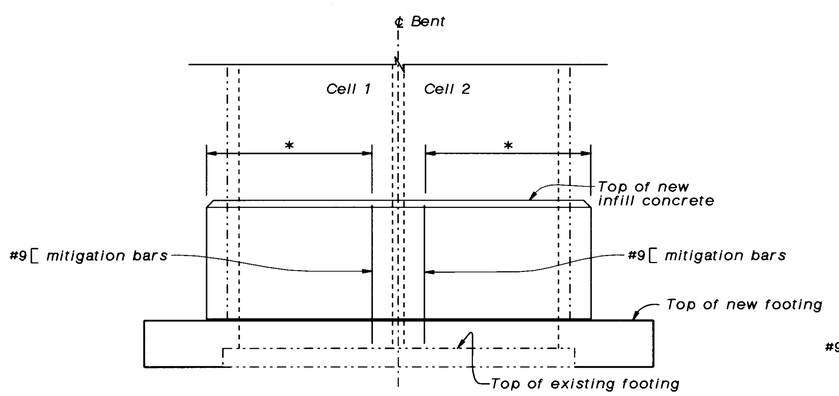

* 2-#9 mitigation bars added, locations not recorded

BENT "A6E" SOUTH ELEVATION

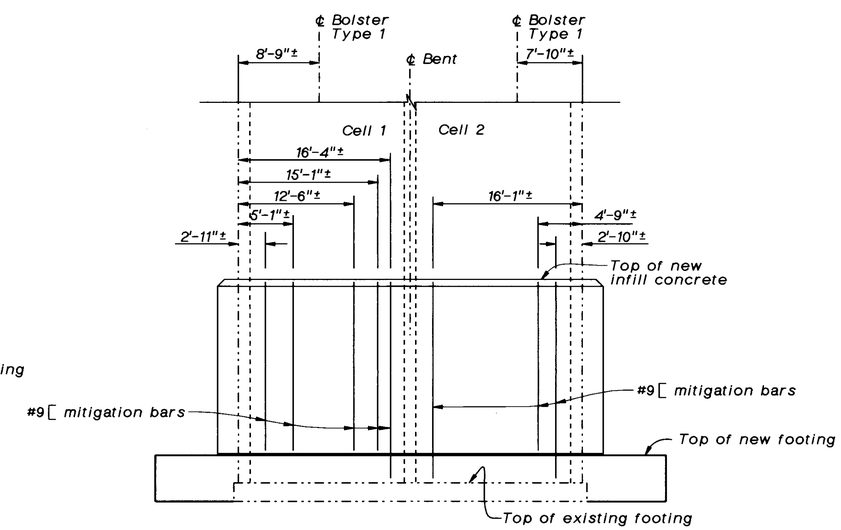

BENT "A7E" SOUTH ELEVATION

ALL INFORMATION ON THIS SHEET REPRESENTS 'AS BUILT' CHANGES

AS BUILT
CORRECTION BY BRIAN BEAUDOIN
CONTRACT NO. 04-043934
DATE FEBRUARY, 2002
STRUCTURES REPRESENTATIVE

The Contractor shall verify all controlling field dimensions before ordering or fabricating any material.

SEISMIC RETROFIT PROJECT NO. 611

CARQUINEZ BRIDGE - "A4E" LINE (APPROACH SPAN)

AS-BUILT REINFORCING NO. 2

Vong Toan
DESIGN OVERSIGHT

SIGN OFF DATE

	BY	CHECKED
DESIGN	J. Aldrich	C. Harrington, J. Quincy
DETAILS	P. Walker	J. Quincy
QUANTITIES	D. Nguyen-Tan, S. Ismail	J. Downing

PREPARED FOR THE STATE OF CALIFORNIA DEPARTMENT OF TRANSPORTATION

Lee Holloway
PROJECT ENGINEER

BRIDGE NO. 23-15 R
POST MILE CC-13.47

CAR-RES6S1.DLV

ORIGINAL SCALE IN INCHES FOR REDUCED PLANS 0 1 2 3

CU 04-268
EA 043931

DISREGARD PRINTS BEARING EARLIER REVISION DATES → 24-APR-2002

REVISION DATES (PRELIMINARY STAGE ONLY)

SHEET 38S3 OF 120

ClibPDF - www.fastio.com

DIST	COUNTY	ROUTE	POST MILES TOTAL PROJECT	SHEET NO.	TOTAL SHEETS
04	CC, SOL	80	12.8/14.1, 0.0/0.6	474	555

REGISTERED CIVIL ENGINEER

10-20-97
PLANS APPROVAL DATE

REGISTERED PROFESSIONAL ENGINEER — Robert L. Morrison Jr — No. 43693 — Exp. 03/31/97 — CIVIL — STATE OF CALIFORNIA

CH2M HILL
2485 NATOMAS PARK DR, SUITE 600
SACRAMENTO, CALIFORNIA 95833

The State of California or its officers or agents shall not be responsible for the accuracy or completeness of electronic copies of this plan sheet.

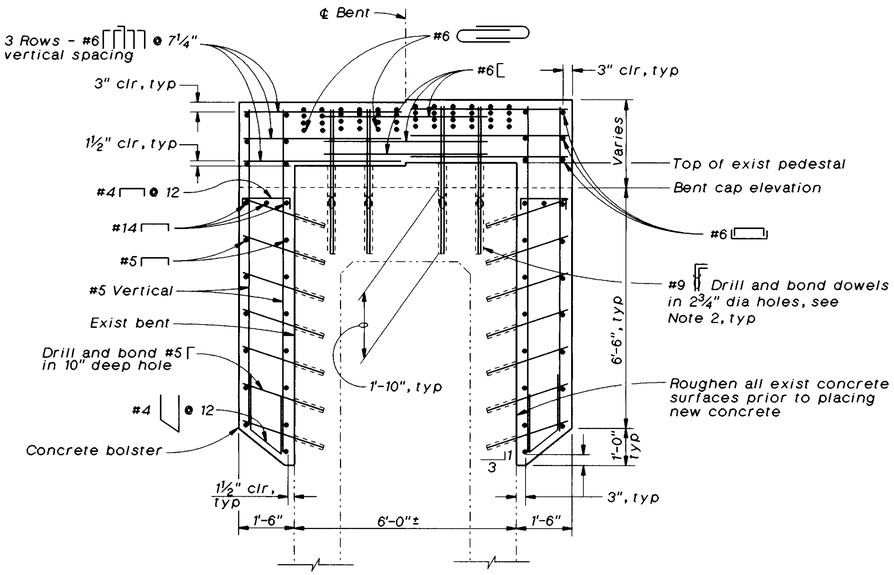

SECTION A-A
½"=1'-0"

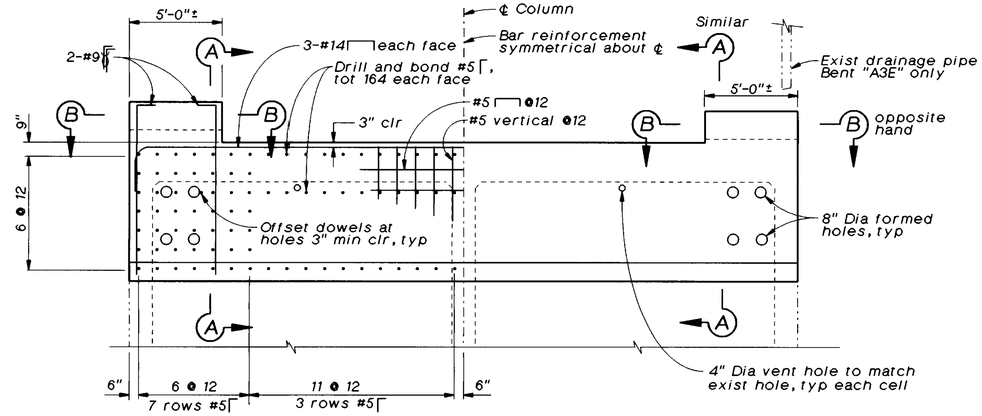

Note:
Bent "A3E" shown, Bent "A4E" similar.

BENT CAP ELEVATION
¼"=1'-0"

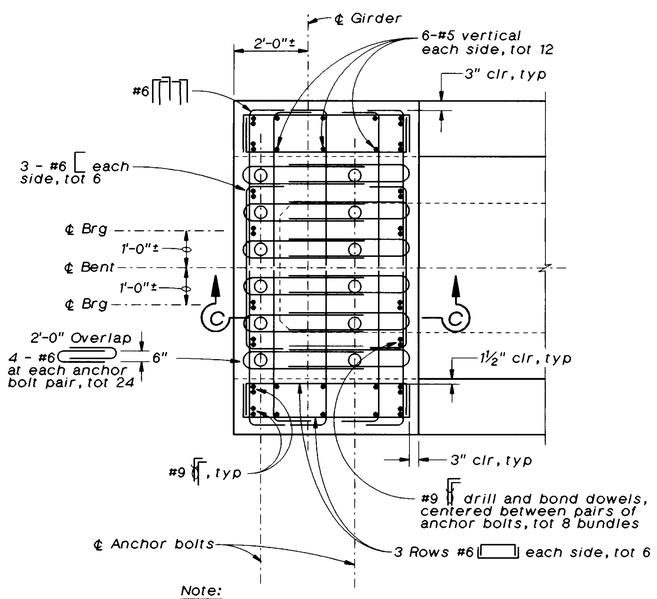

Note:
Reinforcement symmetrical about ℄ bent

SECTION B-B
½"=1'-0"

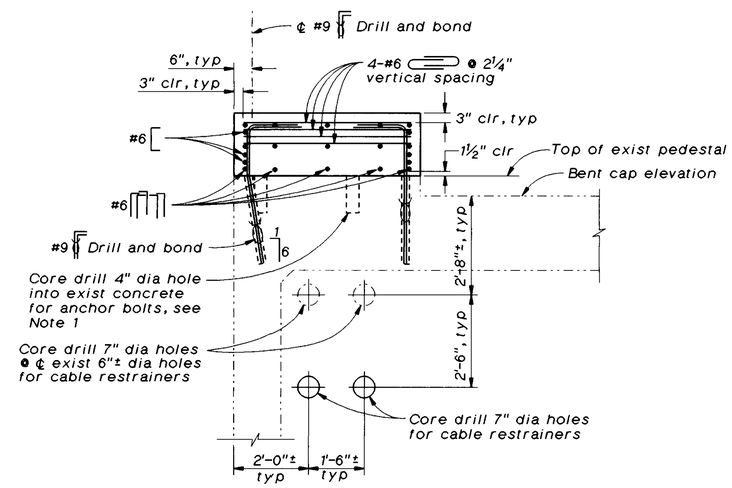

SECTION C-C
½"=1'-0"

NO AS BUILT CHANGES
AS BUILT
CORRECTION BY BRIAN BEAUDOIN
CONTRACT NO. 04-043934
DATE FEBRUARY, 2002
STRUCTURES REPRESENTATIVE

Note:

1. For anchor bolt locations and core drill depth, see "Bearing Details No. 1" and "Bearing Details No. 2" sheets.
2. At the Contractors option, holes for #9 may be core drilled after location of existing reinforcement.

The Contractor shall verify all controlling field dimensions before ordering or fabricating any material.

SEISMIC RETROFIT PROJECT NO. 611

CARQUINEZ BRIDGE - "A4E" LINE (APPROACH SPAN)

BENT A3E AND A4E DETAILS

Vong Toan
DESIGN OVERSIGHT
April 29, 1997
SIGN OFF DATE

	BY	CHECKED
DESIGN	D. Nguyen-Tan	C. Harrington, J. Quincy
DETAILS	A. Kayden, G. Triplat	J. Quincy
QUANTITIES	D. Nguyen-Tan, S. Ismail	J. Downing

PREPARED FOR THE STATE OF CALIFORNIA DEPARTMENT OF TRANSPORTATION

Lee Holloway
PROJECT ENGINEER

BRIDGE NO. 23-15 R
POST MILE CC-13.47

CA4-BD1.DLV

ORIGINAL SCALE IN INCHES FOR REDUCED PLANS 0 1 2 3

CU 04-268
EA 043931

DISREGARD PRINTS BEARING EARLIER REVISION DATES → 22-APR-1997

REVISION DATES (PRELIMINARY STAGE ONLY)

SHEET 39 OF 120

ClibPDF - www.fastio.com

DIST	COUNTY	ROUTE	POST MILES TOTAL PROJECT	SHEET NO.	TOTAL SHEETS
04	CC,SOL	80	12.8/14.1,0.0/0.6	475	555

REGISTERED CIVIL ENGINEER

10-20-97
PLANS APPROVAL DATE

Robert L. Morrison Jr. No. 43693 Exp. 03/31/97 CIVIL — REGISTERED PROFESSIONAL ENGINEER — STATE OF CALIFORNIA

CH2M HILL
2485 NATOMAS PARK DR, SUITE 600
SACRAMENTO, CALIFORNIA 95833

The State of California or its officers or agents shall not be responsible for the accuracy or completeness of electronic copies of this plan sheet.

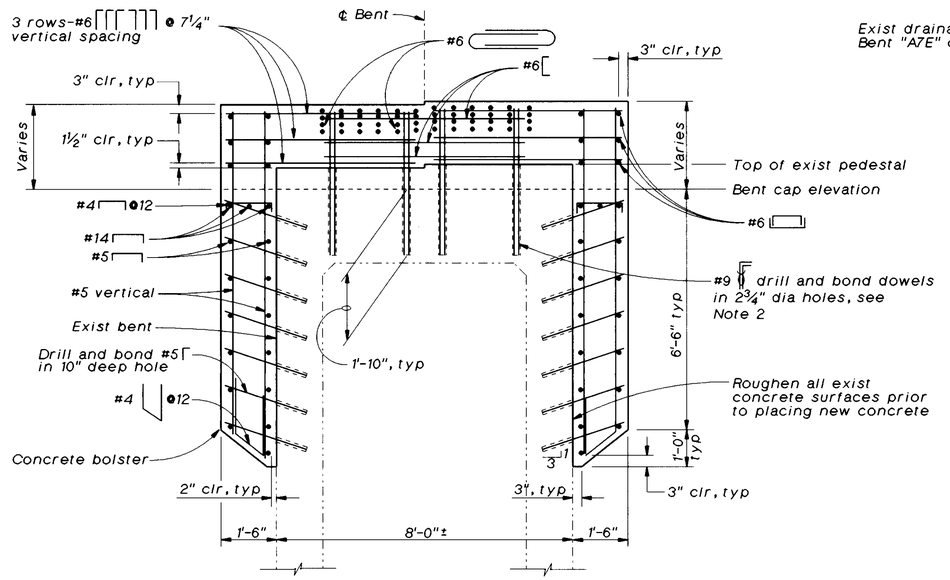

SECTION A-A

½"=1'-0"

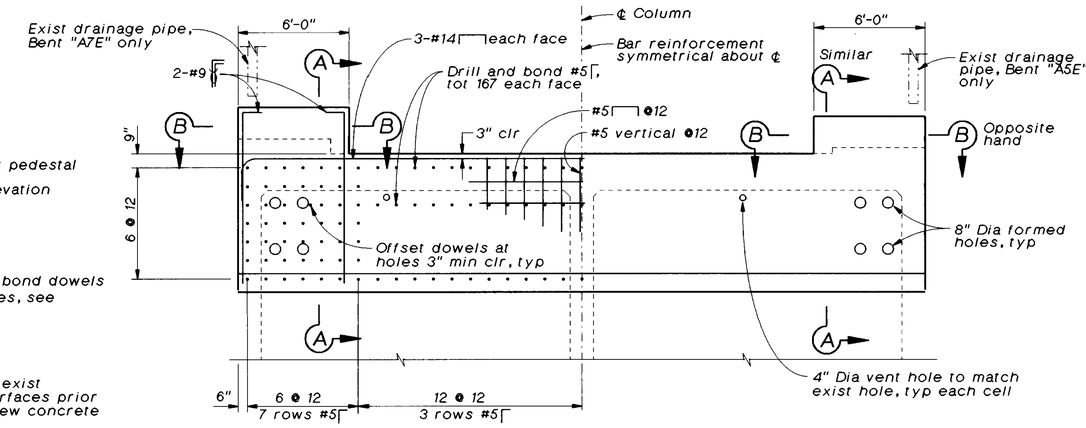

Note:

Bent "A5E" shown, Bents "A6E" and "A7E" similar.

BENT CAP ELEVATION

¼"=1'-0"

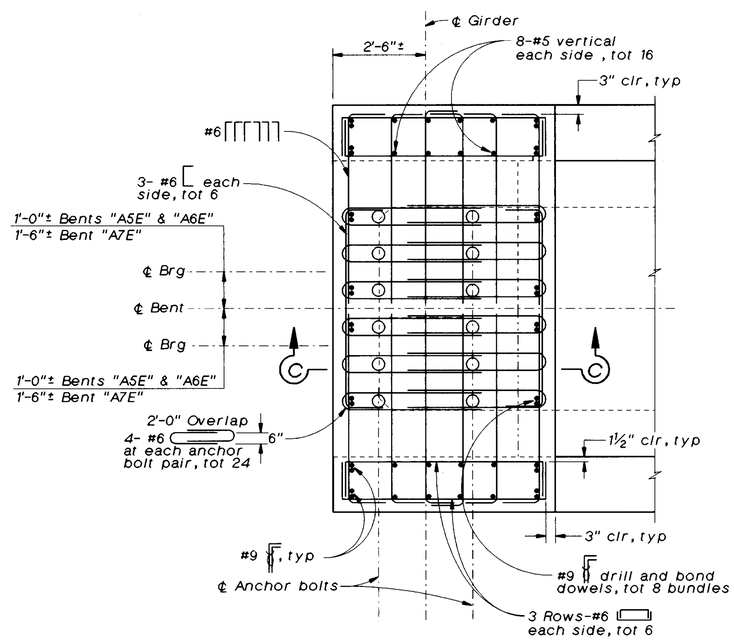

Note:

Reinforcement symmetrical about ℄ bent

SECTION B-B

½"=1'-0"

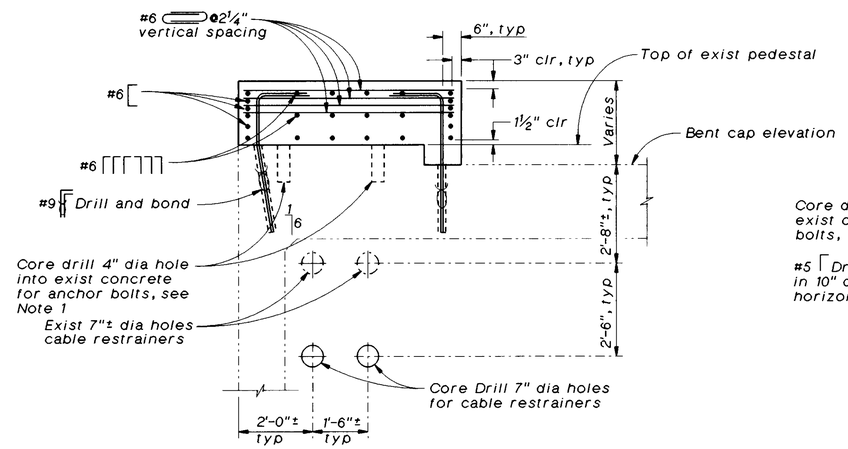

(All pedestals on Bents "A5E" and "A6E", and left pedestal on Bent "A7E")

SECTION C-C

½"=1'-0"

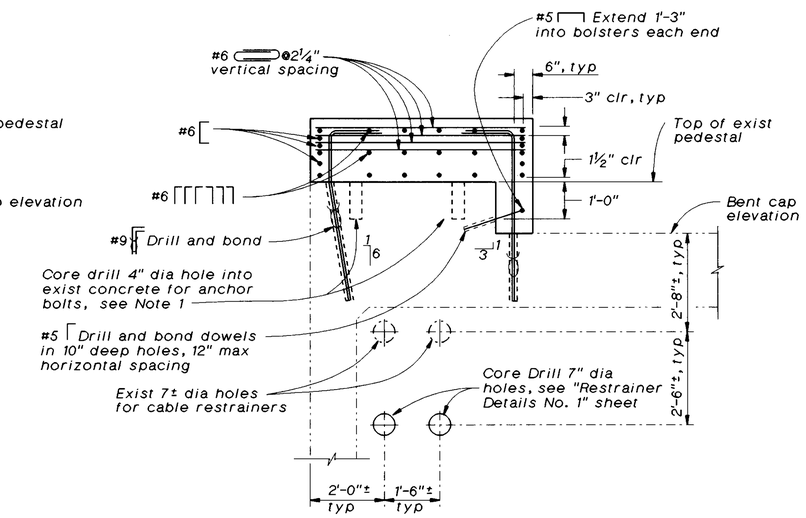

(Right pedestals on Bent "A7E")

Note:

1. For anchor bolt locations and core drill depth, see "Bearing Details No. 1" and "Bearing Details No. 2" sheets.
2. At the Contractors option, holes for #9 may be core drilled after location of existing reinforcement.

The Contractor shall verify all controlling field dimensions before ordering or fabricating any material.

NO AS BUILT CHANGES
AS BUILT
CORRECTION BY BRIAN BEAUDOIN
CONTRACT NO. 04-043934
DATE FEBRUARY, 2002
STRUCTURES REPRESENTATIVE

Vong Toan
DESIGN OVERSIGHT
April 29, 1997
SIGN OFF DATE

	BY		CHECKED
DESIGN	D. Nguyen-Tan		C. Harrington, J. Quincy
DETAILS	A. Kayden, G. Triplat		J. Quincy
QUANTITIES	D. Nguyen-Tan, S. Ismail		J. Downing

PREPARED FOR THE STATE OF CALIFORNIA DEPARTMENT OF TRANSPORTATION

Lee Holloway
PROJECT ENGINEER

BRIDGE NO. 23-15 R
POST MILE CC-13.47

SEISMIC RETROFIT PROJECT NO. 611
CARQUINEZ BRIDGE - "A4E" LINE (APPROACH SPAN)
BENT A5E, A6E, AND A7E DETAILS

CA4-BD2.DLV

ORIGINAL SCALE IN INCHES FOR REDUCED PLANS 0 1 2 3

CU 04-268
EA 043931

DISREGARD PRINTS BEARING EARLIER REVISION DATES → 15-MAR-1997

REVISION DATES (PRELIMINARY STAGE ONLY)

SHEET 40 OF 120

ClibPDF - www.fastio.com

DIST	COUNTY	ROUTE	POST MILES TOTAL PROJECT	SHEET NO.	TOTAL SHEETS
04	CC,SOL	80	12.8/14.1, 0.0/0.6	478	555

REGISTERED CIVIL ENGINEER

10-20-97
PLANS APPROVAL DATE

REGISTERED PROFESSIONAL ENGINEER — Robert L. Morrison Jr. No. 43693 Exp. 03/31/97 CIVIL — STATE OF CALIFORNIA

CH2M HILL
2485 NATOMAS PARK DR, SUITE 600
SACRAMENTO, CALIFORNIA 95833

The State of California or its officers or agents shall not be responsible for the accuracy or completeness of electronic copies of this plan sheet.

Notes:

1. For anchor bolt locations and core drill depth, see "Bearing Details No. 1" and "Bearing Details No. 3" sheets.
2. For prestress anchor beam details, see "Column Post-Tensioning Details" sheet.
3. Side walkway and pipe railing not shown for clarity.
4. For locations of Sections D-D, E-E, G-G, and H-H, see "Bent A11E Details No.1" sheet.
5. At the Contractors option, holes for #9 may be core drilled after location of existing reinforcement.

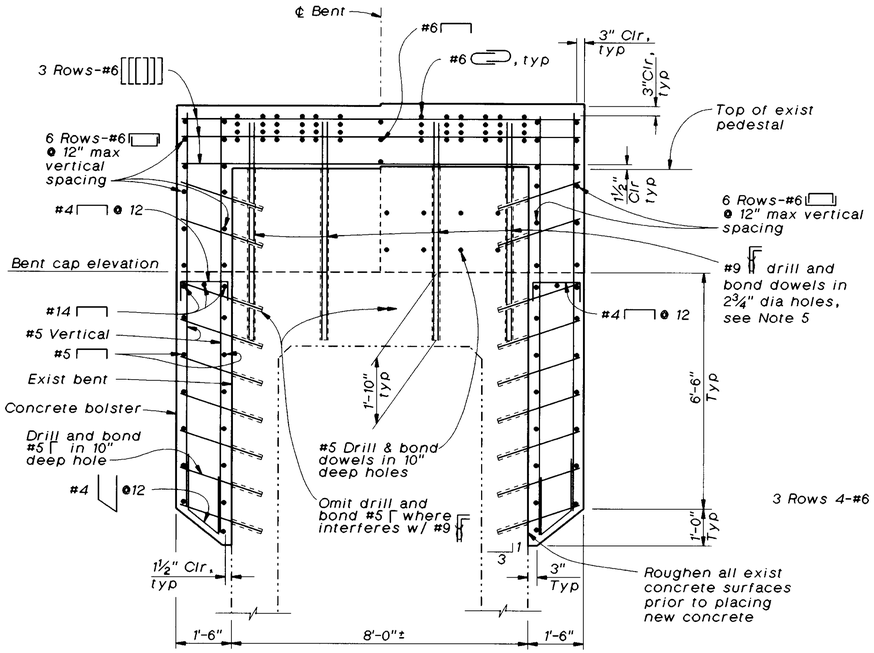

SECTION D-D

½"=1'-0"

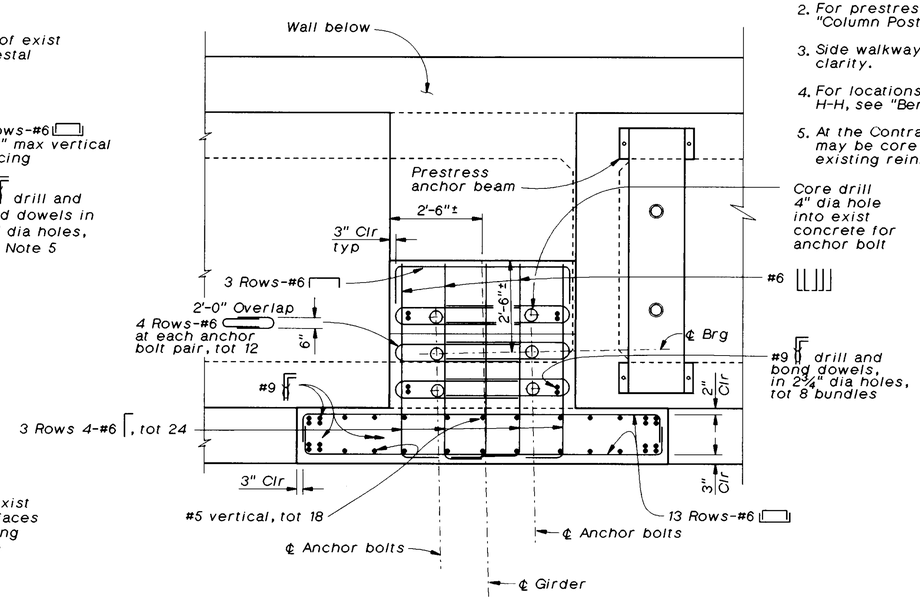

SECTION H-H

½"=1'-0"

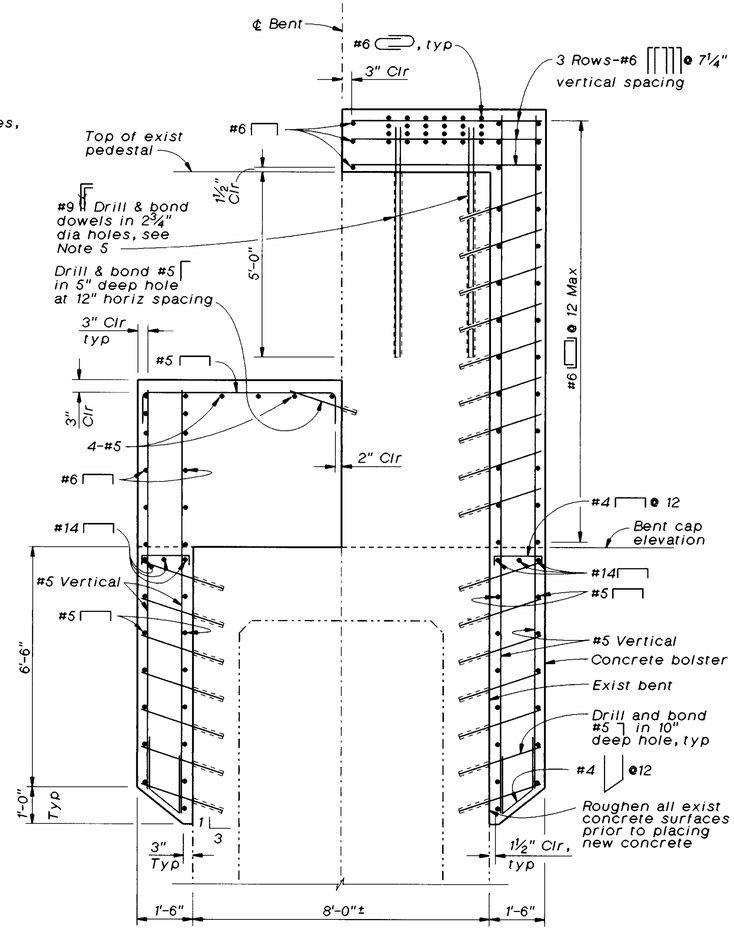

SECTION G-G

½"=1'-0"

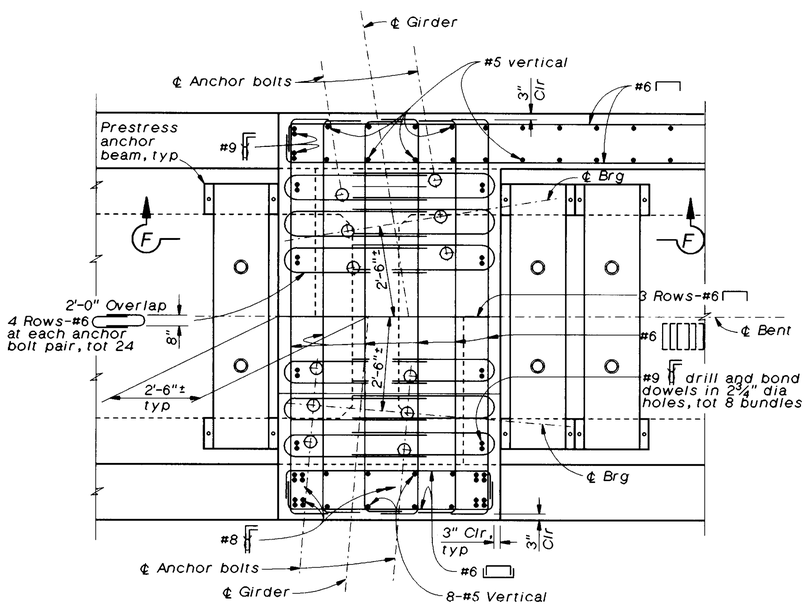

SECTION E-E

½"=1'-0"

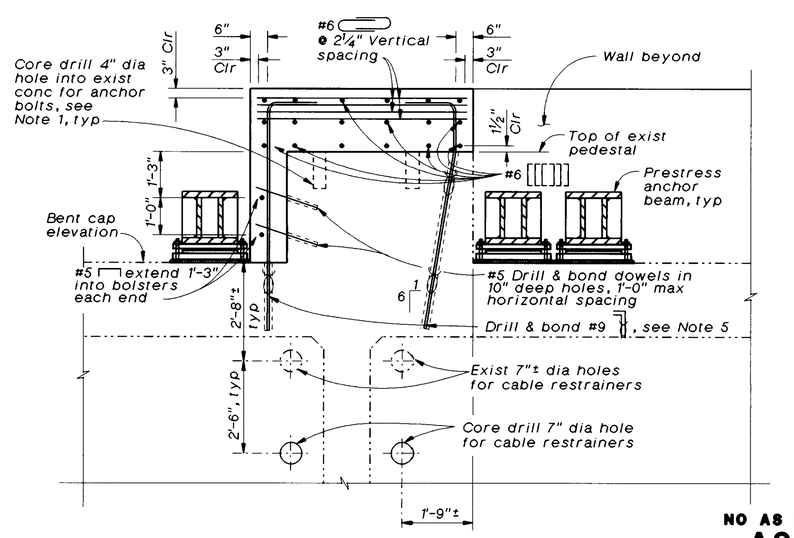

SECTION F-F

½"=1'-0"

NO AS BUILT CHANGES
AS BUILT
CORRECTION BY BRIAN BEAUDOIN
CONTRACT NO. 04-043934
DATE FEBRUARY, 2002
STRUCTURES REPRESENTATIVE

The Contractor shall verify all controlling field dimensions before ordering or fabricating any material.

Vong Toan — DESIGN OVERSIGHT — April 24, 1997 — SIGN OFF DATE	DESIGN	BY D. Nguyen-Tan	CHECKED C. Harrington, J. Quincy	PREPARED FOR THE STATE OF CALIFORNIA DEPARTMENT OF TRANSPORTATION	Lee Holloway — PROJECT ENGINEER
	DETAILS	BY A. Galbraith/A. Kayden	CHECKED J. Quincy		
	QUANTITIES	BY D. Nguyen-Tan, S. Ismail	CHECKED J. Downing		

BRIDGE NO. 23-15 R
POST MILE CC-13.47

SEISMIC RETROFIT PROJECT NO. 611
CARQUINEZ BRIDGE - "A4E" LINE (APPROACH SPAN)
BENT A11E DETAILS NO. 2

A4-BT11B.DLV

ORIGINAL SCALE IN INCHES FOR REDUCED PLANS 0 1 2 3

CU 04-268
EA 043931

DISREGARD PRINTS BEARING EARLIER REVISION DATES → REVISION DATES (PRELIMINARY STAGE ONLY) 15-MAR-1997

SHEET 43 OF 120

ClibPDF - www.fastio.com

DIST	COUNTY	ROUTE	POST MILES TOTAL PROJECT	SHEET NO.	TOTAL SHEETS
04	CC, SOL	80	12.8/14.1, 0.0/0.6	479	555

Robert L. Morrison Jr
REGISTERED CIVIL ENGINEER

PLANS APPROVAL DATE

REGISTERED PROFESSIONAL ENGINEER
Robert L. Morrison Jr
No. 43693
Exp. 03/31/97
CIVIL
STATE OF CALIFORNIA

CH2M HILL
2485 NATOMAS PARK DR, SUITE 600
SACRAMENTO, CALIFORNIA 95833

The State of California or its officers or agents shall not be responsible for the accuracy or completeness of electronic copies of this plan sheet.

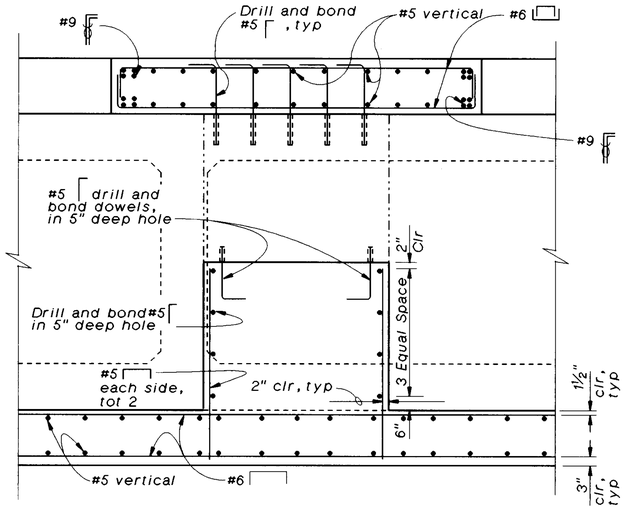

SECTION K-K

½"=1'-0"

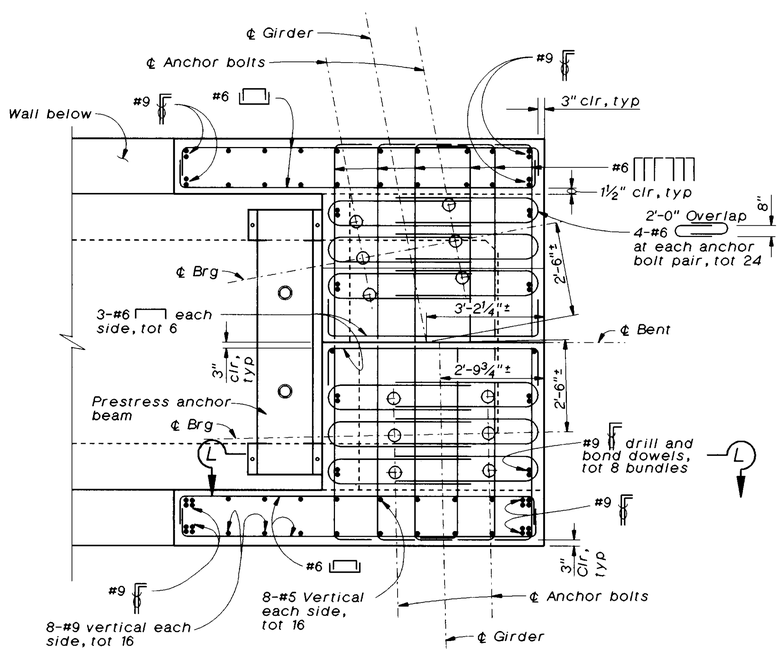

SECTION J-J

½"=1'-0"

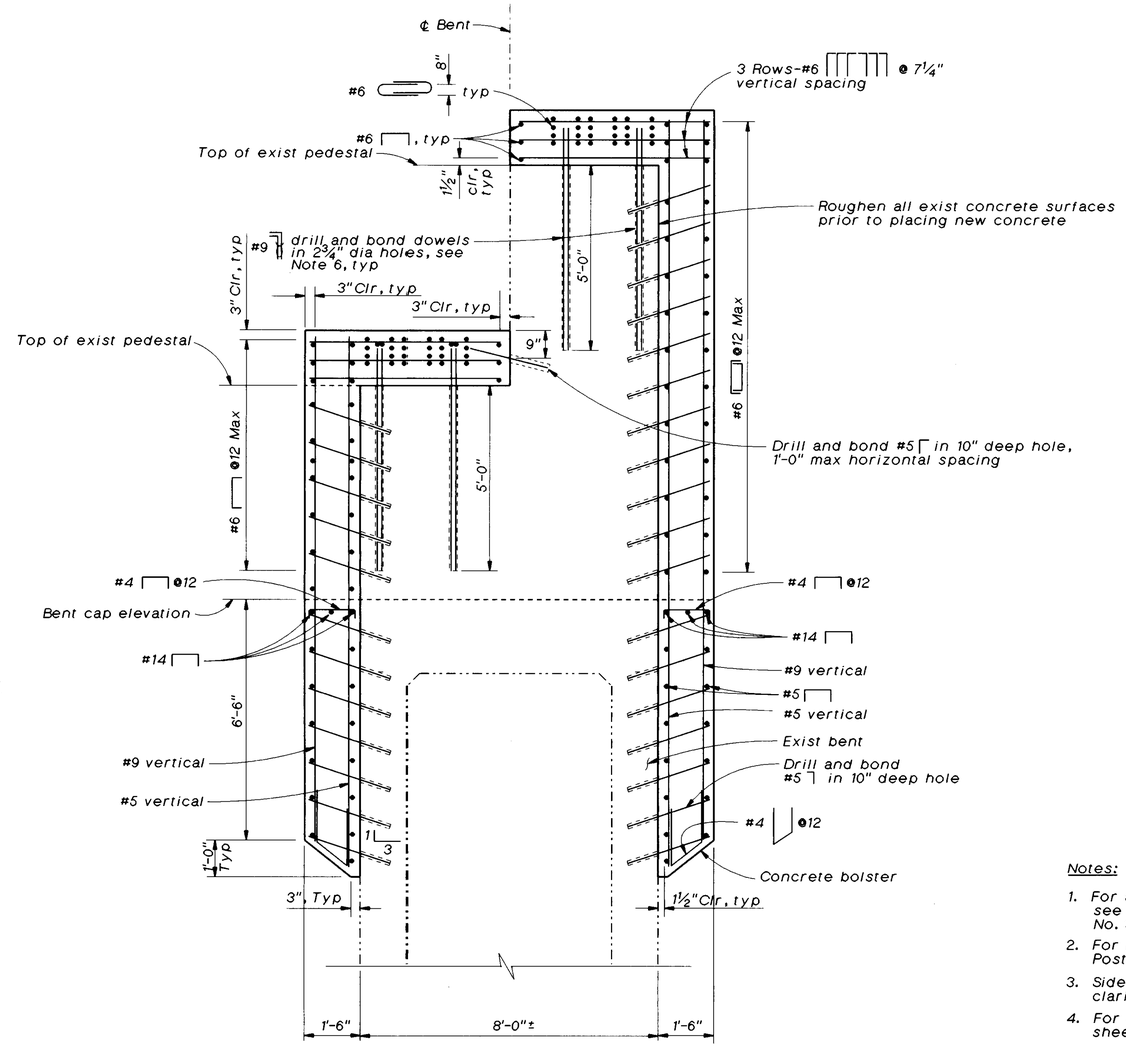

SECTION I-I

½"=1'-0"

NO AS BUILT CHANGES
AS BUILT
CORRECTION BY BRIAN BEAUDOIN
CONTRACT NO. 04-043934
DATE FEBRUARY, 2002
STRUCTURES REPRESENTATIVE

Notes:

1. For anchor bolt locations and core drill depth, see "Bearing Details No. 1" and "Bearing Details No. 3" sheets.
2. For prestress anchor beam details see "Column Post Tensioning Details" sheet.
3. Side walkway and pipe railing not shown for clarity.
4. For Section L-L, see "Bent A8E, A9E and A10E Details" sheet.
5. For location of Sections I-I, J-J, and K-K, see "Bent A11E Details No. 1" sheet.
6. At the Contractors option, holes for #9 may be core drilled after location of existing reinforcement.

The Contractor shall verify all controlling field dimensions before ordering or fabricating any material.

Vong Toan
DESIGN OVERSIGHT
April 24, 1997
SIGN OFF DATE

	BY	CHECKED
DESIGN	D. Nguyen-Tan	C. Harrington, J. Quincy
DETAILS	A. Galbraith, A. Kayden	J. Quincy
QUANTITIES	D. Nguyen-Tan, S. Ismail	J. Downing

PREPARED FOR THE STATE OF CALIFORNIA DEPARTMENT OF TRANSPORTATION

Lee Holloway
PROJECT ENGINEER

BRIDGE NO. 23-15 R
POST MILE CC-13.47

SEISMIC RETROFIT PROJECT NO. 611
CARQUINEZ BRIDGE - "A4E" LINE (APPROACH SPAN)
BENT A11E DETAILS NO. 3

a4-bt11c.dlv

ORIGINAL SCALE IN INCHES FOR REDUCED PLANS 0 1 2 3

CU 04-268
EA 043931

DISREGARD PRINTS BEARING EARLIER REVISION DATES → REVISION DATES (PRELIMINARY STAGE ONLY) 15-MAR-1997

SHEET 44 OF 120

ClibPDF - www.fastio.com

DIST	COUNTY	ROUTE	POST MILES TOTAL PROJECT	SHEET NO.	TOTAL SHEETS
04	CC, SOL	80	12.8/14.1, 0.0/0.6	480	555

Robert L. Morrison Jr
REGISTERED CIVIL ENGINEER

10-20-97
PLANS APPROVAL DATE

REGISTERED PROFESSIONAL ENGINEER
Robert L. Morrison Jr
No. 43693
Exp. 03/31/97
CIVIL
STATE OF CALIFORNIA

CH2M HILL
2485 NATOMAS PARK DR, SUITE 600
SACRAMENTO, CALIFORNIA 95833

The State of California or its officers or agents shall not be responsible for the accuracy or completeness of electronic copies of this plan sheet.

Note:
Contractor shall touch up galvanized coating on all railings and support framing after remounting.

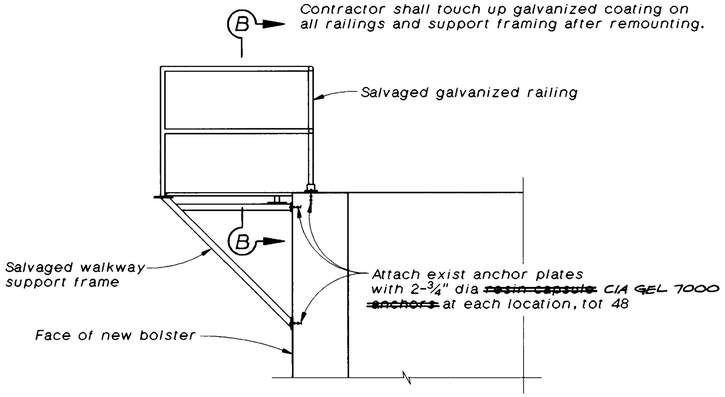

REMOUNT WALKWAY AND PIPE RAILING

1/2"=1'-0"

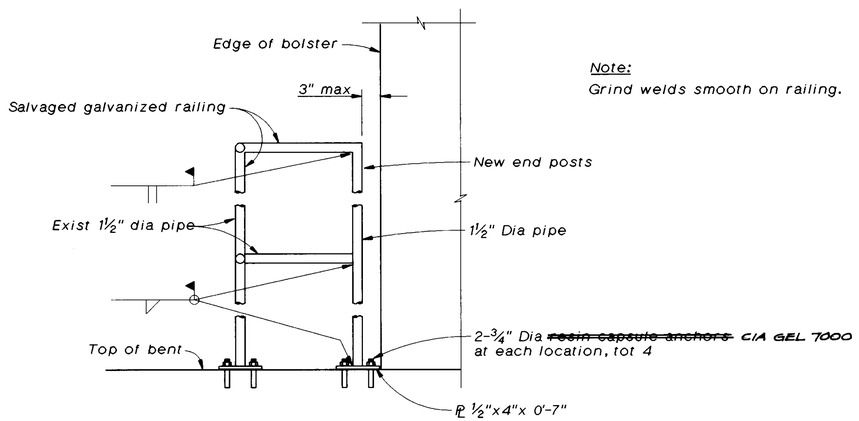

Note:
Grind welds smooth on railing.

SECTION B-B

1"=1'-0"

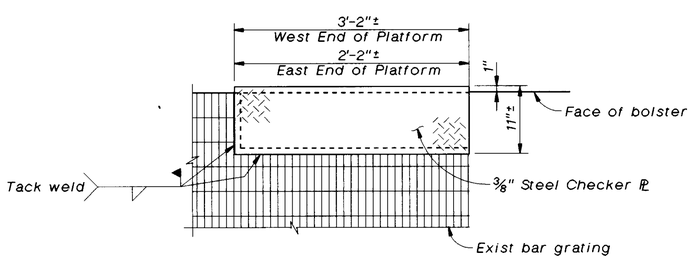

Note:
For location of Detail A, see "Restrainer Plan D" sheet.

DETAIL A

1"=1'-0"

AS BUILT
CORRECTION BY BRIAN BEAUDOIN
CONTRACT NO. 04-043934
DATE FEBRUARY, 2002
STRUCTURES REPRESENTATIVE

The Contractor shall verify all controlling field dimensions before ordering or fabricating any material.

SEISMIC RETROFIT PROJECT NO. 611

CARQUINEZ BRIDGE - "A4E" LINE (APPROACH SPAN)

BENT A11E DETAILS NO. 4

Vong Toan
DESIGN OVERSIGHT
April 24, 1997
SIGN OFF DATE

	BY	CHECKED
DESIGN	D. Nguyen-Tan	C. Harrington, J. Quincy
DETAILS	A. Galbraith	J. Quincy
QUANTITIES	D. Nguyen-Tan, S. Ismail	J. Downing

PREPARED FOR THE STATE OF CALIFORNIA DEPARTMENT OF TRANSPORTATION

Lee Holloway
PROJECT ENGINEER

BRIDGE NO. 23-15 R
POST MILE CC-13.47

A4-BT11D.DLV

ORIGINAL SCALE IN INCHES FOR REDUCED PLANS 0 1 2 3

CU 04-268
EA 043931

DISREGARD PRINTS BEARING EARLIER REVISION DATES → 15-MAR-1997

REVISION DATES (PRELIMINARY STAGE ONLY)

SHEET 45 OF 120

ClibPDF - www.fastio.com

DIST	COUNTY	ROUTE	POST MILES TOTAL PROJECT	SHEET NO.	TOTAL SHEETS
04	CC, SOL	80	12.8/14.1, 0.0/0.6	481	555

REGISTERED CIVIL ENGINEER — Robert L. Morrison Jr

10-20-97
PLANS APPROVAL DATE

REGISTERED PROFESSIONAL ENGINEER — Robert L. Morrison Jr. No. 43693 Exp. 03/31/97 CIVIL — STATE OF CALIFORNIA

CH2M HILL
2485 NATOMAS PARK DR, SUITE 600
SACRAMENTO, CALIFORNIA 95833

The State of California or its officers or agents shall not be responsible for the accuracy or completeness of electronic copies of this plan sheet.

Notes:

1. For Sections A-A and B-B see "Bent A5E, A6E, and A7E Details" sheet.
2. For Sections F-F and G-G see "Bent A8E, A9E, and A10E Details" sheet.
3. For prestress anchor beam locations and details see "Restrainer Plans C & E" and "Column Post Tensioning Details" sheets.
4. For anchor bolt locations and core drill depth, see "Bearing Details No. 1" and "Bearing Details No. 3" sheets.
5. At the Contractors option, holes for #9 may be core drilled after location of existing reinforcement.

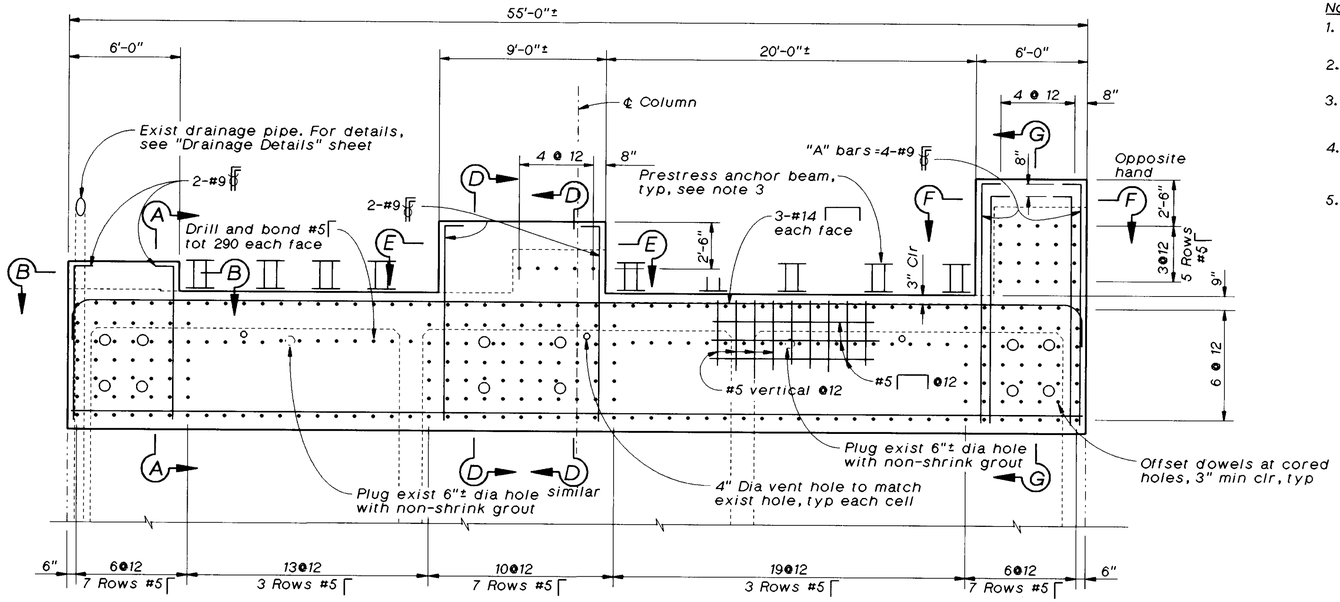

BENT CAP ELEVATION

1/4"=1'-0"

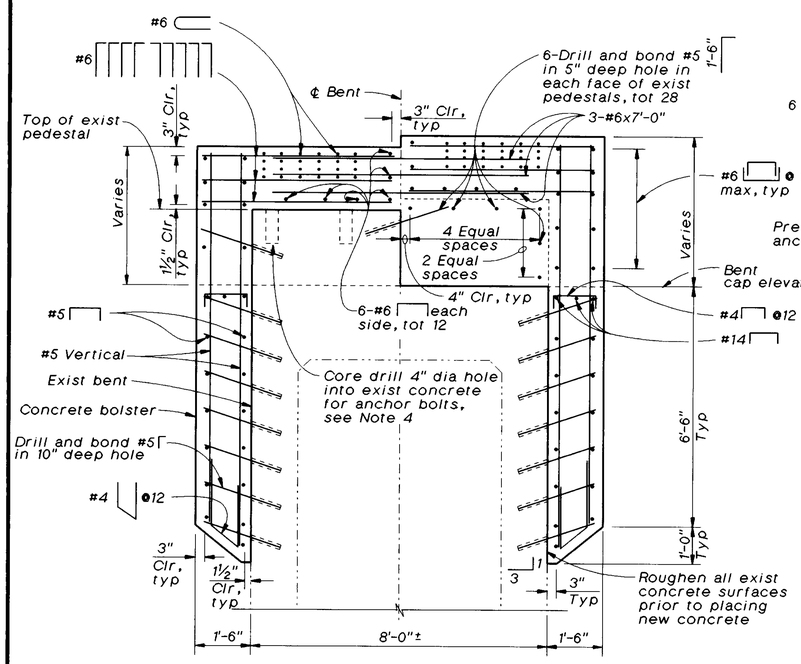

SECTION D-D

1/2"=1'-0"

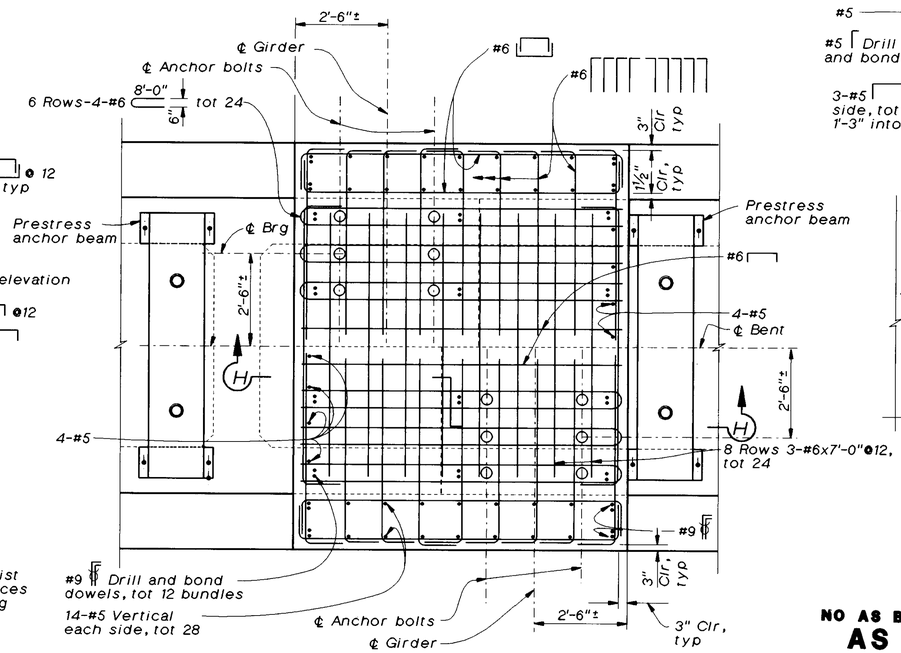

SECTION E-E

1/2"=1'-0"

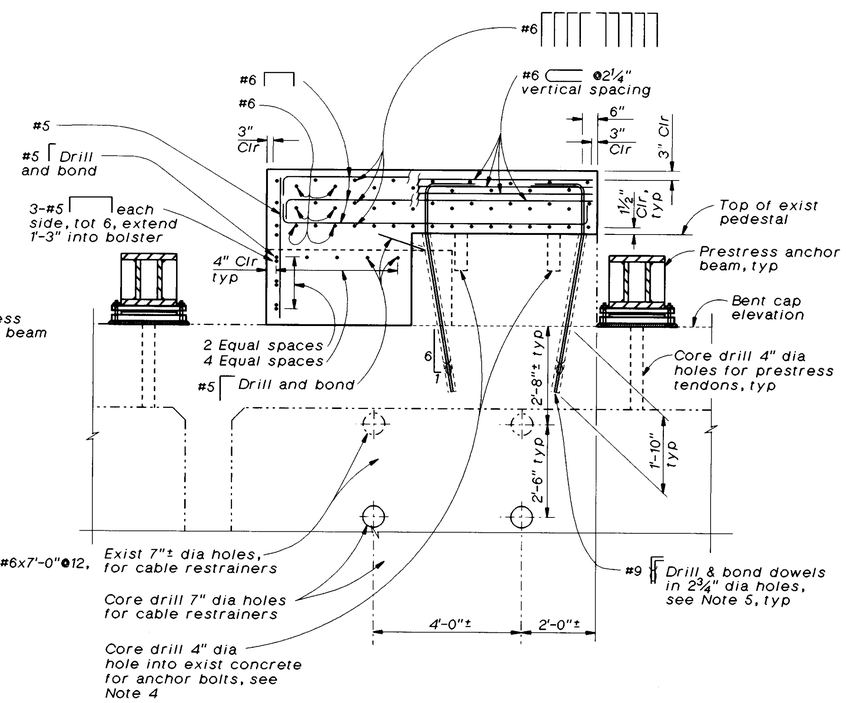

SECTION H-H

1/2"=1'-0"

The Contractor shall verify all controlling field dimensions before ordering or fabricating any material.

NO AS BUILT CHANGES
AS BUILT
CORRECTION BY BRIAN BEAUDOIN
CONTRACT NO. 04-043934
DATE FEBRUARY, 2002
STRUCTURES REPRESENTATIVE

Vong Toan
DESIGN OVERSIGHT
April 24, 1997
SIGN OFF DATE

DESIGN	BY D. Nguyen-Tan	CHECKED C. Harrington, J. Quincy	
DETAILS	BY A. Galbraith, J. Uria	CHECKED J. Quincy	
QUANTITIES	BY D. Nguyen-Tan, S. Ismail	CHECKED J. Downing	

PREPARED FOR THE STATE OF CALIFORNIA DEPARTMENT OF TRANSPORTATION

Lee Holloway
PROJECT ENGINEER

BRIDGE NO. 23-15 R
POST MILE CC-13.47

EARTHQUAKE RETROFIT PROJECT 611

CARQUINEZ BRIDGE - "A4E" LINE (APPROACH SPAN)

BENT A12E DETAILS

a4-bt12a.dlv

ORIGINAL SCALE IN INCHES FOR REDUCED PLANS 0 1 2 3

CU 04-268
EA 043931

DISREGARD PRINTS BEARING EARLIER REVISION DATES → 15-MAR-1997

REVISION DATES (PRELIMINARY STAGE ONLY)

SHEET 46 OF 120

ClibPDF - www.fastio.com

DIST	COUNTY	ROUTE	POST MILES TOTAL PROJECT	SHEET NO.	TOTAL SHEETS
04	CC SOL	80	12.8/14.1 0.0/0.6	482R1	555

REGISTERED CIVIL ENGINEER

PLANS APPROVAL DATE

REGISTERED PROFESSIONAL ENGINEER Robert L. Morrison Jr. No. 43693 Exp. 03/31/97 CIVIL STATE OF CALIFORNIA

CH2M HILL
2485 NATOMAS PARK DR, SUITE 600
SACRAMENTO, CALIFORNIA 95833

The State of California or its officers or agents shall not be responsible for the accuracy or completeness of electronic copies of this plan sheet.

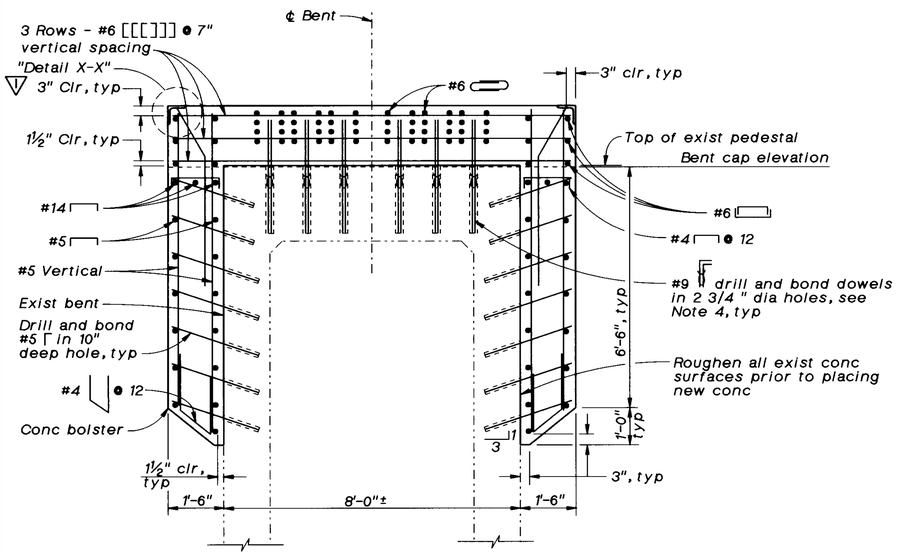

SECTION A-A

½"=1'-0"

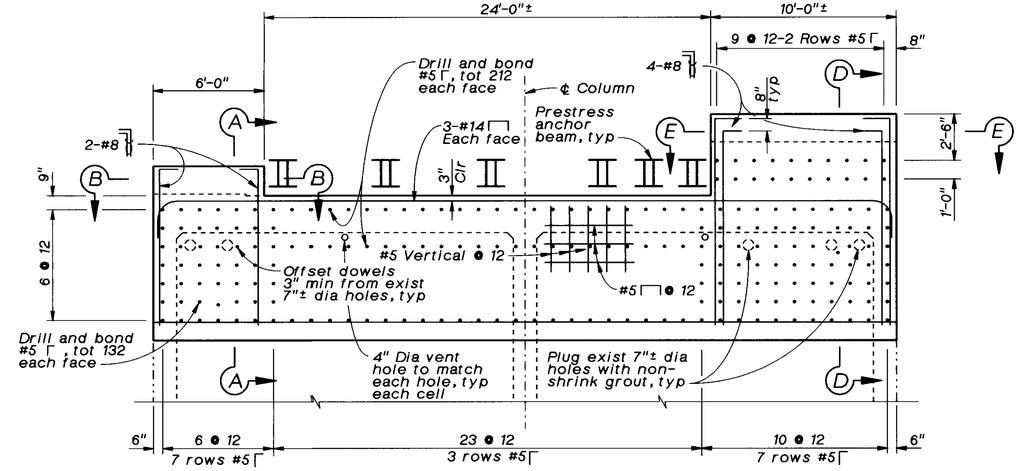

BENT CAP ELEVATION

¼"=1'-0"

MARK	DATE	DESCRIPTIONS	BY	CK
▽	12/8/98	JOINT ARMOR ADDED	JSA	CJS

REVISIONS

CONTRACT CHANGE ORDER NO. _____
SHEET ___ OF ___

NO AS BUILT CHANGES

AS BUILT

CORRECTION BY BRIAN BEAUDOIN
CONTRACT NO. 04-043934
DATE FEBRUARY, 2002
STRUCTURES REPRESENTATIVE

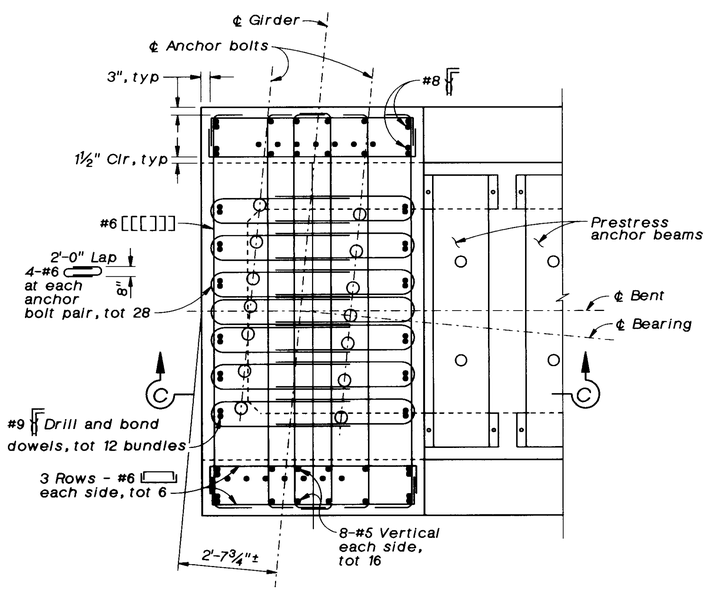

SECTION B-B

½"=1'-0"

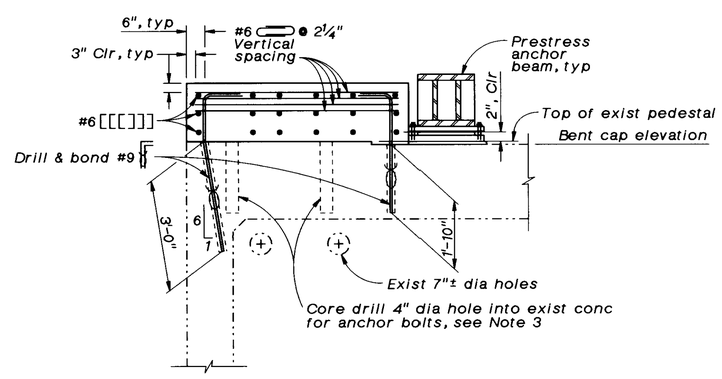

SECTION C-C

½"=1'-0"

Notes:

1. *For Sections D-D and E-E, see "Bent A13E Details No. 2" sheet.*
2. *For prestress anchor beam locations and details, see "Restrainer Plan G" and "Column Post Tensioning Details" sheets.*
3. *For anchor bolt locations and core drill depth, see "Bearing Details No. 5" and "Bearing Details No. 6" sheets.*
4. *At the Contractors option, holes for #9 may be core drilled after location of existing reinforcement.*
5. ▽ *For "Detail X-X", see "Restrainer Details No. 5" sheet.*

The Contractor shall verify all controlling field dimensions before ordering or fabricating any material.

SEISMIC RETROFIT PROJECT NO. 611

DESIGN	BY D. Nguyen-Tan	CHECKED J. Quincy	
DETAILS	BY A. Kayden, A. Galbraith	CHECKED C. Harrington, J. Quincy	
QUANTITIES	BY D. Nguyen-Tan, S. Ismail	CHECKED J. Downing	

Vong Toan — DESIGN OVERSIGHT
SIGN OFF DATE

PREPARED FOR THE STATE OF CALIFORNIA DEPARTMENT OF TRANSPORTATION

Lee Holloway — PROJECT ENGINEER

BRIDGE NO. 23-15 R — CARQUINEZ BRIDGE - "A4E" LINE (APPROACH SPAN)

POST MILE CC-13.47 — BENT A13E DETAILS NO. 1

CA4-BD7.DLV

ORIGINAL SCALE IN INCHES FOR REDUCED PLANS 0 1 2 3

CU 04-268
EA 043931

DISREGARD PRINTS BEARING EARLIER REVISION DATES →

REVISION DATES (PRELIMINARY STAGE ONLY)

SHEET 47 OF 120

ClibPDF - www.fastio.com

DIST	COUNTY	ROUTE	POST MILES TOTAL PROJECT	SHEET NO.	TOTAL SHEETS
04	CC SOL	80	12.8/14.1 0.0/0.6	483R1	555

REGISTERED CIVIL ENGINEER

PLANS APPROVAL DATE

REGISTERED PROFESSIONAL ENGINEER Robert L. Morrison Jr No. 43693 Exp. 03/31/97 CIVIL STATE OF CALIFORNIA

CH2M HILL
2485 NATOMAS PARK DR, SUITE 600
SACRAMENTO, CALIFORNIA 95833

The State of California or its officers or agents shall not be responsible for the accuracy or completeness of electronic copies of this plan sheet.

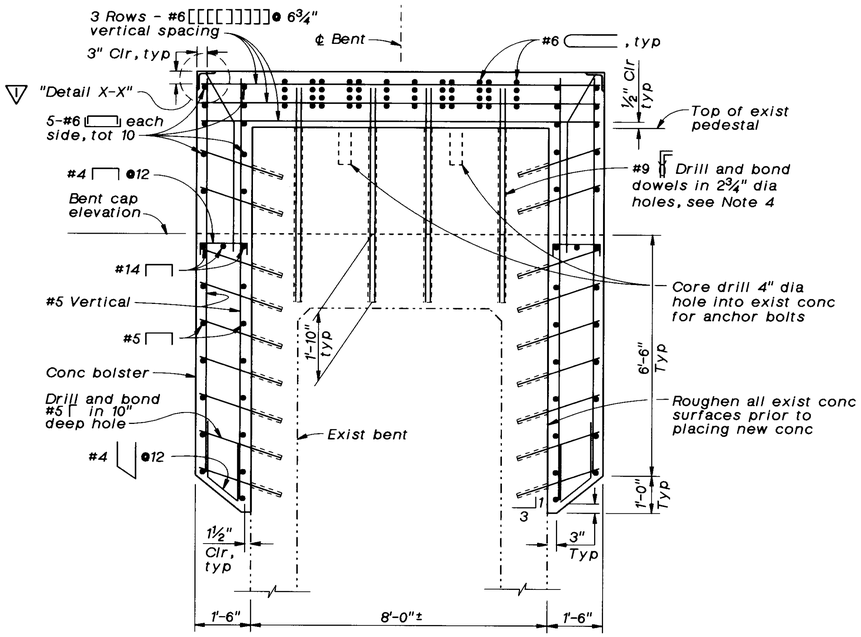

SECTION D-D

½"=1'-0"

MARK	DATE	DESCRIPTIONS	BY	CK
▽	12/8/98	JOINT ARMOR ADDED	JSA	CJS

REVISIONS

CONTRACT CHANGE ORDER NO. _____
SHEET ___ OF ___

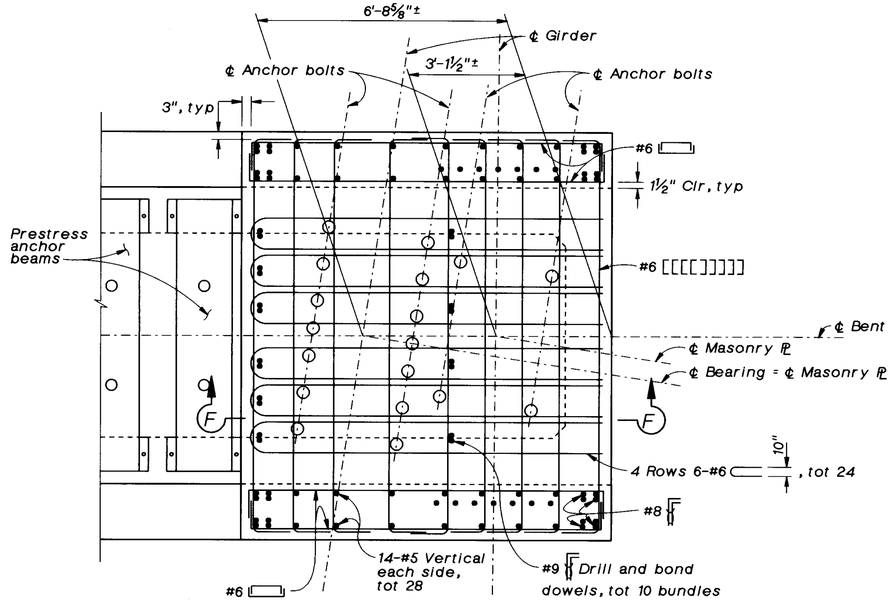

SECTION E-E

½"=1'-0"

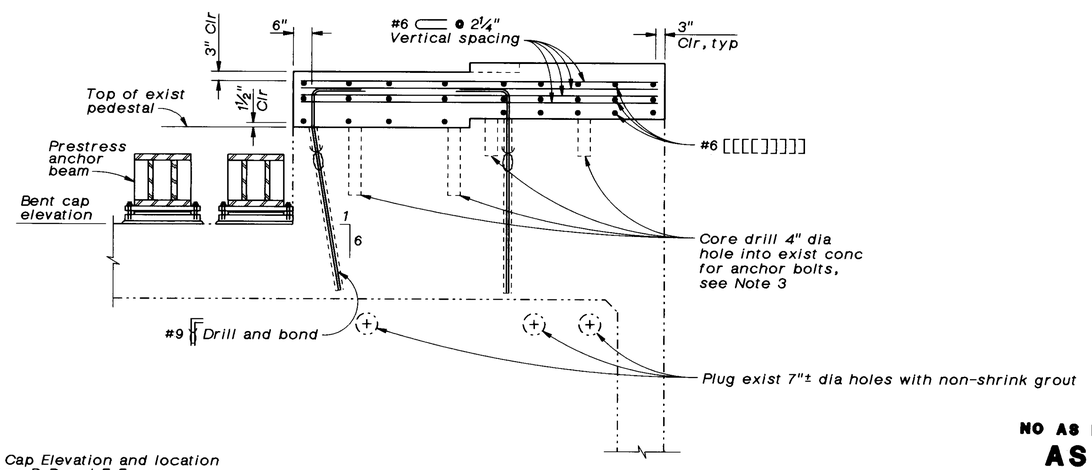

SECTION F-F

½"=1'-0"

Notes:

1. *For Bent Cap Elevation and location of Sections D-D and E-E, see "Bent A13E Details No. 1" sheet.*
2. *For prestress anchor beam locations and details, see "Restrainer Plan G" and "Column Post Tensioning Details" sheets.*
3. *For anchor bolt locations and core drill depth, see "Bearing Details No. 5" and "Bearing Details No. 6" sheets.*
4. *At the Contractors option, holes for #9 may be core drilled after location of existing reinforcement.*
5. ▽ *For "Detail X-X", see "Restrainer Details No. 5" sheet.*

NO AS BUILT CHANGES
AS BUILT
CORRECTION BY BRIAN BEAUDOIN
CONTRACT NO. 04-043934
DATE FEBRUARY, 2002
STRUCTURES REPRESENTATIVE

The Contractor shall verify all controlling field dimensions before ordering or fabricating any material.

Vong Toan
DESIGN OVERSIGHT

SIGN OFF DATE

	BY	CHECKED
DESIGN	D. Nguyen-Tan	C. Harrington, J. Quincy
DETAILS	A. Kayden, A. Galbraith	J. Quincy
QUANTITIES	D. Nguyen-Tan, S. Ismail	J. Downing

PREPARED FOR THE STATE OF CALIFORNIA DEPARTMENT OF TRANSPORTATION

Lee Holloway
PROJECT ENGINEER

BRIDGE NO. 23-15 R
POST MILE CC-13.47

SEISMIC RETROFIT PROJECT NO. 611
CARQUINEZ BRIDGE - "A4E" LINE (APPROACH SPAN)
BENT A13E DETAILS NO. 2

CA4-BD4.DLV

ORIGINAL SCALE IN INCHES FOR REDUCED PLANS 0 1 2 3

CU 04-268
EA 043931

DISREGARD PRINTS BEARING EARLIER REVISION DATES →

REVISION DATES (PRELIMINARY STAGE ONLY)

SHEET 48 OF 120

ClibPDF - www.fastio.com

DIST	COUNTY	ROUTE	POST MILES TOTAL PROJECT	SHEET NO.	TOTAL SHEETS
04	CC, SOL	80	12.8/14.1, 0.0/0.6	485	555

Robert L. Morrison Jr
REGISTERED CIVIL ENGINEER

10-20-97
PLANS APPROVAL DATE

REGISTERED PROFESSIONAL ENGINEER
Robert L. Morrison Jr
No. 43693
Exp. 03/31/97
CIVIL
STATE OF CALIFORNIA

CH2M HILL
2485 NATOMAS PARK DR, SUITE 600
SACRAMENTO, CALIFORNIA 95833

The State of California or its officers or agents shall not be responsible for the accuracy or completeness of electronic copies of this plan sheet.

Note:
See Typical Section - Span "11-E" & "12-E" for details not shown.

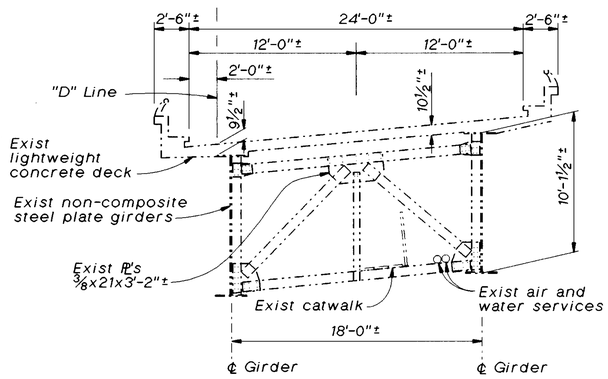

RAMP TYPICAL SECTION - SPAN "D-6"

3/16 "=1'-0"

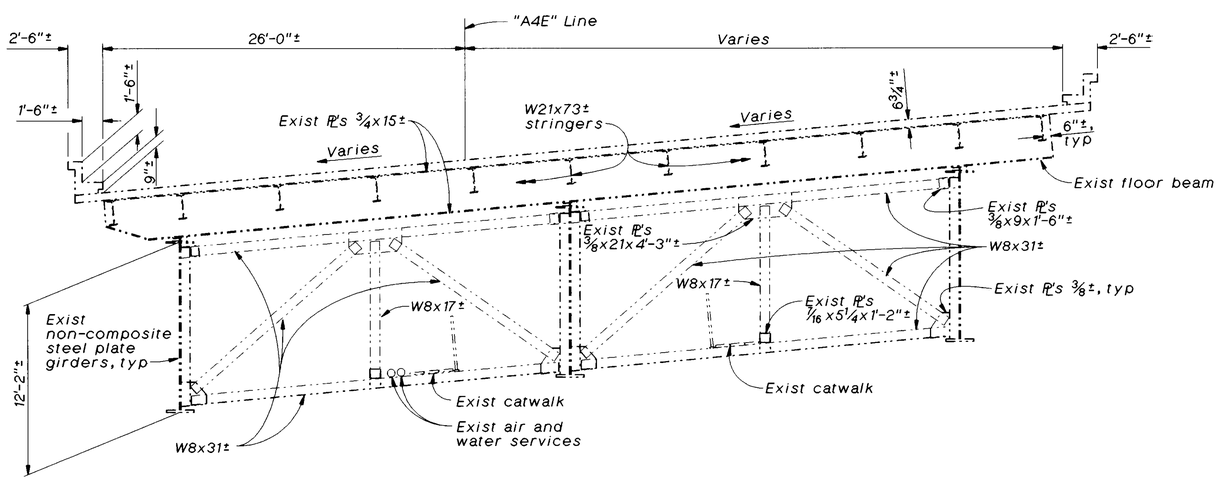

END SECTION - SPAN "11-E" & "12-E"

3/16 "=1'-0"

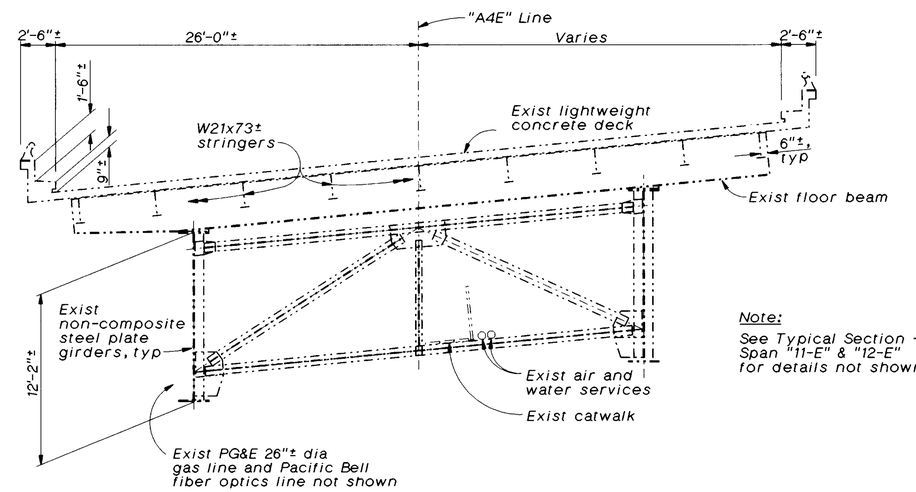

Note:
See Typical Section - Span "11-E" & "12-E" for details not shown.

TYPICAL SECTION - SPAN "A13E"

3/16 "=1'-0"

NO AS BUILT CHANGES
AS BUILT
CORRECTION BY BRIAN BEAUDOIN
CONTRACT NO. 04-043934
DATE FEBRUARY, 2002
STRUCTURES REPRESENTATIVE

Notes:

1. *All girder webs vertical. Girders at 32'± centers except at spans "11-E", "12-E" and ramp span "D-6".*
2. *Exist gusset plate dimensions for estimating purposes only..*

The Contractor shall verify all controlling field dimensions before ordering or fabricating any material.

SEISMIC RETROFIT PROJECT NO. 611
CARQUINEZ BRIDGE - "A4E" LINE (APPROACH SPAN)
AS-BUILT TYPICAL SECTIONS NO. 2

Vong Toan
DESIGN OVERSIGHT
April 24, 1997
SIGN OFF DATE

	BY	CHECKED
DESIGN	R. Morrison, Jr.	C. Harrington/ J. Quincy
DETAILS	G. Bazán	J. Quincy
QUANTITIES	D. Nguyen-Tan/ S. Ismail	J. Downing

PREPARED FOR THE STATE OF CALIFORNIA DEPARTMENT OF TRANSPORTATION

Lee Holloway
PROJECT ENGINEER

BRIDGE NO. 23-15 R
POST MILE CC-13.47

a4e-typ2.dlv

ORIGINAL SCALE IN INCHES FOR REDUCED PLANS 0 1 2 3

CU 04-268
EA 043931

DISREGARD PRINTS BEARING EARLIER REVISION DATES → 15-MAR-1997

REVISION DATES (PRELIMINARY STAGE ONLY)

SHEET 50 OF 120

ClibPDF - www.fastio.com

DIST	COUNTY	ROUTE	POST MILES TOTAL PROJECT	SHEET NO.	TOTAL SHEETS
04	CC, SOL	80	12.8/14.1, 0.0/9.6	486	555

Robert L. Morrison Jr
REGISTERED CIVIL ENGINEER

PLANS APPROVAL DATE

REGISTERED PROFESSIONAL ENGINEER
Robert L. Morrison Jr
No. 43693
Exp. 03/31/97
CIVIL
STATE OF CALIFORNIA

CH2M HILL
2485 NATOMAS PARK DR, SUITE 600
SACRAMENTO, CALIFORNIA 95833

The State of California or its officers or agents shall not be responsible for the accuracy or completeness of electronic copies of this plan sheet.

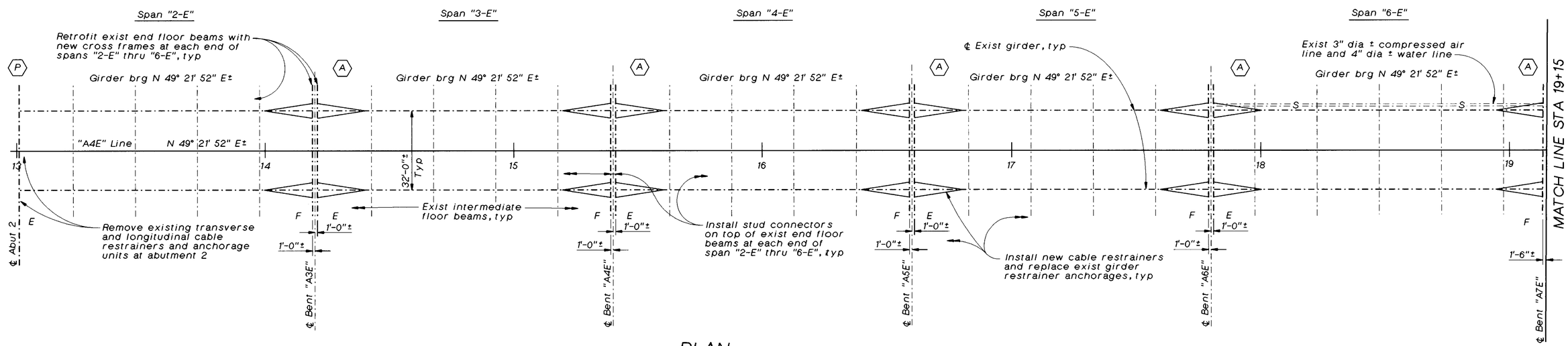

PLAN
1"=20'

LEGEND

⬡	Indicates exist cable restrainer removal and new cable restrainer installation plan letter
>	Indicates new cable restrainers
F	Indicates fixed bearings
E	Indicates expansion bearings.
—·—·—	Indicates existing structure
———	Indicates new structure or retrofit existing structure
:=:=S:=:=	Indicates service lines
·—·—G·—·—	Indicates gas line and fiber optics line

Notes:

1. For end cross frame retrofit and new stud connector details see "End Cross Frame Details" sheets.
2. For existing restrainer removal see "Restrainer Removal Plan" sheets. For new restrainer installation see " Restrainer Details" and "Restrainer Plan" sheets.
3. Replace existing steel bearings with elastomeric bearings at Bents "A3E" thru "A12E". For bearing replacement and details see "Temporary Support Details" and "Bearing Details" sheets. For exist pedestal modification see "Bent Layout" and "Bent Details" sheets.
4. Existing steel stringers not shown.

NO AS BUILT CHANGES
AS BUILT
CORRECTION BY BRIAN BEAUDOIN
CONTRACT NO. 04-043934
DATE FEBRUARY, 2002
STRUCTURES REPRESENTATIVE

The Contractor shall verify all controlling field dimensions before ordering or fabricating any material.

SEISMIC RETROFIT PROJECT NO. 611

Vong Toan
DESIGN OVERSIGHT
April 24, 1997
SIGN OFF DATE

	BY	CHECKED
DESIGN	R. Morrison, Jr.	C. Harrington, J. Quincy
DETAILS	A. Kayden	J. Quincy
QUANTITIES	D. Nguyen-Tan, S. Ismail	J. Downing

PREPARED FOR THE STATE OF CALIFORNIA DEPARTMENT OF TRANSPORTATION

Lee Holloway
PROJECT ENGINEER

BRIDGE NO. 23-15 R
POST MILE CC-13.47

CARQUINEZ BRIDGE - "A4E" LINE (APPROACH SPAN)

GIRDER LAYOUT NO. 1

CA4-GRL1.DLV

ORIGINAL SCALE IN INCHES FOR REDUCED PLANS 0 1 2 3

CU 04-268
EA 043931

DISREGARD PRINTS BEARING EARLIER REVISION DATES → 15-MAR-1997

REVISION DATES (PRELIMINARY STAGE ONLY)

SHEET 51 OF 120

ClibPDF - www.fastio.com

DIST	COUNTY	ROUTE	POST MILES TOTAL PROJECT	SHEET NO.	TOTAL SHEETS
04	CC, SOL	80	12.8/14.1, 0.0/0.6	498	555

Robert L. Morrison Jr
REGISTERED CIVIL ENGINEER

10-20-97
PLANS APPROVAL DATE

REGISTERED PROFESSIONAL ENGINEER
Robert L. Morrison Jr
No. 43693
Exp. 03/31/97
CIVIL
STATE OF CALIFORNIA

CH2M HILL
2485 NATOMAS PARK DR, SUITE 600
SACRAMENTO, CALIFORNIA 95833

The State of California or its officers or agents shall not be responsible for the accuracy or completeness of electronic copies of this plan sheet.

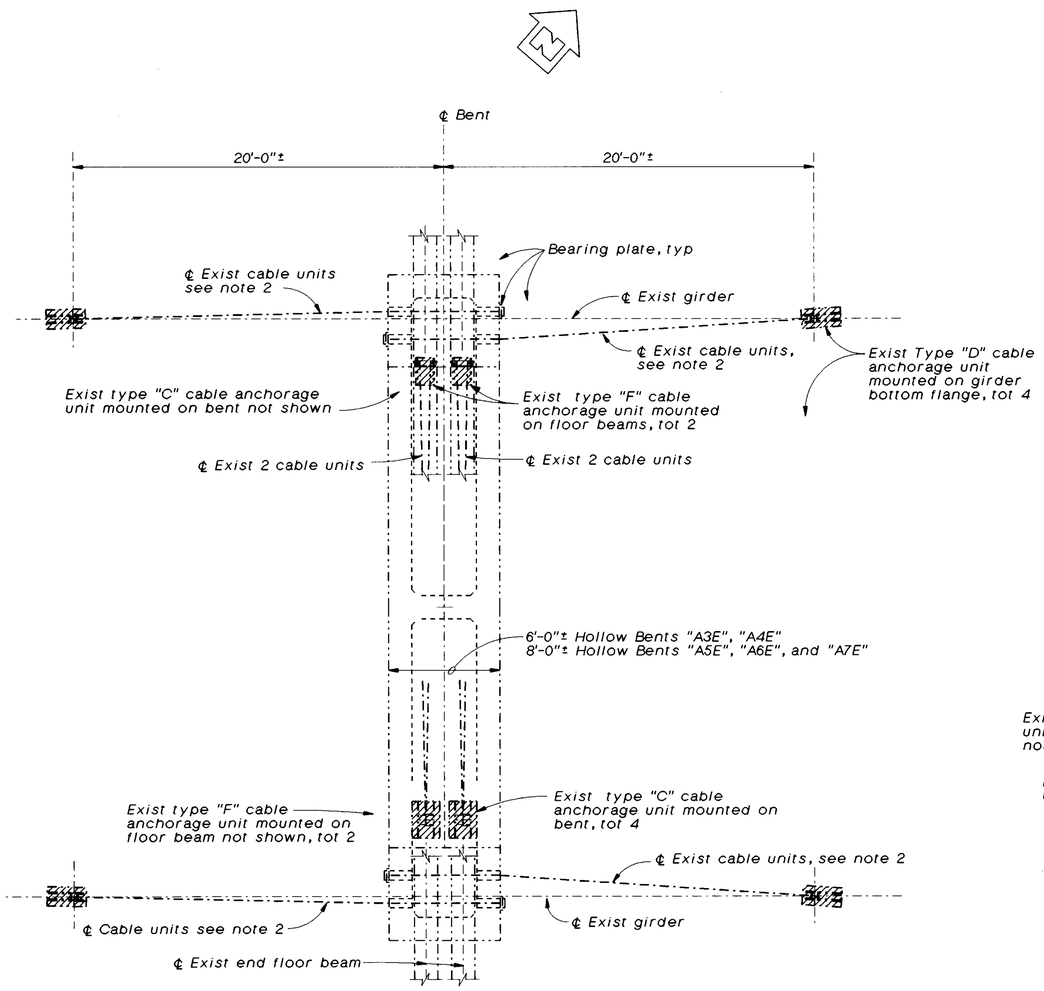

PLAN "A" - BENTS "A3E" THRU "A7E"

1/4"=1'-0"

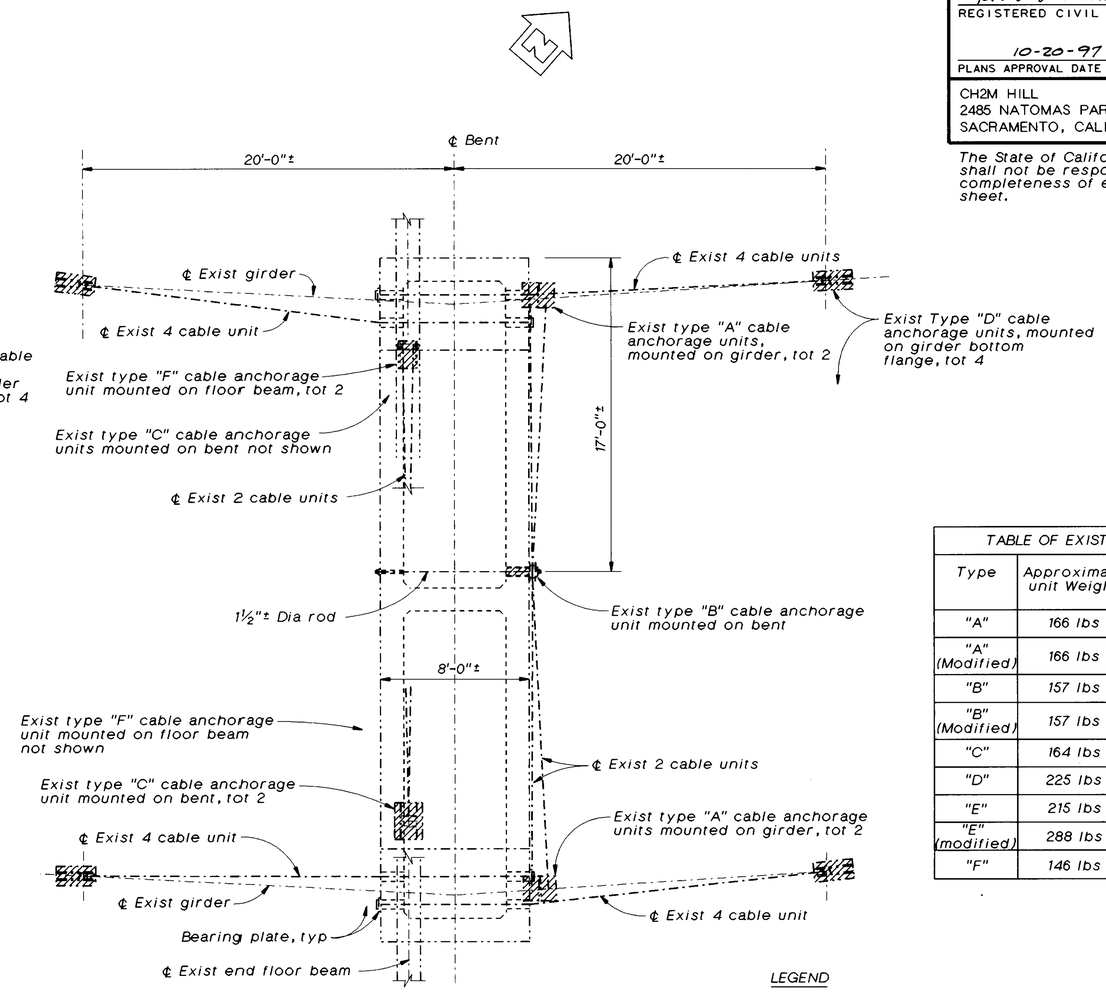

PLAN "B" - BENT "A8E"

1/4"=1'-0"

TABLE OF EXIST CABLE ANCHORAGE UNITS			
Type	Approximate unit Weight	No of HS Bolts	No of anchor bolts (rods)
"A"	166 lbs	6	-
"A" (Modified)	166 lbs	-	6
"B"	157 lbs	-	1 (rod)
"B" (Modified)	157 lbs	-	1 (rod)
"C"	164 lbs	-	10
"D"	225 lbs	12	-
"E"	215 lbs	16	-
"E" (modified)	288 lbs	16	-
"F"	146 lbs	8	-

LEGEND

Existing anchorage to be removed.

Notes:

1. All existing transverse and longitudinal 3/4"± dia restrainer units and anchorage units in Plans "A" and "B" are to be removed.
2. 3 Cable units for Bents "A3E" & "A4E", 4 Cable units for Bents "A5E" thru "A7E"
3. For anchor bolt removal detail of existing anchorage units mounted on bent, see "Restrainer Removal Plan D" sheet.
4. Existing catwalk not shown.

The Contractor shall verify all controlling field dimensions before ordering or fabricating any material.

NO AS BUILT CHANGES
AS BUILT
CORRECTION BY BRIAN BEAUDOIN
CONTRACT NO. 04-043934
DATE FEBRUARY, 2002
STRUCTURES REPRESENTATIVE

SEISMIC RETROFIT PROJECT NO. 611
CARQUINEZ BRIDGE - "A4E" LINE (APPROACH SPAN)
RESTRAINER REMOVAL PLANS A & B

Vong Toan
DESIGN OVERSIGHT
April 29, 1997
SIGN OFF DATE

	BY	CHECKED	
DESIGN	R. Morrison, Jr.	C. Harrington, J. Quincy	
DETAILS	A. Kayden	J. Quincy	
QUANTITIES	D. Nguyen-Tan, S. Ismail	J. Downing	

PREPARED FOR THE STATE OF CALIFORNIA DEPARTMENT OF TRANSPORTATION

Lee Holloway
PROJECT ENGINEER

BRIDGE NO. 23-15 R
POST MILE CC-13.47

car-res7.dlv

ORIGINAL SCALE IN INCHES FOR REDUCED PLANS 0 1 2 3

CU 04-268
EA 043931

DISREGARD PRINTS BEARING EARLIER REVISION DATES
REVISION DATES (PRELIMINARY STAGE ONLY) 15-MAR-1997
SHEET 54 OF 120

ClibPDF - www.fastio.com

DIST	COUNTY	ROUTE	POST MILES TOTAL PROJECT	SHEET NO.	TOTAL SHEETS
04	CC, SOL	80	12.8/14.1, 0.0/0.6	490	555

REGISTERED CIVIL ENGINEER

10-20-97
PLANS APPROVAL DATE

REGISTERED PROFESSIONAL ENGINEER — Robert L. Morrison Jr — No. 43693 — Exp. 03/31/97 — CIVIL — STATE OF CALIFORNIA

CH2M HILL
2485 NATOMAS PARK DR, SUITE 600
SACRAMENTO, CALIFORNIA 95833

The State of California or its officers or agents shall not be responsible for the accuracy or completeness of electronic copies of this plan sheet.

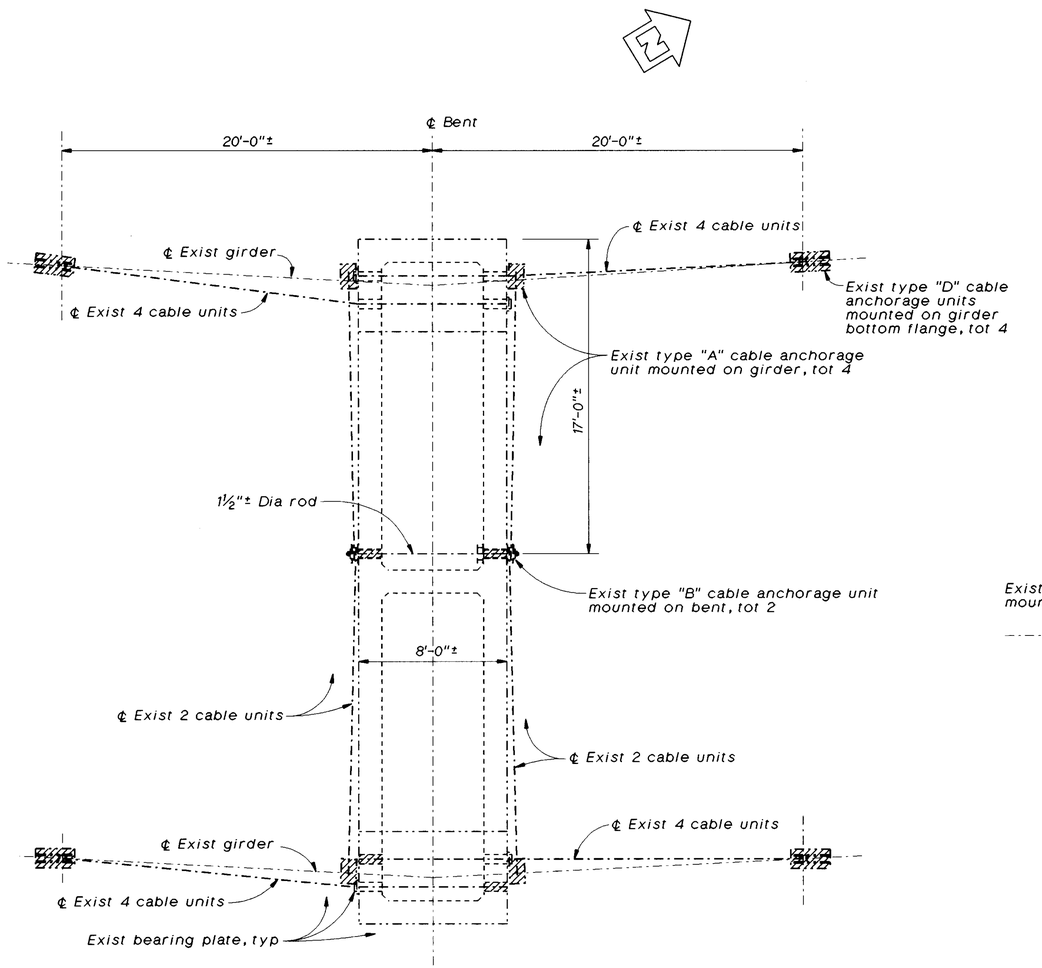

PLAN "C" - BENTS "A9E" & "A10E"

¼"=1'-0"

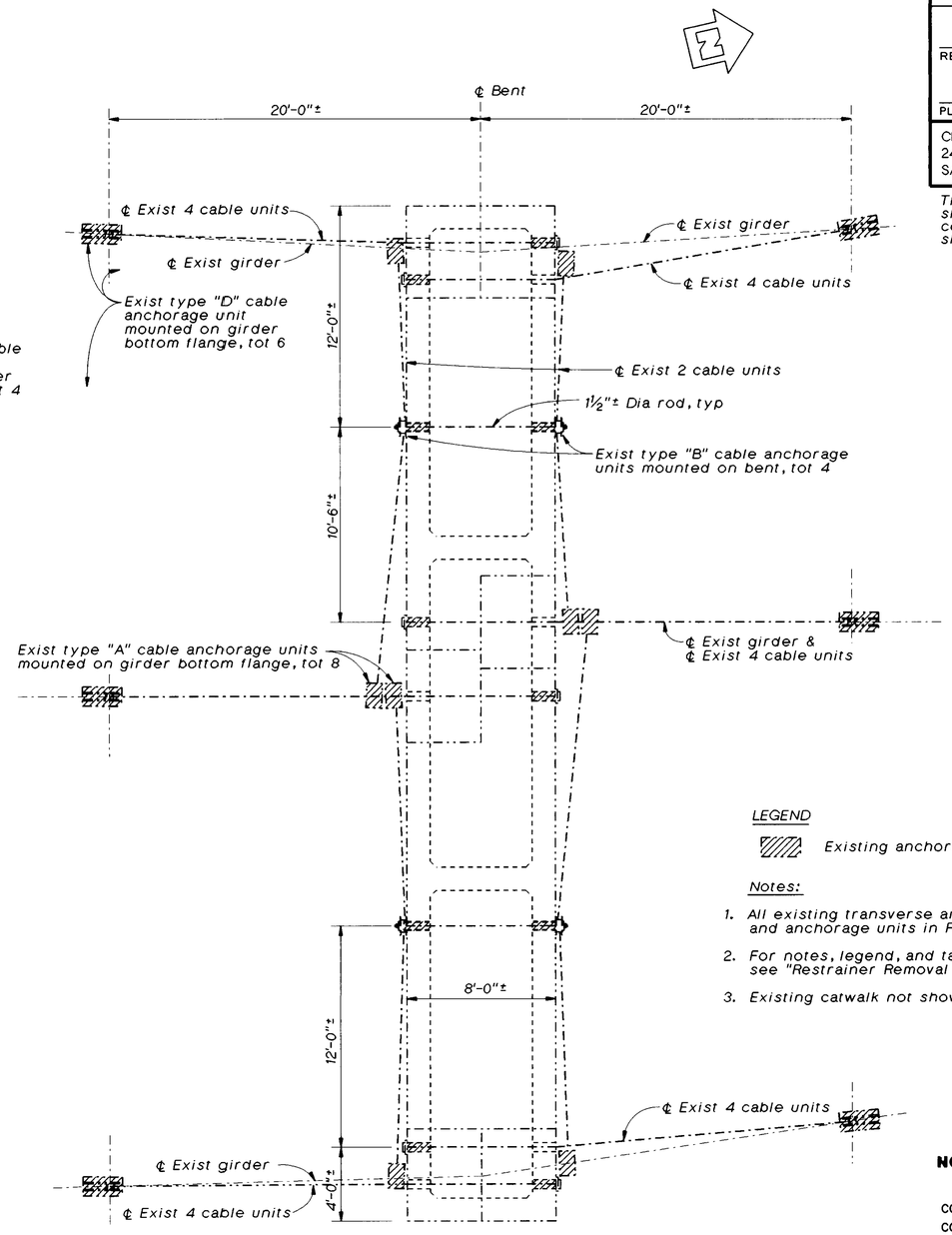

PLAN "E" - BENT "A12E"

¼"=1'-0"

LEGEND

Existing anchorage to be removed.

Notes:

1. All existing transverse and longitudinal ¾"± dia restrainer units and anchorage units in Plans "C" and "E" are to be removed.
2. For notes, legend, and table of existing cable anchorage units, see "Restrainer Removal Plans A & B" sheet.
3. Existing catwalk not shown.

NO AS BUILT CHANGES
AS BUILT
CORRECTION BY BRIAN BEAUDOIN
CONTRACT NO. 04-043934
DATE FEBRUARY, 2002
STRUCTURES REPRESENTATIVE

The Contractor shall verify all controlling field dimensions before ordering or fabricating any material.

EARTHQUAKE RETROFIT PROJECT 611

CARQUINEZ BRIDGE - "A4E" LINE (APPROACH SPAN)

RESTRAINER REMOVAL PLANS C & E

Vong Toan
DESIGN OVERSIGHT
April 21, 1997
SIGN OFF DATE

	BY	CHECKED
DESIGN	R. Morrison, Jr.	C. Harrington, J. Quincy
DETAILS	A. Kayden	J. Quincy
QUANTITIES	D. Nguyen-Tan, S. Ismail	J. Downing

PREPARED FOR THE STATE OF CALIFORNIA DEPARTMENT OF TRANSPORTATION

Lee Holloway
PROJECT ENGINEER

BRIDGE NO. 23-15 R
POST MILE CC-13.47

car-res8.dlv

ORIGINAL SCALE IN INCHES FOR REDUCED PLANS 0 1 2 3

CU 04-268
EA 043931

DISREGARD PRINTS BEARING EARLIER REVISION DATES → 15-MAR-1997

REVISION DATES (PRELIMINARY STAGE ONLY)

SHEET 55 OF 120

ClibPDF - www.fastio.com

DIST	COUNTY	ROUTE	POST MILES TOTAL PROJECT	SHEET NO.	TOTAL SHEETS
04	CC, SOL	80	12.8/14.1, 0.0/0.6	491	555

Robert L. Morrison Jr.
REGISTERED CIVIL ENGINEER

10-20-97
PLANS APPROVAL DATE

REGISTERED PROFESSIONAL ENGINEER Robert L. Morrison Jr. No. 43693 Exp. 03/31/97 CIVIL STATE OF CALIFORNIA

CH2M HILL
2485 NATOMAS PARK DR, SUITE 600
SACRAMENTO, CALIFORNIA 95833

The State of California or its officers or agents shall not be responsible for the accuracy or completeness of electronic copies of this plan sheet.

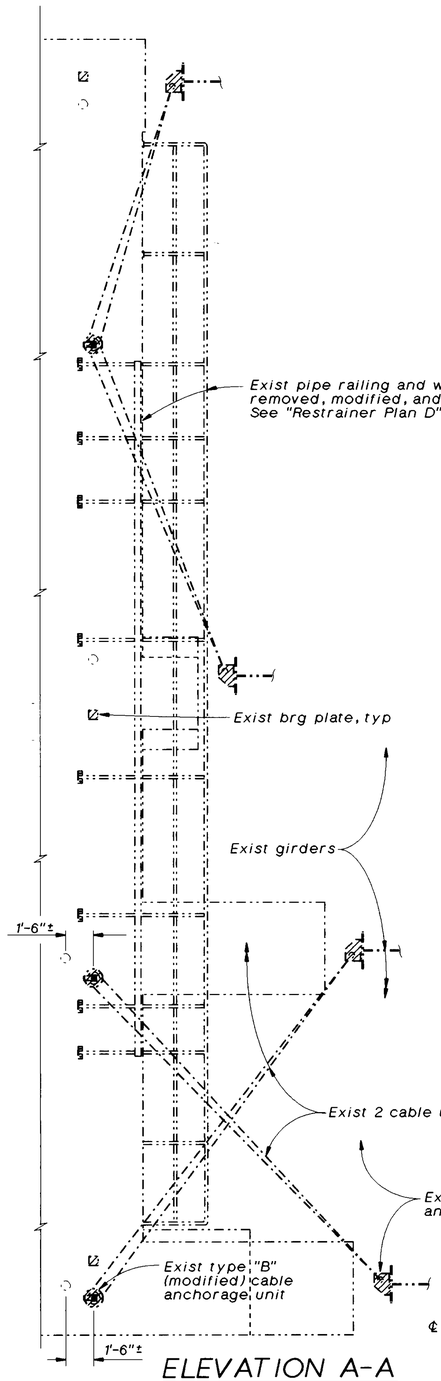

ELEVATION A-A

1/4"=1'-0"

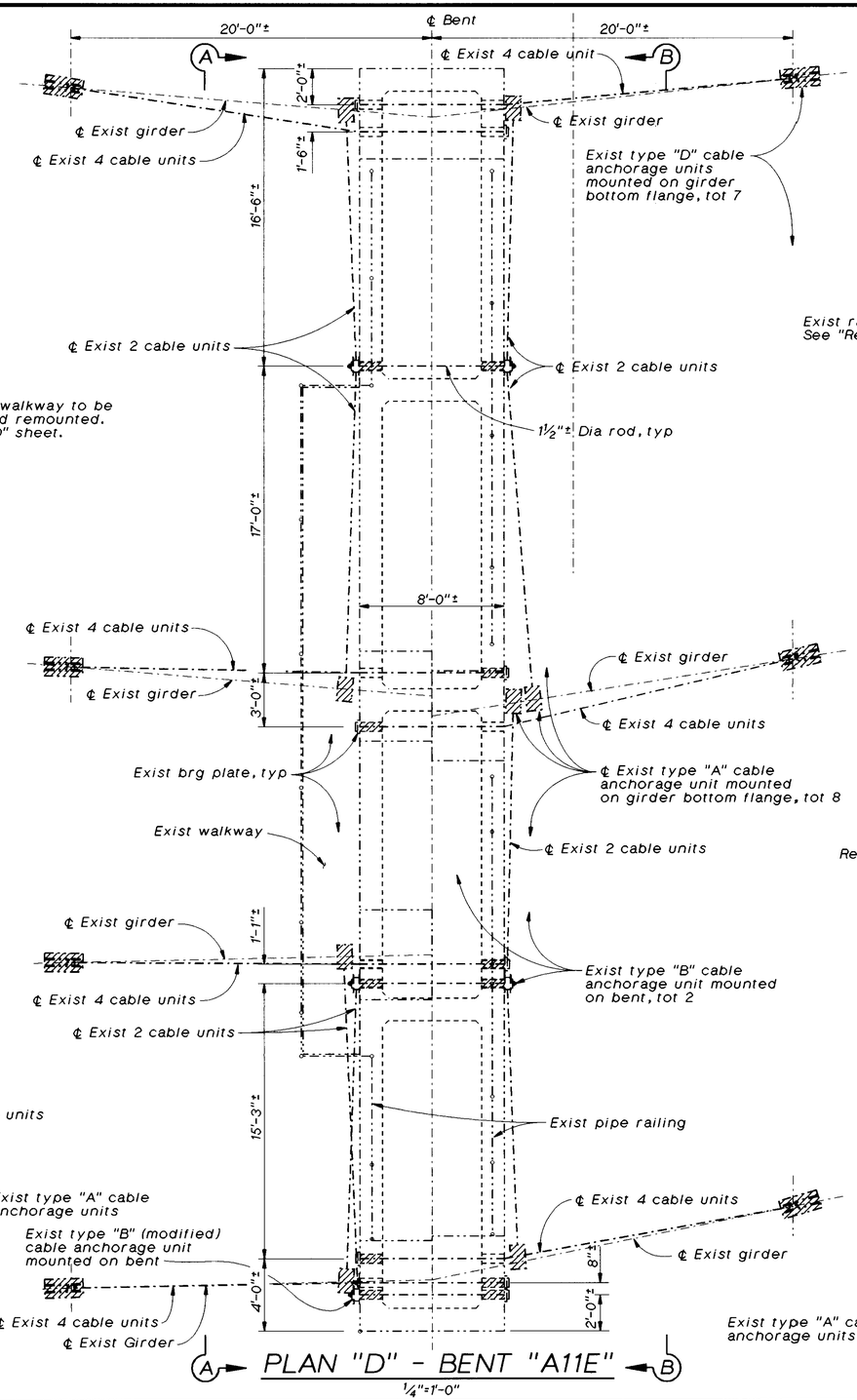

PLAN "D" - BENT "A11E"

1/4"=1'-0"

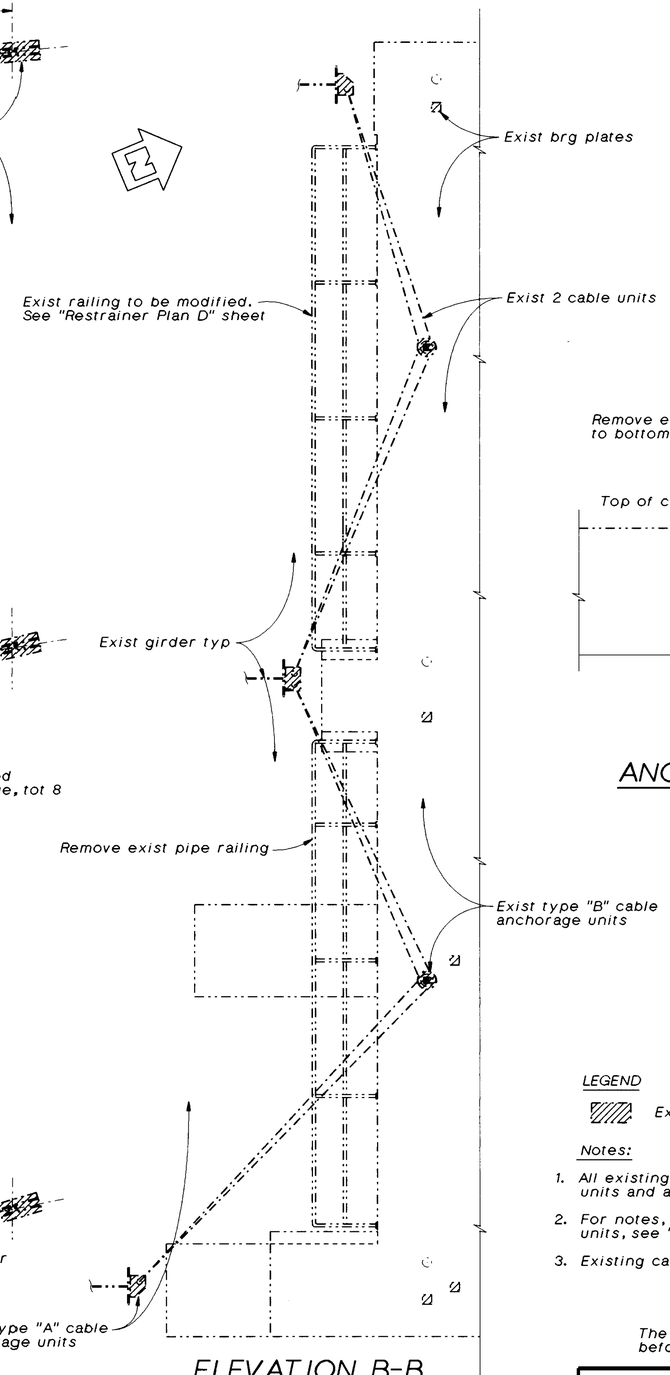

ELEVATION B-B

1/4"=1'-0"

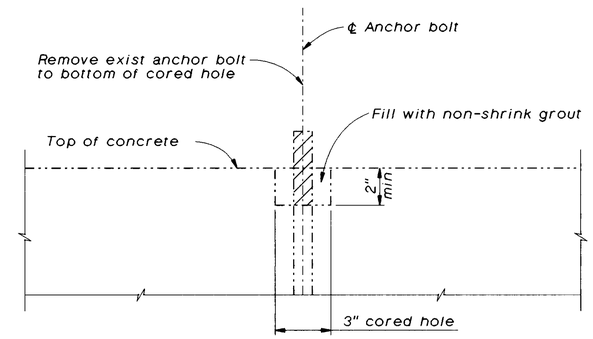

ANCHOR BOLT REMOVAL DETAIL

No Scale

NO AS BUILT CHANGES
AS BUILT
CORRECTION BY BRIAN BEAUDOIN
CONTRACT NO. 04-043934
DATE FEBRUARY, 2002
STRUCTURES REPRESENTATIVE

LEGEND

Existing anchorage to be removed.

Notes:

1. All existing transverse and longitudinal ¾"± dia restrainer units and anchorage units in Plan "D" are to be removed.
2. For notes, legend, and table of existing cable anchorage units, see "Restrainer Removal Plans A & B" sheet.
3. Existing catwalk not shown.

The Contractor shall verify all controlling field dimensions before ordering or fabricating any material.

SEISMIC RETROFIT PROJECT NO. 611

Vong Toan
DESIGN OVERSIGHT
April 24, 1997
SIGN OFF DATE

	BY	CHECKED
DESIGN	R. Morrison, Jr.	C. Harrington, J. Quincy
DETAILS	A. Kayden	J. Quincy
QUANTITIES	D. Nguyen-Tan, S. Ismail	J. Downing

PREPARED FOR THE STATE OF CALIFORNIA DEPARTMENT OF TRANSPORTATION

Lee Holloway
PROJECT ENGINEER

BRIDGE NO. 23-15 R
POST MILE CC-13.47

CARQUINEZ BRIDGE - "A4E" LINE (APPROACH SPAN)

RESTRAINER REMOVAL PLAN D

car-res9.dlv

ORIGINAL SCALE IN INCHES FOR REDUCED PLANS 0 1 2 3

CU 04-268
EA 043931

DISREGARD PRINTS BEARING EARLIER REVISION DATES → 15-MAR-1997

REVISION DATES (PRELIMINARY STAGE ONLY)

SHEET 56 OF 120

ClibPDF - www.fastio.com

DIST	COUNTY	ROUTE	POST MILES TOTAL PROJECT	SHEET NO.	TOTAL SHEETS
04	CC, SOL	80	12.8/14.1, 0.0/0.6	492	555

REGISTERED CIVIL ENGINEER

10-20-97
PLANS APPROVAL DATE

REGISTERED PROFESSIONAL ENGINEER — Robert L. Morrison Jr. No. 43693 Exp. 03/31/97 CIVIL — STATE OF CALIFORNIA

CH2M HILL
2485 NATOMAS PARK DR, SUITE 600
SACRAMENTO, CALIFORNIA 95833

The State of California or its officers or agents shall not be responsible for the accuracy or completeness of electronic copies of this plan sheet.

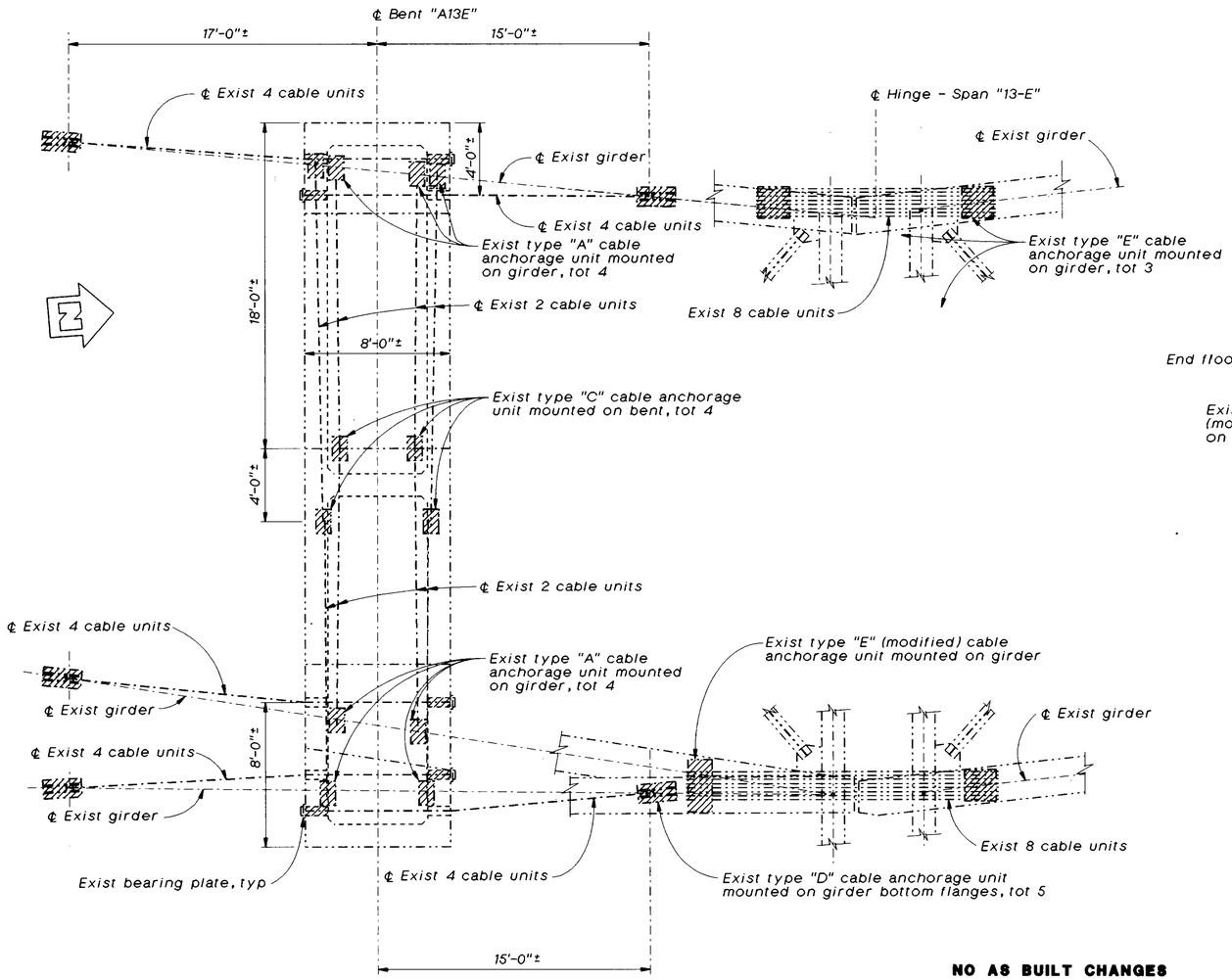

PLAN "G" - BENT "A13E"

1/4"=1'-0"

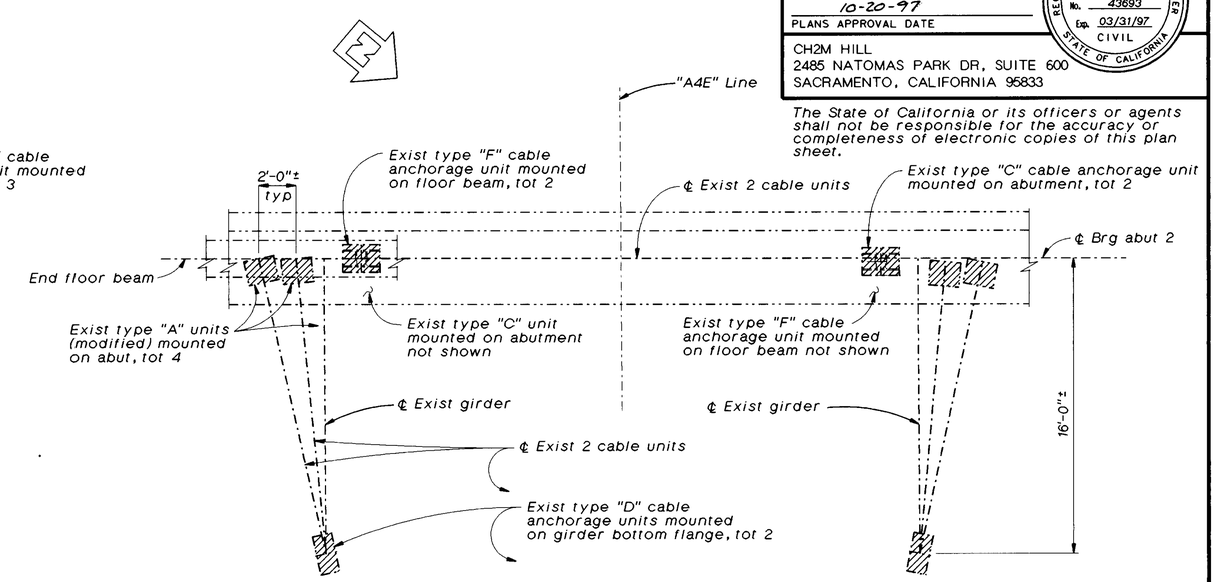

PART PLAN "P" - ABUTMENT 2

1/4"=1'-0"

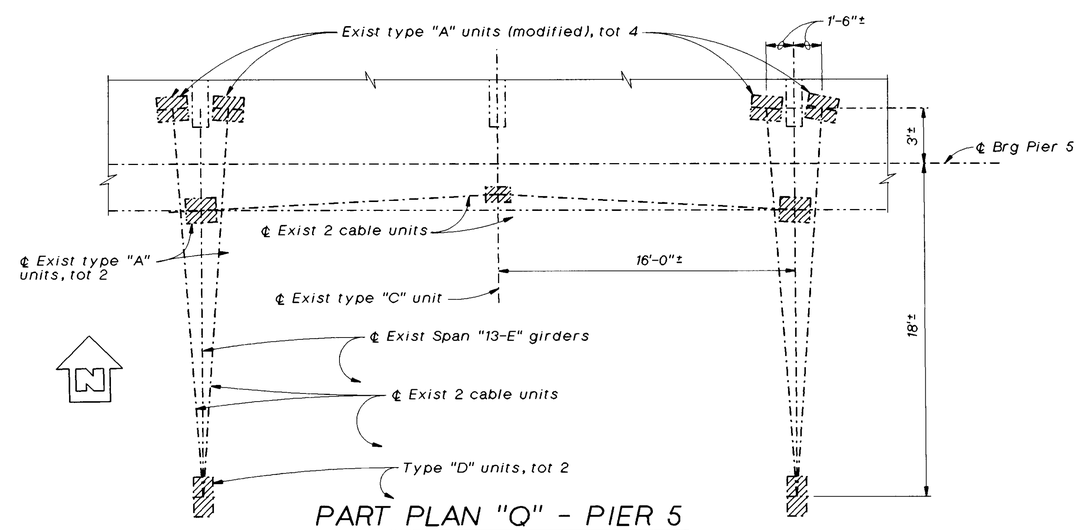

PART PLAN "Q" - PIER 5

1/4"=1'-0"

NO AS BUILT CHANGES
AS BUILT
CORRECTION BY BRIAN BEAUDOIN
CONTRACT NO. 04-043934
DATE FEBRUARY, 2002
STRUCTURES REPRESENTATIVE

LEGEND

Existing anchorage to be removed.

Notes:

1. Remove all existing transverse and longitudinal 3/4"± dia restrainer units and anchorage units in Plans "G", "P" and "Q".
2. For notes, legend, and table of existing cable anchorage units, see "Restrainer Removal Plans A & B" sheets.
3. For anchor bolt removal detail of existing anchorage units mounted on bent or abutment, see "Restrainer Removal Plan D" sheet.
4. Existing catwalk not shown.

The Contractor shall verify all controlling field dimensions before ordering or fabricating any material.

SEISMIC RETROFIT PROJECT NO. 611

CARQUINEZ BRIDGE - "A4E" LINE (APPROACH SPAN)

RESTRAINER REMOVAL PLAN G, P, & Q

DESIGN	BY R. Morrison, Jr.	CHECKED C. Harrington, J. Quincy	
DETAILS	BY A. Kayden	CHECKED J. Quincy	
QUANTITIES	BY D. Nguyen-Tan, S. Ismail	CHECKED J. Downing	

Vong Toan
DESIGN OVERSIGHT
April 29, 1997
SIGN OFF DATE

PREPARED FOR THE STATE OF CALIFORNIA DEPARTMENT OF TRANSPORTATION

Lee Holloway
PROJECT ENGINEER

BRIDGE NO. 23-15 R
POST MILE CC-13.47

CU 04-268
EA 043931

car-re10.dlv

ORIGINAL SCALE IN INCHES FOR REDUCED PLANS 0 1 2 3

DISREGARD PRINTS BEARING EARLIER REVISION DATES → 15-MAR-1997

REVISION DATES (PRELIMINARY STAGE ONLY)

SHEET 57 OF 120

ClibPDF - www.fastio.com

DIST	COUNTY	ROUTE	POST MILES TOTAL PROJECT	SHEET NO.	TOTAL SHEETS
04	CC, SOL	80	12.8/14.1, 0.0/0.6	488	555

REGISTERED CIVIL ENGINEER

10-20-97
PLANS APPROVAL DATE

REGISTERED PROFESSIONAL ENGINEER Robert L. Morrison Jr No. 43693 Exp. 03/31/97 CIVIL STATE OF CALIFORNIA

CH2M HILL
2485 NATOMAS PARK DR, SUITE 600
SACRAMENTO, CALIFORNIA 95833

The State of California or its officers or agents shall not be responsible for the accuracy or completeness of electronic copies of this plan sheet.

Note:

For Legend and Notes, see "Girder Layout No. 1" sheet.

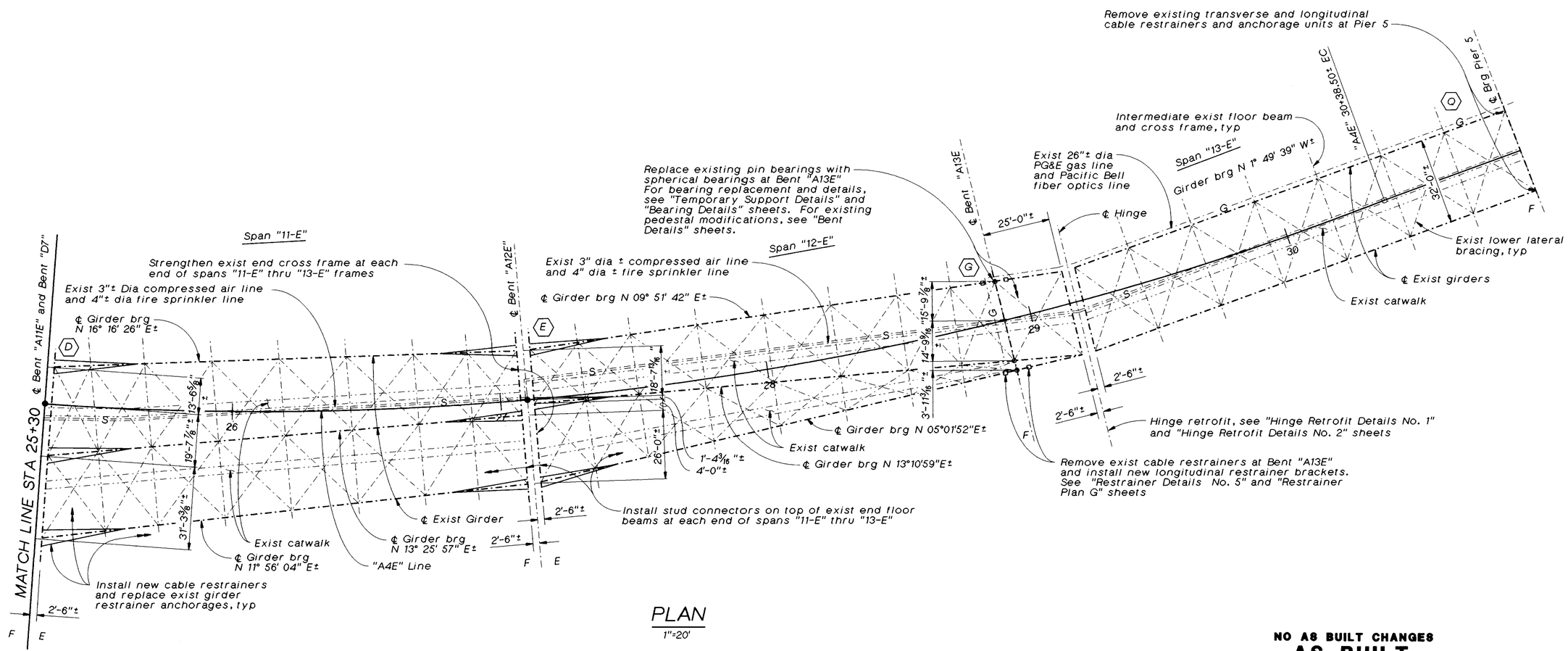

PLAN

1"=20'

NO AS BUILT CHANGES

AS BUILT

CORRECTION BY BRIAN BEAUDOIN
CONTRACT NO. 04-043934
DATE FEBRUARY, 2002
STRUCTURES REPRESENTATIVE

The Contractor shall verify all controlling field dimensions before ordering or fabricating any material.

SEISMIC RETROFIT PROJECT NO. 611

Vong Toan
DESIGN OVERSIGHT
April 24, 1997
SIGN OFF DATE

	BY	CHECKED
DESIGN	R. Morrison, Jr.	C. Harrington, J. Quincy
DETAILS	A. Kayden	J. Quincy
QUANTITIES	D. Nguyen-Tan, S. Ismail	J. Downing

PREPARED FOR THE STATE OF CALIFORNIA DEPARTMENT OF TRANSPORTATION

Lee Holloway
PROJECT ENGINEER

BRIDGE NO. 23-15 R
POST MILE CC-13.47

CARQUINEZ BRIDGE - "A4E" LINE (APPROACH SPAN)

GIRDER LAYOUT NO. 3

CA4-GRL3.DLV

ORIGINAL SCALE IN INCHES FOR REDUCED PLANS 0 1 2 3

CU 04-268
EA 043931

DISREGARD PRINTS BEARING EARLIER REVISION DATES → 15-MAR-1997

REVISION DATES (PRELIMINARY STAGE ONLY) | SHEET 53 | OF 120

ClibPDF - www.fastio.com

DIST	COUNTY	ROUTE	POST MILES TOTAL PROJECT	SHEET NO.	TOTAL SHEETS
04	CC, SOL	80	12.8/14.1, 0.0/0.8	493	555

REGISTERED CIVIL ENGINEER

10-20-97
PLANS APPROVAL DATE

REGISTERED PROFESSIONAL ENGINEER Jeffrey S. Aldrich No. 34271 Exp. 09/30/99 CIVIL STATE OF CALIFORNIA

CH2M HILL
2485 NATOMAS PARK DR, SUITE 600
SACRAMENTO, CALIFORNIA 95833

The State of California or its officers or agents shall not be responsible for the accuracy or completeness of electronic copies of this plan sheet.

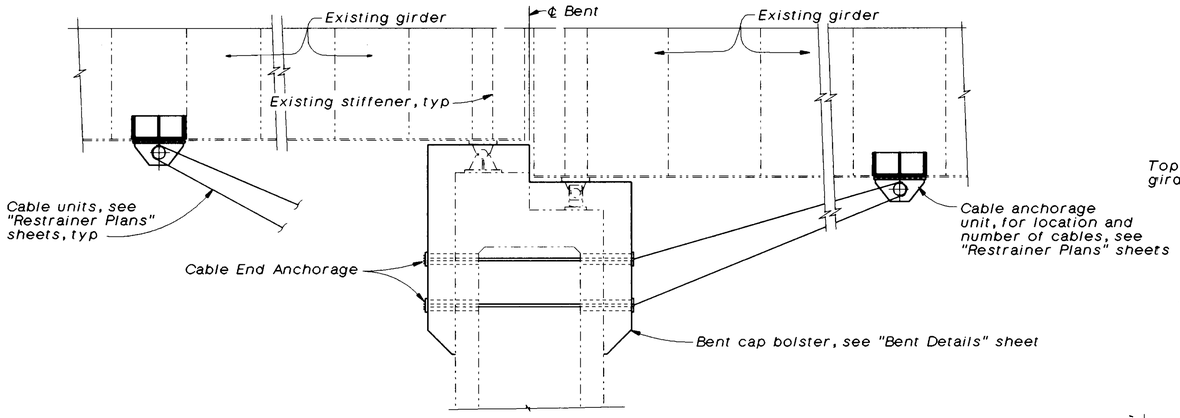

PART ELEVATION

No Scale

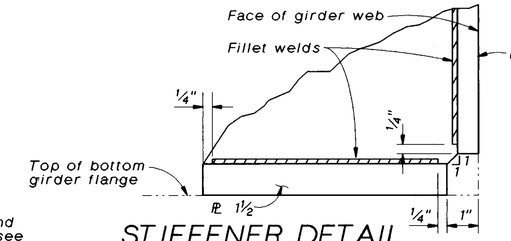

STIFFENER DETAIL

No Scale

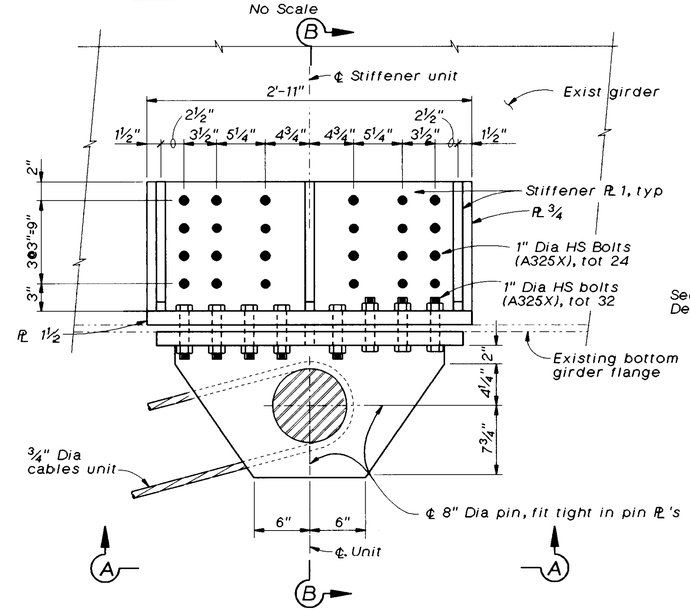

ELEVATION

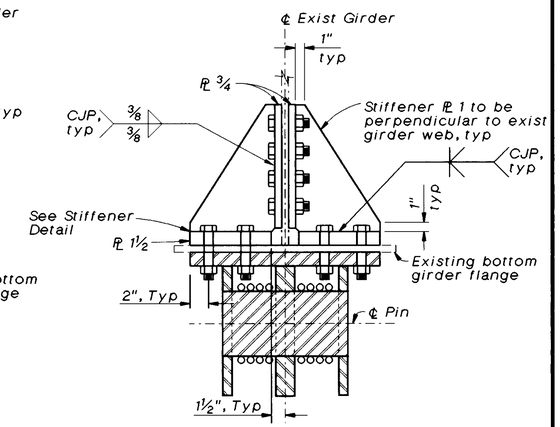

SECTION B-B

Notes:

1. *For Cable End Anchorage Details, and Bearing Plate Details, see "Restrainer Details No. 2" and "Restrainer Details No. 4" sheets.*
2. *For 5 Cable Anchorage Unit Detail, see "Restrainer Details No. 3" sheet.*
3. *Exist bolts are 1"± Dia unless noted otherwise.*
4. *ALL CABLE RESTRAINER BRACKETS ARE GRADE 50 STEEL.*

LEGEND

- ⌖ *Replace exist bolt with new HS bolt*
- ● *New HS bolt*

"D" DIMENSION TABLE *								
BENT	SOUTHEAST (IN.)	SOUTHWEST (IN.)	NORTHEAST (IN.)	NORTHWEST (IN.)	SOUTH MIDDLE EAST	SOUTH MIDDLE WEST	NORTH MIDDLE EAST	NORTH MIDDLE WEST
A3E	22.50	22.50	23.00	22.50	0	0	0	0
A4E	22.50	22.50	22.00	22.00				
A5E	21.00	21.00	21.00	21.00				
A6E	21.25	21.25	21.25	21.25				
A7E	20.00	20.00	20.00	20.25				
A8E	20.00	19.50	14.50	14.60				
A9E	15.50	29.25	28.50	29.75				
A10E	14.75	29.50	16.50	16.25	0	0	0	
A11E	31.50	33.00	26.25	21.25	32.50	16.50	26.50	
A12E	24.50	24.50	24.25	24.25	24.25	0	24.25	
A13E	0	0	0	0	0	0	0	0

* SEE RESTRAINER PLAN SHEETS

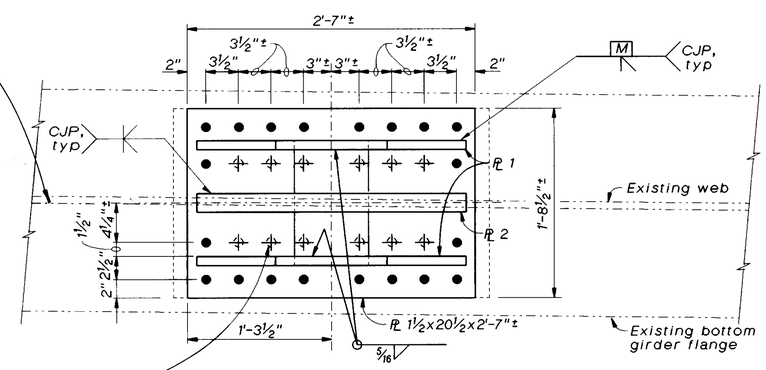

VIEW A-A

8 CABLE ANCHORAGE UNIT

1 1/2"=1'-0"

AS BUILT
CORRECTION BY BRIAN BEAUDOIN
CONTRACT NO. 04-043934
DATE FEBRUARY, 2002
STRUCTURES REPRESENTATIVE

The Contractor shall verify all controlling field dimensions before ordering or fabricating any material.

SEISMIC RETROFIT PROJECT NO. 611

Vong Toan
DESIGN OVERSIGHT
April 29, 1997
SIGN OFF DATE

	BY	CHECKED
DESIGN	J. Aldrich	J. Downing, J. Quincy
DETAILS	A. Kayden, G. Triplat	J. Quincy
QUANTITIES	D. Nguyen-Tan, S. Ismail	J. Downing

PREPARED FOR THE STATE OF CALIFORNIA DEPARTMENT OF TRANSPORTATION

Lee Holloway
PROJECT ENGINEER

BRIDGE NO. 23-15 R
POST MILE CC-13.47

CARQUINEZ BRIDGE - "A4E" LINE (APPROACH SPAN)

RESTRAINER DETAILS NO. 1

car-res4.dlv

ORIGINAL SCALE IN INCHES FOR REDUCED PLANS 0 1 2 3

CU 04-268
EA 043931

DISREGARD PRINTS BEARING EARLIER REVISION DATES → REVISION DATES (PRELIMINARY STAGE ONLY) 15-MAR-1997

SHEET 58 OF 120

ClibPDF - www.fastio.com

DIST	COUNTY	ROUTE	POST MILES TOTAL PROJECT	SHEET NO.	TOTAL SHEETS
04	CC, SOL	80	12.8/14.1, 0.0/0.6	494	558

REGISTERED CIVIL ENGINEER

10-20-97
PLANS APPROVAL DATE

REGISTERED PROFESSIONAL ENGINEER Jeffrey S. Aldrich No. 34271 Exp. 09/30/99 CIVIL STATE OF CALIFORNIA

CH2M HILL
2485 NATOMAS PARK DR, SUITE 600
SACRAMENTO, CALIFORNIA 95833

The State of California or its officers or agents shall not be responsible for the accuracy or completeness of electronic copies of this plan sheet.

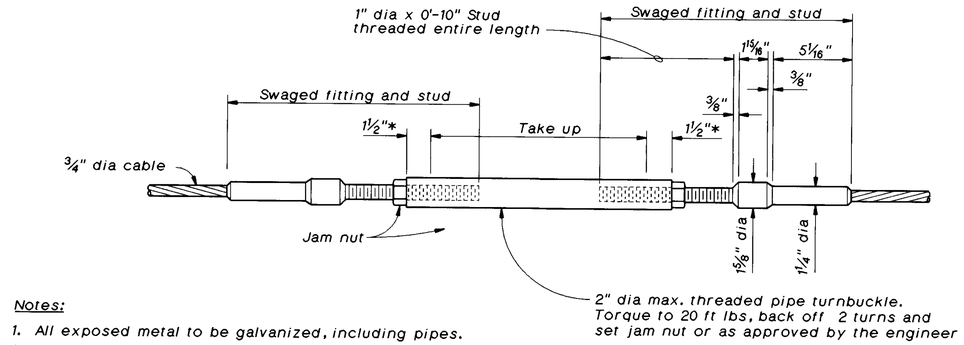

Notes:

1. All exposed metal to be galvanized, including pipes.
2. * Minimum grip
3. For location of Pipe Turnbuckle Assembly, see "Hinge Details No. 1" sheet.

PIPE TURNBUCKLE ASSEMBLY

No Scale

Installation Notes:

1. Chip or grind edges of all cored holes to be 4" min radius, unless otherwise noted.
2. Location of cored and formed holes in the plans are approximate. Prior to placing holes in concrete, the Contractor shall locate all reinf bars. Final hole locations are subject to the approval of the Engineer.

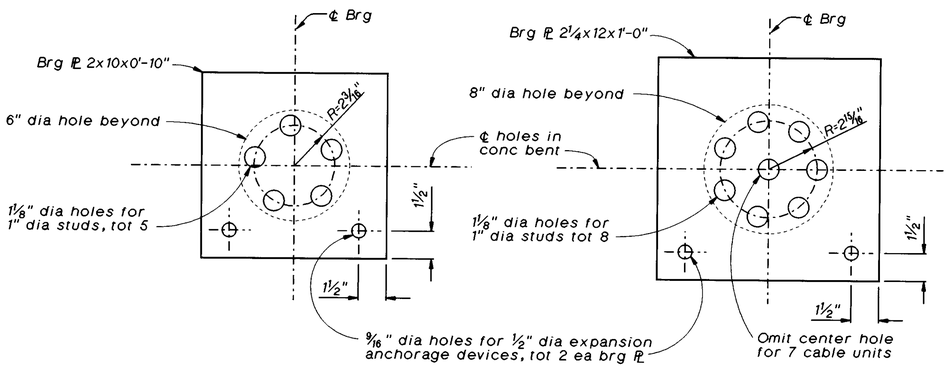

5 CABLE UNITS BEARING PLATE

No Scale

7 OR 8 CABLE UNITS BEARING PLATE

No Scale

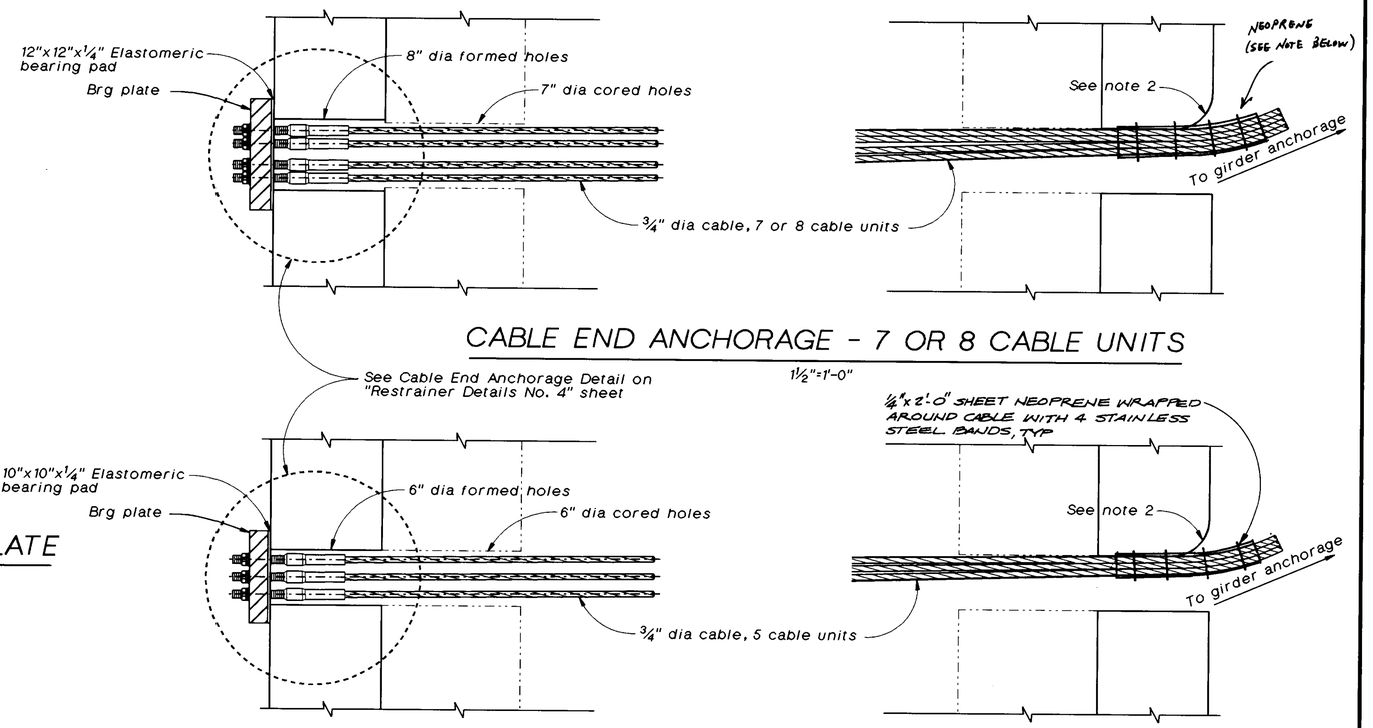

CABLE END ANCHORAGE - 7 OR 8 CABLE UNITS

1 1/2"=1'-0"

CABLE END ANCHORAGE - 5 CABLE UNITS

1 1/2"=1'-0"

AS BUILT
CORRECTION BY BRIAN BEAUDOIN
CONTRACT NO. 04-043934
DATE FEBRUARY, 2002
STRUCTURES REPRESENTATIVE

The Contractor shall verify all controlling field dimensions before ordering or fabricating any material.

SEISMIC RETROFIT PROJECT NO. 611

CARQUINEZ BRIDGE - "A4E" LINE (APPROACH SPAN)

RESTRAINER DETAILS NO. 2

Vong Toan — DESIGN OVERSIGHT — Apr. 1 24, 1997 — SIGN OFF DATE	DESIGN	BY J. Aldrich	CHECKED J. Downing, J. Quincy
	DETAILS	BY J. Law, G. Triplat	CHECKED J. Quincy
	QUANTITIES	BY D. Nguyen-Tan, S. Ismail	CHECKED J. Downing

PREPARED FOR THE STATE OF CALIFORNIA DEPARTMENT OF TRANSPORTATION

Lee Holloway — PROJECT ENGINEER

BRIDGE NO. 23-15 R
POST MILE CC-13.47

A4-RES10.DLV

ORIGINAL SCALE IN INCHES FOR REDUCED PLANS 0 1 2 3

CU 04-268
EA 043931

DISREGARD PRINTS BEARING EARLIER REVISION DATES → 22-APR-1997

REVISION DATES (PRELIMINARY STAGE ONLY)

SHEET 59 OF 120

ClibPDF - www.fastio.com

DIST	COUNTY	ROUTE	POST MILES TOTAL PROJECT	SHEET NO.	TOTAL SHEETS
04	CC, SOL	80	12.8/14.1, 0.0/0.6	495	555

REGISTERED CIVIL ENGINEER

10-20-97
PLANS APPROVAL DATE

REGISTERED PROFESSIONAL ENGINEER Jeffrey S. Aldrich No. 34271 Exp. 09/30/99 CIVIL STATE OF CALIFORNIA

CH2M HILL
2485 NATOMAS PARK DR, SUITE 600
SACRAMENTO, CALIFORNIA 95833

The State of California or its officers or agents shall not be responsible for the accuracy or completeness of electronic copies of this plan sheet.

Notes:
For Legend and Notes see "Restrainer Details No. 1" sheet.

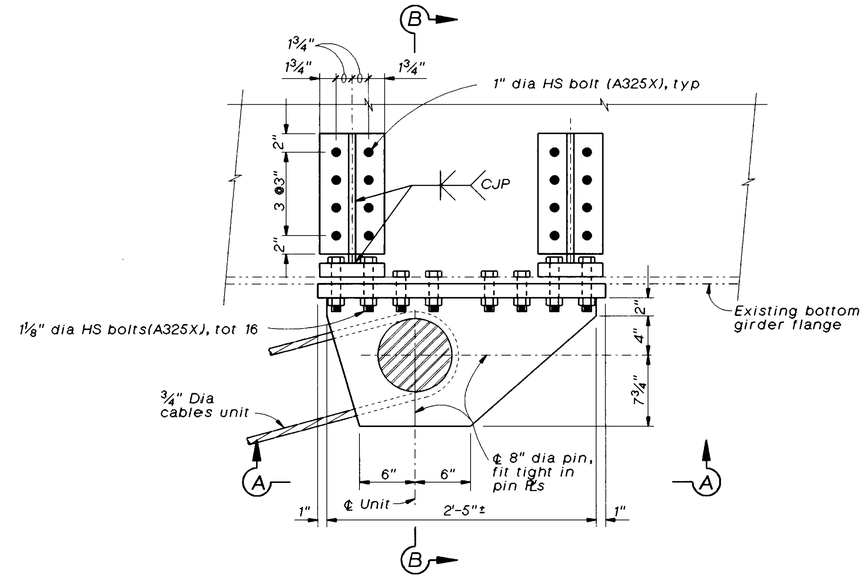

ELEVATION

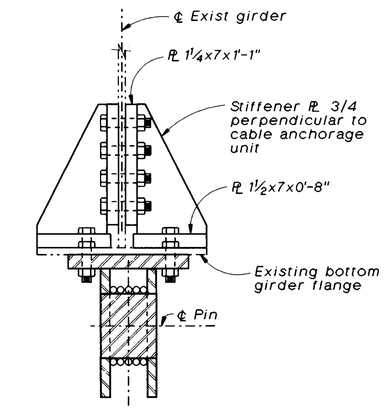

SECTION B-B

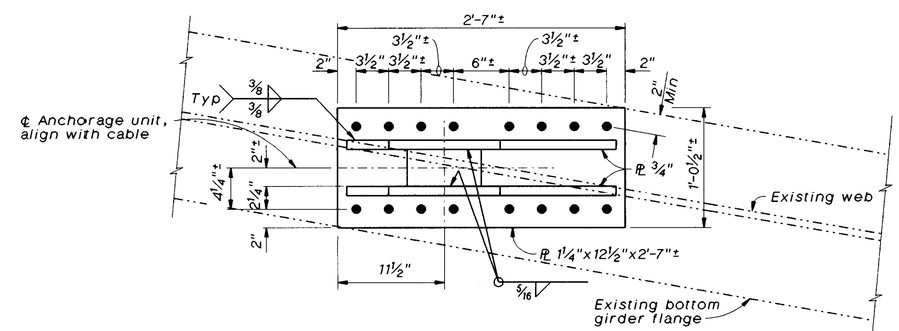

VIEW A-A

5 CABLE ANCHORAGE UNIT

1½"=1'-0"

NO AS BUILT CHANGES
AS BUILT
CORRECTION BY BRIAN BEAUDOIN
CONTRACT NO. 04-043934
DATE FEBRUARY, 2002
STRUCTURES REPRESENTATIVE

The Contractor shall verify all controlling field dimensions before ordering or fabricating any material.

SEISMIC RETROFIT PROJECT NO. 611

CARQUINEZ BRIDGE - "A4E" LINE (APPROACH SPAN)

RESTRAINER DETAILS NO. 3

Vong Toan
DESIGN OVERSIGHT
April 24, 1997
SIGN OFF DATE

	BY	CHECKED
DESIGN	J. Aldrich	J. Downing, J. Quincy
DETAILS	A. Kayden, G. Triplat	J. Quincy
QUANTITIES	D. Nguyen-Tan, S. Ismail	J. Downing

PREPARED FOR THE STATE OF CALIFORNIA DEPARTMENT OF TRANSPORTATION

Lee Holloway
PROJECT ENGINEER

BRIDGE NO. 23-15 R
POST MILE CC-13.47

ca4-res3.dlv

ORIGINAL SCALE IN INCHES FOR REDUCED PLANS 0 1 2 3

CU 04-268
EA 043931

DISREGARD PRINTS BEARING EARLIER REVISION DATES → 15-MAR-1997

REVISION DATES (PRELIMINARY STAGE ONLY)

SHEET 60 OF 120

ClibPDF - www.fastio.com

DIST	COUNTY	ROUTE	POST MILES TOTAL PROJECT	SHEET NO.	TOTAL SHEETS
04	CC, SOL	80	12.8/14.1, 0.0/0.6	496	555

REGISTERED CIVIL ENGINEER

10-20-97

PLANS APPROVAL DATE

REGISTERED PROFESSIONAL ENGINEER — Jeffrey S. Aldrich — No. 34271 — Exp. 09/30/99 — CIVIL — STATE OF CALIFORNIA

CH2M HILL
2485 NATOMAS PARK DR, SUITE 600
SACRAMENTO, CALIFORNIA 95833

The State of California or its officers or agents shall not be responsible for the accuracy or completeness of electronic copies of this plan sheet.

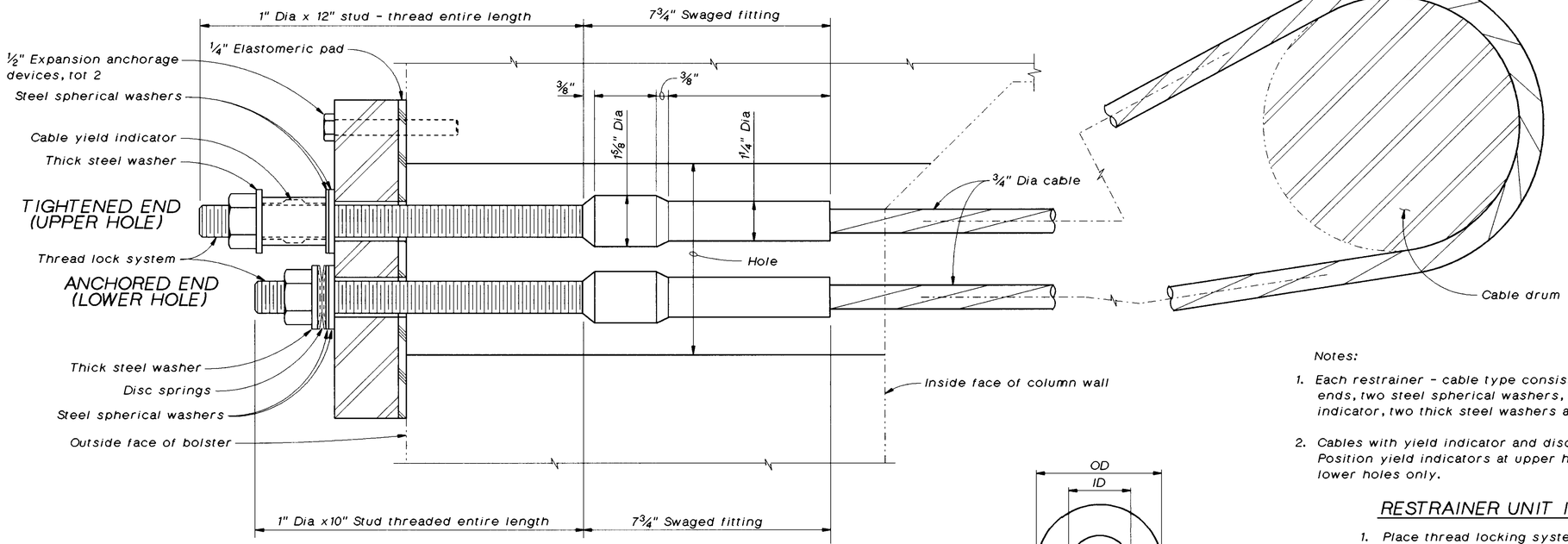

CABLE END ANCHORAGE

No Scale

TABLE A	
Ambient Temp (°F)	Back off Turns
< 40	4
40 to 80	6
> 80	8

Notes:

1. Each restrainer - cable type consists of cable loop with two swaged ends, two steel spherical washers, one disc spring, one cable yield indicator, two thick steel washers and two nuts.
2. Cables with yield indicator and disc springs shown through same hole. Position yield indicators at upper holes only. Position disc springs at lower holes only.

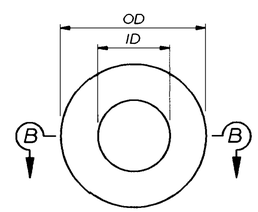

PLAN

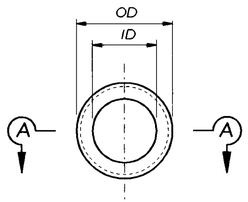

END VIEW

Legend:

OD Indicates outside diameter
ID Indicates inside diameter

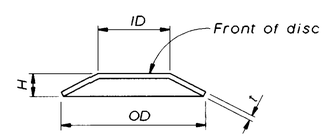

SECTION B-B

(Single spring)

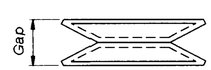

AS INSTALLED ON STUD

DISC SPRING

No Scale

RESTRAINER UNIT INSTALLATION PROCEDURE

1. Place thread locking system on stud prior to tightening the cable.
2. Install disc springs on cable system using steel spherical washers to align discs to stud. Discs shall be installed front to front as shown in " Disc Spring " detail. Install Cable Yield Indicator, disc springs, and Steel Spherical Washers on the restrainers as shown in " Cable End Anchorage" detail.
3. Tighten the cable until the disc springs collapse and there is no gap remaining between the discs. The cable should be approximately straight with no sag.
4. Place thread locking system on stud after tightening the cable, but before backing off the nut. Back off the nut equal to number of turns shown in "Table A".
5. If the cable needs to be secured from turning while tightening, use double nut locking technique on the stud to protect the threads.
6. Back off turns is based on 8 threads per inch stud.

DISC SPRINGS AND WASHERS												
L *	DISC SPRING					STEEL SPHERICAL WASHER			THICK WASHER		
	ID	OD	t	H	COLOR CODE	ID	OD	Nominal Thickness	ID	OD	t**
10.0 to 25.0	1.000	2.000	0.065	0.130	White	1.1875	2.250	0.500	1.030	2.000	0.250
25.1 to 31.9	1.000	2.000	0.084	0.136	Red	1.1875	2.250	0.500	1.030	2.000	0.312
32.0 to 37.9	1.000	2.000	0.097	0.145	Blue	1.1875	2.250	0.500	1.030	2.000	0.312
38.0 +	1.250	2.500	0.120	0.180	Yellow	1.3120	2.500	0.500	1.156	2.250	0.312

Note:
All dimensions in inches, except as noted
* - For length L (ft), determine length along cable from cable yield indicator, around cable drum, to disc springs.
** - Minimum value
The Contractor shall verify all controlling field dimensions before ordering or fabricating any material.

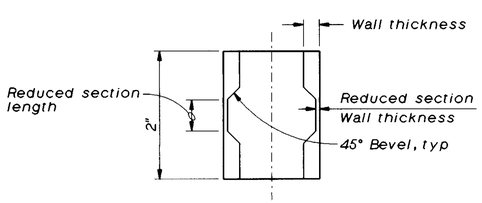

SECTION A-A

DIMENSIONS: 0.005"±

OD	WALL	ID (After Galv.)
1.500"	0.250"	1.000"

REDUCED SECTION:

Length	Wall Thickness
0.500"± 0.001"	0.073"± 0.0005"

All dimensions are before galvanizing except as noted.

CABLE YIELD INDICATOR

No Scale

NO AS BUILT CHANGES
AS BUILT
CORRECTION BY BRIAN BEAUDOIN
CONTRACT NO. 04-043934
DATE FEBRUARY, 2002
STRUCTURES REPRESENTATIVE

SEISMIC RETROFIT PROJECT NO. 611

CARQUINEZ BRIDGE - "A4E" LINE (APPROACH SPAN)

RESTRAINER DETAILS NO. 4

Vong Toan
DESIGN OVERSIGHT
April 24, 1997
SIGN OFF DATE

	BY	CHECKED	BY
DESIGN	J. Aldrich	R. Morrison, Jr	
DETAILS	G. Triplat	R. Morrison, Jr	
QUANTITIES	D. Nguyen-Tan, S. Ismail	J. Downing	

PREPARED FOR THE STATE OF CALIFORNIA DEPARTMENT OF TRANSPORTATION

Lee Holloway
PROJECT ENGINEER

BRIDGE NO. 23-15 R
POST MILE CC-13.47

ca4-res4.dlv

ORIGINAL SCALE IN INCHES FOR REDUCED PLANS 0 1 2 3

CU 04-268
EA 043931

DISREGARD PRINTS BEARING EARLIER REVISION DATES → REVISION DATES (PRELIMINARY STAGE ONLY) 15-MAR-1997

SHEET 61 OF 120

ClibPDF - www.fastio.com

MARK	DATE	DESCRIPTIONS	BY	CK
▽	12/8/98	LONGITUDINAL RESTRAINER GEOMETRY MODIFIED JOINT ARMOR ADDED	JSA	CJS

REVISIONS

CONTRACT CHANGE ORDER NO. _____
SHEET ___ OF ___

DIST	COUNTY	ROUTE	POST MILES TOTAL PROJECT	SHEET NO.	TOTAL SHEETS
04	CC SOL	80	12.8/14.1 0.0/0.6	497R1	555

REGISTERED CIVIL ENGINEER

PLANS APPROVAL DATE

REGISTERED PROFESSIONAL ENGINEER Jeffery S. Aldrich No. 34271 Exp. 09/30/99 CIVIL STATE OF CALIFORNIA

CH2M HILL
2485 NATOMAS PARK DR, SUITE 600
SACRAMENTO, CALIFORNIA 95833

The State of California or its officers or agents shall not be responsible for the accuracy or completeness of electronic copies of this plan sheet.

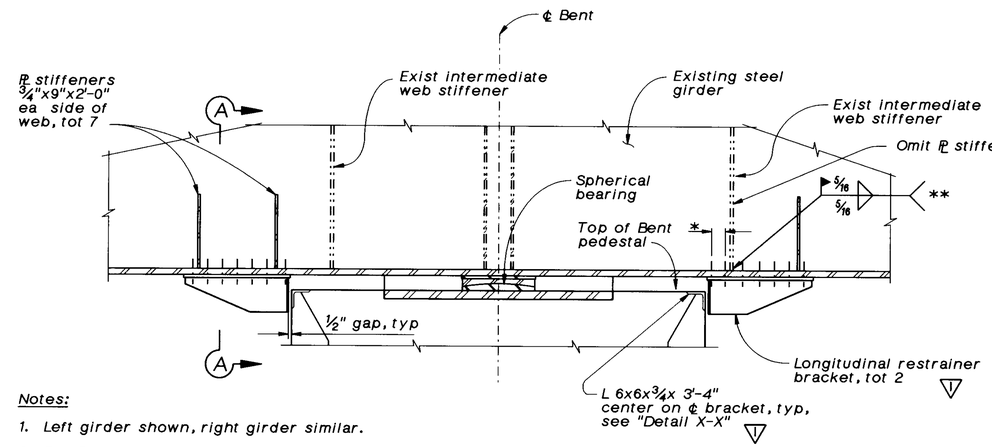

** Field verify size of existing fillet weld. If existing weld exceeds 5/16" fillet, No additional welding required.

Notes:

1. Left girder shown, right girder similar.
2. For Bearing Details not shown, see "Bearing Details No. 5", "Bearing Details No. 6", and "Bearing Details No. 7" sheets.
3. For Bent pedestal details not shown, see "Bent A13E Details" sheets.
4. Locate brackets so that face of Neoprene pads are parallel to face of Bent.
5. The west girder longitudinal brackets were relocated:
   a. North bracket by 1½" eastward, moved parallel to pier.
   b. South bracket by 1½" westward, moved parallel to pier.
6. All cable restrainer brackets are Grade 50 steel.

SECTION THRU CAP AT BEARING - BENT "A13E"

½"=1'-0"

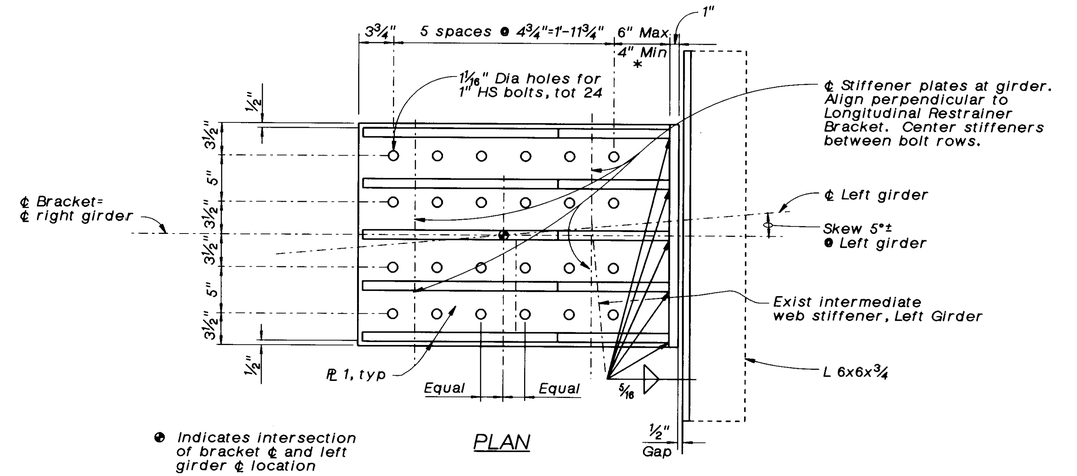

● Indicates intersection of bracket ℄ and left girder ℄ location

PLAN

* Field verify required dimension at exist intermediate web stiffener

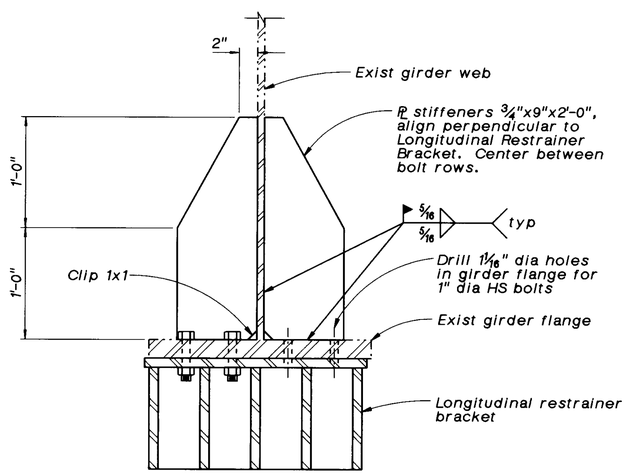

SECTION A-A

1½"=1'-0"

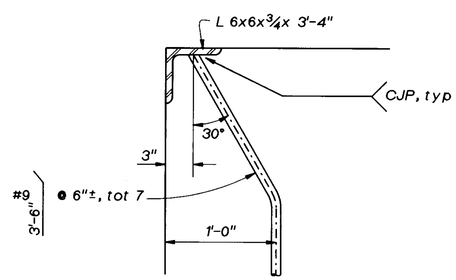

▽ DETAIL X-X

1½"=1'-0"

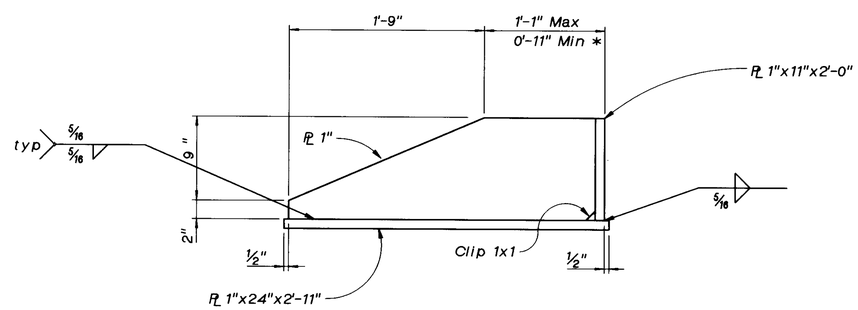

ELEVATION

▽ LONGITUDINAL RESTRAINER BRACKET DETAIL

1½"=1'-0"

AS BUILT
CORRECTION BY BRIAN BEAUDOIN
CONTRACT NO. 04-043934
DATE FEBRUARY, 2002
STRUCTURES REPRESENTATIVE

The Contractor shall verify all controlling field dimensions before ordering or fabricating any material.

Vong Toan DESIGN OVERSIGHT	DESIGN	BY R. Morrison Jr./ J. Aldrich	CHECKED J. Zhang / J. Quincy	PREPARED FOR THE STATE OF CALIFORNIA DEPARTMENT OF TRANSPORTATION	Lee Holloway PROJECT ENGINEER
SIGN OFF DATE	DETAILS	BY J. Peppel	CHECKED J. Quincy		
	QUANTITIES	BY D. Nguyen-Tan S. Ismail	CHECKED J. Downing		

BRIDGE NO. 23-15 R
POST MILE CC-13.47

SEISMIC RETROFIT PROJECT NO. 611
CARQUINEZ BRIDGE - "A4E" LINE (APPROACH SPAN)
RESTRAINER DETAILS NO. 5

car-re15.dlv

ORIGINAL SCALE IN INCHES FOR REDUCED PLANS 0 1 2 3

CU 04-268
EA 043931

DISREGARD PRINTS BEARING EARLIER REVISION DATES →

REVISION DATES (PRELIMINARY STAGE ONLY)

SHEET 62 OF 120

ClibPDF - www.fastio.com

DIST	COUNTY	ROUTE	POST MILES TOTAL PROJECT	SHEET NO.	TOTAL SHEETS
04	CC, SOL	80	12.8/14.1, 0.0/0.6	498	555

REGISTERED CIVIL ENGINEER

10-20-97
PLANS APPROVAL DATE

REGISTERED PROFESSIONAL ENGINEER
Jeffrey S. Aldrich
No. 34271
Exp. 09/30/99
CIVIL
STATE OF CALIFORNIA

CH2M HILL
2485 NATOMAS PARK DR, SUITE 600
SACRAMENTO, CALIFORNIA 95833

The State of California or its officers or agents shall not be responsible for the accuracy or completeness of electronic copies of this plan sheet.

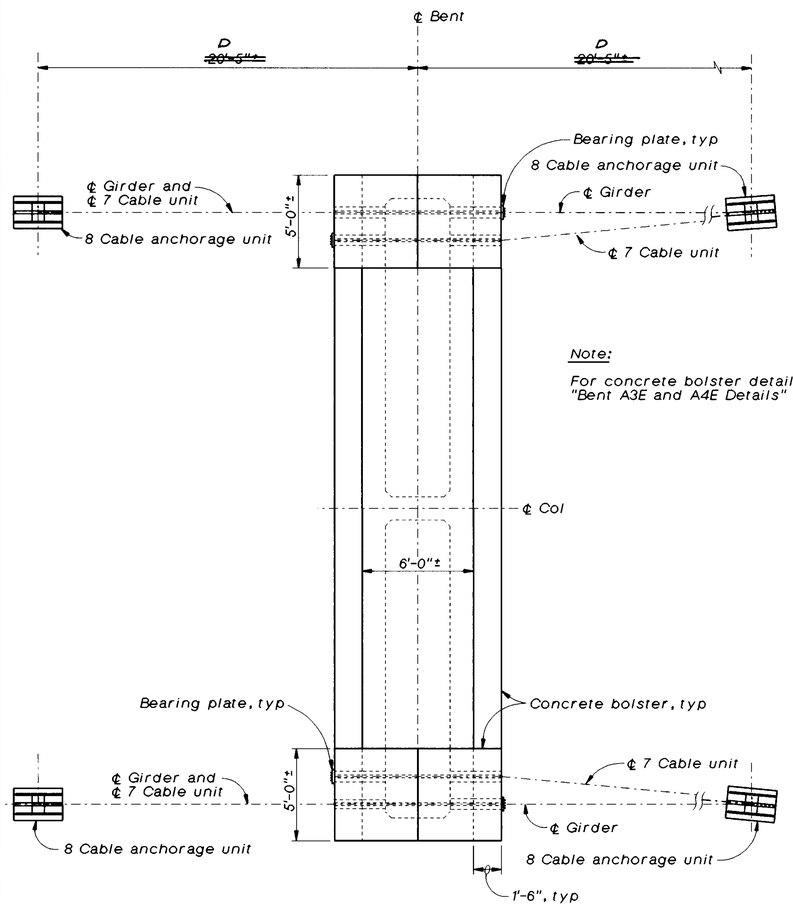

(BENTS "A3E" AND "A4E")

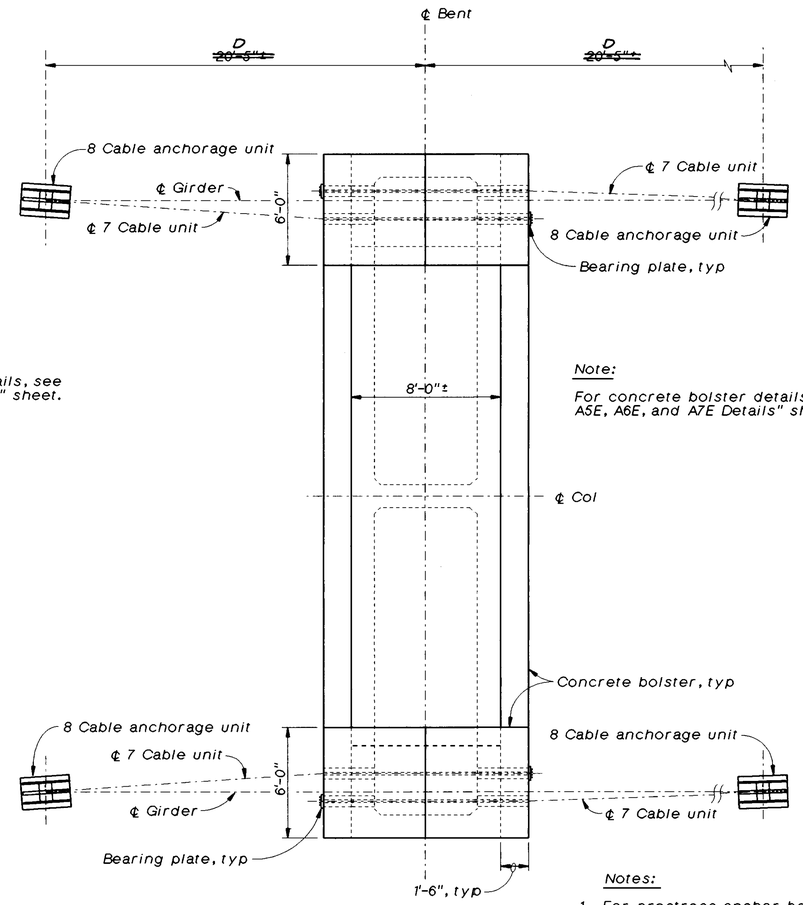

(BENTS "A5E" THRU "A7E")

PLAN "A" - BENTS "A3E" THRU "A7E"

1/4"=1'-0"

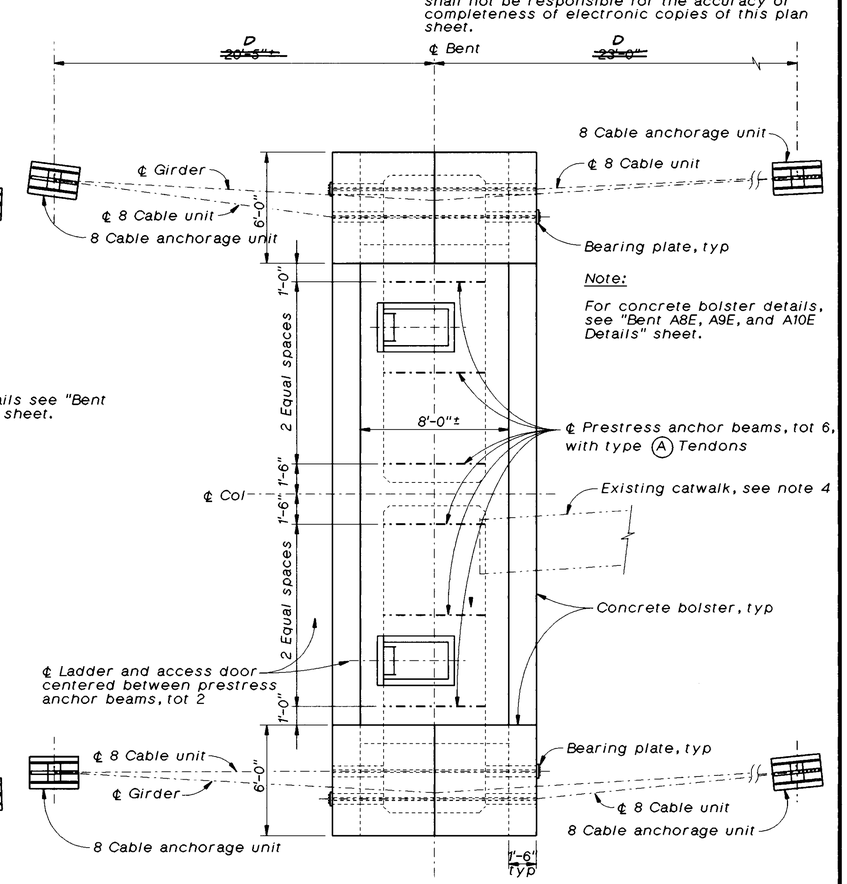

PLAN "B" - BENT "A8E"

1/4"=1'-0"

Notes:

1. For prestress anchor beam details and prestressing notes, see "Column Post-Tensioning Details" sheet
2. For bearing plate and restrainer cable anchorage unit details, see "Restrainer Details" sheets.
3. For ladder and access door details, see "Miscellaneous Details" sheets.
4. Remove existing catwalk where required to install prestress anchor beams and reset after stressing tendons.
5. SEE "RESTRAINER DETAILS No. 1" SHEET FOR "D" DIMENSIONS.

AS BUILT
CORRECTION BY BRIAN BEAUDOIN
CONTRACT NO. 04-043934
DATE FEBRUARY, 2002
STRUCTURES REPRESENTATIVE

The Contractor shall verify all controlling field dimensions before ordering or fabricating any material.

SEISMIC RETROFIT PROJECT NO. 611

CARQUINEZ BRIDGE - "A4E" LINE (APPROACH SPAN)

RESTRAINER PLANS A & B

Vong Toan — DESIGN OVERSIGHT	DESIGN	BY J. Aldrich	CHECKED C. Harrington, J. Quincy
April 24, 1997 — SIGN OFF DATE	DETAILS	BY A. Kayden	CHECKED J. Quincy
	QUANTITIES	BY D. Nguyen-Tan, S. Ismail	CHECKED J. Downing

PREPARED FOR THE STATE OF CALIFORNIA DEPARTMENT OF TRANSPORTATION

Lee Holloway — PROJECT ENGINEER

BRIDGE NO. 23-15 R
POST MILE CC-13.47

car-re11.dlv

ORIGINAL SCALE IN INCHES FOR REDUCED PLANS 0 1 2 3

CU 04-268
EA 043931

DISREGARD PRINTS BEARING EARLIER REVISION DATES → 15-MAR-1997

REVISION DATES (PRELIMINARY STAGE ONLY)

SHEET 63 OF 120

ClibPDF - www.fastio.com

DIST	COUNTY	ROUTE	POST MILES TOTAL PROJECT	SHEET NO.	TOTAL SHEETS
04	CC, SOL	80	12.8/14.1, 0.0/0.6	499	555

REGISTERED CIVIL ENGINEER

10-20-97
PLANS APPROVAL DATE

REGISTERED PROFESSIONAL ENGINEER
Jeffrey S. Aldrich
No. 34271
Exp. 09/30/99
CIVIL
STATE OF CALIFORNIA

CH2M HILL
2485 NATOMAS PARK DR, SUITE 600
SACRAMENTO, CALIFORNIA 95833

The State of California or its officers or agents shall not be responsible for the accuracy or completeness of electronic copies of this plan sheet.

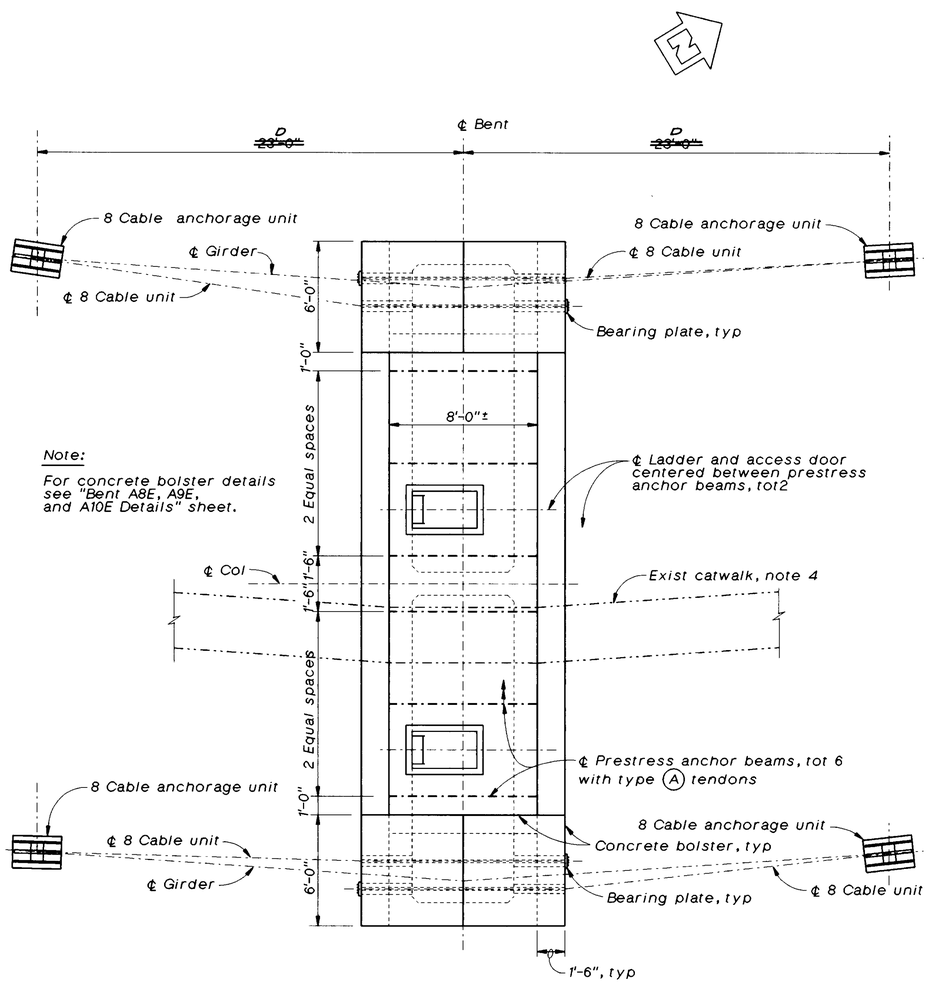

Note:

For concrete bolster details see "Bent A8E, A9E, and A10E Details" sheet.

PLAN "C" - BENTS "A9E" & "A10E"

1/4"=1'-0"

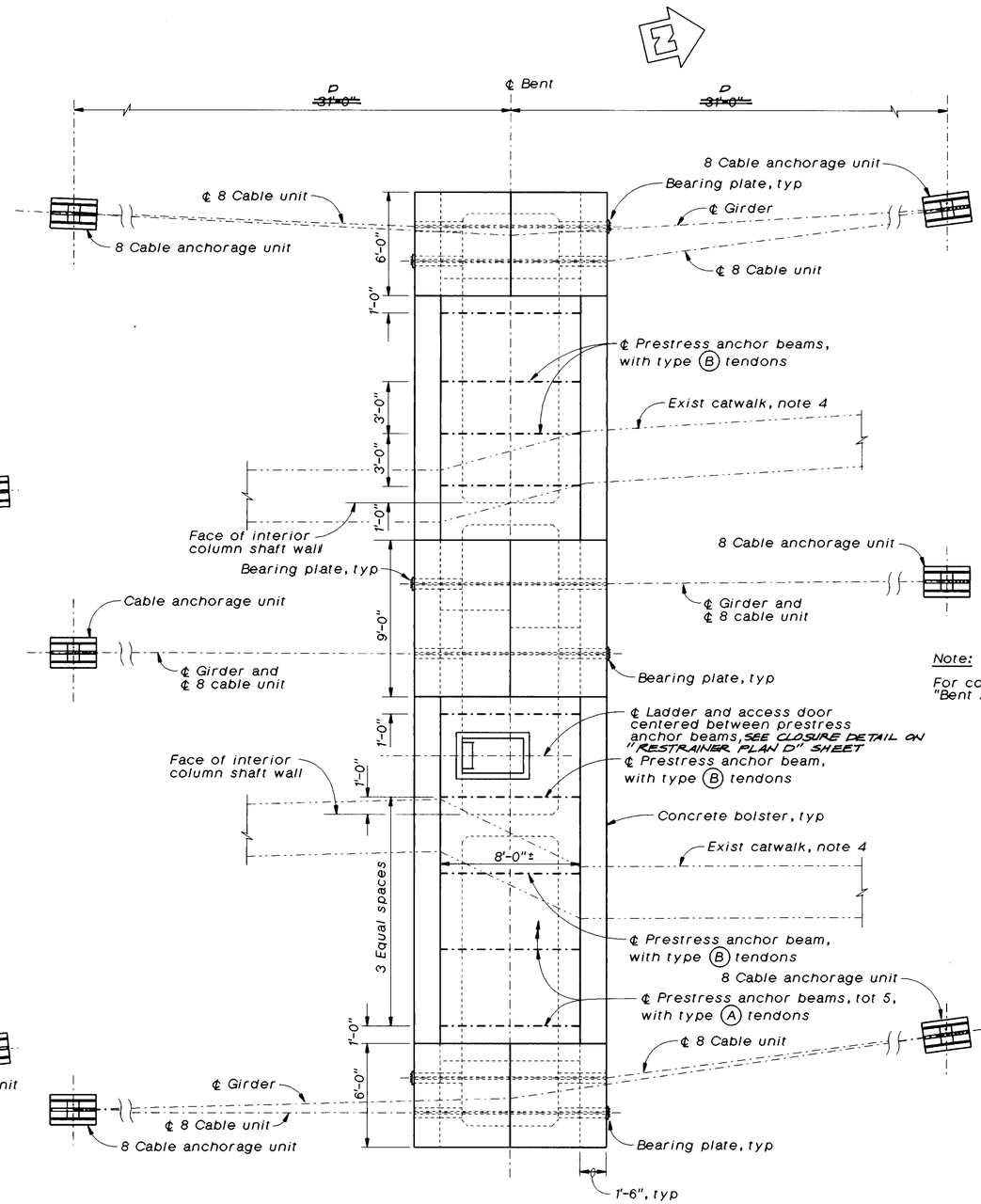

Note:

For concrete bolster details see "Bent A12E Details" sheet.

PLAN "E" - BENT "A12E"

1/4"=1'-0"

AS BUILT

CORRECTION BY BRIAN BEAUDOIN
CONTRACT NO. 04-043934
DATE FEBRUARY, 2002
STRUCTURES REPRESENTATIVE

Notes:

1. For Prestress anchor beam details and prestressing notes, see "Column Post-Tensioning Details" sheet
2. For bearing plate and restrainer cable anchorage unit details, see "Restrainer Details" sheets.
3. For ladder and access door details, see "Miscellaneous Details" sheets.
4. Remove existing catwalk where required to install prestress anchor beams and reset after stressing tendons.
5. SEE "RESTRAINER DETAILS NO. 1" SHEET FOR 'D' DIMENSION.

The Contractor shall verify all controlling field dimensions before ordering or fabricating any material.

SEISMIC RETROFIT PROJECT NO. 611

CARQUINEZ BRIDGE - "A4E" LINE (APPROACH SPAN)

RESTRAINER PLANS C & E

Vong Toan
DESIGN OVERSIGHT
April 29, 1997
SIGN OFF DATE

	BY	CHECKED
DESIGN	J. Aldrich	C. Harrington, J. Quincy
DETAILS	A. Kayden	J. Quincy
QUANTITIES	D. Nguyen-Tan, S. Ismail	J. Downing

PREPARED FOR THE STATE OF CALIFORNIA DEPARTMENT OF TRANSPORTATION

Lee Holloway
PROJECT ENGINEER

BRIDGE NO. 23-15 R
POST MILE CC-13.47

car-re12.dlv

ORIGINAL SCALE IN INCHES FOR REDUCED PLANS 0 1 2 3

CU 04-268
EA 043931

DISREGARD PRINTS BEARING EARLIER REVISION DATES → 15-MAR-1997

REVISION DATES (PRELIMINARY STAGE ONLY)

SHEET 64 OF 120

ClibPDF - www.fastio.com

DIST	COUNTY	ROUTE	POST MILES TOTAL PROJECT	SHEET NO.	TOTAL SHEETS
04	CC SOL	80	12.8/14.1 0.0/0.6	500R1	555

REGISTERED CIVIL ENGINEER

PLANS APPROVAL DATE

REGISTERED PROFESSIONAL ENGINEER Jeffrey S. Aldrich No. 34271 Exp. 09/30/99 CIVIL STATE OF CALIFORNIA

CH2M HILL
2485 NATOMAS PARK DR, SUITE 600
SACRAMENTO, CALIFORNIA 95833

The State of California or its officers or agents shall not be responsible for the accuracy or completeness of electronic copies of this plan sheet.

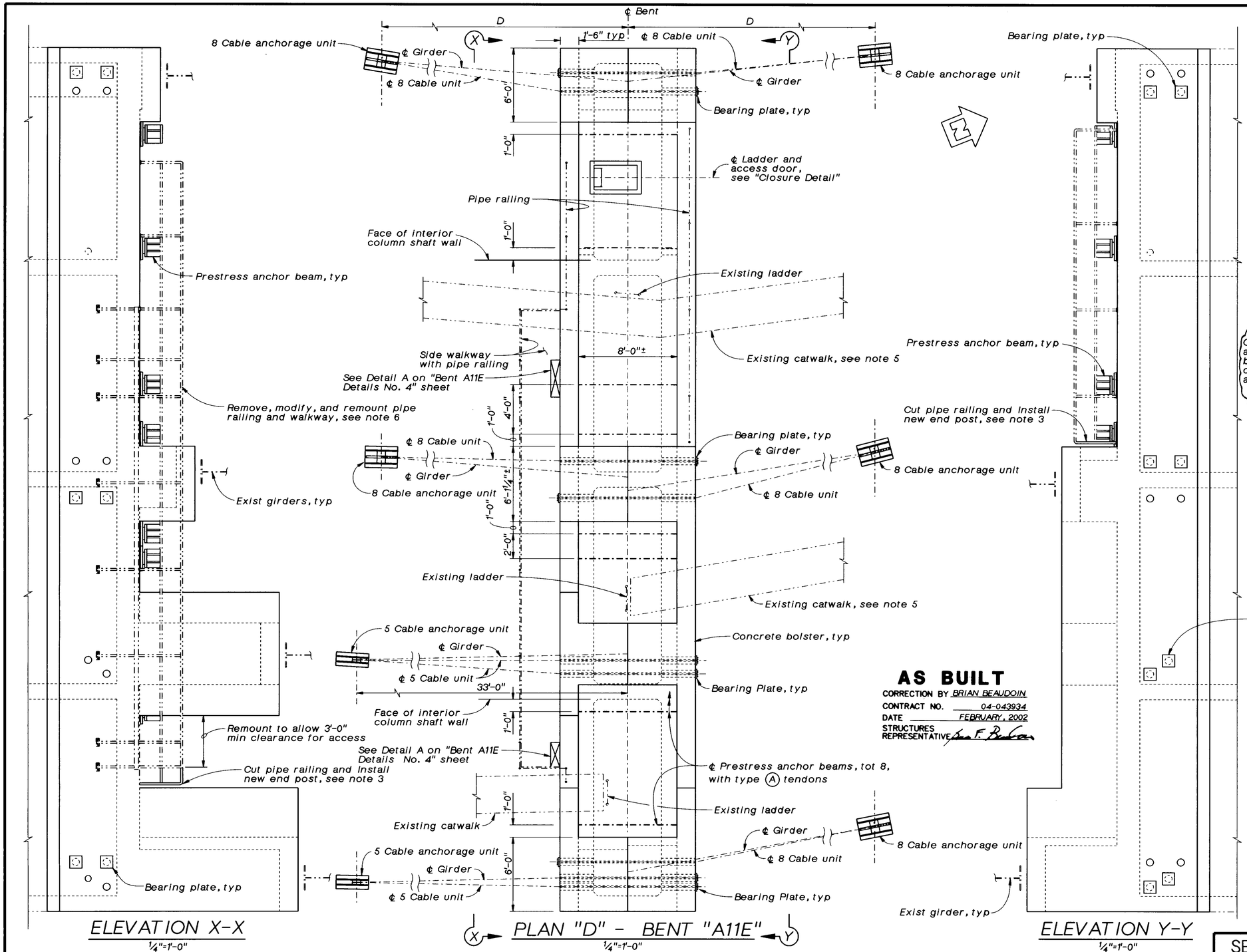

AS BUILT
CORRECTION BY BRIAN BEAUDOIN
CONTRACT NO. 04-043934
DATE FEBRUARY, 2002
STRUCTURES REPRESENTATIVE

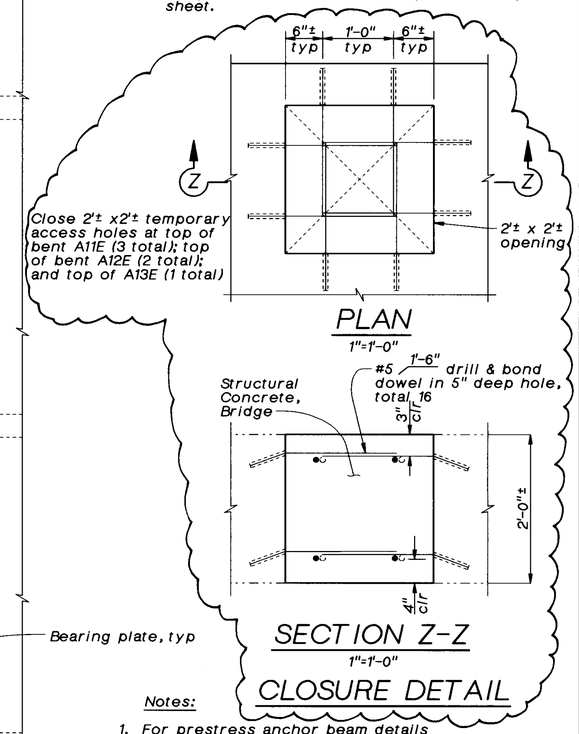

Notes:

1. For prestress anchor beam details and prestressing notes, see "Column Post-Tensioning Details" sheet.
2. For bearing plate and restrainer cable anchorage unit details, see "Restrainer Details" sheets.
3. For walkway, pipe railing, and concrete bolster details, see "Bent A11E Details" sheets.
4. For ladder and access door details, see "Miscellaneous Details" sheets.
5. Remove existing catwalk and/or ladder where required to install prestress anchor beams and reset after stressing tendons.
6. Remount pipe railing and side walkway such that side walkway supports do not interfere with cable restrainer units.
7. See "Restrainer Details No. 1" sheet for "D" dimension.

The Contractor shall verify all controlling field dimensions before ordering or fabricating any material.

SEISMIC RETROFIT PROJECT NO. 611

CARQUINEZ BRIDGE - "A4E" LINE (APPROACH SPAN)

RESTRAINER PLAN D

Vong Toan, DESIGN OVERSIGHT	DESIGN	BY J. Aldrich	CHECKED C. Harrington, J. Quincy
SIGN OFF DATE	DETAILS	BY A. Kayden	CHECKED J. Quincy
car-re13.dlv	QUANTITIES	BY D. Nguyen-Tan, S. Ismail	CHECKED J. Downing

PREPARED FOR THE STATE OF CALIFORNIA DEPARTMENT OF TRANSPORTATION

Lee Holloway, PROJECT ENGINEER

BRIDGE NO. 23-15 R
POST MILE CC-13.47

ORIGINAL SCALE IN INCHES FOR REDUCED PLANS 0 1 2 3

CU 04-268
EA 043931

DISREGARD PRINTS BEARING EARLIER REVISION DATES → 23-APR-2002

REVISION DATES (PRELIMINARY STAGE ONLY)

SHEET 65R1 OF 120

ClibPDF - www.fastio.com

DIST	COUNTY	ROUTE	POST MILES TOTAL PROJECT	SHEET NO.	TOTAL SHEETS
04	CC SOL	80	12.8/14.1 0.0/0.6	501R1	555

REGISTERED CIVIL ENGINEER

PLANS APPROVAL DATE

REGISTERED PROFESSIONAL ENGINEER Robert L. Morrison Jr No. 43693 Exp. 03/31/97 CIVIL STATE OF CALIFORNIA

CH2M HILL
2485 NATOMAS PARK DR, SUITE 600
SACRAMENTO, CALIFORNIA 95833

The State of California or its officers or agents shall not be responsible for the accuracy or completeness of electronic copies of this plan sheet.

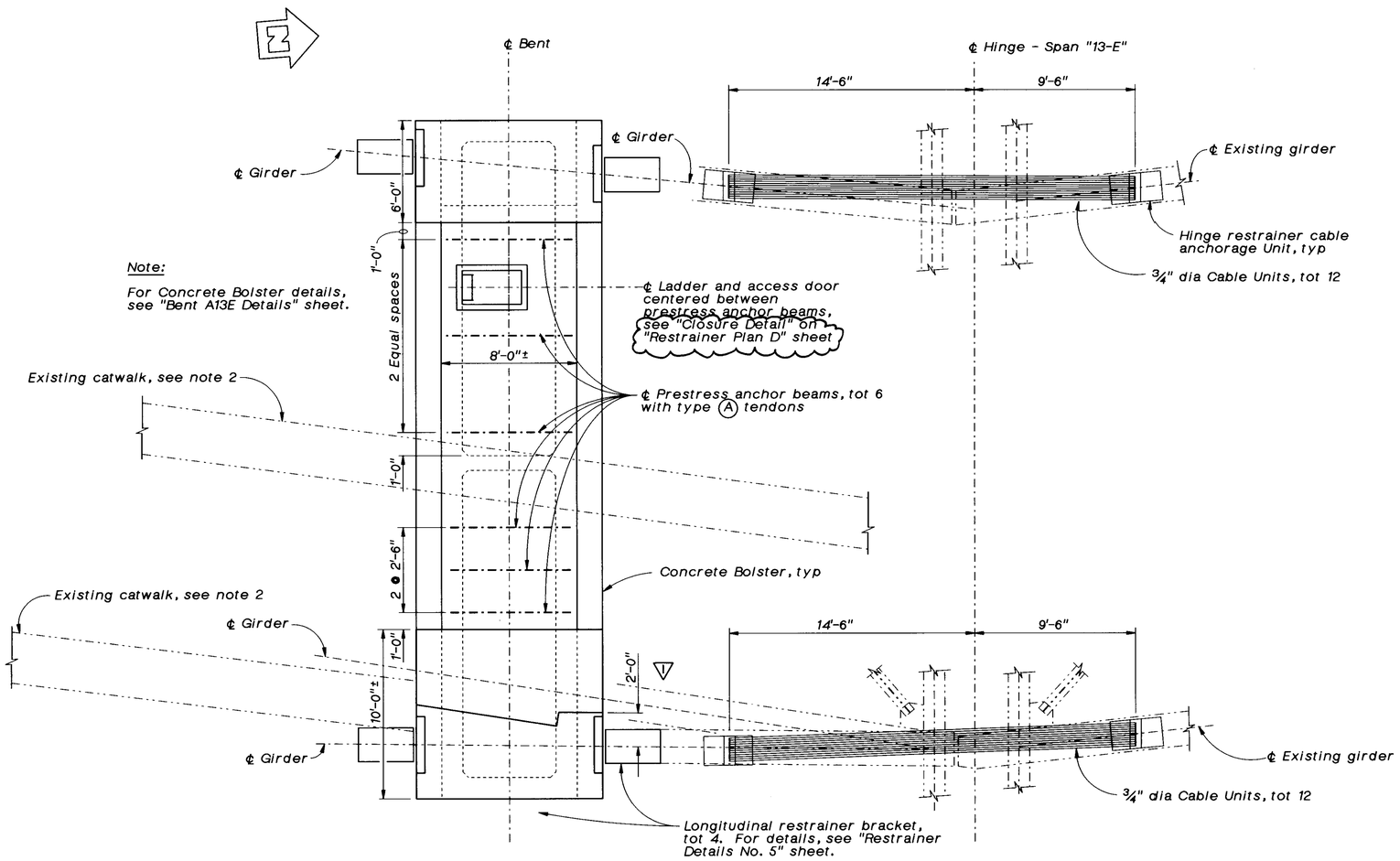

Note:

For Concrete Bolster details, see "Bent A13E Details" sheet.

PLAN "G" - BENT "A13E"

¼"=1'-0"

AS BUILT
CORRECTION BY BRIAN BEAUDOIN
CONTRACT NO. 04-043934
DATE FEBRUARY, 2002
STRUCTURES REPRESENTATIVE

Notes:

1. For prestress anchor beam details, schedule, and prestressing notes, see "Column Post-Tensioning Details" sheet.
2. Remove exist catwalk where required to install prestress anchor beams and reset after stressing tendons.
3. For ladder and access door details, see "Miscellaneous Details" sheet.

MARK	DATE	DESCRIPTIONS	BY	CK
▽	12/8/98	JOINT ARMOR ADDED PEDESTAL GEOMETRY MODIFIED	JSA	CJS

REVISIONS

CONTRACT CHANGE ORDER NO. _____
SHEET ____ OF ____

The Contractor shall verify all controlling field dimensions before ordering or fabricating any material.

SEISMIC RETROFIT PROJECT NO. 611

CARQUINEZ BRIDGE - "A4E" LINE (APPROACH SPAN)

RESTRAINER PLAN G

Vong Toan
DESIGN OVERSIGHT

SIGN OFF DATE

	BY	CHECKED
DESIGN	J. Aldrich	C. Harrington, J. Quincy
DETAILS	A. Kayden	J. Quincy
QUANTITIES	D. Nguyen-Tan, S. Ismail	J. Downing

PREPARED FOR THE STATE OF CALIFORNIA DEPARTMENT OF TRANSPORTATION

Lee Holloway
PROJECT ENGINEER

BRIDGE NO. 23-15 R
POST MILE CC-13.47

car-re14.dlv

ORIGINAL SCALE IN INCHES FOR REDUCED PLANS 0 1 2 3

CU 04-268
EA 043931

DISREGARD PRINTS BEARING EARLIER REVISION DATES →

REVISION DATES (PRELIMINARY STAGE ONLY)

SHEET 66R1 OF 120

ClibPDF - www.fastio.com

DIST	COUNTY	ROUTE	POST MILES TOTAL PROJECT	SHEET NO.	TOTAL SHEETS
04	CC, SOL	80	12.8/12.1/0.0/0.6	502	555

REGISTERED CIVIL ENGINEER

10-28-97
PLANS APPROVAL DATE

REGISTERED PROFESSIONAL ENGINEER
Jeffrey S. Aldrich
No. 34271
Exp. 09/30/99
CIVIL
STATE OF CALIFORNIA

CH2M HILL
2485 NATOMAS PARK DR, SUITE 600
SACRAMENTO, CALIFORNIA 95833

The State of California or its officers or agents shall not be responsible for the accuracy or completeness of electronic copies of this plan sheet.

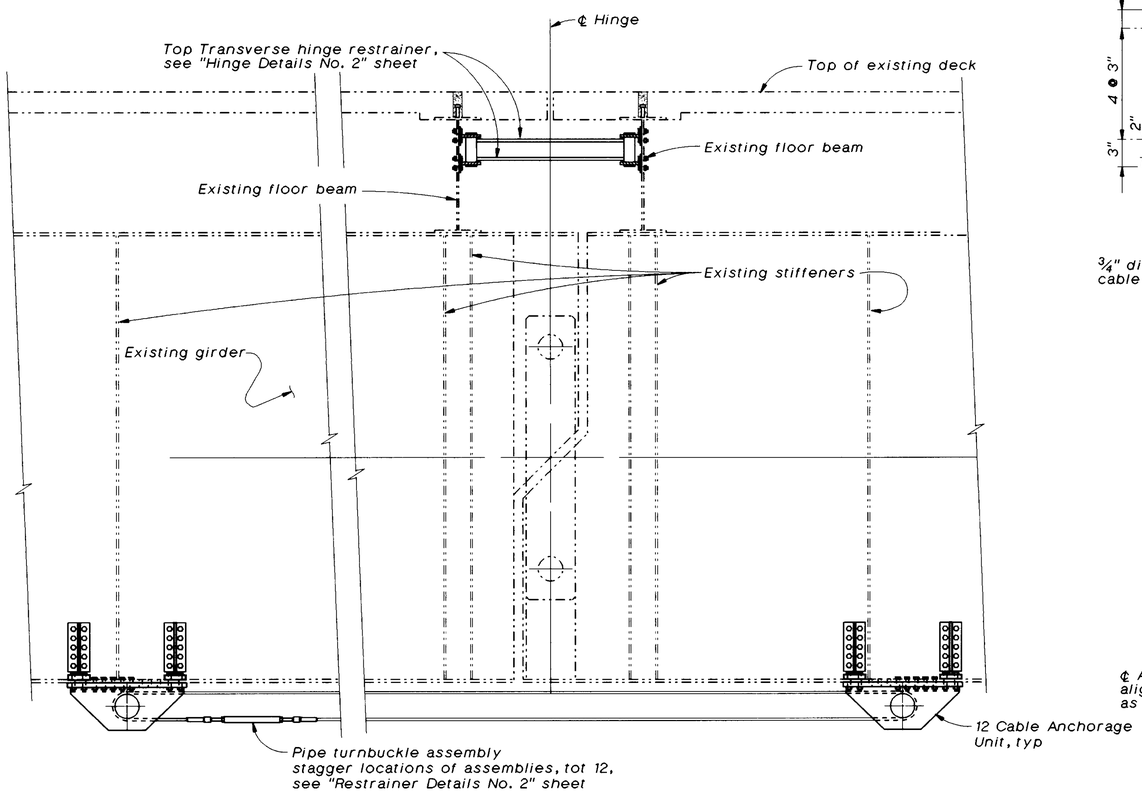

ELEVATION

½"=1'-0"

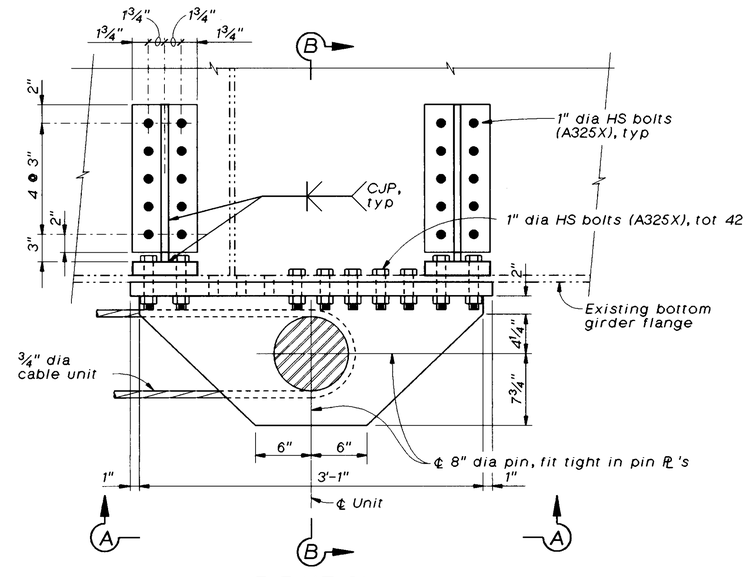

ELEVATION

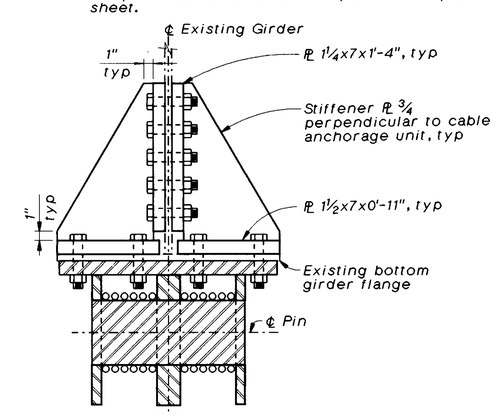

SECTION B-B

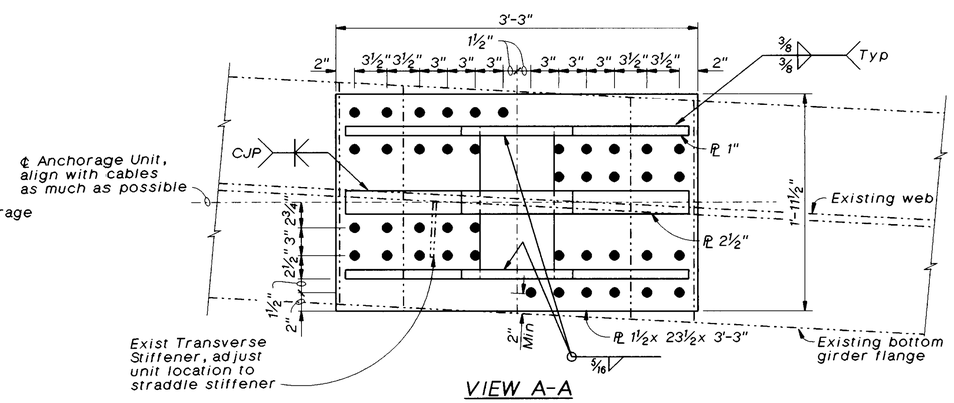

VIEW A-A

12 CABLE ANCHORAGE UNIT

1½"=1'-0"

NO AS BUILT CHANGES
AS BUILT
CORRECTION BY BRIAN BEAUDOIN
CONTRACT NO. 04-043934
DATE FEBRUARY, 2002
STRUCTURES REPRESENTATIVE

The Contractor shall verify all controlling field dimensions before ordering or fabricating any material.

SEISMIC RETROFIT PROJECT NO. 611

CARQUINEZ BRIDGE - "A4E" LINE (APPROACH SPAN)

HINGE DETAILS NO. 1

Vong Toan — DESIGN OVERSIGHT	DESIGN	BY J. Aldrich	CHECKED J. Zhang / J. Quincy
April 24, 1997 — SIGN OFF DATE	DETAILS	BY A. Kayden, G. Triplat	CHECKED J. Quincy
	QUANTITIES	BY D. Nguyen-Tan, S. Ismail	CHECKED J. Downing

PREPARED FOR THE STATE OF CALIFORNIA DEPARTMENT OF TRANSPORTATION

Lee Holloway — PROJECT ENGINEER

BRIDGE NO. 23-15 R
POST MILE CC-13.47

car-res1.dlv

ORIGINAL SCALE IN INCHES FOR REDUCED PLANS 0 1 2 3

CU 04-268
EA 043931

DISREGARD PRINTS BEARING EARLIER REVISION DATES → 15-MAR-1997

REVISION DATES (PRELIMINARY STAGE ONLY)

SHEET 67 OF 120

ClibPDF - www.fastio.com

DIST	COUNTY	ROUTE	POST MILES TOTAL PROJECT	SHEET NO.	TOTAL SHEETS
04	CC, SOL	80	12.8/14.1, 0.0/0.6	504	555

REGISTERED CIVIL ENGINEER

10-20-97
PLANS APPROVAL DATE

REGISTERED PROFESSIONAL ENGINEER Robert L. Morrison Jr. No. 43693 Exp. 03/31/97 CIVIL STATE OF CALIFORNIA

CH2M HILL
2485 NATOMAS PARK DR, SUITE 600
SACRAMENTO, CALIFORNIA 95833

The State of California or its officers or agents shall not be responsible for the accuracy or completeness of electronic copies of this plan sheet.

Existing Slab Top Longitudinal Reinforcement Schedule
Bent A3E thru A6E : 5/8" dia @ 12"±
Bent A7E : 5/8" dia @ 6"±
Bent A8E South : 7/8" dia alternating with 5/8" dia at 6"±

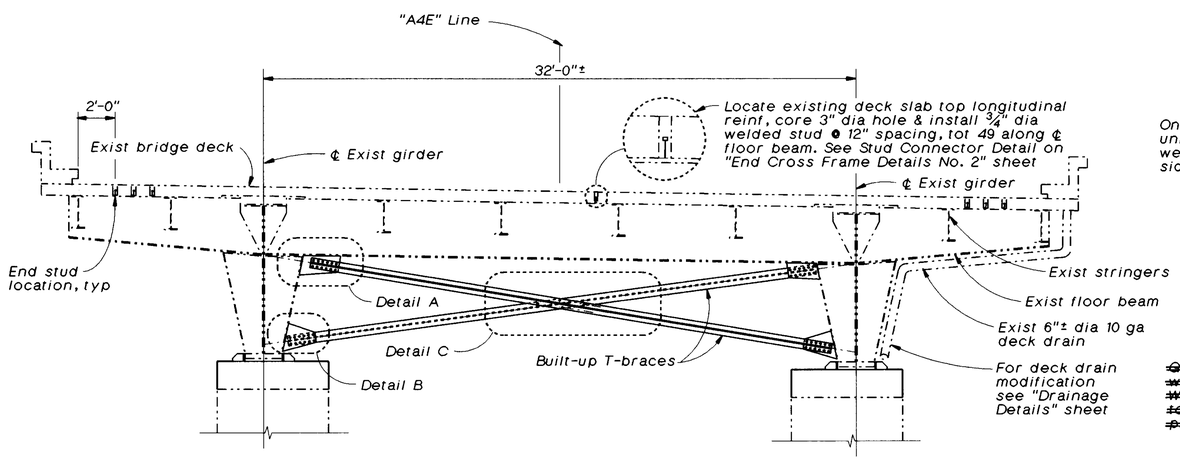

END CROSS FRAME ELEVATION

1/4"=1'-0"
(Abutment 2 and Bents A3E thru A5E shown, Bents A6E thru A8E South, similar)

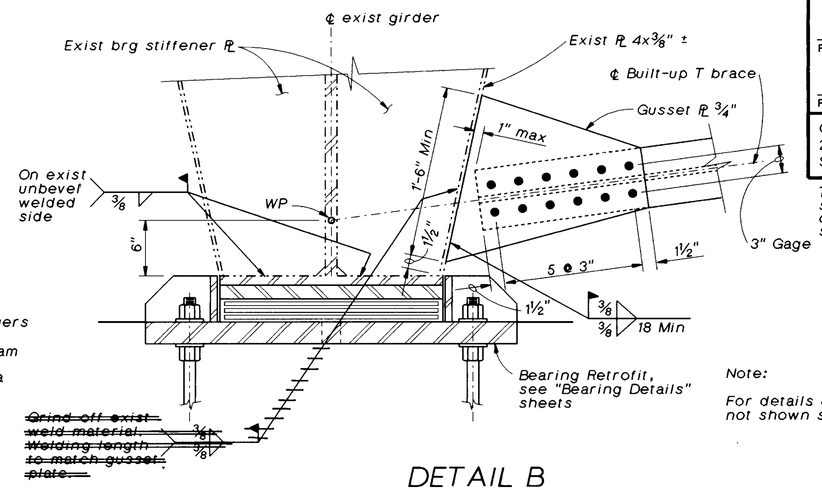

DETAIL B

1 1/2"=1'-0"

Note:

For details & dimensions not shown see Detail A.

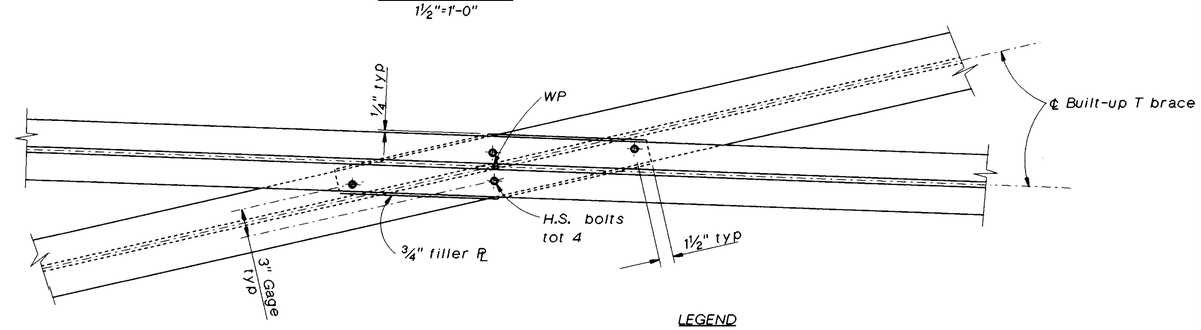

DETAIL C

1 1/2"=1'-0"

LEGEND

- Replace exist rivet or bolt with new HS bolt
- New HS bolt
- Exist rivet or bolt to remain

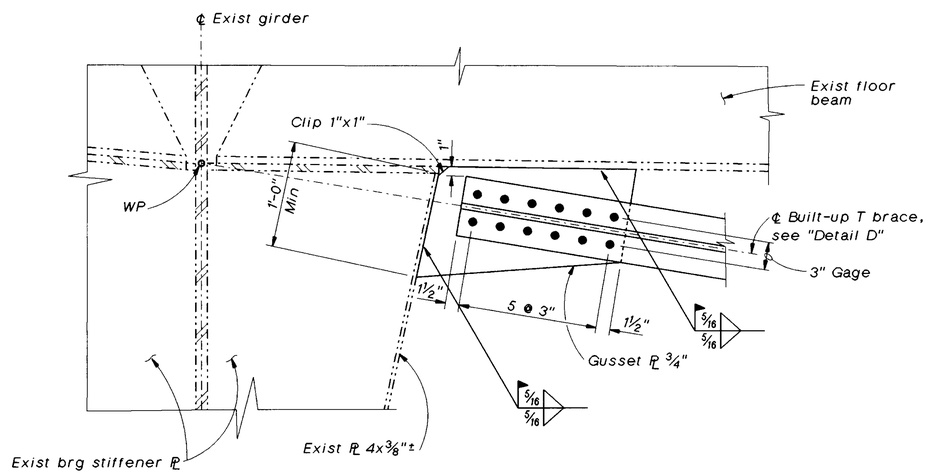

DETAIL A

1 1/2"=1'-0"

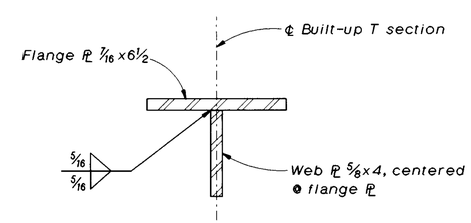

DETAIL D

3"=1'-0"

Notes:

1. All bolted connections are to be with 7/8" dia HS bolts (A325) unless otherwise noted.
2. Exist bolt or rivets are 7/8" Dia ± unless otherwise noted.
3. For dimensions of superstructure not shown, see "As-Built Typical Section" sheets.
4. Install ℄ gusset PL at ℄ floor beam and ℄ girder bearing stiffener.
5. Provide total 12 HS bolts at each end of built-up T brace.
6. Provide 1 1/16" dia oversized holes in gusset PLs.

AS BUILT
CORRECTION BY BRIAN BEAUDOIN
CONTRACT NO. 04-043934
DATE FEBRUARY, 2002
STRUCTURES REPRESENTATIVE

The Contractor shall verify all controlling field dimensions before ordering or fabricating any material.

SEISMIC RETROFIT PROJECT NO. 611

CARQUINEZ BRIDGE - "A4E" LINE (APPROACH SPAN)

END CROSS FRAME DETAILS NO. 1

Vong Toan
DESIGN OVERSIGHT
April 29, 1997
SIGN OFF DATE

	BY	CHECKED
DESIGN	B. Morrison, Jr.	J. Zhang/ J. Quincy
DETAILS	G. Bazán	J. Quincy
QUANTITIES	D. Nguyen-Tan/ S. Ismail	J. Downing

PREPARED FOR THE STATE OF CALIFORNIA DEPARTMENT OF TRANSPORTATION

Lee Holloway
PROJECT ENGINEER

BRIDGE NO. 23-15 R
POST MILE CC-13.47

CU 04-268
EA 043931

a4e-ecf1.dlv

ORIGINAL SCALE IN INCHES FOR REDUCED PLANS 0 1 2 3

DISREGARD PRINTS BEARING EARLIER REVISION DATES → 15-MAR-1997

REVISION DATES (PRELIMINARY STAGE ONLY)

SHEET 69 OF 120

ClibPDF - www.fastio.com

DIST	COUNTY	ROUTE	POST MILES TOTAL PROJECT	SHEET NO.	TOTAL SHEETS
04	CC, SOL	80	12.8/12.1, 0.0/0.6	505	555

REGISTERED CIVIL ENGINEER

10-20-97

PLANS APPROVAL DATE

REGISTERED PROFESSIONAL ENGINEER — Robert L. Morrison Jr. No. 43693 Exp. 03/31/97 CIVIL — STATE OF CALIFORNIA

CH2M HILL
2485 NATOMAS PARK DR, SUITE 600
SACRAMENTO, CALIFORNIA 95833

The State of California or its officers or agents shall not be responsible for the accuracy or completeness of electronic copies of this plan sheet.

Existing Slab Top Longitudinal Reinforcement Schedule
Bent A8E North : 7/8"dia alternating with 5/8"dia @ 6"±
Bent A9E thru A12E : 7/8"dia alternating with 5/8"dia @ 6"±
and Pier 5

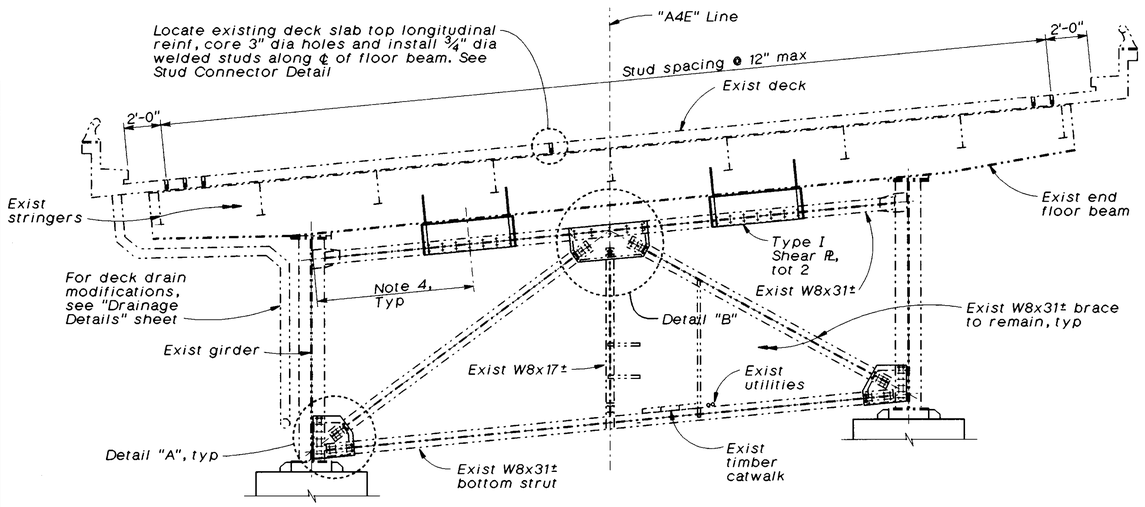

(Bent "A8E" north through "A11E" south, and Pier 5)

END CROSS FRAME ELEVATION

1/4"=1'-0"

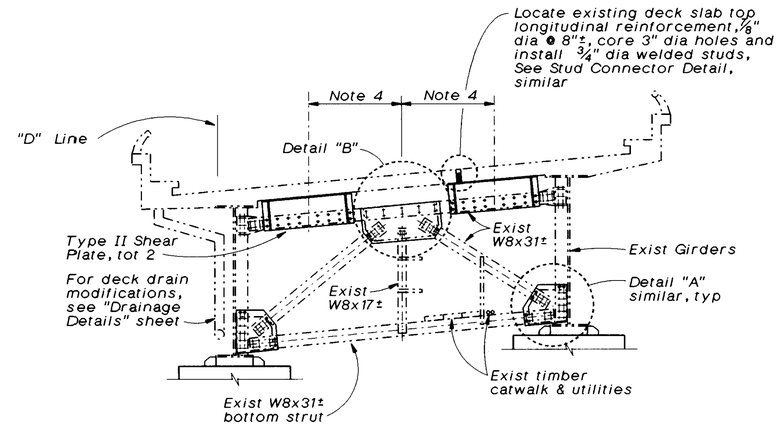

(Bent "A11E")

RAMP END CROSS FRAME ELEVATION

1/4"=1'-0"

Notes:

1. For Notes and Legend, see "Cross Frame Details No. 1" sheet.
2. For Type I and II Shear Plate details, see "Cross Frame Details No. 3" sheet.
3. For Detail "A" and Detail "B", see "Cross Frame Details No.4" sheet.
4. Center shear plate between connections 1'-0"± as to avoid conflict with existing stringers.

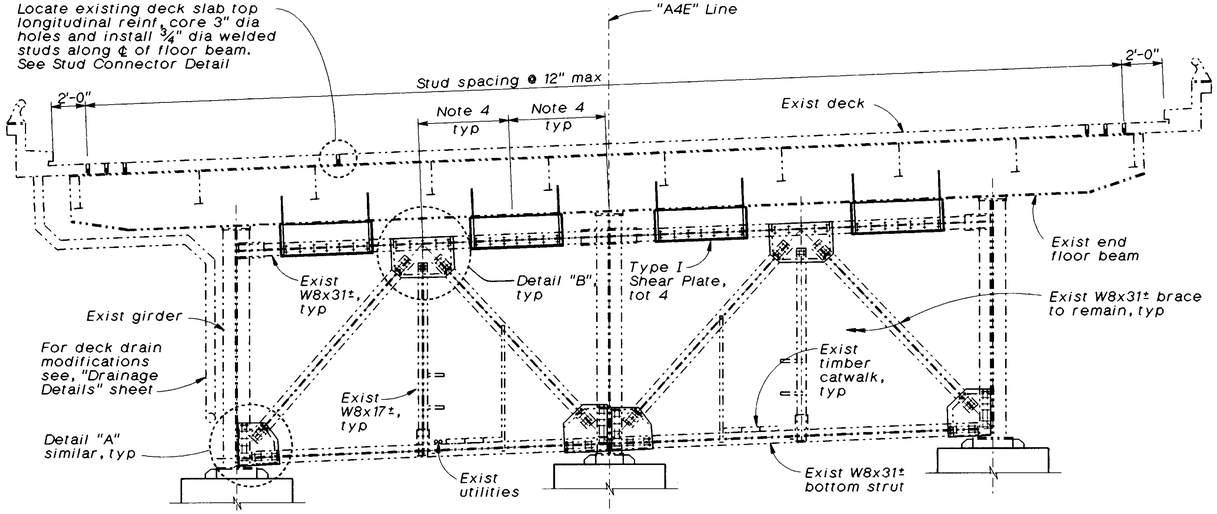

(Bent "A11E" north through "A12E")

END CROSS FRAME ELEVATION

1/4"=1'-0"

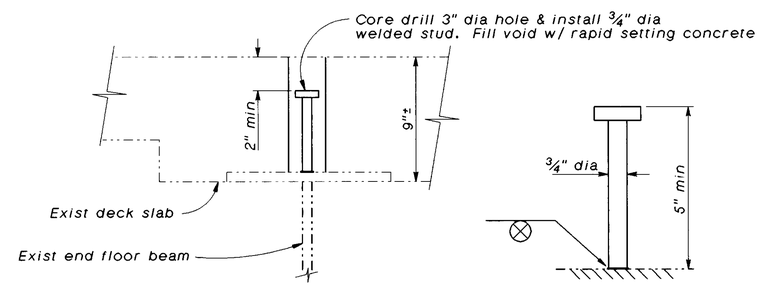

Notes:

1. Stud length to be determined by the Contractor, unless otherwise shown.

STUD CONNECTOR DETAIL

No scale

NO AS BUILT CHANGES
AS BUILT
CORRECTION BY BRIAN BEAUDOIN
CONTRACT NO. 04-043934
DATE FEBRUARY, 2002
STRUCTURES REPRESENTATIVE

The Contractor shall verify all controlling field dimensions before ordering or fabricating any material.

SEISMIC RETROFIT PROJECT NO. 611

CARQUINEZ BRIDGE - "A4E" LINE (APPROACH SPAN)

END CROSS FRAME DETAILS NO. 2

Vong Toan
DESIGN OVERSIGHT
April 29, 1997
SIGN OFF DATE

	BY	CHECKED
DESIGN	D. Nguyen-Tan	J. Zhang / J. Quincy
DETAILS	G. Bazán	J. Quincy
QUANTITIES	S. Ismail/ D. Nguyen-Tan	J. Downing

PREPARED FOR THE STATE OF CALIFORNIA DEPARTMENT OF TRANSPORTATION

Lee Holloway
PROJECT ENGINEER

BRIDGE NO. 23-15 R
POST MILE CC-13.47

a4e-ecf2.dlv

ORIGINAL SCALE IN INCHES FOR REDUCED PLANS 0 1 2 3

CU 04-268
EA 043931

DISREGARD PRINTS BEARING EARLIER REVISION DATES → 15-MAR-1997

REVISION DATES (PRELIMINARY STAGE ONLY)

SHEET 70 OF 120

ClibPDF - www.fastio.com

DIST	COUNTY	ROUTE	POST MILES TOTAL PROJECT	SHEET NO.	TOTAL SHEETS
04	CC, SOL	80	12.8/14.1, 0.0/0.6	506	555

REGISTERED CIVIL ENGINEER

10-20-97
PLANS APPROVAL DATE

REGISTERED PROFESSIONAL ENGINEER — Robert L. Morrison Jr. — No. 43693 — Exp. 03/31/97 — CIVIL — STATE OF CALIFORNIA

CH2M HILL
2485 NATOMAS PARK DR, SUITE 600
SACRAMENTO, CALIFORNIA 95833

The State of California or its officers or agents shall not be responsible for the accuracy or completeness of electronic copies of this plan sheet.

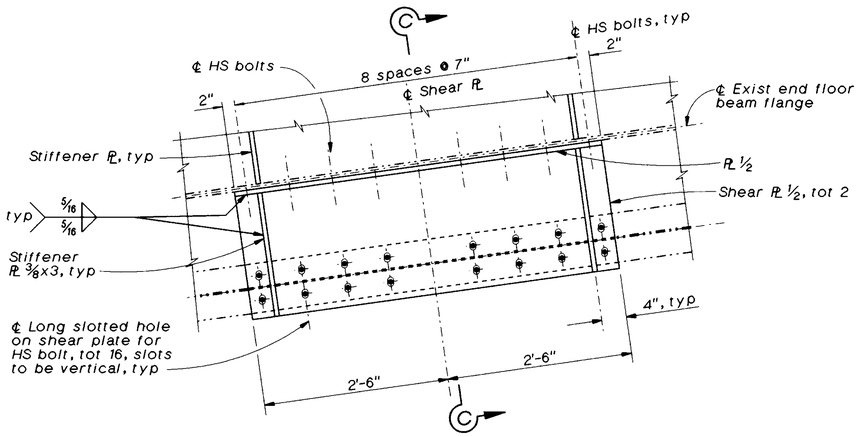

TYPE I SHEAR PLATE ELEVATION

1"=1'-0"

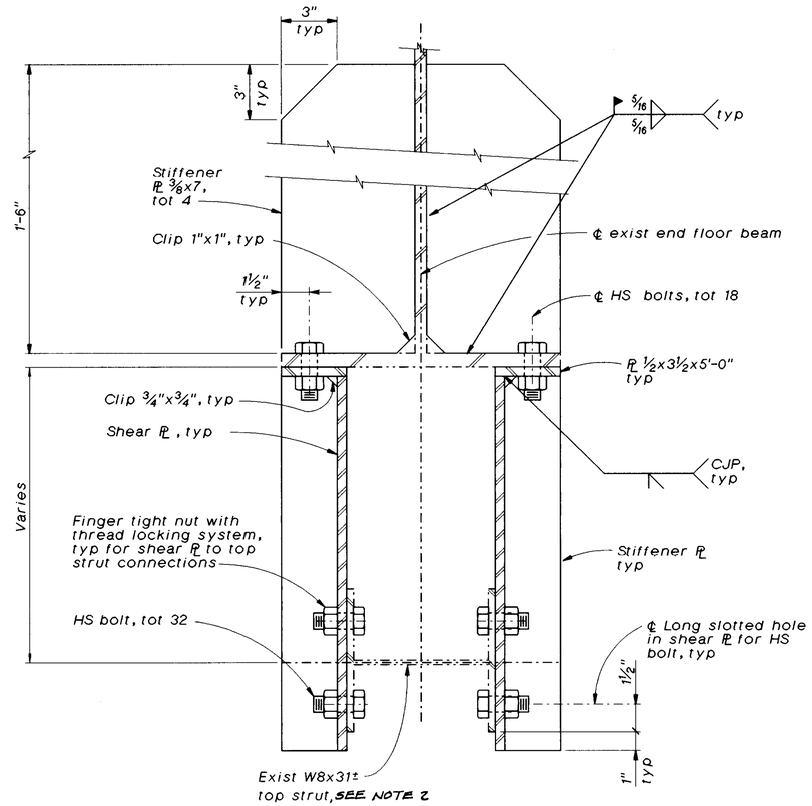

SECTION C-C

3"=1'-0"

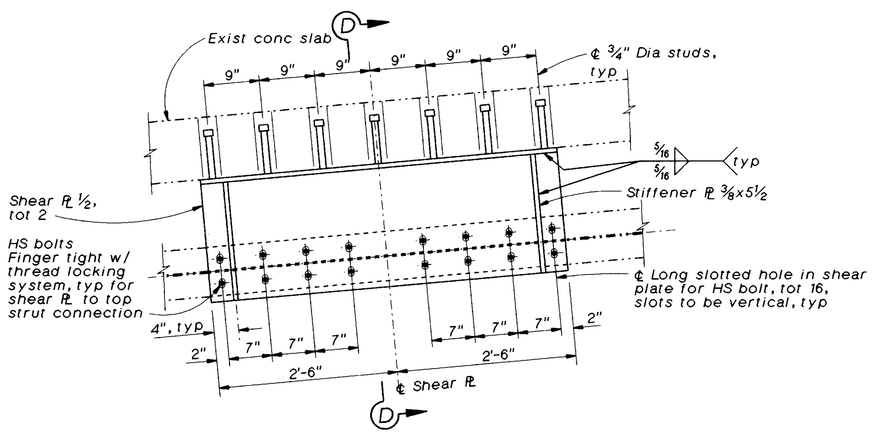

TYPE II SHEAR PLATE ELEVATION

1"=1'-0"

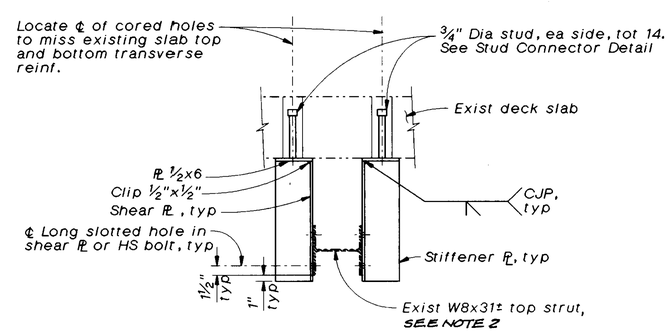

SECTION D-D

1"=1'-0"

AS BUILT

CORRECTION BY BRIAN BEAUDOIN
CONTRACT NO. 04-043934
DATE FEBRUARY, 2002
STRUCTURES REPRESENTATIVE

Notes:

1. For Notes and Legend, see "End Cross Frame Details No. 1" sheet.
2. THE HOLES IN THE EXISTING W8 MAY BE DRILLED TO WITHIN SPECIFICATION EDGE DISTANCE (1-⅛ INCH FOR A ⅞ INCH DIA BOLT). THE LONG-SLOT HOLES IN THE SHEAR PLATE MAY BE ENLARGED IN THE LONG DIRECTION AS LONG AS THE GAP BETWEEN THE BOLT AND THE EDGE OF THE HOLE DOES NOT EXCEED ½ INCH (IN THE DIRECTION OF THE SLOT) AND A MINIMUM EDGE DISTANCE OF 1-⅛ INCH IS MAINTAINED BETWEEN THE BOTTOM OF THE SLOT AND THE BOTTOM EDGE OF THE SHEAR PLATE.

The Contractor shall verify all controlling field dimensions before ordering or fabricating any material.

SEISMIC RETROFIT PROJECT NO. 611

CARQUINEZ BRIDGE - "A4E" LINE (APPROACH SPAN)

END CROSS FRAME DETAILS NO. 3

Vong Toan
DESIGN OVERSIGHT
April 24, 1997
SIGN OFF DATE

	BY	CHECKED
DESIGN	D. Nguyen-Tan	J. Zhang / J. Quincy
DETAILS	G. Bazán	J. Quincy
QUANTITIES	S. Ismail, D. Nguyen-Tan	J. Downing

PREPARED FOR THE STATE OF CALIFORNIA DEPARTMENT OF TRANSPORTATION

Lee Holloway
PROJECT ENGINEER

BRIDGE NO. 23-15 R
POST MILE CC-13.47

a4e-ecf3.dlv

ORIGINAL SCALE IN INCHES FOR REDUCED PLANS 0 1 2 3

CU 04-268
EA 043931

DISREGARD PRINTS BEARING EARLIER REVISION DATES → 15-MAR-1997

REVISION DATES (PRELIMINARY STAGE ONLY) | SHEET 71 | OF 120

ClibPDF - www.fastio.com

DIST	COUNTY	ROUTE	POST MILES TOTAL PROJECT	SHEET NO.	TOTAL SHEETS
04	CC,SOL	80	12.8/14.1,0.0/0.6	507	555

REGISTERED CIVIL ENGINEER

10-20-97
PLANS APPROVAL DATE

REGISTERED PROFESSIONAL ENGINEER — Robert L. Morrison Jr — No. 43693 — Exp. 03/31/97 — CIVIL — STATE OF CALIFORNIA

CH2M HILL
2485 NATOMAS PARK DR, SUITE 600
SACRAMENTO, CALIFORNIA 95833

The State of California or its officers or agents shall not be responsible for the accuracy or completeness of electronic copies of this plan sheet.

Note:

For Notes And Legend see "End Cross Frame Details No. 1" sheet.

Detail A -Bolts & Rivet Replacement Quantity- (each connection)											
Location	Bent A8E	Bent A9E		Bent A10E		Bent A11E			Bent A12E		Pier 5
	North	South	North	South	North	South	North	Ramp	South	North	
Remove exist 7/8"± dia rivets	7	7	7	7	7	7	7	7	7	0	0
Remove exist 7/8"± dia bolts	31	31	31	31	31	31	31	31	31	48	48
Install 7/8" dia HS bolts	64	64	64	64	64	64	64	64	64	64	64

Detail B -Bolts & Rivet Replacement Quantity- (each connection)											
Location	Bent A8E	Bent A9E		Bent A10E		Bent A11E			Bent A12E		Pier 5
	North	South	North	South	North	South	North	Ramp	South	North	
Remove exist 7/8"± dia rivets	22	22	22	22	22	22	22	18	22	0	0
Remove exist 7/8"± dia bolts	24	24	24	24	24	24	24	24	24	48	48
Remove exist 3/4"± dia bolts	8	8	8	8	8	8	8	8	8	12	12
Install 7/8" dia HS bolts	58	58	58	58	58	58	58	54	58	60	60
Install 3/4" dia HS bolts	8	8	8	8	8	8	8	8	8	12	12

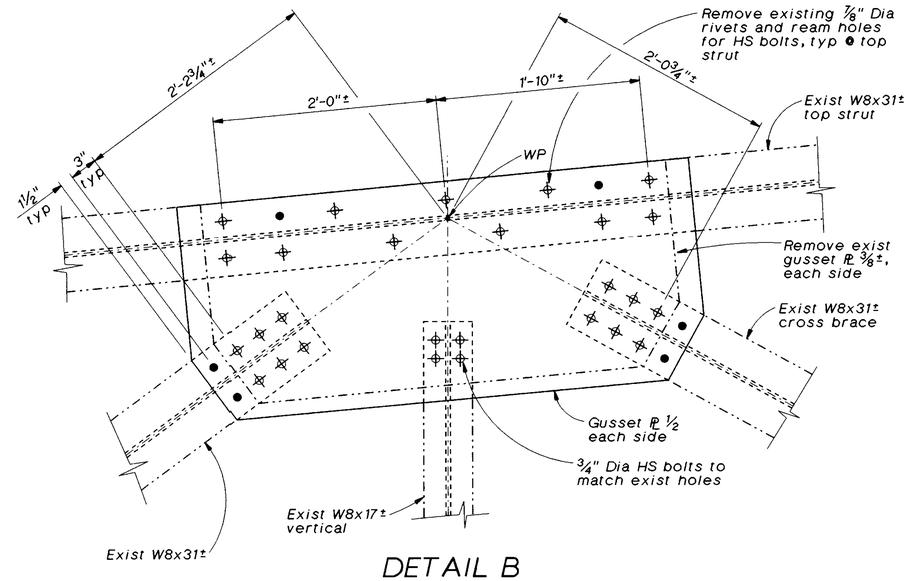

DETAIL B

1 1/2"=1'-0"

NOTES:
1. REMOVE EXISTING 7/8"± DIA RIVETS AND INSTALL 7/8" DIA HS BOLTS TO MATCH EXISTING HOLES.

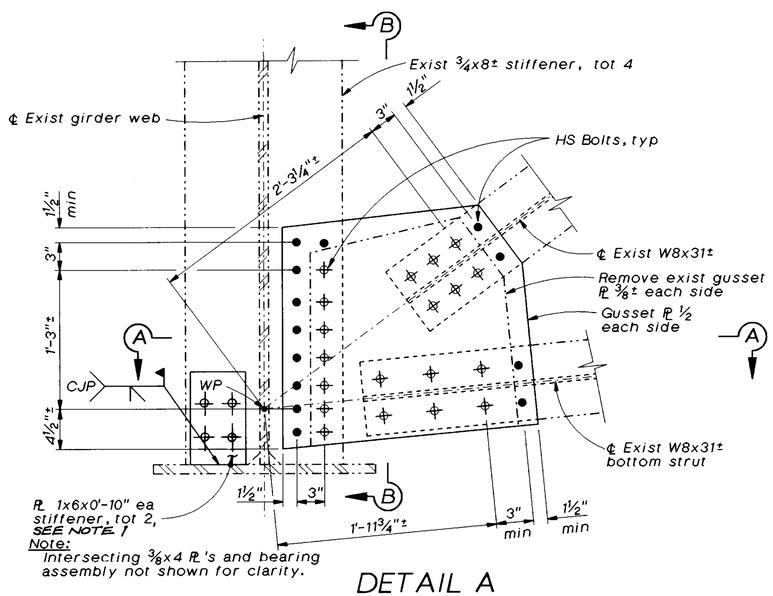

Note:
Intersecting 3/8x4 PL's and bearing assembly not shown for clarity.

DETAIL A

1 1/2"=1'-0"

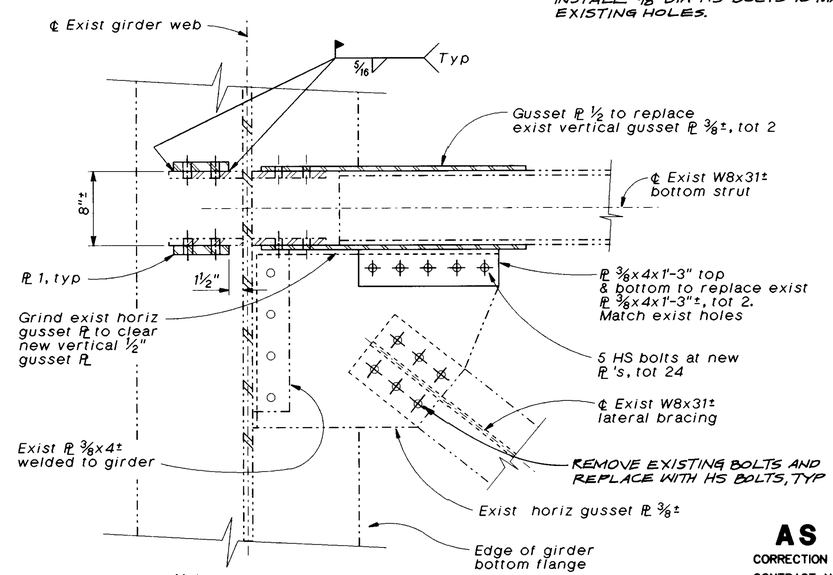

Note:
Bearing assembly not shown for clarity.

SECTION A-A

1 1/2"=1'-0"

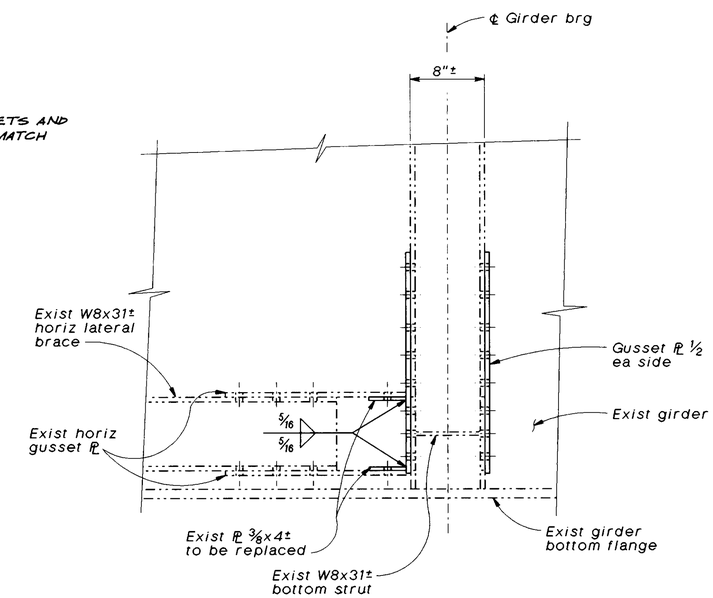

Note:
Bearing assembly not shown for clarity.

SECTION B-B

1 1/2"=1'-0"

AS BUILT
CORRECTION BY BRIAN BEAUDOIN
CONTRACT NO. 04-043934
DATE FEBRUARY, 2002
STRUCTURES REPRESENTATIVE

The Contractor shall verify all controlling field dimensions before ordering or fabricating any material.

SEISMIC RETROFIT PROJECT NO. 611

CARQUINEZ BRIDGE - "A4E" LINE (APPROACH SPAN)

END CROSS FRAME DETAILS NO. 4

Vong Toan — DESIGN OVERSIGHT — Apr. 24, 1997 — SIGN OFF DATE	DESIGN	BY D. Nguyen-Tan	CHECKED J. Zhang / J. Quincy	PREPARED FOR THE STATE OF CALIFORNIA DEPARTMENT OF TRANSPORTATION	Lee Holloway — PROJECT ENGINEER
	DETAILS	BY G. Bazan, D Carrell	CHECKED J. Quincy		
	QUANTITIES	BY D. Nguyen-Tan, S. Ismail	CHECKED J. Downing		

BRIDGE NO. 23-15 R
POST MILE CC-13.47

a4e-ecf6.dlv

ORIGINAL SCALE IN INCHES FOR REDUCED PLANS 0 1 2 3

CU 04-268
EA 043931

DISREGARD PRINTS BEARING EARLIER REVISION DATES → REVISION DATES (PRELIMINARY STAGE ONLY) 15-MAR-1997

SHEET 72 OF 120

ClibPDF - www.fastio.com

DIST	COUNTY	ROUTE	POST MILES TOTAL PROJECT	SHEET NO.	TOTAL SHEETS
04	CC, SOL	80	12.8/14.1, 0.0/0.6	508	555

REGISTERED CIVIL ENGINEER — Robert L. Morrison Jr.

10-20-97
PLANS APPROVAL DATE

REGISTERED PROFESSIONAL ENGINEER — Robert L. Morrison Jr. — No. 43693 — Exp. 03/31/97 — CIVIL — STATE OF CALIFORNIA

CH2M HILL
2485 NATOMAS PARK DR, SUITE 600
SACRAMENTO, CALIFORNIA 95833

The State of California or its officers or agents shall not be responsible for the accuracy or completeness of electronic copies of this plan sheet.

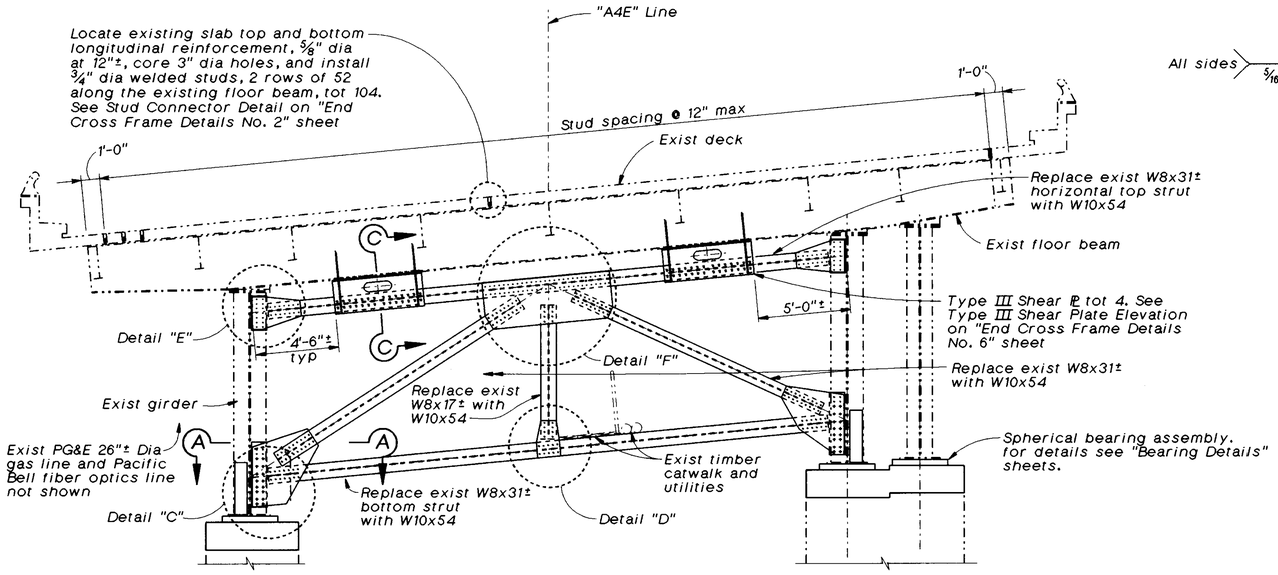

CROSS FRAME ELEVATION - BENT "A13E"

1/4"=1'-0"

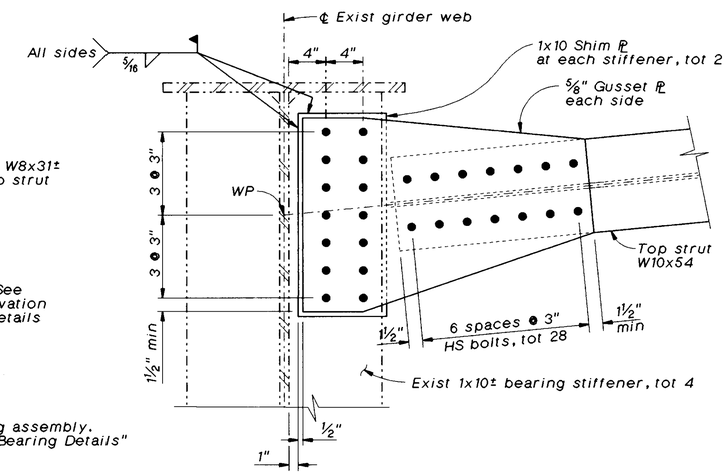

DETAIL E

1 1/2"=1'-0"

NOTES:

1. For Legend and Notes, see "End Cross Frame Details No. 1" sheet.
2. New WP loactions equal exist WP locations.
3. For Sections A-A, B-B, C-C and D-D see "End Cross Frame Details No. 6" sheet.
4. JACKING STIFFNER LEFT IN-PLACE. TYP TO ALL BENTS.

NOTES:

1A. AT THE SOUTHWEST BEARING STIFFENER AT THE CENTER GIRDER, THE INBOARD EDGE OF THE SHIM PLATE WAS CHAMFERED BY 1/2" x FULL THICKNESS x FULL HEIGHT AND TRIMMED 1/2" FROM EDGE THAT ABUTS WITH THE GIRDER FLANGE.

2A. 1/8" THICK FILL PLATE INSTALLED ON ONE SIDE OF THE CONNECTION BETWEEN 1x10 SHIM AND GUSSET.

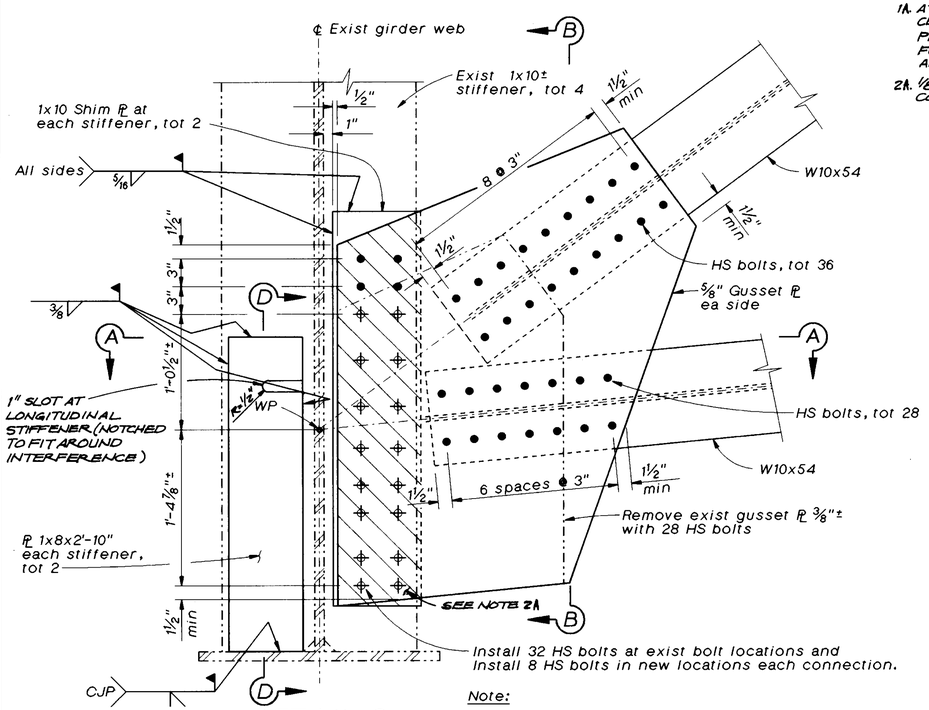

DETAIL C

1 1/2"=1'-0"

Note:

Intersecting 3/8x4 PLs and bearing assembly not shown for clarity.

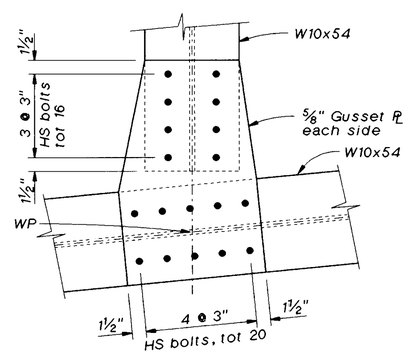

DETAIL D

1 1/2"=1'-0"

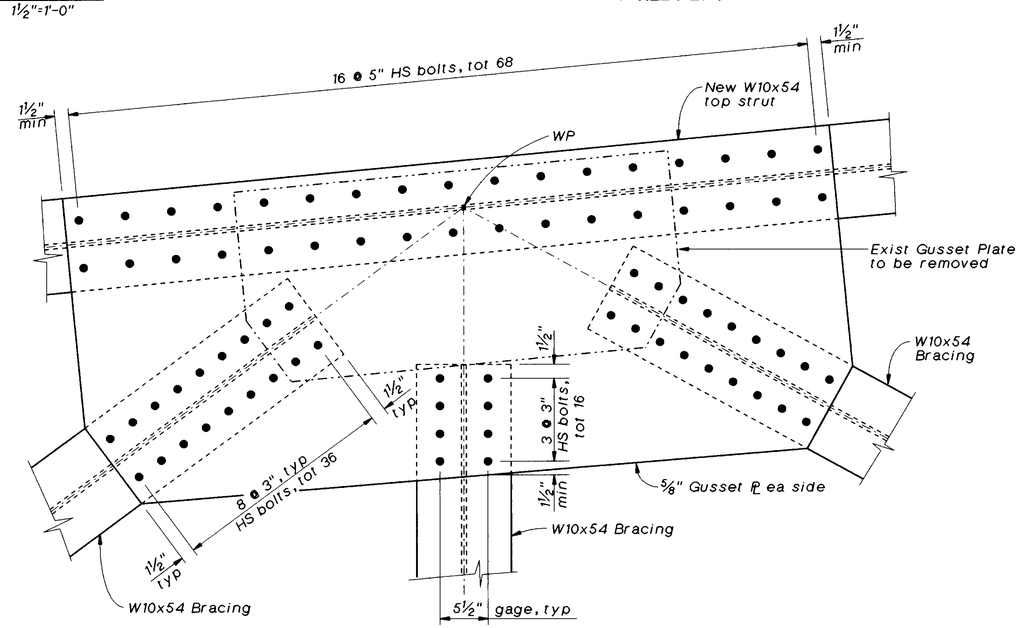

DETAIL F

1 1/2"=1'-0"

AS BUILT

CORRECTION BY BRIAN BEAUDOIN
CONTRACT NO. 04-043934
DATE FEBRUARY, 2002
STRUCTURES REPRESENTATIVE

The Contractor shall verify all controlling field dimensions before ordering or fabricating any material.

SEISMIC RETROFIT PROJECT NO. 611

CARQUINEZ BRIDGE - "A4E" LINE (APPROACH SPAN)

END CROSS FRAME DETAILS NO. 5

Vong Toan — DESIGN OVERSIGHT — April 29, 1997 — SIGN OFF DATE	DESIGN	BY R. Morrison, Jr.	CHECKED J. Zhang / J. Quincy
	DETAILS	BY G. Bazán	CHECKED J. Quincy
	QUANTITIES	BY D. Nguyen-Tan / S. Ismail	CHECKED J. Downing

PREPARED FOR THE STATE OF CALIFORNIA DEPARTMENT OF TRANSPORTATION

Lee Holloway — PROJECT ENGINEER

BRIDGE NO. 23-15 R
POST MILE CC-13.47

a4e-ecf4.dlv

ORIGINAL SCALE IN INCHES FOR REDUCED PLANS 0 1 2 3

CU 04-268
EA 043931

DISREGARD PRINTS BEARING EARLIER REVISION DATES → 15-MAR-1997

REVISION DATES (PRELIMINARY STAGE ONLY)

SHEET 73 OF 120

ClibPDF - www.fastio.com

DIST	COUNTY	ROUTE	POST MILES TOTAL PROJECT	SHEET NO.	TOTAL SHEETS
04	CC, SOL	80	12.8/14.1, 0.0/0.6	509	555

REGISTERED CIVIL ENGINEER

10-20-97
PLANS APPROVAL DATE

REGISTERED PROFESSIONAL ENGINEER — Robert L. Morrison Jr. — No. 43693 — Exp. 03/31/97 — CIVIL — STATE OF CALIFORNIA

CH2M HILL
2485 NATOMAS PARK DR, SUITE 600
SACRAMENTO, CALIFORNIA 95833

The State of California or its officers or agents shall not be responsible for the accuracy or completeness of electronic copies of this plan sheet.

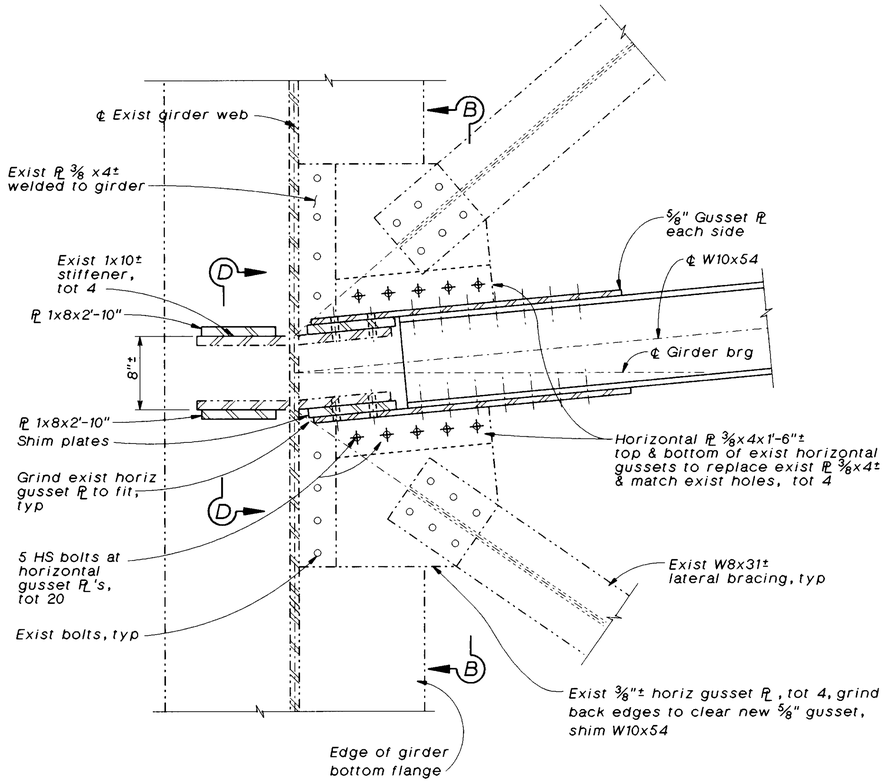

SECTION A-A

1½"=1'-0"

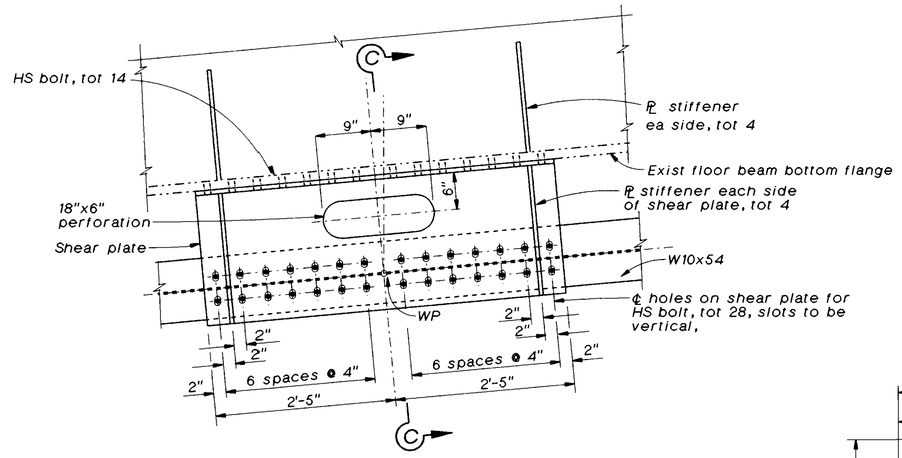

TYPE III SHEAR PLATE ELEVATION

1"=1'-0"

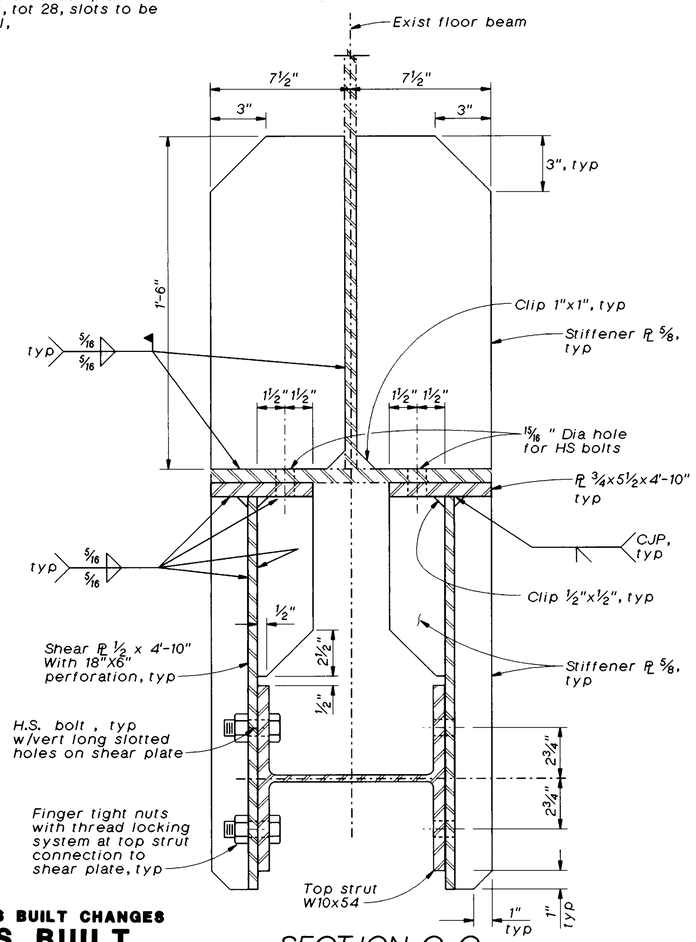

SECTION C-C

3"=1'-0"

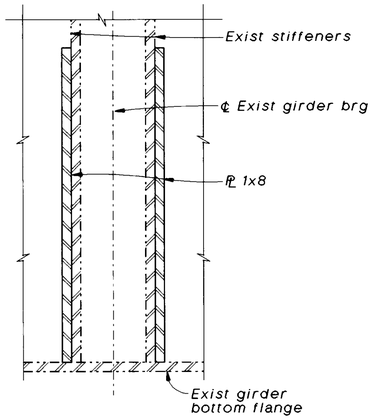

SECTION D-D

1½"=1'-0"

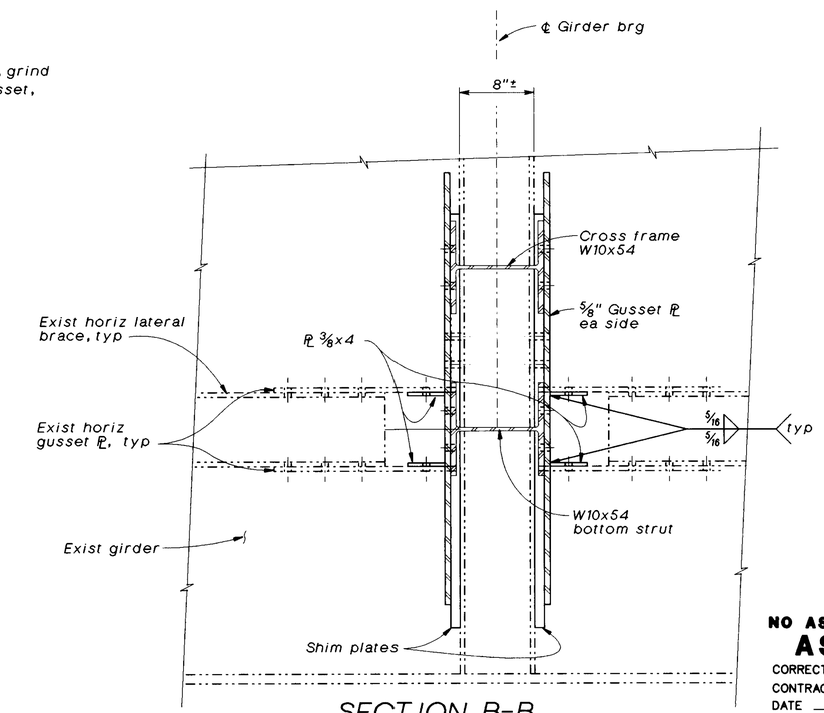

SECTION B-B

1½"=1'-0"

NO AS BUILT CHANGES
AS BUILT
CORRECTION BY BRIAN BEAUDOIN
CONTRACT NO. 04-043934
DATE FEBRUARY, 2002
STRUCTURES REPRESENTATIVE

The Contractor shall verify all controlling field dimensions before ordering or fabricating any material.

Notes:

1. For Legend and Notes, see "End Cross Frame Details No. 1" sheet.
2. For locations of Sections A-A, B-B, C-C & D-D see "End Cross Frame Details No. 5" sheet.

SEISMIC RETROFIT PROJECT NO. 611

CARQUINEZ BRIDGE - "A4E" LINE (APPROACH SPAN)

END CROSS FRAME DETAILS NO. 6

Vong Toan
DESIGN OVERSIGHT
April 24, 1997
SIGN OFF DATE

	BY	CHECKED
DESIGN	B. Morrison, Jr.	J. Zhang / J. Quincy
DETAILS	G. Bazán	J. Quincy
QUANTITIES	D. Nguyen-Tan, S. Ismail	J. Downing

PREPARED FOR THE STATE OF CALIFORNIA DEPARTMENT OF TRANSPORTATION

Lee Holloway
PROJECT ENGINEER

BRIDGE NO. 23-15 R
POST MILE CC-13.47

a4e-ecf5.dlv

ORIGINAL SCALE IN INCHES FOR REDUCED PLANS 0 1 2 3

CU 04-268
EA 043931

DISREGARD PRINTS BEARING EARLIER REVISION DATES → 17-MAR-1997

REVISION DATES (PRELIMINARY STAGE ONLY)

SHEET 74 OF 120

ClibPDF - www.fastio.com

DIST	COUNTY	ROUTE	POST MILES TOTAL PROJECT	SHEET NO.	TOTAL SHEETS
04	CC, SOL	80	12.8/14.1, 0.0/0.6	510	555

Robert L. Morrison Jr
REGISTERED CIVIL ENGINEER

10-20-97
PLANS APPROVAL DATE

REGISTERED PROFESSIONAL ENGINEER
Robert L. Morrison Jr
No. 43693
Exp. 03/31/97
CIVIL
STATE OF CALIFORNIA

CH2M HILL
2485 NATOMAS PARK DR, SUITE 600
SACRAMENTO, CALIFORNIA 95833

The State of California or its officers or agents shall not be responsible for the accuracy or completeness of electronic copies of this plan sheet.

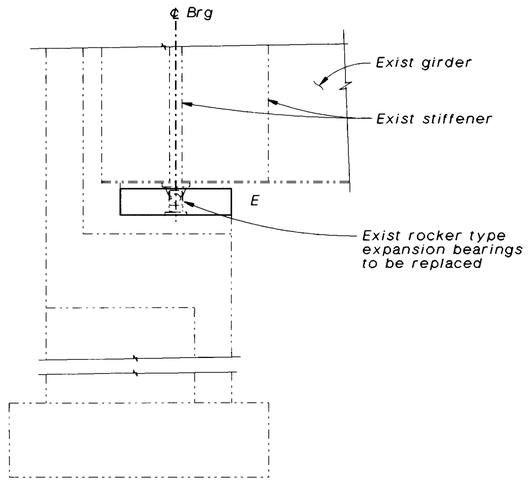

ABUTMENT

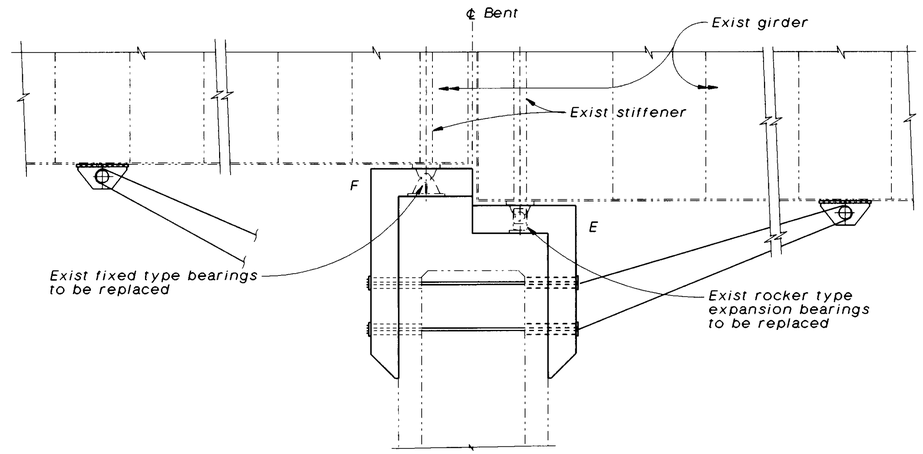

BENT

PART ELEVATION

No Scale

Notes:

1. Initial jacking loads (dead load) are estimated working level dead load girder reactions required to unload the existing bearings.
2. Live load plus impact loads are estimated working level girder reactions.
3. No traffic shall be allowed on span while it is being raised or lowered by jacks.
4. Girders within a span shall be raised and lowered simultaneously so as to prevent racking of steel work or cracking of deck slab.
5. Temporary supports shall include jacking assemblies and appurtenant items necessary to jack and support the structure both vertically and laterally.
6. For bearing replacement details see "Bearing Details" sheet.

INITIAL JACKING LOADS AND LIVE LOADS

SPAN	LOCATION	APPROXIMATE INITIAL JACKING LOAD (DEAD LOAD), KIPS PER GIRDER	LIVE LOAD + IMPACT LOAD KIPS PER GIRDER
2-E	Abut A2E	193	169
	Bent A3E	193	169
3-E	Bent A3E	193	169
	Bent A4E	193	169
4-E	Bent A4E	193	169
	Bent A5E	193	169
5-E	Bent A5E	193	169
	Bent A6E	193	169
6-E	Bent A6E	226	172
	Bent A7E	226	172
7-E	Bent A7E	225	172
	Bent A8E	225	185
8-E	Bent A8E	262	193
	Bent A9E	262	197
9-E	Bent A9E	262	197
	Bent A10E	262	197
10-E	Bent A10E	321	222
	Bent A11E	321	226
11-E	Bent A11E/D7		
	Left	364	227
	Center	370	209
	Right	245	132
	Bent A12E		
	Left	273	165
	Center	302	185
	Right	285	170

INITIAL JACKING LOADS AND LIVE LOADS

SPAN	LOCATION	APPROXIMATE INITIAL JACKING LOAD (DEAD LOAD), KIPS PER GIRDER	LIVE LOAD + IMPACT LOAD KIPS PER GIRDER
6-D	A11E/D7	205	106
12-E	Bent A12E		
	Left	257	169
	Center	247	177
	Right	295	197
	Bent A13E		
	Left	816	388
	Center	544	285
	Right	560	308
13-E	Pier 5		
	Left	319	205
	Right	319	205

NO AS BUILT CHANGES
AS BUILT
CORRECTION BY BRIAN BEAUDOIN
CONTRACT NO. 04-043934
DATE FEBRUARY, 2002
STRUCTURES REPRESENTATIVE

The Contractor shall verify all controlling field dimensions before ordering or fabricating any material.

SEISMIC RETROFIT PROJECT NO. 611

CARQUINEZ BRIDGE - "A4E" LINE (APPROACH SPAN)

TEMPORARY SUPPORT DETAILS

Vong Toan
DESIGN OVERSIGHT
April 24, 1997
SIGN OFF DATE

	BY	CHECKED
DESIGN	J. Aldrich/ R. Morrison, Jr.	J. Eising J. Quincy
DETAILS	J. Law	J. Quincy
QUANTITIES	D. Nguyen-Tan/ S. Ismail	J. Downing

PREPARED FOR THE STATE OF CALIFORNIA DEPARTMENT OF TRANSPORTATION

Lee Holloway
PROJECT ENGINEER

BRIDGE NO. 23-15 R
POST MILE CC-13.47

car-tsd1.dlv

ORIGINAL SCALE IN INCHES FOR REDUCED PLANS 0 1 2 3

CU 04-268
EA 043931

DISREGARD PRINTS BEARING EARLIER REVISION DATES → 17-MAR-1997

REVISION DATES (PRELIMINARY STAGE ONLY)

SHEET 75 OF 120

ClibPDF - www.fastio.com

DIST	COUNTY	ROUTE	POST MILES TOTAL PROJECT	SHEET NO.	TOTAL SHEETS
04					

REGISTERED CIVIL ENGINEER

PLANS APPROVAL DATE

REGISTERED PROFESSIONAL ENGINEER — Robert L. Morrison Jr. No. 43693 Exp. 03/31/97 CIVIL — STATE OF CALIFORNIA

CH2M HILL
2485 NATOMAS PARK DR, SUITE 600
SACRAMENTO, CALIFORNIA 95833

The State of California or its officers or agents shall not be responsible for the accuracy or completeness of electronic copies of this plan sheet.

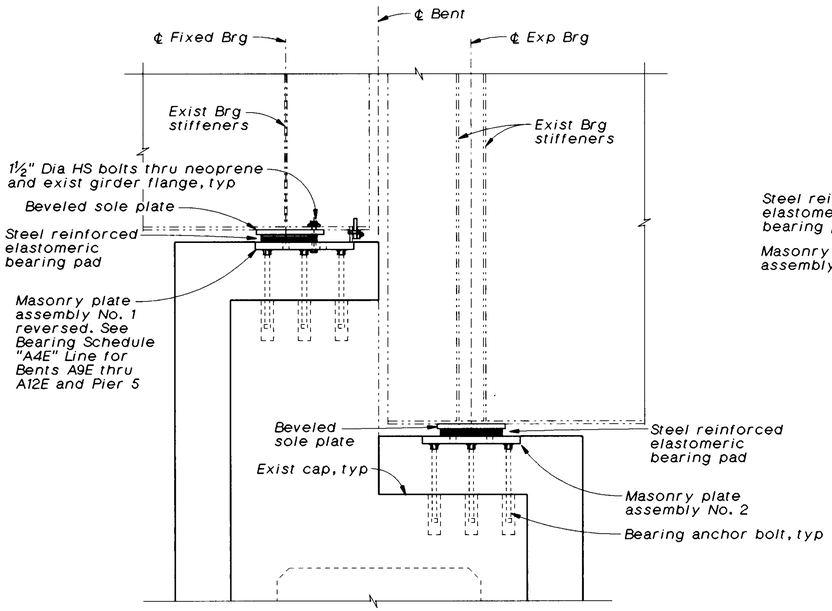

Note:
Bent A8E Rt girder shown, Lt girder and Bents A9E thru A12E and Pier 5 similar.

SECTION THROUGH CAP AT BEARING

½"=1'-0"

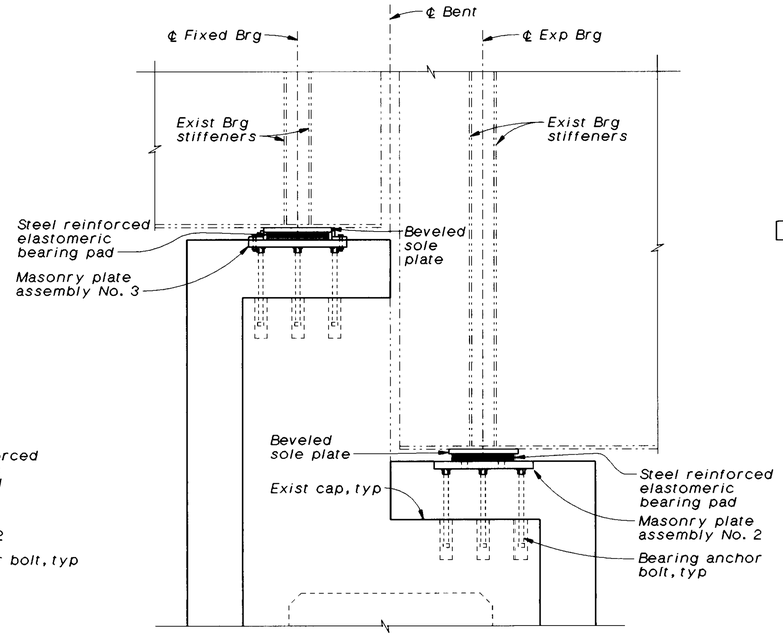

Note:
Bent D7 and A11E Rt girders shown. Bent D7 Lt girder similar.

SECTION THROUGH CAP AT BEARING

½"=1'-0"

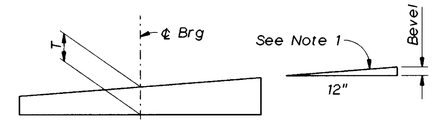

BEVELED SOLE PLATE

No Scale

BEARING SCHEDULE - "A4E" LINE							
Span No.	Location	Bearing Type	T @ ℄ Bearing	Masonry Plate Assembly	Girder Bottom Flange Elevation		
					Left Girder	Center Girder	Right Girder
2-E	Abut 2	E	1½"	1	149.82±		147.34±
	Bent A3E	F	1½"	1	147.67±		147.19±
3-E	Bent A3E	E	1½"	1	147.64±		147.15±
	Bent A4E	F	1½"	1	145.48±		145.00±
4-E	Bent A4E	E	1½"	1	145.44±		144.96±
	Bent A5E	F	1½"	1	143.29±		142.81±
5-E	Bent A5E	E	1½"	1	143.22±		142.58±
	Bent A6E	F	1½"	1	141.23±		141.11±
6-E	Bent A6E	E	1½"	1	141.19±		141.24±
	Bent A7E	F	1½"	1	139.14±		140.37±
7-E	Bent A7E	E	1½"	1	139.03±		140.28±
	Bent A8E	F	1½"	1 (Reversed)	137.11±		139.52±
8-E	Bent A8E	E	1½"	2	131.83±		134.42±
	Bent A9E	F	1½"	2	129.38±		132.40±
9-E	Bent A9E	E	1½"	2	129.20±		132.07±
	Bent A10E	F	1½"	2	126.60±		129.47±
10-E	Bent A10E	E	1½"	2	124.31±		127.23±
	Bent A11E	F	1½"	2	122.16±		124.99±
11-E	Bent A11E	E	1½"	2	121.10±	125.02±	127.78±
	Bent A12E	F	1½"	2	120.89±	123.15±	125.57±
12-E	Bent A12E	E	1½"	2	120.86±	122.84±	125.45±
	Bent A13E	F		4,5, see Note 2	121.89±	124.43±	124.68±
13-E	Pier 5	F	1½"	2	123.36±		124.68±
6-D	Bent A11E-D7	F	1½"	3	131.80±		133.36±

Legend:

E Indicates expansion bearing
F Indicates fixed bearing

NO AS BUILT CHANGES
AS BUILT
CORRECTION BY BRIAN BEAUDOIN
CONTRACT NO. 04-043934
DATE FEBRUARY, 2002
STRUCTURES REPRESENTATIVE

Notes:

1. The Contractor shall verify bevel prior to fabrication of beveled sole plates.
2. Replace exist steel fixed bearings at Bent A13E with spherical bearings. For details, see "Bearing Details No. 5", "Bearing Details No. 6", and "Bearing Details No. 7" sheets.

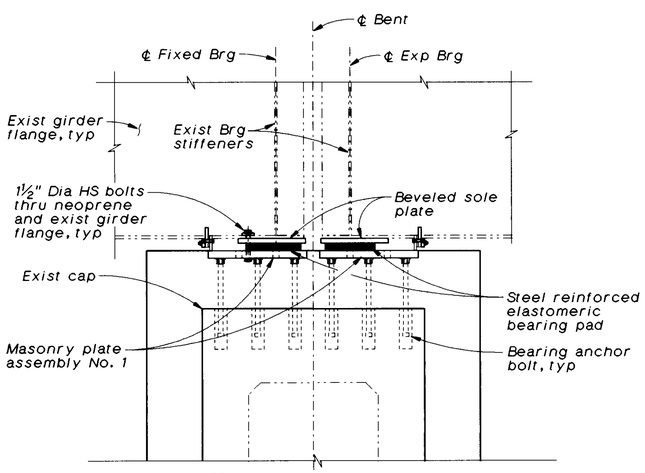

Note:
A3E and A4E shown, Abutment 2 and Bents A5E through A7E similar

SECTION THROUGH CAP AT BEARING

½"=1'-0"

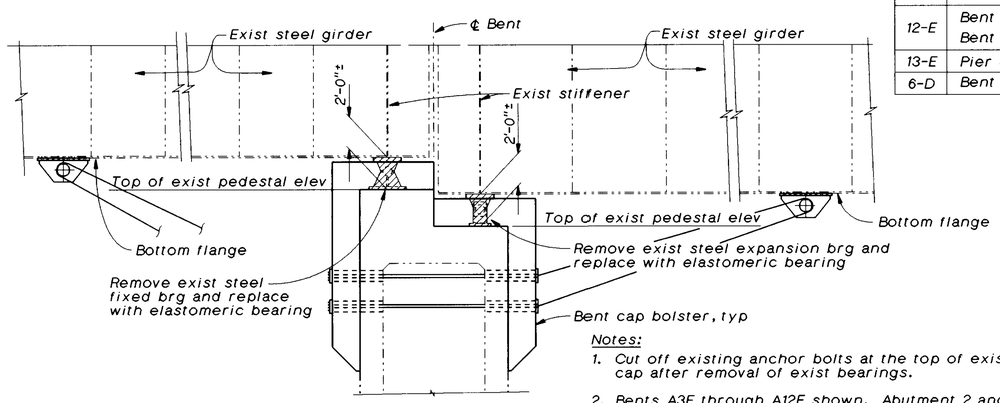

Notes:

1. Cut off existing anchor bolts at the top of exist cap after removal of exist bearings.
2. Bents A3E through A12E shown. Abutment 2 and Pier 5 similar.

EXISTING BEARING ELEVATION

No Scale

The Contractor shall verify all controlling field dimensions before ordering or fabricating any material.

SEISMIC RETROFIT PROJECT NO. 611

CARQUINEZ BRIDGE - "A4E" LINE (APPROACH SPAN)

BEARING DETAILS NO. 1

Vong Toan — DESIGN OVERSIGHT — SIGN OFF DATE April 29, 1997

	BY		CHECKED
DESIGN	R. Morrison, Jr.		J. Eising
DETAILS	A. Kayden		J. Quincy
QUANTITIES	D. Nguyen-Tan, S. Ismail		J. Downing

PREPARED FOR THE STATE OF CALIFORNIA DEPARTMENT OF TRANSPORTATION

Lee Holloway — PROJECT ENGINEER

BRIDGE NO. 23-15 R
POST MILE CC-13.47

CA4-BRG1.DLV

ORIGINAL SCALE IN INCHES FOR REDUCED PLANS 0 1 2 3

CU 04-268
EA 043931

DISREGARD PRINTS BEARING EARLIER REVISION DATES → REVISION DATES (PRELIMINARY STAGE ONLY) 16-MAR-1997

SHEET 76 OF 120

ClibPDF - www.fastio.com

DIST	COUNTY	ROUTE	POST MILES TOTAL PROJECT	SHEET NO.	TOTAL SHEETS
04	CC SOL	80	12.8/14.1 0.0/0.6	512S	555

REGISTERED CIVIL ENGINEER

PLANS APPROVAL DATE

REGISTERED PROFESSIONAL ENGINEER Robert L. Morrison Jr. No. 43693 Exp. 03/31/97 CIVIL STATE OF CALIFORNIA

CH2M HILL
2485 NATOMAS PARK DR, SUITE 600
SACRAMENTO, CALIFORNIA 95833

The State of California or its officers or agents shall not be responsible for the accuracy or completeness of electronic copies of this plan sheet.

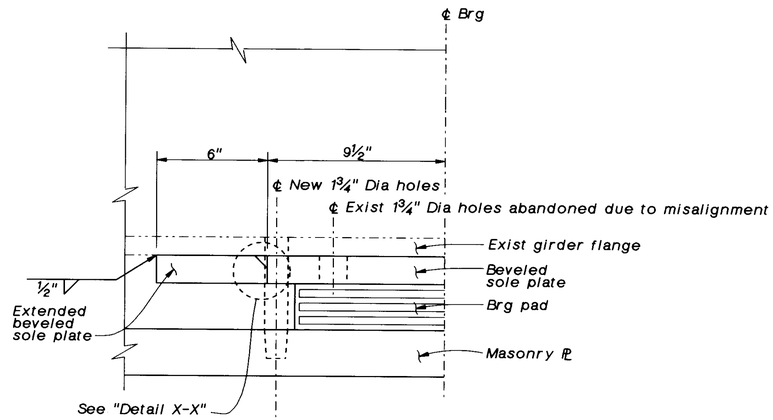

FIXED BEARING, BENT A8E SOUTHWEST

3"=1'-0"

Notes:

1. For clarity, only AS-Built modifications shown. Refer to sheet "Bearing Details No. 2" for details not shown.
2. Due to the misalignment of the Beveled Sole Plate the following modifications may be made:
   - -Extend Beveled Sole Plate 6" to North
   - -Weld Extended Portion to Existing
   - -Drill New 1¾" ø holes in Beveled Sole Plate

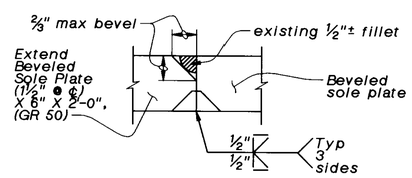

DETAIL X-X

No Scale

AS BUILT
CORRECTION BY BRIAN BEAUDOIN
CONTRACT NO. 04-043934
DATE FEBRUARY, 2002
STRUCTURES REPRESENTATIVE

ALL INFORMATION ON THIS SHEET REPRESENTS 'AS BUILT' CHANGES

The Contractor shall verify all controlling field dimensions before ordering or fabricating any material.

SEISMIC RETROFIT PROJECT NO. 611

CARQUINEZ BRIDGE - "A4E" LINE (APPROACH SPAN)

BEARING DETAILS NO. 2 (SUPPLEMENTAL)

Vong Toan — DESIGN OVERSIGHT	DESIGN	R. Morrison, Jr.	J. Downing, J. Quincy
SIGN OFF DATE	DETAILS	P. Walker	J. Quincy
	QUANTITIES	D. Nguyen-Tan, S. Ismail	J. Downing

PREPARED FOR THE STATE OF CALIFORNIA DEPARTMENT OF TRANSPORTATION

Lee Holloway — PROJECT ENGINEER

BRIDGE NO. 23-15 R
POST MILE CC-13.47

ca4-brg2s.dgn

ORIGINAL SCALE IN INCHES FOR REDUCED PLANS 0 1 2 3

CU 04-268
EA 043931

DISREGARD PRINTS BEARING EARLIER REVISION DATES → 09-APR-2002

REVISION DATES (PRELIMINARY STAGE ONLY)

SHEET 77S OF 120

ClibPDF - www.fastio.com

DIST	COUNTY	ROUTE	POST MILES TOTAL PROJECT	SHEET NO.	TOTAL SHEETS
04	CC, SOL	80	12.8/14.1, 0.0/0.6	512	555

REGISTERED CIVIL ENGINEER

10-20-97
PLANS APPROVAL DATE

REGISTERED PROFESSIONAL ENGINEER Robert L. Morrison Jr. No. 43693 Exp. 03/31/97 CIVIL STATE OF CALIFORNIA

CH2M HILL
2485 NATOMAS PARK DR, SUITE 600
SACRAMENTO, CALIFORNIA 95833

The State of California or its officers or agents shall not be responsible for the accuracy or completeness of electronic copies of this plan sheet.

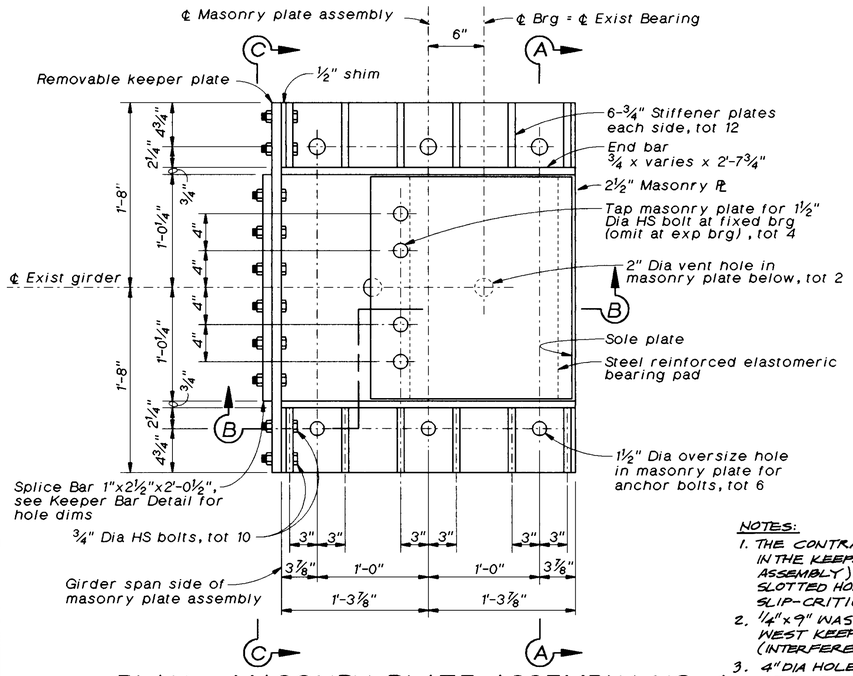

PLAN - MASONRY PLATE ASSEMBLY NO. 1

1½"=1'-0"

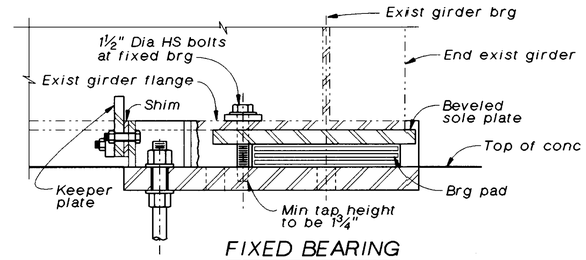

FIXED BEARING

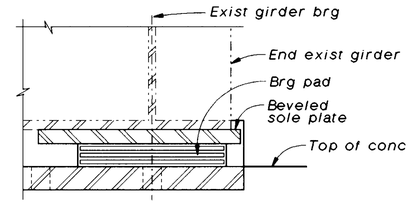

EXPANSION BEARING

SECTION B-B

1½"=1'-0"

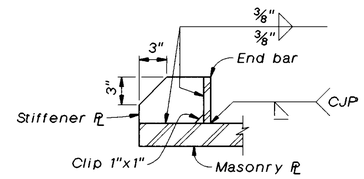

STIFFENER PLATE DETAIL

1½"=1'-0"

NOTE:
FOR BENT A8E SECTION B-B 'AS-BUILT' MODIFICATIONS, SEE SHEET "BEARING DETAILS NO.2 SUPPLEMENTAL".

NOTES:
1. THE CONTRACTOR MAY SLOT THE HOLES IN THE KEEPER BAR (OR STIFFENER ASSEMBLY) PROVIDED THAT THE 4 BOLTS IN SLOTTED HOLES ARE INSTALLED AS SLIP-CRITICAL BOLTS.
2. ¼"x9" WAS TRIMMED FROM THE TOP OF WEST KEEPER BAR AT BENT A12E (INTERFERENCE WITH LATERAL BRACING)
3. 4" DIA HOLES FOR ANCHOR BOLTS AT BENT A3E WERE SHIFTED ¾" AWAY FROM CENTER-LINE OF GIRDER AND CORED TO DEPTH OF 15"

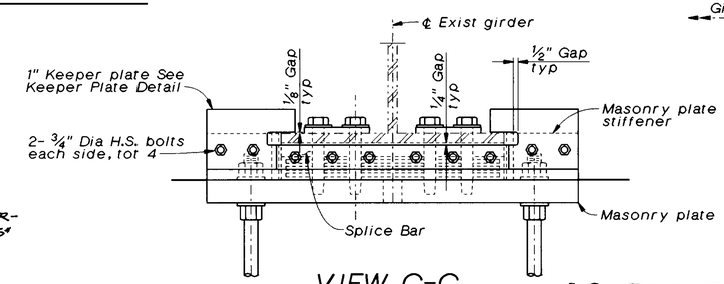

VIEW C-C

1½"=1'-0"

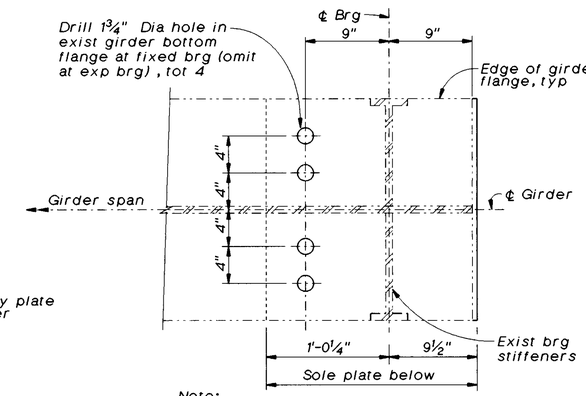

Note:
Abut "A2E" and Bents "A3E" through "A6E" shown. Bent "A7E" similar.

PLAN AT GIRDER BEARING

1½"=1'-0"

AS BUILT
CORRECTION BY BRIAN BEAUDOIN
CONTRACT NO. 04-043934
DATE FEBRUARY, 2002
STRUCTURES REPRESENTATIVE

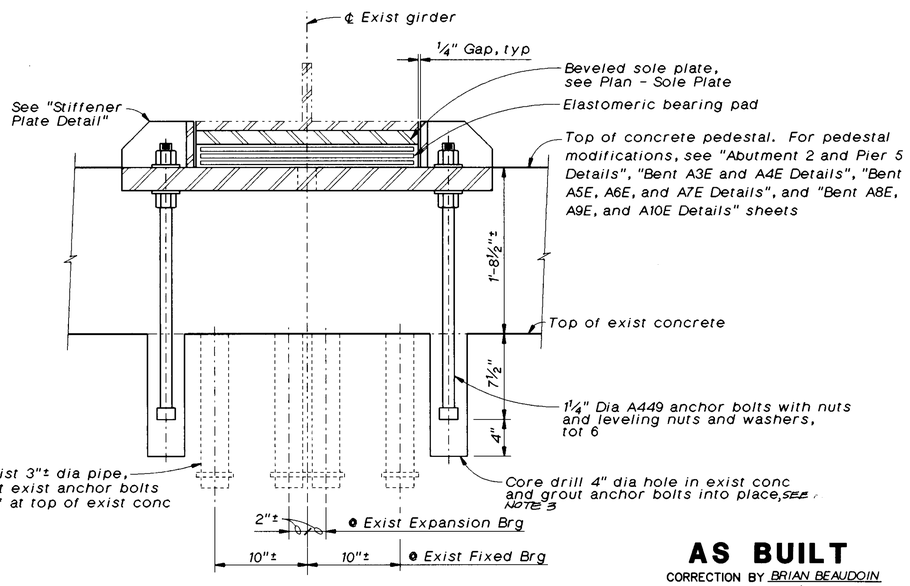

SECTION A-A

1½"=1'-0"

AS BUILT
CORRECTION BY BRIAN BEAUDOIN
CONTRACT NO. 04-043934
DATE FEBRUARY, 2002
STRUCTURES REPRESENTATIVE

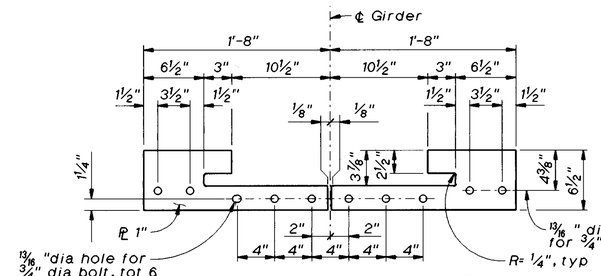

KEEPER PLATE DETAIL

1½"=1'-0"

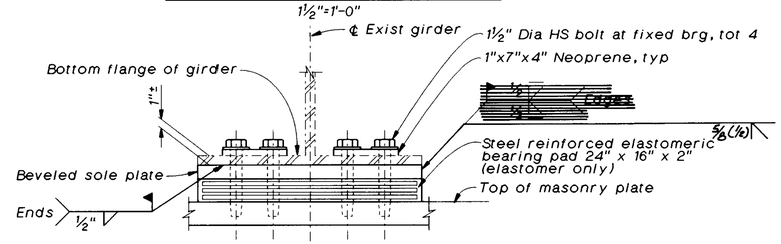

PART ELEVATION

1½"=1'-0"

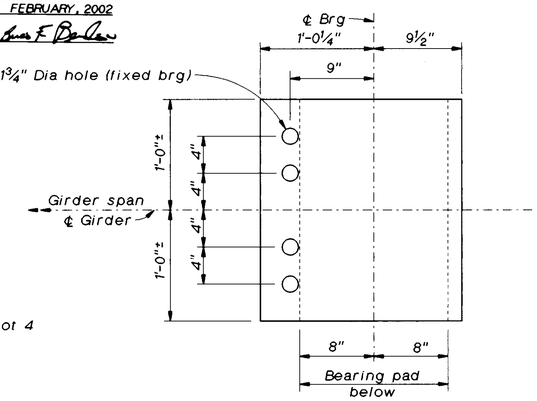

PLAN - SOLE PLATE

1½"=1'-0"

The Contractor shall verify all controlling field dimensions before ordering or fabricating any material.

SEISMIC RETROFIT PROJECT NO. 611

CARQUINEZ BRIDGE - "A4E" LINE (APPROACH SPAN)

BEARING DETAILS NO. 2

Vong Toan
DESIGN OVERSIGHT
April 24, 1997
SIGN OFF DATE

	BY	CHECKED
DESIGN	R. Morrison, Jr.	J. Downing, J. Quincy
DETAILS	A. Kayden	J. Quincy
QUANTITIES	D. Nguyen-Tan, S. Ismail	J. Downing

PREPARED FOR THE STATE OF CALIFORNIA DEPARTMENT OF TRANSPORTATION

Lee Holloway
PROJECT ENGINEER

BRIDGE NO. 23-15 R
POST MILE CC-13.47

CU 04-268
EA 043931

DISREGARD PRINTS BEARING EARLIER REVISION DATES → 16-MAR-1997

SHEET 77 OF 120

ca4-brg2.dlv

ORIGINAL SCALE IN INCHES FOR REDUCED PLANS 0 1 2 3

ClibPDF - www.fastio.com

DIST	COUNTY	ROUTE	POST MILES TOTAL PROJECT	SHEET NO.	TOTAL SHEETS
04	CC,SOL	80	12.8/14.1,0.0/0.6	513	555

REGISTERED CIVIL ENGINEER — Robert L. Morrison Jr

10-20-97
PLANS APPROVAL DATE

REGISTERED PROFESSIONAL ENGINEER — Robert L. Morrison Jr — No. 43693 — Exp. 03/31/97 — CIVIL — STATE OF CALIFORNIA

CH2M HILL
2485 NATOMAS PARK DR, SUITE 600
SACRAMENTO, CALIFORNIA 95833

The State of California or its officers or agents shall not be responsible for the accuracy or completeness of electronic copies of this plan sheet.

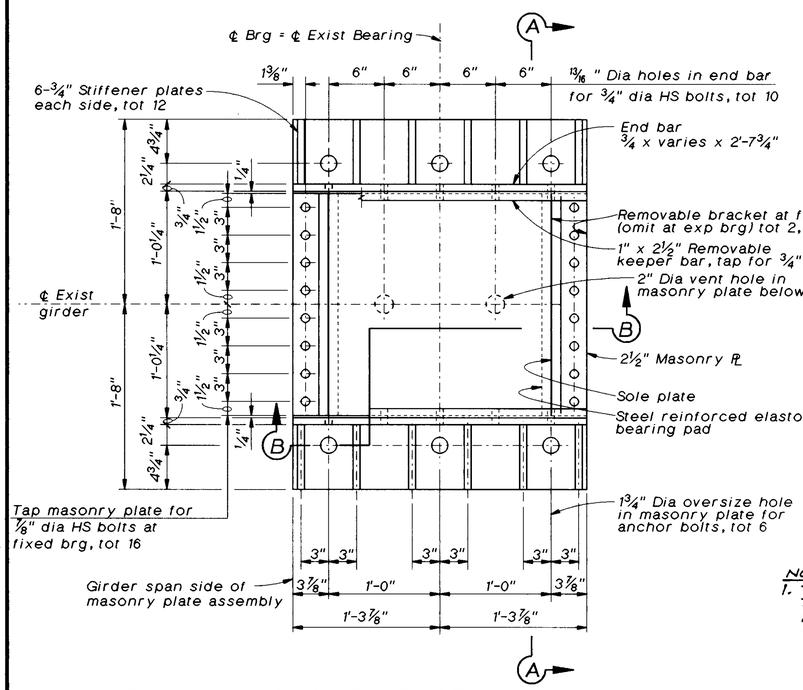

PLAN - MASONRY PLATE ASSEMBLY NO. 2

1½"=1'-0"

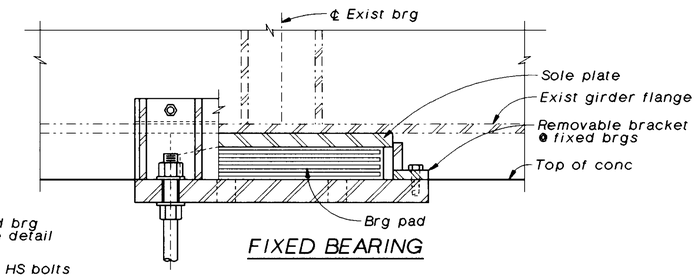

FIXED BEARING

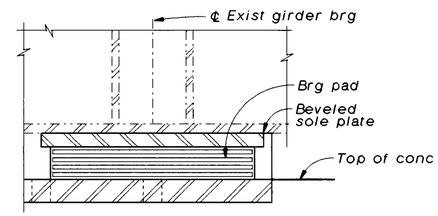

EXPANSION BEARING

SECTION B-B

1½"=1'-0"

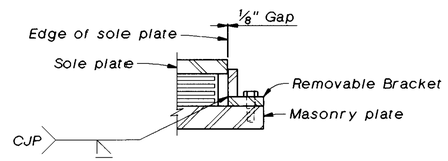

SECTION C-C

1½"=1'-0"

NOTES:
1. THE CONTRACTOR MAY SLOT THE HOLES IN THE KEEPER BAR (OR STIFFENER ASSEMBLY) PROVIDED THAT THE BOLTS IN THE SLOTTED HOLES ARE INSTALLED AS SLIP CRITICAL BOLTS.

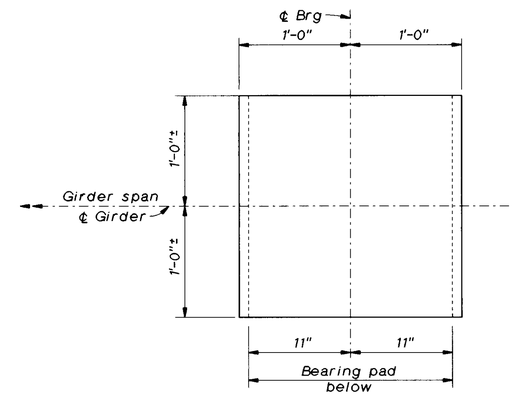

PLAN - SOLE PLATE

1½"=1'-0"

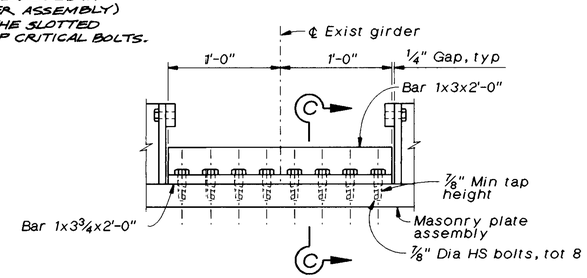

ELEVATION

REMOVABLE BRACKET DETAIL

1½"=1'-0"

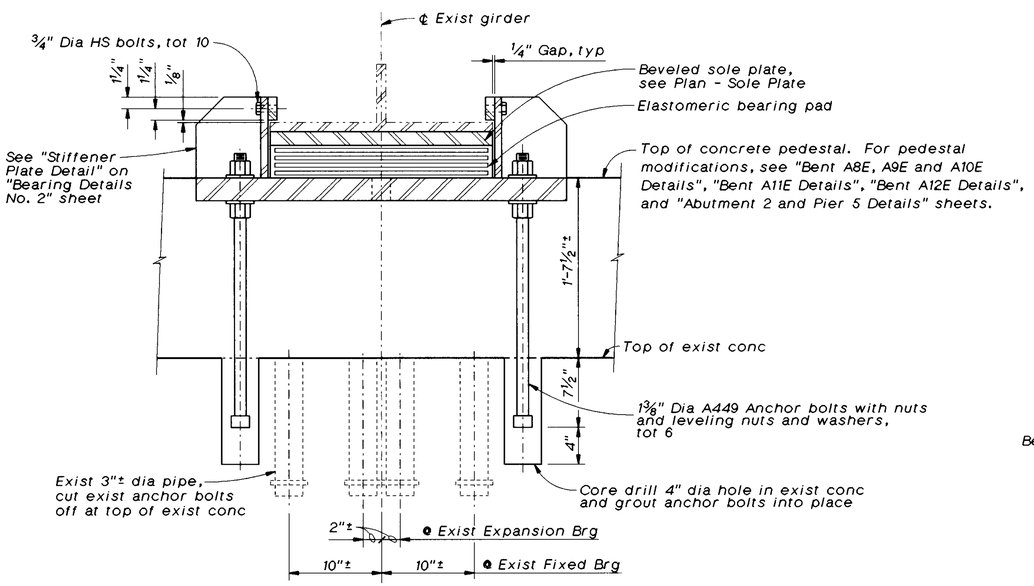

SECTION A-A

1½"=1'-0"

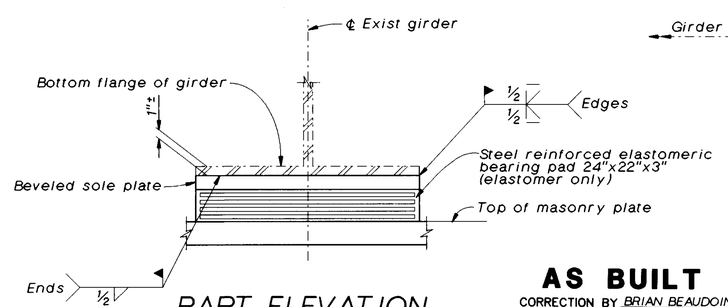

PART ELEVATION

1½"=1'-0"

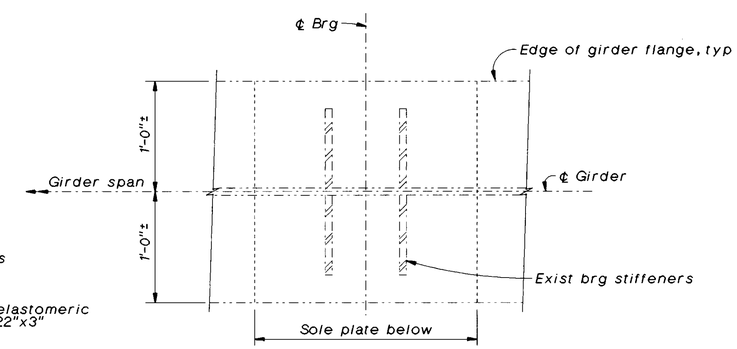

PLAN AT GIRDER BEARING

1½"=1'-0"

AS BUILT
CORRECTION BY BRIAN BEAUDOIN
CONTRACT NO. 04-043934
DATE FEBRUARY, 2002
STRUCTURES REPRESENTATIVE

The Contractor shall verify all controlling field dimensions before ordering or fabricating any material.

SEISMIC RETROFIT PROJECT NO. 611

CARQUINEZ BRIDGE - "A4E" LINE (APPROACH SPAN)

BEARING DETAILS NO. 3

Vong Toan
DESIGN OVERSIGHT
April 29, 1997
SIGN OFF DATE

	BY	CHECKED
DESIGN	R. Morrison, Jr.	J. Downing, J. Quincy
DETAILS	A. Kayden, A. Galbraith	J. Quincy
QUANTITIES	D. Nguyen-Tan, S. Ismail	J. Downing

PREPARED FOR THE STATE OF CALIFORNIA DEPARTMENT OF TRANSPORTATION

Lee Holloway
PROJECT ENGINEER

BRIDGE NO. 23-15 R
POST MILE CC-13.47

CU 04-268
EA 043931

ca4-brg3.dlv

ORIGINAL SCALE IN INCHES FOR REDUCED PLANS 0 1 2 3

DISREGARD PRINTS BEARING EARLIER REVISION DATES → REVISION DATES (PRELIMINARY STAGE ONLY) 16-MAR-1997

SHEET 78 OF 120

ClibPDF - www.fastio.com

DIST	COUNTY	ROUTE	POST MILES TOTAL PROJECT	SHEET NO.	TOTAL SHEETS
04	CC, SOL	80	12.8/14.1, 0.0/0.6	514	555

REGISTERED CIVIL ENGINEER

10-20-97
PLANS APPROVAL DATE

REGISTERED PROFESSIONAL ENGINEER Robert L. Morrison Jr No. 43693 Exp. 03/31/97 CIVIL STATE OF CALIFORNIA

CH2M HILL
2485 NATOMAS PARK DR, SUITE 600
SACRAMENTO, CALIFORNIA 95833

The State of California or its officers or agents shall not be responsible for the accuracy or completeness of electronic copies of this plan sheet.

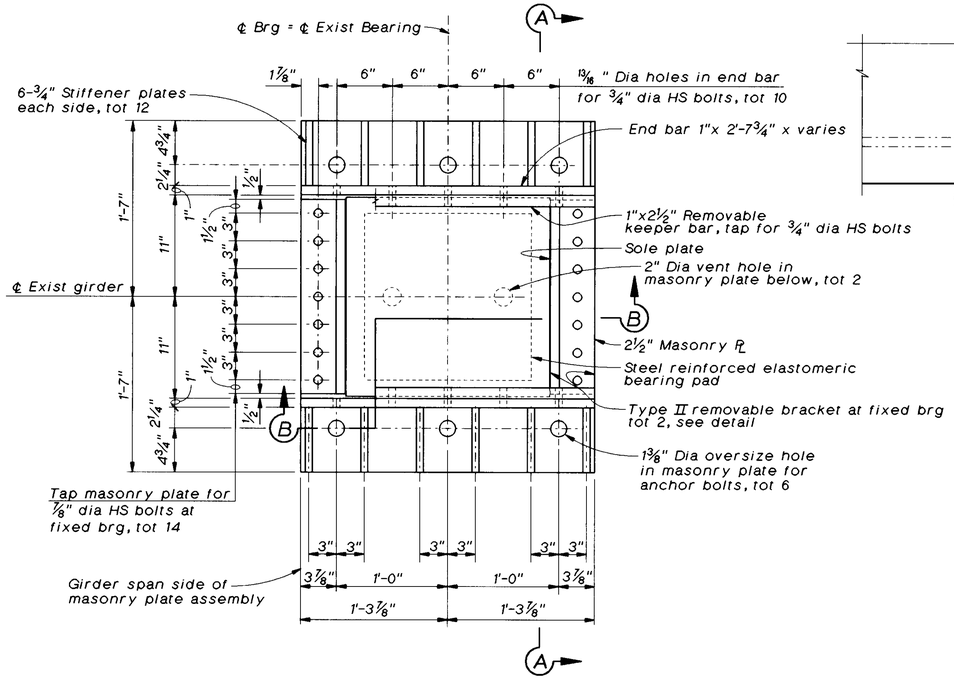

PLAN - MASONRY PLATE ASSEMBLY NO. 3

1½"=1'-0"

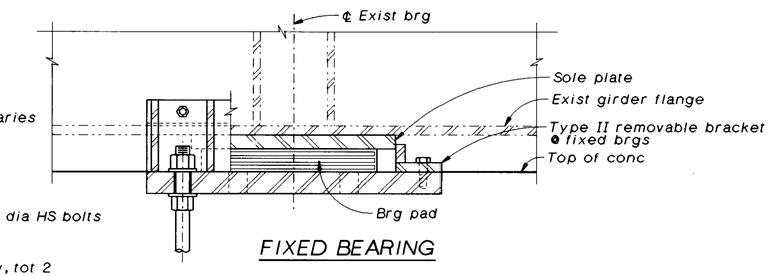

FIXED BEARING

SECTION B-B

1½"=1'-0"

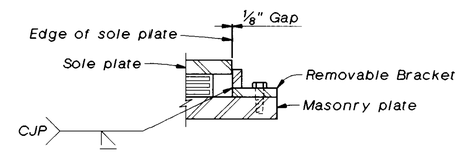

SECTION C-C

1½"=1'-0"

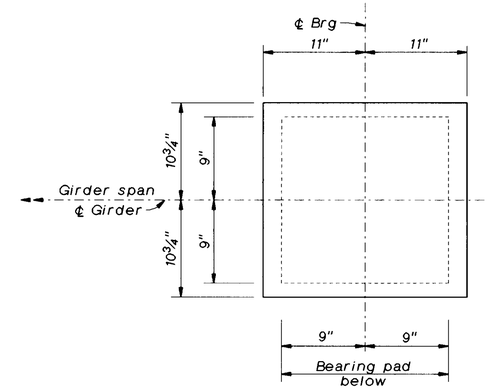

PLAN - SOLE PLATE

1½"=1'-0"

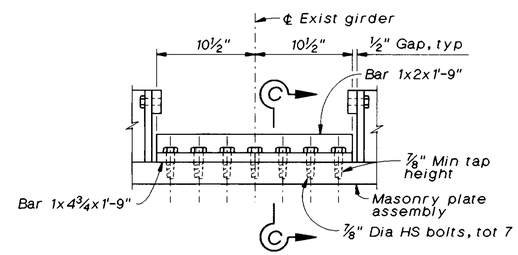

ELEVATION

TYPE II REMOVABLE BRACKET DETAIL

1½"=1'-0"

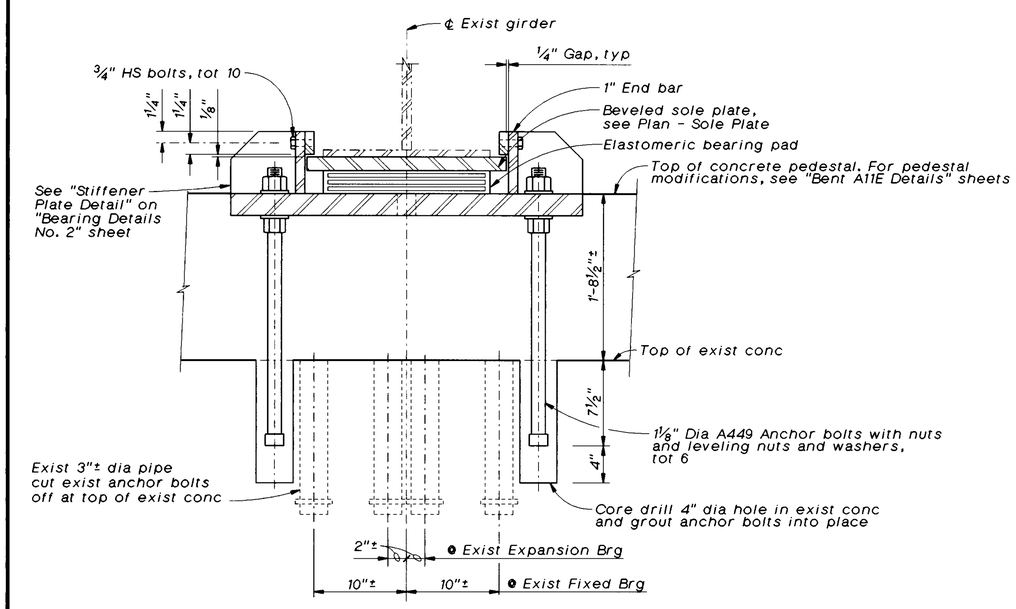

SECTION A-A

1½"=1'-0"

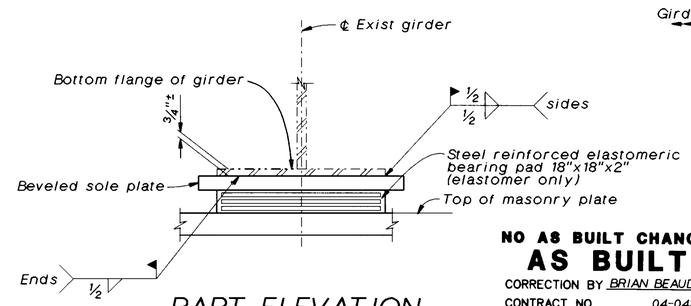

PART ELEVATION

1½"=1'-0"

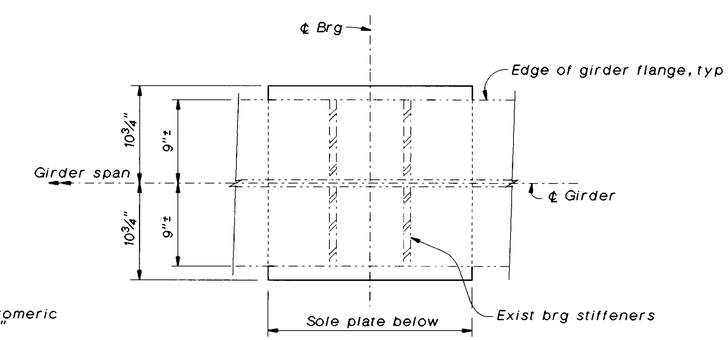

PLAN AT GIRDER BEARING

1½"=1'-0"

NO AS BUILT CHANGES
AS BUILT
CORRECTION BY BRIAN BEAUDOIN
CONTRACT NO. 04-043934
DATE FEBRUARY, 2002
STRUCTURES REPRESENTATIVE

The Contractor shall verify all controlling field dimensions before ordering or fabricating any material.

SEISMIC RETROFIT PROJECT NO. 611

CARQUINEZ BRIDGE - "A4E" LINE (APPROACH SPAN)

BEARING DETAILS NO. 4

Vong Toan
DESIGN OVERSIGHT
Apr. 1 24, 1997
SIGN OFF DATE

	BY	CHECKED
DESIGN	R. Morrison, Jr.	J. Downing, J. Quincy
DETAILS	A. Kayden, A. Galbraith	J. Quincy
QUANTITIES	D. Nguyen-Tan, S. Ismail	J. Downing

PREPARED FOR THE STATE OF CALIFORNIA DEPARTMENT OF TRANSPORTATION

Lee Holloway
PROJECT ENGINEER

BRIDGE NO. 23-15 R
POST MILE CC-13.47

CA4-BRG5.DLV

ORIGINAL SCALE IN INCHES FOR REDUCED PLANS 0 1 2 3

CU 04-268
EA 043931

DISREGARD PRINTS BEARING EARLIER REVISION DATES → 16-MAR-1997

REVISION DATES (PRELIMINARY STAGE ONLY)

SHEET 79 OF 120

ClibPDF - www.fastio.com

DIST	COUNTY	ROUTE	POST MILES TOTAL PROJECT	SHEET NO.	TOTAL SHEETS
04	CC, SOL	80	12.8/14.1, 0.0/0.6	515	555

REGISTERED CIVIL ENGINEER

10-20-97

PLANS APPROVAL DATE

REGISTERED PROFESSIONAL ENGINEER Robert L. Morrison Jr No. 43693 Exp. 03/31/97 CIVIL STATE OF CALIFORNIA

CH2M HILL
2485 NATOMAS PARK DR, SUITE 600
SACRAMENTO, CALIFORNIA 95833

The State of California or its officers or agents shall not be responsible for the accuracy or completeness of electronic copies of this plan sheet.

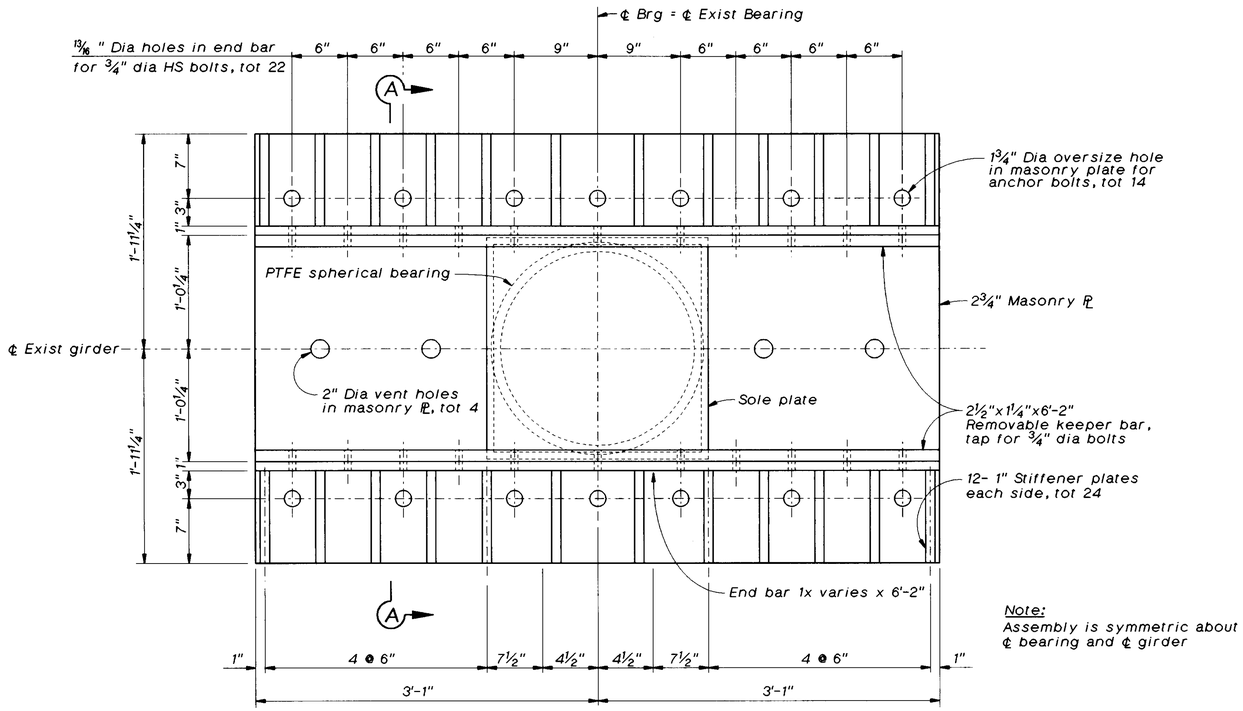

Note:
Assembly is symmetric about ℄ bearing and ℄ girder

LEFT AND CENTER GIRDERS

PLAN - MASONRY PLATE ASSEMBLY NO. 4

1½"=1'-0"

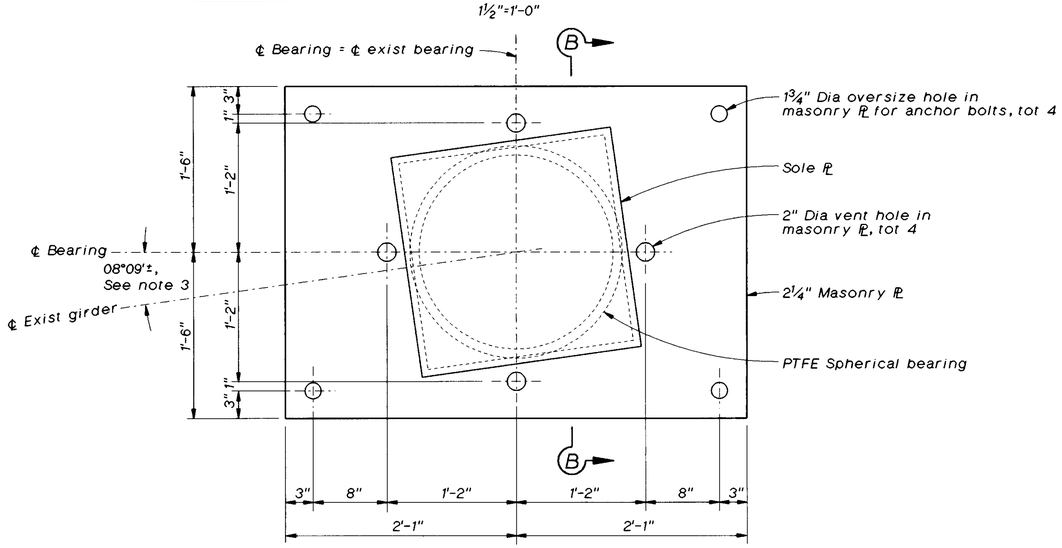

RIGHT GIRDER

PLAN - MASONRY PLATE ASSEMBLY NO. 5

1½"=1'-0"

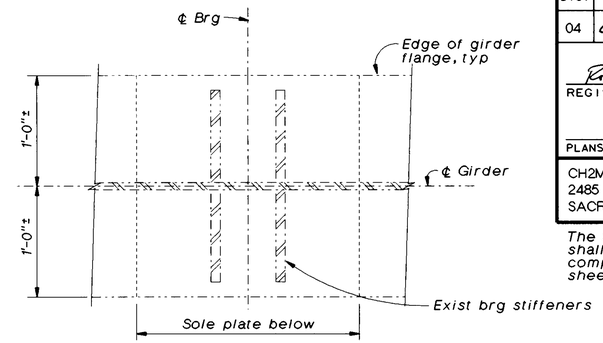

PLAN AT GIRDER BEARING

1½"=1'-0"

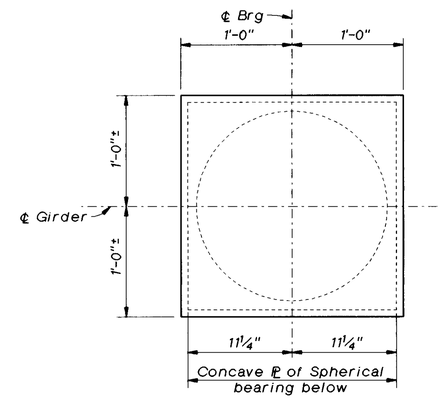

PLAN - SOLE PLATE

1½"=1'-0"

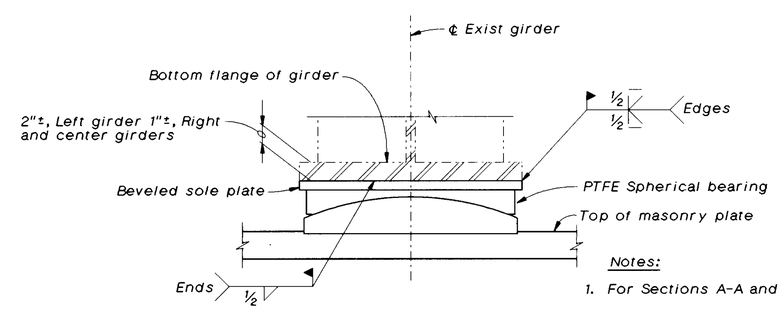

PART ELEVATION

1½"=1'-0"

NO AS BUILT CHANGES
AS BUILT
CORRECTION BY BRIAN BEAUDOIN
CONTRACT NO. 04-043934
DATE FEBRUARY, 2002
STRUCTURES REPRESENTATIVE

Notes:

1. For Sections A-A and B-B, see "Bearing Details No. 6" sheet.
2. Plan at Girder Bearing, Plan - Sole Plate, and Part Elevation applies to Masonry Plate Assemblies No. 4 and 5.
3. Angle shall be equal to the angle between the right and center girders. The Contractor shall verify the angle prior to fabrication of Masonry Plate.

The Contractor shall verify all controlling field dimensions before ordering or fabricating any material.

SEISMIC RETROFIT PROJECT NO. 611

CARQUINEZ BRIDGE - "A4E" LINE (APPROACH SPAN)

BEARING DETAILS NO. 5

Vong Toan
DESIGN OVERSIGHT
April 24, 1997
SIGN OFF DATE

	BY	CHECKED
DESIGN	D. Nguyen-Tan	J. Downing, J. Quincy
DETAILS	A. Kayden	J. Quincy
QUANTITIES	D. Nguyen-Tan, S. Ismail	J. Downing

PREPARED FOR THE STATE OF CALIFORNIA DEPARTMENT OF TRANSPORTATION

Lee Holloway
PROJECT ENGINEER

BRIDGE NO. 23-15 R
POST MILE CC-13.47

CA4-BRG7.DLV

ORIGINAL SCALE IN INCHES FOR REDUCED PLANS 0 1 2 3

CU 04-268
EA 043931

DISREGARD PRINTS BEARING EARLIER REVISION DATES → REVISION DATES (PRELIMINARY STAGE ONLY): 17-MAR-1997

SHEET 80 OF 120

ClibPDF - www.fastio.com

DIST	COUNTY	ROUTE	POST MILES TOTAL PROJECT	SHEET NO.	TOTAL SHEETS
04	CC, SOL	80	12.8/14.1, 0.0/0.6	516	555

REGISTERED CIVIL ENGINEER

10-20-97
PLANS APPROVAL DATE

REGISTERED PROFESSIONAL ENGINEER — Robert L. Morrison Jr — No. 43693 — Exp. 03/31/97 — CIVIL — STATE OF CALIFORNIA

CH2M HILL
2485 NATOMAS PARK DR, SUITE 600
SACRAMENTO, CALIFORNIA 95833

The State of California or its officers or agents shall not be responsible for the accuracy or completeness of electronic copies of this plan sheet.

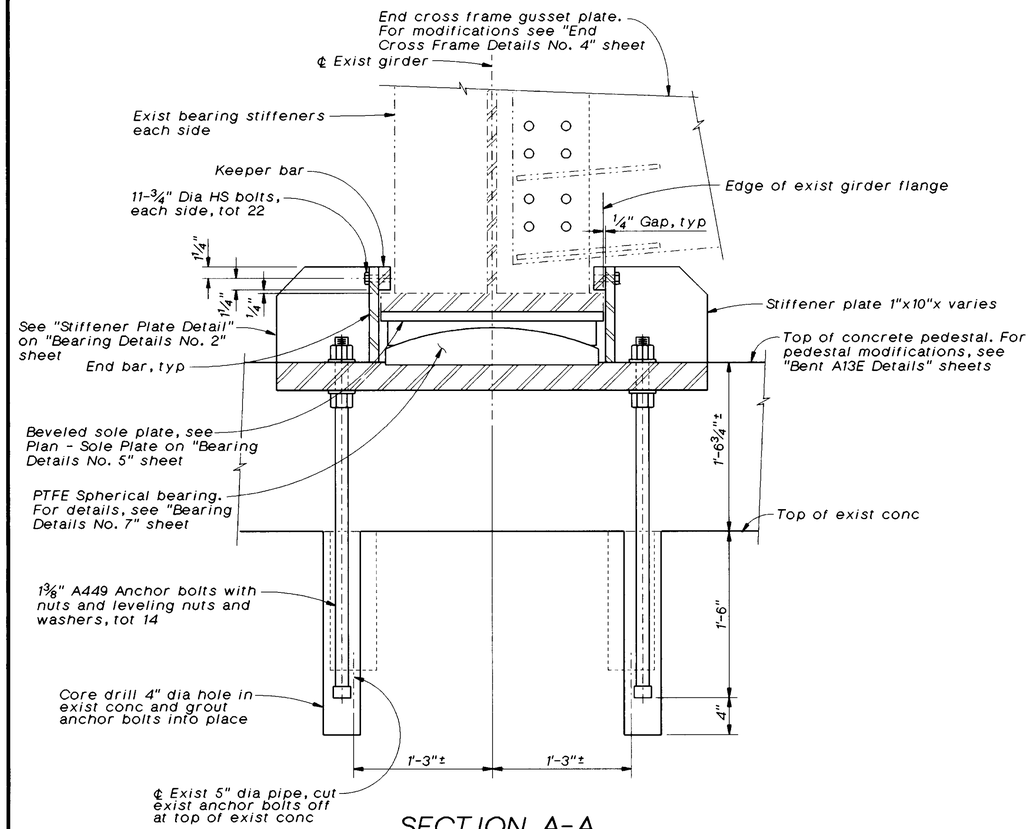

SECTION A-A
1½"=1'-0"

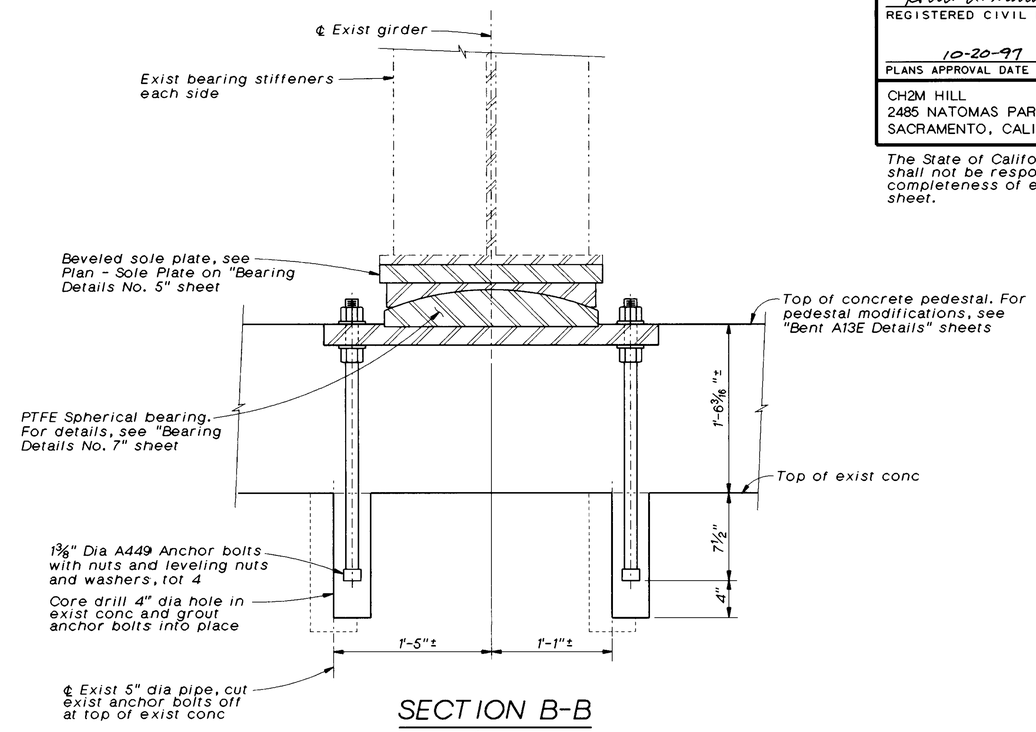

SECTION B-B
1½"=1'-0"

NO AS BUILT CHANGES
AS BUILT
CORRECTION BY BRIAN BEAUDOIN
CONTRACT NO. 04-043934
DATE FEBRUARY, 2002
STRUCTURES REPRESENTATIVE

The Contractor shall verify all controlling field dimensions before ordering or fabricating any material.

SEISMIC RETROFIT PROJECT NO. 611

CARQUINEZ BRIDGE - "A4E" LINE (APPROACH SPAN)

BEARING DETAILS NO. 6

Vong Toan
DESIGN OVERSIGHT
April 24, 1997
SIGN OFF DATE

	BY	CHECKED
DESIGN	D. Nguyen-Tan	J. Downing, J. Quincy
DETAILS	A. Kayden	J. Quincy
QUANTITIES	D. Nguyen-Tan, S. Ismail	J. Downing

PREPARED FOR THE STATE OF CALIFORNIA DEPARTMENT OF TRANSPORTATION

Lee Holloway
PROJECT ENGINEER

BRIDGE NO. 23-15 R
POST MILE CC-13.47

CA4-BRG6.DLV

ORIGINAL SCALE IN INCHES FOR REDUCED PLANS 0 1 2 3

CU 04-268
EA 043931

DISREGARD PRINTS BEARING EARLIER REVISION DATES → 16-MAR-1997

REVISION DATES (PRELIMINARY STAGE ONLY)

SHEET 81 OF 120

ClibPDF - www.fastio.com

DIST	COUNTY	ROUTE	POST MILES TOTAL PROJECT	SHEET NO.	TOTAL SHEETS
04	CC, SOL	80	12.8/14.1, 0.0/0.6	517	555

Robert L. Morrison Jr
REGISTERED CIVIL ENGINEER

10-20-97
PLANS APPROVAL DATE

REGISTERED PROFESSIONAL ENGINEER
Robert L. Morrison Jr
No. 43693
Exp. 03/31/97
CIVIL
STATE OF CALIFORNIA

CH2M HILL
2485 NATOMAS PARK DR, SUITE 600
SACRAMENTO, CALIFORNIA 95833

The State of California or its officers or agents shall not be responsible for the accuracy or completeness of electronic copies of this plan sheet.

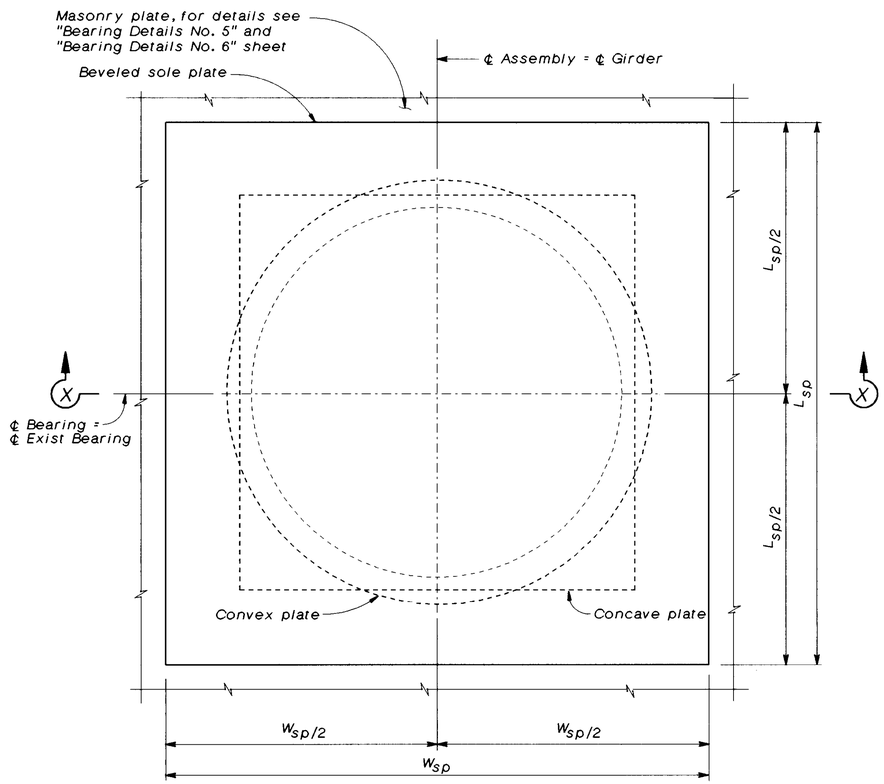

PART PLAN
No scale

SPHERICAL BEARING TABLE (FIXED)

LOCATION	MAXIMUM VERTICAL LOAD (Kips)	MINIMUM DEAD LOAD (Kips)	DESIGN ROTATION (Degrees)	CONCAVE PLATE					CONVEX PLATE		SOLE PLATE			ASSEMBLY HEIGHT
				WIDTH / LENGTH	DIAMETER	SPHERICAL RADIUS	MINIMUM THICKNESS	MAXIMUM THICKNESS	DIAMETER	MAXIMUM THICKNESS	WIDTH	LENGTH	THICKNESS NOTE 6	
				L_{cp}	D_m	R_{act}	T_{min}	T_{max}	C_m	H_{act}	W_{sp}	L_{sp}	T_{sp}	A_h
"A13E" LEFT GIRDER	1204	816	2°	22½	21	30	¾	2⅞	23	3	24	24	2½	9 1/16
"A13E" CTR GIRDER	829	544	2°	22½	21	30	¾	2⅞	23	3	24	24	2	8 9/16
"A13E" RIGHT GIRDER	868	560	2°	22½	21	30	¾	2⅞	23	3	24	24	2	8 1/16

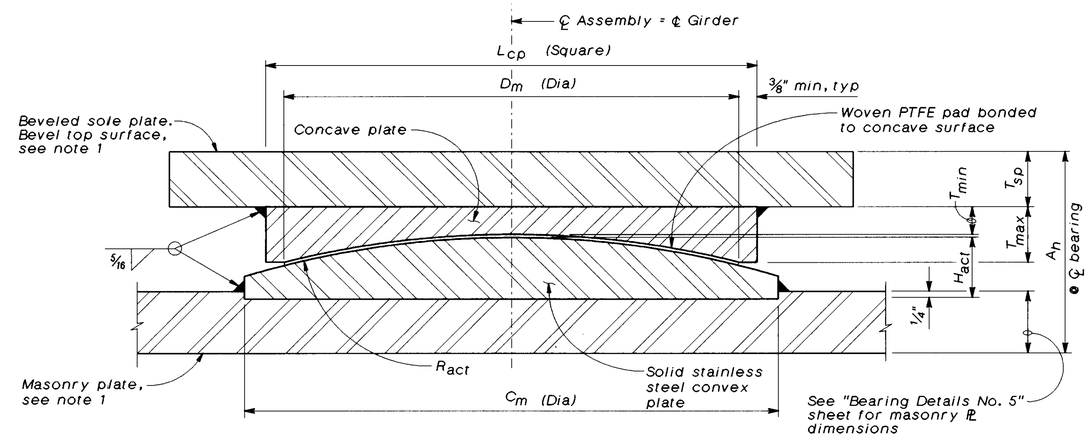

SECTION X-X
No scale

NOTES:

1. Anchorage method not shown.
2. All units in inches unless otherwise noted.
3. All dimensions shown are steel only unless otherwise noted.
4. A_h includes PTFE, substratum and stainless steel, (Varies).
5. R_{act} is to sliding surface.
6. T_{sp} is measured at ℄ of bearing and varies.
7. For bearing details not shown, see "Bearing Details No. 5" sheet.

NO AS BUILT CHANGES
AS BUILT
CORRECTION BY BRIAN BEAUDOIN
CONTRACT NO. 04-043934
DATE FEBRUARY, 2002
STRUCTURES REPRESENTATIVE

The Contractor shall verify all controlling field dimensions before ordering or fabricating any material.

SEISMIC RETROFIT PROJECT NO. 611
CARQUINEZ BRIDGE - "A4E" LINE (APPROACH SPAN)
BEARING DETAILS NO. 7

Vong Toan
DESIGN OVERSIGHT
April 24 1997
SIGN OFF DATE

	BY	CHECKED
DESIGN	D. Nguyen-Tan	J. Downing, J. Quincy
DETAILS	A. Kayden	J. Quincy
QUANTITIES	D. Nguyen-Tan / S. Ismail	J. Downing

PREPARED FOR THE STATE OF CALIFORNIA DEPARTMENT OF TRANSPORTATION

Lee Holloway
PROJECT ENGINEER

BRIDGE NO. 23-15 R
POST MILE CC-13.47

CA4-BRG4.DLV

ORIGINAL SCALE IN INCHES FOR REDUCED PLANS 0 1 2 3

CU 04-268
EA 043931

DISREGARD PRINTS BEARING EARLIER REVISION DATES → 21-APR-1997

REVISION DATES (PRELIMINARY STAGE ONLY)

SHEET 82 OF 120

ClibPDF - www.fastio.com

DIST	COUNTY	ROUTE	POST MILES TOTAL PROJECT	SHEET NO.	TOTAL SHEETS
04	CC SOL	80	12.8/14.1 0.0/0.6	518S1	555

REGISTERED CIVIL ENGINEER

PLANS APPROVAL DATE

REGISTERED PROFESSIONAL ENGINEER Jeffrey S. Aldrich No. 34271 Exp. 09/30/99 CIVIL STATE OF CALIFORNIA

CH2M HILL
2485 NATOMAS PARK DR, SUITE 600
SACRAMENTO, CALIFORNIA 95833

The State of California or its officers or agents shall not be responsible for the accuracy or completeness of electronic copies of this plan sheet.

Notes:

1. *Ladders to be installed plumb.*
2. *Concrete anchors shall be 5/8"Ø stainless steel A316 bolts drilled and epoxy bonded in 6" deep holes.*
3. *Ladders are to be hot-dipped galvanized. Galvanization vent holes placed in bottom plate, typ.*
4. *Remove side rails at location where ladder is placed and replace with 1/4" proof coil chain, connecting links, and steel snaps, typ. (all galvanized).*
5. *Place ladder 7" from the side of the catwalk for toe room.*
6. *Details shown are not to scale.*
7. *Verify all dimensions before fabrication.*

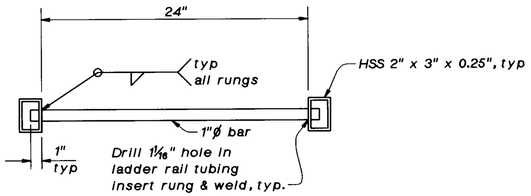

TYPICAL SECTION
NO SCALE

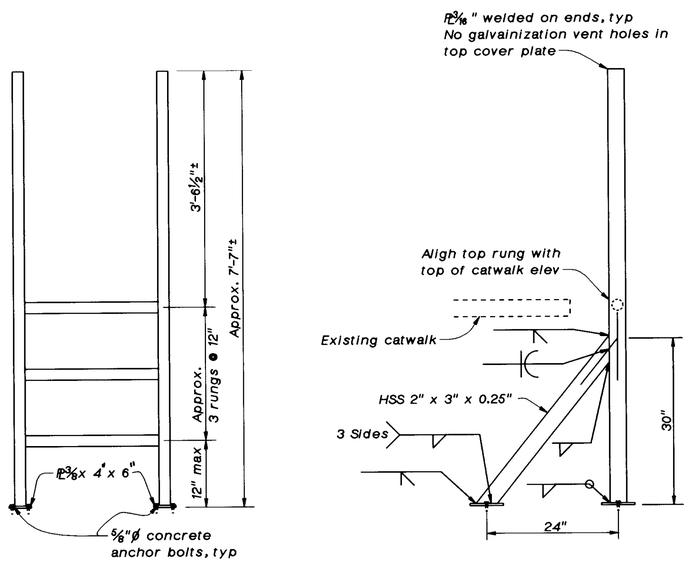

BENT (A9) LADDER
NO SCALE

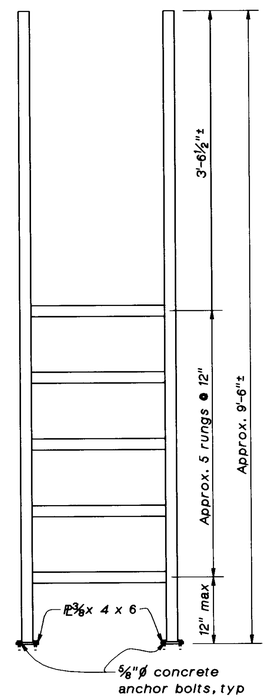

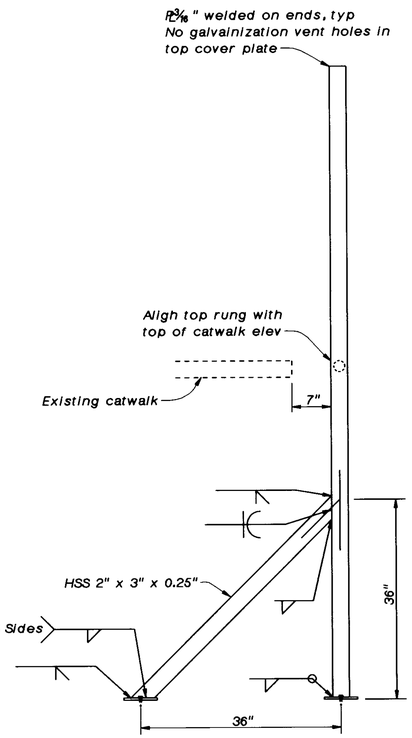

BENT (A10) LADDER
NO SCALE

AS BUILT
CORRECTION BY BRIAN BEAUDOIN
CONTRACT NO. 04-043934
DATE FEBRUARY, 2002
STRUCTURES REPRESENTATIVE

ALL INFORMATION ON THIS SHEET REPRESENTS 'AS-BUILT' CHANGES

The Contractor shall verify all controlling field dimensions before ordering or fabricating any material.

EARTHQUAKE RETROFIT PROJECT 611

CARQUINEZ BRIDGE - "A4E" LINE (APPROACH SPAN)

MISCELLANEOUS DETAILS NO. 1

DESIGN	BY J. Aldrich	CHECKED J. Downing, J. Quincy	
DETAILS	BY A. Galbraith	CHECKED J. Quincy	
QUANTITIES	BY D. Nguyen-Tan, S. Ismail	CHECKED J. Downing	

Vong Toan
DESIGN OVERSIGHT
SIGN OFF DATE

PREPARED FOR THE STATE OF CALIFORNIA DEPARTMENT OF TRANSPORTATION

Lee Holloway
PROJECT ENGINEER

BRIDGE NO. 23-15 R
POST MILE CC-13.47

CU 04-268
EA 043931

A4E-MD1S1.DGN

ORIGINAL SCALE IN INCHES FOR REDUCED PLANS 0 1 2 3

DISREGARD PRINTS BEARING EARLIER REVISION DATES → 16-MAR-1997

REVISION DATES (PRELIMINARY STAGE ONLY) | SHEET 83S1 | OF 120

ClibPDF - www.fastio.com

DIST	COUNTY	ROUTE	POST MILES TOTAL PROJECT	SHEET NO.	TOTAL SHEETS
04				518	

REGISTERED CIVIL ENGINEER

PLANS APPROVAL DATE

REGISTERED PROFESSIONAL ENGINEER Jeffrey S. Aldrich No. 34271 Exp. 09/30/99 CIVIL STATE OF CALIFORNIA

CH2M HILL
2485 NATOMAS PARK DR, SUITE 600
SACRAMENTO, CALIFORNIA 95833

The State of California or its officers or agents shall not be responsible for the accuracy or completeness of electronic copies of this plan sheet.

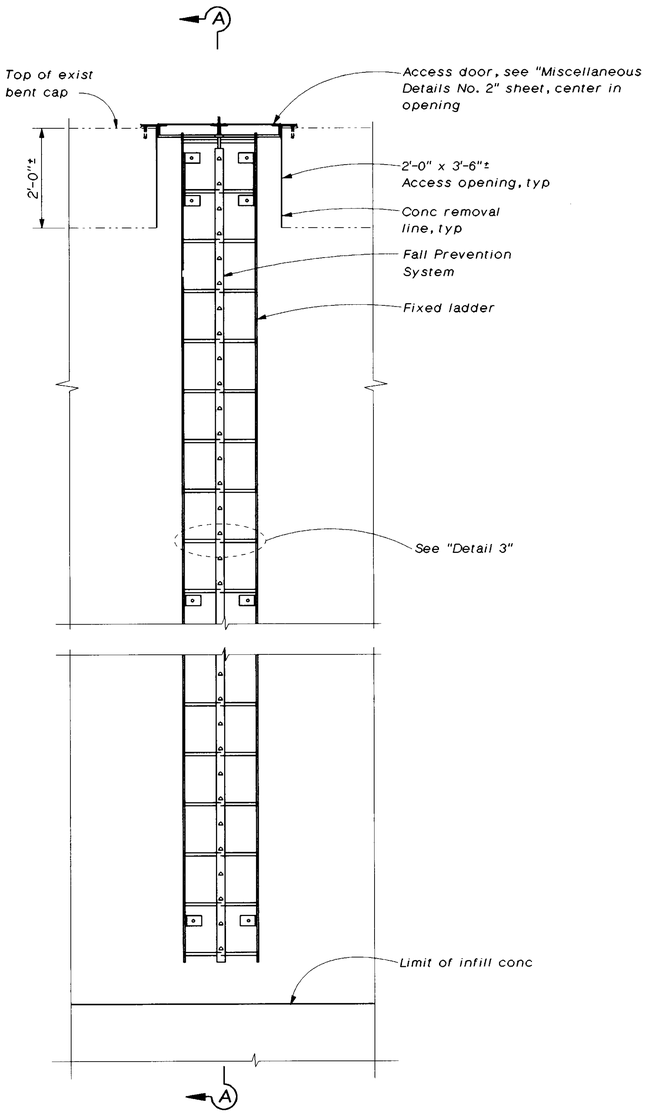

ELEVATION
3/4" = 1'-0"

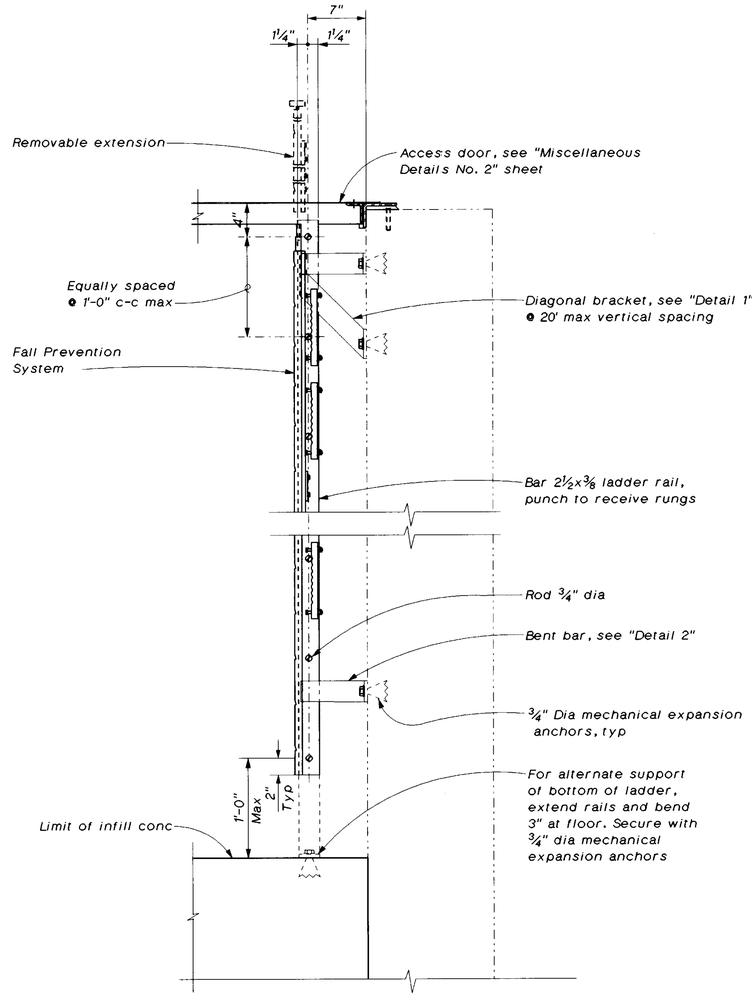

SECTION A-A
1½" = 1'-0"

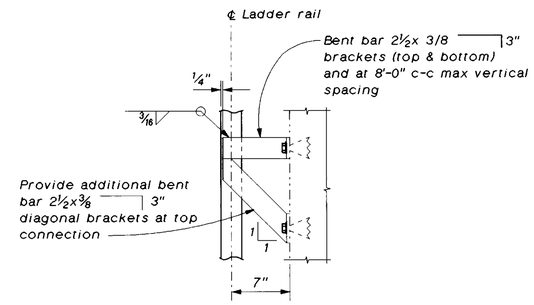

DETAIL 1
1½" = 1'-0"

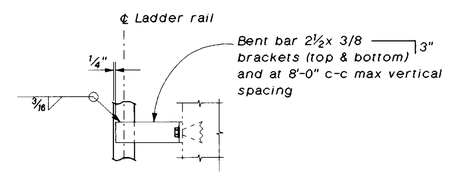

DETAIL 2
1½" = 1'-0"

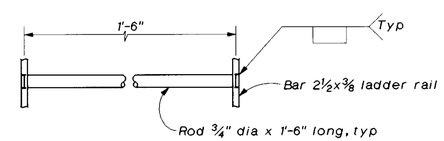

Note:
Ladder siderails may be spliced at contractors option.

DETAIL 3
No Scale

AS BUILT
CORRECTION BY BRIAN BEAUDOIN
CONTRACT NO. 04-043934
DATE FEBRUARY, 2002
STRUCTURES REPRESENTATIVE

The Contractor shall verify all controlling field dimensions before ordering or fabricating any material.

EARTHQUAKE RETROFIT PROJECT 611

CARQUINEZ BRIDGE - "A4E" LINE (APPROACH SPAN)

MISCELLANEOUS DETAILS NO. 1

Vong Toan
DESIGN OVERSIGHT
April 24, 1997
SIGN OFF DATE

	BY	CHECKED
DESIGN	J. Aldrich	J. Downing, J. Quincy
DETAILS	A. Galbraith	J. Quincy
QUANTITIES	D. Nguyen-Tan, S. Ismail	J. Downing

PREPARED FOR THE STATE OF CALIFORNIA DEPARTMENT OF TRANSPORTATION

Lee Holloway
PROJECT ENGINEER

BRIDGE NO. 23-15 R
POST MILE CC-13.47

A4E-MD1.DLV

ORIGINAL SCALE IN INCHES FOR REDUCED PLANS 0 1 2 3

CU 04-268
EA 043931

DISREGARD PRINTS BEARING EARLIER REVISION DATES 16-MAR-1997

REVISION DATES (PRELIMINARY STAGE ONLY)

SHEET 83 OF 120

ClibPDF - www.fastio.com

DIST	COUNTY	ROUTE	POST MILES TOTAL PROJECT	SHEET NO.	TOTAL SHEETS
04	CC, SOL	80		519	555

Robert L. Morrison Jr
REGISTERED CIVIL ENGINEER

10-20-97
PLANS APPROVAL DATE

REGISTERED PROFESSIONAL ENGINEER — Robert L. Morrison Jr — No. 43693 — Exp. 03/31/97 — CIVIL — STATE OF CALIFORNIA

CH2M HILL
2485 NATOMAS PARK DR, SUITE 600
SACRAMENTO, CALIFORNIA 95833

The State of California or its officers or agents shall not be responsible for the accuracy or completeness of electronic copies of this plan sheet.

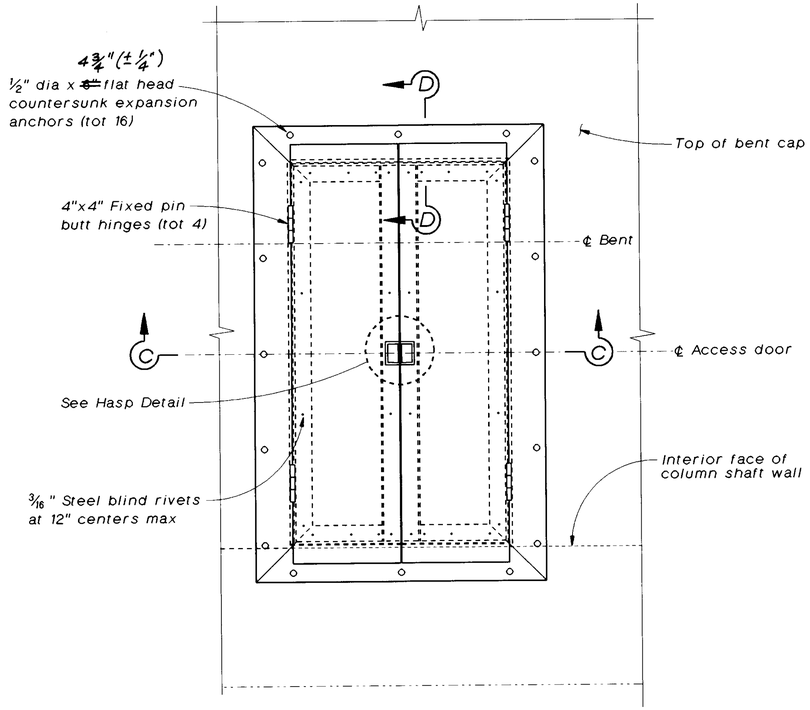

PLAN
1½"=1'-0"

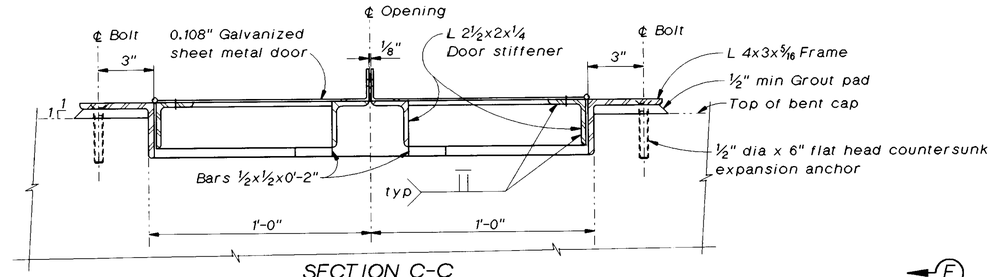

SECTION C-C
3"=1'-0"

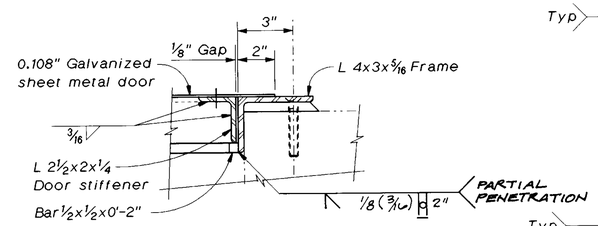

SECTION D-D
3"=1'-0"

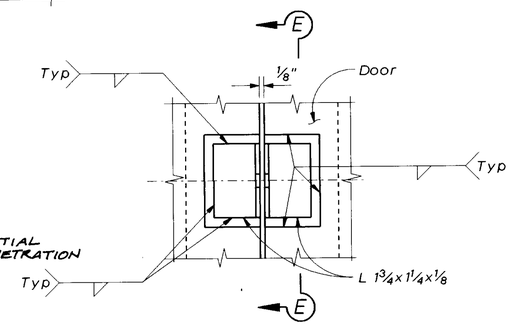

PLAN

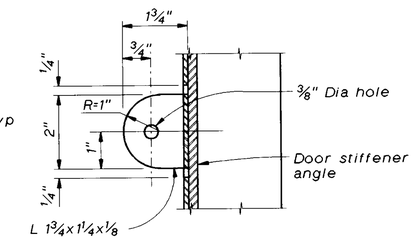

SECTION E-E

Notes:

1. Hot dip galvanize frame assemblies and door stiffener angles after welding and fabrication.
2. Attach door stiffener angles to steel door with blind rivets.

HASP DETAIL
6"=1'-0"

ACCESS DOOR DETAILS

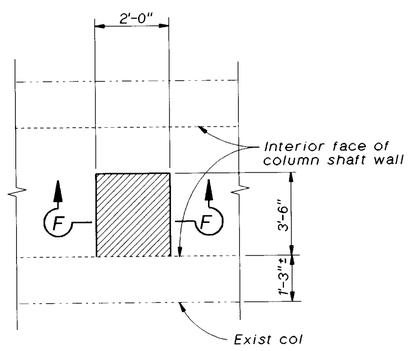

PLAN

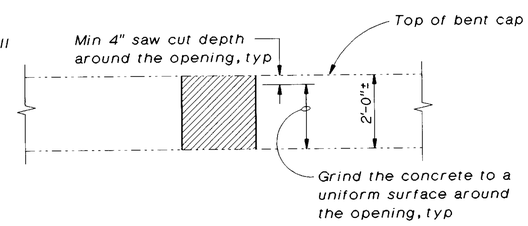

SECTION F-F

Note:
Bolsters and prestress anchor beams not shown for clarity.

BENT CAP REMOVAL DETAILS
No scale

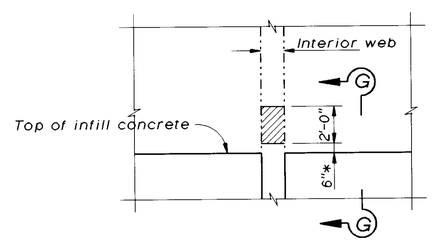

ELEVATION

* Stagger elevation by 2'-0" in adjacent interior webs.

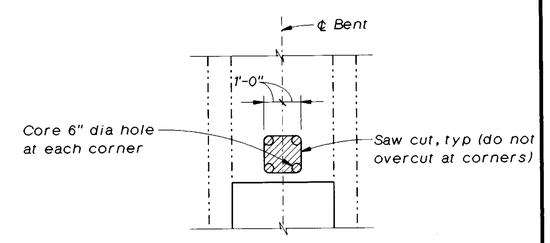

SECTION G-G

Note:
For location of "Web Access Opening Detail" see, "Bent Layout" sheets.

WEB ACCESS OPENING DETAIL
No Scale

AS BUILT
CORRECTION BY BRIAN BEAUDOIN
CONTRACT NO. 04-043934
DATE FEBRUARY, 2002
STRUCTURES REPRESENTATIVE

LEGEND
Indicates Bridge Removal, Portion

The Contractor shall verify all controlling field dimensions before ordering or fabricating any material.

SEISMIC RETROFIT PROJECT NO. 611

CARQUINEZ BRIDGE - "A4E" LINE (APPROACH SPAN)

MISCELLANEOUS DETAILS NO. 2

Vong Toan — DESIGN OVERSIGHT — April 24, 1997 — SIGN OFF DATE	DESIGN	BY D. Nguyen-Tan	CHECKED C. Harrington/ J. Quincy
	DETAILS	BY G. Bazan, G. Triplat	CHECKED J. Quincy
	QUANTITIES	BY D. Nguyen-Tan, S. Ismail	CHECKED J. Downing

PREPARED FOR THE STATE OF CALIFORNIA DEPARTMENT OF TRANSPORTATION

Lee Holloway — PROJECT ENGINEER

BRIDGE NO. 23-15 R
POST MILE CC-13.47

a4e-md2.dlv

ORIGINAL SCALE IN INCHES FOR REDUCED PLANS 0 1 2 3

CU 04-268
EA 043931

DISREGARD PRINTS BEARING EARLIER REVISION DATES → REVISION DATES (PRELIMINARY STAGE ONLY) 16-MAR-1997

SHEET 84 OF 120

ClibPDF - www.fastio.com

DIST	COUNTY	ROUTE	POST MILES TOTAL PROJECT	SHEET NO.	TOTAL SHEETS
04	CC,SOL	80	12.8/14.1,0.0/0.6	520	555

REGISTERED CIVIL ENGINEER

10-20-97
PLANS APPROVAL DATE

REGISTERED PROFESSIONAL ENGINEER — Robert L. Morrison Jr. No. 43693 Exp. 03/31/97 CIVIL — STATE OF CALIFORNIA

CH2M HILL
2485 NATOMAS PARK DR, SUITE 600
SACRAMENTO, CALIFORNIA 95833

The State of California or its officers or agents shall not be responsible for the accuracy or completeness of electronic copies of this plan sheet.

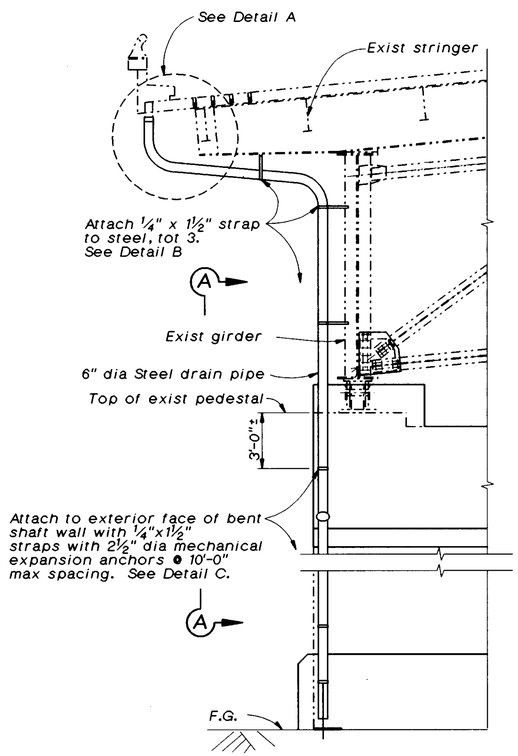

(Bent "A9E" shown, Bents "A11E" & "A12E" similar)

ELEVATION - BENTS "A9E", "A11E", "A12E"

1/4"=1'-0"

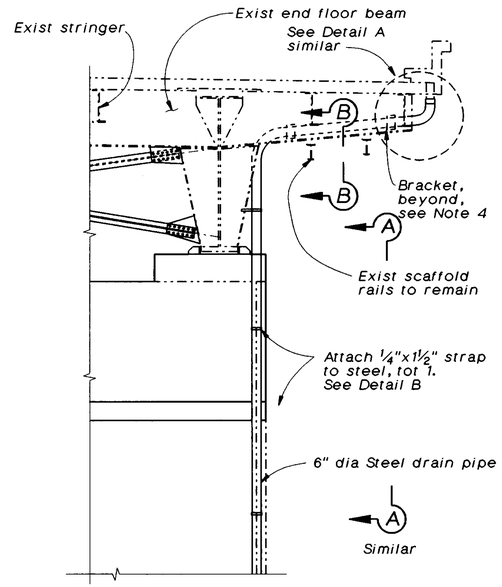

(Bent "A3E" & "A5E"shown, Bents "A7E" similar)

ELEVATION - BENTS "A3E", "A5E" & "A7E"

1/4"=1'-0"

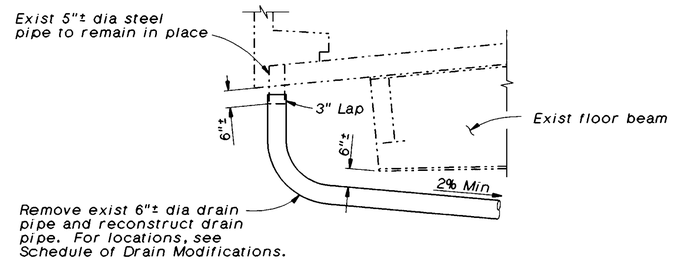

DETAIL A

1/2"=1'-0"

SCHEDULE OF DRAIN MODIFICATION	
Bent	Side
"A3E"	Right
"A5E"	Right
"A7E"	Right
"A9E"	Left
"A11E"	Left
"A12E"	Left

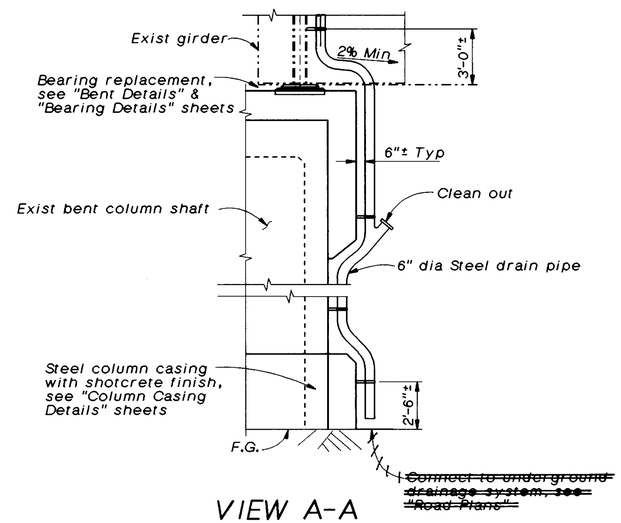

VIEW A-A

1/4"=1'-0"

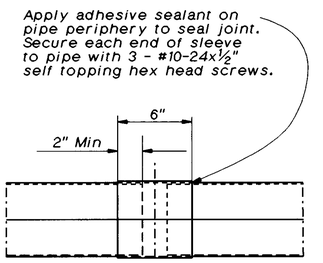

Sleeve inside diameter no greater than pipe outside diameter + 1/16"

SLEEVE CONNECTION

2"=1'-0"

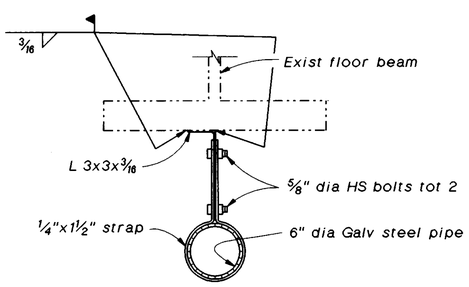

Exist L 3x3x3/16"± to remain where occurs. On vertical leg of drain pipe, omit L 3x3x3/16 and bolt strap to girder bearing stiffener PL.

DETAIL B

1 1/2"=1'-0"

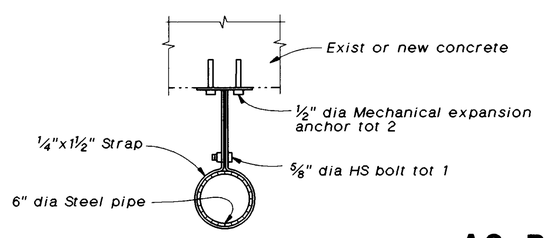

DETAIL C

1 1/2"=1'-0"

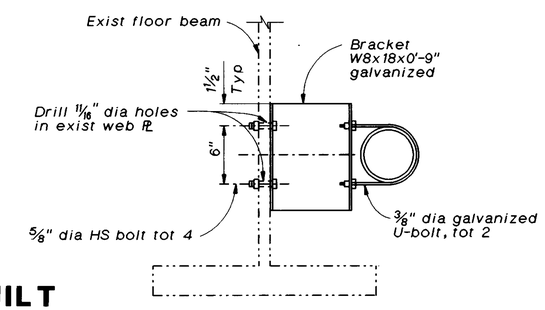

SECTION B-B

1 1/2"=1'-0"

AS BUILT
CORRECTION BY BRIAN BEAUDOIN
CONTRACT NO. 04-043934
DATE FEBRUARY, 2002
STRUCTURES REPRESENTATIVE

Notes:

1. *All pipes to be 6" dia x 0.135" welded steel pipe except as noted. All pipes and steel parts to be galvanized after fabrication. Fitting & bends shall have a minimum thickness of 1/8"*
2. *All joints or connections to be butt welded or connected by a steel pipe sleeve & to be smooth throughout inside of pipe except as noted.*
3. *All bends to be on a 1'-6" minimum radius measured along ℄ pipe. All bends to be smooth*
4. *Existing brackets where occur to remain in place.*
5. *Direct drain pipe to down hill side of the column shaft as directed by the Engineer.*

The Contractor shall verify all controlling field dimensions before ordering or fabricating any material.

SEISMIC RETROFIT PROJECT NO. 611

CARQUINEZ BRIDGE - "A4E" LINE (APPROACH SPAN)

DRAINAGE DETAILS

Vong Toan
DESIGN OVERSIGHT
12/12/97
SIGN OFF DATE

	BY	CHECKED
DESIGN	R. Morrison, Jr.	M. Cooper
DETAILS	J. Law	M. Cooper
QUANTITIES	D. Nguyen-Tan / S. Ismail	J. Downing

PREPARED FOR THE STATE OF CALIFORNIA DEPARTMENT OF TRANSPORTATION

Lee Holloway
PROJECT ENGINEER

BRIDGE NO. 23-15 R
POST MILE CC-13.47

ca4-dd.dlv

ORIGINAL SCALE IN INCHES FOR REDUCED PLANS 0 1 2 3

CU 04-268
EA 043931

DISREGARD PRINTS BEARING EARLIER REVISION DATES → REVISION DATES (PRELIMINARY STAGE ONLY) 10-DEC-1997

SHEET 85 OF 120

ClibPDF - www.fastio.com

DIST.	COUNTY	ROUTE	POST MILES TOTAL PROJECT	SHEET NO.	TOTAL SHEETS
04	CC/Sol	80	12.8/14.1, 0.0/0.6	521	555

R.W. Fox

REGISTERED GEOLOGIST R.W. FOX No. 78 Exp. 9-31-97 CERTIFIED ENGINEERING GEOLOGIST STATE OF CALIFORNIA

10-20-97
PLANS APPROVAL DATE

THE STATE OF CALIFORNIA OR ITS OFFICERS OR AGENTS SHALL NOT BE RESPONSIBLE FOR THE ACCURACY OR COMPLETENESS OF ELECTRONIC COPIES OF THIS PLAN SHEET.

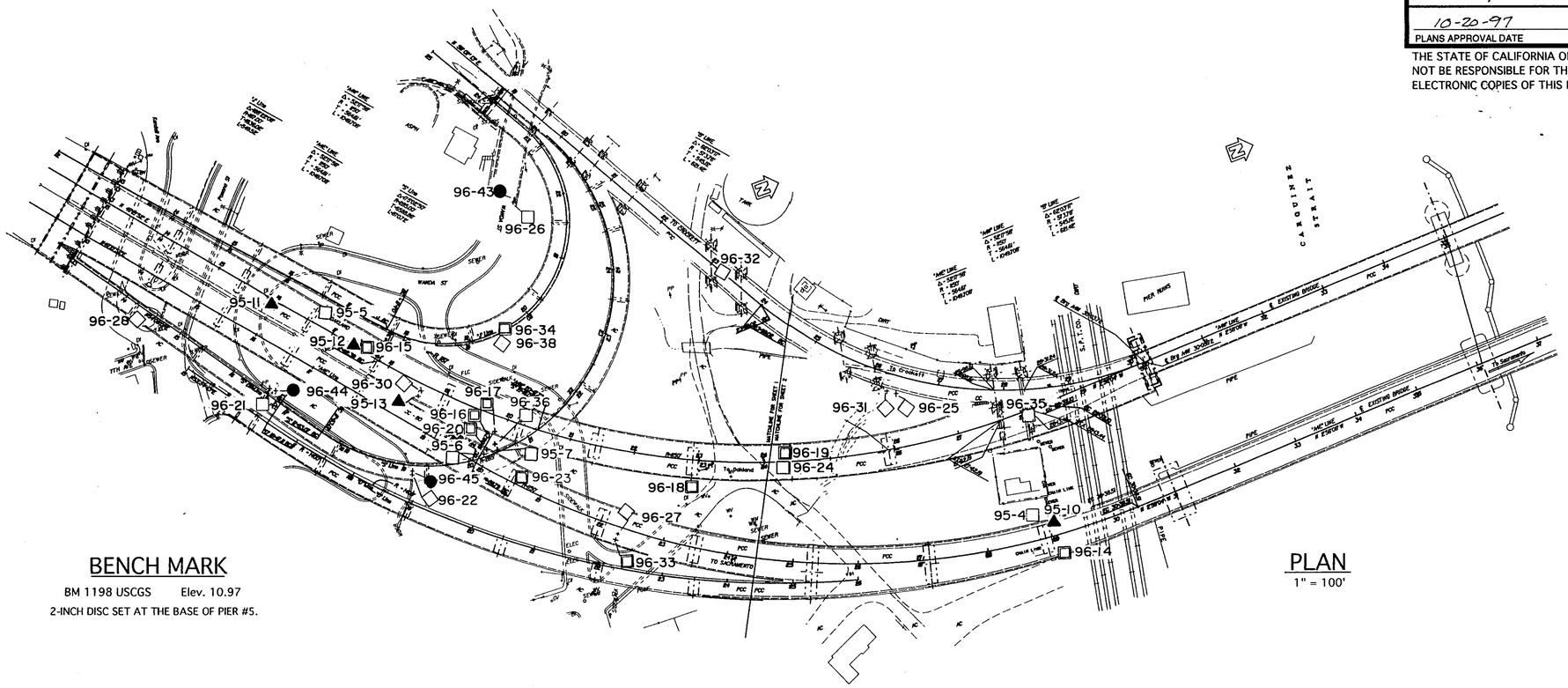

BENCH MARK

BM 1198 USCGS Elev. 10.97

2-INCH DISC SET AT THE BASE OF PIER #5.

PLAN

1" = 100'

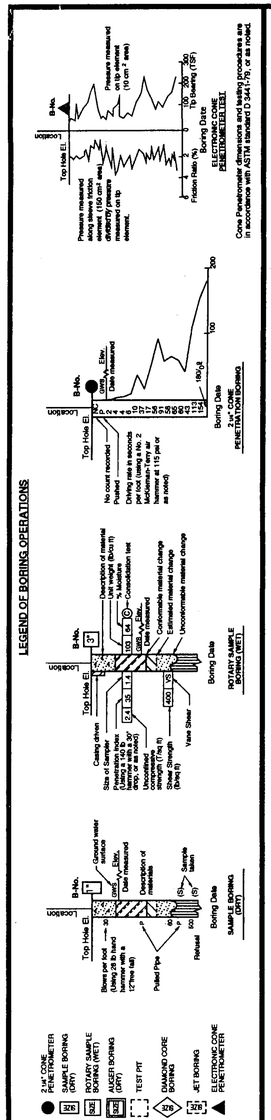

NO AS BUILT CHANGES
AS BUILT
CORRECTION BY BRIAN BEAUDOIN
CONTRACT NO. 04-043934
DATE FEBRUARY, 2002
STRUCTURES REPRESENTATIVE

EARTHQUAKE RETROFIT PROJECT NO. SR-611

CARQUINEZ BRIDGE - SOUTH APPROACH

LOG OF TEST BORINGS 1 OF 35

ENGINEERING SERVICE CENTER	STRUCTURE FOUNDATIONS
DRAWN BY Ken Wald 9-96	
CHECKED BY	

FIELD INVESTIGATION BY: L. JENSEN

State of CALIFORNIA DEPARTMENT OF TRANSPORTATION

DIVISION OF STRUCTURES
STRUCTURE DESIGN

BRIDGE NO. 23-15R/L
POST MILE CC-13.48 Sol-1.72

CU: 04
EA: 043921/043931

ORIGINAL SCALE IN INCHES FOR REDUCED PLANS → 0 1 2 3

DISREGARD PRINTS BEARING EARLIER REVISION DATES →

REVISION DATES (PRELIMINARY STAGE ONLY)

SHEET 86 OF 120

TL 6051 REV. 5/95

ClibPDF - www.fastio.com

DIST.	COUNTY	ROUTE	POST MILES TOTAL PROJECT	SHEET NO.	TOTAL SHEETS
04	CC/Sol	80	12.8/14.1, 0.0/0.6	522	555

R.W. FOX
REGISTERED GEOLOGIST
No. 78
Exp. 8-31-97
CERTIFIED ENGINEERING GEOLOGIST
STATE OF CALIFORNIA

10-20-97
PLANS APPROVAL DATE

THE STATE OF CALIFORNIA OR ITS OFFICERS OR AGENTS SHALL NOT BE RESPONSIBLE FOR THE ACCURACY OR COMPLETENESS OF ELECTRONIC COPIES OF THIS PLAN SHEET.

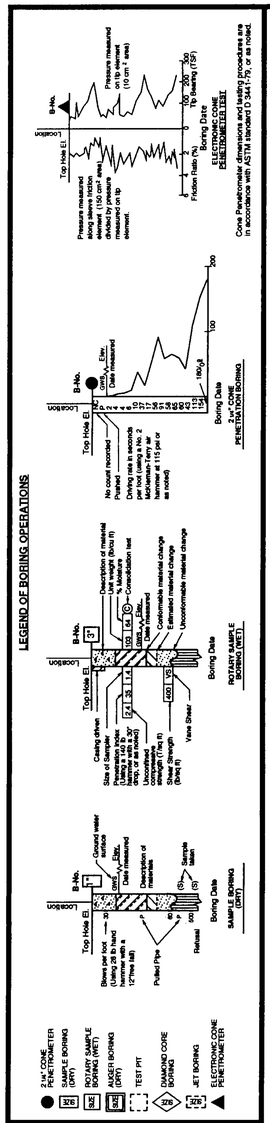

LEGEND OF EARTH MATERIALS

GRAVEL, SAND, SILT, CLAY, SANDY CLAY or CLAYEY SAND, SANDY SILT or SILTY SAND, SILTY CLAY, CLAYEY SILT, PEAT w/ORGANIC MATTER, FILL MATERIAL, IGNEOUS ROCK, SEDIMENTARY ROCK, METAMORPHIC

CONSISTENCY CLASSIFICATION FOR SOILS

According to the Standard Penetration Test

Penetration Index (Blows / Ft)	Granular	Cohesive
0-4	Very Loose	Very Soft
5-9	Loose	Soft
10-19	Slightly compact	Stiff
20-34	Compact	Very Stiff
35-69	Dense	Hard
>70	Very Dense	Very Hard

NOTE: Classification of earth material as shown on this sheet is based upon field inspection and is not to be construed to imply mechanical analysis.

WEATHERING DESCRIPTORS

Descriptors		Diagnostic features					General characteristic (strength, excavation, etc.) §
		Chemical weathering-Discoloration and/or oxidation		Mechanical weathering-Grain boundary conditions (disaggregation) primarily for granitics and some coarse-grained sediments	Texture and solutioning		
Alphanumeric descriptor	Descriptive term	Body of rock	Fracture surfaces†		Texture	Solutioning	
W1	Fresh	No discoloration, not oxidized	No discoloration or oxidation	No separation, intact (tight)	No change	No solutioning	Hammer rings when crystalline rocks are struck. Almost always rock excavation except for naturally weak or weakly cemented rocks such as siltstones or shales.
W2	Slightly weathered to fresh*						
W3	Slightly weathered	Discoloration or oxidation is limited to surface of, or short distance from, fractures; some feldspar crystals are dull	Minor to complete discoloration or oxidation of most surfaces	No visible separation, intact (tight)	Preserved	Minor leaching of some soluble minerals may be noted	Hammer rings when crystalline rocks are struck. Body of rock not weakened. With few exceptions, such as siltstones or shales, classified as rock excavation.
W4	Moderately to slightly weathered*						
W5	Moderately weathered	Discoloration or oxidation extends from fractures usually throughout; Fe-Mg minerals are "rusty", feldspar crystals are "cloudy".	All fracture surfaces are discoloured or oxidized	Partial seperation of boundaries visible	Generally preserved	Soluble minerals may be mostly leached	Hammer rings when crystalline rocks are struck. Body of rock is slightly weakened. Depending on fracturing, usually is rock excavation except in naturally weak rocks such as siltstones or shales.
W6	Intensely to moderately weathered*						
W7	Intensely weathered	Discoloration or oxidation throughout; all feldspars and Fe-Mg minerals are altered to clay to some extent; or chemical alteration produces in situ disaggregation, see grain boundary conditions	All fracture surfaces are discolored or oxidized, surfaces friable	Partial seperation, rock is friable; in semiarid conditions granitics are disaggregated	Texture altered by chemical disintegration (hydration, argillation)	Leaching of soluble minerals may be complete	Dull sound when struck with hammer, usually can be broken with moderate to heavy manual pressure or by light hammer blow without reference to planes of weakness such as incipient or hairline fractures, or veinlets. Rock is significantly weakened. Usually common excavation.
W8	Very intensely weathered						
W9	Decomposed	Discolored or oxidized throughout, but resistant minerals such as quartz may be unaltered; all feldspars and Fe-Mg minerals are completely altered to clay		Complete separation of grain boundaries (disaggregated)	Resembles a soil, partial or complete remnant rock structure may be preserved; leaching of soluble minerals usually complete		Can be granulated by hand. Always common excavation. Resistant minerals such as quartz may be present as "stringers" or "dikes".

Note: This chart and its horizontal categories are more readily applied to rocks with feldspars and mafic minerals. Weathering in various sedimentary rocks, particularly limestones and poorly indurated sediments, will not always fit the categories established. This chart and weathering categories may have to be modified for particular site conditions or alteration such as hydrothermal effects; however, the basic framework and similar descriptors are to be used.

* Combination descriptors are permissible where equal distribution of both weathering characteristics are present over significant intervals or where characteristics present are "in between" the diagnostic feature. However, dual descriptors should not be used where significant, identifiable zones can be delineated. When given as a range, only two adjacent terms may be combined (i.e., decomposed to lightly weathered or moderately weathered to fresh) are not acceptable.

† Does not include directional weathering along shears or faults and their associated features. For example, a shear zone that carried weathering to great depths into a fresh rock mass would not require the rock mass to be classified as weathered.

§ These are generalizations and should not be used as diagnostic features for weathering or excavation classification. These characteristics vary to a large extent based on naturally weak materials or cementation and type of excavation.

ROCK HARDNESS/ STRENGTH DESCRIPTORS

Alphanumeric descriptor	Descriptor	Criteria
H1	Extremely hard	Core, fragment, or exposure cannot be scratched with knife or sharp pick; can only be chipped with repeated heavy hammer blows.
H2	Very hard	Cannot be scratched with knife or sharp pick. Core of fragment breaks with repeated heavy hammer blows.
H3	Hard	Can be scratched with knife or sharp pick with difficulty (heavy pressure). Heavy hammer blow required to break specimen.
H4	Moderately hard	Can be scratched with knife or sharp pick with light or moderate pressure. Core or fragment breaks with moderate hammer blow.
H5	Moderately soft	Can be grooved 1/16 inch (2 mm) deep by knife or sharp pick with moderate or heavy pressure. Core or fragment breaks with light hammer blow or heavy manual pressure.
H6	Soft	Can be grooved or gouged easily by knife or sharp pick with light pressure, can be scratched with fingernail. Breaks with light to moderate manual pressure.
H7	Very soft	Can be readily indented, grooved or gouged with fingernail, or carved with a knife. Breaks with light manual pressure.

Any bedrock unit softer than H7, very soft, is to be described using USBR 5000 consistency descriptors.

Note: Although "sharp pick" is included in these definitions, descriptions of ability to be scratched, grooved of gouged by a knife is the preferred criteria.

FRACTURE DENSITY

FRACTURE DENSITY - Based on the spacing of all natural fractures in an exposure or core recovery lengths in boreholes; excludes mechanical breaks, shears, and shear zones; however, shear-distributed zones (fracturing outside the shear) are included. Descriptors for fracture density apply to all rock exposures such as tunnel walls, dozer trenches, outcrops, or foundation cut slopes and inverts, as well as boreholes. Descriptive criteria presented below are based on borehole cores where lengths are measured along the core axis, for other exposures the criteria is distance measured between fractures (size of blocks).

UNFRACTURED (FDØ) : No fractures.

VERY SLIGHTLY FRACTURED (FD1) : Core recovered mostly in lengths greater than 3 feet (1 m).

SLIGHTLY TO VERY SLIGHTLY FRACTURED (FD2)*

SLIGHTLY FRACTURED (FD3) : Core recovered mostly in lengths from 1 to 3 feet (300 to 1000 mm) with few scattered lengths less than 1 foot (300 mm) or greater than 3 feet (1000 mm).

MODERATELY TO SLIGHTLY FRACTURED (FD4)*

MODERATELY FRACTURED (FD5) : Core recovered mostly in 0.3 to 1.0 foot (100 to 300 mm) lengths with most lengths about 0.6 foot (200 mm)

INTENSELY TO MODERATELY FRACTURED (FD6)*

INTENSELY FRACTURED (FD7) : Lengths average from 0.1 to 0.3 foot (30 to 100 mm) with scattered fragmented intervals. Core recovered mostly in lengths less than 0.3 foot (100 mm).

VERY INTENSELY TO INTENSELY FRACTURED (FD8)*

VERY INTENSELY FRACTURED (FD9) : Core recovered mostly as chips and fragments with a few scattered short core lengths.

* Combinations of fracture densities (e.g. Very Intensely to Intensely Fractured or Moderately to Slightly Fractured) are used where equal distribution of both fracture density characteristics are presently over a significant interval or exposure, or where characteristics are "in between" the descriptor definitions.

BEDDING, FOLIATION, OR FLOW TEXTURE DESCRIPTORS

Descriptors	Thickness / Spacing
Massive	Greater than 10 ft (3 m)
Very thickly (bedded, foliated, or banded)	3 to 10 ft (1 to 3 m)
Thickly	1 to 3 ft (300 mm to 1 m)
Moderately	0.3 to 1 ft (100 to 300 mm)
Thinly	0.1 to 0.3 ft (30 to 100 mm)
Very thinly	0.03 (3/8 in) to 0.1 ft (10 to 30 mm)
Laminated (intensely foliated or banded)	Less than 0.03 ft (3/8 in) (<10 mm)

RQD LOGGING

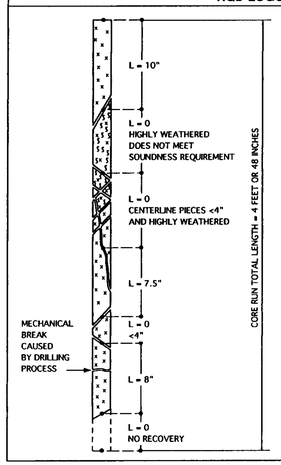

$$RQD = \frac{\sum \text{LENGTH OF SOUND CORE PIECES} > 4 \text{ INCHES (100 mm)}}{\text{TOTAL CORE RUN LENGTH}}$$

$$RQD = \frac{10 + 7.5 + 8}{48} \times 100\%$$

RQD = 53% (FAIR)

RQD (ROCK QUALITY DESIGNATION)	DESCRIPTION OF ROCK QUALITY
0 - 25%	VERY POOR
25 - 50%	POOR
50 - 75%	FAIR
75 - 90%	GOOD
90 - 100%	EXCELLENT

after Deere & Deere, 1989

NOTES:

1. All elevations shown refer to Mean Sea Level (M.S.L.) Datum = 0.0.
2. Rock Quality Designation (RQD), Weathering, Hardness, Fracture Density and Bedding Thickness descriptors, as shown on this plate, were used to describe all rock core from borings drilled in 1995 and 1996. Descriptors were determined in the field in accordance with the United States Department of the Interior, Bureau of Reclamation, Engineering Geology, Field Manual.
3. Unconfined compressive strength (qu) determined in field by "Pocket Penetrometer." Units shown are in tons per square foot (TSF).
4. Undrained shear strength (Su) determined in field by "Torvane." Units shown are in tons per square foot (TSF).
5. Penetration Index recorded as "P" when sampler sank under weight of rods. No blow counts recorded.
6. E = Blow count for one foot of penetration extrapolated from blow count for less than one foot of penetration (typically due to a change in material or hard driving).
7. REC = % Rock Recovery.
8. RQD = % Rock Quality Designation.
9. Shear wave velocity data/reports for borings 95-4, 95-5, 95-7, 96-28, 96-31, 96-32, 96-35, and 96-38 are available for review through the Engineering Service Center, Office of Structural Foundations, Geotechnical Support Branch, at the Transportation Laboratory, 5900 Folsom Blvd., Sacramento, CA 95819.
10. A strong motion accelerometer was installed at the bottom of borehole 95-4. This device is being monitored by the Earth Sciences Division of Lawrence Livermore National Laboratory, University of California, Livermore, P.O. Box 808, L-808, Livermore, CA 94551.
11. Additional Laboratory Soil/Rock Test Data is available through the Engineering Service Center, Office of Structural Foundations, Structure Foundations Branch, at 5900 Folsom Blvd. Sacramento, CA 95819.
12. Ground water surface elevations encountered in the 1995/96 foundation investigation are indicated on the Log of Test Boring Sheets and reflect the fluid level in the borehole on the specified date. Ground water surface elevations are subject to seasonal fluctuations and may occur at higher or lower elevations depending on the conditions at any particular time. As a practical consideration, ground water may be encountered frequently during pile construction. For this reason, whenever construction or deep excavation is planned close to previous ground water elevations, the ground water elevations should be determined from observation wells or other means, and provisions should be made for ground water management.

NO AS BUILT CHANGES
AS BUILT
CORRECTION BY BRIAN BEAUDOIN
CONTRACT NO. 04-043934
DATE FEBRUARY, 2002
STRUCTURES REPRESENTATIVE

GENERAL NOTES
EARTHQUAKE RETROFIT - PROJECT No. SR-611
CARQUINEZ BRIDGE - SOUTH APPROACH
LOG OF TEST BORINGS 2 OF 35

ENGINEERING SERVICE CENTER | STRUCTURE FOUNDATIONS
DRAWN BY Irma Gamarra 8/96
CHECKED BY

FIELD INVESTIGATION BY:

State of CALIFORNIA DEPARTMENT OF TRANSPORTATION
DIVISION OF STRUCTURES
STRUCTURE DESIGN

BRIDGE NO. 23-15 R/L
POST MILE CC-13.48 Sol-1.72

CU: 04
EA: 043921/043931

ORIGINAL SCALE IN INCHES FOR REDUCED PLANS → 0 1 2 3

DISREGARD PRINTS BEARING EARLIER REVISION DATES →
REVISION DATES (PRELIMINARY STAGE ONLY)
SHEET 87 OF 120

TL 6051 REV. 5/95

ClibPDF - www.fastio.com

DIST.	COUNTY	ROUTE	POST MILES TOTAL PROJECT	SHEET NO.	TOTAL SHEETS
04	CC/Sol	80	12.8/14.1, 0.0/0.6	523	555

R. W. Fox

REGISTERED GEOLOGIST — R. W. FOX — No. 78 — Exp. 8-31-97 — CERTIFIED ENGINEERING GEOLOGIST — STATE OF CALIFORNIA

10-20-97
PLANS APPROVAL DATE

THE STATE OF CALIFORNIA OR ITS OFFICERS OR AGENTS SHALL NOT BE RESPONSIBLE FOR THE ACCURACY OR COMPLETENESS OF ELECTRONIC COPIES OF THIS PLAN SHEET.

FOR PLAN VIEW, SEE "LOG OF TEST BORINGS, SHEET 1 OF 35"

NO AS BUILT CHANGES
AS BUILT
CORRECTION BY BRIAN BEAUDOIN
CONTRACT NO. 04-043934
DATE FEBRUARY, 2002
STRUCTURES REPRESENTATIVE

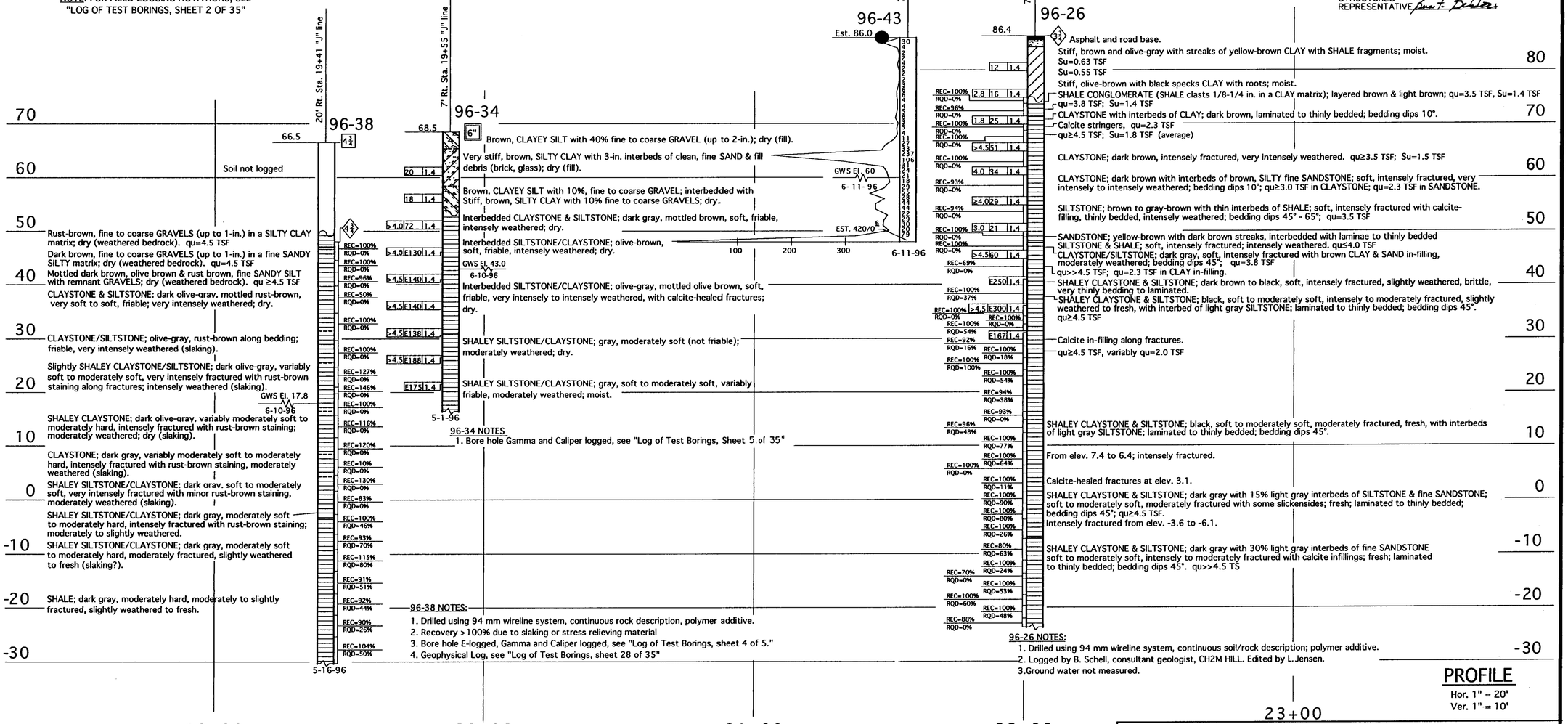

96-34 NOTES
1. Bore hole Gamma and Caliper logged, see "Log of Test Borings, Sheet 5 of 35"

96-38 NOTES:
1. Drilled using 94 mm wireline system, continuous rock description, polymer additive.
2. Recovery >100% due to slaking or stress relieving material
3. Bore hole E-logged, Gamma and Caliper logged, see "Log of Test Borings, sheet 4 of 5."
4. Geophysical Log, see "Log of Test Borings, sheet 28 of 35"

96-26 NOTES:
1. Drilled using 94 mm wireline system, continuous soil/rock description; polymer additive.
2. Logged by B. Schell, consultant geologist, CH2M HILL. Edited by L. Jensen.
3. Ground water not measured.

PROFILE
Hor. 1" = 20'
Ver. 1" = 10'

LEGEND OF BORING OPERATIONS

LEGEND OF EARTH MATERIALS: GRAVEL, CLAYEY SILT, SAND, PEAT and/or ORGANIC MATTER, SILT, FILL MATERIAL, CLAY, IGNEOUS ROCK, SEDIMENTARY ROCK, METAMORPHIC, SANDY CLAY or CLAYEY SAND, SANDY SILT or SILTY SAND, SILTY CLAY

CONSISTENCY CLASSIFICATION FOR SOILS
According to the Standard Penetration Test

Penetration Index (Blows / Ft)	Granular	Cohesive
0-4	Very Loose	Very Soft
5-9	Loose	Soft
10-19	Slightly compact	Stiff
20-34	Compact	Very Stiff
35-69	Dense	Hard
>70	Very Dense	Very Hard

NOTE: Classification of earth material as shown on this sheet is based upon field inspection and is not to be construed to imply mechanical analysis.

ENGINEERING SERVICE CENTER	STRUCTURE FOUNDATIONS	FIELD INVESTIGATION BY:	State of CALIFORNIA DEPARTMENT OF TRANSPORTATION	DIVISION OF STRUCTURES STRUCTURE DESIGN	BRIDGE NO. 23-15 R/L
DRAWN BY Irma Samarra 9/96		L. JENSEN & H. VALENCIA			POST MILE CC-13.48 Sol-1.72
CHECKED BY					

EARTHQUAKE RETROFIT - PROJECT No. SR-611
CARQUINEZ BRIDGE SOUTH APPROACH
LOG OF TEST BORINGS 3 OF 35

ORIGINAL SCALE IN INCHES FOR REDUCED PLANS → 0 1 2 3

CU: 04
EA: 043921/043931

DISREGARD PRINTS BEARING EARLIER REVISION DATES →
REVISION DATES (PRELIMINARY STAGE ONLY)
SHEET 88 OF 120

TL 6051 REV. 5/95

ClibPDF - www.fastio.com

PLANS APPROVED: 10-20-97

DIST.	COUNTY	ROUTE	POST MILES TOTAL PROJECT	SHEET NO.	TOTAL SHEETS
04	CC/Sol	80	12.8/14.1, 0.0/0.6	524	555

The information represented on this drawing title "Carquinez Bridge South Approach" was not the result of any work developed, performed or completed by this Department (Caltrans). All such activity appears to be by those parties presented on this drawing who would bear all such responsibility. This drawing is available and presented only for the convenience of any bidder, contractor or other interested party. It should be expressly understood that Caltrans assumes no responsibility whatsoever in respect to the sufficiency or accuracy, completeness, interpretation set forth therein or any other aspect of the information shown on or represented by this drawing.

Signed By: _____ Date: 10-1-96

NO AS BUILT CHANGES
AS BUILT
CORRECTION BY BRIAN BEAUDOIN
CONTRACT NO. 04-043934
DATE FEBRUARY, 2002
STRUCTURES REPRESENTATIVE _____

GEO-HYDRO-DATA
INCORPORATED

NATURAL GAMMA LOG

OTHER SERVICES: INVOICE 9950

96-38

COMPANY : CAL TRANS
WELL : B 38 NEAR PIER J 7
LOCATION/FIELD : CARQUINEZ BRIDGE
COUNTY : CONTRA COSTA
STATE : CALIFORNIA
SECTION : . TOWNSHIP : . RANGE : .

DATE : 05/16/96
DEPTH DRILLER : 98.6
LOG BOTTOM : 97.20
LOG TOP : 0.40
PERMANENT DATUM : GL
ELEV. PERM. DATUM:
LOG MEASURED FROM: GL
DRL MEASURED FROM: GL
ELEVATIONS KB : DF : GL :

CASING DRILLER : .
CASING TYPE : .
CASING THICKNESS: .
LOGGING UNIT : 7
FIELD OFFICE : TEHACHAPI
RECORDED BY : K. KEMP

BIT SIZE : 4.75
MAGNETIC DECL. : .
MATRIX DENSITY : .
FLUID DENSITY : .
NEUTRON MATRIX :
REMARKS :
BOREHOLE FLUID : POLY
RM : .
RM TEMPERATURE : .
MATRIX DELTA T : .
FLUID DELTA T : .
FILE : ORIGINAL
TYPE : 9041A
LOG : 1
PLOT : 1 57
THRESH: 3000

DRILED BY: CAL TRANS
LOG 5/16/96 OPEN HOLE 9:00 AM
ALL SERVICES PROVIDED SUBJECT TO STANDARD TERMS AND CONDITIONS

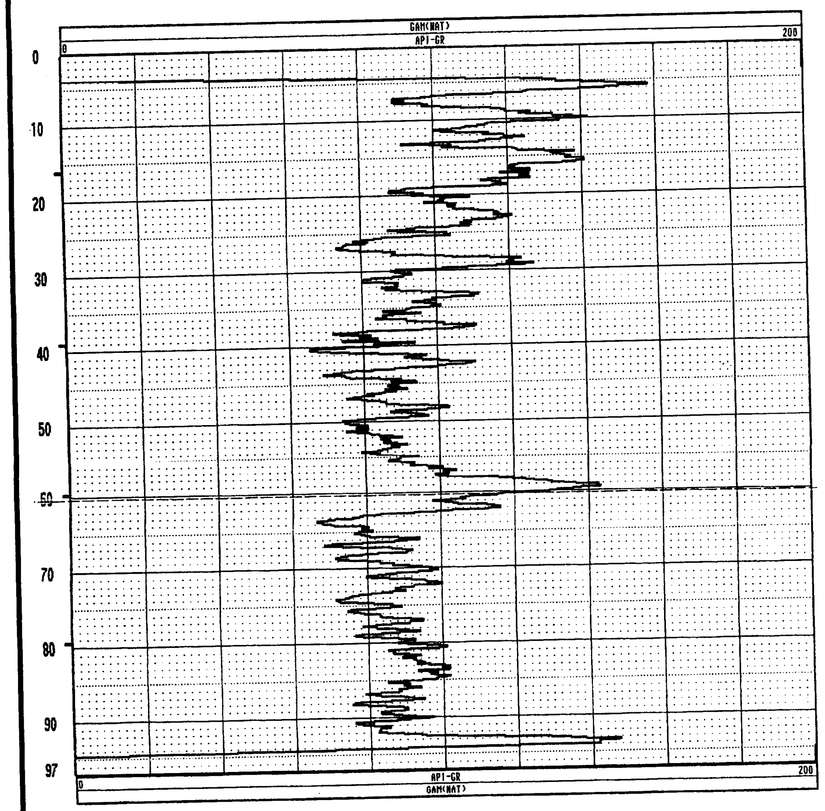

GEO-HYDRO-DATA
INCORPORATED

CALIPER LOG

OTHER SERVICES: INVOICE 9950

96-38

COMPANY : CAL TRANS
WELL : B 38 NEAR PIER J 7
LOCATION/FIELD : CARQUINEZ BRIDGE
COUNTY : CONTRA COSTA
STATE : CALIFORNIA
SECTION : . TOWNSHIP : . RANGE : .

DATE : 05/16/96
DEPTH DRILLER : 98.6
LOG BOTTOM : 96.80
LOG TOP : 6.20
PERMANENT DATUM : GL
ELEV. PERM. DATUM:
LOG MEASURED FROM: GL
DRL MEASURED FROM: GL
ELEVATIONS KB : DF : GL :

CASING DRILLER : .
CASING TYPE : .
CASING THICKNESS: .
LOGGING UNIT : 7
FIELD OFFICE : TEHACHAPI
RECORDED BY : K. KEMP

BIT SIZE : 4.75
MAGNETIC DECL. : .
MATRIX DENSITY : .
FLUID DENSITY : .
NEUTRON MATRIX :
REMARKS :
BOREHOLE FLUID : POLY
RM : .
RM TEMPERATURE : .
MATRIX DELTA T : .
FLUID DELTA T : .
FILE : PROCESSED
TYPE : 9064A1
LOG : 2
PLOT : 1 60
THRESH: 3000

DRILED BY: CAL TRANS
LOG 5/16/96 OPEN HOLE 9:00 AM
ALL SERVICES PROVIDED SUBJECT TO STANDARD TERMS AND CONDITIONS

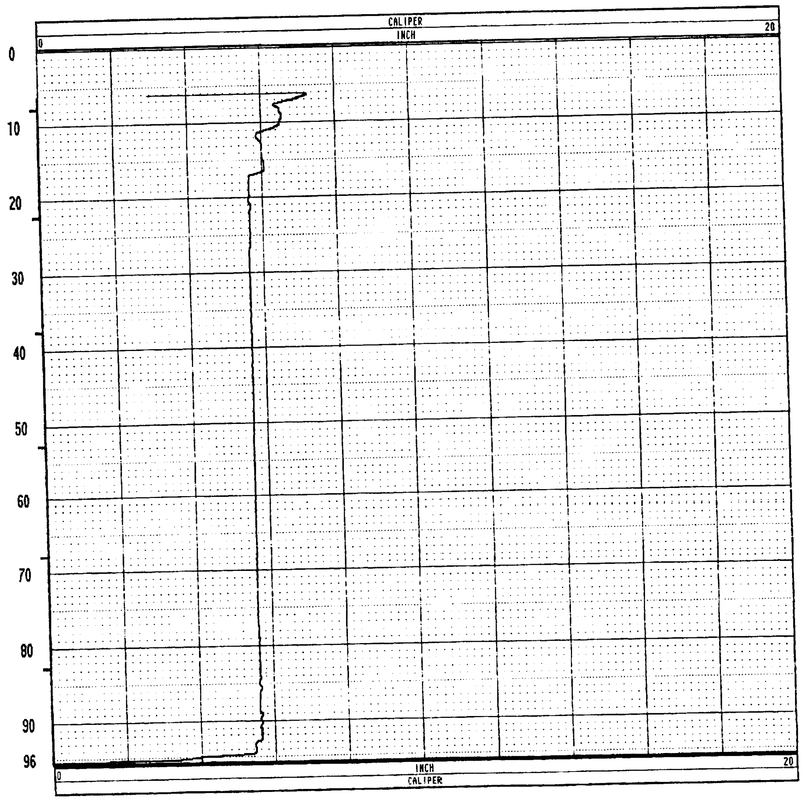

GEO-HYDRO-DATA
INCORPORATED

ELECTRIC WELL LOG

OTHER SERVICES: INVOICE 9950

96-38

COMPANY : CAL TRANS
WELL : B 38 NEAR PIER J 7
LOCATION/FIELD : CARQUINEZ BRIDGE
COUNTY : CONTRA COSTA
STATE : CALIFORNIA
SECTION : . TOWNSHIP : . RANGE : .

DATE : 05/16/96
DEPTH DRILLER : 98.6
LOG BOTTOM : 97.20
LOG TOP : 0.40
PERMANENT DATUM : GL
ELEV. PERM. DATUM:
LOG MEASURED FROM: GL
DRL MEASURED FROM: GL
ELEVATIONS KB : DF : GL :

CASING DRILLER : .
CASING TYPE : .
CASING THICKNESS: .
LOGGING UNIT : 7
FIELD OFFICE : TEHACHAPI
RECORDED BY : K. KEMP

BIT SIZE : 4.75
MAGNETIC DECL. : .
MATRIX DENSITY : .
FLUID DENSITY : .
NEUTRON MATRIX :
REMARKS :
BOREHOLE FLUID : POLY
RM : .
RM TEMPERATURE : .
MATRIX DELTA T : .
FLUID DELTA T : .
FILE : ORIGINAL
TYPE : 9041A
LOG : 1
PLOT : 1 0
THRESH: 3000

DRILED BY: CAL TRANS
LOG 5/16/96 OPEN HOLE 9:00 AM
ALL SERVICES PROVIDED SUBJECT TO STANDARD TERMS AND CONDITIONS

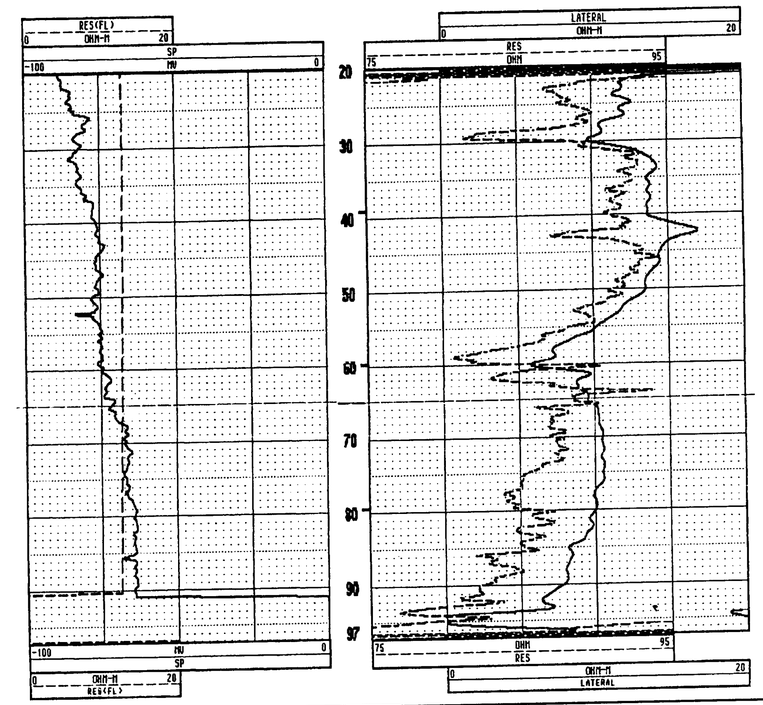

EARTHQUAKE RETROFIT - PROJECT No. SR-611

CARQUINEZ BRIDGE - SOUTH APPROACH

LOG OF TEST BORINGS 4 OF 35

ENGINEERING SERVICE CENTER	STRUCTURE FOUNDATIONS	FIELD INVESTIGATION BY:	State of CALIFORNIA DEPARTMENT OF TRANSPORTATION	DIVISION OF STRUCTURES STRUCTURE DESIGN	BRIDGE NO. 23-15 R/L
PREPARED BY	Irma Gamarra 8/96				POST MILE CC-13.48 Sol-1.72
CHECKED BY				CU: 04 EA: 043921/043931	DISREGARD PRINTS BEARING EARLIER REVISION DATES →

ORIGINAL SCALE IN INCHES FOR REDUCED PLANS → 0 1 2 3

REVISION DATES (PRELIMINARY STAGE ONLY)

SHEET 89 OF 120

TL 6051 REV. 7/96

ClibPDF - www.fastio.com

DIST.	COUNTY	ROUTE	POST MILES TOTAL PROJECT	SHEET NO.	TOTAL SHEETS
04	CC/Sol	80	12.8/14.1, 0.0/0.6	525	555

The information represented on this drawing title "Carquinez Bridge South Approach" was not the result of any work developed, performed or completed by this Department (Caltrans). All such activity appears to be by those parties presented on this drawing who would bear all such responsibility. This drawing is available and presented only for the convenience of any bidder, contractor or other interested party. It should be expressly understood that Caltrans assumes no responsibility whatsoever in respect to the sufficiency or accuracy, completeness, interpretation set forth therein or any other aspect of the information shown on or represented by this drawing.

Signed By: R.W. Date: 10-1-96

TO ACCOMPANY PLANS DATED 10-20-97

GEO-HYDRO-DATA

INCORPORATED

NATURAL GAMMA LOG

96-34

OTHER SERVICES:
INVOICE
9958
RUN 2

COMPANY : CAL TRANS
WELL : B 34 NEAR BENT J-7
LOCATION/FIELD : CARQUINEZ BRIDGE
COUNTY : CONTRA COSTA
STATE : CALIFORNIA
SECTION : . TOWNSHIP : . RANGE : .

DATE : 05/02/96
DEPTH DRILLER : 52
LOG BOTTOM : 48.10
LOG TOP : 8.60

PERMANENT DATUM : GL
ELEV. PERM. DATUM:
LOG MEASURED FROM: GL
DRL MEASURED FROM: GL

ELEVATIONS
KB :
DF :
GL :

CASING DRILLER : .
CASING TYPE : .
CASING THICKNESS: .

LOGGING UNIT : 7
FIELD OFFICE : TEHACHAPI
RECORDED BY : K. KEMP

BIT SIZE : 6
MAGNETIC DECL. : .
MATRIX DENSITY : .
FLUID DENSITY : .
NEUTRON MATRIX :
REMARKS :

BOREHOLE FLUID :
RM : .
RM TEMPERATURE : .
MATRIX DELTA T : .
FLUID DELTA T : .

FILE : ORIGINAL
TYPE : 9041A
LOG : 8
PLOT : 1 57
THRESH: 3000

DRILLED BY: CAL TRANS
RUN IN OPEN HOLE 12:30 PM

ALL SERVICES PROVIDED SUBJECT TO STANDARD TERMS AND CONDITIONS

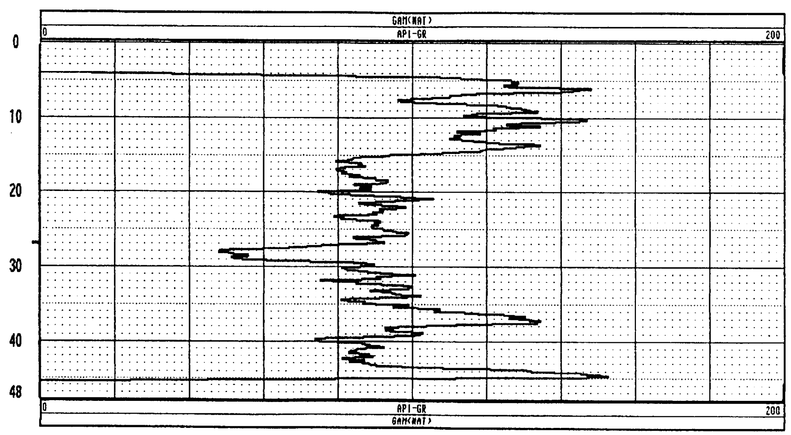

GEO-HYDRO-DATA

INCORPORATED

CALIPER LOG

96-34

OTHER SERVICES:
INVOICE
9958
RUN 2

COMPANY : CAL TRANS
WELL : B 34 NEAR BENT J-7
LOCATION/FIELD : CARQUINEZ BRIDGE
COUNTY : CONTRA COSTA
STATE : CALIFORNIA
SECTION : . TOWNSHIP : . RANGE : .

DATE : 05/02/96
DEPTH DRILLER : 52
LOG BOTTOM : 46.90
LOG TOP : 5.70

PERMANENT DATUM : GL
ELEV. PERM. DATUM:
LOG MEASURED FROM: GL
DRL MEASURED FROM: GL

ELEVATIONS
KB :
DF :
GL :

CASING DRILLER : .
CASING TYPE : .
CASING THICKNESS: .

LOGGING UNIT : 7
FIELD OFFICE : TEHACHAPI
RECORDED BY : K. KEMP

BIT SIZE : 6
MAGNETIC DECL. : .
MATRIX DENSITY : .
FLUID DENSITY : .
NEUTRON MATRIX :
REMARKS :

BOREHOLE FLUID :
RM : .
RM TEMPERATURE : .
MATRIX DELTA T : .
FLUID DELTA T : .

FILE : ORIGINAL
TYPE : 9064A1
LOG : 1
PLOT : GHD 60
THRESH: 3000

DRILLED BY: CAL TRANS
RUN IN OPEN HOLE 12:30 PM

ALL SERVICES PROVIDED SUBJECT TO STANDARD TERMS AND CONDITIONS

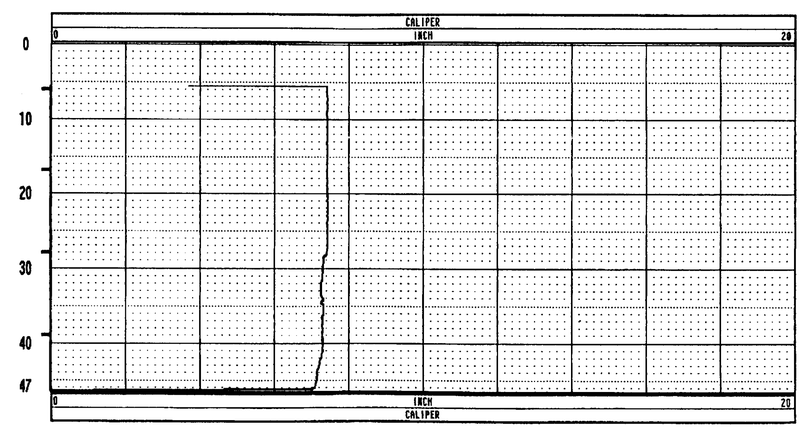

NO AS BUILT CHANGES
AS BUILT
CORRECTION BY BRIAN BEAUDOIN
CONTRACT NO. 04-043934
DATE FEBRUARY, 2002
STRUCTURES REPRESENTATIVE

EARTHQUAKE RETROFIT - PROJECT No. SR-611

ENGINEERING SERVICE CENTER	STRUCTURE FOUNDATIONS	FIELD INVESTIGATION BY:	State of CALIFORNIA DEPARTMENT OF TRANSPORTATION	DIVISION OF STRUCTURES STRUCTURE DESIGN	BRIDGE NO. 23-15 R/L	CARQUINEZ BRIDGE - SOUTH APPROACH
PREPARED BY	Irma Gamarra 8/96				POST MILE CC-13.48 Sol-1.72	LOG OF TEST BORINGS 5 OF 35
CHECKED BY						

ORIGINAL SCALE IN INCHES FOR REDUCED PLANS → 0 1 2 3

CU: 04
EA: 043921/043931

DISREGARD PRINTS BEARING EARLIER REVISION DATES →

REVISION DATES (PRELIMINARY STAGE ONLY)

SHEET 90 OF 120

TL 6051 REV. 7/96

ClibPDF - www.fastio.com

DIST.	COUNTY	ROUTE	POST MILES TOTAL PROJECT	SHEET NO.	TOTAL SHEETS
04	CC/Sol	80	12.8/14.1, 0.0/0.6	526	555

NO AS BUILT CHANGES
AS BUILT
CORRECTION BY BRIAN BEAUDOIN
CONTRACT NO. 04-043934
DATE FEBRUARY, 2002
STRUCTURES REPRESENTATIVE

REGISTERED GEOLOGIST R.W. FOX No. 78 Exp. 8-31-97 CERTIFIED ENGINEERING GEOLOGIST STATE OF CALIFORNIA

10-20-97
PLANS APPROVAL DATE

THE STATE OF CALIFORNIA OR ITS OFFICERS OR AGENTS SHALL NOT BE RESPONSIBLE FOR THE ACCURACY OR COMPLETENESS OF ELECTRONIC COPIES OF THIS PLAN SHEET.

FOR PLAN VIEW, SEE "LOG OF TEST BORINGS, SHEET 1 OF 35"

NOTE: FOR FIELD LOGGING NOTATIONS, SEE "LOG OF TEST BORINGS, SHEET 2 OF 35"

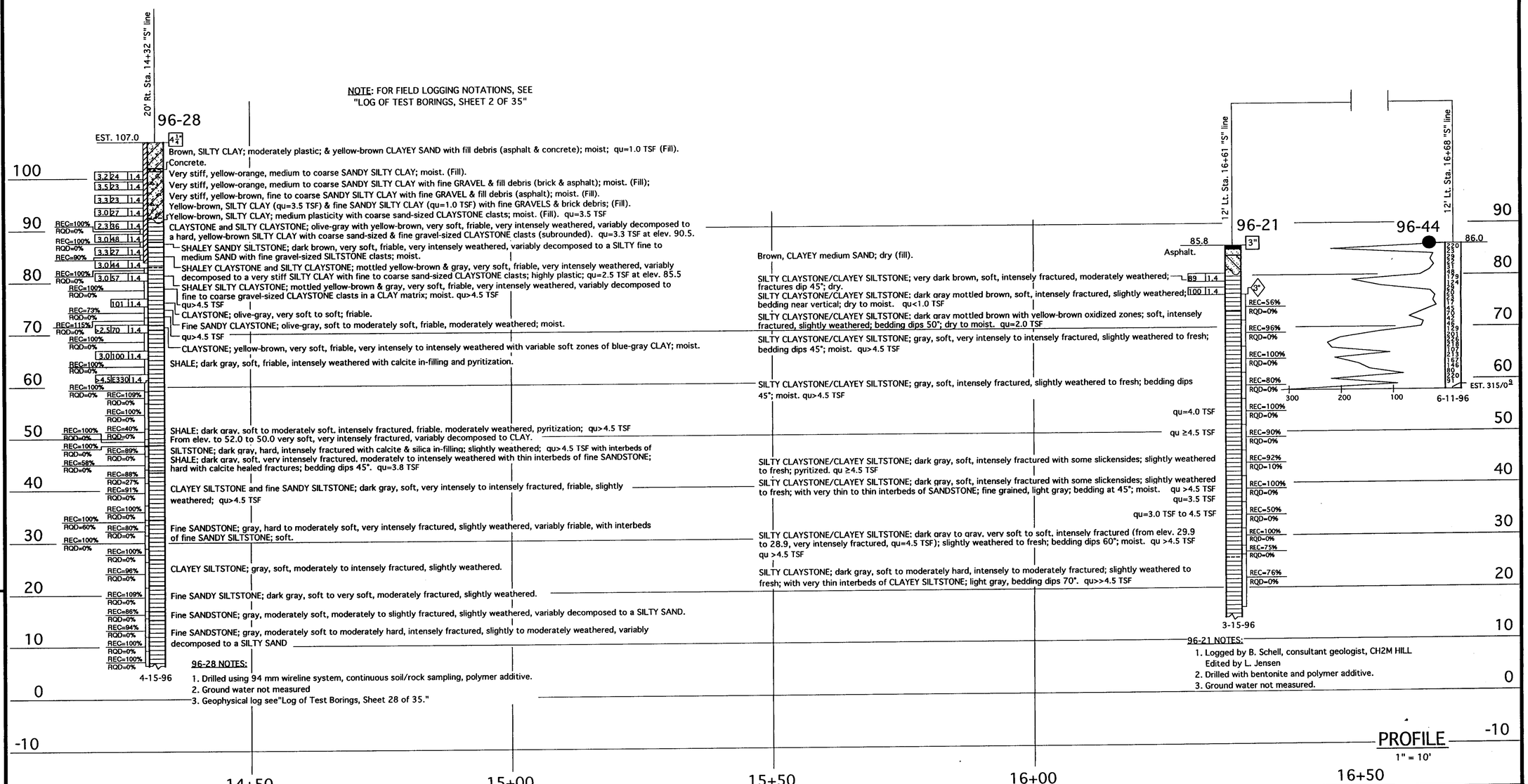

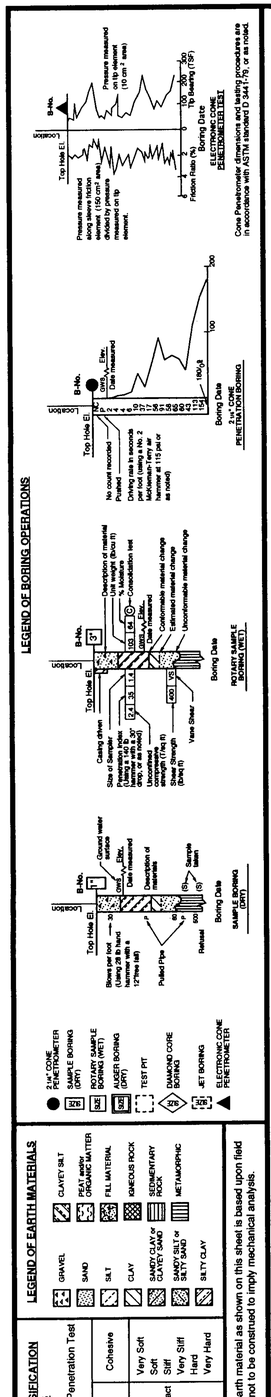

ENGINEERING SERVICE CENTER	STRUCTURE FOUNDATIONS
DRAWN BY Irma Figueroa 9/96	
CHECKED BY	

FIELD INVESTIGATION BY: L. JENSEN, K. AMARU, M. FELBERTI, H. VALENCIA

State of CALIFORNIA DEPARTMENT OF TRANSPORTATION

DIVISION OF STRUCTURES
STRUCTURE DESIGN

BRIDGE NO. 23-15 R/L
POST MILE CC-13.48 Sol-1.72

EARTHQUAKE RETROFIT - PROJECT No. SR-611
CARQUINEZ BRIDGE SOUTH APPROACH
LOG OF TEST BORINGS 6 OF 35

ORIGINAL SCALE IN INCHES FOR REDUCED PLANS → 0 1 2 3

CU: 04
EA: 04391/043931

DISREGARD PRINTS BEARING EARLIER REVISION DATES →

REVISION DATES (PRELIMINARY STAGE ONLY)

SHEET 91 OF 120

TL 6051 REV. 5/95

ClibPDF - www.fastio.com

DIST.	COUNTY	ROUTE	POST MILES TOTAL PROJECT	SHEET NO.	TOTAL SHEETS
04	CC/Sol	80	12.8/14.1, 0.0/0.6	527	555

R. W. Fox

REGISTERED GEOLOGIST — R. W. FOX No. 78 Exp. 8-31-97 CERTIFIED ENGINEERING GEOLOGIST — STATE OF CALIFORNIA

10-20-97
PLANS APPROVAL DATE

THE STATE OF CALIFORNIA OR ITS OFFICERS OR AGENTS SHALL NOT BE RESPONSIBLE FOR THE ACCURACY OR COMPLETENESS OF ELECTRONIC COPIES OF THIS PLAN SHEET.

NO AS BUILT CHANGES
AS BUILT
CORRECTION BY BRIAN BEAUDOIN
CONTRACT NO. 04-043934
DATE FEBRUARY, 2002
STRUCTURES REPRESENTATIVE James F. Bela

FOR PLAN VIEW, SEE "LOG OF TEST BORINGS, SHEET 1 OF 35"

NOTE: FOR FIELD LOGGING NOTATIONS, SEE "LOG OF TEST BORINGS, SHEET 2 OF 35"

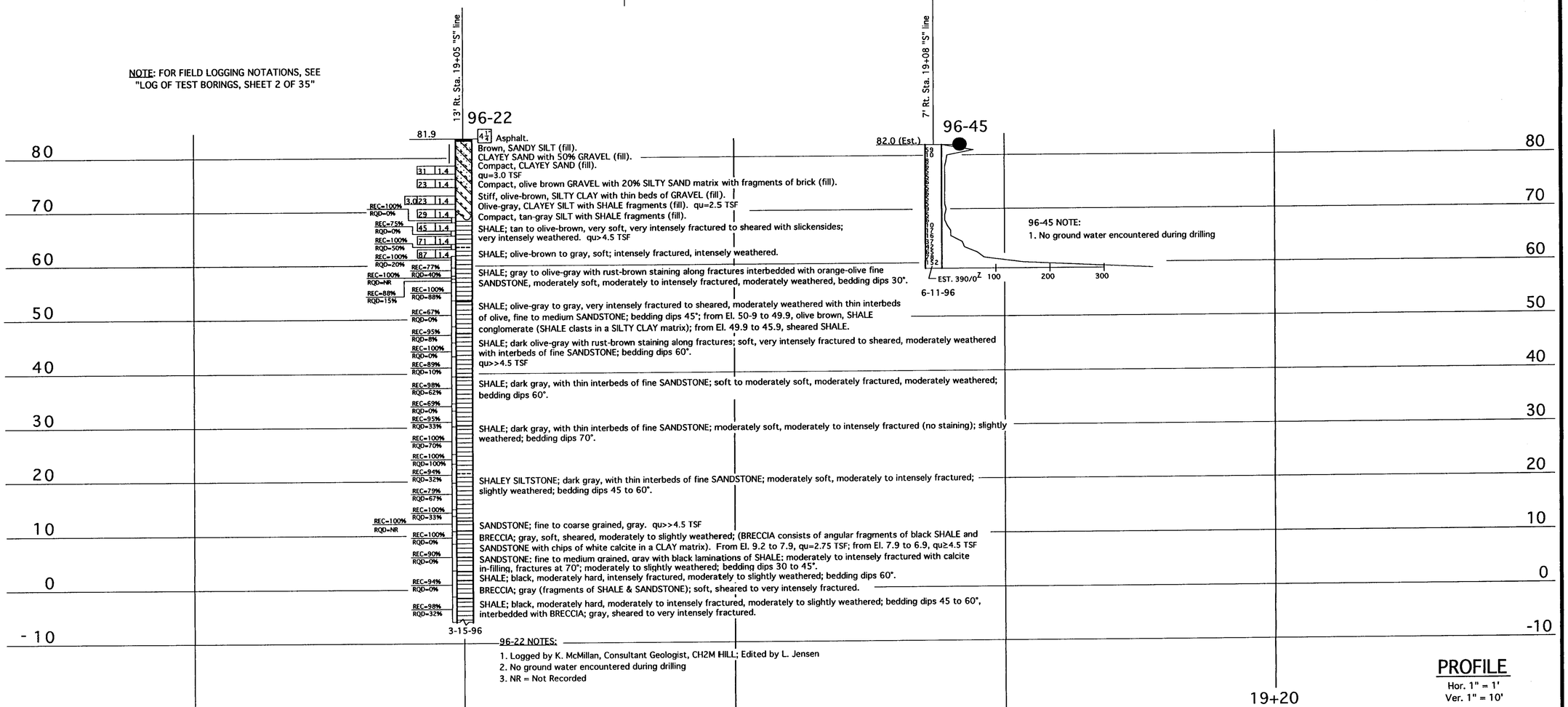

96-22 NOTES:
1. Logged by K. McMillan, Consultant Geologist, CH2M HILL; Edited by L. Jensen
2. No ground water encountered during drilling
3. NR = Not Recorded

PROFILE
Hor. 1" = 1'
Ver. 1" = 10'

LEGEND OF BORING OPERATIONS

LEGEND OF EARTH MATERIALS: GRAVEL, SAND, SILT, CLAY, SANDY CLAY or CLAYEY SAND, SANDY SILT or SILTY SAND, SILTY CLAY, CLAYEY SILT, PEAT and/or ORGANIC MATTER, FILL MATERIAL, IGNEOUS ROCK, SEDIMENTARY ROCK, METAMORPHIC

CONSISTENCY CLASSIFICATION FOR SOILS
According to the Standard Penetration Test

Penetration Index (Blows / Ft)	Granular	Cohesive
0-4	Very Loose	Very Soft
5-9	Loose	Soft
10-19	Slightly compact	Stiff
20-34	Compact	Very Stiff
35-69	Dense	Hard
>70	Very Dense	Very Hard

NOTE: Classification of earth material as shown on this sheet is based upon field inspection and is not to be construed to imply mechanical analysis.

ENGINEERING SERVICE CENTER	STRUCTURE FOUNDATIONS
DRAWN BY James Siemens 8/96	
CHECKED BY	

FIELD INVESTIGATION BY: L. JENSEN & H. VALENCIA

State of CALIFORNIA DEPARTMENT OF TRANSPORTATION

DIVISION OF STRUCTURES
STRUCTURE DESIGN

BRIDGE NO. 23-15 R/L
POST MILE CC-13.48 Sol-1.72

EARTHQUAKE RETROFIT - PROJECT No. SR-611
CARQUINEZ BRIDGE SOUTH APPROACH
LOG OF TEST BORINGS 7 OF 35

ORIGINAL SCALE IN INCHES FOR REDUCED PLANS → 0 1 2 3

CU: 04
EA: 043921/043931

DISREGARD PRINTS BEARING EARLIER REVISION DATES →
REVISION DATES (PRELIMINARY STAGE ONLY)
SHEET 92 OF 120

TL 6051 REV. 5/95

ClibPDF - www.fastio.com

DIST.	COUNTY	ROUTE	POST MILES TOTAL PROJECT	SHEET NO.	TOTAL SHEETS
04	CC/Sol	80	12.8/14.1, 0.0/0.6	528	555

R. W. Fox

REGISTERED GEOLOGIST R. W. FOX No. 78 Exp. 8-31-97 CERTIFIED ENGINEERING GEOLOGIST STATE OF CALIFORNIA

10-20-97
PLANS APPROVAL DATE

THE STATE OF CALIFORNIA OR ITS OFFICERS OR AGENTS SHALL NOT BE RESPONSIBLE FOR THE ACCURACY OR COMPLETENESS OF ELECTRONIC COPIES OF THIS PLAN SHEET.

NO AS BUILT CHANGES
AS BUILT
CORRECTION BY BRIAN BEAUDOIN
CONTRACT NO. 04-043934
DATE FEBRUARY, 2002
STRUCTURES REPRESENTATIVE

FOR PLAN VIEW, SEE "LOG OF TEST BORINGS", SHEET 1 OF 35.

NOTE: FOR FIELD LOGGING NOTATIONS SEE LOG OF TEST BORINGS, SHEET 2 OF 35.

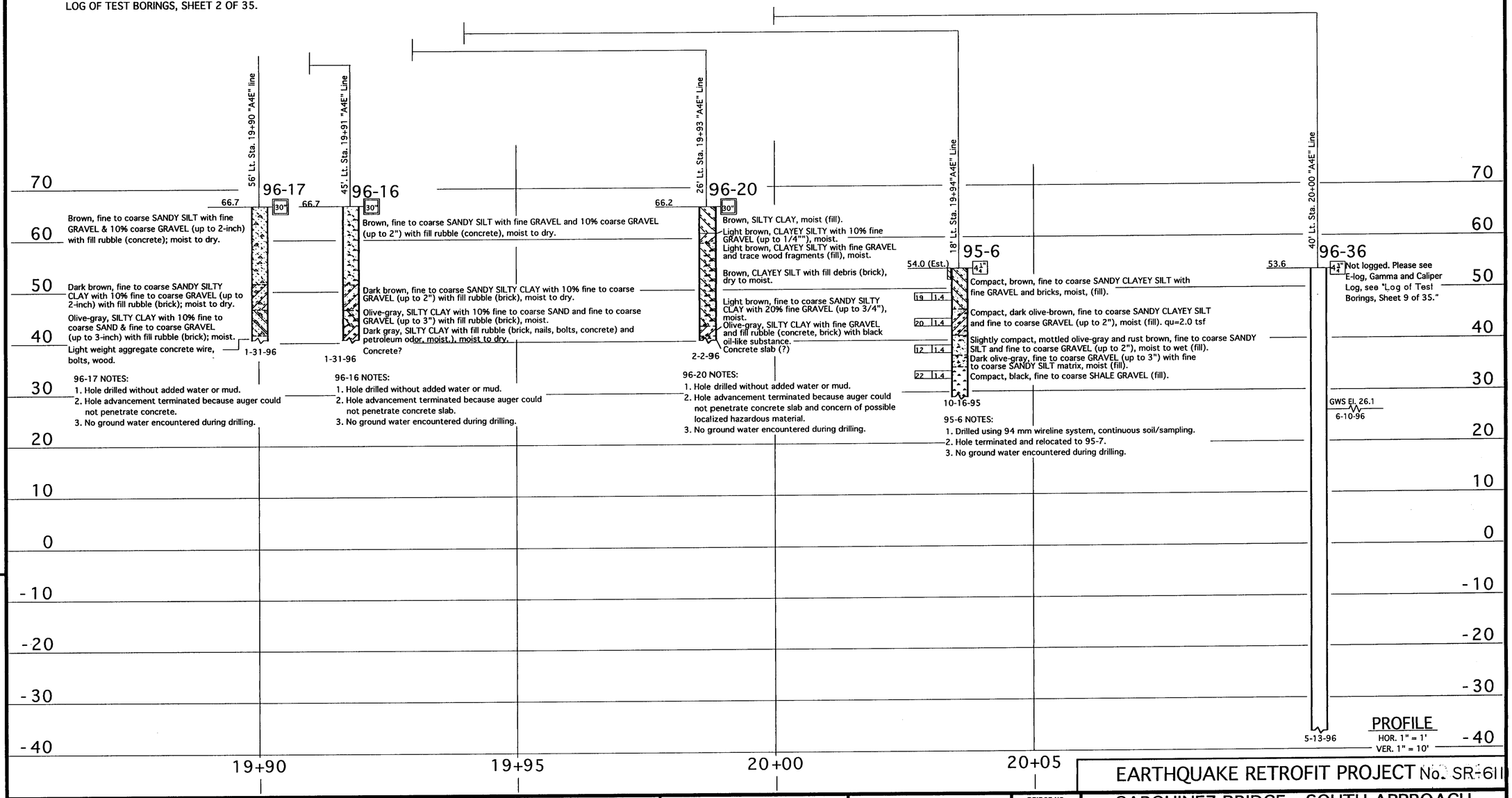

96-17 NOTES:
1. Hole drilled without added water or mud.
2. Hole advancement terminated because auger could not penetrate concrete.
3. No ground water encountered during drilling.

96-16 NOTES:
1. Hole drilled without added water or mud.
2. Hole advancement terminated because auger could not penetrate concrete slab.
3. No ground water encountered during drilling.

96-20 NOTES:
1. Hole drilled without added water or mud.
2. Hole advancement terminated because auger could not penetrate concrete slab and concern of possible localized hazardous material.
3. No ground water encountered during drilling.

95-6 NOTES:
1. Drilled using 94 mm wireline system, continuous soil/sampling.
2. Hole terminated and relocated to 95-7.
3. No ground water encountered during drilling.

PROFILE
HOR. 1" = 1'
VER. 1" = 10'

LEGEND OF BORING OPERATIONS

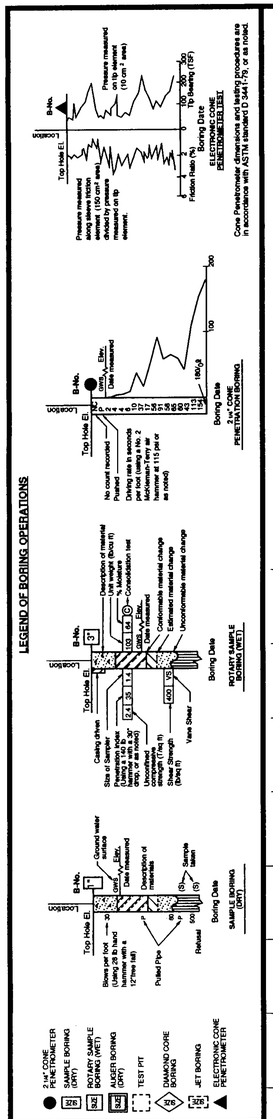

LEGEND OF EARTH MATERIALS

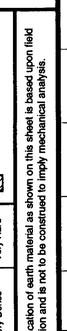

CONSISTENCY CLASSIFICATION FOR SOILS
According to the Standard Penetration Test

Penetration Index (Blows / Ft)	Granular	Cohesive
0-4	Very Loose	Very Soft
5-9	Loose	Soft
10-19	Slightly compact	Stiff
20-34	Compact	Very Stiff
35-69	Dense	Hard
>70	Very Dense	Very Hard

NOTE: Classification of earth material as shown on this sheet is based upon field inspection and is not to be construed to imply mechanical analysis.

ENGINEERING SERVICE CENTER	STRUCTURE FOUNDATIONS
DRAWN BY Ken Wahl 9-96	
CHECKED BY	

FIELD INVESTIGATION BY: L. JENSEN & H. VALENCIA

State of CALIFORNIA DEPARTMENT OF TRANSPORTATION

DIVISION OF STRUCTURES
STRUCTURE DESIGN

BRIDGE NO. 23-15R/L
POST MILE CC-13.48 Sol-1.72

EARTHQUAKE RETROFIT PROJECT No. SR-611
CARQUINEZ BRIDGE - SOUTH APPROACH
LOG OF TEST BORINGS 8 OF 35

ORIGINAL SCALE IN INCHES FOR REDUCED PLANS → 0 1 2 3

CU: 04
EA: 043921/043931

DISREGARD PRINTS BEARING EARLIER REVISION DATES →
REVISION DATES (PRELIMINARY STAGE ONLY)
SHEET 93 OF 120

TL 6051 REV. 5/95

ClibPDF - www.fastio.com

DIST.	COUNTY	ROUTE	POST MILES TOTAL PROJECT	SHEET NO.	TOTAL SHEETS
04	CC/Sol	80	12.8/18.1, 0.0/0.6	529	555

The information represented on this drawing title "Carquinez Bridge South Approach" was not the result of any work developed, performed or completed by this Department (Caltrans). All such activity appears to be by those parties presented on this drawing who would bear all such responsibility. This drawing is available and presented only for the convenience of any bidder, contractor or other interested party. It should be expressly understood that Caltrans assumes no responsibility whatsoever in respect to the sufficiency or accuracy, completeness, interpretation set forth therein or any other aspect of the information shown on or represented by this drawing.

Signed By: R W. [illegible] Date: 10-1-96

TO ACCOMPANY PLANS DATED: 10-20-97

NO AS BUILT CHANGES
AS BUILT
CORRECTION BY BRIAN BEAUDOIN
CONTRACT NO. 04-043934
DATE FEBRUARY, 2002
STRUCTURES REPRESENTATIVE [illegible]

GEO-HYDRO-DATA
INCORPORATED

NATURAL GAMMA LOG

COMPANY : CAL TRANS
WELL : B 36 PIER AW-8 96-36
LOCATION/FIELD : CARQUINEZ BRIDGE
COUNTY : CONTRA COSTA
STATE : CALIFORNIA
SECTION : . TOWNSHIP : . RANGE : .

OTHER SERVICES: INVOICE 9950

DATE : 05/14/96 PERMANENT DATUM : GL ELEVATIONS
DEPTH DRILLER : 98 ELEV. PERM. DATUM: KB :
LOG BOTTOM : 93.30 LOG MEASURED FROM: GL DF :
LOG TOP : 8.30 DRL MEASURED FROM: GL GL :

CASING DRILLER : . LOGGING UNIT : 7
CASING TYPE : . FIELD OFFICE : TEHACHAPI
CASING THICKNESS: . RECORDED BY : K. KEMP

BIT SIZE : 4.75 BOREHOLE FLUID : BENT FILE : ORIGINAL
MAGNETIC DECL. : . RM : . TYPE : 9841A
MATRIX DENSITY : . RM TEMPERATURE : . LOG : 9
FLUID DENSITY : . MATRIX DELTA T : . PLOT : 1 57
NEUTRON MATRIX : FLUID DELTA T : . THRESH: 3000
REMARKS :
DRILLED BY: CAL TRANS
RUN LOG IN OPEN HOLE 5/14/96 10:30 AM
ALL SERVICES PROVIDED SUBJECT TO STANDARD TERMS AND CONDITIONS

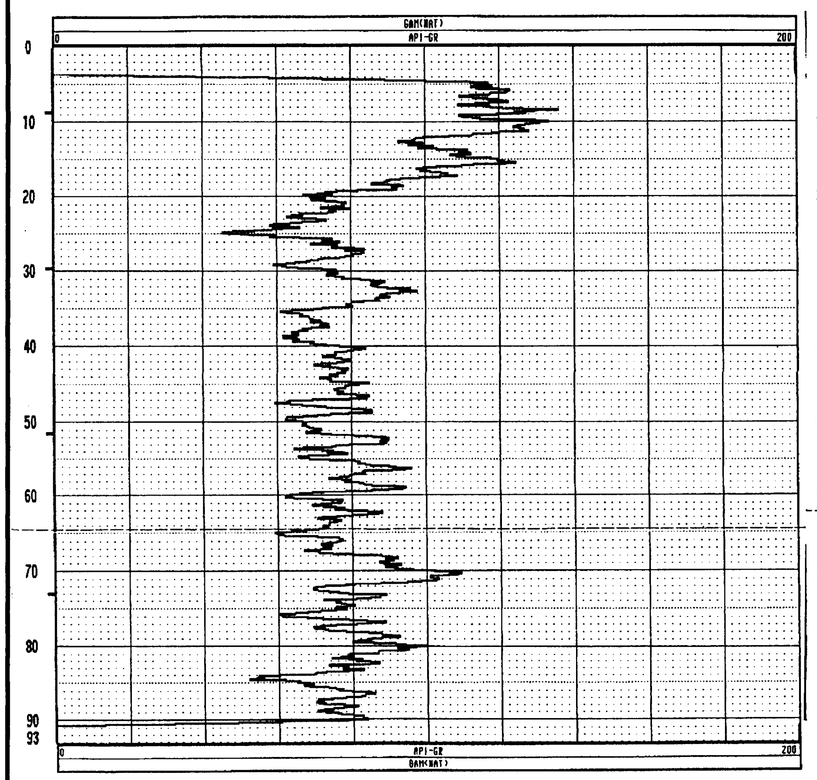

GEO-HYDRO-DATA
INCORPORATED

CALIPER LOG

COMPANY : CAL TRANS
WELL : B 36 NEAR PIER AW 8 96-36
LOCATION/FIELD : CARQUINEZ BRIDGE
COUNTY : CONTRA COSTA
STATE : CALIFORNIA
SECTION : . TOWNSHIP : . RANGE : .

OTHER SERVICES: INVOICE 9950 RUN 3

DATE : 05/28/96 PERMANENT DATUM : GL ELEVATIONS
DEPTH DRILLER : 98 ELEV. PERM. DATUM: KB :
LOG BOTTOM : 91.40 LOG MEASURED FROM: GL DF :
LOG TOP : 5.98 DRL MEASURED FROM: GL GL :

CASING DRILLER : . LOGGING UNIT : 7
CASING TYPE : . FIELD OFFICE : TEHACHAPI
CASING THICKNESS: . RECORDED BY : K. KEMP

BIT SIZE : 4.75 BOREHOLE FLUID : . FILE : ORIGINAL
MAGNETIC DECL. : . RM : . TYPE : 9864A1
MATRIX DENSITY : . RM TEMPERATURE : . LOG : 0
FLUID DENSITY : . MATRIX DELTA T : . PLOT : 1 68
NEUTRON MATRIX : FLUID DELTA T : . THRESH: 3000
REMARKS :
DRILLED BY: CAL TRANS
LOG RUN 3 5/28/96 2:45 PM NOTE MUD VERY THINCK HAD TO WORK TOOL DOWN
ALL SERVICES PROVIDED SUBJECT TO STANDARD TERMS AND CONDITIONS

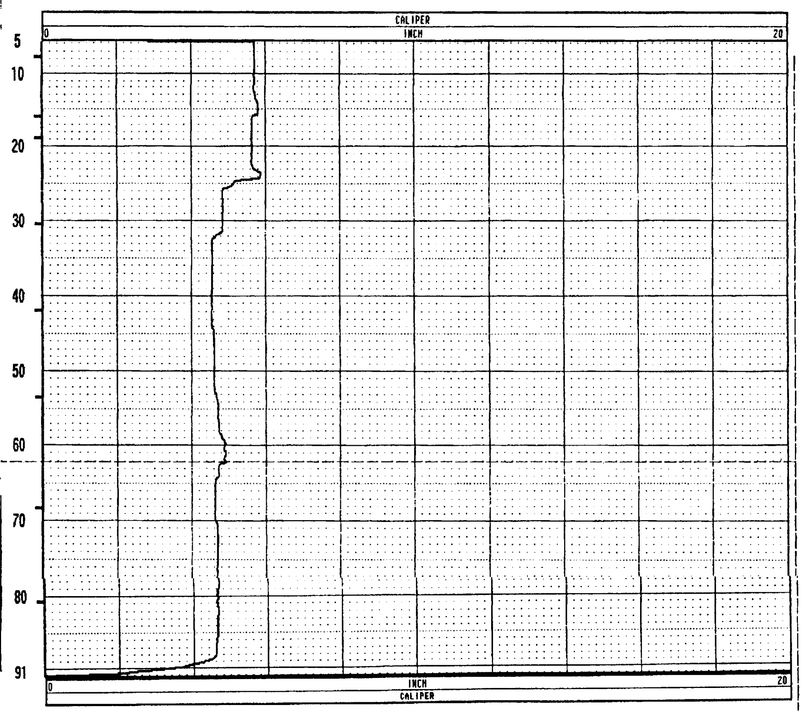

GEO-HYDRO-DATA
INCORPORATED

ELECTRIC WELL LOG

COMPANY : CAL TRANS
WELL : B 36 PIER AW-8 96-36
LOCATION/FIELD : CARQUINEZ BRIDGE
COUNTY : CONTRA COSTA
STATE : CALIFORNIA
SECTION : . TOWNSHIP : . RANGE : .

OTHER SERVICES: INVOICE 9950

DATE : 05/14/96 PERMANENT DATUM : GL ELEVATIONS
DEPTH DRILLER : 98 ELEV. PERM. DATUM: KB :
LOG BOTTOM : 93.30 LOG MEASURED FROM: GL DF :
LOG TOP : 8.30 DRL MEASURED FROM: GL GL :

CASING DRILLER : . LOGGING UNIT : 7
CASING TYPE : . FIELD OFFICE : TEHACHAPI
CASING THICKNESS: . RECORDED BY : K. KEMP

BIT SIZE : 4.75 BOREHOLE FLUID : BENT FILE : ORIGINAL
MAGNETIC DECL. : . RM : . TYPE : 9841A
MATRIX DENSITY : . RM TEMPERATURE : . LOG : 9
FLUID DENSITY : . MATRIX DELTA T : . PLOT : 1 8
NEUTRON MATRIX : FLUID DELTA T : . THRESH: 3000
REMARKS :
DRILLED BY: CAL TRANS
RUN LOG IN OPEN HOLE 5/14/96 10:30 AM
ALL SERVICES PROVIDED SUBJECT TO STANDARD TERMS AND CONDITIONS

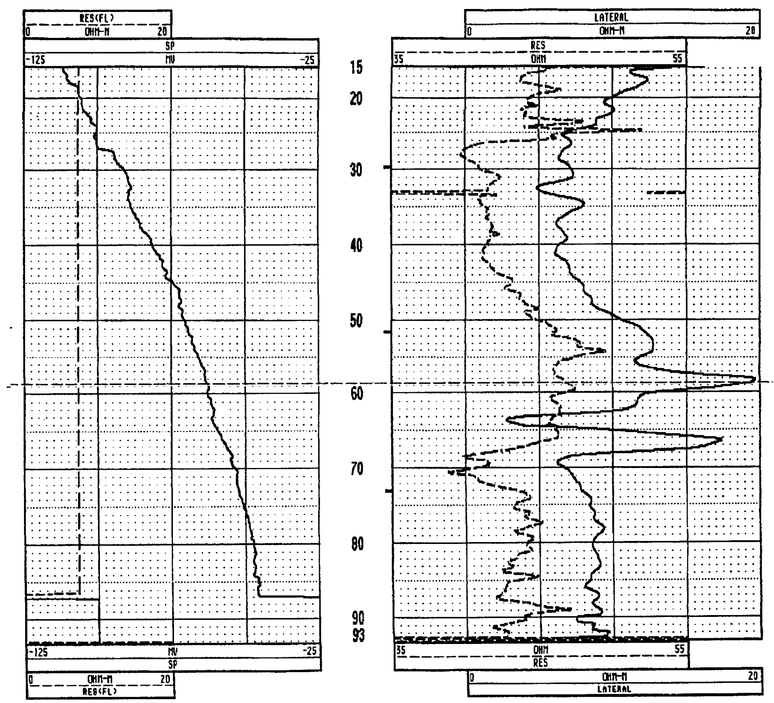

EARTHQUAKE RETROFIT PROJECT NO. SR-611

ENGINEERING SERVICE CENTER	STRUCTURE FOUNDATIONS	FIELD INVESTIGATION BY:	State of CALIFORNIA DEPARTMENT OF TRANSPORTATION	DIVISION OF STRUCTURES STRUCTURE DESIGN	BRIDGE NO. 23-15 R/L	CARQUINEZ BRIDGE - SOUTH APPROACH
PREPARED BY	Ken Wahl 8-96				POST MILE CC-13.48 Sol-1.72	LOG OF TEST BORINGS
CHECKED BY						

ORIGINAL SCALE IN INCHES FOR REDUCED PLANS → 0 1 2 3

CU: 04
EA: 043921/043931

DISREGARD PRINTS BEARING EARLIER REVISION DATES →

REVISION DATES (PRELIMINARY STAGE ONLY)

SHEET 94 OF 120

9 OF 35

TL 6052 REV. 6/95

ClibPDF - www.fastio.com

DIST.	COUNTY	ROUTE	POST MILES TOTAL PROJECT	SHEET NO.	TOTAL SHEETS
04	CC/Sol	80	12.8/14.1, 0.0/0.6	530	555

R.W. Fox

REGISTERED GEOLOGIST
R.W. FOX
No. 78
Exp. 8-31-97
CERTIFIED ENGINEERING GEOLOGIST
STATE OF CALIFORNIA

10-20-97
PLANS APPROVAL DATE

THE STATE OF CALIFORNIA OR ITS OFFICERS OR AGENTS SHALL NOT BE RESPONSIBLE FOR THE ACCURACY OR COMPLETENESS OF ELECTRONIC COPIES OF THIS PLAN SHEET.

NO AS BUILT CHANGES
AS BUILT
CORRECTION BY BRIAN BEAUDOIN
CONTRACT NO. 04-043934
DATE FEBRUARY, 2002
STRUCTURES REPRESENTATIVE

FOR PLAN VIEW, SEE "LOG OF TEST BORINGS, SHEET 1 OF 35"

NOTE: FOR FIELD LOGGING NOTATIONS, SEE "LOG OF TEST BORINGS, SHEET 2 OF 35"

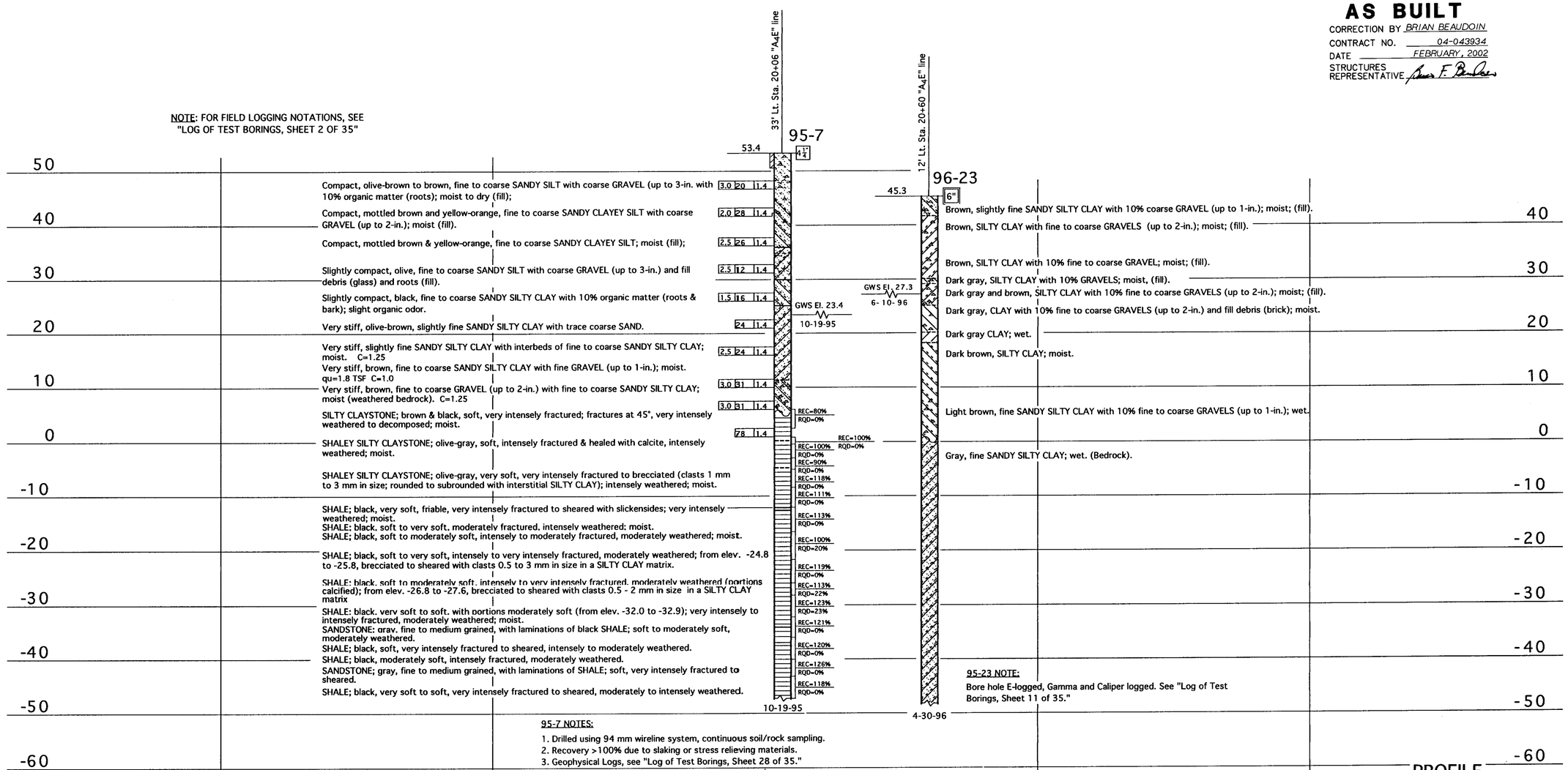

PROFILE
Hor. 1" = 20'
Ver. 1" = 10'

LEGEND OF BORING OPERATIONS

LEGEND OF EARTH MATERIALS: GRAVEL, SAND, SILT, CLAY, SANDY CLAY or CLAYEY SAND, SANDY SILT or SILTY SAND, SILTY CLAY, CLAYEY SILT, PEAT and/or ORGANIC MATTER, FILL MATERIAL, IGNEOUS ROCK, SEDIMENTARY ROCK, METAMORPHIC

CONSISTENCY CLASSIFICATION FOR SOILS
According to the Standard Penetration Test

Penetration Index (Blows / Ft)	Granular	Cohesive
0-4	Very Loose	Very Soft
5-9	Loose	Soft
10-19	Slightly compact	Stiff
20-34	Compact	Very Stiff
35-69	Dense	Hard
>70	Very Dense	Very Hard

NOTE: Classification of earth material as shown on this sheet is based upon field inspection and is not to be construed to imply mechanical analysis.

ENGINEERING SERVICE CENTER	STRUCTURE FOUNDATIONS
DRAWN BY Irma Gamarra 8/96	
CHECKED BY	

FIELD INVESTIGATION BY: L. JENSEN, M. FILBERTI, B. TRINH & J. WITTRY

State of CALIFORNIA DEPARTMENT OF TRANSPORTATION

DIVISION OF STRUCTURES
STRUCTURE DESIGN

BRIDGE NO. 23-15 R/L
POST MILE CC-13.48 Sol-1.72

EARTHQUAKE RETROFIT - PROJECT No. SR-611
CARQUINEZ BRIDGE - SOUTH APPROACH
LOG OF TEST BORINGS 10 OF 35

ORIGINAL SCALE IN INCHES FOR REDUCED PLANS → 0 1 2 3

CU: 04
EA: 043921/043931

DISREGARD PRINTS BEARING EARLIER REVISION DATES →

REVISION DATES (PRELIMINARY STAGE ONLY)

SHEET 95 OF 120

TL 6051 REV. 5/95

ClibPDF - www.fastio.com

DIST.	COUNTY	ROUTE	POST MILES TOTAL PROJECT	SHEET NO.	TOTAL SHEETS
04	CC/Sol	80	12.8/14.1, 0.0/0.6	531	555

The information represented on this drawing title "Carquinez Bridge South Approach" was not the result of any work developed, performed or completed by this Department (Caltrans). All such activity appears to be by those parties presented on this drawing who would bear all such responsibility. This drawing is available and presented only for the convenience of any bidder, contractor or other interested party. It should be expressly understood that Caltrans assumes no responsibility whatsoever in respect to the sufficiency or accuracy, completeness, interpretation set forth therein or any other aspect of the information shown on or represented by this drawing.

Signed By: R.W. Joy Date: 10-1-96

10-20-97
PLANS APPROVAL DATE

GEO-HYDRO-DATA
INCORPORATED

NATURAL GAMMA LOG

OTHER SERVICES:
INVOICE
9950

96-23

COMPANY	: CAL TRANS				
WELL	: B 32A NEAR BEND AE-8				
LOCATION/FIELD	: CARQUINEZ BRIDGE				
COUNTY	: CONTRA COSTA				
STATE	: CA.				
SECTION	: N/A	TOWNSHIP	: N/A	RANGE	: N/A
DATE	: 04/30/96	PERMANENT DATUM	: G.L.	ELEVATIONS	
DEPTH DRILLER	: 95 FEET	ELEV. PERM. DATUM	: N/A	KB	: N/A
LOG BOTTOM	: 48.30	LOG MEASURED FROM	: G.L.	DF	: N/A
LOG TOP	: 4.00	DRL MEASURED FROM	: G.L.	GL	: N/A
CASING DRILLER	: -	LOGGING UNIT	: 10		
CASING TYPE	: -	FIELD OFFICE	: CLEMENTS,CA.		
CASING THICKNESS	: -	RECORDED BY	: D.SHANHOLTZR		
BIT SIZE	: 6	BOREHOLE FLUID	: AUGER	FILE	: ORIGINAL
MAGNETIC DECL.	:	RM	: -	TYPE	: 9041A
MATRIX DENSITY	: -	RM TEMPERATURE	: -	LOG	: 0
FLUID DENSITY	:	MATRIX DELTA T	: -	PLOT	: 1 57
NEUTRON MATRIX	: N/A	FLUID DELTA T	: -	THRESH	: 4000
REMARKS	:				

DRILLED BY: CAL TRANS

ALL SERVICES PROVIDED SUBJECT TO STANDARD TERMS AND CONDITIONS

GEO-HYDRO-DATA
INCORPORATED

ELECTRIC WELL LOG

OTHER SERVICES:
INVOICE
9950

96-23

COMPANY	: CAL TRANS				
WELL	: B 32A NEAR BEND AE-8				
LOCATION/FIELD	: CARQUINEZ BRIDGE				
COUNTY	: CONTRA COSTA				
STATE	: CA.				
SECTION	: N/A	TOWNSHIP	: N/A	RANGE	: N/A
DATE	: 04/30/96	PERMANENT DATUM	: G.L.	ELEVATIONS	
DEPTH DRILLER	: 95 FEET	ELEV. PERM. DATUM	: N/A	KB	: N/A
LOG BOTTOM	: 48.30	LOG MEASURED FROM	: G.L.	DF	: N/A
LOG TOP	: 4.00	DRL MEASURED FROM	: G.L.	GL	: N/A
CASING DRILLER	: -	LOGGING UNIT	: 10		
CASING TYPE	: -	FIELD OFFICE	: CLEMENTS,CA.		
CASING THICKNESS	: -	RECORDED BY	: D.SHANHOLTZR		
BIT SIZE	: 6	BOREHOLE FLUID	: AUGER	FILE	: ORIGINAL
MAGNETIC DECL.	:	RM	: -	TYPE	: 9041A
MATRIX DENSITY	: -	RM TEMPERATURE	: -	LOG	: 0
FLUID DENSITY	:	MATRIX DELTA T	: -	PLOT	: 1 0
NEUTRON MATRIX	: N/A	FLUID DELTA T	: -	THRESH	: 4000
REMARKS	:				

DRILLED BY: CAL TRANS

~~ALL SERVICES PROVIDED SUBJECT TO STANDARD TERMS AND CONDITIONS~~

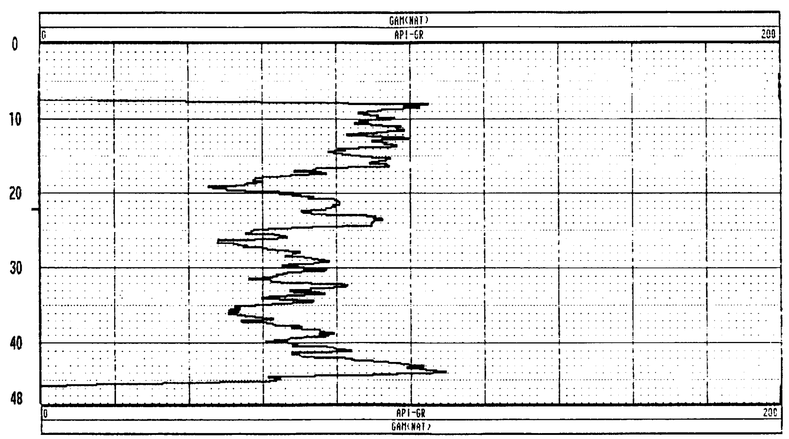

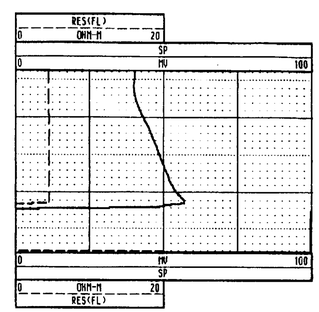

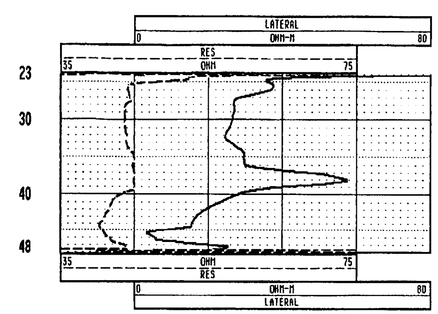

NO AS BUILT CHANGES
AS BUILT
CORRECTION BY BRIAN BEAUDOIN
CONTRACT NO. 04-043934
DATE FEBRUARY, 2002
STRUCTURES REPRESENTATIVE

EARTHQUAKE RETROFIT - PROJECT No. SR-611

CARQUINEZ BRIDGE - SOUTH APPROACH

LOG OF TEST BORINGS 11 OF 35

ENGINEERING SERVICE CENTER	STRUCTURE FOUNDATIONS	FIELD INVESTIGATION BY:	State of CALIFORNIA DEPARTMENT OF TRANSPORTATION	DIVISION OF STRUCTURES STRUCTURE DESIGN	BRIDGE NO. 23-15 R/L
PREPARED BY	Irma Gamarra 8/96				POST MILE CC-13.48 Sol-1.72
CHECKED BY					

ORIGINAL SCALE IN INCHES FOR REDUCED PLANS → 0 1 2 3

CU: 04
EA: 043921/043931

DISREGARD PRINTS BEARING EARLIER REVISION DATES →

REVISION DATES (PRELIMINARY STAGE ONLY)

SHEET 96 OF 120

TL 6051 REV. 7/96

ClibPDF - www.fastio.com

DIST.	COUNTY	ROUTE	POST MILES TOTAL PROJECT	SHEET NO.	TOTAL SHEETS
04	CC/Sol	80	12.8/14.1, 0.0/0.6	532	555

R. W. Fox

REGISTERED GEOLOGIST — R. W. FOX — No. 78 — Exp. 8-31-97 — CERTIFIED ENGINEERING GEOLOGIST — STATE OF CALIFORNIA

10-20-97
PLANS APPROVAL DATE

THE STATE OF CALIFORNIA OR ITS OFFICERS OR AGENTS SHALL NOT BE RESPONSIBLE FOR THE ACCURACY OR COMPLETENESS OF ELECTRONIC COPIES OF THIS PLAN SHEET.

NO AS BUILT CHANGES
AS BUILT
CORRECTION BY BRIAN BEAUDOIN
CONTRACT NO. 04-043934
DATE FEBRUARY, 2002
STRUCTURES REPRESENTATIVE

NOTE: FOR FIELD LOGGING NOTATIONS SEE LOG OF TEST BORINGS, SHEET 2 OF 35.

FOR PLAN VIEW, SEE "LOG OF TEST BORINGS", SHEET 1 OF 35.

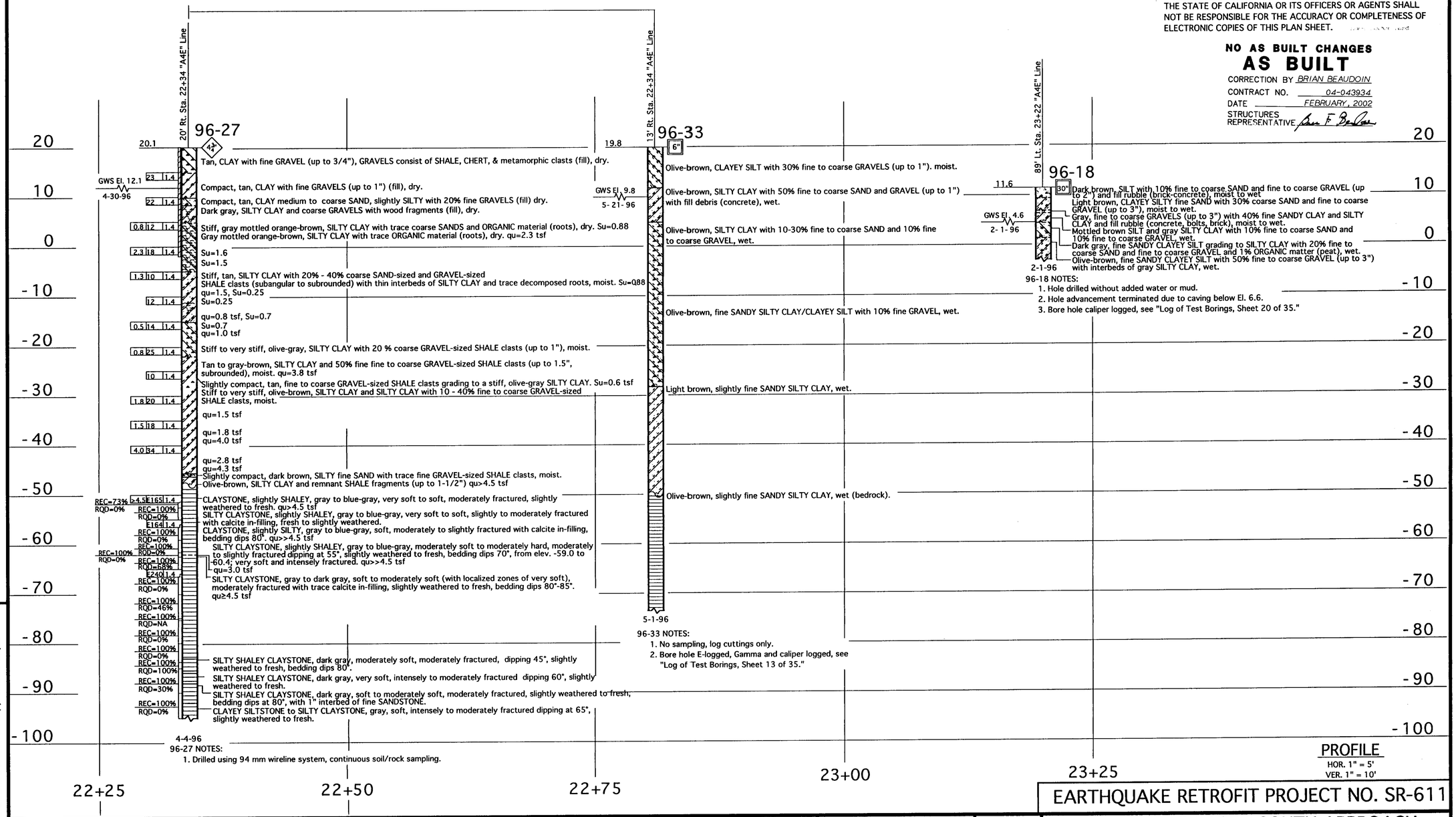

PROFILE
HOR. 1" = 5'
VER. 1" = 10'

LEGEND OF BORING OPERATIONS

LEGEND OF EARTH MATERIALS: GRAVEL, SAND, SILT, CLAY, SANDY CLAY or CLAYEY SAND, SANDY SILT or SILTY SAND, SILTY CLAY, CLAYEY SILT, PEAT and/or ORGANIC MATTER, FILL MATERIAL, IGNEOUS ROCK, SEDIMENTARY ROCK, METAMORPHIC

CONSISTENCY CLASSIFICATION FOR SOILS
According to the Standard Penetration Test

Penetration Index (Blows / Ft)	Granular	Cohesive
0-4	Very Loose	Very Soft
5-9	Loose	Soft
10-19	Slightly compact	Stiff
20-34	Compact	Very Stiff
35-69	Dense	Hard
>70	Very Dense	Very Hard

NOTE: Classification of earth material as shown on this sheet is based upon field inspection and is not to be construed to imply mechanical analysis.

EARTHQUAKE RETROFIT PROJECT NO. SR-611

CARQUINEZ BRIDGE - SOUTH APPROACH

LOG OF TEST BORINGS 12 OF 35

ENGINEERING SERVICE CENTER	STRUCTURE FOUNDATIONS
DRAWN BY Ken Wahl 8-96	
CHECKED BY	

FIELD INVESTIGATION BY: L. JENSEN & H. VALENCIA

State of CALIFORNIA DEPARTMENT OF TRANSPORTATION

DIVISION OF STRUCTURES STRUCTURE DESIGN

BRIDGE NO. 23-15 R/L
POST MILE CC-13.48 Sol-1.77

CU: 04
EA: 043921/043931

ORIGINAL SCALE IN INCHES FOR REDUCED PLANS → 0 1 2 3

DISREGARD PRINTS BEARING EARLIER REVISION DATES →

REVISION DATES (PRELIMINARY STAGE ONLY)

SHEET 97 OF 120

TL 6051 REV. 5/95

ClibPDF - www.fastio.com

DIST.	COUNTY	ROUTE	POST MILES TOTAL PROJECT	SHEET NO.	TOTAL SHEETS
04	CC/Sol	80	12.8/14.1, 0.0/0.6	533	555

The information represented on this drawing title "Carquinez Bridge South Approach" was not the result of any work developed, performed or completed by this Department (Caltrans). All such activity appears to be by those parties presented on this drawing who would bear all such responsibility. This drawing is available and presented only for the convenience of any bidder, contractor or other interested party. It should be expressly understood that Caltrans assumes no responsibility whatsoever in respect to the sufficiency or accuracy, completeness, interpretation set forth therein or any other aspect of the information shown on or represented by this drawing.

Signed By: B. W. [illegible] Date: 10-1-96

NO AS BUILT CHANGES
AS BUILT
CORRECTION BY BRIAN BEAUDOIN
CONTRACT NO. 04-043934
DATE FEBRUARY, 2002
STRUCTURES REPRESENTATIVE [illegible]

PLANS APPROVAL DATE: 10-20-97

GEO-HYDRO-DATA

INCORPORATED

NATURAL GAMMA LOG

96-33

OTHER SERVICES: INVOICE 9930 RUN 2

COMPANY : CAL TRANS
WELL : B 33 NEAR BENCH AM-9
LOCATION/FIELD : CARQUINEZ BRIDGE
COUNTY : CONTRA COSTA
STATE : CALIFORNIA
SECTION : . TOWNSHIP : . RANGE : .

DATE : 05/01/96 PERMANENT DATUM : GL ELEVATIONS
DEPTH DRILLER : 93.5 ELEV. PERM. DATUM: KB :
LOG BOTTOM : 84.50 LOG MEASURED FROM: GL DF :
LOG TOP : -1.00 DRL MEASURED FROM: GL GL :

CASING DRILLER : . LOGGING UNIT : 7
CASING TYPE : . FIELD OFFICE : TDHACHAPI
CASING THICKNESS: . RECORDED BY : K. KEMP

BIT SIZE : 6 BOREHOLE FLUID : NATURAL FILE : ORIGINAL
MAGNETIC DECL. : . RM : . TYPE : 9041A
MATRIX DENSITY : . RM TEMPERATURE : . LOG : 1
FLUID DENSITY : . MATRIX DELTA T : . PLOT : 1 57
NEUTRON MATRIX : FLUID DELTA T : . THRESH: 3000
REMARKS :
DRILLED BY: CAL TRANS
LOG IN OPEN HOLE

ALL SERVICES PROVIDED SUBJECT TO STANDARD TERMS AND CONDITIONS

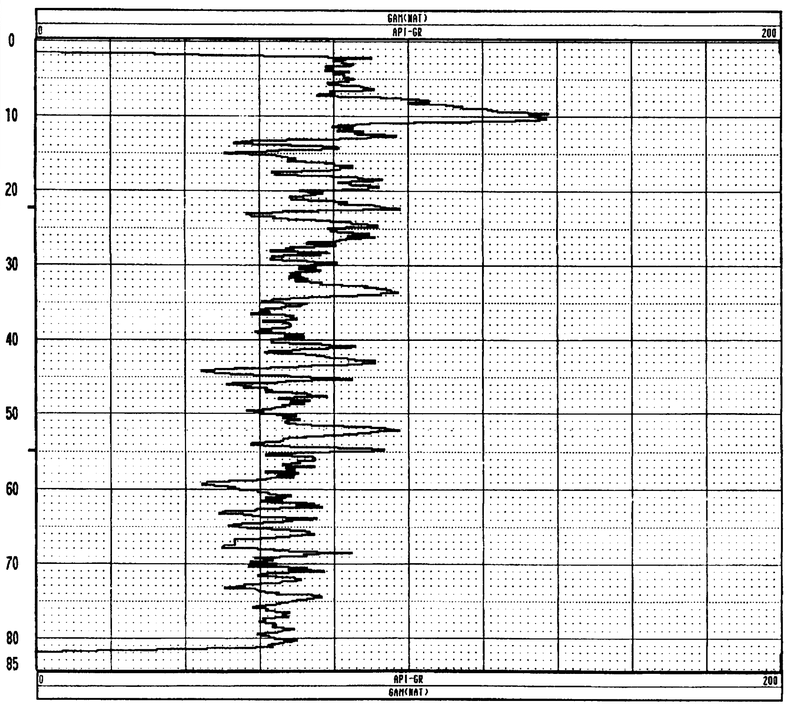

GEO-HYDRO-DATA

INCORPORATED

CALIPER LOG

96-33

OTHER SERVICES: INVOICE 9930 RUN 2

COMPANY : CAL TRANS
WELL : B 33 NEAR BENCH AM-9
LOCATION/FIELD : CARQUINEZ BRIDGE
COUNTY : CONTRA COSTA
STATE : CALIFORNIA
SECTION : . TOWNSHIP : . RANGE : .

DATE : 05/01/96 PERMANENT DATUM : GL ELEVATIONS
DEPTH DRILLER : 93.5 ELEV. PERM. DATUM: KB :
LOG BOTTOM : 47.40 LOG MEASURED FROM: GL DF :
LOG TOP : 3.18 DRL MEASURED FROM: GL GL :

CASING DRILLER : . LOGGING UNIT : 7
CASING TYPE : . FIELD OFFICE : TDHACHAPI
CASING THICKNESS: . RECORDED BY : K. KEMP

BIT SIZE : 6 BOREHOLE FLUID : FILE : ORIGINAL
MAGNETIC DECL. : . RM : . TYPE : 9864A1
MATRIX DENSITY : . RM TEMPERATURE : . LOG : 2
FLUID DENSITY : . MATRIX DELTA T : . PLOT : CHD 68
NEUTRON MATRIX : FLUID DELTA T : . THRESH: 3000
REMARKS :
DRILLED BY: CAL TRANS
LOG IN OPEN HOLE 1:15 PM

ALL SERVICES PROVIDED SUBJECT TO STANDARD TERMS AND CONDITIONS

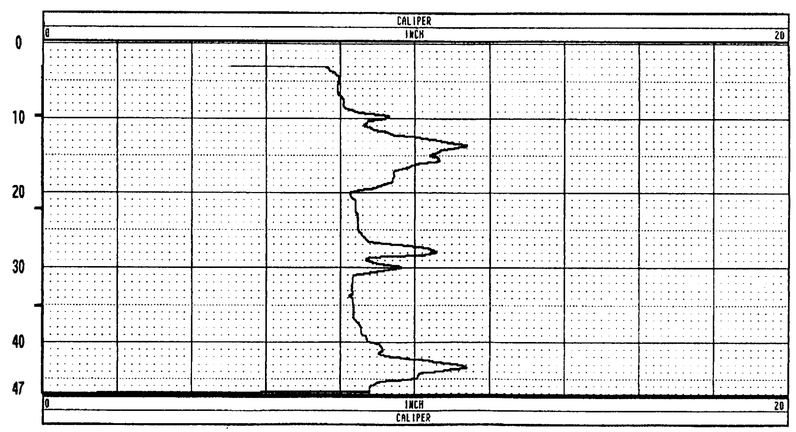

* Note: Instrument could not penetrate below 47.0' depth in bore hole due to heavy mud.

GEO-HYDRO-DATA

INCORPORATED

ELECTRIC WELL LOG

96-33

OTHER SERVICES: INVOICE 9930 RUN 2

COMPANY : CAL TRANS
WELL : B 33 NEAR BENCH AM-9
LOCATION/FIELD : CARQUINEZ BRIDGE
COUNTY : CONTRA COSTA
STATE : CALIFORNIA
SECTION : . TOWNSHIP : . RANGE : .

DATE : 05/01/96 PERMANENT DATUM : GL ELEVATIONS
DEPTH DRILLER : 93.5 ELEV. PERM. DATUM: KB :
LOG BOTTOM : 84.50 LOG MEASURED FROM: GL DF :
LOG TOP : -1.00 DRL MEASURED FROM: GL GL :

CASING DRILLER : . LOGGING UNIT : 7
CASING TYPE : . FIELD OFFICE : TDHACHAPI
CASING THICKNESS: . RECORDED BY : K. KEMP

BIT SIZE : 6 BOREHOLE FLUID : NATURAL FILE : ORIGINAL
MAGNETIC DECL. : . RM : . TYPE : 9041A
MATRIX DENSITY : . RM TEMPERATURE : . LOG : 1
FLUID DENSITY : . MATRIX DELTA T : . PLOT : CHD 0
NEUTRON MATRIX : FLUID DELTA T : . THRESH: 3000
REMARKS :
DRILLED BY: CAL TRANS
LOG IN OPEN HOLE

ALL SERVICES PROVIDED SUBJECT TO STANDARD TERMS AND CONDITIONS

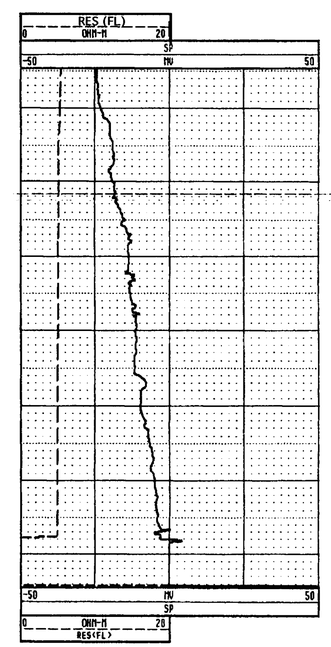

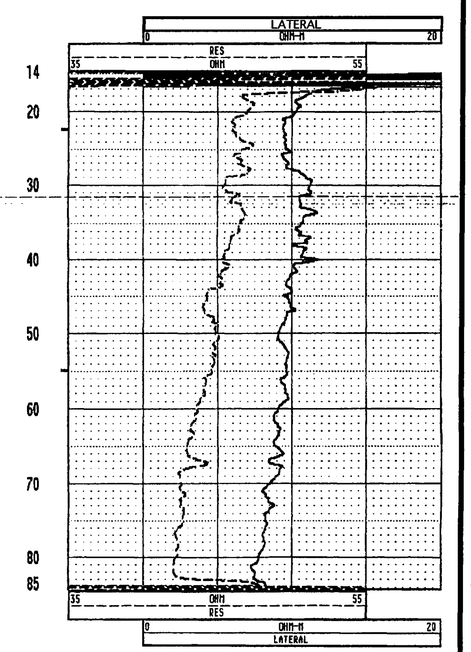

EARTHQUAKE RETROFIT PROJECT NO. SR-611

ENGINEERING SERVICE CENTER	STRUCTURE FOUNDATIONS	FIELD INVESTIGATION BY:	State of CALIFORNIA DEPARTMENT OF TRANSPORTATION	DIVISION OF STRUCTURES STRUCTURE DESIGN	BRIDGE NO. 23-15 R/L	CARQUINEZ BRIDGE - SOUTH APPROACH
PREPARED BY	Ken Wahl 8-96				POST MILE CC-13.48 Sol-1.72	LOG OF TEST BORINGS 13 OF 35
CHECKED BY						

ORIGINAL SCALE IN INCHES FOR REDUCED PLANS → 0 1 2 3

CU: 04
EA: 043921/043931

DISREGARD PRINTS BEARING EARLIER REVISION DATES →

REVISION DATES (PRELIMINARY STAGE ONLY) | SHEET 98 | OF 120

TL 6052 REV. 6/95

ClibPDF - www.fastio.com

DIST.	COUNTY	ROUTE	POST MILES TOTAL PROJECT	SHEET NO.	TOTAL SHEETS
04	CC/Sol	80	12.8/14.1, 0.0/0.6	534	555

R.W. FOX — REGISTERED GEOLOGIST — No. 78 — Exp. 8-31-97 — CERTIFIED ENGINEERING GEOLOGIST — STATE OF CALIFORNIA

10-20-97
PLANS APPROVAL DATE

THE STATE OF CALIFORNIA OR ITS OFFICERS OR AGENTS SHALL NOT BE RESPONSIBLE FOR THE ACCURACY OR COMPLETENESS OF ELECTRONIC COPIES OF THIS PLAN SHEET.

NOTE: FOR FIELD LOGGING NOTATIONS SEE LOG OF TEST BORINGS, SHEET 2 OF 35.

FOR PLAN VIEW, SEE "LOG OF TEST BORINGS", SHEET 1 OF 35.

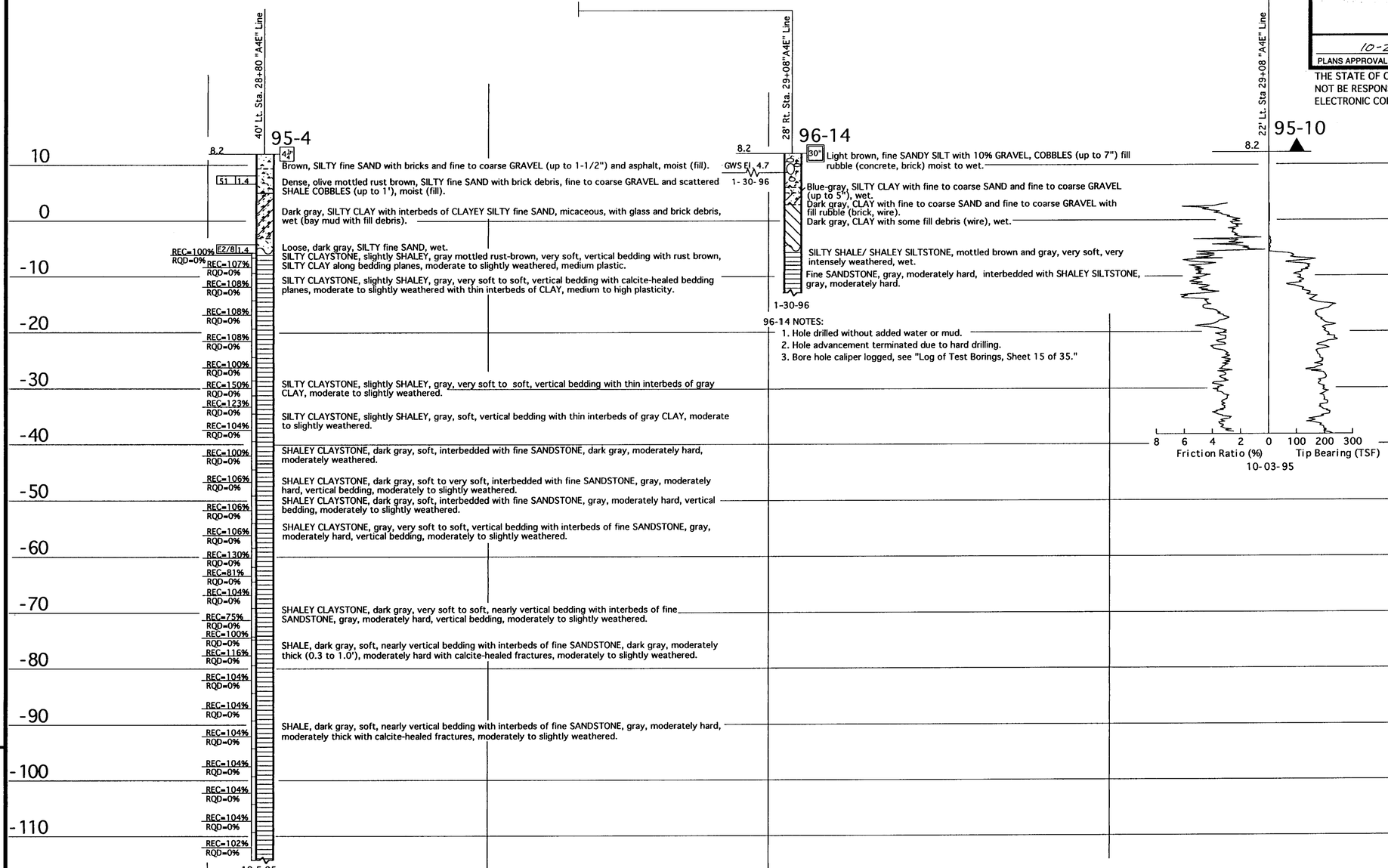

96-14 NOTES:
1. Hole drilled without added water or mud.
2. Hole advancement terminated due to hard drilling.
3. Bore hole caliper logged, see "Log of Test Borings, Sheet 15 of 35."

95-4 NOTES:
1. Recovery >100% due to slaking and/or stress relieving materials.
2. Installed Lawrence Berkeley Laboratory Seismic Instrument to bottom of hole, and grouted in place, instrument line runs 2 feet below ground westerly to sewer pump station. See Log of Test Borings, Sheet 2 of 35 for more details.
3. Ground water not measured
4. For Geophysical logs, see "Log of Test Boring, Sheet 29 of 35".

NO AS BUILT CHANGES
AS BUILT
CORRECTION BY BRIAN BEAUDOIN
CONTRACT NO. 04-043934
DATE FEBRUARY, 2002
STRUCTURES REPRESENTATIVE

PROFILE
HOR. 1" = 5'
VER. 1" = 10'

LEGEND OF BORING OPERATIONS

LEGEND OF EARTH MATERIALS: GRAVEL, SAND, SILT, CLAY, SANDY CLAY or CLAYEY SAND, SANDY SILT or SILTY SAND, SILTY CLAY, CLAYEY SILT, PEAT and/or ORGANIC MATTER, FILL MATERIAL, IGNEOUS ROCK, SEDIMENTARY ROCK, METAMORPHIC

CONSISTENCY CLASSIFICATION FOR SOILS
According to the Standard Penetration Test

Penetration Index (Blows / Ft)	Granular	Cohesive
0-4	Very Loose	Very Soft
5-9	Loose	Soft
10-19	Slightly compact	Stiff
20-34	Compact	Very Stiff
35-69	Dense	Hard
>70	Very Dense	Very Hard

NOTE: Classification of earth material as shown on this sheet is based upon field inspection and is not to be construed to imply mechanical analysis.

ENGINEERING SERVICE CENTER	STRUCTURE FOUNDATIONS
DRAWN BY Ken Wahl 9-96	
CHECKED BY	

FIELD INVESTIGATION BY: R. FITZPATRICK, L. JENSEN, B. TRINH & J. WITTRY

State of CALIFORNIA DEPARTMENT OF TRANSPORTATION

DIVISION OF STRUCTURES — STRUCTURE DESIGN

BRIDGE NO. 23-15 R/L
POST MILE CC-13.48 Sol-1.72

EARTHQUAKE RETROFIT PROJECT No. SR-611
CARQUINEZ BRIDGE - SOUTH APPROACH
LOG OF TEST BORINGS 14 OF 35

ORIGINAL SCALE IN INCHES FOR REDUCED PLANS → 0 1 2 3

CU: 04
EA: 043921/043931

DISREGARD PRINTS BEARING EARLIER REVISION DATES →
REVISION DATES (PRELIMINARY STAGE ONLY)
SHEET 99 OF 120

TL 6051 REV. 5/95

ClibPDF - www.fastio.com

DIST.	COUNTY	ROUTE	POST MILES TOTAL PROJECT	SHEET NO.	TOTAL SHEETS
04	CC/Sol	80	12.8/14.1, 0.0/0.6	535	555

The information represented on this drawing title "Carquinez Bridge South Approach" was not the result of any work developed, performed or completed by this Department (Caltrans). All such activity appears to be by those parties presented on this drawing who would bear all such responsibility. This drawing is available and presented only for the convenience of any bidder, contractor or other interested party. It should be expressly understood that Caltrans assumes no responsibility whatsoever in respect to the sufficiency or accuracy, completeness, interpretation set forth therein or any other aspect of the information shown on or represented by this drawing.

Signed By: R. W. Day Date: 10-1-96

PLANS APPROVAL DATE: 10-20-97

GEO-HYDRO-DATA

INCORPORATED

CALIPER LOG

96-14

OTHER SERVICES:
INVOICE
9857

COMPANY	: CAL TRANS				
WELL	: B-8 RUN TWO				
LOCATION/FIELD	: CARQU BR AE-13				
COUNTY	: CONTRA COSTA				
STATE	: CALIFORNIA				
SECTION	:	TOWNSHIP	:	RANGE	:
DATE	: 01/30/96	PERMANENT DATUM	: GL	ELEVATIONS	
DEPTH DRILLER	: 25	ELEV. PERM. DATUM:		KB	:
LOG BOTTOM	: 24.90	LOG MEASURED FROM:	GL	DF	:
LOG TOP	: 4.70	DRL MEASURED FROM:	GL	GL	:
CASING DRILLER	: .	LOGGING UNIT	: 7		
CASING TYPE	: .	FIELD OFFICE	: TEHACHAPI		
CASING THICKNESS	: .	RECORDED BY	: K. KEMP		
BIT SIZE	: 30	BOREHOLE FLUID	: BUCKET	FILE	: ORIGINAL
MAGNETIC DECL.	: .	RM	: .	TYPE	: 9064A1
MATRIX DENSITY	: .	RM TEMPERATURE	: .	LOG	: 1
FLUID DENSITY	: .	MATRIX DELTA T	: .	PLOT	: 1 60
NEUTRON MATRIX	:	FLUID DELTA T	: .	THRESH	: 3000
REMARKS	:				

DRILLED BY: CAL TRANS

ALL SERVICES PROVIDED SUBJECT TO STANDARD TERMS AND CONDITIONS

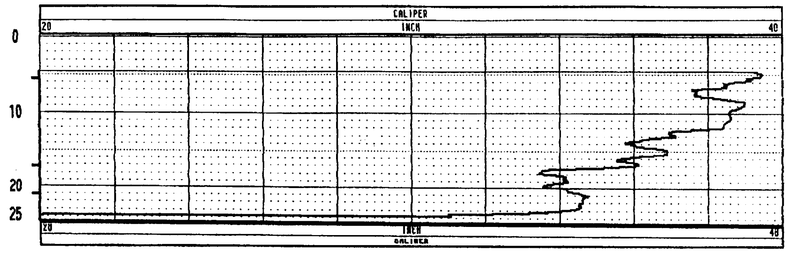

GEO-HYDRO-DATA

INCORPORATED

CALIPER LOG

96-14

OTHER SERVICES:
INVOICE
9857

COMPANY	: CAL TRANS				
WELL	: B-8 RUN FOUR				
LOCATION/FIELD	: CARQU BR AE-13				
COUNTY	: CONTRA COSTA				
STATE	: CALIFORNIA				
SECTION	:	TOWNSHIP	:	RANGE	:
DATE	: 01/31/96	PERMANENT DATUM	: GL	ELEVATIONS	
DEPTH DRILLER	: 25	ELEV. PERM. DATUM:		KB	:
LOG BOTTOM	: 24.40	LOG MEASURED FROM:	GL	DF	:
LOG TOP	: 4.20	DRL MEASURED FROM:	GL	GL	:
CASING DRILLER	: .	LOGGING UNIT	: 7		
CASING TYPE	: .	FIELD OFFICE	: TEHACHAPI		
CASING THICKNESS	: .	RECORDED BY	: K. KEMP		
BIT SIZE	: 30	BOREHOLE FLUID	: BUCKET	FILE	: ORIGINAL
MAGNETIC DECL.	: .	RM	: .	TYPE	: 9064A1
MATRIX DENSITY	: .	RM TEMPERATURE	: .	LOG	: 5
FLUID DENSITY	: .	MATRIX DELTA T	: .	PLOT	: 1 60
NEUTRON MATRIX	:	FLUID DELTA T	: .	THRESH	: 3000
REMARKS	:				

DRILLED BY: CAL TRANS

ALL SERVICES PROVIDED SUBJECT TO STANDARD TERMS AND CONDITIONS

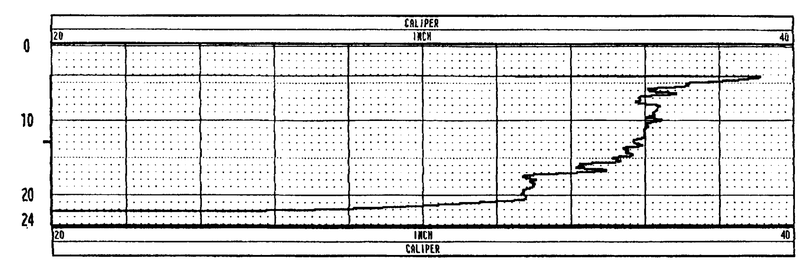

NO AS BUILT CHANGES

AS BUILT

CORRECTION BY BRIAN BEAUDOIN
CONTRACT NO. 04-043934
DATE FEBRUARY, 2002
STRUCTURES REPRESENTATIVE

EARTHQUAKE RETROFIT - PROJECT No. SR-611

CARQUINEZ BRIDGE - SOUTH APPROACH

LOG OF TEST BORINGS 15 OF 35

ENGINEERING SERVICE CENTER	STRUCTURE FOUNDATIONS	FIELD INVESTIGATION BY:	State of CALIFORNIA DEPARTMENT OF TRANSPORTATION	DIVISION OF STRUCTURES STRUCTURE DESIGN	BRIDGE NO. 23-15 R/L
DRAWN BY	Irma Gamarra 8/96				POST MILE CC-13.48 Sol-1.72
CHECKED BY					

ORIGINAL SCALE IN INCHES FOR REDUCED PLANS → 0 1 2 3

CU: 04
EA: 043921/043931

DISREGARD PRINTS BEARING EARLIER REVISION DATES →

REVISION DATES (PRELIMINARY STAGE ONLY)

SHEET 100 OF 120

TL 6051 REV. 7/96

ClibPDF - www.fastio.com

DIST.	COUNTY	ROUTE	POST MILES TOTAL PROJECT	SHEET NO.	TOTAL SHEETS
04	CC/Sol	80	12.8/14.1, 0.0/0.6	536	555

R.W. Fox

REGISTERED GEOLOGIST R.W. FOX No. 78 Exp. 8-31-97 CERTIFIED ENGINEERING GEOLOGIST STATE OF CALIFORNIA

10-20-97
PLANS APPROVAL DATE

NO AS BUILT CHANGES
AS BUILT
CORRECTION BY BRIAN BEAUDOIN
CONTRACT NO. 04-043934
DATE FEBRUARY, 2002
STRUCTURES REPRESENTATIVE

THE STATE OF CALIFORNIA OR ITS OFFICERS OR AGENTS SHALL NOT BE RESPONSIBLE FOR THE ACCURACY OR COMPLETENESS OF ELECTRONIC COPIES OF THIS PLAN SHEET.

FOR PLAN VIEW, SEE "LOG OF TEST BORINGS 1 OF 35"

NOTE: FOR FIELD LOGGING NOTATIONS SEE LOG OF TEST BORINGS, SHEET 2 OF 35.

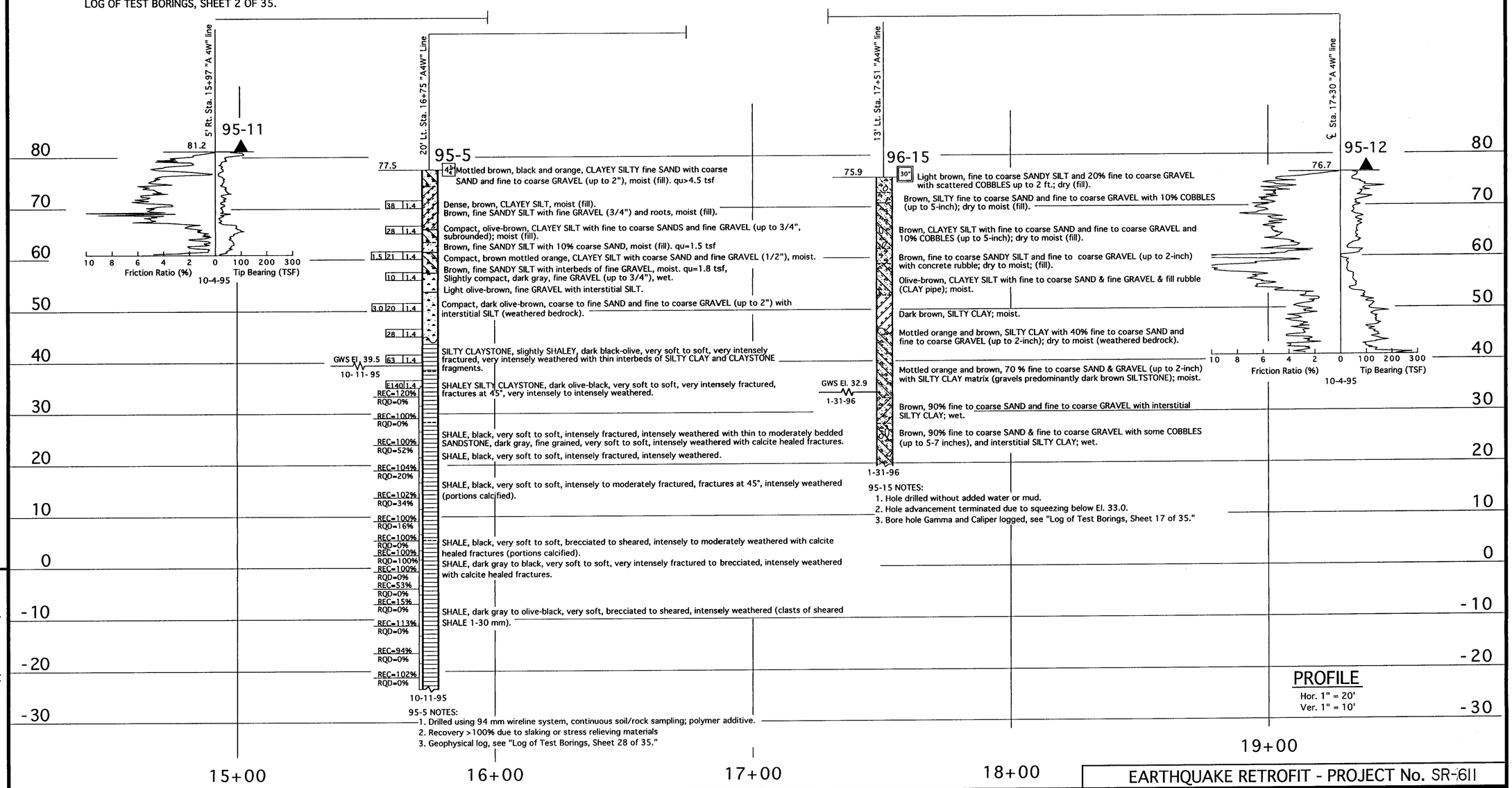

LEGEND OF BORING OPERATIONS

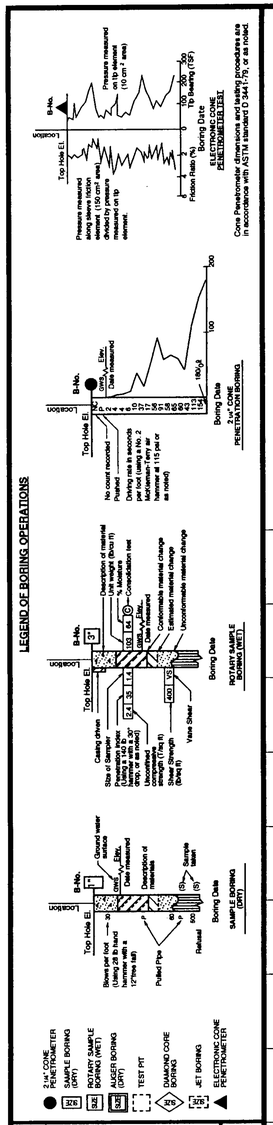

LEGEND OF EARTH MATERIALS

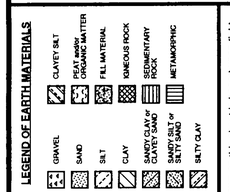

CONSISTENCY CLASSIFICATION FOR SOILS
According to the Standard Penetration Test

Penetration Index (Blows / Ft)	Granular	Cohesive
0-4	Very Loose	Very Soft
5-9	Loose	Soft
10-19	Slightly compact	Stiff
20-34	Compact	Very Stiff
35-69	Dense	Hard
>70	Very Dense	Very Hard

NOTE: Classification of earth material as shown on this sheet is based upon field inspection and is not to be construed to imply mechanical analysis.

ENGINEERING SERVICE CENTER	STRUCTURE FOUNDATIONS
DRAWN BY Ken Wahl & J. Gamarra 9-96	
CHECKED BY	

FIELD INVESTIGATION BY:
L. JENSEN, R. FITZPATRICK, G. HADSALL & J, WITTRY

State of CALIFORNIA DEPARTMENT OF TRANSPORTATION

DIVISION OF STRUCTURES
STRUCTURE DESIGN

BRIDGE NO. 23-15 R/L
POST MILE CC-13.48 Sol-1.72

EARTHQUAKE RETROFIT - PROJECT No. SR-611
CARQUINEZ BRIDGE SOUTH-APPROACH
LOG OF TEST BORINGS 16 OF 35

ORIGINAL SCALE IN INCHES FOR REDUCED PLANS → 0 1 2 3

CU: 04
EA: 043921/043931

DISREGARD PRINTS BEARING EARLIER REVISION DATES →
REVISION DATES (PRELIMINARY STAGE ONLY)
SHEET 101 OF 120

TL 6051 REV. 5/95

ClibPDF - www.fastio.com

DIST.	COUNTY	ROUTE	POST MILES TOTAL PROJECT	SHEET NO.	TOTAL SHEETS
04	CC/Sol	80	12.8/14.1, 0.0/0.6	537	555

The information represented on this drawing title "Carquinez Bridge South Approach" was not the result of any work developed, performed or completed by this Department (Caltrans). All such activity appears to be by those parties presented on this drawing who would bear all such responsibility. This drawing is available and presented only for the convenience of any bidder, contractor or other interested party. It should be expressly understood that Caltrans assumes no responsibility whatsoever in respect to the sufficiency or accuracy, completeness, interpretation set forth therein or any other aspect of the information shown on or represented by this drawing.

Signed By: R. W. Day Date: 10-1-96

GEO-HYDRO-DATA

INCORPORATED

NATURAL GAMMA LOG

COMPANY : CAL TRANS
WELL : B-9 96-15
LOCATION/FIELD : CARQU BR AW-6
COUNTY : CONTRA COSTA
STATE : CALIFORNIA
SECTION :

96-15

OTHER SERVICES:
INVOICE
9857

TOWNSHIP : RANGE :

DATE : 01/31/96
DEPTH DRILLER : 56
LOG BOTTOM : 57.00
LOG TOP : 0.90

PERMANENT DATUM : GL
ELEV. PERM. DATUM:
LOG MEASURED FROM: GL
DRL MEASURED FROM: GL

ELEVATIONS
KB :
DF :
GL :

CASING DRILLER : .
CASING TYPE : .
CASING THICKNESS: .

LOGGING UNIT : 7
FIELD OFFICE : TEHACHAPI
RECORDED BY : K. KEMP

BIT SIZE : 30
MAGNETIC DECL. : .
MATRIX DENSITY : .
FLUID DENSITY : .
NEUTRON MATRIX :
REMARKS :

BOREHOLE FLUID : BUCKET
RM : .
RM TEMPERATURE : .
MATRIX DELTA T : .
FLUID DELTA T : .

FILE : ORIGINAL
TYPE : 9041A
LOG : 3
PLOT : 1 57
THRESH: 3000

DRILLED BY: CAL TRANS

ALL SERVICES PROVIDED SUBJECT TO STANDARD TERMS AND CONDITIONS

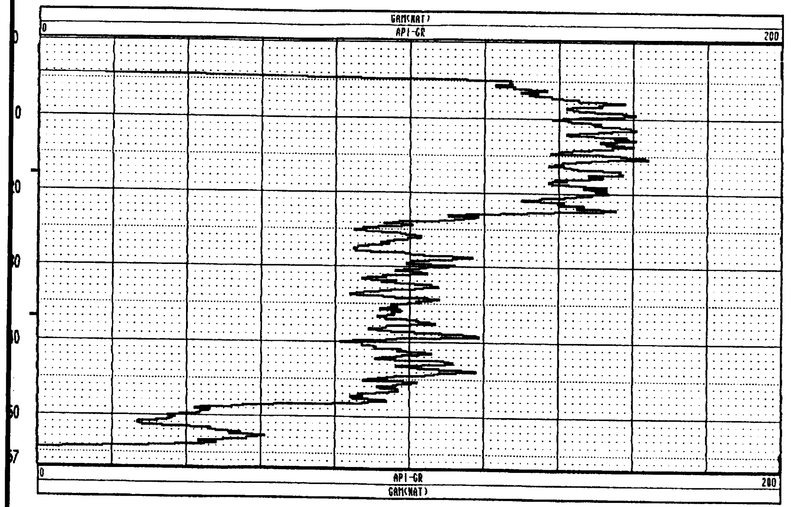

GEO-HYDRO-DATA

INCORPORATED

CALIPER LOG

COMPANY : CAL TRANS
WELL : B-9 96-15
LOCATION/FIELD : CARQU BR AW-6
COUNTY : CONTRA COSTA
STATE : CALIFORNIA
SECTION :

96-15

OTHER SERVICES:
INVOICE
9857

TOWNSHIP : RANGE :

DATE : 01/31/96
DEPTH DRILLER : 56
LOG BOTTOM : 55.40
LOG TOP : 5.00

PERMANENT DATUM : GL
ELEV. PERM. DATUM:
LOG MEASURED FROM: GL
DRL MEASURED FROM: GL

ELEVATIONS
KB :
DF :
GL :

CASING DRILLER : .
CASING TYPE : .
CASING THICKNESS: .

LOGGING UNIT : 7
FIELD OFFICE : TEHACHAPI
RECORDED BY : K. KEMP

BIT SIZE : 30
MAGNETIC DECL. : .
MATRIX DENSITY : .
FLUID DENSITY : .
NEUTRON MATRIX :
REMARKS :

BOREHOLE FLUID : BUCKET
RM : .
RM TEMPERATURE : .
MATRIX DELTA T : .
FLUID DELTA T : .

FILE : ORIGINAL
TYPE : 9064A1
LOG : 4
PLOT : 1 60
THRESH: 3000

DRILLED BY: CAL TRANS

ALL SERVICES PROVIDED SUBJECT TO STANDARD TERMS AND CONDITIONS

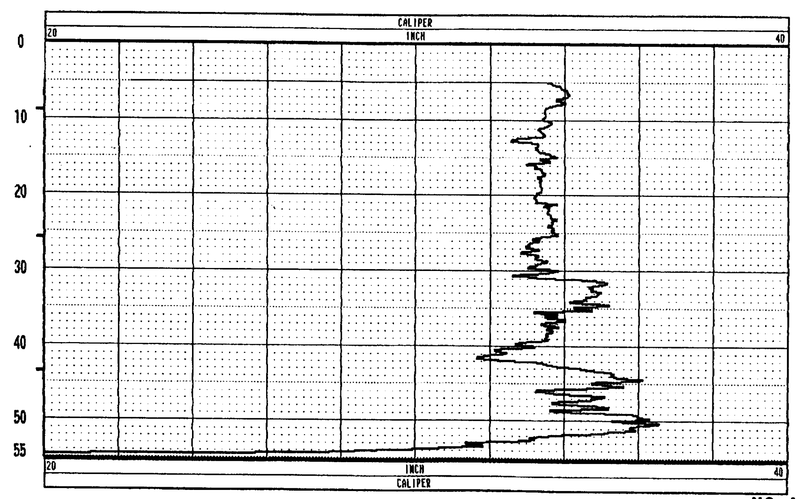

GEO-HYDRO-DATA

INCORPORATED

CALIPER LOG

COMPANY : CAL TRANS
WELL : B-9 RUN FIVE 96-15
LOCATION/FIELD : CARQU BR AW-6
COUNTY : CONTRA COSTA
STATE : CALIFORNIA
SECTION :

96-15

OTHER SERVICES:
INVOICE
9857

TOWNSHIP : RANGE :

DATE : 02/02/96
DEPTH DRILLER : 56
LOG BOTTOM : 52.70
LOG TOP : 4.10

PERMANENT DATUM : GL
ELEV. PERM. DATUM:
LOG MEASURED FROM: GL
DRL MEASURED FROM: GL

ELEVATIONS
KB :
DF :
GL :

CASING DRILLER : .
CASING TYPE : .
CASING THICKNESS: .

LOGGING UNIT : 7
FIELD OFFICE : TEHACHAPI
RECORDED BY : K. KEMP

BIT SIZE : 30
MAGNETIC DECL. : .
MATRIX DENSITY : .
FLUID DENSITY : .
NEUTRON MATRIX :
REMARKS :

BOREHOLE FLUID : BUCKET
RM : .
RM TEMPERATURE : .
MATRIX DELTA T : .
FLUID DELTA T : .

FILE : ORIGINAL
TYPE : 9064A1
LOG : 9
PLOT : 1 60
THRESH: 3000

DRILLED BY: CAL TRANS

ALL SERVICES PROVIDED SUBJECT TO STANDARD TERMS AND CONDITIONS

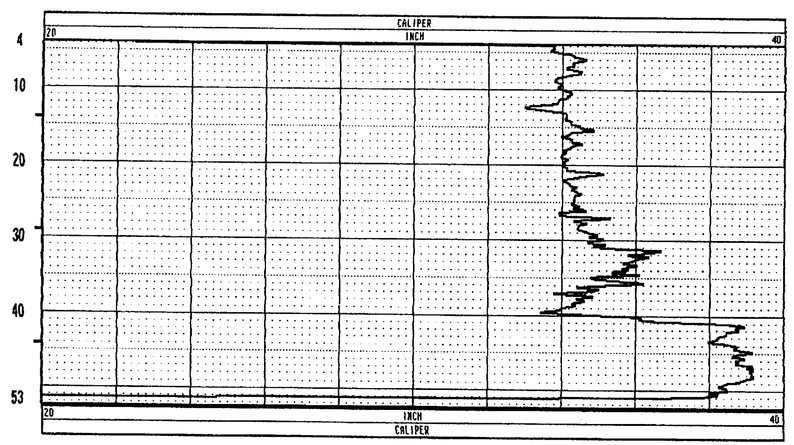

NO AS BUILT CHANGES

AS BUILT

CORRECTION BY BRIAN BEAUDOIN
CONTRACT NO. 04-043934
DATE FEBRUARY, 2002
STRUCTURES REPRESENTATIVE

EARTHQUAKE RETROFIT PROJECT NO. SR-611

ENGINEERING SERVICE CENTER	STRUCTURE FOUNDATIONS	FIELD INVESTIGATION BY:	State of CALIFORNIA DEPARTMENT OF TRANSPORTATION	DIVISION OF STRUCTURES STRUCTURE DESIGN	BRIDGE NO. 23-15 R/L	CARQUINEZ BRIDGE - SOUTH APPROACH
PREPARED BY	Ken Wall 8-96				POST MILE CC-13.48 Sol-1.72	LOG OF TEST BORINGS
CHECKED BY						

ORIGINAL SCALE IN INCHES FOR REDUCED PLANS → 0 1 2 3

CU: 04
EA: 043921/043931

DISREGARD PRINTS BEARING EARLIER REVISION DATES →

REVISION DATES (PRELIMINARY STAGE ONLY)

SHEET 102 OF 120

TL 6052 REV. 6/95

ClibPDF - www.fastio.com

DIST.	COUNTY	ROUTE	POST MILES TOTAL PROJECT	SHEET NO.	TOTAL SHEETS
04	CC/Sol	80	12.8/14.1, 0.0/0.6	538	555

R.W. Fox

REGISTERED GEOLOGIST R.W. FOX 70 No. 8-31-97 Exp. CERTIFIED ENGINEERING GEOLOGIST STATE OF CALIFORNIA

10-20-97
PLANS APPROVAL DATE

THE STATE OF CALIFORNIA OR ITS OFFICERS OR AGENTS SHALL NOT BE RESPONSIBLE FOR THE ACCURACY OR COMPLETENESS OF ELECTRONIC COPIES OF THIS PLAN SHEET.

NOTE: FOR FIELD LOGGING NOTATIONS SEE LOG OF TEST BORINGS, SHEET 2 OF 35.

FOR PLAN VIEW, SEE "LOG OF TEST BORINGS 1 OF 35."

NO AS BUILT CHANGES
AS BUILT
CORRECTION BY BRIAN BEAUDOIN
CONTRACT NO. 04-043934
DATE FEBRUARY, 2002
STRUCTURES REPRESENTATIVE Brian F. Beaudoin

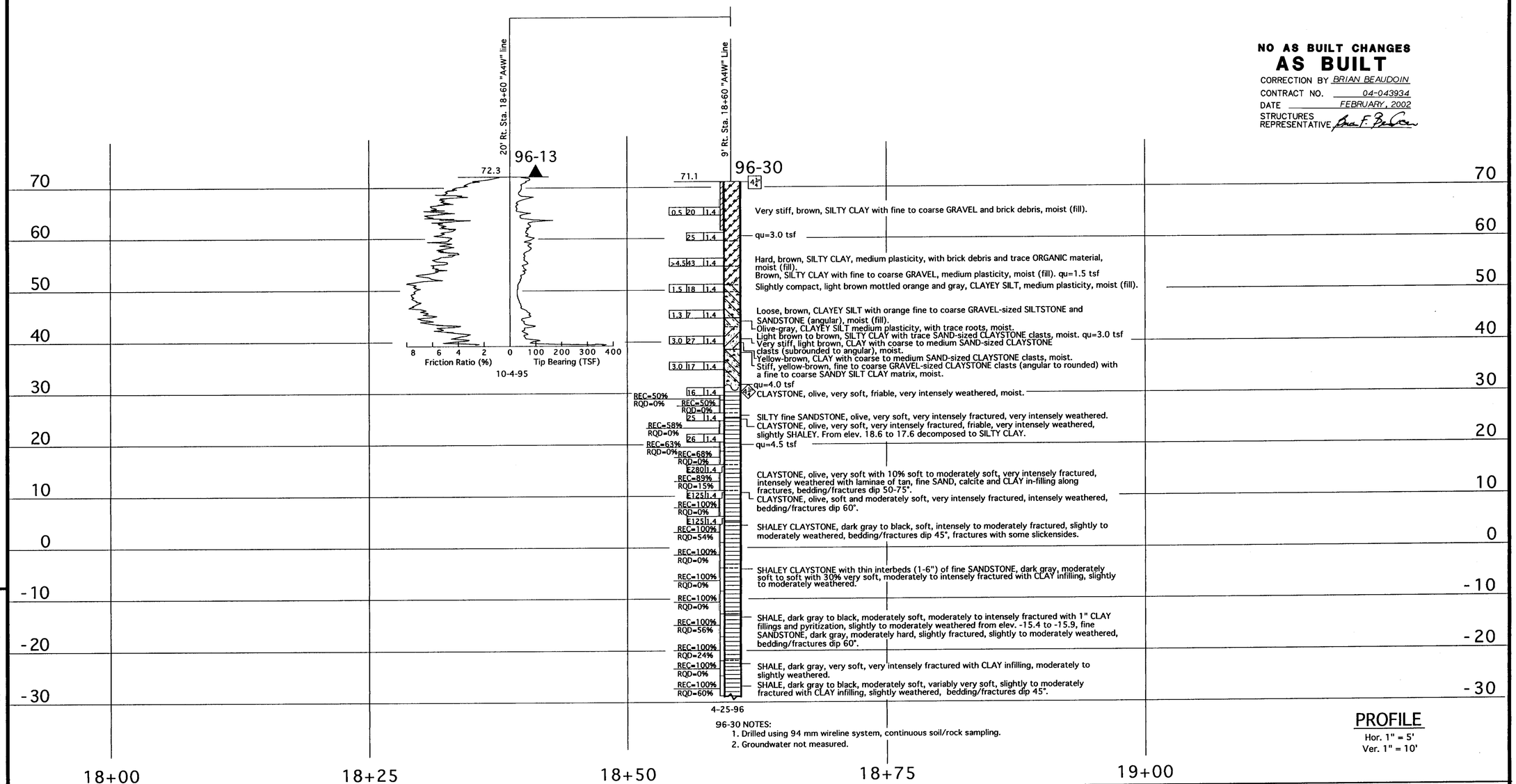

96-30 NOTES:
1. Drilled using 94 mm wireline system, continuous soil/rock sampling.
2. Groundwater not measured.

PROFILE
Hor. 1" = 5'
Ver. 1" = 10'

LEGEND OF BORING OPERATIONS

LEGEND OF EARTH MATERIALS: GRAVEL, SAND, SILT, CLAY, SANDY CLAY or CLAYEY SAND, SANDY SILT or SILTY SAND, SILTY CLAY, CLAYEY SILT, PEAT, ORGANIC MATTER, FILL MATERIAL, IGNEOUS ROCK, SEDIMENTARY ROCK, METAMORPHIC

CONSISTENCY CLASSIFICATION FOR SOILS
According to the Standard Penetration Test

Penetration Resistance (Blows / Ft)	Granular	Cohesive
0-4	Very Loose	Very Soft
5-9	Loose	Soft
10-19	Slightly compact	Stiff
20-34	Compact	Very Stiff
35-69	Dense	Hard
>70	Very Dense	Very Hard

NOTE: Classification of earth material as shown on this sheet is based upon field inspection and is not to be construed to imply mechanical analysis.

EARTHQUAKE RETROFIT - PROJECT No. SR-611
CARQUINEZ BRIDGE-SOUTH APPROACH
LOG OF TEST BORINGS
18 OF 35

ENGINEERING SERVICE CENTER	STRUCTURE FOUNDATIONS
DRAWN BY Ken Wahl 9-96	
CHECKED BY	

FIELD INVESTIGATION BY:
L. JENSEN, R. FITZPATRICK, G. HADSALL
K. AMARU, H. SALIMI & M. FILBERTI

State of CALIFORNIA DEPARTMENT OF TRANSPORTATION

DIVISION OF STRUCTURES
STRUCTURE DESIGN

BRIDGE NO. 23-15 R/L
POST MILE ~~CC-13.48~~ Sol-1.72

CU: 04
EA: 043921/043931

ORIGINAL SCALE IN INCHES FOR REDUCED PLANS → 0 1 2 3

DISREGARD PRINTS BEARING EARLIER REVISION DATES →
REVISION DATES (PRELIMINARY STAGE ONLY)

SHEET 103 OF 120

TL 6051 REV. 5/95

ClibPDF - www.fastio.com

DIST.	COUNTY	ROUTE	POST MILES TOTAL PROJECT	SHEET NO.	TOTAL SHEETS
04	CC/Sol	80	12.8/14.1, 0.0/0.6	539	555

R.W. Fox
REGISTERED GEOLOGIST R.W. FOX No. 78 Exp. 8-31-97 CERTIFIED ENGINEERING GEOLOGIST STATE OF CALIFORNIA

10-20-97
PLANS APPROVAL DATE

THE STATE OF CALIFORNIA OR ITS OFFICERS OR AGENTS SHALL NOT BE RESPONSIBLE FOR THE ACCURACY OR COMPLETENESS OF ELECTRONIC COPIES OF THIS PLAN SHEET.

FOR PLAN VIEW, SEE "LOG OF TEST BORINGS 1 OF 35."

NOTE: FOR FIELD LOGGING NOTATIONS SEE LOG OF TEST BORINGS, SHEET 2 OF 35.

NO AS BUILT CHANGES
AS BUILT
CORRECTION BY BRIAN BEAUDOIN
CONTRACT NO. 04-043934
DATE FEBRUARY, 2002
STRUCTURES REPRESENTATIVE

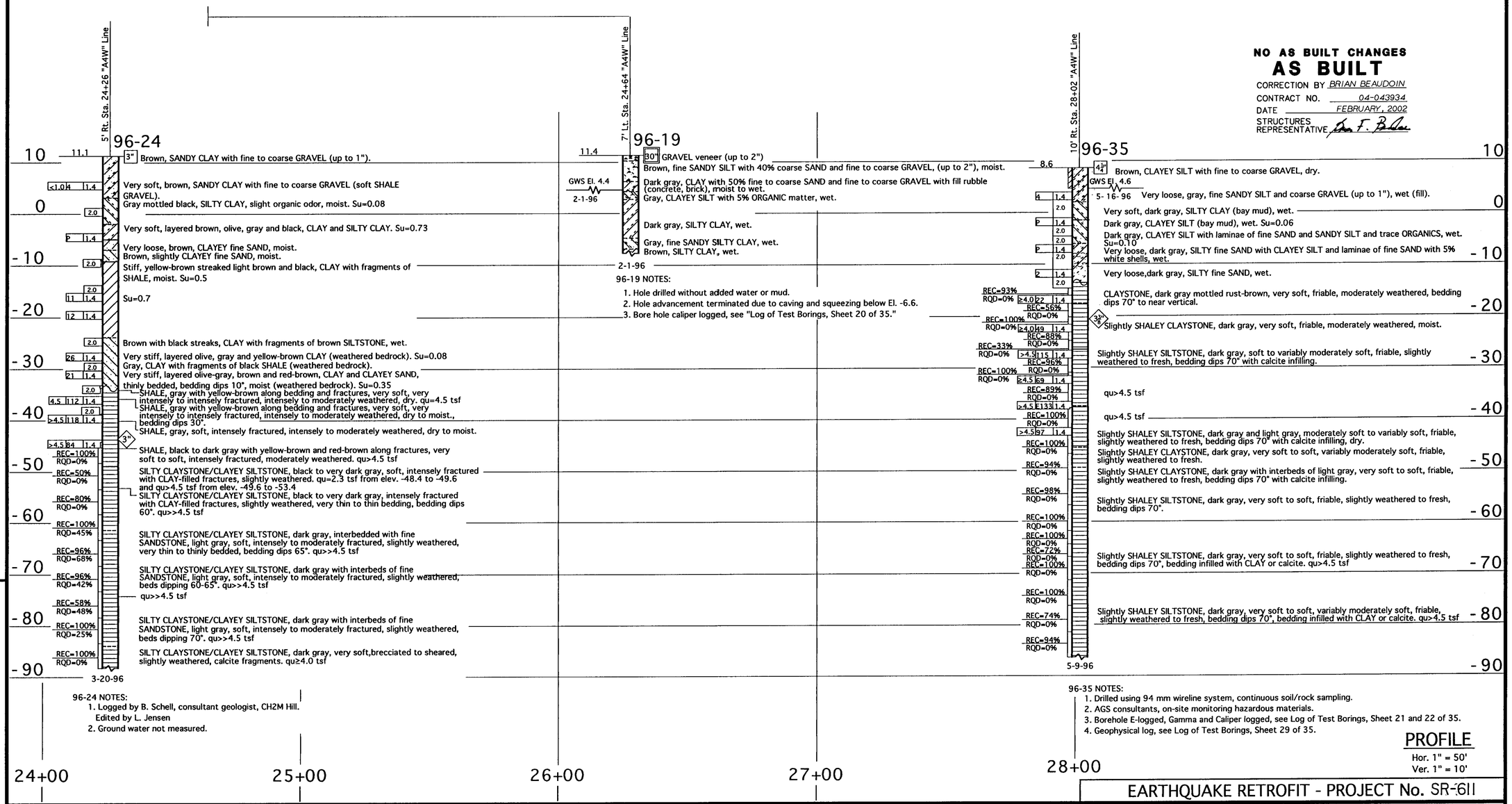

96-24 NOTES:
1. Logged by B. Schell, consultant geologist, CH2M Hill. Edited by L. Jensen
2. Ground water not measured.

96-35 NOTES:
1. Drilled using 94 mm wireline system, continuous soil/rock sampling.
2. AGS consultants, on-site monitoring hazardous materials.
3. Borehole E-logged, Gamma and Caliper logged, see Log of Test Borings, Sheet 21 and 22 of 35.
4. Geophysical log, see Log of Test Borings, Sheet 29 of 35.

PROFILE
Hor. 1" = 50'
Ver. 1" = 10'

LEGEND OF BORING OPERATIONS

LEGEND OF EARTH MATERIALS: GRAVEL, SAND, SILT, CLAY, SANDY CLAY or CLAYEY SAND, SANDY SILT or SILTY SAND, SILTY CLAY, CLAYEY SILT, PEAT and/or ORGANIC MATTER, FILL MATERIAL, IGNEOUS ROCK, SEDIMENTARY ROCK, METAMORPHIC

CONSISTENCY CLASSIFICATION FOR SOILS
According to the Standard Penetration Test

Penetration Index (Blows / Ft)	Granular	Cohesive
0-4	Very Loose	Very Soft
5-9	Loose	Soft
10-19	Slightly compact	Stiff
20-34	Compact	Very Stiff
35-69	Dense	Hard
>70	Very Dense	Very Hard

NOTE: Classification of earth material as shown on this sheet is based upon field inspection and is not to be construed to imply mechanical analysis.

ENGINEERING SERVICE CENTER	STRUCTURE FOUNDATIONS
DRAWN BY Ken Wahl 8-96	
CHECKED BY	

FIELD INVESTIGATION BY: L. JENSEN

State of CALIFORNIA DEPARTMENT OF TRANSPORTATION

DIVISION OF STRUCTURES
STRUCTURE DESIGN

BRIDGE NO. 23-15 R/L
POST MILE CC-13.48 Sol-1.72

EARTHQUAKE RETROFIT - PROJECT No. SR-611
CARQUINEZ BRIDGE-SOUTH APPROACH
LOG OF TEST BORINGS 19 OF 35

ORIGINAL SCALE IN INCHES FOR REDUCED PLANS → 0 1 2 3

CU: 04
EA: 043921/043931

DISREGARD PRINTS BEARING EARLIER REVISION DATES →

REVISION DATES (PRELIMINARY STAGE ONLY) | SHEET 104 | OF 120

TL 6051 REV. 5/95

ClibPDF - www.fastio.com

DIST.	COUNTY	ROUTE	POST MILES TOTAL PROJECT	SHEET NO.	TOTAL SHEETS
04	CC/Sol	80	12.8/14.1, 0.0/0.6	540	555

The information represented on this drawing title "Carquinez Bridge South Approach" was not the result of any work developed, performed or completed by this Department (Caltrans). All such activity appears to be by those parties presented on this drawing who would bear all such responsibility. This drawing is available and presented only for the convenience of any bidder, contractor or other interested party. It should be expressly understood that Caltrans assumes no responsibility whatsoever in respect to the sufficiency or accuracy, completeness, interpretation set forth therein or any other aspect of the information shown on or represented by this drawing.

Signed By: R. W. Vop Date: 10-20-97 ~~10-1-96~~

GEO-HYDRO-DATA

INCORPORATED

CALIPER LOG

96-18

OTHER SERVICES:
INVOICE
9857

COMPANY : CAL TRANS
WELL : B-12
LOCATION/FIELD : CARQU BR AW-10
COUNTY : CONTRA COSTA
STATE : CALIFORNIA
SECTION : TOWNSHIP : RANGE :

DATE : 02/01/96
DEPTH DRILLER : 14.5
LOG BOTTOM : 13.90
LOG TOP : 4.10
PERMANENT DATUM : GL
ELEV. PERM. DATUM:
LOG MEASURED FROM: GL
DRL MEASURED FROM: GL
ELEVATIONS
KB :
DF :
GL :

CASING DRILLER : .
CASING TYPE : .
CASING THICKNESS: .
LOGGING UNIT : 7
FIELD OFFICE : TEHACHAPI
RECORDED BY : K. KEMP

BIT SIZE : 30
MAGNETIC DECL. : .
MATRIX DENSITY : .
FLUID DENSITY : .
NEUTRON MATRIX :
REMARKS :
BOREHOLE FLUID : BUCKET
RM : .
RM TEMPERATURE : .
MATRIX DELTA T : .
FLUID DELTA T : .
FILE : ORIGINAL
TYPE : 9064A1
LOG : 9
PLOT : 1 60
THRESH: 3000

DRILLED BY: CAL TRANS

ALL SERVICES PROVIDED SUBJECT TO STANDARD TERMS AND CONDITIONS

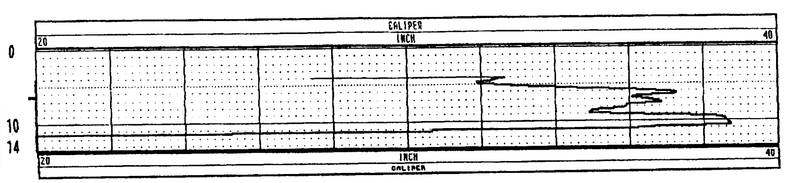

GEO-HYDRO-DATA

INCORPORATED

CALIPER LOG

96-19

OTHER SERVICES:
INVOICE
9857

COMPANY : CAL TRANS
WELL : B-13
LOCATION/FIELD : CARQU BR AW-11
COUNTY : CONTRA COSTA
STATE : CALIFORNIA
SECTION : TOWNSHIP : RANGE :

DATE : 02/01/96
DEPTH DRILLER : 19
LOG BOTTOM : 17.70
LOG TOP : 5.00
PERMANENT DATUM : GL
ELEV. PERM. DATUM:
LOG MEASURED FROM: GL
DRL MEASURED FROM: GL
ELEVATIONS
KB :
DF :
GL :

CASING DRILLER : .
CASING TYPE : .
CASING THICKNESS: .
LOGGING UNIT : 7
FIELD OFFICE : TEHACHAPI
RECORDED BY : K. KEMP

BIT SIZE : 30
MAGNETIC DECL. : .
MATRIX DENSITY : .
FLUID DENSITY : .
NEUTRON MATRIX :
REMARKS :
BOREHOLE FLUID : BUCKET
RM : .
RM TEMPERATURE : .
MATRIX DELTA T : .
FLUID DELTA T : .
FILE : ORIGINAL
TYPE : 9064A1
LOG : 0
PLOT : 1 60
THRESH: 3000

DRILLED BY: CAL TRANS

ALL SERVICES PROVIDED SUBJECT TO STANDARD TERMS AND CONDITIONS

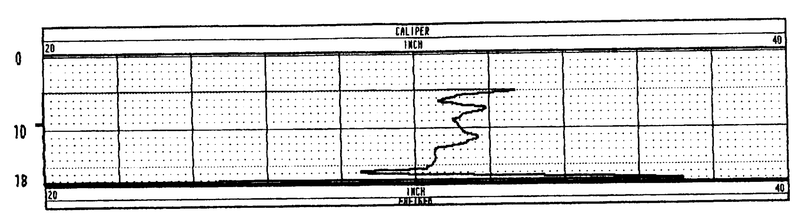

GEO-HYDRO-DATA

INCORPORATED

CALIPER LOG

96-19

OTHER SERVICES:
INVOICE
9857

COMPANY : CAL TRANS
WELL : B-13 RUN TWO
LOCATION/FIELD : CARQU BR AW-11
COUNTY : CONTRA COSTA
STATE : CALIFORNIA
SECTION : TOWNSHIP : RANGE :

DATE : 02/02/96
DEPTH DRILLER : 19
LOG BOTTOM : 17.30
LOG TOP : 4.50
PERMANENT DATUM : GL
ELEV. PERM. DATUM:
LOG MEASURED FROM: GL
DRL MEASURED FROM: GL
ELEVATIONS
KB :
DF :
GL :

CASING DRILLER : .
CASING TYPE : .
CASING THICKNESS: .
LOGGING UNIT : 7
FIELD OFFICE : TEHACHAPI
RECORDED BY : K. KEMP

BIT SIZE : 30
MAGNETIC DECL. : .
MATRIX DENSITY : .
FLUID DENSITY : .
NEUTRON MATRIX :
REMARKS :
BOREHOLE FLUID : BUCKET
RM : .
RM TEMPERATURE : .
MATRIX DELTA T : .
FLUID DELTA T : .
FILE : ORIGINAL
TYPE : 9064A1
LOG : 8
PLOT : 1 60
THRESH: 3000

DRILLED BY: CAL TRANS

ALL SERVICES PROVIDED SUBJECT TO STANDARD TERMS AND CONDITIONS

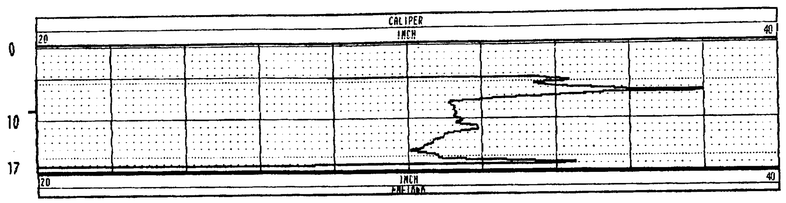

NO AS BUILT CHANGES

AS BUILT

CORRECTION BY BRIAN BEAUDOIN
CONTRACT NO. 04-043934
DATE FEBRUARY, 2002
STRUCTURES REPRESENTATIVE

EARTHQUAKE RETROFIT - PROJECT No. SR-611

CARQUINEZ BRIDGE - SOUTH APPROACH

LOG OF TEST BORINGS 20 OF 35

ENGINEERING SERVICE CENTER	STRUCTURE FOUNDATIONS	FIELD INVESTIGATION BY:	State of CALIFORNIA DEPARTMENT OF TRANSPORTATION	DIVISION OF STRUCTURES STRUCTURE DESIGN	BRIDGE NO. 23-15 R/L	SHEET 105 OF 120
DRAWN BY Irma Gamarra 8/96					POST MILE CC-13.48 Sol-1.72	
CHECKED BY				CU: 04 EA: 043921/043931	DISREGARD PRINTS BEARING EARLIER REVISION DATES	REVISION DATES (PRELIMINARY STAGE ONLY)

ORIGINAL SCALE IN INCHES FOR REDUCED PLANS → 0 1 2 3

TL 6051 REV. 7/96

ClibPDF - www.fastio.com

DIST.	COUNTY	ROUTE	POST MILES TOTAL PROJECT	SHEET NO.	TOTAL SHEETS
04	CC/Sol	80	12.8/14.1, 0.0/0.6	541	555

The information represented on this drawing title "Carquinez Bridge South Approach" was not the result of any work developed, performed or completed by this Department (Caltrans). All such activity appears to be by those parties presented on this drawing who would bear all such responsibility. This drawing is available and presented only for the convenience of any bidder, contractor or other interested party. It should be expressly understood that Caltrans assumes no responsibility whatsoever in respect to the sufficiency or accuracy, completeness, interpretation set forth therein or any other aspect of the information shown on or represented by this drawing.

Signed By: R. W. [illegible] Date: 10-1-96

TO ACCOMPANY PLANS DATED: 10-20-97

GEO-HYDRO-DATA

INCORPORATED

NATURAL GAMMA LOG

96-35

OTHER SERVICES:
INVOICE
9950

COMPANY : CAL TRANS
WELL : B 35 NEAR PIER 6 A
LOCATION/FIELD : CARQUBNEZ BRIDGE
COUNTY : CONTRA COSTA
STATE : CALIFORNIA
SECTION : . TOWNSHIP : . RANGE : .

DATE : 05/09/96 PERMANENT DATUM : GL ELEVATIONS
DEPTH DRILLER : 95 ELEV. PERM. DATUM: KB :
LOG BOTTOM : 95.40 LOG MEASURED FROM: GL DF :
LOG TOP : 0.80 DRL MEASURED FROM: GL GL :

CASING DRILLER : . LOGGING UNIT : 7
CASING TYPE : . FIELD OFFICE : TEHACHAPI
CASING THICKNESS: . RECORDED BY : K. KEMP

BIT SIZE : 3.75 BOREHOLE FLUID : FILE : ORIGINAL
MAGNETIC DECL. : . RM : . TYPE : 9041A
MATRIX DENSITY : . RM TEMPERATURE : . LOG : 3
FLUID DENSITY : . MATRIX DELTA T : . PLOT : 1 57
NEUTRON MATRIX : FLUID DELTA T : . THRESH: 3000
REMARKS :
DRILED BY: CAL TRANS
LOG RUN 5/9/96 1:10 PM

ALL SERVICES PROVIDED SUBJECT TO STANDARD TERMS AND CONDITIONS

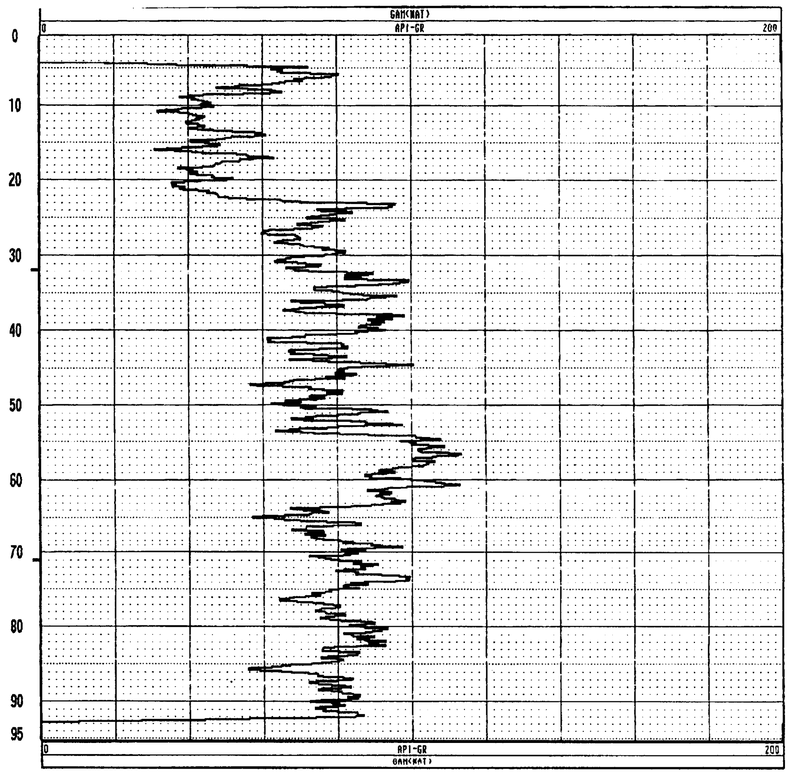

GEO-HYDRO-DATA

INCORPORATED

ELECTRIC WELL LOG

96-35

OTHER SERVICES:
INVOICE
9950

COMPANY : CAL TRANS
WELL : B 35 NEAR PIER 6 A
LOCATION/FIELD : CARQUBNEZ BRIDGE
COUNTY : CONTRA COSTA
STATE : CALIFORNIA
SECTION : . TOWNSHIP : . RANGE : .

DATE : 05/09/96 PERMANENT DATUM : GL ELEVATIONS
DEPTH DRILLER : 95 ELEV. PERM. DATUM: KB :
LOG BOTTOM : 95.40 LOG MEASURED FROM: GL DF :
LOG TOP : 0.80 DRL MEASURED FROM: GL GL :

CASING DRILLER : . LOGGING UNIT : 7
CASING TYPE : . FIELD OFFICE : TEHACHAPI
CASING THICKNESS: . RECORDED BY : K. KEMP

BIT SIZE : 3.75 BOREHOLE FLUID : FILE : ORIGINAL
MAGNETIC DECL. : . RM : . TYPE : 9041A
MATRIX DENSITY : . RM TEMPERATURE : . LOG : 3
FLUID DENSITY : . MATRIX DELTA T : . PLOT : 1 0
NEUTRON MATRIX : FLUID DELTA T : . THRESH: 3000
REMARKS :
DRILED BY: CAL TRANS
LOG RUN 5/9/96 1:10 PM

ALL SERVICES PROVIDED SUBJECT TO STANDARD TERMS AND CONDITIONS

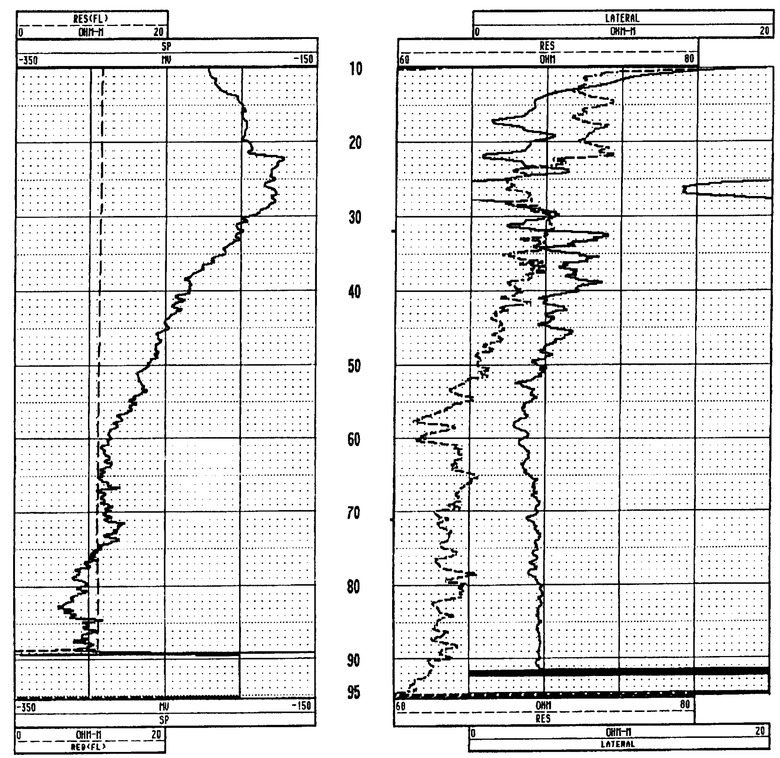

NO AS BUILT CHANGES
AS BUILT
CORRECTION BY BRIAN BEAUDOIN
CONTRACT NO. 04-043934
DATE FEBRUARY, 2002
STRUCTURES REPRESENTATIVE [illegible]

EARTHQUAKE RETROFIT - PROJECT No. SR-611

CARQUINEZ BRIDGE - SOUTH APPROACH

LOG OF TEST BORINGS 21 OF 35

ENGINEERING SERVICE CENTER	STRUCTURE FOUNDATIONS	FIELD INVESTIGATION BY:	State of CALIFORNIA DEPARTMENT OF TRANSPORTATION	DIVISION OF STRUCTURES STRUCTURE DESIGN	BRIDGE NO. 23-15 R/L
PREPARED BY	[illegible] 8/96				POST MILE CC-13.48 Sol-1.72
CHECKED BY					

ORIGINAL SCALE IN INCHES FOR REDUCED PLANS → 0 1 2 3

CU: 04
EA: 043921/043931

DISREGARD PRINTS BEARING EARLIER REVISION DATES →

REVISION DATES (PRELIMINARY STAGE ONLY)

SHEET 106 OF 120

TL 6051 REV. 7/96

ClibPDF - www.fastio.com