DIST	COUNTY	ROUTE	KILOMETER POST TOTAL PROJECT	SHEET No	TOTAL SHEETS
04	CC, Sol	80	19.5/22.7, 0.0/0.7	900	1050

Michael J Marquez 5-8-00
REGISTERED CIVIL ENGINEER

7-17-00
PLANS APPROVAL DATE

The State of California or its officers or agents shall not be responsible for the accuracy or completeness of electronic copies of this plan sheet.

Caltrans now has a web site! To get to the web site, go to: http://www.dot.ca.gov

Michael J Marquez No. 54355 Exp. 12-31-03 CIVIL STATE OF CALIFORNIA — REGISTERED PROFESSIONAL ENGINEER

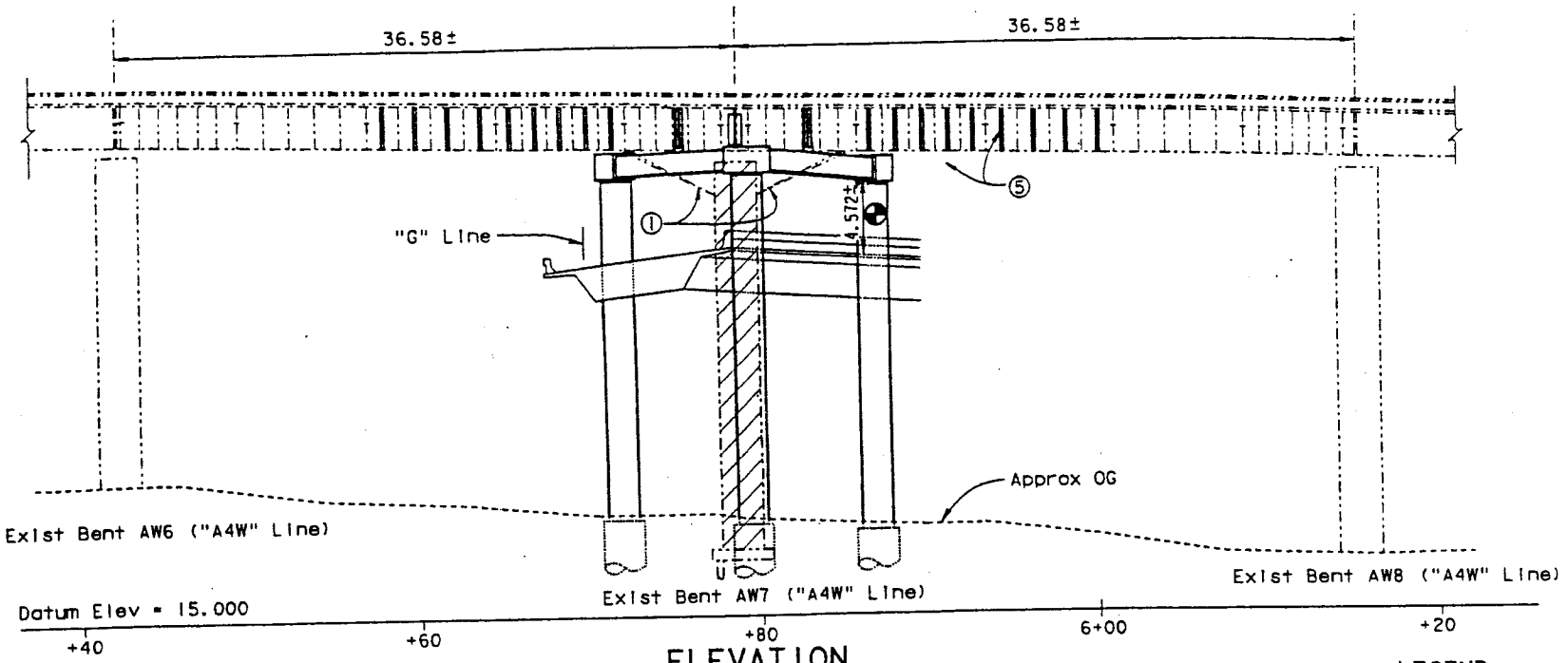

ELEVATION
1:200

QUANTITIES

STRUCTURE-EXCAVATION (BRIDGE)	6	m^3
STRUCTURE BACKFILL (BRIDGE)	3	m^3
2.4 m CAST-IN-DRILLED-HOLE CONCRETE PILING	74	m
STRUCTURAL CONCRETE, BRIDGE	324	m^3
BAR REINFORCING STEEL (BRIDGE)	129,500	kg
WELDED HEADED BAR REINFORCEMENT	120	EA
STRUCTURAL STEEL (BRIDGE)	4,580	kg
CLEAN AND PAINT STRUCTURAL STEEL	LUMP	SUM
SPOT BLAST CLEAN AND PAINT UNDERCOAT	3	m^2
WORK AREA MONITORING (LOCATION B)	LUMP	SUM

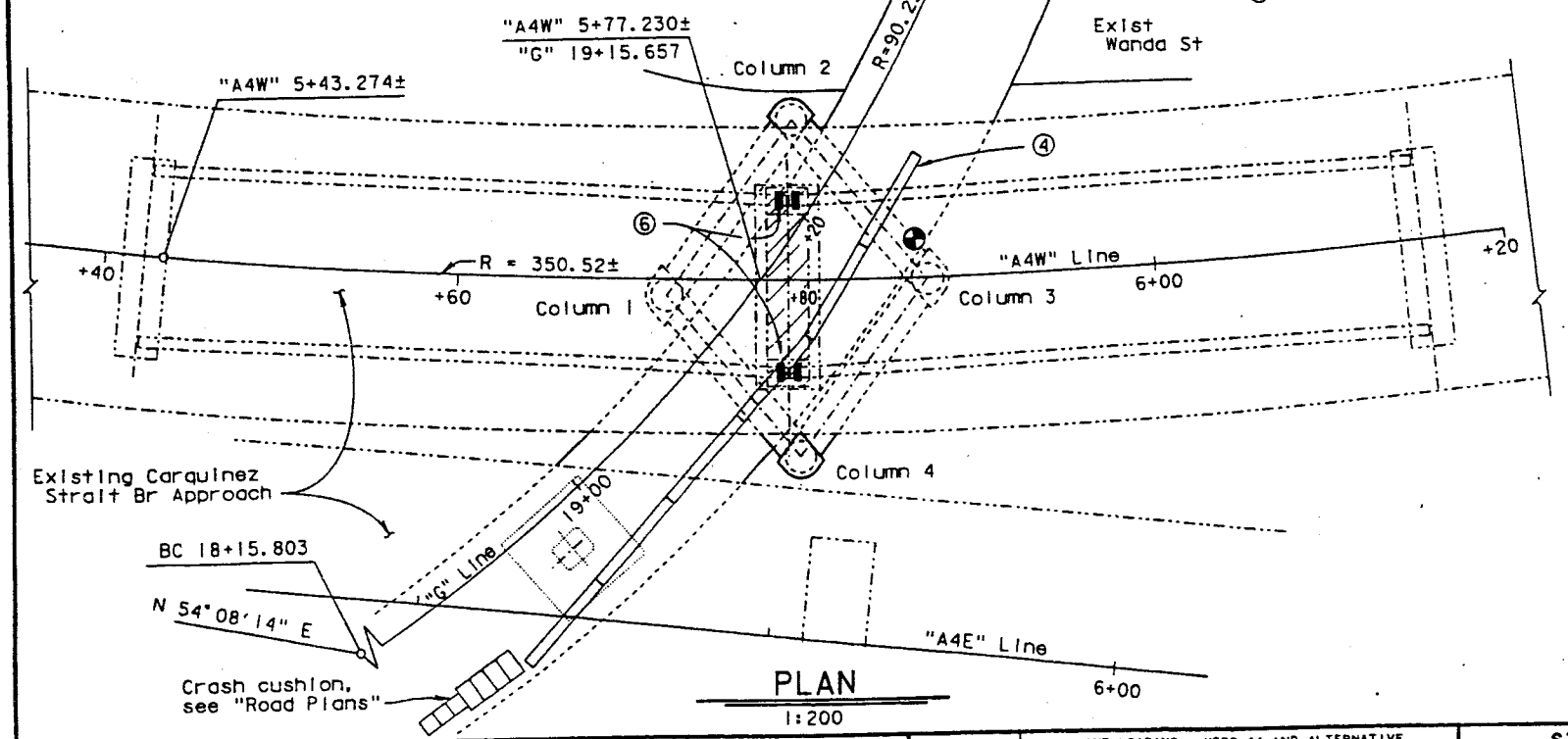

PLAN
1:200

LEGEND

1. Existing restrainer cables to be removed. Anchorage, at girders, to remain.
2. Existing restrainer cables and anchorage to be removed
3. Existing rocker bearings to be removed after loads have been transferred to new supports (see 'Construction Sequence', "Index to Plans" sheet)
4. Temporary Railing (Type K) see "Road Plans".
5. Place new Intermediate stiffeners
6. Place temporary Jacks

"G" Line	"A4W" Line
R = 90.250	R = 350.52±
Δ = 118°0'43"	Δ = 52°17'58"±
T = 150.236	T = 172.096±
L = 185.888	L = 319.954±

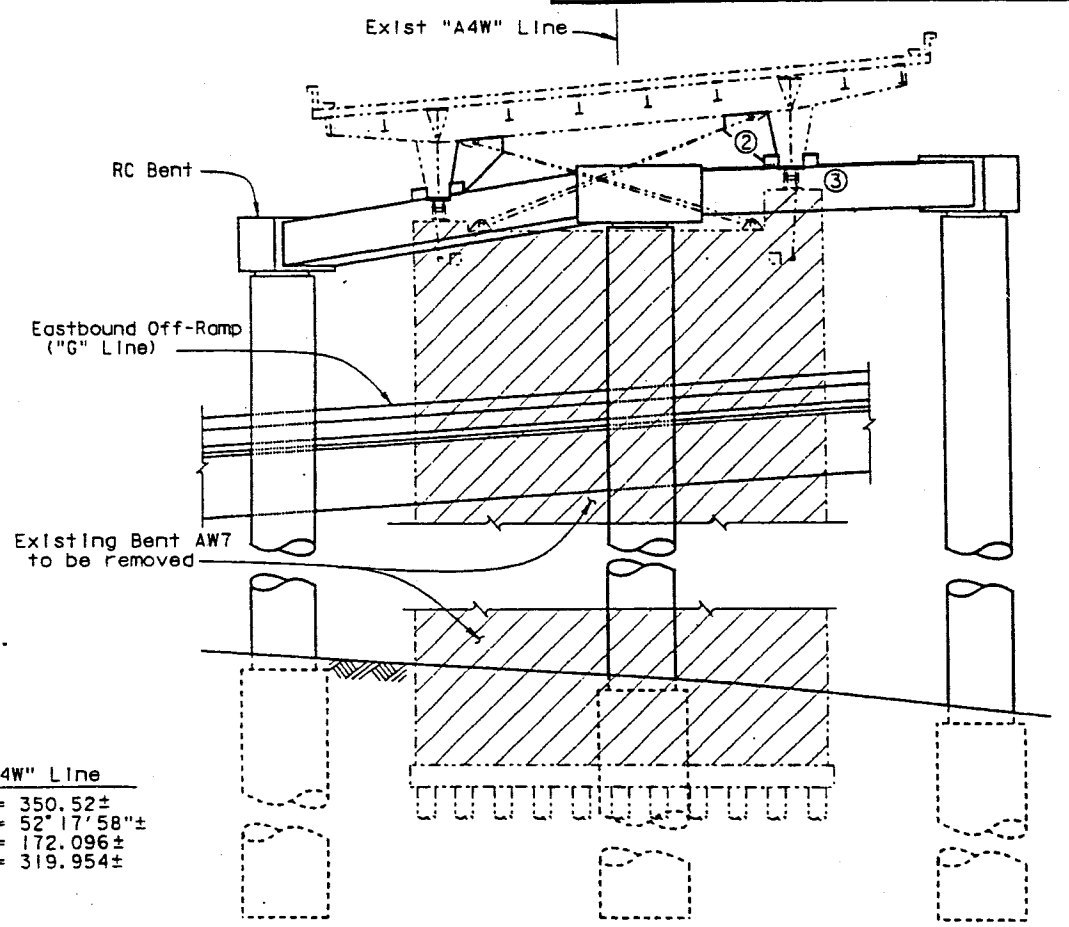

TYPICAL SECTION
1:100

Notes:

For 'Pile Data Table, 'General Notes' and 'Index to Plans', see "Index to Plans" sheet.

Indicates concrete removal. See "Existing "A4W" Line Bent 7 Demolition, Br. No. 23-0015" Structure Plans

Indicates point of min vertical clearance
edge of traveled way

For "G" Line structure details, see "Crockett Off-Ramp Eastbound, Br. No. 0369S" Structure Plans

NOTE:
THE CONTRACTOR SHALL VERIFY ALL CONTROLLING FIELD DIMENSIONS BEFORE ORDERING OR FABRICATING ANY MATERIAL.

ALL DIMENSIONS ARE IN METERS UNLESS OTHERWISE SHOWN

Joseph E Downing 5-8-00
DESIGN ENGINEER

DESIGN	BY Quang Nguyen	CHECKED Garry Tolen	LOAD FACTOR DESIGN	LIVE LOADING: HS20-44 AND ALTERNATIVE AND PERMIT DESIGN LOAD	
DETAILS	BY Nancy C Gwynn	CHECKED Garry Tolen	LAYOUT	BY Quang Nguyen	CHECKED Garry Tolen
QUANTITIES	BY Eric Burgeson	CHECKED Scott Mawhinney	SPECIFICATIONS	BY Steve Margaris	PLANS AND SPECS COMPARED Steve Margaris

STRUCTURES DESIGN GENERAL PLAN SHEET (METRIC) (REV. 3/1/99)

ORIGINAL SCALE IN MILLIMETERS FOR REDUCED PLANS 0 10 20 30 40 50 60 70 80 90 100

STATE OF CALIFORNIA
DEPARTMENT OF TRANSPORTATION

DIVISION OF STRUCTURES
STRUCTURE DESIGN 3

CU 04206
EA 013051

FILE => 04-013051-0900_26.25026

BRIDGE NO. 23-0015L
KILOMETER POST 21.67 (13.47)

"A4W" LINE BENT 7 REPLACEMENT
GENERAL PLAN

DISREGARD PRINTS BEARING EARLIER REVISION DATES →

REVISION DATES (PRELIMINARY STAGE ONLY)

												SHEET	OF
5-1-00												1	11

USERNAME => tomonguye DATE PLOTTED => 26-Jul-2000 TIME PLOTTED => 12:50

THIS IS A COPY

DIST	COUNTY	ROUTE	KILOMETER POST TOTAL PROJECT	SHEET No	TOTAL SHEETS
04	CC, Sol	80	19.5/22.7 0.0/0.7	901	1050

Caltrans Metric

Michael J Marquez 5-8-00
REGISTERED CIVIL ENGINEER

7-17-00
PLANS APPROVAL DATE

Michael J Marquez No. 54355 Exp. 12-31-03 CIVIL STATE OF CALIFORNIA

The State of California or its officers or agents shall not be responsible for the accuracy or completeness of electronic copies of this plan sheet.

Caltrans now has a web site! To get to the web site, go to: http://www.dot.ca.gov

INDEX TO PLANS

Sheet No.	Title
1	General Plan
2	Index to Plans
3	Foundation Plan
4	Bent Layout
5	Bent Details No. 1
6	Bent Details No. 2
7	Bent Details No. 3
8	Girder Layout
9	Girder Details No. 1
10	Girder Details No. 2
11	Girder Details No. 3

STANDARD PLANS dated JULY 1999

A10A Abbreviations

GENERAL NOTES
LOAD FACTOR DESIGN

DESIGN: BRIDGE DESIGN SPECIFICATIONS (1983 AASHTO with Interims and Revisions by CALTRANS)

LIVE LOADING: HS20-44 and alternative and permit design load (P-11)

SEISMIC LOADING: See 'Site Specific ARS Curve'

REINFORCED CONCRETE: f_y = 420 MPa

f'_c = see 'Concrete Strength and Type Limits'

n = 9

STRUCTURAL STEEL:

Existing - Floor Beams, Stringers, Cross Frames, Lateral Bracing A7-46 f_y = 228 MPa

Girder and components A242-91 f_y = 345 MPa, 19.05 mm and under f_y = 310 MPa, 19.05 mm - 38.1 mm, f_y = 278 MPa over 38.1 mm

New - A709 Grade 50 [345] fy = 345 MPA

HS Structural Bolts - A325. No bolt threads are permitted in shear planes

UTILITIES: There are air lines, electrical conduits and wiring, communication conduits and wiring plus access walkways and ladders installed on the bridge which are not depicted in the plans. The Contractor may with the approval of the engineer, relocate or temporarily remove utilities that interfere with work. The Contractor is responsible for reinstalling all utilities removed and for demonstrating to the Engineer that the reinstalled utilities perform their function satisfactorily.

PILE DATA TABLE

Location	Pile Type	Design Loading	Nominal Resistance		Design Tip Elevation (m)	Specified Tip Elevation (m)
			Compression	Tension		
Column 1	2.4 m ø CIDH	N/A	6670 kN	0	1.8 (1) 4.8 (2)	1.8
Column 2	2.4 m ø CIDH	N/A	6670 kN	0	1.8 (1) 4.8 (2)	1.8
Column 3	2.4 m ø CIDH	N/A	6670 kN	0	1.8 (1) 4.8 (2)	1.8
Column 4	2.4 m ø CIDH	N/A	6670 kN	0	1.8 (1) 4.8 (2)	1.8

Note:
Design Tip Elevation is controlled by the following demands:
(1) Compression (2) Lateral Loads

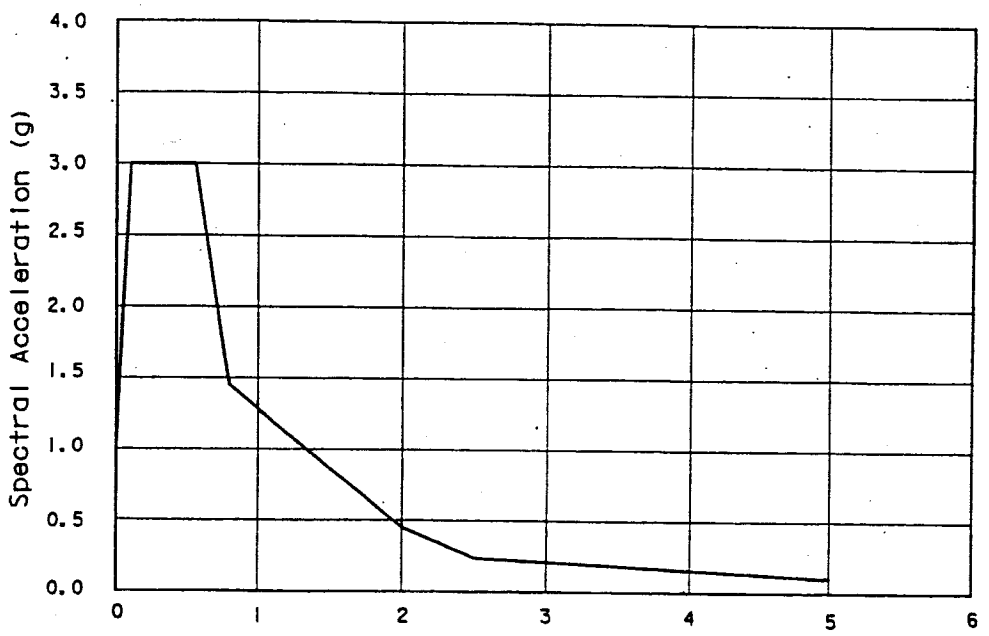

SITE SPECIFIC ARS CURVE

No Scale

CONSTRUCTION SEQUENCE

1. Place all stiffeners, braces, cross frames and girder connections
2. Place temporary Jacks at existing Bent AW7 under each girder (snug tight only)
3. Construct new bents and bearing
4. Jack bridge and remove existing bearings
5. Using temporary Jacks, transfer loads to new bearings
6. Remove existing Bent AW7

Temporary Jack Loads per Girder	
Dead Load	Max Live Load
980 kN	1200 kN

Note:
Jacking system must be capable of resisting the dead and live loads shown in the chart for each girder

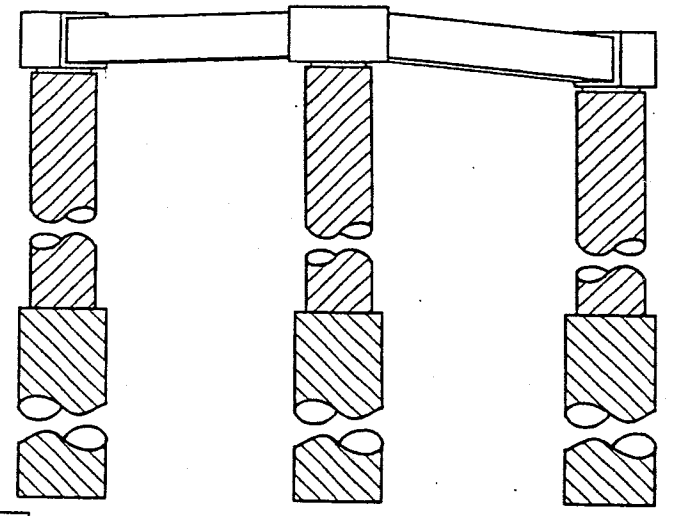

Structural Concrete, Bridge (35 MPa @ 28 days)
Structural Concrete, Bridge (25 MPa @ 28 days)
Cast-In-Drilled-Hole Concrete Pile (25 MPa @ 28 days)

CONCRETE STRENGTH AND TYPE LIMITS

No Scale

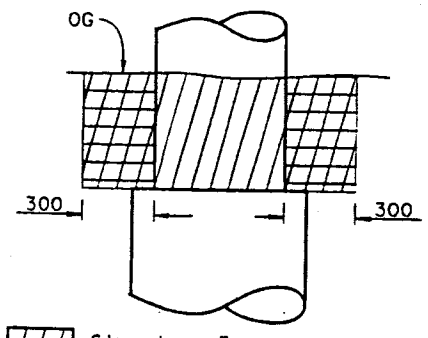

Structure Excavation, Bridge
Structure Backfill, Bridge

PAY LIMITS OF EXCAVATION & BACKFILL

No Scale

NOTE:
THE CONTRACTOR SHALL VERIFY ALL CONTROLLING FIELD DIMENSIONS BEFORE ORDERING OR FABRICATING ANY MATERIAL.

ALL DIMENSIONS ARE IN MILLIMETERS UNLESS OTHERWISE SHOWN

DESIGN	BY Quang Nguyen	CHECKED Garry Tolen	STATE OF CALIFORNIA DEPARTMENT OF TRANSPORTATION
DETAILS	BY Nancy C Gwynn	CHECKED Garry Tolen	DIVISION OF STRUCTURES STRUCTURE DESIGN 3
QUANTITIES	BY Eric Burgenson	CHECKED Scott Mawhinney	CU 04206 EA 013501

BRIDGE NO. 28-0015L
KILOMETER POST 21.67 (13.47)

"A4W" LINE BENT 7 REPLACEMENT

INDEX TO PLANS

DISREGARD PRINTS BEARING EARLIER REVISION DATES

REVISION DATES (PRELIMINARY STAGE ONLY)

SHEET 2 OF 11

STRUCTURES DESIGN DETAIL SHEET (METRIC) REV. 3/1/99

ORIGINAL SCALE IN MILLIMETERS FOR REDUCED PLANS 0 10 20 30 40 50 60 70 80 90 100

FILE => 04-013051*0901_26:25037

USERNAME => TIME PLOTTED => 12:51 DATE PLOTTED => 26-Jul-2000

THIS IS A COPY

NO	R	Δ	T	L	N	E	Alignment
3	389.000	49° 12' 14"	178.114	334.061	174062.225	457845.983	"D3" Line
4	90.250	118° 00' 43"	150.237	185.888	173798.344	458091.525	"G" Line
5	350.520±	52° 17' 58"±	172.096±	319.954±	174055.533±	457927.668±	"A4W" Line

DIST	COUNTY	ROUTE	KILOMETER POST TOTAL PROJECT	SHEET NO	TOTAL
04	CC, Sol	80	19.5/22.7, 0.0/0.7	902	1050

Caltrans Metric

Michael Marquez 5-8-00
REGISTERED CIVIL ENGINEER

7-17-00
PLANS APPROVAL DATE

REGISTERED PROFESSIONAL ENGINEER Michael J Marquez No. 54355 Exp. 12-31-03 CIVIL STATE OF CALIFORNIA

The State of California or its officers or agents shall not be responsible for the accuracy or completeness of electronic copies of this plan sheet.

Caltrans now has a web site! To get to the web site, go to: http://www.dot.ca.gov

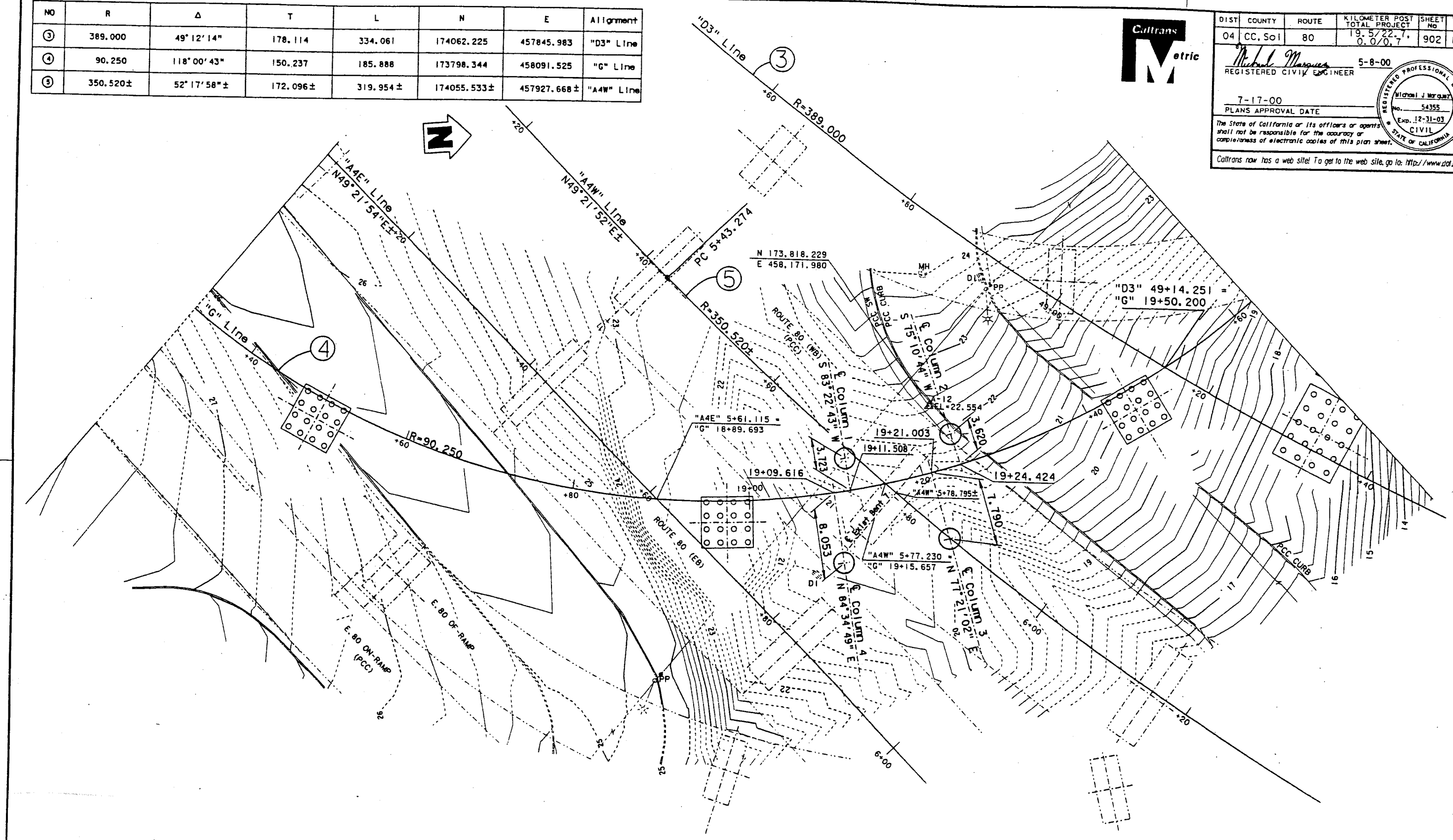

ALL DIMENSIONS ARE IN METERS UNLESS OTHERWISE SHOWN

PRELIMINARY INVESTIGATION SECTION

SCALE 1:200	VERT. DATUM NGVD29	PHOTOGRAMMETRY AS OF:			
	HORZ. DATUM NAD27	SURVEYED	BY A. LASLL 1/99	DRAFTED	BY M. ZUBEIDI 7/99
ALIGNMENT TIES DISTRICT TRAV. SHEET		FIELD CHECKED	BY	CHECKED	BY J. RING 8/99

STRUCTURES FOUNDATION PLAN SHEET (METRIC) (REV. 3/1/99)

DESIGN	BY Quang Nguyen	CHECKED Garry Tolen
DETAILS	BY Nancy C Gwynn	CHECKED Garry Tolen
QUANTITIES	BY Eric Burgeson	CHECKED Scott Mawhinney

ORIGINAL SCALE IN MILLIMETERS FOR REDUCED PLANS 0 10 20 30 40 50 60 70 80 90 100

STATE OF CALIFORNIA
DEPARTMENT OF TRANSPORTATION

DIVISION OF STRUCTURES
STRUCTURE DESIGN 3

CU 04206
EA 013051

BRIDGE NO. 23-0015L
KILOMETER POST 21.67 (13.47)

DISREGARD PRINTS BEARING EARLIER REVISION DATES

REVISION DATES (PRELIMINARY STAGE ONLY) 10-5-99 1-14-00 4-14-00

"A4W" LINE BENT 7 REPLACEMENT
FOUNDATION PLAN

SHEET 3 OF 11

FILE => 04-013051*0902_26125049

USERNAME => tranguye DATE PLOTTED => 26-Jul-2000 TIME PLOTTED => 12:51

THIS IS A COPY

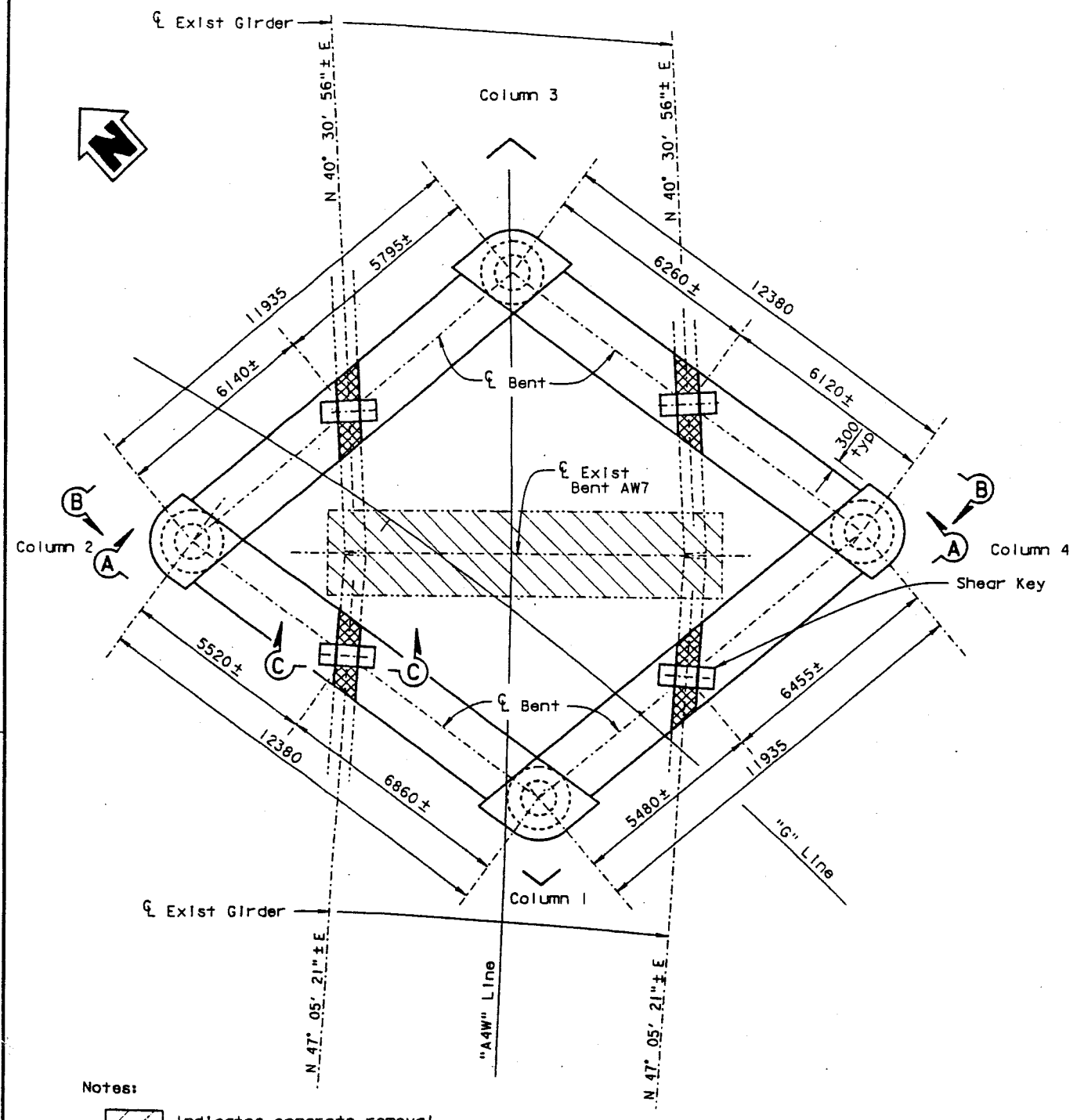

Notes:

Indicates concrete removal

Expanded Polystyrene, same thickness as Bearing Pad

For 'Section C - C' see "Bent Details No. 2" sheet

PLAN

1:80

NOTE:
THE CONTRACTOR SHALL VERIFY ALL CONTROLLING FIELD DIMENSIONS BEFORE ORDERING OR FABRICATING ANY MATERIAL.

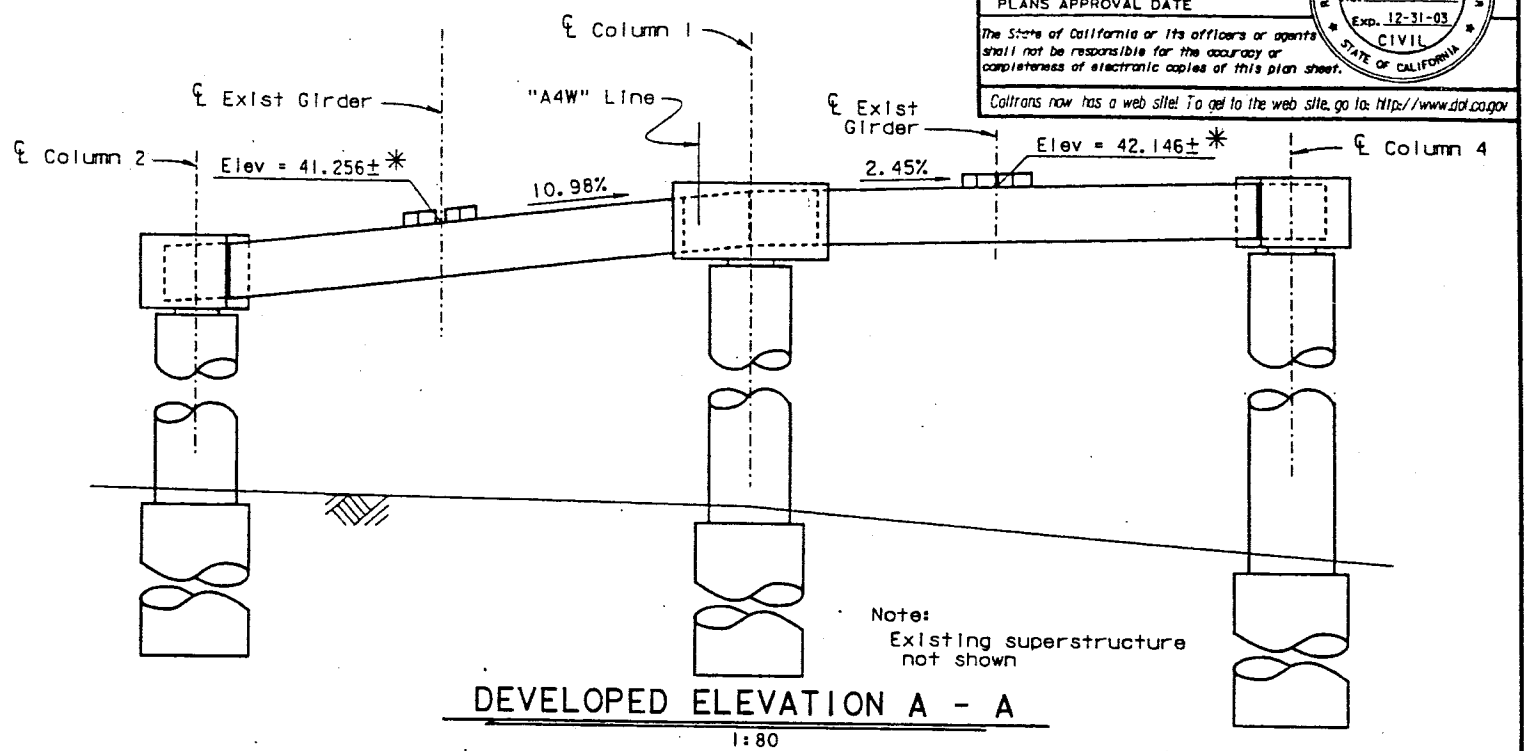

Note:
Existing superstructure not shown

DEVELOPED ELEVATION A - A

1:80

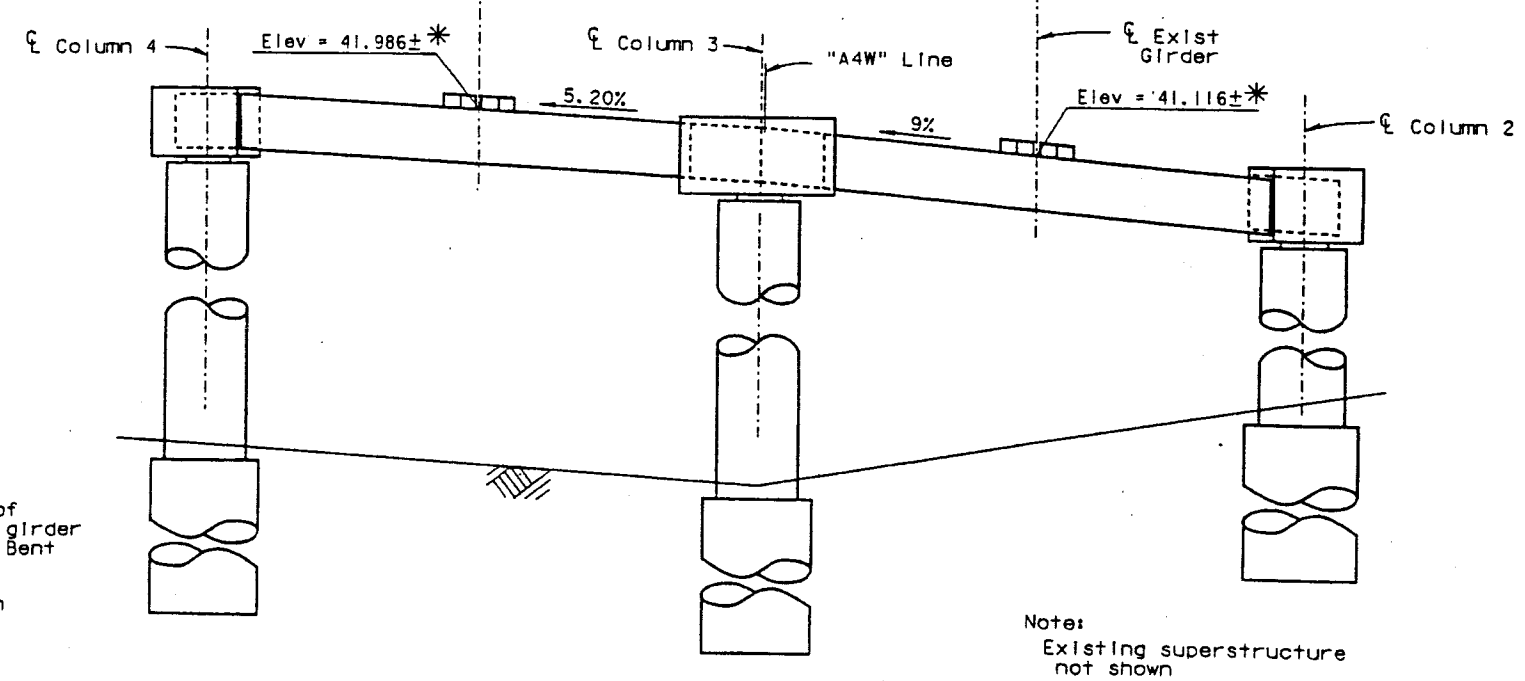

Notes:

* Elev at bottom of existing steel girder taken at ℄ New Bent

Elevations shown are in meters

Note:
Existing superstructure not shown

DEVELOPED ELEVATION B - B

1:80

ALL DIMENSIONS ARE IN MILLIMETERS UNLESS OTHERWISE SHOWN

Caltrans Metric

DIST	COUNTY	ROUTE	KILOMETER POST TOTAL PROJECT	SHEET No	TOTAL SHEETS
04	CC, Sol	80	19.5/22.7, 0.0/0.7	903	1050

Michael Marquez 5-8-00
REGISTERED CIVIL ENGINEER

7-17-00
PLANS APPROVAL DATE

REGISTERED PROFESSIONAL ENGINEER — Michael J Marquez — No. 54355 — Exp. 12-31-03 — CIVIL — STATE OF CALIFORNIA

The State of California or its officers or agents shall not be responsible for the accuracy or completeness of electronic copies of this plan sheet.

Caltrans now has a web site! To get to the web site, go to: http://www.dot.ca.gov

DESIGN	BY Duong Nguyen	CHECKED Garry Tolen	
DETAILS	BY Nancy C Gwynn	CHECKED Garry Tolen	
QUANTITIES	BY Eric Burgeson	CHECKED S. Mawhinney/J. Aquino	

STATE OF CALIFORNIA
DEPARTMENT OF TRANSPORTATION
DIVISION OF STRUCTURES
STRUCTURE DESIGN 3

BRIDGE NO. 23-0015L
KILOMETER POST 21.67 (13.47)

"A4W" LINE BENT 7 REPLACEMENT
BENT LAYOUT

CU 04206
EA 013051

DISREGARD PRINTS BEARING EARLIER REVISION DATES

REVISION DATES (PRELIMINARY STAGE ONLY)

SHEET 4 OF 11

STRUCTURES DESIGN DETAIL SHEET (METRIC) REV. 3/1/99

ORIGINAL SCALE IN MILLIMETERS FOR REDUCED PLANS 0 10 20 30 40 50 60 70 80 90 100

FILE => 04-013051*0903_26125055

USERNAME => tmmoye DATE PLOTTED => 26-Jul-2000 TIME PLOTTED => 12:52

THIS IS A COPY

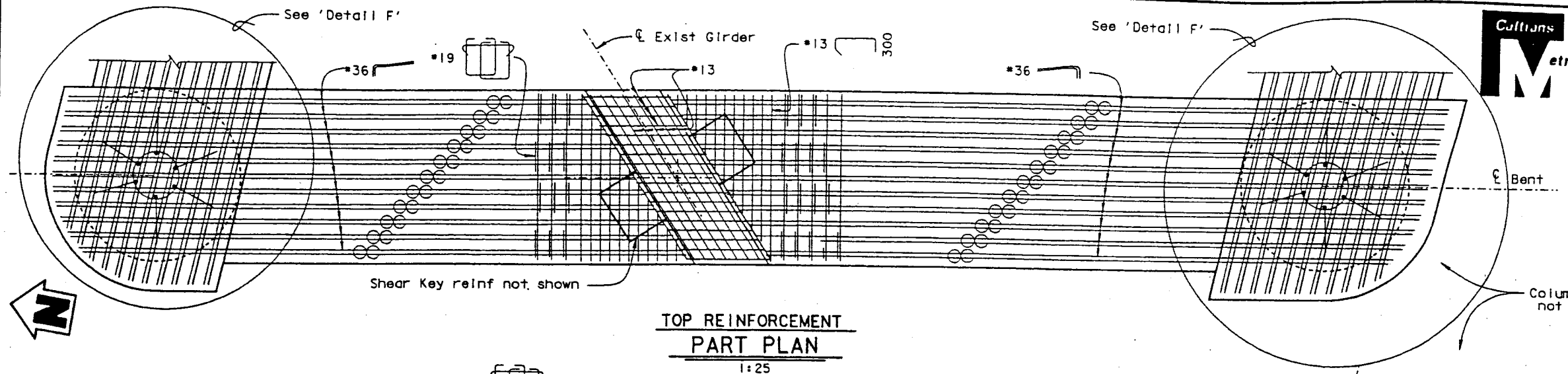

TOP REINFORCEMENT
PART PLAN
1:25

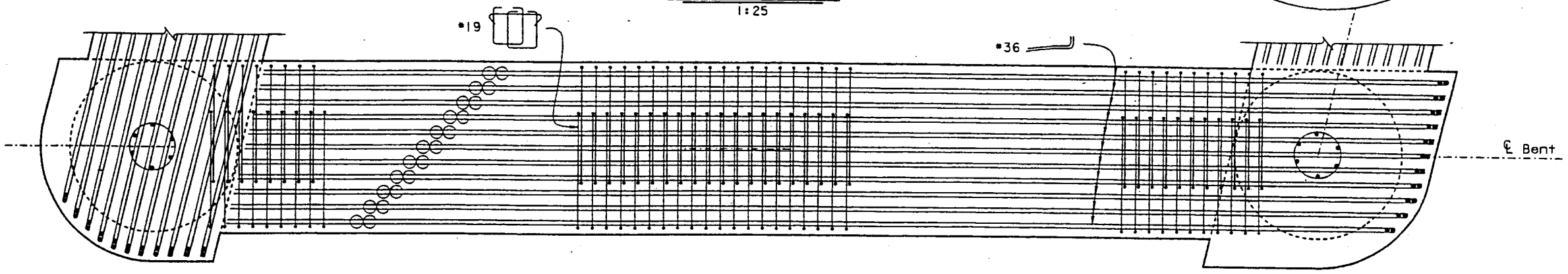

BOTTOM REINFORCEMENT
PART PLAN
1:25

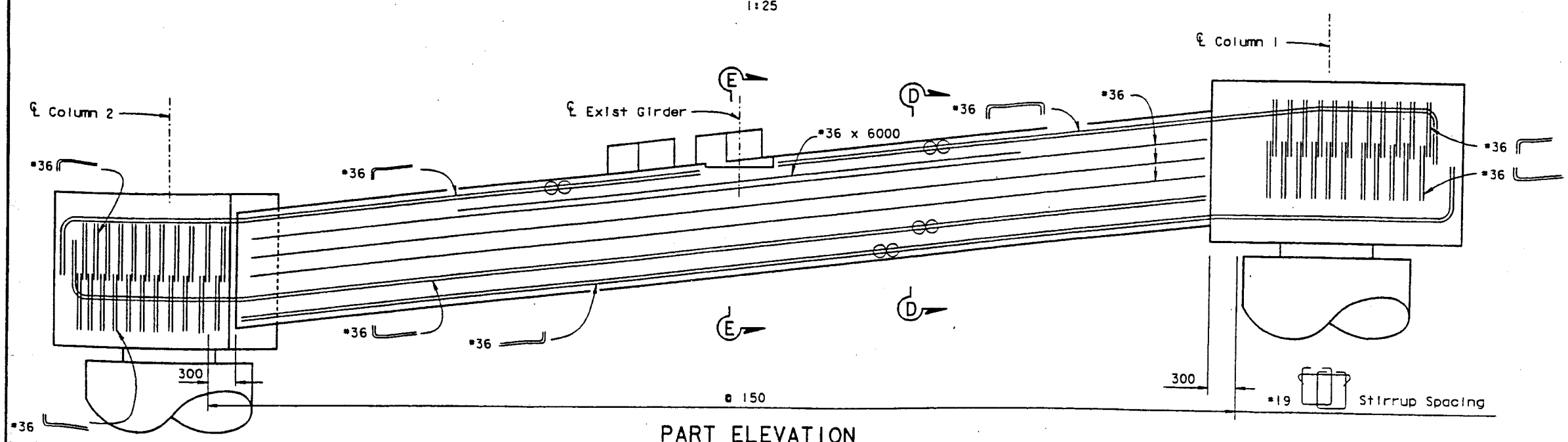

PART ELEVATION
1:25

Note:
⊂⊃ Indicates bundled bars

For 'Section D - D' and 'Section E - E', see "Bent Details No. 2" sheet

For 'Detail 'F','Shear Key' detail and details not shown, see "Bent Details No. 3" sheet

NOTE:
THE CONTRACTOR SHALL VERIFY ALL CONTROLLING FIELD DIMENSIONS BEFORE ORDERING OR FABRICATING ANY MATERIAL.

ALL DIMENSIONS ARE IN MILLIMETERS UNLESS OTHERWISE SHOWN

Caltrans Metric

DIST	COUNTY	ROUTE	KILOMETER POST TOTAL PROJECT	SHEET No	TOTAL SHEETS
04	CC, Sol	80	19.5/22.7, 0.0/0.7	904	1050

Michael J Marquez 5-8-00
REGISTERED CIVIL ENGINEER

7-17-00
PLANS APPROVAL DATE

REGISTERED PROFESSIONAL ENGINEER — Michael J Marquez — No. 54355 — Exp. 12-31-03 — CIVIL — STATE OF CALIFORNIA

The State of California or its officers or agents shall not be responsible for the accuracy or completeness of electronic copies of this plan sheet.

Caltrans now has a web site! To get to the web site, go to: http://www.dot.ca.gov

	BY	CHECKED
DESIGN	Duang Nguyen	Garry Tolen
DETAILS	Nancy C Gwynn	Garry Tolen
QUANTITIES	Eric Burgeson	S. Mawhinney/J. Aquino

STATE OF CALIFORNIA
DEPARTMENT OF TRANSPORTATION

DIVISION OF STRUCTURES
STRUCTURE DESIGN 3

BRIDGE NO. 23-0015L
KILOMETER POST 21.67 (13.47)

"A4W" LINE BENT 7 REPLACEMENT

BENT DETAILS NO. 1

CU 04206
EA 013051

DISREGARD PRINTS BEARING EARLIER REVISION DATES →

REVISION DATES (PRELIMINARY STAGE ONLY)
3-17-00 | 5-8-00 | 6-14-00

SHEET 5 OF 11

STRUCTURES DESIGN DETAIL SHEET (METRIC) REV. 3/1/99

ORIGINAL SCALE IN MILLIMETERS FOR REDUCED PLANS 0 10 20 30 40 50 60 70 80 90 100

FILE => 04-013051-0904_26125107

USERNAME => N.Nguyen DATE PLOTTED => 26-Jul-2000 TIME PLOTTED => 12:53

THIS IS A COPY

Caltrans now has a web site! To get to the web site, go to: http://www.dot.ca.gov

DIST	COUNTY	ROUTE	KILOMETER POST TOTAL PROJECT	SHEET No	TOTAL SHEETS
04	CC, Sol	80	19.5/22.7, 0.0/0.7	905	1050

Caltrans Metric

Michael Marquez 5-8-00
REGISTERED CIVIL ENGINEER

7-17-00
PLANS APPROVAL DATE

REGISTERED PROFESSIONAL ENGINEER Michael J Marquez No. 54355 Exp. 12-31-03 CIVIL STATE OF CALIFORNIA

The State of California or its officers or agents shall not be responsible for the accuracy or completeness of electronic copies of this plan sheet.

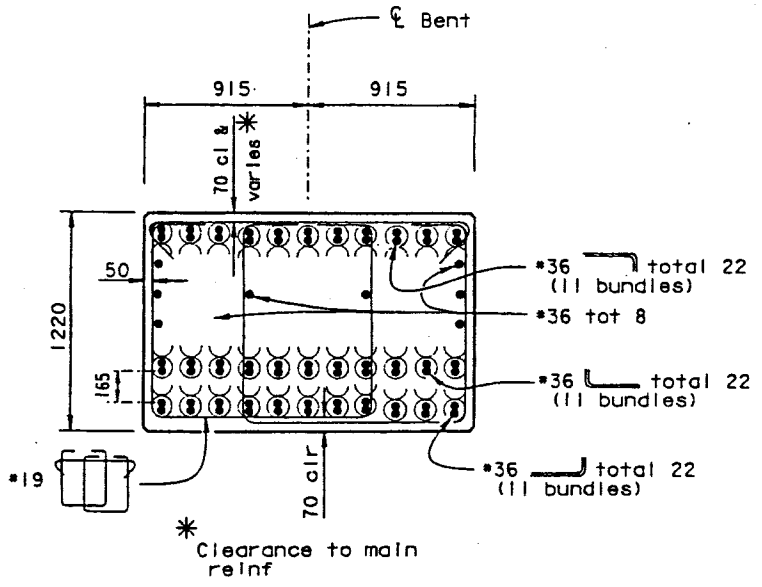

SECTION D - D
1:20

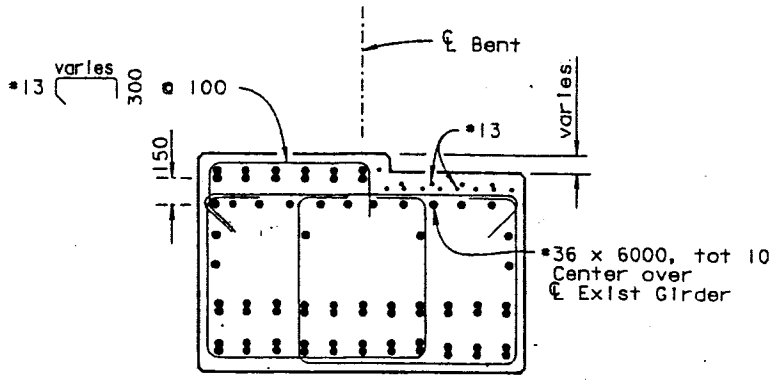

Note:
For details not shown, see 'Section D - D'

SECTION E - E
1:20

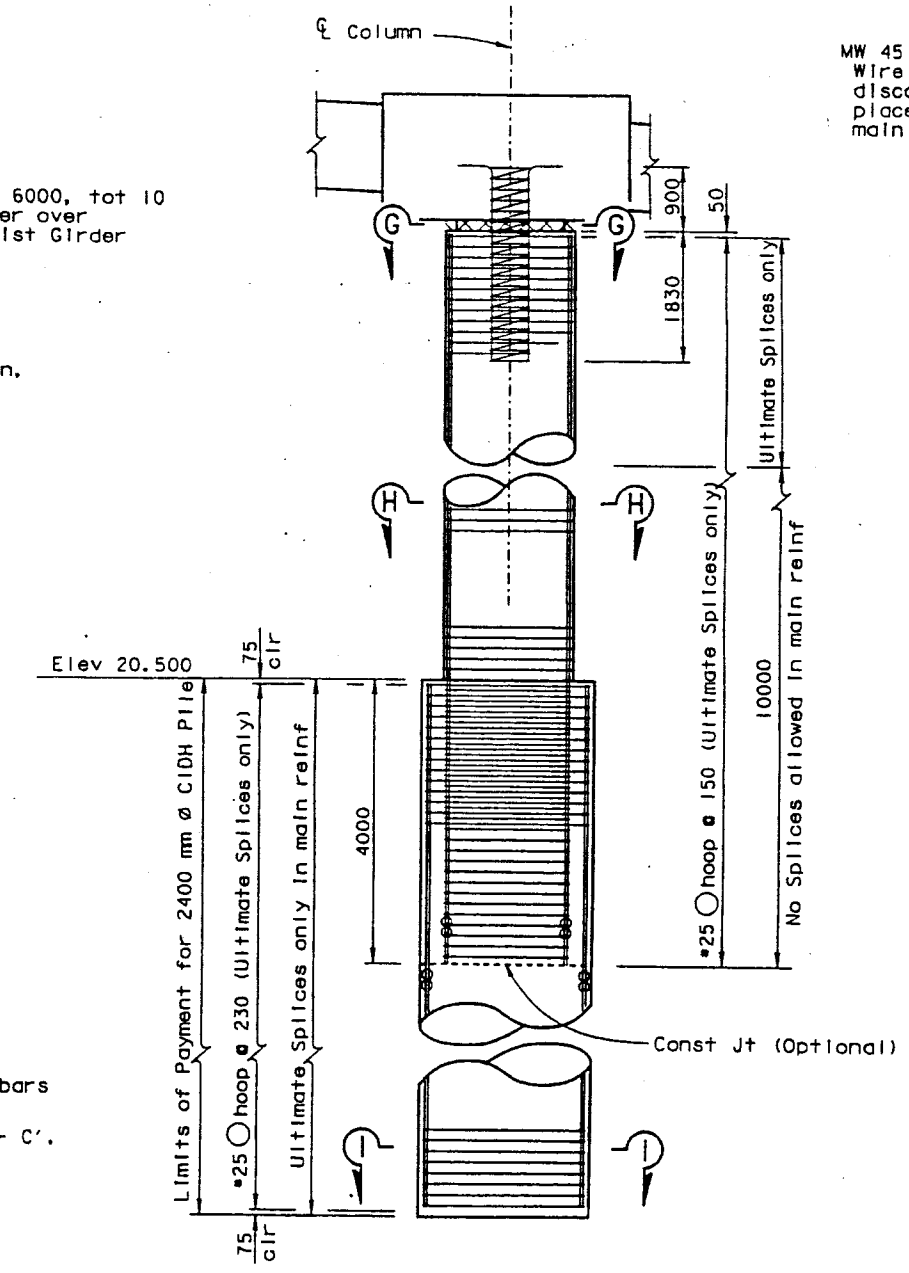

PART ELEVATION
1:50

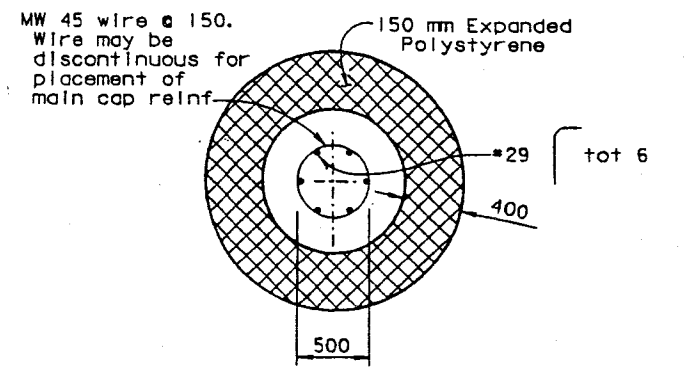

SECTION G - G
1:25

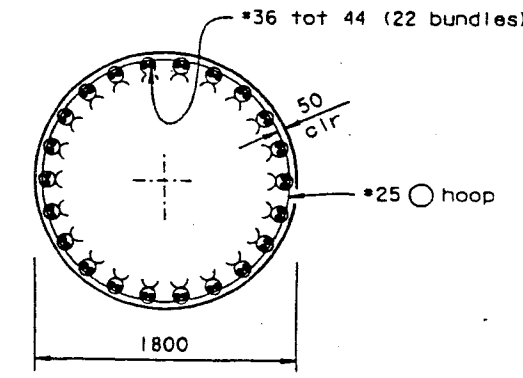

SECTION H - H
1:25

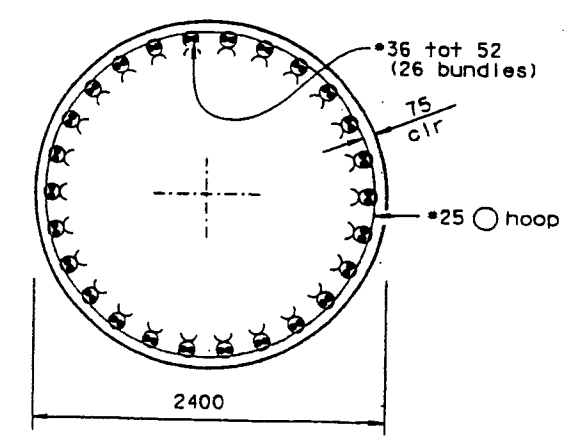

SECTION I - I
1:25

ALL DIMENSIONS ARE IN MILLIMETERS UNLESS OTHERWISE SHOWN

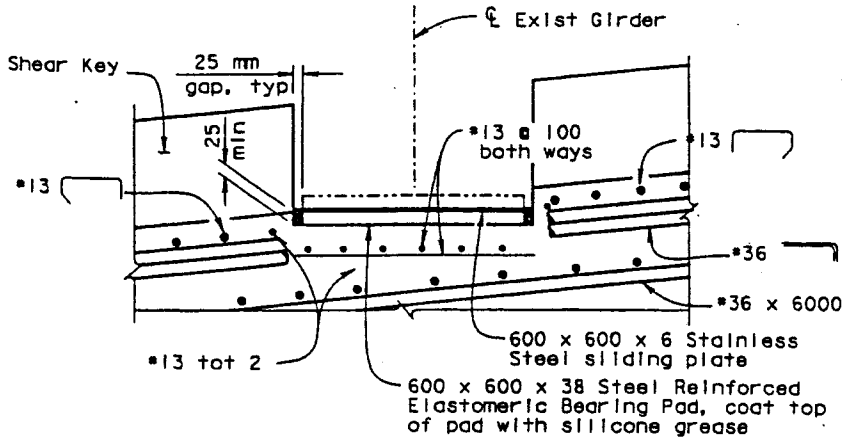

SECTION C - C
1:10

Notes:

Indicates bundled bars

For location of 'Section C - C', see "Bent Layout" sheet

Elevation shown in meters

NOTE:
THE CONTRACTOR SHALL VERIFY ALL CONTROLLING FIELD DIMENSIONS BEFORE ORDERING OR FABRICATING ANY MATERIAL.

DESIGN	BY Quang Nguyen	CHECKED Garry Tolen	
DETAILS	BY Nancy C Gwynn	CHECKED Garry Tolen	
QUANTITIES	BY Eric Burgeson	CHECKED S. Mawhinney/J. Aquino	

STATE OF CALIFORNIA
DEPARTMENT OF TRANSPORTATION

DIVISION OF STRUCTURES
STRUCTURE DESIGN 3

BRIDGE NO. 23-0015L
KILOMETER POST 21.67 (13.47)

"A4W" LINE BENT 7 REPLACEMENT
BENT DETAILS NO. 2

STRUCTURES DESIGN DETAIL SHEET (METRIC) REV. 3/1/99

ORIGINAL SCALE IN MILLIMETERS FOR REDUCED PLANS 0 10 20 30 40 50 60 70 80 90 100

CU 04206
EA 013051

DISREGARD PRINTS BEARING EARLIER REVISION DATES

REVISION DATES (PRELIMINARY STAGE ONLY)

SHEET 6 OF 11

FILE => 04-013051*0905_26::0910

USERNAME => trrone DATE PLOTTED => 26-Jul-2000 TIME PLOTTED => 11:13

THIS IS A COPY

DIST	COUNTY	ROUTE	KILOMETER POST TOTAL PROJECT	SHEET No	TOTAL SHEETS
04	CC, Sol	80	19.5/22.7, 0.0/0.7	906	1050

Caltrans Metric

Michael Marquez 5-8-00
REGISTERED CIVIL ENGINEER

7-17-00
PLANS APPROVAL DATE

REGISTERED PROFESSIONAL ENGINEER Michael J Marquez No. 54355 Exp. 12-31-03 CIVIL STATE OF CALIFORNIA

The State of California or its officers or agents shall not be responsible for the accuracy or completeness of electronic copies of this plan sheet.

Caltrans now has a web site! To get to the web site, go to: http://www.dot.ca.gov

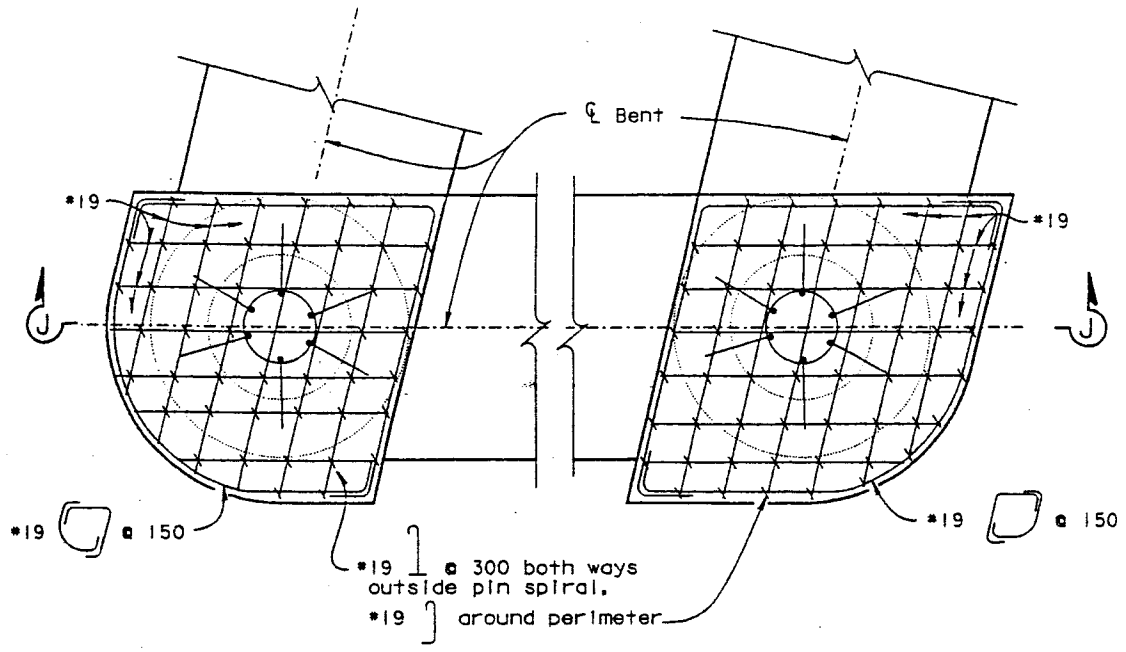

Notes:
Main cap reinf not shown
For location of 'Detail F', see "Bent Details No. 1" sheet

DETAIL 'F'
1:25

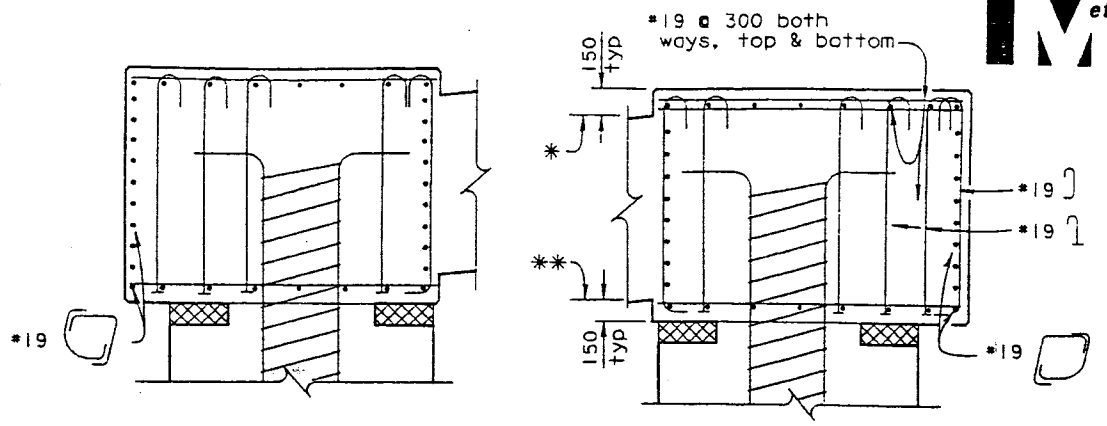

Notes:
Main cap reinf not shown
* Highest Elev of Intersecting Bents, typ
** Lowest Elev of Intersecting Bents, typ

SECTION J - J
1:25

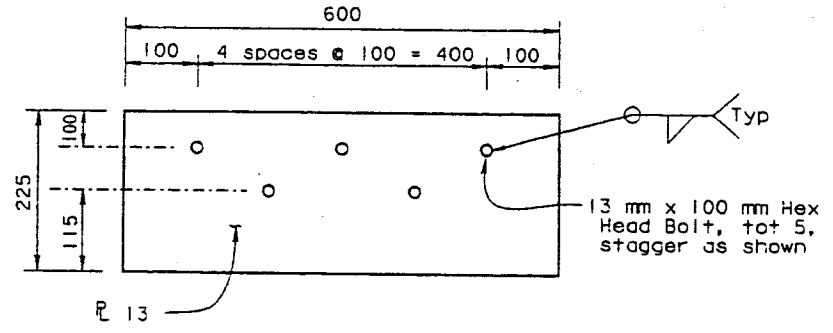

SIDE PLATE
1:5

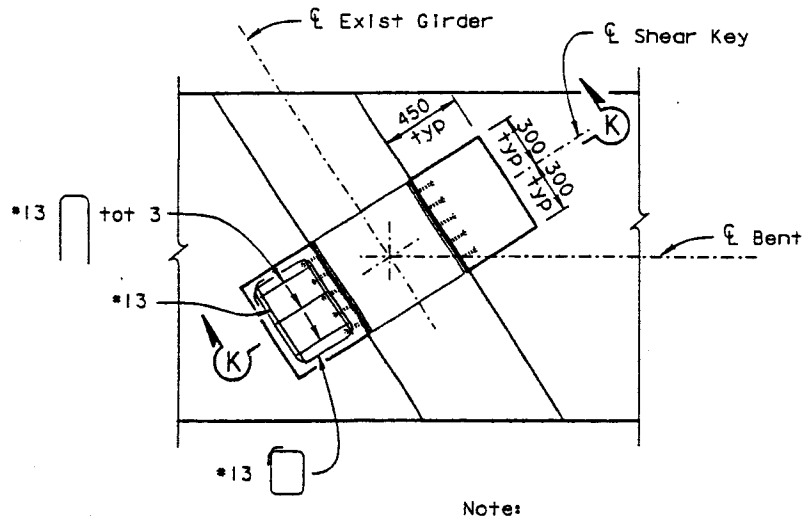

Note:
Exist girder not shown

SHEAR KEY
1:20

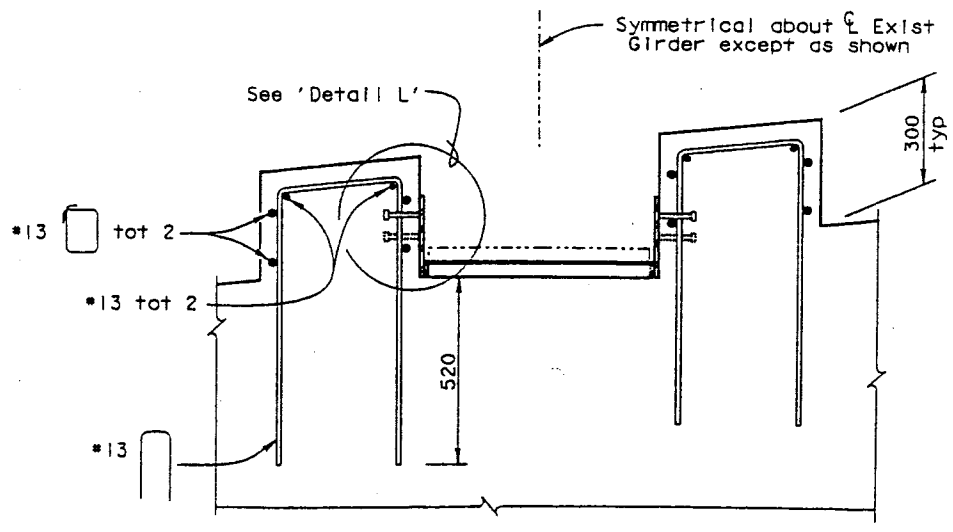

SECTION K - K
1:10

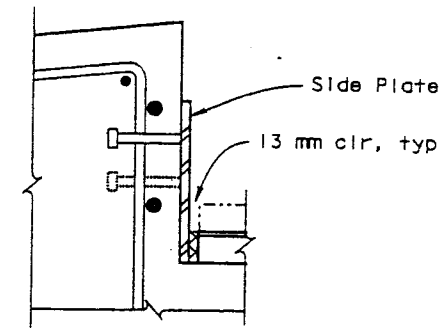

DETAIL 'L'
1:5

NOTE:
THE CONTRACTOR SHALL VERIFY ALL CONTROLLING FIELD DIMENSIONS BEFORE ORDERING OR FABRICATING ANY MATERIAL.

ALL DIMENSIONS ARE IN MILLIMETERS UNLESS OTHERWISE SHOWN

	BY	CHECKED
DESIGN	Quang Nguyen	Garry Tolen
DETAILS	Nancy C Gwynn	Garry Tolen
QUANTITIES	Eric Burgeson	S. Mawhinney/J. Aquino

STATE OF CALIFORNIA
DEPARTMENT OF TRANSPORTATION

DIVISION OF STRUCTURES
STRUCTURE DESIGN 3

BRIDGE NO. 23-0015L
KILOMETER POST 21.67 (13.47)

"A4W" LINE BENT 7 REPLACEMENT
BENT DETAILS NO. 3

STRUCTURES DESIGN DETAIL SHEET (METRIC) REV. 3/1/99

ORIGINAL SCALE IN MILLIMETERS FOR REDUCED PLANS 0 10 20 30 40 50 60 70 80 90 100

CU 04206
EA 013051

DISREGARD PRINTS BEARING EARLIER REVISION DATES

REVISION DATES (PRELIMINARY STAGE ONLY) 9-13-99 10-13-99 2-14-00 4-14-00

SHEET 7 OF 11

FILE => 04-013051=0906_26110903

USERNAME => lrrgne DATE PLOTTED => 26-Jul-2000 TIME PLOTTED => 11:12

Caltrans Metric

DIST	COUNTY	ROUTE	KILOMETER POST TOTAL PROJECT	SHEET No	TOTAL SHEETS
04	CC, Sol	80	19.5/22.7, 0.0/0.7	907	1050

Michael Marquez 5-8-00
REGISTERED CIVIL ENGINEER

7-17-00
PLANS APPROVAL DATE

REGISTERED PROFESSIONAL ENGINEER — Michael J Marquez — No. 54355 — Exp. 12-31-03 — CIVIL — STATE OF CALIFORNIA

The State of California or its officers or agents shall not be responsible for the accuracy or completeness of electronic copies of this plan sheet.

Caltrans now has a web site! To get to the web site, go to: http://www.dot.ca.gov

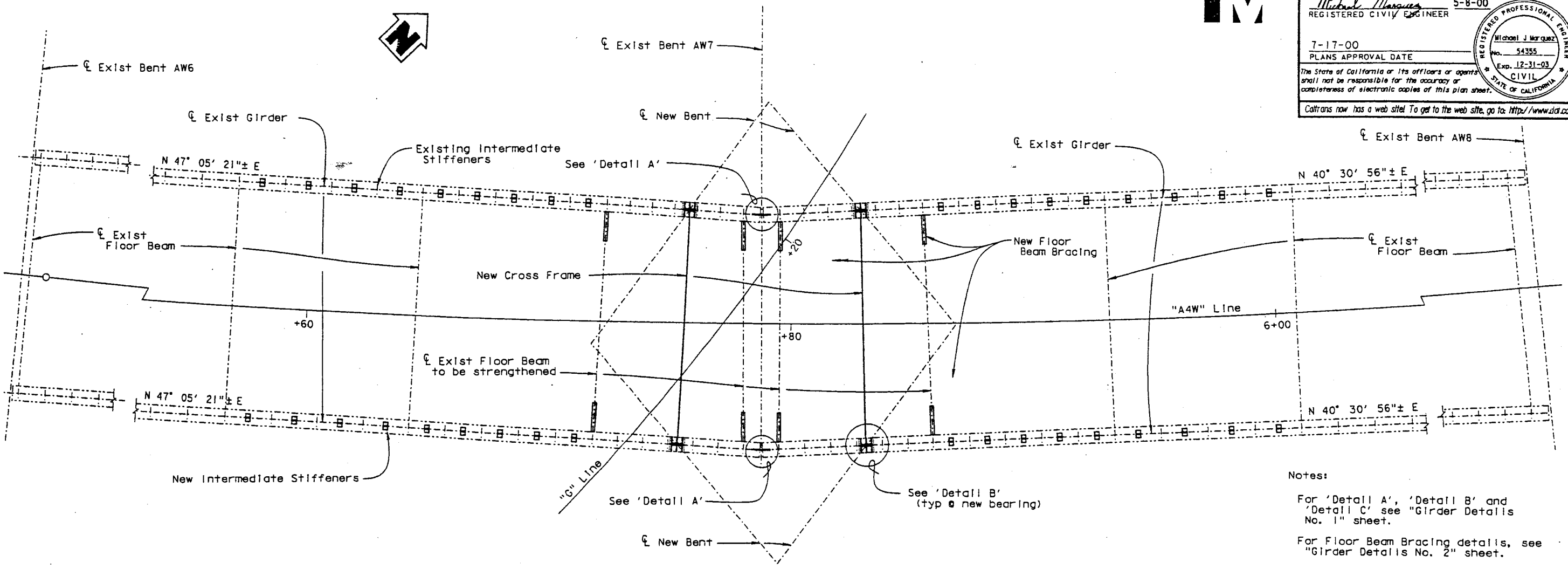

PART PLAN
1:80

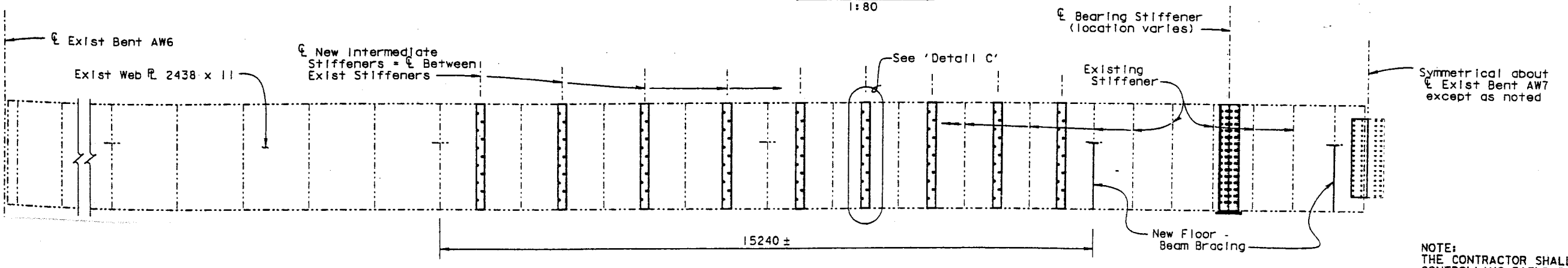

PART GIRDER ELEVATION
1:80

Notes:

For 'Detail A', 'Detail B' and 'Detail C' see "Girder Details No. 1" sheet.

For Floor Beam Bracing details, see "Girder Details No. 2" sheet.

NOTE:
THE CONTRACTOR SHALL VERIFY ALL CONTROLLING FIELD DIMENSIONS BEFORE ORDERING OR FABRICATING ANY MATERIAL.

ALL DIMENSIONS ARE IN MILLIMETERS UNLESS OTHERWISE SHOWN

	BY	CHECKED
DESIGN	Quang Nguyen	Garry Tolen
DETAILS	Nancy C Gwynn	Garry Tolen
QUANTITIES	Eric Burgeson	Scott Mawhinney

STATE OF CALIFORNIA
DEPARTMENT OF TRANSPORTATION

DIVISION OF STRUCTURES
STRUCTURE DESIGN 3

BRIDGE NO. 23-0015L
KILOMETER POST 21.67 (13.47)

"A4W" LINE BENT 7 REPLACEMENT
GIRDER LAYOUT

STRUCTURES DESIGN DETAIL SHEET (METRIC) REV. 3/1/99

ORIGINAL SCALE IN MILLIMETERS FOR REDUCED PLANS 0 10 20 30 40 50 60 70 80 90 100

CU 04206
EA 013051

FILE => 04-013051*0907_26110852

DISREGARD PRINTS BEARING EARLIER REVISION DATES —

REVISION DATES (PRELIMINARY STAGE ONLY)
10-14-99 | 2-11-00 | 4-14-00 | 5-4-00

SHEET 8 OF 11

DATE PLOTTED => 26-Jul-2000 TIME PLOTTED => 11:12
ISERNAME => trrena

DIST	COUNTY	ROUTE	KILOMETER POST TOTAL PROJECT	SHEET No	TOTAL SHEETS
04	CC, Sol	80	19.5/22.7, 0.0/0.7	908	1050

Caltrans Metric

Michael Marquez 5-8-00
REGISTERED CIVIL ENGINEER

7-17-00
PLANS APPROVAL DATE

REGISTERED PROFESSIONAL ENGINEER Michael J Marquez No. 54355 Exp. 12-31-03 CIVIL STATE OF CALIFORNIA

The State of California or its officers or agents shall not be responsible for the accuracy or completeness of electronic copies of this plan sheet.

Caltrans now has a web site! To get to the web site, go to: http://www.dot.ca.gov

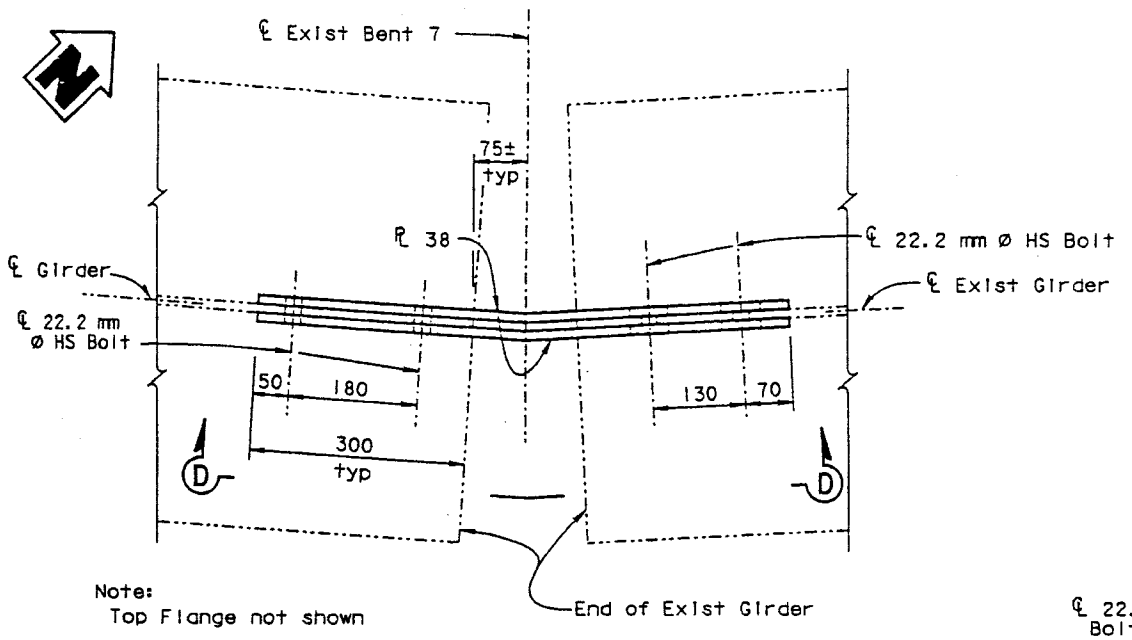

Note:
Top Flange not shown

DETAIL 'A'
1:5

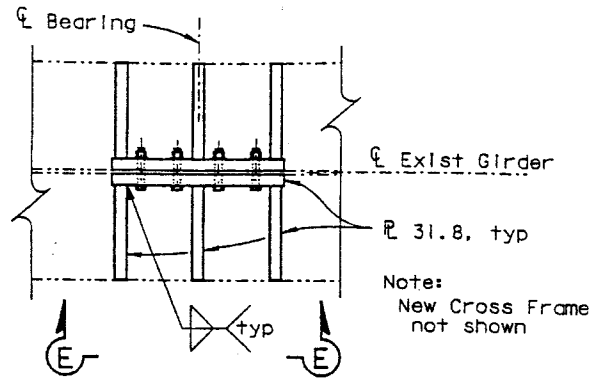

Note:
New Cross Frame not shown

DETAIL 'B'
1:10

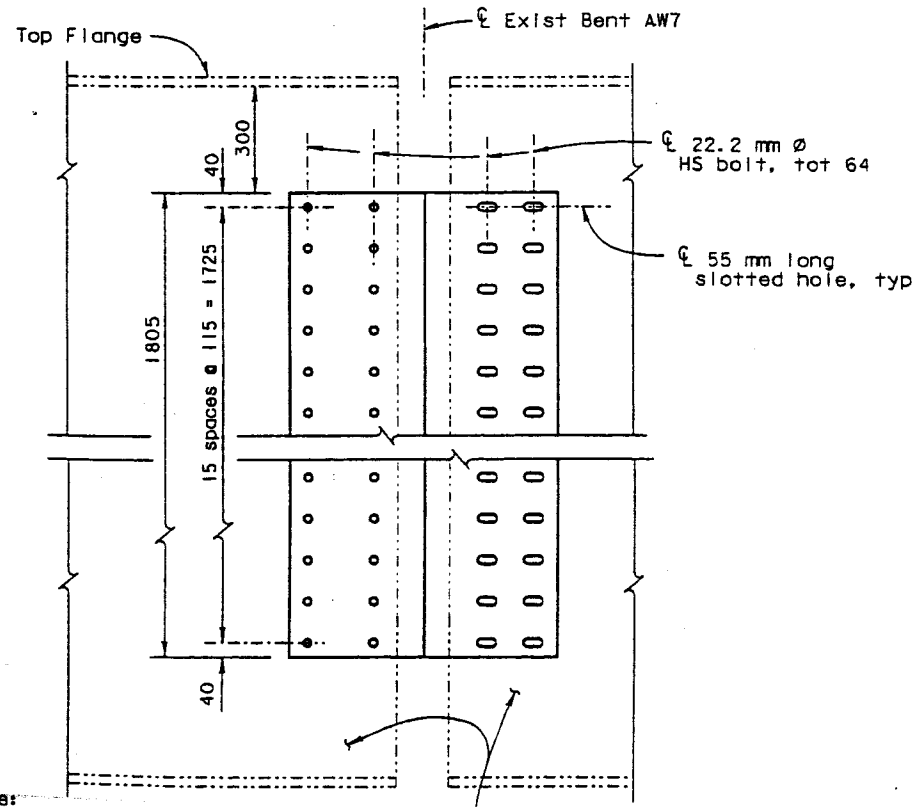

Note:
Exist Stiffener and rocker bearing not shown

ELEVATION D - D
1:10

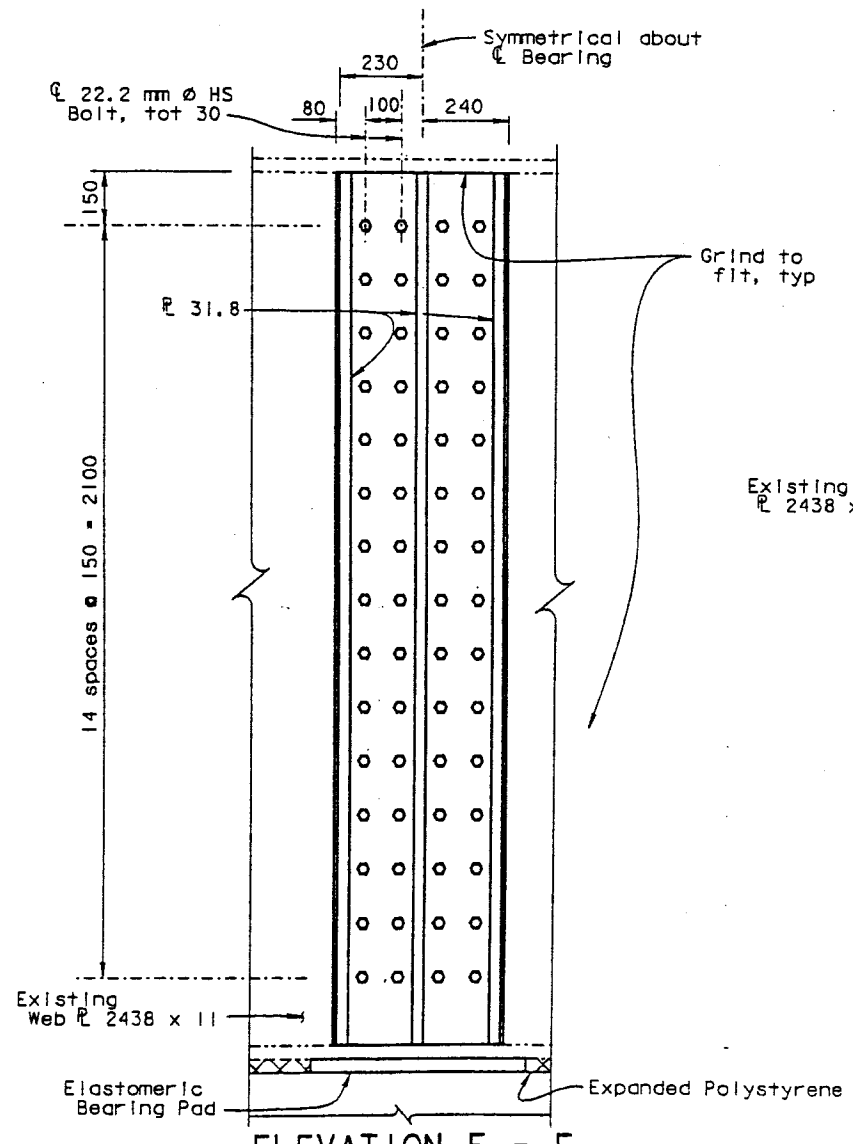

ELEVATION E - E
1:10

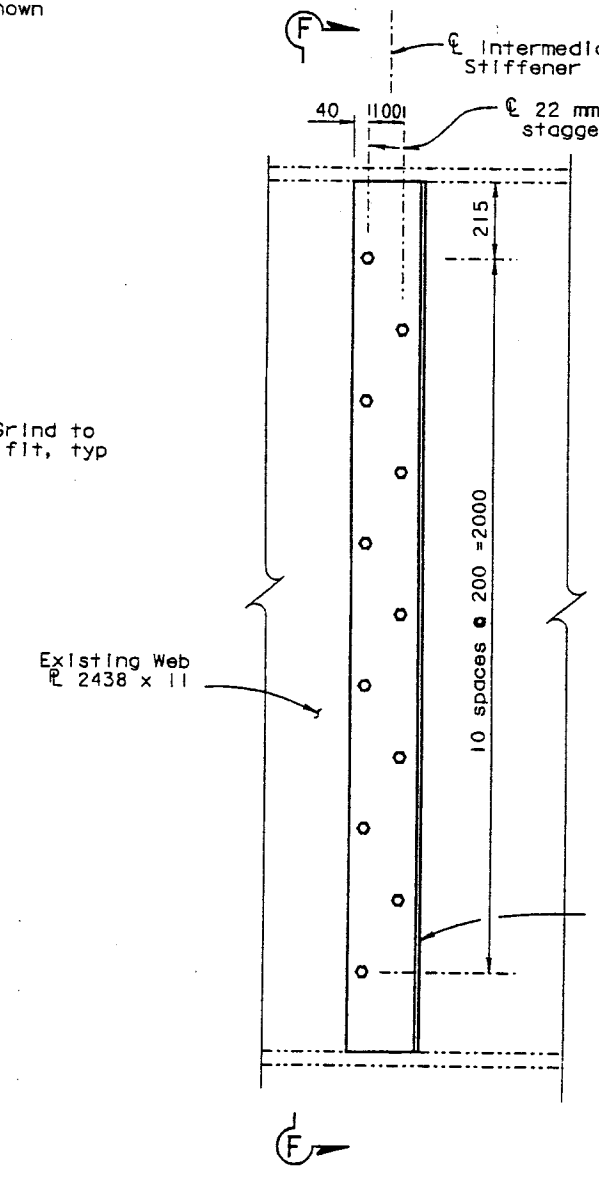

DETAIL 'C'
1:10

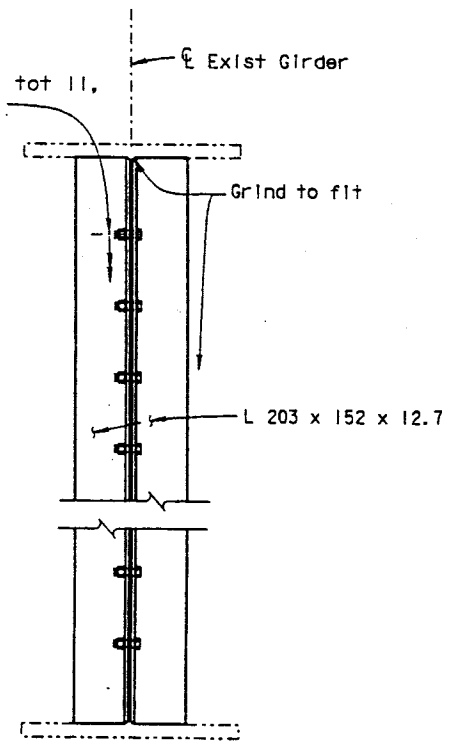

SECTION F - F
1:10

Note:
Bolts shall be installed one at a time with stiffener in place prior to drilling the next bolt hole through the existing web

NOTE:
THE CONTRACTOR SHALL VERIFY ALL CONTROLLING FIELD DIMENSIONS BEFORE ORDERING OR FABRICATING ANY MATERIAL.

ALL DIMENSIONS ARE IN MILLIMETERS UNLESS OTHERWISE SHOWN

DESIGN	BY Quang Nguyen	CHECKED Garry Tolen	
DETAILS	BY Nancy C Gwynn	CHECKED Garry Tolen	
QUANTITIES	BY Eric Burgeson	CHECKED Scott Mawhinney	

STATE OF CALIFORNIA
DEPARTMENT OF TRANSPORTATION

DIVISION OF STRUCTURES
STRUCTURE DESIGN 3

BRIDGE NO. 23-0015L
KILOMETER POST 21.67 (13.47)

"A4W" LINE BENT 7 REPLACEMENT
GIRDER DETAILS NO. 1

STRUCTURES DESIGN DETAIL SHEET (METRIC) (REV. 3/1/99)

ORIGINAL SCALE IN MILLIMETERS FOR REDUCED PLANS 0 10 20 30 40 50 60 70 80 90 100

CU 04206
EA 013051

DISREGARD PRINTS BEARING EARLIER REVISION DATES

REVISION DATES (PRELIMINARY STAGE ONLY) 10-5-99 2-11-00 4-16-00 5-4-00

SHEET 9 OF 11

FILE => 04-013051=0908_26110845

USERNAME => trrane DATE PLOTTED => 26-Jul-2000 TIME PLOTTED => 11:11

THIS IS A COPY

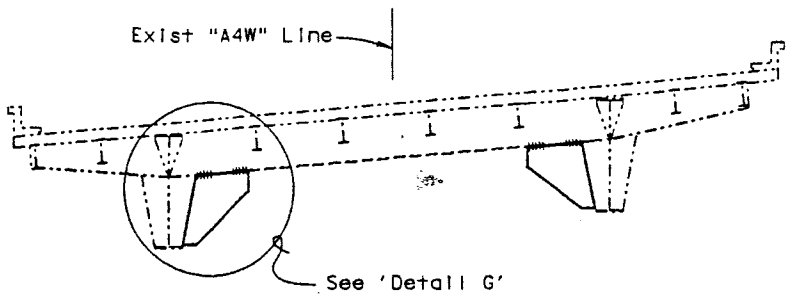

FLOOR BEAM
TYPICAL SECTION
1:80

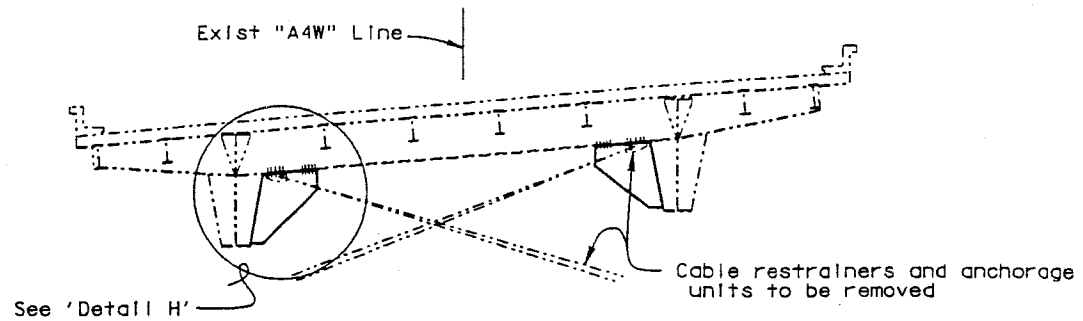

FLOOR BEAM ℄ BENT
TYPICAL SECTION
1:80

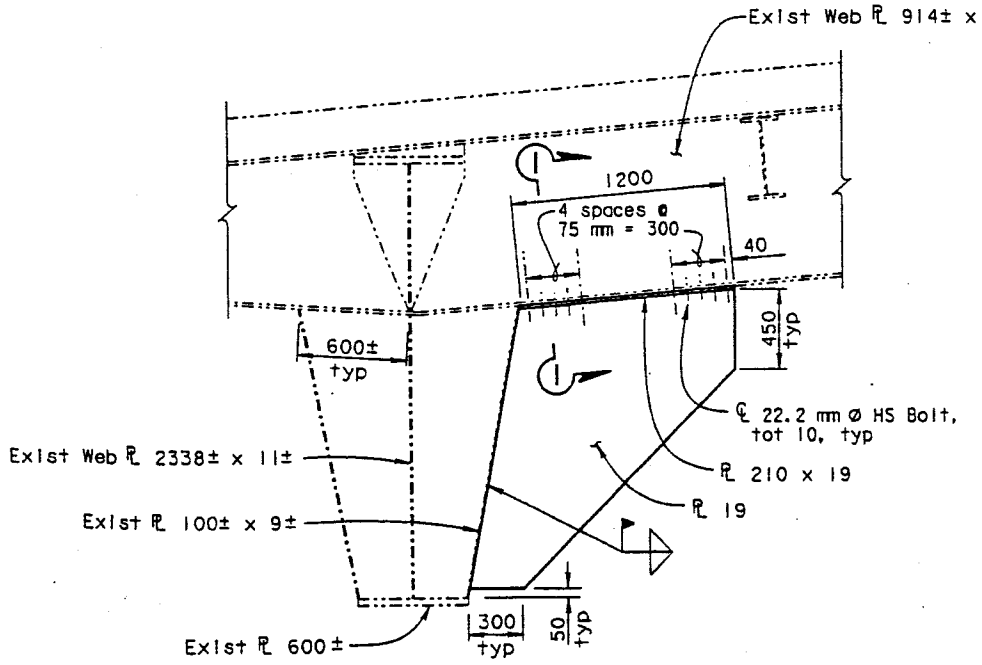

DETAIL 'G'
1:20

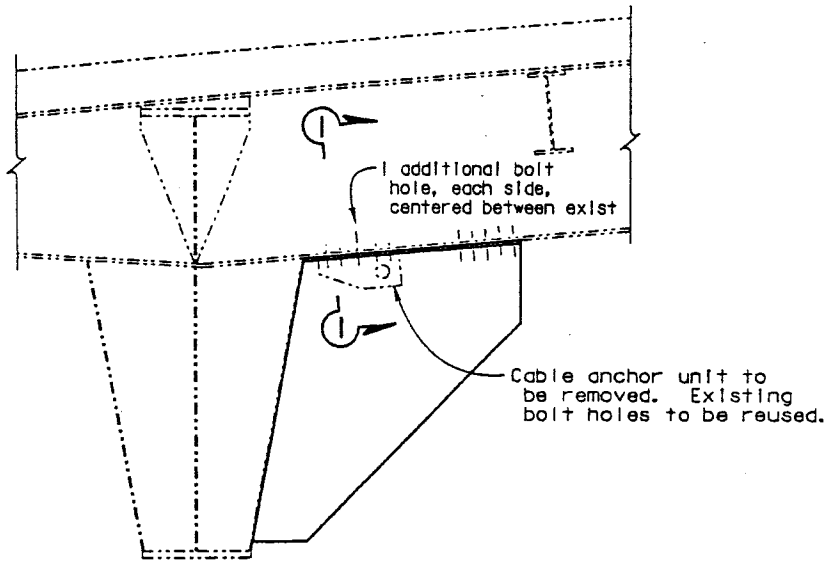

Note:
For details not shown, see 'Detail 'G''

DETAIL 'H'
1:20

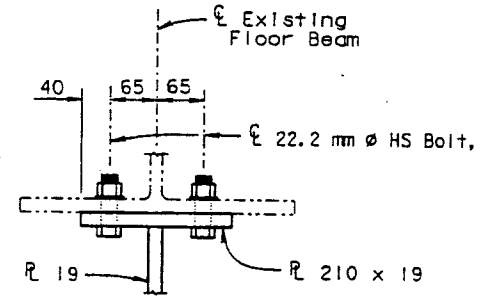

SECTION 1 - 1
1:5

NOTE:
THE CONTRACTOR SHALL VERIFY ALL CONTROLLING FIELD DIMENSIONS BEFORE ORDERING OR FABRICATING ANY MATERIAL.

ALL DIMENSIONS ARE IN MILLIMETERS UNLESS OTHERWISE SHOWN

Caltrans Metric

DIST	COUNTY	ROUTE	KILOMETER POST TOTAL PROJECT	SHEET No	TOTAL SHEETS
04	CC, Sol	80	19.5/22.7, 0.0/0.7	909	1050

Michael Marquez 5-8-00
REGISTERED CIVIL ENGINEER

7-17-00
PLANS APPROVAL DATE

REGISTERED PROFESSIONAL ENGINEER — Michael J Marquez — No. 54355 — Exp. 12-31-03 — CIVIL — STATE OF CALIFORNIA

The State of California or its officers or agents shall not be responsible for the accuracy or completeness of electronic copies of this plan sheet.

Caltrans now has a web site! To get to the web site, go to: http://www.dot.ca.gov

DESIGN	BY Quang Nguyen	CHECKED Garry Tolen	STATE OF CALIFORNIA DEPARTMENT OF TRANSPORTATION
DETAILS	BY Nancy C Gwynn	CHECKED Garry Tolen	
QUANTITIES	BY Eric Burgeson	CHECKED Scott Mawhinney	

DIVISION OF STRUCTURES
STRUCTURE DESIGN 3

CU 04206
EA 013051

BRIDGE NO. 23-0015L
KILOMETER POST 21.67 (13.47)

"A4W" LINE BENT 7 REPLACEMENT
GIRDER DETAILS NO. 2

SHEET 10 OF 11

DISREGARD PRINTS BEARING EARLIER REVISION DATES

REVISION DATES (PRELIMINARY STAGE ONLY)

STRUCTURES DESIGN DETAIL SHEET (METRIC) REV. 3/1/99

ORIGINAL SCALE IN MILLIMETERS FOR REDUCED PLANS 0 10 20 30 40 50 60 70 80 90 100

FILE ⇒ 04-013051+0909_26110839

DATE PLOTTED ⇒ 26-JUL-2000 TIME PLOTTED ⇒ 11:10

USERNAME ⇒ tirene

DIST	COUNTY	ROUTE	KILOMETER POST TOTAL PROJECT	SHEET No	TOTAL SHEETS
04	CC, Sol	80	19.5/22.7, 0.0/0.7	910	1050

Michael Marquez 5-8-00
REGISTERED CIVIL ENGINEER

7-17-00
PLANS APPROVAL DATE

REGISTERED PROFESSIONAL ENGINEER — Michael J Marquez — No. 54355 — Exp. 12-31-03 — CIVIL — STATE OF CALIFORNIA

The State of California or its officers or agents shall not be responsible for the accuracy or completeness of electronic copies of this plan sheet.

Caltrans now has a web site! To get to the web site, go to: http://www.dot.ca.gov

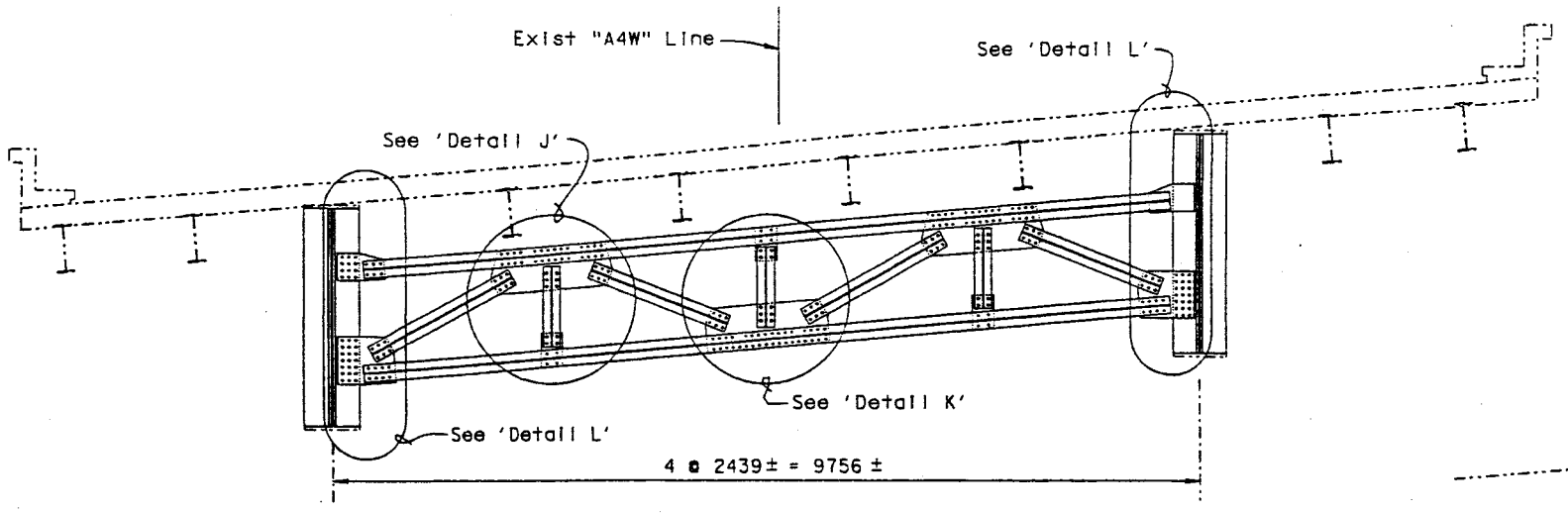

TYPICAL SECTION
1:40

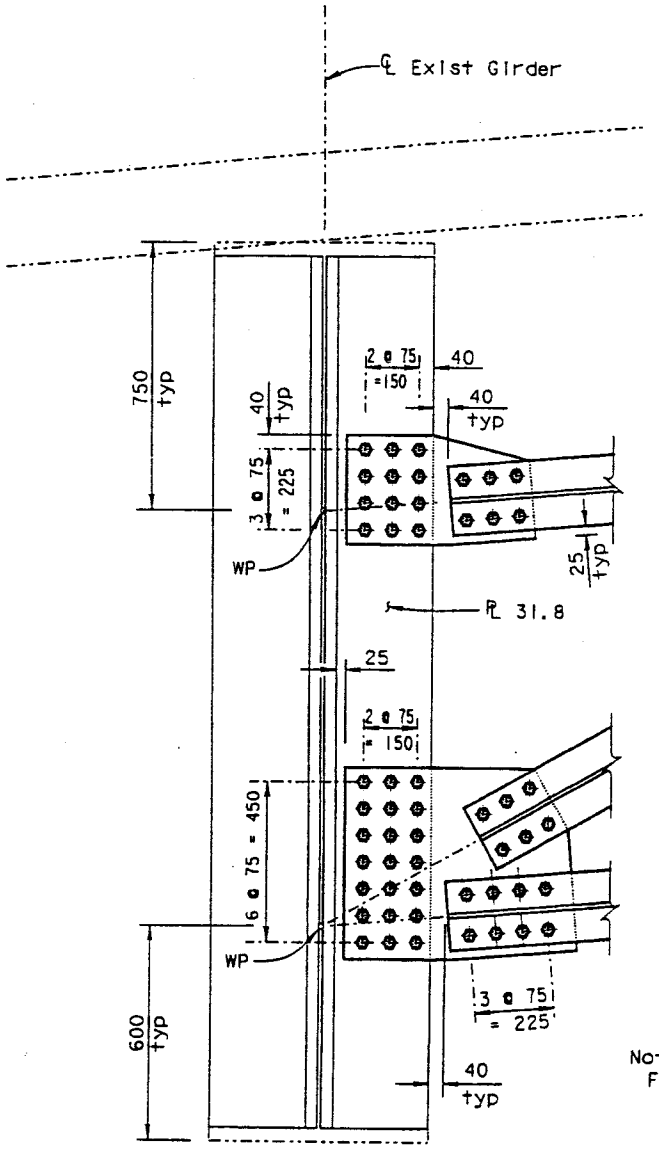

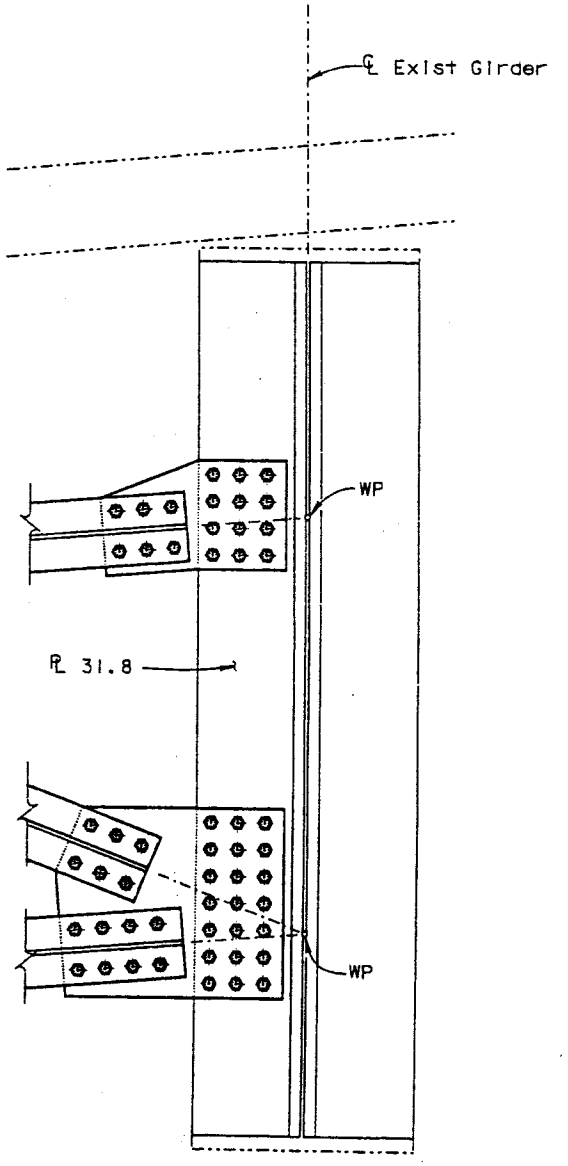

Note:
For details not shown, see 'Detail J'

DETAIL 'L'
1:10

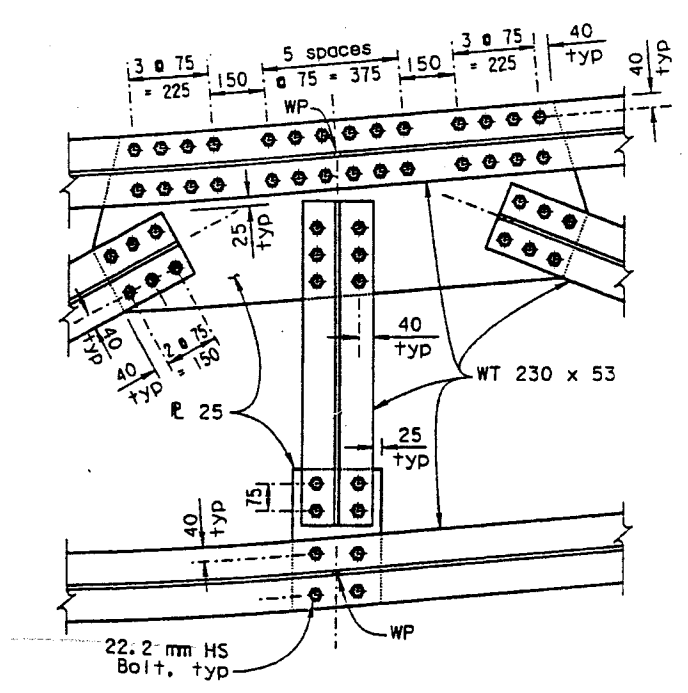

DETAIL 'J'
1:10

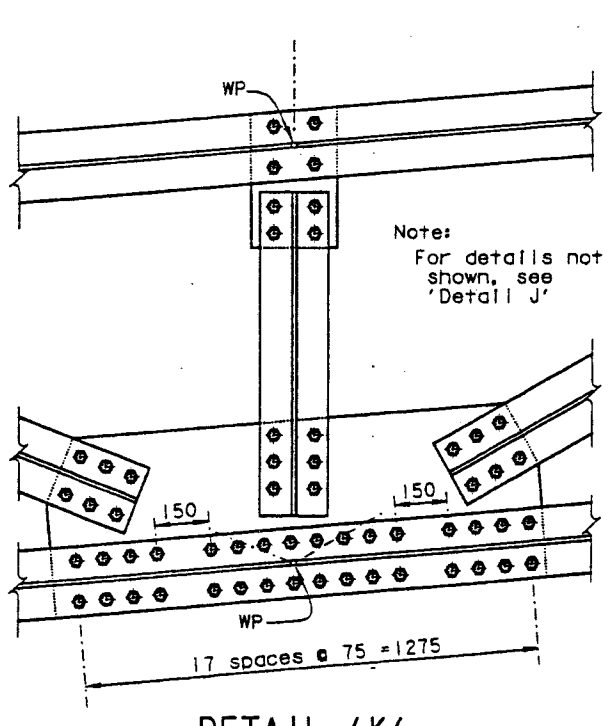

DETAIL 'K'
1:10

NOTE:
THE CONTRACTOR SHALL VERIFY ALL CONTROLLING FIELD DIMENSIONS BEFORE ORDERING OR FABRICATING ANY MATERIAL.

ALL DIMENSIONS ARE IN MILLIMETERS UNLESS OTHERWISE SHOWN

DESIGN	BY Quang Nguyen	CHECKED Garry Tolen	STATE OF CALIFORNIA DEPARTMENT OF TRANSPORTATION
DETAILS	BY Nancy C Gwynn	CHECKED Garry Tolen	DIVISION OF STRUCTURES STRUCTURE DESIGN 3
QUANTITIES	BY Eric Burgeson	CHECKED S. Mawhinney/J. Aquino	

BRIDGE NO. 23-0015L
KILOMETER POST 21.67 (13.47)

"A4W" LINE BENT 7 REPLACEMENT
GIRDER DETAILS NO. 3

CU 04206
EA 013051

DISREGARD PRINTS BEARING EARLIER REVISION DATES →

REVISION DATES (PRELIMINARY STAGE ONLY): 2-14-00 | 4-14-00 | 5-4-00

SHEET 11 OF 11

STRUCTURES DESIGN DETAIL SHEET (METRIC) (REV. 3/1/99)

ORIGINAL SCALE IN MILLIMETERS FOR REDUCED PLANS 0 10 20 30 40 50 60 70 80 90 100

FILE => 04-013051-0910_26112030

USERNAME => trbirg DATE PLOTTED => 26-Jul-2000 TIME PLOTTED => 11:24