DIST.	COUNTY	ROUTE	KILOMETER POST TOTAL PROJECT	SHEET NO.	TOTAL SHEETS
04	SF	80	12.7/13.2	759	806

Caltrans Metric

REGISTERED ENGINEER - CIVIL

6-23-08
PLANS APPROVAL DATE

REGISTERED PROFESSIONAL ENGINEER A.L. ELY No. 18880 Exp. 6-30-09 CIVIL STATE OF CALIFORNIA

The State of California or its officers or agents shall not be responsible for the accuracy or completeness of electronic copies of this plan sheet.

T.Y. LIN / MOFFATT & NICHOL
TWO HARRISON STREET
SAN FRANCISCO, CA 94105

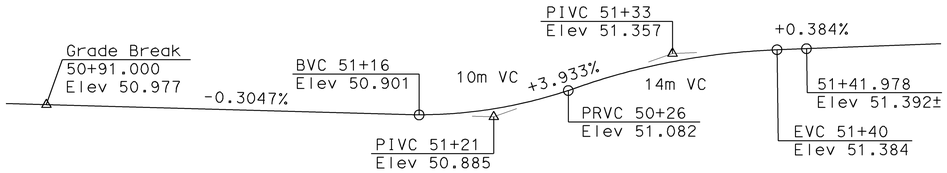

PROFILE GRADE
No Scale

PILE DATA						
LOCATION	DESIGN LOADING	NOMINAL RESISTANCE		DESIGN TIP ELEVATION (1)	(2)	SPECIFIED TIP ELEVATION
		COMPRESSION	TENSION			
PP 762 O.D.						
Bent 2	900 KN	1800 KN	0 KN	+33.0	+36.0	+33.0

Design tip elevation is controlled by the following demands:
(1) Compression, (2) Lateral

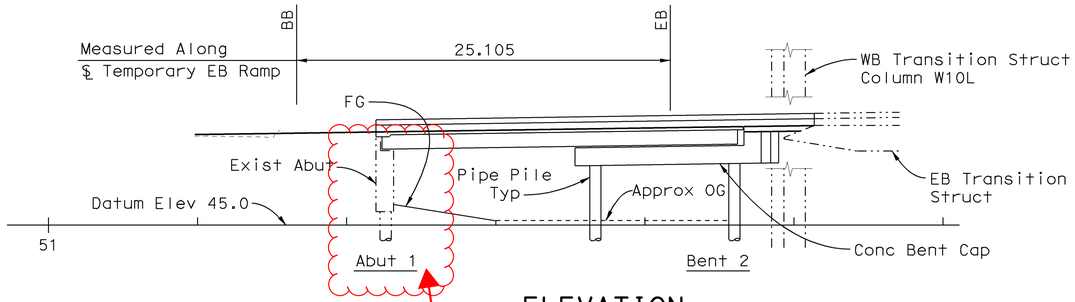

ELEVATION
1:200

Missing information regarding abutment 1 and soldier pile wall.

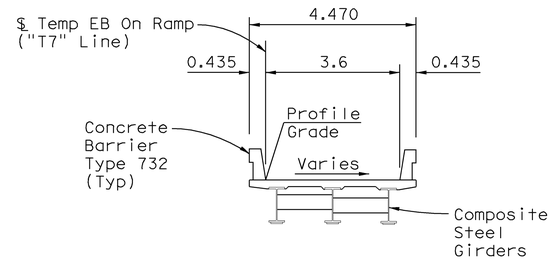

TYPICAL SECTION
1:80

INDEX TO BRIDGE PLANS

SHEET NO.	TITLE
1	GENERAL PLAN
2	DECK CONTOURS
3	FOUNDATION PLAN
4	BENT DETAILS
5	TYPICAL SECTION
6	GIRDER LAYOUT AND DETAILS
7	GIRDER DIAPHRAGM DETAILS
8	JOINT SEAL ASSEMBLY DETAILS
9-13	LOG OF TEST BORINGS NO.1 TO 5

Standard Plan Sheet No.
Detail No.

APPLICABLE STANDARD PLANS (DATED JULY 2004)

A10A	ACRONYMS AND ABBREVIATIONS (A-I)
A10B	ACRONYMS AND ABBREVIATIONS (M-Z)
A10C	SYMBOLS (SHEET 1 OF 2)
A10D	SYMBOLS (SHEET 2 OF 2)
A62C	LIMITS OF PAYMENT FOR EXCAVATION AND BACKFILL - BRIDGE
B0-1	BRIDGE DETAILS
B0-5	BRIDGE DETAILS
B2-8	PILE DETAILS - CLASS 900
B11-55	CONCRETE BARRIER TYPE 732

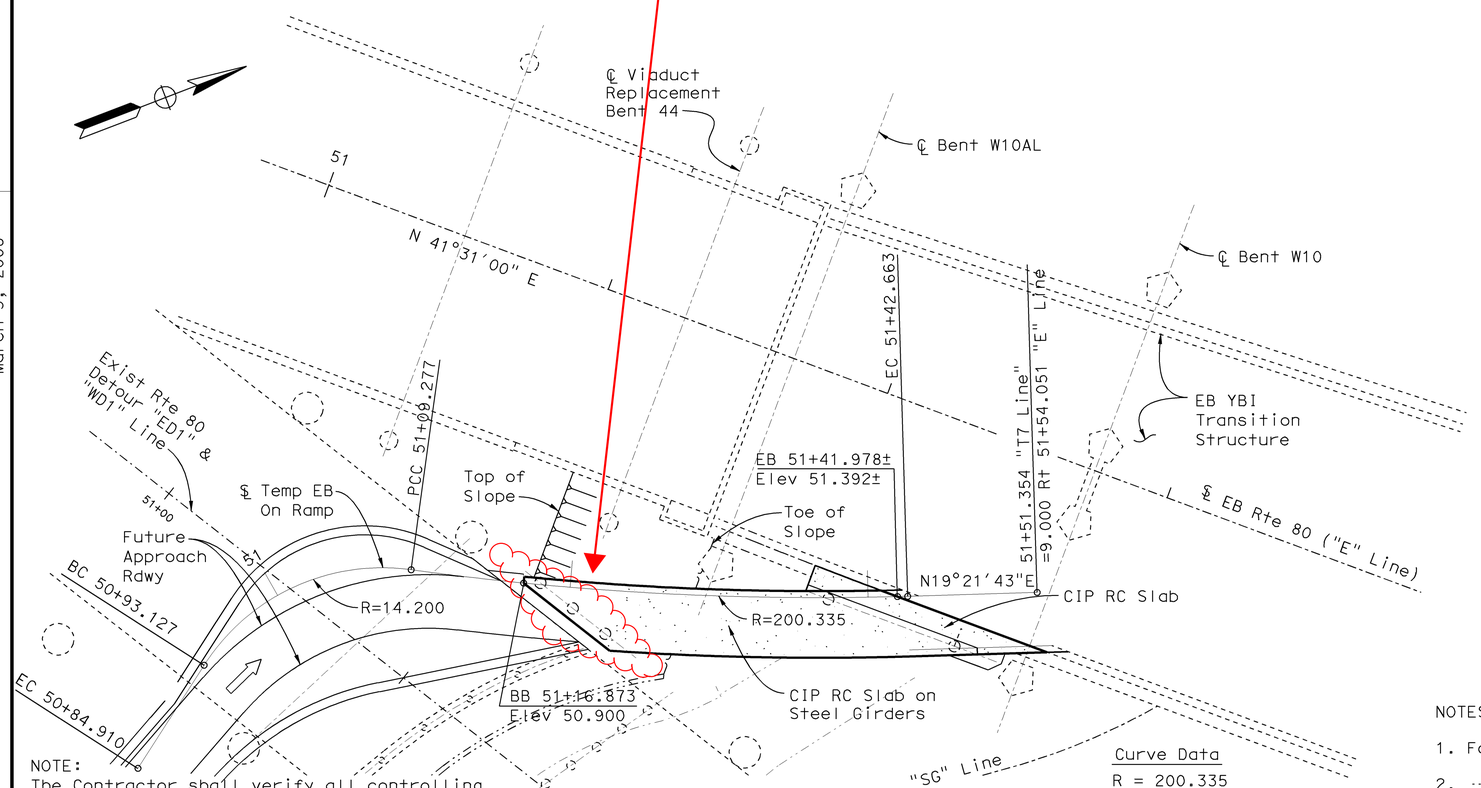

NOTE:
The Contractor shall verify all controlling field dimensions before ordering or fabricating any material or performing any work that might thereby be affected.

PLAN
1:200

Curve Data
R = 200.335
Δ = 9°32'54"
T = 16.732
L = 33.386

QUANTITIES

FURNISH STEEL PIPE PILING (762 MM)	33	m
DRIVE STEEL PIPE PILE (762 MM)	2	EA
STRUCTURAL CONCRETE, BRIDGE	62	m^3
JOINT SEAL ASSEMBLY (MR 100 MM)	12	m
BAR REINFORCING STEEL (BRIDGE)	8 150	kg
FURNISH STRUCTURAL STEEL (BRIDGE)	27 840	kg
ERECT STRUCTURAL STEEL (BRIDGE)	27 840	kg
CLEAN AND PAINT STRUCTURAL STEEL	LUMP	SUM
CONCRETE BARRIER (TYPE 732 MODIFIED)	54	m

NOTES:

1. For General Notes, see "Deck Contours" sheet.
2. ·-·-·-·- Indicates existing structure.

ALL DIMENSIONS ARE IN METERS UNLESS OTHERWISE SHOWN

SAN FRANCISCO OAKLAND BAY BRIDGE
EAST SPAN SEISMIC SAFETY PROJECT

TEMPORARY EB ON-RAMP STRUCTURE
GENERAL PLAN

DESIGN OVERSIGHT
BERNARD CHAN, JUAN F. CARPIO
March 3, 2008
SIGN OFF DATE

	BY	CHECKED		BY	CHECKED
DESIGN	Desai	Lee	LOAD FACTOR DESIGN	LIVE LOADING: HS20-44 AND ALTERNATIVE AND PERMIT DESIGN LOAD	
DETAILS	Samson	Desai	LAYOUT	Desai	Lee
QUANTITIES	Desai	Lee	SPECIFICATIONS	Birdy	PLANS AND SPECS COMPARED Desai

Rev. Date: 5-18-98

PREPARED FOR THE STATE OF CALIFORNIA DEPARTMENT OF TRANSPORTATION

Jal Birdy
PROJECT ENGINEER

BRIDGE NO. 34-171S
KILOMETER POST 12.8

CU 04251
EA 0120S1

ORIGINAL SCALE IN MILLIMETERS FOR REDUCED PLANS 0 10 20 30 40 50 60 70 80 90 100

DISREGARD PRINTS BEARING EARLIER REVISION DATES

REVISION DATES (PRELIMINARY STAGE ONLY): 1/24/07 6/28/07 9/27/07 1/31/08 3/3/08

SHEET 1 OF 13

FILE => 04-0120s1-34-171s-a-gp.dgn

March 3, 2008

USERNAME => trlenard DATE PLOTTED => 01-JUL-2008 TIME PLOTTED => 06:54