Bent E23 to E39 Retrofit (Contract No. 04-043431)

The as-built drawings, which are contained in these CDs, are scanned from drawings of the existing structure for the convenience of the contractor and as a means to convey to the contractor the available information regarding the existing structure. It is to be understood that no claim is being made as to the accuracy or completeness of the said information and that the State of California or its officers or agents shall not be responsible for the manner in which the contractor interprets and uses this information or for the accuracy, currency or completeness of these scanned as-built drawings. The contractor shall be responsible to obtain, at the contractor's expense, any additional information that the contractor deems necessary for completely and accurately assessing the existing conditions of the structure. The contractor shall not be entitled to any compensation for any claim arising from inaccuracy or insufficiency of these as-built drawings or in anyway related to these drawings.

1. Bent E23 to E39 General Plan
2. Bent E23 to E39 Index to Plans No. 1
3. Bent E23 to E39 Index to Plans No. 2
4. Bent E23 to E39 General Notes
5. Bent E23 to E28 Structure Plan
6. Bent E29 to E32 Structure Plan
7. Bent E33 to E39 Structure Plan
8. Bent E23 to E28 Site Plan – Stage 1
9. Missing sheet?
10. Bent E33 to E39 Site Plan – Stage 1
11. Bent E23 to E28 Site Plan – Stage 2
12. Bent E24 Pile Layout
13. Bent E25 Pile Layout
14. Bent E26 Pile Layout
15. Bent E27 Pile Layout
16. Bent E28 Pile Layout
17. Bent E24-E27 Left & Right Column Footing Details
18. Bent E27 Center Column Footing Details
19. Bent E28 Footing Details
20. Bent E24 to E28 Pile Details
21. Bent E24 Bent Elevation
22. Bent E25 Bent Elevation
23. Bent E26 Bent Elevation
24. Bent E27 Bent Elevation
25. Bent E27 Bent Details
26. Bent E28 Bent Elevation
27. Bent E24-E27 Left & Right Columns Column Details
28. Bent E27 Center Column Column Details
29. Bent E28 Left & Right Columns Column Details
30. Bent E24 Spandrel Beam Layout
31. Bent E25 Spandrel Beam Layout
32. Bent E26 Spandrel Beam Layout
33. Bent E27 Spandrel Beam Layout
34. Bent E24 to E27 Spandrel Beam Details No. 1
35. Bent E28 Retaining Wall Details
36. Bent E24 Cap Extension Details

37. Bent E24 Cap Extension Revisions
38. Bent E25 Cap Extension Details
39. Bent E25 Cap Extension Revisions
40. Bent E26 Cap Extension Details
41. Bent E26 Cap Extension Revisions
42. Bent E27 Cap Extension Details No. 1
43. Bent E27 Cap Extension Details No. 2
44. Bent E27 Cap Extension Revisions
45. Bent E24 to E27 Cap Extension Details
46. Bent E24 Cap Bracing Details
47. Bent E25 Cap Bracing Details
48. Bent E26 Cap Bracing Details
49. Bent E27 Cap Bracing Details
50. Bent E24 to E27 Cap Bracing Details No. 1
51. Bent E24 to E27 Cap Bracing Details No. 2
52. Bent E24 to E27 Cap Bracing Details No. 3
53. Bent E23A to E25A Seat Extension Layout
54. Bent E23A to E25A Seat Extension Type A
55. Bent E23A to E25A Seat Extension Type B
56. Bent E28 Walkway/Stairway Removal
57. Bent E27 Cap Strengthening Details
58. Bent E28 Cap Strengthening Details No. 1
59. Bent E28 Cap Strengthening Details No. 2
60. Bent E29 to E32 Column and Footing Demolition
61. Bent E29 to E32 Bent Details
62. Bent E29 Cap Strengthening Details No. 1
63. Bent E29 Cap Strengthening Details No. 2
64. Bents 30 through 32 Cap Strengthening Details
65. Bent E29 to E32 Pile and Footing Details
66. Bent E33 Bent Layout
67. Bent E34 & E35 Bent Layout
68. Bent E36 & E38 Bent Layout
69. Bent E39 Bent Layout
70. Bent E33 Bent Details No. 1
71. Bent E33 Bent Details No. 2
72. Bent E34 & E35 Bent Details
73. Bent E36 to E38 Bent Details
74. Bent E39 Bent Details
75. Bent E34 to E38 Transverse Shear Keys
76. Bent E33 to E39 Pile Details
77. Bent E24 to E27 Lt & Rt Col. Bearing Details No. 1
78. Bent E24 to E27 Lt & Rt Col. Bearing Details No. 2
79. Bent E27 Ctr, E29-E33 Bearing Details No. 1

80. Bent E27 Ctr, E29-E33 Bearing Details No. 2
81. Bent E28 Lt Column Bearing Details
82. Bent E28 Rt Column Bearing Details
83. Bent E23 to E32 Upper Deck Restrainer, Bracing & Seat Extension Layout
84. Bent E23 to E27A Lower Deck Restrainer and Shear Key Layout
85. Bent E23 Upper and Lower Deck Restrainer Elevation
86. Bent E23 Upper Deck Restrainer Details No. 1
87. Bent E23 Upper Deck Restrainer Details No. 2
88. Bent E25, E27, E29 & E31 Upper Deck Restrainer & Seat Extension Details 1
89. Bent E25, E27, E29 & E31 Upper Deck Restrainer & Seat Extension Details 2
90. Bent E23 Lower Deck Restrainer Details No. 1
91. Bent E23 Lower Deck Restrainer Details No. 2
92. Bents E23A, E24A, E25A, E26A & E27A Restrainer Details
93. Bent E24 to E27 Lower Deck Restrainer Details No. 1
94. Bent E24 to E27 Lower Deck Restrainer Details No. 2
95. Bent E23 to E39 Column and Footing Reinf. Details
96. Bent E28 Approach Slab Removal
97. Bent E28 Approach Slab Layout
98. Bent E28 Approach Slab Details No. 1
99. Bent E28 Approach Slab Details No. 2
100. Bent E39 Approach Slab Removal
101. Bent E39 Approach Slab Layout
102. Bent E39 Approach Slab Details No. 1
103. Bent E39 Approach Slab Details No. 2
104. Bent E25 Drainage Details
105. Bent E27 to Bent E33 Drainage Details
106. Bent E23 to E39 CZ G.R.E.A.T. Temp. Crash Cushion Details
107. Bent E23 to E39 Barrier Details
108. Bent E23 through Bent E27A 12” Water Pipe Relocation
109. Bent E23 to E39 Load Test Pile Details (1)
110. Bent E23 to E39 Load Test Pile Details (2)
111. Log of Test Borings 1 of 18
112. Log of Test Borings 2 of 18
113. Log of Test Borings 3 of 18
114. Log of Test Borings 4 of 18
115. Log of Test Borings 5 of 18
116. Log of Test Borings 6 of 18
117. Log of Test Borings 7 of 18
118. Log of Test Borings 8 of 18
119. Log of Test Borings 9 of 18
120. Log of Test Borings 10 of 18
121. Log of Test Borings 11 of 18
122. Log of Test Borings 12 of 18

123. Log of Test Borings 13 of 18
124. Log of Test Borings 14 of 18
125. Log of Test Borings 15 of 18
126. Log of Test Borings 16 of 18
127. Log of Test Borings 17 of 18
128. Log of Test Borings 18 of 18

DIST.	COUNTY	ROUTE	POST MILES TOTAL PROJECT	SHEET NO.	TOTAL SHEETS
04	ALA	80			

REGISTERED ENGINEER - CIVIL

REGISTERED PROFESSIONAL ENGINEER Gregory Evan Slocum No. 44950 Exp. 3-31-98 CIVIL STATE OF CALIFORNIA

PLANS APPROVAL DATE

The State of California or its officers or agents shall not be responsible for the accuracy or completeness of electronic copies of this plan sheet.

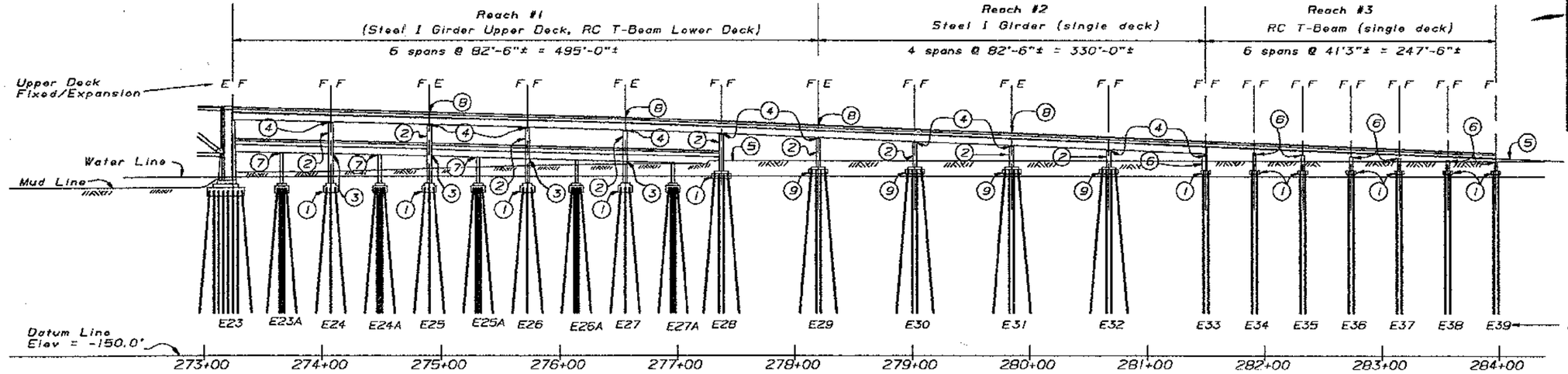

EXISTING STRUCTURE ELEVATION

1" = 50'-0"

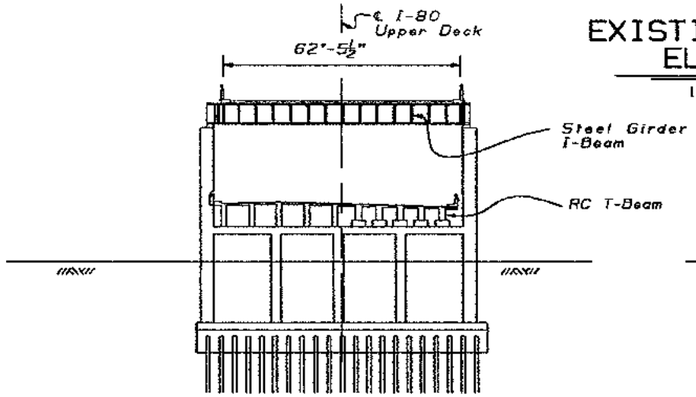

EXISTING TYPICAL SECTION REACH #1*

1" = 20'-0"

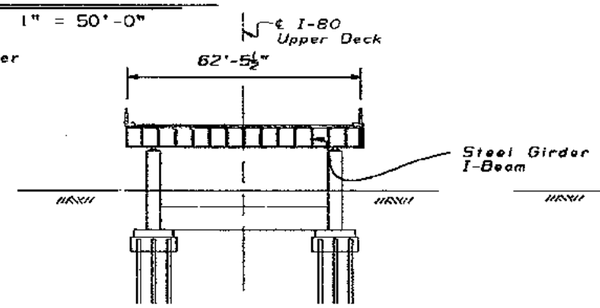

EXISTING TYPICAL SECTION REACH #2

1" = 20'-0"

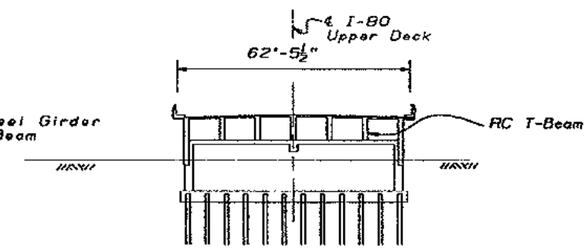

EXISTING TYPICAL SECTION REACH #3

1" = 20'-0"

* Last span has top Deck only

RETROFIT DESIGN

1. New or enlarged Footings
2. Remove and replace Columns.
3. New Spandrel Beams
4. Extend cross girders and replace girder bearings
5. New approach slab
6. Strengthen existing columns.
7. New girder seat extensions.
8. New upper deck stringer seat extensions.
9. Remove and reconstruct footings.

New restrainers throughout. (Not shown)

Note:
F = Fixed joint
E = Expansion joint

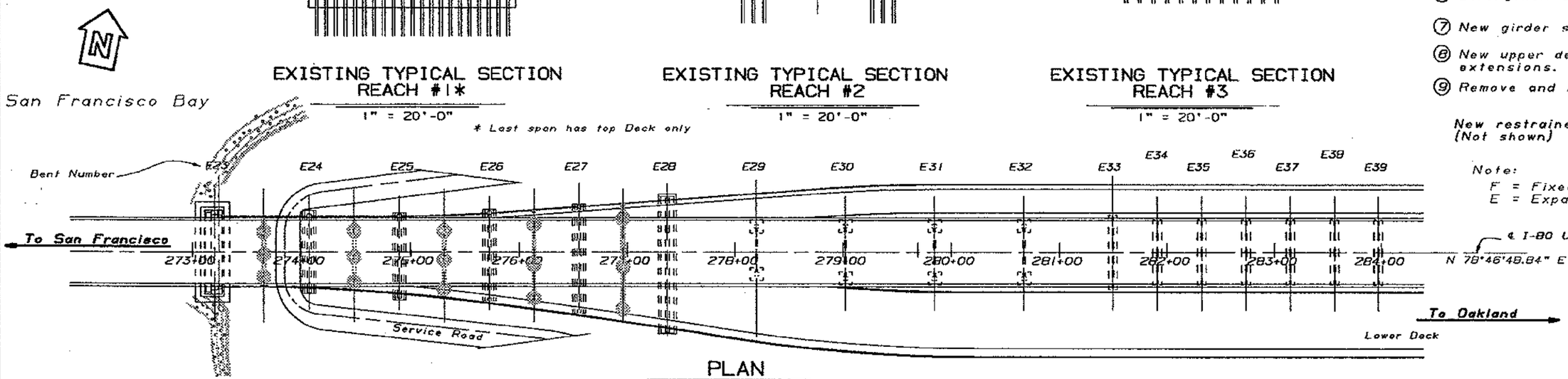

PLAN

1" = 50'-0"

MAR 22 1995

DESIGN ENGINEER	DESIGN	BY Gregory Slocum	CHECKED various	LOAD FACTOR DESIGN	LIVE LOADING: HS20-44 AND ALTERNATIVE AND PERMIT DESIGN LOAD
	DETAILS	BY Franci Dukeshire 3/93	CHECKED various	LAYOUT	BY GS/JF/LD CHECKED GS/JF/LD
	QUANTITIES	BY various	CHECKED various	SPECIFICATIONS	BY John Strootman PLANS AND SPECS COMPARED

05 050 2450 (CADD 4/89)

ORIGINAL SCALE IN INCHES FOR REDUCED PLANS 0 1 2 3

SEISMIC RETROFIT PROJECT No. 614

STATE OF CALIFORNIA DEPARTMENT OF TRANSPORTATION

DIVISION OF STRUCTURES STRUCTURE DESIGN 2

BRIDGE NO. 33-25

POST MILE 1.0-1.3

CU 04
EA 043431

DISREGARD PRINTS BEARING EARLIER REVISION DATES

REVISION DATES (PRELIMINARY STAGE ONLY) 1/19/94 1/24/94 4/14/94 2/28/95

SFOBB - BENT E23 TO E39 RETROFIT

BENT E23 TO E39

GENERAL PLAN

SHEET 1 OF 120

DIST.	COUNTY	ROUTE	POST MILES TOTAL PROJECT	SHEET NO.	TOTAL SHEETS
04	Ala	80			

REGISTERED ENGINEER - CIVIL

REGISTERED PROFESSIONAL ENGINEER Gregory Even Slocum No. 44950 Exp. 3-31-98 CIVIL STATE OF CALIFORNIA

PLANS APPROVAL DATE

The State of California or its officers or agents shall not be responsible for the accuracy or completeness of electronic copies of this plan sheet.

Sheet No.	Location	Sheet Title
SFOBB - BENT E23 TO E39 RETROFIT		
1.	Bent E23 to E39	General Plan
2.	Bent E23 to E39	Index to Plans No. 1
3.	Bent E23 to E39	Index to Plans No. 2
4.	Bent E23 to E39	General Notes
5.	Bent E23 to E28	Structure Plan
6.	Bent E29 to E32	Structure Plan
7.	Bent E33 to E39	Structure Plan
8.	Bent E23 to E28	Site Plan - Stage 1
9.	Bent E29 to E32	Site Plan - Stage 1
10.	Bent E33 to E39	Site Plan - Stage 1
11.	Bent E23 to E28	Site Plan - Stage 2
SFOBB - BENT E23 TO E28 RETROFIT		
12.	Bent E24	Pile Layout
13.	Bent E25	Pile Layout
14.	Bent E26	Pile Layout
15.	Bent E27	Pile Layout
16.	Bent E28	Pile Layout
17.	Bent E24 to E27 Lt. & Rt. Column	Footing Details
18.	Bent E27 Center Column	Footing Details
19.	Bent E28	Footing Details
20.	Bent E24 to E28	Pile Details
21.	Bent E24	Bent Elevation
22.	Bent E25	Bent Elevation
23.	Bent E26	Bent Elevation
24.	Bent E27	Bent Elevation
25.	Bent E27	Bent Details
26.	Bent E28	Bent Elevation
27.	Bent E24 to E27 Lt. & Rt. Column	Column Details
28.	Bent E27 Center Column	Column Details
29.	Bent E28 Lt. & Rt. Column	Column Details
30.	Bent E24	Spandrel Beam Layout
31.	Bent E25	Spandrel Beam Layout
32.	Bent E26	Spandrel Beam Layout
33.	Bent E27	Spandrel Beam Layout
34.	Bent E24 to E27	Spandrel Beam Details No. 1
35.	Bent E24 to E27	Spandrel Beam Details No. 2
36.	Bent E28	Retaining Wall Details
37.	Bent E24	Cap Extension Details
37A.	Bent E24	Cap Extension Revisions
38.	Bent E25	Cap Extension Details
38A.	Bent E25	Cap Extension Revisions
39.	Bent E26	Cap Extension Details
39A.	Bent E26	Cap Extension Revisions
40.	Bent E27	Cap Extension Details No. 1
41.	Bent E27	Cap Extension Details No. 2
41A.	Bent E27	Cap Extension Revisions
42.	Bent E24 to E27	Cap Extension Details
43.	Bent E24	Cap Bracing Details
44.	Bent E25	Cap Bracing Details
45.	Bent E26	Cap Bracing Details
46.	Bent E27	Cap Bracing Details
47.	Bent E24 to E27	Cap Bracing Details No. 1
48.	Bent E24 to E27	Cap Bracing Details No. 2
49.	Bent E24 to E27	Cap Bracing Details No. 3
SFOBB - BENT E23 TO E28 RETROFIT		
50.	Bent E23A and E25A	Seat Extension Layout
51.	Bent E23A and E25A	Seat Extension Type A
52.	Bent E23A and E25A	Seat Extension Type B
53.	Bent E28	Walkway/Stairway Removal
53A.	Bent E27	Cap Strengthening Details
53B.	Bent E28	Cap Strengthening Details No. 1
53C.	Bent E28	Cap Strengthening Details No. 2
SFOBB - BENT E29 TO E32 RETROFIT		
54.	Bent E29 to E32	Column and Footing Demolition
55.	Bent E29 to E32	Bent Details
55A.	Bent E29	Cap Strengthening Details No. 1
55B.	Bent E29	Cap Strengthening Details No. 2
55C.	Bent 30 Through 32	Cap Strengthening Details
56.	Bent E29 to E32	Pile and Footing Details
SFOBB - BENT E33 TO E39 RETROFIT		
57.	Bent E33	Bent Layout
58.	Bent E34 & E35	Bent Layout
59.	Bent E36 to E38	Bent Layout
60.	Bent E39	Bent Layout
61.	Bent E33	Bent Details No. 1
62.	Bent E33	Bent Details No. 2
63.	Bent E34 & E35	Bent Details
64.	Bent E36 to E38	Bent Details
65.	Bent E39	Bent Details
66.	Bent E34 to E38	Transverse Shear Keys
67.	Bent E33 to E39	Pile Details

JUN 15 1995

DESIGN	BY Gregory Slocum	CHECKED Robert Tanaka
DETAILS	BY F. Dukeshire 11/93	CHECKED Gregory Slocum

SEISMIC RETROFIT PROJECT No. 614

STATE OF CALIFORNIA DEPARTMENT OF TRANSPORTATION

DIVISION OF STRUCTURES STRUCTURE DESIGN 2

BRIDGE NO. 33-25

POST MILE 1.0-1.3

SFOBB - BENT E23 TO E39 RETROFIT

BENT E23 TO E39

INDEX TO PLANS No. 1

05 000 2199 (CADD 4/89)

ORIGINAL SCALE IN INCHES FOR REDUCED PLANS 0 1 2 3

CU 04
EA 043431

DISREGARD PRINTS BEARING EARLIER REVISION DATES → REVISION DATES (PRELIMINARY STAGE ONLY) 2/28/95 . 1/31/94 2/28/94 3/1/94

SHEET 2 OF 120

DIST.	COUNTY	ROUTE	POST MILES TOTAL PROJECT	SHEET NO.	TOTAL SHEETS
04	Ala	80			

REGISTERED ENGINEER - CIVIL

REGISTERED PROFESSIONAL ENGINEER Gregory Evan Slocum No. 44950 Exp. 3-31-98 CIVIL STATE OF CALIFORNIA

PLANS APPROVAL DATE

The State of California or its officers or agents shall not be responsible for the accuracy or completeness of electronic copies of this plan sheet.

Sheet No.	Location	Sheet Title
SFOBB - BENT E23 TO E39 RETROFIT		
68.	Bent E24 to E27 Lt. & Rt. Column	Bearing Details No. 1
69.	Bent E24 to E27 Lt. & Rt. Column	Bearing Details No. 2
70.	Bent E27 Center, E29 - E33	Bearing Details No. 1
71.	Bent E27 Center, E29 - E33	Bearing Details No. 2
72.	Bent E28 Lt. Column	Bearing Details
73.	Bent E28 Rt. Column	Bearing Details
74.	Bent E23 to E32 Upper Deck	Restrainer, Bracing & Seat Extension Layout
75.	Bent E23 to E27A Lower Deck	Restrainer & Shear Key Layout
76.	Bent E23 Upper & Lower Decks	Restrainer Elevation
77.	Bent E23 Upper Deck	Restrainer Details No. 1
78.	Bent E23 Upper Deck	Restrainer Details No. 2
79.	Bent E25, E27, E29, E31 Upper Deck	Restrainer & Seat Extension Details No. 1
80.	Bent E25, E27, E29, E31 Upper Deck	Restrainer & Seat Extension Details No. 2
81.	Bent E23 Lower Deck	Restrainer Details No. 1
82.	Bent E23 Lower Deck	Restrainer Details No. 2
83.	Bent E23A, E24A, E25A, E26A & E27A	Restrainer Details
84.	Bent E24 to E27 Lower Deck	Restrainer Details No. 1
85.	Bent E24 to E27 Lower Deck	Restrainer Details No. 2
86.	Bent E34 to E38	Restrainer Details
87.	Bent E24 to E39	Column and Footing Reinf. Details
88.	Bent E28	Approach Slab Removal
89.	Bent E28	Approach Slab Layout
90.	Bent E28	Approach Slab Details No. 1
91.	Bent E28	Approach Slab Details No. 2
92.	Bent E39	Approach Slab Removal
93.	Bent E39	Approach Slab Layout
94.	Bent E39	Approach Slab Details No. 1
95.	Bent E39	Approach Slab Details No. 2
96.	Bent E25	Drainage Details
97.	Bent E27 to E33	Drainage Details
98.	Bent E23 to E39	Temporary Crash Cushion Details
99.	Bent E23 to E39	Barrier Details
100.	Bent E23 to E39	12" Water Pipe Relocation
101.	Bent E23 to E39	Pile Load Test Details No. 1
102.	Bent E23 to E39	Pile Load Test Details No. 2
103.	Bent E23 to E39	Log of Test Borings No. 1
104.	Bent E23 to E39	Log of Test Borings No. 2
105.	Bent E23 to E39	Log of Test Borings No. 3
106.	Bent E23 to E39	Log of Test Borings No. 4
107.	Bent E23 to E39	Log of Test Borings No. 5
108.	Bent E23 to E39	Log of Test Borings No. 6
109.	Bent E23 to E39	Log of Test Borings No. 7
110.	Bent E23 to E39	Log of Test Borings No. 8
111.	Bent E23 to E39	Log of Test Borings No. 9
112.	Bent E23 to E39	Log of Test Borings No. 10
113.	Bent E23 to E39	Log of Test Borings No. 11
114.	Bent E23 to E39	Log of Test Borings No. 12
115.	Bent E23 to E39	Log of Test Borings No. 13
116.	Bent E23 to E39	Log of Test Borings No. 14
117.	Bent E23 to E39	Log of Test Borings No. 15
118.	Bent E23 to E39	Log of Test Borings No. 16
119.	Bent E23 to E39	Log of Test Borings No. 17
120.	Bent E23 to E39	Log of Test Borings No. 18

MAR 22 1995

	BY	CHECKED
DESIGN	Gregory Slocum	Robert Tanaka
DETAILS	F. Dukeshire 11/93	Gregory Slocum

SEISMIC RETROFIT PROJECT No. 614

STATE OF CALIFORNIA DEPARTMENT OF TRANSPORTATION

DIVISION OF STRUCTURES STRUCTURE DESIGN 2

BRIDGE NO. 33-25

POST MILE 1.0-1.3

SFOBB - BENT E23 TO E39 RETROFIT

BENT E23 TO E39

INDEX TO PLANS No. 2

DS 050 2139 (CADD 4/89)

ORIGINAL SCALE IN INCHES FOR REDUCED PLANS 0 1 2 3

CU 04
EA 043431

DISREGARD PRINTS BEARING EARLIER REVISION DATES

REVISION DATES (PRELIMINARY STAGE ONLY) 2/28/95 1/31/94 2/28/94 3/11/94

SHEET 3 OF 120

GENERAL NOTES
LOAD FACTOR DESIGN

DESIGN: BRIDGE DESIGN SPECIFICATIONS
1983 AASHTO with Interims and Revisions by CALTRANS

LIVE LOADING: HS20-44 and alternative and permit design load.

REINFORCED CONCRETE: A 706 f_y = 66,000 psi
f'_c = 4,000 psi
n = 9

PRESTRESSED CONCRETE: See Prestressing Notes on Approach Slab sheets.

STRUCTURAL STEEL: A 709 GR 50 (AASHTO 270 GR 50) unless otherwise noted

PIPE PILE STEEL: f_y (minimum yield strenght) = 45,000 psi
f_u (minimum tensile strength) = 65,000 psi

SEISMIC LOADING: Site Specific ARS as follows:

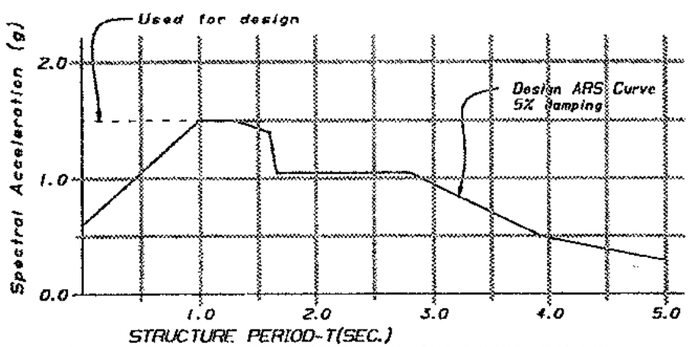

ACCELERATION RESPONSE SPECTRE FOR BAY BRIDGE, E23-E31

PERIOD	ACCELERATION (g)
0	1.50
1.30	1.50
1.60	1.40
1.66	1.05
2.80	1.05
3.80	0.50
5.00	0.29

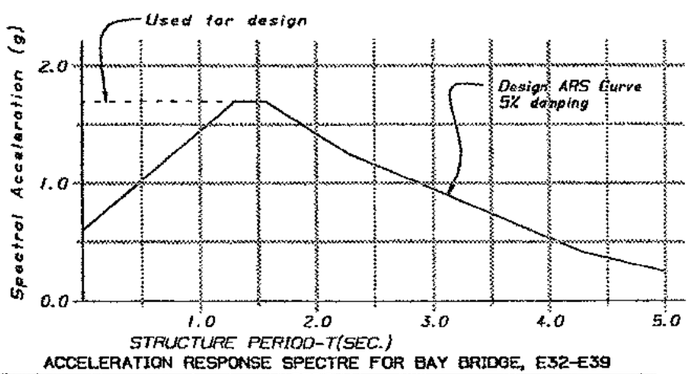

ACCELERATION RESPONSE SPECTRE FOR BAY BRIDGE, E32-E39

PERIOD	ACCELERATION (g)
0	1.70
1.10	1.70
1.56	1.70
2.28	1.25
4.28	0.41
5.00	0.25

Standard Plans dated July 1992

A10-A	Abbreviations
A62-B	Excavation and Backfill - Bridge Surcharge and Wall
A62-C	Excavation and Backfill - Bridge
A75-A	Concrete Barrier Type 50
B0-3	Bridge Details
B6-21	Joint Seals
B7-6	Deck Drains Types D-1 and D-2
B11-53	Concrete Barrier Type 25
T3	Temporary Railing (Type K)

Standard Plan Sheet No.
Detail No.

NOTE:
THE CONTRACTOR SHALL VERIFY ALL CONTROLLING FIELD DIMENSIONS BEFORE ORDERING OR FABRICATING ANY MATERIAL.

BENT No.	EXCAVATION TYPE (D, DH)	DEPTH (FEET)
24-27	DH	FULL DEPTH
28-39	DH	TOP 4 FEET
28-39	D	BELOW TOP 4 FEET
APPR. SLABS	D	FULL DEPTH

TEMPORARY SUPPORT LOADS AT ℄ OF EXISTING COLUMNS (FACTORED)

COLUMN NUMBER	AXIAL LOAD (KIPS)	LONGIT. SHEAR (KIPS)	TRANS. SHEAR (KIPS)
E24L	1000	200	300
E24R	1000	250	300
E25L	1100	250	200
E25R	950	150	200
E26L	1100	300	150
E26R	950	250	150
E27L	600	150	150
E27C	1450	200	150
E27R	600	150	250
E28L	900/-100	250	150
E28R	1600	250	150
E29L	1000	150	150
E29R	1200	150	150
E30L	1050	200	200
E30R	1050	200	200
E31L	1050	150	150
E31R	1050	150	150
E32L	1050	200	200
E32R	1050	200	200
E33L	700	100	100
E33R	700	100	100

DIST.	COUNTY	ROUTE	POST MILES TOTAL PROJECT	SHEET NO.	TOTAL SHEETS
04	Ala	880			

REGISTERED ENGINEER - CIVIL
Gregory Evan Slocum No. 44950 Exp. 3-31-98 CIVIL STATE OF CALIFORNIA
PLANS APPROVAL DATE

The State of California or its officers or agents shall not be responsible for the accuracy or completeness of electronic copies of this plan sheet.

PIPE PILE FOUNDATION DATA

SUPPORT LOCATION	PILE TYPE	MIN. WALL THICKNESS (TOP TO EL. -25) (IN.)	MIN. WALL THICKNESS (EL. -25 to TIP) (IN.)	NOMINAL COMPRESSION CAPACITY (TONS)	NOMINAL TENSION CAPACITY (TONS)	TIP ELEVATION (M.L.L.W.) (FT.)
E24-E28	24in Steel Pipe Pile 20in Steel Pipe Pile (drill and grout)	0.75 1.00	0.50 0.50	212 212	80 80	-40.0 -35.0
E29-E30	24in Steel Pipe Pile 20in Steel Pipe Pile (drill and grout)	0.75 1.00	0.50 0.50	212 212	80 80	-40.0 -39.0
E31	24in Steel Pipe Pile 20in Steel Pipe Pile (drill and grout)	0.75 1.00	0.50 0.50	212 212	80 80	-42.0 -42.0
E32	24in Steel Pipe Pile 20in Steel Pipe Pile (drill and grout)	0.75 1.00	0.50 0.50	140 140	120 120	-45.0 -45.0
E33-E35	20in Steel Pipe Pile (drill and grout)	1.00	0.50	90	55	-65.0
E36	20in Steel Pipe Pile (drill and grout)	1.00	0.50	90	55	-67.0
E37	20in Steel Pipe Pile (drill and grout)	1.00	0.50	90	55	-70.0
E38	20in Steel Pipe Pile (drill and grout)	1.00	0.50	90	55	-73.0
E39	24in Steel Pipe Pile 20in Steel Pipe Pile (drill and grout)	0.75 1.00	0.50 0.50	90 90	55 55	-77.0 -77.0

Notes:

1. For Column location, see "Bent E24 to E28 - Pile Layout", "Bent E29 to E32 - Bent Details", "Bent E33, Bent E34 and Bent E35, and Bent E36 to E38 - Bent Layout" sheets.
2. For Pile layout, see "Bent E24 to E28 - Pile Layout", "Bent E29 to E32 - Bent Details", "Bent E33, Bent E34 and Bent E35, and Bent E36 to E38 - Bent Layout" sheets.
3. For pipe pile details, see "Pile Details" sheets.
4. Temporary support loads shown apply only to existing conditions: Dead load and live load supported at existing column center lines, plus lateral loads due to 25% of maximum credible earthquake. Support points at other locations or the application of additional loading would require adjustment of the listed temporary shoring loads and approval by the Engineer.
5. The temporary support shall provide a minimum lateral stiffness of 60 kips per inch in any lateral direction.
6. The initial jacking loads shall be assumed to be not less than the listed temporary shoring loads.
7. The insitu soil above the following listed elevations shall not be used to develop the axial capacity of the concrete filled pipe piles:
   Bent E24-E28 Elev. -10.0
   Bent E29-E39 Elev. -15.0
8. Existing timber pile capacity:
   Compression = 37 tons (service load)
   74 tons (factored load)
   Tension = 59 tons (factored load)
9. Right column and left column refer respectively to columns south and north of I-80 upper deck center line.
10. The Datum for all vertical elevations is BM E23-8 (Elev. 14.085 M.L.L.W.) chisled on South face of Bent E23 right column at approximately four feet above ground.

MAY 2 1995

DESIGN	BY Gregory Slocum	CHECKED RT/JF/LD
DETAILS	BY F. Dukeshire 1/94	CHECKED Gregory Slocum

SEISMIC RETROFIT PROJECT No. 614

STATE OF CALIFORNIA
DEPARTMENT OF TRANSPORTATION

DIVISION OF STRUCTURES
STRUCTURE DESIGN 2

BRIDGE NO. 33-25
POST MILE 1.0-1.3

SFOBB - BENT E23 TO E39 RETROFIT

BENT E23 TO E39

GENERAL NOTES

CU 04
EA 043431

DISREGARD PRINTS BEARING EARLIER REVISION DATES

REVISION DATES (PRELIMINARY STAGE ONLY) 2/23/95 3/6/95 4/11/95 4/26/94

SHEET 4 OF 12

05 050 2:50 (CADD 4/93)

ORIGINAL SCALE IN INCHES FOR REDUCED PLANS 0 1 2 3

DIST.	COUNTY	ROUTE	POST MILES TOTAL PROJECT	SHEET NO.	TOTAL SHEETS
04	ALA	80			

REGISTERED ENGINEER - CIVIL

REGISTERED PROFESSIONAL ENGINEER Gregory Evan Slocum No. 44950 Exp. 3-31-98 CIVIL STATE OF CALIFORNIA

PLANS APPROVAL DATE

NOTE:
THE CONTRACTOR SHALL VERIFY ALL CONTROLLING FIELD DIMENSIONS BEFORE ORDERING OR FABRICATING ANY MATERIAL.

The State of California or its officers or agents shall not be responsible for the accuracy or completeness of electronic copies of this plan sheet.

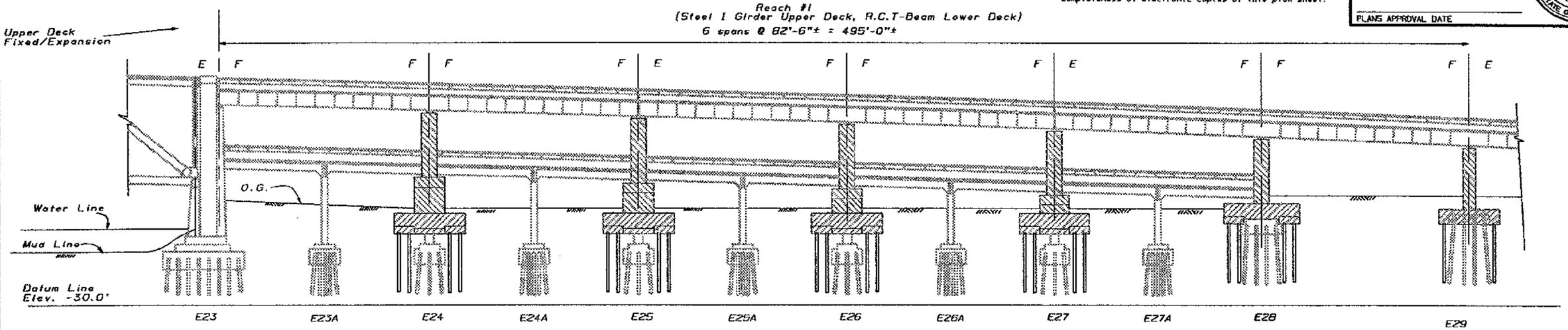

ELEVATION

1" = 20'-0"

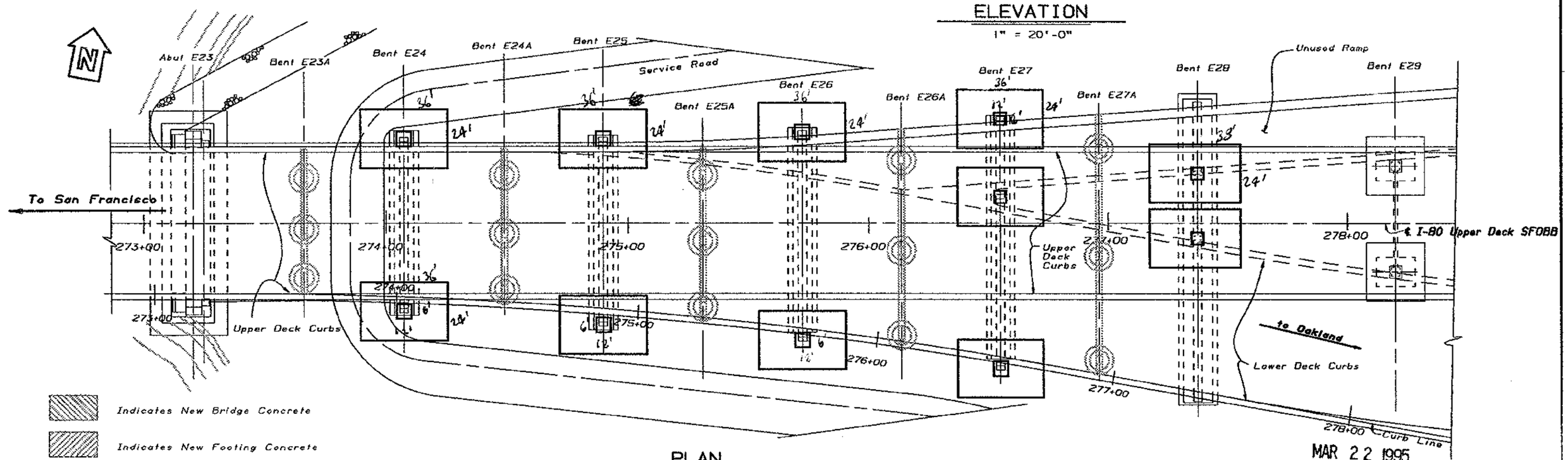

PLAN

1" = 20'-0"

MAR 22 1995

SEISMIC RETROFIT PROJECT No. 614

SFOBB - BENT E23 TO E39 RETROFIT

BENT E23 TO E28

STRUCTURE PLAN

	BY	CHECKED
DESIGN	Gregory Slocum	Robert Tanaka
DETAILS	Franci Dukeshire 3/93	Robert Tanaka
QUANTITIES	S. Blank	Husam Aqqad

STATE OF CALIFORNIA DEPARTMENT OF TRANSPORTATION

DIVISION OF STRUCTURES STRUCTURE DESIGN 2

BRIDGE NO. 33-25

POST MILE 1.0-1.3

CU 04
EA 043431

DISREGARD PRINTS BEARING EARLIER REVISION DATES

REVISION DATES (PRELIMINARY STAGE ONLY) 1/31/94 2/23/94 1/20/94 1/24/94

SHEET 5 OF 120

05 050 2138 (CADD 4/89)

ORIGINAL SCALE IN INCHES FOR REDUCED PLANS 0 1 2 3

DIST.	COUNTY	ROUTE	POST MILES TOTAL PROJECT	SHEET NO.	TOTAL SHEETS
04	ALA	80			

REGISTERED ENGINEER - CIVIL

REGISTERED PROFESSIONAL ENGINEER Gregory Evan Slocum No. 44950 Exp. 3-31-98 CIVIL STATE OF CALIFORNIA

PLANS APPROVAL DATE

The State of California or its officers or agents shall not be responsible for the accuracy or completeness of electronic copies of this plan sheet.

NOTE:
THE CONTRACTOR SHALL VERIFY ALL CONTROLLING FIELD DIMENSIONS BEFORE ORDERING OR FABRICATING ANY MATERIAL.

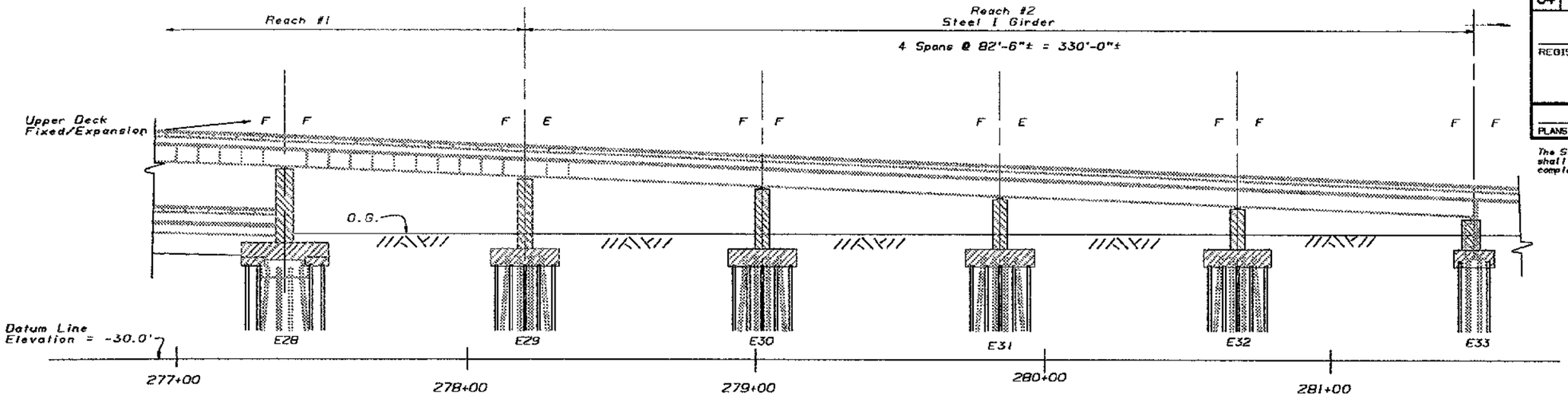

ELEVATION

1" = 20'-0"

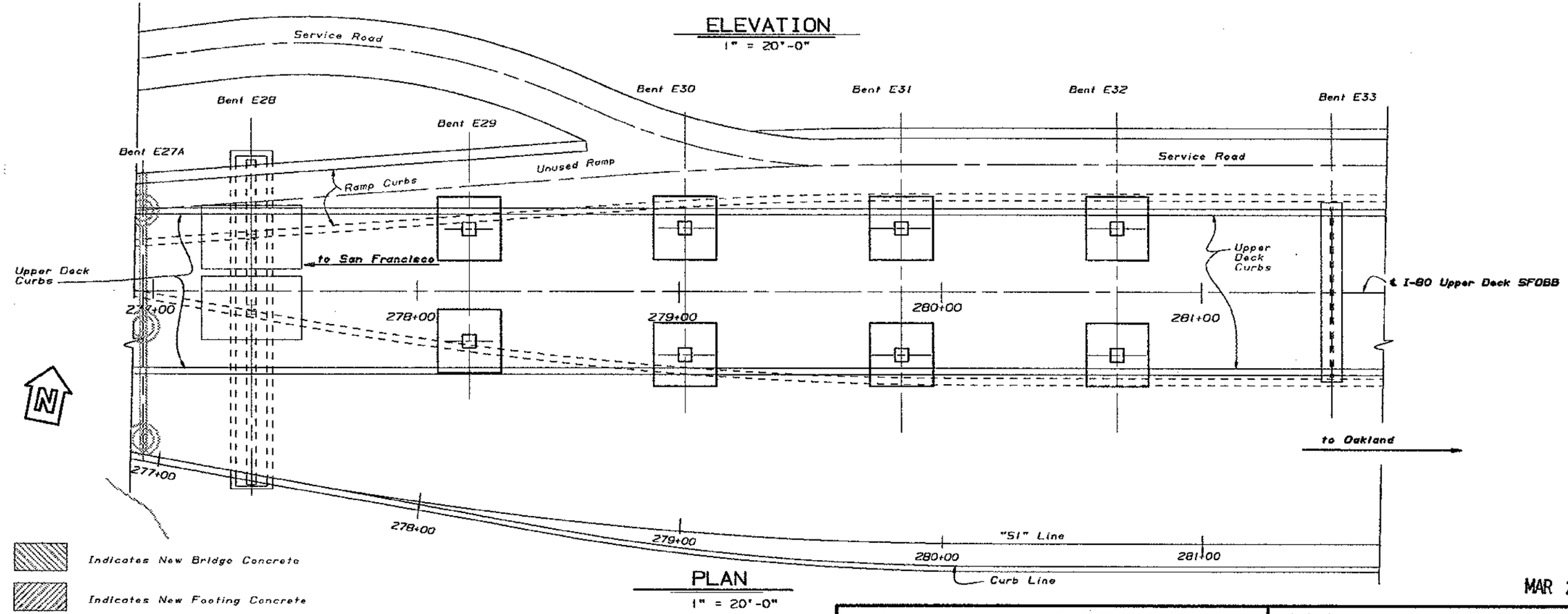

PLAN

1" = 20'-0"

MAR 22 1995

DESIGN	BY John Fujimoto	CHECKED Lian Duan	
DETAILS	BY Franci Dukeshire 3/93	CHECKED Lian Duan	
QUANTITIES	BY S. Blank	CHECKED Husam Aggad	

ORIGINAL SCALE IN INCHES FOR REDUCED PLANS 0 1 2 3

SEISMIC RETROFIT PROJECT No. 614

STATE OF CALIFORNIA DEPARTMENT OF TRANSPORTATION

DIVISION OF STRUCTURES STRUCTURE DESIGN 2

CU 04
EA 043431

BRIDGE NO. 33-25

POST MILE 1.0-1.3

SFOBB - BENT E23 TO E39 RETROFIT

BENT E29 TO E32

STRUCTURE PLAN

DISREGARD PRINTS BEARING EARLIER REVISION DATES

REVISION DATES (PRELIMINARY STAGE ONLY) 1/5/94 1/13/94 1/18/94 1/24/94 2/23/94

SHEET 6 OF 120

05 050 2438 (CADD 4/98)

DIST.	COUNTY	ROUTE	POST MILES TOTAL PROJECT	SHEET NO.	TOTAL SHEETS
04	ALA	80			

REGISTERED ENGINEER - CIVIL

REGISTERED PROFESSIONAL ENGINEER
Gregory Evan Stocum
No. 44950
Exp. 3-31-98
CIVIL
STATE OF CALIFORNIA

PLANS APPROVAL DATE

The State of California or its officers or agents shall not be responsible for the accuracy or completeness of electronic copies of this plan sheet.

NOTE:
THE CONTRACTOR SHALL VERIFY ALL CONTROLLING FIELD DIMENSIONS BEFORE ORDERING OR FABRICATING ANY MATERIAL.

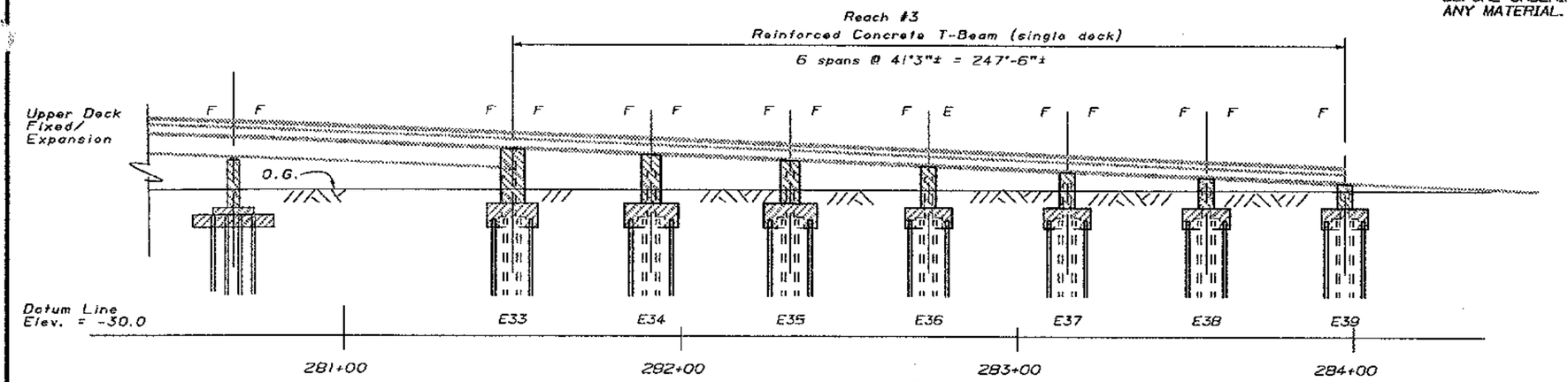

ELEVATION
1" = 20'-0"

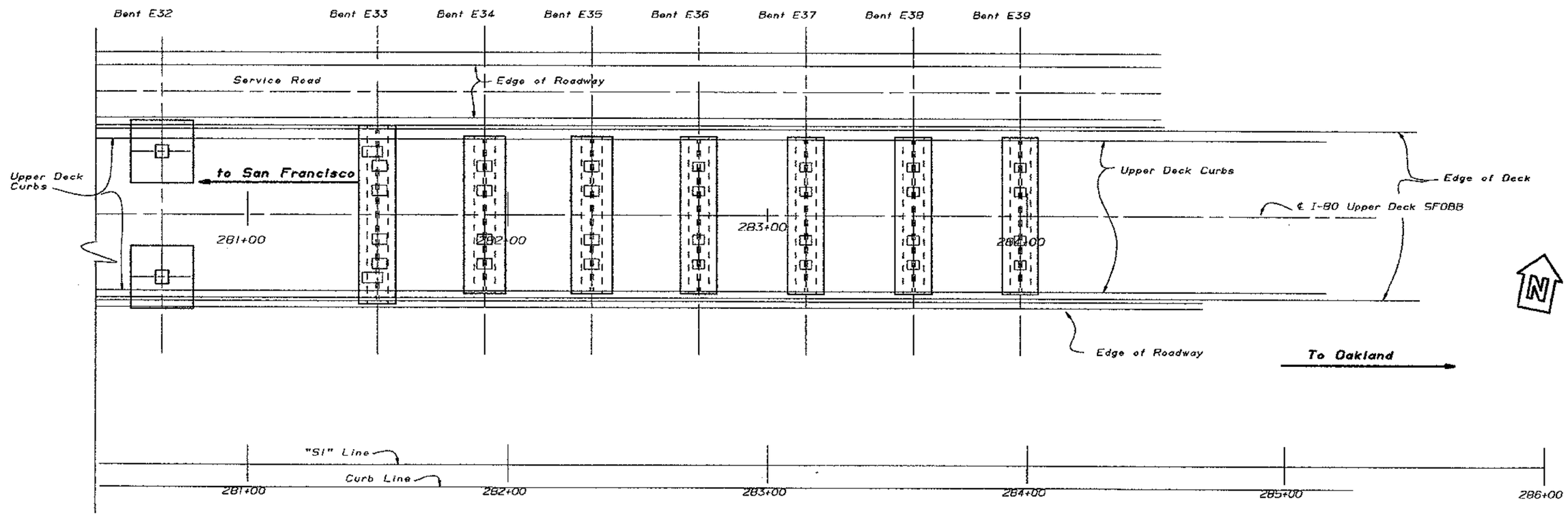

PLAN
1" = 20'-0"

Indicates New Bridge Concrete

Indicates New Footing Concrete

MAR 22 1995

DESIGN	BY Lian Duan	CHECKED John Fujimoto	
DETAILS	BY Franci Dukeshire 3/93	CHECKED John Fujimoto	
QUANTITIES	BY Husam Aggad	CHECKED Simon Blank	

SEISMIC RETROFIT PROJECT No. 614

STATE OF CALIFORNIA
DEPARTMENT OF TRANSPORTATION

DIVISION OF STRUCTURES
STRUCTURE DESIGN 2

BRIDGE NO. 33-25
POST MILE 1.0-1.3

CU 04
EA 043431

SFOBB - BENT E23 TO E39 RETROFIT

BENT E33 TO E39

STRUCTURE PLAN

DS 050 2136 (CADD 4/89)

ORIGINAL SCALE IN INCHES FOR REDUCED PLANS 0 1 2 3

DISREGARD PRINTS BEARING EARLIER REVISION DATES

REVISION DATES (PRELIMINARY STAGE ONLY) 2/23/94 2/23/94 . 1/24/96 2/22/96

SHEET 7 OF 120

DIST.	COUNTY	ROUTE	POST MILES TOTAL PROJECT	SHEET NO.	TOTAL SHEETS
04	ALA	80			

REGISTERED ENGINEER - CIVIL

Gregory Evan Stoppa No. 44950 Exp. 3-31-98 CIVIL STATE OF CALIFORNIA REGISTERED PROFESSIONAL ENGINEER

PLANS APPROVAL DATE

NOTE:
THE CONTRACTOR SHALL VERIFY ALL CONTROLLING FIELD DIMENSIONS BEFORE ORDERING OR FABRICATING ANY MATERIAL.

The State of California or its officers or agents shall not be responsible for the accuracy or completeness of electronic copies of this plan sheet.

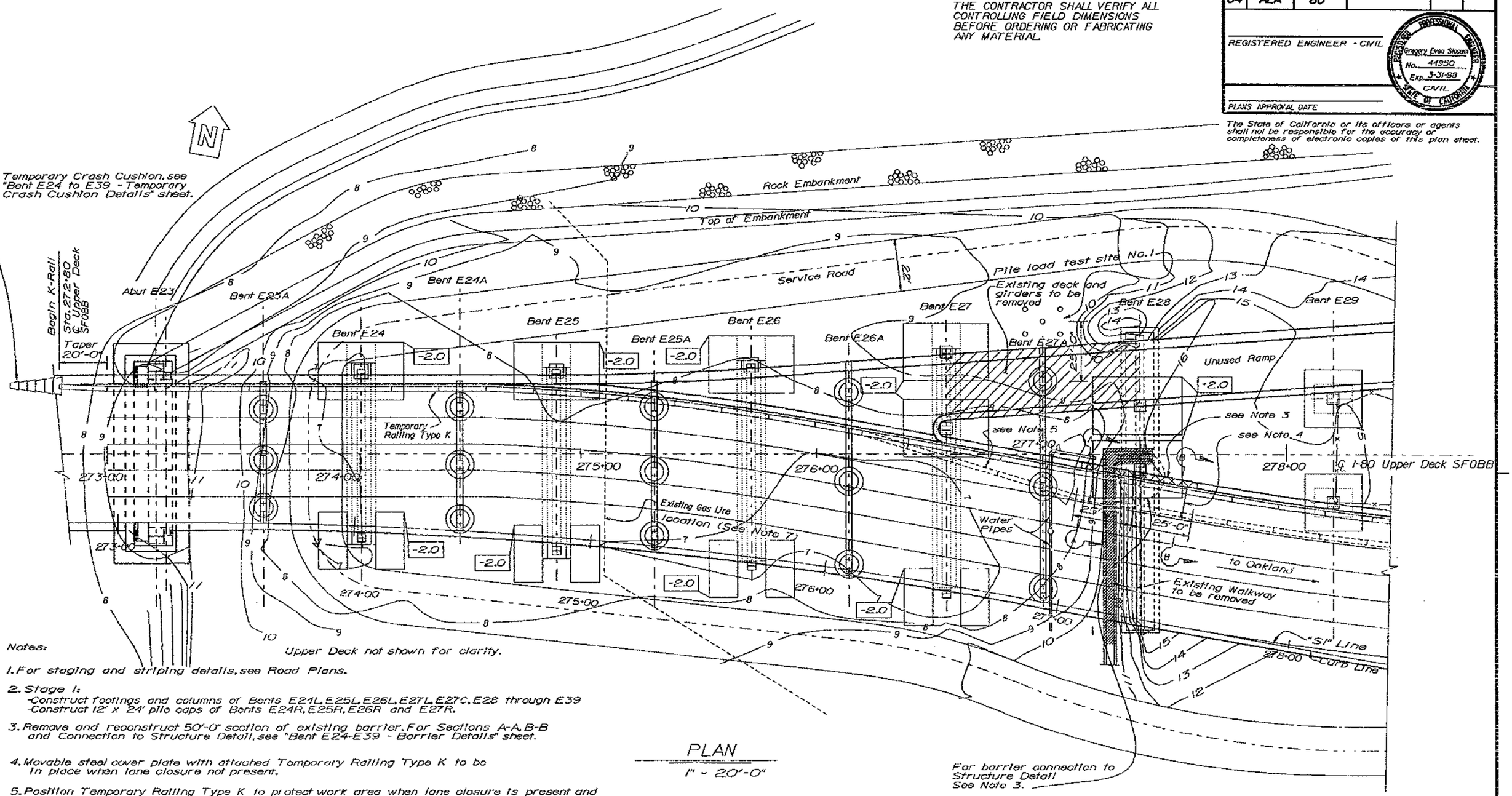

Notes:

Upper Deck not shown for clarity.

1. For staging and striping details, see Road Plans.
2. Stage 1:
   - Construct footings and columns of Bents E24L, E25L, E26L, E27L, E27C, E28 through E39
   - Construct 12' x 24' pile caps of Bents E24R, E25R, E26R and E27R.
3. Remove and reconstruct 50'-0" section of existing barrier. For Sections A-A, B-B and Connection to Structure Detail, see "Bent E24-E39 - Barrier Details" sheet.
4. Movable steel cover plate with attached Temporary Railing Type K to be in place when lane closure not present.
5. Position Temporary Railing Type K to protect work area when lane closure is present and steel cover plate is removed.
6. Bottom of footing elevation indicated by elev.
7. Gas line to be relocatd prior to excavation of adjacent footing. For relocation alignment, see Roadway Plans.
8. For test pile layout and details, see "Load Test Pile Details No.1 and No.2" sheets.

PLAN
1" = 20'-0"

SEP 20 1995

SEISMIC RETROFIT PROJECT No.614

SFOBB - BENT E23 TO E39 RETROFIT

BENT E23 TO E28

SITE PLAN - STAGE 1

DESIGN	BY John Fujimoto	CHECKED Shawn Sun	
DETAILS	BY Franol Dukeshire 3/93	CHECKED Shawn Sun	
QUANTITIES	BY M. Vinayagamoorthy	CHECKED Mike Keever	

STATE OF CALIFORNIA DEPARTMENT OF TRANSPORTATION

DIVISION OF STRUCTURES STRUCTURE DESIGN 2

BRIDGE NO. 33-25

POST MILE 1.0-1.3

CU 04
EA 043431

DS OSD 8/38 (CADD 4/89)

ORIGINAL SCALE IN INCHES FOR REDUCED PLANS 0 1 2 3

DISREGARD PRINTS BEARING EARLIER REVISION DATES

REVISION DATES (PRELIMINARY STAGE ONLY) 2/16/94 3/1/94 4/28/94 2/28/95

SHEET 8 OF 120

DIST.	COUNTY	ROUTE	POST MILES TOTAL PROJECT	SHEET NO.	TOTAL SHEETS
04	ALA	80			

REGISTERED ENGINEER - CIVIL

PLANS APPROVAL DATE

REGISTERED PROFESSIONAL ENGINEER Gregory Evan Slocum No. 44950 Exp. 3-31-98 CIVIL STATE OF CALIFORNIA

The State of California or its officers or agents shall not be responsible for the accuracy or completeness of electronic copies of this plan sheet.

NOTE:
THE CONTRACTOR SHALL VERIFY ALL CONTROLLING FIELD DIMENSIONS BEFORE ORDERING OR FABRICATING ANY MATERIAL.

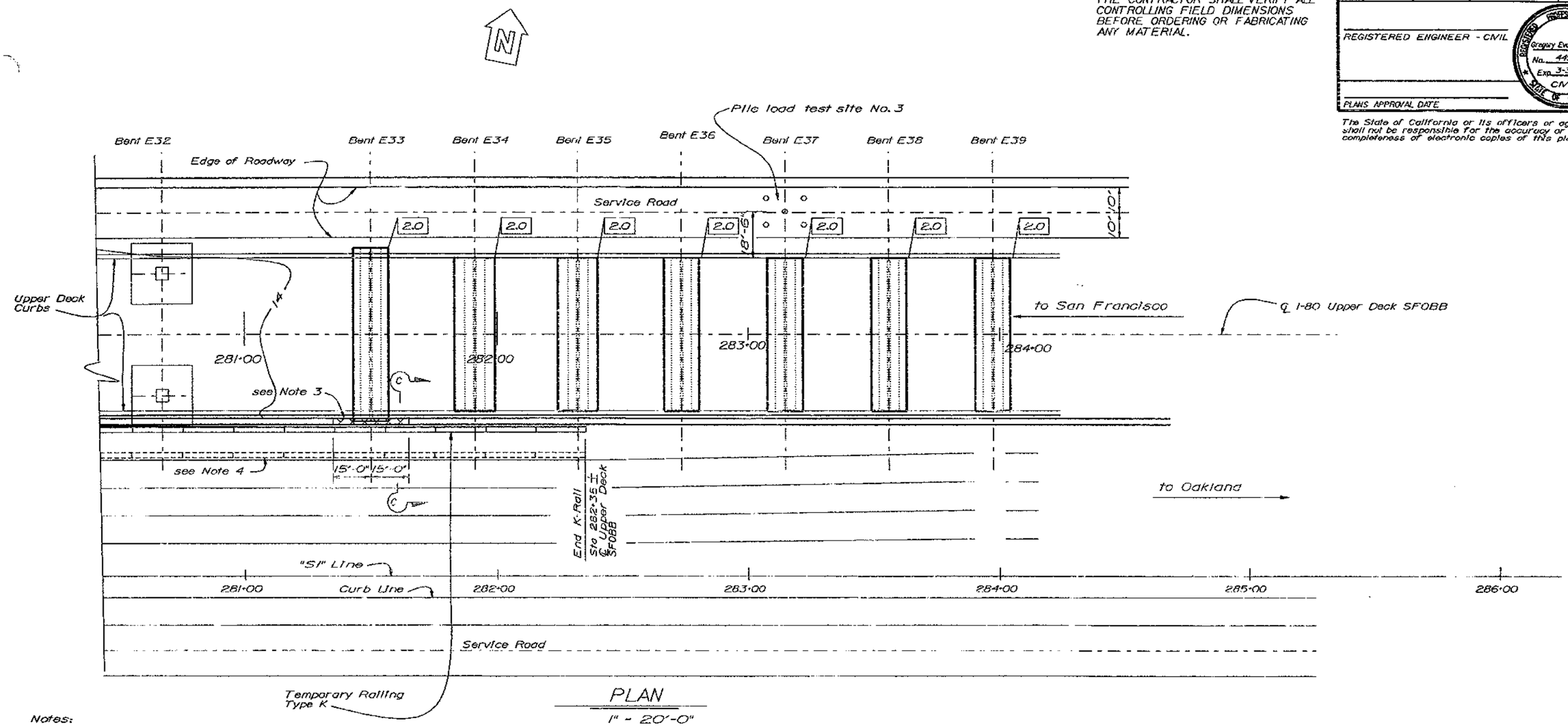

PLAN
1" = 20'-0"

Notes:

1. For staging and striping details, see Road Plans.
2. Stage 1:
   -Construct footings and columns of Bents E24L, E25L, E26L, E27L, E27C, E28 through E39.
   -Construct 12' x 24' pile caps of Bents E24R, E25R, E26R and E27R. (L-left, C-center and R-right)
3. Remove and reconstruct 30'-0" section of existing barrier. For Section C-C, see "Bent E24-E39 - Barrier Details" sheet.
4. Position Temporary Railing Type K to protect work area when lane closure is present.
5. Bottom of footing elevation indicated by elev.
6. For test pile layout and details, see "Load Test Pile Details No. 1 and No. 2" sheets.

SEP 19 1995

DESIGN	BY John Fujimoto	CHECKED Shawn Sun	
DETAILS	BY Franci Dukeshire 3/93	CHECKED Shawn Sun	
QUANTITIES	BY Husam Aqqad	CHECKED Simon Blank	

ORIGINAL SCALE IN INCHES FOR REDUCED PLANS 0 1 2 3

STATE OF CALIFORNIA DEPARTMENT OF TRANSPORTATION

DIVISION OF STRUCTURES STRUCTURE DESIGN 2

CU 04
EA 043431

SEISMIC RETROFIT PROJECT No. 614

BRIDGE NO. 33-25
POST MILE 1.0-1.3

SFOBB - BENT E23 TO E39 RETROFIT
BENT E33 TO E39
SITE PLAN - STAGE 1

DISREGARD PRINTS BEARING EARLIER REVISION DATES

REVISION DATES (PRELIMINARY STAGE ONLY) 2/23/94 2/28/94 4/28/94 2/28/95 4/11/95

SHEET 10 OF 120

DIST.	COUNTY	ROUTE	POST MILES TOTAL PROJECT	SHEET NO.	TOTAL SHEETS
04	ALA	80			

REGISTERED ENGINEER - CIVIL

REGISTERED PROFESSIONAL ENGINEER Gregory Evon Slocum No. 44950 Exp. 3-31-98 CIVIL STATE OF CALIFORNIA

PLANS APPROVAL DATE

The State of California or its officers or agents shall not be responsible for the accuracy or completeness of electronic copies of this plan sheet.

NOTE:
THE CONTRACTOR SHALL VERIFY ALL CONTROLLING FIELD DIMENSIONS BEFORE ORDERING OR FABRICATING ANY MATERIAL.

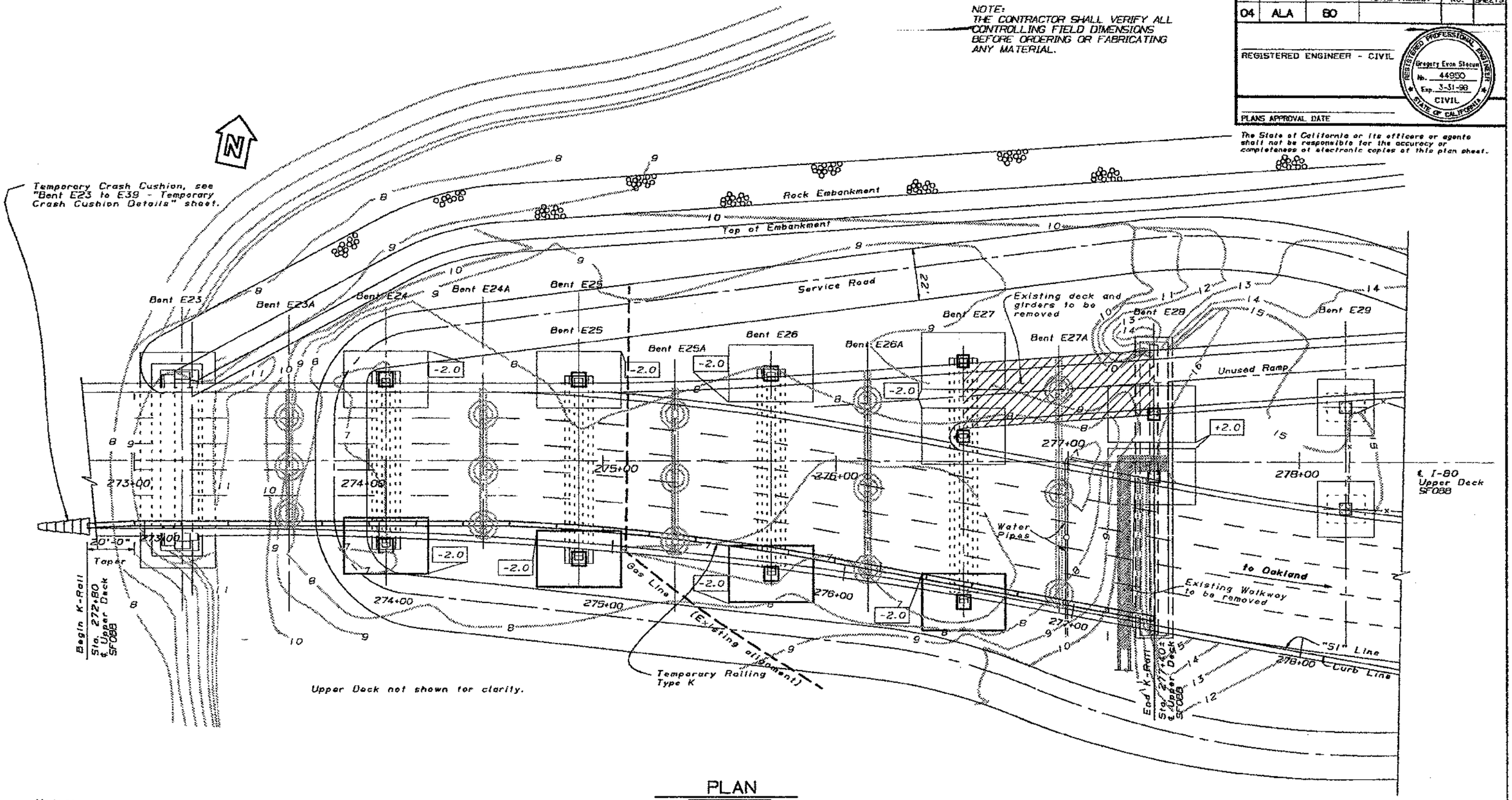

PLAN

1" = 20'-0"

Notes:

1. *For staging and striping details, see Road Plans.*
2. *Stage 2:*
   -Complete construction of footings and construct columns of Bents E24R, E25R, E26R and E27R.

MAR 22 1995

DESIGN	BY John Fujimoto	CHECKED Shawn Sun	
DETAILS	BY Franci Dukeshire 3/93	CHECKED Shawn Sun	
QUANTITIES	BY M. Vinayagamoorthy	CHECKED C. Rende	

SEISMIC RETROFIT PROJECT No. 614

STATE OF CALIFORNIA
DEPARTMENT OF TRANSPORTATION

DIVISION OF STRUCTURES
STRUCTURE DESIGN 2

BRIDGE NO. 33-25
POST MILE 1.0-1.3

SFOBB - BENT E23 TO E39 RETROFIT
BENT E23 TO E28
SITE PLAN - STAGE 2

CU 04
EA 043431

DISREGARD PRINTS BEARING EARLIER REVISION DATES

REVISION DATES (PRELIMINARY STAGE ONLY) 1/18/94 1/19/94 1/20/94 2/24/94 2/26/94

SHEET 11 OF 120

DS DSD 2139 (CADD) 4/89

ORIGINAL SCALE IN INCHES FOR REDUCED PLANS 0 1 2 3

DIST.	COUNTY	ROUTE	POST MILES TOTAL PROJECT	SHEET NO.	TOTAL SHEETS
04	ALA	80			

REGISTERED ENGINEER - CIVIL

REGISTERED PROFESSIONAL ENGINEER Gregory Evan Slocum No. 44950 Exp. 3-31-98 CIVIL STATE OF CALIFORNIA

PLANS APPROVAL DATE

The State of California or its officers or agents shall not be responsible for the accuracy or completeness of electronic copies of this plan sheet.

NOTE:
THE CONTRACTOR SHALL VERIFY ALL CONTROLLING FIELD DIMENSIONS BEFORE ORDERING OR FABRICATING ANY MATERIAL.

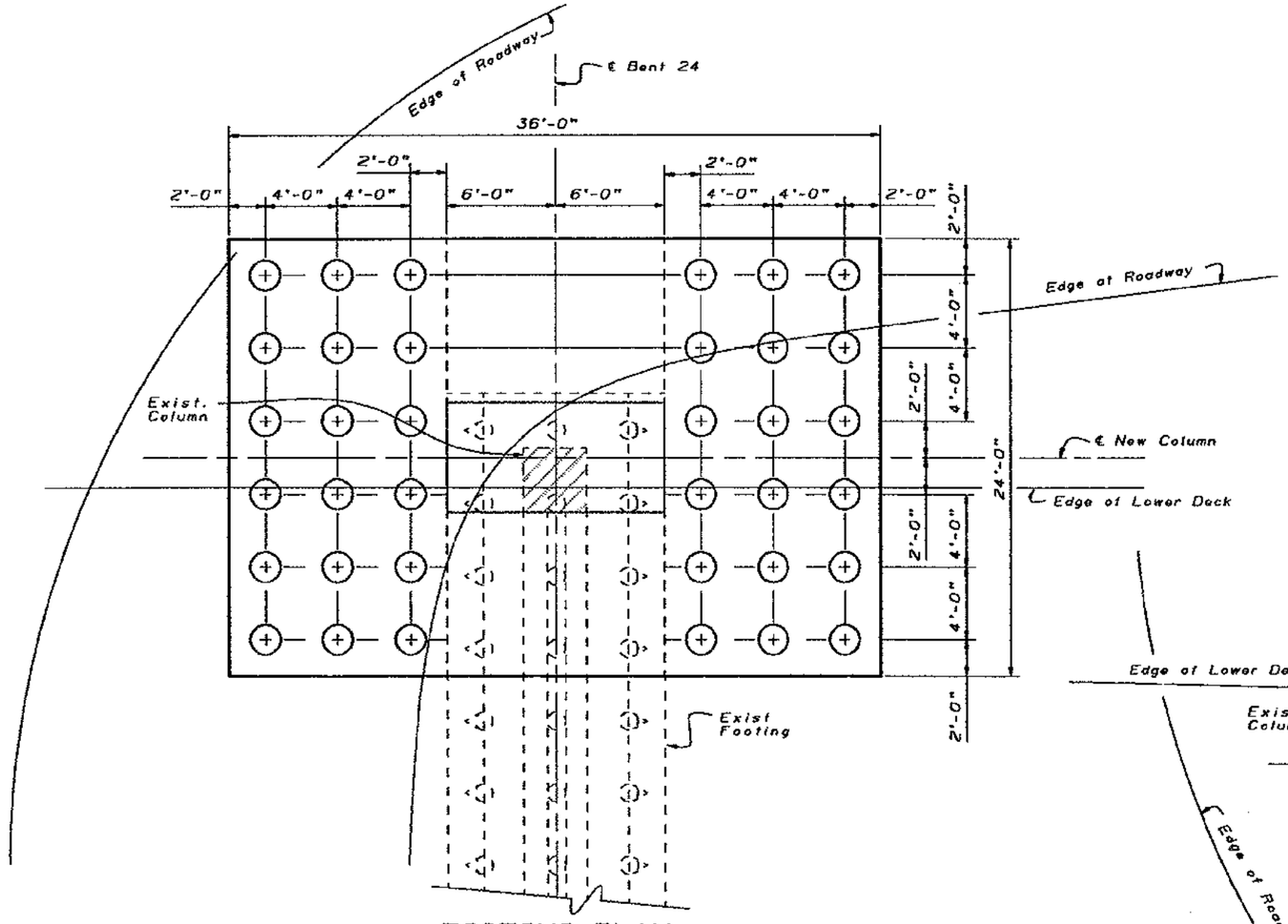

FOOTING PLAN
BENT E24 (LEFT COLUMN)
$\frac{1}{4}$" = 1'-0"

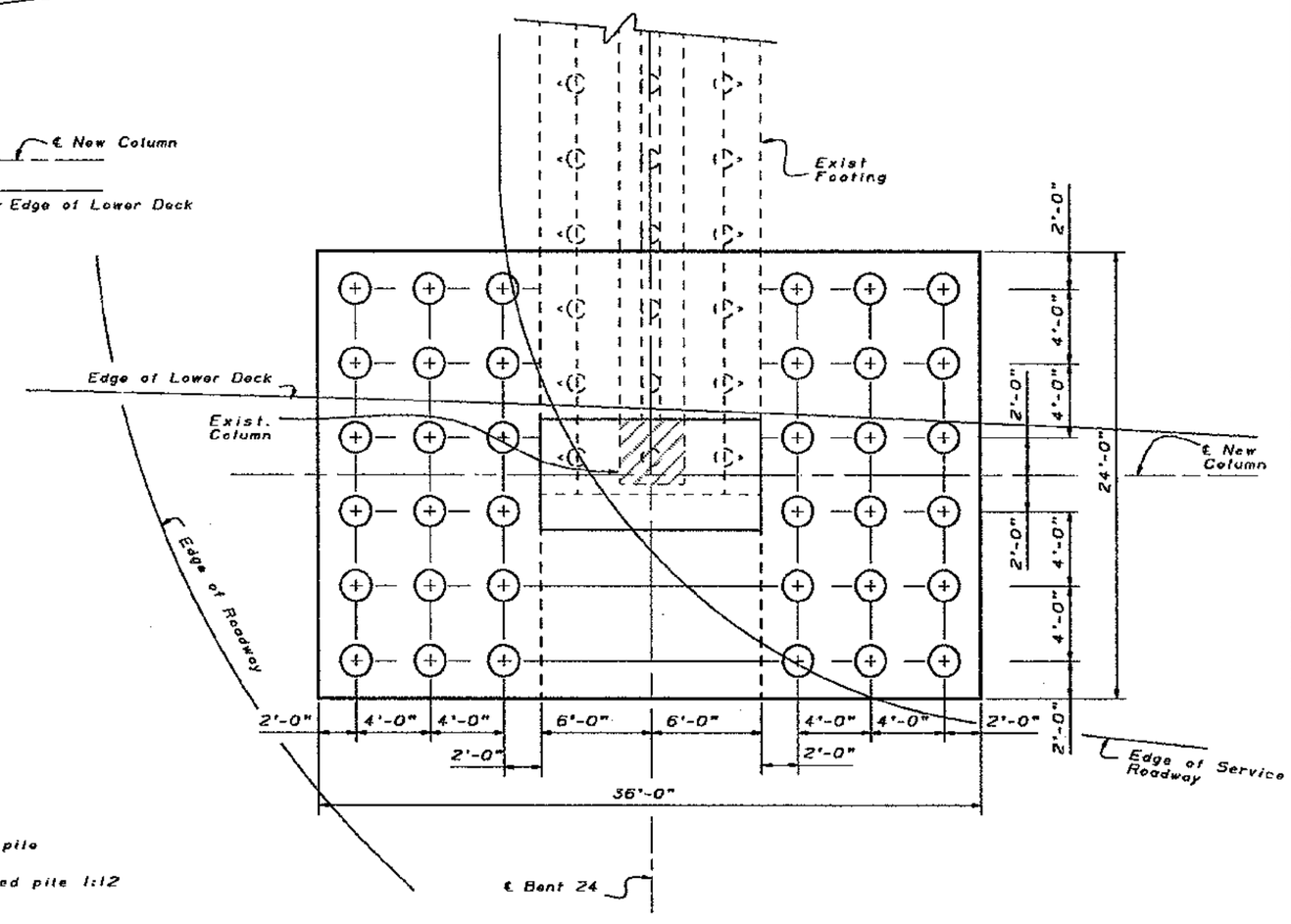

FOOTING PLAN
BENT E24 (RIGHT COLUMN)
$\frac{1}{4}$" = 1'-0"

Note:

- Indicates existing plumb pile
- Indicates existing battered pile 1:12
- Indicates new piles

MAR 22 1995

SEISMIC RETROFIT PROJECT No. 614

SFOBB - BENT E23 TO E28 RETROFIT

DESIGN	BY Gregory Slocum	CHECKED Robert Tanaka
DETAILS	BY Franci Dukeshire 3/93	CHECKED Gregory Slocum
QUANTITIES	BY M. Vinayagamoorthy	CHECKED Mike Keever

STATE OF CALIFORNIA
DEPARTMENT OF TRANSPORTATION

DIVISION OF STRUCTURES
STRUCTURE DESIGN 2

BRIDGE NO. 33-25
POST MILE 1.0-1.3

BENT E24
PILE LAYOUT

DS DSD 2158 (CADD 4/89)

ORIGINAL SCALE IN INCHES FOR REDUCED PLANS 0 1 2 3

CU 04
EA 043431

DISREGARD PRINTS BEARING EARLIER REVISION DATES → 1/20/94 2/24/94 . 11/28/95 1/18/94

REVISION DATES (PRELIMINARY STAGE ONLY)

SHEET 12 OF 120

DIST.	COUNTY	ROUTE	POST MILES TOTAL PROJECT	SHEET NO.	TOTAL SHEETS
04	ALA	80			

REGISTERED ENGINEER - CIVIL

REGISTERED PROFESSIONAL ENGINEER Gregory Evan Slocum No. 44950 Exp. 3-31-98 CIVIL STATE OF CALIFORNIA

PLANS APPROVAL DATE

The State of California or its officers or agents shall not be responsible for the accuracy or completeness of electronic copies of this plan sheet.

NOTE:
THE CONTRACTOR SHALL VERIFY ALL CONTROLLING FIELD DIMENSIONS BEFORE ORDERING OR FABRICATING ANY MATERIAL.

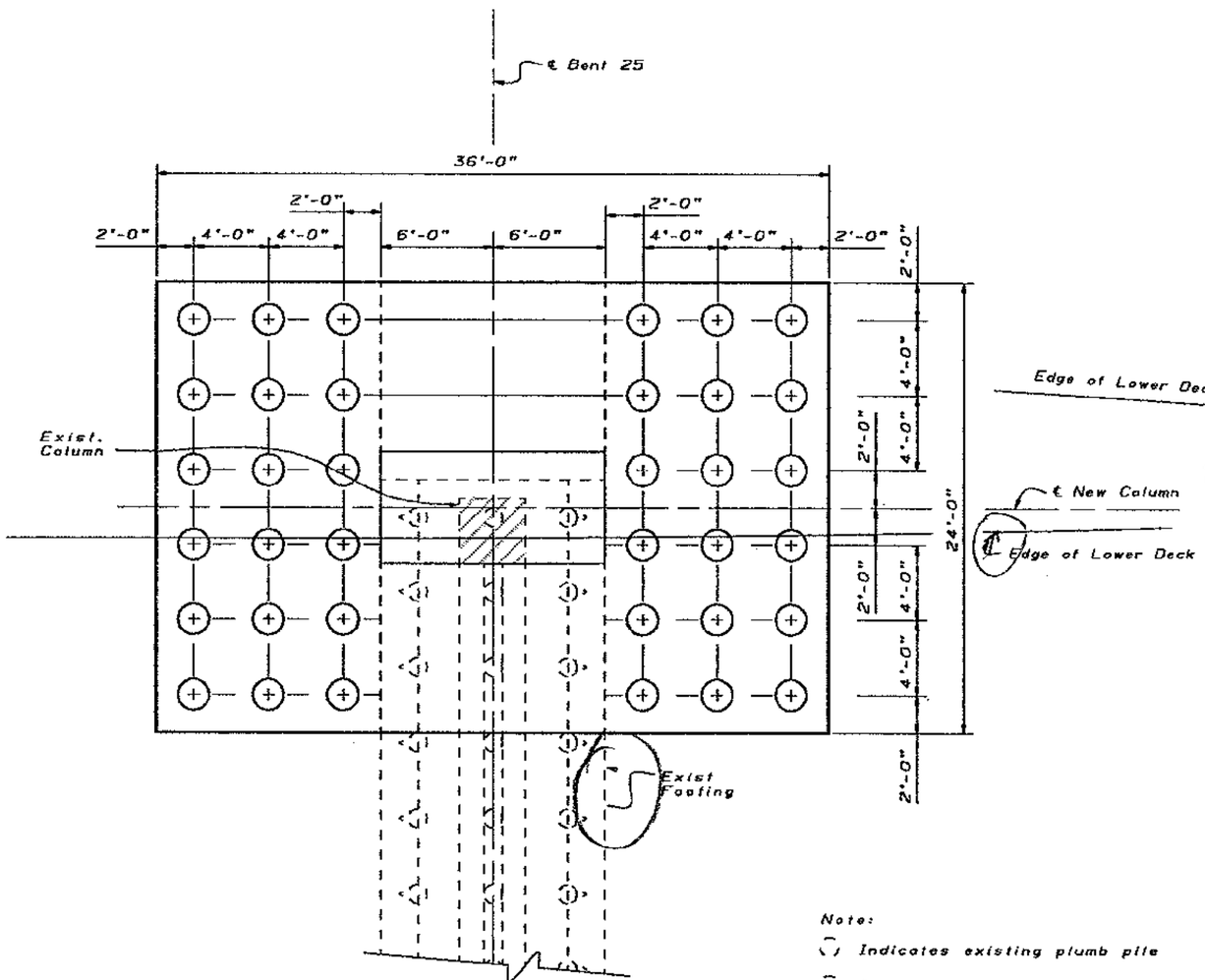

FOOTING PLAN
BENT E25 (LEFT COLUMN)
$\frac{1}{4}$" = 1'-0"

Note:
- Indicates existing plumb pile
- Indicates existing battered pile 1:12
- Indicates new pile

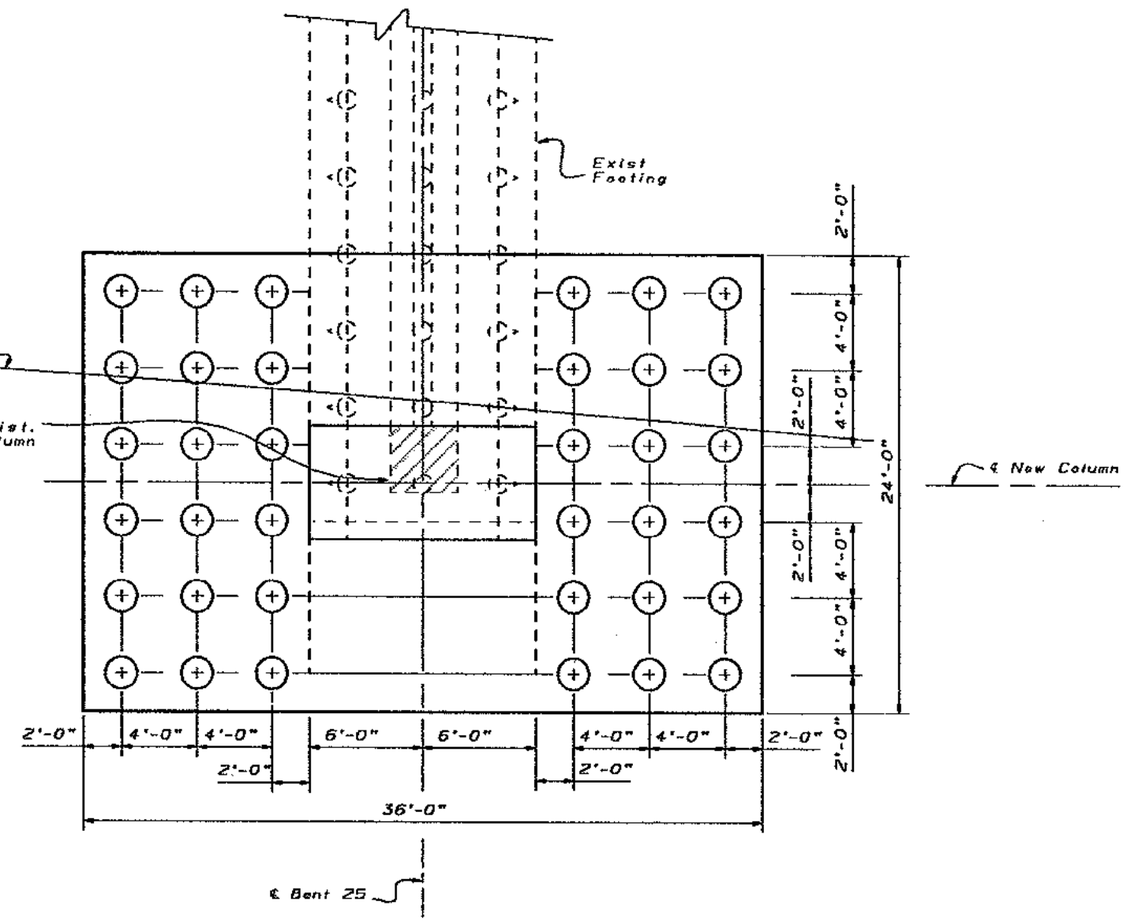

FOOTING PLAN
BENT E25 (RIGHT COLUMN)
$\frac{1}{4}$" = 1'-0"

MAR 22 1995

DESIGN	BY Gregory Slocum	CHECKED Robert Tanaka	
DETAILS	BY Franci Dukeshire 3/93	CHECKED Gregory Slocum	
QUANTITIES	BY W. Vinayagamoorthy	CHECKED Mike Keever	

ORIGINAL SCALE IN INCHES FOR REDUCED PLANS 0 1 2 3

SEISMIC RETROFIT PROJECT No. 614

STATE OF CALIFORNIA
DEPARTMENT OF TRANSPORTATION

DIVISION OF STRUCTURES
STRUCTURE DESIGN 2

CU 04
EA 043431

BRIDGE NO. 33-25
POST MILE 1.0-1.3

SFOBB - BENT E23 TO E28 RETROFIT

BENT E25

PILE LAYOUT

DISREGARD PRINTS BEARING EARLIER REVISION DATES → 2/24/94 | . | 11/24/93 | 11/28/93 | 1/19/94

SHEET 13 OF 120

05 050 2138 (CADD 4/88)

DIST.	COUNTY	ROUTE	POST MILES TOTAL PROJECT	SHEET NO.	TOTAL SHEETS
04	ALA	80			

REGISTERED ENGINEER - CIVIL

REGISTERED PROFESSIONAL ENGINEER
Gregory Evon Slocum
No. 44950
Exp. 3-31-98
CIVIL
STATE OF CALIFORNIA

PLANS APPROVAL DATE

The State of California or its officers or agents shall not be responsible for the accuracy or completeness of electronic copies of this plan sheet.

NOTE:
THE CONTRACTOR SHALL VERIFY ALL CONTROLLING FIELD DIMENSIONS BEFORE ORDERING OR FABRICATING ANY MATERIAL.

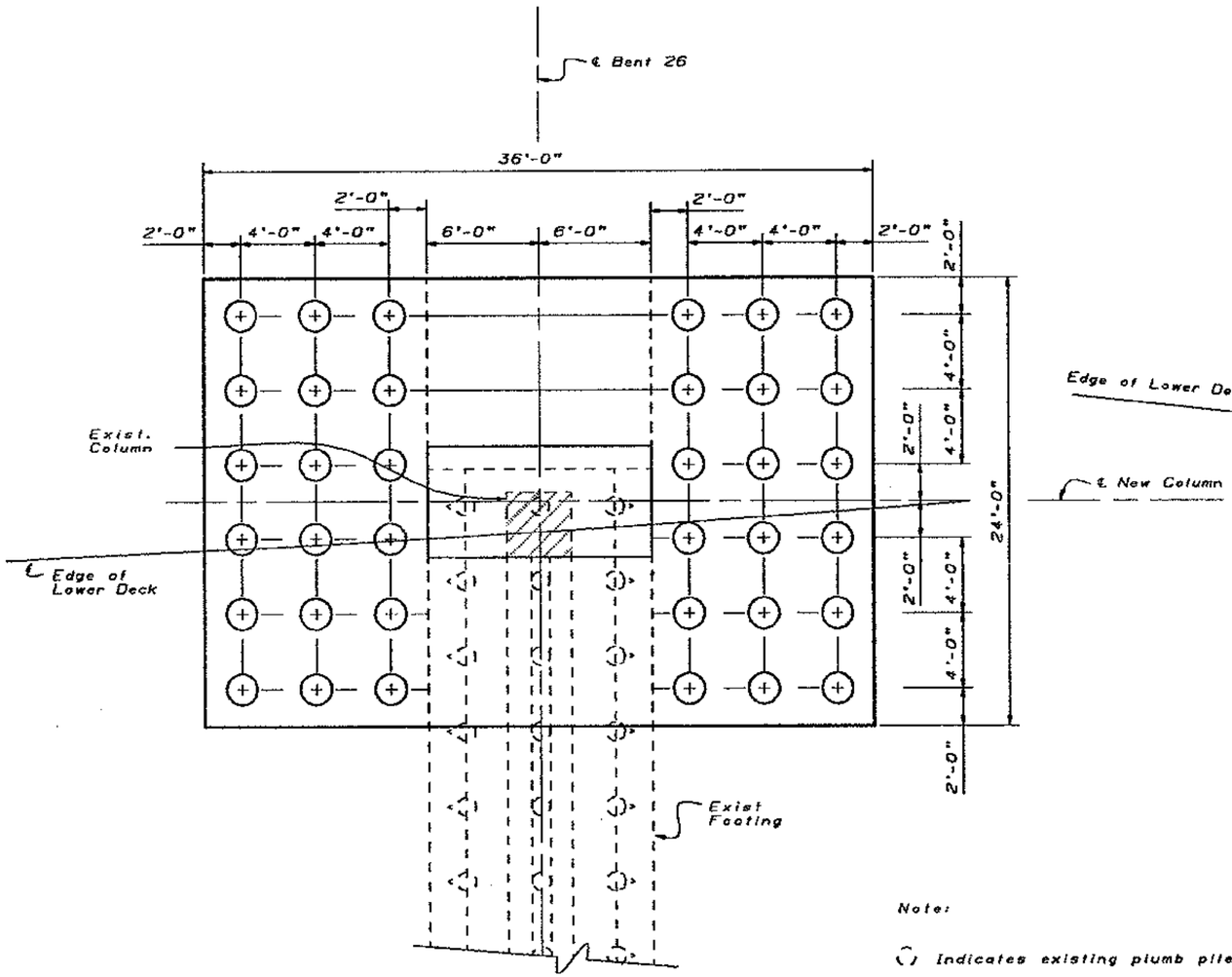

FOOTING PLAN
BENT E26 (LEFT COLUMN)
$\frac{1}{4}$" = 1'-0"

Note:

- Indicates existing plumb pile
- Indicates existing battered pile 1:12
- Indicates new pile

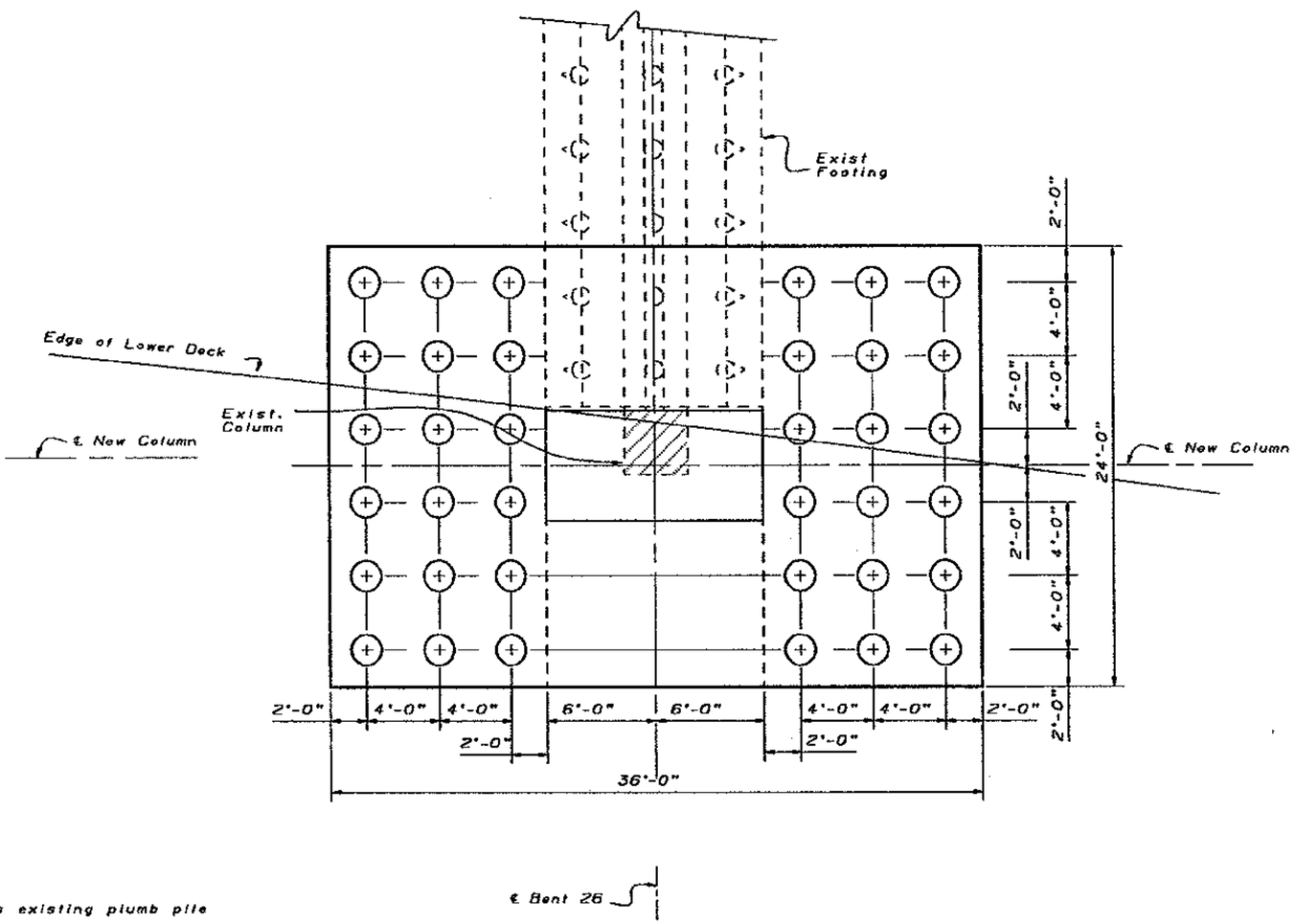

FOOTING PLAN
BENT E26 (RIGHT COLUMN)
$\frac{1}{4}$" = 1'-0"

MAR 22 1995

DESIGN	BY Gregory Slocum	CHECKED Robert Tanaka	
DETAILS	BY Franci Dukeshire 3/93	CHECKED Gregory Slocum	
QUANTITIES	BY M. Vinayagamoorthy	CHECKED Mike Keever	

SEISMIC RETROFIT PROJECT No. 614

STATE OF CALIFORNIA
DEPARTMENT OF TRANSPORTATION

DIVISION OF STRUCTURES
STRUCTURE DESIGN 2

BRIDGE NO. 33-25
POST MILE 1.0-1.3

SFOBB - BENT E23 TO E28 RETROFIT

BENT E26

PILE LAYOUT

DS DSD 2138 (CADD 4/89)

ORIGINAL SCALE IN INCHES FOR REDUCED PLANS 0 1 2 3

CU 04
EA 043431

DISREGARD PRINTS BEARING EARLIER REVISION DATES

REVISION DATES (PRELIMINARY STAGE ONLY) 2/24/94 . ~~11/21/93~~ ~~11/29/93~~ ~~1/18/94~~

SHEET 14 OF 120

DIST.	COUNTY	ROUTE	POST MILES TOTAL PROJECT	SHEET NO.	TOTAL SHEETS
04	ALA	80			

REGISTERED ENGINEER - CIVIL

REGISTERED PROFESSIONAL ENGINEER Gregory Evan Slocum No. 44950 Exp. 3-31-98 CIVIL STATE OF CALIFORNIA

PLANS APPROVAL DATE

The State of California or its officers or agents shall not be responsible for the accuracy or completeness of electronic copies of this plan sheet.

NOTE:
THE CONTRACTOR SHALL VERIFY ALL CONTROLLING FIELD DIMENSIONS BEFORE ORDERING OR FABRICATING ANY MATERIAL.

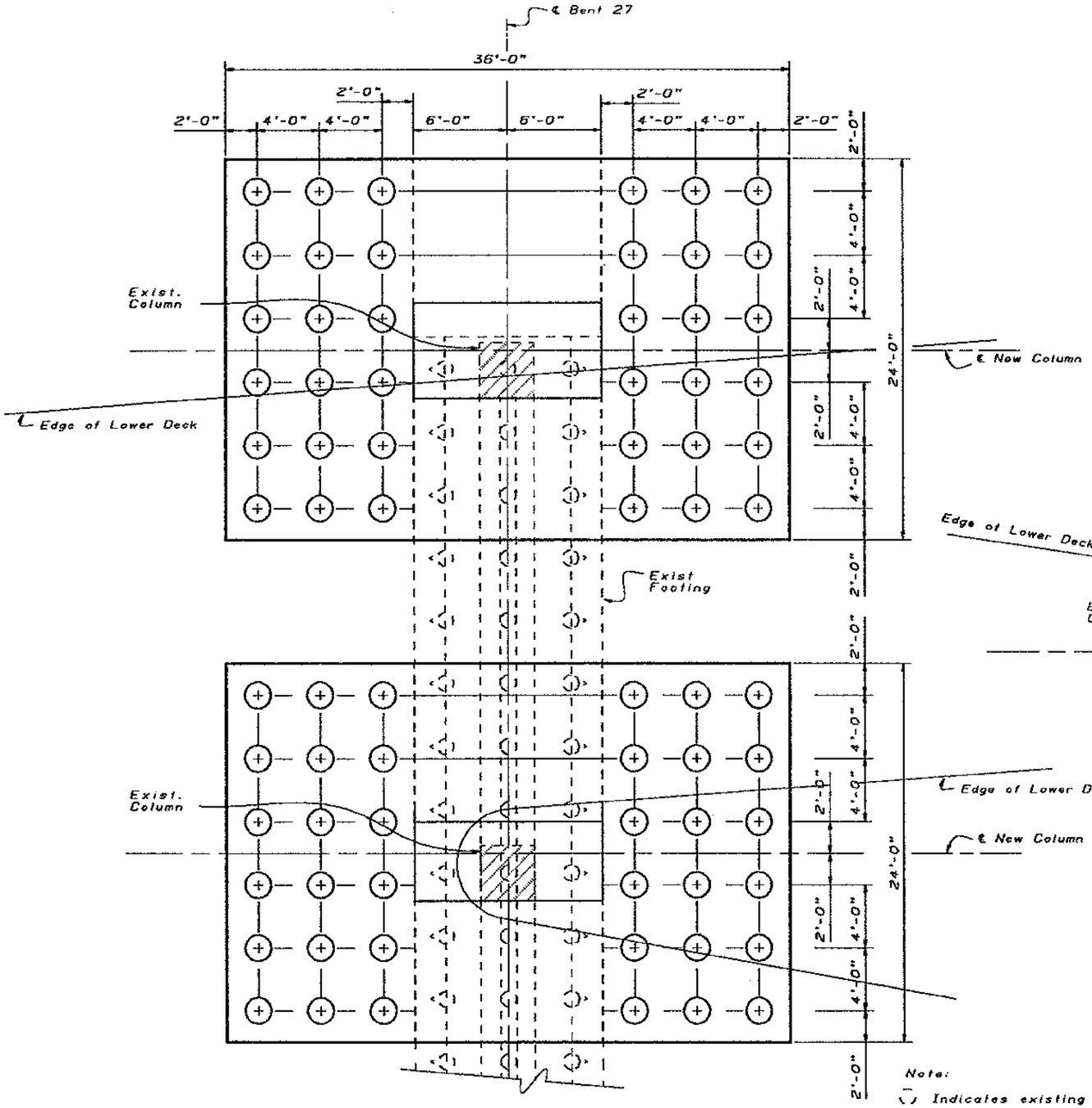

FOOTING PLAN
BENT E27 (LEFT & CENTER COLUMNS)

$\frac{1}{4}$" = 1'-0"

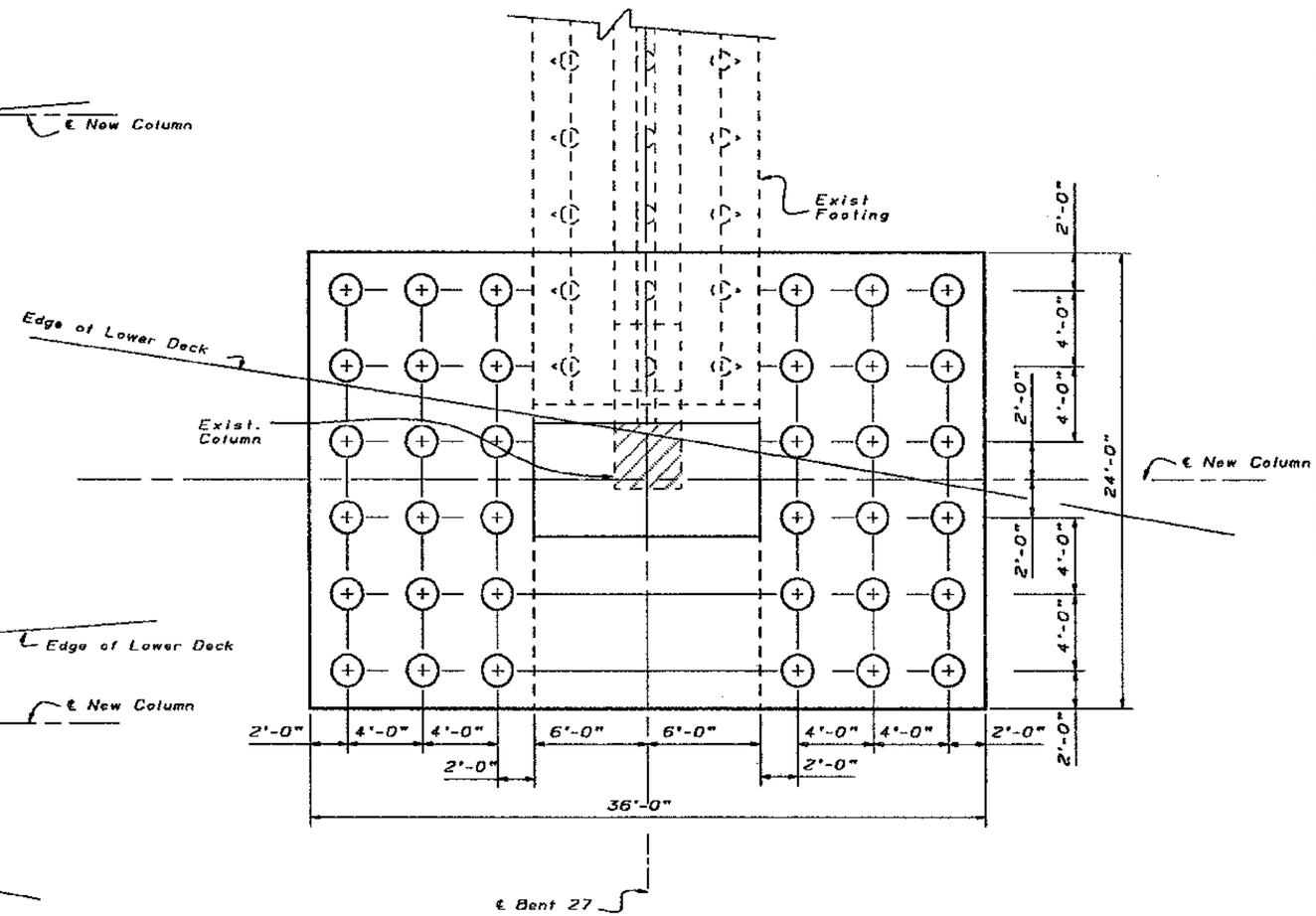

FOOTING PLAN
BENT E27 (RIGHT COLUMN)

$\frac{1}{4}$" = 1'-0"

Note:
- Indicates existing plumb pile
- Indicates existing battered pile 1:12
- Indicates new pile

MAR 22 1995

SEISMIC RETROFIT PROJECT No. 614

SFOBB - BENT E23 TO E28 RETROFIT

	BY	CHECKED
DESIGN	Gregory Slocum	Robert Tanaka
DETAILS	Franci Dukeshire 3/93	Gregory Slocum
QUANTITIES	M. Vinayagamoorthy	Mike Keever

STATE OF CALIFORNIA
DEPARTMENT OF TRANSPORTATION

DIVISION OF STRUCTURES
STRUCTURE DESIGN 2

BRIDGE NO. 33-25
POST MILE 1.0-1.3

BENT E27
PILE LAYOUT

CU 04
EA 043431

DISREGARD PRINTS BEARING EARLIER REVISION DATES

REVISION DATES (PRELIMINARY STAGE ONLY) 2/24/94 11/21/93 11/28/93 1/18/94

SHEET 15 OF 120

ORIGINAL SCALE IN INCHES FOR REDUCED PLANS 0 1 2 3

05 050 2136 (CADD 4/89)

DIST.	COUNTY	ROUTE	POST MILES TOTAL PROJECT	SHEET NO.	TOTAL SHEETS
04	ALA	80			

REGISTERED ENGINEER - CIVIL

REGISTERED PROFESSIONAL ENGINEER
Gregory Evan Slocum
No. 44950
Exp. 3-31-98
CIVIL
STATE OF CALIFORNIA

PLANS APPROVAL DATE

The State of California or its officers or agents shall not be responsible for the accuracy or completeness of electronic copies of this plan sheet.

NOTE:
THE CONTRACTOR SHALL VERIFY ALL CONTROLLING FIELD DIMENSIONS BEFORE ORDERING OR FABRICATING ANY MATERIAL.

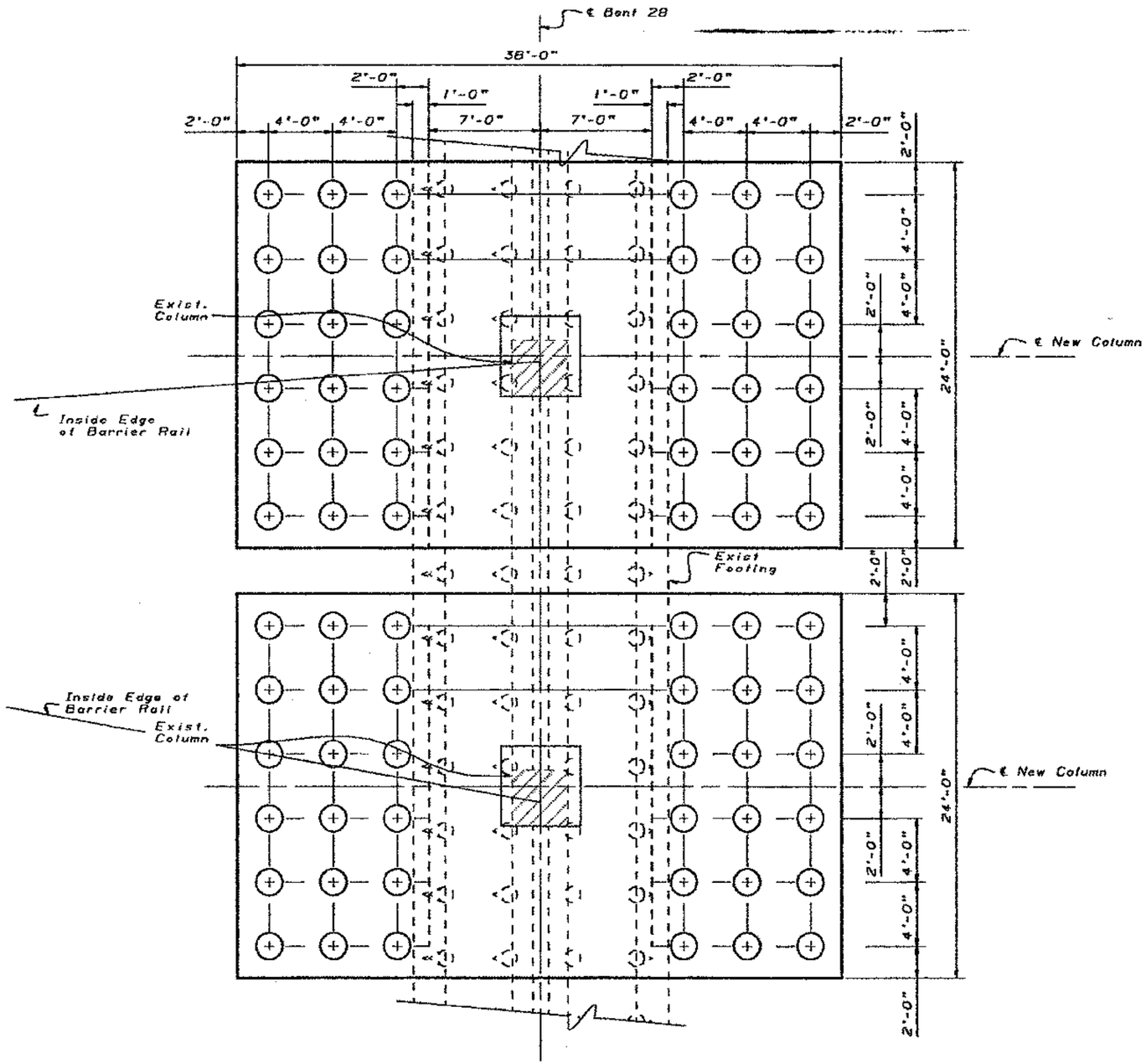

FOOTING PLAN
BENT E28
$\frac{1}{4}$" = 1'-0"

Note:

- Indicates existing plumb pile
- Indicates existing battered pile 1:12
- Indicates existing battered pile 2:12
- Indicates new pile

MAR 22 1995

DESIGN	BY Gregory Slocum	CHECKED Robert Tanaka	
DETAILS	BY Franci Dukeshire 3/95	CHECKED Gregory Slocum	
QUANTITIES	BY M. Vinayagamoorthy	CHECKED Mike Keever	

SEISMIC RETROFIT PROJECT No. 614

STATE OF CALIFORNIA
DEPARTMENT OF TRANSPORTATION

DIVISION OF STRUCTURES
STRUCTURE DESIGN 2

BRIDGE NO. 33-25
POST MILE 1.0-1.3

SFOBB - BENT E23 TO E28 RETROFIT
BENT E28
PILE LAYOUT

DS DSO 2138 (EACO 4/89)

ORIGINAL SCALE IN INCHES FOR REDUCED PLANS 0 1 2 3

CU 04
EA 043431

DISREGARD PRINTS BEARING EARLIER REVISION DATES

REVISION DATES (PRELIMINARY STAGE ONLY) 11/28/93 1/10/99 2/24/94 11/21/93

SHEET 16 OF 120

DIST	COUNTY	ROUTE	POST MILES TOTAL PROJECT	SHEET NO.	TOTAL SHEETS
04	ALA	80			

REGISTERED ENGINEER - CIVIL

PLANS APPROVAL DATE

REGISTERED PROFESSIONAL ENGINEER Gregory Evan Slocum No. 44950 Exp. 3-31-98 CIVIL STATE OF CALIFORNIA

The State of California or its officers or agents shall not be responsible for the accuracy or completeness of electronic copies of this plan sheet.

NOTE:
THE CONTRACTOR SHALL VERIFY ALL CONTROLLING FIELD DIMENSIONS BEFORE ORDERING OR FABRICATING ANY MATERIAL.

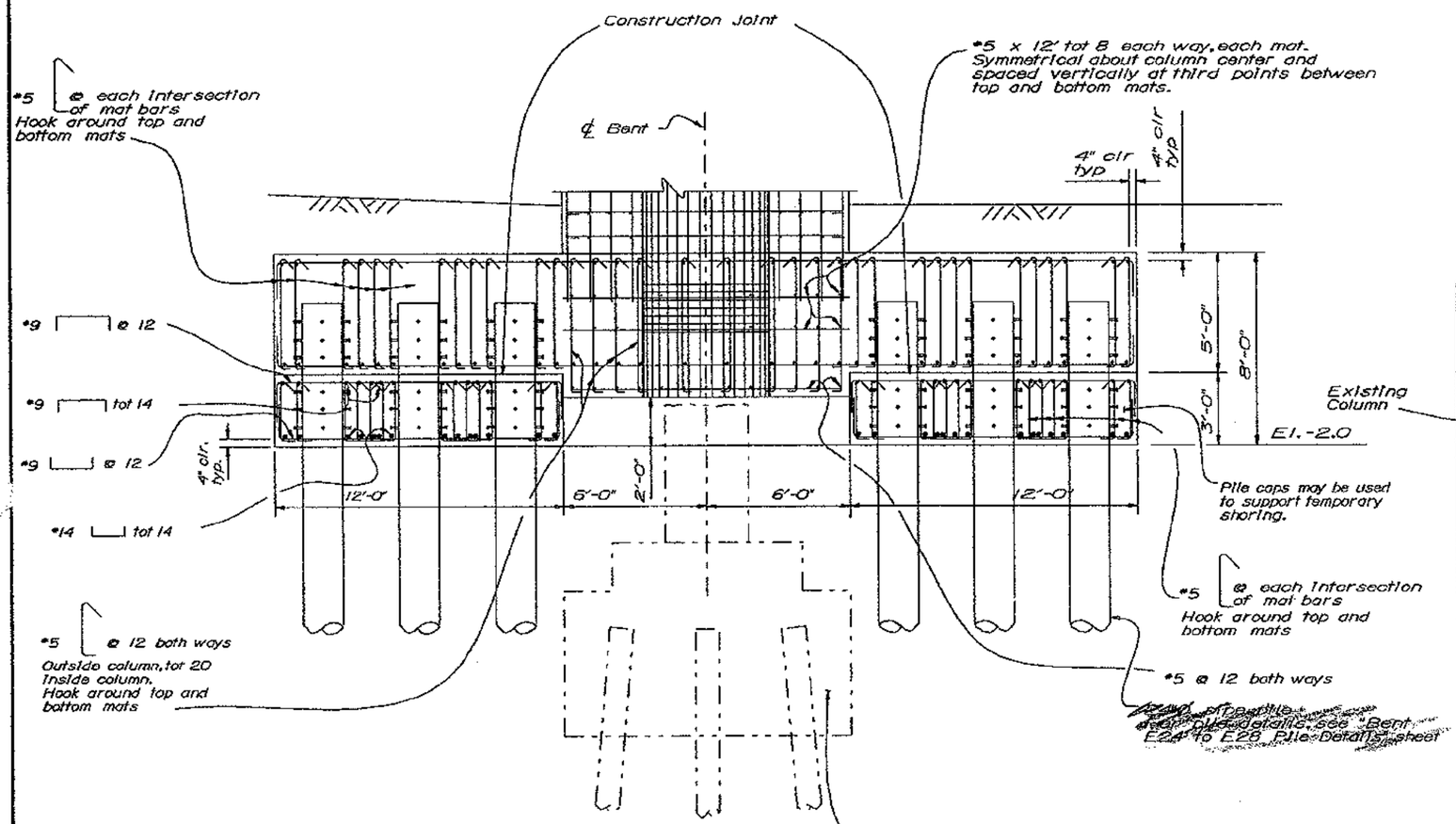

ELEVATION
BENT E24 - E27
LEFT AND RIGHT COLUMNS

1/4" = 1'-0"

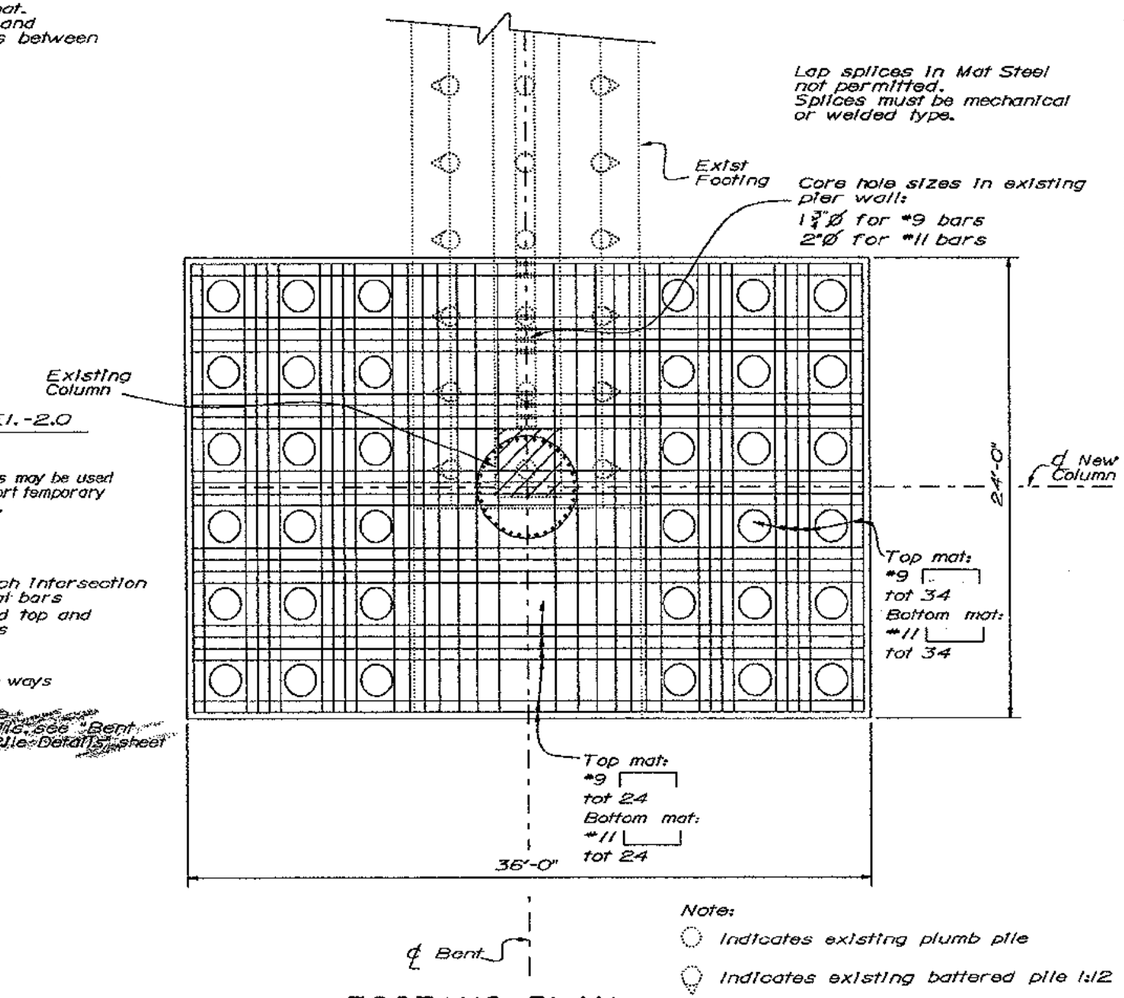

FOOTING PLAN

1/4" = 1'-0"

Note:
- ○ Indicates existing plumb pile
- ○ Indicates existing battered pile 1:12
- ○ Indicates new pile

JUL 7 1995

DESIGN	BY Gregory Slocum	CHECKED Robert Tanaka	
DETAILS	BY Frand Dukeshire 3/93	CHECKED Gregory Slocum	
QUANTITIES	BY M.V.Inayagamoorthy	CHECKED G. Rende	

ORIGINAL SCALE IN INCHES FOR REDUCED PLANS 0 1 2 3

SEISMIC RETROFIT PROJECT No. 614

STATE OF CALIFORNIA DEPARTMENT OF TRANSPORTATION

DIVISION OF STRUCTURES STRUCTURE DESIGN 2

CU 04
EA 043431

BRIDGE NO. 33-25
POST MILE 1.0-1.3

SFOBB - BENT E23 TO E28 RETROFIT

BENT E24-E27 LEFT & RIGHT COLUMN FOOTING DETAILS

DISREGARD PRINTS BEARING EARLIER REVISION DATES → 2/26/94 | 1/31/94 | 2/1/94 | 2/24/94

REVISION DATES (PRELIMINARY STAGE ONLY)

SHEET 17 OF 120

DIST	COUNTY	ROUTE	POST MILES TOTAL PROJECT	SHEET NO.	TOTAL SHEETS
04	ALA	80			

REGISTERED ENGINEER - CIVIL

REGISTERED PROFESSIONAL ENGINEER Gregory Evan Slocum No. 44950 Exp. 3-31-98 CIVIL STATE OF CALIFORNIA

PLANS APPROVAL DATE

The State of California or its officers or agents shall not be responsible for the accuracy or completeness of electronic copies of this plan sheet.

NOTE:
THE CONTRACTOR SHALL VERIFY ALL CONTROLLING FIELD DIMENSIONS BEFORE ORDERING OR FABRICATING ANY MATERIAL.

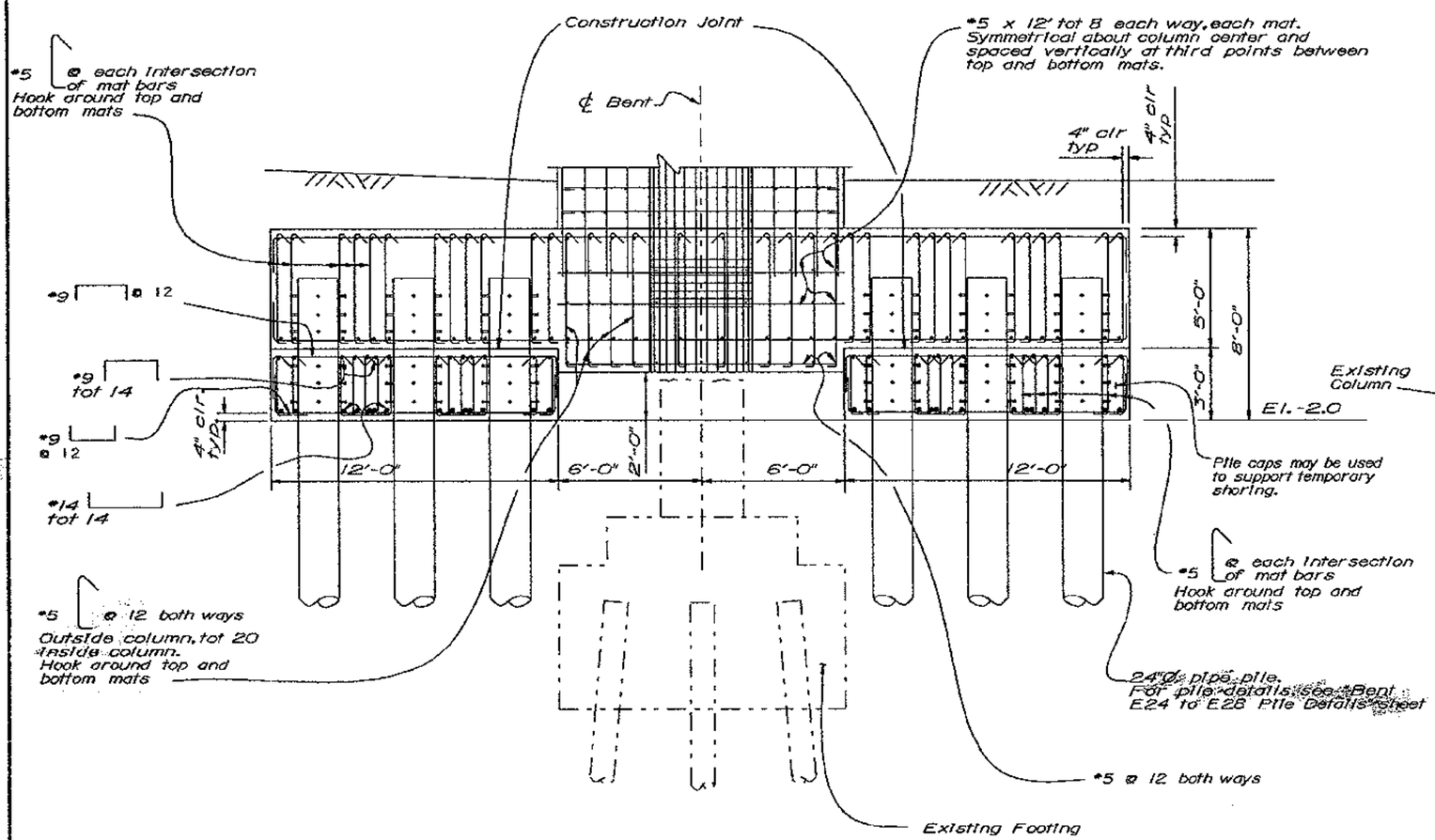

ELEVATION
BENT E27 (CENTER COLUMN)

1/4" = 1'-0"

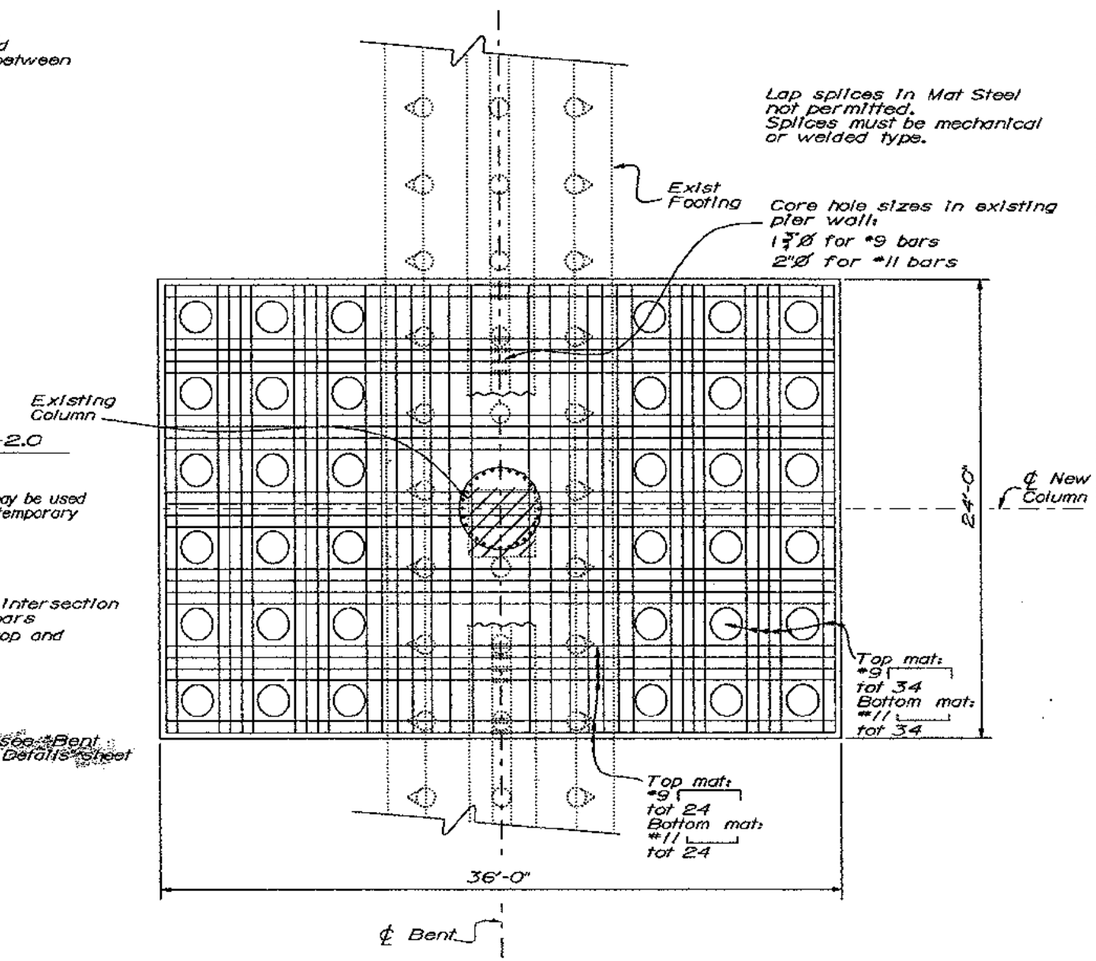

FOOTING PLAN

1/4" = 1'-0"

Note:
- ○ Indicates existing plumb pile
- ○ Indicates existing battered pile 1:12
- ○ Indicates new pile

JUL 7 1995

DESIGN	BY Gregory Slocum	CHECKED Robert Tanaka
DETAILS	BY Francl Dukeshire 3/93	CHECKED Gregory Slocum
QUANTITIES	BY M.Vinayagamoorthy	CHECKED G.Rende

ORIGINAL SCALE IN INCHES FOR REDUCED PLANS 0 1 2 3

SEISMIC RETROFIT PROJECT No. 614

STATE OF CALIFORNIA
DEPARTMENT OF TRANSPORTATION

DIVISION OF STRUCTURES
STRUCTURE DESIGN 2

CU 04
EA 043431

BRIDGE NO. 33-25
POST MILE 1.0-1.3

SFOBB - BENT E23 TO E28 RETROFIT

BENT E27 CENTER COLUMN

FOOTING DETAILS

DISREGARD PRINTS BEARING EARLIER REVISION DATES

REVISION DATES (PRELIMINARY STAGE ONLY): 2/26/94 2/28/95 2/14/94 2/24/94

SHEET 18 OF 120

NOTE:
THE CONTRACTOR SHALL VERIFY ALL CONTROLLING FIELD DIMENSIONS BEFORE ORDERING OR FABRICATING ANY MATERIAL.

DIST	COUNTY	ROUTE	POST MILES TOTAL PROJECT	SHEET NO.	TOTAL SHEETS
04	ALA	80			

REGISTERED ENGINEER - CIVIL

REGISTERED PROFESSIONAL ENGINEER Gregory Evan Slocum No. 44950 Exp. 3-31-96 CIVIL STATE OF CALIFORNIA

PLANS APPROVAL DATE

The State of California or its officers or agents shall not be responsible for the accuracy or completeness of electronic copies of this plan sheet.

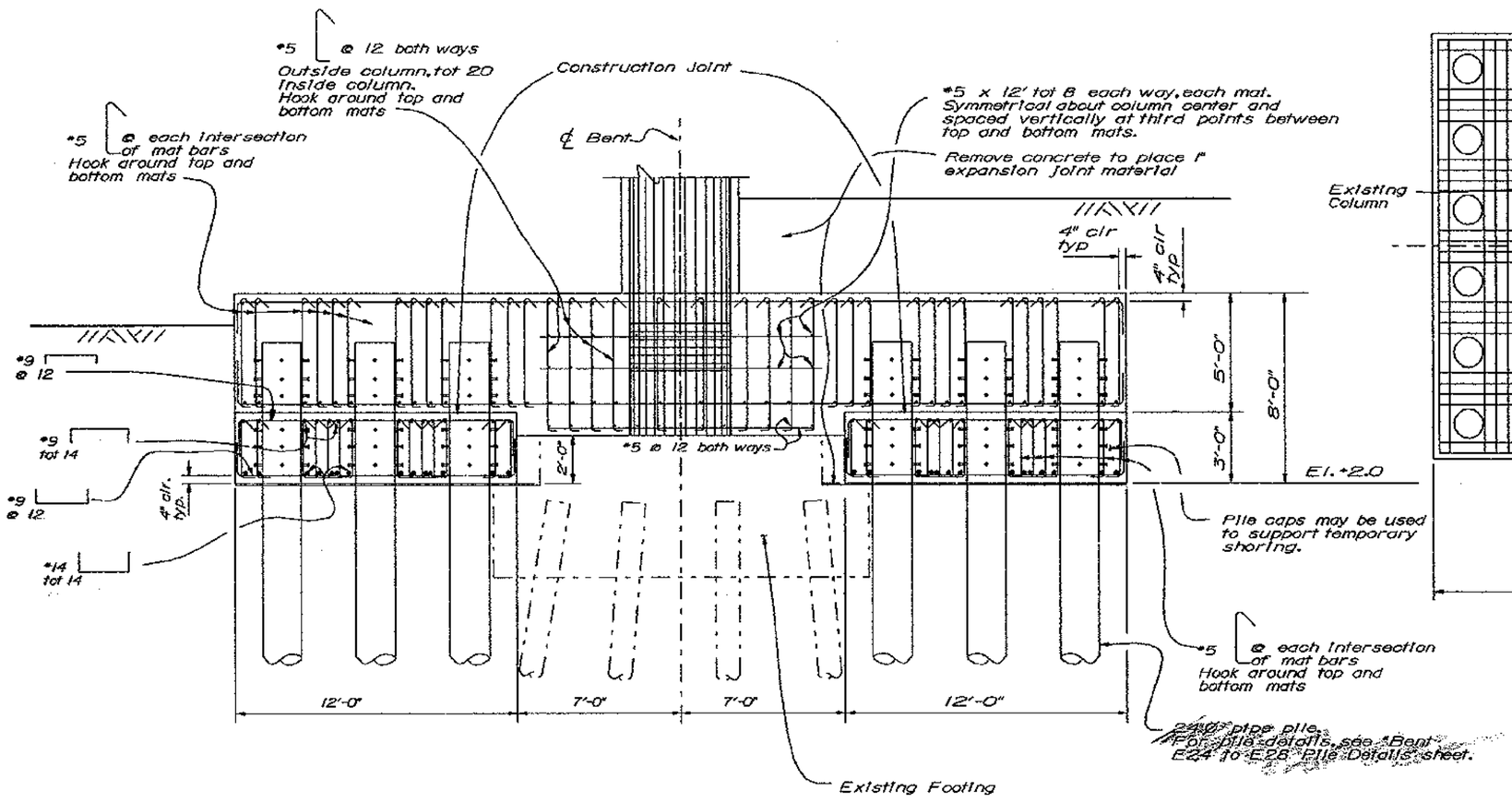

ELEVATION
BENT E28 LEFT & RIGHT COLUMNS

1/5" = 1'-0"

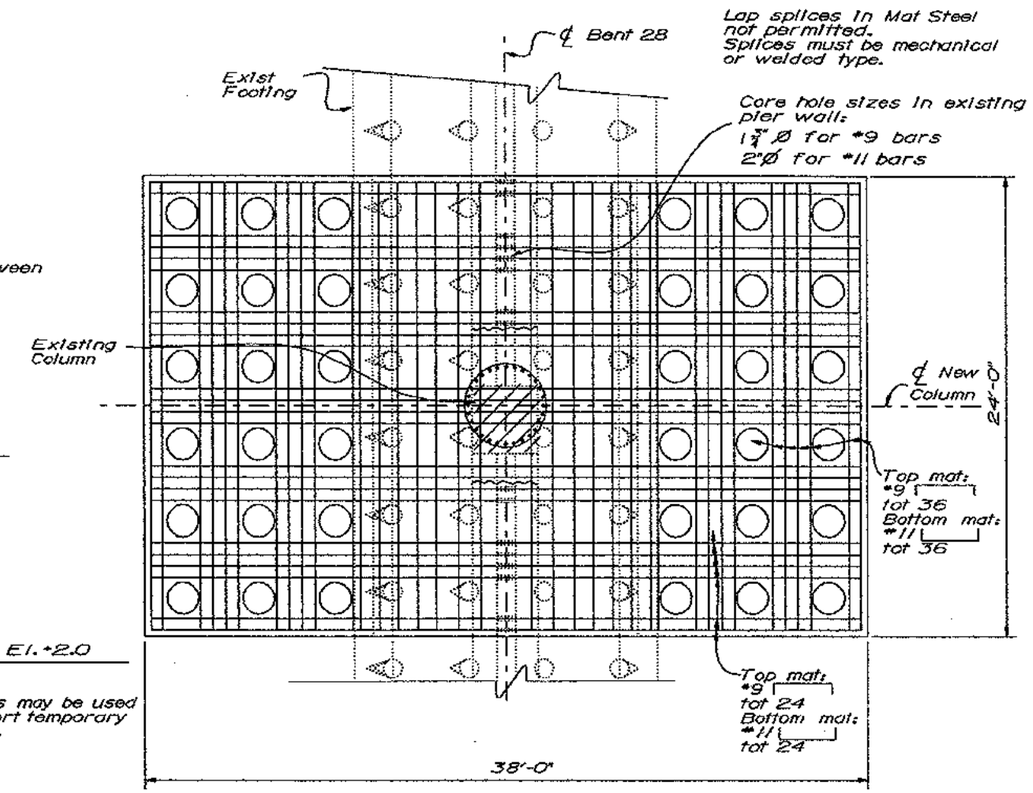

FOOTING PLAN

1/5" = 1'-0"

JUL 10 1995

Note:

- ○ Indicates existing plumb pile
- Indicates existing battered pile 1:12
- Indicates existing battered pile 2:12
- ⊕ Indicates new pile

DESIGN	BY Gregory Slocum	CHECKED Robert Tanaka	
DETAILS	BY Franci Dukeshire 3/93	CHECKED Gregory Slocum	
QUANTITIES	BY M.Vinayagamoorthy	CHECKED G.Rende	

ORIGINAL SCALE IN INCHES FOR REDUCED PLANS 0 1 2 3

SEISMIC RETROFIT PROJECT No. 614

STATE OF CALIFORNIA
DEPARTMENT OF TRANSPORTATION

DIVISION OF STRUCTURES
STRUCTURE DESIGN 2

CU 04
EA 043431

BRIDGE NO. 33-25
POST MILE 1.0-1.3

SFOBB - BENT E23 TO E28 RETROFIT

BENT E28

FOOTING DETAILS

DISREGARD PRINTS BEARING EARLIER REVISION DATES

REVISION DATES (PRELIMINARY STAGE ONLY) 2/26/94 2/28/95 2/1/94 2/24/94

SHEET 19 OF 120

DIST.	COUNTY	ROUTE	POST MILES TOTAL PROJECT	SHEET NO.	TOTAL SHEETS
04	ALA	80			

REGISTERED ENGINEER - CIVIL

REGISTERED PROFESSIONAL ENGINEER Gregory Evan Slocum No. 44950 Exp. 3-31-98 CIVIL STATE OF CALIFORNIA

PLANS APPROVAL DATE

The State of California or its officers or agents shall not be responsible for the accuracy or completeness of electronic copies of this plan sheet.

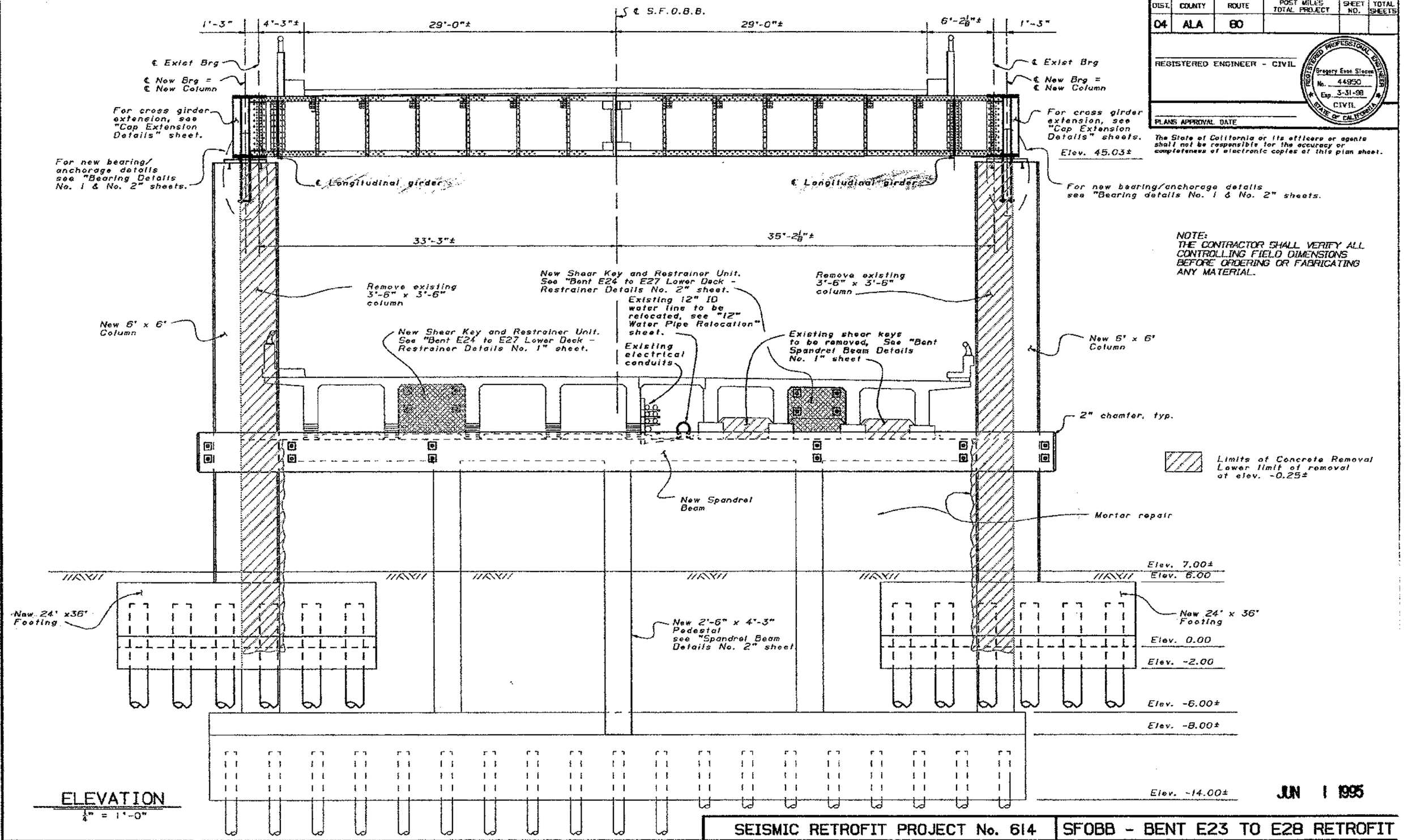

NOTE:
THE CONTRACTOR SHALL VERIFY ALL CONTROLLING FIELD DIMENSIONS BEFORE ORDERING OR FABRICATING ANY MATERIAL.

ELEVATION
1/4" = 1'-0"

JUN 1 1995

SEISMIC RETROFIT PROJECT No. 614

SFOBB - BENT E23 TO E28 RETROFIT

DESIGN	BY Gregory Slocum	CHECKED Robert Tanaka
DETAILS	BY Franci Dukeshire 3/93	CHECKED Gregory Slocum
QUANTITIES	BY M. Vinayagamoorthy	CHECKED C. Rendo

STATE OF CALIFORNIA
DEPARTMENT OF TRANSPORTATION

DIVISION OF STRUCTURES
STRUCTURE DESIGN 2

BRIDGE NO. 33-25
POST MILE 1.0-1.3

BENT E24
BENT ELEVATION

CU 04
EA 043431

DISREGARD PRINTS BEARING EARLIER REVISION DATES → 1/20/94 1/31/94 2/1/94 2/28/94 3/1/94

SHEET 21 OF 120

05 050 2136 (CADD 4/95)

ORIGINAL SCALE IN INCHES FOR REDUCED PLANS 0 1 2 3

DIST.	COUNTY	ROUTE	POST MILES TOTAL PROJECT	SHEET NO.	TOTAL SHEETS
04	ALA	80			

REGISTERED ENGINEER - CIVIL

REGISTERED PROFESSIONAL ENGINEER Gregory Evan Slocum No. 44950 Exp. 3-31-96 CIVIL STATE OF CALIFORNIA

PLANS APPROVAL DATE

The State of California or its officers or agents shall not be responsible for the accuracy or completeness of electronic copies of this plan sheet.

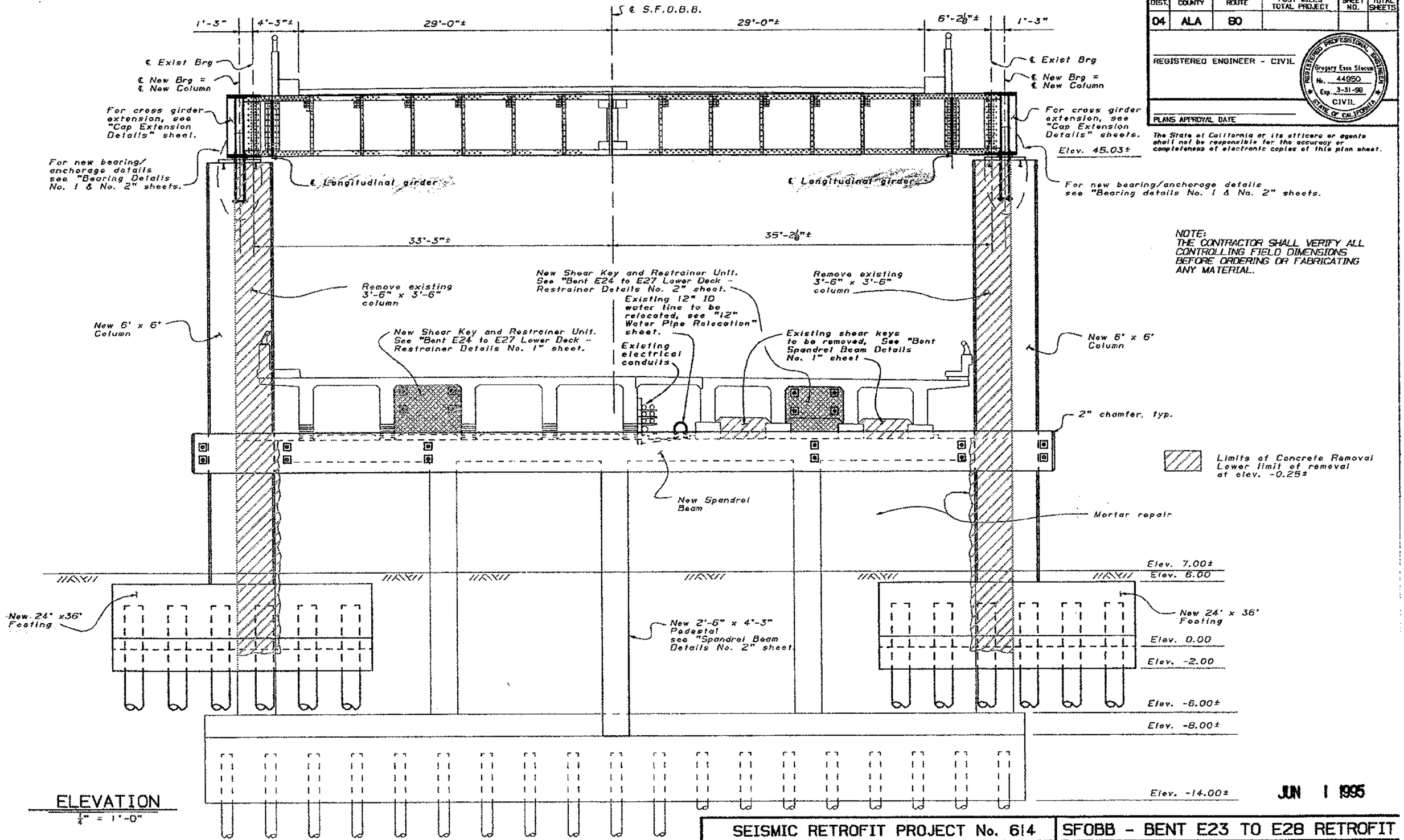

NOTE:
THE CONTRACTOR SHALL VERIFY ALL CONTROLLING FIELD DIMENSIONS BEFORE ORDERING OR FABRICATING ANY MATERIAL.

ELEVATION
¼" = 1'-0"

JUN 1 1995

SEISMIC RETROFIT PROJECT No. 614

SFOBB - BENT E23 TO E28 RETROFIT

BENT E24

BENT ELEVATION

DESIGN	BY Gregory Slocum	CHECKED Robert Tanaka
DETAILS	BY Franci Dukeshire 3/93	CHECKED Gregory Slocum
QUANTITIES	BY M. Vinayagamoorthy	CHECKED C. Rende

STATE OF CALIFORNIA DEPARTMENT OF TRANSPORTATION

DIVISION OF STRUCTURES STRUCTURE DESIGN 2

CU 04
EA 043431

BRIDGE NO. 33-25

POST MILE 1.0-1.3

DISREGARD PRINTS BEARING EARLIER REVISION DATES → 1/30/94 1/31/94 2/1/94 2/28/94 3/1/94

SHEET 21 OF 120

05 050 2138 (CADD 4/89)

ORIGINAL SCALE IN INCHES FOR REDUCED PLANS 0 1 2 3

DIST.	COUNTY	ROUTE	POST MILES TOTAL PROJECT	SHEET NO.	TOTAL SHEETS
04	ALA	80			

REGISTERED ENGINEER - CIVIL

REGISTERED PROFESSIONAL ENGINEER Gregory Evan Slocum No. 44950 Exp. 3-31-98 CIVIL STATE OF CALIFORNIA

PLANS APPROVAL DATE

The State of California or its officers or agents shall not be responsible for the accuracy or completeness of electronic copies of this plan sheet.

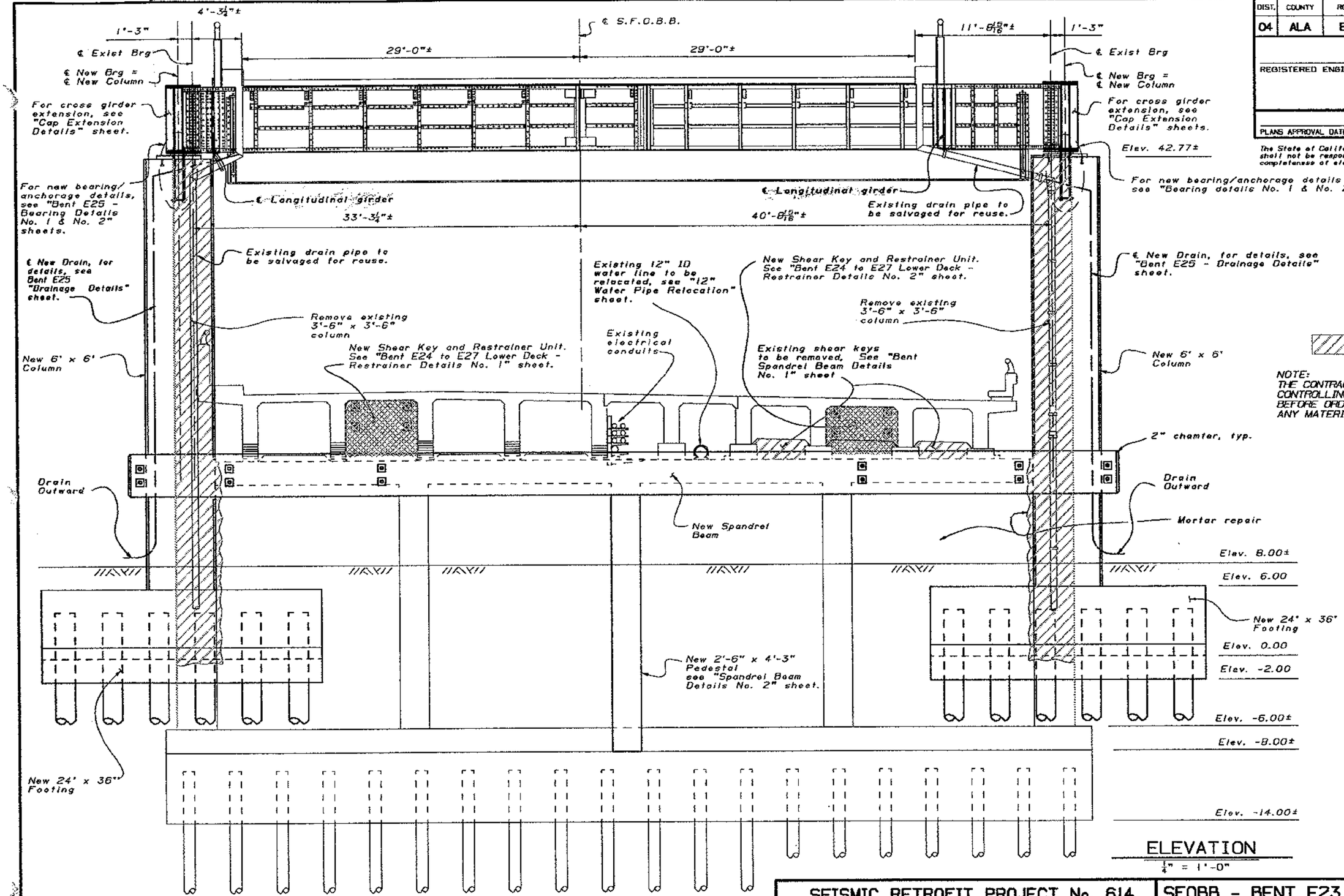

Limits of concrete removal. Lower limit of removal at elev. -0.25±

NOTE:
THE CONTRACTOR SHALL VERIFY ALL CONTROLLING FIELD DIMENSIONS BEFORE ORDERING OR FABRICATING ANY MATERIAL.

ELEVATION
¼" = 1'-0"

JUN 1 1995

SEISMIC RETROFIT PROJECT No. 614

SFOBB - BENT E23 TO E28 RETROFIT

	BY	CHECKED
DESIGN	Gregory Slocum	Robert Tanaka
DETAILS	Franci Oukeshire 3/93	Gregory Slocum
QUANTITIES	W. Vinayagamoorthy	C. Rende

STATE OF CALIFORNIA
DEPARTMENT OF TRANSPORTATION

DIVISION OF STRUCTURES
STRUCTURE DESIGN 2

BRIDGE NO. 33-25
POST MILE 1.0-1.3

BENT E25
BENT ELEVATION

CU 04
EA 043431

DISREGARD PRINTS BEARING EARLIER REVISION DATES → 1/20/94 1/24/94 1/31/94 2/26/94

REVISION DATES (PRELIMINARY STAGE ONLY)

SHEET 22 OF 120

ORIGINAL SCALE IN INCHES FOR REDUCED PLANS 0 1 2 3

DS 050 2138 (CADD 4/89)

DIST.	COUNTY	ROUTE	POST MILES TOTAL PROJECT	SHEET NO.	TOTAL SHEETS
04	ALA	80			

REGISTERED ENGINEER - CIVIL

REGISTERED PROFESSIONAL ENGINEER Gregory Evan Slocum No. 44950 Exp. 3-31-98 CIVIL STATE OF CALIFORNIA

PLANS APPROVAL DATE

The State of California or its officers or agents shall not be responsible for the accuracy or completeness of electronic copies of this plan sheet.

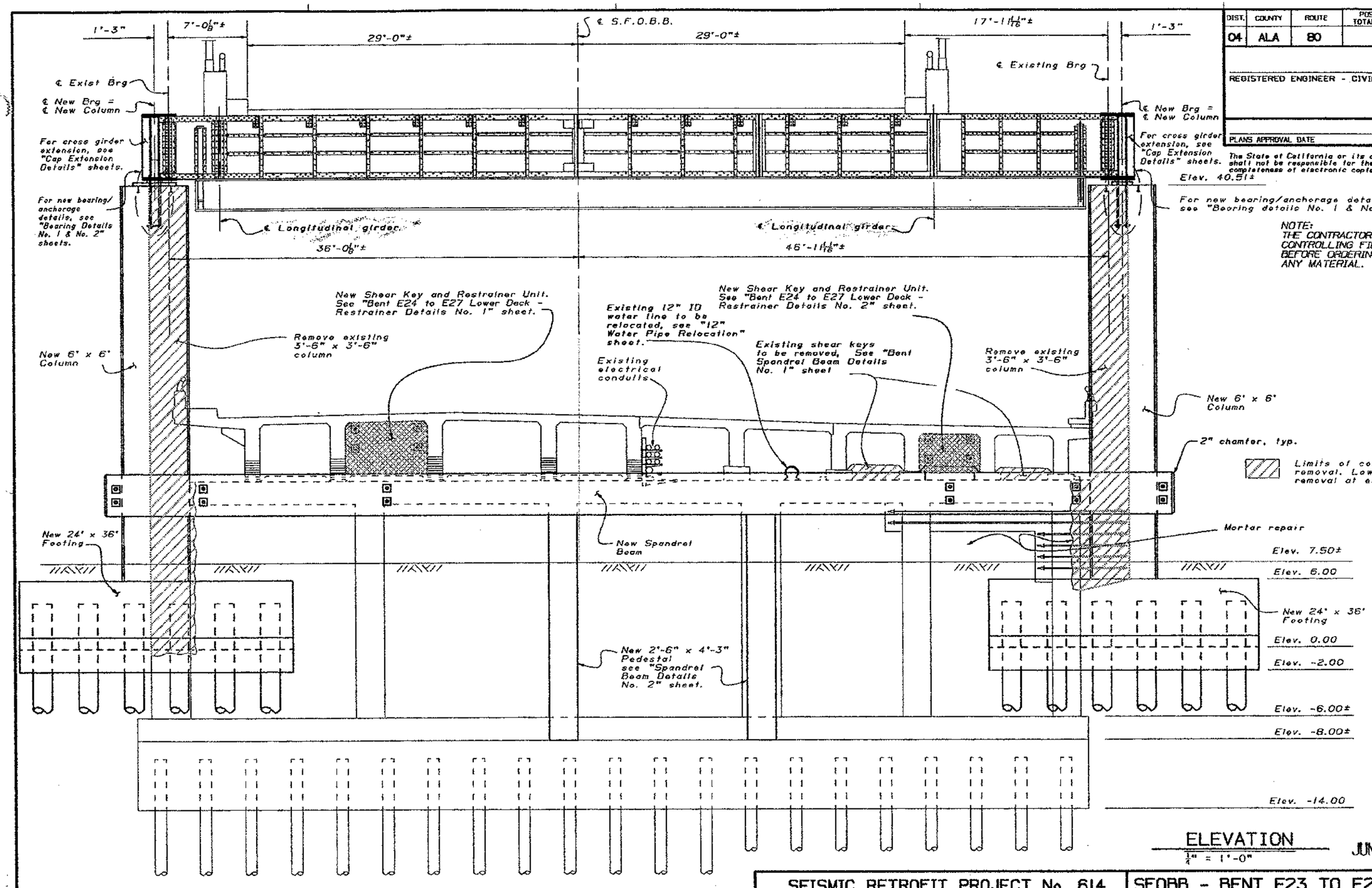

NOTE:
THE CONTRACTOR SHALL VERIFY ALL CONTROLLING FIELD DIMENSIONS BEFORE ORDERING OR FABRICATING ANY MATERIAL.

ELEVATION

1/4" = 1'-0"

JUN 1 1995

SEISMIC RETROFIT PROJECT No. 614

SFOBB - BENT E23 TO E28 RETROFIT

DESIGN	BY Gregory Slocum	CHECKED Robert Tanaka
DETAILS	BY Franci Dukeshire 3/93	CHECKED Gregory Slocum
QUANTITIES	BY M. Vinayagamoorthy	CHECKED C. Rende

STATE OF CALIFORNIA
DEPARTMENT OF TRANSPORTATION

DIVISION OF STRUCTURES
STRUCTURE DESIGN 2

BRIDGE NO. 33-25
POST MILE 1.0-1.3

BENT E26
BENT ELEVATION

DS 050 2138 (CADD 4/88)

ORIGINAL SCALE IN INCHES FOR REDUCED PLANS 0 1 2 3

CU 04
EA 043431

DISREGARD PRINTS BEARING EARLIER REVISION DATES

REVISION DATES (PRELIMINARY STAGE ONLY) 1/31/94 2/1/94 2/26/94 1/24/94

SHEET 23 OF 120

DIST.	COUNTY	ROUTE	POST MILES TOTAL PROJECT	SHEET NO.	TOTAL SHEETS
04	ALA	80			

REGISTERED ENGINEER - CIVIL

REGISTERED PROFESSIONAL ENGINEER Gregory Evan Slocum No. 44950 Exp. 3-31-98 CIVIL STATE OF CALIFORNIA

PLANS APPROVAL DATE

NOTE:
THE CONTRACTOR SHALL VERIFY ALL CONTROLLING FIELD DIMENSIONS BEFORE ORDERING OR FABRICATING ANY MATERIAL.

The State of California or its officers or agents shall not be responsible for the accuracy or completeness of electronic copies of this plan sheet.

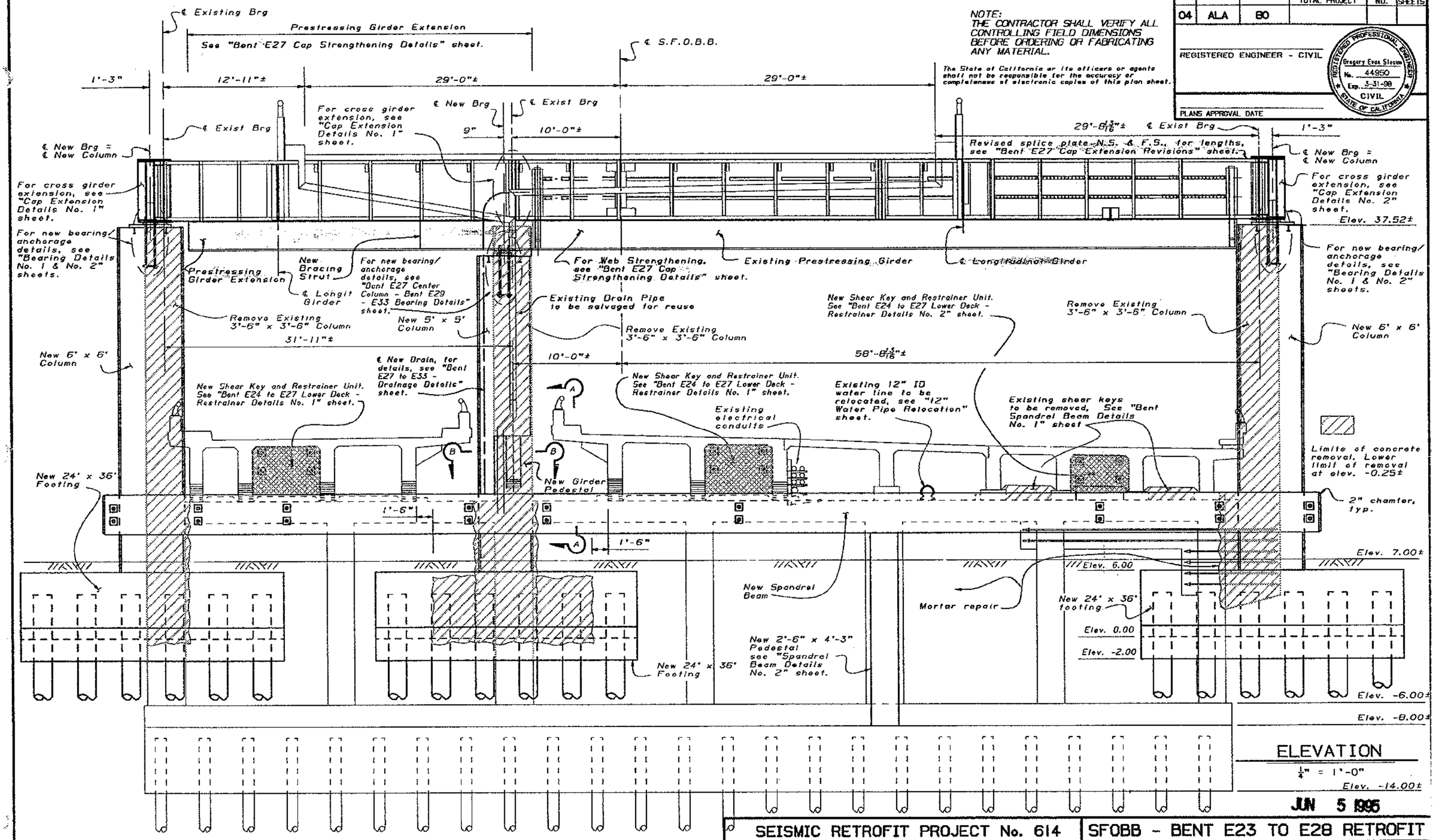

ELEVATION

1/4" = 1'-0"

JUN 5 1995

SEISMIC RETROFIT PROJECT No. 614

SFOBB - BENT E23 TO E28 RETROFIT

DESIGN	BY Gregory Slocum	CHECKED Robert Tanaka
DETAILS	BY Fronci Dukeshire 3/93	CHECKED Gregory Slocum
QUANTITIES	BY W. Vinayagamoorthy	CHECKED C. Rende

STATE OF CALIFORNIA
DEPARTMENT OF TRANSPORTATION

DIVISION OF STRUCTURES
STRUCTURE DESIGN 2

BRIDGE NO. 33-25
POST MILE 1.0-1.3

BENT E27

BENT ELEVATION

DS DSD 2158 (CADD 4/89)

ORIGINAL SCALE IN INCHES FOR REDUCED PLANS 0 1 2 3

CU 04
EA 043431

DISREGARD PRINTS BEARING EARLIER REVISION DATES

REVISION DATES (PRELIMINARY STAGE ONLY) 1/31/94 2/1/94 2/26/94 1/24/94

SHEET 24 OF 120

DIST.	COUNTY	ROUTE	POST MILES TOTAL PROJECT	SHEET NO.	TOTAL SHEETS
04	ALA	80			

REGISTERED ENGINEER - CIVIL

REGISTERED PROFESSIONAL ENGINEER Gregory Evan Slocum No. 44950 Exp. 3-31-98 CIVIL STATE OF CALIFORNIA

PLANS APPROVAL DATE

The State of California or its officers or agents shall not be responsible for the accuracy or completeness of electronic copies of this plan sheet.

NOTE:
THE CONTRACTOR SHALL VERIFY ALL CONTROLLING FIELD DIMENSIONS BEFORE ORDERING OR FABRICATING ANY MATERIAL.

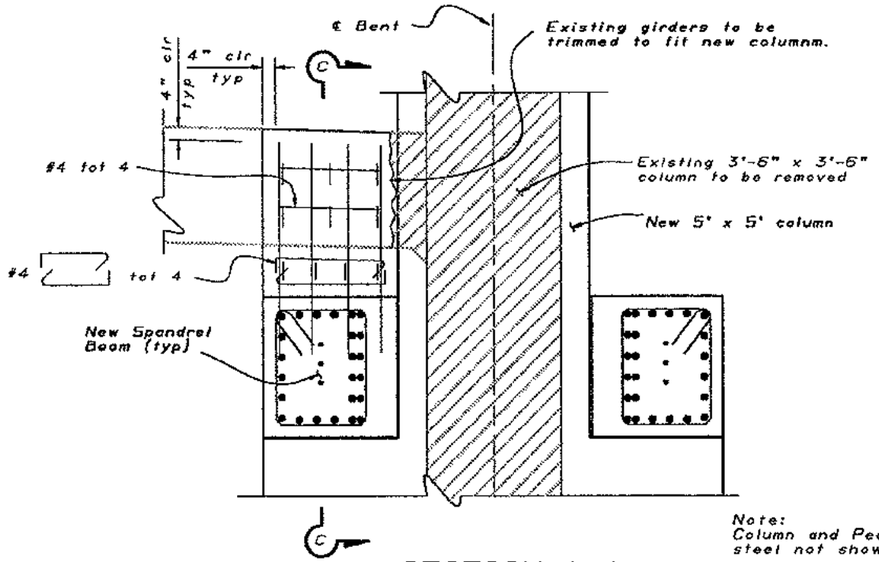

Note:
Column and Pedestal steel not shown.

SECTION A-A

½" = 1'-0"

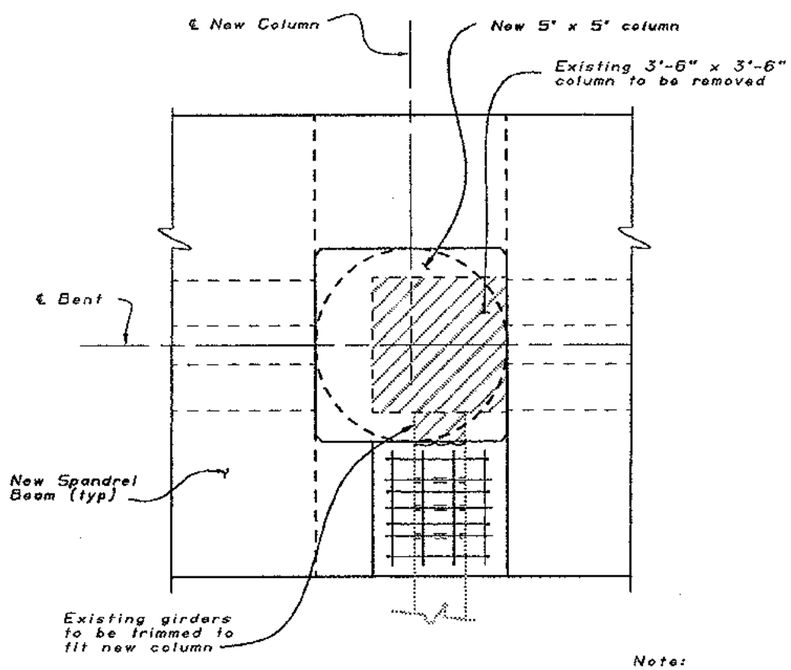

Note:
Column and Spandrel Beam steel not shown.

SECTION B-B

½" = 1'-0"

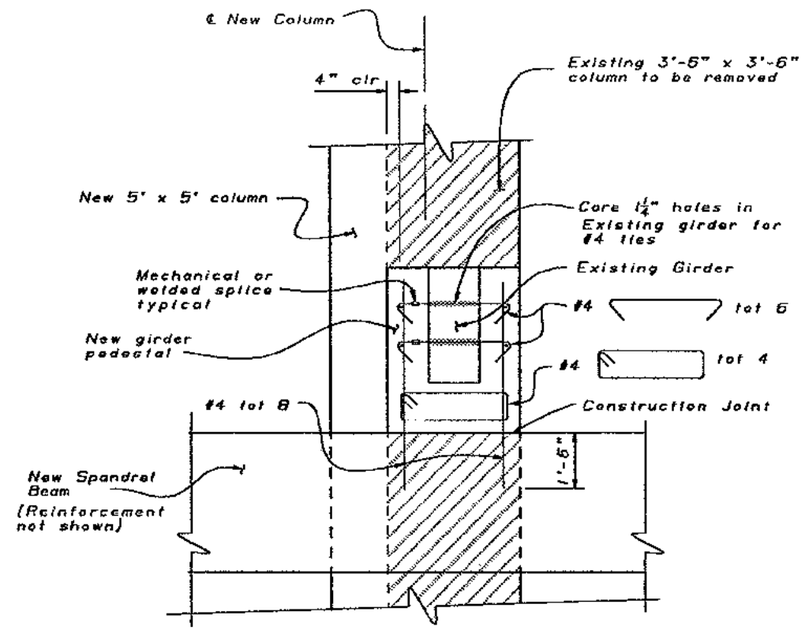

SECTION C-C

½" = 1'-0"

Limits of Concrete Removal

For Section A-A and Section B-B, see "Bent E27 - Bent Elevation" sheet.

MAR 22 1995

SEISMIC RETROFIT PROJECT No. 614

SFOBB - BENT E23 TO E28 RETROFIT

DESIGN	BY Gregory Slocum	CHECKED Robert Tanaka
DETAILS	BY Franci Dukeshire 3/93	CHECKED Gregory Slocum
QUANTITIES	BY M. Vinayagamoorthy	CHECKED C. Rende

STATE OF CALIFORNIA DEPARTMENT OF TRANSPORTATION

DIVISION OF STRUCTURES STRUCTURE DESIGN 2

BRIDGE NO. 33-25

POST MILE 1.0-1.3

BENT E27

BENT DETAILS

DS 050 2138 (CADD 4/88)

ORIGINAL SCALE IN INCHES FOR REDUCED PLANS 0 1 2 3

CU 04
EA 043431

DISREGARD PRINTS BEARING EARLIER REVISION DATES

REVISION DATES (PRELIMINARY STAGE ONLY) 11/8/93 11/23/93 11/28/93 1/18/94 1/24/94

SHEET 25 OF 120

DIST.	COUNTY	ROUTE	POST MILES TOTAL PROJECT	SHEET NO.	TOTAL SHEETS
04	ALA	80			

REGISTERED ENGINEER - CIVIL

REGISTERED PROFESSIONAL ENGINEER Gregory Evan Slocum No. 44950 Exp. 3-31-98 CIVIL STATE OF CALIFORNIA

PLANS APPROVAL DATE

The State of California or its officers or agents shall not be responsible for the accuracy or completeness of electronic copies of this plan sheet.

NOTE:
THE CONTRACTOR SHALL VERIFY ALL CONTROLLING FIELD DIMENSIONS BEFORE ORDERING OR FABRICATING ANY MATERIAL.

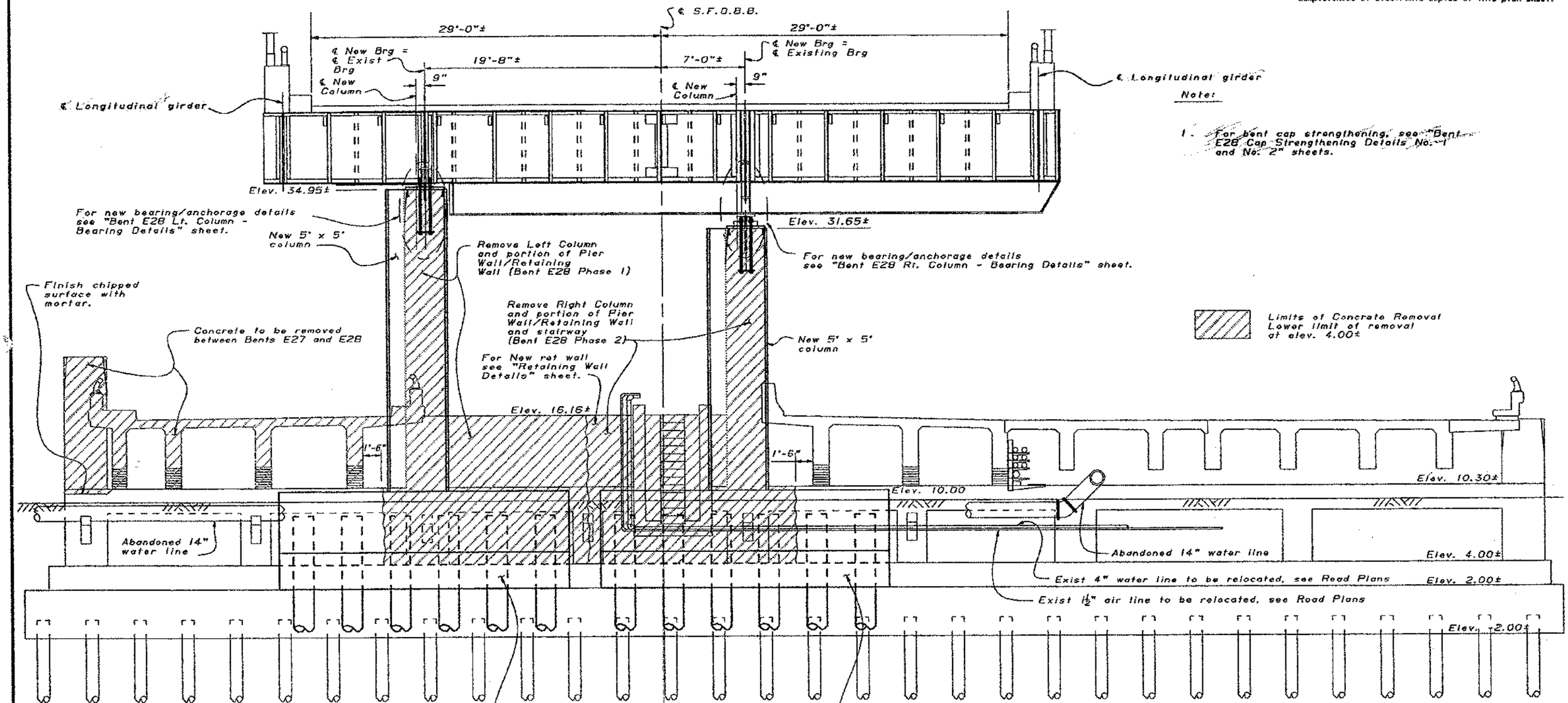

Note:

1. For bent cap strengthening, see "Bent E28 Cap Strengthening Details No. 1 and No. 2" sheets.

ELEVATION
¼" = 1'-0"

JUN 1 1995

SEISMIC RETROFIT PROJECT No. 614

SFOBB - BENT E23 TO E28 RETROFIT

DESIGN	BY Gregory Slocum	CHECKED Robert Tanaka
DETAILS	BY Franci Dukeshire 3/93	CHECKED Gregory Slocum
QUANTITIES	BY W. Vinayagamoorthy	CHECKED C. Rende

STATE OF CALIFORNIA
DEPARTMENT OF TRANSPORTATION

DIVISION OF STRUCTURES
STRUCTURE DESIGN 2

BRIDGE NO. 33-25
POST MILE 1.0-1.3

BENT E28
BENT ELEVATION

ORIGINAL SCALE IN INCHES FOR REDUCED PLANS 0 1 2 3

CU 04
EA 043431

DISREGARD PRINTS BEARING EARLIER REVISION DATES

REVISION DATES (PRELIMINARY STAGE ONLY) 11/29/93 1/18/94 1/20/94 2/26/94

SHEET 26 OF 120

05 050 2138 (CADD 4/89)

DIST.	COUNTY	ROUTE	POST MILES TOTAL PROJECT	SHEET NO.	TOTAL SHEETS
04	ALA	80			

REGISTERED ENGINEER - CIVIL

REGISTERED PROFESSIONAL ENGINEER — Gregory Evan Slocum — No. 44950 — Exp. 3-31-98 — CIVIL — STATE OF CALIFORNIA

PLANS APPROVAL DATE

The State of California or its officers or agents shall not be responsible for the accuracy or completeness of electronic copies of this plan sheet.

* NOTE:
THE CONTRACTOR SHALL VERIFY ALL CONTROLLING FIELD DIMENSIONS BEFORE ORDERING OR FABRICATING ANY MATERIAL.

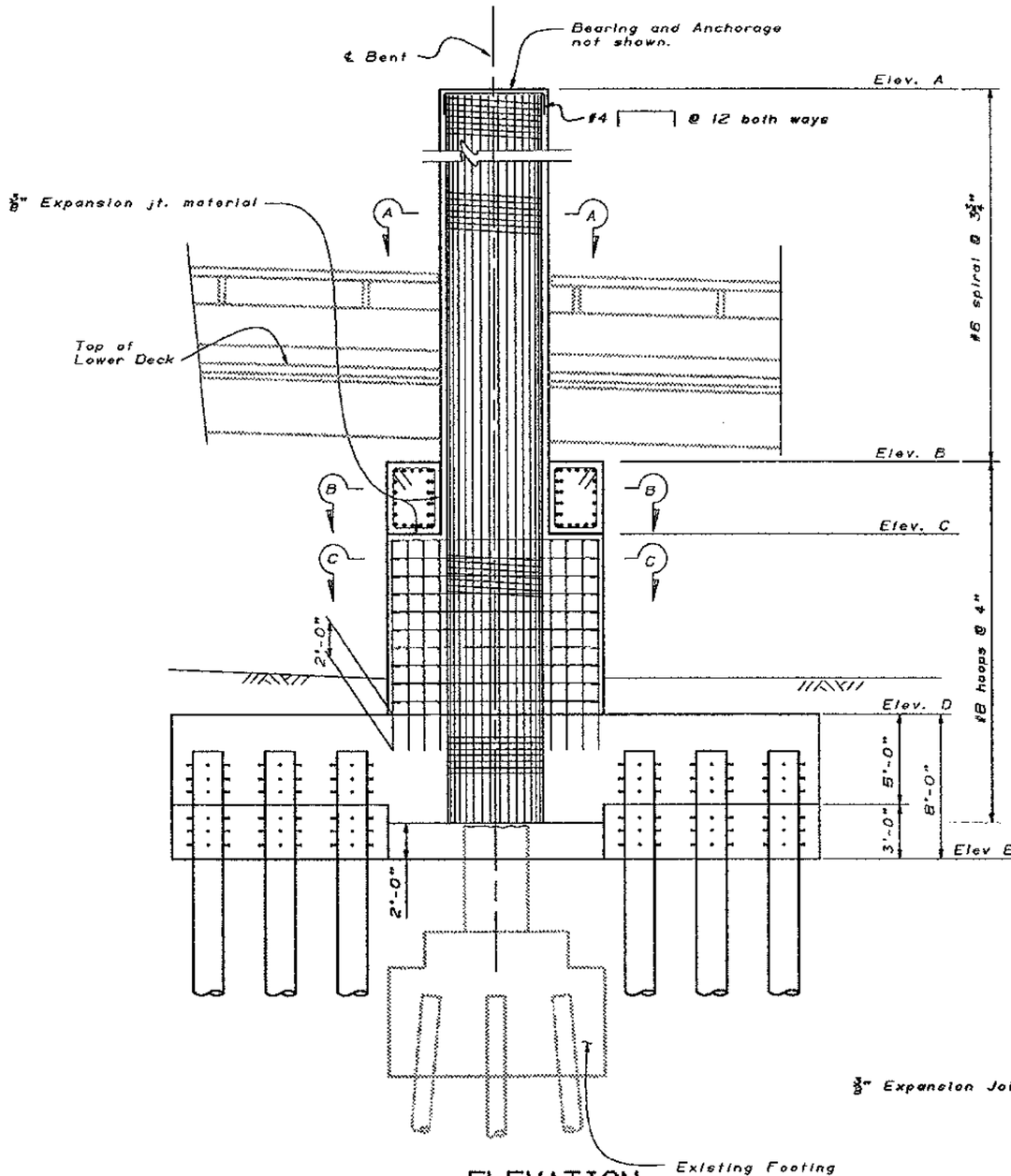

ELEVATION
BENT E24 - E27
LEFT AND RIGHT COLUMNS

1/4" = 1'-0"

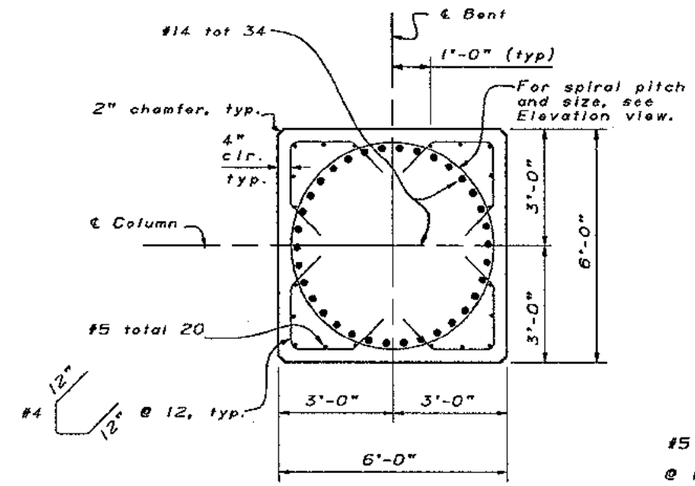

SECTION A-A

1/2" = 1'-0"

Bent	ELEVATION *				
	A	B	C	D	E
E24	45.03	19.91	16.24	6.0	-2.0
E25	42.77	17.65	13.98	6.0	-2.0
E26	40.26	15.39	11.72	6.0	-2.0
E27	37.52	13.12	9.45	6.0	-2.0

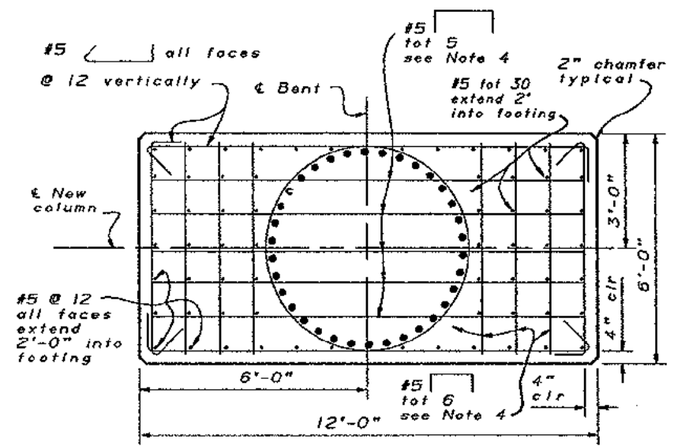

SECTION C-C

1/2" = 1'-0"

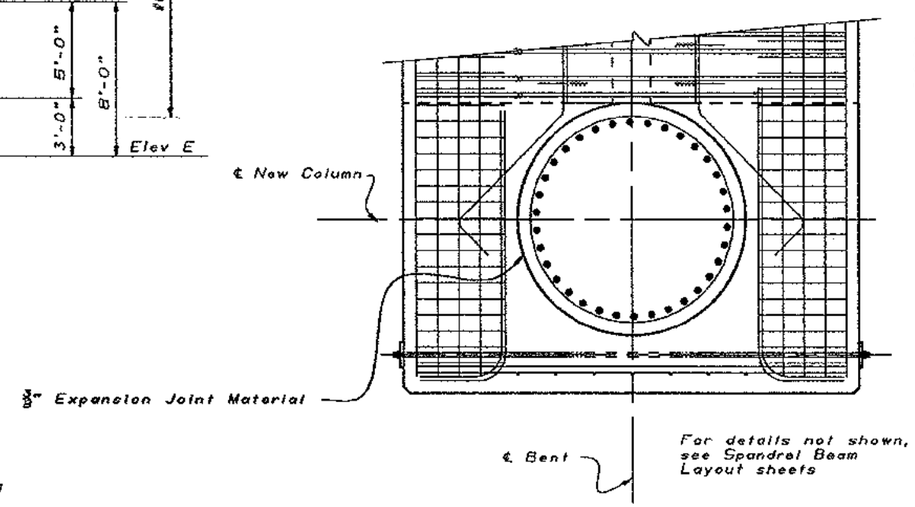

SECTION B-B

1/2" = 1'-0"

Notes:

1. No splices allowed in column longitudinal reinforcement.
2. For Bar Spiral Splice, Spiral Anchor, and Hoop Details, see "Column and Footing Reinforcement Details" sheet.
3. For footing reinforcement, see "Bent E24-E27 Lt. & Rt. - Footing Details" sheet.
4. Mats placed at 12" vertically.

MAR 22 1995

DESIGN	BY Gregory Slocum	CHECKED Robert Tanaka
DETAILS	BY Franci Dukeshire 3/93	CHECKED Gregory Slocum
QUANTITIES	BY M. Vinayagamoorthy	CHECKED C. Rende

SEISMIC RETROFIT PROJECT No. 614

STATE OF CALIFORNIA DEPARTMENT OF TRANSPORTATION

DIVISION OF STRUCTURES STRUCTURE DESIGN 2

BRIDGE NO. 33-25

POST MILE 1.0-1.3

SFOBB - BENT E23 TO E28 RETROFIT

BENT E24-E27 LEFT & RIGHT COLUMNS

COLUMN DETAILS

CU 04
EA 043431

DS 050 2138 (CADD 4/89)

ORIGINAL SCALE IN INCHES FOR REDUCED PLANS 0 1 2 3

DISREGARD PRINTS BEARING EARLIER REVISION DATES

REVISION DATES (PRELIMINARY STAGE ONLY) 2/26/94 2/26/94 . 2/1/94 2/1/94

SHEET 27 OF 120

DIST.	COUNTY	ROUTE	POST MILES TOTAL PROJECT	SHEET NO.	TOTAL SHEETS
04	ALA	80			

REGISTERED ENGINEER - CIVIL

REGISTERED PROFESSIONAL ENGINEER Gregory Evan Slocum No. 44950 Exp. 3-31-98 CIVIL STATE OF CALIFORNIA

PLANS APPROVAL DATE

The State of California or its officers or agents shall not be responsible for the accuracy or completeness of electronic copies of this plan sheet.

NOTE:
THE CONTRACTOR SHALL VERIFY ALL CONTROLLING FIELD DIMENSIONS BEFORE ORDERING OR FABRICATING ANY MATERIAL.

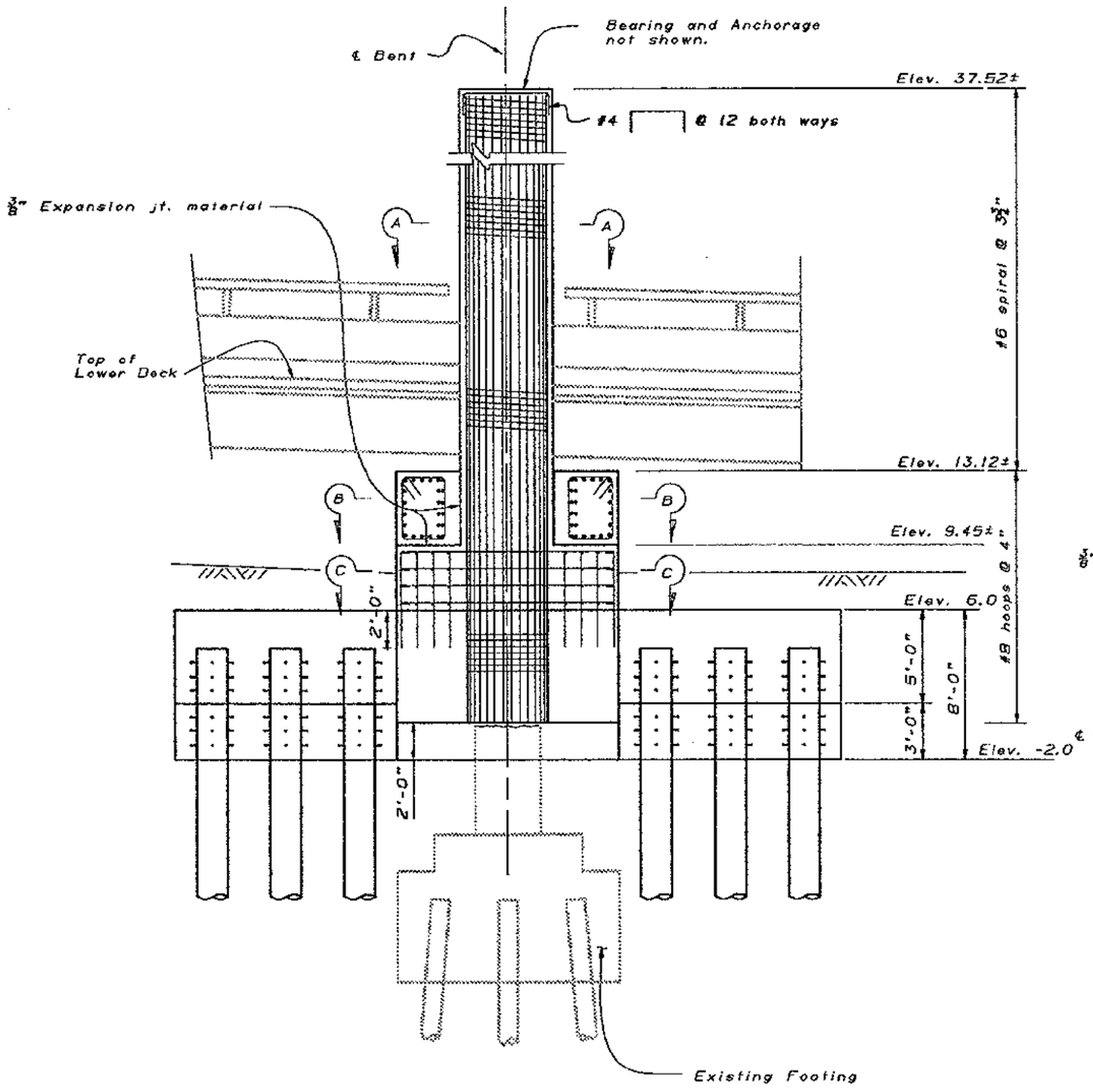

ELEVATION
BENT E27 CENTER COLUMN

¼" = 1'-0"

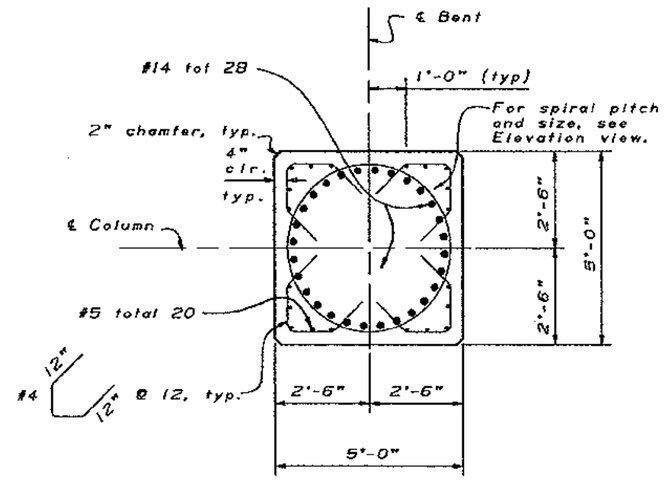

SECTION A-A

½" = 1'-0"

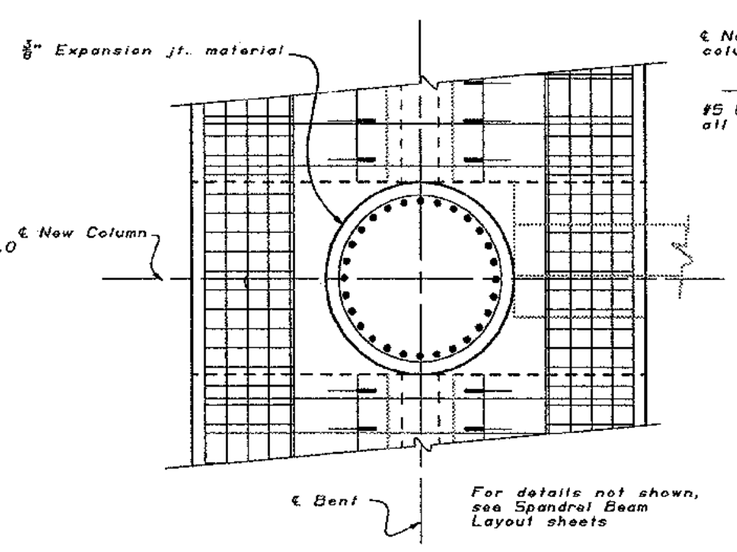

SECTION B-B

½" = 1'-0"

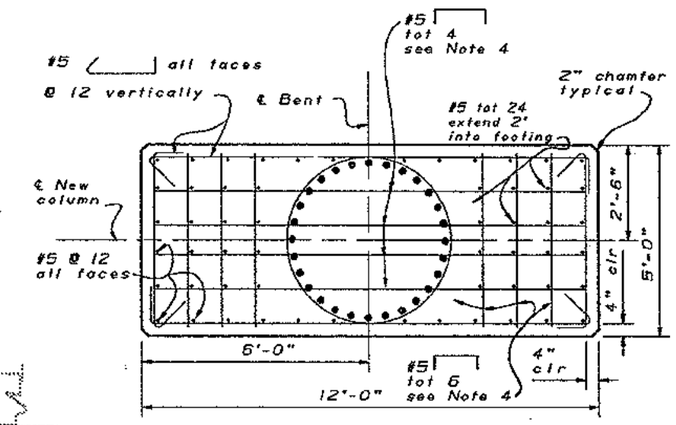

SECTION C-C

½" = 1'-0"

Notes:

1. No splices allowed in column longitudinal reinforcement.
2. For Bar Spiral Splice, Spiral Anchor, and Hoop Details, see "Column and Footing Reinforcement Details" sheet.
3. For footing reinforcement, see "Bent E27 Center Column - Footing Details" sheet.
4. Mats placed at 12" vertically.

MAR 22 1995

DESIGN	BY Gregory Slocum	CHECKED Robert Tanaka
DETAILS	BY Franci Dukeshire 3/93	CHECKED Gregory Slocum
QUANTITIES	BY M. Vinayagamoorthy	CHECKED C. Rende

SEISMIC RETROFIT PROJECT No. 614

STATE OF CALIFORNIA DEPARTMENT OF TRANSPORTATION

DIVISION OF STRUCTURES STRUCTURE DESIGN 2

BRIDGE NO. 33-25

POST MILE 1.0-1.3

SFOBB - BENT E23 TO E28 RETROFIT

BENT E27 CENTER COLUMN

COLUMN DETAILS

DS 050 2038 (CADD 4/89)

ORIGINAL SCALE IN INCHES FOR REDUCED PLANS 0 1 2 3

CU 04
EA 043431

DISREGARD PRINTS BEARING EARLIER REVISION DATES

REVISION DATES (PRELIMINARY STAGE ONLY) 1/18/94 1/20/94 1/31/94 2/26/94

SHEET 28 OF 120

DIST.	COUNTY	ROUTE	POST MILES TOTAL PROJECT	SHEET NO.	TOTAL SHEETS
04	ALA	80			

REGISTERED ENGINEER - CIVIL

REGISTERED PROFESSIONAL ENGINEER Gregory Evan Slocum No. 44950 Exp. 3-31-98 CIVIL STATE OF CALIFORNIA

PLANS APPROVAL DATE

The State of California or its officers or agents shall not be responsible for the accuracy or completeness of electronic copies of this plan sheet.

NOTE:
THE CONTRACTOR SHALL VERIFY ALL CONTROLLING FIELD DIMENSIONS BEFORE ORDERING OR FABRICATING ANY MATERIAL.

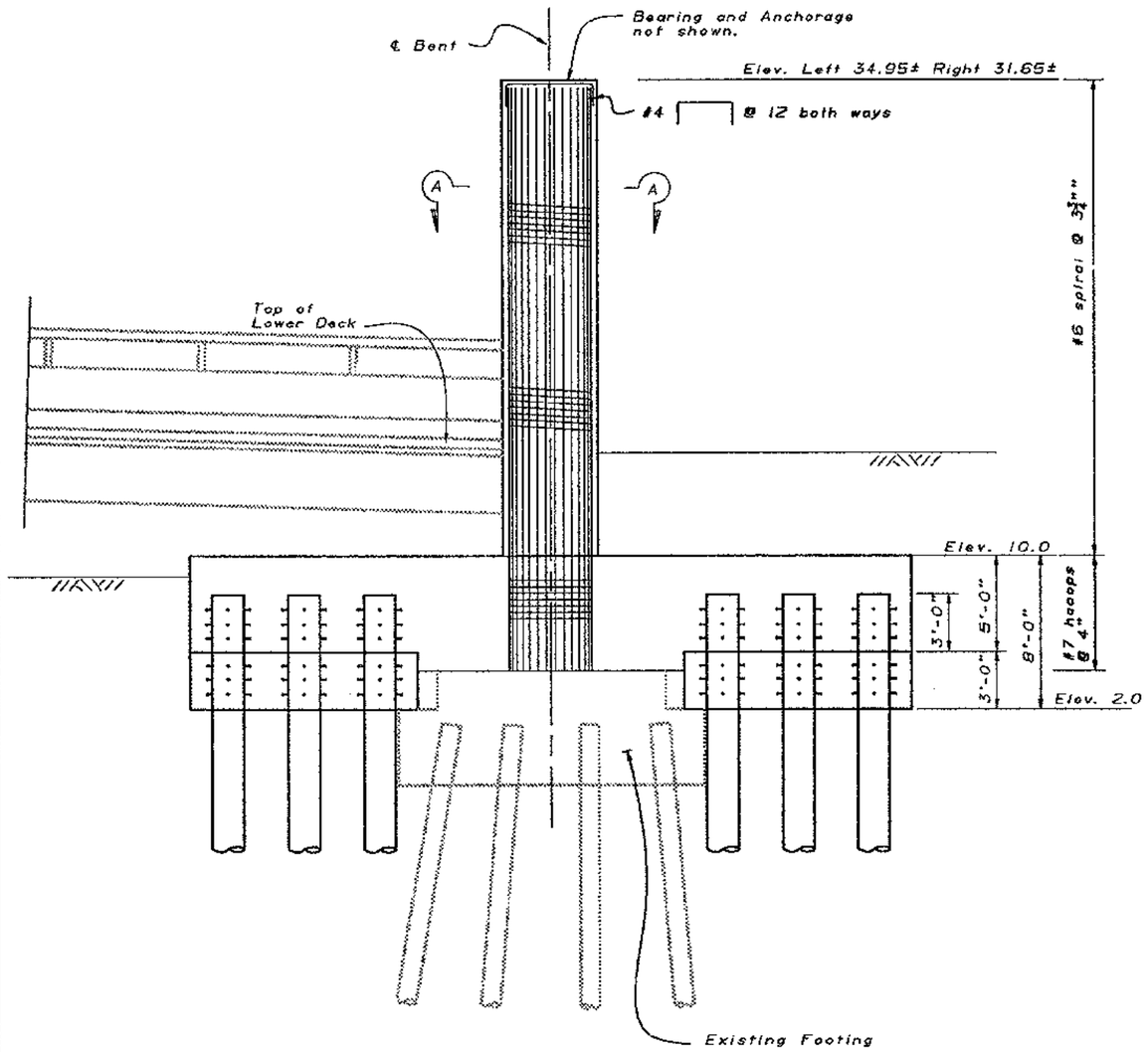

ELEVATION
BENT E28 LEFT & RIGHT COLUMNS

¼" = 1'-0"

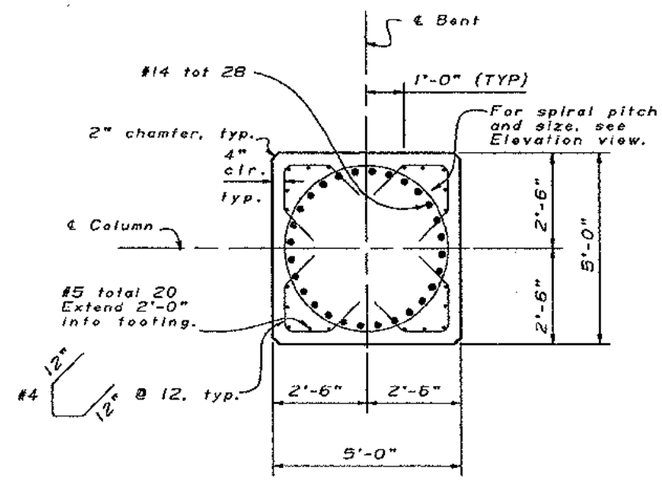

SECTION A-A

½" = 1'-0"

Notes:

1. No splices allowed in column longitudinal reinforcement.
2. For Bar Spiral Splice, Spiral Anchor, and Hoop Details, see "Column and Footing Reinforcement Details" sheet.
3. For footing reinforcement, see "Bent E28- Footing Details" sheet.

MAR 22 1995

DESIGN	BY Gregory Slocum	CHECKED Robert Tanaka	
DETAILS	BY Franci Dukeshire 3/93	CHECKED Gregory Slocum	
QUANTITIES	BY M. Vinayagamoorthy	CHECKED C. Rende	

SEISMIC RETROFIT PROJECT No. 614

STATE OF CALIFORNIA
DEPARTMENT OF TRANSPORTATION

DIVISION OF STRUCTURES
STRUCTURE DESIGN 2

BRIDGE NO. 33-25
POST MILE 1.0-1.3

SFOBB - BENT E23 TO E28 RETROFIT

BENT E28 LEFT & RIGHT COLUMNS

COLUMN DETAILS

05 DSD 2138 (CADD 4/89)

ORIGINAL SCALE IN INCHES FOR REDUCED PLANS 0 1 2 3

CU 04
EA 043431

DISREGARD PRINTS BEARING EARLIER REVISION DATES

REVISION DATES (PRELIMINARY STAGE ONLY) 1/18/94 1/28/94 1/31/94 2/26/94

SHEET 29 OF 120

DIST.	COUNTY	ROUTE	POST MILES TOTAL PROJECT	SHEET NO.	TOTAL SHEETS
04	ALA	80			

REGISTERED ENGINEER - CIVIL

REGISTERED PROFESSIONAL ENGINEER Gregory Evan Slocum No. 44950 Exp. 3-31-98 CIVIL STATE OF CALIFORNIA

PLANS APPROVAL DATE

The State of California or its officers or agents shall not be responsible for the accuracy or completeness of electronic copies of this plan sheet.

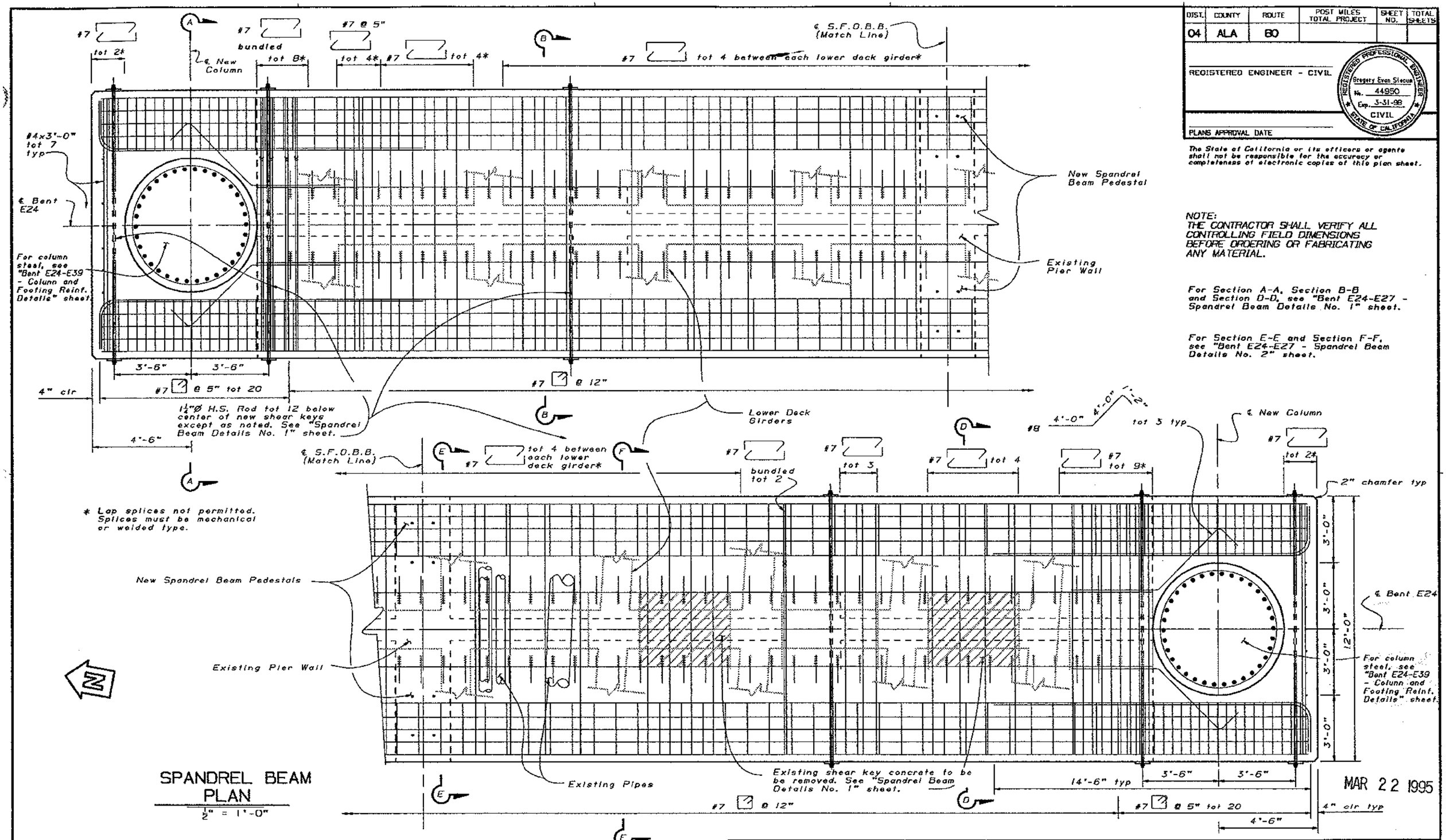

SPANDREL BEAM PLAN

½" = 1'-0"

MAR 22 1995

DESIGN	BY Gregory Slocum	CHECKED Robert Tanaka	
DETAILS	BY Franci Dukeshire 3/93	CHECKED Gregory Slocum	
QUANTITIES	BY M. Vinayagamoorthy	CHECKED Mike Keever	

SEISMIC RETROFIT PROJECT No. 614

STATE OF CALIFORNIA DEPARTMENT OF TRANSPORTATION

DIVISION OF STRUCTURES STRUCTURE DESIGN 2

BRIDGE NO. 33-25

POST MILE 1.0-1.3

SFOBB - BENT E23 TO E28 RETROFIT

BENT E24

SPANDREL BEAM LAYOUT

DS DSD 2138 (CADD 4/88)

ORIGINAL SCALE IN INCHES FOR REDUCED PLANS 0 1 2 3

CU 04
EA 043431

DISREGARD PRINTS BEARING EARLIER REVISION DATES

REVISION DATES (PRELIMINARY STAGE ONLY) 1/31/94 2/1/94 2/1/94 . 1/20/94

SHEET 30 OF 120

DIST.	COUNTY	ROUTE	POST MILES TOTAL PROJECT	SHEET NO.	TOTAL SHEETS
04	ALA	80			

REGISTERED ENGINEER - CIVIL

REGISTERED PROFESSIONAL ENGINEER Gregory Evan Slocum No. 44950 Exp. 3-31-98 CIVIL STATE OF CALIFORNIA

PLANS APPROVAL DATE

The State of California or its officers or agents shall not be responsible for the accuracy or completeness of electronic copies of this plan sheet.

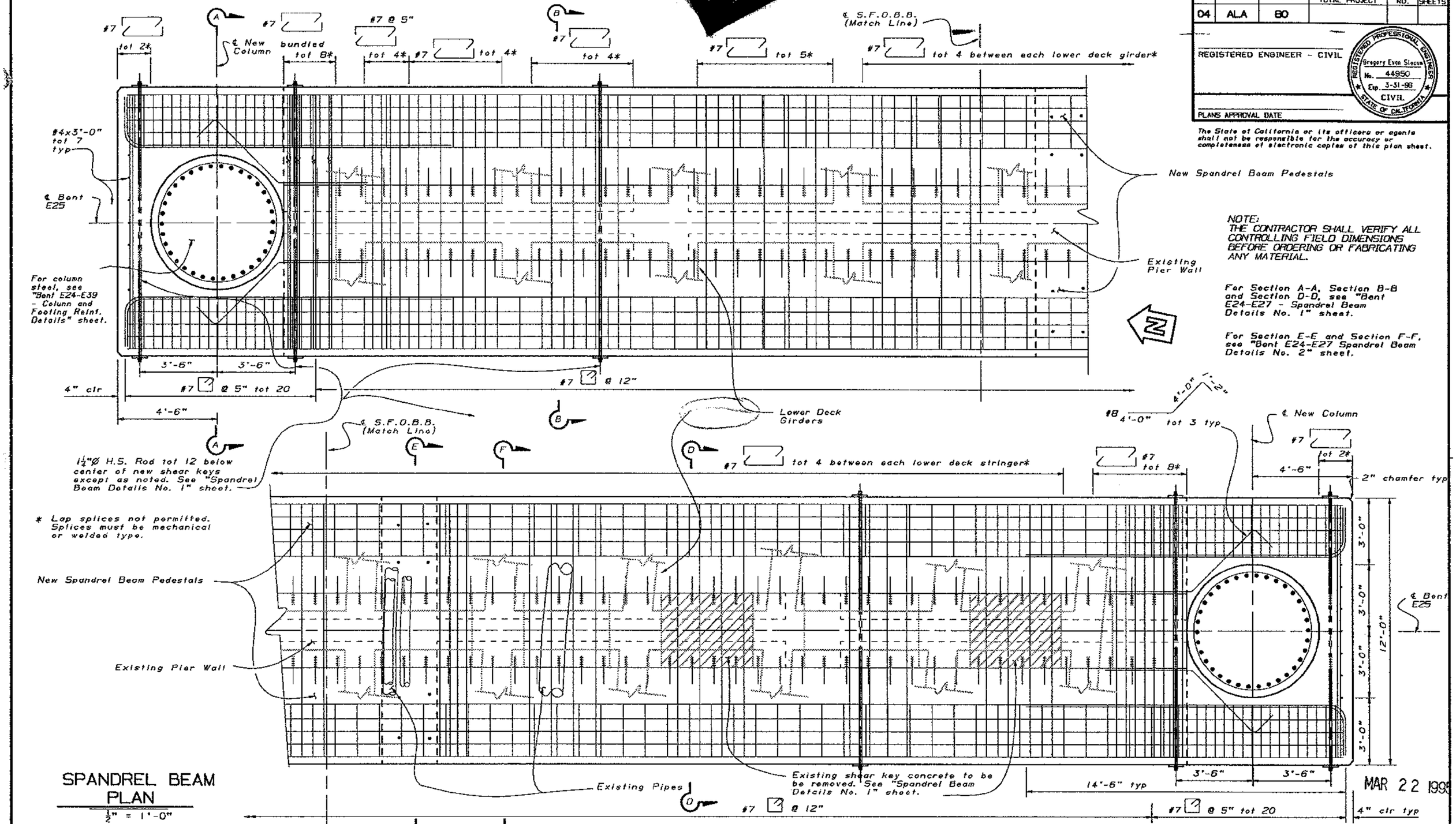

NOTE:
THE CONTRACTOR SHALL VERIFY ALL CONTROLLING FIELD DIMENSIONS BEFORE ORDERING OR FABRICATING ANY MATERIAL.

For Section A-A, Section B-B and Section D-D, see "Bent E24-E27 - Spandrel Beam Details No. 1" sheet.

For Section E-E and Section F-F, see "Bent E24-E27 Spandrel Beam Details No. 2" sheet.

SPANDREL BEAM PLAN

½" = 1'-0"

MAR 22 1995

DESIGN	Gregory Slocum	CHECKED Robert Tanaka
DETAILS	BY Franci Dukeshire 3/93	CHECKED Gregory Slocum
QUANTITIES	BY W. Vinayagamoorthy	CHECKED Mike Keever

ORIGINAL SCALE IN INCHES FOR REDUCED PLANS 0 1 2 3

SEISMIC RETROFIT PROJECT No. 614

STATE OF CALIFORNIA DEPARTMENT OF TRANSPORTATION

DIVISION OF STRUCTURES STRUCTURE DESIGN 2

BRIDGE NO. 33-25

POST MILE 1.0-1.3

CU 04
EA 043431

SFOBB - BENT E23 TO E28 RETROFIT

BENT E25

SPANDREL BEAM LAYOUT

DISREGARD PRINTS BEARING EARLIER REVISION DATES → REVISION DATES (PRELIMINARY STAGE ONLY) 1/20/94 1/31/94 2/4/94 2/1/94

SHEET 31 OF 120

05 050 2136 (CADD 4/89)

DIST.	COUNTY	ROUTE	POST MILES TOTAL PROJECT	SHEET NO.	TOTAL SHEETS
04	ALA	80			

REGISTERED ENGINEER - CIVIL

REGISTERED PROFESSIONAL ENGINEER Gregory Evos Slocum No. 44950 Exp. 3-31-98 CIVIL STATE OF CALIFORNIA

PLANS APPROVAL DATE

The State of California or its officers or agents shall not be responsible for the accuracy or completeness of electronic copies of this plan sheet.

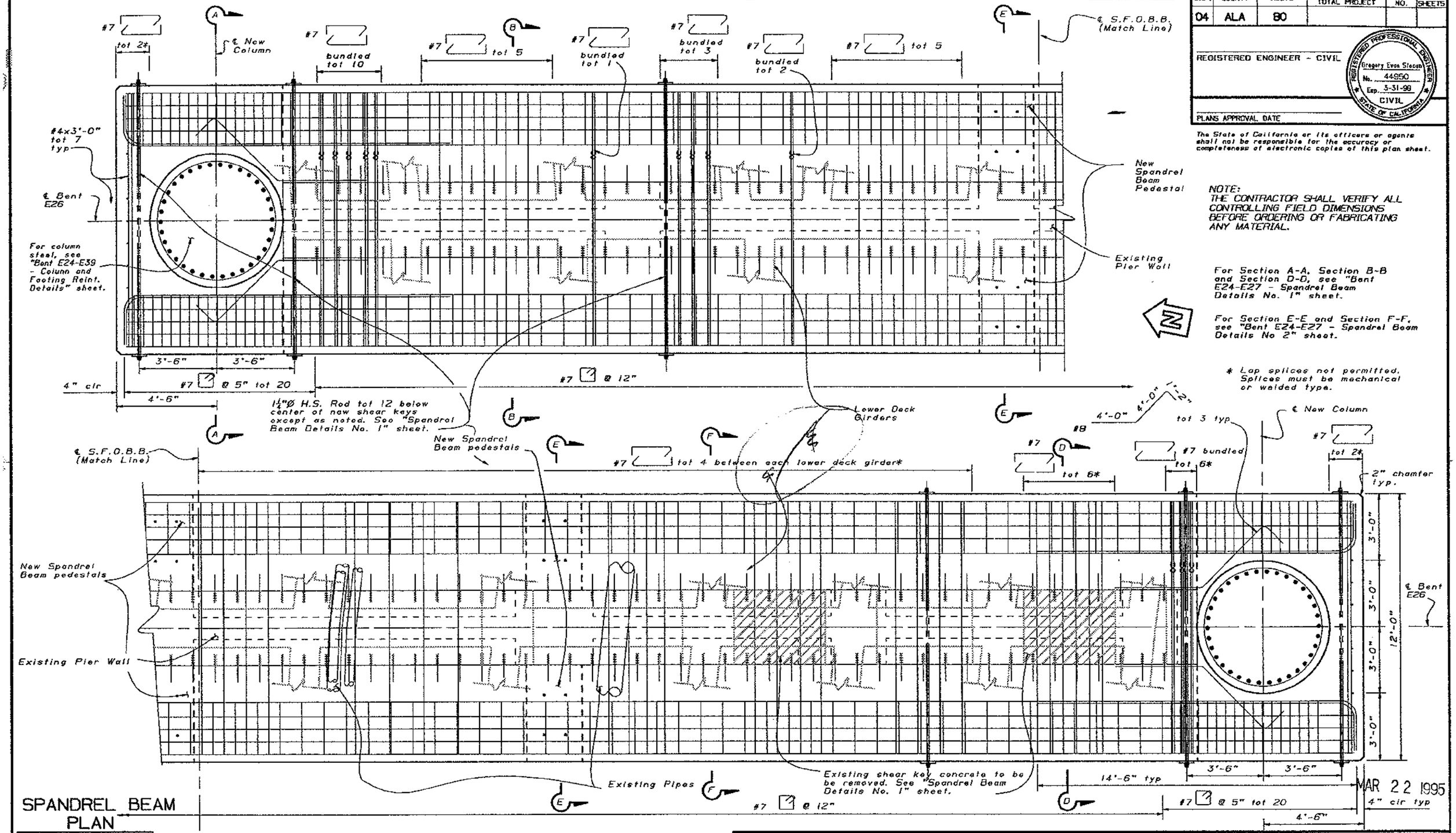

NOTE:
THE CONTRACTOR SHALL VERIFY ALL CONTROLLING FIELD DIMENSIONS BEFORE ORDERING OR FABRICATING ANY MATERIAL.

For Section A-A, Section B-B and Section D-D, see "Bent E24-E27 - Spandrel Beam Details No. 1" sheet.

For Section E-E and Section F-F, see "Bent E24-E27 - Spandrel Beam Details No 2" sheet.

* Lap splices not permitted. Splices must be mechanical or welded type.

MAR 22 1995

SPANDREL BEAM PLAN

½" = 1'-0"

SEISMIC RETROFIT PROJECT No. 614

SFOBB - BENT E23 TO E28 RETROFIT

DESIGN	BY Gregory Slocum	CHECKED Robert Tanaka
DETAILS	BY Franci Dukeshire 3/93	CHECKED Gregory Slocum
QUANTITIES	BY M. Vinayagamoorthy	CHECKED Mike Keever

STATE OF CALIFORNIA
DEPARTMENT OF TRANSPORTATION

DIVISION OF STRUCTURES
STRUCTURE DESIGN 2

BRIDGE NO. 33-25
POST MILE 1.0-1.3

BENT E26
SPANDREL BEAM LAYOUT

CU 04
EA 043431

ORIGINAL SCALE IN INCHES FOR REDUCED PLANS 0 1 2 3

DISREGARD PRINTS BEARING EARLIER REVISION DATES

REVISION DATES (PRELIMINARY STAGE ONLY) 1/31/94 2/1/94 2/1/94 1/20/94

SHEET 32 OF 120

OS 050 2436 (CADD 4/89)

DIST.	COUNTY	ROUTE	POST MILES TOTAL PROJECT	SHEET NO.	TOTAL SHEETS
04	ALA	80			

REGISTERED ENGINEER - CIVIL

REGISTERED PROFESSIONAL ENGINEER Gregory Evan Stocum No. 44950 Exp. 3-31-98 CIVIL STATE OF CALIFORNIA

PLANS APPROVAL DATE

The State of California or its officers or agents shall not be responsible for the accuracy or completeness of electronic copies of this plan sheet.

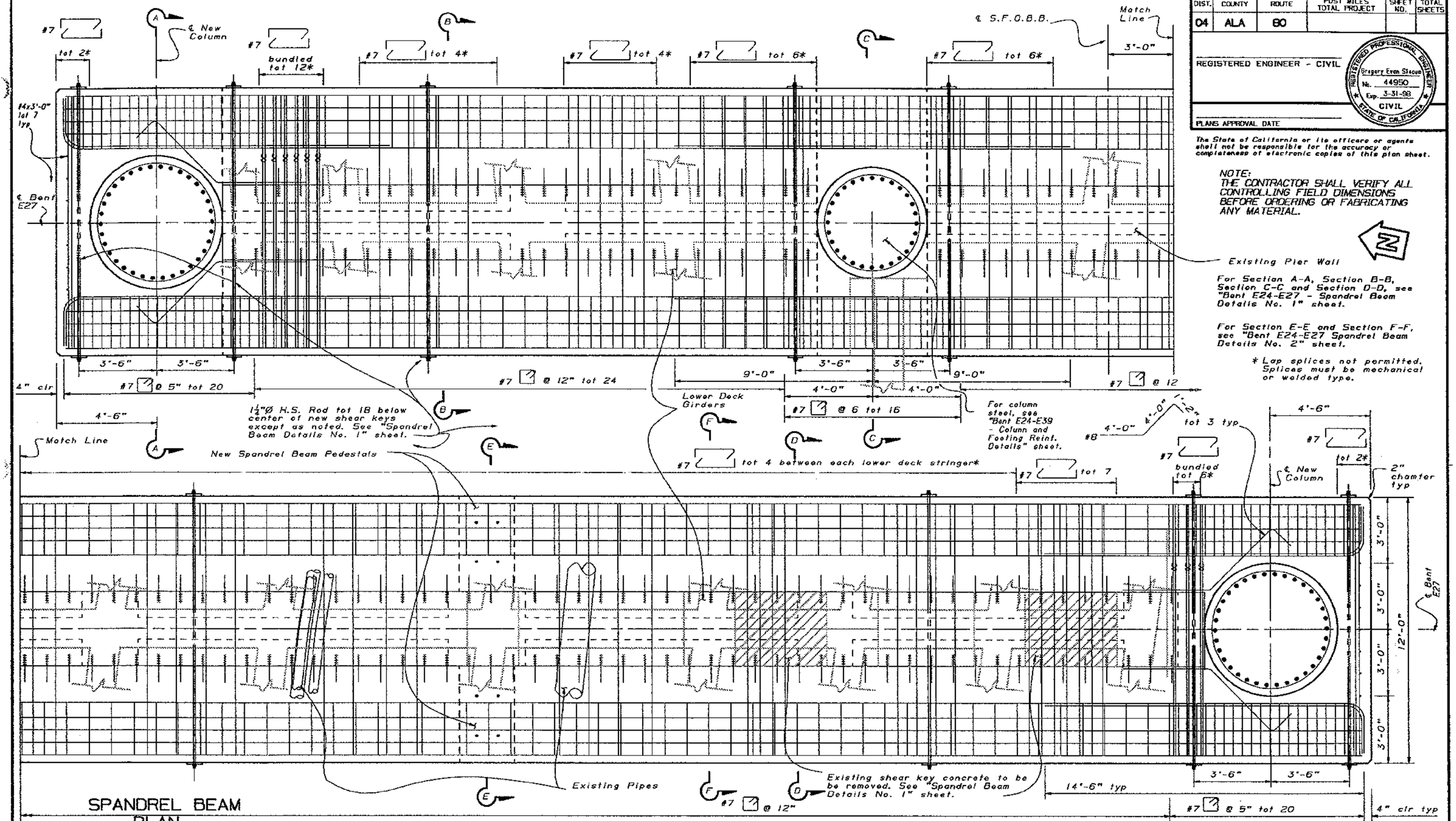

Existing Pier Wall

For Section A-A, Section B-B, Section C-C and Section D-D, see "Bent E24-E27 - Spandrel Beam Details No. 1" sheet.

For Section E-E and Section F-F, see "Bent E24-E27 Spandrel Beam Details No. 2" sheet.

* Lap splices not permitted. Splices must be mechanical or welded type.

NOTE:
THE CONTRACTOR SHALL VERIFY ALL CONTROLLING FIELD DIMENSIONS BEFORE ORDERING OR FABRICATING ANY MATERIAL.

N

SPANDREL BEAM PLAN

½" = 1'-0"

SEISMIC RETROFIT PROJECT No. 614

SFOBB - BENT E23 TO E28 RETROFIT

DESIGN	BY Gregory Stocum	CHECKED Robert Tanaka
DETAILS	BY Franci Dukeshire 3/93	CHECKED Gregory Stocum
QUANTITIES	BY W. Vinayagamoorthy	CHECKED Mike Keever

STATE OF CALIFORNIA
DEPARTMENT OF TRANSPORTATION

DIVISION OF STRUCTURES
STRUCTURE DESIGN 2

BRIDGE NO. 33-25
POST MILE 1.0-1.3

BENT E27 MAR 22 1995

SPANDREL BEAM LAYOUT

05 050 2:38 (CADD 4/88)

ORIGINAL SCALE IN INCHES FOR REDUCED PLANS 0 1 2 3

CU 04
EA 043431

DISREGARD PRINTS BEARING EARLIER REVISION DATES

REVISION DATES (PRELIMINARY STAGE ONLY) 1/31/94 2/1/94 2/1/94 . 1/20/94

SHEET 33 OF 120

DIST.	COUNTY	ROUTE	POST MILES TOTAL PROJECT	SHEET NO.	TOTAL SHEETS
04	ALA	80			

REGISTERED ENGINEER - CIVIL

REGISTERED PROFESSIONAL ENGINEER Gregory Evan Slocum No. 44950 Exp. 3-31-98 CIVIL STATE OF CALIFORNIA

PLANS APPROVAL DATE

The State of California or its officers or agents shall not be responsible for the accuracy or completeness of electronic copies of this plan sheet.

NOTE:
THE CONTRACTOR SHALL VERIFY ALL CONTROLLING FIELD DIMENSIONS BEFORE ORDERING OR FABRICATING ANY MATERIAL.

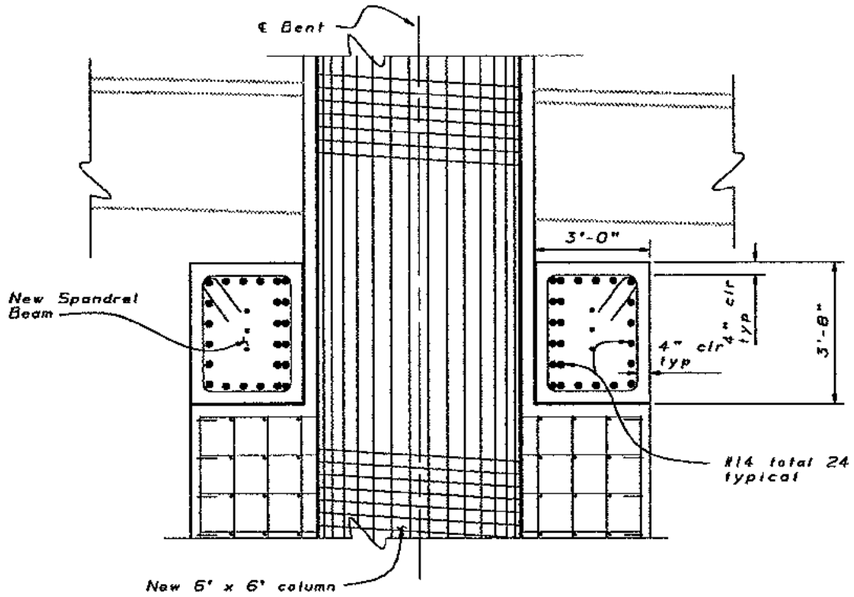

SECTION A-A

½" = 1'-0"

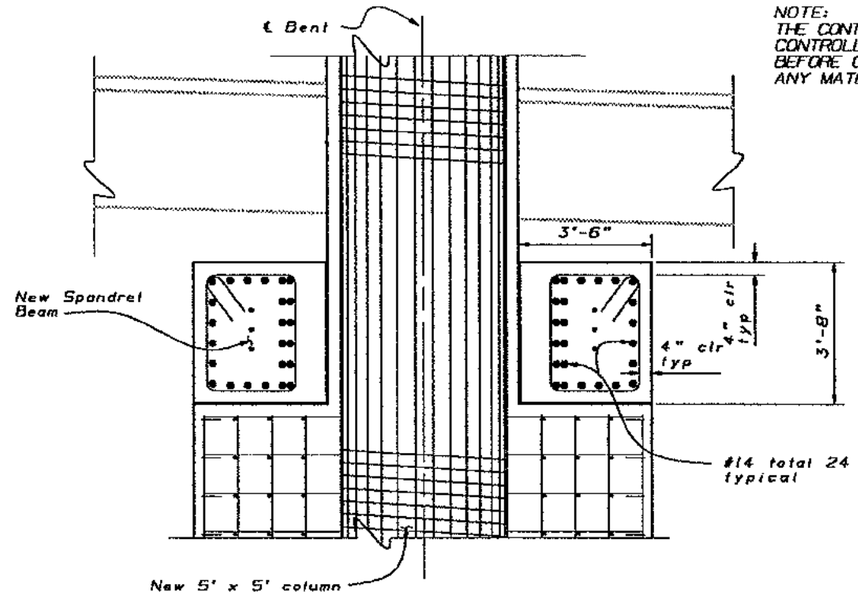

SECTION C-C

½" = 1'-0"

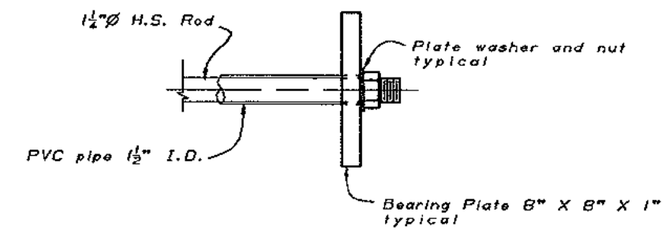

H.S. ROD ANCHORAGE DETAIL

3" = 1'-0"

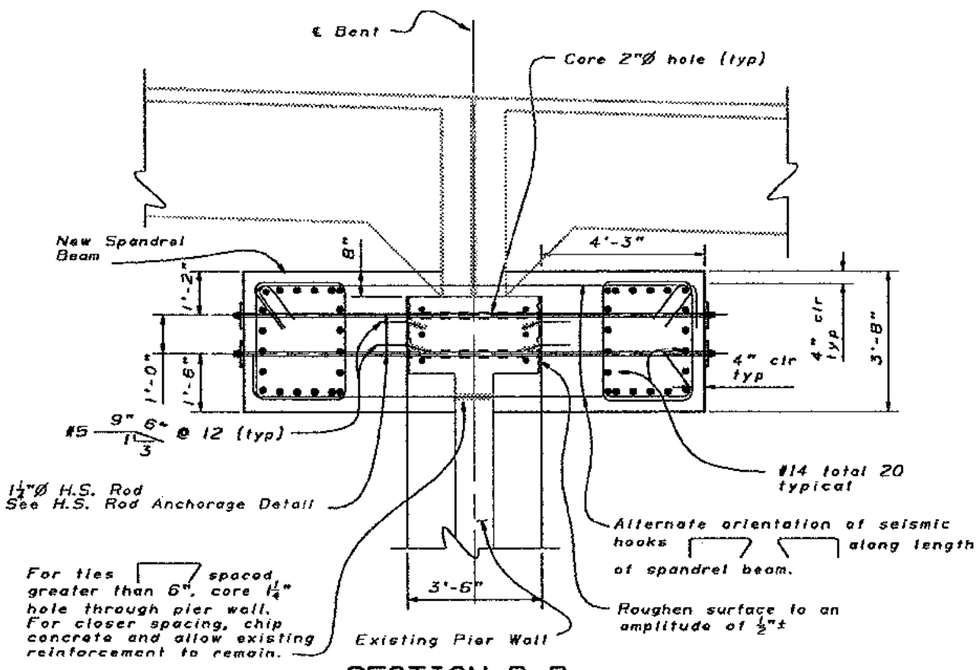

SECTION B-B

½" = 1'-0"

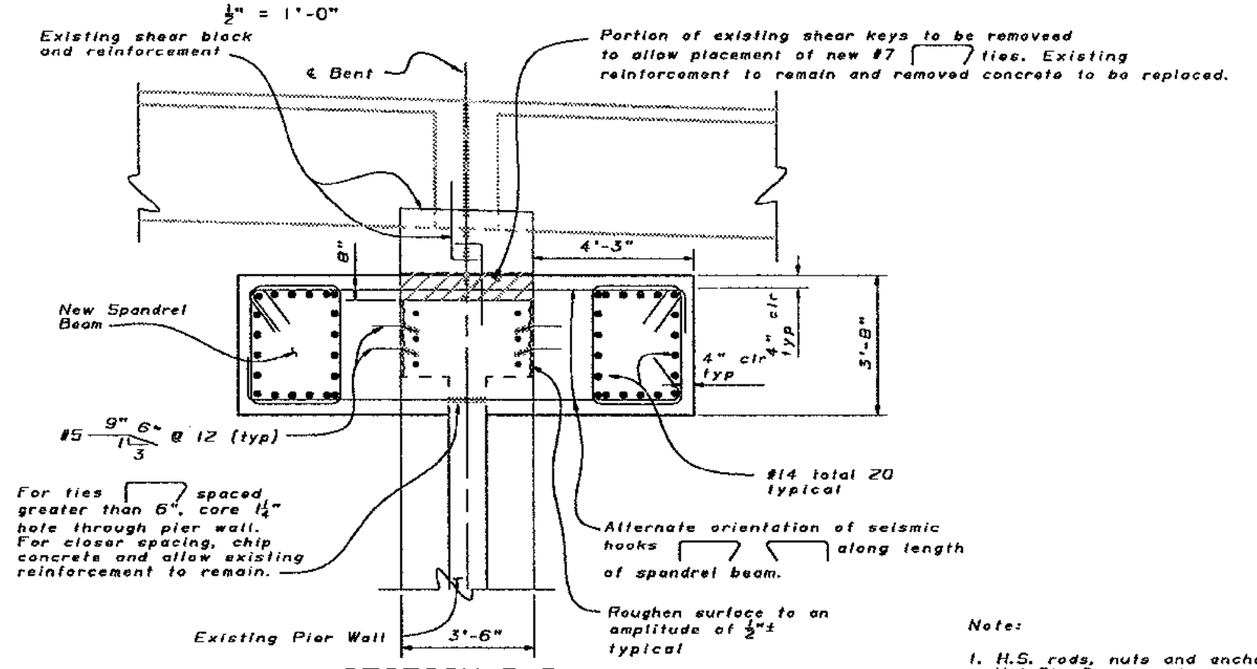

SECTION D-D

½" = 1'-0"

Note:

1. H.S. rods, nuts and anchor plates to be Hot-Dip Galvanized.

MAR 22 1995

DESIGN	BY Gregory Slocum	CHECKED Robert Tanaka
DETAILS	BY Franci Dukeshire 3/93	CHECKED Gregory Slocum
QUANTITIES	BY W. Vinayagamoorthy	CHECKED Mike Keever

SEISMIC RETROFIT PROJECT No. 614

STATE OF CALIFORNIA DEPARTMENT OF TRANSPORTATION

DIVISION OF STRUCTURES STRUCTURE DESIGN 2

BRIDGE NO. 33-25

POST MILE 1.0-1.3

SFOBB - BENT E23 TO E28 RETROFIT

BENT E24 TO E27

SPANDREL BEAM DETAILS No. 1

CU 04
EA 043431

DISREGARD PRINTS BEARING EARLIER REVISION DATES

REVISION DATES (PRELIMINARY STAGE ONLY) 1/18/94 1/20/94 11/29/93 12/1/93

SHEET 34 OF 120

05 DSD 2138 (CADD 4/89)

ORIGINAL SCALE IN INCHES FOR REDUCED PLANS 0 1 2 3

NOTE:
THE CONTRACTOR SHALL VERIFY ALL CONTROLLING FIELD DIMENSIONS BEFORE ORDERING OR FABRICATING ANY MATERIAL.

The State of California or its officers or agents shall not be responsible for the accuracy or completeness of electronic copies of this plan sheet.

DIST.	COUNTY	ROUTE	POST MILES TOTAL PROJECT	SHEET NO.	TOTAL SHEETS
04	ALA	80			

REGISTERED ENGINEER - CIVIL

REGISTERED PROFESSIONAL ENGINEER Gregory Evan Slocum No. 44950 Exp. 3-31-98 CIVIL STATE OF CALIFORNIA

PLANS APPROVAL DATE

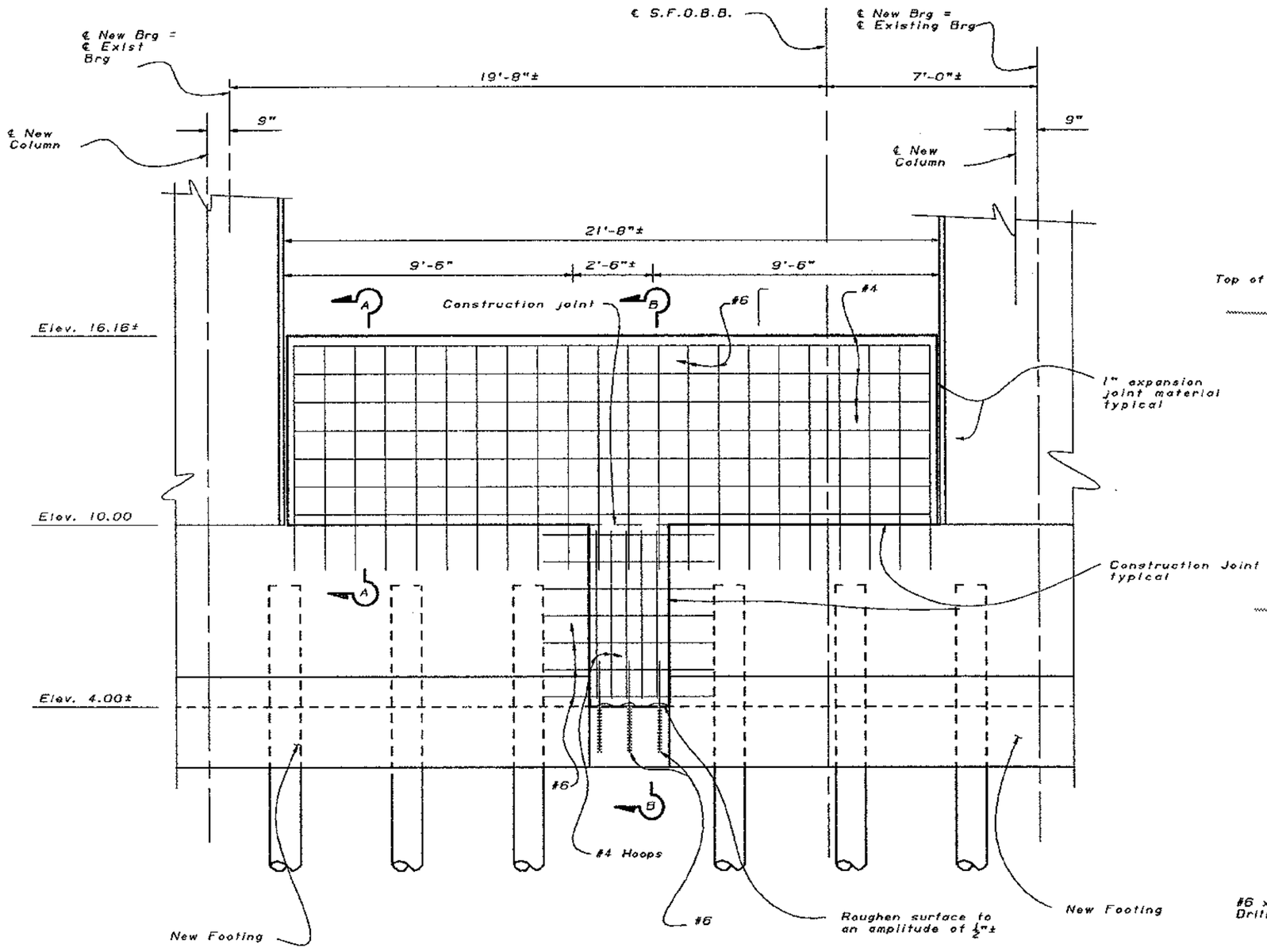

ELEVATION
½" = 1'-0"

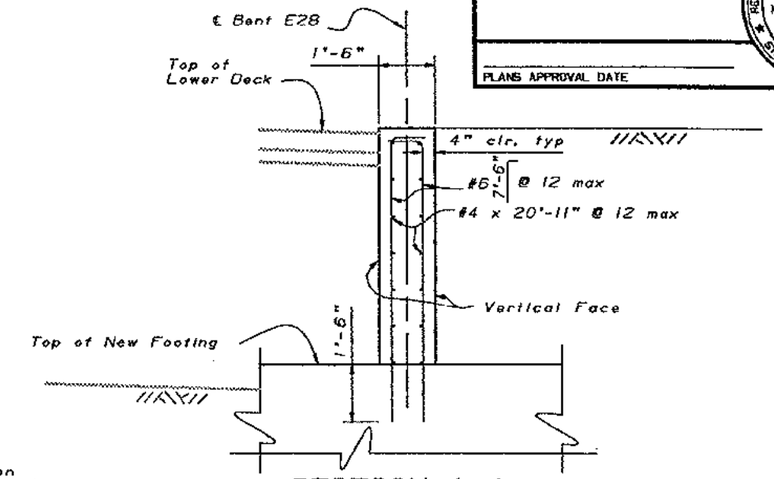

SECTION A-A
½" = 1'-0"

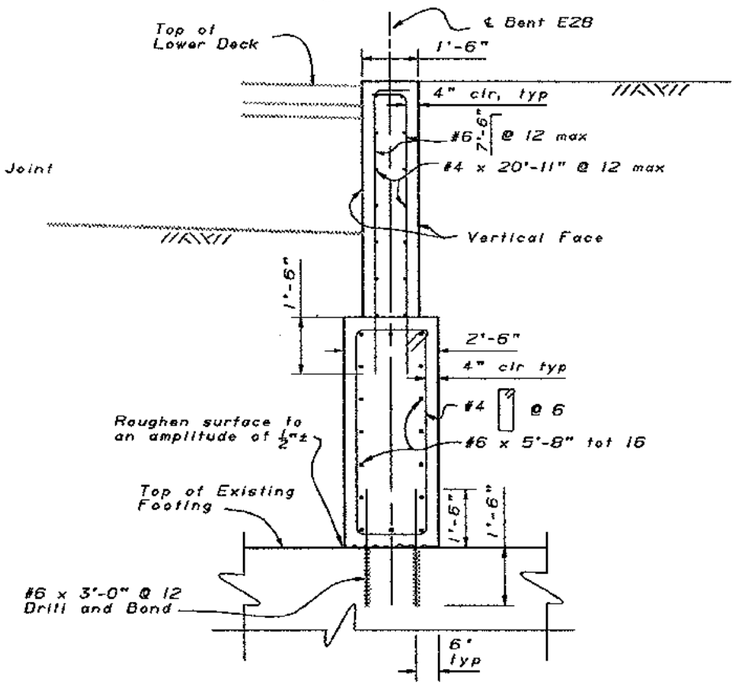

SECTION B-B
½" = 1'-0"

MAR 22 1995

SEISMIC RETROFIT PROJECT No. 614

SFOBB - BENT E23 TO E28 RETROFIT

BENT E28

RETAINING WALL DETAILS

	BY	CHECKED BY
DESIGN	Ali Hamza	Lian Duan
DETAILS	Franci Dukeshire 3/93	Ali Hamza
QUANTITIES	Ali Hamza	Lian Duan

STATE OF CALIFORNIA
DEPARTMENT OF TRANSPORTATION

DIVISION OF STRUCTURES
STRUCTURE DESIGN 2

BRIDGE NO. 33-25
POST MILE 1.0-1.3

CU 04
EA 043431

DS 050 2438 (CADD 4/94)

ORIGINAL SCALE IN INCHES FOR REDUCED PLANS 0 1 2 3

DISREGARD PRINTS BEARING EARLIER REVISION DATES

REVISION DATES (PRELIMINARY STAGE ONLY) 11/28/93 12/1/93 1/23/94 2/26/94 4/26/94

SHEET 36 OF 12

DIST.	COUNTY	ROUTE	POST MILES TOTAL PROJECT	SHEET NO.	TOTAL SHEETS
04	Ala	80			

REGISTERED ENGINEER - CIVIL

REGISTERED PROFESSIONAL ENGINEER Gregory Evan Stocum No. 44950 Exp. 3-31-98 CIVIL STATE OF CALIFORNIA

PLANS APPROVAL DATE

The State of California or its officers or agents shall not be responsible for the accuracy or completeness of electronic copies of this plan sheet.

NOTE:
THE CONTRACTOR SHALL VERIFY ALL CONTROLLING FIELD DIMENSIONS BEFORE ORDERING OR FABRICATING ANY MATERIAL.

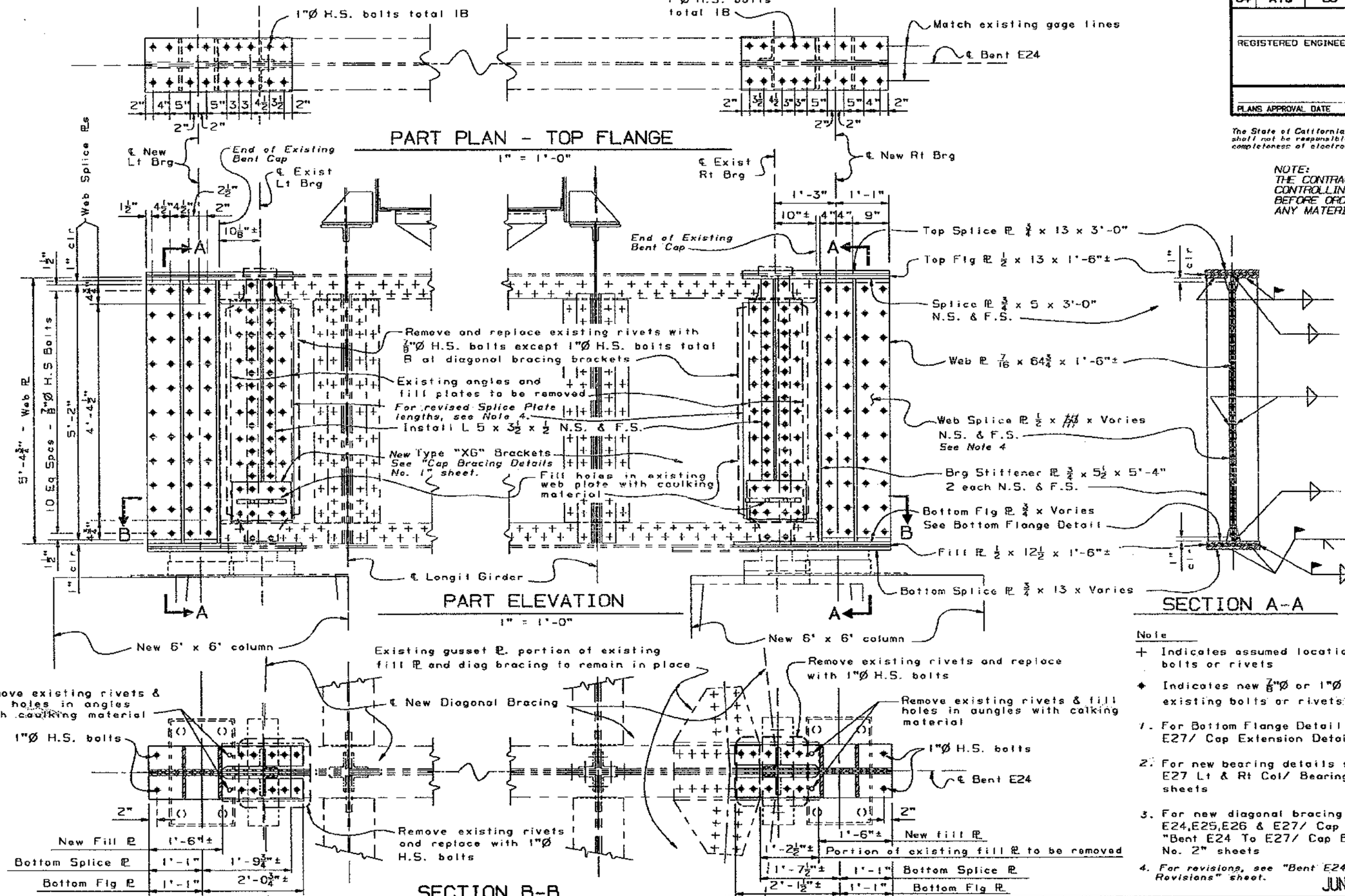

Note

+ Indicates assumed location of existing bolts or rivets

◆ Indicates new 7/8"Ø or 1"Ø H.S. bolts. Remove existing bolts or rivets as required.

1. For Bottom Flange Detail see "Bent E24 to E27/ Cap Extension Details" sheet
2. For new bearing details see "Bent E24 to E27 Lt & Rt Col/ Bearing Details No 1 & No 2" sheets
3. For new diagonal bracing details see "Bent E24,E25,E26 & E27/ Cap Bracing Details" and "Bent E24 To E27/ Cap Bracing Details No. 1 & No. 2" sheets
4. *For revisions, see "Bent E24 Cap Extension Revisions" sheet.*

JUN 19 1995

SEISMIC RETROFIT PROJECT No. 614

SFOBB - BENT E23 TO E28 RETROFIT

BENT E24

CAP EXTENSION DETAILS

	BY	CHECKED
DESIGN	R. E. Bateman 8-93	Shown Sun
DETAILS	K-C-B, Framci 0 9-93	Shown Sun
QUANTITIES	Mark Reno	R. E. Bateman

STATE OF CALIFORNIA DEPARTMENT OF TRANSPORTATION

DIVISION OF STRUCTURES STRUCTURE DESIGN 2

BRIDGE NO. 33-25

POST MILE 1.0-1.3

CU 04
EA 043431

DISREGARD PRINTS BEARING EARLIER REVISION DATES

REVISION DATES (PRELIMINARY STAGE ONLY)

SHEET 37 OF 120

ORIGINAL SCALE IN INCHES FOR REDUCED PLANS 0 1 2 3

DS OSD 2139 (CADD 4/89)

The State of California or its officers or agents shall not be responsible for the accuracy or completeness of electronic copies of this plan sheet.

DIST.	COUNTY	ROUTE	POST MILES TOTAL PROJECT	SHEET NO.	TOTAL SHEETS
04	Ala	80			

REGISTERED ENGINEER - CIVIL

REGISTERED PROFESSIONAL ENGINEER Gregory Evan Slocum No. 44960 Exp. 3-31-98 CIVIL STATE OF CALIFORNIA

PLANS APPROVAL DATE

NOTE:
THE CONTRACTOR SHALL VERIFY ALL CONTROLLING FIELD DIMENSIONS BEFORE ORDERING OR FABRICATING ANY MATERIAL.

NEW

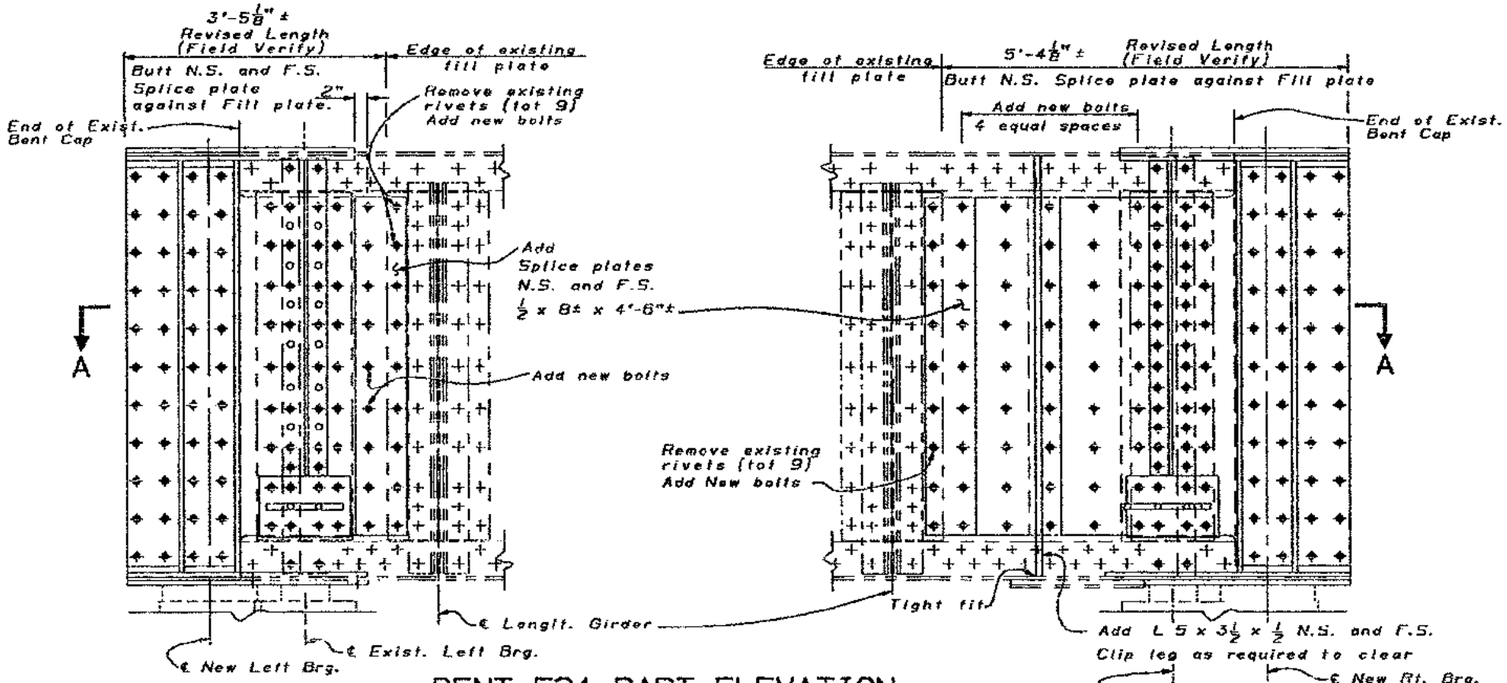

BENT E24 PART ELEVATION

1" = 1'-0"

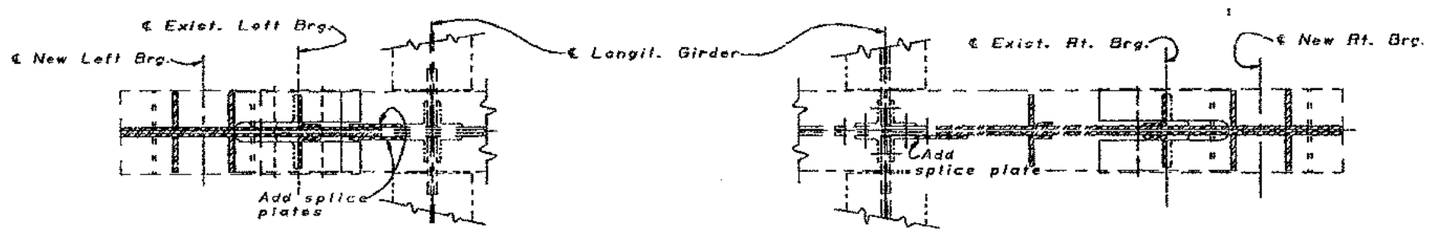

SECTION A-A

1" = 1'-0"

JUN 19 1995

Note

+ Indicates assumed location of existing bolts or rivets

✦ Indicates new 7/8"Ø H.S. bolts. Replace existing bolts or rivets as required.

° Indicates bolt or rivet to be removed and remaining hole to be filled with caulking.

DESIGN	BY R. E. Boteman	CHECKED Ed Lee	
DETAILS	BY Jim K., Franci O	CHECKED Gregory Slocum	
QUANTITIES	BY R. E. Boteman	CHECKED A.E.S.	

SEISMIC RETROFIT PROJECT No. 614

STATE OF CALIFORNIA DEPARTMENT OF TRANSPORTATION

DIVISION OF STRUCTURES STRUCTURE DESIGN 2

BRIDGE NO. 33-25

POST MILE 1.0-1.3

SFOBB - BENT E23 TO E28 RETROFIT

BENT E24

CAP EXTENSION REVISIONS

CU 04
EA 043431

DS DSD 2139 (2A00 4/89)

ORIGINAL SCALE IN INCHES FOR REDUCED PLANS 0 1 2 3

DISREGARD PRINTS BEARING EARLIER REVISION DATES

REVISION DATES (PRELIMINARY STAGE ONLY) 4-27-95

SHEET 37A OF

DIST.	COUNTY	ROUTE	POST MILES TOTAL PROJECT	SHEET NO.	TOTAL SHEETS
04	Ala	80		R1	

REGISTERED ENGINEER - CIVIL

REGISTERED PROFESSIONAL ENGINEER Gregory Evan Slocum No. 44960 Exp. 3-31-98 CIVIL STATE OF CALIFORNIA

PLANS APPROVAL DATE

The State of California or its officers or agents shall not be responsible for the accuracy or completeness of electronic copies of this plan sheet.

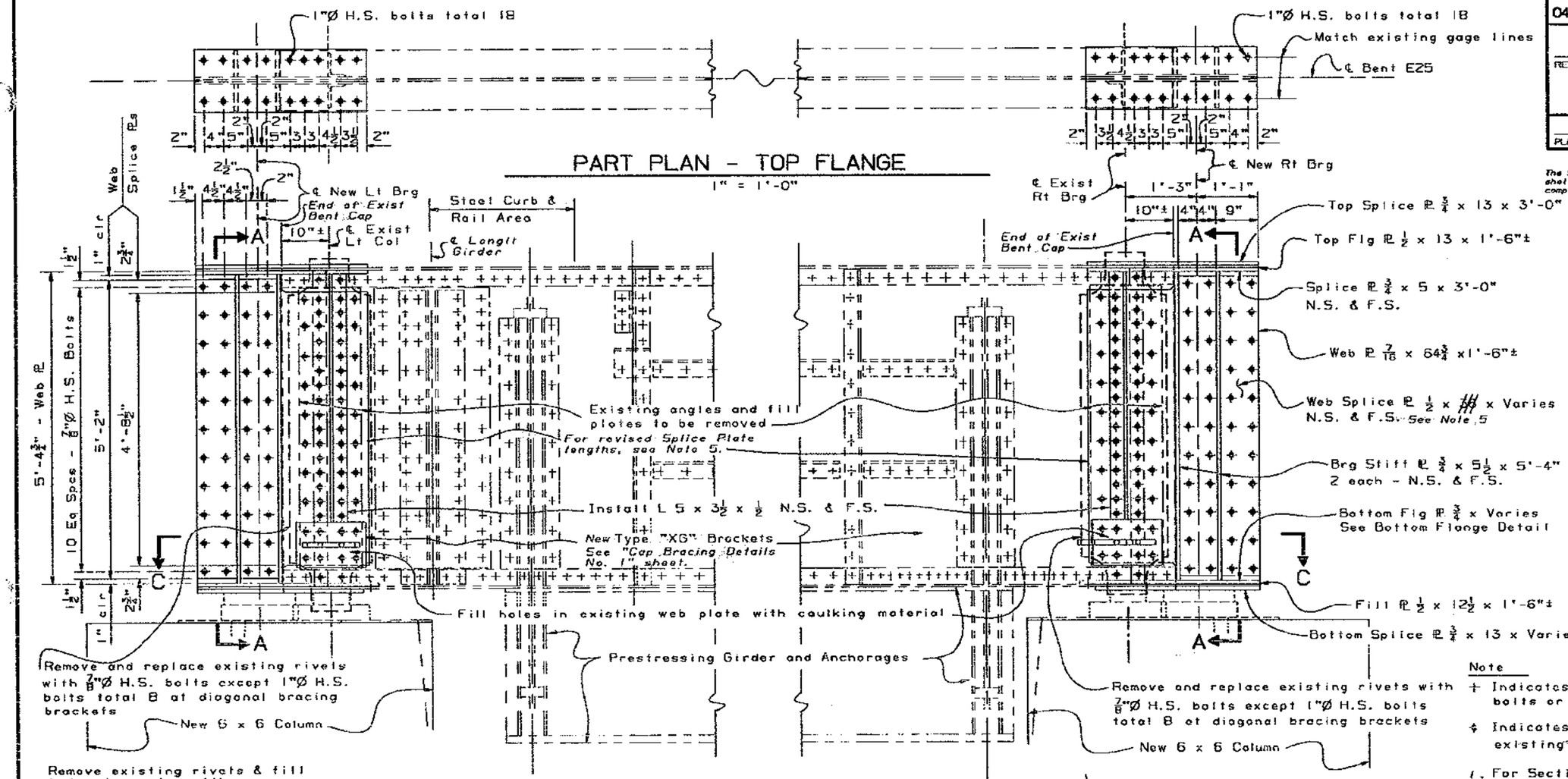

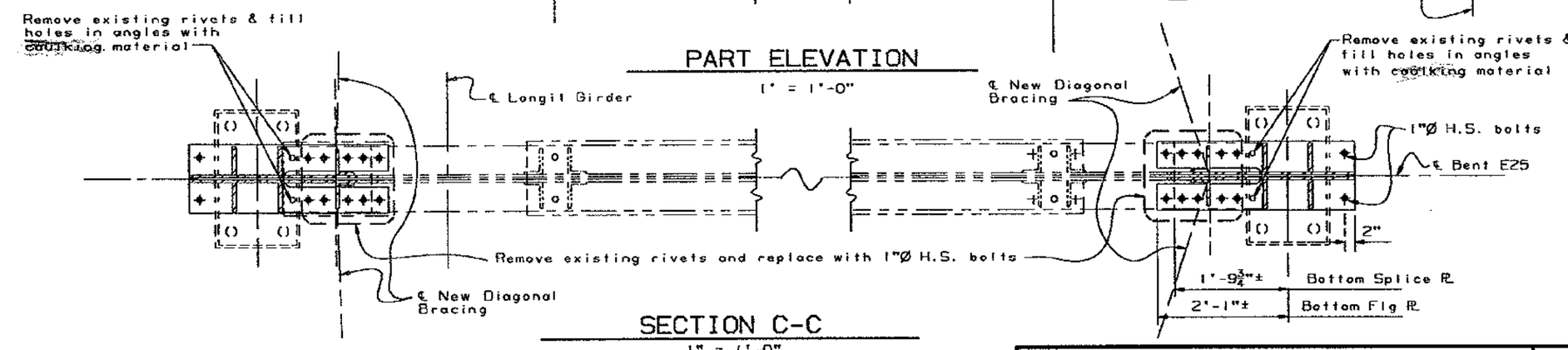

NOTE:
THE CONTRACTOR SHALL VERIFY ALL CONTROLLING FIELD DIMENSIONS BEFORE ORDERING OR FABRICATING ANY MATERIAL.

Note

+ Indicates assumed location of existing bolts or rivets

♦ Indicates new 7/8"Ø or 1"Ø H.S. bolts. Remove existing bolts or rivets as required.

1. For Section A-A see "Bent E24/ Cap Extension Details" sheet
2. For Bottom Flange Detail see "Bent E24 to E27/ Cap Extension Details" sheet
3. For new bearing details see "Bent E24 to E27 Lt & Rt Col/ Bearing Details No 1 & No 2" sheets
4. For new diagonal bracing details see "Bent E24,E25,E26 & E27/ Cap Bracing Details" and "Bent E24 To E27/ Cap Bracing Details No. 1, No. 2 & No. 3" sheets
5. For revisions, see "Bent E25 Cap Extension Revisions" sheet.

JUN 19 1995

SEISMIC RETROFIT PROJECT No. 614

SFOBB - BENT E23 TO E28 RETROFIT

BENT E25

CAP EXTENSION DETAILS

DESIGN	BY R. E. Bateman 8-93	CHECKED Shawn Sun
DETAILS	BY K-C-B,Franci D 9-93	CHECKED Shawn Sun
QUANTITIES	BY R. E. Bateman	CHECKED Mark Reno

STATE OF CALIFORNIA DEPARTMENT OF TRANSPORTATION

DIVISION OF STRUCTURES STRUCTURE DESIGN 2

BRIDGE NO. 33-25

POST MILE 1.0-1.3

CU 04 EA 043431

DISREGARD PRINTS BEARING EARLIER REVISION DATES

REVISION DATES (PRELIMINARY STAGE ONLY)

SHEET 38 OF 120

DS 050 2139 (CADD 4/89)

ORIGINAL SCALE IN INCHES FOR REDUCED PLANS 0 1 2 3

The State of California or its officers or agents shall not be responsible for the accuracy or completeness of electronic copies of this plan sheet.

DIST.	COUNTY	ROUTE	POST MILES TOTAL PROJECT	SHEET NO.	TOTAL SHEETS
04	Ala	80			

REGISTERED ENGINEER - CIVIL

REGISTERED PROFESSIONAL ENGINEER Gregory Evan Slocum No. 44850 Exp. 3-31-98 CIVIL STATE OF CALIFORNIA

PLANS APPROVAL DATE

NOTE:
THE CONTRACTOR SHALL VERIFY ALL CONTROLLING FIELD DIMENSIONS BEFORE ORDERING OR FABRICATING ANY MATERIAL.

NEW

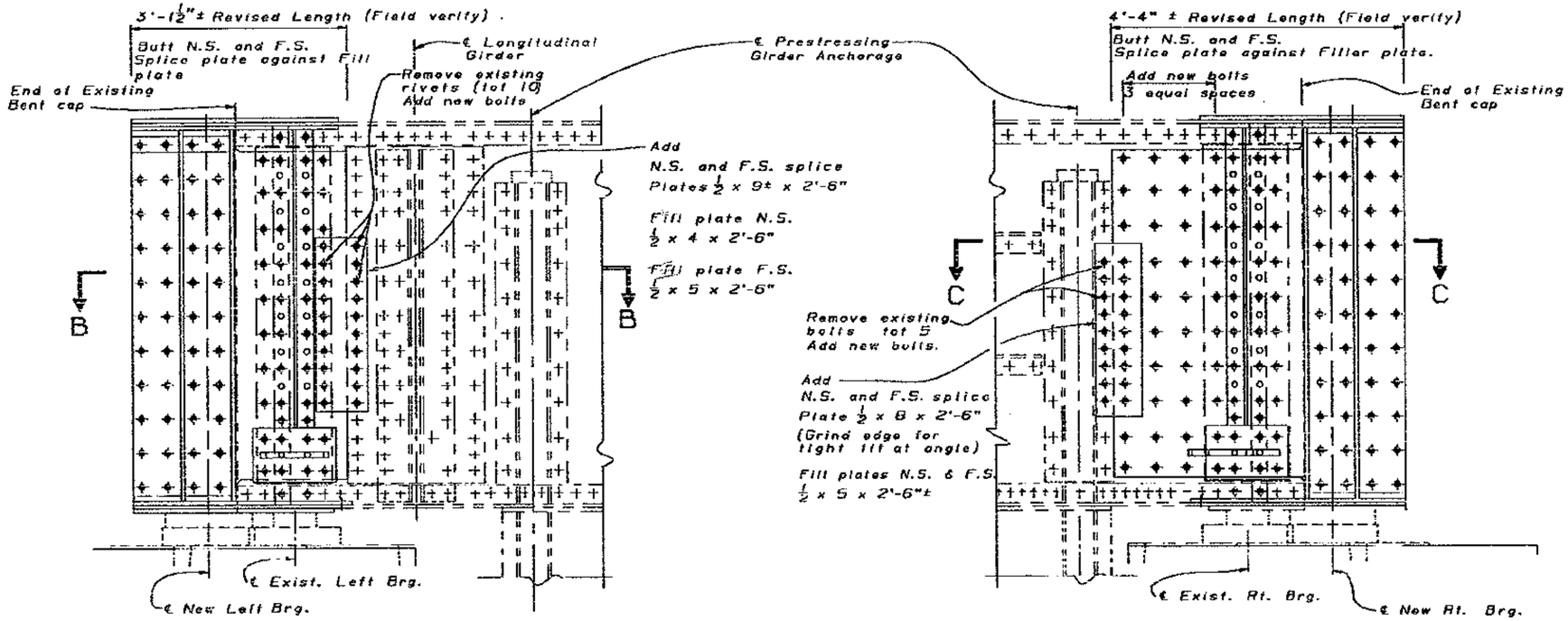

BENT E25 PART ELEVATION

1" = 1'-0"

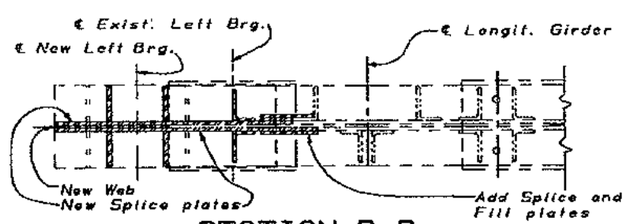

SECTION B-B

1" = 1'-0"

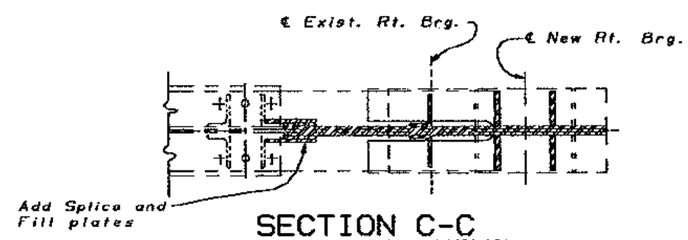

SECTION C-C

1" = 1'-0"

JUN 19 1995

Note

+ Indicates assumed location of existing bolts or rivets

✦ Indicates new ⅞"Ø H.S. bolts. Replace existing bolts or rivets as required.

o *Indicates bolt or rivet to be removed and remaining hole to be filled with caulking.*

DESIGN	BY R. E. Bateman	CHECKED Ed Lee	
DETAILS	BY Jim K., Franci D	CHECKED Gregory Slocum	
QUANTITIES	BY R. E. Bateman	CHECKED A.E.S.	

SEISMIC RETROFIT PROJECT No. 614

STATE OF CALIFORNIA DEPARTMENT OF TRANSPORTATION

DIVISION OF STRUCTURES STRUCTURE DESIGN 2

BRIDGE NO. 33-25

POST MILE 1.0-1.3

SFOBB - BENT E23 TO E28 RETROFIT

BENT E25

CAP EXTENSION REVISIONS

CU 04
EA 043431

DS 050 2139 (CADD 4/89)

ORIGINAL SCALE IN INCHES FOR REDUCED PLANS 0 1 2 3

DISREGARD PRINTS BEARING EARLIER REVISION DATES 4-27-95

REVISION DATES (PRELIMINARY STAGE ONLY)

SHEET 38A OF

DIST.	COUNTY	ROUTE	POST MILES TOTAL PROJECT	SHEET NO.	TOTAL SHEETS
04	Ala	80			

REGISTERED ENGINEER - CIVIL

REGISTERED PROFESSIONAL ENGINEER Gregory Evan Slocum No. 44960 Exp. 3-31-98 CIVIL STATE OF CALIFORNIA

PLANS APPROVAL DATE

The State of California or its officers or agents shall not be responsible for the accuracy or completeness of electronic copies of this plan sheet.

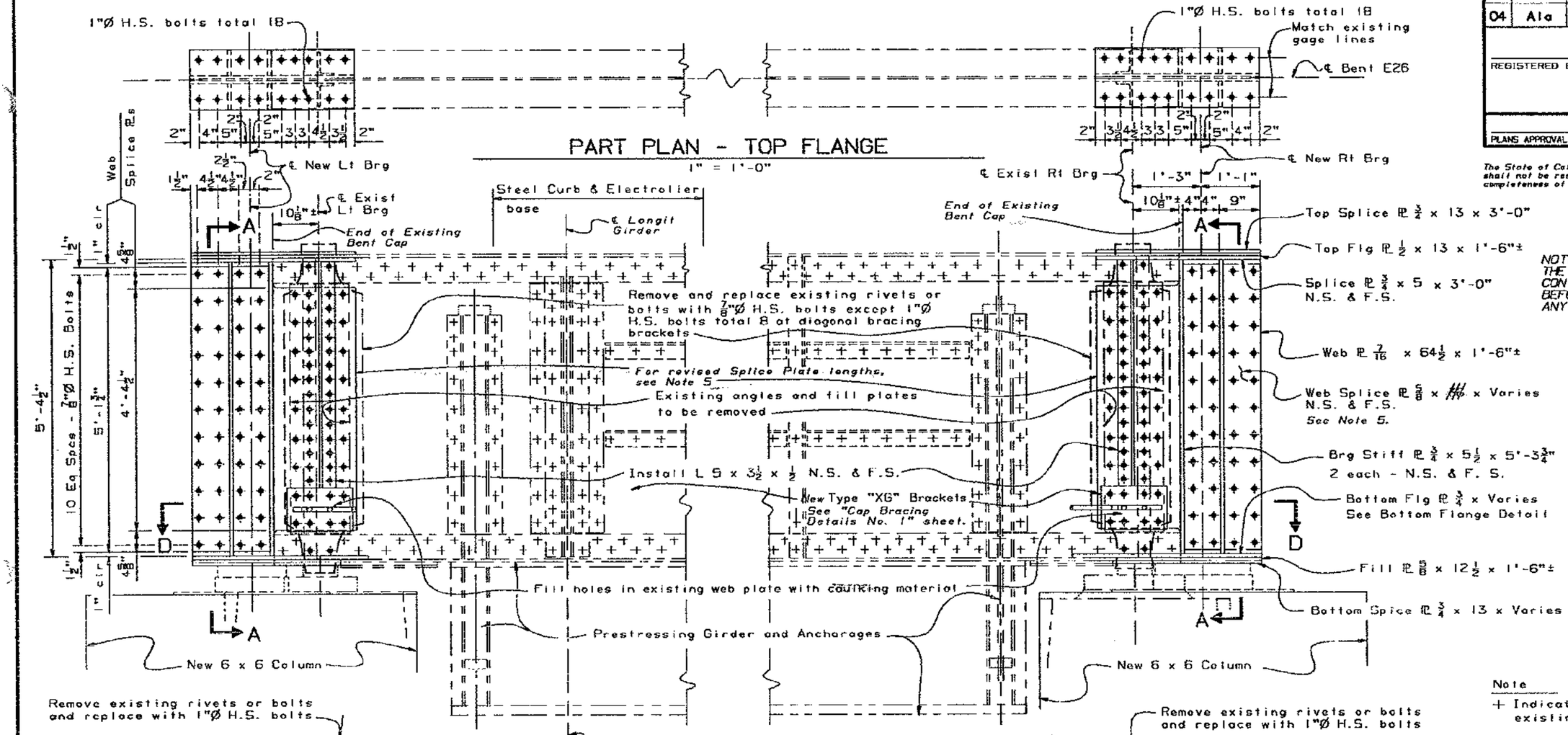

NOTE:
THE CONTRACTOR SHALL VERIFY ALL CONTROLLING FIELD DIMENSIONS BEFORE ORDERING OR FABRICATING ANY MATERIAL.

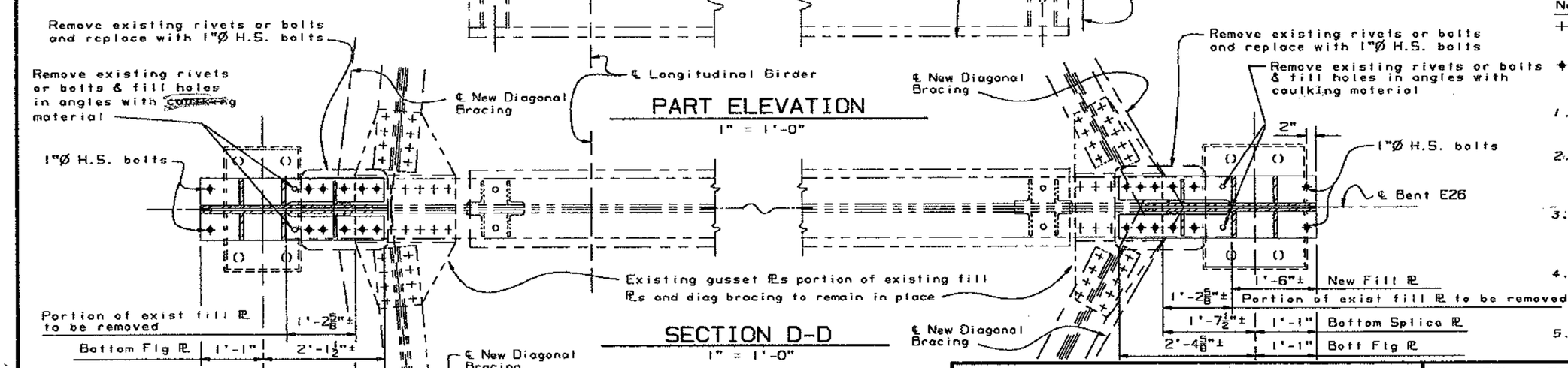

Note

+ Indicates assumed location of existing bolts or rivets

✦ Indicates new 7/8"Ø or 1"Ø H.S. bolts. Remove existing bolts or rivets as required.

1. For Section A-A see "Bent E24/ Cap Extension Details" sheet
2. For Bottom Flange Details see "Bent E24 to E27/ Cap Extension Details" sheet
3. For new bearing details see "Bent E24 to E27 Lt & Rt Col/ Bearing Details No 1 & No 2" sheets
4. For new diagonal bracing details see "Bent E24,E25,E26 & E27/ Cap Bracing Details" and "Bent E24 To E27/ Cap Bracing Details No. 1 & No. 2" sheets
5. *For revisions, see "Bent E26 Cap Extension Revisions" sheet.*

SEISMIC RETROFIT PROJECT No. 614

SFOBB - BENT E23 TO E28 RETROFIT

DESIGN	BY R. E. Bateman 8-93	CHECKED Shawn Sun
DETAILS	BY K-C-B, Franci D 9-93	CHECKED Shawn Sun
QUANTITIES	BY R. E. Bateman	CHECKED Mark Reno

STATE OF CALIFORNIA DEPARTMENT OF TRANSPORTATION

DIVISION OF STRUCTURES STRUCTURE DESIGN 2

BRIDGE NO. 33-25

POST MILE 1.0-1.3

BENT E26 JUN 19 1995

CAP EXTENSION DETAILS

CU 04 EA 043431

DS 050 2159 (CADD 4/89)

ORIGINAL SCALE IN INCHES FOR REDUCED PLANS 0 1 2 3

DISREGARD PRINTS BEARING EARLIER REVISION DATES

REVISION DATES (PRELIMINARY STAGE ONLY) 9-30-93 11-30-93 12-02-93 01-03-94 2-18-94 4-25-94

SHEET 39 OF 120

DIST.	COUNTY	ROUTE	POST MILES TOTAL PROJECT	SHEET NO.	TOTAL SHEETS
04	Ala	80			

REGISTERED ENGINEER - CIVIL

REGISTERED PROFESSIONAL ENGINEER Gregory Evan Slocum No. 44950 Exp. 3-31-96 CIVIL STATE OF CALIFORNIA

PLANS APPROVAL DATE

The State of California or its officers or agents shall not be responsible for the accuracy or completeness of electronic copies of this plan sheet.

NOTE:
THE CONTRACTOR SHALL VERIFY ALL CONTROLLING FIELD DIMENSIONS BEFORE ORDERING OR FABRICATING ANY MATERIAL.

NEW

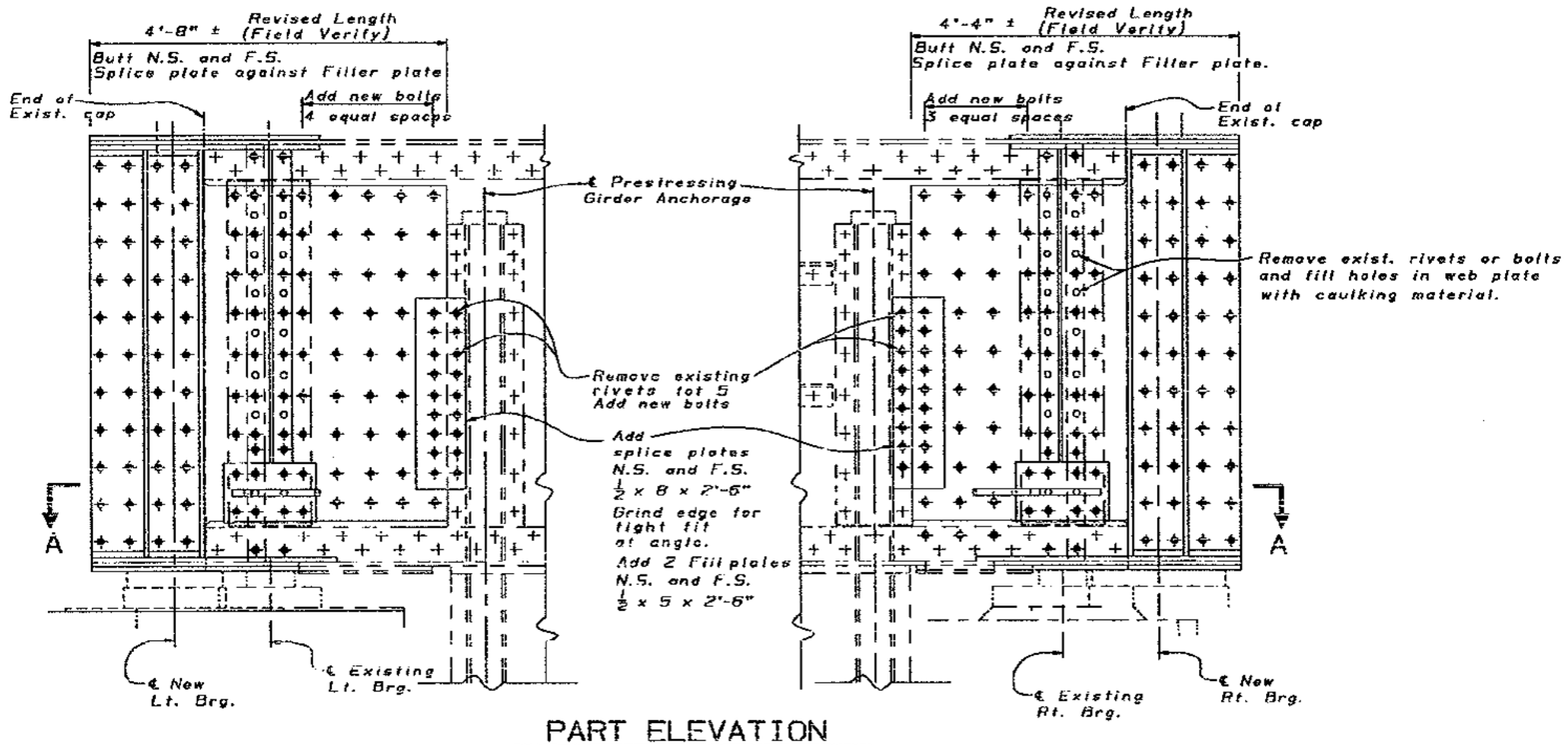

PART ELEVATION
1" = 1'-0"

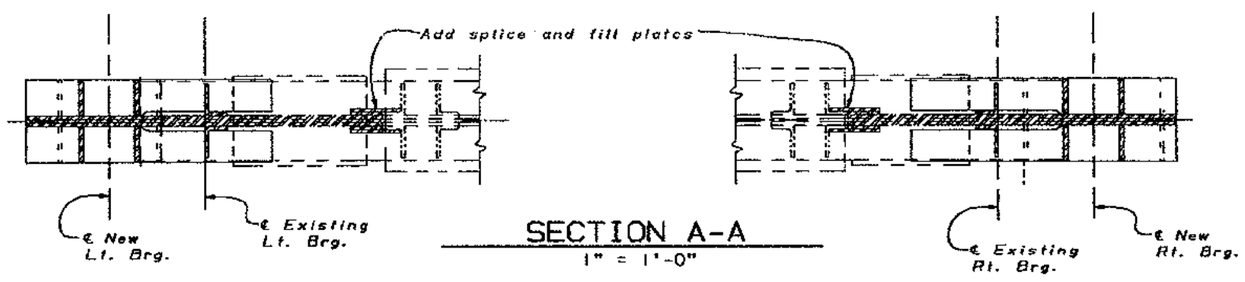

SECTION A-A
1" = 1'-0"

+ Indicates assumed location of existing bolts or rivets

✦ Indicates new ⅞"Ø H.S. bolts. *Replace existing bolts or rivets as required.*

o *Indicates bolt or rivet to be removed and remaining hole to be filled with caulking.*

JUN 19 1995

DESIGN	BY R. E. Bateman 8-93	CHECKED Ed Lee
DETAILS	BY Jim K., Franci D	CHECKED Gregory Slocum
QUANTITIES	BY R. E. Bateman	CHECKED A.E.S.

SEISMIC RETROFIT PROJECT No. 614

STATE OF CALIFORNIA DEPARTMENT OF TRANSPORTATION

DIVISION OF STRUCTURES STRUCTURE DESIGN 2

BRIDGE NO. 33-25

POST MILE 1.0-1.3

CU 04
EA 043431

SFOBB - BENT E23 TO E28 RETROFIT

BENT E26

CAP EXTENSION REVISIONS

DS 030 2139 (CADD 4/89)

ORIGINAL SCALE IN INCHES FOR REDUCED PLANS 0 1 2 3

DISREGARD PRINTS BEARING EARLIER REVISION DATES

REVISION DATES (PRELIMINARY STAGE ONLY)

SHEET 39A OF

DIST.	COUNTY	ROUTE	POST MILES TOTAL PROJECT	SHEET NO.	TOTAL SHEETS
04	Ala	80			

REGISTERED ENGINEER - CIVIL

REGISTERED PROFESSIONAL ENGINEER Gregory Evan Slocum No. 44950 Exp. 3-31-98 CIVIL STATE OF CALIFORNIA

PLANS APPROVAL DATE

NOTE:
THE CONTRACTOR SHALL VERIFY ALL CONTROLLING FIELD DIMENSIONS BEFORE ORDERING OR FABRICATING ANY MATERIAL.

The State of California or its officers or agents shall not be responsible for the accuracy or completeness of electronic copies of this plan sheet.

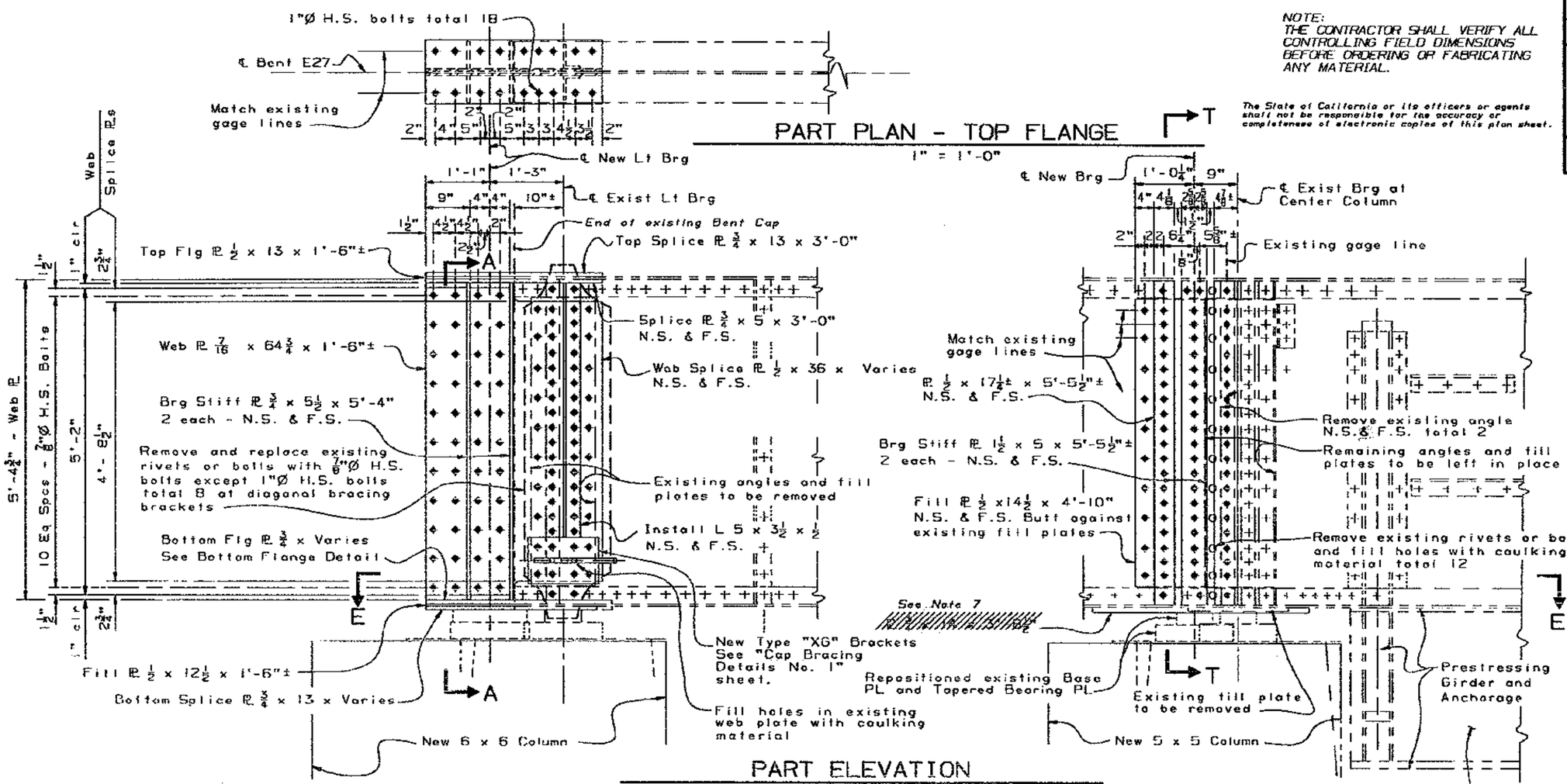

PART ELEVATION
1" = 1'-0"

Notes

+ Indicates assumed location of existing bolts or rivets

◆ Indicates new ⅞"Ø or 1"Ø H.S. bolts. Replace existing bolts or rivets as required.

1. For Section A-A see "Bent E24/ Cap Extension Details" sheet
2. For Bottom Flange Details and additional details at Web Splice Plates see "Bent E24 to E27/ Cap Extension Details" sheet
3. For details at South End of Bent E27 see "Bent E27/ Cap Extension Details No. 2" sheet
4. For bearing details see "Bent E24 to E27 Lt & Rt Col/ Bearing Details No 1 and No 2", "Bent E27 Ctr, E29 - E33/ Bearing Details No 1 and No 2" sheets
5. For new diagonal bracing details see "Bent E24,E25,E26 & E27/ Cap Bracing Details" and "Bent E24 To E27/ Cap Bracing Details No. 1 & No. 2" sheets
6. For revisions, see "Bent E27 Cap Extension Revisions" sheet.
7. For revisions see "Bent E27 Cap Strengthening Details" sheet.

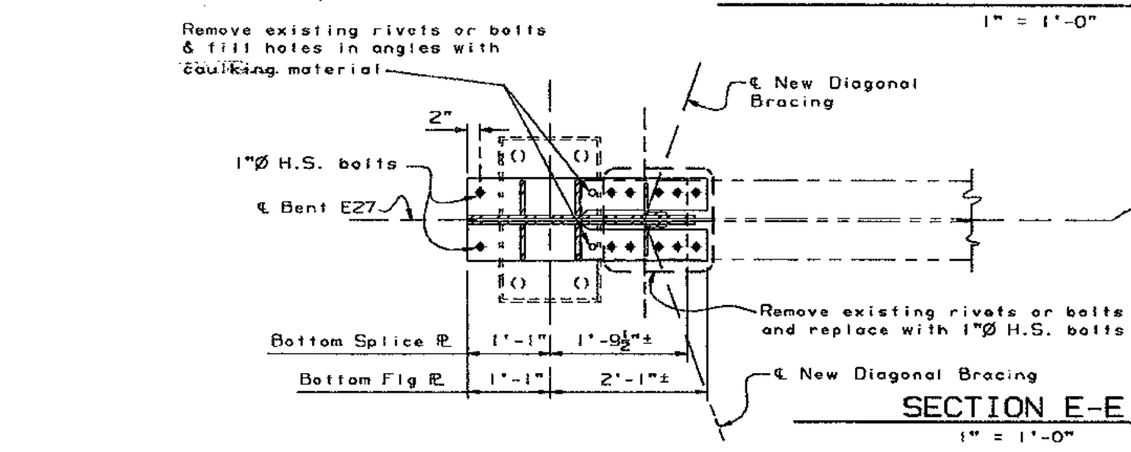

SECTION E-E
1" = 1'-0"

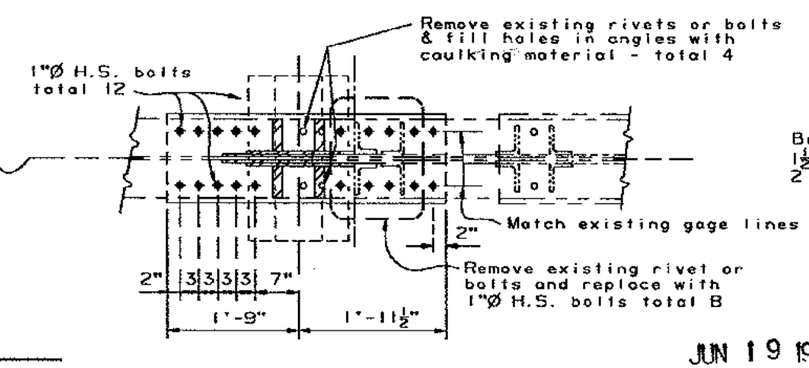

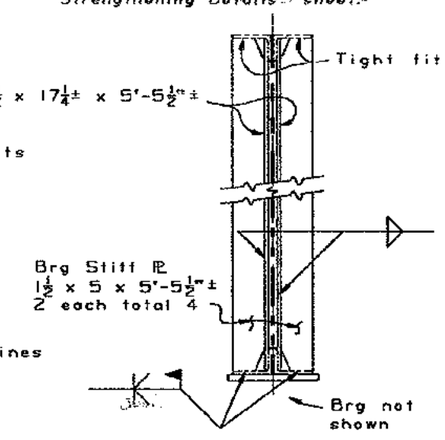

SECTION T-T

JUN 19 1995

SEISMIC RETROFIT PROJECT No. 614

SFOBB - BENT E23 TO E28 RETROFIT

DESIGN	BY R. E. Bateman 9-93	CHECKED Shawn Sun	
DETAILS	BY K-C-B, Franci 010-93	CHECKED Shawn Sun	
QUANTITIES	BY R. E. Bateman	CHECKED Mark Reno	

STATE OF CALIFORNIA
DEPARTMENT OF TRANSPORTATION

DIVISION OF STRUCTURES
STRUCTURE DESIGN 2

CU 04
EA 043431

BRIDGE NO. 33-25
POST MILE 1.0-1.3

BENT E27
CAP EXTENSION DETAILS NO. 1

DISREGARD PRINTS BEARING EARLIER REVISION DATES

REVISION DATES (PRELIMINARY STAGE ONLY) 10-8-93 10-27-93 10-28-93 11-10-93 12-16-93 01-14-94 2-8-94 4-25-94

SHEET 40 OF 120

DS 030 2139 (CADD 4/89)

ORIGINAL SCALE IN INCHES FOR REDUCED PLANS 0 1 2 3

DIST.	COUNTY	ROUTE	POST MILES TOTAL PROJECT	SHEET NO.	TOTAL SHEETS
04	Ala	80			

REGISTERED ENGINEER - CIVIL

PLANS APPROVAL DATE

REGISTERED PROFESSIONAL ENGINEER Gregory Evan Slocum No. 44950 Exp. 3-31-98 CIVIL STATE OF CALIFORNIA

The State of California or its officers or agents shall not be responsible for the accuracy or completeness of electronic copies of this plan sheet.

NOTE:
THE CONTRACTOR SHALL VERIFY ALL CONTROLLING FIELD DIMENSIONS BEFORE ORDERING OR FABRICATING ANY MATERIAL.

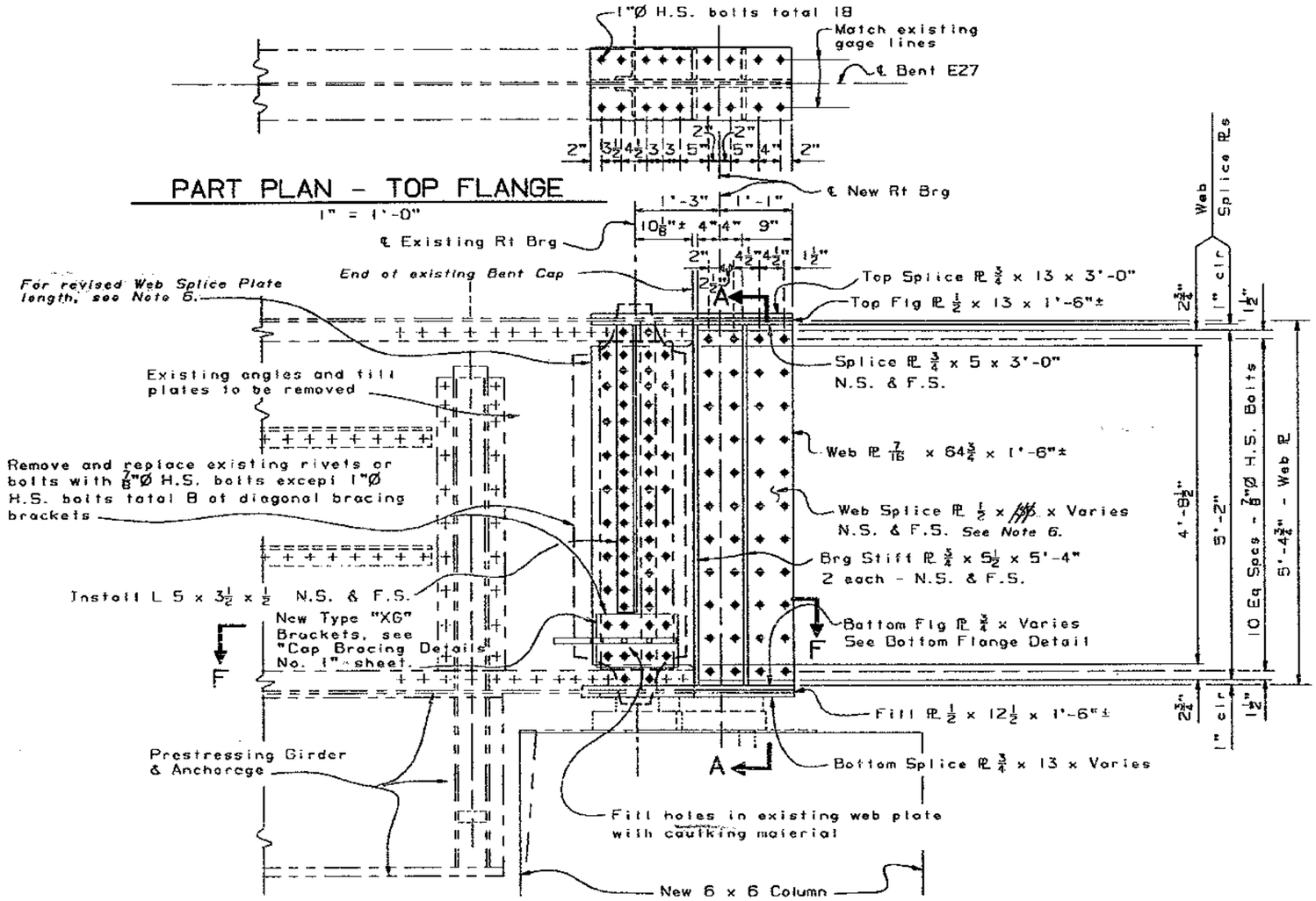

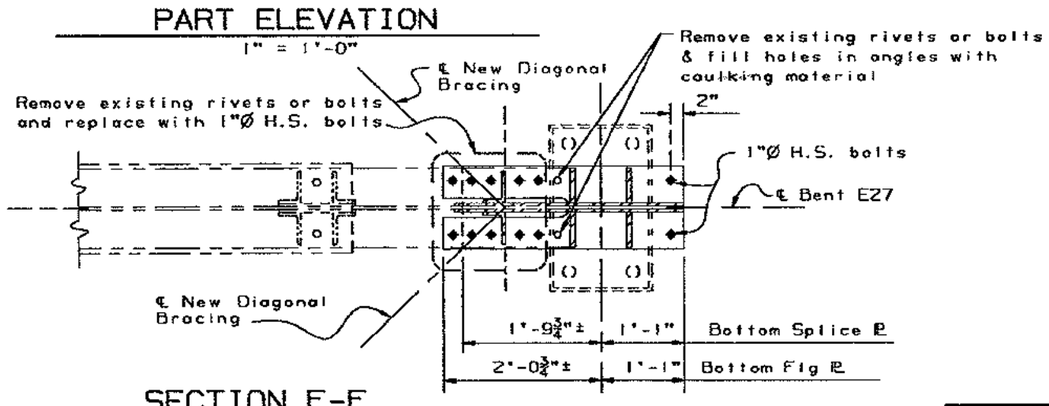

Note

+ Indicates assumed location of existing bolts or rivets

◆ Indicates new ⅞"Ø or 1"Ø H.S. bolts Replace existing bolts or rivets as required.

1. For Section A-A see "Bent E24/ Cap Extension Details" sheet
2. For Bottom Flange Details and additional details at Web Splice Plates see "Bent E24 to E27/ Cap Extension Details" sheet
3. For bearing details see "Bent E24 to E27 Lt & Rt Col/ Bearing Details No 1 and No 2" "Bent E27 Ctr, E29 - E33/ Bearing Details No 1 and No 2" sheets
4. For details at North End and Center of Bent E27 see "Bent E27/ Cap Extension Details No. 1" sheet
5. For new diagonal bracing details see "Bent E24 E25,E26 & E27/ Cap Bracing Details" and "Bent E24 To E27/ Cap Bracing Details No. 1 & No. 2" sheets
6. For revisions, see "Bent E27 Cap Extension Revisions" sheet.

JUN 19 1995

DESIGN	BY R. E. Bateman 9-93	CHECKED Shawn Sun	
DETAILS	BY K-C-B,FranciO 10-93	CHECKED Shawn Sun	
QUANTITIES	BY R. E. Bateman	CHECKED Mark Reno	

SEISMIC RETROFIT PROJECT No. 614

STATE OF CALIFORNIA DEPARTMENT OF TRANSPORTATION

DIVISION OF STRUCTURES STRUCTURE DESIGN 2

BRIDGE NO. 33-25

POST MILE 1.0-1.3

SFOBB - BENT E23 TO E28 RETROFIT

BENT E27

CAP EXTENSION DETAILS NO. 2

CU 04
EA 043431

DISREGARD PRINTS BEARING EARLIER REVISION DATES

REVISION DATES (PRELIMINARY STAGE ONLY) 10-8-93 10-27-93 11-30-93 12-20-93 01-25-94 2-18-94 4-25-94

SHEET 41 OF 120

05 000 2139 (CADD 4/89)

ORIGINAL SCALE IN INCHES FOR REDUCED PLANS 0 1 2 3

DIST.	COUNTY	ROUTE	POST MILES TOTAL PROJECT	SHEET NO.	TOTAL SHEETS
04	Ala	80			

REGISTERED ENGINEER - CIVIL

REGISTERED PROFESSIONAL ENGINEER Gregory Evan Slocum No. 44950 Exp. 3-31-98 CIVIL STATE OF CALIFORNIA

PLANS APPROVAL DATE

The State of California or its officers or agents shall not be responsible for the accuracy or completeness of electronic copies of this plan sheet.

NOTE:
THE CONTRACTOR SHALL VERIFY ALL CONTROLLING FIELD DIMENSIONS BEFORE ORDERING OR FABRICATING ANY MATERIAL.

NBIU

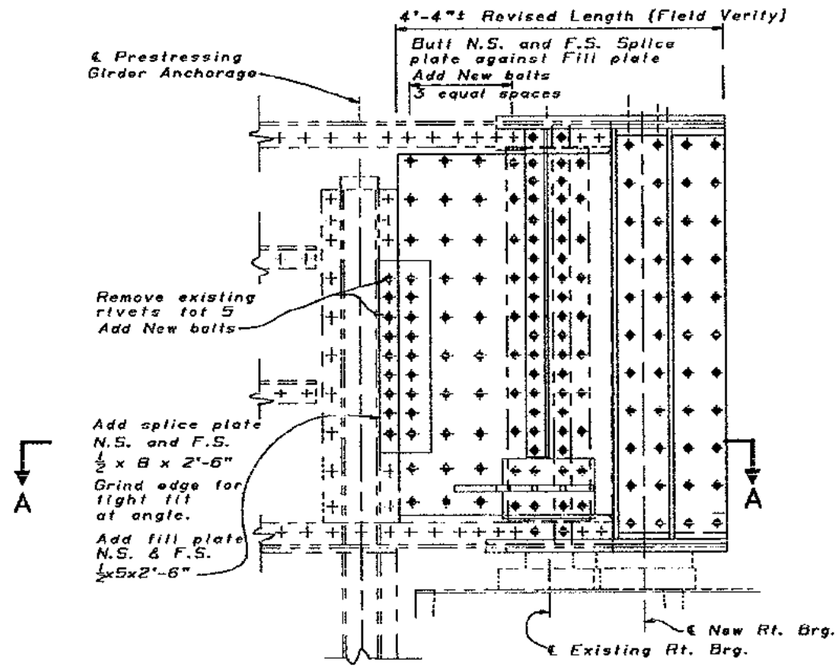

ELEVATION
1" = 1'-0"

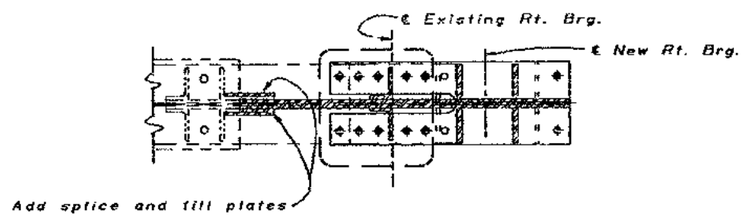

SECTION A-A
1" = 1'-0"

Notes

+ Indicates assumed location of existing bolts or rivets

◆ Indicates new $\frac{7}{8}$"Ø bolts. Replace existing bolts or rivets as required

JUN 19 1995

DESIGN	BY R. E. Bateman 9-93	CHECKED Dallas Forester	
DETAILS	BY Jim K., Franci D	CHECKED Gregory Slocum	
QUANTITIES	BY R. E. Bateman	CHECKED A.E.S.	

SEISMIC RETROFIT PROJECT No. 614

SFOBB - BENT E23 TO E28 RETROFIT

STATE OF CALIFORNIA DEPARTMENT OF TRANSPORTATION

DIVISION OF STRUCTURES STRUCTURE DESIGN 2

BRIDGE NO. 33-25

POST MILE 1.0-1.3

BENT E27

CAP EXTENSION REVISIONS

CU 04
EA 043431

DS 050 2159 (CADD 4/89)

ORIGINAL SCALE IN INCHES FOR REDUCED PLANS 0 1 2 3

DISREGARD PRINTS BEARING EARLIER REVISION DATES

REVISION DATES (PRELIMINARY STAGE ONLY) 5-1-95

SHEET 41A

DIST.	COUNTY	ROUTE	POST MILES TOTAL PROJECT	SHEET NO.	TOTAL SHEETS
04	Ala	80			

REGISTERED ENGINEER - CIVIL

REGISTERED PROFESSIONAL ENGINEER
Gregory Evan Slocum
No. 44950
Exp. 3-31-98
CIVIL
STATE OF CALIFORNIA

PLANS APPROVAL DATE

The State of California or its officers or agents shall not be responsible for the accuracy or completeness of electronic copies of this plan sheet.

NOTE:
THE CONTRACTOR SHALL VERIFY ALL CONTROLLING FIELD DIMENSIONS BEFORE ORDERING OR FABRICATING ANY MATERIAL.

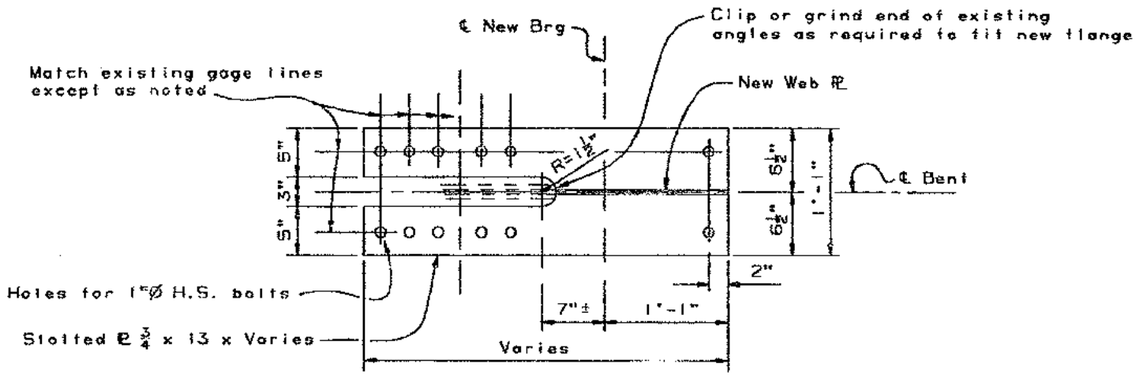

BOTTOM FLANGE DETAIL

1½" = 1'-0"

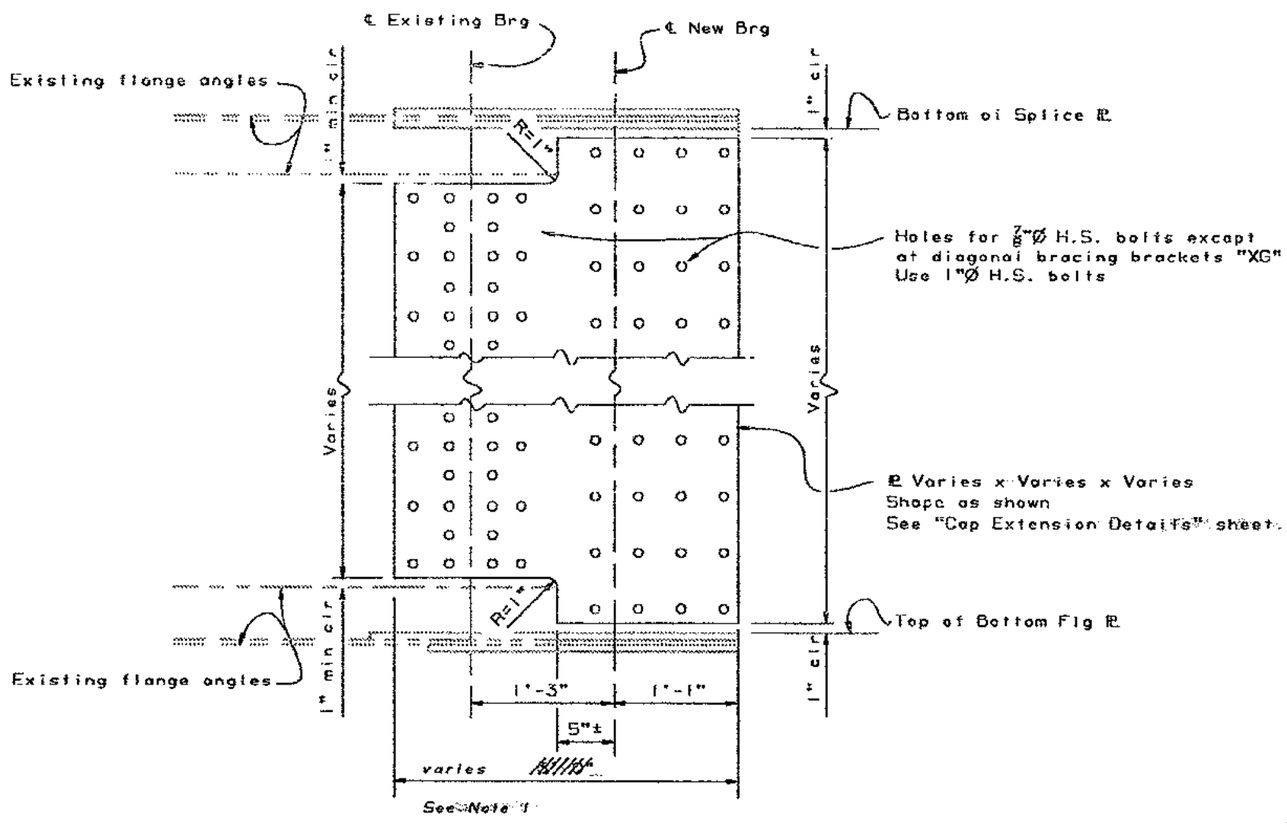

WEB SPLICE PLATE

1½" = 1'-0"

Note:

1. *For splice plate lengths, see "Cap Extension Revision" sheets.*

JUN 19 1995

DESIGN	BY R. E. Bateman 9-93	CHECKED Shawn Sun	
DETAILS	BY K-C-B, FranciD 10-93	CHECKED Shawn Sun	
QUANTITIES	BY R. E. Bateman	CHECKED Mark Reno	

SEISMIC RETROFIT PROJECT No. 614

STATE OF CALIFORNIA
DEPARTMENT OF TRANSPORTATION

DIVISION OF STRUCTURES
STRUCTURE DESIGN 2

BRIDGE NO. 33-25
POST MILE 1.0-1.3

SFOBB - BENT E23 TO E28 RETROFIT

BENT E24 TO E27

CAP EXTENSION DETAILS

DS 050 2159 (CADD 4/95)

ORIGINAL SCALE IN INCHES FOR REDUCED PLANS 0 1 2 3

CU 04
EA 043431

DISREGARD PRINTS BEARING EARLIER REVISION DATES

REVISION DATES (PRELIMINARY STAGE ONLY)

SHEET 42 OF 120

DIST.	COUNTY	ROUTE	POST MILES TOTAL PROJECT	SHEET NO.	TOTAL SHEETS
04	ALA	80			

REGISTERED ENGINEER - CIVIL

REGISTERED PROFESSIONAL ENGINEER Gregory Slocum No. 44950 Exp. 3-31-98 CIVIL STATE OF CALIFORNIA

PLANS APPROVAL DATE

The State of California or its officers or agents shall not be responsible for the accuracy or completeness of electronic copies of this plan sheet.

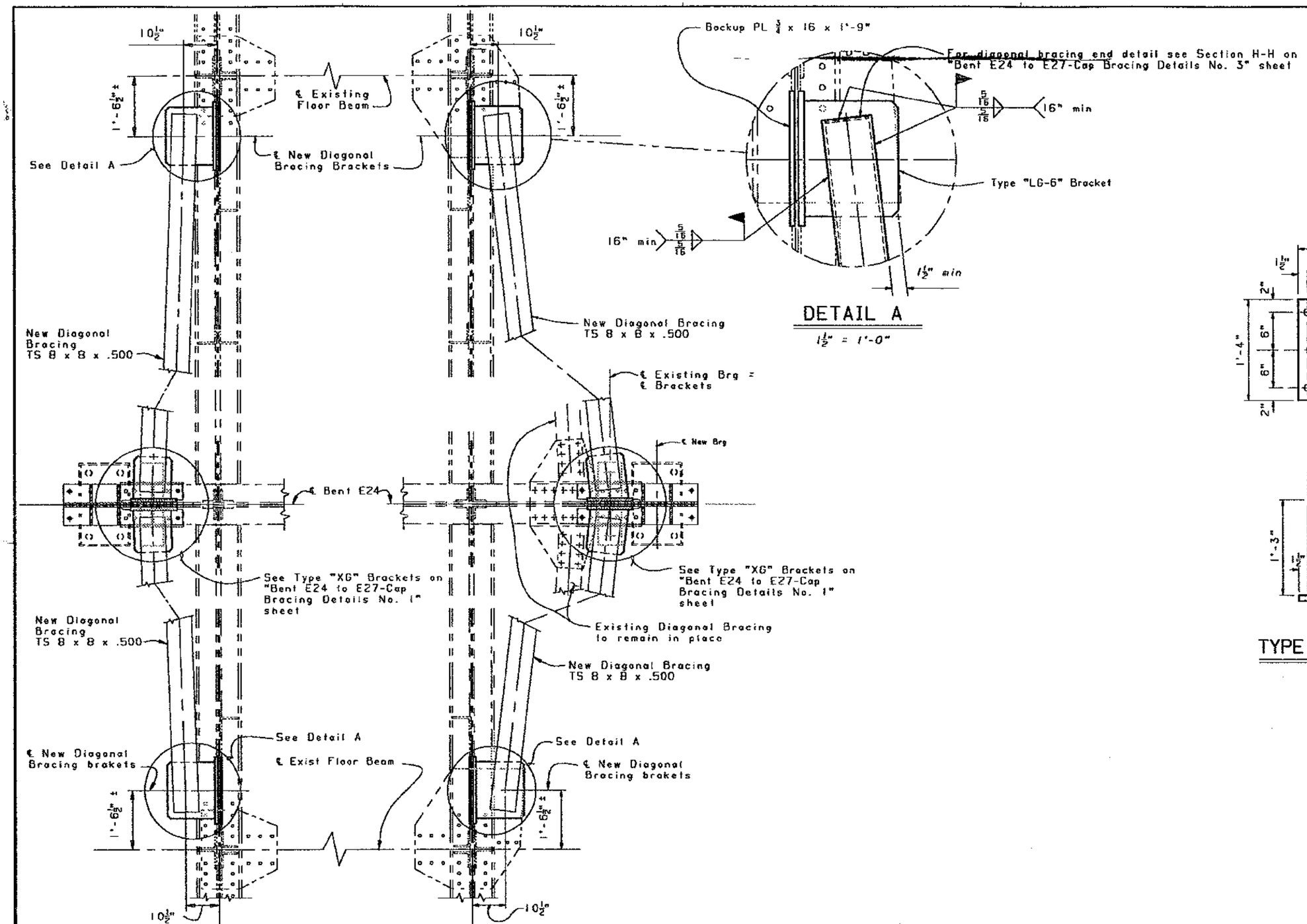

DETAIL A

1½" = 1'-0"

PART PLAN - BENT E24 DIAGONAL BRACING

1" = 1'-0"

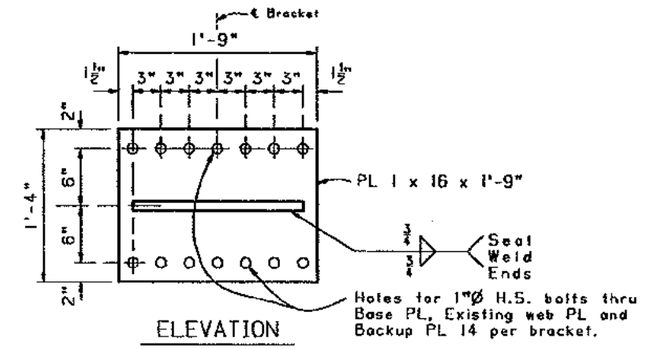

ELEVATION

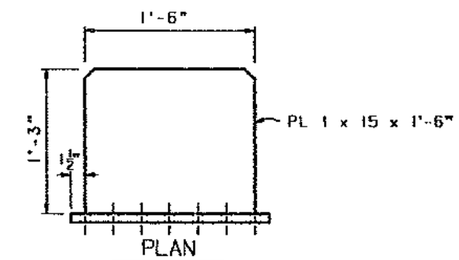

PLAN

TYPE "LG-6" BRACKET

½" = 1'-0"

NOTE:
THE CONTRACTOR SHALL VERIFY ALL CONTROLLING FIELD DIMENSIONS BEFORE ORDERING OR FABRICATING ANY MATERIAL.

MAR 22 1995

SEISMIC RETROFIT PROJECT No. 614

SFOBB - BENT E23 TO E28 RETROFIT

	BY		CHECKED
DESIGN	R.E.Bateman		Shawn Sun
DETAILS	AES	1-94	Shawn Sun
QUANTITIES	R.E.Bateman		Simon Blank

STATE OF CALIFORNIA DEPARTMENT OF TRANSPORTATION

DIVISION OF STRUCTURES STRUCTURE DESIGN 2

BRIDGE NO. 33-25

POST MILE 1.0-1.3

BENT E24

CAP BRACING DETAILS

CU 04
EA 043431

DS 050 2150 (CADD 4/89)

ORIGINAL SCALE IN INCHES FOR REDUCED PLANS 0 1 2 3

DISREGARD PRINTS BEARING EARLIER REVISION DATES

REVISION DATES (PRELIMINARY STAGE ONLY) 1-20-94 4-29-94 5-02-94

SHEET 43 OF 120

DIST.	COUNTY	ROUTE	POST MILES TOTAL PROJECT	SHEET NO.	TOTAL SHEETS
04	ALA	80			

REGISTERED ENGINEER - CIVIL

REGISTERED PROFESSIONAL ENGINEER Gregory Slocum No. 44950 Exp. 3-31-98 CIVIL STATE OF CALIFORNIA

PLANS APPROVAL DATE

The State of California or its officers or agents shall not be responsible for the accuracy or completeness of electronic copies of this plan sheet.

NOTE:
THE CONTRACTOR SHALL VERIFY ALL CONTROLLING FIELD DIMENSIONS BEFORE ORDERING OR FABRICATING ANY MATERIAL.

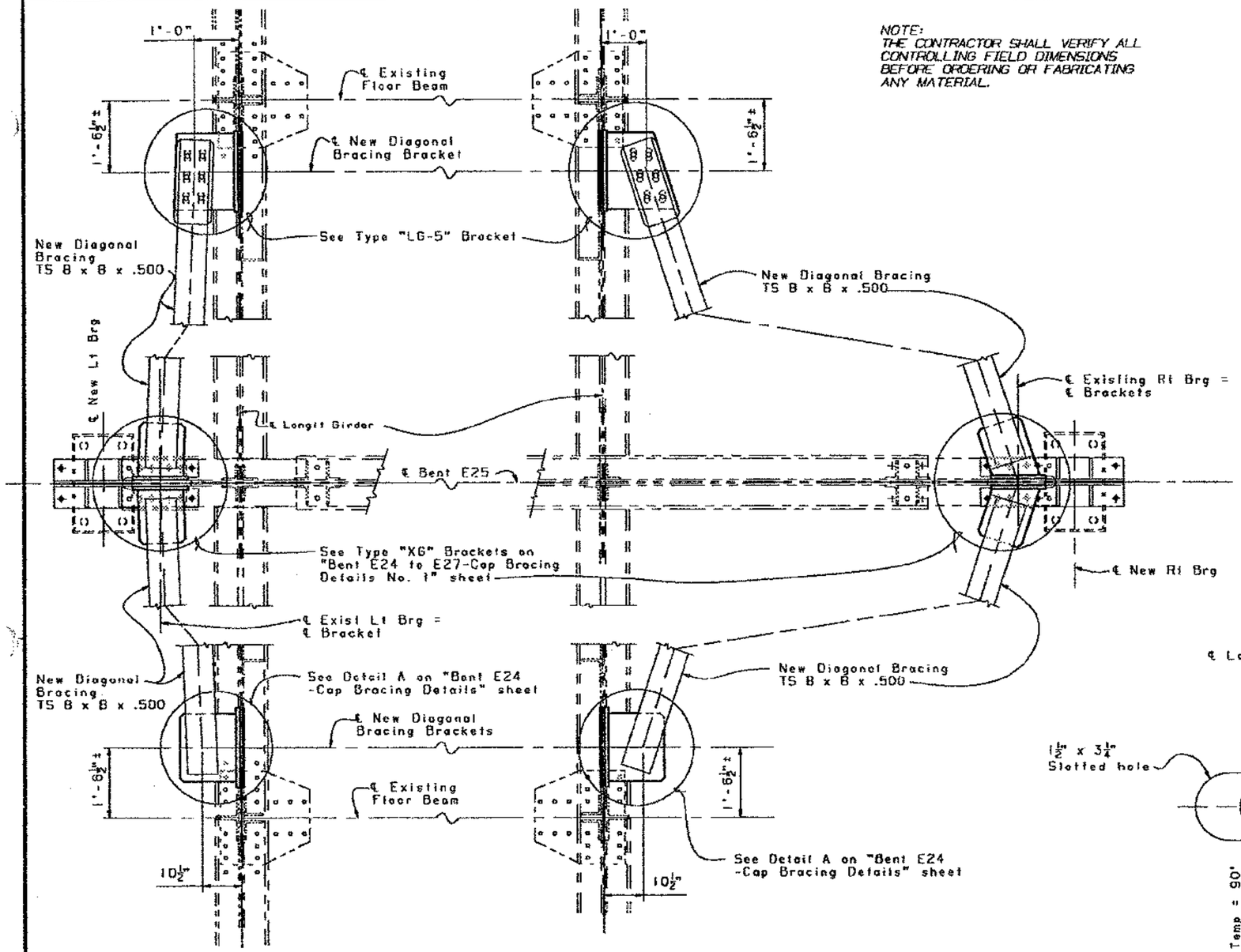

PART PLAN - BENT E25 DIAGONAL BRACING

¾" = 1'-0"

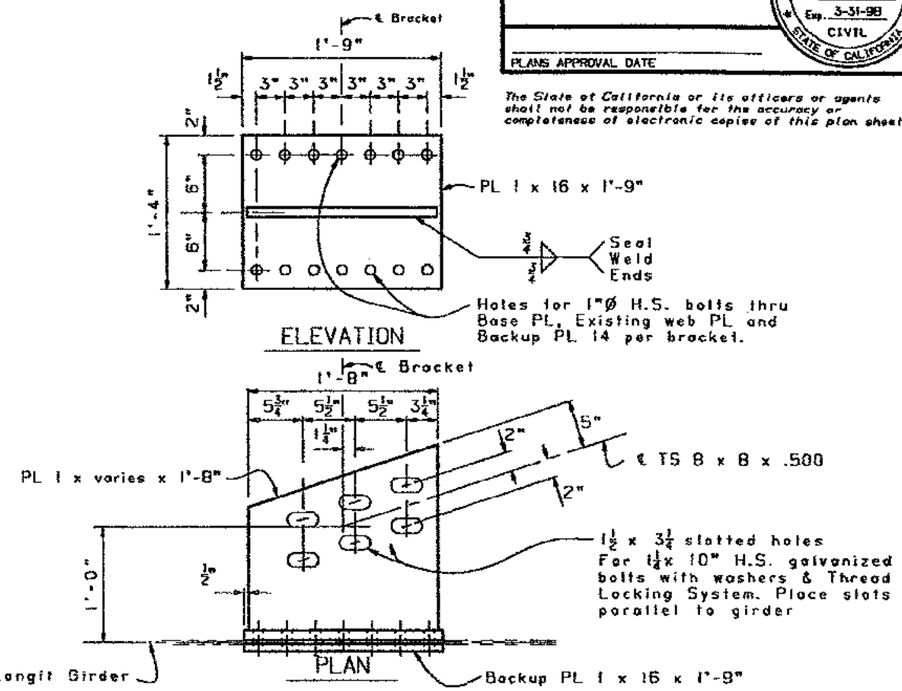

ELEVATION

PLAN

TYPE "LG-5" BRACKET

1½" = 1'-0"

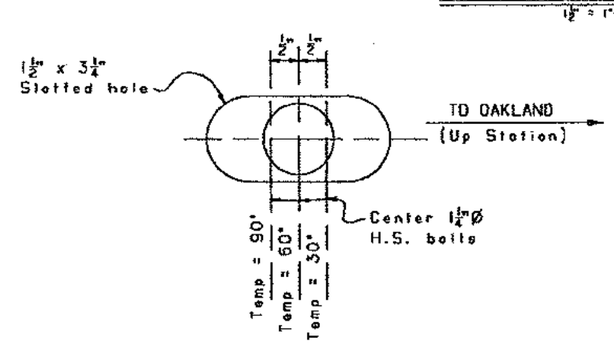

SLOTTED HOLE TEMPERATURE CORRECTION DETAIL AT TYPE "LG-3","LG-4" & "LG-5" BRACKETS

Note
+ Indicates assumed location of existing bolts or rivets
✦ Indicates new ⅞"Ø or 1"Ø H.S. bolts. See details for location

For Bottom Flange Detail see "Bent E24 to E27/ Cap Extension Details" sheet

For new bearing details see "Bent E24 to E27 Lt & Rt Col/ Bearing Details No 1 & No 2" sheets

MAR 22 1995

DESIGN	BY R.E. Bateman	CHECKED Shawn Sun	
DETAILS	BY AES 2-94	CHECKED Shawn Sun	
QUANTITIES	BY R.E. Bateman	CHECKED Simon Blank	

SEISMIC RETROFIT PROJECT No. 614

STATE OF CALIFORNIA DEPARTMENT OF TRANSPORTATION

DIVISION OF STRUCTURES STRUCTURE DESIGN 2

BRIDGE NO. 33-25

POST MILE 1.0-1.3

SFOBB - BENT E23 TO E28 RETROFIT

BENT E25

CAP BRACING DETAILS

DS DSD 2150 (CADD 4/89)

ORIGINAL SCALE IN INCHES FOR REDUCED PLANS 0 1 2 3

CU 04
EA 043431

DISREGARD PRINTS BEARING EARLIER REVISION DATES

REVISION DATES (PRELIMINARY STAGE ONLY) 2-9-94 4-20-94 5-02-94

SHEET 44 OF 120

DIST.	COUNTY	ROUTE	POST MILES TOTAL PROJECT	SHEET NO.	TOTAL SHEETS
04	Ala	80			

REGISTERED ENGINEER - CIVIL

REGISTERED PROFESSIONAL ENGINEER Gregory Evan Slocum No. 44950 Exp. 3-31-98 CIVIL STATE OF CALIFORNIA

PLANS APPROVAL DATE

NOTE:
THE CONTRACTOR SHALL VERIFY ALL CONTROLLING FIELD DIMENSIONS BEFORE ORDERING OR FABRICATING ANY MATERIAL.

The State of California or its officers or agents shall not be responsible for the accuracy or completeness of electronic copies of this plan sheet.

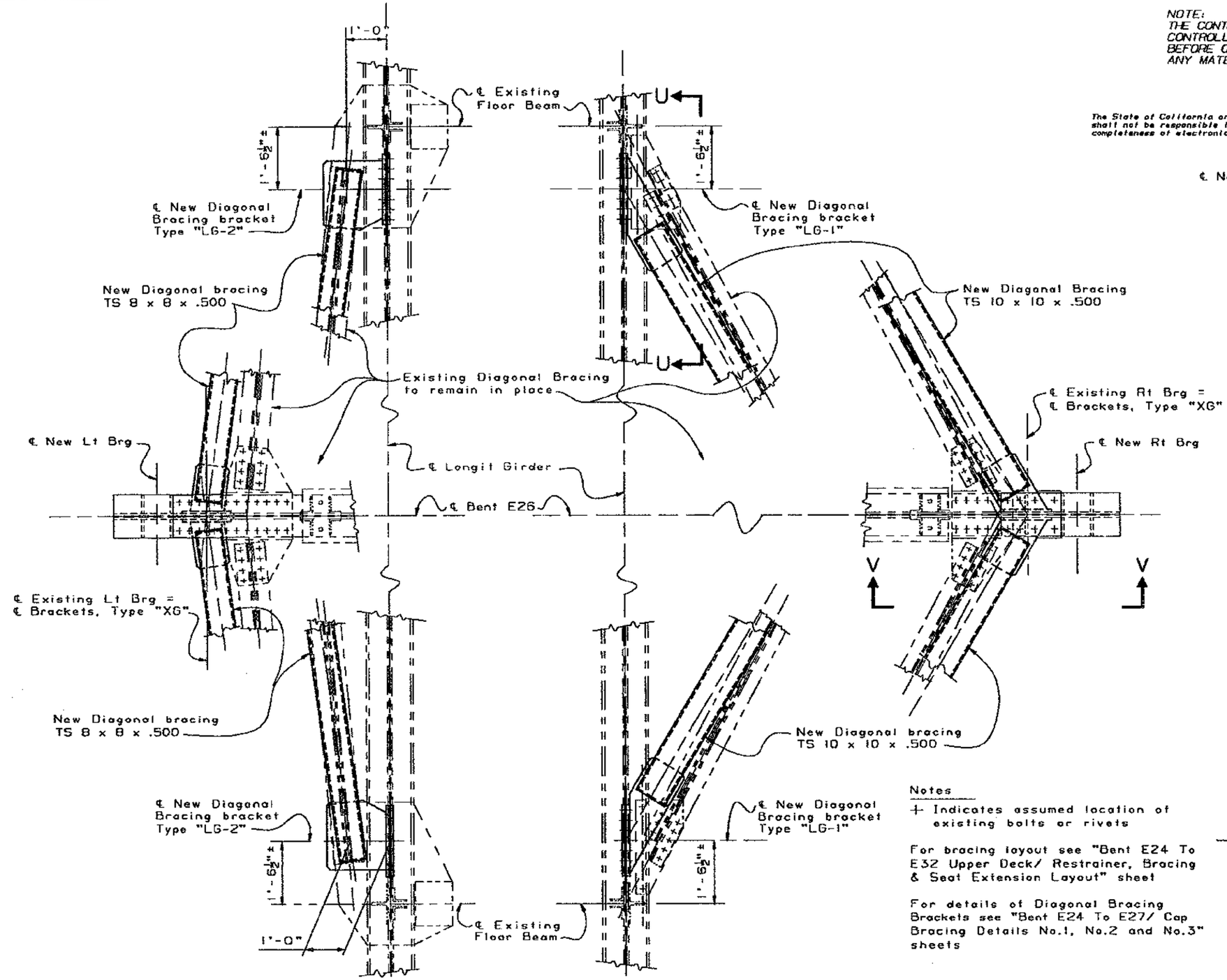

PART PLAN - BENT E26 DIAGONAL BRACING

¾" = 1'-0"

Notes

+ Indicates assumed location of existing bolts or rivets

For bracing layout see "Bent E24 To E32 Upper Deck/ Restrainer, Bracing & Seat Extension Layout" sheet

For details of Diagonal Bracing Brackets see "Bent E24 To E27/ Cap Bracing Details No.1, No.2 and No.3" sheets

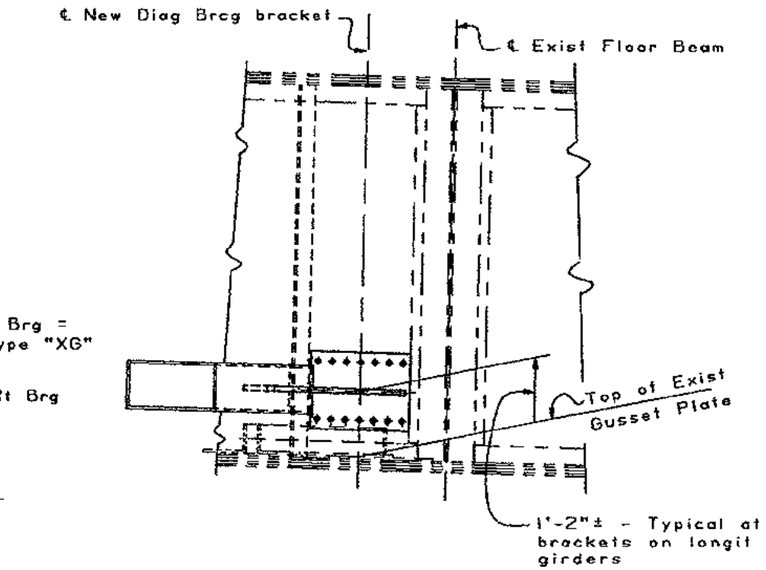

ELEVATION U-U

¾" = 1'-0"

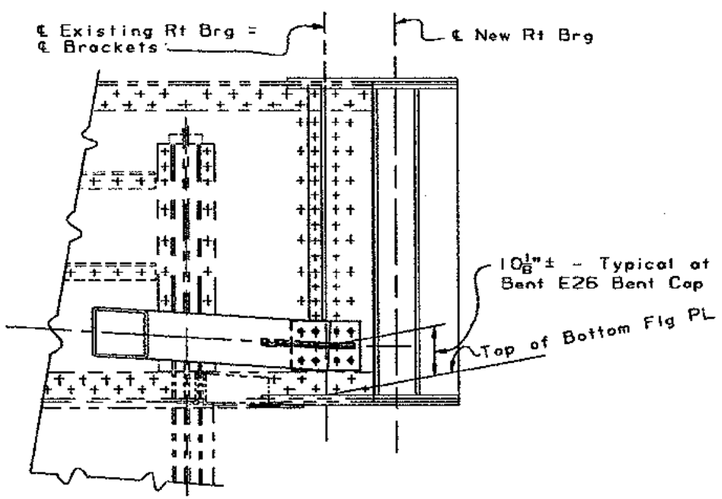

ELEVATION V-V

¾" = 1'-0"

MAR 22 1995

SEISMIC RETROFIT PROJECT No. 614

SFOBB - BENT E23 TO E28 RETROFIT

DESIGN	BY R. E. Bateman 1-94	CHECKED Shawn Sun	
DETAILS	BY K-C-B 1-94	CHECKED Shawn Sun	
QUANTITIES	BY R. E. Bateman	CHECKED Simon Blank	

STATE OF CALIFORNIA
DEPARTMENT OF TRANSPORTATION

DIVISION OF STRUCTURES
STRUCTURE DESIGN 2

BRIDGE NO. 33-25
POST MILE 1.0-1.3

BENT E26
CAP BRACING DETAILS

CU 04
EA 043431

DISREGARD PRINTS BEARING EARLIER REVISION DATES

REVISION DATES (PRELIMINARY STAGE ONLY) 1-12-94 2-01-94 2-14-94 4-25-94 5-02-94

SHEET 45 OF 120

DS 050 2138 (CADD 4/89)

ORIGINAL SCALE IN INCHES FOR REDUCED PLANS 0 1 2 3

DIST.	COUNTY	ROUTE	POST MILES TOTAL PROJECT	SHEET NO.
04	Ala	80		

REGISTERED ENGINEER - CIVIL

REGISTERED PROFESSIONAL ENGINEER Gregory Evan Slocum No. 44950 Exp. 3-31-98 CIVIL STATE OF CALIFORNIA

PLANS APPROVAL DATE

The State of California or its officers or agents shall not be responsible for the accuracy or completeness of electronic copies of this plan sheet.

NOTE:
THE CONTRACTOR SHALL VERIFY ALL CONTROLLING FIELD DIMENSIONS BEFORE ORDERING OR FABRICATING ANY MATERIAL.

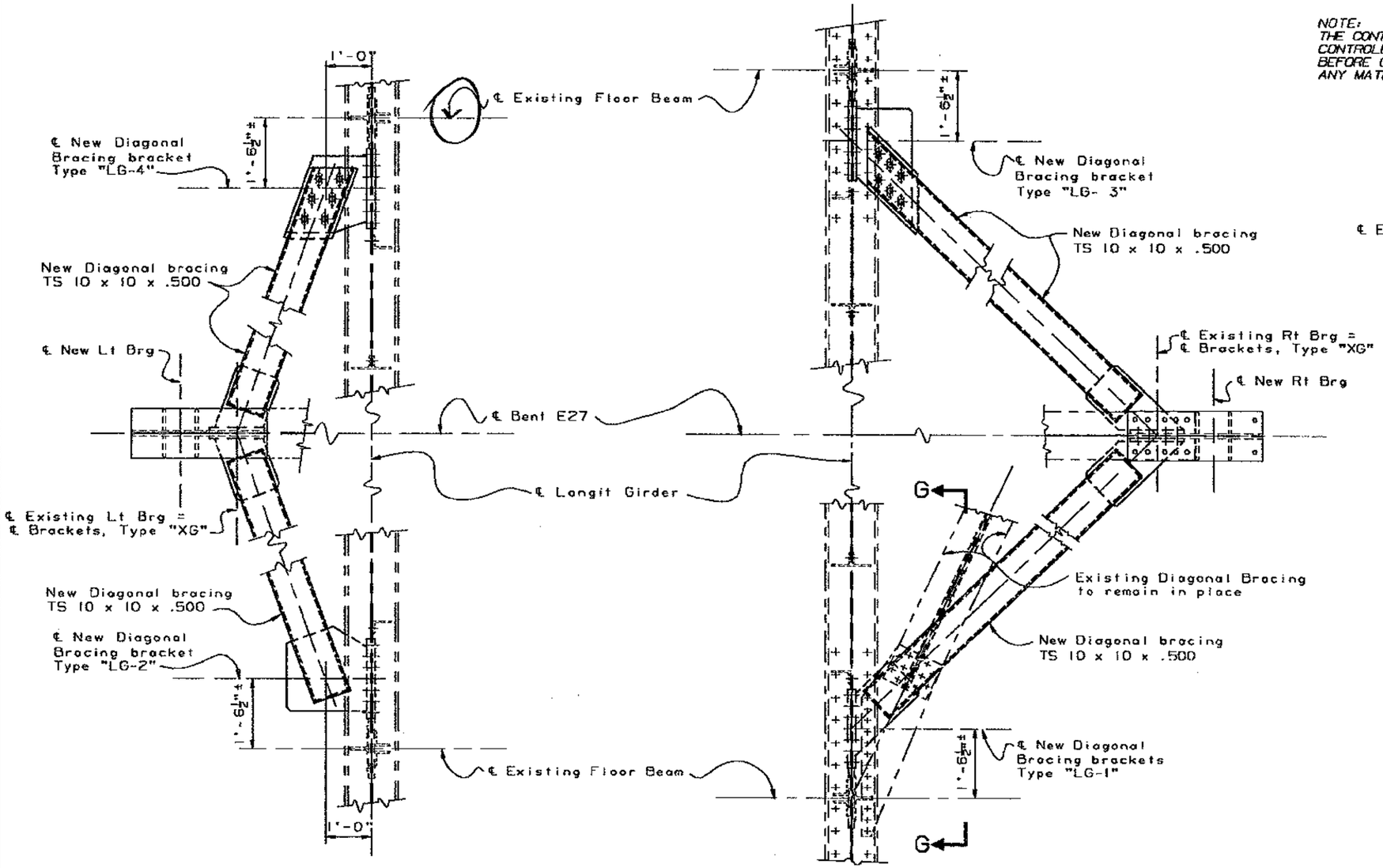

PART PLAN - BENT E27 DIAGONAL BRACING

¾" = 1'-0"

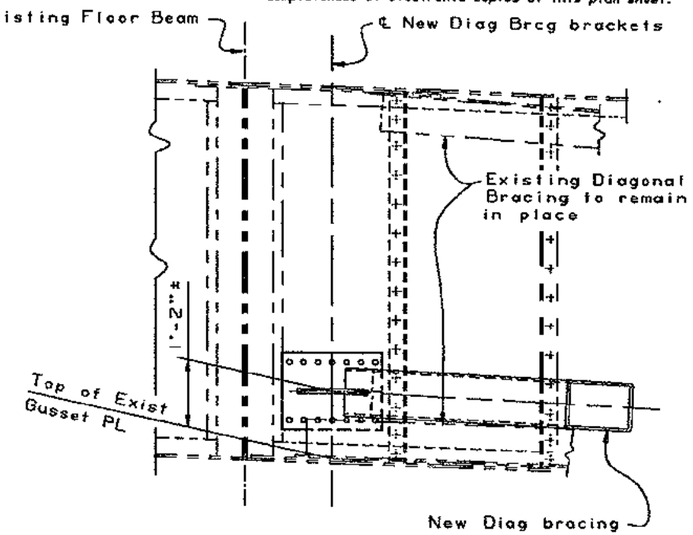

SECTION G-G

¾" = 1'-0"

Notes

+ Indicates assumed location of existing bolts or rivets

For bracing layout see "Bent E24 To E32 Upper Deck/ Restrainer, Bracing & Seat Extension Layout" sheet

For details of Diagonal Bracing Brackets see "Bent E24 To E27/ Cap Bracing No.1, No.2 and No.3" sheets

MAR 22 1995

DESIGN	BY R. E. Bateman 9-93	CHECKED Shawn Sun	
DETAILS	BY K-C-B 10-93	CHECKED Shawn Sun	
QUANTITIES	BY R. E. Bateman	CHECKED Simon Blank	

ORIGINAL SCALE IN INCHES FOR REDUCED PLANS 0 1 2 3

SEISMIC RETROFIT PROJECT No. 614

STATE OF CALIFORNIA DEPARTMENT OF TRANSPORTATION

DIVISION OF STRUCTURES STRUCTURE DESIGN 2

CU 04
EA 043431

BRIDGE NO. 33-25
POST MILE 1.0-1.3

SFOBB - BENT E23 TO E28 RETROFIT

BENT E27

CAP BRACING DETAILS

DS DSD 2138 (CADD 4/89)

DISREGARD PRINTS BEARING EARLIER REVISION DATES

REVISION DATES (PRELIMINARY STAGE ONLY) 10-25-93 11-30-93 12-02-93 1-12-94 1-24-94 2-08-94 2-14-94 4-25-94

SHEET 46 OF 120

DIST.	COUNTY	ROUTE	POST MILES TOTAL PROJECT	SHEET NO.	TOTAL SHEETS
04	Ala	80			

REGISTERED ENGINEER - CIVIL

REGISTERED PROFESSIONAL ENGINEER Gregory Evan Slocum No. 44950 Exp. 5-31-98 CIVIL STATE OF CALIFORNIA

PLANS APPROVAL DATE

The State of California or its officers or agents shall not be responsible for the accuracy or completeness of electronic copies of this plan sheet.

NOTE:
THE CONTRACTOR SHALL VERIFY ALL CONTROLLING FIELD DIMENSIONS BEFORE ORDERING OR FABRICATING ANY MATERIAL.

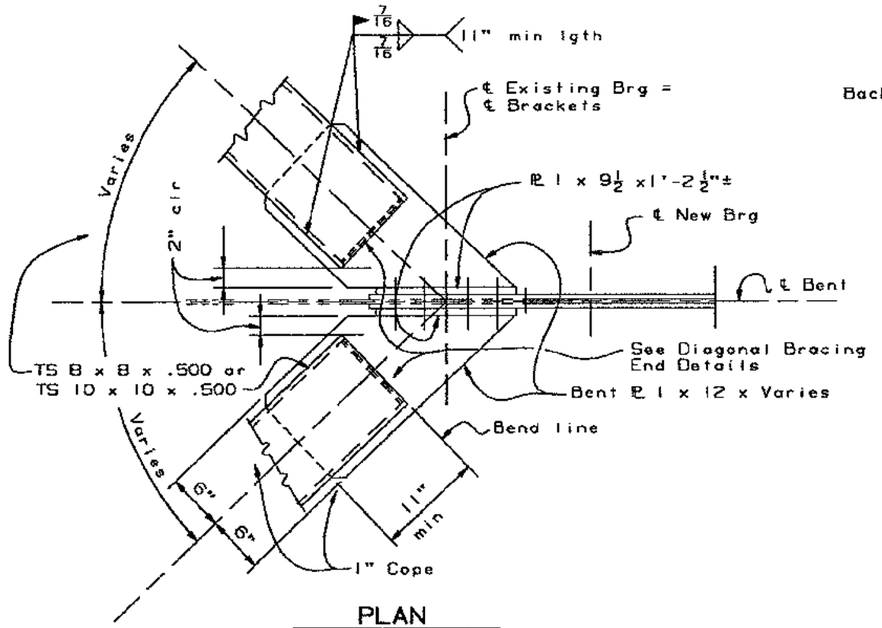

PLAN

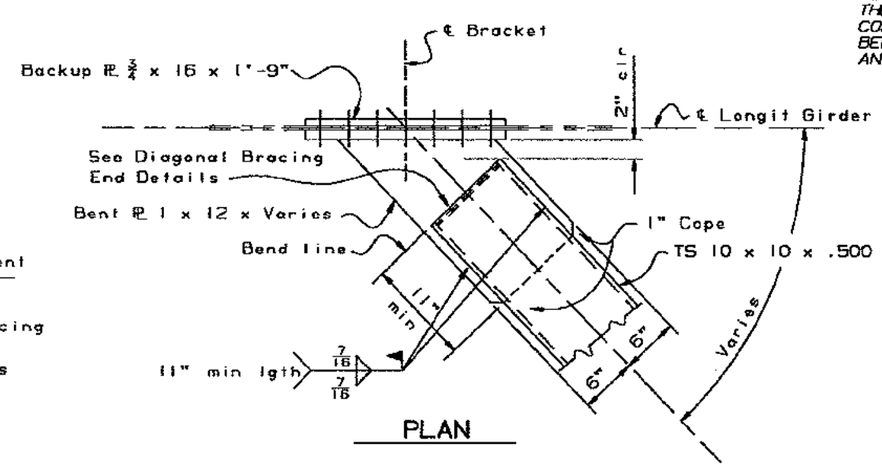

PLAN

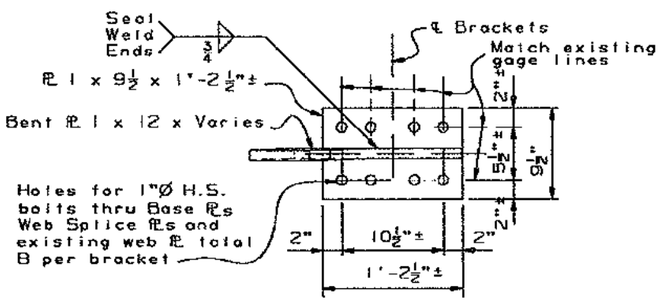

ELEVATION

TYPE "XG" BRACKETS

1½" = 1'-0"

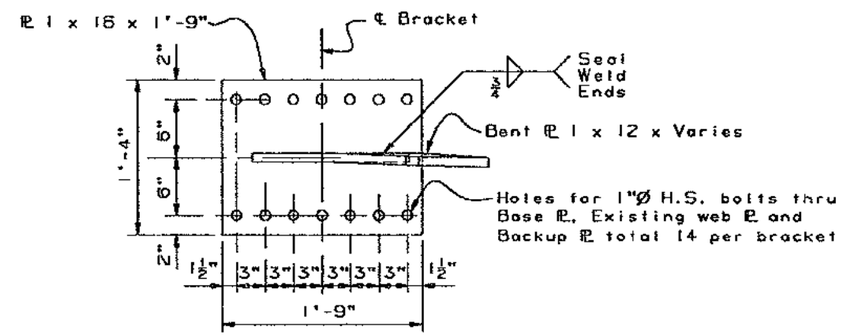

ELEVATION

TYPE "LG-1" BRACKET

1½" = 1'-0"

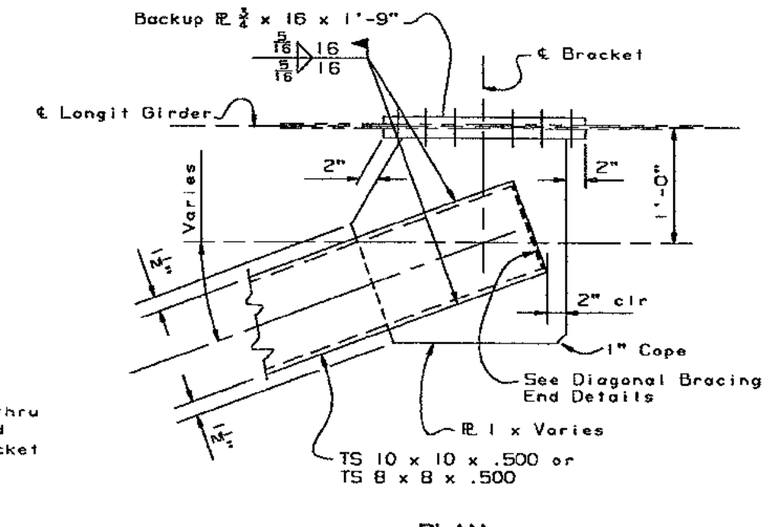

PLAN

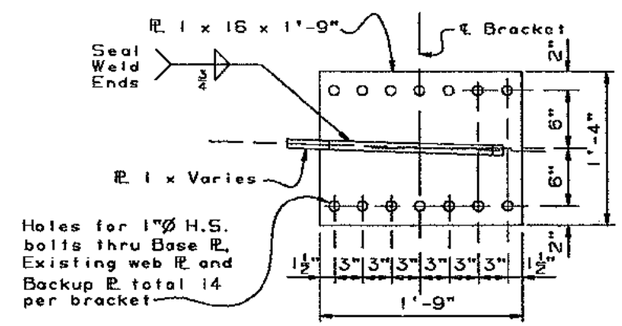

ELEVATION

TYPE "LG-2" BRACKET

1½" = 1'-0"

Notes

For bracing layout see "Bent E24 To E32 Upper Deck/ Restrainer, Bracing & Seat Extension Layout" sheet

For Diagonal Bracing End Details see "Bent E24 To E27/ Cap Bracing Details No. 3" sheet

For location of Brackets see "Bent E26/ Cap Bracing Details" and "Bent E27/ Cap Bracing Details" sheets

MAR 22 1995

SEISMIC RETROFIT PROJECT No. 614

SFOBB - BENT E23 TO E28 RETROFIT

DESIGN	BY R. E. Bateman 9-93	CHECKED Shawn Sun	
DETAILS	BY K-C-B 10-93	CHECKED Shawn Sun	
QUANTITIES	BY R. E. Bateman	CHECKED Simon Blank	

STATE OF CALIFORNIA
DEPARTMENT OF TRANSPORTATION

DIVISION OF STRUCTURES
STRUCTURE DESIGN 2

BRIDGE NO. 33-25
POST MILE 1.0-1.3

BENT E24 TO E27
CAP BRACING DETAILS NO. 1

DS 003 2139 (CADD 4/89)

ORIGINAL SCALE IN INCHES FOR REDUCED PLANS 0 1 2 3

CU 04
EA 043431

DISREGARD PRINTS BEARING EARLIER REVISION DATES

REVISION DATES (PRELIMINARY STAGE ONLY) 10-25-93 11-30-93 12-02-93 1-13-94 1-18-94 2-28-94 3-11-94 3-17-94 4-28-94 5-02-94

SHEET 47 OF 120

DIST.	COUNTY	ROUTE	POST MILES TOTAL PROJECT	SHEET NO.	TOTAL SHEETS
04	Ala	80			

REGISTERED ENGINEER - CIVIL

REGISTERED PROFESSIONAL ENGINEER Gregory Evan Slocum No. 44950 Exp. 3-31-96 CIVIL STATE OF CALIFORNIA

PLANS APPROVAL DATE

The State of California or its officers or agents shall not be responsible for the accuracy or completeness of electronic copies of this plan sheet.

NOTE:
THE CONTRACTOR SHALL VERIFY ALL CONTROLLING FIELD DIMENSIONS BEFORE ORDERING OR FABRICATING ANY MATERIAL.

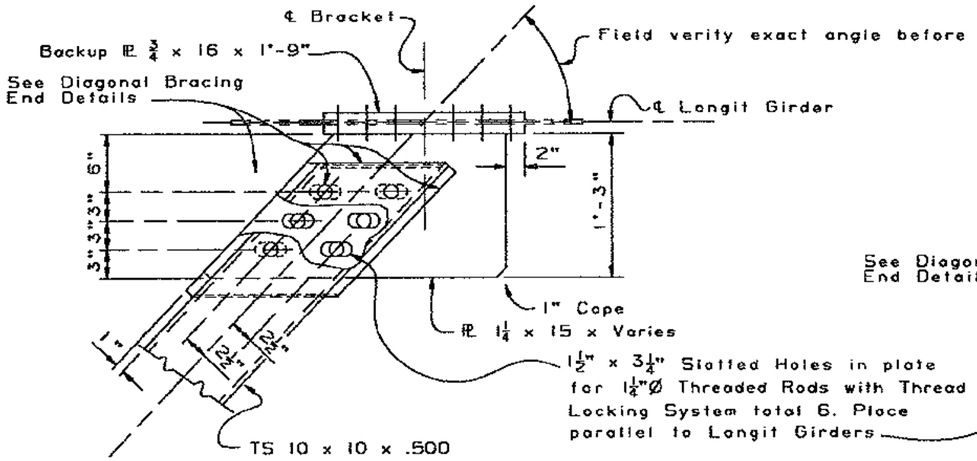

PLAN

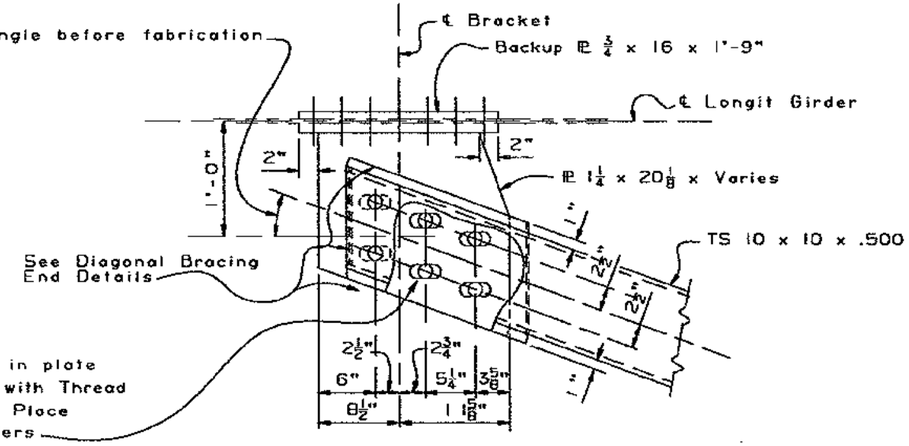

PLAN

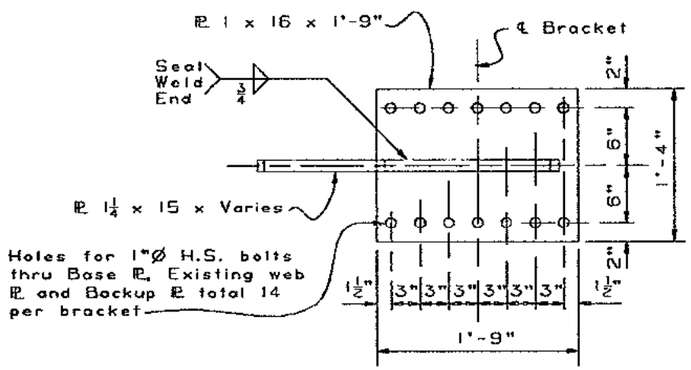

ELEVATION

TYPE "LG-3" BRACKET

1½" = 1'-0"

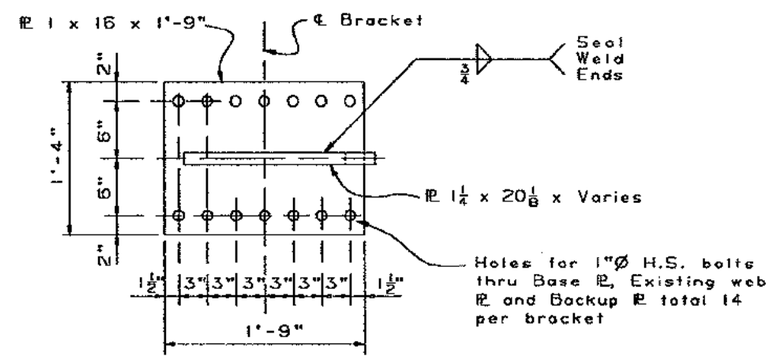

ELEVATION

TYPE "LG-4" BRACKET

1½" = 1'-0"

Notes

For Diagonal Bracing End Details see "Bent E24 To E27/ Cap Bracing Details No. 3" sheet

For location of Brackets see "Bent E26/ Cap Bracing Details" and "Bent E27/ Cap Bracing Details" sheets

See Slotted Hole Temperature Correction detail "Bent E25/ Cap Bracing Details" sheet

MAR 22 1995

DESIGN	BY R. E. Bateman 2-94	CHECKED Shawn Sun	
DETAILS	BY K-C-B 2-94	CHECKED Shawn Sun	
QUANTITIES	BY R. E. Bateman	CHECKED Simon Blank	

SEISMIC RETROFIT PROJECT No. 614

STATE OF CALIFORNIA DEPARTMENT OF TRANSPORTATION

DIVISION OF STRUCTURES STRUCTURE DESIGN 2

BRIDGE NO. 33-25

POST MILE 1.0-1.3

SFOBB - BENT E23 TO E28 RETROFIT

BENT E24 TO E27

CAP BRACING DETAILS NO. 2

CU 04
EA 043431

05 050 2139 (CADD 4/89)

ORIGINAL SCALE IN INCHES FOR REDUCED PLANS 0 1 2 3

DISREGARD PRINTS BEARING EARLIER REVISION DATES

REVISION DATES (PRELIMINARY STAGE ONLY) 2-9-94 2-11-94 2-14-94 4-28-94 5-12-94

SHEET 48 OF 120

DIST.	COUNTY	ROUTE	POST MILES TOTAL PROJECT	SHEET NO.	TOTAL SHEETS
04	Ala	80			

REGISTERED ENGINEER - CIVIL

REGISTERED PROFESSIONAL ENGINEER Gregory Evan Slocum No. 44950 Exp. 3-31-98 CIVIL STATE OF CALIFORNIA

PLANS APPROVAL DATE

The State of California or its officers or agents shall not be responsible for the accuracy or completeness of electronic copies of this plan sheet.

NOTE:
THE CONTRACTOR SHALL VERIFY ALL CONTROLLING FIELD DIMENSIONS BEFORE ORDERING OR FABRICATING ANY MATERIAL.

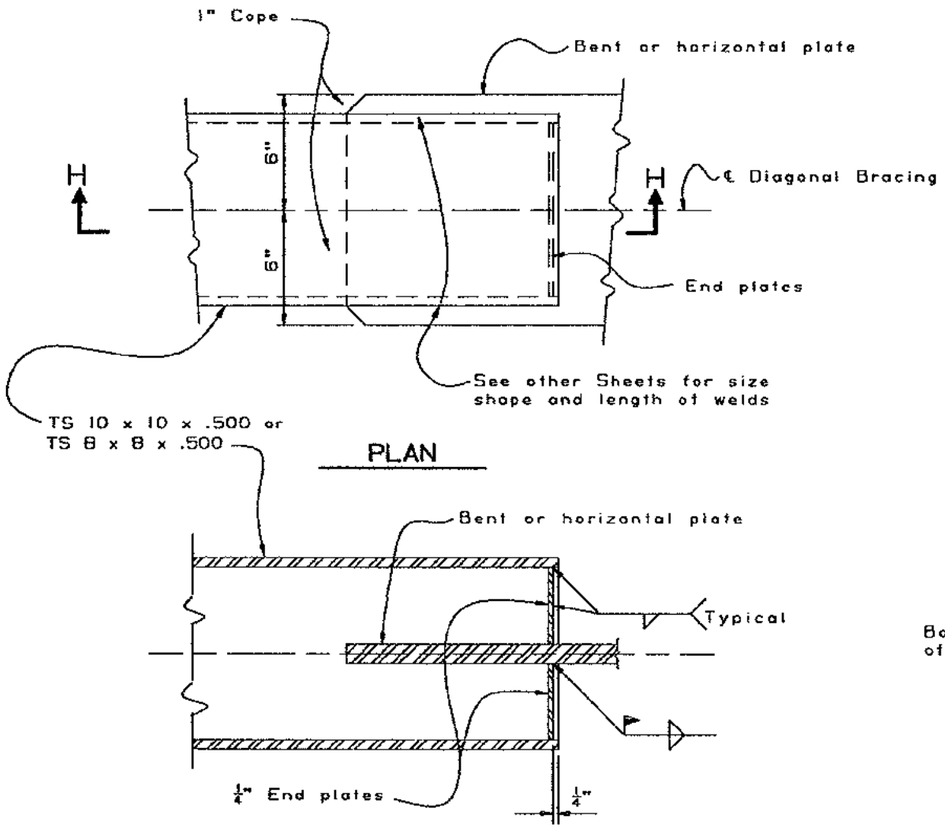

SECTION H-H

AT TYPE "XG","LG-1" & "LG-2" BRACKETS

3" = 1'-0"

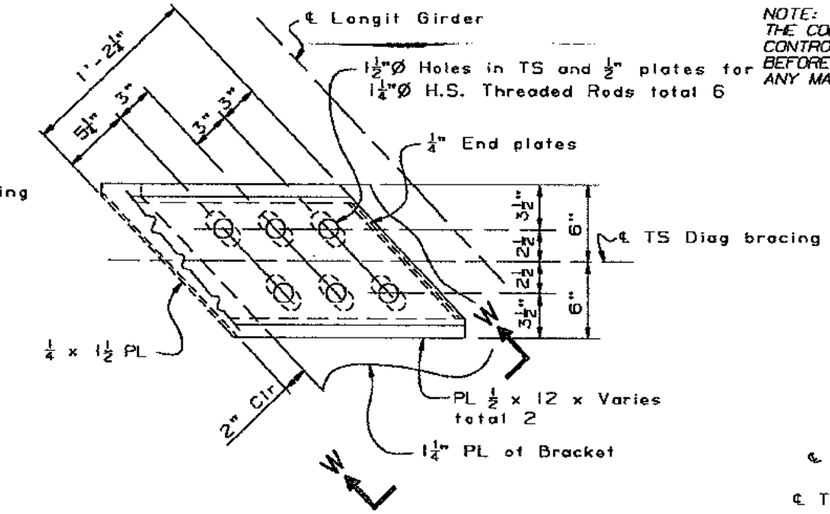

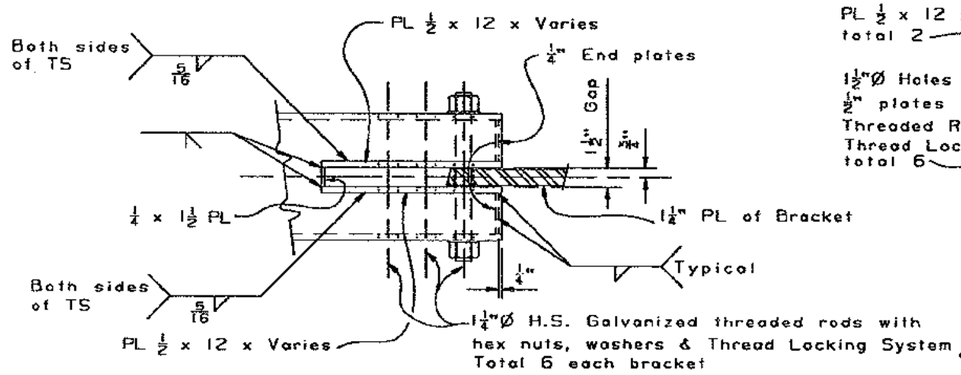

SECTION W-W

AT TYPE "LG-3" BRACKET

2" = 1'-0"

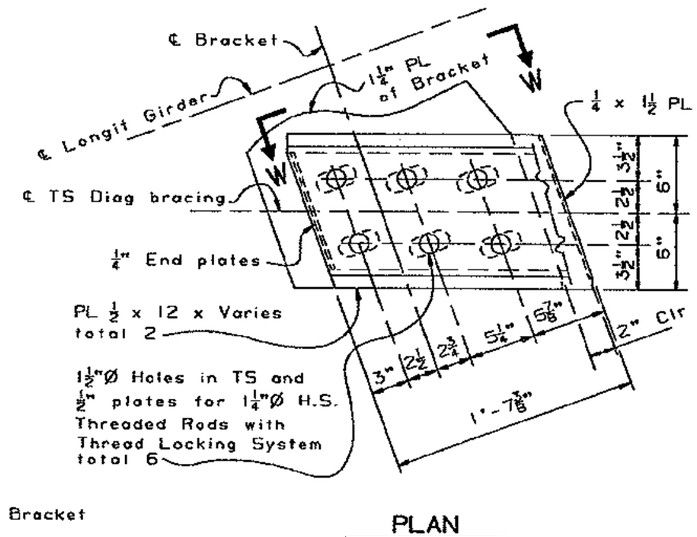

AT TYPE "LG-4" BRACKET

2" = 1'-0"

Notes

For location of Brackets see "Bent E26/ Cap Bracing Details" and "Bent E27/ Cap Bracing Details" sheets

DIAGONAL BRACING END DETAILS

MAR 22 1995

DESIGN	BY R. E. Bateman 2-94	CHECKED Shawn Sun	
DETAILS	BY K-C-B 2-94	CHECKED Shawn Sun	
QUANTITIES	BY R. E. Bateman	CHECKED Simon Blank	

DS 050 2/89 (CADD 4/89)

ORIGINAL SCALE IN INCHES FOR REDUCED PLANS 0 1 2 3

SEISMIC RETROFIT PROJECT No. 614

STATE OF CALIFORNIA DEPARTMENT OF TRANSPORTATION

DIVISION OF STRUCTURES STRUCTURE DESIGN 2

CU 04
EA 043431

BRIDGE NO. 33-25
POST MILE 1.0-1.3

SFOBB - BENT E23 TO E28 RETROFIT

BENT E24 TO E27

CAP BRACING DETAILS NO. 3

DISREGARD PRINTS BEARING EARLIER REVISION DATES

REVISION DATES (PRELIMINARY STAGE ONLY) 2-14-94 2-24-94 4-28-94 5-02-94

SHEET 49 OF 120

DIST.	COUNTY	ROUTE	POST MILES TOTAL PROJECT	SHEET NO.	TOTAL SHEETS
04	ALA	80			

REGISTERED ENGINEER - CIVIL

REGISTERED PROFESSIONAL ENGINEER Gregory Evan Slocum No. 44950 Exp. 3-31-98 CIVIL STATE OF CALIFORNIA

PLANS APPROVAL DATE

The State of California or its officers or agents shall not be responsible for the accuracy or completeness of electronic copies of this plan sheet.

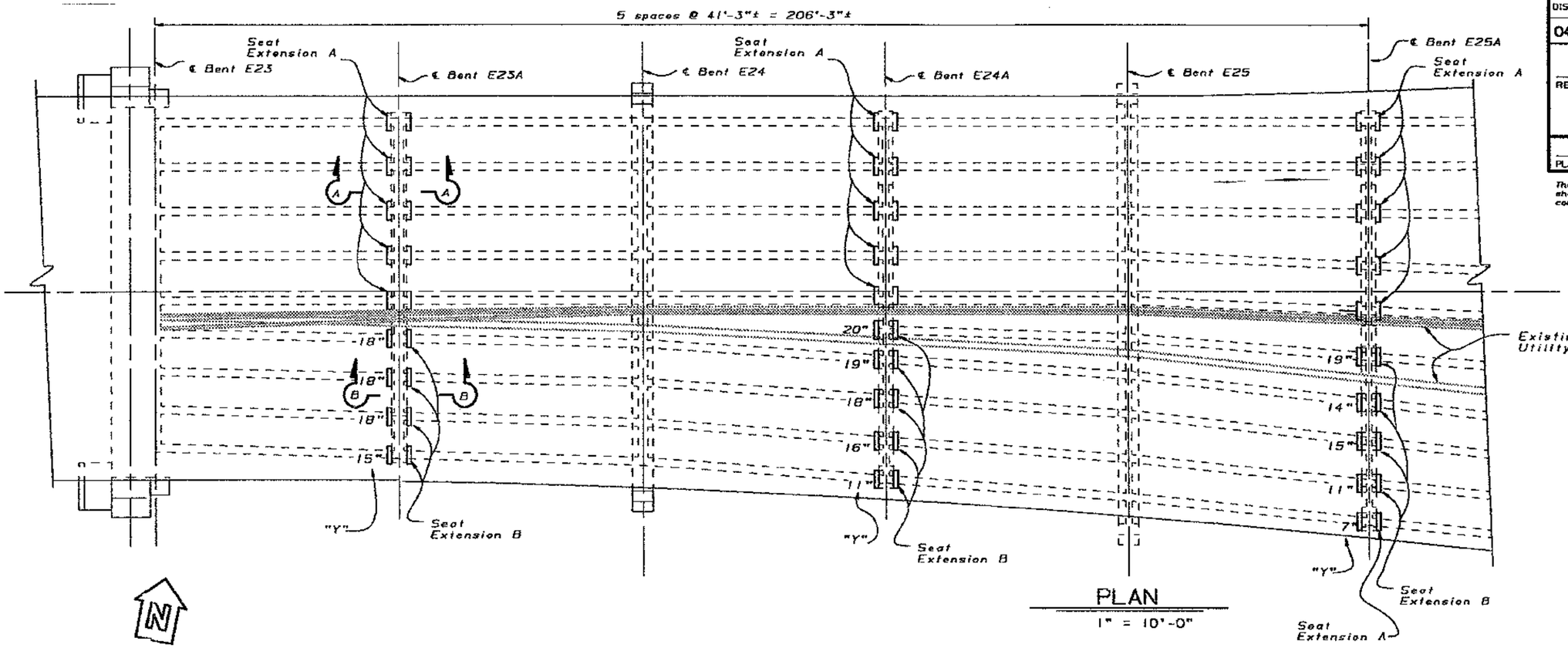

PLAN

1" = 10'-0"

NOTE:
THE CONTRACTOR SHALL VERIFY ALL CONTROLLING FIELD DIMENSIONS BEFORE ORDERING OR FABRICATING ANY MATERIAL.

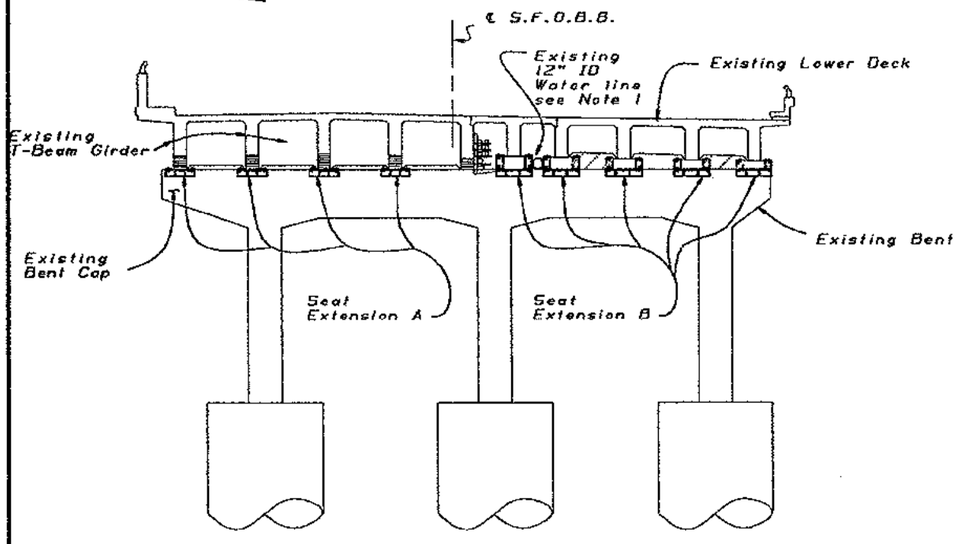

TYPICAL SECTION

1/8" = 1'-0"

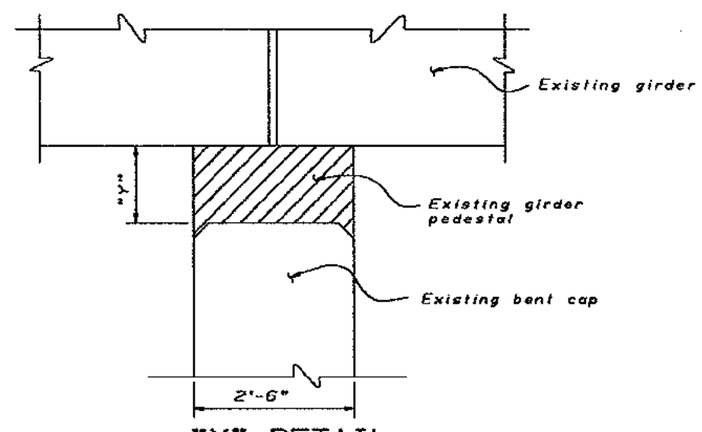

"Y" DETAIL

No Scale

Notes:

1. Relocate 12" diameter water line to accomodate the new seat extension. See "12" Water Pipe Relocation" sheet.
2. For Seat Extension A details, see "Bent E23A to E25A - Seat Extension Type A" sheet.
3. For Seat Extension B details, see "Bent E23A to E25A - Seat Extension Type B" sheet.
4. "Y" pedestal height (field measured).

MAR 22 1995

SEISMIC RETROFIT PROJECT No. 614

SFOBB - BENT E23 TO E28 RETROFIT

DESIGN	BY Richard White	CHECKED John Stockton
DETAILS	BY Franci Dukeshirell/93	CHECKED Ali Hamza
QUANTITIES	BY Ali Hamza	CHECKED Lian Duan

STATE OF CALIFORNIA DEPARTMENT OF TRANSPORTATION

DIVISION OF STRUCTURES STRUCTURE DESIGN 2

BRIDGE NO. 33-25

POST MILE 1.0-1.3

BENT E23A TO E25A

SEAT EXTENSION LAYOUT

CU 04
EA 043431

DS 050 2138 (CADD 4/89)

ORIGINAL SCALE IN INCHES FOR REDUCED PLANS 0 1 2 3

DISREGARD PRINTS BEARING EARLIER REVISION DATES

REVISION DATES (PRELIMINARY STAGE ONLY) 11/20/93 11/21/93 11/30/93 1/18/94 1/24/94

SHEET 50 OF 120

DIST.	COUNTY	ROUTE	POST MILES TOTAL PROJECT	SHEET NO.	TOTAL SHEETS
04	ALA	80			

REGISTERED ENGINEER - CIVIL

REGISTERED PROFESSIONAL ENGINEER Gregory Evan Slocum No. 44950 Exp. 3-31-98 CIVIL STATE OF CALIFORNIA

PLANS APPROVAL DATE

The State of California or its officers or agents shall not be responsible for the accuracy or completeness of electronic copies of this plan sheet.

NOTE:
THE CONTRACTOR SHALL VERIFY ALL CONTROLLING FIELD DIMENSIONS BEFORE ORDERING OR FABRICATING ANY MATERIAL.

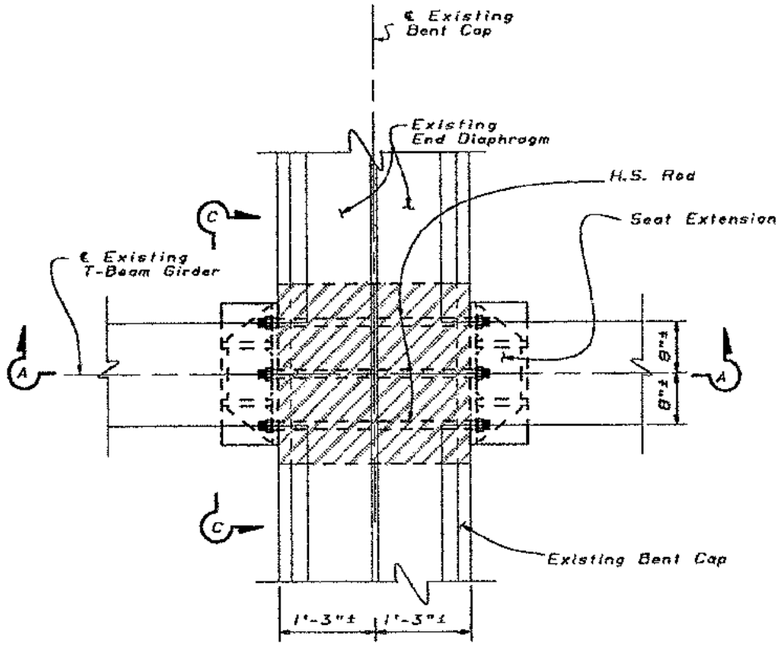

PLAN - SEAT EXTENSION A

1" = 1'-0"

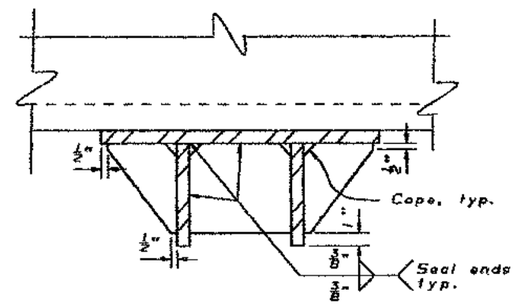

SECTION D-D

2" = 1'-0"

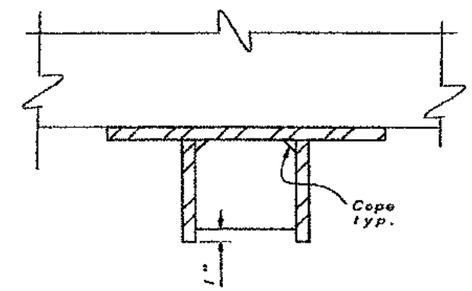

SECTION E-E

2" = 1'-0"

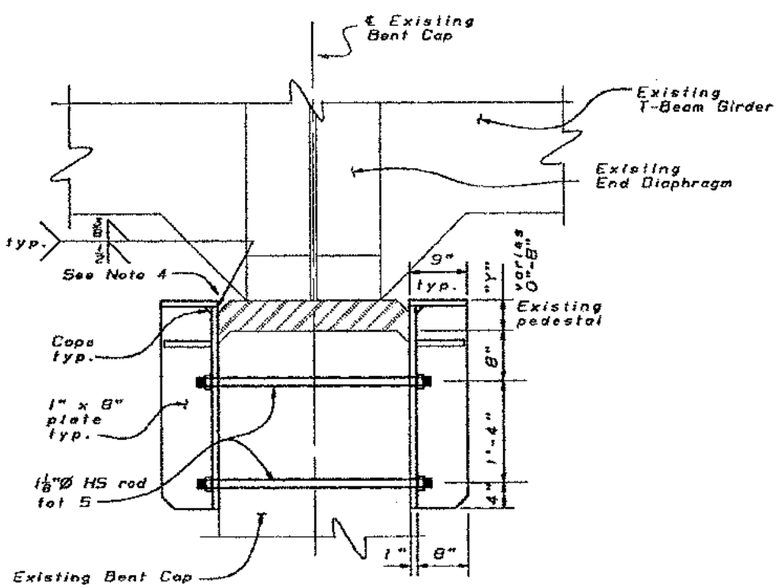

SECTION A-A

1" = 1'-0"

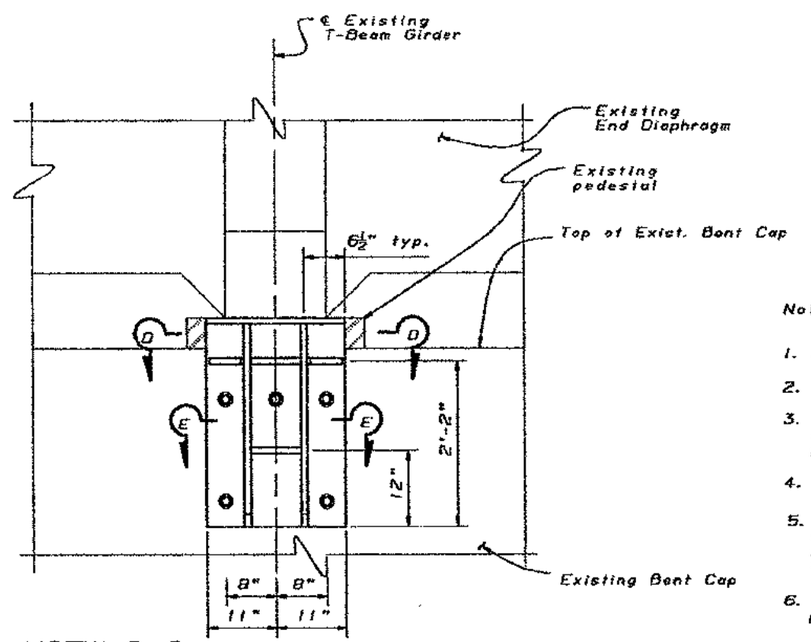

VIEW C-C

1" = 1'-0"

Notes:

1. *All plates are 1" thickness.*
2. *Hot dip galvanize all material after fabrication.*
3. *The cored holes in the existing concrete shall be ¼" larger than the rod diameter. Pressure grout the cored holes after the rods are placed and before the brackets are installed.*
4. *Fill in chamfer with dry-pack mortar.*
5. *Clean and grind existing concrete surface to provide a flat surface for the brackets. Place non-sag polysulfide or polyurethane caulking at the contact surface per Section 55-3.19 of the Standard Specifications.*
6. *The Type A brackets are for use where there is no pedestal or where the pedestal is 8 inches or less in height.*

MAR 22 1995

DESIGN	BY Richard White	CHECKED John Stockton
DETAILS	BY Franci Dukeshirell/93	CHECKED Gregory Slocum
QUANTITIES	BY Ali Hamza	CHECKED Lian Duan

SEISMIC RETROFIT PROJECT No. 614

STATE OF CALIFORNIA DEPARTMENT OF TRANSPORTATION

DIVISION OF STRUCTURES STRUCTURE DESIGN 2

BRIDGE NO. 33-25

POST MILE 1.0-1.3

SFOBB - BENT E23 TO E28 RETROFIT

BENT E23A TO E25A

SEAT EXTENSION TYPE A

CU 04
EA 043431

DISREGARD PRINTS BEARING EARLIER REVISION DATES → 1/18/94 1/24/94 . 1/13/94 1/13/94

REVISION DATES (PRELIMINARY STAGE ONLY)

SHEET 51 OF 120

ORIGINAL SCALE IN INCHES FOR REDUCED PLANS 0 1 2 3

05 050 2138 (CADD 4/88)

DIST.	COUNTY	ROUTE	POST MILES TOTAL PROJECT	SHEET NO.	TOTAL SHEETS
04	ALA	80			

REGISTERED ENGINEER - CIVIL

REGISTERED PROFESSIONAL ENGINEER Gregory Evan Slocum No. 44950 Exp. 3-31-98 CIVIL STATE OF CALIFORNIA

PLANS APPROVAL DATE

The State of California or its officers or agents shall not be responsible for the accuracy or completeness of electronic copies of this plan sheet.

NOTE:
THE CONTRACTOR SHALL VERIFY ALL CONTROLLING FIELD DIMENSIONS BEFORE ORDERING OR FABRICATING ANY MATERIAL.

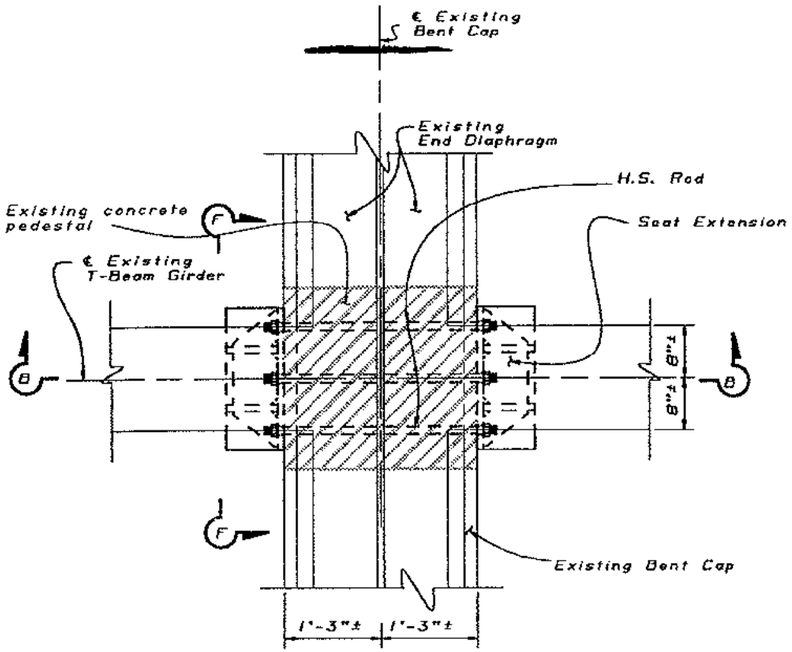

PLAN - SEAT EXTENSION B

1" = 1'-0"

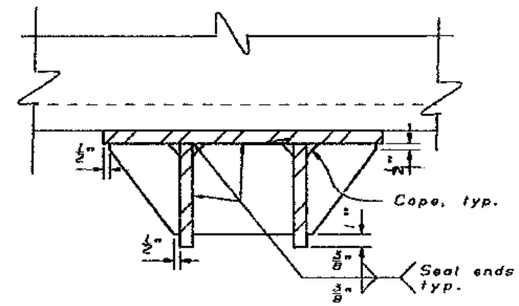

SECTION G-G

2" = 1'-0"

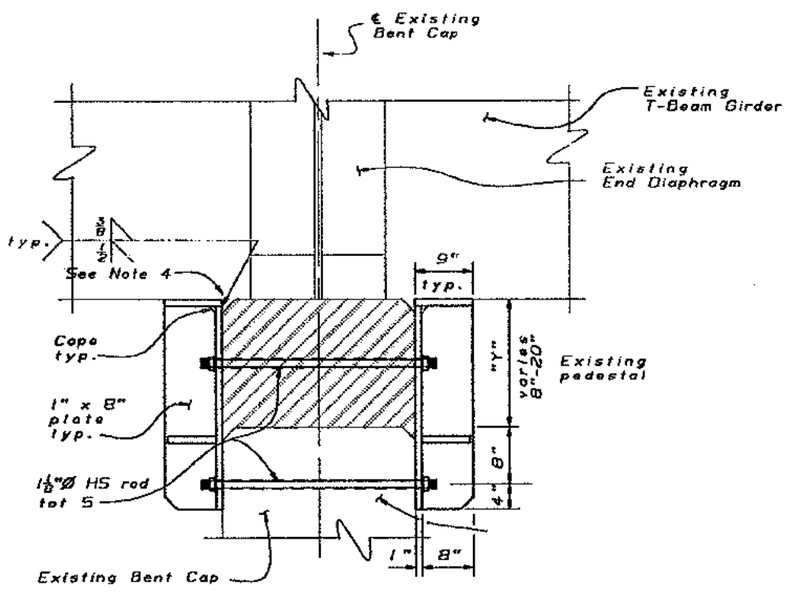

SECTION B-B

1" = 1'-0"

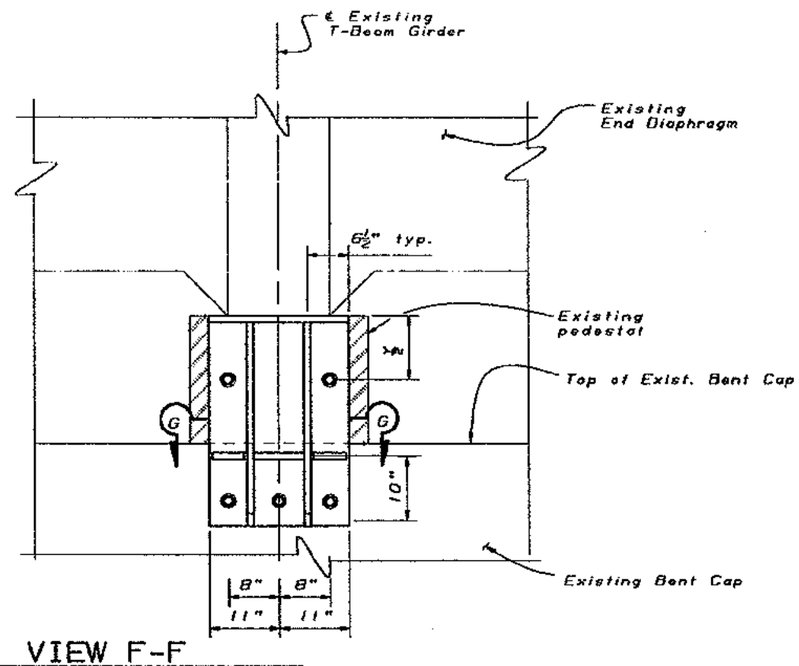

VIEW F-F

1" = 1'-0"

Notes:

1. All plates are 1" thickness.
2. Hot dip galvanize all material after fabrication.
3. The cored holes in the existing concrete shall be ¼" larger than the rod diameter. Pressure grout the cored holes after the rods are placed and before the brackets are installed.
4. Fill in chamfer with dry-pack mortar.
5. Clean and grind existing concrete surface to provide a flat surface for the brackets. Place non-sag polysulfide or polyurethane caulking at the contact surface per Section 55-3.19 of the Standard Specifications.
6. The Type B brackets shall be used where the pedestal is in excess of 8 inches in height (up to approximately 20 inches in height.)

MAR 23 1995

SEISMIC RETROFIT PROJECT No. 614

SFOBB - BENT E23 TO E28 RETROFIT

	BY	CHECKED
DESIGN	Richard White	John Stockton
DETAILS	Franci Dukeshirell/93	Gregory Slocum
QUANTITIES	Ali Hamza	Lian Duan

STATE OF CALIFORNIA
DEPARTMENT OF TRANSPORTATION

DIVISION OF STRUCTURES
STRUCTURE DESIGN 2

BRIDGE NO. 33-25
POST MILE 1.0-1.3

BENT E23A AND E25A
SEAT EXTENSION TYPE B

US DOT 2138 (CADD 4/89)

ORIGINAL SCALE IN INCHES FOR REDUCED PLANS 0 1 2 3

CU 04
EA 043431

DISREGARD PRINTS BEARING EARLIER REVISION DATES → 1/13/94 1/24/94 12/30/93 1/12/94

SHEET 52 OF 120

DIST.	COUNTY	ROUTE	POST MILES TOTAL PROJECT	SHEET NO.	TOTAL SHEETS
04	ALA	80			

REGISTERED ENGINEER - CIVIL

REGISTERED PROFESSIONAL ENGINEER Gregory Evan Slocum No. 44950 Exp. 3-31-98 CIVIL STATE OF CALIFORNIA

PLANS APPROVAL DATE

The State of California or its officers or agents shall not be responsible for the accuracy or completeness of electronic copies of this plan sheet.

NOTE:
THE CONTRACTOR SHALL VERIFY ALL CONTROLLING FIELD DIMENSIONS BEFORE ORDERING OR FABRICATING ANY MATERIAL.

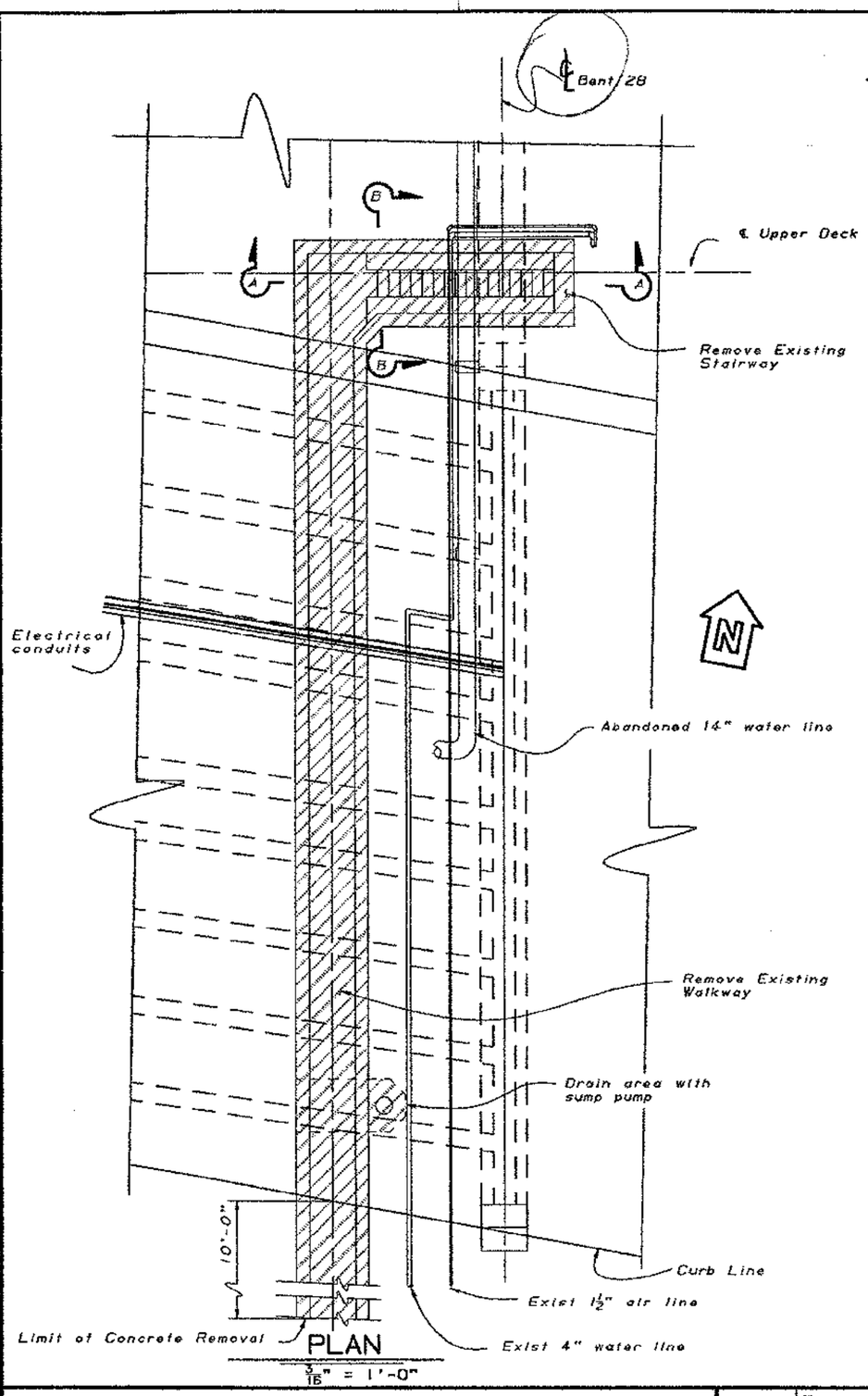

PLAN
3/16" = 1'-0"

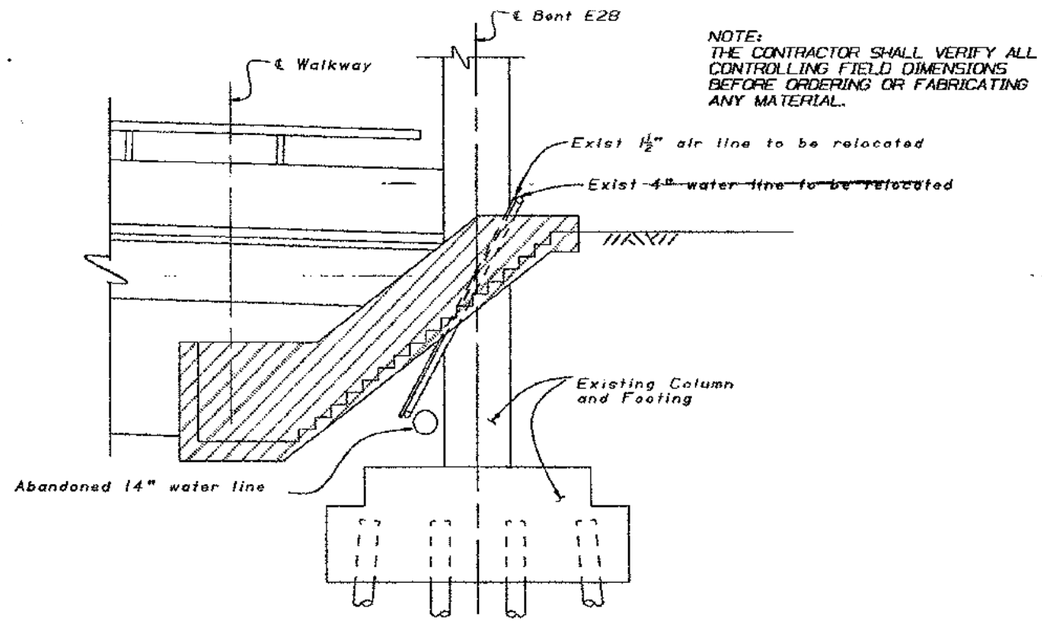

SECTION A-A
¼" = 1'-0"

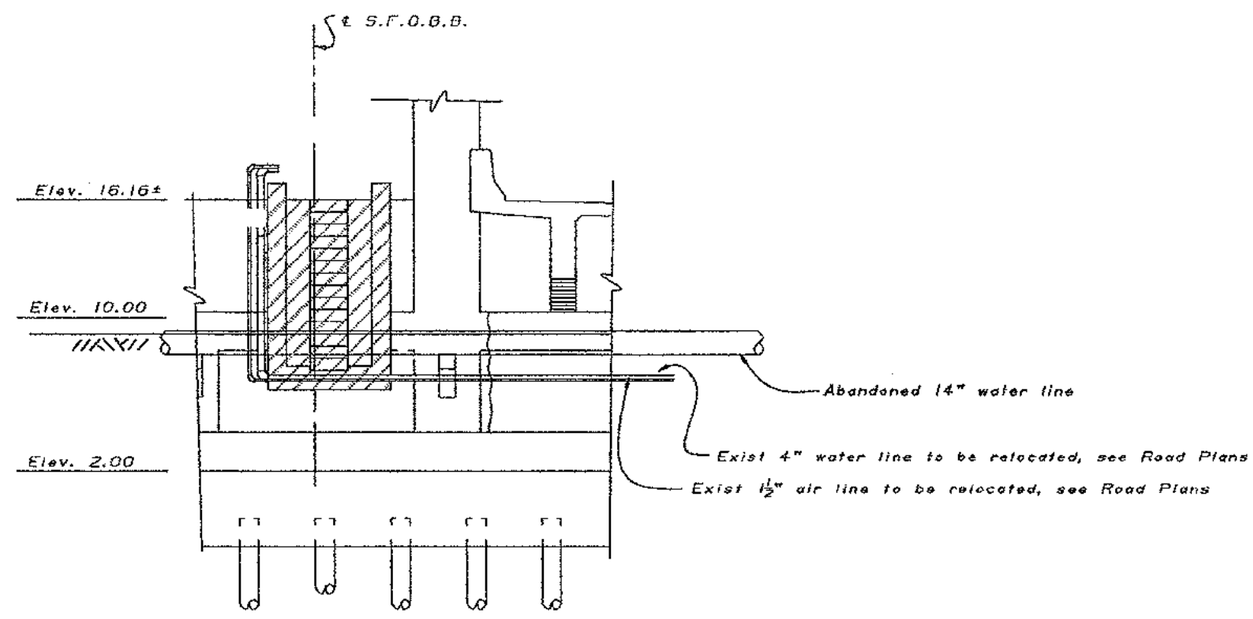

SECTION B-B
¼" = 1'-0"

MAR 22 1995

DESIGN	BY Gregory Slocum	CHECKED Robert Tanaka	
DETAILS	BY Franci Dukeshirell/93	CHECKED Gregory Slocum	
QUANTITIES	BY M. Vinayagamoorthy	CHECKED Mike Keever	

SEISMIC RETROFIT PROJECT No. 614

STATE OF CALIFORNIA
DEPARTMENT OF TRANSPORTATION

DIVISION OF STRUCTURES
STRUCTURE DESIGN 2

BRIDGE NO. 33-25
POST MILE 1.0-1.3

SFOBB - BENT E23 TO E28 RETROFIT

BENT E28

WALKWAY/STAIRWAY REMOVAL

DS 050 2138 (CADD 4/89)

ORIGINAL SCALE IN INCHES FOR REDUCED PLANS 0 1 2 3

CU 04
EA 043431

DISREGARD PRINTS BEARING EARLIER REVISION DATES

REVISION DATES (PRELIMINARY STAGE ONLY) 11/16/93 11/30/93 1/18/94

SHEET 53 OF 120

DIST.	COUNTY	ROUTE	POST MILES TOTAL PROJECT	SHEET NO.	TOTAL SHEETS
04	Ala	80			

REGISTERED ENGINEER - CIVIL

REGISTERED PROFESSIONAL ENGINEER Gregory Evan Slocum No. 44990 Exp. 3-31-98 CIVIL STATE OF CALIFORNIA

PLANS APPROVAL DATE

The State of California or its officers or agents shall not be responsible for the accuracy or completeness of electronic copies of this plan sheet.

NOTE:
THE CONTRACTOR SHALL VERIFY ALL CONTROLLING FIELD DIMENSIONS BEFORE ORDERING OR FABRICATING ANY MATERIAL.

NEW

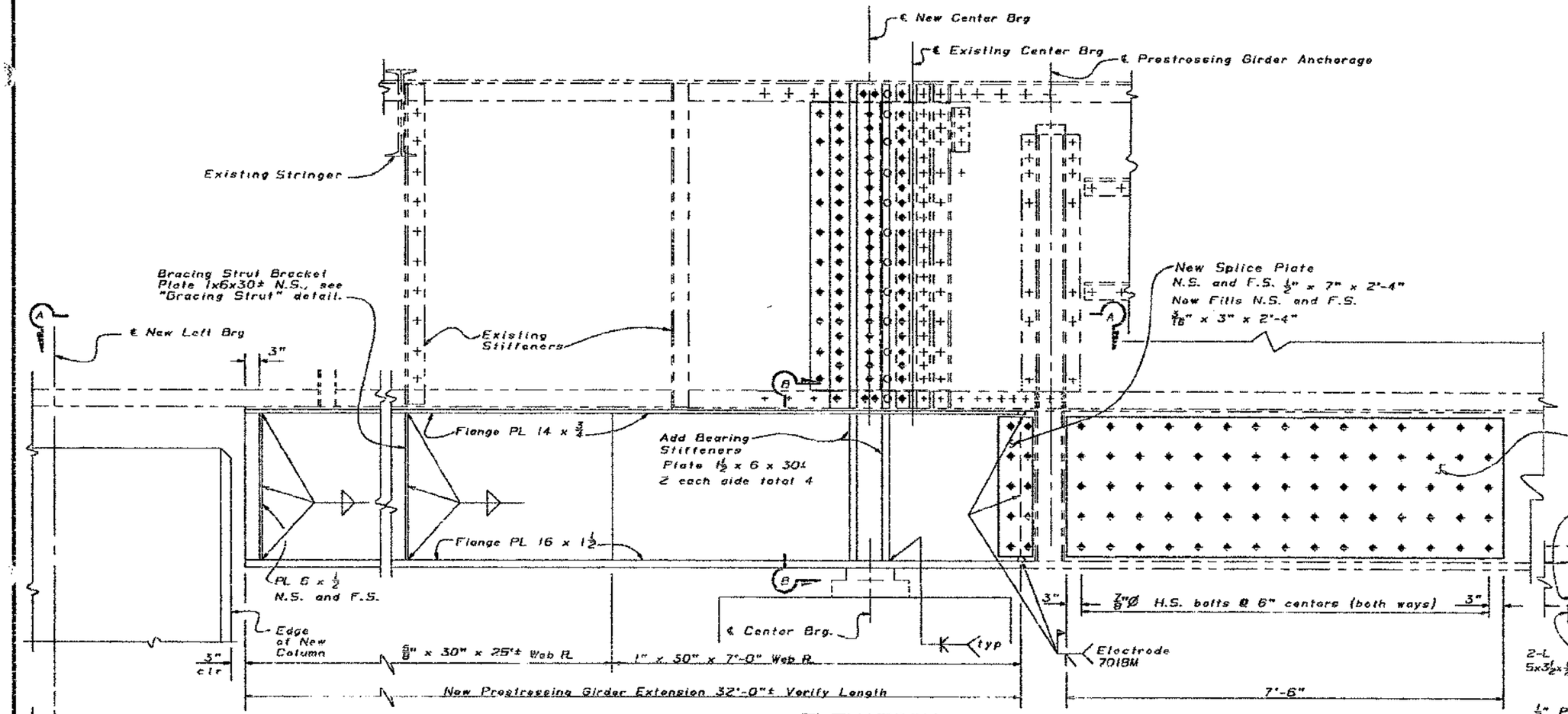

ELEVATION
1" = 1'-0"

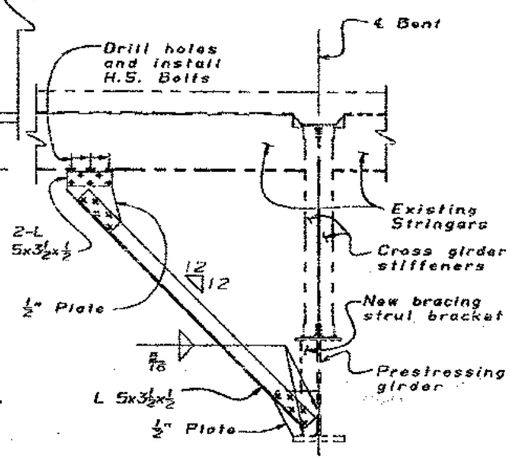

BRACING STRUT DETAIL
1/2" = 1'-0"

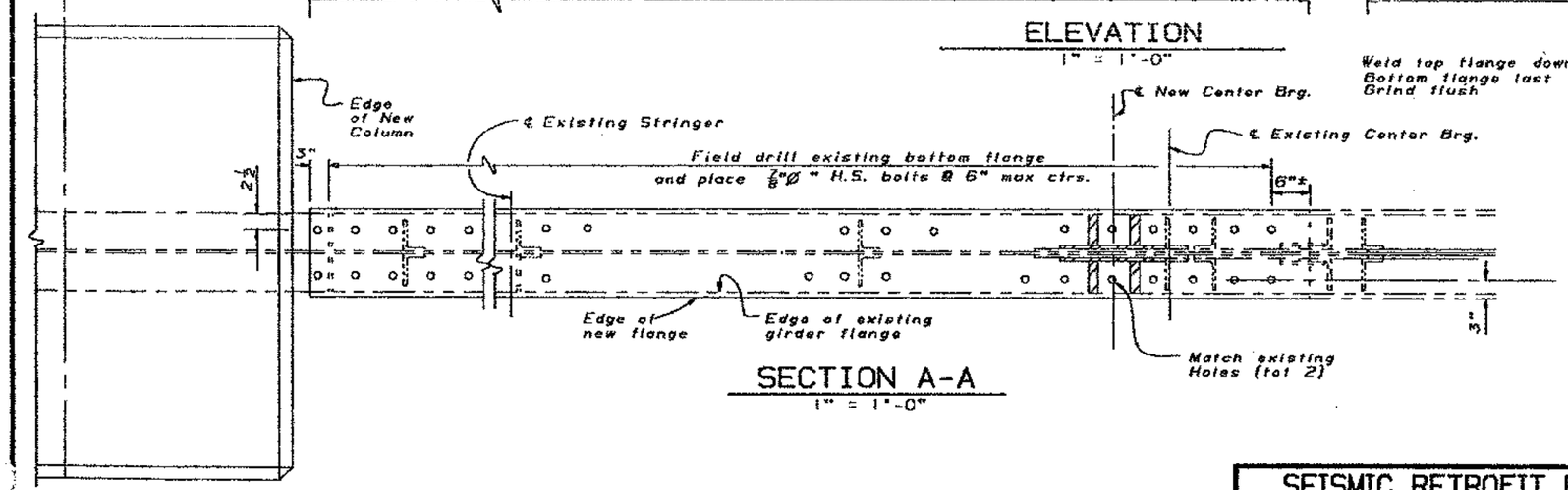

SECTION A-A
1" = 1'-0"

Weld top flange down web
Bottom flange last
Grind flush

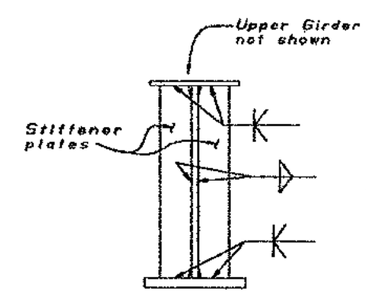

SECTION B-B
1" = 1'-0"

JUN 19 1995

Notes

+ Indicates assumed location of existing bolts or rivets

◆ Indicates new 7/8"Ø bolts. Replace existing bolts or rivets as required.

1. New web plates to be A709 Grade 100.

DESIGN	BY R. E. Bateman 9-93	CHECKED Dallas Forester	
DETAILS	BY Jim K. & Franci D.	CHECKED Gregory Slocum	
QUANTITIES	BY R. E. Bateman	CHECKED R.E.S.	

SEISMIC RETROFIT PROJECT No. 614

STATE OF CALIFORNIA DEPARTMENT OF TRANSPORTATION

DIVISION OF STRUCTURES STRUCTURE DESIGN 2

BRIDGE NO. 33-25

POST MILE 1.0-1.3

SFOBB - BENT E23 TO E28 RETROFIT

BENT E27

CAP STRENGTHENING DETAILS

05 050 2139 (CADD 4/93)

ORIGINAL SCALE IN INCHES FOR REDUCED PLANS 0 1 2 3

CU 04
EA 043431

DISREGARD PRINTS BEARING EARLIER REVISION DATES

REVISION DATES (PRELIMINARY STAGE ONLY)

SHEET 53A OF 120

DIST.	COUNTY	ROUTE	POST MILES TOTAL PROJECT	SHEET NO.	TOTAL SHEETS
04	ALA	80	1.0/1.3	90BB	157

REGISTERED ENGINEER - CIVIL

5-22-95
PLANS APPROVAL DATE

The State of California or its officers or agents shall not be responsible for the accuracy or completeness of electronic copies of this plan sheet.

NOTE:
THE CONTRACTOR SHALL VERIFY ALL CONTROLLING FIELD DIMENSIONS BEFORE ORDERING OR FABRICATING ANY MATERIAL.

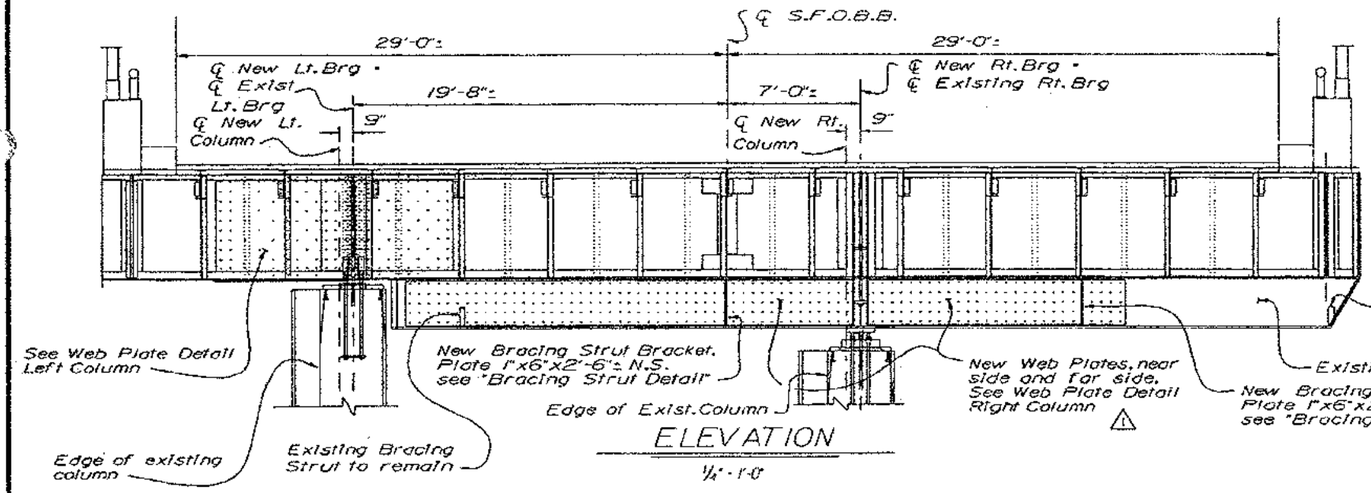

ELEVATION
1/4" = 1'-0"

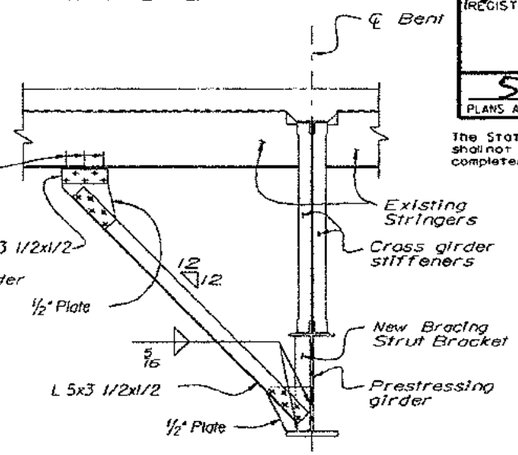

BRACING STRUT DETAIL
1/2" = 1'-0"

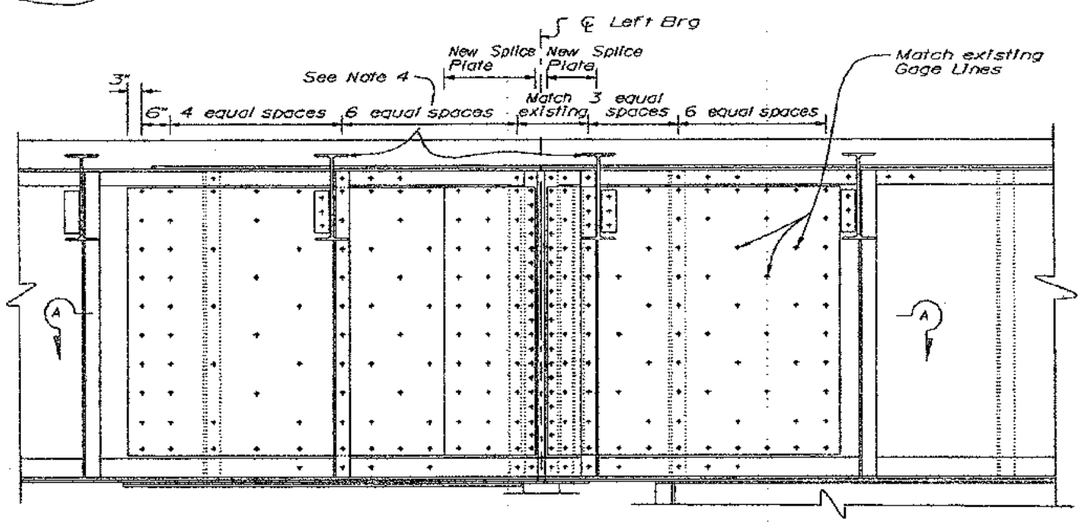

WEB PLATE DETAIL - LEFT COLUMN
3/4" = 1'-0"

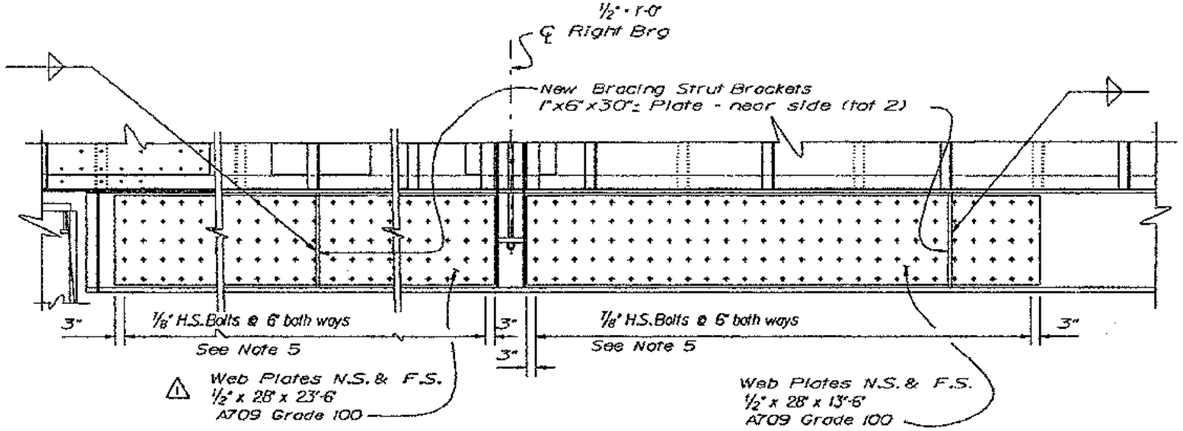

WEB PLATE DETAIL - RIGHT COLUMN
1/2" = 1'-0"

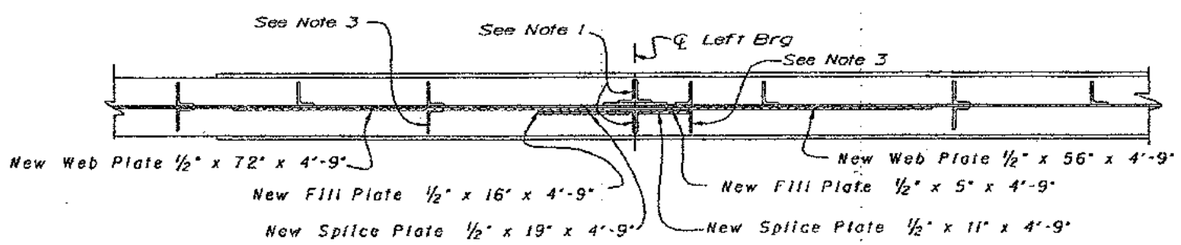

SECTION A-A
3/4" = 1'-0"

Notes:

+ Indicates new 7/8"Ø bolts. Remove existing bolts or rivets as required.

1. Existing bearing stiffeners and fills to remain.
2. Existing stiffeners far side from new web plate to remain.
3. Replace stiffener with uncrimped angle of same dimensions.
4. Trim end of two stringers and slot holes to match relocated stiffeners.
5. Adjust bolt locations to clear new bracing strut brackets.

AUG 7 1995
FEB 6 1996

MARK	DATE	DESCRIPTIONS	BY	CH'D
1	2/6/96	Extend web plates	GS	BB
		REVISIONS		

CONTRACT CHANGE ORDER NO.____
SHEET ____ OF ____

SEISMIC RETROFIT PROJECT No. 614

SFOBB - BENT E23 TO E28 RETROFIT

BENT E28

CAP STRENGTHENING DETAILS No. 1

	BY	CHECKED
DESIGN	Bob Bateman	M. Vinayagamoorthy
DETAILS	Franci Dukeshire 5/95	Gregory Slocum
QUANTITIES	Bob Bateman	A.E.S.

STATE OF CALIFORNIA
DEPARTMENT OF TRANSPORTATION

DIVISION OF STRUCTURES
STRUCTURE DESIGN 2

BRIDGE NO. 33-25
POST MILE 1.0-1.3

CU 04
EA 043431

DISREGARD PRINTS BEARING EARLIER REVISION DATES

REVISION DATES (PRELIMINARY STAGE ONLY): 5/22/95

SHEET 538 OF 120

ORIGINAL SCALE IN INCHES FOR REDUCED PLANS 0 1 2 3

OS 050 233 (CADD 3/95)

DIST.	COUNTY	ROUTE	POST MILES TOTAL PROJECT	SHEET NO.	TOTAL SHEETS
04	ALA	80			

REGISTERED ENGINEER - CIVIL

REGISTERED PROFESSIONAL ENGINEER Gregory Evon Slocum No. 44950 Exp. 3-31-98 CIVIL STATE OF CALIFORNIA

PLANS APPROVAL DATE

The State of California or its officers or agents shall not be responsible for the accuracy or completeness of electronic copies of this plan sheet.

NOTE:
THE CONTRACTOR SHALL VERIFY ALL CONTROLLING FIELD DIMENSIONS BEFORE ORDERING OR FABRICATING ANY MATERIAL.

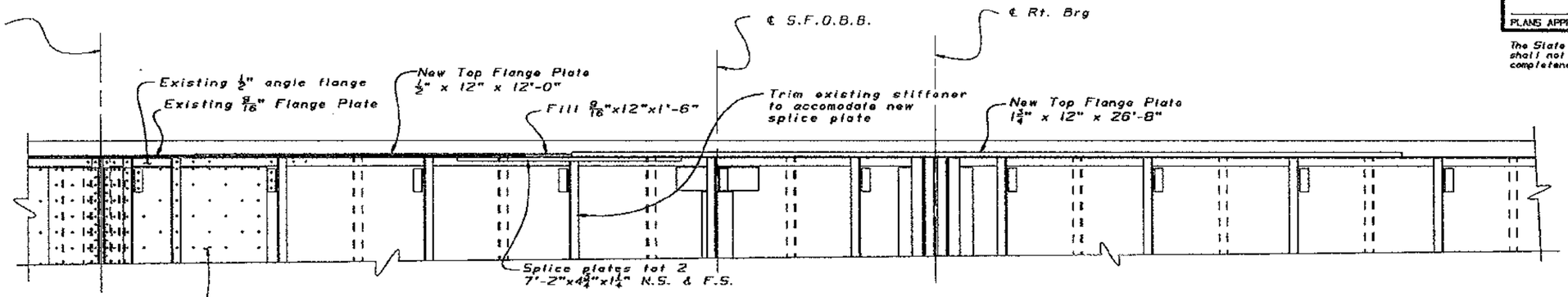

TOP PLATE ELEVATION

½" = 1'-0"

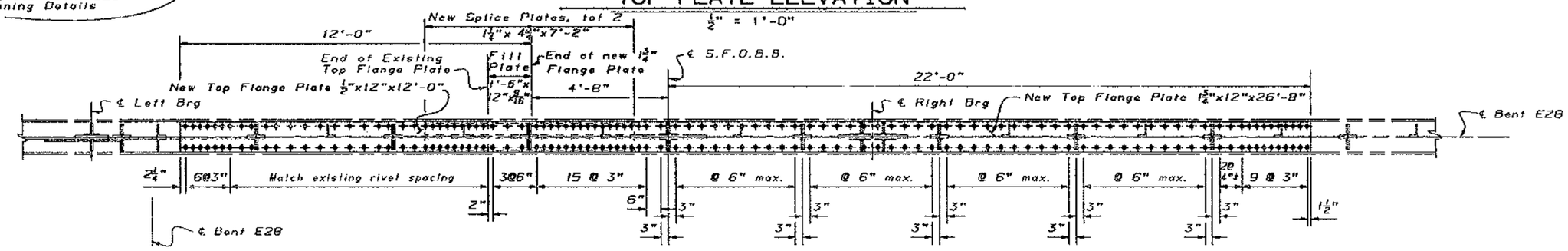

TOP PLATE PLAN

½" = 1'-0"

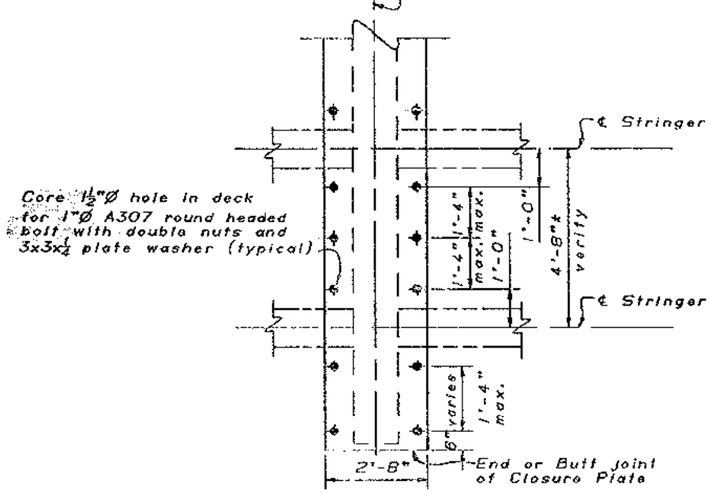

PLAN VIEW DECK OPENING

½" = 1'-0"

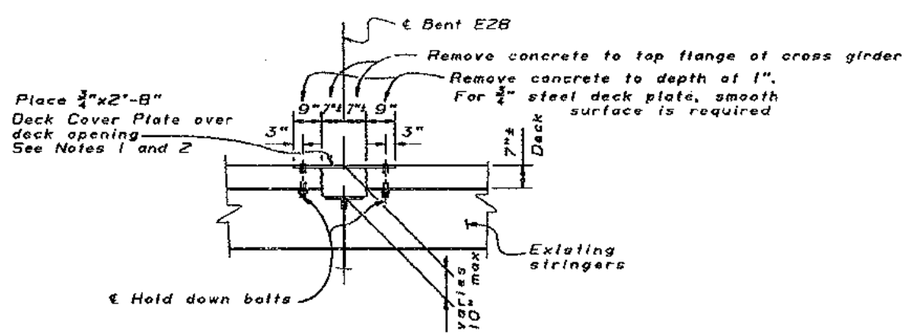

ELEVATION VIEW DECK OPENING

½" = 1'-0"

Notes:

- ● Indicates new 1"Ø bolts. Remove existing bolts or rivets as required.
- ✦ Indicates new ⅞"Ø bolts. Remove existing bolts or rivets as required.

1. After cover plate is removed, place an approved rapid set concrete.
2. Cover plates over concrete openings to be discontinuous only above existing stringers.

JUN 22 1995

DESIGN	BY Bob Baleman	CHECKED M.Vinayagamoorthy
DETAILS	BY Franci Dukeshire 5/95	CHECKED Gregory Slocum
QUANTITIES	BY R. E. Baleman	CHECKED A.E.S.

SEISMIC RETROFIT PROJECT No. 614

STATE OF CALIFORNIA DEPARTMENT OF TRANSPORTATION

DIVISION OF STRUCTURES STRUCTURE DESIGN 2

BRIDGE NO. 33-25

POST MILE 1.0-1.3

SFOBB - BENT E23 TO E28 RETROFIT

BENT E28

CAP STRENGTHENING DETAILS No. 2

05 030 2438 (CADD 4/09)

ORIGINAL SCALE IN INCHES FOR REDUCED PLANS 0 1 2 3

CU 04
EA 043431

DISREGARD PRINTS BEARING EARLIER REVISION DATES

REVISION DATES (PRELIMINARY STAGE ONLY) 5/22/95

SHEET 53C OF 120

DIST.	COUNTY	ROUTE	POST MILES TOTAL PROJECT	SHEET NO.	TOTAL SHEETS
04	Ala	80			

REGISTERED ENGINEER - CIVIL

REGISTERED PROFESSIONAL ENGINEER Gregory Slocum No. 44950 Exp. 3-31-98 CIVIL STATE OF CALIFORNIA

PLANS APPROVAL DATE

The State of California or its officers or agents shall not be responsible for the accuracy or completeness of electronic copies of this plan sheet.

NOTE:
THE CONTRACTOR SHALL VERIFY ALL CONTROLLING FIELD DIMENSIONS BEFORE ORDERING OR FABRICATING ANY MATERIAL.

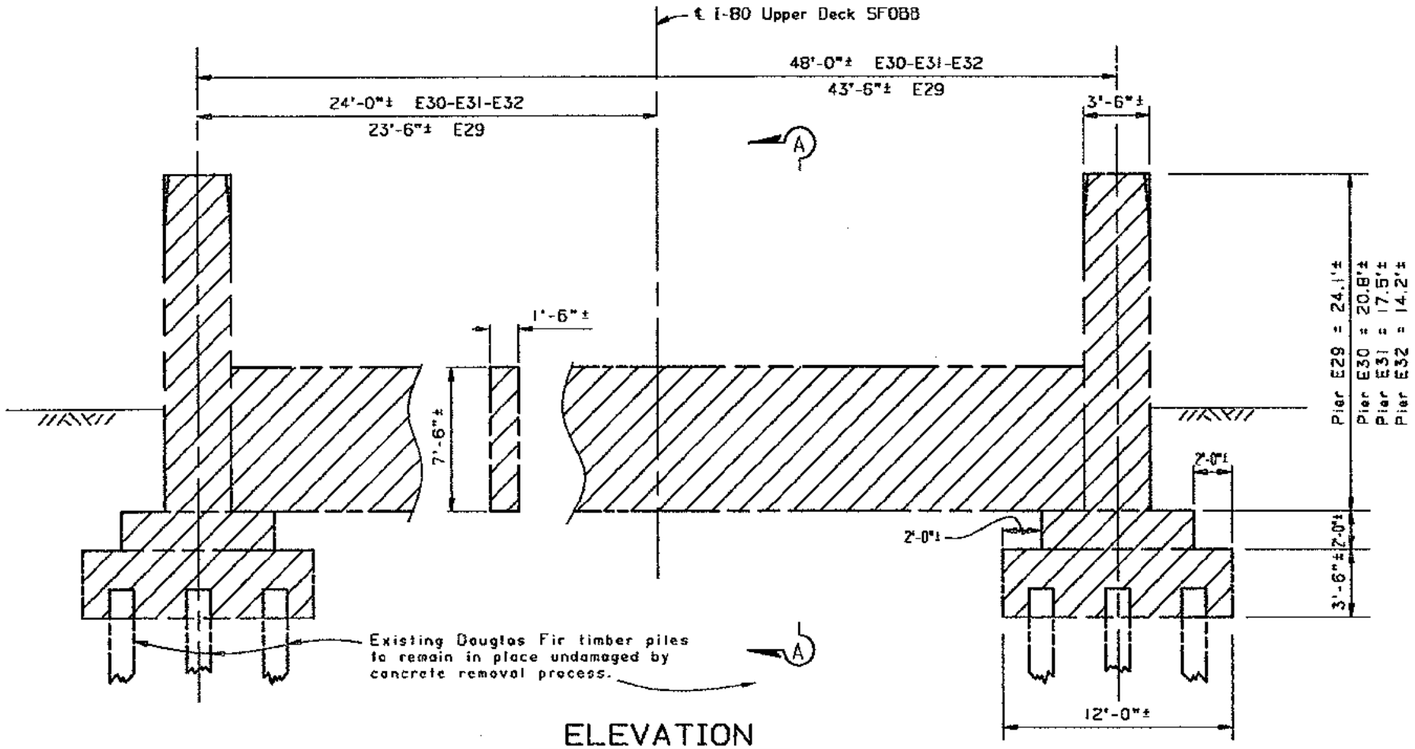

ELEVATION

BENTS E29-E30-E31-E32

$\frac{1}{4}$" = 1'-0"

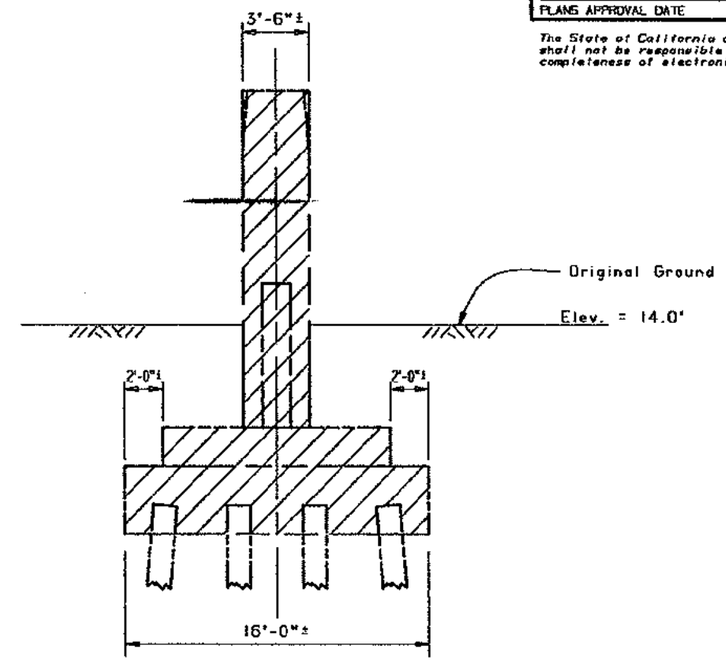

SECTION A-A

$\frac{1}{4}$" = 1'-0"

Indicates limits of concrete removal.

Note:
For temporary support loads see "General Notes" sheet.

MAR 22 1995

DESIGN	BY John Fujimoto 6-93	CHECKED Lian Duan	
DETAILS	BY AES 6-93	CHECKED Lian Duan	
QUANTITIES	BY Ali Hamza	CHECKED Lian Duan	

SEISMIC RETROFIT PROJECT No. 614

STATE OF CALIFORNIA DEPARTMENT OF TRANSPORTATION

DIVISION OF STRUCTURES STRUCTURE DESIGN 2

BRIDGE NO. 33-25

POST MILE 1.0-1.3

SFOBB - BENT E29 TO E32 RETROFIT

BENT E29 TO E32

COLUMN AND FOOTING DEMOLITION

ORIGINAL SCALE IN INCHES FOR REDUCED PLANS 0 1 2 3

CU 04
EA 043431

DISREGARD PRINTS BEARING EARLIER REVISION DATES

REVISION DATES (PRELIMINARY STAGE ONLY) 6-24-93 11-16-93 2/1/93

SHEET 54 OF 120

05 050 2139 (CADD 4/88)

DIST	COUNTY	ROUTE	POST MILES TOTAL PROJECT	SHEET NO.	TOTAL SHEETS
04	ALA	80			

REGISTERED ENGINEER - CIVIL

REGISTERED PROFESSIONAL ENGINEER Gregory Evan Slocum No. 44950 Exp. 3-31-98 CIVIL STATE OF CALIFORNIA

PLANS APPROVAL DATE

NOTE:
THE CONTRACTOR SHALL VERIFY ALL CONTROLLING FIELD DIMENSIONS BEFORE ORDERING OR FABRICATING ANY MATERIAL.

The State of California or its officers or agents shall not be responsible for the accuracy or completeness of electronic copies of this plan sheet.

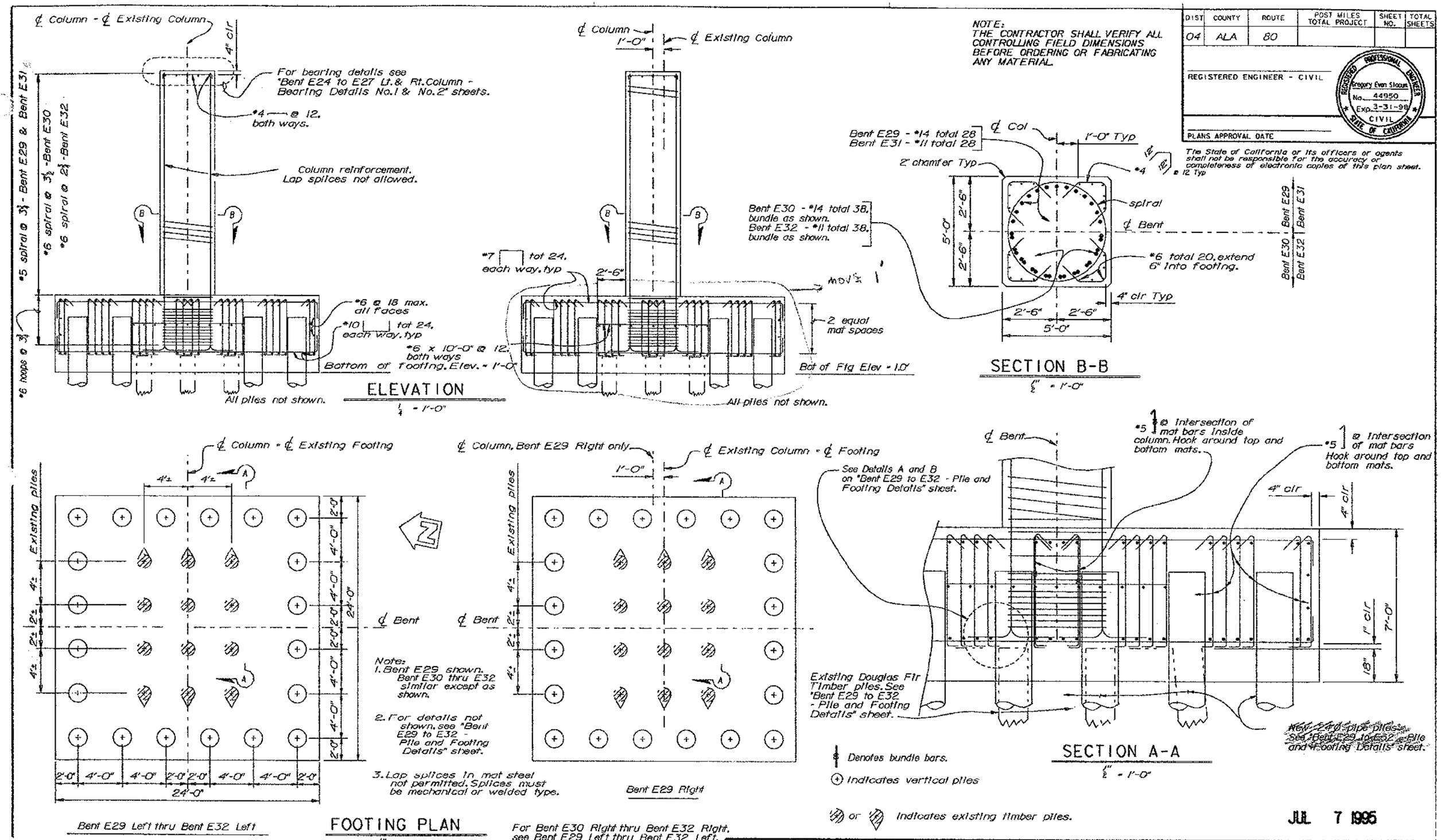

JUL 7 1995

DESIGN	BY John Fujimoto	CHECKED Lian Duan	
DETAILS	BY Franci Dukeshire 3/93	CHECKED Lian Duan	
QUANTITIES	BY Ali Hamza	CHECKED Lian Duan	

ORIGINAL SCALE IN INCHES FOR REDUCED PLANS

SEISMIC RETROFIT PROJECT No. 614

STATE OF CALIFORNIA DEPARTMENT OF TRANSPORTATION

DIVISION OF STRUCTURES STRUCTURE DESIGN 2

BRIDGE NO. 33-25

POST MILE 1.0-1.3

CU 04
EA 043431

SFOBB - BENT E29 TO E32 RETROFIT

BENT E29 TO E32

BENT DETAILS

DISREGARD PRINTS BEARING EARLIER REVISION DATES

REVISION DATES (PRELIMINARY STAGE ONLY)

SHEET 55 OF 120

DIST.	COUNTY	ROUTE	POST MILES TOTAL PROJECT	SHEET NO.	TOTAL SHEETS
04	ALA	80			

REGISTERED ENGINEER - CIVIL

REGISTERED PROFESSIONAL ENGINEER Gregory Evan Stocum No. 44950 Exp. 3-31-98 CIVIL STATE OF CALIFORNIA

PLANS APPROVAL DATE

The State of California or its officers or agents shall not be responsible for the accuracy or completeness of electronic copies of this plan sheet.

NOTE:
THE CONTRACTOR SHALL VERIFY ALL CONTROLLING FIELD DIMENSIONS BEFORE ORDERING OR FABRICATING ANY MATERIAL.

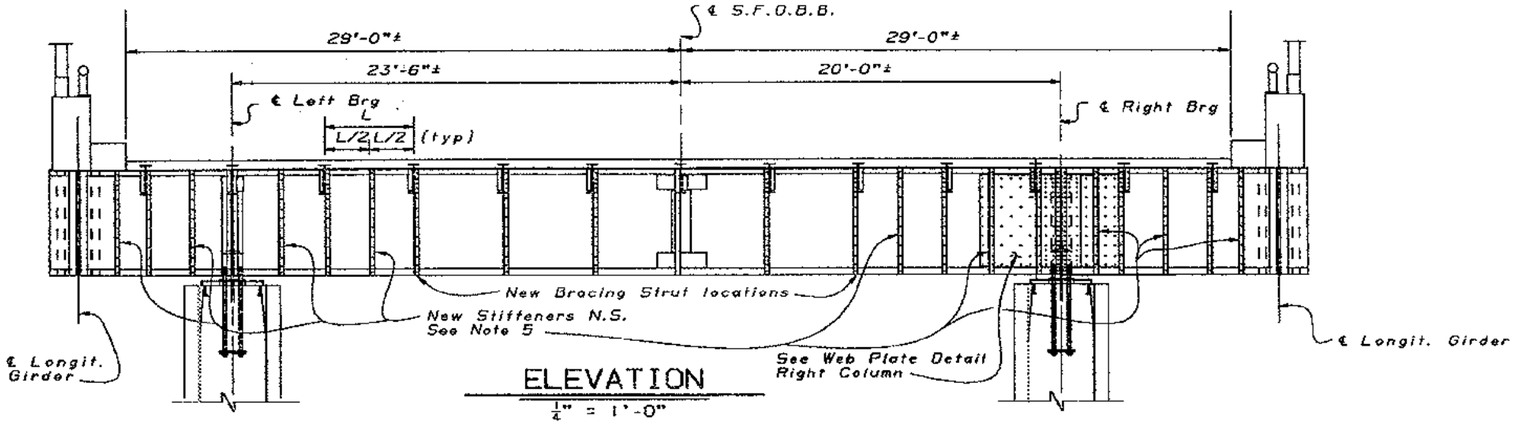

ELEVATION

$\frac{1}{4}$" = 1'-0"

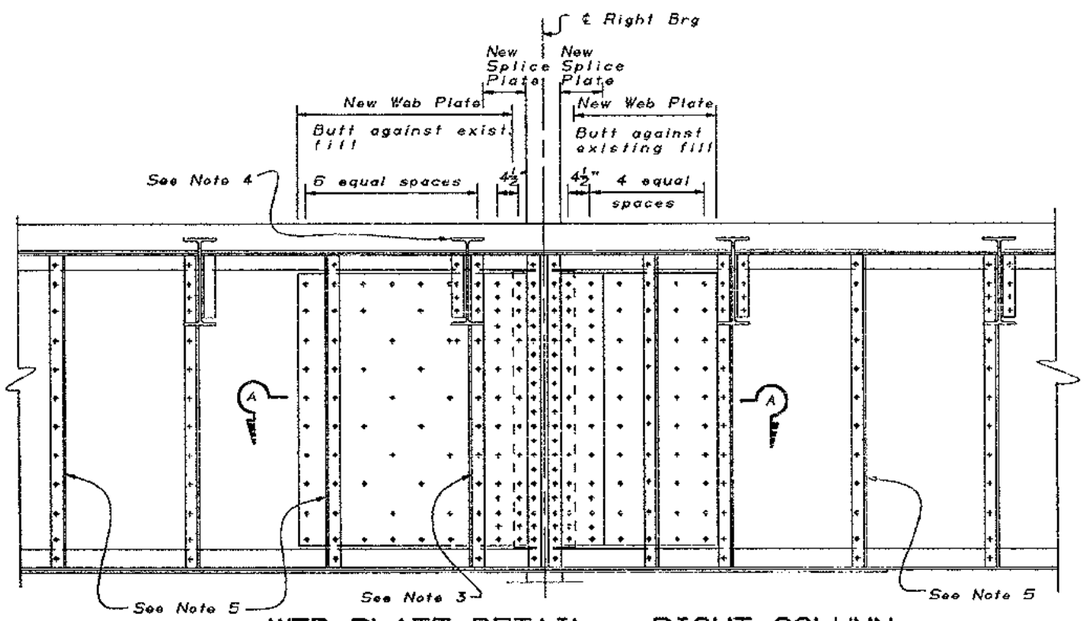

WEB PLATE DETAIL - RIGHT COLUMN

$\frac{3}{4}$" = 1'-0"

New Web Plate Bolts Match existing Gage Lines

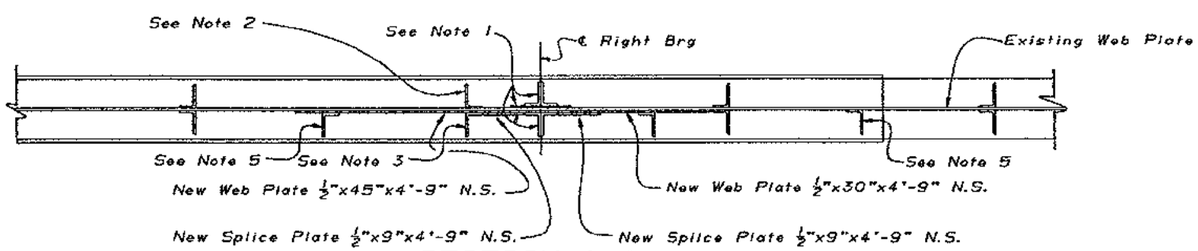

SECTION A-A

$\frac{3}{4}$" = 1'-0"

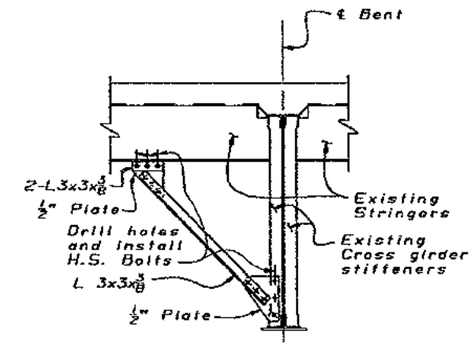

BRACING STRUT DETAIL

$\frac{1}{2}$" = 1'-0"

NEW

Notes:

- * Indicates new $\frac{7}{8}$"Ø bolts. Remove existing bolts or rivets as required.
1. Existing bearing stiffeners and fills to remain.
2. Existing stiffeners far side from new web plate to remain.
3. Replace stiffener with uncrimped angle of same dimensions.
4. Trim end of stringer and slot holes to match relocated stiffener.
5. New near side stiffeners L5x3½x½ with fills where required. Stiffener locations to be adjusted to clear flange bolts. Bolt spacing to match existing stiffeners.

JUN 19 1995

SEISMIC RETROFIT PROJECT No. 614

SFOBB - BENT E29 TO E32 RETROFIT

BENT E29

CAP STRENGTHENING DETAILS No. 1

DESIGN	BY Bob Bateman	CHECKED Dallas Forester
DETAILS	BY Franci Dukeshire 5/95	CHECKED Gregory Stocum
QUANTITIES	BY R. E. Bateman	CHECKED A.E.S.

STATE OF CALIFORNIA DEPARTMENT OF TRANSPORTATION

DIVISION OF STRUCTURES STRUCTURE DESIGN 2

BRIDGE NO. 33-25

POST MILE 1.0-1.3

CU 04
EA 043431

DISREGARD PRINTS BEARING EARLIER REVISION DATES

REVISION DATES (PRELIMINARY STAGE ONLY) 5/22/95

SHEET 55A OF 120

DS 050 2138 (CADD 4/89)

ORIGINAL SCALE IN INCHES FOR REDUCED PLANS 0 1 2 3

DIST.	COUNTY	ROUTE	POST MILES TOTAL PROJECT	SHEET NO.	TOTAL SHEETS
04	ALA	80			

REGISTERED ENGINEER - CIVIL

PLANS APPROVAL DATE

REGISTERED PROFESSIONAL ENGINEER — Gregory Evan Slocum — No. 44950 — Exp. 3-31-98 — CIVIL — STATE OF CALIFORNIA

The State of California or its officers or agents shall not be responsible for the accuracy or completeness of electronic copies of this plan sheet.

NOTE:
THE CONTRACTOR SHALL VERIFY ALL CONTROLLING FIELD DIMENSIONS BEFORE ORDERING OR FABRICATING ANY MATERIAL.

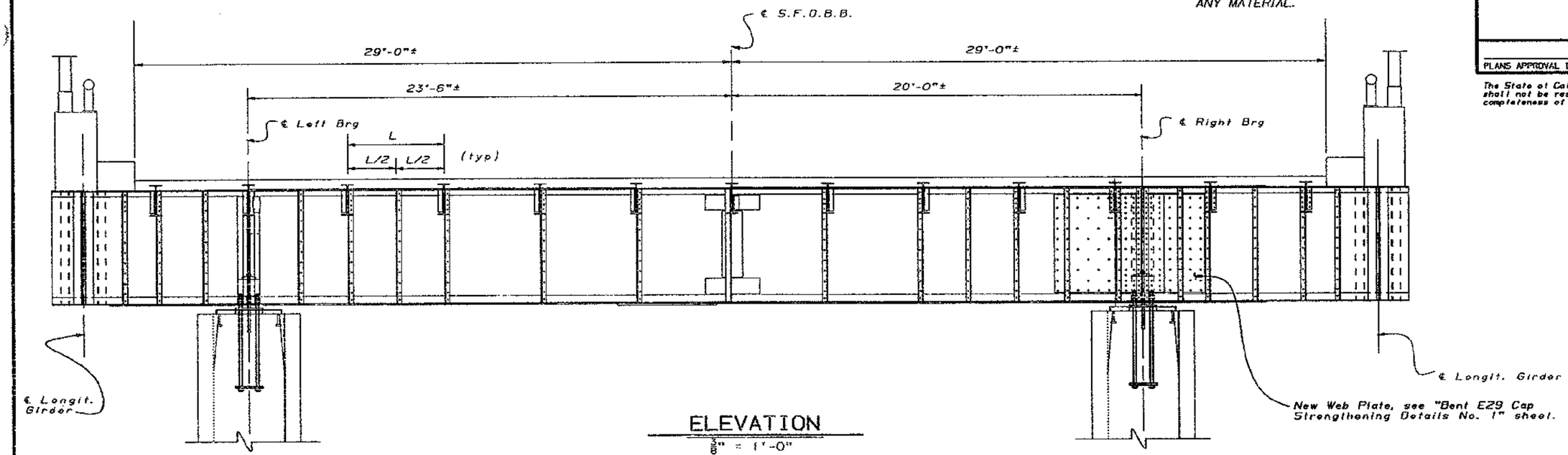

NEW

ELEVATION

$\frac{3}{8}$" = 1'-0"

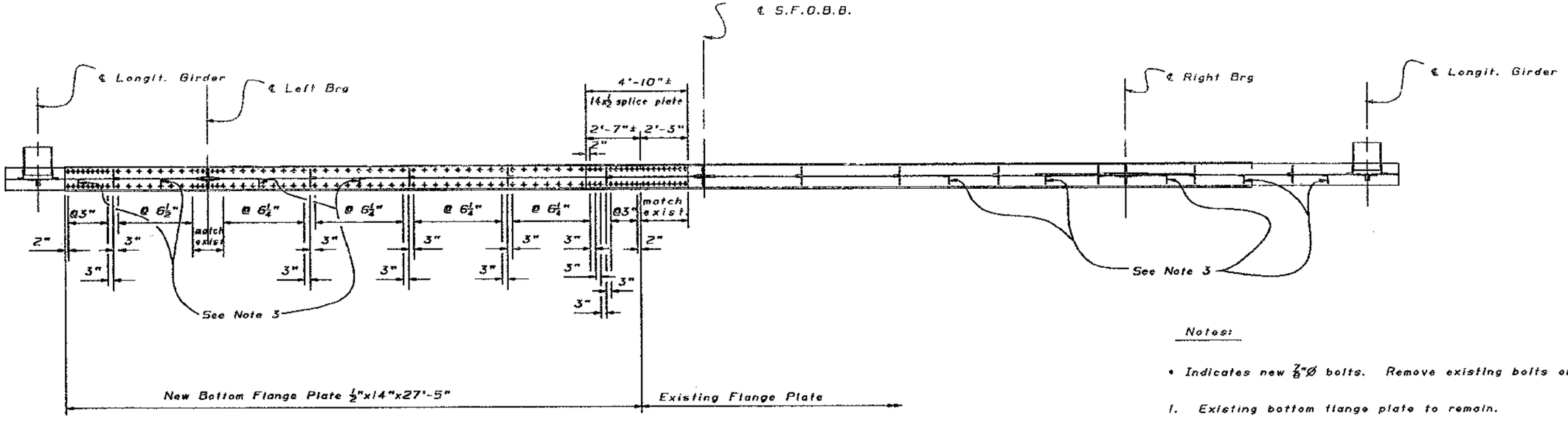

BOTTOM FLANGE PLAN

$\frac{3}{8}$" = 1'-0"

JUN 19 1995

Notes:

- *Indicates new $\frac{7}{8}$"Ø bolts. Remove existing bolts or rivets as required.*

1. *Existing bottom flange plate to remain.*
2. *New bottom flange plate to butt up to existing bottom flange plate.*
3. *For new web stiffeners, see "Bent E29 Cap Strengthening Details No. 1" sheet.*

DESIGN	BY Bob Bateman	CHECKED Dallas Forester
DETAILS	BY Franci Dukeshire 5/95	CHECKED Gregory Slocum
QUANTITIES	BY R. E. Bateman	CHECKED A.E.S.

SEISMIC RETROFIT PROJECT No. 614

STATE OF CALIFORNIA
DEPARTMENT OF TRANSPORTATION

DIVISION OF STRUCTURES
STRUCTURE DESIGN 2

CU 04
EA 043431

BRIDGE NO. 33-25
POST MILE 1.0-1.3

SFOBB - BENT E29 TO E32 RETROFIT

BENT E29

CAP STRENGTHENING DETAILS No. 2

DISREGARD PRINTS BEARING EARLIER REVISION DATES → 5/22/95

REVISION DATES (PRELIMINARY STAGE ONLY)

SHEET 558 OF 120

ORIGINAL SCALE IN INCHES FOR REDUCED PLANS 0 1 2 3

DS 050 2038 (CADD 4/89)

DIST.	COUNTY	ROUTE	POST MILES TOTAL PROJECT	SHEET NO.	TOTAL SHEETS
04	ALA	80			

REGISTERED ENGINEER - CIVIL

REGISTERED PROFESSIONAL ENGINEER Gregory Evan Slocum No. 44950 Exp. 3-31-98 CIVIL STATE OF CALIFORNIA

PLANS APPROVAL DATE

The State of California or its officers or agents shall not be responsible for the accuracy or completeness of electronic copies of this plan sheet.

NOTE:
THE CONTRACTOR SHALL VERIFY ALL CONTROLLING FIELD DIMENSIONS BEFORE ORDERING OR FABRICATING ANY MATERIAL.

NEW

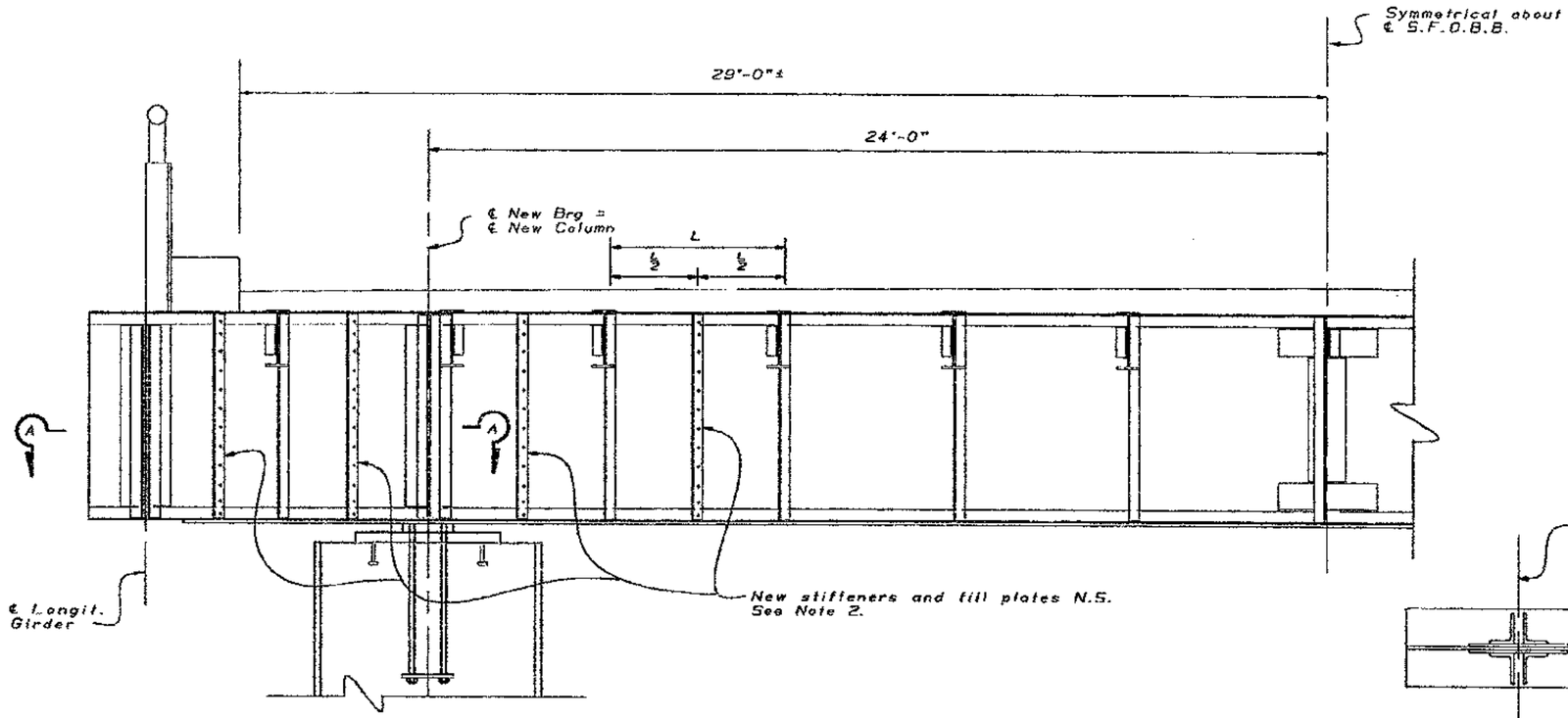

BENT 30, 31 AND 32 ELEVATION

½" = 1'-0"

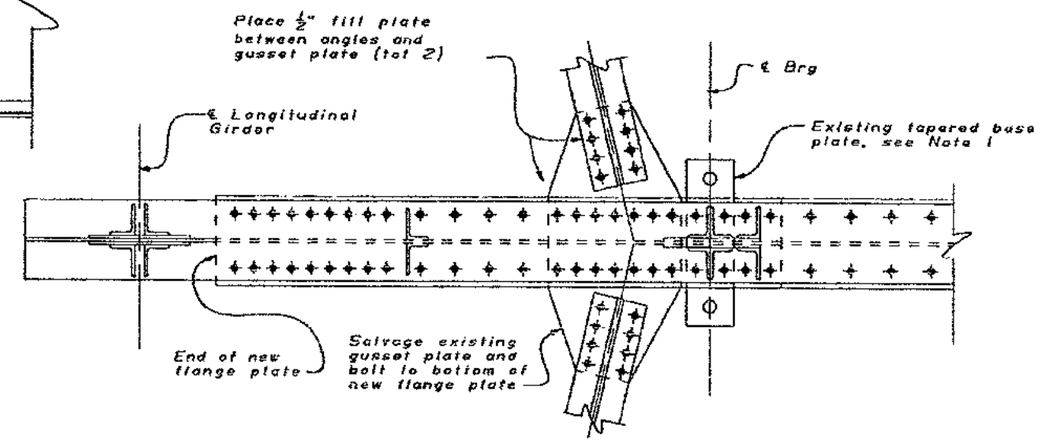

SECTION A-A

1" = 1'-0"

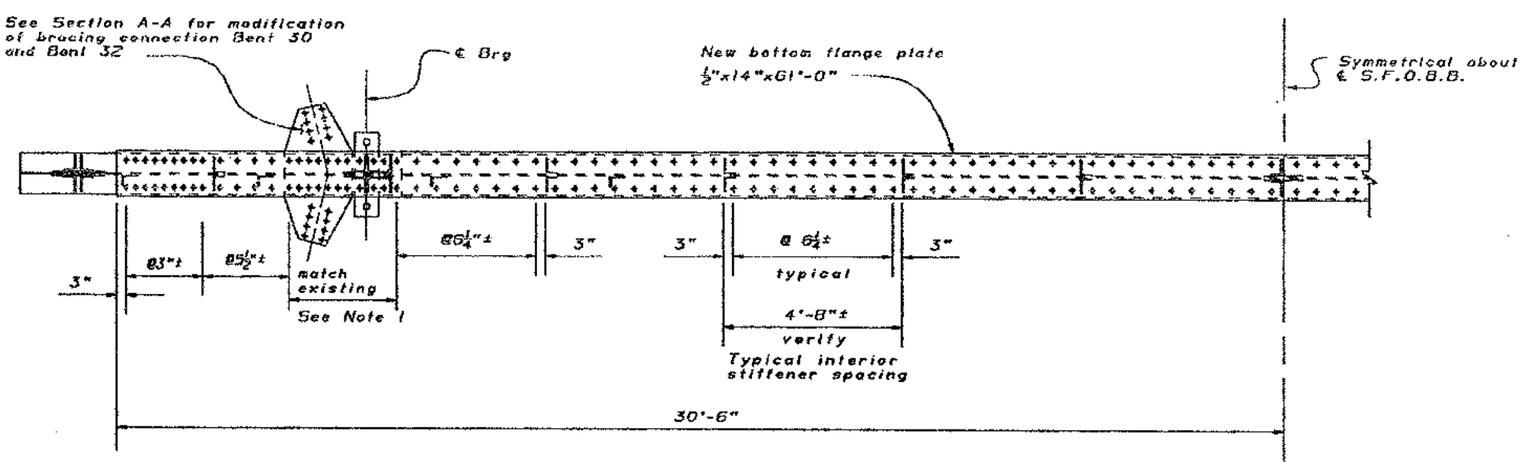

BENT 30, 31 AND 32 PLAN

½" = 1'-0"

Note:

✦ Indicates new ⅞"Ø bolts. Replace existing bolts or rivets as required.

1. For Base Plate Details, see "Bent E27 Ctr, E29-E33 Bearing Details No. 2" sheets.

2. New near side stiffeners L5x3½x½ with fills. Stiffener locations to be adjusted to clear flange bolts. Bolt spacing to match existing stiffeners.

JUN 19 1995

SEISMIC RETROFIT PROJECT No. 614

SFOBB - BENT E29 TO E32 RETROFIT

BENTS 30 THROUGH 32

CAP STRENGTHENING DETAILS

DESIGN	BY Bob Bateman	CHECKED Dallas Forester
DETAILS	BY Franci Dukeshire	CHECKED Gregory Slocum
QUANTITIES	BY R. E. Bateman	CHECKED A.E.S.

STATE OF CALIFORNIA DEPARTMENT OF TRANSPORTATION

DIVISION OF STRUCTURES STRUCTURE DESIGN 2

BRIDGE NO. 33-25

POST MILE 1.0-1.3

CU 04 EA 043431

DS (ISO 216B (CADD 4/89)

ORIGINAL SCALE IN INCHES FOR REDUCED PLANS 0 1 2 3

DISREGARD PRINTS BEARING EARLIER REVISION DATES

REVISION DATES (PRELIMINARY STAGE ONLY) 5/12/95

SHEET 65C OF 120

DIST.	COUNTY	ROUTE	POST MILES TOTAL PROJECT	SHEET NO.	TOTAL SHEETS
04	Ala	80	1.0/1.3	93R1	157

REGISTERED ENGINEER - CIVIL

REGISTERED PROFESSIONAL ENGINEER — John Fujimoto No. 43943 Exp. 6-30-97 CIVIL — STATE OF CALIFORNIA

5-22-95
PLANS APPROVAL DATE

The State of California or its officers or agents shall not be responsible for the accuracy or completeness of electronic copies of this plan sheet.

NOTE:
THE CONTRACTOR SHALL VERIFY ALL CONTROLLING FIELD DIMENSIONS BEFORE ORDERING OR FABRICATING ANY MATERIAL.

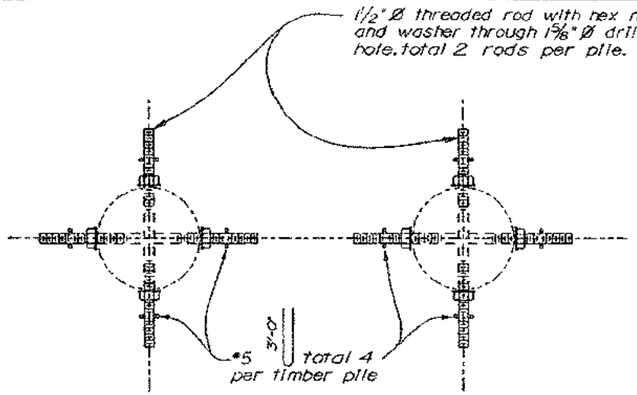

PLAN

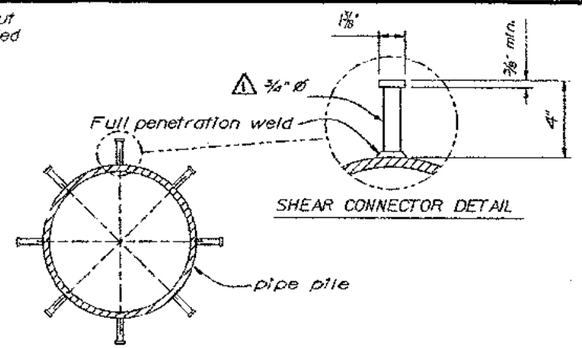

SHEAR CONNECTOR DETAIL

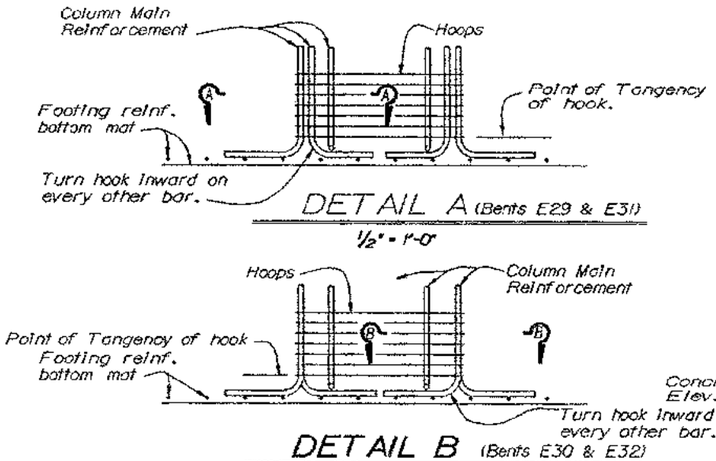

DETAIL A (Bents E29 & E31)
½" = 1'-0"

DETAIL B (Bents E30 & E32)

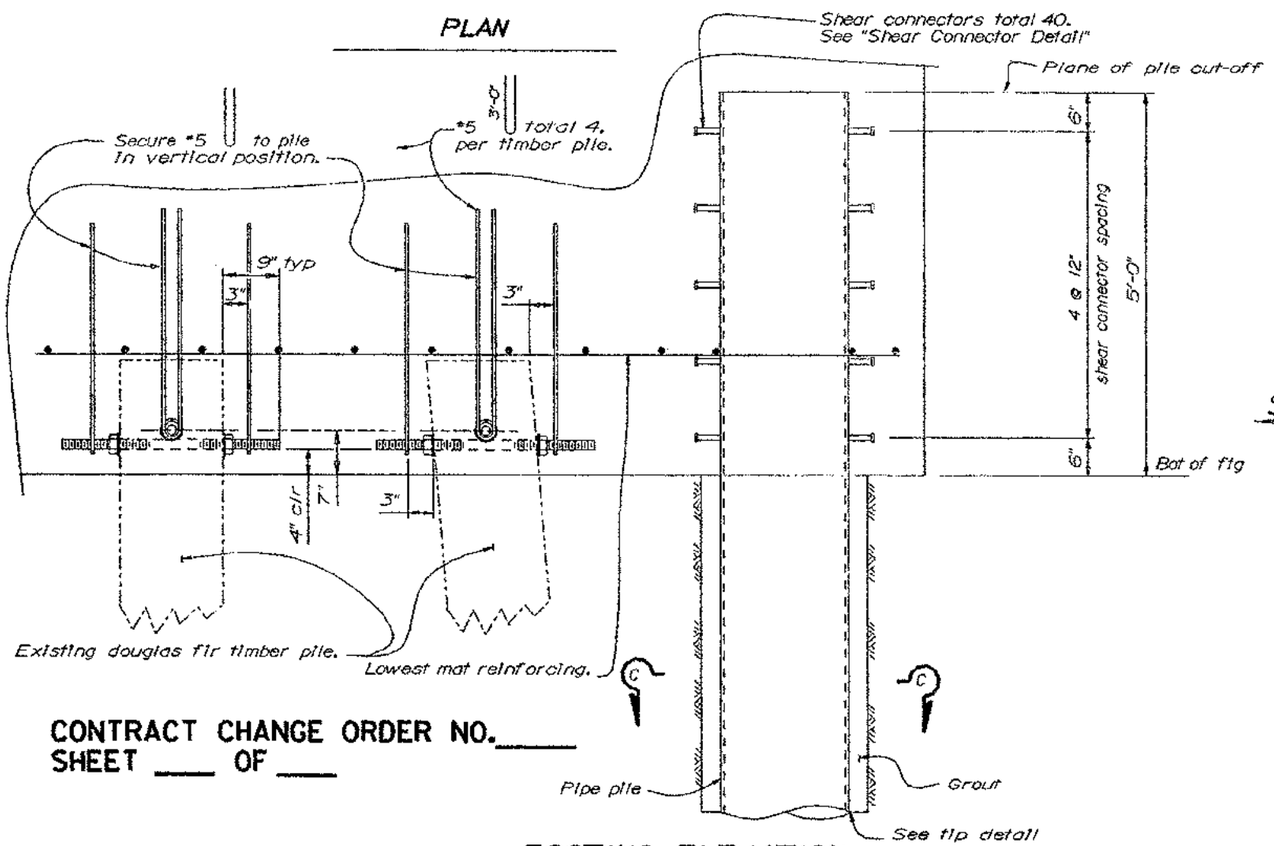

FOOTING ELEVATION
20" PIPE PILE (DRILL AND GROUT) SHOWN
1" = 1'-0"

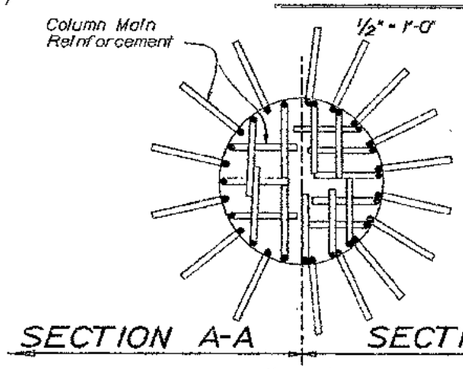

SECTION A-A SECTION B-B
No scale

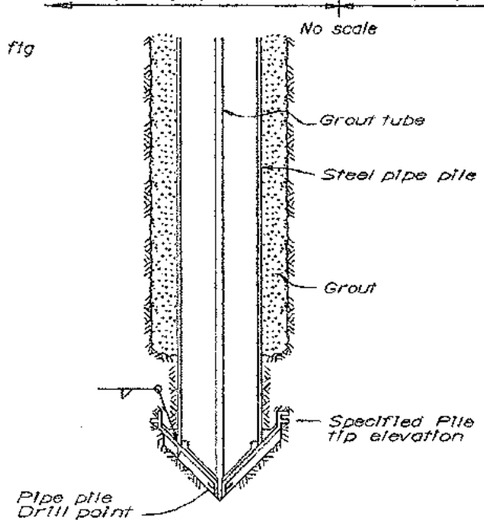

TIP DETAIL FOR 20" PIPE PILE (DRILL AND GROUT)
No Scale

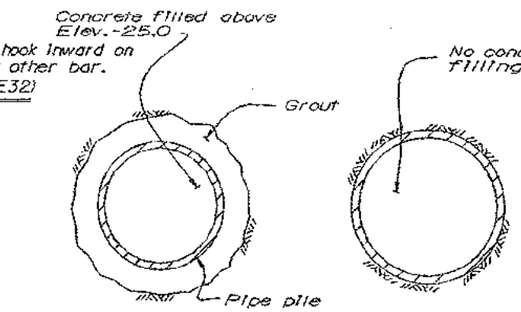

20" PIPE PILE (DRILL & GROUT) 24" PIPE PILE

SECTION C-C
No Scale

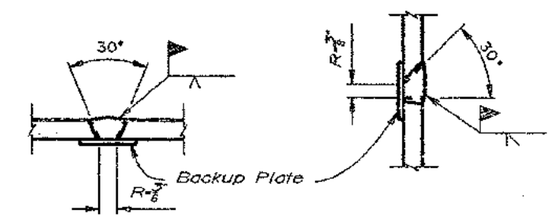

SINGLE VEE-GROOVE SINGLE BEVEL-GROOVE

PILE WELDING DETAIL-BUTT JOINTS

Welding Notes:
1. Single Vee-Groove Permitted for all positions.
2. Single Bevel-Groove permitted for horizontal joints only.
3. All materials, workmanship and joint details shall conform to Standard Specifications 49-5.02.

Notes:
1. For testing and bent details not shown see "Bent E29 to E32 - Bent Details" sheet.
2. For locations of Details A and B, see "Bent E29 to E32 - Bent Details" sheet.
3. 24" Pipe pile shall be open ended.

Notes:
1. For footing and bent details not shown see "Bent E29 to E32 - Bent Details" sheet.
2. For locations of Details A and B, see "Bent E29 to E32 - Bent Details" sheet.

CONTRACT CHANGE ORDER NO.____
SHEET ___ OF ___

MARK	DATE	DESCRIPTIONS	BY	CH'D
1	8/16/95	reduce diameter	GS	BB

REVISIONS

DESIGN	BY John Fujimoto 6-93	CHECKED Dan Duan	
DETAILS	BY AES 7-93	CHECKED Dan Duan	
QUANTITIES	BY Ali Hamza	CHECKED Dan Duan	

DS QSD 2.39 (CADD 4/89)

ORIGINAL SCALE IN INCHES FOR REDUCED PLANS 0 1 2 3

SEISMIC RETROFIT PROJECT No. 614

STATE OF CALIFORNIA
DEPARTMENT OF TRANSPORTATION

DIVISION OF STRUCTURES
STRUCTURE DESIGN 2

CU 04
EA 043431

BRIDGE NO. 33-25
POST MILE 1.0-1.3

SFOBB - BENT E29 TO E32 RETROFIT

BENT E29 TO E32

PILE AND FOOTING DETAILS

DISREGARD PRINTS BEARING EARLIER REVISION DATES

REVISION DATES (PRELIMINARY STAGE ONLY)

SHEET 56 OF 120

BOX HAS BEEN REMOVED

INFORMED BY AND CHANGE OF THIS CHANGE 1/3/96

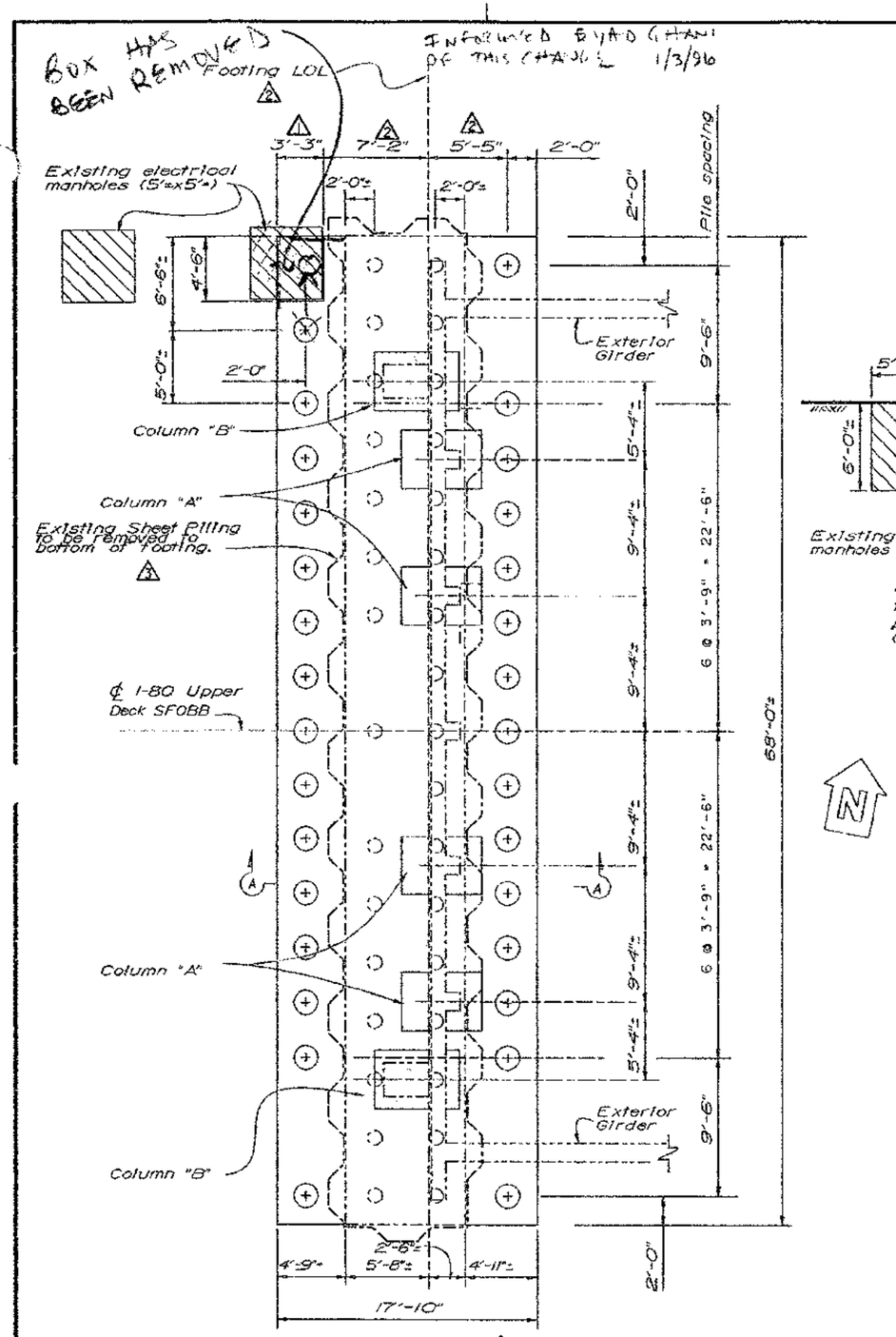

PLAN

1" = 5'-0"

○ Indicates existing timber piles

⊕ Indicates new concrete filled 20"Ø pipe piles (drill and grout)

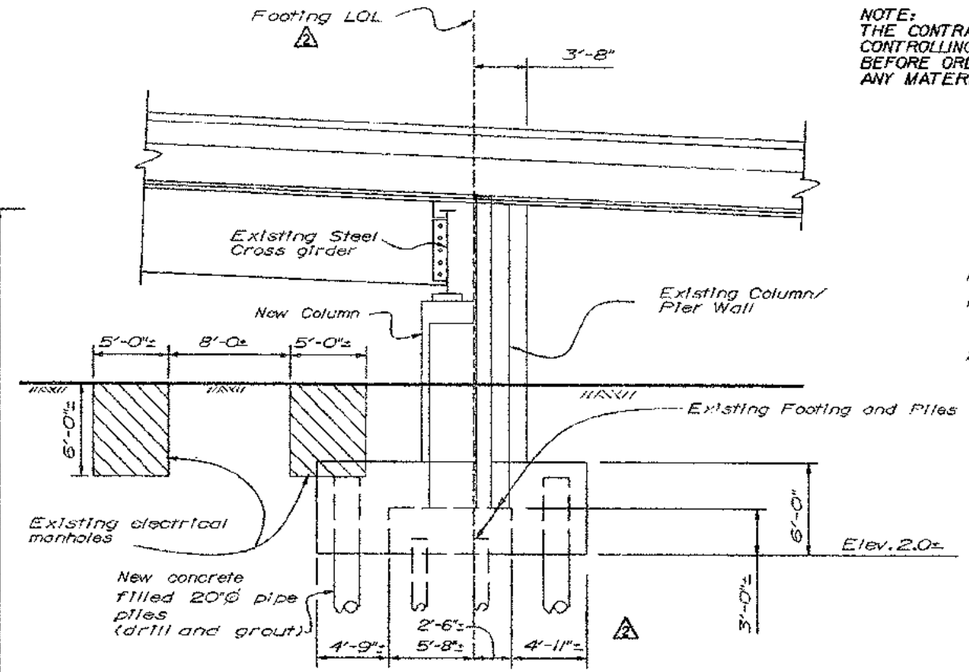

SECTION A-A

1" = 5'-0"

NOTE:
THE CONTRACTOR SHALL VERIFY ALL CONTROLLING FIELD DIMENSIONS BEFORE ORDERING OR FABRICATING ANY MATERIAL.

DIST	COUNTY	ROUTE	POST MILES TOTAL PROJECT	SHEET NO.	TOTAL SHEETS
04	ALA	80			

REGISTERED ENGINEER - CIVIL

REGISTERED PROFESSIONAL ENGINEER Gregory Evan Slocum No. 44950 Exp. 3-31-98 CIVIL STATE OF CALIFORNIA

PLANS APPROVAL DATE

The State of California or its officers or agents shall not be responsible for the accuracy or completeness of electronic copies of this plan sheet.

Note:

1. For Columns "A", see "Bent E33 - Bent Details No. 1" sheet. For Columns "B", see "Bent E33 - Bent Details No. 2" sheet.

2. Lap splices in mat steel not permitted. Splices must be mechanical or welded type.

MARK	DATE	DESCRIPTIONS	BY	CH'D
3	12/21/95	show existing sheet piling	GS	BB
2	12/21/95	change footing LOL location	GS	BB
1	12/21/95	Notch footing to clear electric box	GS	BB

REVISIONS

CONTRACT CHANGE ORDER NO. ____
SHEET ____ OF ____

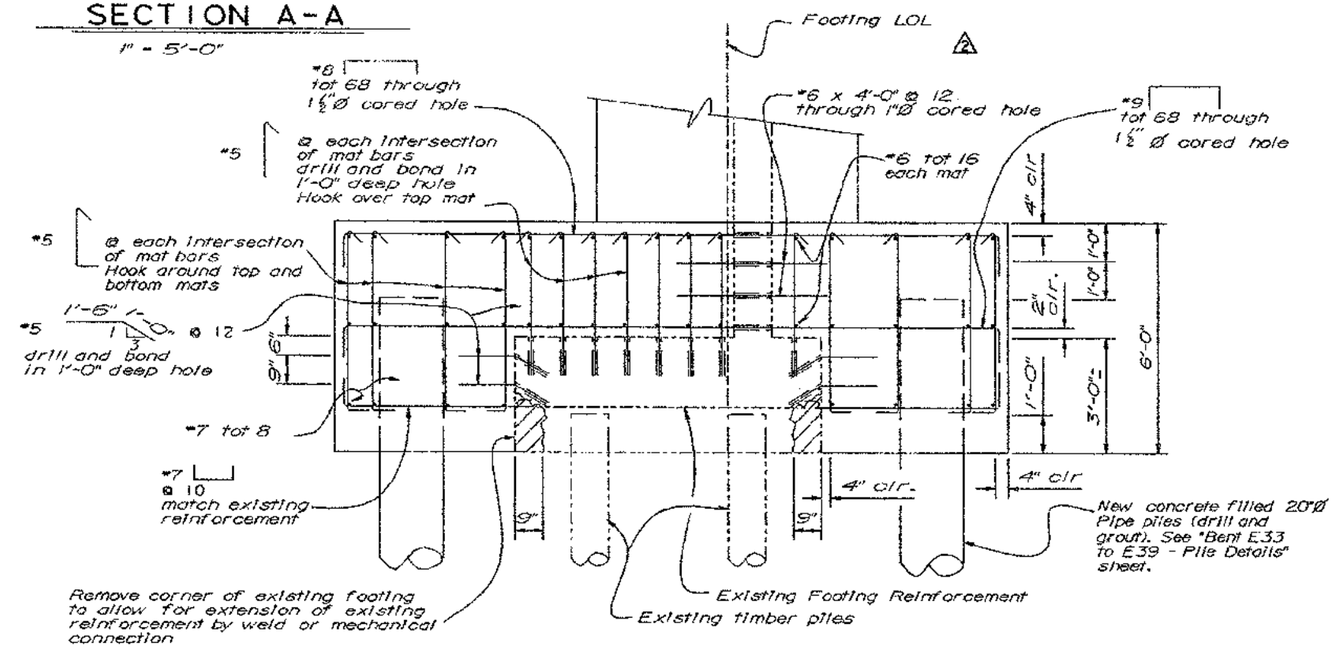

FOOTING REINFORCEMENT

½" = 1'-0"

DEC 21 1995

DESIGN	BY Lian Duan	CHECKED John Fujimoto	
DETAILS	BY Franci Dukeshire 3/93	CHECKED John Fujimoto	
QUANTITIES	BY Kammy Bhola	CHECKED Simon Blank	

ORIGINAL SCALE IN INCHES FOR REDUCED PLANS 0 1 2 3

SEISMIC RETROFIT PROJECT No. 614

STATE OF CALIFORNIA DEPARTMENT OF TRANSPORTATION

DIVISION OF STRUCTURES STRUCTURE DESIGN 2

CU 04
EA 043431

BRIDGE NO. 33-25
POST MILE 1.0-1.3

SFOBB - BENT E33 TO E39 RETROFIT

BENT E33

BENT LAYOUT

DISREGARD PRINTS BEARING EARLIER REVISION DATES →

REVISION DATES (PRELIMINARY STAGE ONLY) 12/21/95 11/24/94 8/25/94 2/28/94

SHEET 57 OF 120

DIST	COUNTY	ROUTE	POST MILES TOTAL PROJECT	SHEET NO.	TOTAL SHEETS
04	ALA	80			

REGISTERED ENGINEER - CIVIL

REGISTERED PROFESSIONAL ENGINEER Gregory Evan Slocum No. 44950 Exp. 3-31-96 CIVIL STATE OF CALIFORNIA

PLANS APPROVAL DATE

The State of California or its officers or agents shall not be responsible for the accuracy or completeness of electronic copies of this plan sheet.

NOTE:
THE CONTRACTOR SHALL VERIFY ALL CONTROLLING FIELD DIMENSIONS BEFORE ORDERING OR FABRICATING ANY MATERIAL.

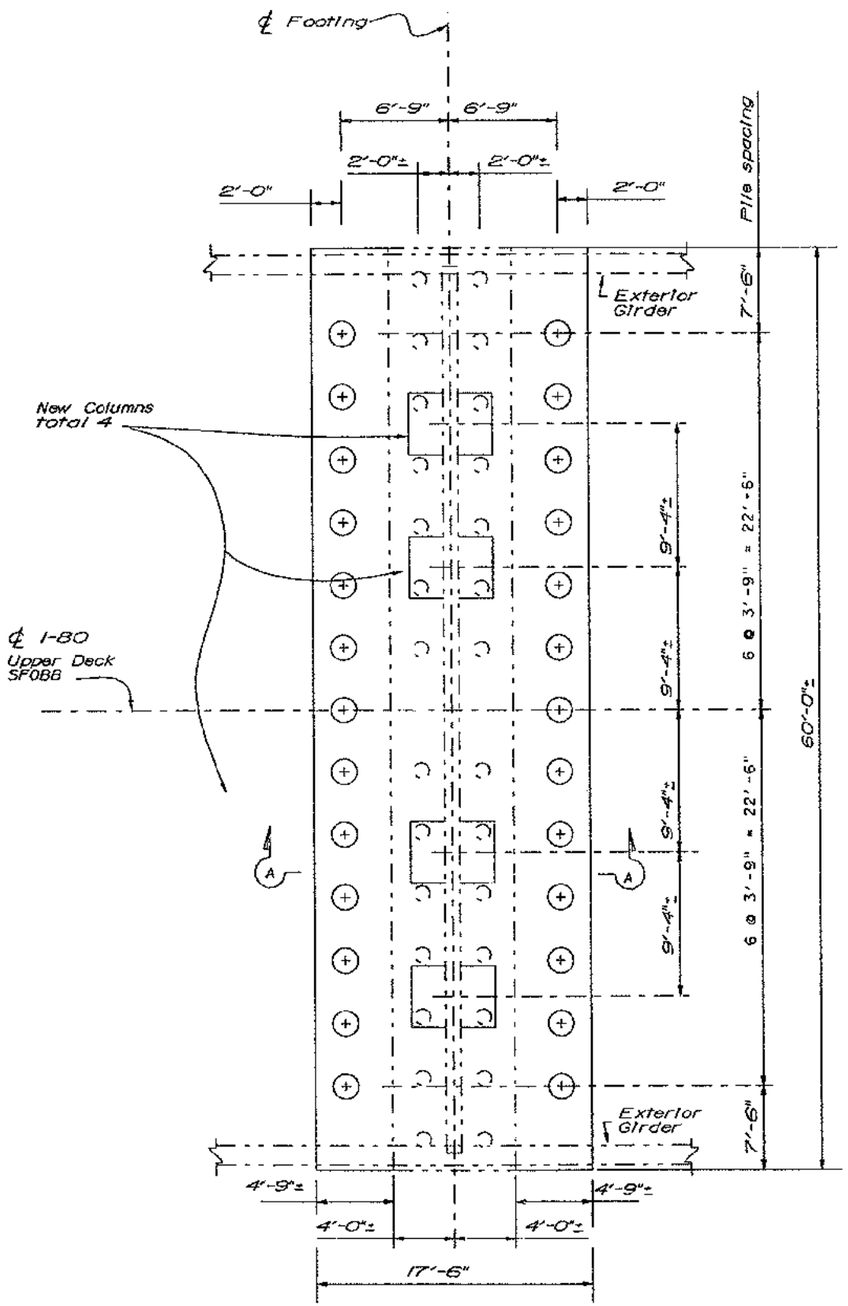

PLAN

1" = 5'-0"

○ Indicates existing timber piles

⊕ Indicates new concrete filled 20"Ø pipe piles (drill and grout)

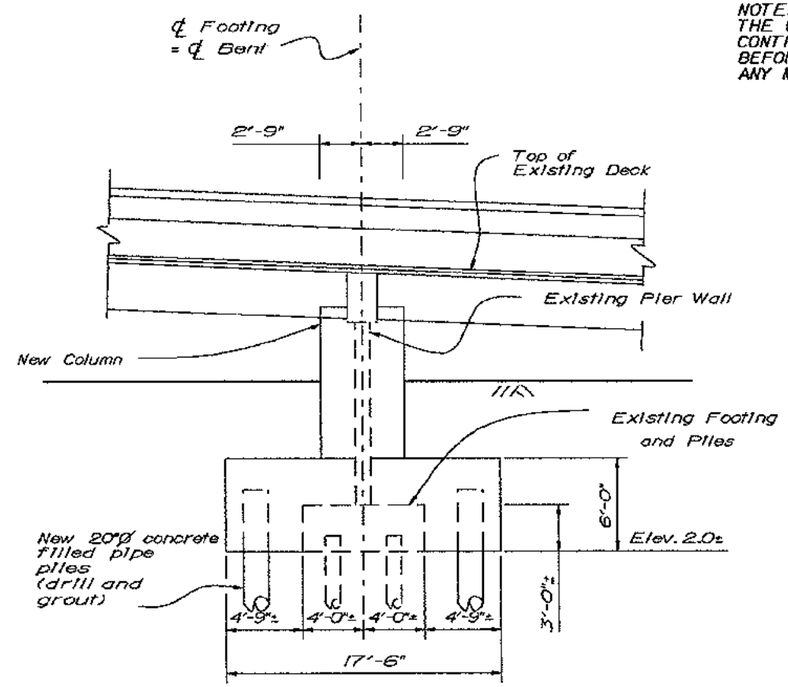

SECTION A-A

1" = 5'-0"

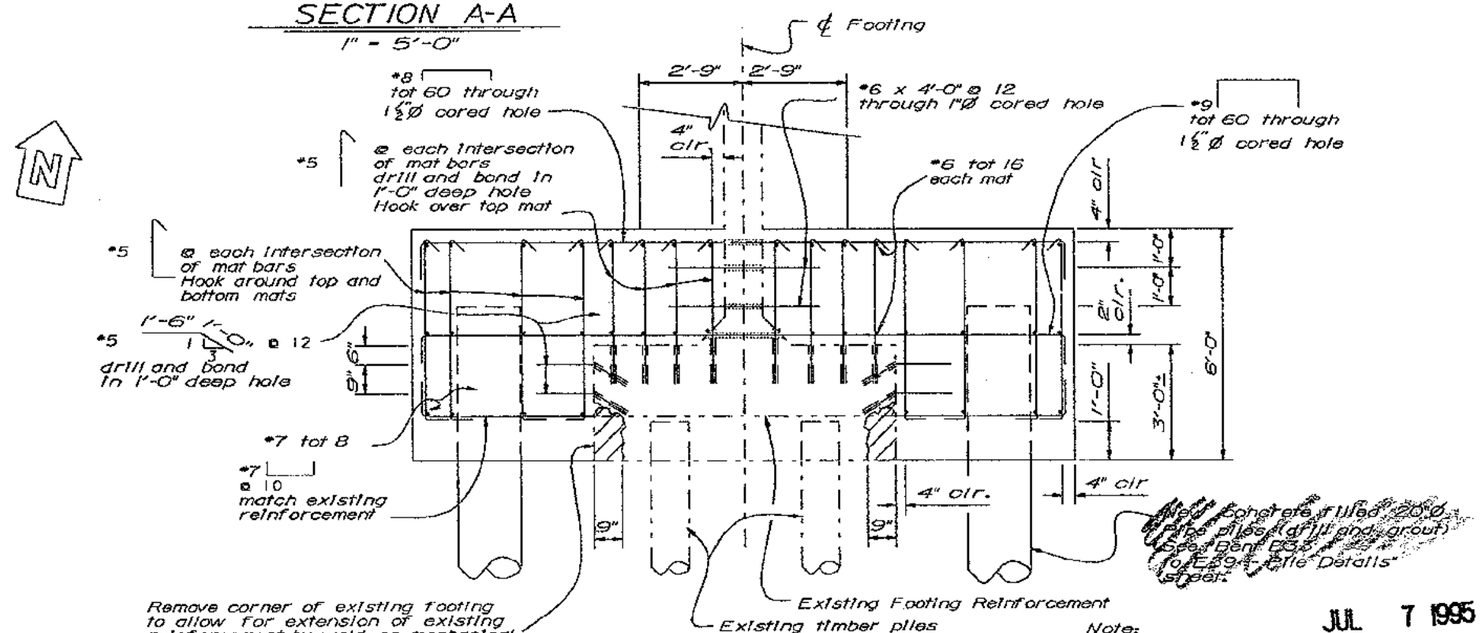

FOOTING REINFORCEMENT

½" = 1'-0"

JUL 7 1995

Note:
1. For new columns, see "Bent E34 & E35 - Bent Details" sheet.
2. Lap splices in mat steel not permitted. Splices must be mechanical or welded type.

SEISMIC RETROFIT PROJECT No. 614

SFOBB - BENT E33 TO E39 RETROFIT

DESIGN	BY Lian Duan	CHECKED John Fujimoto
DETAILS	BY Franci Dukeshire 3/93	CHECKED John Fujimoto
QUANTITIES	BY Kammy Bhala	CHECKED Simon Blank

ORIGINAL SCALE IN INCHES FOR REDUCED PLANS 0 1 2 3

STATE OF CALIFORNIA
DEPARTMENT OF TRANSPORTATION

DIVISION OF STRUCTURES
STRUCTURE DESIGN 2

CU 04
EA 043431

BRIDGE NO. 33-25
POST MILE 1.0-1.3

BENT E34 & E35
BENT LAYOUT

DISREGARD PRINTS BEARING EARLIER REVISION DATES

REVISION DATES (PRELIMINARY STAGE ONLY) 2/23/94 2/24/94

SHEET 58 OF 120

DIST	COUNTY	ROUTE	POST MILES TOTAL PROJECT	SHEET NO.	TOTAL SHEETS
04	ALA	80			

REGISTERED ENGINEER - CIVIL

REGISTERED PROFESSIONAL ENGINEER Gregory Evan Sloan No. 44950 Exp. 3-31-96 CIVIL STATE OF CALIFORNIA

PLANS APPROVAL DATE

The State of California or its officers or agents shall not be responsible for the accuracy or completeness of electronic copies of this plan sheet.

NOTE:
THE CONTRACTOR SHALL VERIFY ALL CONTROLLING FIELD DIMENSIONS BEFORE ORDERING OR FABRICATING ANY MATERIAL.

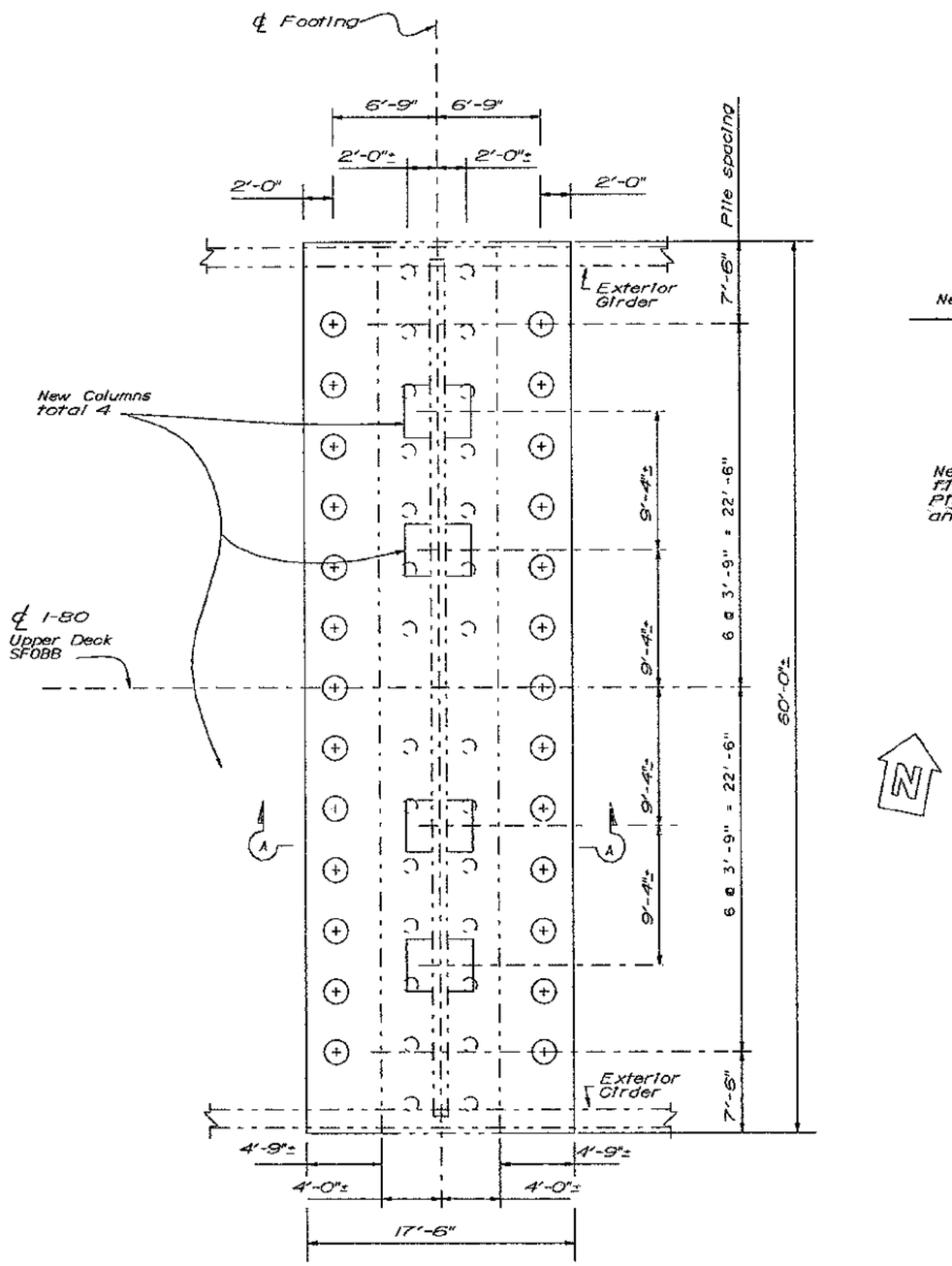

PLAN

1" = 5'-0"

○ Indicates existing timber piles

⊕ Indicates new concrete filled 20"Ø pipe piles (drill and grout)

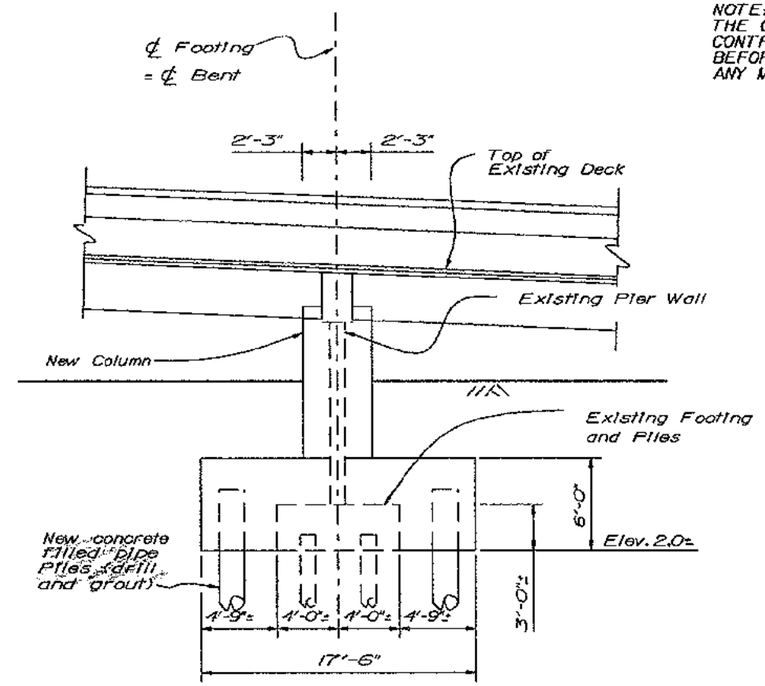

SECTION A-A

1" = 5'-0"

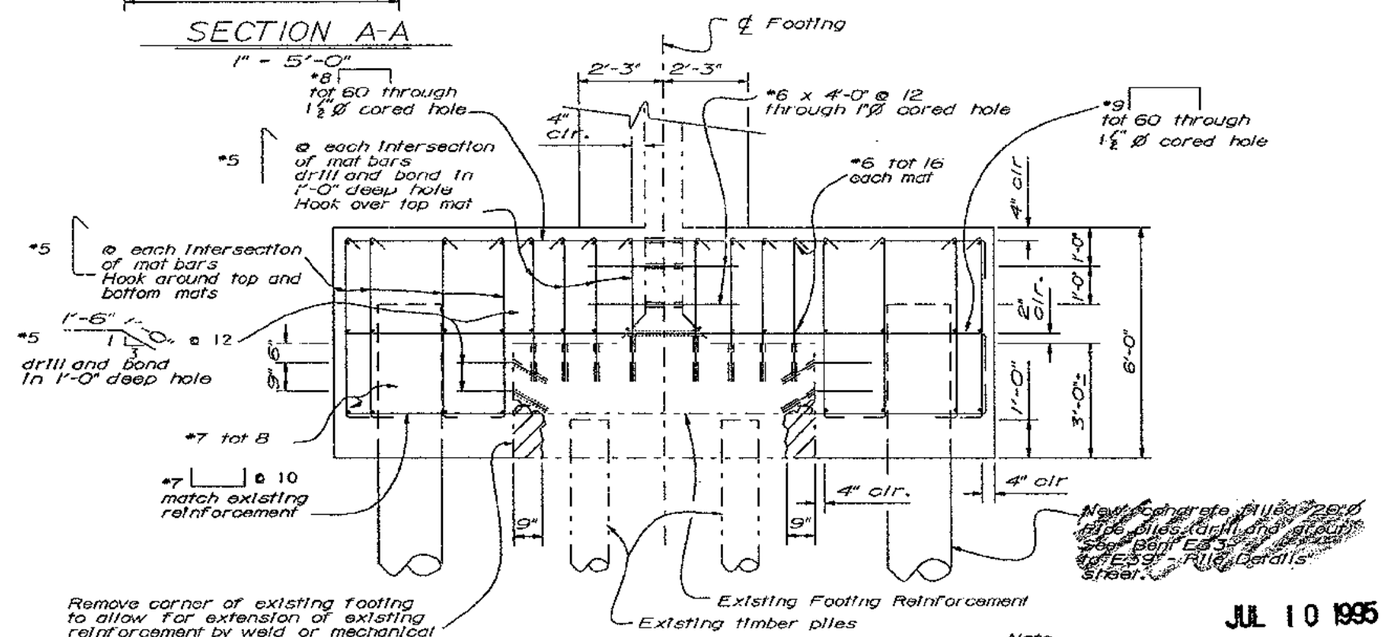

FOOTING REINFORCEMENT

½" = 1'-0"

JUL 10 1995

Note:

1. For new columns, see "Bent E36 to E38 - Bent Details" sheet.
2. Lap splices in mat steel not permitted. Splices must be mechanical or welded type.

DESIGN	BY Uan Duan	CHECKED John Fujimoto	
DETAILS	BY Franci Dukeshire 3/93	CHECKED John Fujimoto	
QUANTITIES	BY Kammy Bhala	CHECKED Simon Blank	

ORIGINAL SCALE IN INCHES FOR REDUCED PLANS 0 1 2 3

SEISMIC RETROFIT PROJECT No. 614

STATE OF CALIFORNIA DEPARTMENT OF TRANSPORTATION

DIVISION OF STRUCTURES STRUCTURE DESIGN 2

CU 04
EA 043431

BRIDGE NO. 33-25
POST MILE 1.0-1.3

SFOBB - BENT E33 TO E39 RETROFIT

BENT E36 TO E38

BENT LAYOUT

DISREGARD PRINTS BEARING EARLIER REVISION DATES →

REVISION DATES (PRELIMINARY STAGE ONLY): 2/23/94 2/24/94 3/11/94 2/28/95

SHEET 59 OF 120

DIST	COUNTY	ROUTE	POST MILES TOTAL PROJECT	SHEET NO.	TOTAL SHEETS
04	ALA	80			

REGISTERED ENGINEER - CIVIL

REGISTERED PROFESSIONAL ENGINEER Gregory Eron Slocum No. 44950 Exp. 3-31-96 CIVIL STATE OF CALIFORNIA

PLANS APPROVAL DATE

The State of California or its officers or agents shall not be responsible for the accuracy or completeness of electronic copies of this plan sheet.

NOTE:
THE CONTRACTOR SHALL VERIFY ALL CONTROLLING FIELD DIMENSIONS BEFORE ORDERING OR FABRICATING ANY MATERIAL.

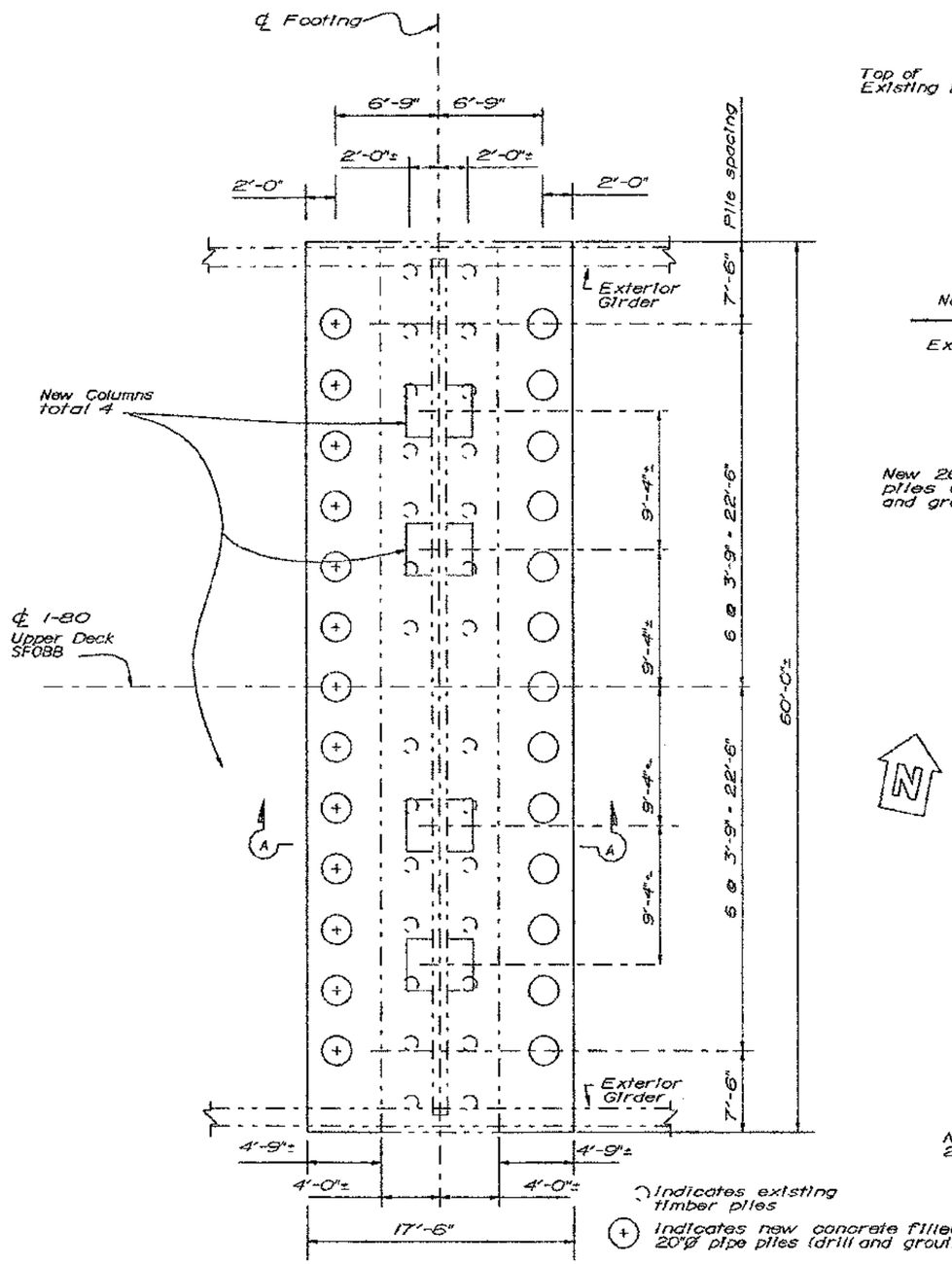

PLAN
1" = 5'-0"

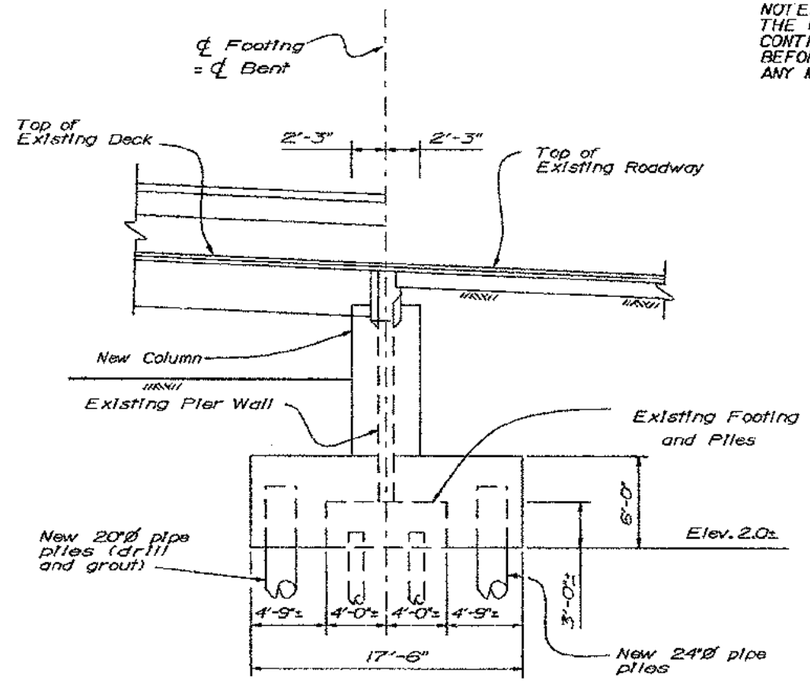

SECTION A-A
1" = 5'-0"

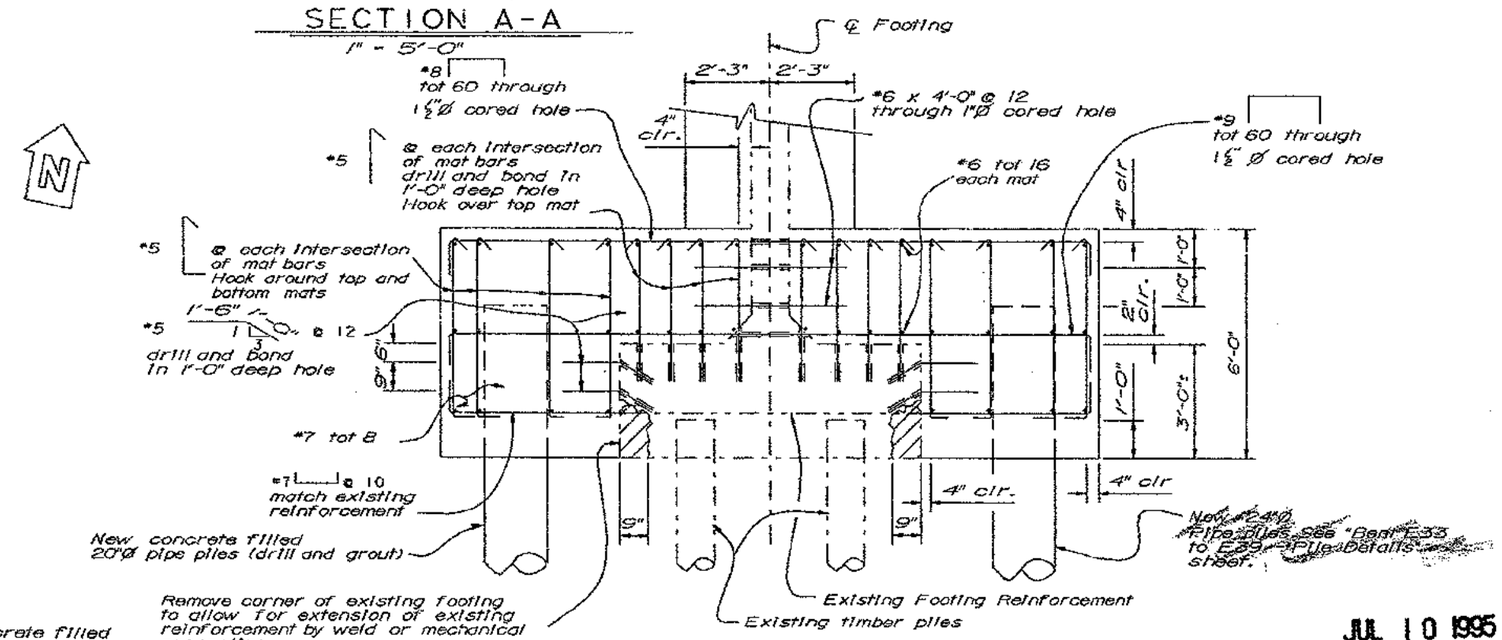

FOOTING REINFORCEMENT
½" = 1'-0"

JUL 10 1995

Note:
For new columns, see "Bent E39 - Bent Details" sheet.

DESIGN	BY Lian Duan	CHECKED John Fujimoto
DETAILS	BY Franci Dukeshire 3/93	CHECKED John Fujimoto
QUANTITIES	BY Kammy Bhala	CHECKED Simon Blank

ORIGINAL SCALE IN INCHES FOR REDUCED PLANS 0 1 2 3

SEISMIC RETROFIT PROJECT No. 614

STATE OF CALIFORNIA
DEPARTMENT OF TRANSPORTATION

DIVISION OF STRUCTURES
STRUCTURE DESIGN 2

BRIDGE NO. 33-25
POST MILE 1.0-1.3

CU 04
EA 043431

SFOBB - BENT E33 TO E39 RETROFIT

BENT E39

BENT LAYOUT

DISREGARD PRINTS BEARING EARLIER REVISION DATES

REVISION DATES (PRELIMINARY STAGE ONLY) 2/25/94 2/24/94 2/28/95

SHEET 60 OF 120

DIST	COUNTY	ROUTE	POST MILES TOTAL PROJECT	SHEET NO.	TOTAL SHEETS
04	ALA	80	1.0/1.3	98R1	157

REGISTERED ENGINEER - CIVIL

Registered Professional Engineer — Gregory Evan Slocum — No. 44950 — Exp. 3-31-98 — CIVIL — State of California

PLANS APPROVAL DATE

The State of California or its officers or agents shall not be responsible for the accuracy or completeness of electronic copies of this plan sheet.

NOTE:
THE CONTRACTOR SHALL VERIFY ALL CONTROLLING FIELD DIMENSIONS BEFORE ORDERING OR FABRICATING ANY MATERIAL.

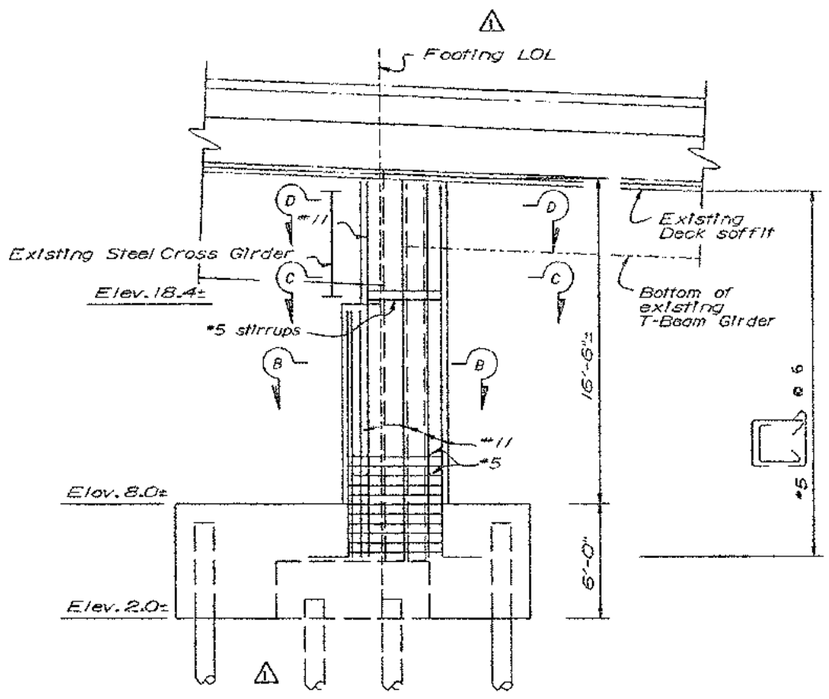

COLUMN "A" REINFORCEMENT

3/4" = 1'-0"

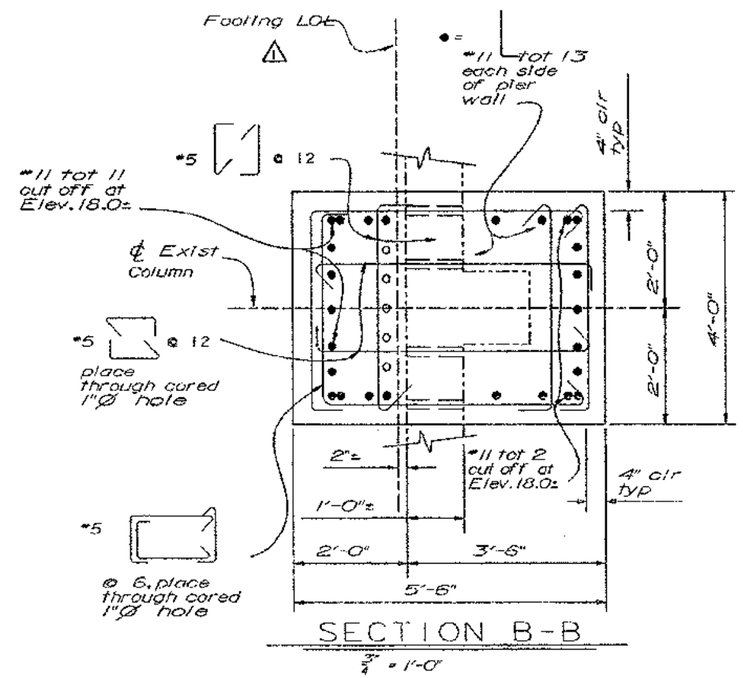

SECTION B-B

3/4" = 1'-0"

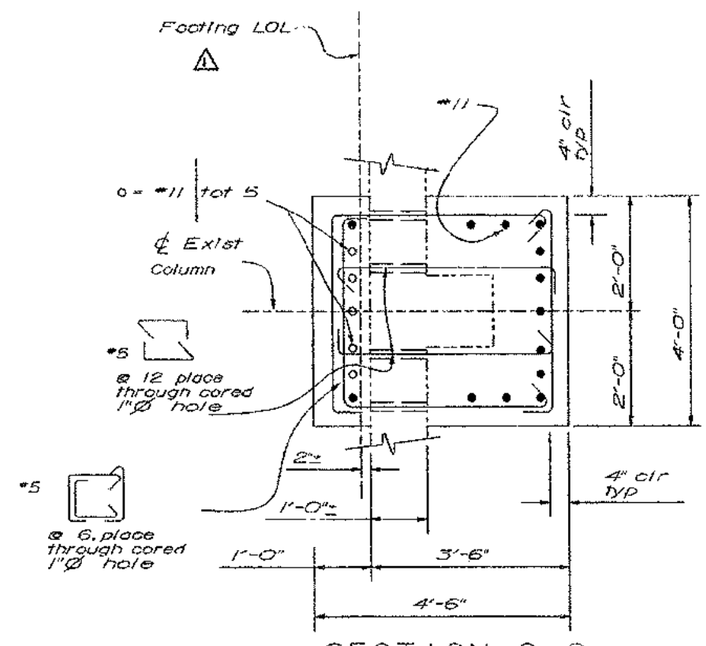

SECTION C-C

3/4" = 1'-0"

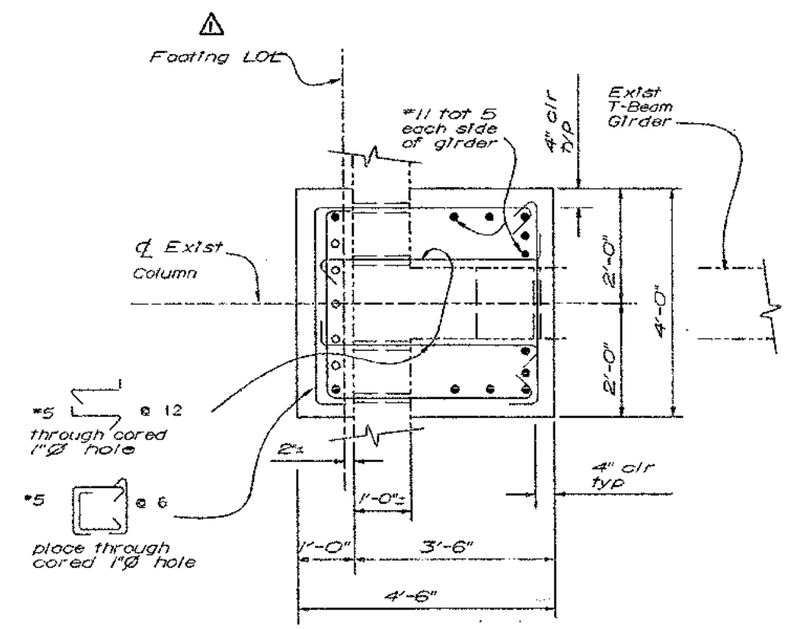

SECTION D-D

3/4" = 1'-0"

DEC 21 1995

Note:

1. For locations of Column A and details not shown, see "Bent E33 - Bent Layout" sheet.

MARK	DATE	DESCRIPTIONS	BY	CH'D
1	12/21/95	change footing LOL	GS	BB

REVISIONS

CONTRACT CHANGE ORDER NO.____
SHEET ___ OF ___

DESIGN	BY Van Duan	CHECKED John Fujimoto
DETAILS	BY Franci Dukeshire 3/93	CHECKED John Fujimoto
QUANTITIES	BY Kamny Bhola	CHECKED Simon Blank

ORIGINAL SCALE IN INCHES FOR REDUCED PLANS 0 1 2 3

SEISMIC RETROFIT PROJECT No. 614

STATE OF CALIFORNIA DEPARTMENT OF TRANSPORTATION

DIVISION OF STRUCTURES STRUCTURE DESIGN 2

CU 04
EA 043431

BRIDGE NO. 33-25
POST MILE 1.0-1.3

SFOBB - BENT E33 TO E39 RETROFIT

BENT E33

BENT DETAILS No. 1

DISREGARD PRINTS BEARING EARLIER REVISION DATES

REVISION DATES (PRELIMINARY STAGE ONLY) 1/24/94 2/25/94 2/24/94 4/26/94

SHEET 61 OF 120

DIST	COUNTY	ROUTE	POST MILES TOTAL PROJECT	SHEET NO.	TOTAL SHEETS
04	ALA	80	1.0/1.3	97R1	157

REGISTERED ENGINEER - CIVIL

PROFESSIONAL ENGINEER Gregory Evan Slocum No. 44950 Exp. 3-31-98 CIVIL STATE OF CALIFORNIA

PLANS APPROVAL DATE

The State of California or its officers or agents shall not be responsible for the accuracy or completeness of electronic copies of this plan sheet.

NOTE:
THE CONTRACTOR SHALL VERIFY ALL CONTROLLING FIELD DIMENSIONS BEFORE ORDERING OR FABRICATING ANY MATERIAL.

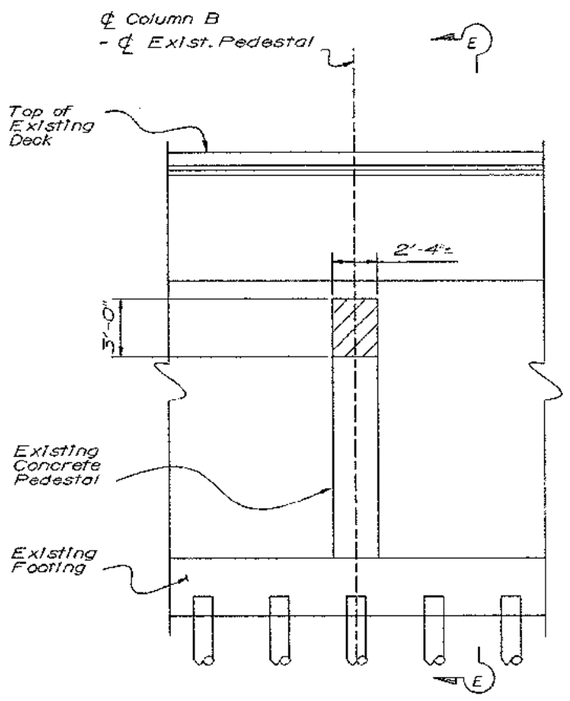

COLUMN "B" BENT E33 FRONT ELEVATION

1/4" = 1'-0"

(New construction not shown)

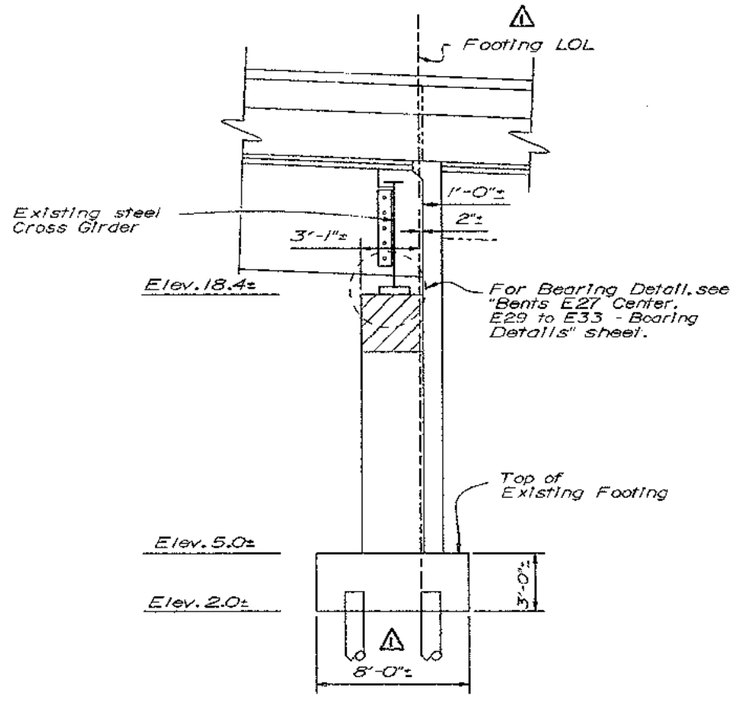

SECTION E-E

1/4" = 1'-0"

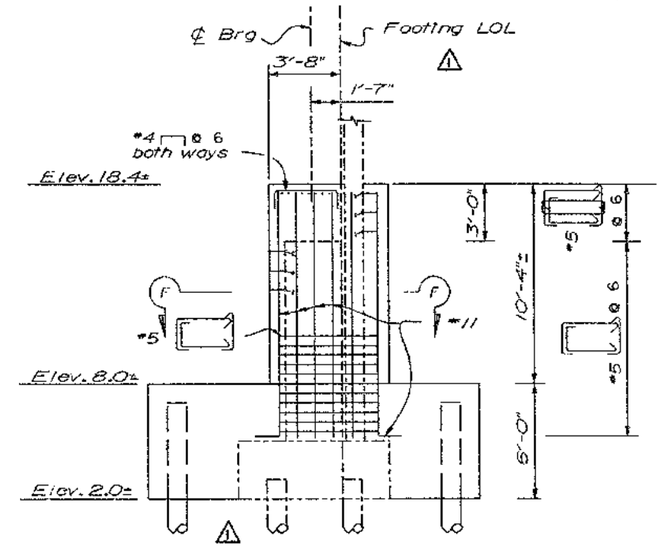

COLUMN "B" REINFORCEMENT

1/4" = 1'-0"

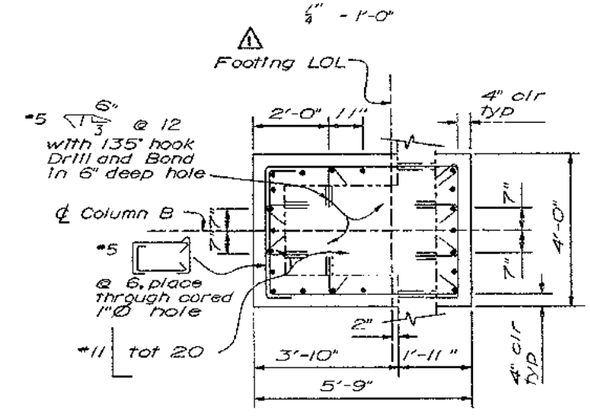

SECTION F-F

1/2" = 1'-0"

MARK	DATE	DESCRIPTIONS	BY	CH'D
1	12/21/95	change location of footing LOL	GS	BB

REVISIONS

CONTRACT CHANGE ORDER NO.____
SHEET ___ OF ___

DEC 21 1995

Note:

1. For locations of Column B and details not shown, see "Bent E33 - Bent Layout" sheet.

Indicates limits of concrete removal

DESIGN	BY Lion Duan	CHECKED John Fujimoto
DETAILS	BY Francl Dukeshire 3/93	CHECKED John Fujimoto
QUANTITIES	BY Kamny Bhalla	CHECKED Simon Blank

ORIGINAL SCALE IN INCHES FOR REDUCED PLANS 0 1 2 3

SEISMIC RETROFIT PROJECT No. 614

STATE OF CALIFORNIA DEPARTMENT OF TRANSPORTATION

DIVISION OF STRUCTURES STRUCTURE DESIGN 2

CU 04
EA 043431

BRIDGE NO. 33-25
POST MILE 1.0-1.3

SFOBB - BENT E33 TO E39 RETROFIT

BENT E33

BENT DETAILS No. 2

DISREGARD PRINTS BEARING EARLIER REVISION DATES

REVISION DATES (PRELIMINARY STAGE ONLY): 4/26/94 1/23/94 1/24/94 2/24/94

SHEET 62 OF 120

DIST	COUNTY	ROUTE	POST MILES TOTAL PROJECT	SHEET NO.	TOTAL SHEETS
04	ALA	80			

REGISTERED ENGINEER - CIVIL

PLANS APPROVAL DATE

REGISTERED PROFESSIONAL ENGINEER Gregory Evan Slocum No. 44950 Exp. 3-31-98 CIVIL STATE OF CALIFORNIA

The State of California or its officers or agents shall not be responsible for the accuracy or completeness of electronic copies of this plan sheet.

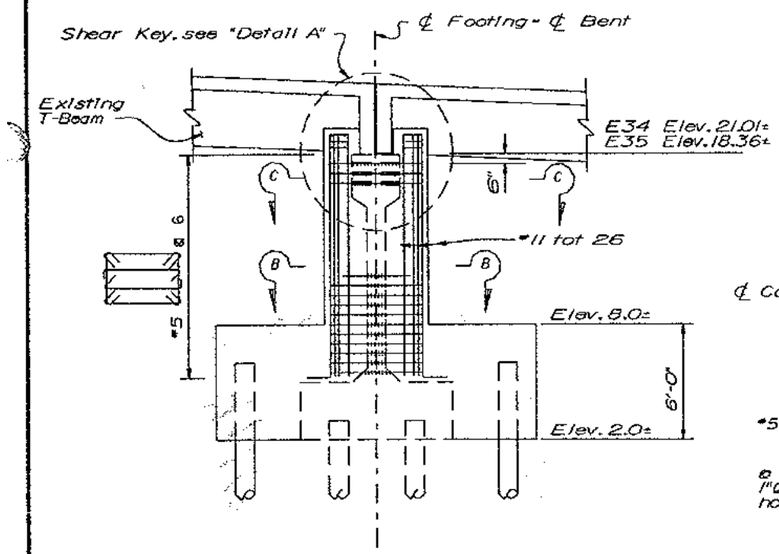

COLUMN REINFORCEMENT

3/4" = 1'-0"

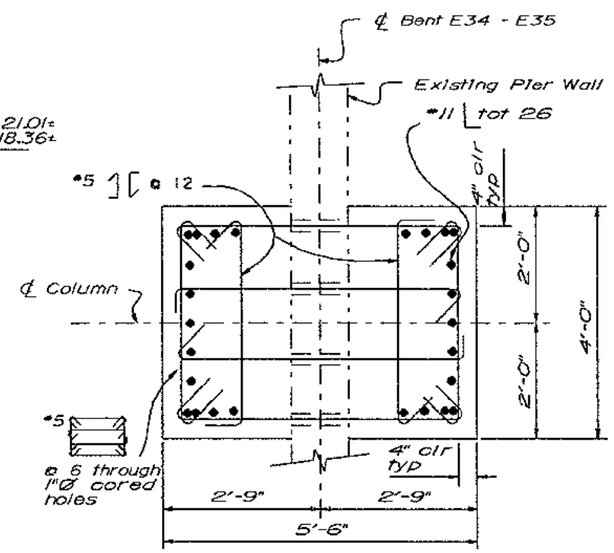

SECTION B-B

3/4" = 1'-0"

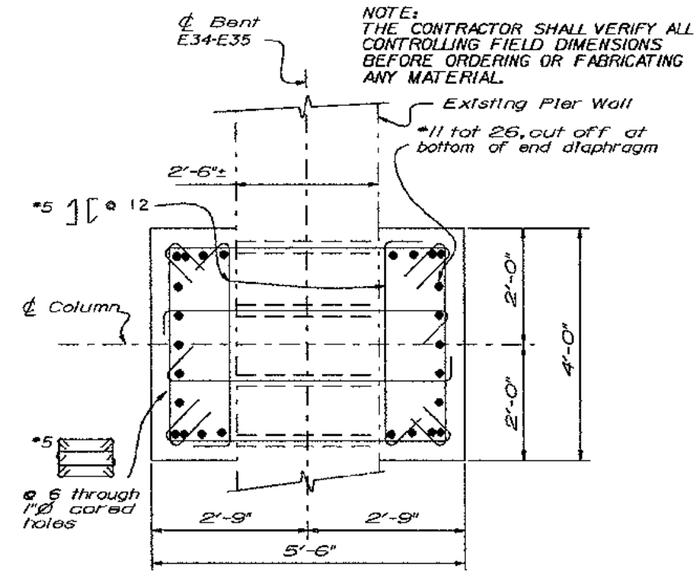

SECTION C-C

3/4" = 1'-0"

NOTE:
THE CONTRACTOR SHALL VERIFY ALL CONTROLLING FIELD DIMENSIONS BEFORE ORDERING OR FABRICATING ANY MATERIAL.

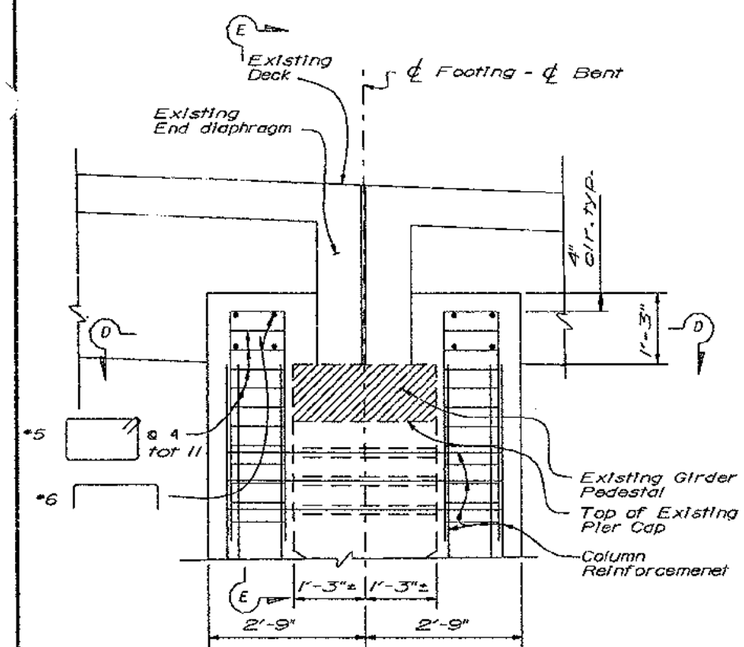

DETAIL A

3/4" = 1'-0"

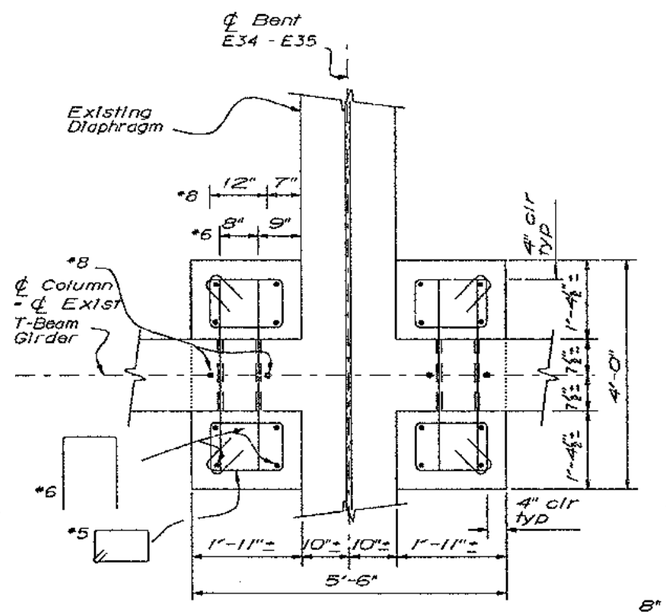

SECTION D-D

3/4" = 1'-0"

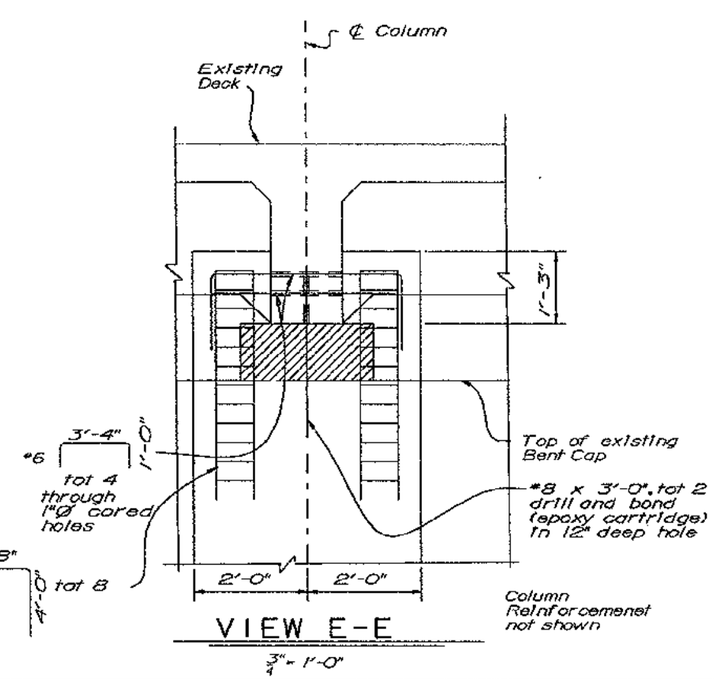

VIEW E-E

3/4" = 1'-0"

Column Reinforcemenet not shown

Note:

For location of column and details not shown, see "Bent E34 & E35 - Bent Layout" sheet.

JUL 10 1995

	BY	CHECKED
DESIGN	Van Duan	John Fujimoto
DETAILS	Francl Dukeshire 3/93	John Fujimoto
QUANTITIES	Kammy Bhala	Simon Blank

ORIGINAL SCALE IN INCHES FOR REDUCED PLANS 0 1 2 3

SEISMIC RETROFIT PROJECT No. 614

STATE OF CALIFORNIA DEPARTMENT OF TRANSPORTATION

DIVISION OF STRUCTURES STRUCTURE DESIGN 2

CU 04
EA 043431

BRIDGE NO. 33-25

POST MILE 10-13

DISREGARD PRINTS BEARING EARLIER REVISION DATES

REVISION DATES (PRELIMINARY STAGE ONLY) 1/18/94 1/24/94 2/22/94 2/23/94

SFOBB - BENT E33 TO E39 RETROFIT

BENT E34 & E35

BENT DETAILS

SHEET 63 OF 120

DIST	COUNTY	ROUTE	POST MILES TOTAL PROJECT	SHEET NO.	TOTAL SHEETS
04	ALA	80			

REGISTERED ENGINEER - CIVIL

PLANS APPROVAL DATE

REGISTERED PROFESSIONAL ENGINEER Gregory Evan Slocum No. 44950 Exp. 3-31-98 CIVIL STATE OF CALIFORNIA

The State of California or its officers or agents shall not be responsible for the accuracy or completeness of electronic copies of this plan sheet.

NOTE:
THE CONTRACTOR SHALL VERIFY ALL CONTROLLING FIELD DIMENSIONS BEFORE ORDERING OR FABRICATING ANY MATERIAL.

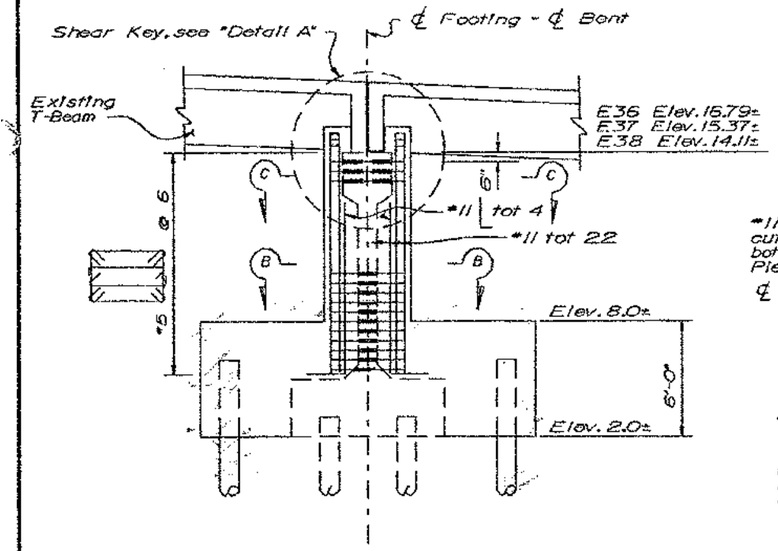

COLUMN REINFORCEMENT
1/4" = 1'-0"

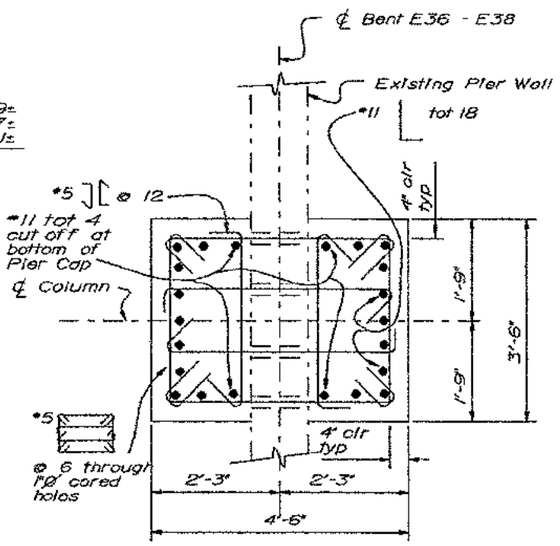

SECTION B-B
3/4" = 1'-0"

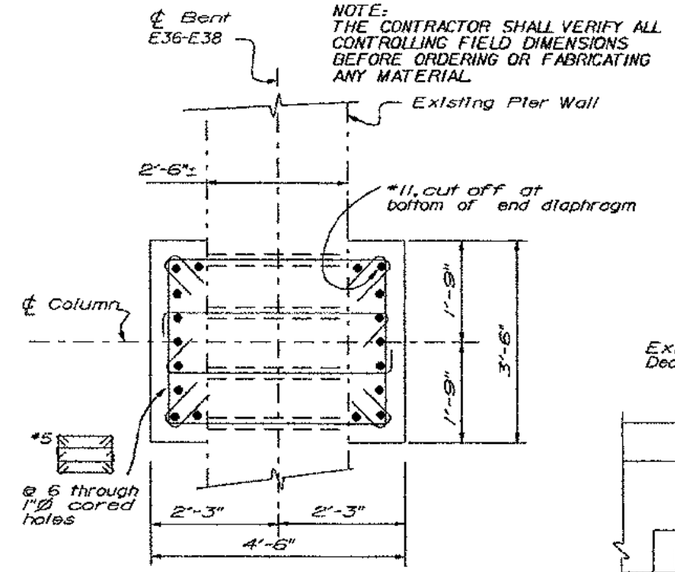

SECTION C-C
3/4" = 1'-0"

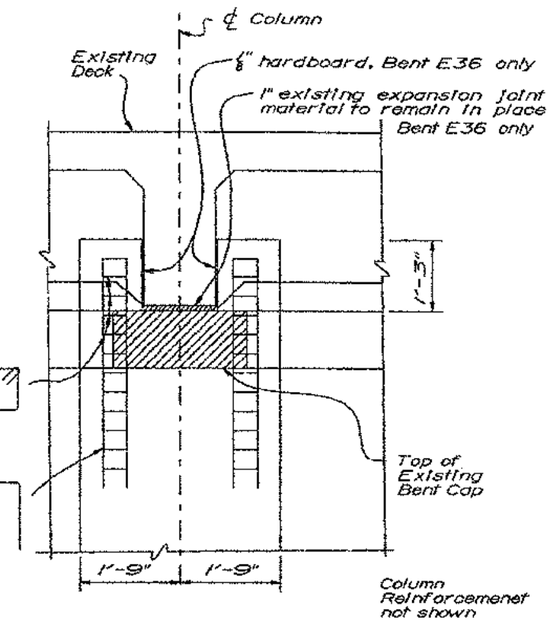

VIEW F-F
3/4" = 1'-0"

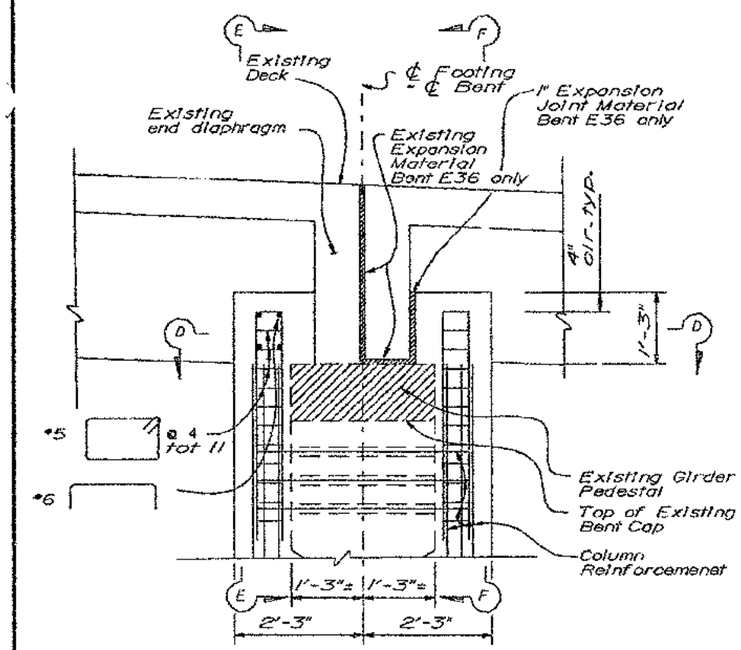

DETAIL A
3/4" = 1'-0"

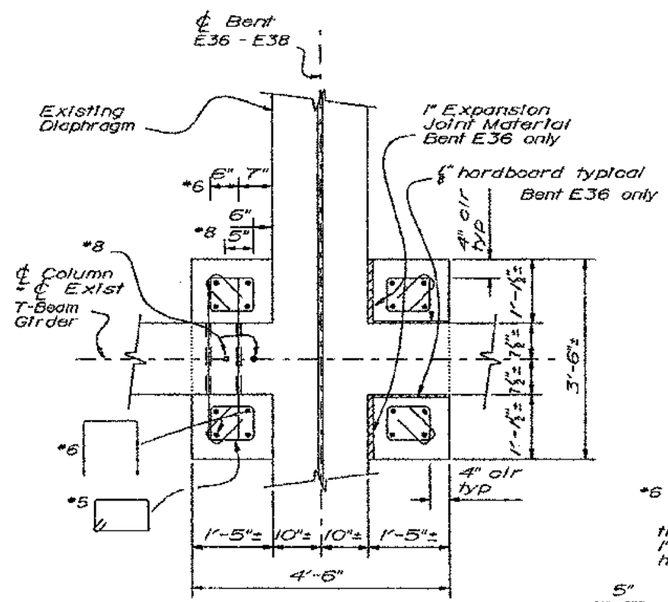

SECTION D-D
3/4" = 1'-0"

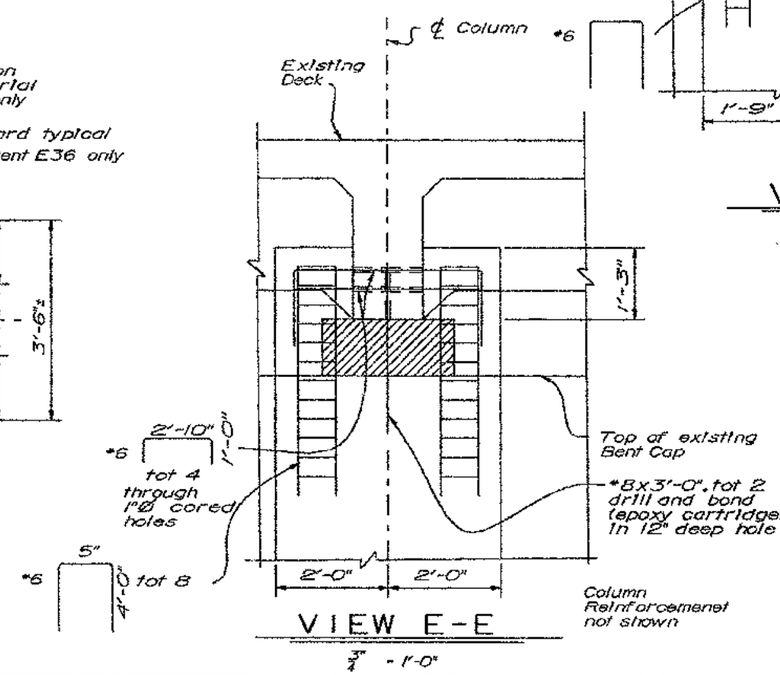

VIEW E-E
3/4" = 1'-0"

Note:
For location of column and details not shown, see "Bent E36 to E38 - Bent Layout" sheet.

JUL 10 1995

DESIGN	BY Lian Duan	CHECKED John Fujimoto	
DETAILS	BY Franci Dukeshire 3/93	CHECKED John Fujimoto	
QUANTITIES	BY Kammy Bhola	CHECKED Simon Blank	

ORIGINAL SCALE IN INCHES FOR REDUCED PLANS 0 1 2 3

SEISMIC RETROFIT PROJECT No. 614

STATE OF CALIFORNIA
DEPARTMENT OF TRANSPORTATION

DIVISION OF STRUCTURES
STRUCTURE DESIGN 2

BRIDGE NO. 33-25
POST MILE 1.0-1.3

CU 04
EA 043431

DISREGARD PRINTS BEARING EARLIER REVISION DATES

REVISION DATES (PRELIMINARY STAGE ONLY) 1/18/94 1/24/94 2/28/94 2/23/94 2/24/94

SHEET 64 OF 120

SFOBB - BENT E33 TO E39 RETROFIT

BENT E36 TO E38

BENT DETAILS

DIST	COUNTY	ROUTE	POST MILES TOTAL PROJECT	SHEET NO.	TOTAL SHEETS
04	ALA	80			

REGISTERED ENGINEER - CIVIL

PLANS APPROVAL DATE

REGISTERED PROFESSIONAL ENGINEER Gregory Evan Slocum No. 44950 Exp. 3-31-98 CIVIL STATE OF CALIFORNIA

The State of California or its officers or agents shall not be responsible for the accuracy or completeness of electronic copies of this plan sheet.

NOTE:
THE CONTRACTOR SHALL VERIFY ALL CONTROLLING FIELD DIMENSIONS BEFORE ORDERING OR FABRICATING ANY MATERIAL.

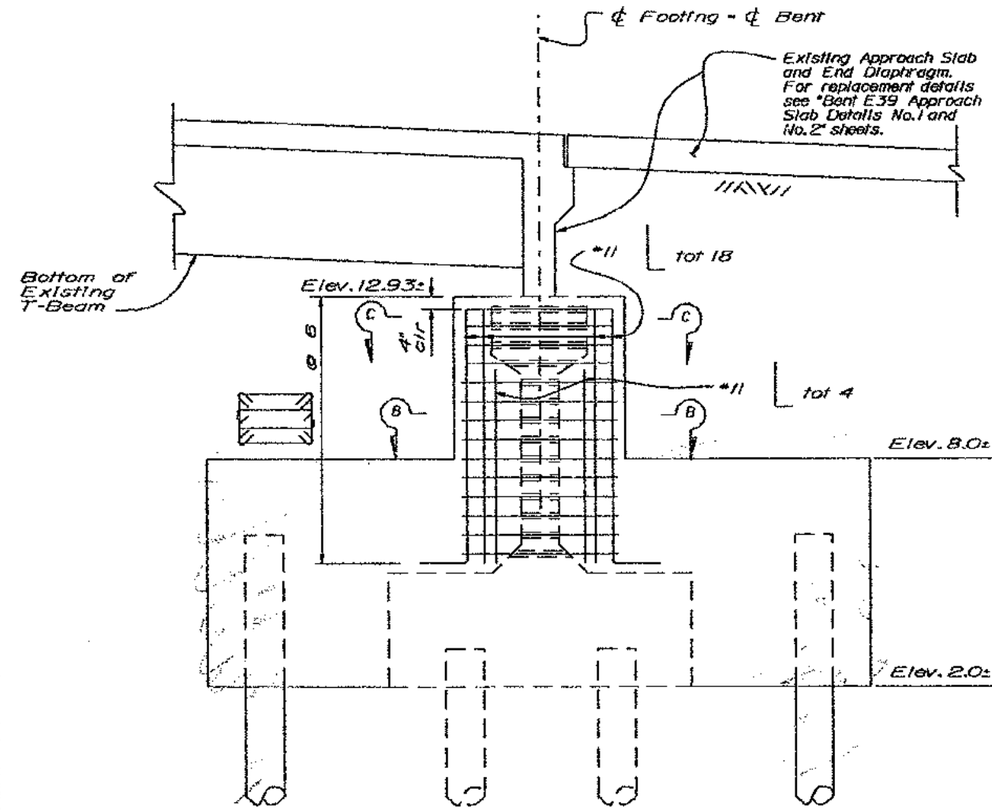

COLUMN REINFORCEMENT

1/2" = 1'-0"

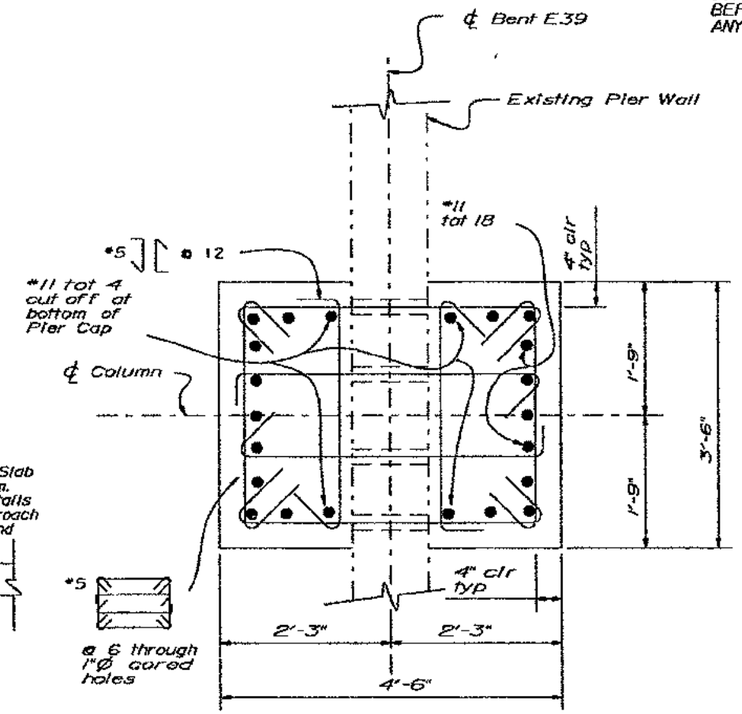

SECTION B-B

1" = 1'-0"

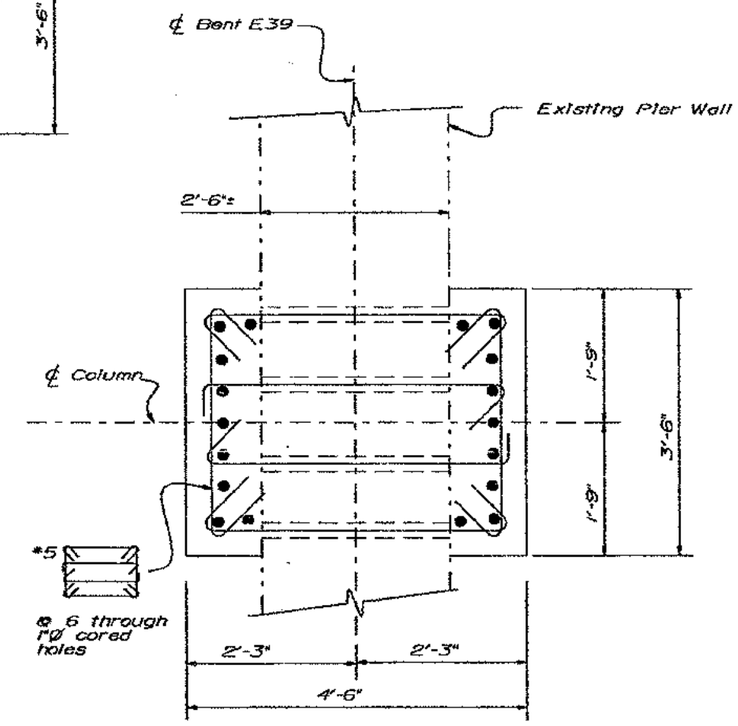

SECTION C-C

1" = 1'-0"

JUL 10 1995

Note:
For location of column and details not shown, see "Bent E39 - Bent Layout" sheet.

DESIGN	BY Lian Duan	CHECKED John Fujimoto	
DETAILS	BY Franci Dukeshire 3/93	CHECKED John Fujimoto	
QUANTITIES	BY Kammy Bhala	CHECKED Simon Blank	

ORIGINAL SCALE IN INCHES FOR REDUCED PLANS 0 1 2 3

SEISMIC RETROFIT PROJECT No. 614

STATE OF CALIFORNIA
DEPARTMENT OF TRANSPORTATION

DIVISION OF STRUCTURES
STRUCTURE DESIGN 2

CU 04
EA 043431

BRIDGE NO. 33-25
POST MILE 1.0-1.3

SFOBB - BENT E33 TO E39 RETROFIT

BENT E39

BENT DETAILS

DISREGARD PRINTS BEARING EARLIER REVISION DATES

REVISION DATES (PRELIMINARY STAGE ONLY) 8/24/94

SHEET 65 OF 120

DIST.	COUNTY	ROUTE	POST MILES TOTAL PROJECT	SHEET NO.	TOTAL SHEETS
04	ALA	80			

REGISTERED ENGINEER - CIVIL

REGISTERED PROFESSIONAL ENGINEER
Gregory Evan Steeves
No. 44950
Exp. 3-31-98
CIVIL
STATE OF CALIFORNIA

PLANS APPROVAL DATE

The State of California or its officers or agents shall not be responsible for the accuracy or completeness of electronic copies of this plan sheet.

NOTE:
THE CONTRACTOR SHALL VERIFY ALL CONTROLLING FIELD DIMENSIONS BEFORE ORDERING OR FABRICATING ANY MATERIAL.

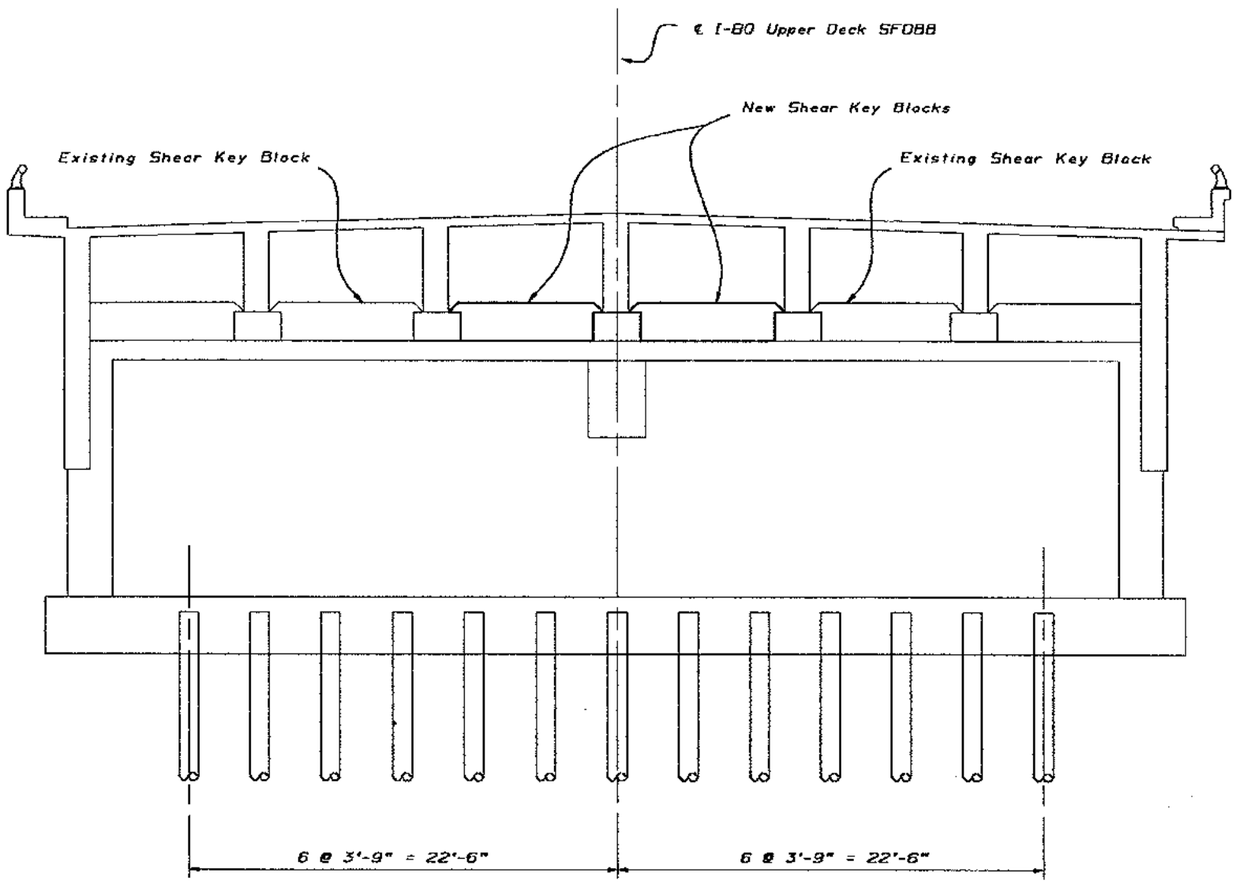

ELEVATION
BENT E34 THROUGH E38
$\frac{1}{4}$" = 1'-0"

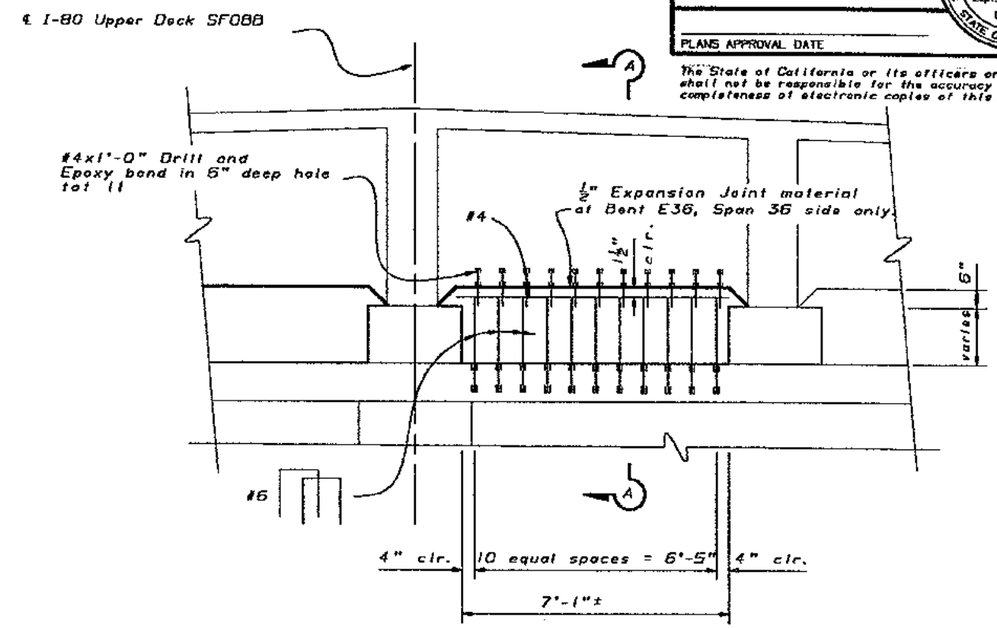

SHEAR KEY BLOCK DETAIL
BENT E34 THROUGH E38
½" = 1'-0"

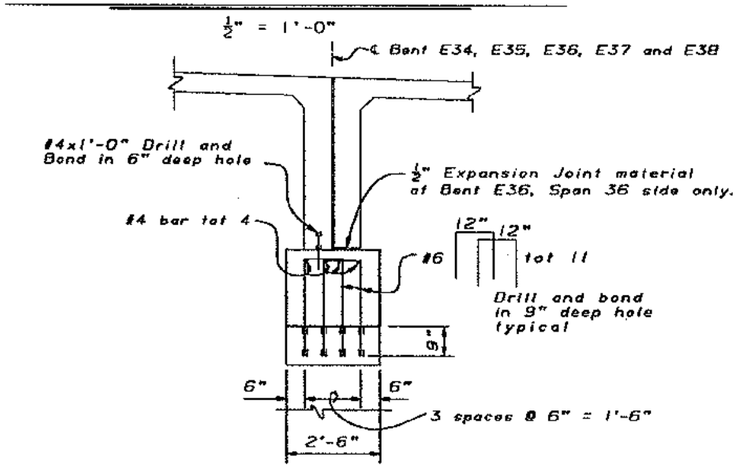

SECTION A-A
½" = 1'-0"

MAR 22 1995

DESIGN	BY Lian Duan	CHECKED John Fujimoto	
DETAILS	BY Franci Dukeshire 8/93	CHECKED John Fujimoto	
QUANTITIES	BY various	CHECKED Simon Blank	

SEISMIC RETROFIT PROJECT No. 614

STATE OF CALIFORNIA
DEPARTMENT OF TRANSPORTATION

DIVISION OF STRUCTURES
STRUCTURE DESIGN 2

BRIDGE NO. 33-25
POST MILE 1.0-1.3

SFOBB - BENT E33 TO E39 RETROFIT

BENT E34 TO E38

TRANSVERSE SHEAR KEYS

CU 04
EA 043431

DISREGARD PRINTS BEARING EARLIER REVISION DATES

REVISION DATES (PRELIMINARY STAGE ONLY): 1/24/94, 2/22/94, 4/26/94, 11/30/93

SHEET 66 OF 120

ORIGINAL SCALE IN INCHES FOR REDUCED PLANS 0 1 2 3

05 050 2158 (CADD 4/89)

DIST.	COUNTY	ROUTE	POST MILES TOTAL PROJECT	SHEET NO.	TOTAL SHEETS
04	Ala	80		104R1	

REGISTERED ENGINEER - CIVIL

REGISTERED PROFESSIONAL ENGINEER Gregory Slocum No. 44950 Exp. 3-31-98 CIVIL STATE OF CALIFORNIA

PLANS APPROVAL DATE

The State of California or its officers or agents shall not be responsible for the accuracy or completeness of electronic copies of this plan sheet.

NOTE:
THE CONTRACTOR SHALL VERIFY ALL CONTROLLING FIELD DIMENSIONS BEFORE ORDERING OR FABRICATING ANY MATERIAL.

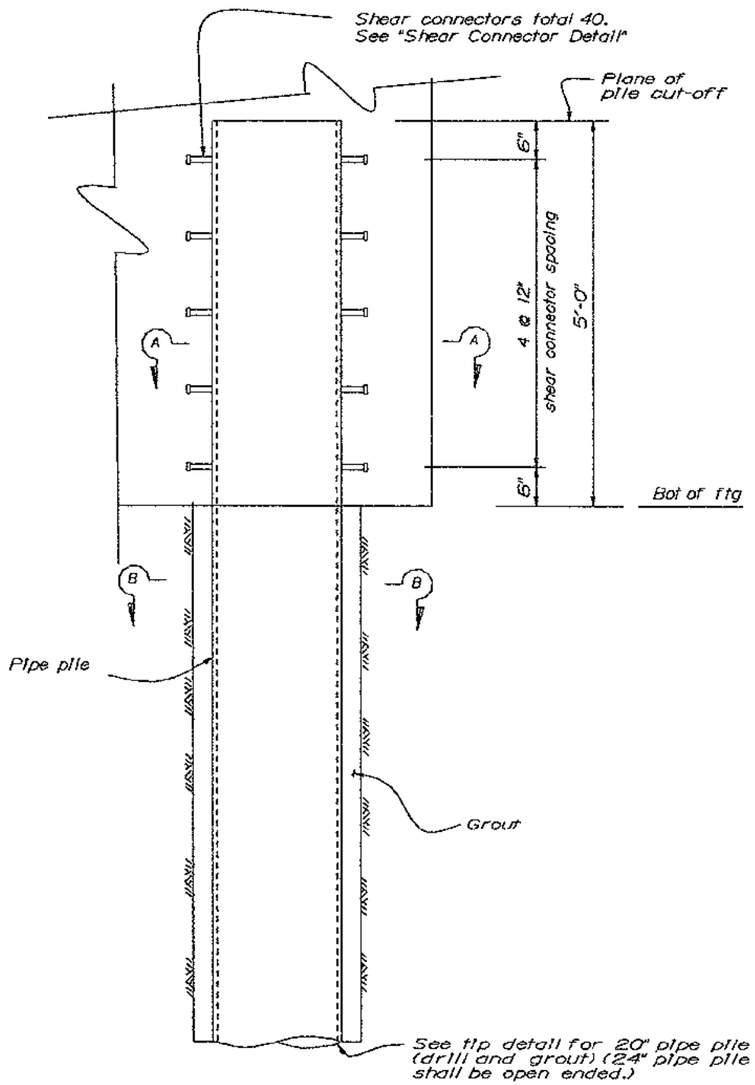

FOOTING ELEVATION
20" PIPE PILE (DRILL AND GROUT) SHOWN

1" = 1'-0"

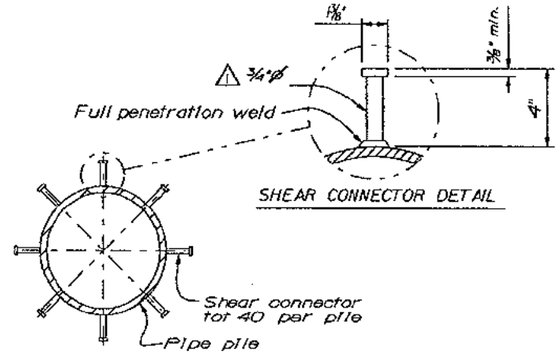

SHEAR CONNECTOR DETAIL

SECTION A-A

No Scale

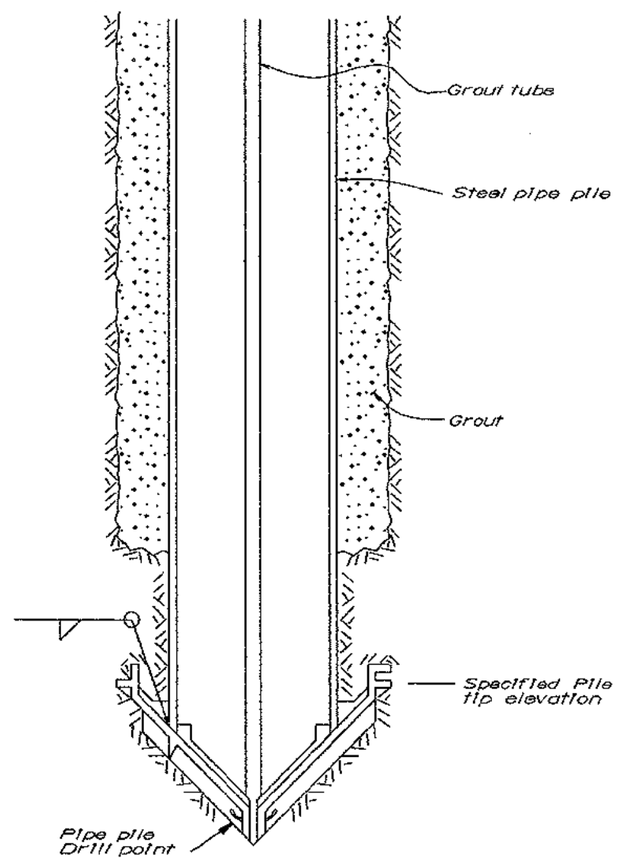

TIP DETAIL FOR 20" PIPE PILE
(DRILL AND GROUT)

No Scale

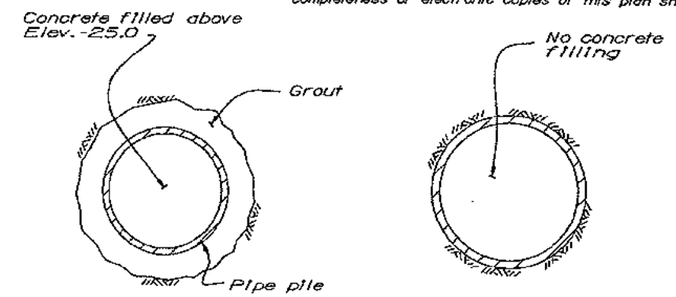

20" PIPE PILE (DRILL & GROUT) 24" PIPE PILE

SECTION B-B

No Scale

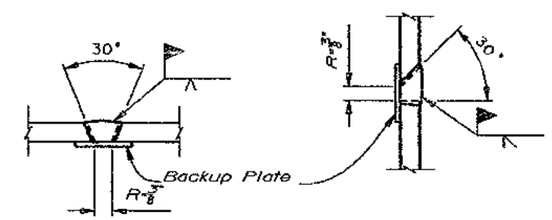

SINGLE VEE-GROOVE SINGLE BEVEL-GROOVE

PILE WELDING DETAIL-BUTT JOINTS

Welding Notes:

1. Single Vee-Groove permitted for all positions.
2. Single Bevel-Groove permitted for horizontal joints only.
3. All materials, workmanship and joint details shall conform to Standard Specifications 49-5.02.

MARK	DATE	DESCRIPTIONS	BY	CH'D
1	8/16/95	reduce diameter	GS	BB

REVISIONS

NOV 16 1995

CONTRACT CHANGE ORDER NO.____
SHEET ____ OF ____

Note:
1. For Footing details not shown, see "Bent E33 to E39 Bent Layout" sheets.

DESIGN	BY Uan Duan	CHECKED	John Fujimoto
DETAILS	BY Francl Dukeshire 11-93	CHECKED	Uan Duan
QUANTITIES	BY Kammy Bhola	CHECKED	Simon Blank

SEISMIC RETROFIT PROJECT No. 614

STATE OF CALIFORNIA
DEPARTMENT OF TRANSPORTATION

DIVISION OF STRUCTURES
STRUCTURE DESIGN 2

BRIDGE NO. 33-25
POST MILE 1.0-1.3

SFOBB - BENT E33 TO E39 RETROFIT

BENT E33 TO E39
PILE DETAILS

DS OSD 8/39 (CADD 4/89)

ORIGINAL SCALE IN INCHES FOR REDUCED PLANS 0 1 2 3

CU 04
EA 043431

DISREGARD PRINTS BEARING EARLIER REVISION DATES

REVISION DATES (PRELIMINARY STAGE ONLY) 2/28/94 2/28/95 1/24/94 2/28/94

SHEET 67 OF 120

DIST.	COUNTY	ROUTE	POST MILES TOTAL PROJECT	SHEET NO.	TOTAL SHEETS
04	Ala	80			

REGISTERED ENGINEER - CIVIL

REGISTERED PROFESSIONAL ENGINEER Gregory Evan Slocum No. 44950 Exp. 3-31-98 CIVIL STATE OF CALIFORNIA

PLANS APPROVAL DATE

The State of California or its officers or agents shall not be responsible for the accuracy or completeness of electronic copies of this plan sheet.

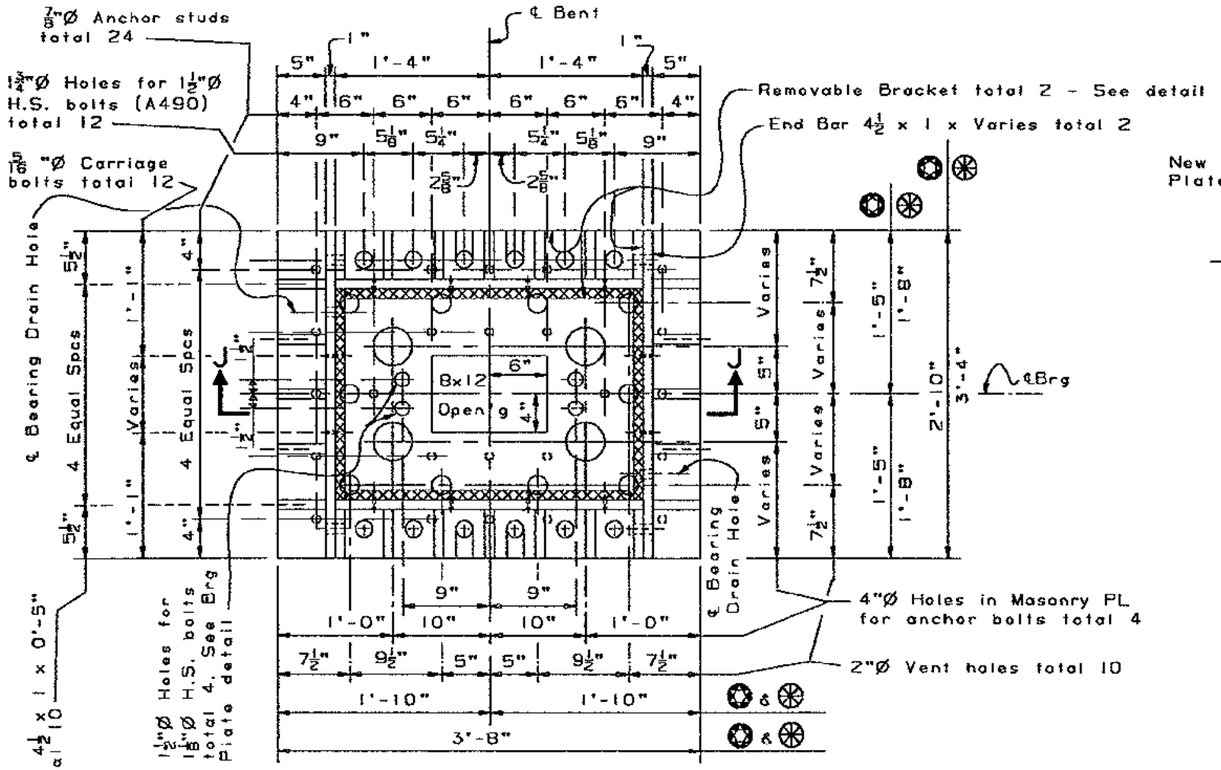

PLAN - MASONRY PLATE ASSEMBLY

1 1/2" = 1'-0"

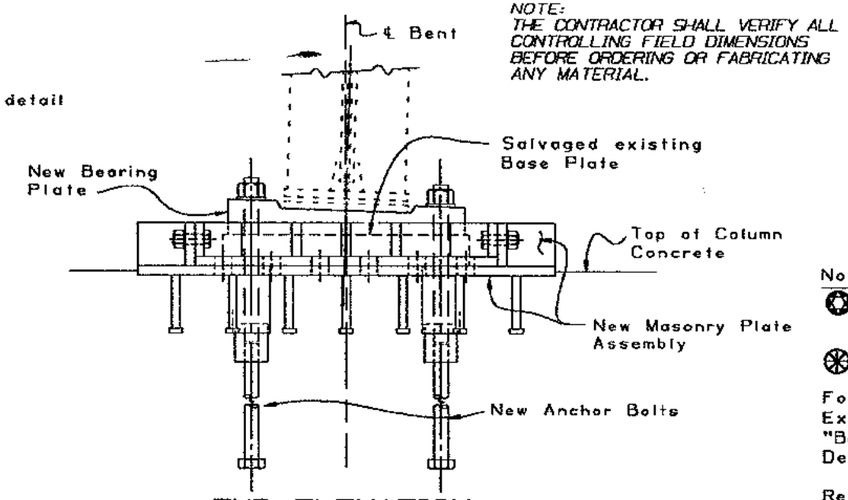

END ELEVATION

1 1/2" = 1'-0"

NOTE:
THE CONTRACTOR SHALL VERIFY ALL CONTROLLING FIELD DIMENSIONS BEFORE ORDERING OR FABRICATING ANY MATERIAL.

Notes

Indicates dimensions at Bent E24,E25, E26 Lt & E27

Indicates Dimensions at Bent E26 Rt

For Anchor Bolt, New Bearing Plate and Existing Base Plate modifications see "Bent E24 to E27 Lt & Rt Col/ Bearing Details No. 2" sheet

Remove and grind smooth at numerous locations bolts, plates and angles that have been attached to existing bearings, masonry plates and etc. by previous modifications

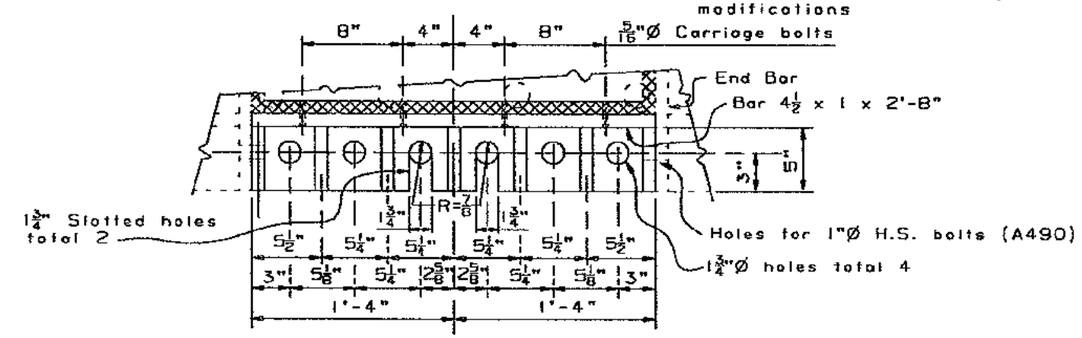

PLAN

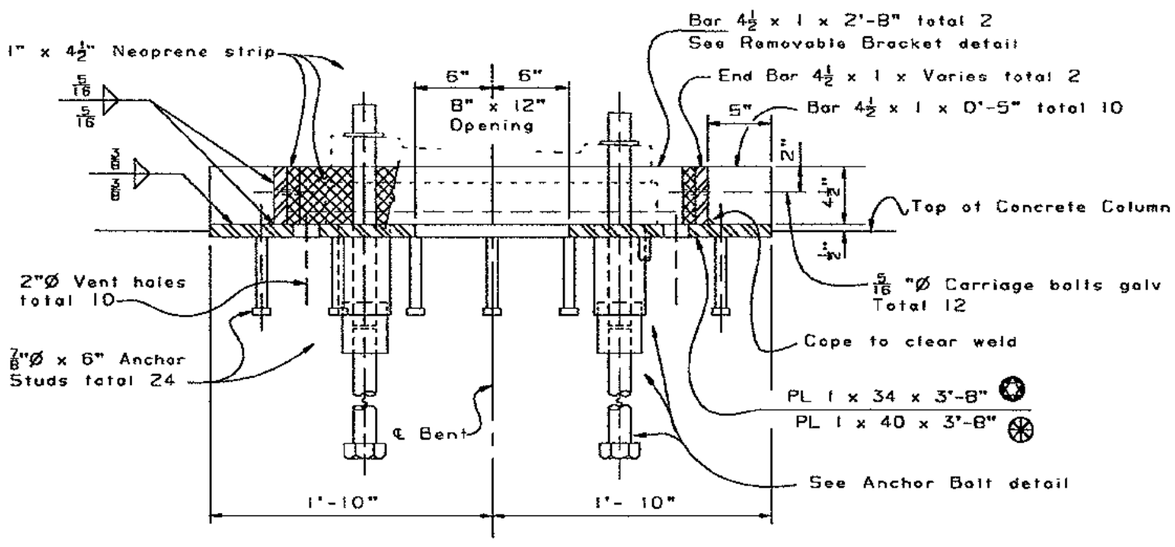

SECTION J-J

2" = 1'-0"

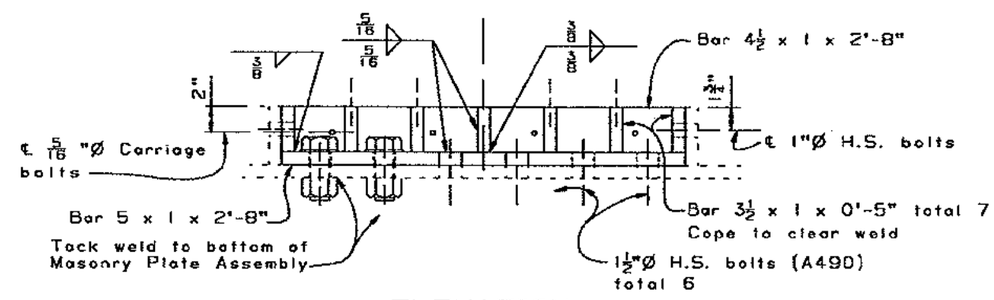

ELEVATION

REMOVABLE BRACKET DETAIL

2" = 1'-0"

MAR 2 2 1995

DESIGN	BY R. E. Bateman 10-93	CHECKED Shawn Sun	
DETAILS	BY K-C-B 11-93	CHECKED Shawn Sun	
QUANTITIES	BY R. E. Bateman	CHECKED Mark Reno	

ORIGINAL SCALE IN INCHES FOR REDUCED PLANS 0 1 2 3

SEISMIC RETROFIT PROJECT No. 614

STATE OF CALIFORNIA DEPARTMENT OF TRANSPORTATION

DIVISION OF STRUCTURES STRUCTURE DESIGN 2

BRIDGE NO. 33-25

POST MILE 1.0-1.3

CU 04
EA 043431

SFOBB - BENT E23 TO E39 RETROFIT

BENT E24 TO E27 LT & RT COL.

BEARING DETAILS NO. 1

DISREGARD PRINTS BEARING EARLIER REVISION DATES

REVISION DATES (PRELIMINARY STAGE ONLY) 11-22-93 11-30-93 11-30-93 12-20-93 06-06-94 4-28-94 5-02-94

SHEET 68 OF 120

05 050 2450 (CADD 4/89)

DIST.	COUNTY	ROUTE	POST MILES TOTAL PROJECT	SHEET NO.	TOTAL SHEETS
04	Ala	80			

REGISTERED ENGINEER - CIVIL

REGISTERED PROFESSIONAL ENGINEER Gregory Evan Slocum No. 44950 Exp. 3-31-98 CIVIL STATE OF CALIFORNIA

PLANS APPROVAL DATE

The State of California or its officers or agents shall not be responsible for the accuracy or completeness of electronic copies of this plan sheet.

NOTE:
THE CONTRACTOR SHALL VERIFY ALL CONTROLLING FIELD DIMENSIONS BEFORE ORDERING OR FABRICATING ANY MATERIAL.

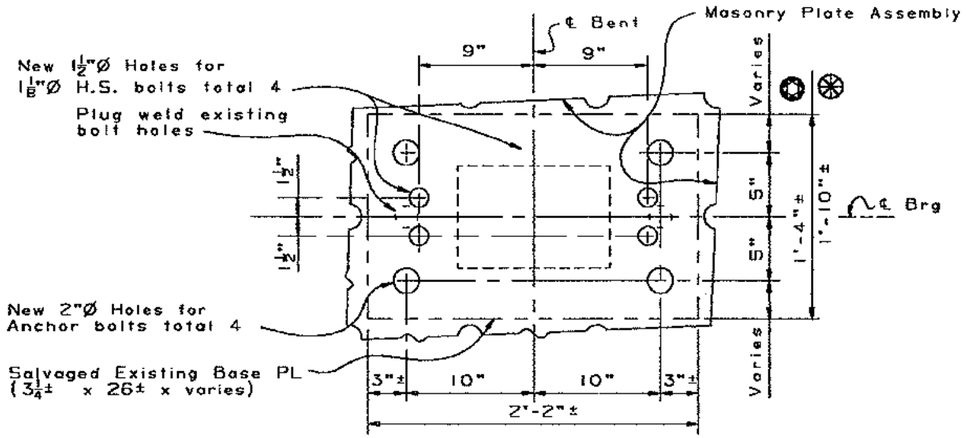

PLAN - BASE PLATE

2" = 1'-0"

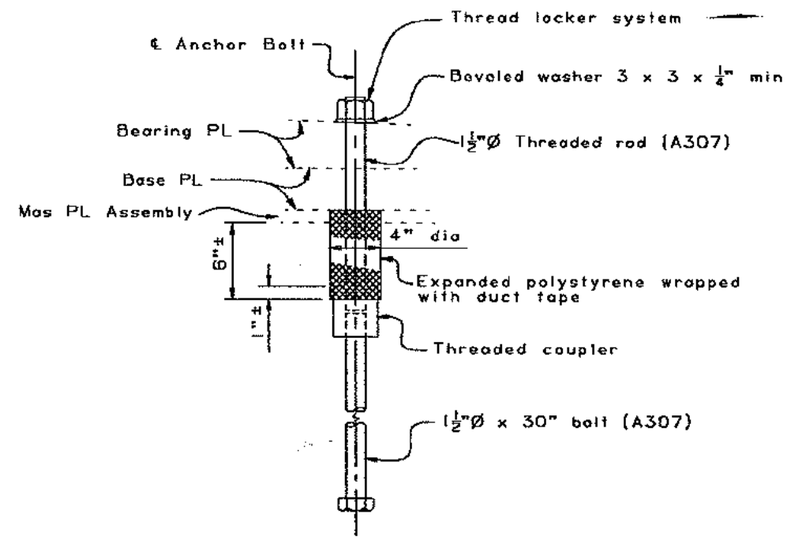

ANCHOR BOLT DETAIL

2" = 1'-0"

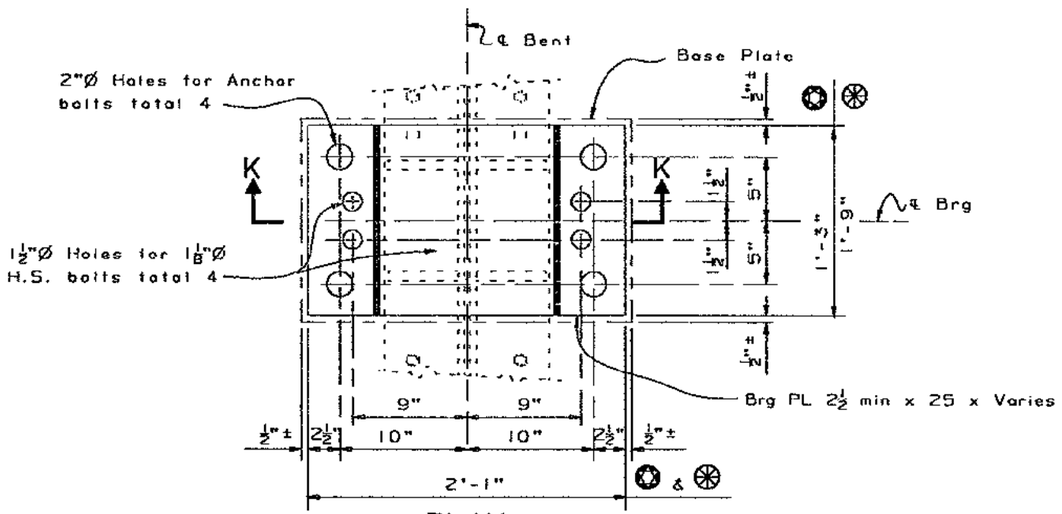

PLAN

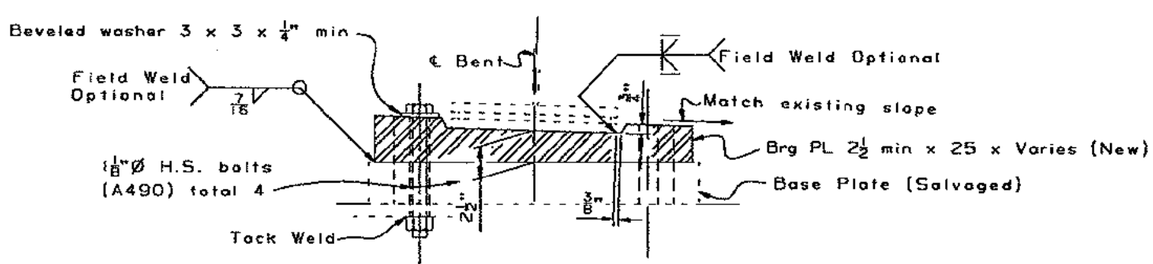

SECTION K-K

BEARING PLATE DETAIL

2" = 1'-0"

Notes

- Indicates dimensions at Bent E24,E25 E26 Lt & E27
- Indicates dimensions at Bent E26 Rt

For additional details at bearings see "Bent E24 to E27 Lt & Rt Col/ Bearing Details No. 1" sheet

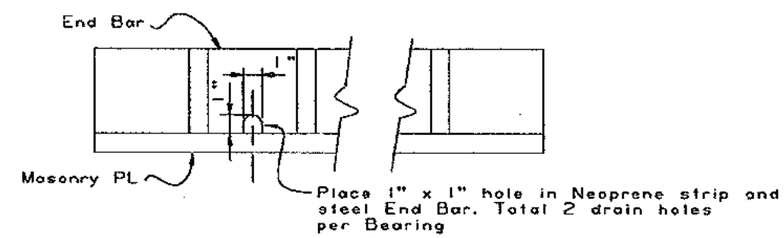

BEARING DRAIN HOLE DETAIL

3" = 1'-0"

MAR 22 1995

DESIGN	BY R. E. Bateman 10-93	CHECKED Shawn Sun	
DETAILS	BY K-C-8 11-93	CHECKED Shawn Sun	
QUANTITIES	BY R. E. Bateman	CHECKED Mark Reno	

SEISMIC RETROFIT PROJECT No. 614

STATE OF CALIFORNIA DEPARTMENT OF TRANSPORTATION

DIVISION OF STRUCTURES STRUCTURE DESIGN 2

BRIDGE NO. 33-25

POST MILE 1.0-1.3

SFOBB - BENT E23 TO E39 RETROFIT

BENT E24 TO E27 LT & RT COL.

BEARING DETAILS NO. 2

ORIGINAL SCALE IN INCHES FOR REDUCED PLANS 0 1 2 3

CU 04
EA 043431

DISREGARD PRINTS BEARING EARLIER REVISION DATES

REVISION DATES (PRELIMINARY STAGE ONLY) 11-23-93 11-30-93 12-02-93 01-03-94 4-25-94

SHEET 69 OF 120

05 050 2138 (CADD 4/89)

DIST.	COUNTY	ROUTE	POST MILES TOTAL PROJECT	SHEET NO.	TOTAL SHEETS
04	Ala	80			

REGISTERED ENGINEER - CIVIL

REGISTERED PROFESSIONAL ENGINEER Gregory Evan Slocum No. 44950 Exp. 3-31-98 CIVIL STATE OF CALIFORNIA

PLANS APPROVAL DATE

The State of California or its officers or agents shall not be responsible for the accuracy or completeness of electronic copies of this plan sheet.

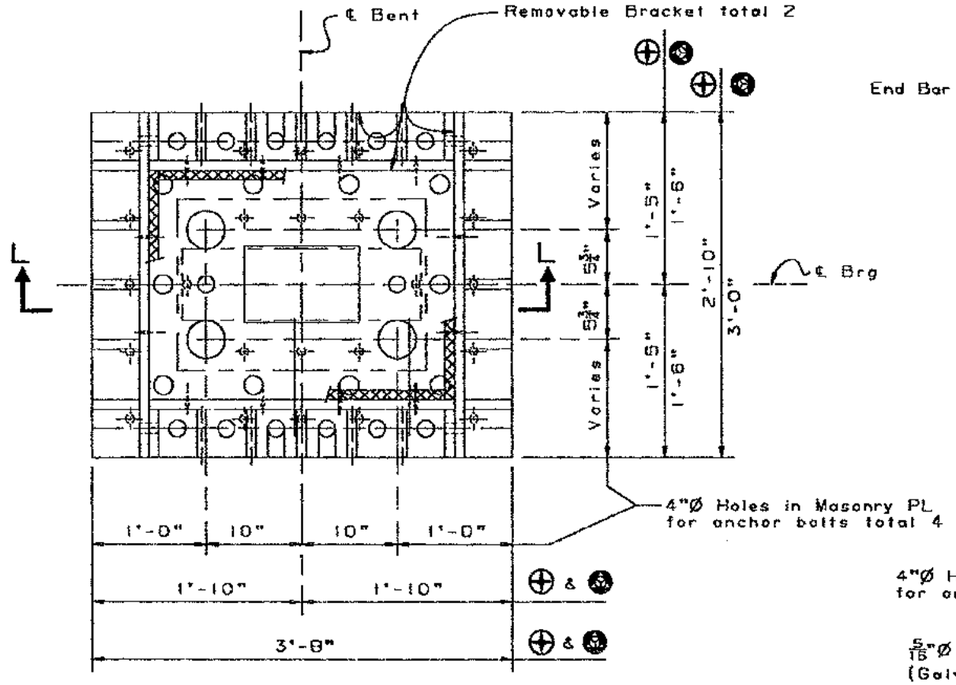

PLAN - MASONRY PLATE ASSEMBLY NO 2

1½" = 1'-0"

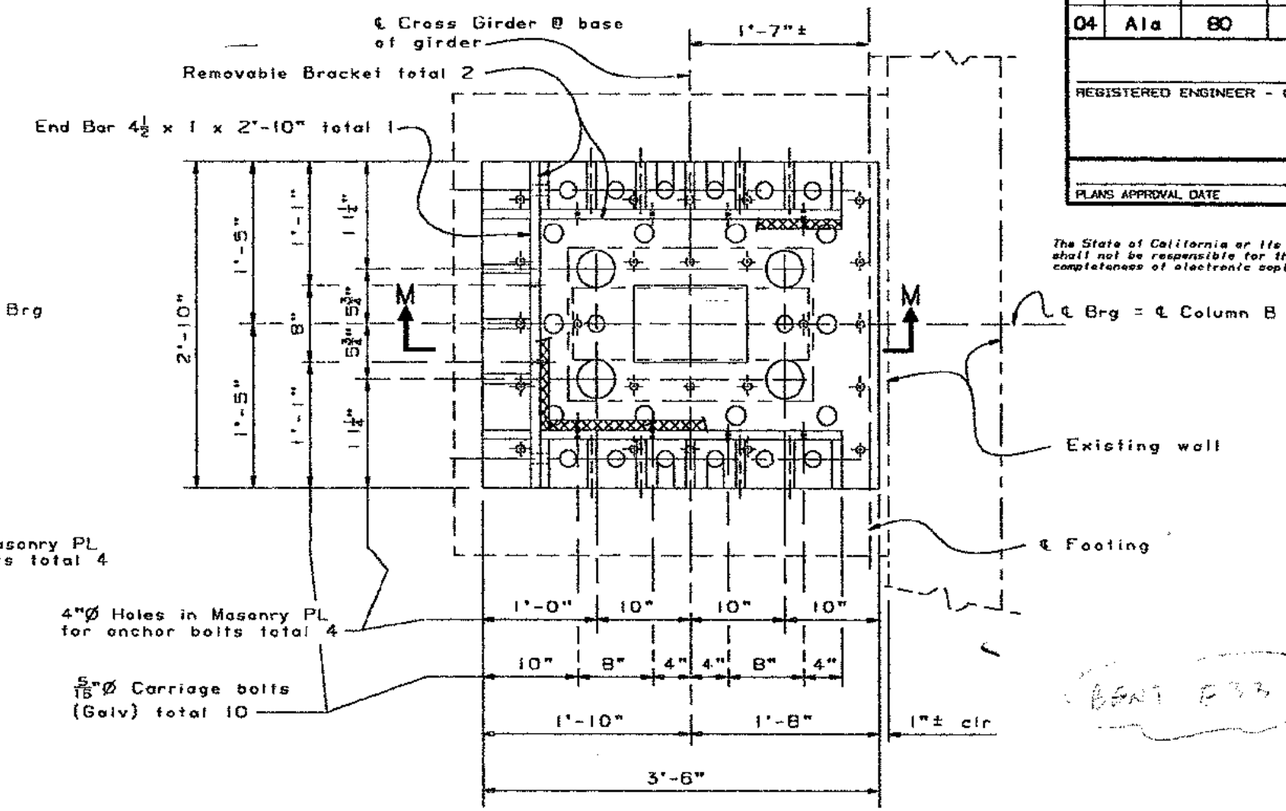

PLAN - MASONRY PLATE ASSEMBLY NO 3

1½" = 1'-0"

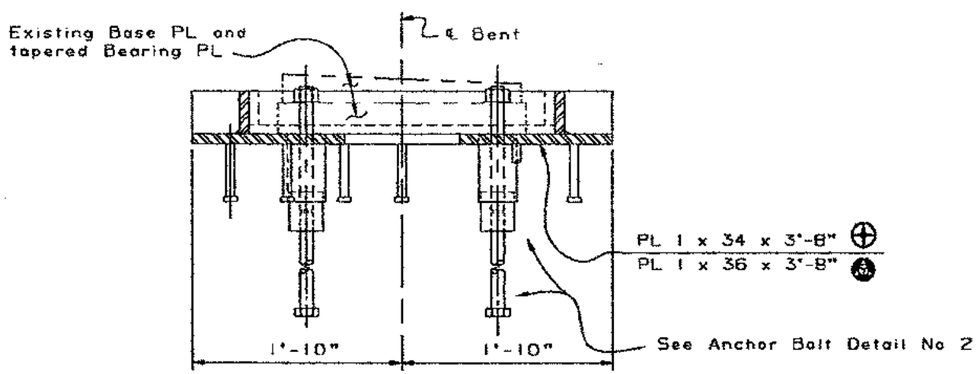

SECTION L-L

1½" = 1'-0"

NOTE:
THE CONTRACTOR SHALL VERIFY ALL CONTROLLING FIELD DIMENSIONS BEFORE ORDERING OR FABRICATING ANY MATERIAL.

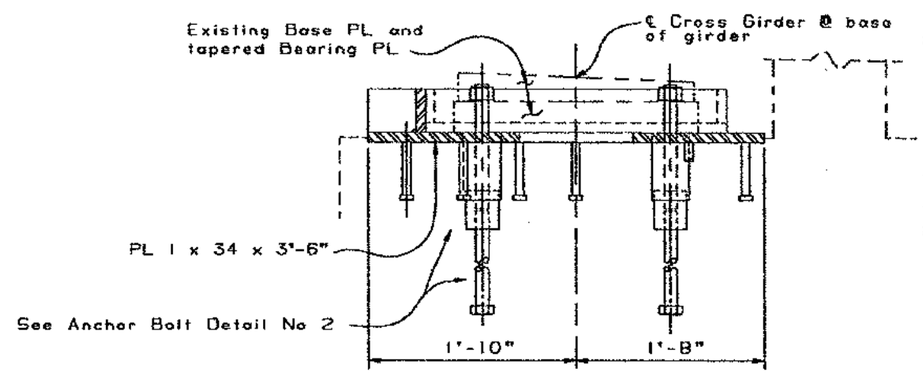

SECTION M-M

1½" = 1'-0"

Notes

⊕ Indicates dimensions at Bent E27 Ctr, E29 Lt, E30, E31, & E32

Indicates dimensions at Bent E29 Rt

For Anchor Bolt Detail No 2 and new connection of existing Base & Tapered Bearing plates see "Bent E27 Ctr, E29 - E33/ Bearing Details No 2" sheet

For details not shown see "Bent E24 to E27 Lt & Rt Column/ Bearing Details No 1" sheet

MAR 22 1995

DESIGN	BY R. E. Bateman 12-93	CHECKED Shawn Sun	
DETAILS	BY K-C-B 12-93	CHECKED Shawn Sun	
QUANTITIES	BY R. E. Bateman	CHECKED Mark Rano	

SEISMIC RETROFIT PROJECT No. 614

STATE OF CALIFORNIA DEPARTMENT OF TRANSPORTATION

DIVISION OF STRUCTURES STRUCTURE DESIGN 2

CU 04
EA 043431

BRIDGE NO. 33-25
POST MILE 1.0-1.3

SFOBB - BENT E23 TO E39 RETROFIT

BENT E27 CTR, E29 - E33

BEARING DETAILS NO. 1

DS DSD 2139 (CADD 4/95)

ORIGINAL SCALE IN INCHES FOR REDUCED PLANS 0 1 2 3

DISREGARD PRINTS BEARING EARLIER REVISION DATES

REVISION DATES (PRELIMINARY STAGE ONLY)

SHEET OF

DIST.	COUNTY	ROUTE	POST MILES TOTAL PROJECT	SHEET NO.	TOTAL SHEETS
04	Ala	80			

REGISTERED ENGINEER - CIVIL

REGISTERED PROFESSIONAL ENGINEER Gregory Evan Slocum No. 44950 Exp. 3-31-98 CIVIL STATE OF CALIFORNIA

PLANS APPROVAL DATE

The State of California or its officers or agents shall not be responsible for the accuracy or completeness of electronic copies of this plan sheet.

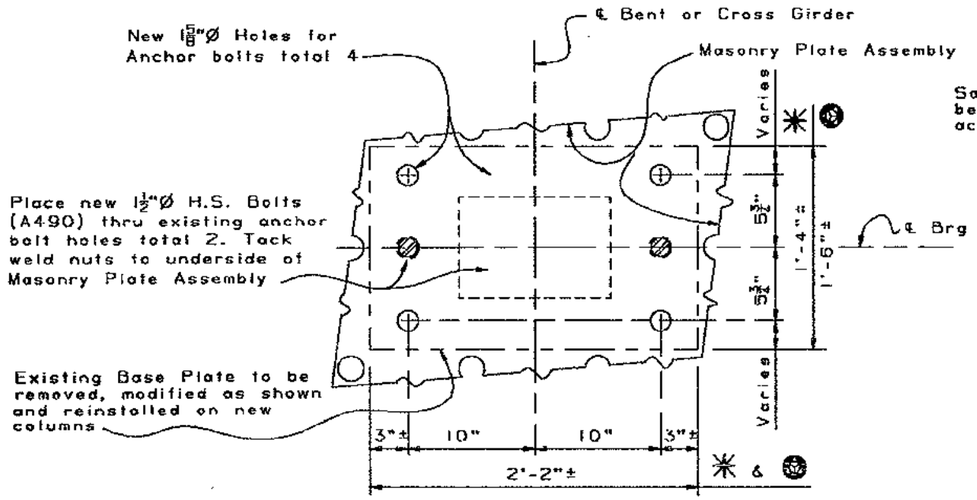

PLAN - BASE PLATE

2" = 1'-0"

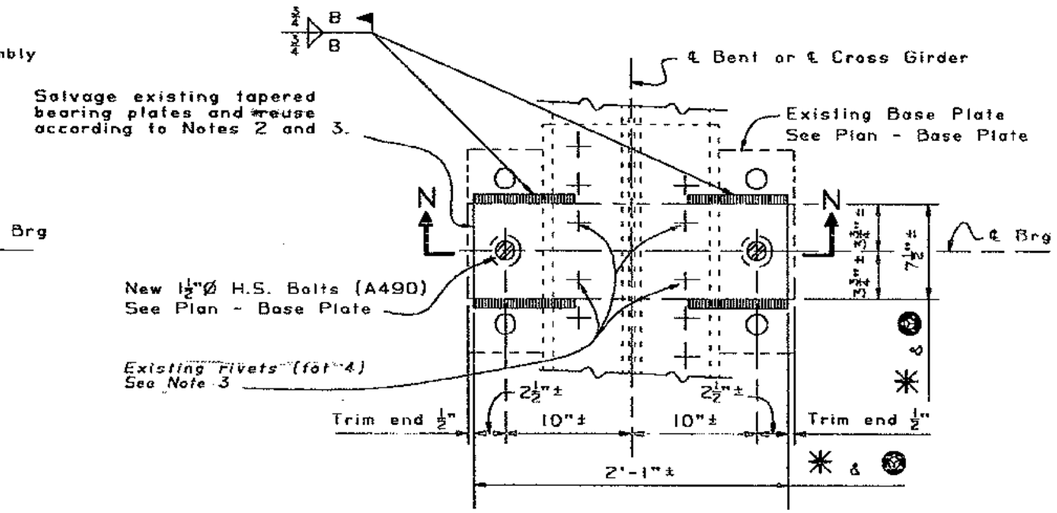

PLAN

NOTE:
THE CONTRACTOR SHALL VERIFY ALL CONTROLLING FIELD DIMENSIONS BEFORE ORDERING OR FABRICATING ANY MATERIAL.

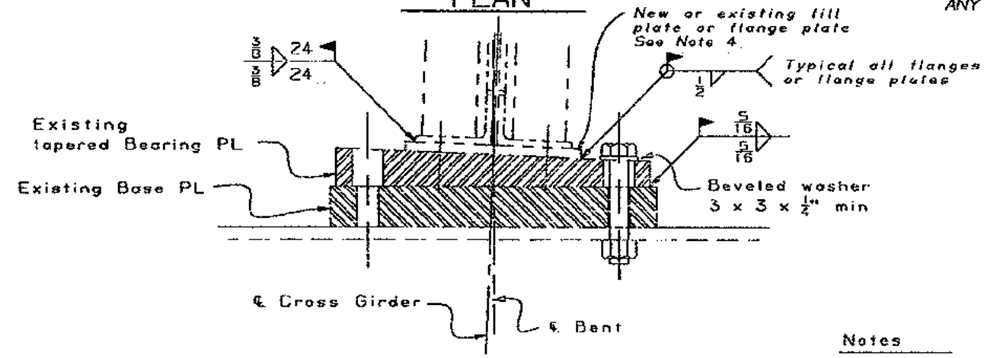

SECTION N-N

BEARING PLATE DETAIL

2" = 1'-0"

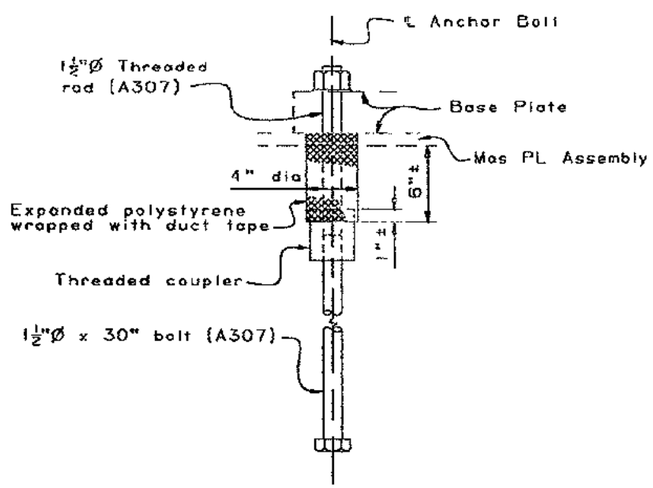

ANCHOR BOLT DETAIL NO 2

2" = 1'-0"

Notes

✳ Indicates dimensions at Bent E27 Ctr; E29 Lt and E30 to E33

⑥ Indicates dimensions at Bent E29 Rt

1. For additional details at bearings see "Bent E27 Ctr, E29 - E33/ Bearing Details No. 1" sheet
2. *Bent 29R, 33R and 33L bearing plates to be welded in place to existing flange plate or angle flanges.*
3. *Bent 27center, Bents 29L and 30-32 right and left, remove bearing plates and weld to new flange plates. Existing rivets (tot 4) not to be replaced.*
4. *At Bent 27 Center this plate is the bottom flange plate for the prestressing girder extension.*

JUN 19 1995

DESIGN	BY R. E. Bateman 12-93	CHECKED Shawn Sun	
DETAILS	BY K-C-B/Franci D 12-93	CHECKED Shawn Sun	
QUANTITIES	BY R. E. Bateman	CHECKED Mark Reno	

SEISMIC RETROFIT PROJECT No. 614

STATE OF CALIFORNIA DEPARTMENT OF TRANSPORTATION

DIVISION OF STRUCTURES STRUCTURE DESIGN 2

CU 04
EA 043431

BRIDGE NO. 33-25
POST MILE 1.0-1.3

SFOBB - BENT E23 TO E39 RETROFIT

BENT E27 CTR, E29 - E33

BEARING DETAILS NO. 2

DS DSD 2139 (CADD 4/89)

ORIGINAL SCALE IN INCHES FOR REDUCED PLANS 0 1 2 3

DISREGARD PRINTS BEARING EARLIER REVISION DATES

REVISION DATES (PRELIMINARY STAGE ONLY) 12-29-93 4-28-94

SHEET 71 OF 120

DIST.	COUNTY	ROUTE	POST MILES TOTAL PROJECT	SHEET NO.	TOTAL SHEETS
04	Ala	80			

REGISTERED ENGINEER - CIVIL

REGISTERED PROFESSIONAL ENGINEER Gregory Evan Slocum No. 44950 Exp. 3-31-98 CIVIL STATE OF CALIFORNIA

PLANS APPROVAL DATE

The State of California or its officers or agents shall not be responsible for the accuracy or completeness of electronic copies of this plan sheet.

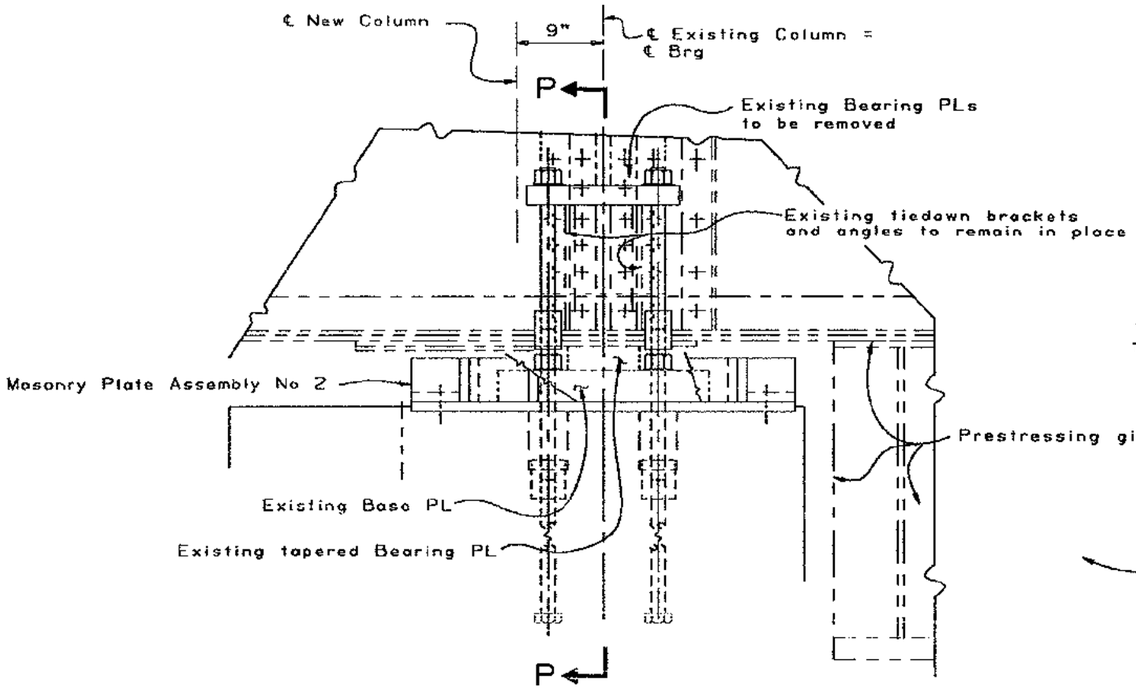

PART ELEVATION - BEARING AT LT COL

$1\frac{1}{2}$" = 1'-0"

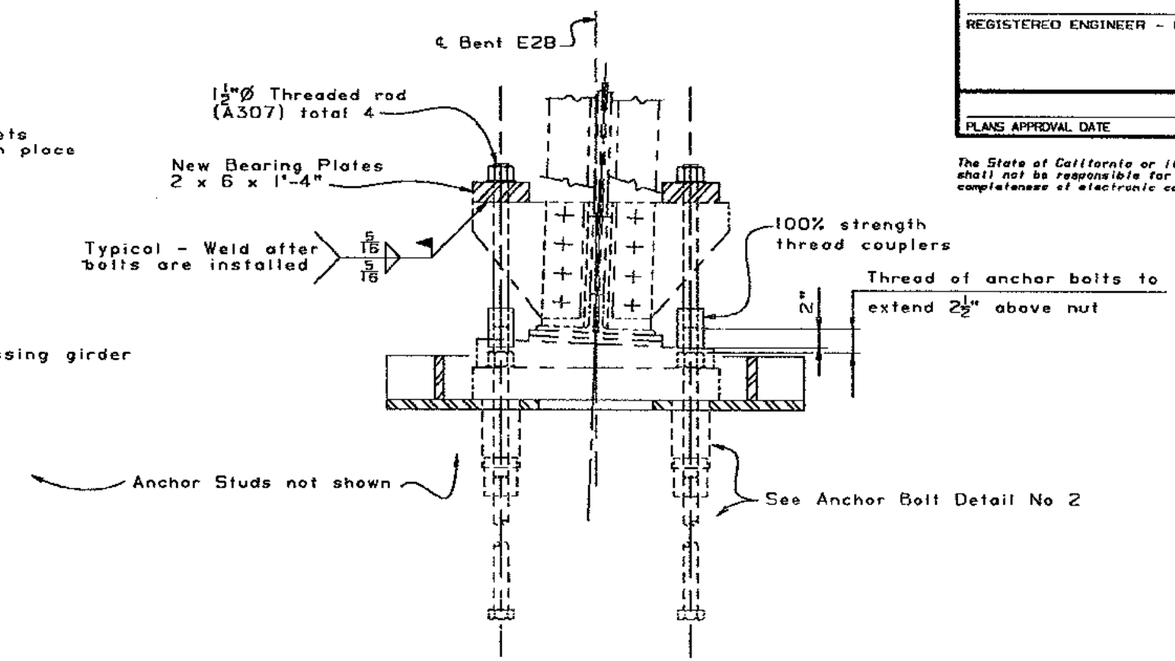

SECTION P-P

$1\frac{1}{2}$" = 1' 0"

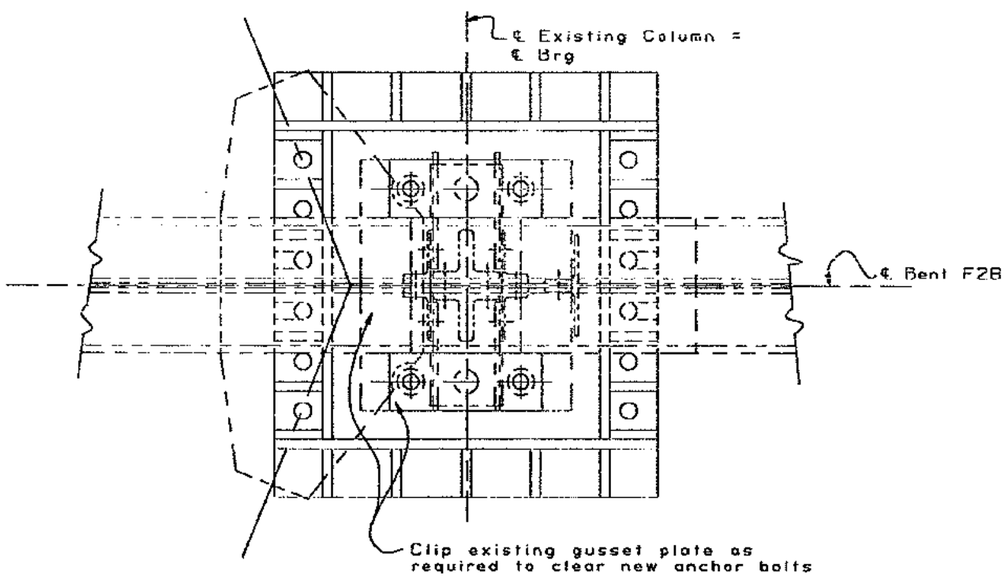

PART PLAN - BEARING AT LT COL

$1\frac{1}{2}$" = 1'-0"

Notes

For details of Masonry Plate Assembly No. 2 Anchor Bolt Detail NO 2 and modifications of existing tapered Bearing & Base plates see "Bent E27 CTR, E29 - E33/ Bearing Details NO. 1 and NO. 2" sheets

NOTE:
THE CONTRACTOR SHALL VERIFY ALL CONTROLLING FIELD DIMENSIONS BEFORE ORDERING OR FABRICATING ANY MATERIAL.

APR 13 1995

DESIGN	BY R. E. Bateman 12-93	CHECKED Shown Sun	
DETAILS	BY K-C-B 12-93	CHECKED Shown Sun	
QUANTITIES	BY R. E. Bateman	CHECKED Mark Reno	

SEISMIC RETROFIT PROJECT No. 614

STATE OF CALIFORNIA DEPARTMENT OF TRANSPORTATION

DIVISION OF STRUCTURES STRUCTURE DESIGN 2

BRIDGE NO. 33-25

POST MILE 1.0-1.3

SFOBB - BENT E23 TO E39 RETROFIT

BENT E28 LT COLUMN

BEARING DETAILS

ORIGINAL SCALE IN INCHES FOR REDUCED PLANS 0 1 2 3

CU 04
EA 043431

DISREGARD PRINTS BEARING EARLIER REVISION DATES

REVISION DATES (PRELIMINARY STAGE ONLY) 12-10-93 01-03-94 4-26-94

SHEET 72 OF 120

DS DSD 2739 (CADD 4/89)

DIST.	COUNTY	ROUTE	POST MILES TOTAL PROJECT	SHEET NO.	TOTAL SHEETS
04	Ala	80			

REGISTERED ENGINEER - CIVIL

REGISTERED PROFESSIONAL ENGINEER Gregory Evan Slocum No. 44950 Exp. 3-31-98 CIVIL STATE OF CALIFORNIA

PLANS APPROVAL DATE

The State of California or its officers or agents shall not be responsible for the accuracy or completeness of electronic copies of this plan sheet.

NOTE:
THE CONTRACTOR SHALL VERIFY ALL CONTROLLING FIELD DIMENSIONS BEFORE ORDERING OR FABRICATING ANY MATERIAL.

Notes

One Bracket G may be welded in the shop

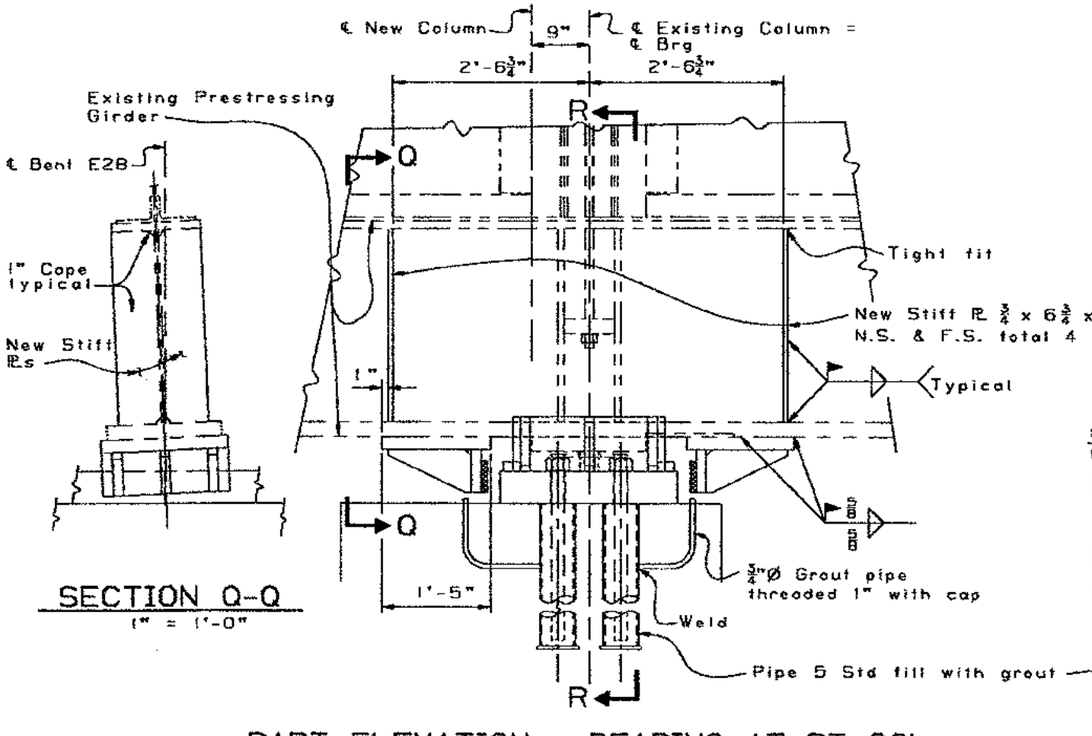

SECTION Q-Q
1" = 1'-0"

PART ELEVATION - BEARING AT RT COL
1" = 1'-0"

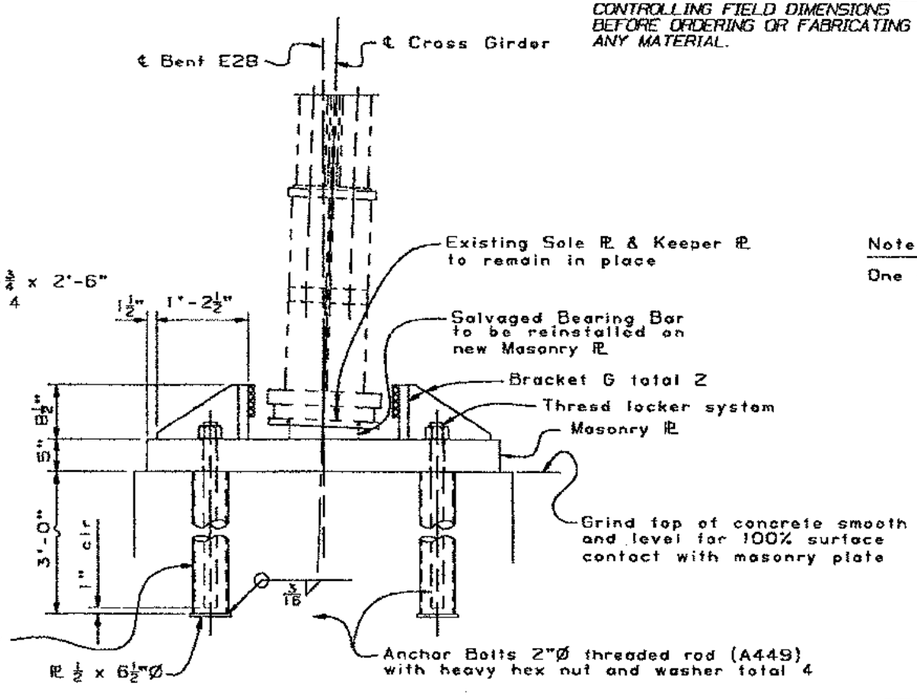

SECTION R-R
1" = 1'-0"

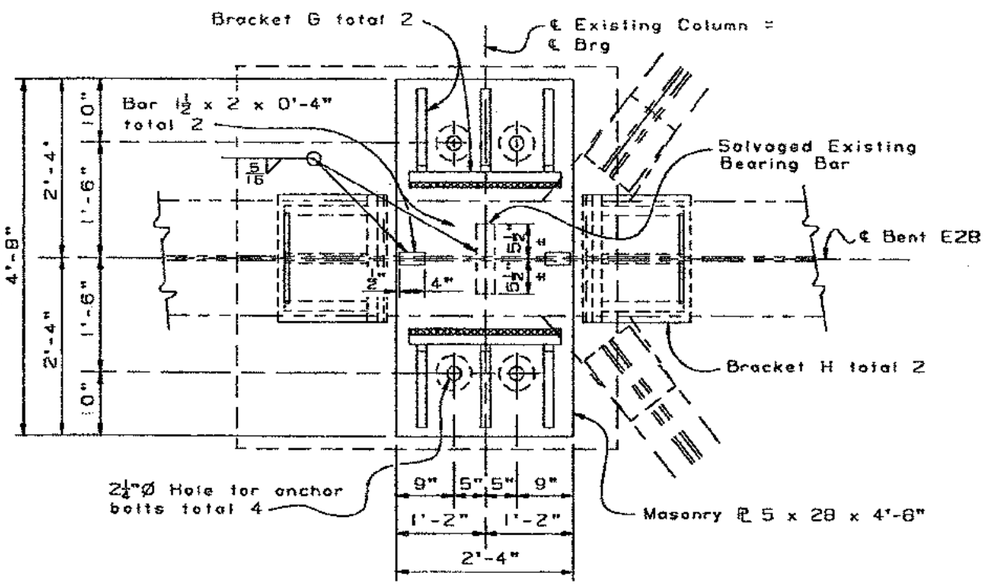

PART PLAN - BEARING AT RT COL
1" = 1'-0"

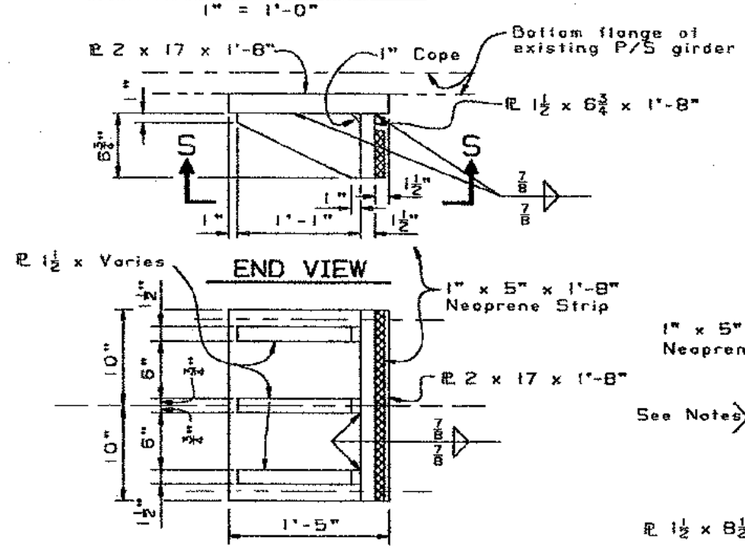

VIEW S-S

BRACKET H DETAILS
1½" = 1'-0"

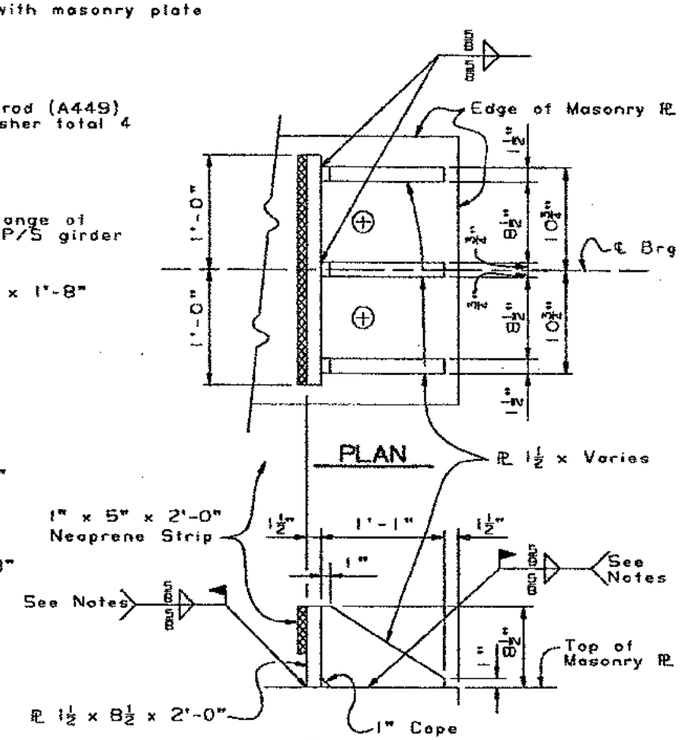

MAR 22 1995

BRACKET G DETAILS
1½" = 1'-0"

DESIGN	BY R. E. Bateman 12-93	CHECKED Shawn Sun	
DETAILS	BY K-C-B 12-93	CHECKED Shawn Sun	
QUANTITIES	BY R. E. Bateman	CHECKED Mark Reno	

SEISMIC RETROFIT PROJECT No. 614

STATE OF CALIFORNIA DEPARTMENT OF TRANSPORTATION

DIVISION OF STRUCTURES STRUCTURE DESIGN 2

BRIDGE NO. 33-25

POST MILE 1.0-1.3

SFOBB - BENT E23 TO E28 RETROFIT

BENT E28 RT COLUMN

BEARING DETAILS

05 DSD 2138 (CADD 4/88)

ORIGINAL SCALE IN INCHES FOR REDUCED PLANS 0 1 2 3

CU 04
EA 043431

DISREGARD PRINTS BEARING EARLIER REVISION DATES

REVISION DATES (PRELIMINARY STAGE ONLY) 12-28-93 4-29-94

SHEET 73 OF 120

DIST.	COUNTY	ROUTE	POST MILES TOTAL PROJECT	SHEET NO.	TOTAL SHEETS
04	ALA	80			

REGISTERED ENGINEER - CIVIL

REGISTERED PROFESSIONAL ENGINEER
Gregory Slacum
No. 44950
Exp. 3-31-98
CIVIL
STATE OF CALIFORNIA

PLANS APPROVAL DATE

The State of California or its officers or agents shall not be responsible for the accuracy or completeness of electronic copies of this plan sheet.

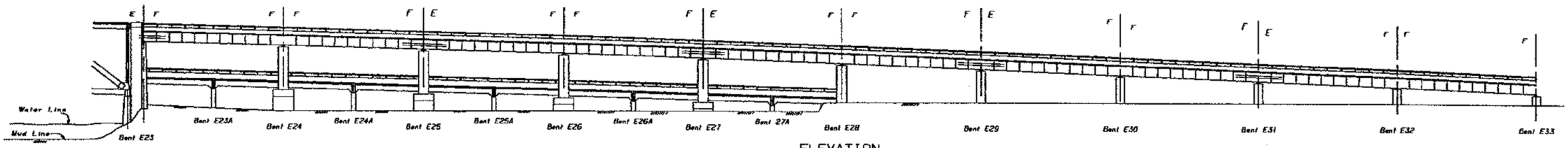

F = Fixed
E = Expansion

ELEVATION
1" = 30'-0"

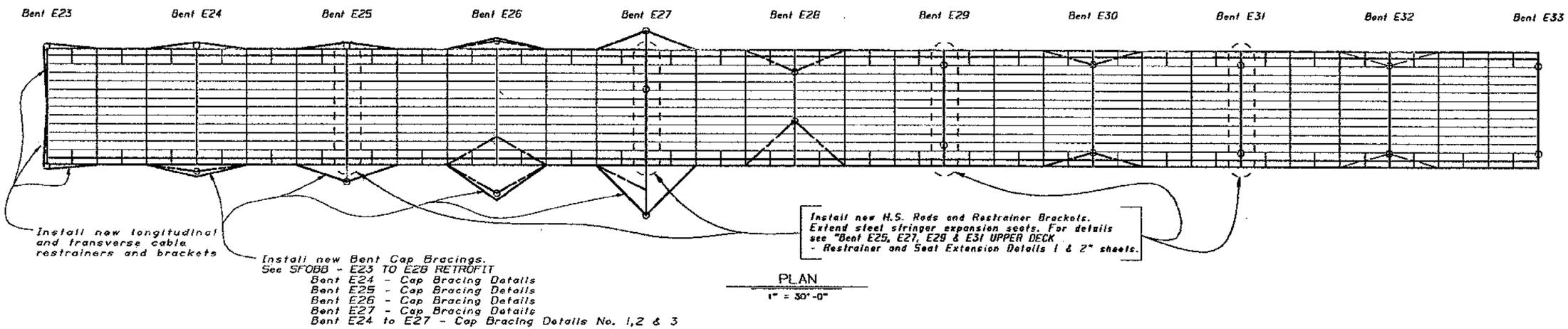

PLAN
1" = 30'-0"

——— — ——— Indicates existing bracings

MAR 22 1995

SEISMIC RETROFIT PROJECT NO. 614

SFOBB - BENT E23 TO E39 RETROFIT

BENT E23 TO E32 UPPER DECK

RESTRAINER, BRACING & SEAT EXTENSION LAYOUT

DESIGN	BY Robert Bateman	CHECKED Shawn Sun	
DETAILS	BY AES 11-93	CHECKED Shawn Sun	
QUANTITIES	BY M. Vinayagamoorthy	CHECKED Mike Keever	

STATE OF CALIFORNIA
DEPARTMENT OF TRANSPORTATION

DIVISION OF STRUCTURES
STRUCTURE DESIGN 2

BRIDGE NO. 33-25
POST MILE 1.0-1.3

CU 04
EA 043431

DG 050 2139 (CADD 4/89)

ORIGINAL SCALE IN INCHES FOR REDUCED PLANS 0 1 2 3

DISREGARD PRINTS BEARING EARLIER REVISION DATES

REVISION DATES (PRELIMINARY STAGE ONLY) 11-16-93 11-29-93 4-8-94

SHEET 74 OF 120

DIST.	COUNTY	ROUTE	POST MILES TOTAL PROJECT	SHEET NO.	TOTAL SHEETS
04	ALA	80			

REGISTERED ENGINEER - CIVIL

REGISTERED PROFESSIONAL ENGINEER Gregory Slocum No. 44950 Exp. 3-31-98 CIVIL STATE OF CALIFORNIA

PLANS APPROVAL DATE

The State of California or its officers or agents shall not be responsible for the accuracy or completeness of electronic copies of this plan sheet.

NOTE:
THE CONTRACTOR SHALL VERIFY ALL CONTROLLING FIELD DIMENSIONS BEFORE ORDERING OR FABRICATING ANY MATERIAL.

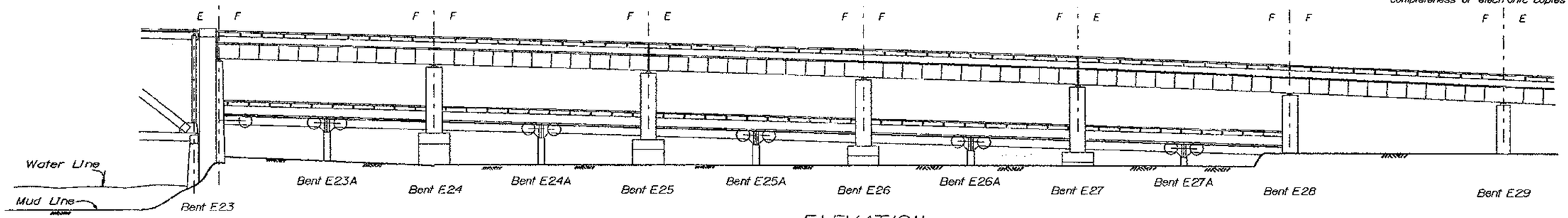

ELEVATION

1" = 20'-0"

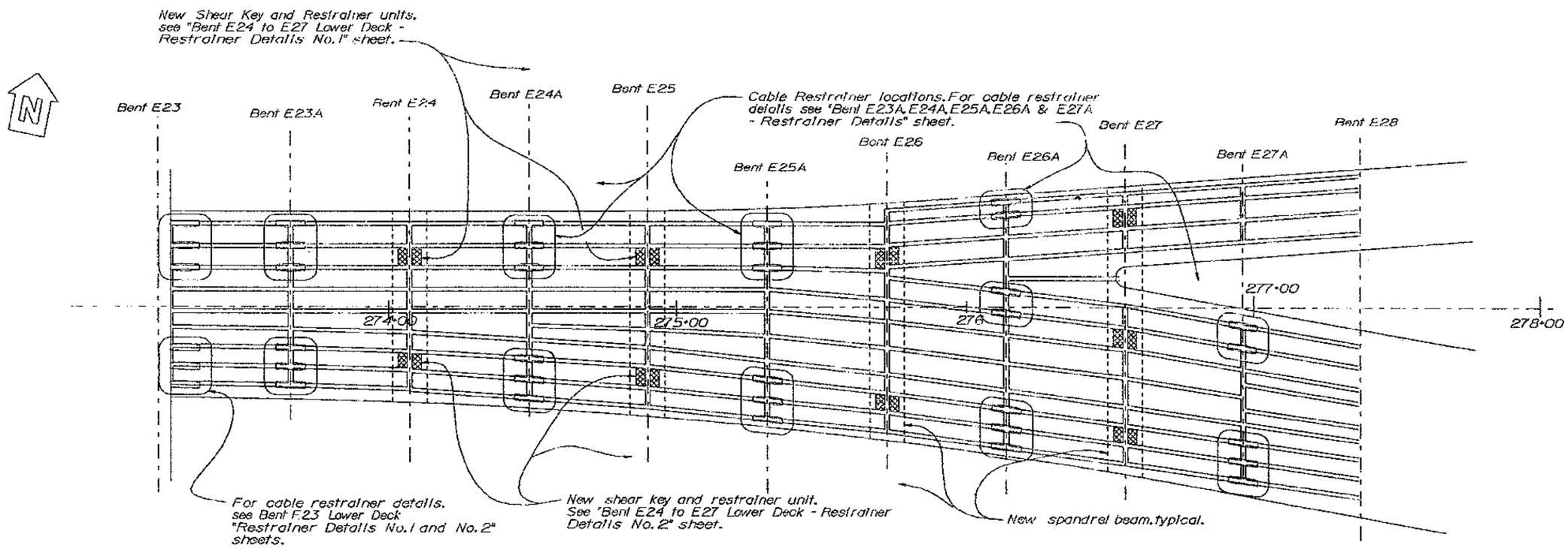

SEP 19 1995

PLAN

1" = 20'-0"

SEISMIC RETROFIT PROJECT No.614

SFOBB - BENT E23 TO E39 RETROFIT

DESIGN	BY Bob Bateman	CHECKED Ali Hamza	
DETAILS	BY AES 11-93	CHECKED Bob Bateman	
QUANTITIES	BY M.Vinayagamoorthy	CHECKED Mike Keeyer	

STATE OF CALIFORNIA
DEPARTMENT OF TRANSPORTATION

DIVISION OF STRUCTURES
STRUCTURE DESIGN 2

BRIDGE NO. 33-25
POST MILE 1.0-1.3

BENT E23 TO E27A LOWER DECK
RESTRAINER AND SHEAR KEY LAYOUT

DS OSD 2139 (CADD 4/89)

ORIGINAL SCALE IN INCHES FOR REDUCED PLANS 0 1 2 3

CU 04
EA 043431

DISREGARD PRINTS BEARING EARLIER REVISION DATES → REVISION DATES (PRELIMINARY STAGE ONLY) 11-5-93 12-2-93 12-1-93

SHEET 75 OF 120

DIST.	COUNTY	ROUTE	POST MILES TOTAL PROJECT	SHEET NO.	TOTAL SHEETS
04	ALA	80			

REGISTERED ENGINEER - CIVIL

REGISTERED PROFESSIONAL ENGINEER Gregory Evan Slocum No. 44950 Exp. 3-31-98 CIVIL STATE OF CALIFORNIA

PLANS APPROVAL DATE

The State of California or its officers or agents shall not be responsible for the accuracy or completeness of electronic copies of this plan sheet.

NOTE:
THE CONTRACTOR SHALL VERIFY ALL CONTROLLING FIELD DIMENSIONS BEFORE ORDERING OR FABRICATING ANY MATERIAL.

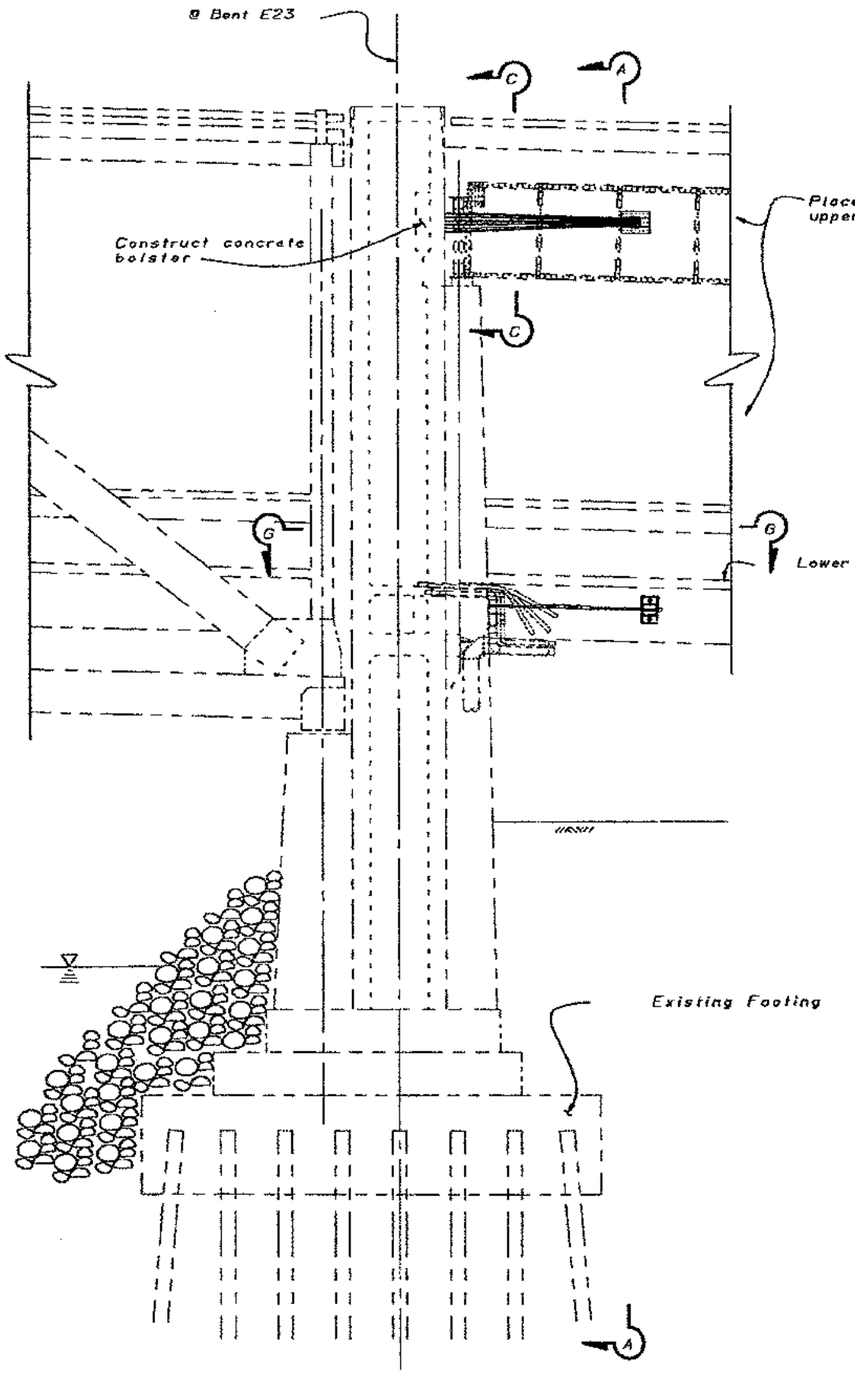

ELEVATION

$\frac{5}{16}$" = 1'-0"

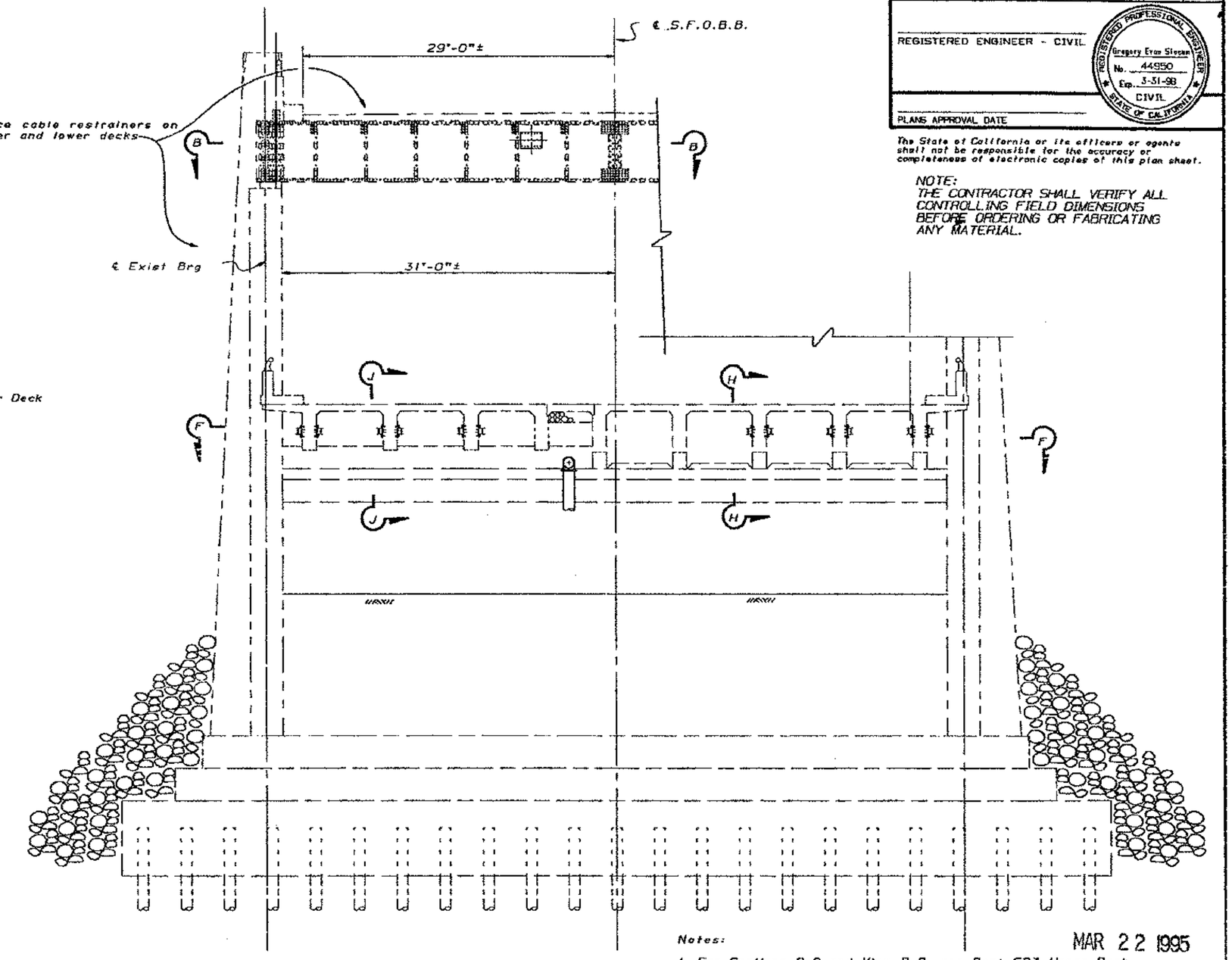

VIEW A-A

$\frac{3}{16}$" = 1'-0"

MAR 22 1995

Notes:

1. For Sections C-C and View B-B, see Bent E23 Upper Deck "Restrainer Details No. 1" sheet.
2. For Sections F-F and G-G, see Bent E23 Lower Deck "Restainer Details No. 1" sheet.
3. For Sections H-H and J-J, see Bent E23 Lower Deck "Restainer Details No. 1" sheet.

DESIGN	BY Bob Bateman	CHECKED Robert Tanaka
DETAILS	BY Franci Dukeshire 3/93	CHECKED Bob Bateman
QUANTITIES	BY Bob Bateman	CHECKED C. Rende

SEISMIC RETROFIT PROJECT No. 614

SFOBB - BENT E23 TO E28 RETROFIT

STATE OF CALIFORNIA
DEPARTMENT OF TRANSPORTATION

DIVISION OF STRUCTURES
STRUCTURE DESIGN 2

BRIDGE NO. 33-25

POST MILE 1.0-1.3

BENT E23 UPPER AND LOWER DECK
RESTRAINER ELEVATION

CU 04
EA 043431

DS 000 2138 (CADD 4/89)

ORIGINAL SCALE IN INCHES FOR REDUCED PLANS 0 1 2 3

DISREGARD PRINTS BEARING EARLIER REVISION DATES → 6/17/94

REVISION DATES (PRELIMINARY STAGE ONLY)

SHEET 76 OF 120

DIST.	COUNTY	ROUTE	POST MILES TOTAL PROJECT	SHEET NO.	TOTAL SHEETS
04	ALA	80			

REGISTERED ENGINEER - CIVIL

REGISTERED PROFESSIONAL ENGINEER Gregory Evan Slocum No. 44950 Exp. 3-31-98 CIVIL STATE OF CALIFORNIA

PLANS APPROVAL DATE

The State of California or its officers or agents shall not be responsible for the accuracy or completeness of electronic copies of this plan sheet.

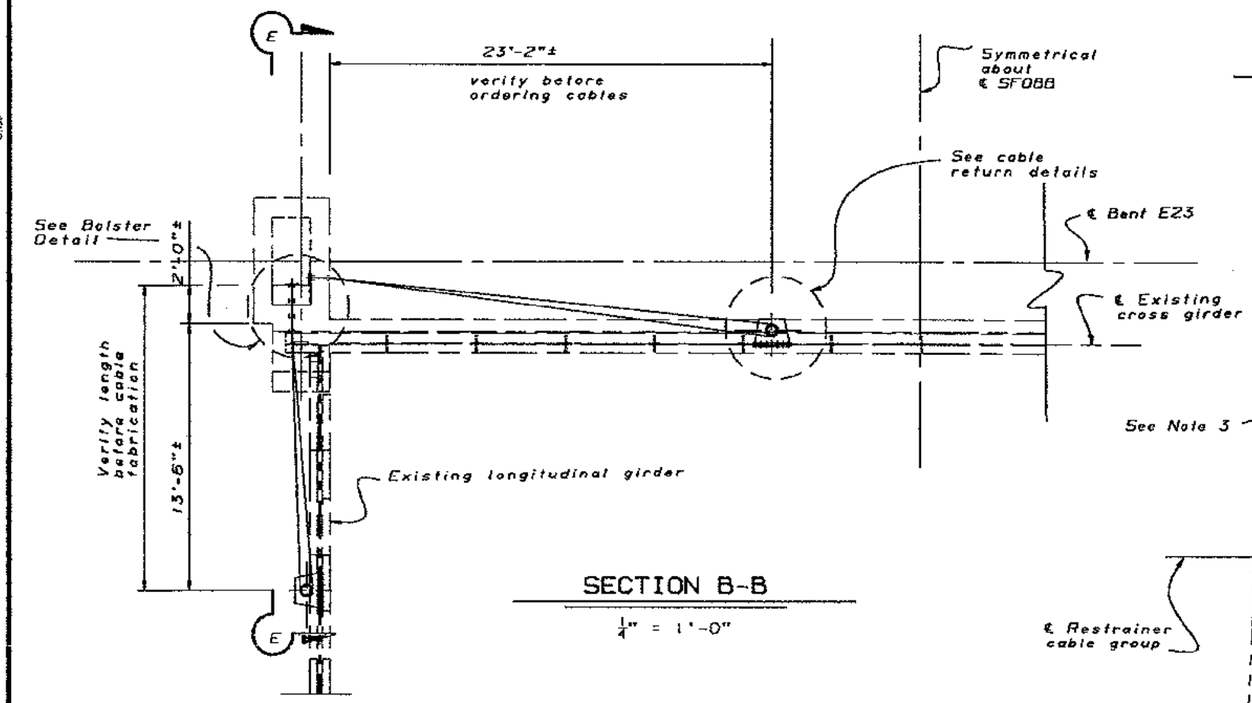

SECTION B-B

$\frac{1}{4}$" = 1'-0"

Note:
Upper girder top flanges and deck not shown for clarity.

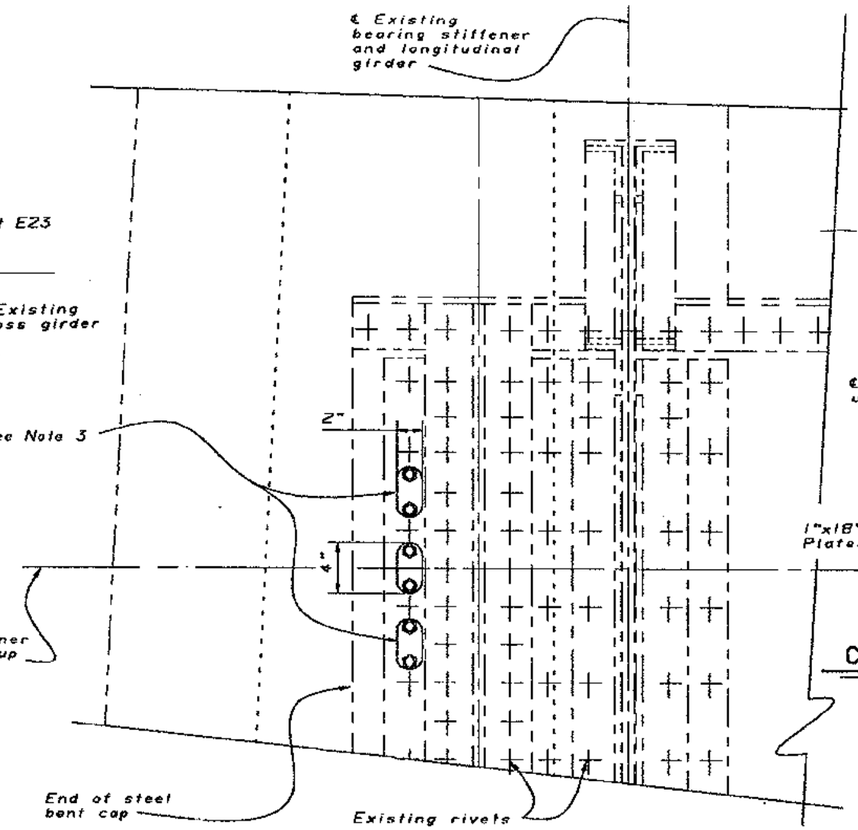

PART SECTION C-C

2" = 1'-0"

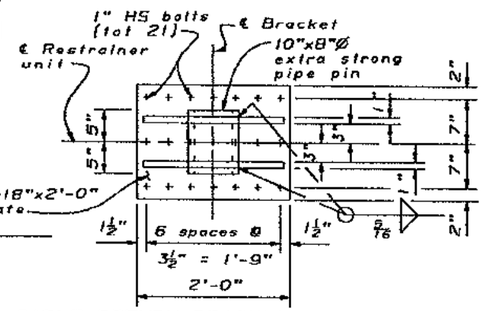

CABLE RETURN BRACKET - ELEVATION

1" = 1'-0"

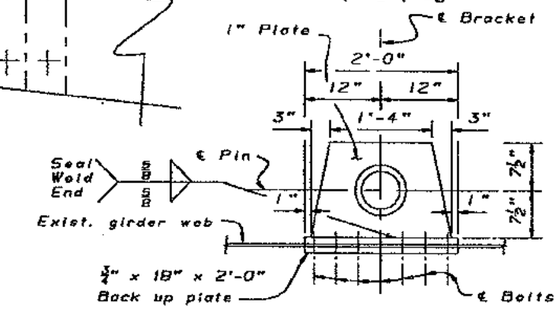

CABLE RETURN BRACKET - PLAN

1" = 1'-0"

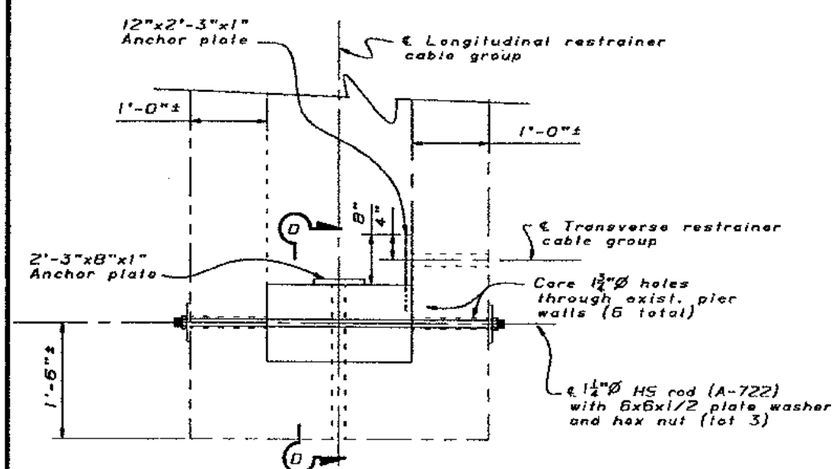

BOLSTER DETAIL

1" = 1'-0"

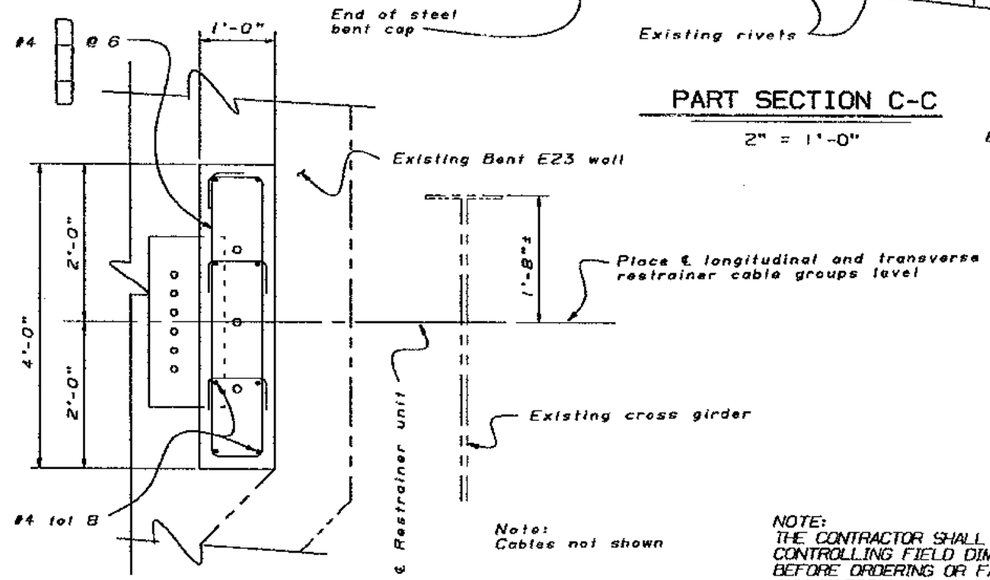

SECTION D-D

1" = 1'-0"

Note:
Cables not shown

NOTE:
THE CONTRACTOR SHALL VERIFY ALL CONTROLLING FIELD DIMENSIONS BEFORE ORDERING OR FABRICATING ANY MATERIAL.

Notes:

1. For locations of View B-B and Section C-C, see Bent E23 "Restrainer Elevation" sheet.
2. For location of Section E-E, see Bent E23 "Restrainer Details No. 2" sheet.
3. Place slotted holes through girder as indicated. Grind ¼" radius around both edges of holes.

MAR 22 1995

SEISMIC RETROFIT PROJECT No. 614

SFOBB - BENT E23 TO E28 RETROFIT

	BY	CHECKED
DESIGN	Bob Bateman	Gregory Slocum
DETAILS	Franci Dukeshire 3/93	Bob Bateman
QUANTITIES	Bob Bateman	C. Rende

STATE OF CALIFORNIA DEPARTMENT OF TRANSPORTATION

DIVISION OF STRUCTURES STRUCTURE DESIGN 2

BRIDGE NO. 33-25

POST MILE 1.0-1.3

BENT E23 UPPER DECK

RESTRAINER DETAILS No. 1

CU 04
EA 043431

ORIGINAL SCALE IN INCHES FOR REDUCED PLANS 0 1 2 3

DISREGARD PRINTS BEARING EARLIER REVISION DATES

REVISION DATES (PRELIMINARY STAGE ONLY) 6/17/94

SHEET 77 OF 120

OS DSD 2429 (CADD 4/89)

DIST.	COUNTY	ROUTE	POST MILES TOTAL PROJECT	SHEET NO.	TOTAL SHEETS
04	Ala	80			

REGISTERED ENGINEER - CIVIL

REGISTERED PROFESSIONAL ENGINEER Gregory Even Slocum No. 44950 Exp. 3-31-98 CIVIL STATE OF CALIFORNIA

PLANS APPROVAL DATE

The State of California or its officers or agents shall not be responsible for the accuracy or completeness of electronic copies of this plan sheet.

NOTE:
THE CONTRACTOR SHALL VERIFY ALL CONTROLLING FIELD DIMENSIONS BEFORE ORDERING OR FABRICATING ANY MATERIAL.

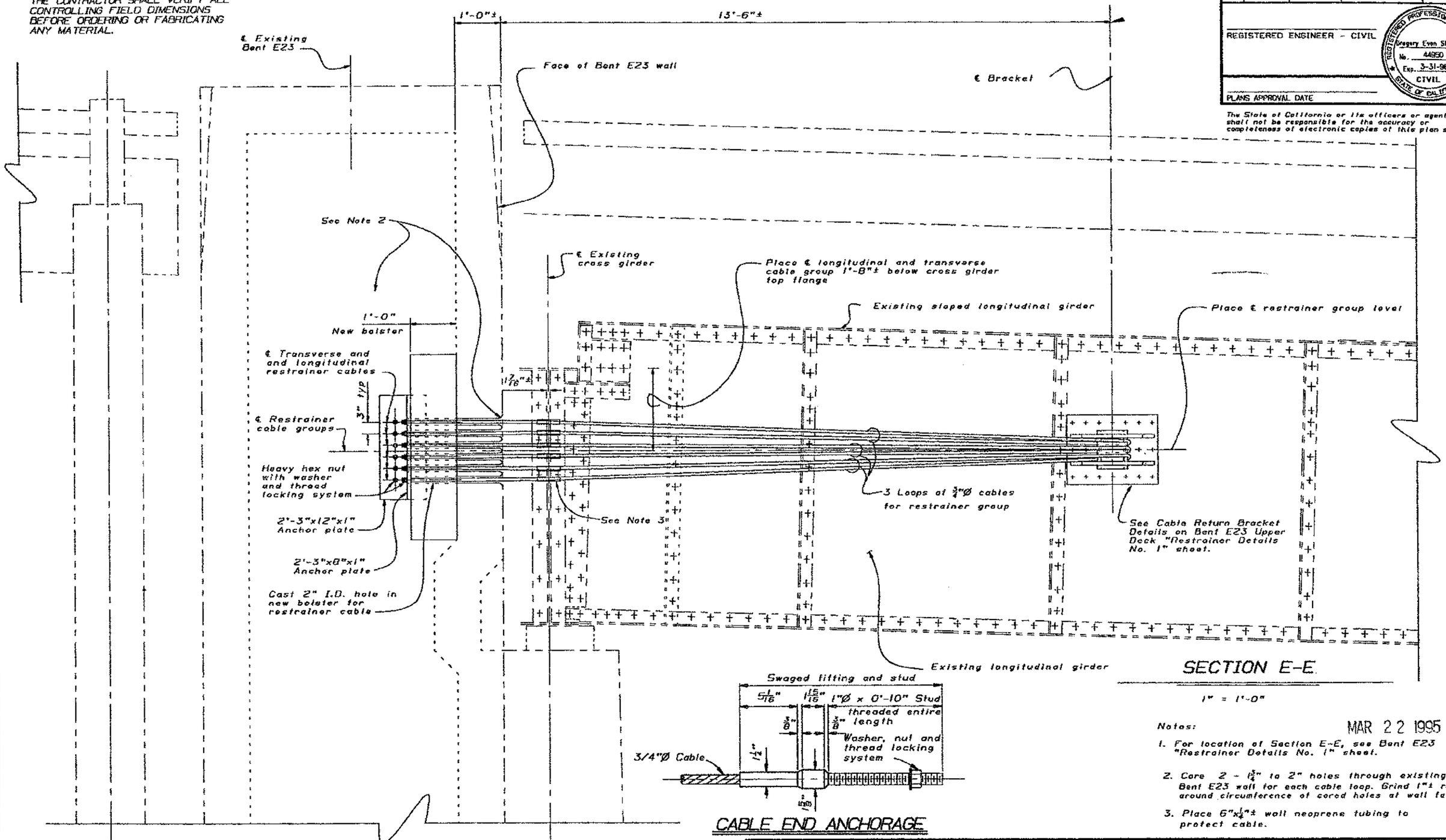

MAR 22 1995

Notes:

1. For location of Section E-E, see Bent E23 "Restrainer Details No. 1" sheet.
2. Core 2 - 1 3/4" to 2" holes through existing Bent E23 wall for each cable loop. Grind 1"± radius around circumference of cored holes at wall face.
3. Place 6"x1/4"± wall neoprene tubing to protect cable.

DESIGN	BY Gregory Slocum	CHECKED R. E. Bateman	
DETAILS	BY Franci Dukeshire 6/94	CHECKED Gregory Slocum	
QUANTITIES	BY R. E. Bateman	CHECKED Mark Reno	

SEISMIC RETROFIT PROJECT No. 614

STATE OF CALIFORNIA DEPARTMENT OF TRANSPORTATION

DIVISION OF STRUCTURES STRUCTURE DESIGN 2

BRIDGE NO. 33-25

POST MILE 1.0-1.3

SFOBB - BENT E23 TO E39 RETROFIT

BENT E23 UPPER DECK

RESTRAINER DETAILS NO. 2

CU 04
EA 043431

DISREGARD PRINTS BEARING EARLIER REVISION DATES

REVISION DATES (PRELIMINARY STAGE ONLY) 6/22/94

SHEET 78 OF 120

ORIGINAL SCALE IN INCHES FOR REDUCED PLANS 0 1 2 3

OS DSD 2139 (CADD 4/89)

DIST.	COUNTY	ROUTE	POST MILES TOTAL PROJECT	SHEET NO.	TOTAL SHEETS
04	Ala	80			

REGISTERED ENGINEER - CIVIL

REGISTERED PROFESSIONAL ENGINEER Gregory Evan Slocum No. 44950 Exp. 3-31-98 CIVIL STATE OF CALIFORNIA

PLANS APPROVAL DATE

NOTE:
THE CONTRACTOR SHALL VERIFY ALL CONTROLLING FIELD DIMENSIONS BEFORE ORDERING OR FABRICATING ANY MATERIAL.

The State of California or its officers or agents shall not be responsible for the accuracy or completeness of electronic copies of this plan sheet.

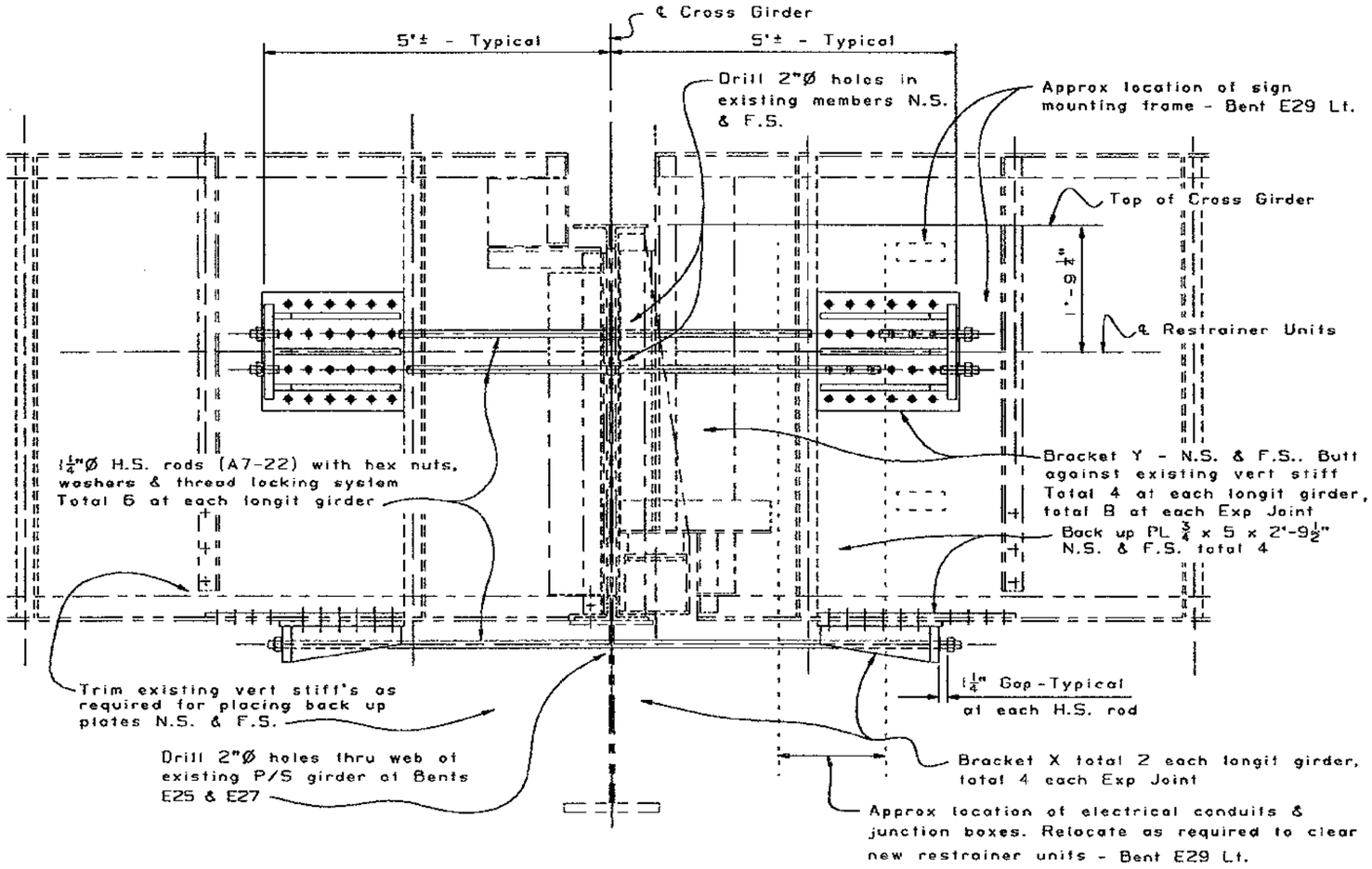

PART ELEVATION - LONGITUDINAL GIRDERS AT EXPANSION BENTS

1" = 1'-0"

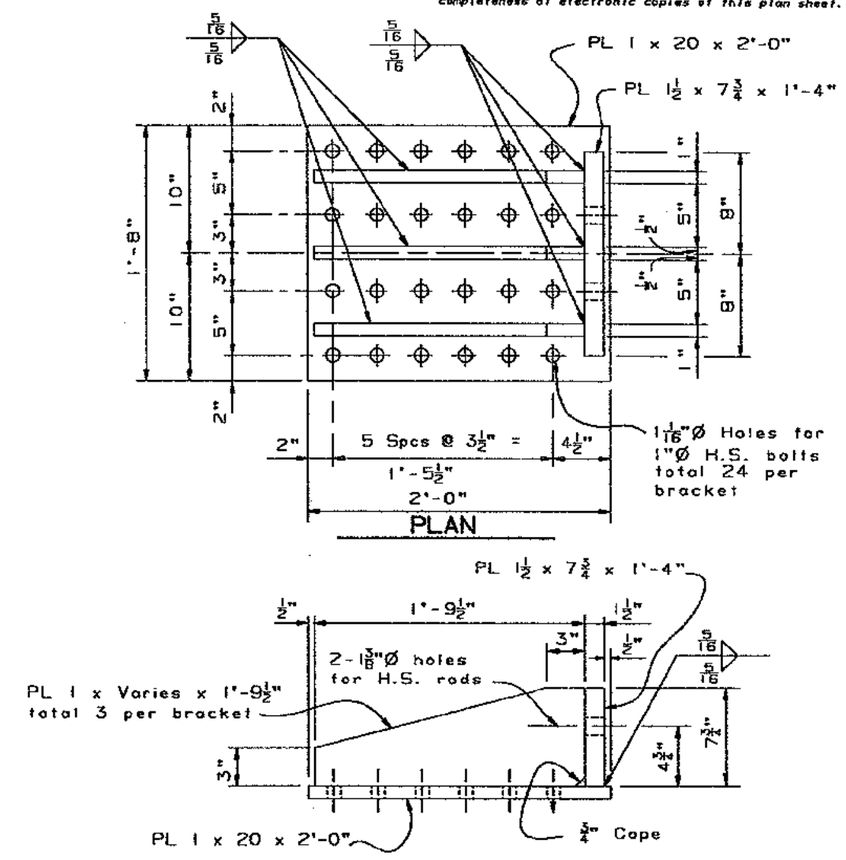

ELEVATION

BRACKET Y DETAILS

2" = 1'-0"

Notes

Remove existing brackets and rod restrainers on bottom flange of longitudinal girders just prior to installation of new restrainer units

For details of Bracket X and Back Up plates see "Bent E25, E27, E29 & E31 Upper Deck/ Restrainer & Seat Extension Details 2" sheet

MAR 22 1995

DESIGN	BY R. E. Bateman 2-94	CHECKED Shawn Sun	
DETAILS	BY K-C-B 2-94	CHECKED Shawn Sun	
QUANTITIES	BY R. E. Bateman	CHECKED Mark Reno	

SEISMIC RETROFIT PROJECT No. 614

STATE OF CALIFORNIA DEPARTMENT OF TRANSPORTATION

DIVISION OF STRUCTURES STRUCTURE DESIGN 2

BRIDGE NO. 33-25

POST MILE 1.0-1.3

CU 04
EA 043431

SFOBB - BENT E23 TO E39 RETROFIT

BENT E25, E27, E29 & E31 UPPER DECK RESTRAINER & SEAT EXTENSION DETAILS 1

DS DSD 2139 (CADD 4/88)

ORIGINAL SCALE IN INCHES FOR REDUCED PLANS 0 1 2 3

DISREGARD PRINTS BEARING EARLIER REVISION DATES

REVISION DATES (PRELIMINARY STAGE ONLY) 2-24-94 4-28-94 5-02-94

SHEET 79 OF 120

DIST.	COUNTY	ROUTE	POST MILES TOTAL PROJECT	SHEET NO.	TOTAL SHEETS
04	ALA	80			

REGISTERED ENGINEER - CIVIL

REGISTERED PROFESSIONAL ENGINEER Gregory Slocum No. 44950 Exp. 3-31-98 CIVIL STATE OF CALIFORNIA

PLANS APPROVAL DATE

The State of California or its officers or agents shall not be responsible for the accuracy or completeness of electronic copies of this plan sheet.

NOTE:
THE CONTRACTOR SHALL VERIFY ALL CONTROLLING FIELD DIMENSIONS BEFORE ORDERING OR FABRICATING ANY MATERIAL.

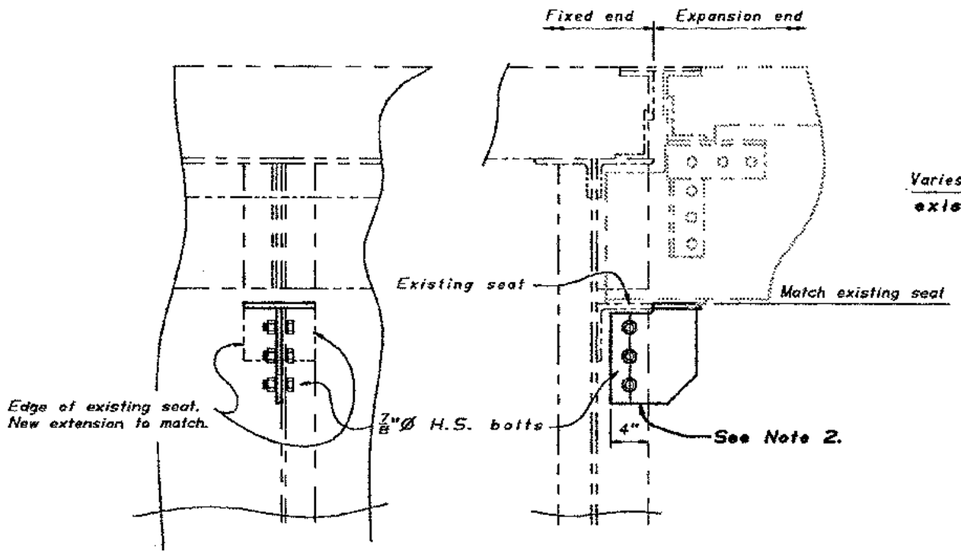

INTERIOR STRINGERS AT EXPANSION BENTS

1 1/2" = 1'-0"

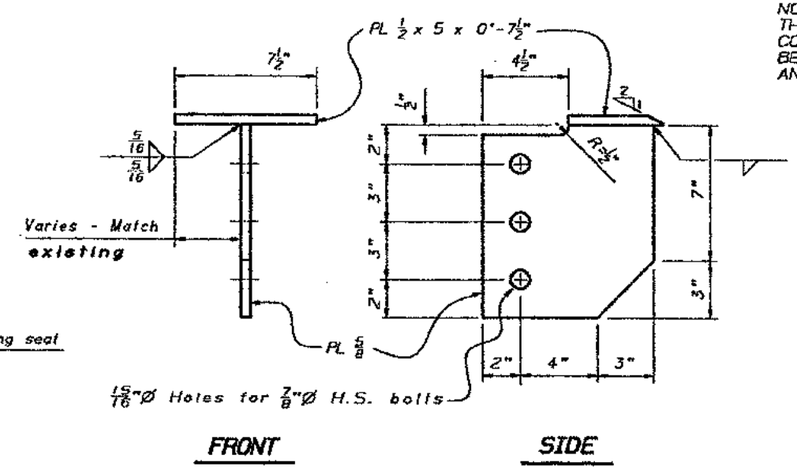

SEAT EXTENSION

3" = 1'-0"

Note: 1. Length of seat extension may be adjusted in the field by the Engineer.

2. Clean surface. No paint removal required

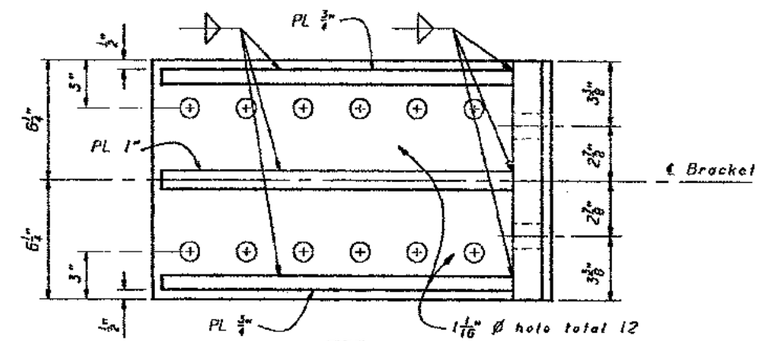

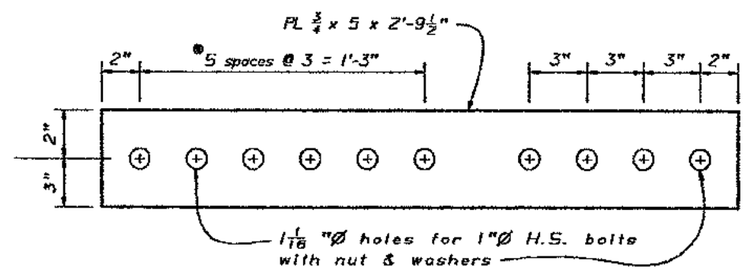

BACK UP PLATES TO BRACKETS

3" = 1'-0"

● Match bracket holes.

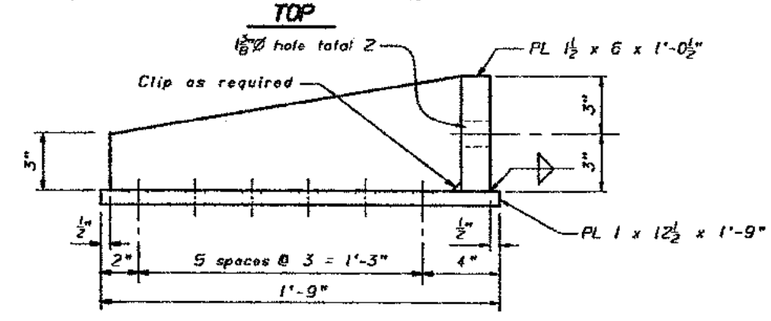

BRACKET X DETAILS

3" = 1'-0"

MAR 22 1995

SEISMIC RETROFIT PROJECT NO. 614

SFOBB - BENT E23 TO E39 RETROFIT

BENT E25, E27, E29 & E31 UPPER DECK

RESTRAINER & SEAT EXTENSION DETAILS 2

	BY	CHECKED
DESIGN	Bob Bateman	Shawn sun
DETAILS	AES 11-93	Shawn Sun
QUANTITIES	Ali Hamza	AES

STATE OF CALIFORNIA DEPARTMENT OF TRANSPORTATION

DIVISION OF STRUCTURES STRUCTURE DESIGN 2

BRIDGE NO. 33-25

POST MILE 1.0-1.3

CU 04
EA 043431

DISREGARD PRINTS BEARING EARLIER REVISION DATES

REVISION DATES (PRELIMINARY STAGE ONLY)

SHEET 80 OF 120

ORIGINAL SCALE IN INCHES FOR REDUCED PLANS 0 1 2 3

OS 053 2139 (CADD 4/89)

NOTE:
THE CONTRACTOR SHALL VERIFY ALL CONTROLLING FIELD DIMENSIONS BEFORE ORDERING OR FABRICATING ANY MATERIAL.

DIST.	COUNTY	ROUTE	POST MILES TOTAL PROJECT	SHEET NO.	TOTAL SHEETS
04	ALA	80			

REGISTERED ENGINEER - CIVIL

REGISTERED PROFESSIONAL ENGINEER Gregory Slocum No. 44950 Exp. 3-31-98 CIVIL STATE OF CALIFORNIA

PLANS APPROVAL DATE

The State of California or its officers or agents shall not be responsible for the accuracy or completeness of electronic copies of this plan sheet.

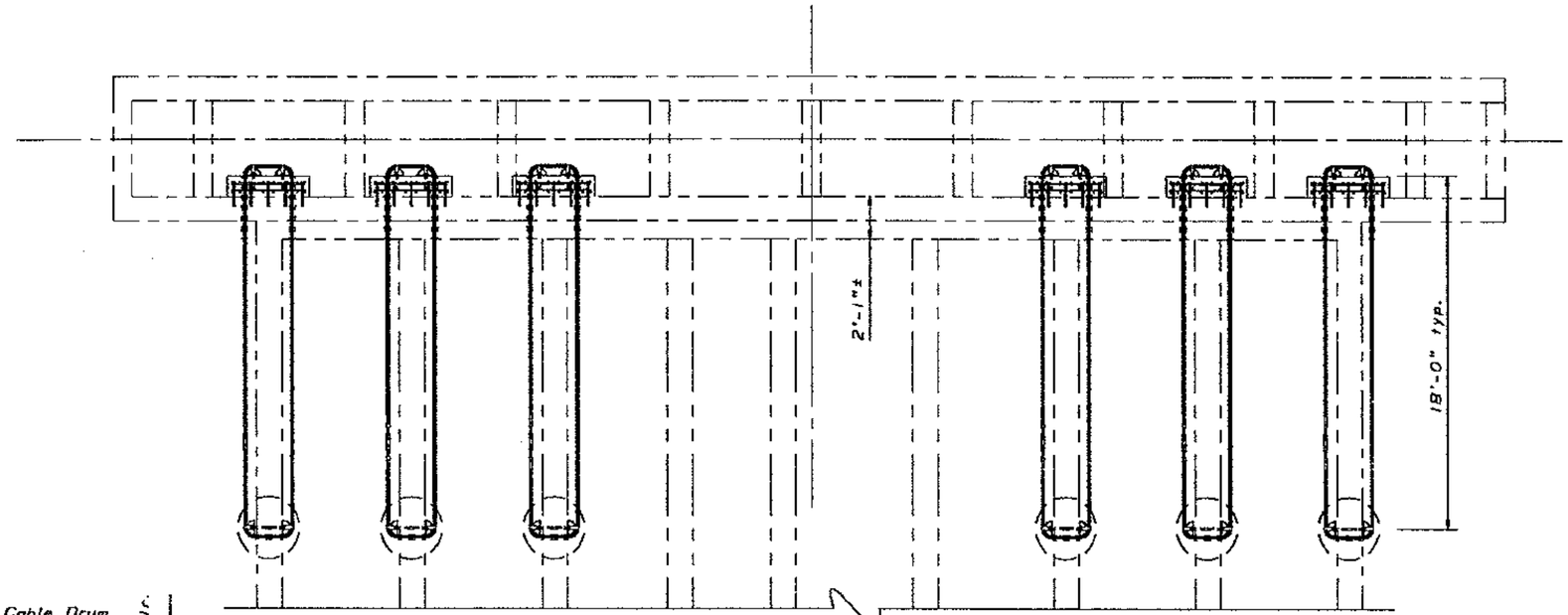

SECTION F-F

$\frac{1}{4}$" = 1'-0"

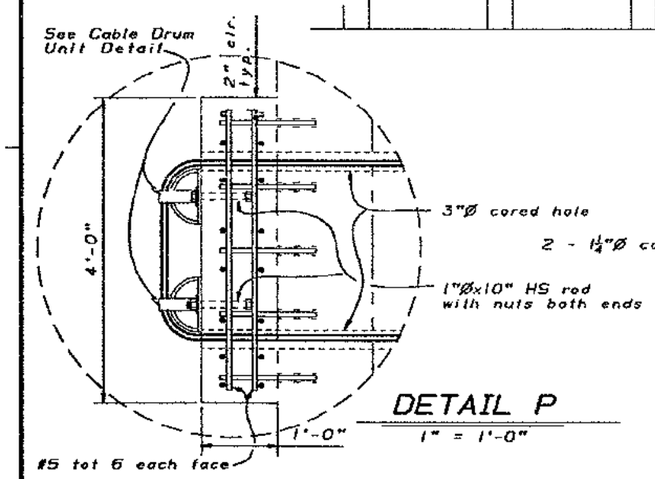

DETAIL P

1" = 1'-0"

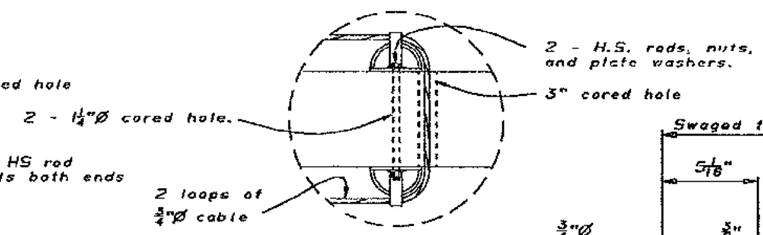

DETAIL R

1" = 1'-0"

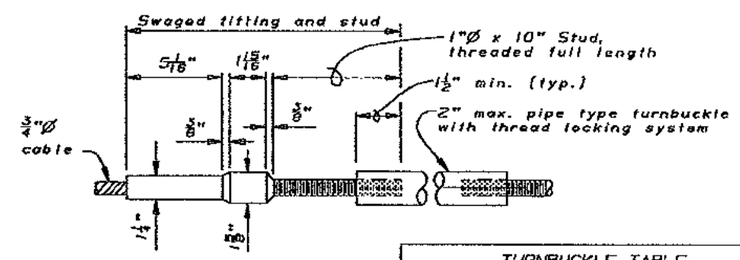

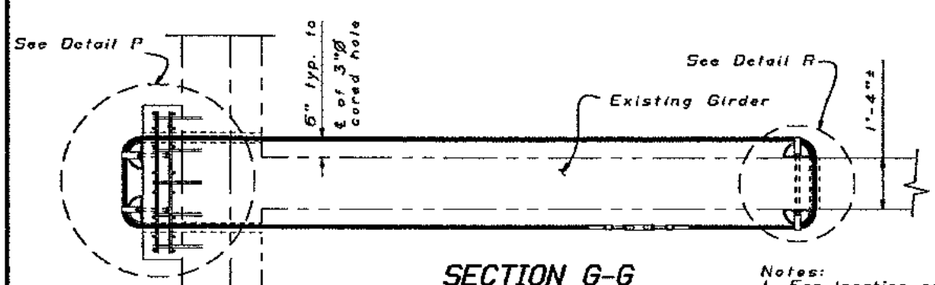

SECTION G-G

$\frac{1}{2}$" = 1'-0"

Notes:
1. For location of Sections F-F and G-G, see Bent E23 Upper and Lower Decks "Restrainer Elevation" sheet.

Turnbuckle Installation Notes:
1. The turnbuckle shall be tightened as required to remove slack.
2. Tighten the turnbuckle one turn per 10 feet of cable length to tension the assembly.
3. Loosen the turnbuckle the number of turns specified in the "Turnbuckle Table" to allow for thermal contraction of girders.

TURNBUCKLE TABLE	
AMBIENT TEMP. °F	*No. of Turns
0	0
60	3
120	4

*No. of turns may be adjusted as directed by the Engineer. Interpolate for intermediate temperatures.

TURNBUCKLE DETAIL

3" = 1'-0"

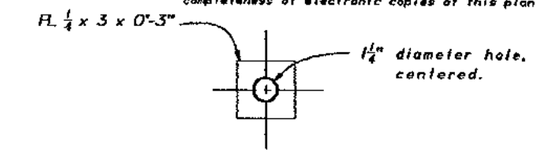

PLATE WASHER

No scale

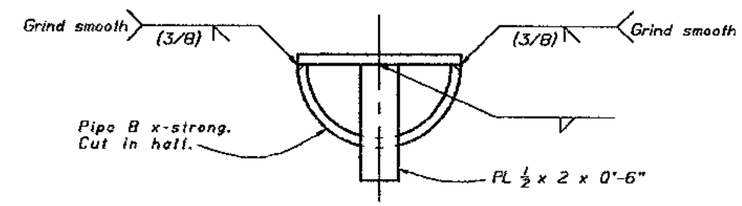

TOP VIEW

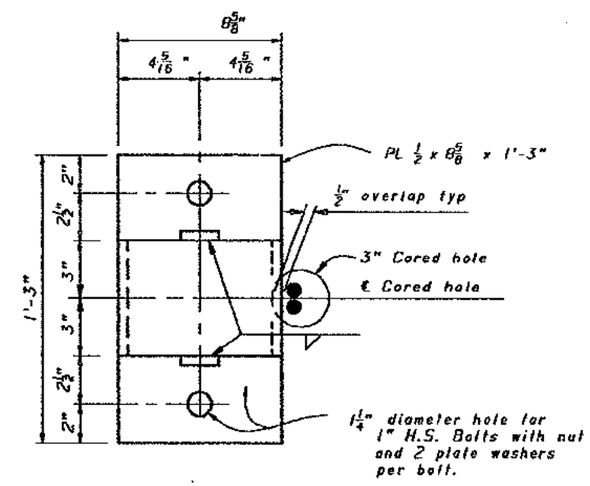

FRONT VIEW

CABLE DRUM UNIT

3" = 1'-0"

MAR 22 1995

SEISMIC RETROFIT PROJECT NO. 614

SFOBB - BENT E23 TO E39 RETROFIT

BENT E23 LOWER DECK

RESTRAINER DETAILS No. 1

DESIGN	BY Gregory Slocum	CHECKED Bob Bateman	
DETAILS	BY Franci Dukeshire 6/94	CHECKED Gregory Slocum	
QUANTITIES	BY Gregory Slocum	CHECKED Bob Bateman	

STATE OF CALIFORNIA DEPARTMENT OF TRANSPORTATION

DIVISION OF STRUCTURES STRUCTURE DESIGN 2

BRIDGE NO. 33-25

POST MILE 1.0-1.3

CU 04
EA 043431

DISREGARD PRINTS BEARING EARLIER REVISION DATES

REVISION DATES (PRELIMINARY STAGE ONLY) 6/22/94

SHEET 81 OF 120

DS DSD 2139 (CADD 4/88)

ORIGINAL SCALE IN INCHES FOR REDUCED PLANS 0 1 2 3

DIST.	COUNTY	ROUTE	POST MILES TOTAL PROJECT	SHEET NO.	TOTAL SHEETS
04	ALA	80			

REGISTERED ENGINEER - CIVIL

REGISTERED PROFESSIONAL ENGINEER Gregory Slocum No. 44950 Exp. 3-31-98 CIVIL STATE OF CALIFORNIA

PLANS APPROVAL DATE

The State of California or its officers or agents shall not be responsible for the accuracy or completeness of electronic copies of this plan sheet.

NOTE:
THE CONTRACTOR SHALL VERIFY ALL CONTROLLING FIELD DIMENSIONS BEFORE ORDERING OR FABRICATING ANY MATERIAL.

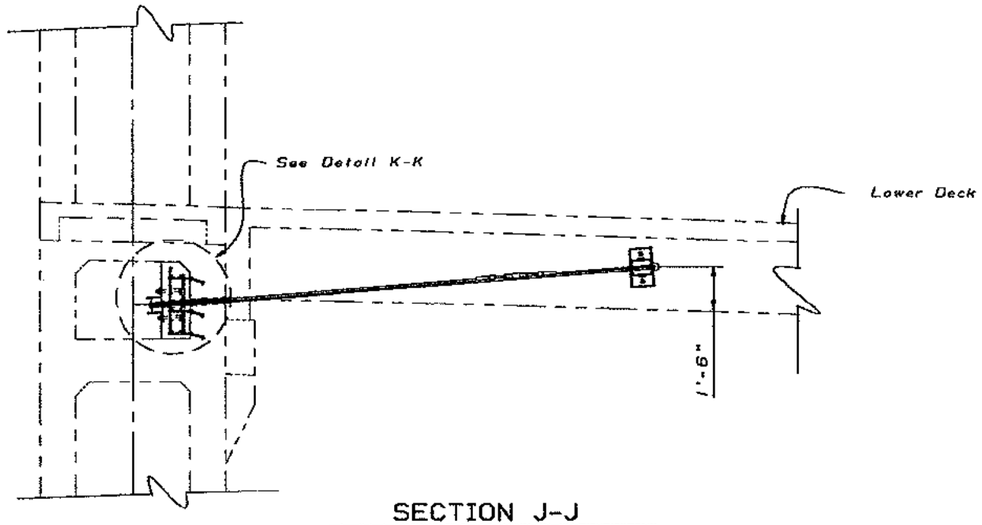

SECTION J-J

$\frac{3}{8}$" = 1'-0"

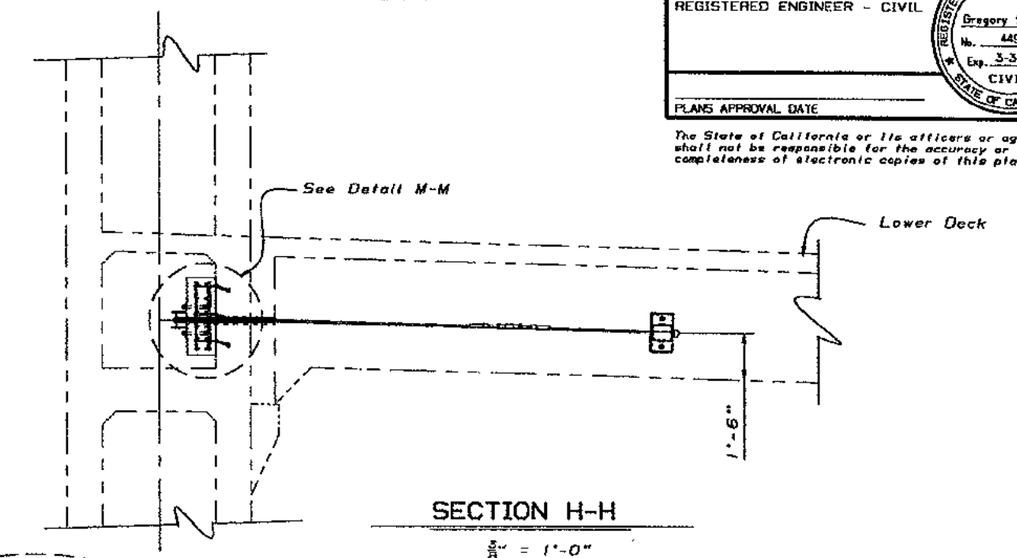

SECTION H-H

$\frac{3}{8}$" = 1'-0"

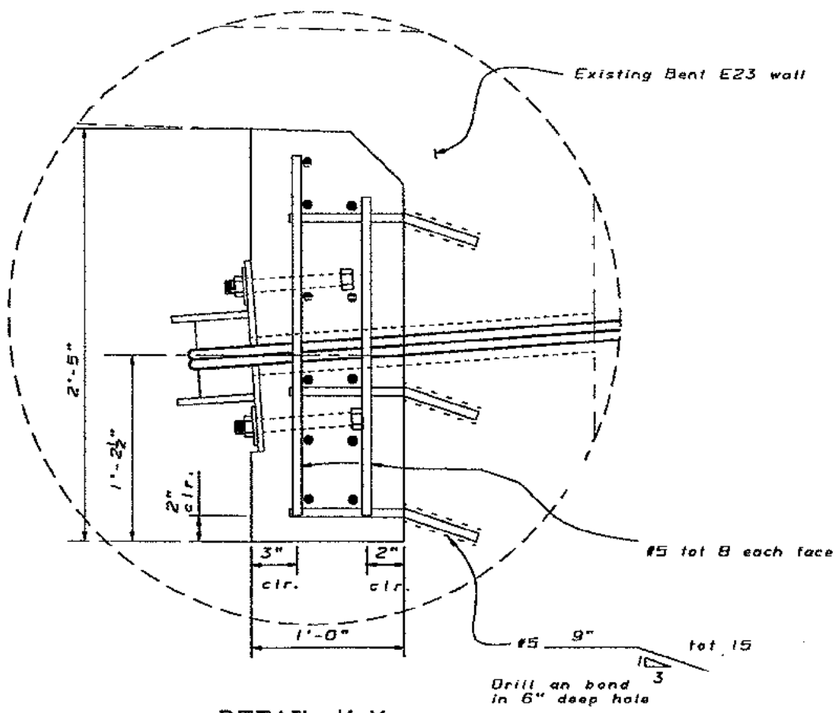

DETAIL K-K

2" = 1'-0"

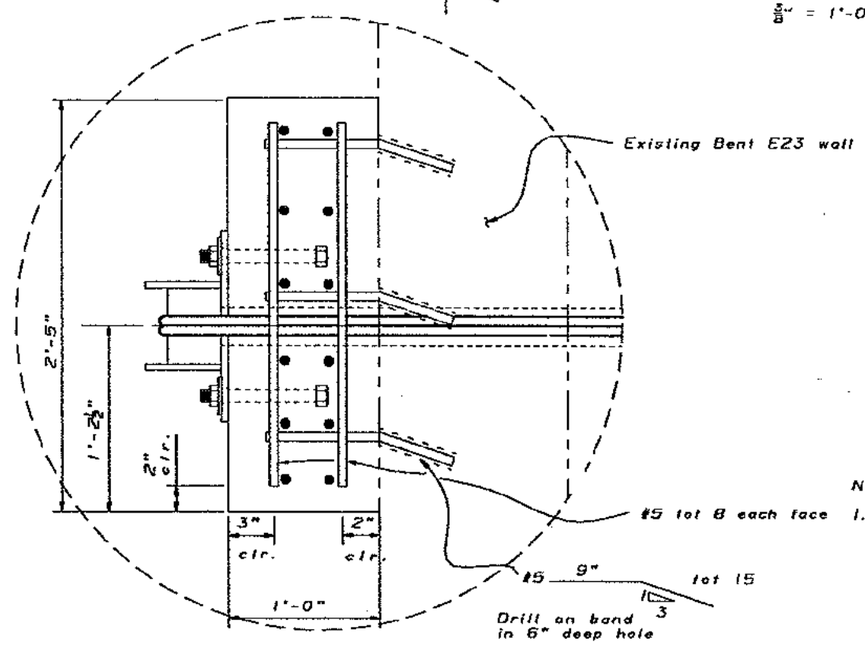

DETAIL M-M

2" = 1'-0"

Notes:

1. For location of Section H-H and J-J, see Bent E23 Upper and Lower Decks - "Restrainer Elevation" sheet.

MAR 22 1995

DESIGN	BY Gregory Slocum	CHECKED Bob Bateman
DETAILS	BY Franci Dukeshire 6/94	CHECKED Gregory Slocum
QUANTITIES	BY Gregory Slocum	CHECKED Bob Bateman

SEISMIC RETROFIT PROJECT NO. 614

SFOBB - BENT E23 TO E39 RETROFIT

STATE OF CALIFORNIA DEPARTMENT OF TRANSPORTATION

DIVISION OF STRUCTURES STRUCTURE DESIGN 2

BRIDGE NO. 33-25

POST MILE 1.0-1.3

BENT E23 LOWER DECK

RESTRAINER DETAILS No. 2

CU 04
EA 043431

DISREGARD PRINTS BEARING EARLIER REVISION DATES

REVISION DATES (PRELIMINARY STAGE ONLY) 6/22/94

SHEET 82 OF 120

DS DSD 2030 (CADD 4/89)

ORIGINAL SCALE IN INCHES FOR REDUCED PLANS 0 1 2 3

DIST.	COUNTY	ROUTE	POST MILES TOTAL PROJECT	SHEET NO.	TOTAL SHEETS
04	ALA	80			

REGISTERED ENGINEER - CIVIL

REGISTERED PROFESSIONAL ENGINEER Gregory Slocum No. 44950 Exp. 3-31-98 CIVIL STATE OF CALIFORNIA

PLANS APPROVAL DATE

NOTE:
THE CONTRACTOR SHALL VERIFY ALL CONTROLLING FIELD DIMENSIONS BEFORE ORDERING OR FABRICATING ANY MATERIAL.

The State of California or its officers or agents shall not be responsible for the accuracy or completeness of electronic copies of this plan sheet.

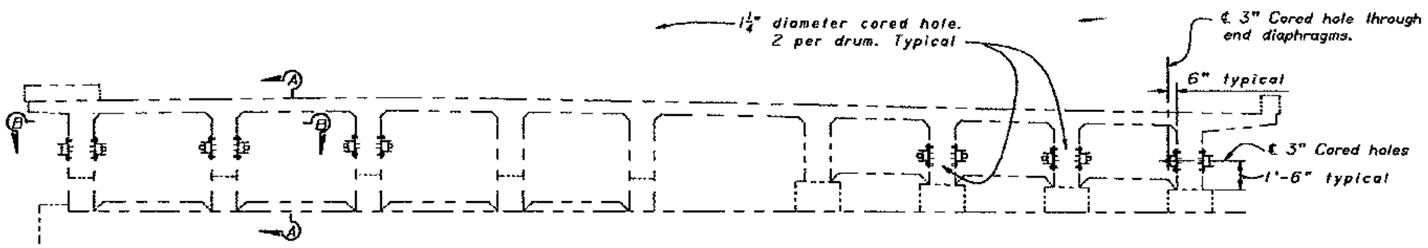

TYPICAL SECTION

¼" = 1'-0"

Note:
See "Bent E23A to E27A Lower Deck - Restrainer and Shear Key Layout" sheet for Restrainer locations.

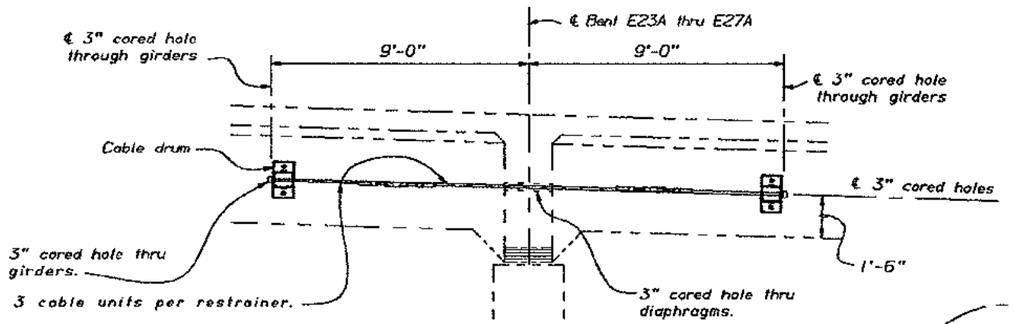

SECTION A-A

⅜" = 1'-0"

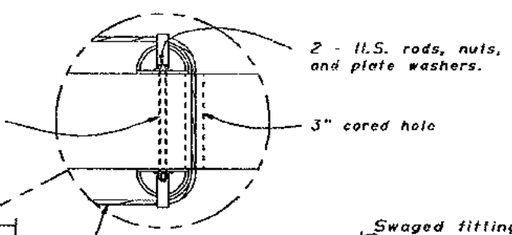

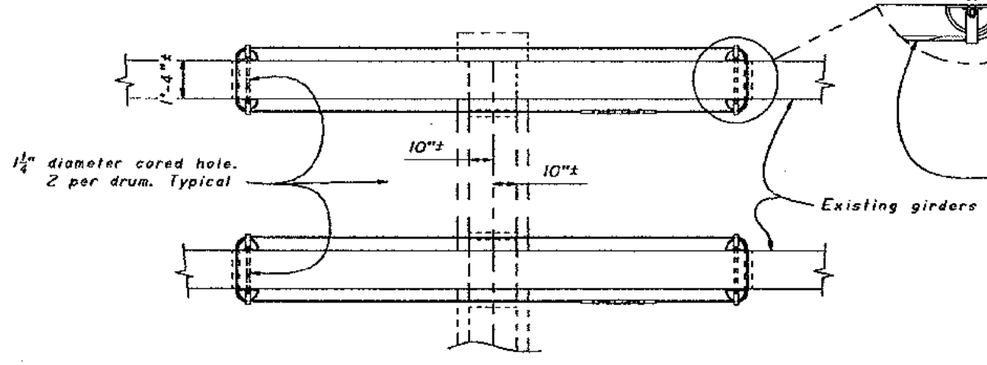

SECTION B-B

⅜" = 1'-0"

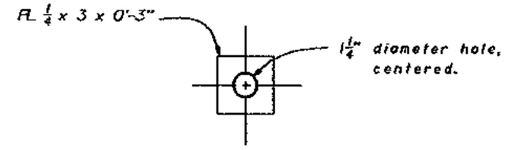

PLATE WASHER

No scale

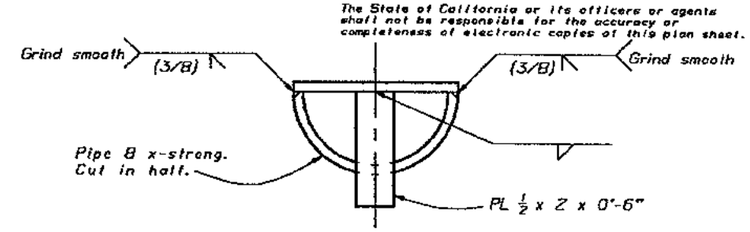

TOP VIEW

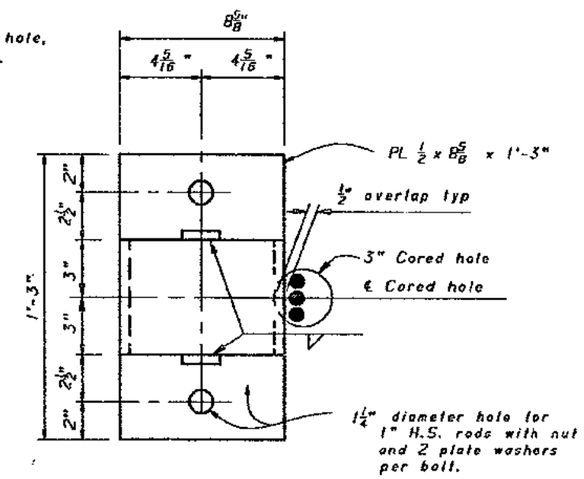

FRONT VIEW

CABLE DRUM UNIT

3" = 1'-0"

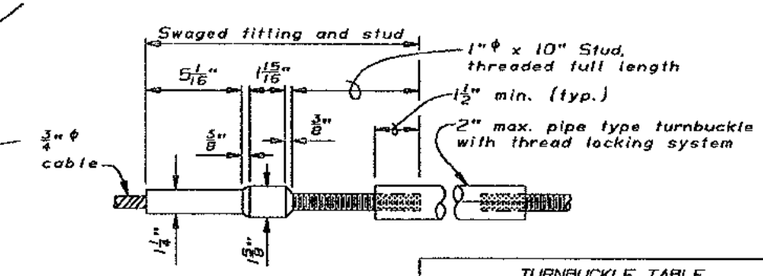

Turnbuckle Installation Notes:

1. The turnbuckle shall be tightened as required to remove slack.
2. Tighten the turnbuckle one turn per 10 feet of cable length to tension the assembly.
3. Loosen the turnbuckle the number of turns specified in the "Turnbuckle Table" to allow for thermal contraction of girders.

TURNBUCKLE TABLE

AMBIENT TEMP. °F	*No. of Turns
0	0
60	3
120	4

*No. of turns may be adjusted as directed by the Engineer. Interpolate for intermediate temperatures.

TURNBUCKLE DETAIL

3" = 1'-0"

MAR 22 1995

DESIGN	BY Bob Bateman	CHECKED Sean Sun	
DETAILS	BY AES 11-93	CHECKED Sean Sun	
QUANTITIES	BY Ali Hamza	CHECKED AES	

SEISMIC RETROFIT PROJECT NO. 614

STATE OF CALIFORNIA DEPARTMENT OF TRANSPORTATION

DIVISION OF STRUCTURES STRUCTURE DESIGN 2

BRIDGE NO. 33-25 POST MILE 1.0-1.3

SFOBB - BENT E23 TO E39 RETROFIT

BENTS E23A, E24A, E25A, E26A & E27A

RESTRAINER DETAILS

CU 04
EA 043431

ORIGINAL SCALE IN INCHES FOR RECORDED PLANS 0 1 2 3

DISREGARD PRINTS BEARING EARLIER REVISION DATES

REVISION DATES (PRELIMINARY STAGE ONLY) 11-15-93 11-19-93 11-30-93 12-1-93 5-1-94

SHEET 85 OF 120

ES 050 2130 (CADD 4/93)

DIST.	COUNTY	ROUTE	POST MILES TOTAL PROJECT	SHEET NO.	TOTAL SHEETS
04	ALA	80			

REGISTERED ENGINEER - CIVIL

REGISTERED PROFESSIONAL ENGINEER Gregory Evan Slocum No. 44950 Exp. 3-31-98 CIVIL STATE OF CALIFORNIA

PLANS APPROVAL DATE

The State of California or its officers or agents shall not be responsible for the accuracy or completeness of electronic copies of this plan sheet.

NOTE:
THE CONTRACTOR SHALL VERIFY ALL CONTROLLING FIELD DIMENSIONS BEFORE ORDERING OR FABRICATING ANY MATERIAL.

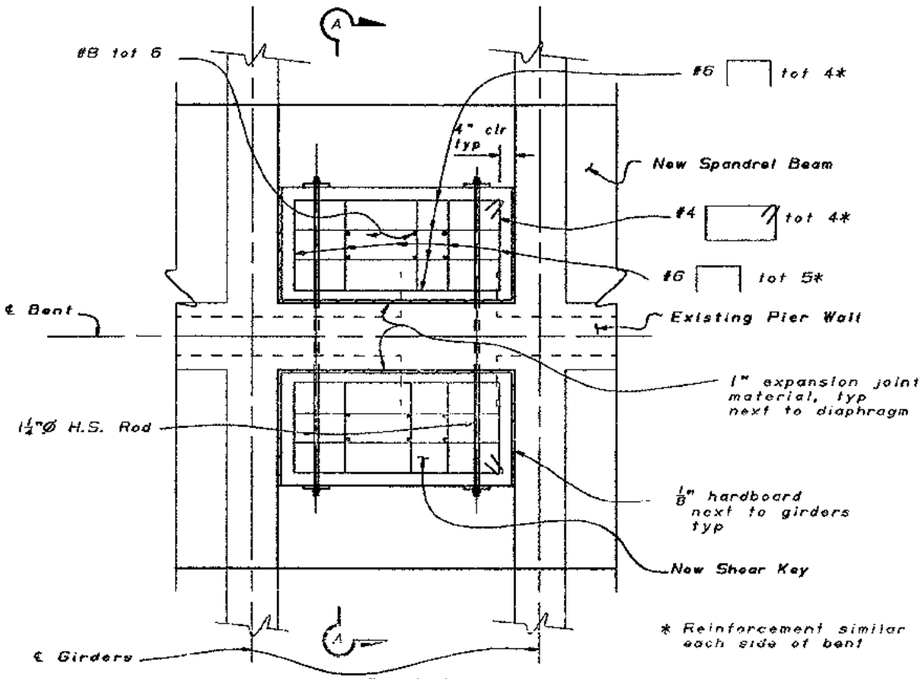

PLAN

½" = 1'-0"

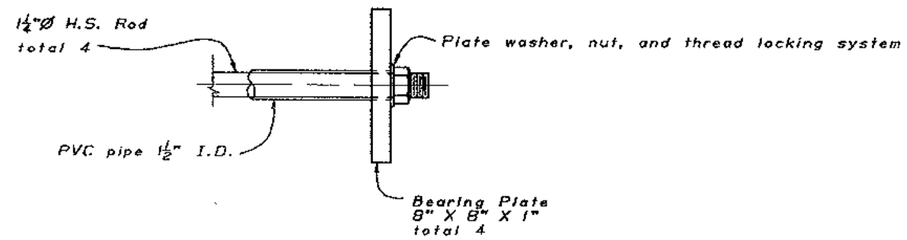

H.S. ROD ANCHORAGE DETAIL

3" = 1'-0"

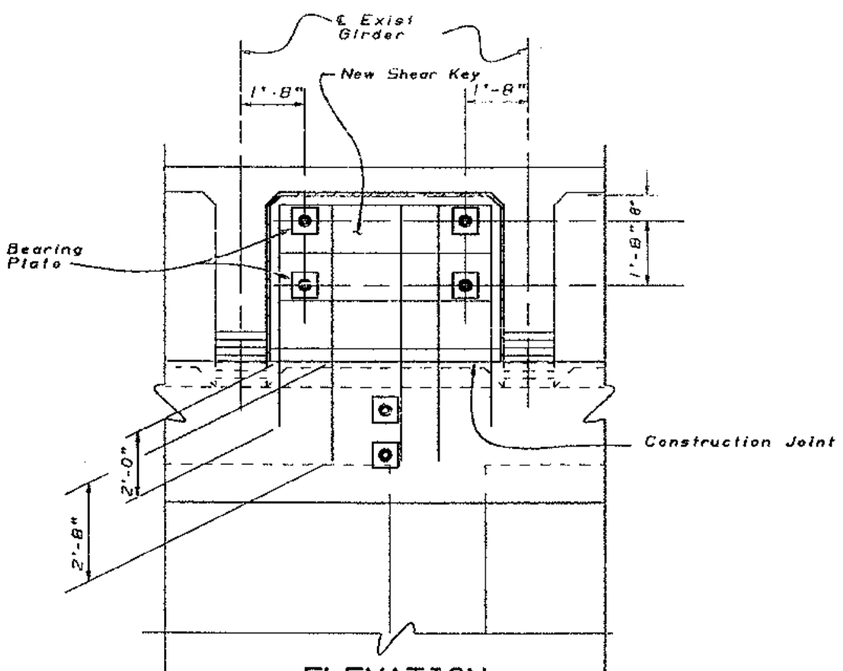

ELEVATION

½" = 1'-0"

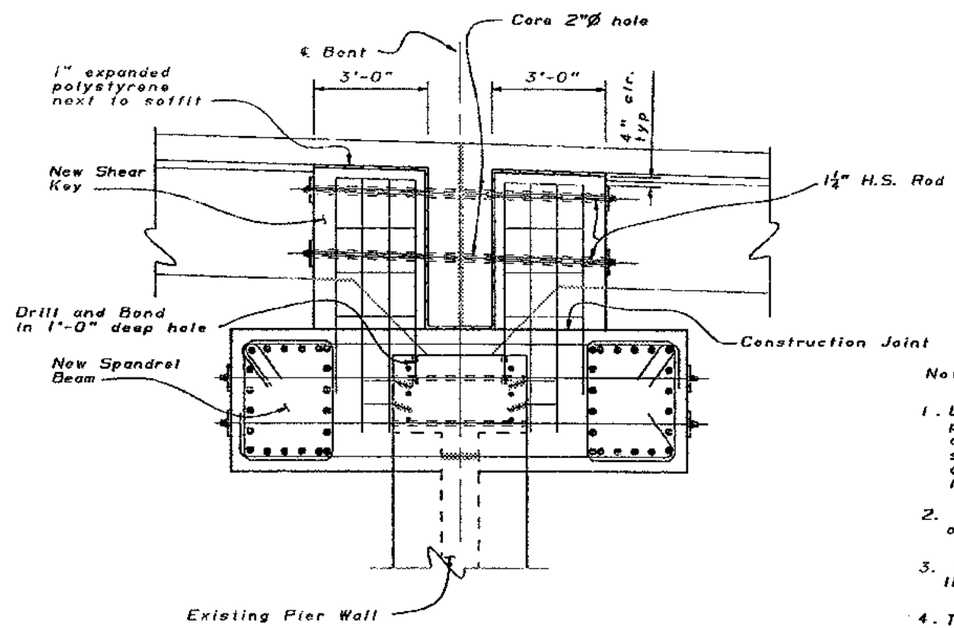

SECTION A-A

½" = 1'-0"

Notes:

1. Location of cored and drilled holes shown in the plans are approximate. Prior to placing holes in concrete, the contractor shall locate all reinforcing steel and adjust the location of the holes to clear all reinforcing bars (except as noted). Final hole locations are subject to the approval of the Engineer.
2. The rod anchorage detail is identical for both ends of H.S. Rods.
3. The bearing plate shall be perpendicular to center line of H.S. Rod.
4. Temporary shoring shall be placed under spandrel beam to support weight of unhardened shear key concrete.
5. For restrainer and shear key layout, see "Bent E23A to E27A Lower Deck - Restrainer and Shear Key Layout" sheet.

APR 13 1995

DESIGN	BY Ali Hamza	CHECKED Gregory Slocum	
DETAILS	BY Fronci Dukeshireti/93	CHECKED Ali Hamza	
QUANTITIES	BY Ali Hamza	CHECKED Lian Duan	

STATE OF CALIFORNIA
DEPARTMENT OF TRANSPORTATION

DIVISION OF STRUCTURES
STRUCTURE DESIGN 2

BRIDGE NO. 33-25
POST MILE 1.0-1.3

SEISMIC RETROFIT PROJECT No. 614

SFOBB - BENT E23 TO E39 RETROFIT

BENT E24 TO E27 LOWER DECK

RESTRAINER DETAILS No. 1

DS DSD 2135 (CADD 4/89)

ORIGINAL SCALE IN INCHES FOR REDUCED PLANS 0 1 2 3

CU 04
EA 043431

DISREGARD PRINTS BEARING EARLIER REVISION DATES

REVISION DATES (PRELIMINARY STAGE ONLY) 12/14/93 1/19/94 . 11/24/93 11/29/93

SHEET 84 OF 120

DIST.	COUNTY	ROUTE	POST MILES TOTAL PROJECT	SHEET NO.	TOTAL SHEETS
04	ALA	80			

REGISTERED ENGINEER - CIVIL

REGISTERED PROFESSIONAL ENGINEER Gregory Evan Slocum No. 44950 Exp. 3-31-93 CIVIL STATE OF CALIFORNIA

PLANS APPROVAL DATE

The State of California or its officers or agents shall not be responsible for the accuracy or completeness of electronic copies of this plan sheet.

NOTE:
THE CONTRACTOR SHALL VERIFY ALL CONTROLLING FIELD DIMENSIONS BEFORE ORDERING OR FABRICATING ANY MATERIAL.

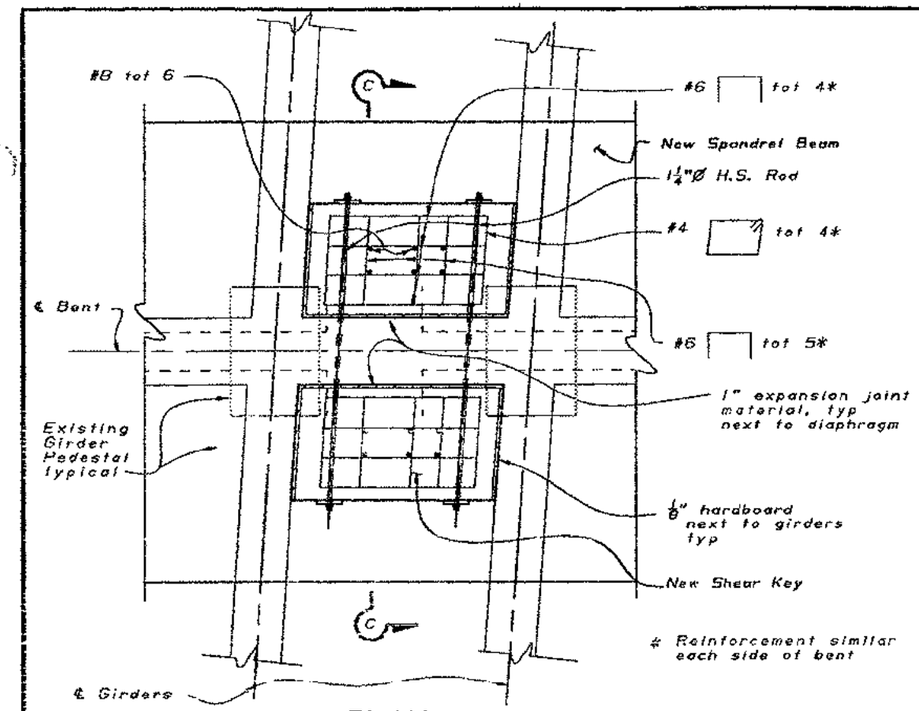

PLAN
½" = 1'-0"

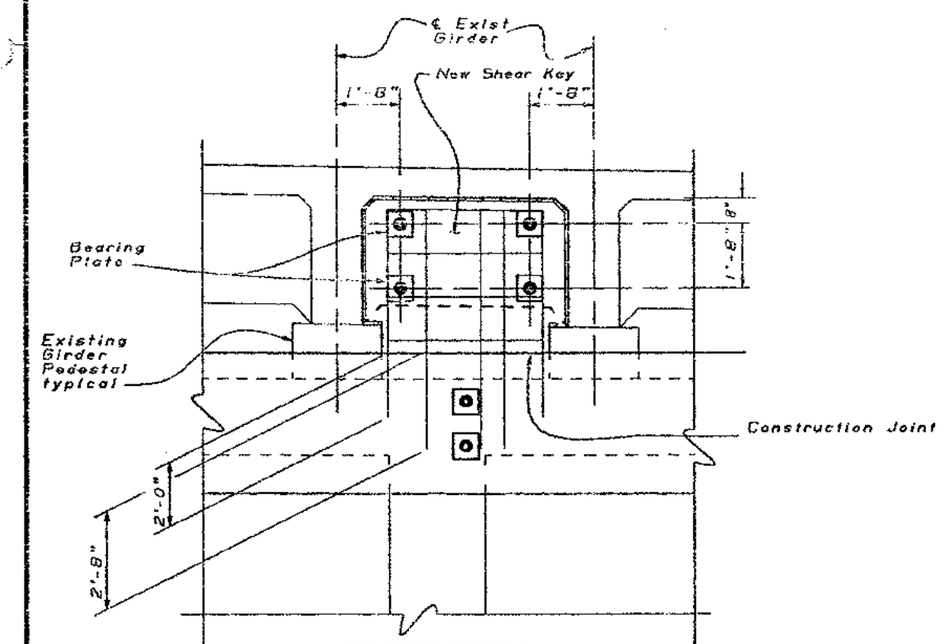

ELEVATION
½" = 1'-0"

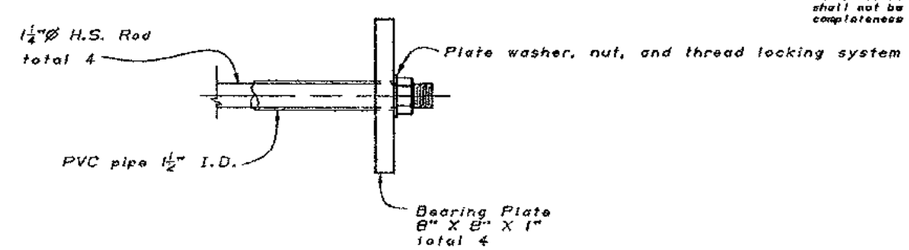

H.S. ROD ANCHORAGE DETAIL
3" = 1'-0"

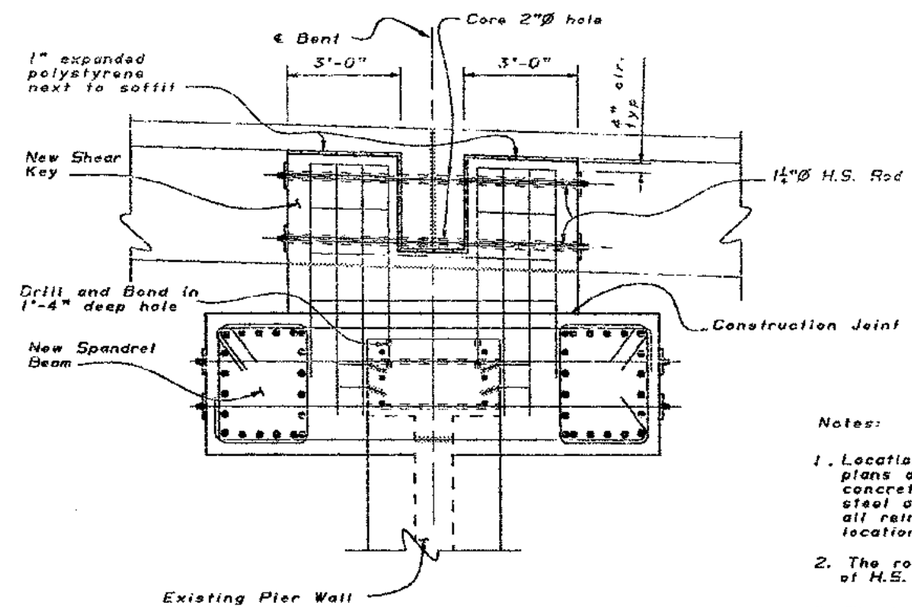

SECTION C-C
½" = 1'-0"

Notes:

1. Location of cored and drilled holes shown in the plans are approximate. Prior to placing holes in concrete, the contractor shall locate all reinforcing steel and adjust the location of the holes to clear all reinforcing bars (except as noted). Final hole locations are subject to the approval of the Engineer.
2. The rod anchorage detail is identical for both ends of H.S. Rods.
3. The bearing plate shall be perpendicular to center line of H.S. Rod.
4. Temporary shoring shall be placed under spandrel beam to support weight of unhardened shear key concrete.
5. For restrainer and shear key layout, see "Bent E23A to E27A Lower Deck - Restrainer and Shear Key Layout" sheet.

APR 13 1995

DESIGN	BY Ali Hamza	CHECKED Gregory Slocum	
DETAILS	BY Franci Dukeshireit/93	CHECKED Ali Hamza	
QUANTITIES	BY Ali Hamza	CHECKED Lian Duan	

SEISMIC RETROFIT PROJECT No. 614

STATE OF CALIFORNIA
DEPARTMENT OF TRANSPORTATION

DIVISION OF STRUCTURES
STRUCTURE DESIGN 2

BRIDGE NO. 33-25
POST MILE 1.0-1.3

SFOBB - BENT E23 TO E39 RETROFIT
BENT E24 TO E27 LOWER DECK
RESTRAINER DETAILS No. 2

ORIGINAL SCALE IN INCHES FOR REDUCED PLANS 0 1 2 3

CU 04
EA 043431

DISREGARD PRINTS BEARING EARLIER REVISION DATES

REVISION DATES (PRELIMINARY STAGE ONLY) 11/28/93 12/1/93 1/19/94 11/24/93

SHEET 85 OF 120

DS ISG 2138 (CADD 4/89)

DIST.	COUNTY	ROUTE	POST MILES TOTAL PROJECT	SHEET NO.	TOTAL SHEETS
04	ALA	80			

REGISTERED ENGINEER - CIVIL

REGISTERED PROFESSIONAL ENGINEER
Gregory Evan Slocum
No. 44950
Exp. 3-31-98
CIVIL
STATE OF CALIFORNIA

PLANS APPROVAL DATE

The State of California or its officers or agents shall not be responsible for the accuracy or completeness of electronic copies of this plan sheet.

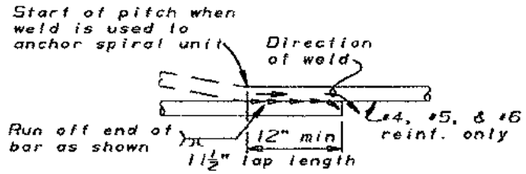

Note: Flare weld to be made in direction shown.

WELDED LAP SPLICE AND ANCHOR

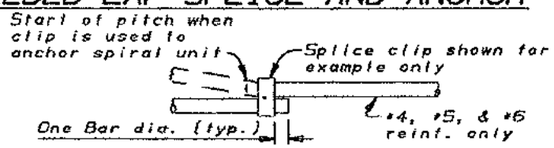

MECHANICAL LAP SPLICE AND ANCHOR

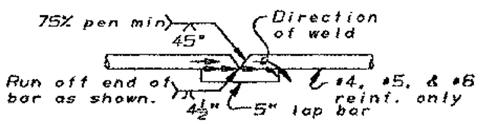

1. Butt weld to be made first.
2. Butt weld to be made in flat or horizontal position.
3. Lap bar to be centered on splice.
4. Flare weld to be made in direction shown.
5. Lap bar equal size to spiral bar.

VEE GROOVE WELDED SPLICE

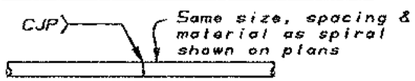

Individual hoops, made continuous with 100% penetration welds, may be substituted for spirals.

BUTT WELDED CONTINUOUS HOOP

BAR SPIRAL SPLICE AND SPIRAL ANCHOR AND HOOP DETAIL

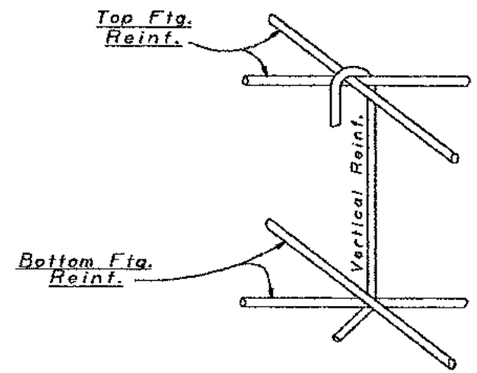

DETAIL C

No Scale

Notes:

1. For location of Detail C, see "Footing Details" sheets.

MAR 22 1995

DESIGN	BY John Fujimoto	CHECKED Ali Hamza	SEISMIC RETROFIT PROJECT No. 614			SFOBB - BENT E23 TO E39 RETROFIT
DETAILS	BY Franci Dukeshire 10-92	CHECKED Ali Hamza	STATE OF CALIFORNIA DEPARTMENT OF TRANSPORTATION	DIVISION OF STRUCTURES STRUCTURE DESIGN 2	BRIDGE NO. 33-25	BENT E23 TO E39
QUANTITIES	BY M. Vinayagamoorthy	CHECKED Mike Keever			POST MILE 1.0-1.3	COLUMN AND FOOTING REINF. DETAILS

DS DED 2139 (CADD 4/89)

ORIGINAL SCALE IN INCHES FOR REDUCED PLANS 0 1 2 3

CU 04
EA043431

DISREGARD PRINTS BEARING EARLIER REVISION DATES

REVISION DATES (PRELIMINARY STAGE ONLY) 11/28/93 11/30/93

SHEET 87 OF 120

DIST.	COUNTY	ROUTE	POST MILES TOTAL PROJECT	SHEET NO.	TOTAL SHEETS
04	ALA	80			

REGISTERED ENGINEER - CIVIL

REGISTERED PROFESSIONAL ENGINEER
Gregory Evan Slocum
No. 44950
Exp. 3-31-98
CIVIL
STATE OF CALIFORNIA

PLANS APPROVAL DATE

The State of California or its officers or agents shall not be responsible for the accuracy or completeness of electronic copies of this plan sheet.

NOTE:
THE CONTRACTOR SHALL VERIFY ALL CONTROLLING FIELD DIMENSIONS BEFORE ORDERING OR FABRICATING ANY MATERIAL.

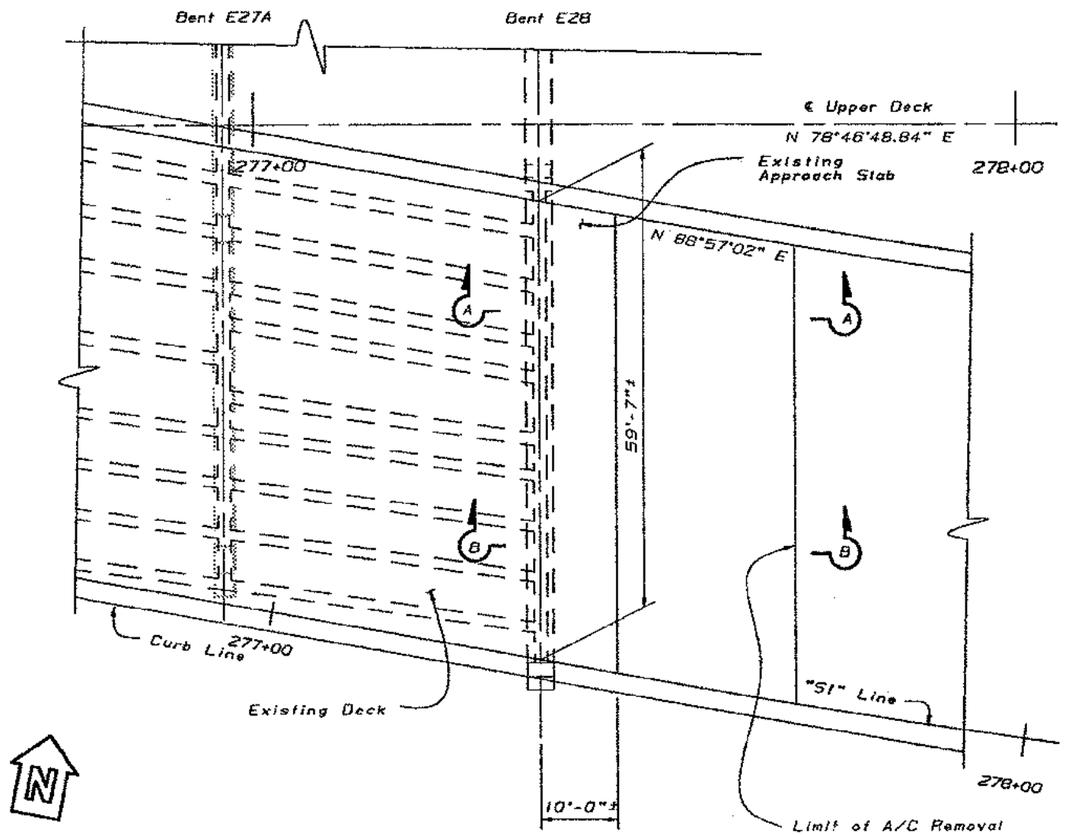

PLAN
1" = 10'-0"

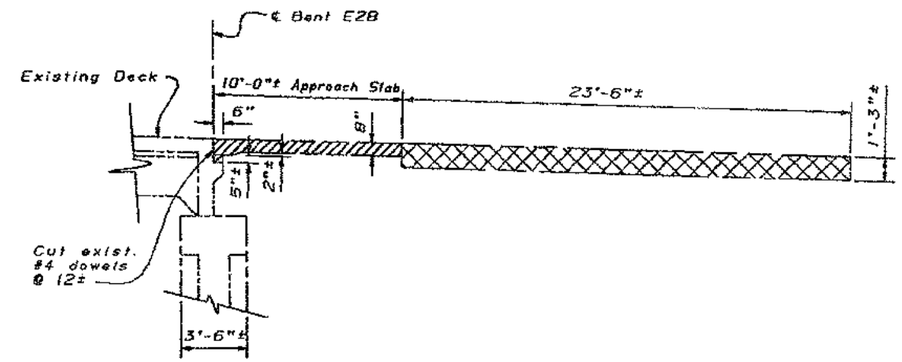

SECTION A-A
$\frac{1}{4}$" = 1'-0"

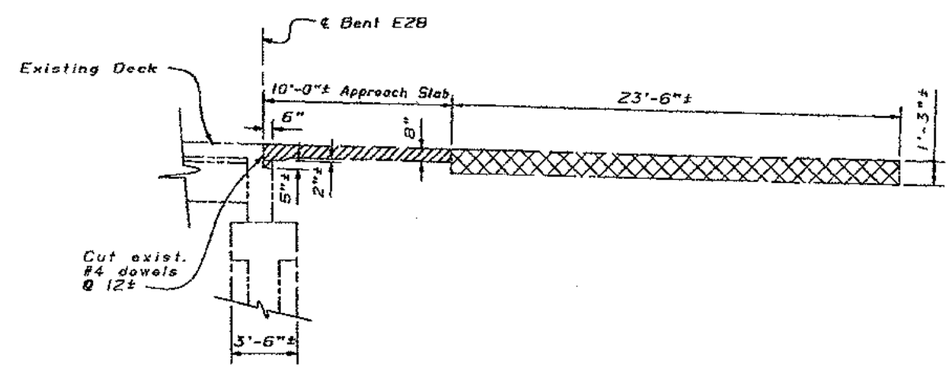

SECTION B-B
$\frac{1}{4}$" = 1'-0"

Indicates limits of concrete removal

Indicates limits of AC removal

MAR 22 1995

SEISMIC RETROFIT PROJECT No. 614

SFOBB - BENT E23 TO E39 RETROFIT

BENT E28

APPROACH SLAB REMOVAL

DESIGN	BY Lian Duan	CHECKED Ali Hamza
DETAILS	BY Franci Dukeshire 3/93	CHECKED Ali Hamza
QUANTITIES	BY A. Hamza	CHECKED J. Fujimoto

STATE OF CALIFORNIA
DEPARTMENT OF TRANSPORTATION

DIVISION OF STRUCTURES
STRUCTURE DESIGN 2

BRIDGE NO. 33-25
POST MILE 1.0-1.3

CU 04
EA 043431

DISREGARD PRINTS BEARING EARLIER REVISION DATES

REVISION DATES (PRELIMINARY STAGE ONLY) 12/30/93 1/12/94 12/23/93 12/30/93

SHEET 88 OF 120

ORIGINAL SCALE IN INCHES FOR REDUCED PLANS 0 1 2 3

OS 050 2138 (CADD 4/95)

DIST.	COUNTY	ROUTE	POST MILES TOTAL PROJECT	SHEET NO.	TOTAL SHEETS
04	ALA	80			

REGISTERED ENGINEER - CIVIL

REGISTERED PROFESSIONAL ENGINEER Gregory Evan Slocum No. 44950 Exp. 3-31-98 CIVIL STATE OF CALIFORNIA

PLANS APPROVAL DATE

The State of California or its officers or agents shall not be responsible for the accuracy or completeness of electronic copies of this plan sheet.

NOTE:
THE CONTRACTOR SHALL VERIFY ALL CONTROLLING FIELD DIMENSIONS BEFORE ORDERING OR FABRICATING ANY MATERIAL.

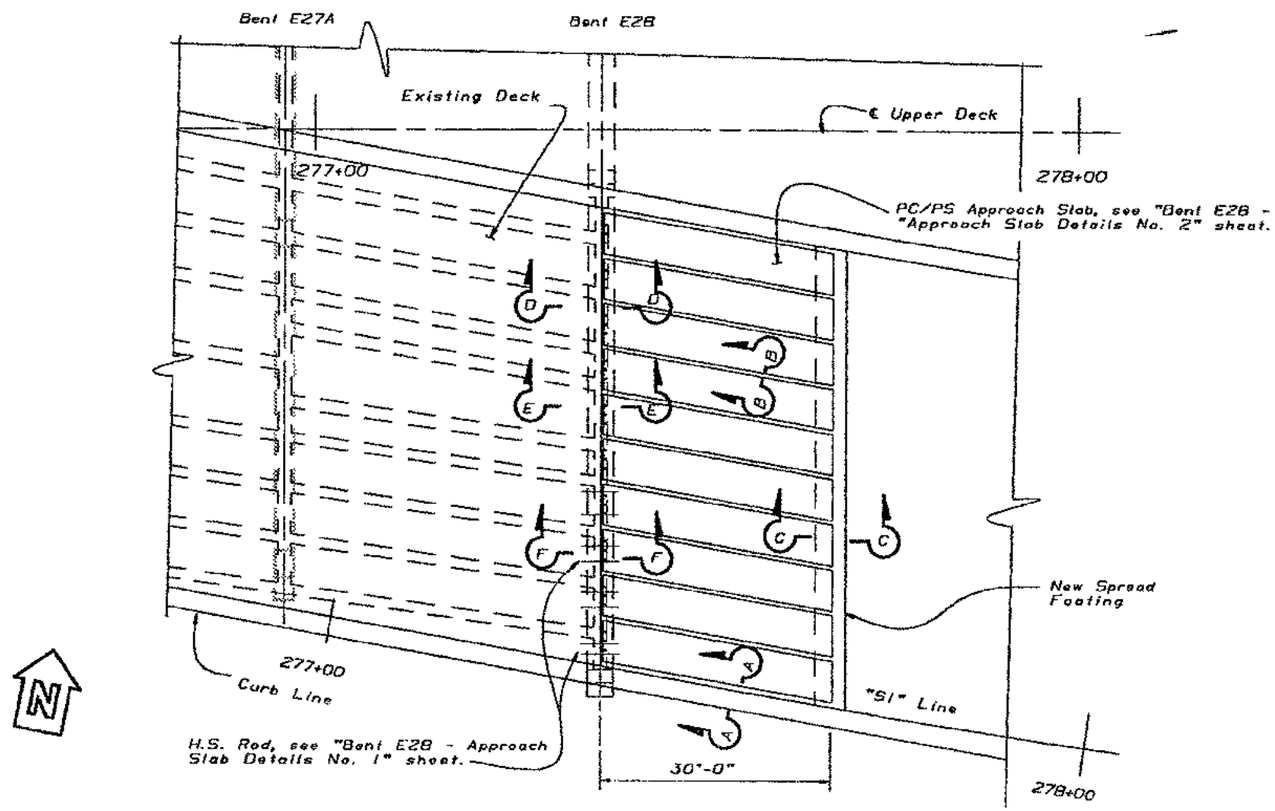

PLAN

1" = 10'-0"

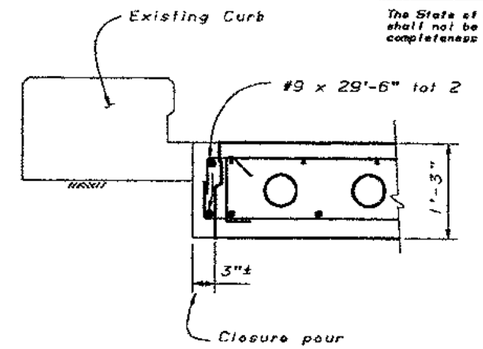

SECTION A-A

1" = 1'-0"

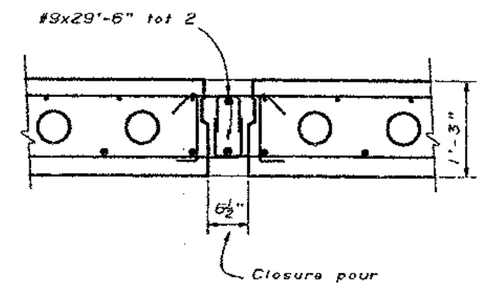

SECTION B-B

1" = 1'-0"

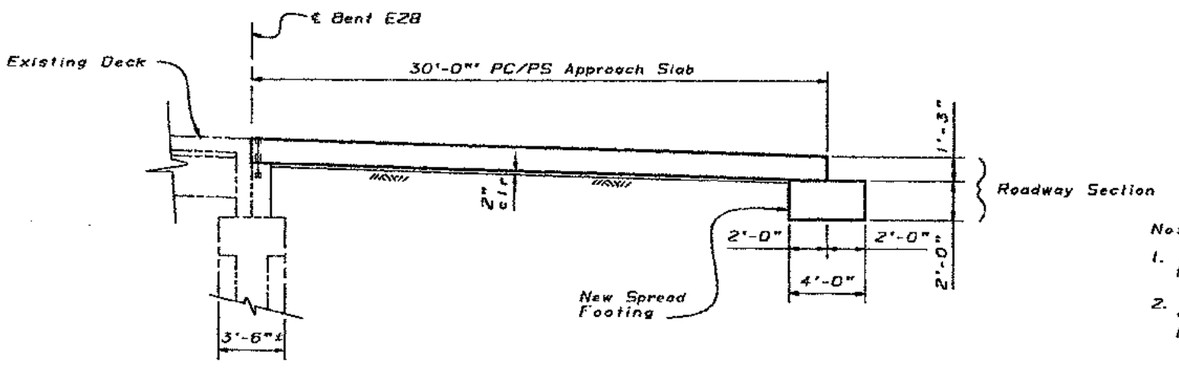

ELEVATION

¼" = 1'-0"

Notes:

1. Closure pour filled with f'c = 4,000 psi concrete @ 28 days.
2. For Sections D-D, E-E and F-F, see "Bent E28 - Approach Slab Details No. 1" sheet.

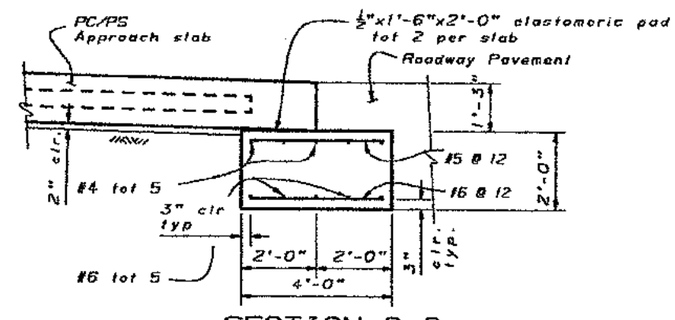

SECTION C-C

½" = 1'-0"

MAR 22 1995

SEISMIC RETROFIT PROJECT No. 614

SFOBB - BENT E23 TO E39 RETROFIT

DESIGN	BY Lian Duan	CHECKED Ali Hamza
DETAILS	BY Franci Dukeshire 3/93	CHECKED Ali Hamza
QUANTITIES	BY A. Hamza	CHECKED J. Fujimoto

STATE OF CALIFORNIA
DEPARTMENT OF TRANSPORTATION

DIVISION OF STRUCTURES
STRUCTURE DESIGN 2

BRIDGE NO. 33-25
POST MILE 1.0-1.3

BENT E28
APPROACH SLAB LAYOUT

DS DSD 2130 (CADD 4/89)

ORIGINAL SCALE IN INCHES FOR REDUCED PLANS 0 1 2 3

CU 04
EA 043431

DISREGARD PRINTS BEARING EARLIER REVISION DATES

REVISION DATES (PRELIMINARY STAGE ONLY) 12/30/93 1/12/94

SHEET 89 OF 120

DIST.	COUNTY	ROUTE	POST MILES TOTAL PROJECT	SHEET NO.	TOTAL SHEETS
04	ALA	80			

REGISTERED ENGINEER - CIVIL

REGISTERED PROFESSIONAL ENGINEER Gregory Evon Slocum No. 44950 Exp. 3-31-98 CIVIL STATE OF CALIFORNIA

PLANS APPROVAL DATE

The State of California or its officers or agents shall not be responsible for the accuracy or completeness of electronic copies of this plan sheet.

NOTE:
THE CONTRACTOR SHALL VERIFY ALL CONTROLLING FIELD DIMENSIONS BEFORE ORDERING OR FABRICATING ANY MATERIAL.

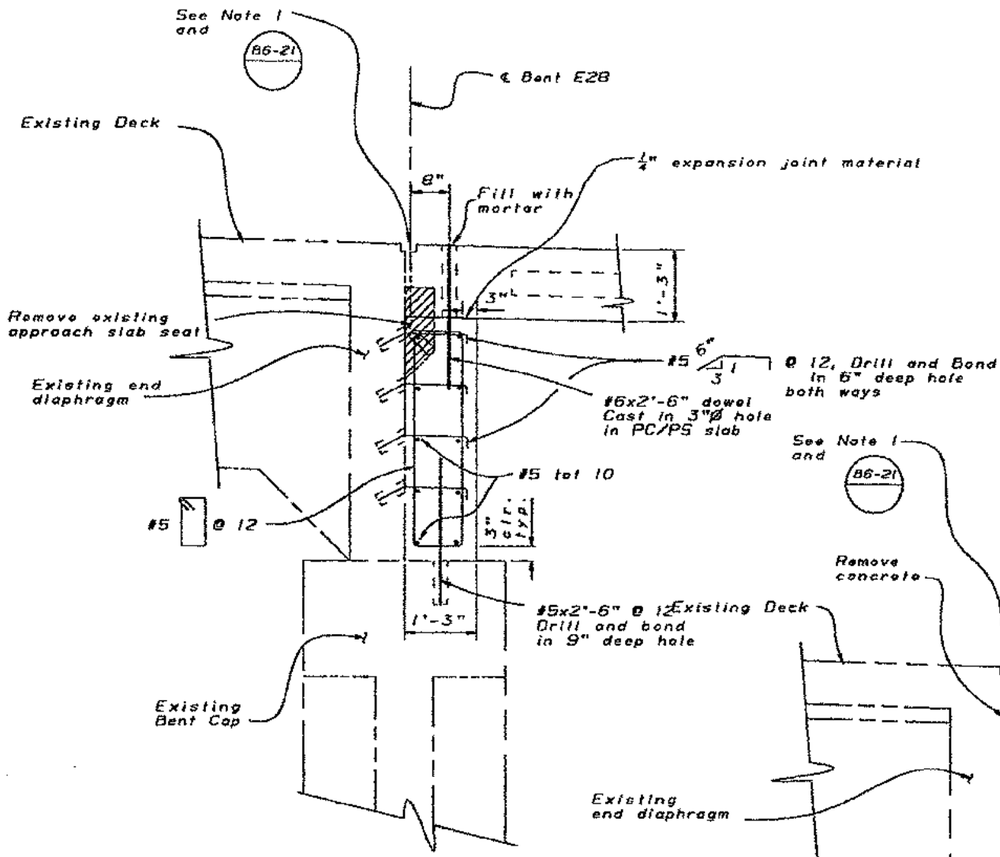

SECTION D-D

3/4" = 1'-0"

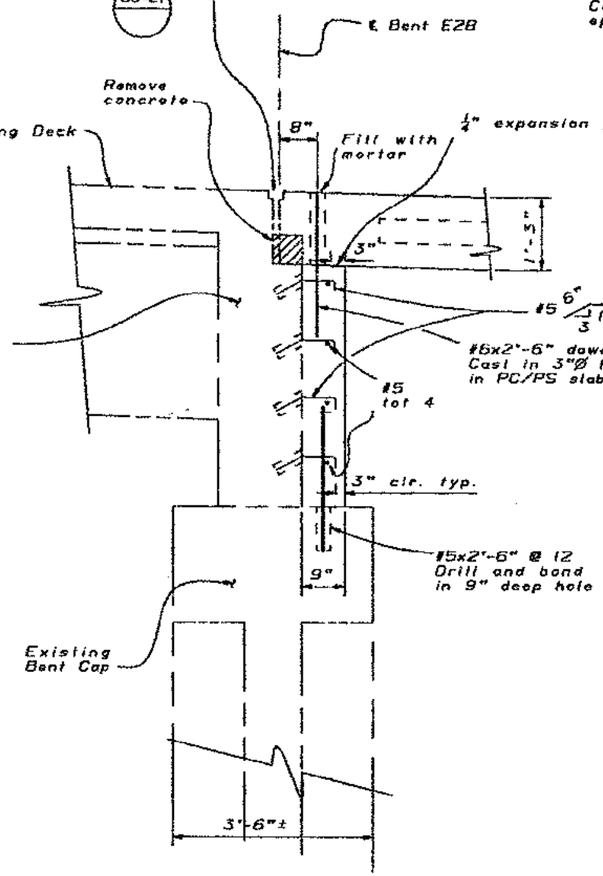

SECTION E-E

3/4" = 1'-0"

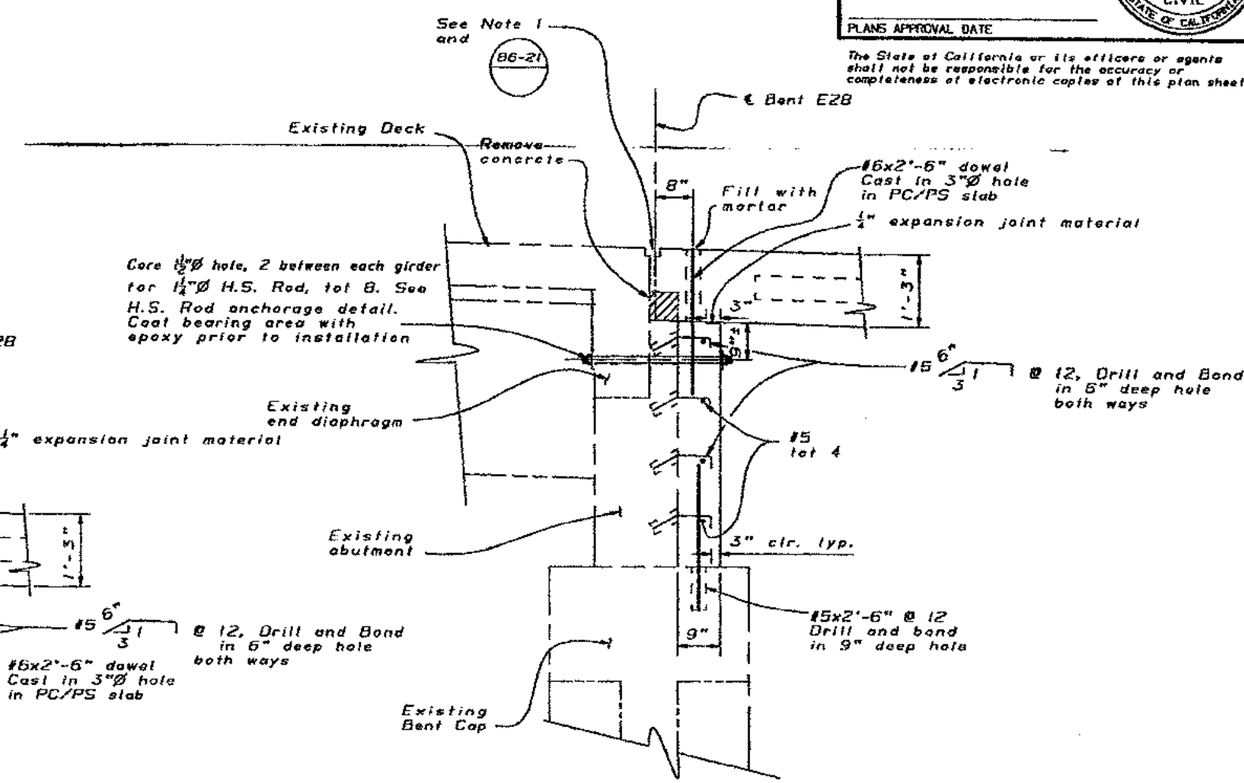

SECTION F-F

3/4" = 1'-0"

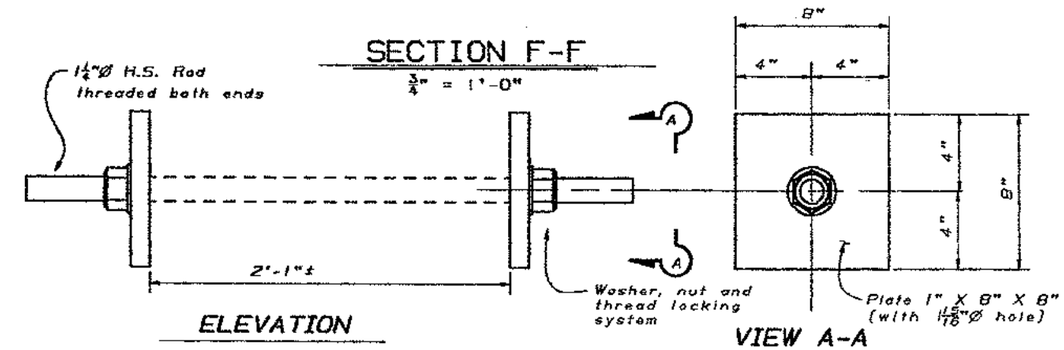

H.S. ROD ANCHORAGE DETAIL

3" = 1'-0"

Notes:

1. Sealed Joint MR = 1/2"
2. For locations of Sections D-D, E-E and F-F, see "Bent E28 - Approach Slab Layout" sheet.

Indicates limits of concrete removal

MAR 22 1995

SEISMIC RETROFIT PROJECT No. 614

SFOBB - BENT E23 TO E39 RETROFIT

BENT E28

APPROACH SLAB DETAILS No. 1

	BY	CHECKED
DESIGN	Lian Duan	Ali Hamza
DETAILS	Franci Dukeshire 3/93	Ali Hamza
QUANTITIES	Gregory Slocum	S. Blank

STATE OF CALIFORNIA DEPARTMENT OF TRANSPORTATION

DIVISION OF STRUCTURES STRUCTURE DESIGN 2

BRIDGE NO. 33-25

POST MILE 1.0-1.3

CU 04
EA 043431

DS 000 2436 (CADD 4/88)

ORIGINAL SCALE IN INCHES FOR REDUCED PLANS 0 1 2 3

DISREGARD PRINTS BEARING EARLIER REVISION DATES

REVISION DATES (PRELIMINARY STAGE ONLY) 1/12/94 1/18/94 1/24/94 12/30/93

SHEET 90 OF 120

DIST.	COUNTY	ROUTE	POST MILES TOTAL PROJECT	SHEET NO.	TOTAL SHEETS
04	ALA	80			

REGISTERED ENGINEER - CIVIL

REGISTERED PROFESSIONAL ENGINEER Gregory Evan Slocum No. 44950 Exp. 3-31-98 CIVIL STATE OF CALIFORNIA

PLANS APPROVAL DATE

The State of California or its officers or agents shall not be responsible for the accuracy or completeness of electronic copies of this plan sheet.

NOTE:
THE CONTRACTOR SHALL VERIFY ALL CONTROLLING FIELD DIMENSIONS BEFORE ORDERING OR FABRICATING ANY MATERIAL.

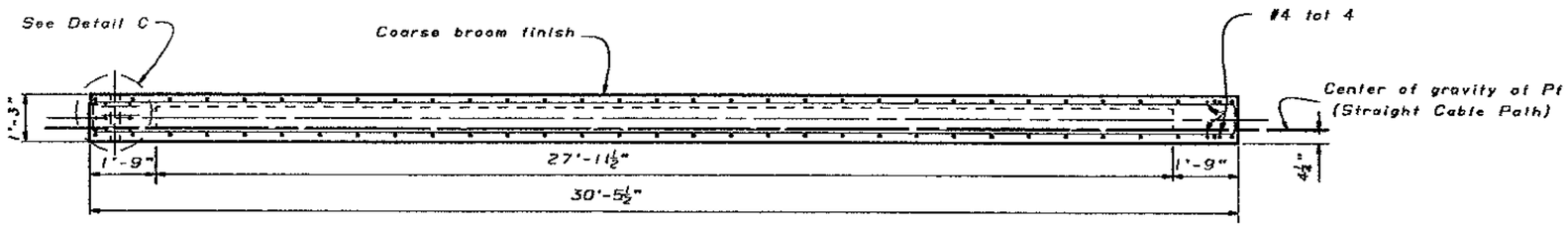

SECTION A-A

½" = 1'-0"

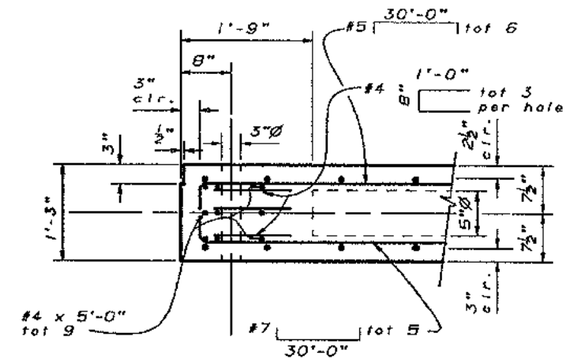

DETAIL C

1" = 1'-0"

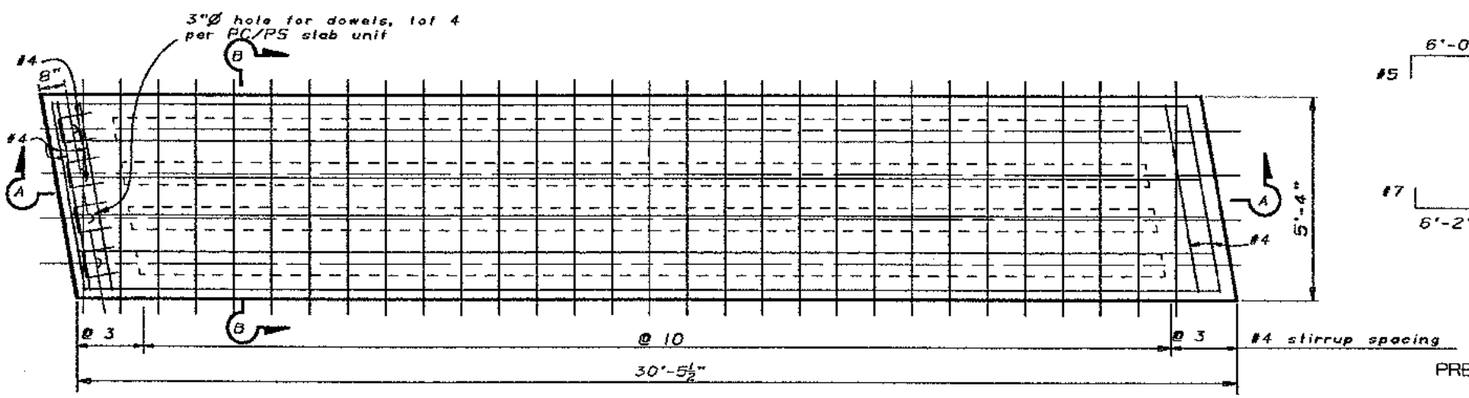

PLAN

½" = 1'-0"

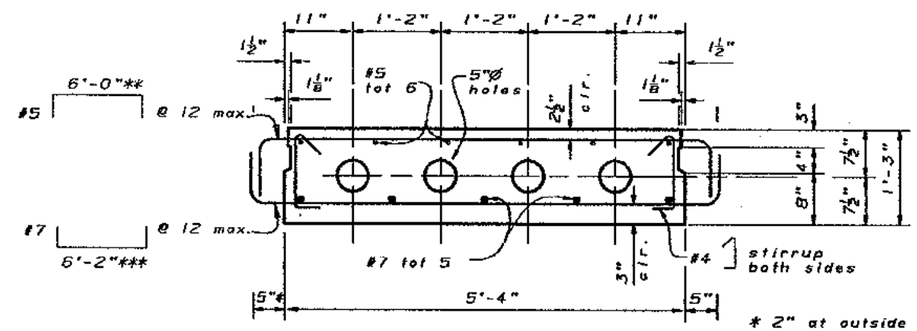

SECTION B-B

1" = 1'-0"

* 2" at outside edge of exterior slab

** 5'-11" at outside edge of exterior slab

*** 5'-10" at outside edge of exterior slab

PRESTRESSING NOTES

270 KSI Low Relaxation Strand:

P_f = 525 kips per PC/PS Slab Unit
(Working force required at center of span after all losses)

Concrete: f'_c = 5,000 psi @ 28 days
f'_{ci} = 3,000 psi @ time of stressing

Slab to be pretensioned

Note:

For location of Approach Slabs, see "Bent E28 - Approach Slab Layout" sheet.

MAR 22 1995

DESIGN	BY Lian Duan	CHECKED Ali Hamza	
DETAILS	BY Franci Dukeshire 3/93	CHECKED Ali Hamza	
QUANTITIES	BY A. Hamza	CHECKED J. Fujimoto	

ORIGINAL SCALE IN INCHES FOR REDUCED PLANS 0 1 2 3

SEISMIC RETROFIT PROJECT No. 614

STATE OF CALIFORNIA DEPARTMENT OF TRANSPORTATION

DIVISION OF STRUCTURES STRUCTURE DESIGN 2

CU 04
EA 043431

BRIDGE NO. 33-25
POST MILE 1.0-1.3

SFOBB - BENT E23 TO E39 RETROFIT

BENT E28

APPROACH SLAB DETAILS No. 2

DISREGARD PRINTS BEARING EARLIER REVISION DATES

REVISION DATES (PRELIMINARY STAGE ONLY) 1/12/94 . 11/22/93 11/29/93 12/30/93

SHEET 91 OF 120

DIST.	COUNTY	ROUTE	POST MILES TOTAL PROJECT	SHEET NO.	TOTAL SHEETS
04	ALA	80			

REGISTERED ENGINEER - CIVIL

REGISTERED PROFESSIONAL ENGINEER
Gregory Evon Slocum
No. 44950
Exp. 3-31-98
CIVIL
STATE OF CALIFORNIA

PLANS APPROVAL DATE

The State of California or its officers or agents shall not be responsible for the accuracy or completeness of electronic copies of this plan sheet.

NOTE:
THE CONTRACTOR SHALL VERIFY ALL CONTROLLING FIELD DIMENSIONS BEFORE ORDERING OR FABRICATING ANY MATERIAL.

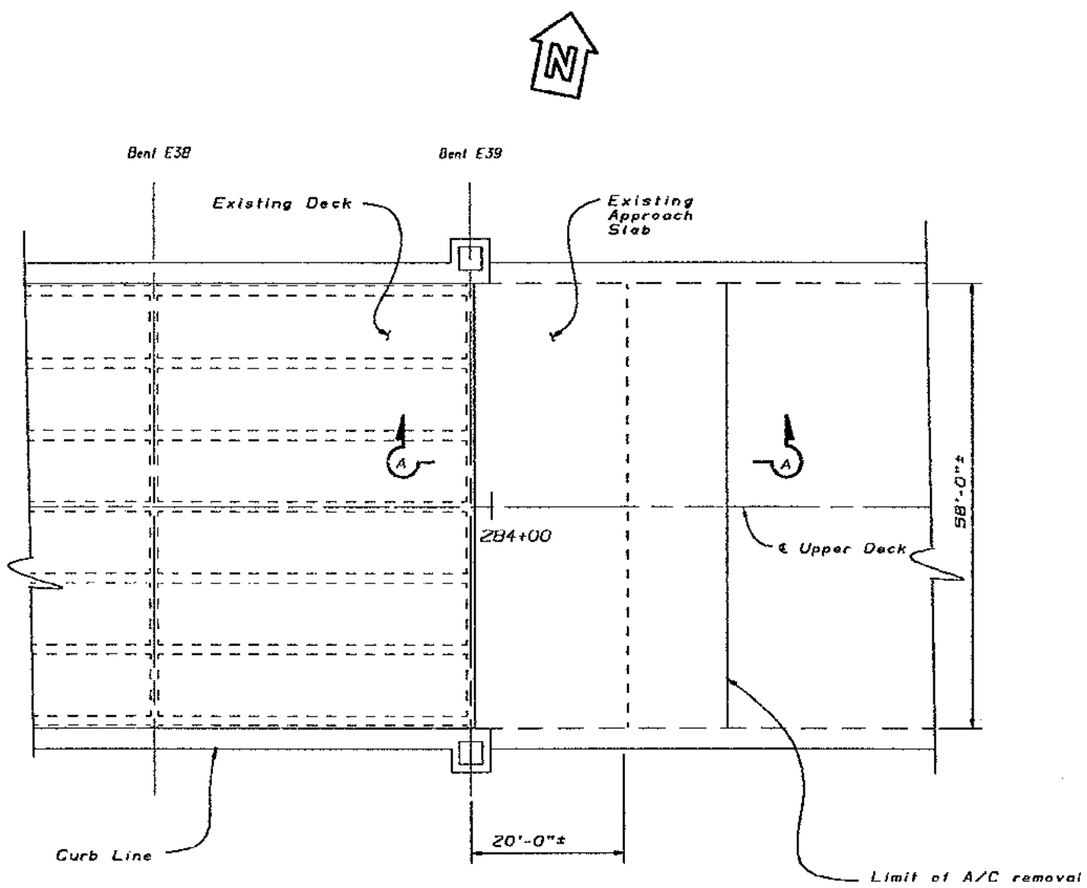

PLAN

1" = 10'-0"

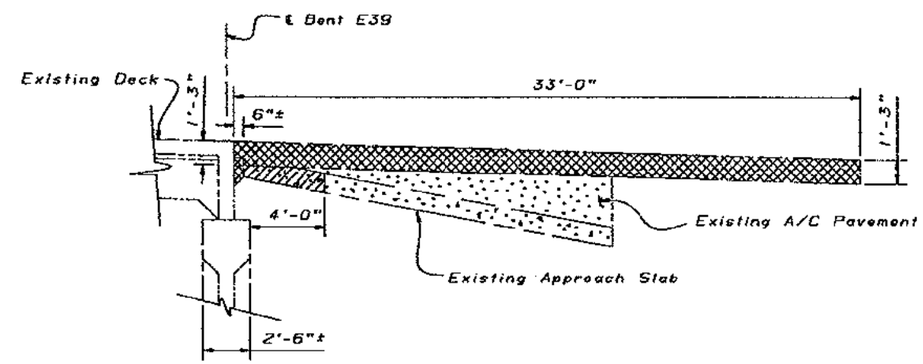

SECTION A-A

$\frac{1}{4}$" = 1'-0"

Indicates limits of A/C removal

Indicates limits of concrete removal

MAR 22 1995

DESIGN	BY Lian Duan	CHECKED Ali Hamza	
DETAILS	BY Franci Dukeshire 3/93	CHECKED Ali Hamza	
QUANTITIES	BY A. Hamza	CHECKED J. Fujimoto	

SEISMIC RETROFIT PROJECT No. 614

STATE OF CALIFORNIA
DEPARTMENT OF TRANSPORTATION

DIVISION OF STRUCTURES
STRUCTURE DESIGN 2

BRIDGE NO. 33-25
POST MILE 1.0-1.3

SFOBB - BENT E23 TO E39 RETROFIT

BENT E39

APPROACH SLAB REMOVAL

DS 050 2138 (CADD 4/89)

ORIGINAL SCALE IN INCHES FOR REDUCED PLANS 0 1 2 3

CU 04
EA 043401

DISREGARD PRINTS BEARING EARLIER REVISION DATES

REVISION DATES (PRELIMINARY STAGE ONLY) 12/30/93 1/13/94 12/20/93 12/30/93

SHEET 92 OF 120

DIST.	COUNTY	ROUTE	POST MILES TOTAL PROJECT	SHEET NO.	TOTAL SHEETS
04	ALA	80			

REGISTERED ENGINEER - CIVIL

REGISTERED PROFESSIONAL ENGINEER Gregory Evan Slocum No. 44950 Exp. 5-31-96 CIVIL STATE OF CALIFORNIA

PLANS APPROVAL DATE

The State of California or its officers or agents shall not be responsible for the accuracy or completeness of electronic copies of this plan sheet.

NOTE:
THE CONTRACTOR SHALL VERIFY ALL CONTROLLING FIELD DIMENSIONS BEFORE ORDERING OR FABRICATING ANY MATERIAL.

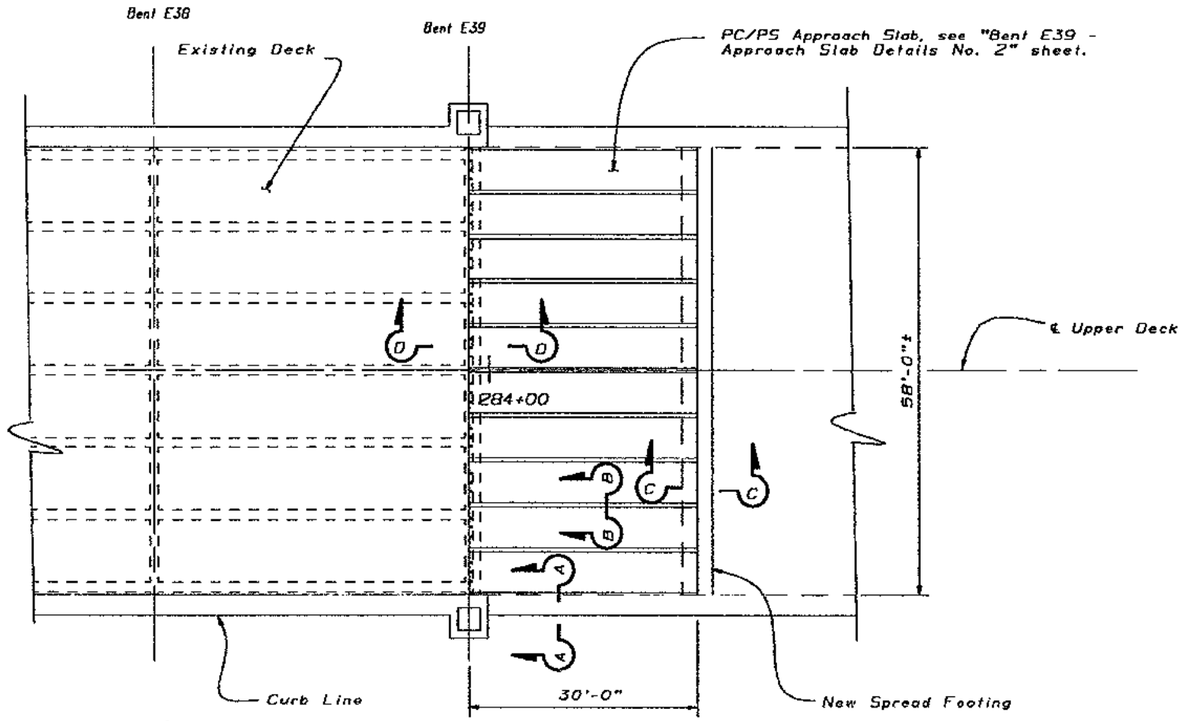

PLAN

1" = 10'-0"

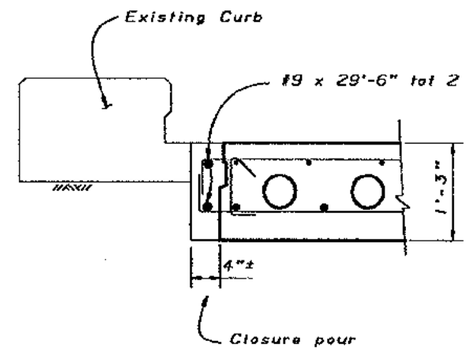

SECTION A-A

1" = 1'-0"

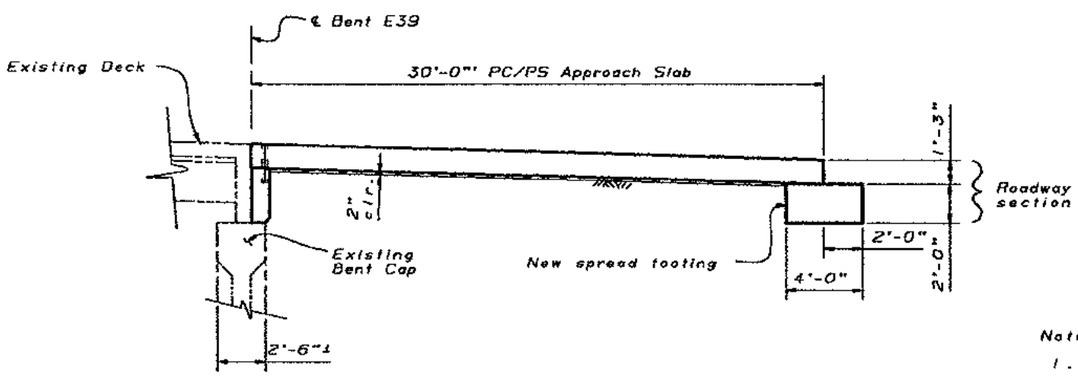

ELEVATION

$\frac{1}{4}$" = 1'-0"

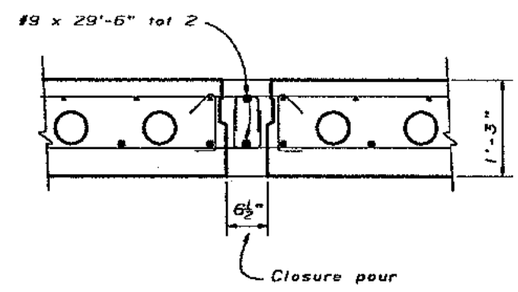

SECTION B-B

1" = 1'-0"

Notes:

1. Closure pour filled with f'c = 4,000 psi concrete @ 28 days.
2. For Sections C-C and D-D, see "Bent E39 - Approach Slab Details No. 1" sheet.

MAR 22 1995

DESIGN	BY Lian Duan	CHECKED Ali Hamza	
DETAILS	BY Franci Dukeshire 3/93	CHECKED Ali Hamza	
QUANTITIES	BY A. Hamza	CHECKED J. Fujimoto	

SEISMIC RETROFIT PROJECT No. 614

STATE OF CALIFORNIA DEPARTMENT OF TRANSPORTATION

DIVISION OF STRUCTURES STRUCTURE DESIGN 2

BRIDGE NO. 33-28

POST MILE 1.0-1.3

SFOBB - BENT E23 TO E39 RETROFIT

BENT E39

APPROACH SLAB LAYOUT

DS 050 2138 (CADD 4/89)

ORIGINAL SCALE IN INCHES FOR REDUCED PLANS 0 1 2 3

CU 04
EA 043401

DISREGARD PRINTS BEARING EARLIER REVISION DATES

REVISION DATES (PRELIMINARY STAGE ONLY) 11/23/93 12/30/93 12/30/93 1/13/94

SHEET 93 OF 120

NOTE:
THE CONTRACTOR SHALL VERIFY ALL CONTROLLING FIELD DIMENSIONS BEFORE ORDERING OR FABRICATING ANY MATERIAL.

DIST.	COUNTY	ROUTE	POST MILES TOTAL PROJECT	SHEET NO.	TOTAL SHEETS
04	ALA	80			

REGISTERED ENGINEER - CIVIL

REGISTERED PROFESSIONAL ENGINEER Gregory Evan Slocum No. 44950 Exp. 3-31-98 CIVIL STATE OF CALIFORNIA

PLANS APPROVAL DATE

The State of California or its officers or agents shall not be responsible for the accuracy or completeness of electronic copies of this plan sheet.

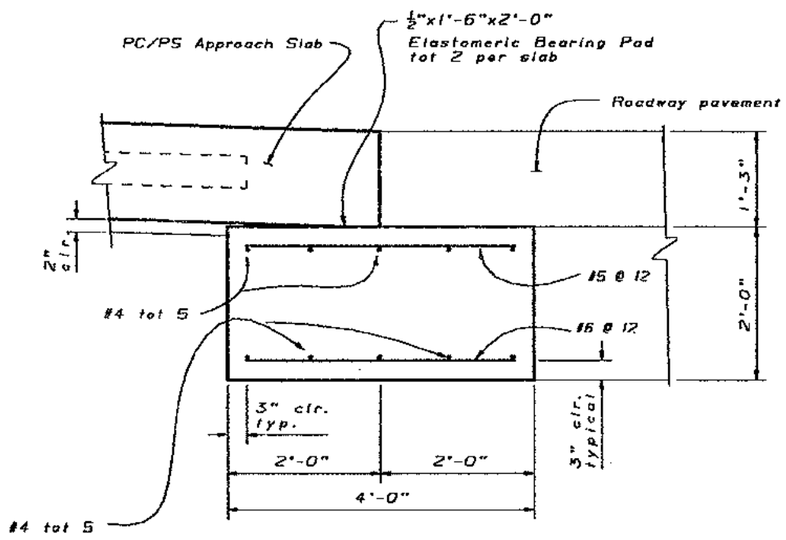

SECTION C-C

1" = 1'-0"

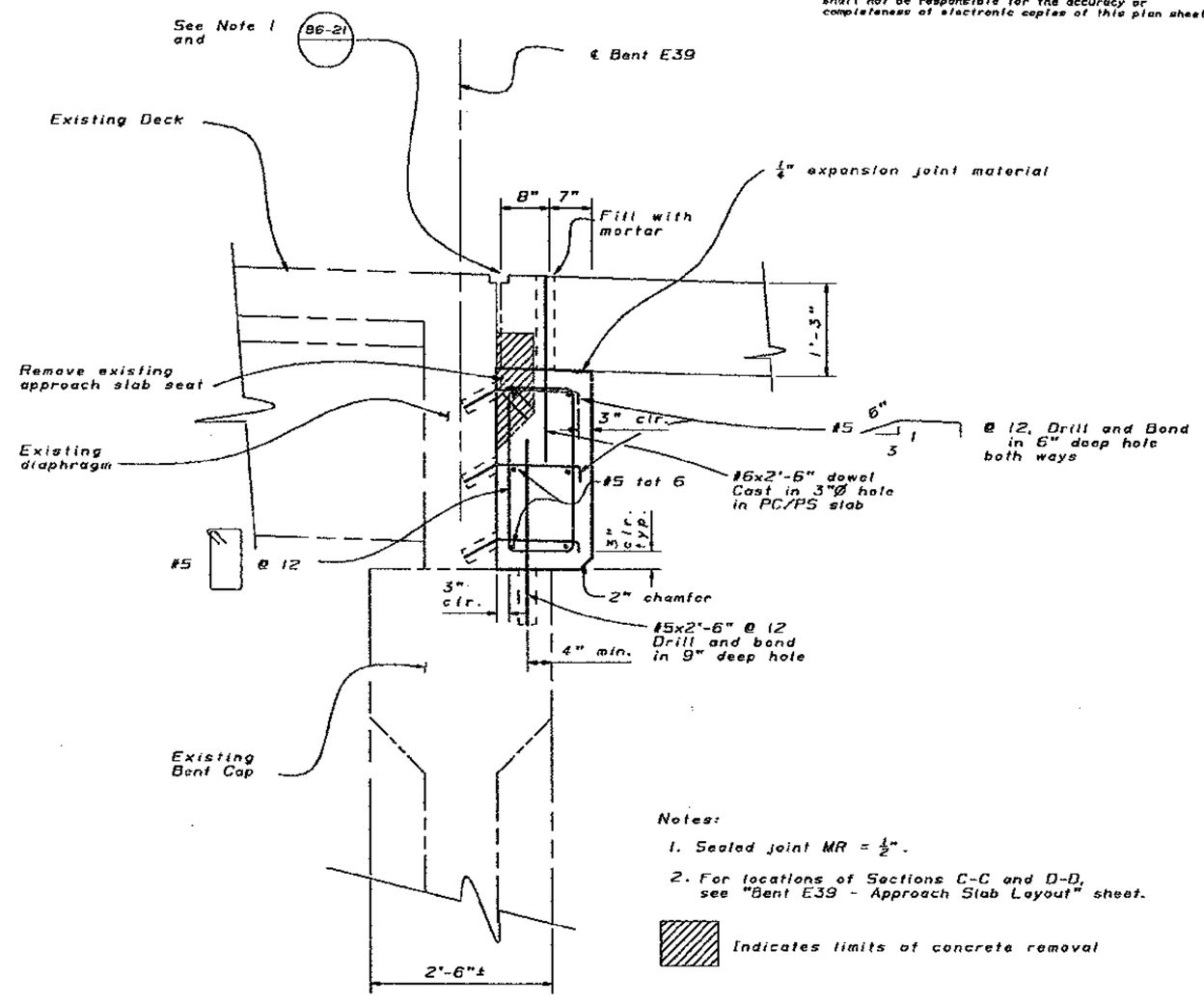

Notes:

1. Sealed joint MR = ½".
2. For locations of Sections C-C and D-D, see "Bent E39 - Approach Slab Layout" sheet.

Indicates limits of concrete removal

SECTION D-D

1" = 1'-0"

MAR 22 1995

DESIGN	BY Lian Duan	CHECKED Ali Hamza	
DETAILS	BY Franci Dukeshire 3/93	CHECKED Ali Hamza	
QUANTITIES	BY Gregory Slocum	CHECKED Simon Blank	

SEISMIC RETROFIT PROJECT No. 614

STATE OF CALIFORNIA DEPARTMENT OF TRANSPORTATION

DIVISION OF STRUCTURES STRUCTURE DESIGN 2

BRIDGE NO. 33-25

POST MILE 1.0-1.3

SFOBB - BENT E23 TO E39 RETROFIT

BENT E39

APPROACH SLAB DETAILS No. 1

DS OSD 2128 (CADD 4/88)

ORIGINAL SCALE IN INCHES FOR REDUCED PLANS 0 1 2 3

CU 04
EA 043401

DISREGARD PRINTS BEARING EARLIER REVISION DATES

REVISION DATES (PRELIMINARY STAGE ONLY) 1/24/94 . 12/30/93 1/13/93 1/18/94

SHEET 94 OF 120

DIST.	COUNTY	ROUTE	POST MILES TOTAL PROJECT	SHEET NO.	TOTAL SHEETS
04	ALA	80			

REGISTERED ENGINEER - CIVIL

REGISTERED PROFESSIONAL ENGINEER Gregory Evon Slecum No. 44950 Exp. 3-31-98 CIVIL STATE OF CALIFORNIA

PLANS APPROVAL DATE

The State of California or its officers or agents shall not be responsible for the accuracy or completeness of electronic copies of this plan sheet.

NOTE:
THE CONTRACTOR SHALL VERIFY ALL CONTROLLING FIELD DIMENSIONS BEFORE ORDERING OR FABRICATING ANY MATERIAL.

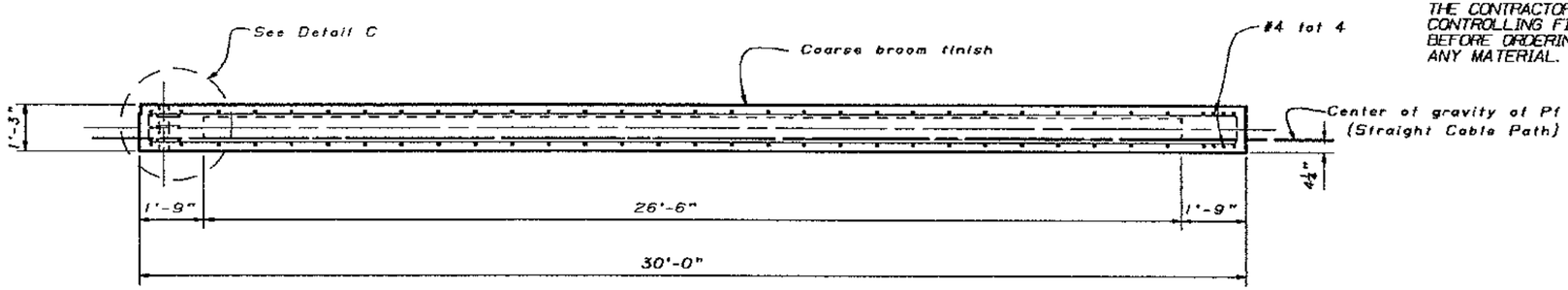

SECTION A-A

½" = 1'-0"

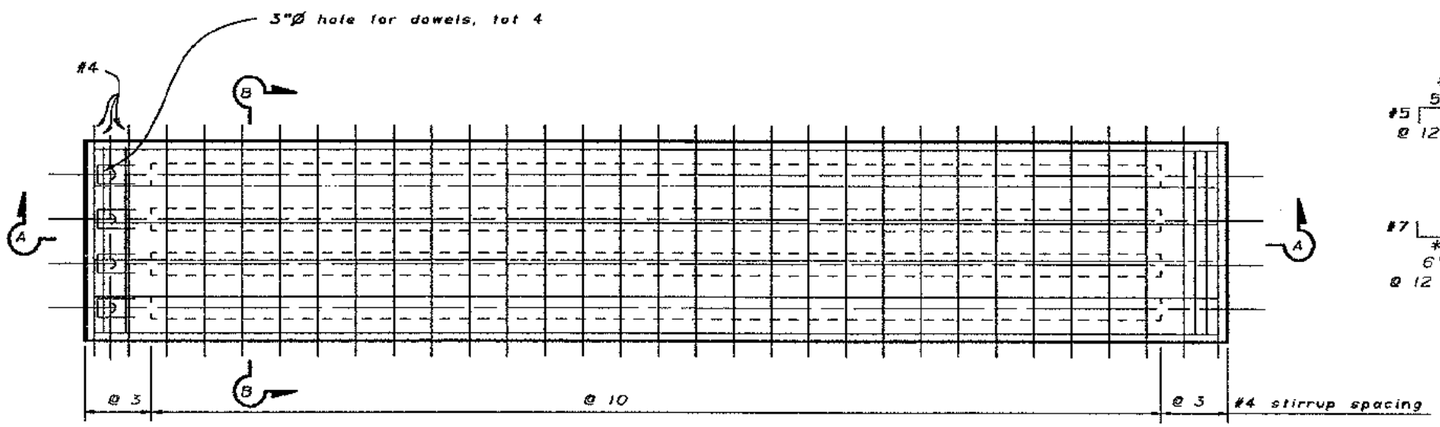

PLAN

½" = 1'-0"

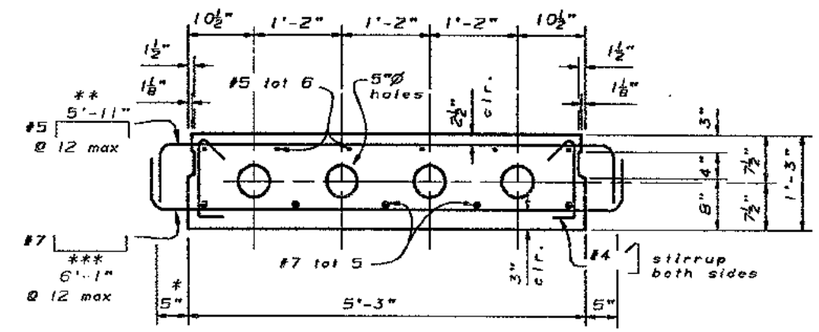

SECTION B-B

1" = 1'-0"

* 3" at outside edge of exterior slab

** 5'-9" at outside edge of exterior slab

*** 5'-11" at outside edge of exterior slab

PRESTRESSING NOTES

270 KSI Low Relaxation Strand:

P_f = 525 kips
(Working force required at center of span after all losses)

Concrete: f'_c = 5,000 psi @ 28 days
f'_{ci} = 3,000 psi @ time of stressing

Slab to be pretensioned.

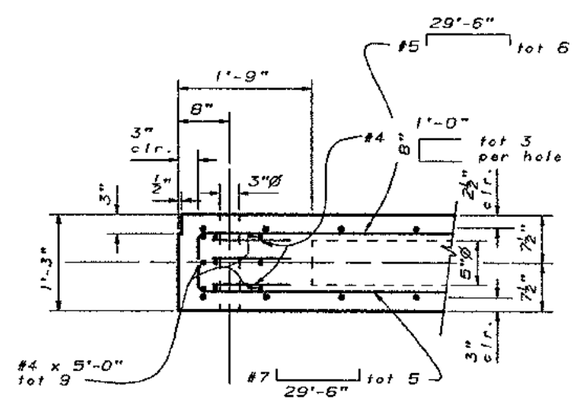

DETAIL C

1" = 1'-0"

Note:

For location of approach slabs, see "Bent E39 - Approach Slab Layout" sheet.

MAR 22 1995

DESIGN	BY Lian Duan	CHECKED Ali Hamza	
DETAILS	BY Franci Dukeshire 3/93	CHECKED Ali Hamza	
QUANTITIES	BY A. Hamza	CHECKED J. Fujimoto	

ORIGINAL SCALE IN INCHES FOR REDUCED PLANS 0 1 2 3

SEISMIC RETROFIT PROJECT No. 614

STATE OF CALIFORNIA DEPARTMENT OF TRANSPORTATION

DIVISION OF STRUCTURES STRUCTURE DESIGN 2

CU 04
EA 043431

BRIDGE NO. 33-25
POST MILE 1.0-1.3

SFOBB - BENT E23 TO E39 RETROFIT

BENT E39

APPROACH SLAB DETAILS No. 2

DISREGARD PRINTS BEARING EARLIER REVISION DATES →

REVISION DATES (PRELIMINARY STAGE ONLY) 12/30/93 12/30/93 1/13/94 12/23/93

SHEET 95 OF 120

DIST.	COUNTY	ROUTE	POST MILES TOTAL PROJECT	SHEET NO.	TOTAL SHEETS
04	ALA	80			

REGISTERED ENGINEER - CIVIL

REGISTERED PROFESSIONAL ENGINEER Gregory Evan Slocum No. 44950 Exp. 3-31-98 CIVIL STATE OF CALIFORNIA

PLANS APPROVAL DATE

The State of California or its officers or agents shall not be responsible for the accuracy or completeness of electronic copies of this plan sheet.

NOTE:
THE CONTRACTOR SHALL VERIFY ALL CONTROLLING FIELD DIMENSIONS BEFORE ORDERING OR FABRICATING ANY MATERIAL.

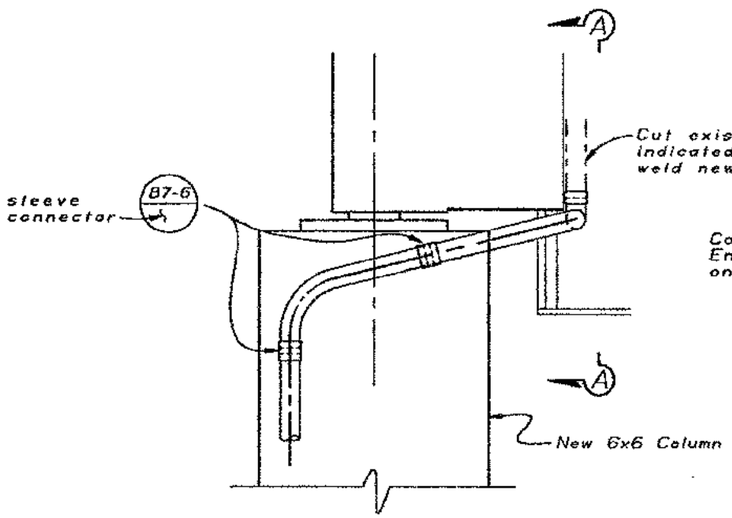

ELEVATION

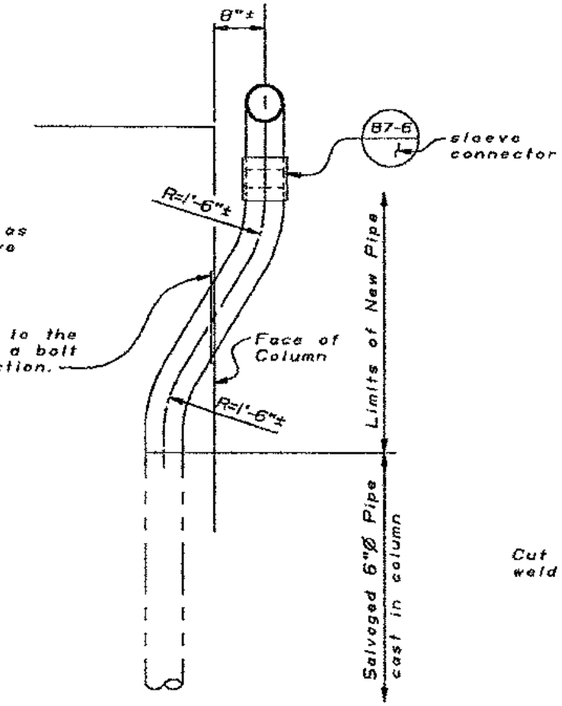

SECTION B-B

1"=1'-0"

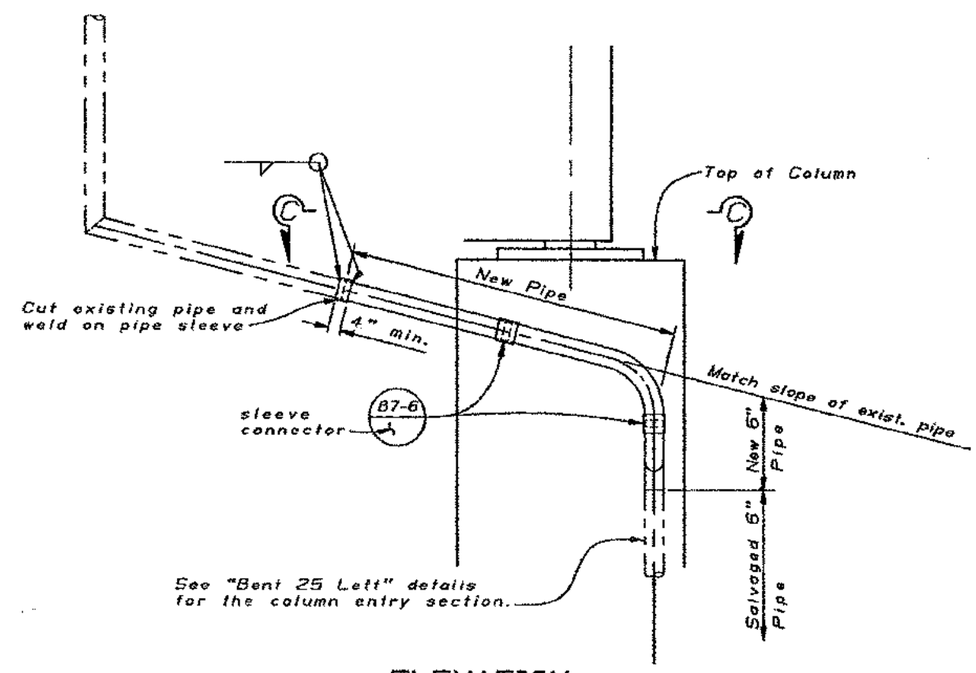

ELEVATION

BENT E25 RIGHT

½"=1'-0"

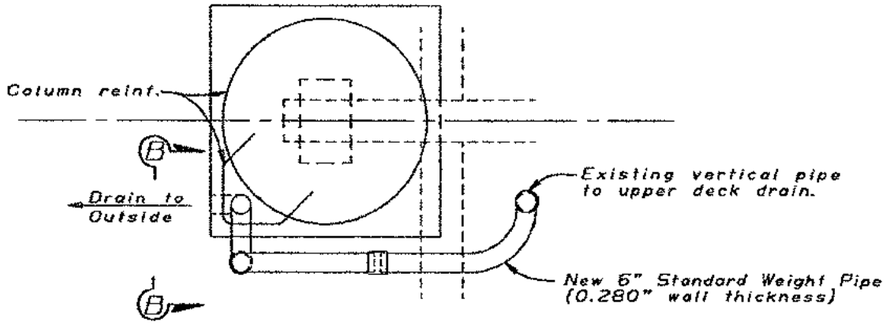

PLAN

BENT E25 LEFT

½"=1'-0"

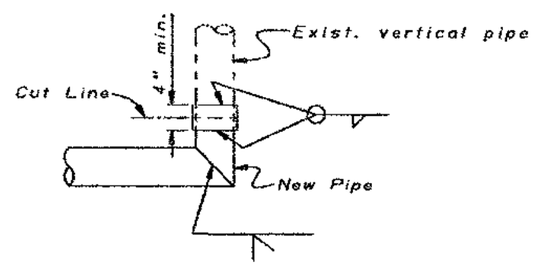

SECTION A-A

1"=1'-0"

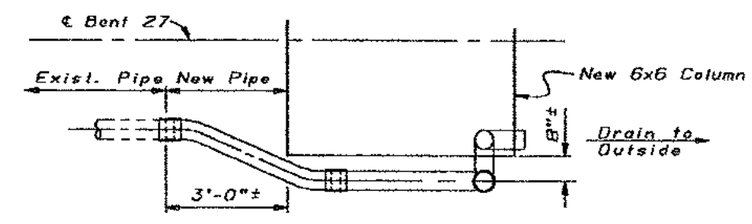

SECTION C-C

½"=1'-0"

Notes:
1. For details not shown see Standard Plan. B7-6
2. All new pipe to be 6" standard weight pipe wall thickness 0.28 in.

MAR 22 1995

DESIGN	BY Gregory Slocum	CHECKED Mark Reno	
DETAILS	BY ND/SS/FD 11/93	CHECKED Mark Reno	
QUANTITIES	BY Bob Bateman	CHECKED Mark Reno	

SEISMIC RETROFIT PROJECT No. 614

STATE OF CALIFORNIA DEPARTMENT OF TRANSPORTATION

DIVISION OF STRUCTURES STRUCTURE DESIGN 2

BRIDGE NO. 33-25

POST MILE 1.0-1.3

SFOBB - BENT E23 TO E39 RETROFIT

BENT E25

DRAINAGE DETAILS

CU 04
EA 043431

DISREGARD PRINTS BEARING EARLIER REVISION DATES

REVISION DATES (PRELIMINARY STAGE ONLY) 11/30/93 1/19/94

SHEET 96 OF 120

ORIGINAL SCALE IN INCHES FOR REDUCED PLANS 0 1 2 3

DS DSD 2139 (CADD 4/92)

DIST.	COUNTY	ROUTE	POST MILES TOTAL PROJECT	SHEET NO.	TOTAL SHEETS
04	Ala	80			

REGISTERED ENGINEER - CIVIL

REGISTERED PROFESSIONAL ENGINEER Gregory Evan Slocum No. 44950 Exp. 3-31-98 CIVIL STATE OF CALIFORNIA

PLANS APPROVAL DATE

Notes:
1. For details not shown see Standard Plan. B7-6
2. All new pipe to be 6" standard weight pipe wall thickness 0.28 in.

NOTE:
THE CONTRACTOR SHALL VERIFY ALL CONTROLLING FIELD DIMENSIONS BEFORE ORDERING OR FABRICATING ANY MATERIAL.

The State of California or its officers or agents shall not be responsible for the accuracy or completeness of electronic copies of this plan sheet.

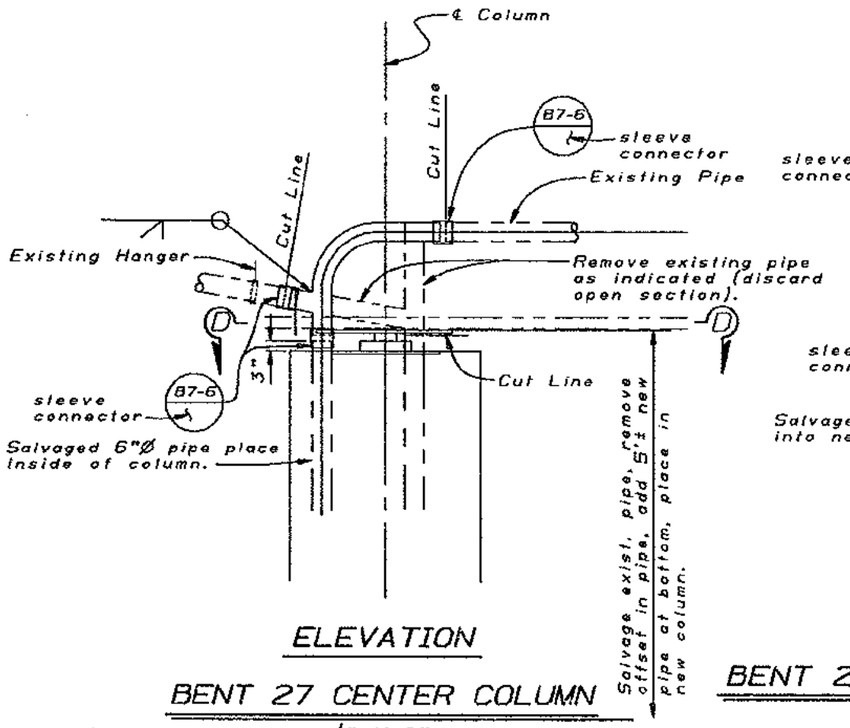

ELEVATION

BENT 27 CENTER COLUMN

½"=1'-0"

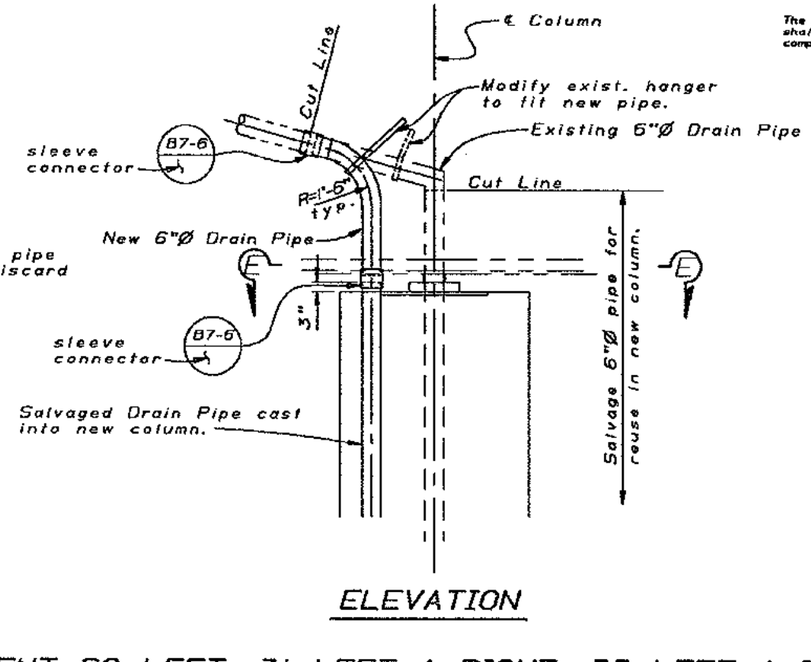

ELEVATION

BENT 29 LEFT, 31 LEFT & RIGHT, 33 LEFT & RIGHT

½"=1'-0"

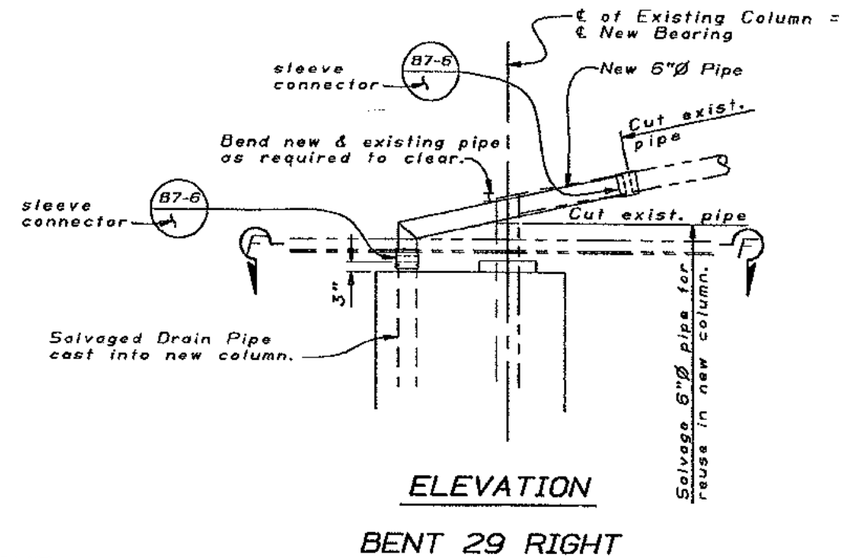

ELEVATION

BENT 29 RIGHT

½"=1'-0"

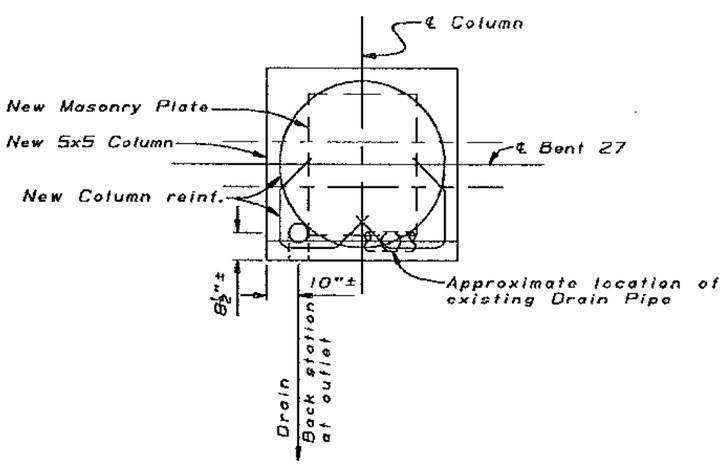

SECTION D-D

½"=1'-0"

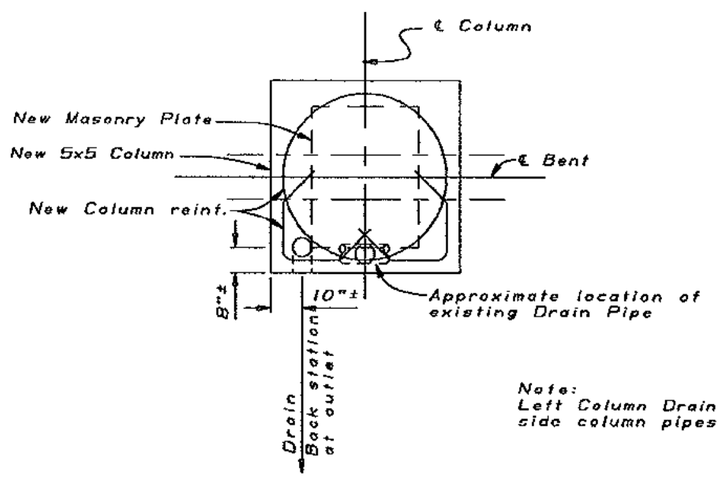

Note:
Left Column Drain Pipes shown, Right side column pipes opposite hand.

SECTION E-E

½"=1'-0"

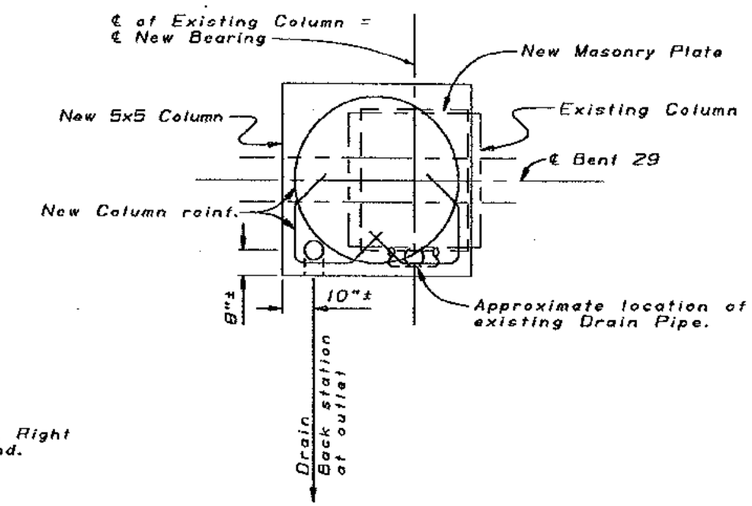

SECTION F-F

½"=1'-0"

MAR 22 1995

DESIGN	BY Bob Bateman	CHECKED Mark Reno	
DETAILS	BY ND/SS/FD 11-93	CHECKED Mark Reno	
QUANTITIES	BY Bob Bateman	CHECKED Mark Reno	

SEISMIC RETROFIT PROJECT No. 614

STATE OF CALIFORNIA DEPARTMENT OF TRANSPORTATION

DIVISION OF STRUCTURES STRUCTURE DESIGN 2

BRIDGE NO. 33-25

POST MILE 1.0-1.3

SFOBB - BENT E23 TO E39 RETROFIT

BENT E27 TO BENT E33

DRAINAGE DETAILS

DS DSD 2139 (CADD 4/89)

ORIGINAL SCALE IN INCHES FOR REDUCED PLANS 0 1 2 3

CU 04
EA 043431

DISREGARD PRINTS BEARING EARLIER REVISION DATES

REVISION DATES (PRELIMINARY STAGE ONLY) 11-29-93 11-29-93 11/30/93 1/24/94 3/1/94

SHEET 97 OF 120

DIST.	COUNTY	ROUTE	POST MILES TOTAL PROJECT	SHEET NO.	TOTAL SHEETS
04	Ala	80			

REGISTERED ENGINEER - CIVIL

REGISTERED PROFESSIONAL ENGINEER Gregory Even Slocum No. 44950 Exp. 3-31-98 CIVIL STATE OF CALIFORNIA

PLANS APPROVAL DATE

The State of California or its officers or agents shall not be responsible for the accuracy or completeness of electronic copies of this plan sheet.

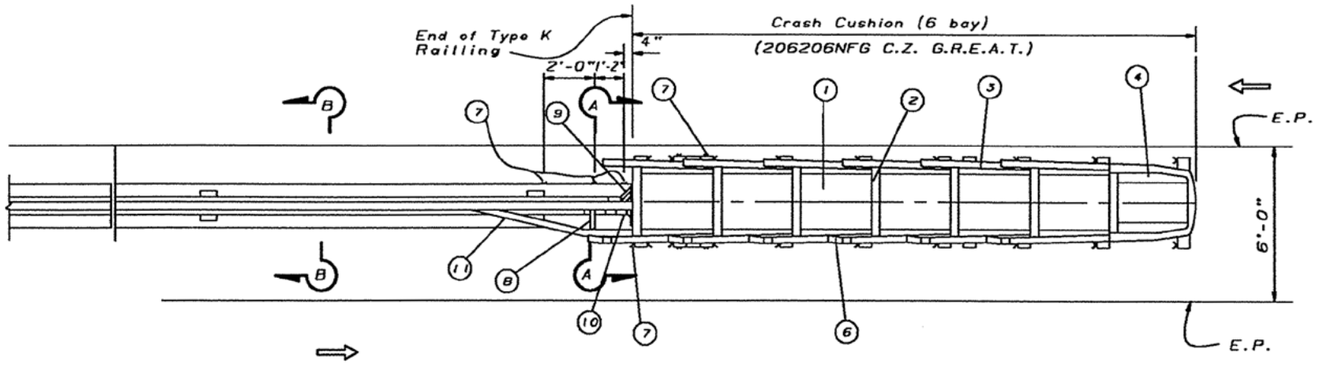

PLAN

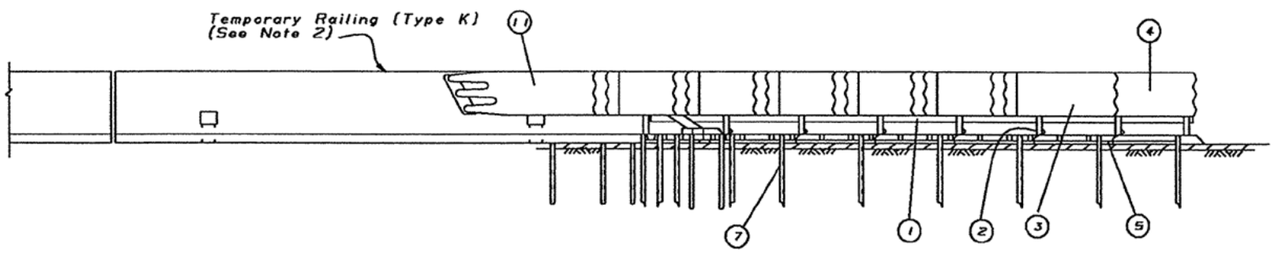

ELEVATION

(AC Base shown)

Note: Bidirectional unit shown. Items 6, 8, and 11 are eliminated on one-way traffic conditions.

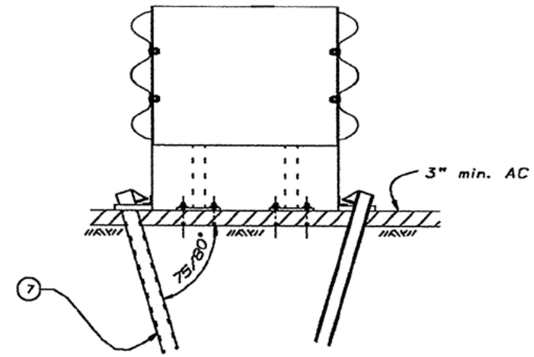

TYPICAL ANCHORAGE DETAIL TO ASPHALT SURFACE

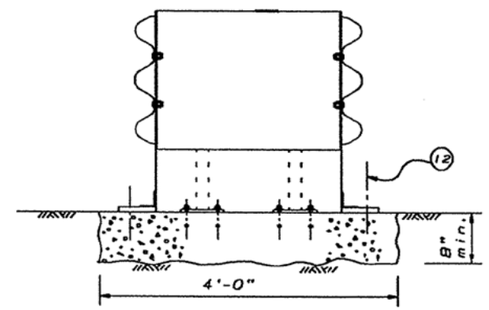

TYPICAL ANCHORAGE DETAIL TO CONCRETE PAD OR DECK

The G.R.E.A.T. system shall consist of, in general, the following:

1. Hex-foam cartridge
2. Diaphragm
3. Thrie Beam tender panel
4. Nose cover
5. Stabilizing chain platform
6. Deflectors
7. Anchor Pin (26 required)
8. Support bracket
9. Right attachment bracket
10. Left attachment bracket
11. Transition panel
12. Concrete anchor bolts

LEGEND

CZ - Construction Zone
EP - Edge of Pavement
AC - Asphalt Concrete

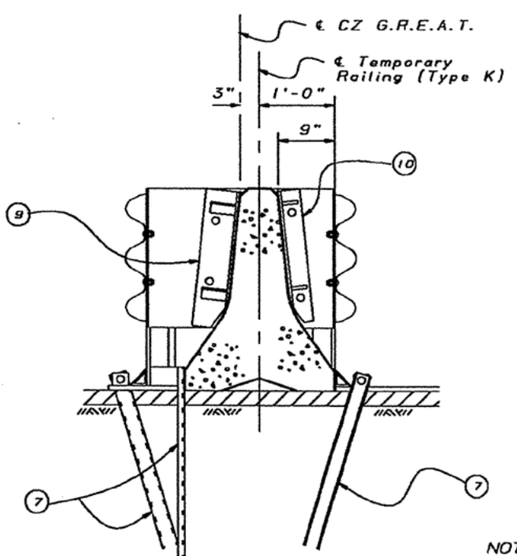

SECTION A-A

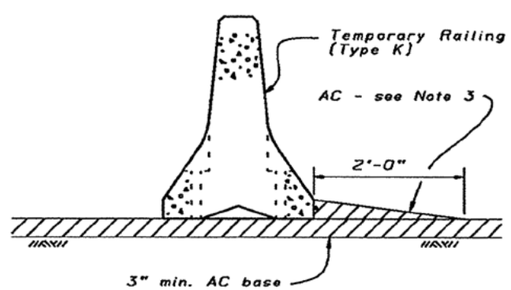

AC BASE

SECTION B-B

(See Note 4)

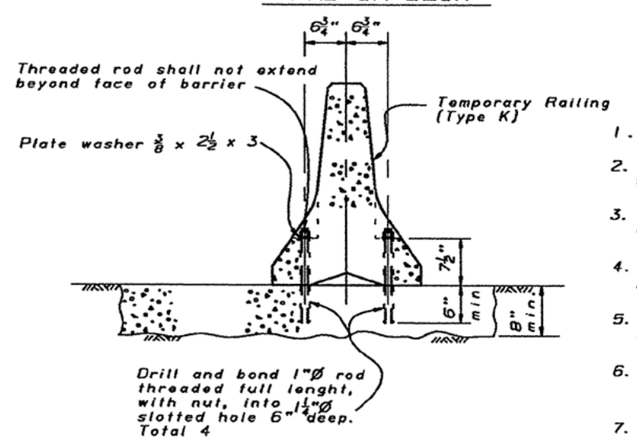

CONCRETE BASE

GENERAL NOTES

1. ⟹ Indicates direction of traffic.
2. Installed length of temporary railing type K to be 80 feet minimum.
3. Place AC the entire length of 20 foot panel on bidirectional units.
4. Provide a concrete or AC base for the first panel of type K railing and anchor as shown.
5. For details of temporary type K, see Standard Plan B11-30.
6. For details of G.R.E.A.T. system and accessories see manufacturer's details.
7. Only anchorages provided by the manufacturer shall be used. No substitutions permitted.

NOTE:
THE CONTRACTOR SHALL VERIFY ALL CONTROLLING FIELD DIMENSIONS BEFORE ORDERING OR FABRICATING ANY MATERIAL.

MAR 22 1995

Type - K Attachment

For duration less than 52 hours AC backup (Note 3) may be eliminated.

For duration greater than 120 days - use concrete base.

DESIGN	BY John Fujimato	CHECKED Shawn Sun	
DETAILS	BY F. Dukeshire 1/94	CHECKED Shawn Sun	

SEISMIC RETROFIT PROJECT No. 614

STATE OF CALIFORNIA DEPARTMENT OF TRANSPORTATION

DIVISION OF STRUCTURES STRUCTURE DESIGN 2

BRIDGE NO. 33-25

POST MILE 1.0-1.3

SFOBB - BENT E23 TO E39 RETROFIT

BENT E23 TO E39

CZ G.R.E.A.T. TEMP. CRASH CUSHION DETAILS

DG 050 2130 (CADD 4/93)

ORIGINAL SCALE IN INCHES FOR REDUCED PLANS 0 1 2 3

CU 04
EA 043431

DISREGARD PRINTS BEARING EARLIER REVISION DATES → ~~1/24/94~~ 1/31/94

REVISION DATES (PRELIMINARY STAGE ONLY)

SHEET 98 OF 120

DIST.	COUNTY	ROUTE	POST MILES TOTAL PROJECT	SHEET NO.	TOTAL SHEETS
04	Ala	80			

REGISTERED ENGINEER - CIVIL

REGISTERED PROFESSIONAL ENGINEER Gregory Evan Slocum No. 44950 Exp. 3-31-98 CIVIL STATE OF CALIFORNIA

PLANS APPROVAL DATE

The State of California or its officers or agents shall not be responsible for the accuracy or completeness of electronic copies of this plan sheet.

NOTE:
THE CONTRACTOR SHALL VERIFY ALL CONTROLLING FIELD DIMENSIONS BEFORE ORDERING OR FABRICATING ANY MATERIAL.

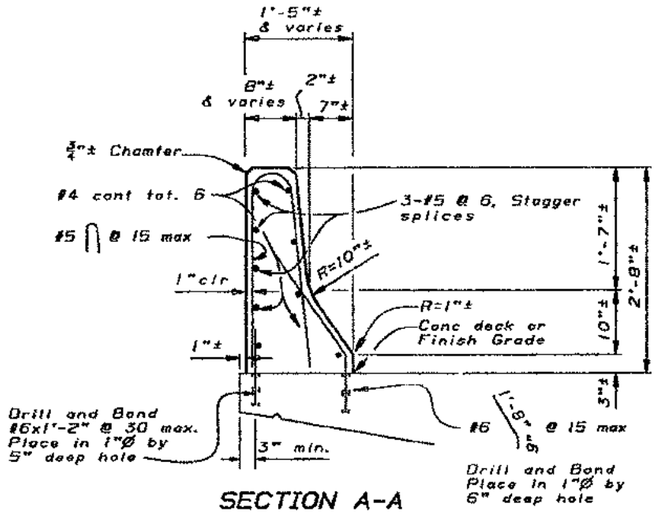

SECTION A-A
TYPE 27R
1" = 1'-0"

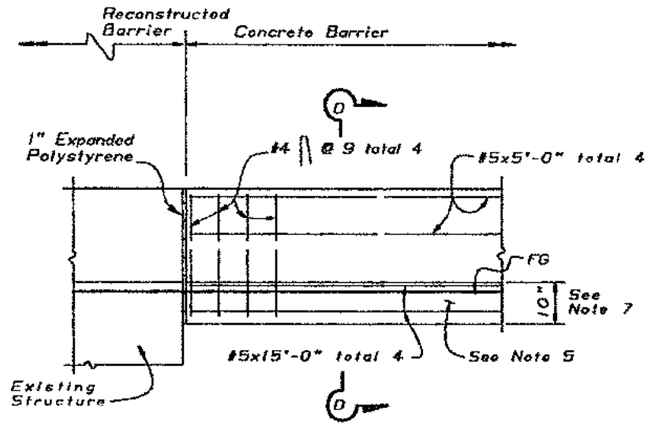

ELEVATION
CONNECTION TO STRUCTURE
1/2" = 1'-0"

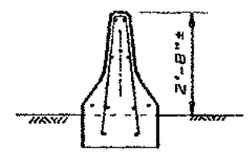

SECTION D-D
1/2" = 1'-0"

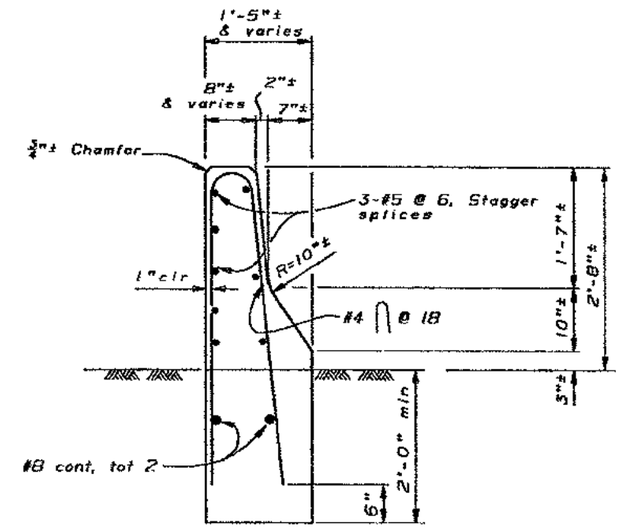

SECTION C-C
TYPE 27B
1" = 1'-0"

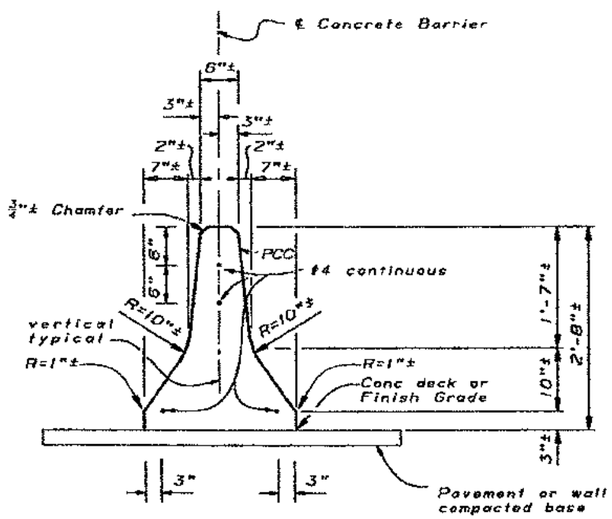

SECTION B-B
TYPE 50
1" = 1'-0"

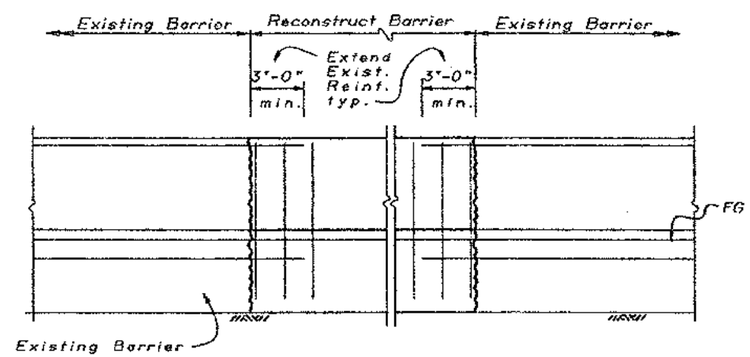

ELEVATION
BARRIER RECONSTRUCTION
No Scale

NOTES

1. Barrier dimensions and alignment to match existing.
2. Provide 1/2" expanded polystyrene between column faces and barrier at locations where columns are incorporated into barrier.
3. Opening into existing drainage inlets shall not extend above the 3 inch vertical face at bottom of the barrier.
4. Contractor may submit alternative details for Engineer's approval.
5. Footing monolithic or doweled with 2-8x0'-8" @ 24. Required at barrier ends and at interruptions in barrier.
6. Expansion joints in concrete barrier shall be located at all deck, pavement and principal wall joints. Expansion joint filler material shall be the same size as joint or 1/2" minimum.
7. 10" barrier footing extends 10' back from structure.
8. For locations of Section A-A, Section B-B, Section C-C, and Connection to Structure Detail, see "Site Plan - Stage 1" sheets.

MAR 22 1995

DESIGN	BY John Fujimoto	CHECKED Shawn Sun	
DETAILS	BY F. Dukeshire 11/93	CHECKED Shawn Sun	

SEISMIC RETROFIT PROJECT No. 614

STATE OF CALIFORNIA
DEPARTMENT OF TRANSPORTATION

DIVISION OF STRUCTURES
STRUCTURE DESIGN 2

BRIDGE NO. 33-25
POST MILE 1.0-1.3

SFOBB - BENT E23 TO E39 RETROFIT
BENT E23 TO E39
BARRIER DETAILS

DS OSD 2139 (CADD 4/89)

ORIGINAL SCALE IN INCHES FOR REDUCED PLANS 0 1 2 3

CU 04
EA 043431

DISREGARD PRINTS BEARING EARLIER REVISION DATES

REVISION DATES (PRELIMINARY STAGE ONLY) 12/2/93 12/7/93 12/23/93 1/19/94

SHEET 99 OF 120

DIST.	COUNTY	ROUTE	POST MILES TOTAL PROJECT	SHEET NO.	TOTAL SHEETS
04	ALA	80			

REGISTERED ENGINEER - CIVIL

Gregory Evan Slocum No. 44950 Exp. 5-31-98 CIVIL STATE OF CALIFORNIA REGISTERED PROFESSIONAL ENGINEER

PLANS APPROVAL DATE

The State of California or its officers or agents shall not be responsible for the accuracy or completeness of electronic copies of this plan sheet.

NOTE:
THE CONTRACTOR SHALL VERIFY ALL CONTROLLING FIELD DIMENSIONS BEFORE ORDERING OR FABRICATING ANY MATERIAL.

Note:
Anchors shall have 4" min. embedment with 3" min. spacing between each other.

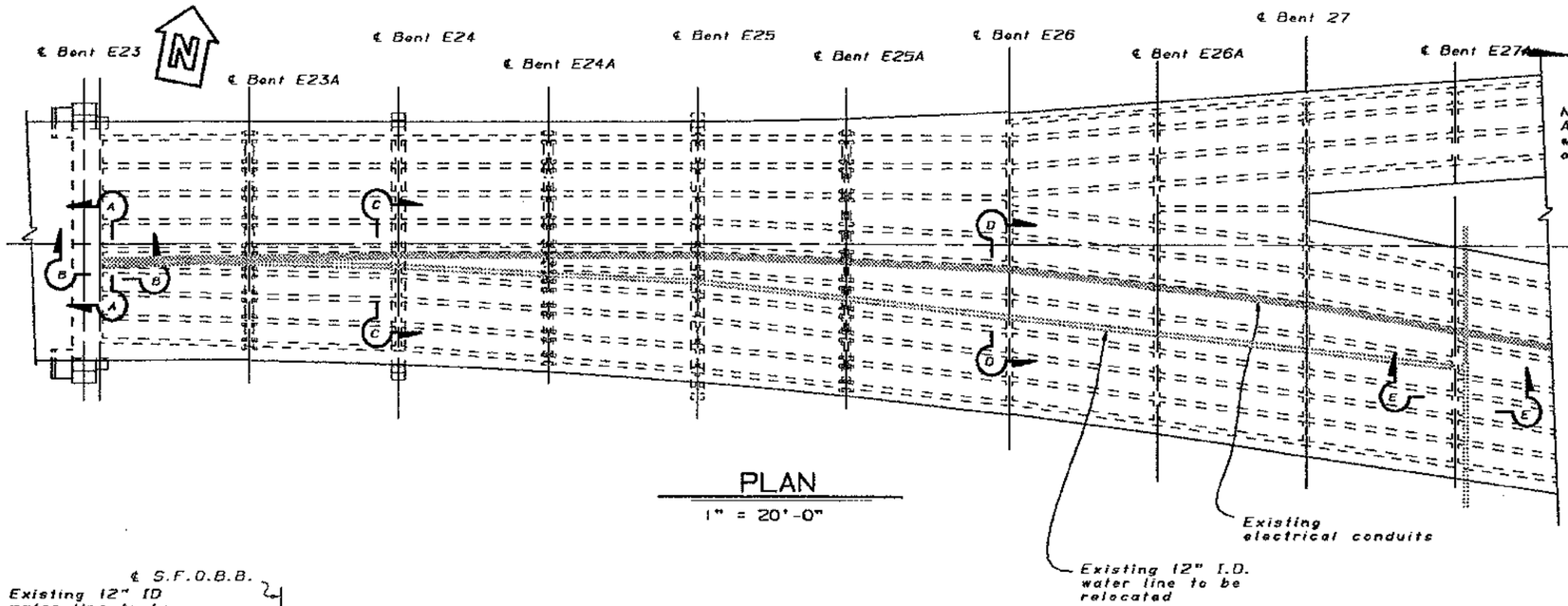

PLAN

1" = 20'-0"

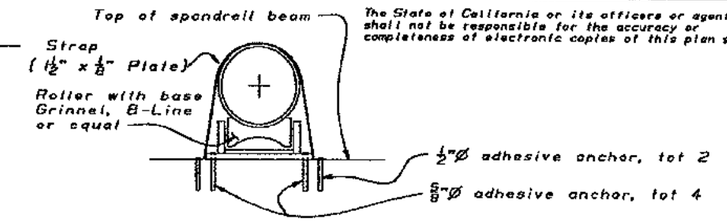

ROLLER AND BASE DETAIL

1" = 1'-0"

Notes:
1. Cut strap at all Bents (23A through 27A).
2. Unbolt elbow at flanges and unbolt elbow anchorage from wall (Bent 23).
3. Cut elbow from tee (Bent 27A).
4. Jack up and support pipe (support approved by Engineer).
5. Remove roller and base assemblies (Bents 23A through 27A).
6. Retrofit for new spandrel beams.
7. After retrofit is completed, remove temporary fittings and lower pipe to top of new spandrel beams. Attach with new rollers and base assemblies.
8. Cut riser at mid length (Bent 23), bolt the flanged connections together and weld extensions of same material to reconnect pipe (Bent 23 and Bent 27A). Adjust for offsets, if any.

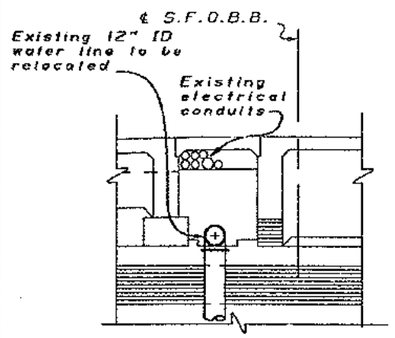

EXISTING LOCATION

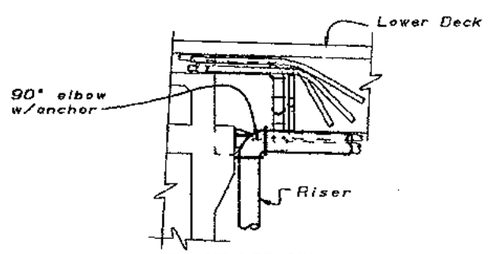

EXISTING LOCATION

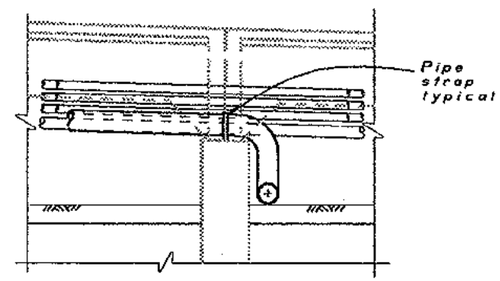

EXISTING LOCATION

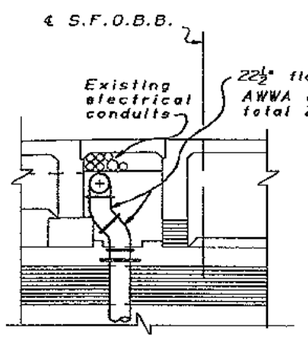

TEMPORARY RELOCATION

BENT 23 SECTION A-A

¼" = 1'-0"

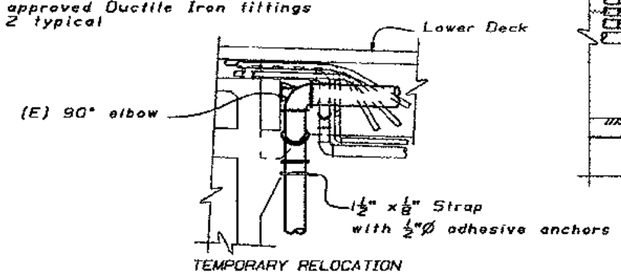

TEMPORARY RELOCATION

BENT 23 SECTION B-B

¼" = 1'-0"

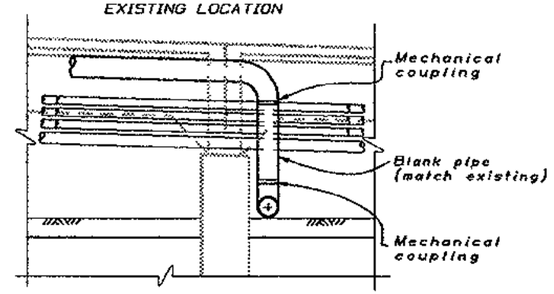

TEMPORARY RELOCATION

BENT E27A SECTION E-E

¼" = 1'-0"

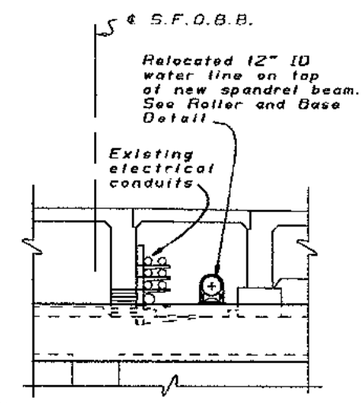

PERMANENT LOCATION

BENT E23A TO E24A SECTION C-C

¼" = 1'-0"

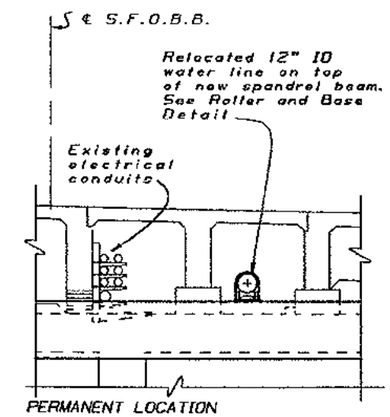

PERMANENT LOCATION

BENT E24A TO E27A SECTION D-D

¼" = 1'-0"

MAR 22 1995

DESIGN	BY Al Kwan	CHECKED Gregory Slocum
DETAILS	BY Franci Dukeshire 3/93	CHECKED Al Kwan
QUANTITIES	BY Al Kwan	CHECKED Alan Torres

SEISMIC RETROFIT PROJECT No. 614

STATE OF CALIFORNIA DEPARTMENT OF TRANSPORTATION

DIVISION OF STRUCTURES STRUCTURE DESIGN 2

BRIDGE NO. 33-25

POST MILE 1.0-1.3

SFOBB - BENT E23 TO E28 RETROFIT

BENT E23 THROUGH BENT E27A

12" WATER PIPE RELOCATION

CU 04
EA 043431

ORIGINAL SCALE IN INCHES FOR REDUCED PLANS 0 1 2 3

DISREGARD PRINTS BEARING EARLIER REVISION DATES

REVISION DATES (PRELIMINARY STAGE ONLY) 4/29/94

SHEET 100 OF 120

05 050 2138 (CADD 4/89)

DIST.	COUNTY	ROUTE	POST MILES TOTAL PROJECT	SHEET NO.	TOTAL SHEETS
04	Ala	80			

REGISTERED ENGINEER - CIVIL

REGISTERED PROFESSIONAL ENGINEER Gregory Evan Slocum No. 44950 Exp. 3-31-98 CIVIL STATE OF CALIFORNIA

PLANS APPROVAL DATE

The State of California or its officers or agents shall not be responsible for the accuracy or completeness of electronic copies of this plan sheet.

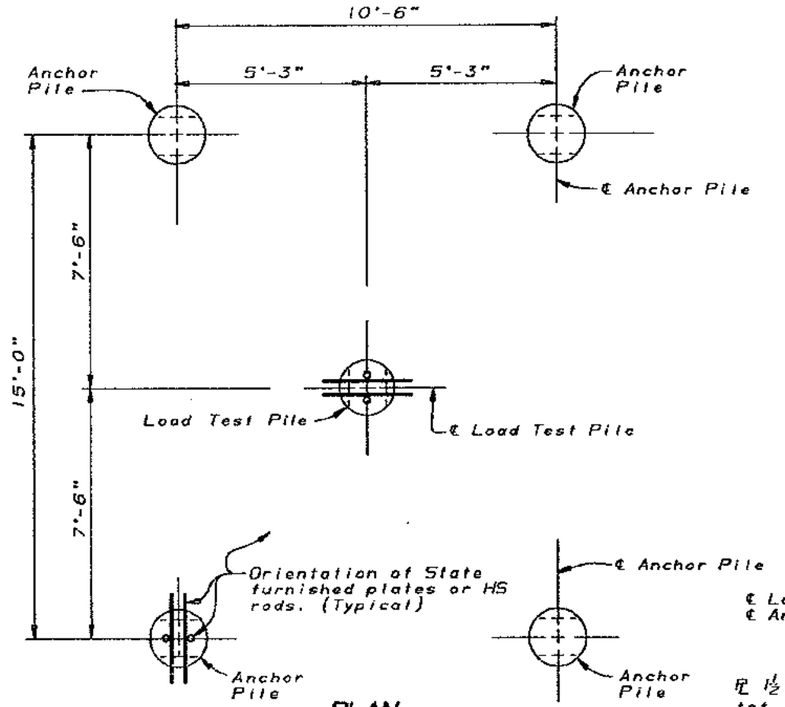

PLAN

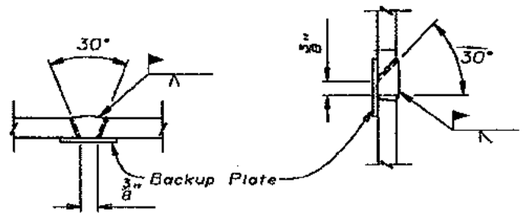

SINGLE VEE-GROOVE SINGLE BEVEL-GROOVE

③ PILE WELDING DETAIL-BUTT JOINTS

Welding notes:

1. Single Vee-Groove permitted for all positions.
2. Single Bevel-Groove permitted for horizontal joints only.
3. All materials, workmanship and joint details shall conform to Standard Specifications 49-5.02.

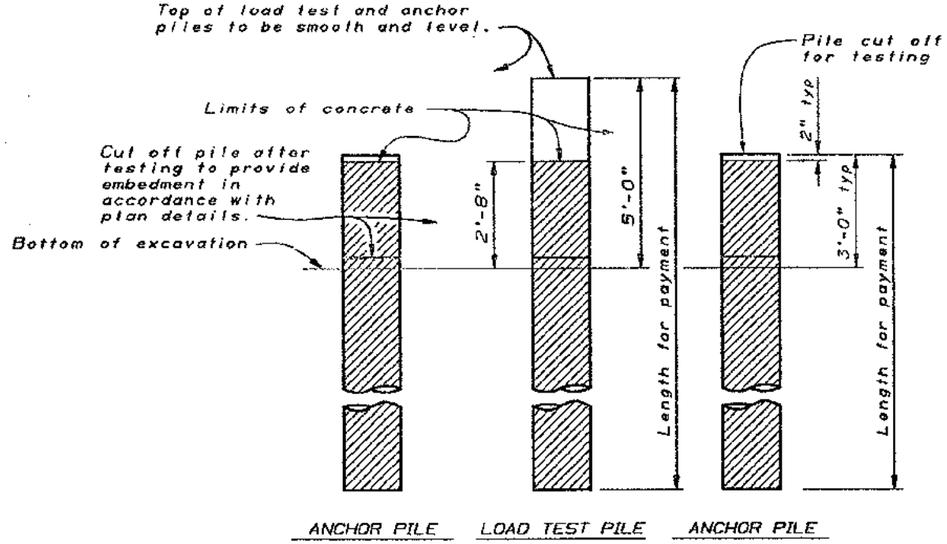

ELEVATION

LOAD TEST PILE GROUP ④

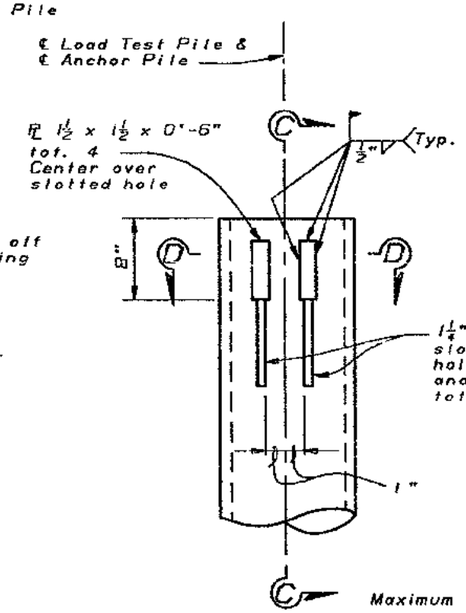

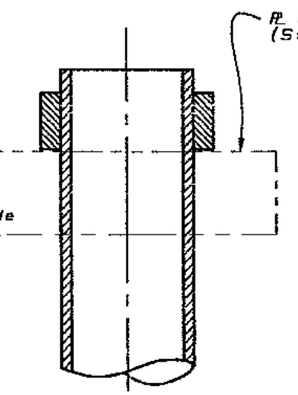

SECTION C-C

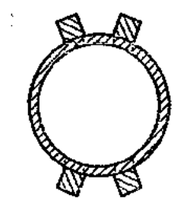

SECTION D-D

Note:
This sheet supersedes Sheet No. B2-9, page 132 of the Standard Plans, dated July 1992.

Maximum Tensile Test Force Per Pile: Class 70 (PP 14 x 0.75) = 280 kips
Class 100 (PP 14 x 0.75) = 300 kips ①

Note:
Alignment of slots and 1½"PL's shall permit a PL 1 x 12 x 3'-4" to pass through pile.
Details applicable for load test and anchor piles.
Slots to be cut after piles are driven.

ALTERNATIVE "W" STEEL PIPE - PILE DETAILS

SPECIAL DETAILS MAR 24 1995

STANDARD DRAWING			
FILE NO. XS 10-35.1	DESIGN BY Lily Sun 11-91	CHECKED T. Jensen 11-91	APPROVAL RECOMMENDED BY DESIGN SUPERVISOR
DRAWING DATE Revised	DETAILS BY M.J./W.F.S. 11-91	CHECKED T. Jensen 11-91	
	SUBMITTED BY Ted Jensen 11-91		

① Revised pipe wall thickness
② Deleted details ④ Revised
③ Added Welding detail

SEISMIC RETROFIT PROJECT No. 614

STATE OF CALIFORNIA DEPARTMENT OF TRANSPORTATION

DIVISION OF STRUCTURES - STRUCTURE DESIGN

BRIDGE NO. 33-25

POST MILE 1.0-1.3

SFOBB - PILE LOAD TEST

BENT E23 TO E39

LOAD TEST PILE DETAILS (1)

DS OSD 2447A (CADD 5/98)

ORIGINAL SCALE IN INCHES FOR REDUCED PLANS 0 1 2 3

CU 04
EA 04343K

DISREGARD PRINTS BEARING EARLIER REVISION DATES

REVISION DATES (PRELIMINARY STAGE ONLY) 10-11-94 10-20-94

SHEET 101 OF 120

DIST.	COUNTY	ROUTE	POST MILES TOTAL PROJECT	SHEET NO.	TOTAL SHEETS
04	Ala	80			

REGISTERED ENGINEER - CIVIL

REGISTERED PROFESSIONAL ENGINEER Gregory Evan Slocum No. 44950 Exp. 3-31-96 CIVIL STATE OF CALIFORNIA

PLANS APPROVAL DATE

The State of California or its officers or agents shall not be responsible for the accuracy or completeness of electronic copies of this plan sheet.

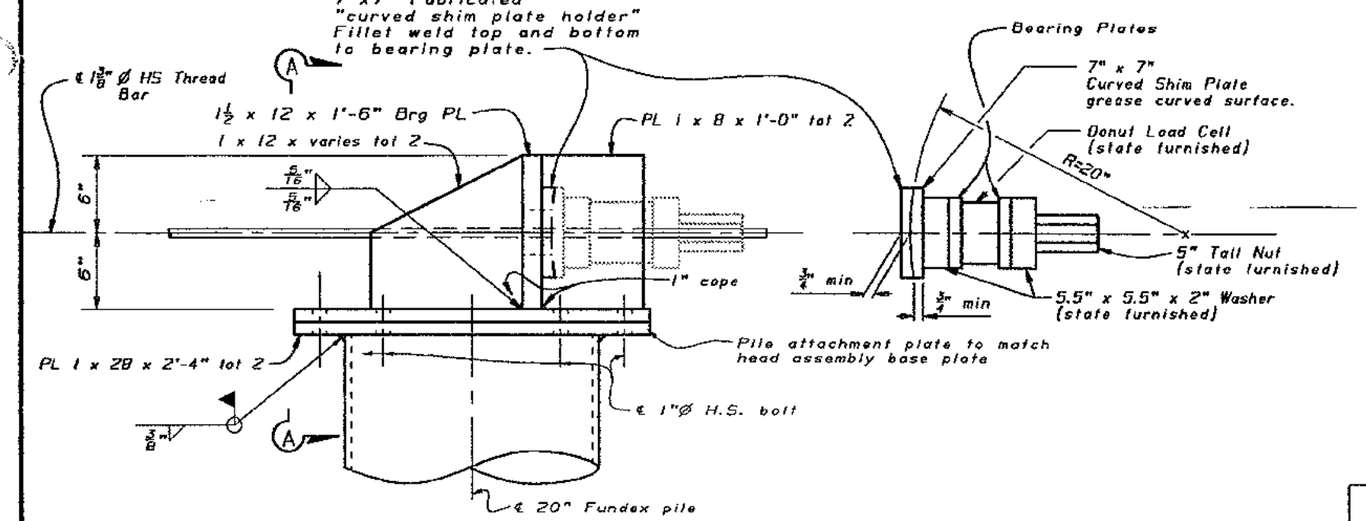

BRACKET ELEVATION

2" = 1'-0"

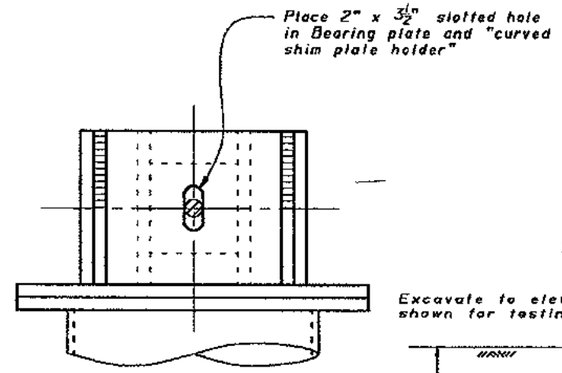

VIEW A-A

2" = 1'-0"

TEST PILE LOCATION				
	Vertical Location	P1 & P2	P3 & P4	P5
TEST PILE WALL THICKNESS	A	0.8125"	0.8125"	0.8125"
	B	½"	½"	½"

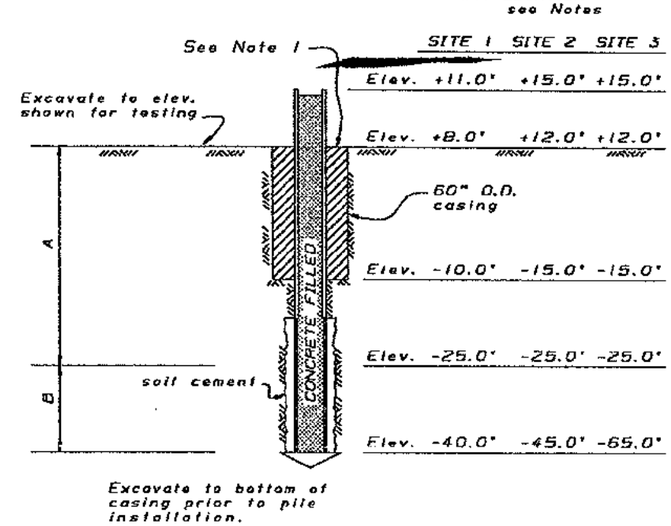

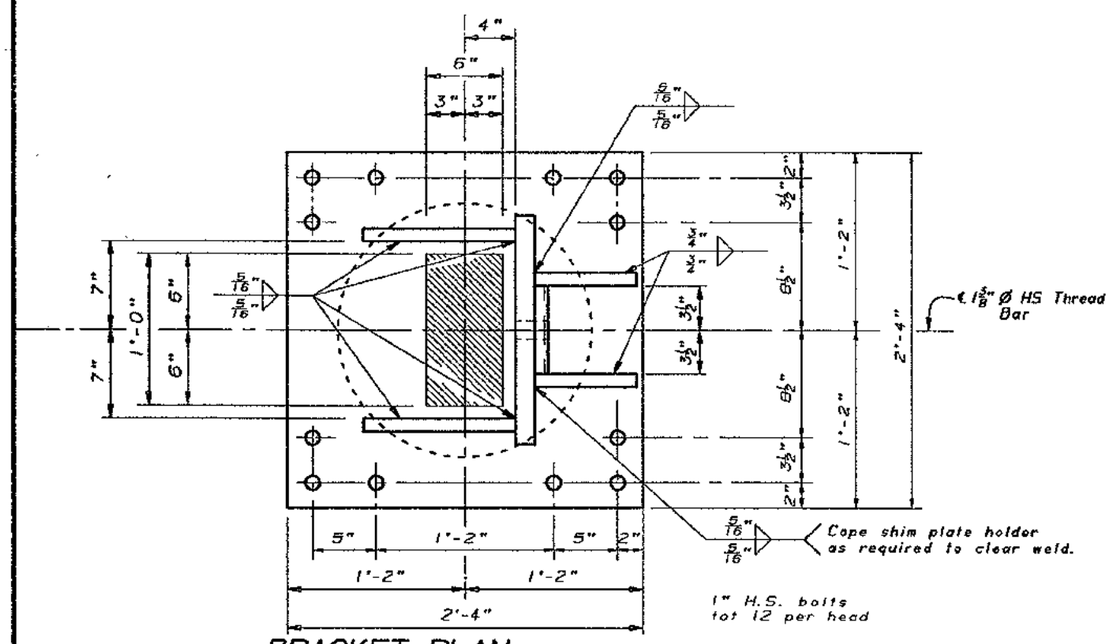

BRACKET PLAN

2" = 1'-0"

Indicates area of plates to be removed for instrumentation.

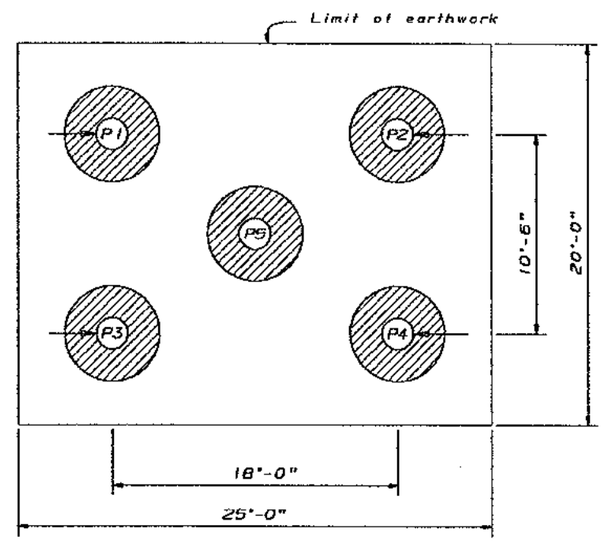

SITE PLAN FOR LOAD TEST SITES 1 - 3

Test Sequence:

1. Place lateral head assemblies on piles P1 - P4.
2. Laterally load piles P1 & P2.
3. Laterally load piles P3 & P4.
4. Remove lateral head assemblies from piles P1 through P4 and prop windows for vertical load tests in piles P1 through P5.
5. Compression load test pile P5.
6. Tension load test pile P5.

MAR 24 1995

Note:

1. Cased shafts shall be filled with 90-95 lb/ft³ drilling mud during pile load test.
2. For test site location, see "Site Plan 1, Site Plan 2 and Site Plan 3" sheets.
3. Performance test pile shall be installed in same manner as production piles located in low overhead clearance areas. (Installation time, use of bentonite, etc.)
4. Each pile shall have a slope inclinometer casing placed within it before concrete is poured.

DESIGN	BY Bob Bateman	CHECKED Gregory Slocum	
DETAILS	BY FD/AES 10-94	CHECKED Bob Bateman	
QUANTITIES	BY Bob Bateman	CHECKED Simon Blank	

SEISMIC RETROFIT PROJECT No. 614

STATE OF CALIFORNIA DEPARTMENT OF TRANSPORTATION

DIVISION OF STRUCTURES STRUCTURE DESIGN 2

BRIDGE NO. 33-25

POST MILE 1.0-1.3

CU 04
EA 04343K

SFOBB - PILE LOAD TEST

BENT E23 TO E39

LOAD TEST PILE DETAILS (2)

DS DSD 2147A (CADD 5/89)

ORIGINAL SCALE IN INCHES FOR REDUCED PLANS 0 1 2 3

DISREGARD PRINTS BEARING EARLIER REVISION DATES

REVISION DATES (PRELIMINARY STAGE ONLY) 10-11-94 10-21-94 10/28/94

SHEET 102 OF 120

DIST	COUNTY	ROUTE	POST MILES TOTAL PROJECT	SHEET NO	TOTAL SHEETS
04	Ala	80			

CERTIFIED ENGINEERING GEOLOGIST

REGISTERED GEOLOGIST J.K. BOWMAN No 1677 Exp 6-30-95 CERTIFIED ENGINEERING GEOLOGIST STATE OF CALIFORNIA

PLANS APPROVAL DATE

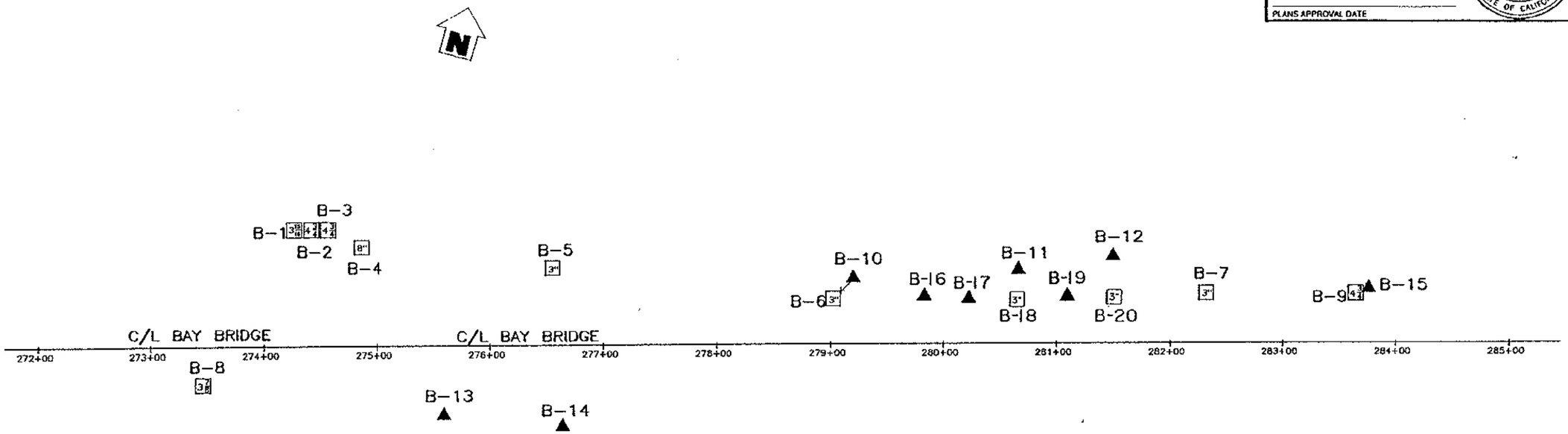

PLAN
1" = 50'

BENCH MARK

BM #50 Elev. 18.95
FD. COPPER NAIL ON N CURB OF LOWER DECK AT BENT 27 MARKED WITH ELEVATION 18.95'

TBM3 Elev. 8.95
SET AERIAL SURVEY TARGET #3 IN C/L OF N. FRONTAGE ROAD BETWEEN BENTS 27 AND 26.

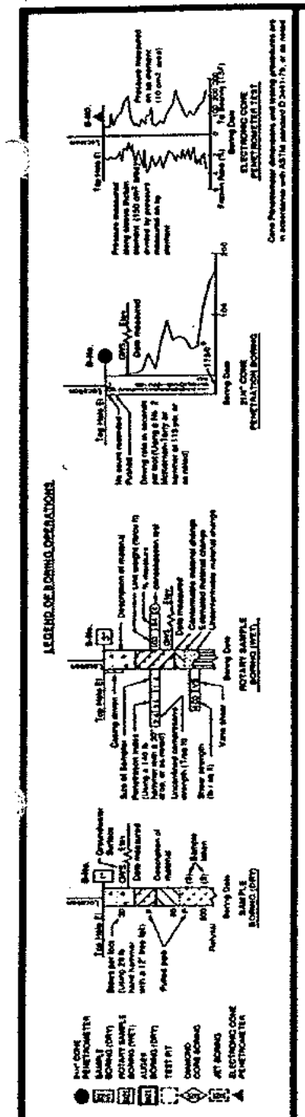

DIVISION OF NEW TECHNOLOGY, MATERIALS AND RESEARCH	OFFICE OF ENGINEERING GEOLOGY	FIELD INVESTIGATION BY:	State of CALIFORNIA DEPARTMENT OF TRANSPORTATION	DIVISION OF STRUCTURES STRUCTURE DESIGN	BRIDGE NO. 33-25	SFOBB–BENT E23 TO E39 RETROFIT
DRAWN BY L. GAMARRA 7/93		J. BOWMAN			POST MILE 1.0/1.3	LOG OF TEST BORINGS 1 OF 18
CHECKED BY						

ORIGINAL SCALE IN INCHES FOR REDUCED PLANS 0 1 2 3

CU 04
EA 04340K

DISREGARD PRINTS BEARING EARLIER REVISION DATES

REVISION DATES (PRELIMINARY STAGE ONLY) 9-3-93 1-12-94

SHEET 109 OF 120

DIST.	COUNTY	ROUTE	POST MILES TOTAL PROJECT	SHEET NO.	TOTAL SHEETS
04	Ala	80			

CERTIFIED ENGINEERING GEOLOGIST

REGISTERED GEOLOGIST — J. K. BOWMAN No. 1677 Exp. 6-30-94 — CERTIFIED ENGINEERING GEOLOGIST — STATE OF CALIFORNIA

PLANS APPROVAL DATE

BENCH MARK

FD. COPPER NAIL ON N. CURB OF LOWER DECK ● BENT 27 MARKED W/ ELEV. 18.95'.
TBM3 ELEV. 8.95'
SET AERIAL SURVEY TARGET #3 IN C/L OF N. FRONTAGE ROAD BETWEEN BENTS 27 & 26.

FOR PLAN VIEW, SEE

"LOG OF TEST BORINGS 1 OF 18"

NOTES:
1. GROUND WATER ELEVATION VARIED WITH THE TIDES.
2. UNCONFINED COMPRESSIVE STRENGTH DETERMINED BY "POCKET PENETROMETER".
3. SOIL DESCRIPTIONS FOR BORINGS B1, B2, AND B3 ARE "FIELD VISUAL" CLASSIFICATIONS DETERMINED ACORDING TO ASTM DESIGNATION: D2488-90.

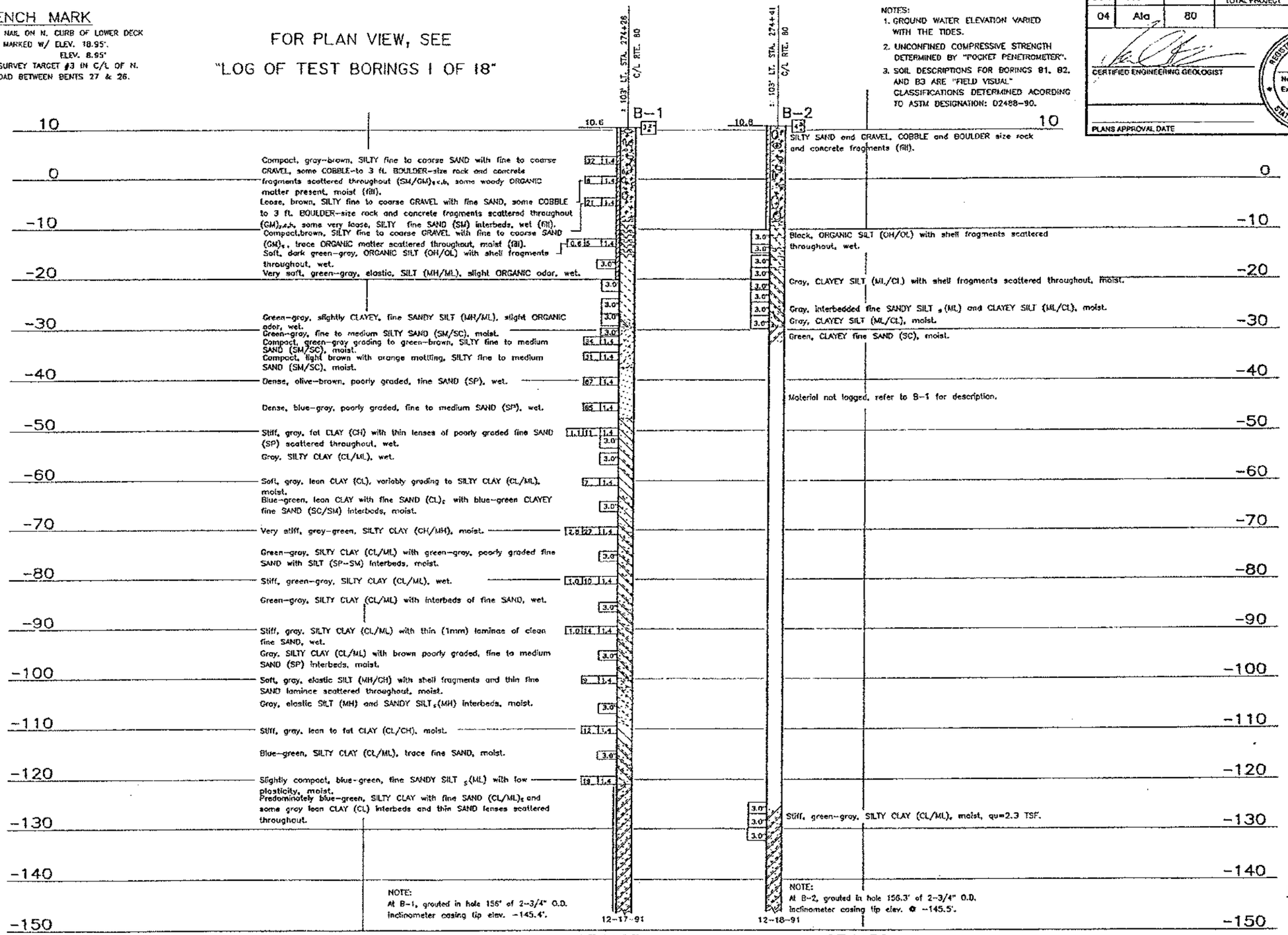

PROFILE
HOR. 1" = 5'
VER. 1" = 10'

LEGEND OF BORING OPERATIONS

LEGEND OF EARTH MATERIALS

CONSISTENCY CLASSIFICATION FOR SOILS

NOTE: Classification of earth material as shown on the logs is based upon field inspection and is not to be construed to imply mechanical analysis.

DIVISION OF NEW TECHNOLOGY, MATERIALS AND RESEARCH	OFFICE OF ENGINEERING GEOLOGY	FIELD INVESTIGATION BY:	State of CALIFORNIA DEPARTMENT OF TRANSPORTATION	DIVISION OF STRUCTURES STRUCTURE DESIGN	BRIDGE NO. 33-25	SFOBB-BENT E23 TO E39 RETROFIT
DRAWN BY K. WAHL 3-93		M. PALMER, J. BOWMAN			POST MILE 1.0/1.3	LOG OF TEST BORINGS 2 OF 18
CHECKED BY						

ORIGINAL SCALE IN INCHES FOR REDUCED PLANS 0 1 2 3

CU 04
EA 04343K

DISREGARD PRINTS BEARING EARLIER REVISION DATES

REVISION DATES (PRELIMINARY STAGE ONLY) 10-3-93 11-17-94

SHEET 170 OF 170

CONSISTENCY CLASSIFICATION FOR SOILS

According to the Standard Penetration Test

Penetration Index (Blows / Ft)	Granular	Cohesive
0-4	Very loose	Very soft
5-9	Loose	Soft
10-19	Slightly compact	Firm
20-34	Compact	Very stiff
35-69	Dense	Hard
>70	Very dense	Very hard

LEGEND OF EARTH MATERIALS

GRAVEL; SAND; SILT; CLAY; SANDY CLAY or CLAYEY SAND; SANDY SILT or SILTY SAND; SILTY CLAY; CLAYEY SILT; PEAT and/or ORGANIC MATTER; FILL MATERIAL; IGNEOUS ROCK; SEDIMENTARY ROCK; METAMORPHIC ROCK

NOTE: Classification of earth material as shown on this sheet is based upon field inspection and is not to be construed to imply mechanical analysis.

LEGEND OF BORING OPERATIONS

2-1/4" CONE PENETROMETER; SAMPLE BORING (DRY); ROTARY SAMPLE BORING (WET); AUGER BORING (DRY); TEST PIT; DIAMOND CORE BORING; JET BORING; ELECTRONIC CONE PENETROMETER

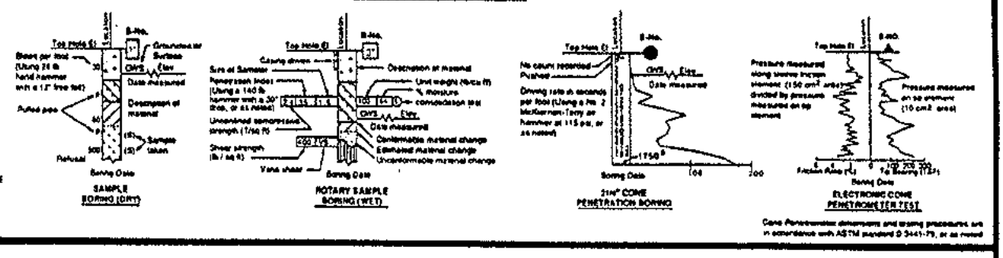

FOR PLAN VIEW, SEE "LOG OF TEST BORINGS", SHEET 1 OF 18"

NOTE:

1. GROUND WATER ELEVATION VARIED WITH THE TIDES.
2. UNCONFINED COMPRESSIVE STRENGTH DETERMINED BY "POCKET PENETROMETER".
3. HOLE WAS DRILLED USING AN HQ WIRELINE SYSTEM.
4. RQD = ROCK QUALITY DESIGNATION. REC = % CORE RECOVERY.
5. GROUTED IN HOLE, 558 FEET OF 3" O.D. INCLINOMETER CASING. TIP ELEV. -545.5.

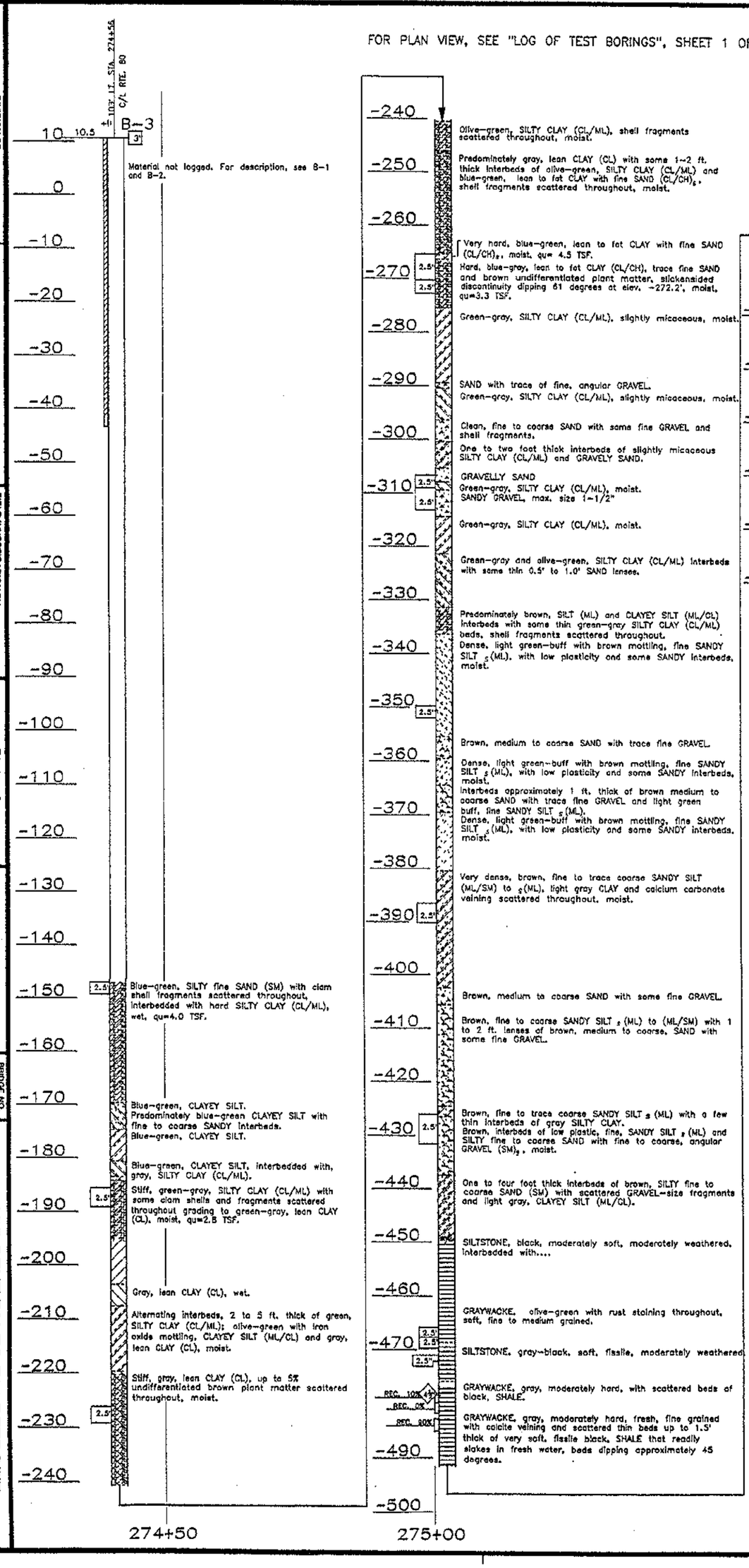

PROFILE

1" = 10'

B-3

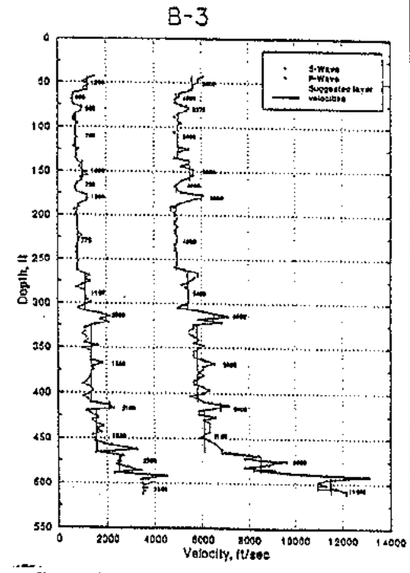

Shear- and compression-wave interval velocities acquired by PS Suspension logger.

DIVISION OF NEW TECHNOLOGY, MATERIALS AND RESEARCH — OFFICE OF ENGINEERING GEOLOGY

DRAWN BY K. WAHL 3-93

CHECKED BY

FIELD INVESTIGATION BY: M. PALMER + BONHAM

ORIGINAL SCALE IN INCHES FOR REDUCED PLANS 0 1 2 3

State of CALIFORNIA DEPARTMENT OF TRANSPORTATION

DIVISION OF STRUCTURES STRUCTURE DESIGN

CU 04 EA 0B343K

BRIDGE NO. 33-25 POST MILE 1.0/1.3

DISREGARD PRINTS BEARING EARLIER REVISION DATES

REVISION DATES PRELIMINARY STAGE ONLY

SHEET 1 OF 1

LOG OF TEST BORINGS 3 OF 18

SFOBB-BENT E23 TO E39 RETROFIT

PLANS APPROVAL DATE

CERTIFIED ENGINEERING GEOLOGIST

REGISTERED GEOLOGIST — STATE OF CALIFORNIA — CERTIFIED ENGINEERING GEOLOGIST

DIST.	COUNTY	ROUTE	POST MILES TOTAL PROJECT	SHEET NO.	TOTAL SHEETS
04	Ala	80			

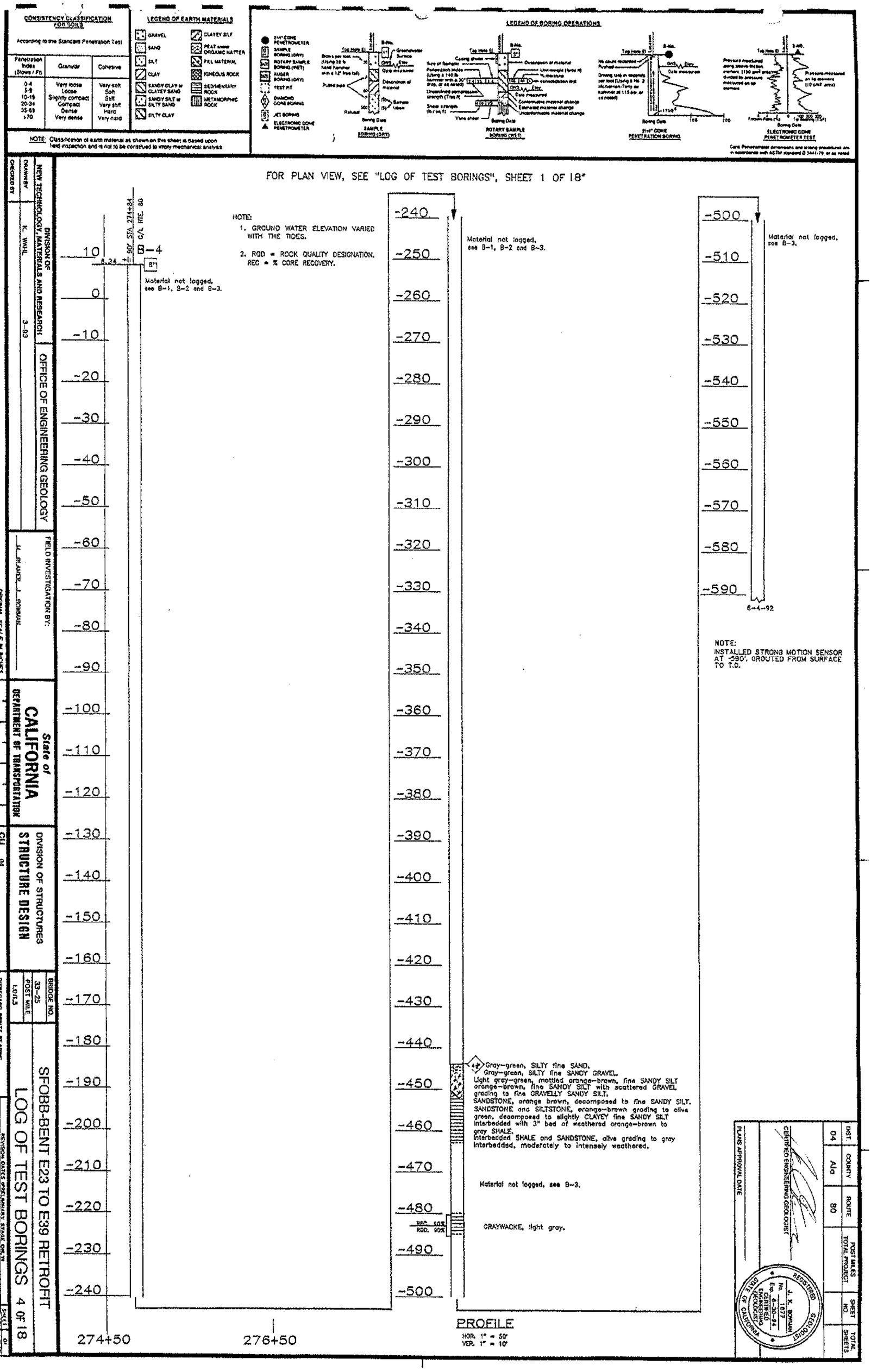
CONSISTENCY CLASSIFICATION FOR SOILS
According to the Standard Penetration Test
Penetration Index (Blows / Ft)
Granular
Cohesive
0-4 Very loose Very soft
5-9 Loose Soft
10-19 Slightly compact Stiff
20-34 Compact Very stiff
35-69 Dense Hard
>70 Very dense Very hard
LEGEND OF EARTH MATERIALS
GRAVEL
SAND
SILT
CLAY
SANDY CLAY or CLAYEY SAND
SANDY SILT or SILTY SAND
SILTY CLAY
CLAYEY SILT
PEAT and/or ORGANIC MATTER
FILL MATERIAL
IGNEOUS ROCK
SEDIMENTARY ROCK
METAMORPHIC ROCK
NOTE: Classification of earth material as shown on this sheet is based upon field inspection and is not to be construed to imply mechanical analyses.
LEGEND OF BORING OPERATIONS
SAMPLE BORING (DRY)
ROTARY SAMPLE BORING (WET)
2½" CONE PENETRATION BORING
ELECTRONIC CONE PENETROMETER TEST
FOR PLAN VIEW, SEE "LOG OF TEST BORINGS", SHEET 1 OF 18*
NOTE:
1. GROUND WATER ELEVATION VARIED WITH THE TIDES.
2. RQD = ROCK QUALITY DESIGNATION. REC = % CORE RECOVERY.
90° STA. 274+84
C/L RTE. 80
B-4
8.34 +11
8"
Material not logged, see B-1, B-2 and B-3.
Material not logged, see B-1, B-2 and B-3.
Material not logged, see B-3.
6-4-92
NOTE:
INSTALLED STRONG MOTION SENSOR AT -590', GROUTED FROM SURFACE TO T.D.
Gray-green, SILTY fine SAND.
Gray-green, SILTY fine SANDY GRAVEL.
Light gray-green, mottled orange-brown, fine SANDY SILT orange-brown, fine SANDY SILT with scattered GRAVEL grading to fine GRAVELLY SANDY SILT.
SANDSTONE, orange brown, decomposed to fine SANDY SILT.
SANDSTONE and SILTSTONE, orange-brown grading to olive green, decomposed to slightly CLAYEY fine SANDY SILT interbedded with 3" bed of weathered orange-brown to gray SHALE.
Interbedded SHALE and SANDSTONE, olive grading to gray interbedded, moderately to intensely weathered.
Material not logged, see B-3.
REC. 90%
RQD. 90%
GRAYWACKE, light gray.
274+50
276+50
PROFILE
HOR. 1" = 50'
VER. 1" = 10'
DIVISION OF NEW TECHNOLOGY, MATERIALS AND RESEARCH
OFFICE OF ENGINEERING GEOLOGY
DRAWN BY K. WAHL 3-93
CHECKED BY
FIELD INVESTIGATION BY: M. PLAMER, J. BOWMAN
State of CALIFORNIA
DEPARTMENT OF TRANSPORTATION
DIVISION OF STRUCTURES
STRUCTURE DESIGN
BRIDGE NO. 33-25
POST MILE 1.0/1.3
SFOBB-BENT E23 TO E39 RETROFIT
LOG OF TEST BORINGS 4 OF 18
ORIGINAL SCALE IN INCHES FOR REDUCED PLANS
CU 04
EA 04343K
DISREGARD PRINTS BEARING EARLIER REVISION DATES
REVISION DATES (PRELIMINARY STAGE ONLY)
SHEET 1 OF 18
DIST. 04
COUNTY Ala
ROUTE 80
POST MILES TOTAL PROJECT
SHEET NO.
TOTAL SHEETS
PLANS APPROVAL DATE
CERTIFIED ENGINEERING GEOLOGIST
REGISTERED GEOLOGIST J. K. BOWMAN No. 1877 Exp. 6-30-94 CERTIFIED ENGINEERING GEOLOGIST STATE OF CALIFORNIA

DIST.	COUNTY	ROUTE	POST MILES TOTAL PROJECT	SHEET NO.	TOTAL SHEETS
04	Ala	80			

CERTIFIED ENGINEERING GEOLOGIST

REGISTERED GEOLOGIST — J. K. BOWMAN — No. 1577 — Exp. 6-30-94 — CERTIFIED ENGINEERING GEOLOGIST — STATE OF CALIFORNIA

PLANS APPROVAL DATE

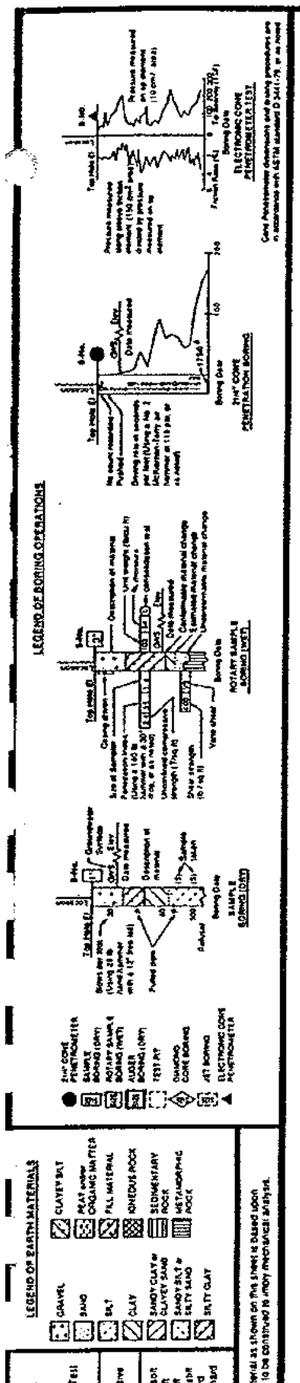

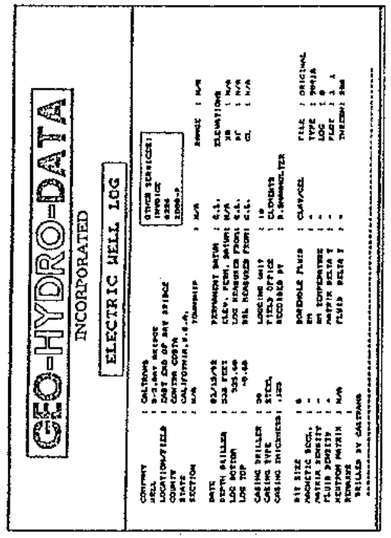

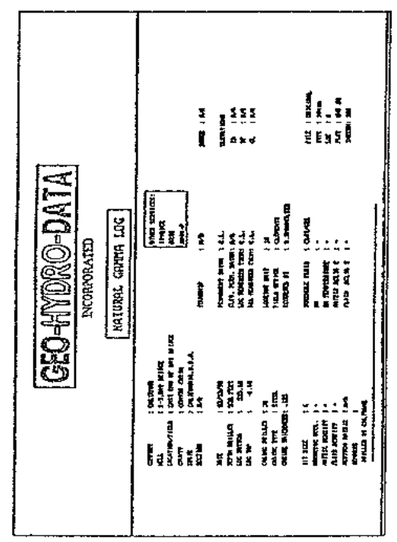

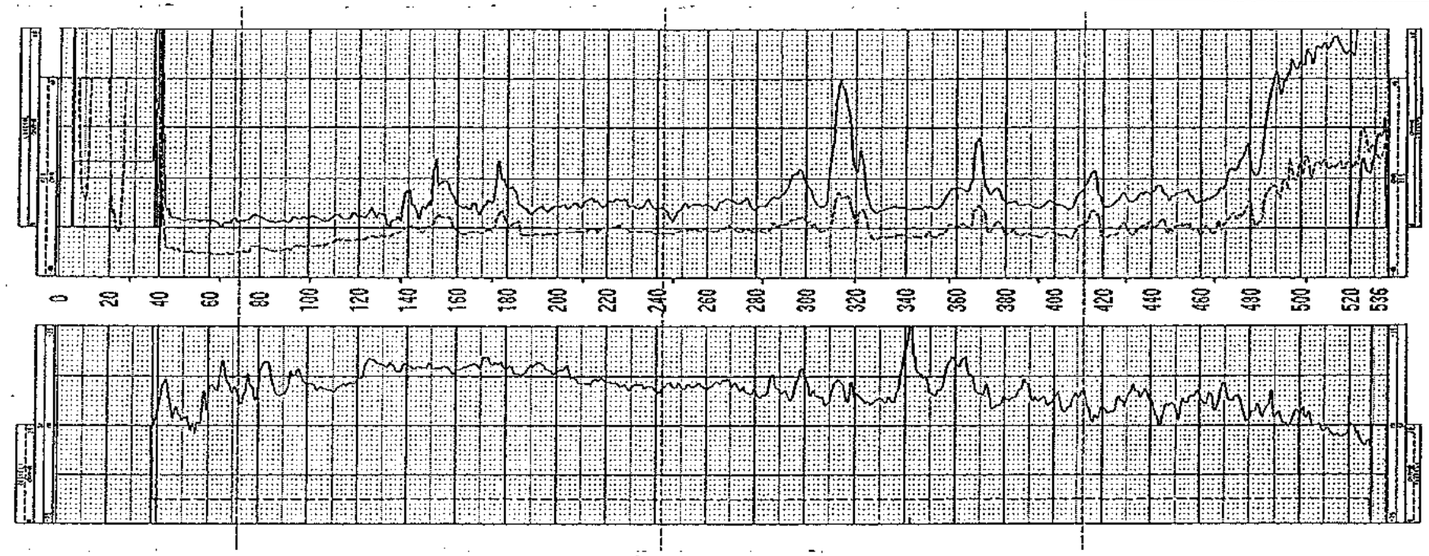

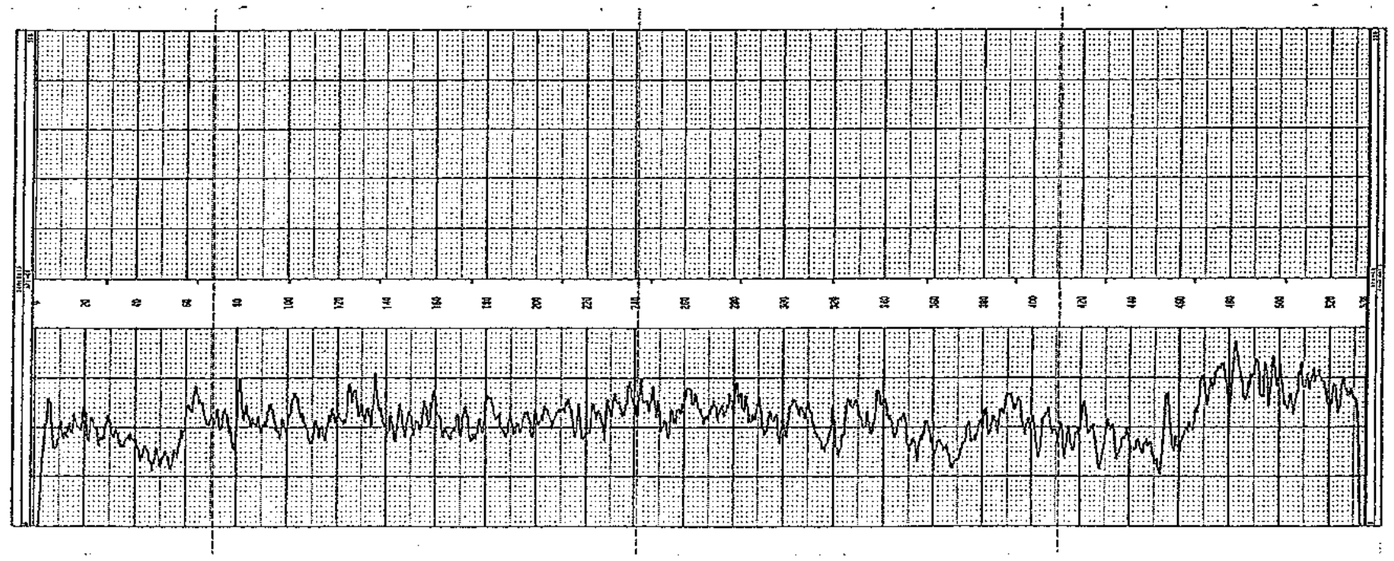

B-3

DIVISION OF NEW TECHNOLOGY, MATERIALS AND RESEARCH	OFFICE OF ENGINEERING GEOLOGY
DRAWN BY K. WAHL 3-93	
CHECKED BY	

FIELD INVESTIGATION BY: M. PALMER, J. BOWMAN

State of CALIFORNIA DEPARTMENT OF TRANSPORTATION

DIVISION OF STRUCTURES STRUCTURE DESIGN

BRIDGE NO. 33-25

POST MILE 1.0/1.3

SFOBB-BENT E23 TO E39 RETROFIT

LOG OF TEST BORINGS 5 OF 18

ORIGINAL SCALE IN INCHES FOR REDUCED PLANS 0 1 2 3

CU 04 EA 04343K

DISREGARD PRINTS BEARING EARLIER REVISION DATES

REVISION DATES (PRELIMINARY STAGE ONLY) 9-3-93 4-17-94

SHEET 107 OF 120 01

DIST.	COUNTY	ROUTE	POST MILES TOTAL PROJECT	SHEET NO.	TOTAL SHEETS
04	Alc	80			

CERTIFIED ENGINEERING GEOLOGIST

REGISTERED GEOLOGIST — J. K. BOWMAN — No. 1677 — Exp. 6-30-94 — CERTIFIED ENGINEERING GEOLOGIST — STATE OF CALIFORNIA

PLANS APPROVAL DATE

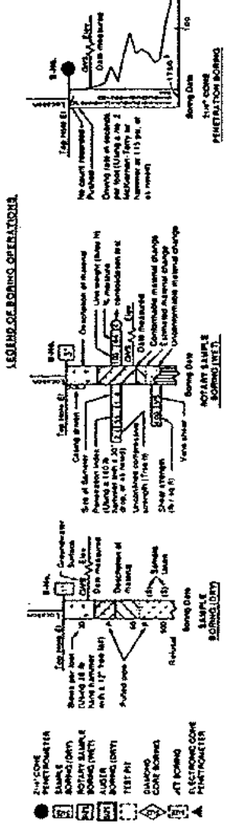

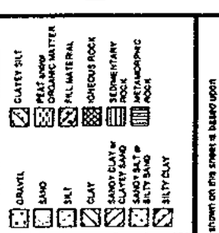

CONSISTENCY CLASSIFICATION FOR SOILS

According to the Standard Penetration Test

Penetration Index (Blows / Ft)	Granular	Cohesive
0-4	Very loose	Very soft
5-9	Loose	Soft
10-19	Slightly compact	Stiff
20-34	Compact	Very stiff
35-59	Dense	Hard
>70	Very dense	Very hard

NOTE: Classification of earth material as shown on this sheet is based upon field inspection and is not to be construed to imply mechanical analysis.

B-3 BENT 23

INTERPRETED LOGS
GAMMA RAY RESISTIVITY

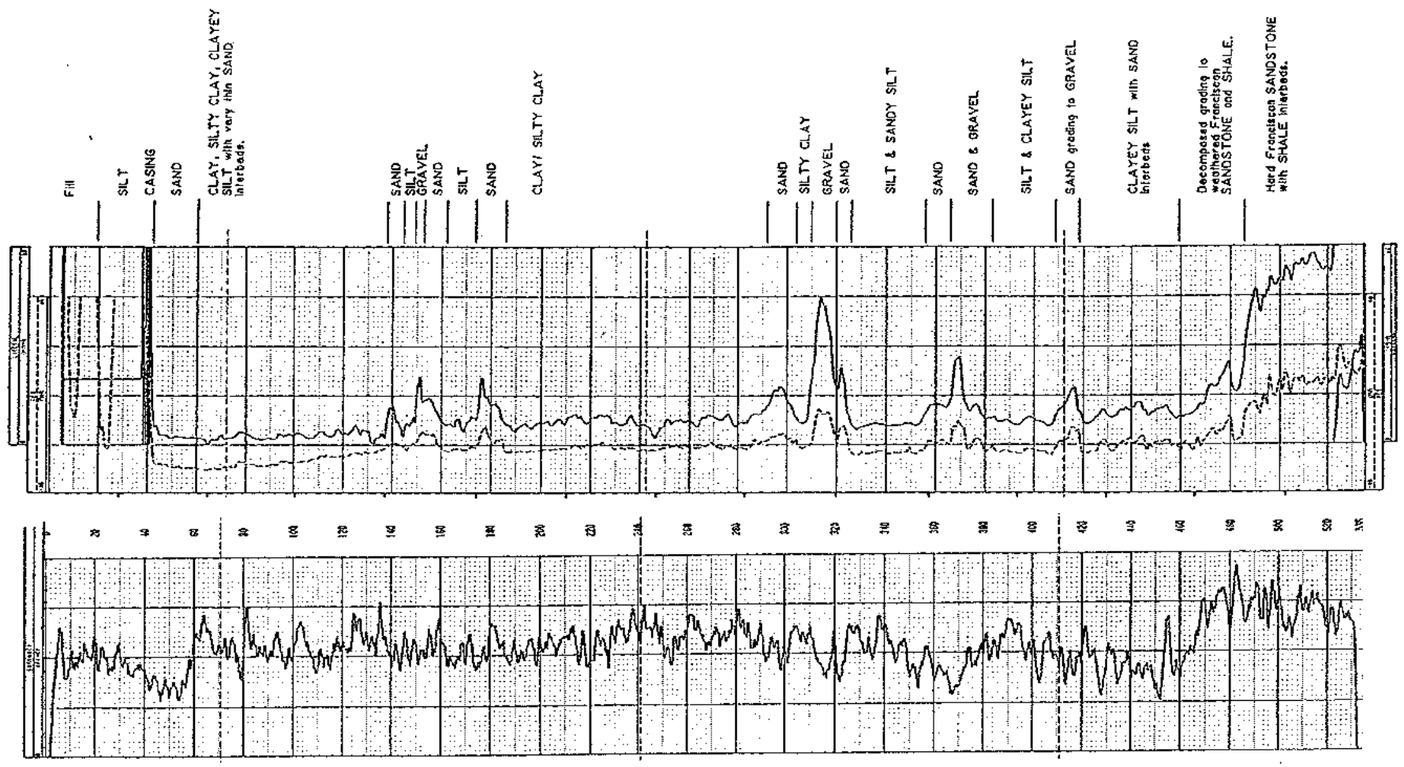

DIVISION OF NEW TECHNOLOGY, MATERIALS AND RESEARCH	OFFICE OF ENGINEERING GEOLOGY
DRAWN BY K. WAHL 3-93	
CHECKED BY	

FIELD INVESTIGATION BY: M. PALMER, J. BOWMAN

State of CALIFORNIA DEPARTMENT OF TRANSPORTATION

DIVISION OF STRUCTURES STRUCTURE DESIGN

BRIDGE NO. 33-25 | POST MILE 1.0/1.3

SFOBB-BENT E23 TO E39 RETROFIT

LOG OF TEST BORINGS 6 OF 18

ORIGINAL SCALE IN INCHES FOR REDUCED PLANS 0 1 2 3

CU 04 EA 04343K

DISREGARD PRINTS BEARING EARLIER REVISION DATES

REVISION DATES (PRELIMINARY STAGE ONLY) 9-3-93 4-17-94

SHEET 106 OF 120

CONSISTENCY CLASSIFICATION FOR SOILS

According to the Standard Penetration Test

Penetration Index (Blows / Ft)	Granular	Cohesive
0-4	Very loose	Very soft
5-9	Loose	Soft
10-19	Slightly compact	Stiff
20-34	Compact	Very stiff
35-69	Dense	Hard
>70	Very dense	Very hard

LEGEND OF EARTH MATERIALS

GRAVEL, SAND, SILT, CLAY, SANDY CLAY or CLAYEY SAND, SANDY SILT or SILTY SAND, SILTY CLAY, CLAYEY SILT, PEAT and/or ORGANIC MATTER, FILL MATERIAL, IGNEOUS ROCK, SEDIMENTARY ROCK, METAMORPHIC ROCK

NOTE Classification of earth material as shown on this sheet is based upon field inspection and is not to be construed to imply mechanical analysis.

LEGEND OF BORING OPERATIONS

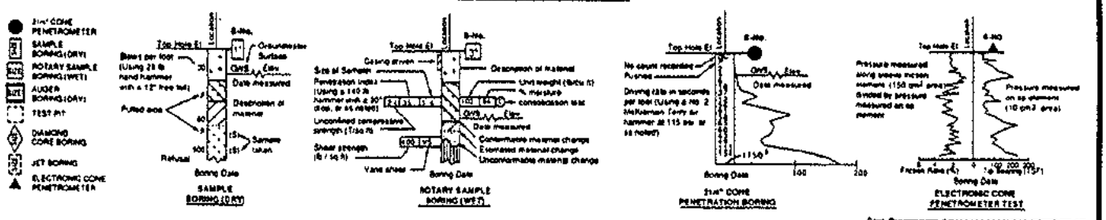

Cone Penetrometer dimensions and testing procedures are in accordance with ASTM standard D 3441-79, or as noted.

FOR PLAN VIEW, SEE "LOG OF TEST BORINGS 1 OF 18"

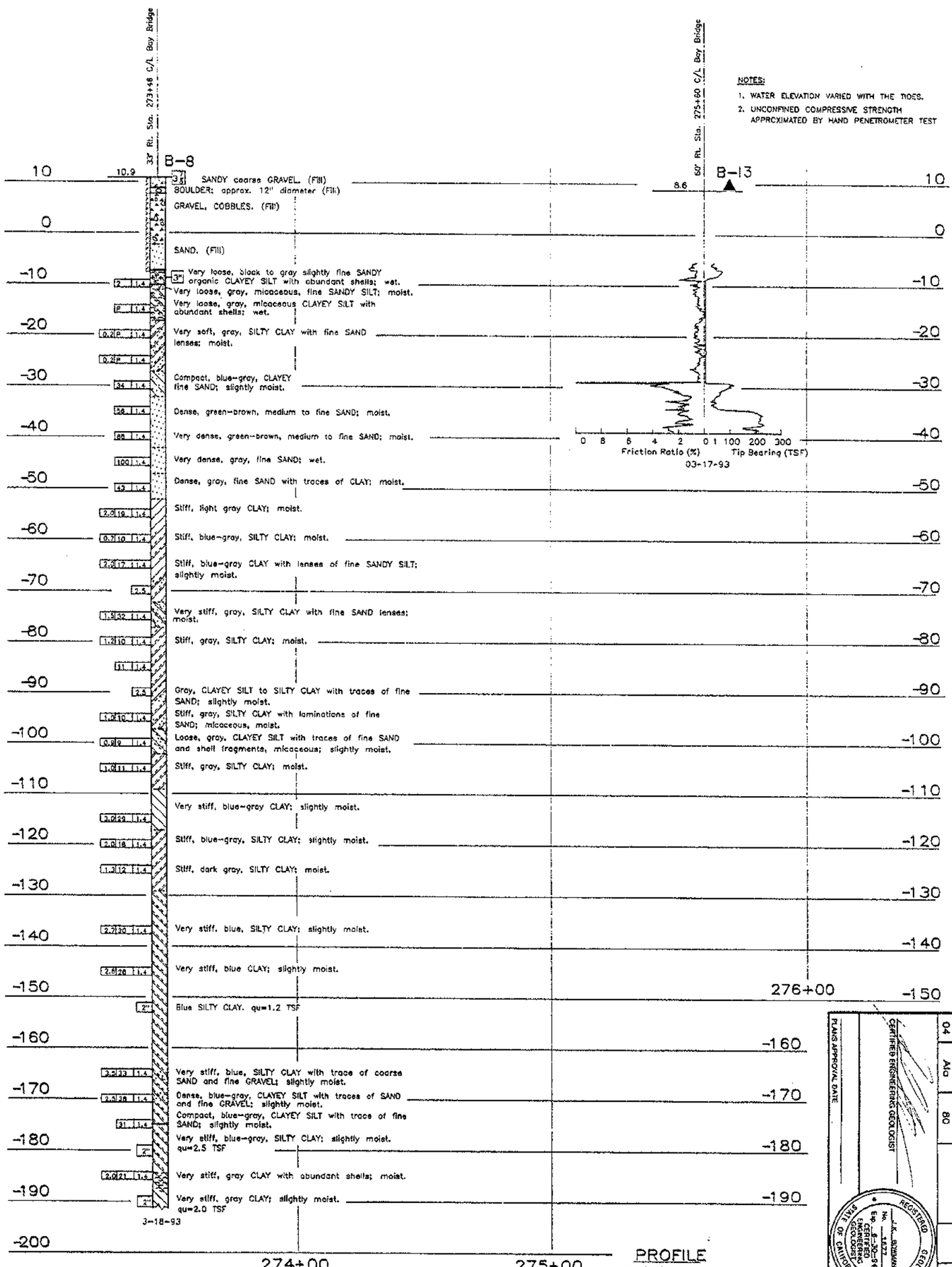

NOTES:

1. WATER ELEVATION VARIED WITH THE TIDES.
2. UNCONFINED COMPRESSIVE STRENGTH APPROXIMATED BY HAND PENETROMETER TEST

PROFILE
Hor. 1"=20' Ver. 1"=10'

DIST.	COUNTY	ROUTE	POST MILES TOTAL PROJECT	SHEET NO.	TOTAL SHEETS
04	Ala	80			

PLANS APPROVAL DATE

CERTIFIED ENGINEERING GEOLOGIST

REGISTERED GEOLOGIST No. 1677 Exp. 6-30-94 CERTIFIED ENGINEERING GEOLOGIST STATE OF CALIFORNIA

DIVISION OF NEW TECHNOLOGY, MATERIALS AND RESEARCH

OFFICE OF ENGINEERING GEOLOGY

DRAWN BY IRMA GAMARRA 7/93

CHECKED BY

FIELD INVESTIGATION BY: J. BOWMAN

ORIGINAL SCALE IN INCHES FOR REDUCED PLANS 0 1 2 3

State of CALIFORNIA DEPARTMENT OF TRANSPORTATION

DIVISION OF STRUCTURES STRUCTURE DESIGN

CU 04 EA 04343K

BRIDGE NO. 33-25 POST MILE 1.0/1.3

SFOBB-BENT E23 TO E39 RETROFIT

LOG OF TEST BORINGS 7 OF 18

DISREGARD PRINTS BEARING EARLIER REVISION DATES

REVISION DATES (PRELIMINARY STAGE ONLY) 3-3-93 4-17-94

SHEET 109 OF 120

CONSISTENCY CLASSIFICATION FOR SOILS

According to the Standard Penetration Test

Penetration Index (Blows / Ft)	Granular	Cohesive
0-4	Very loose	Very soft
5-9	Loose	Soft
10-19	Slightly compact	Stiff
20-34	Compact	Very stiff
35-69	Dense	Hard
>70	Very dense	Very hard

LEGEND OF EARTH MATERIALS

GRAVEL; SAND; SILT; CLAY; SANDY CLAY or CLAYEY SAND; SANDY SILT or SILTY SAND; SILTY CLAY; CLAYEY SILT; PEAT and/or ORGANIC MATTER; FILL MATERIAL; IGNEOUS ROCK; SEDIMENTARY ROCK; METAMORPHIC ROCK

NOTE: Classification of earth material as shown on this sheet is based upon field inspection and is not to be construed to imply mechanical analysis.

LEGEND OF BORING OPERATIONS

3½" CONE PENETROMETER; SAMPLE BORING (DRY); ROTARY SAMPLE BORING (WET); AUGER BORING (DRY); TEST PIT; DIAMOND CORE BORING; JET BORING; ELECTRONIC CONE PENETROMETER

SAMPLE BORING (DRY); ROTARY SAMPLE BORING (WET); 3½" CONE PENETRATION BORING; ELECTRONIC CONE PENETROMETER TEST

Cone Penetrometer dimensions and testing procedures are in accordance with ASTM standard D 3441-79 or as noted

FOR PLAN VIEW, SEE "LOG OF TEST BORINGS 1 OF 18"

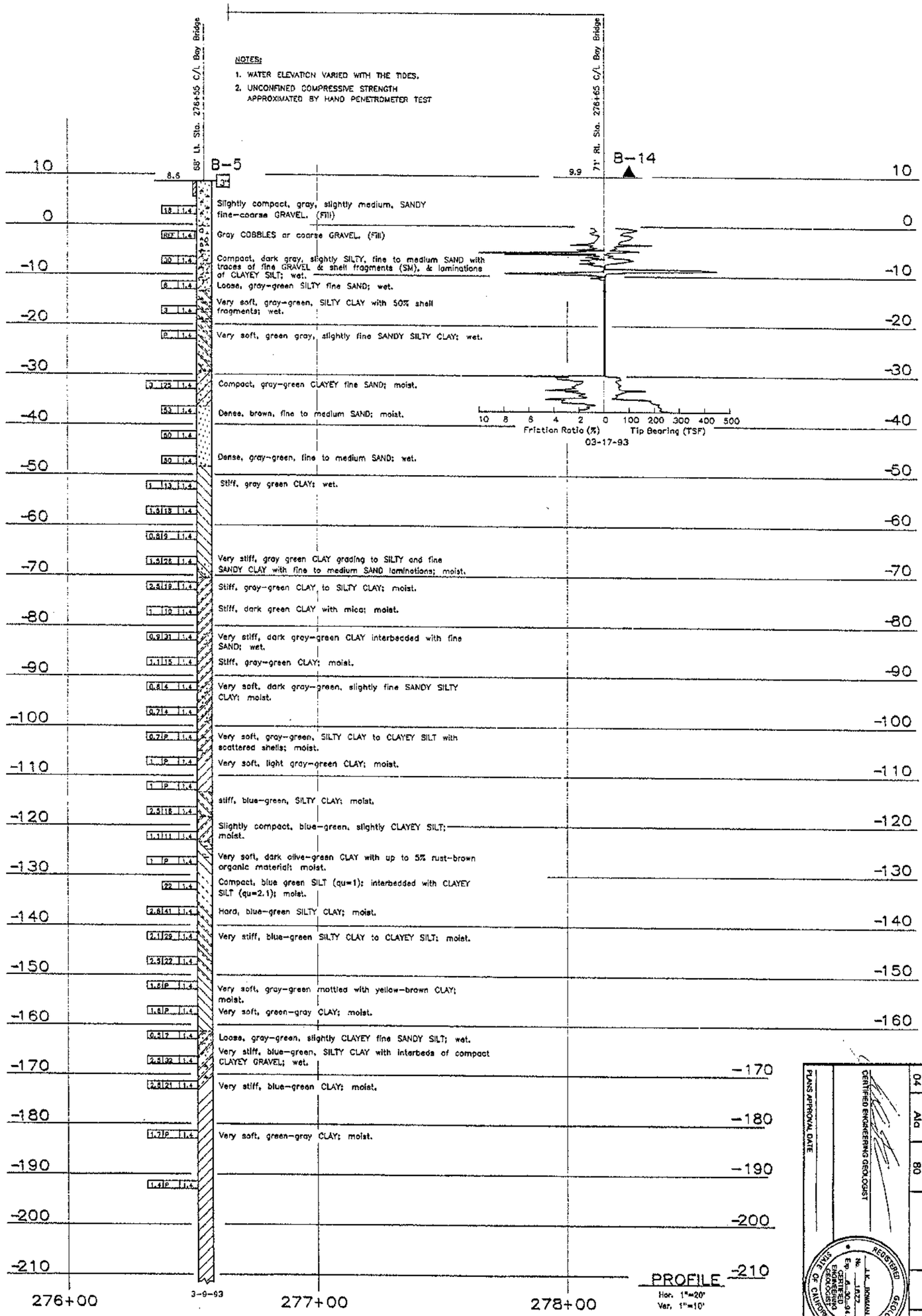

DIVISION OF NEW TECHNOLOGY, MATERIALS AND RESEARCH — OFFICE OF ENGINEERING GEOLOGY

DRAWN BY: IRMA GAMARRA 7/93

CHECKED BY:

FIELD INVESTIGATION BY: J. BOWMAN

State of CALIFORNIA DEPARTMENT OF TRANSPORTATION

DIVISION OF STRUCTURES STRUCTURE DESIGN

ORIGINAL SCALE IN INCHES FOR REDUCED PLANS 0 1 2 3

CU 04 EA 043433K

DISREGARD PRINTS BEARING EARLIER REVISION DATES

BRIDGE NO. 33-25 POST MILE 1.0/1.3

SFOBB-BENT E23 TO E39 RETROFIT

LOG OF TEST BORINGS 8 OF 18

REVISION DATES (PRELIMINARY STAGE ONLY) 3-9-93 (11-14)

SHEET 18 OF 120

PLANS APPROVAL DATE

REGISTERED GEOLOGIST — CERTIFIED ENGINEERING GEOLOGIST — STATE OF CALIFORNIA — No. 1727 — Exp. 6-30-94 — J.H. BOWMAN

DIST	COUNTY	ROUTE	POST MILES TOTAL PROJECT	SHEET NO.	TOTAL SHEETS
04	Ala	80			

CONSISTENCY CLASSIFICATION FOR SOILS

According to the Standard Penetration Test

Penetration Index (Blows / Ft)	Granular	Cohesive
0-4	Very loose	Very soft
5-9	Loose	Soft
10-19	Slightly compact	Stiff
20-34	Compact	Very stiff
35-69	Dense	Hard
>70	Very dense	Very hard

LEGEND OF EARTH MATERIALS

- GRAVEL
- SAND
- SILT
- CLAY
- SANDY CLAY or CLAYEY SAND
- SANDY SILT or SILTY SAND
- SILTY CLAY
- CLAYEY SILT
- PEAT and/or ORGANIC MATTER
- FILL MATERIAL
- IGNEOUS ROCK
- SEDIMENTARY ROCK
- METAMORPHIC ROCK

NOTE Classification of earth material as shown on this sheet is based upon field inspection and is not to be construed to imply mechanical analysis.

LEGEND OF BORING OPERATIONS

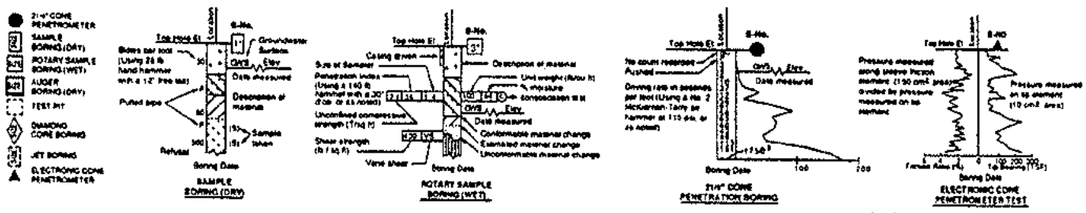

Cone Penetrometer dimensions and testing procedures are in accordance with ASTM standard D 3441-79 or as noted

FOR PLAN VIEW, SEE "LOG OF TEST BORINGS 1 OF 18"

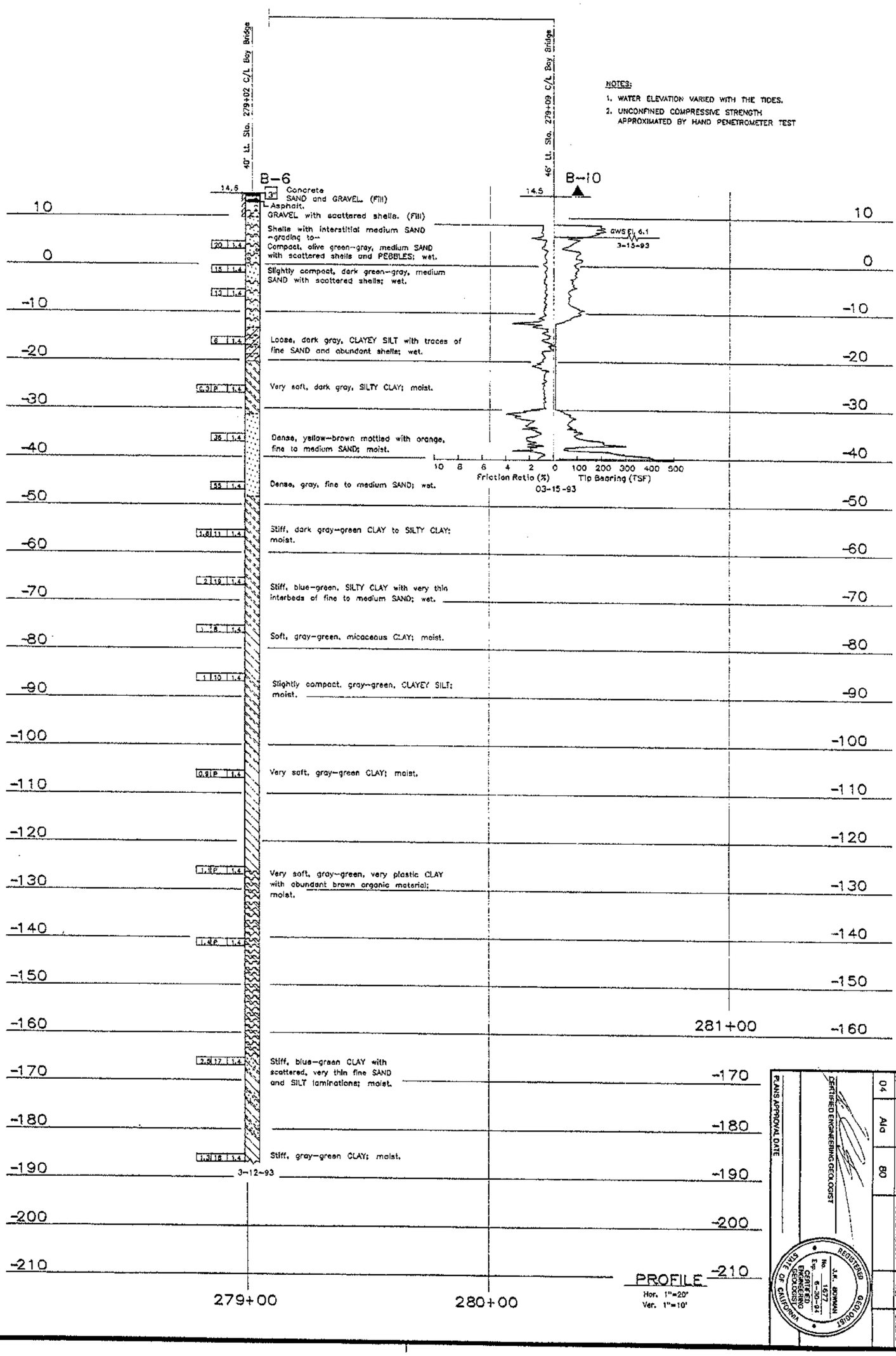

NOTES:

1. WATER ELEVATION VARIED WITH THE TIDES.
2. UNCONFINED COMPRESSIVE STRENGTH APPROXIMATED BY HAND PENETROMETER TEST

PROFILE
Hor. 1"=20'
Ver. 1"=10'

DIVISION OF NEW TECHNOLOGY, MATERIALS AND RESEARCH
OFFICE OF ENGINEERING GEOLOGY

DRAWN BY IRMA GAMARRA 7/93
CHECKED BY

FIELD INVESTIGATION BY: J. BOWMAN

State of CALIFORNIA
DEPARTMENT OF TRANSPORTATION

DIVISION OF STRUCTURES
STRUCTURE DESIGN

CU 04
EA 04343K

BRIDGE NO. 33-25
POST MILE 1.0/1.3

SFOBB-BENT E23 TO E39 RETROFIT
LOG OF TEST BORINGS 9 OF 18

DISREGARD PRINTS BEARING EARLIER REVISION DATES

REVISION DATES (PRELIMINARY STAGE ONLY)

DIST.	COUNTY	ROUTE	POST MILES TOTAL PROJECT	SHEET NO.	TOTAL SHEETS
04	Ala	80			

CERTIFIED ENGINEERING GEOLOGIST
PLANS APPROVAL DATE

REGISTERED GEOLOGIST
J.K. BOWMAN
No. 1677
Exp. 6-30-94
CERTIFIED ENGINEERING GEOLOGIST
STATE OF CALIFORNIA

DIST.	COUNTY	ROUTE	POST MILES TOTAL PROJECT	SHEET NO.	TOTAL SHEETS
04	Ala	80			

CERTIFIED ENGINEERING GEOLOGIST

REGISTERED GEOLOGIST J. K. BOWMAN No. 1677 Exp. 6-30-94 CERTIFIED ENGINEERING GEOLOGIST STATE OF CALIFORNIA

PLANS APPROVAL DATE

FOR PLAN VIEW, SEE "LOG OF TEST BORINGS", SHEET 1 OF 18.

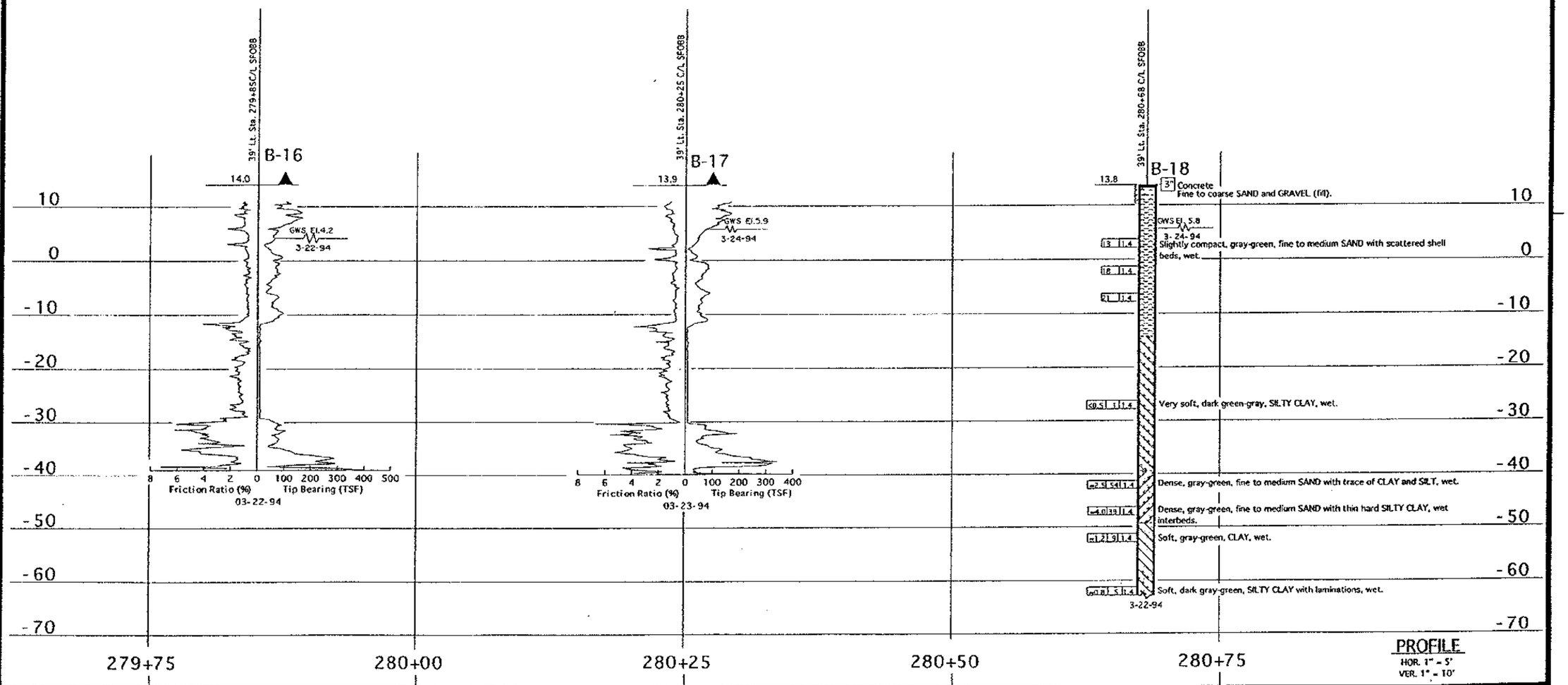

PROFILE
HOR. 1" = 5'
VER. 1" = 10'

LEGEND OF BORING OPERATIONS

LEGEND OF EARTH MATERIALS

CONSISTENCY CLASSIFICATION FOR SOILS

According to the Standard Penetration Test

Penetration Index (Blows / Ft)	Granular	Cohesive
0-4	Very loose	Very soft
5-9	Loose	Soft
10-19	Slightly compact	Stiff
20-34	Compact	Very stiff
35-69	Dense	Hard
>70	Very dense	Very hard

NOTE: Classification of earth material as shown on this sheet is based upon field inspection and is not to be construed to imply mechanical analysis.

DIVISION OF NEW TECHNOLOGY, MATERIALS AND RESEARCH	OFFICE OF ENGINEERING GEOLOGY	FIELD INVESTIGATION BY:	State of CALIFORNIA DEPARTMENT OF TRANSPORTATION	DIVISION OF STRUCTURES STRUCTURE DESIGN	BRIDGE NO. 33-25	SFOBB - BENT E23 TO E39 RETROFIT
DRAWN BY [illegible] 4/94		J. BOWMAN			POST MILE 1.0/1.3	LOG OF TEST BORINGS 10 OF 18.
CHECKED BY						

ORIGINAL SCALE IN INCHES FOR REDUCED PLANS 0 1 2 3

CU 04
EA 04343K

DISREGARD PRINTS BEARING EARLIER REVISION DATES

REVISION DATES (PRELIMINARY STAGE ONLY)

SHEET 10 OF 18

CONSISTENCY CLASSIFICATION FOR SOILS

According to the Standard Penetration Test

Penetration Index (Blows / Ft)	Granular	Cohesive
0-4	Very loose	Very soft
5-9	Loose	Soft
10-19	Slightly compact	Stiff
20-34	Compact	Very stiff
35-69	Dense	Hard
>70	Very dense	Very hard

LEGEND OF EARTH MATERIALS

GRAVEL; SAND; SILT; CLAY; SANDY CLAY or CLAYEY SAND; SANDY SILT or SILTY SAND; SILTY CLAY; CLAYEY SILT; PEAT and/or ORGANIC MATTER; FILL MATERIAL; IGNEOUS ROCK; SEDIMENTARY ROCK; METAMORPHIC ROCK

NOTE: Classification of earth material as shown on this sheet is based upon field inspection and is not to be construed to imply mechanical analysis.

LEGEND OF BORING OPERATIONS

2½" CONE PENETROMETER; SAMPLE BORING (DRY); ROTARY SAMPLE BORING (WET); AUGER BORING (DRY); TEST PIT; DIAMOND CORE BORING; JET BORING; ELECTRONIC CONE PENETROMETER

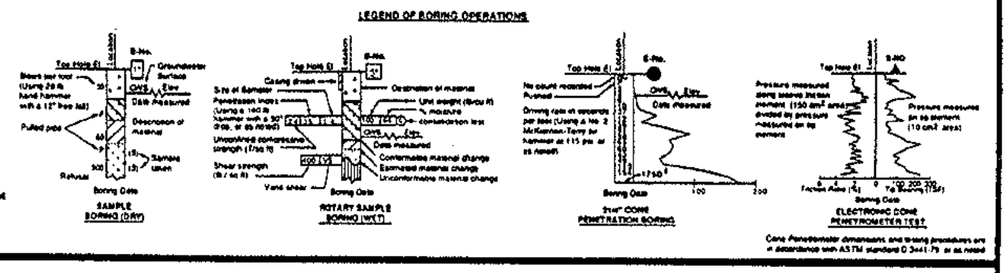

Cone Penetrometer dimensions and testing procedures are in accordance with ASTM standard D 3441-79 or as noted

NOTES:

1. WATER ELEVATION VARIED WITH THE TIDES.
2. UNCONFINED COMPRESSIVE STRENGTH APPROXIMATED BY HAND PENETROMETER TEST

FOR PLAN VIEW, SEE "LOG OF TEST BORINGS I OF 18"

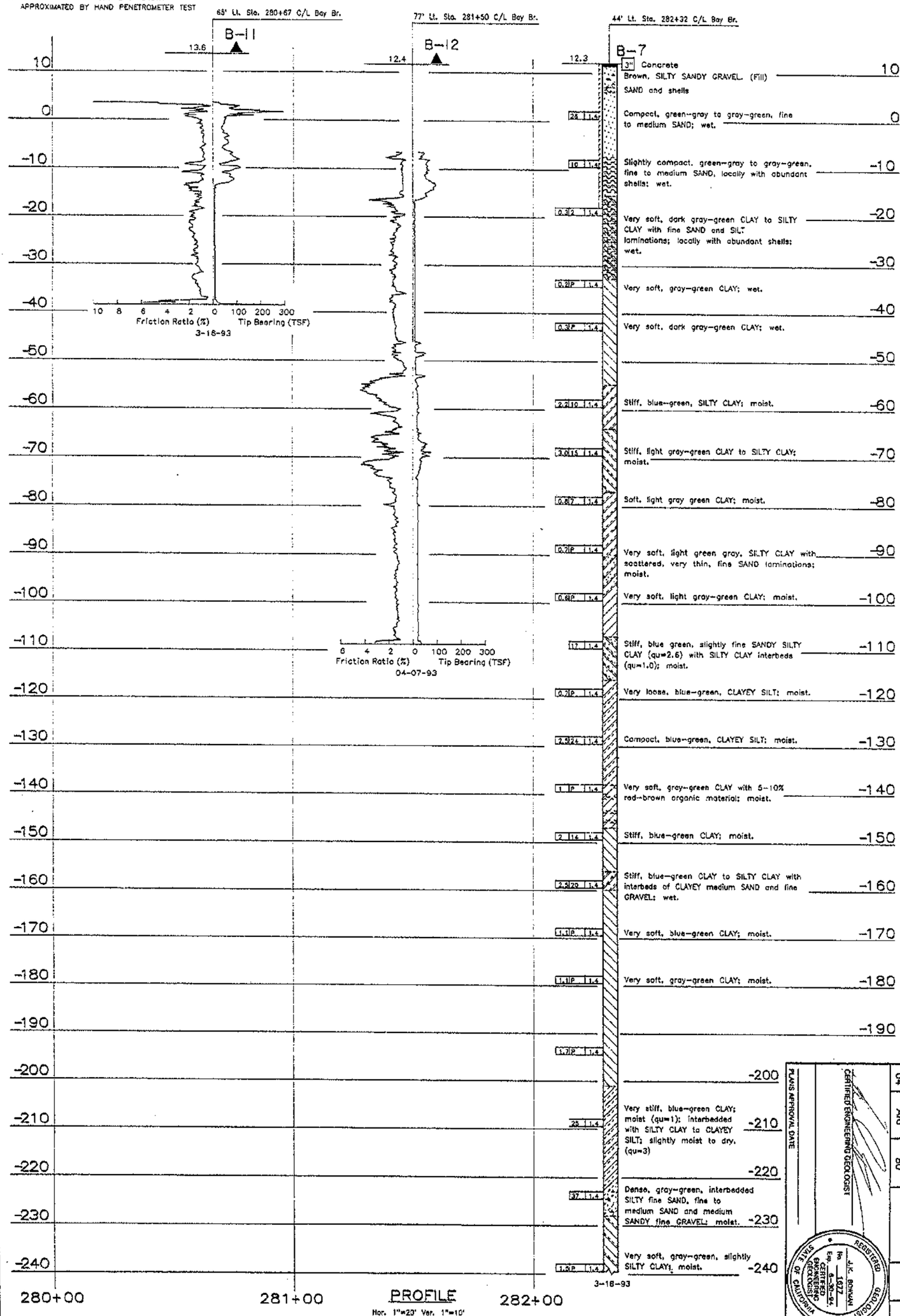

DIVISION OF NEW TECHNOLOGY, MATERIALS AND RESEARCH — OFFICE OF ENGINEERING GEOLOGY

DRAWN BY: IRMA CAMARRA 7/93

CHECKED BY:

FIELD INVESTIGATION BY: J. BOWMAN

State of CALIFORNIA DEPARTMENT OF TRANSPORTATION

DIVISION OF STRUCTURES STRUCTURE DESIGN

ORIGINAL SCALE IN INCHES FOR REDUCED PLANS

CU 04 EA 043434K

BRIDGE NO. 33-25 POST MILE 1.0/1.3

DISREGARD PRINTS BEARING EARLIER REVISION DATES

REVISION DATES (PRELIMINARY STAGE ONLY)

SFOBB—BENT E23 TO E39 RETROFIT

LOG OF TEST BORINGS II OF 18

PLANS APPROVAL DATE

CERTIFIED ENGINEERING GEOLOGIST

J.K. BOWMAN No. 1677 Exp. 6-30-94 CERTIFIED ENGINEERING GEOLOGIST STATE OF CALIFORNIA REGISTERED GEOLOGIST

DIST.	COUNTY	ROUTE	POST MILES TOTAL PROJECT	SHEET NO.	TOTAL SHEETS
04	Ala	80			

CONSISTENCY CLASSIFICATION FOR SOILS

According to the Standard Penetration Test

Penetration Index (Blows / Ft)	Granular	Cohesive
0-4	Very loose	Very soft
5-9	Loose	Soft
10-19	Slightly compact	Stiff
20-34	Compact	Very stiff
35-69	Dense	Hard
>70	Very dense	Very hard

LEGEND OF EARTH MATERIALS

GRAVEL, SAND, SILT, CLAY, SANDY CLAY or CLAYEY SAND, SANDY SILT or SILTY SAND, SILTY CLAY, CLAYEY SILT, PEAT and/or ORGANIC MATTER, FILL MATERIAL, IGNEOUS ROCK, SEDIMENTARY ROCK, METAMORPHIC ROCK

NOTE Classification of earth material as shown on this sheet is based upon field inspection and is not to be construed to imply mechanical analysis.

LEGEND OF BORING OPERATIONS

21-in CONE PENETROMETER; SAMPLE BORING (DRY); ROTARY SAMPLE BORING (WET); AUGER BORING (DRY); TEST PIT; DIAMOND CORE BORING; JET BORING; ELECTRONIC CONE PENETROMETER

SAMPLE BORING (DRY) — ROTARY SAMPLE BORING (WET) — 21-in CONE PENETRATION BORING — ELECTRONIC CONE PENETROMETER TEST

Cone Penetrometer dimensions and testing procedures are in accordance with ASTM standard D 3441-79, or as noted.

FOR PLAN VIEW, SEE "LOG OF TEST BORINGS", SHEET 1 OF 18.

39' Lt. Sta. 281+51 C/L SFOBB

B-20

13.2

NOTE:
UNCONFINED COMPRESSIVE STRENGTH DETERMINED BY "POCKET PENETROMETER".

Elev.	Description
10	Concrete; Fine to coarse SAND and GRAVEL (fill).
	Brown, fine to coarse SAND and scattered fine GRAVEL with scattered shells.
0	Gray-green, fine to medium SAND.
-10	
-20	Green-gray, CLAY with scattered shells.
-30	
-40	Loose, gray-green, CLAYEY fine to medium SAND.
-50	Compact, gray-green, fine to medium SAND, wet interbedded with very stiff CLAY.
	Slightly compact, gray-green, fine SAND interbedded with stiff CLAY, wet.
	Gray-green, CLAY to SILTY CLAY.
-60	
-70	Slightly compact and stiff, dark gray-green interbedded fine SAND, SILT, CLAYEY fine SAND and CLAY, wet.
-80	Very stiff, dark green-gray, CLAY with fine SAND interbeds.
-90	Soft, blue-green to gray-green, SILTY CLAY, moist.
	Soft, gray-green, CLAY and SILTY CLAY, moist, qu=1.0
-100	
	Blue-green, SILT, moist.
-110	
-120	Soft, blue-green, CLAYEY SILT to SILTY CLAY, moist.
-130	Very stiff, gray-green, SILTY CLAY, moist.
-140	Soft, gray-green, CLAY with abundant brown, ORGANIC material, moist.
-150	Stiff, blue-green, CLAY, moist.
-160	Very stiff, blue-green, SILTY CLAY to CLAYEY SILT, moist.
-170	
	Soft, green-gray, CLAY, moist.
-180	
-190	Stiff, green-gray, CLAY, moist.

3-23-94

NOTE
P and S wave measurements made with Cyo P/S suspension logger.

PROFILE
1" = 10'

281+00 281+50 282+00

NEW TECHNOLOGY, MATERIALS AND RESEARCH — DIVISION OF
OFFICE OF ENGINEERING GEOLOGY
DRAWN BY / CHECKED BY / 4/94
FIELD INVESTIGATION BY: J. BOWMAN
State of CALIFORNIA DEPARTMENT OF TRANSPORTATION
DIVISION OF STRUCTURES STRUCTURE DESIGN
ORIGINAL SCALE IN INCHES FOR REDUCED PLANS 0 1 2 3
CU 04 EA 0-433K
BRIDGE NO. 33.25 POST MILE 1.0/1.3
DESIGN AND PRESTRESSING CARLOS REYNOSO DAVES
REVISION DATES (PRELIMINARY STAGE ONLY)
SFOBB - BENT E23 TO E39 RETROFIT
LOG OF TEST BORINGS 12 OF 18
SHEET 01 OF 20

PLANS APPROVAL DATE

CERTIFIED ENGINEERING GEOLOGIST

REGISTERED GEOLOGIST — J. K. BOWMAN No. 1677 Exp. 6-30-95 ENGINEERING GEOLOGIST — STATE OF CALIFORNIA

DIST	COUNTY	ROUTE	POST MILES TOTAL PROJECT	SHEET NO.	TOTAL SHEETS
04	Ala	80			

CONSISTENCY CLASSIFICATION FOR SOILS

According to the Standard Penetration Test

Penetration Index (Blows / Ft)	Granular	Cohesive
0-4	Very loose	Very soft
5-9	Loose	Soft
10-19	Slightly compact	Stiff
20-34	Compact	Very stiff
35-69	Dense	Hard
>70	Very dense	Very hard

LEGEND OF EARTH MATERIALS

GRAVEL; SAND; SILT; CLAY; SANDY CLAY or CLAYEY SAND; SANDY SILT or SILTY SAND; SILTY CLAY; CLAYEY SILT; PEAT and/or ORGANIC MATTER; FILL MATERIAL; IGNEOUS ROCK; SEDIMENTARY ROCK; METAMORPHIC ROCK

NOTE: Classification of earth material as shown on this sheet is based upon field inspection and is not to be construed to imply mechanical analysis.

LEGEND OF BORING OPERATIONS

2in" CONE PENETROMETER; SAMPLE BORING (DRY); ROTARY SAMPLE BORING (WET); AUGER BORING (DRY); TEST PIT; DIAMOND CORE BORING; JET BORING; ELECTRONIC CONE PENETROMETER

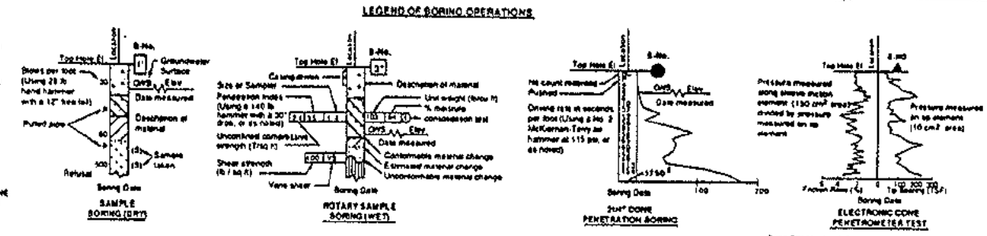

FOR PLAN VIEW, SEE "LOG OF TEST BORINGS 1 OF 18"

NOTES:

1. WATER ELEVATION VARIED WITH THE TIDES.
2. UNCONFINED COMPRESSIVE STRENGTH APPROXIMATED BY HAND PENETROMETER TEST
3. BORING REAMED OUT TO 10.5", 5" PVC CASING INSTALLED.

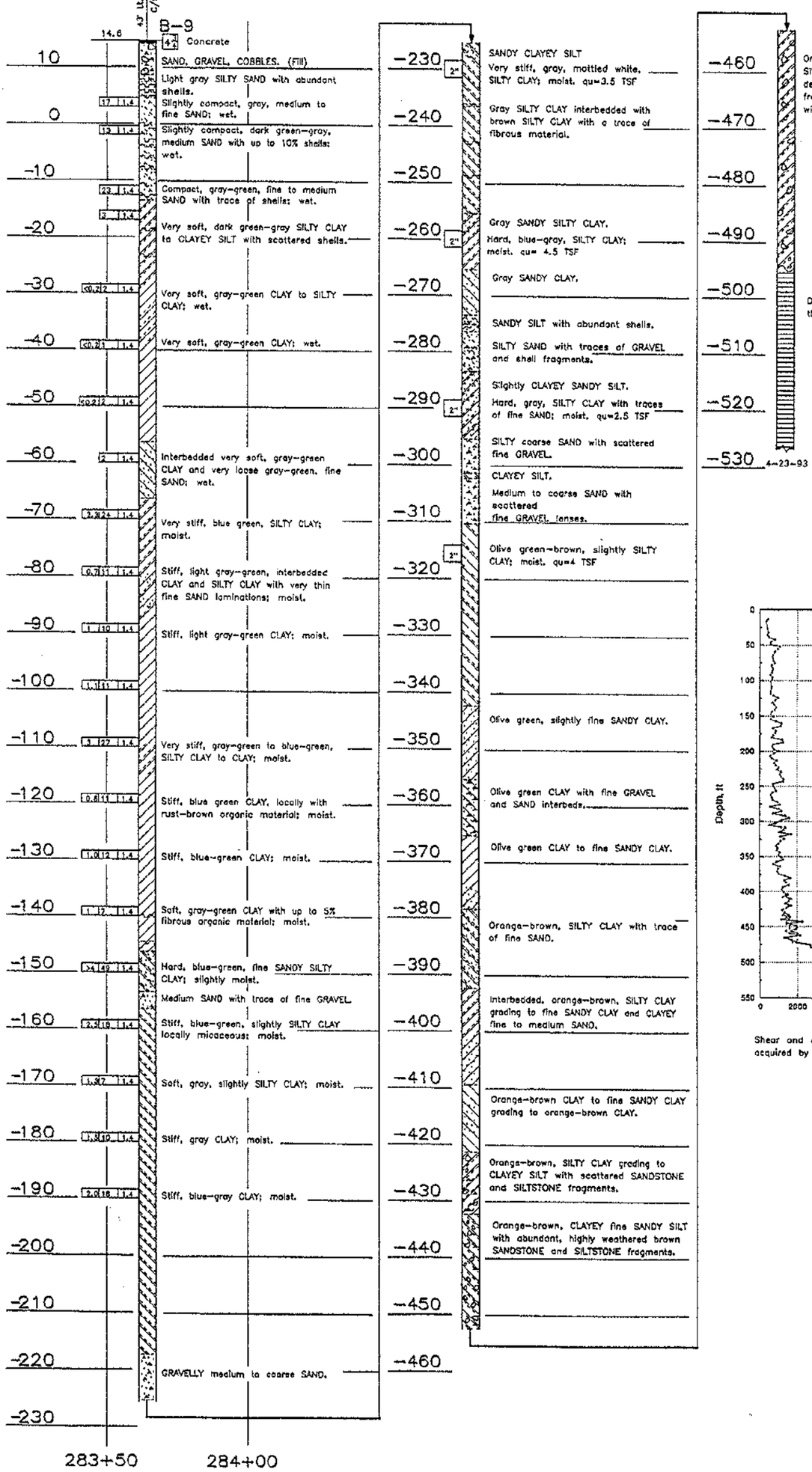

PROFILE

Hor. 1" = 20'
Ver. 1" = 10'

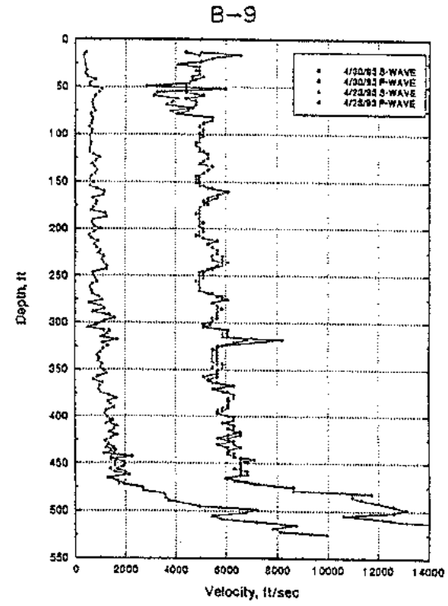

Shear and compression-wave interval velocities acquired by PS Suspension logger.

DIVISION OF NEW TECHNOLOGY, MATERIALS AND RESEARCH
OFFICE OF ENGINEERING GEOLOGY
DRAWN BY / CHECKED BY: IRMA GAMARRA 7/93
FIELD INVESTIGATION BY: J. BOWMAN
ORIGINAL SCALE IN INCHES FOR REDUCED PLANS
State of CALIFORNIA DEPARTMENT OF TRANSPORTATION
DIVISION OF STRUCTURES STRUCTURE DESIGN
CU 04 EA 04343K
BRIDGE NO. 33-25 POST MILE 1.0/1.3
SFOBB-BENT E23 TO E39 RETROFIT
LOG OF TEST BORINGS 13 OF 18
SHEET 13 OF 18

DIST.	COUNTY	ROUTE	POST MILES TOTAL PROJECT	SHEET NO.	TOTAL SHEETS
04	Ala	80			

PLANS APPROVAL DATE

CERTIFIED ENGINEERING GEOLOGIST

REGISTERED GEOLOGIST J.K. BOWMAN No. 1677 Exp. 6-30-94 CERTIFIED ENGINEERING GEOLOGIST STATE OF CALIFORNIA

DIST.	COUNTY	ROUTE	POST MILES TOTAL PROJECT	SHEET NO.	TOTAL SHEETS
04	Ala	80			

CERTIFIED ENGINEERING GEOLOGIST

REGISTERED GEOLOGIST J. K. BOWMAN No. 1577 Exp. 6-30-94 CERTIFIED ENGINEERING GEOLOGIST STATE OF CALIFORNIA

PLANS APPROVAL DATE

FOR PLAN VIEW, SEE "LOG OF TEST BORINGS", SHEET 1 OF 18.

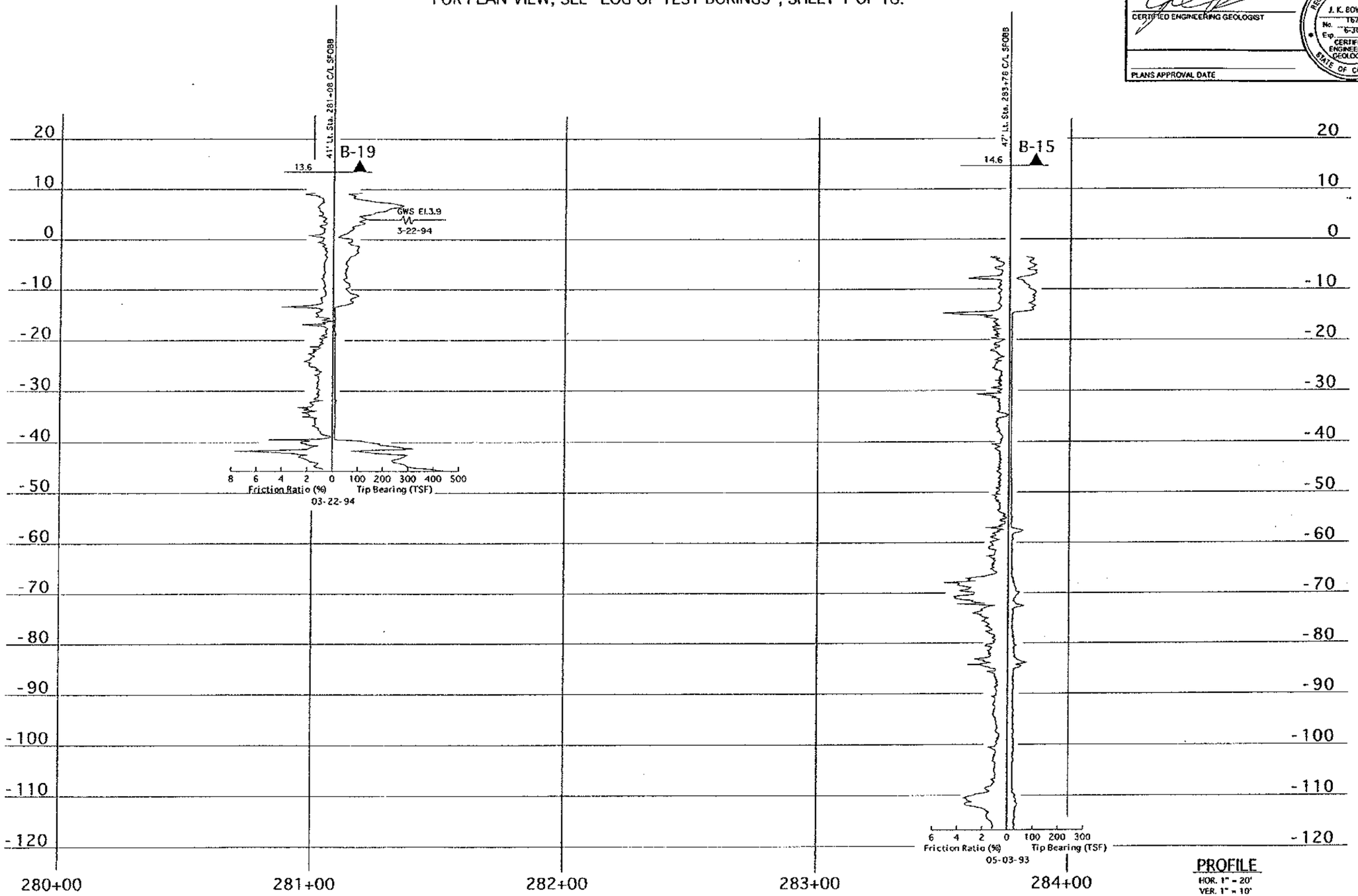

PROFILE
HOR. 1" = 20'
VER. 1" = 10'

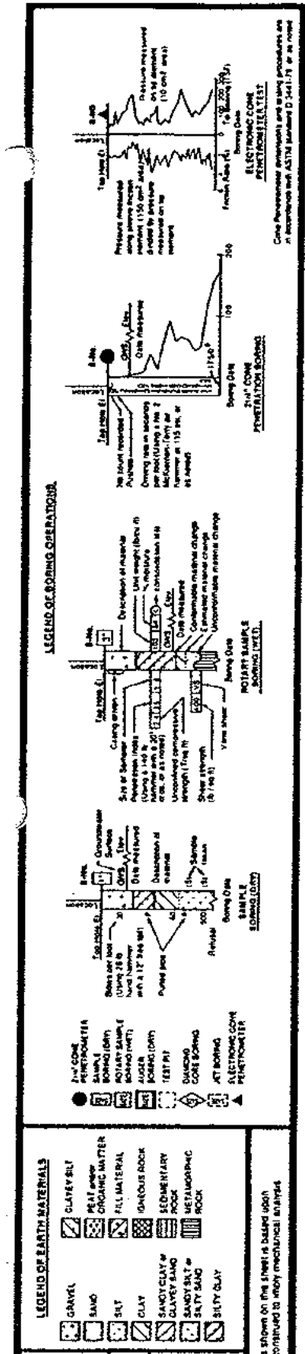

Penetration Index (Blows / Ft)	Granular	Cohesive
0-4	Very loose	Very soft
5-9	Loose	Soft
10-19	Slightly compact	Stiff
20-34	Compact	Very stiff
35-69	Dense	Hard
>70	Very dense	Very hard

NOTE: Classification of earth material as shown on the sheet is based upon field inspection and is not to be construed to imply mechanical analysis.

DIVISION OF NEW TECHNOLOGY, MATERIALS AND RESEARCH	OFFICE OF ENGINEERING GEOLOGY	FIELD INVESTIGATION BY:	State of CALIFORNIA DEPARTMENT OF TRANSPORTATION	DIVISION OF STRUCTURES STRUCTURE DESIGN	BRIDGE NO. 33-25	SFOBB - BENT E23 TO E39 RETROFIT
DRAWN BY	4/94	J. BOWMAN			POST MILE 1.0/1.3	LOG OF TEST BORINGS 14 OF 18
CHECKED BY						

ORIGINAL SCALE IN INCHES FOR REDUCED PLANS 0 1 2 3

CU 04
EA 04343K

DISREGARD PRINTS BEARING EARLIER REVISION DATES

REVISION DATES (PRELIMINARY STAGE ONLY)

SHEET 14 OF 120

DIST.	COUNTY	ROUTE	POST MILES TOTAL PROJECT	SHEET NO.	TOTAL SHEETS
04	Ala	80			

CERTIFIED ENGINEERING GEOLOGIST

REGISTERED GEOLOGIST — J.K. BOWMAN — No. 1677 — Exp. 6-30-94 — CERTIFIED ENGINEERING GEOLOGIST — STATE OF CALIFORNIA

PLANS APPROVAL DATE

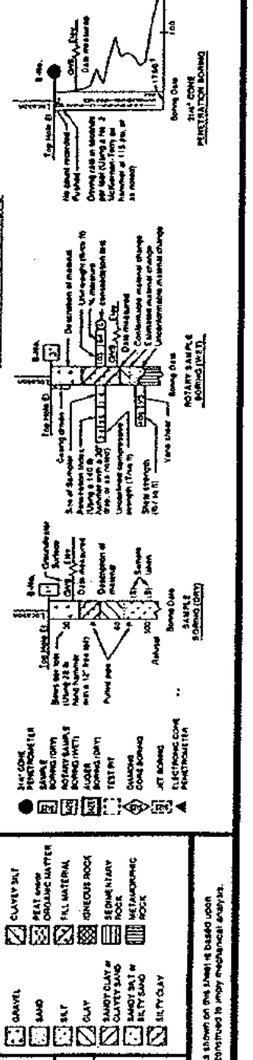

B-9

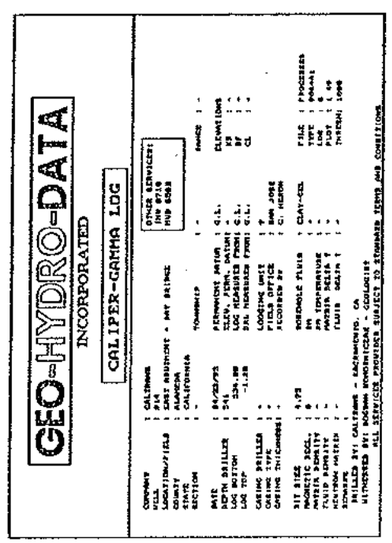

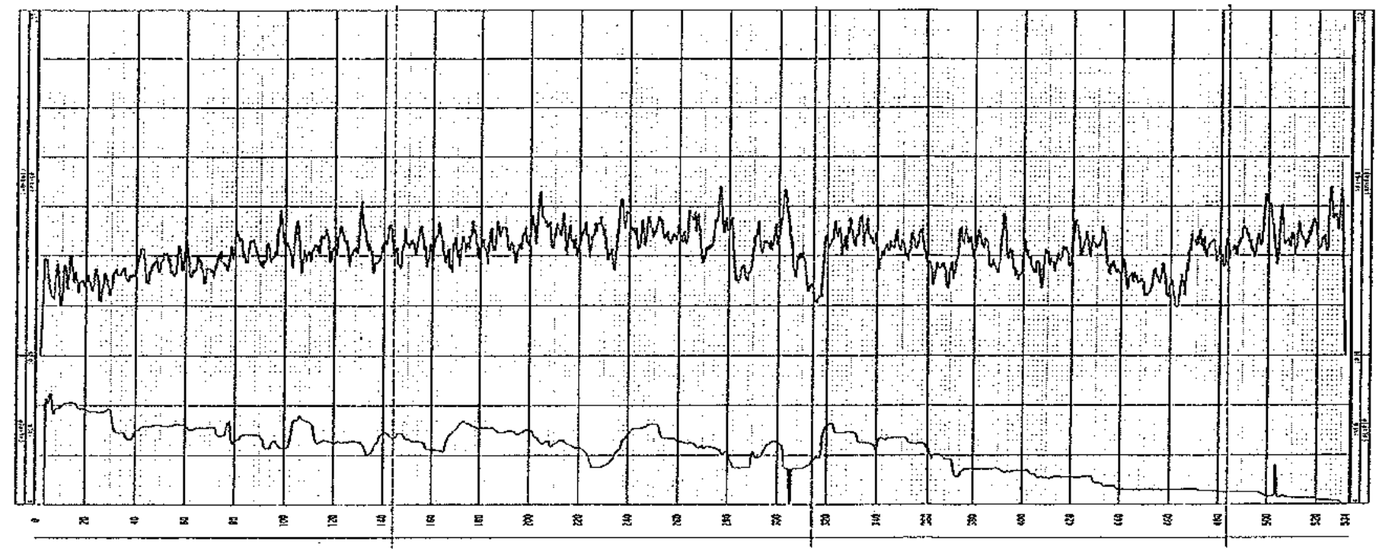

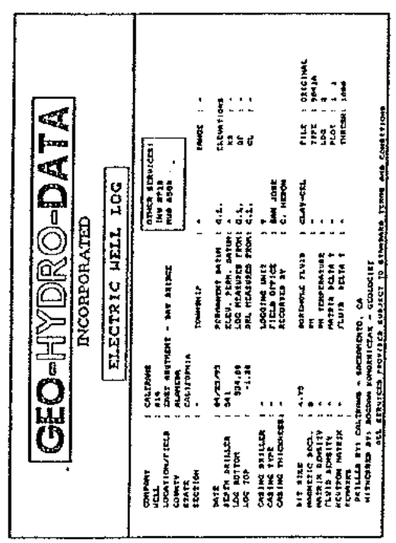

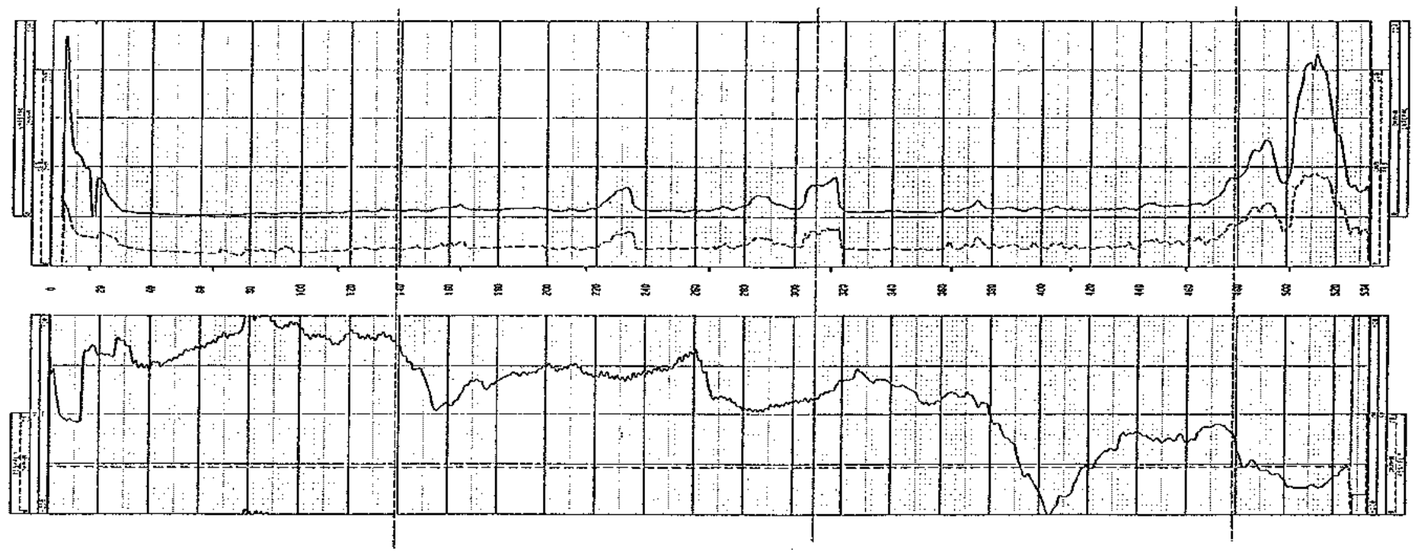

DIVISION OF NEW TECHNOLOGY, MATERIALS AND RESEARCH	OFFICE OF ENGINEERING GEOLOGY	FIELD INVESTIGATION BY: J. BOWMAN	State of CALIFORNIA DEPARTMENT OF TRANSPORTATION	DIVISION OF STRUCTURES STRUCTURE DESIGN	BRIDGE NO. 33-25 / POST MILE 1.0/1.3
DRAWN BY 7/93					SFOBB--BENT E23 TO E39 RETROFIT
CHECKED BY					LOG OF TEST BORINGS 15 OF 18

ORIGINAL SCALE IN INCHES FOR REDUCED PLANS 0 1 2 3

CU 04 EA 04343K

DISREGARD PRINTS BEARING EARLIER REVISION DATES

REVISION DATES (PRELIMINARY STAGE ONLY) 3-8-93 4-7-94

SHEET 117 OF 120

DIST.	COUNTY	ROUTE	POST MILES TOTAL PROJECT	SHEET NO.	TOTAL SHEETS
04	Ala	80			

CERTIFIED ENGINEERING GEOLOGIST

REGISTERED GEOLOGIST
J.K. BOWMAN
No. 1677
Exp. 6-30-94
CERTIFIED ENGINEERING GEOLOGIST
STATE OF CALIFORNIA

PLANS APPROVAL DATE

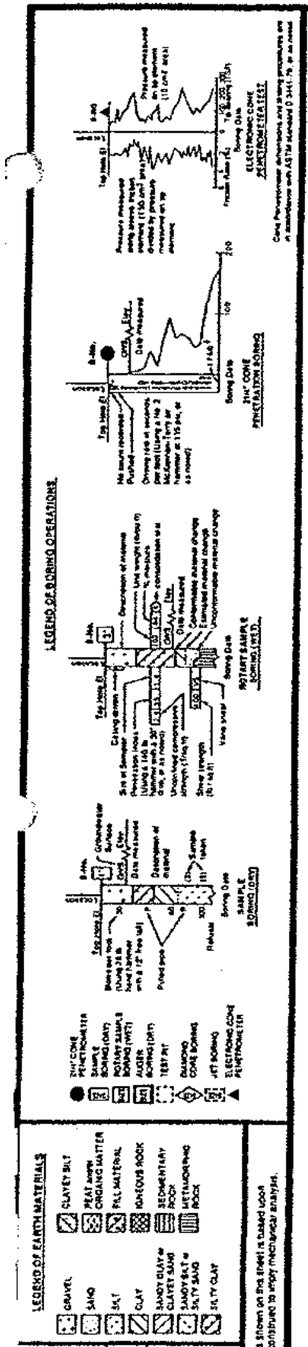

INTERPRETED B-9 LOG
GAMMA RAY RESISTIVITY

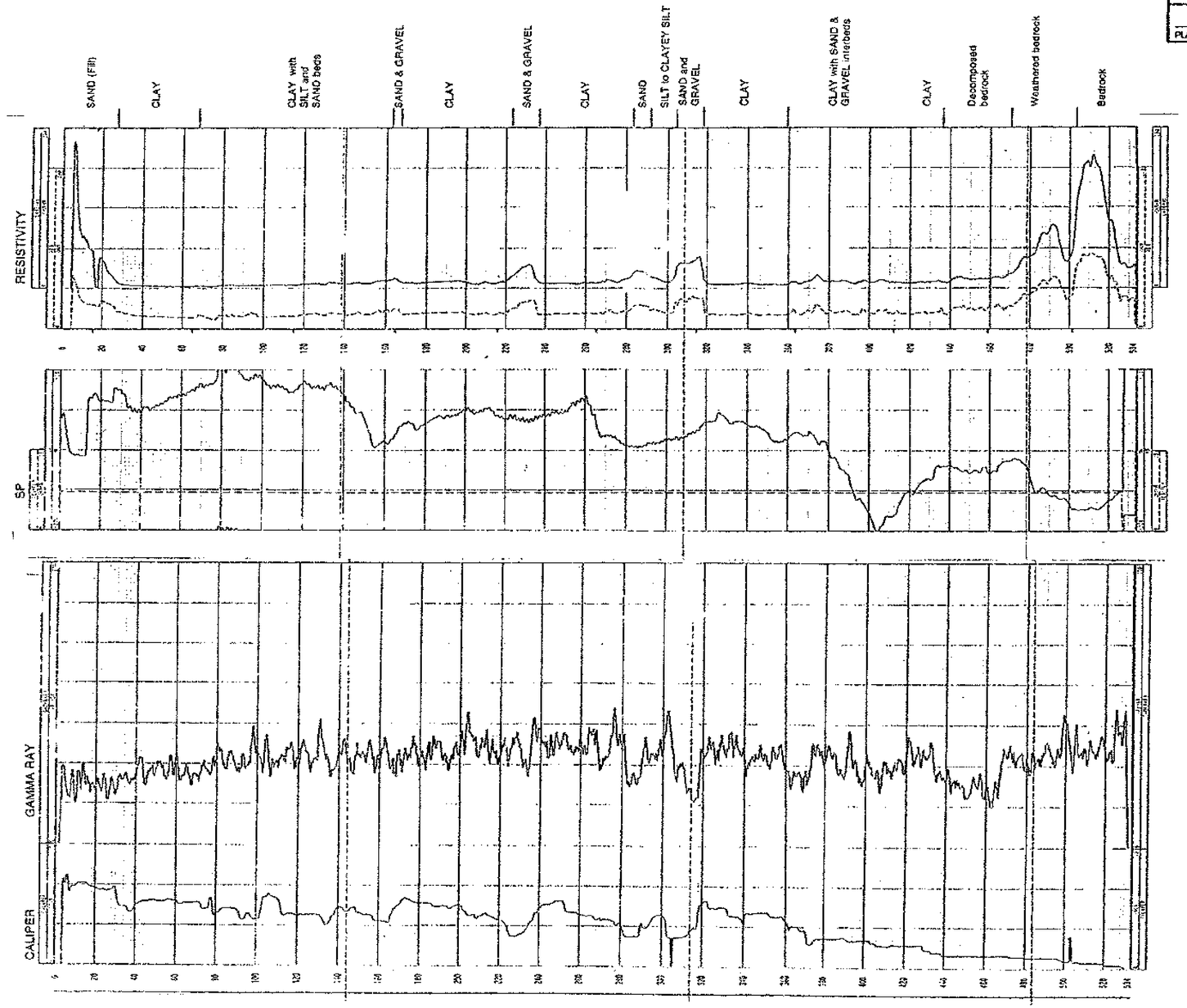

DIVISION OF NEW TECHNOLOGY, MATERIALS AND RESEARCH	OFFICE OF ENGINEERING GEOLOGY	FIELD INVESTIGATION BY:	State of CALIFORNIA DEPARTMENT OF TRANSPORTATION	DIVISION OF STRUCTURES STRUCTURE DESIGN	BRIDGE NO. 33-25 POST MILE 1.0/1.3	SFOBB-BENT E23 TO E39 RETROFIT LOG OF TEST BORINGS 16 OF 18
DRAWN BY 7/93		J. BOWMAN				
CHECKED BY						

ORIGINAL SCALE IN INCHES FOR REDUCED PLANS 0 1 2 3

CU 04
EA 04343K

DISREGARD PRINTS BEARING EARLIER REVISION DATES

REVISION DATES (PRELIMINARY STAGE ONLY)

SHEET 118 OF 120

DIST.	COUNTY	ROUTE	POST MILES TOTAL PROJECT	SHEET NO.	TOTAL SHEETS
04	Ala	80			

CERTIFIED ENGINEERING GEOLOGIST

REGISTERED GEOLOGIST J. BOWMAN No. 1677 Exp. 6-30-94 CERTIFIED ENGINEERING GEOLOGIST STATE OF CALIFORNIA

PLANS APPROVAL DATE

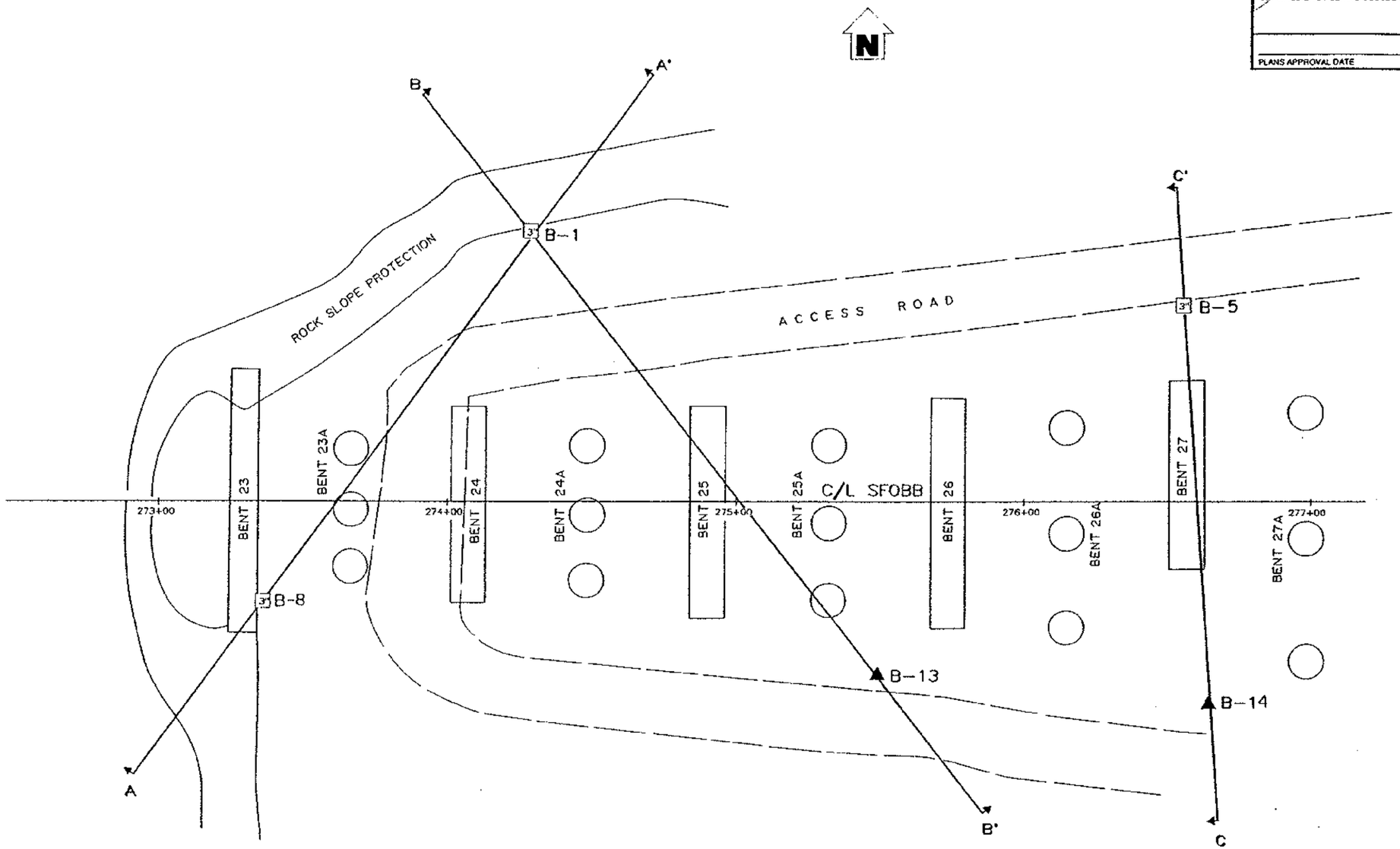

PLAN
1" = 20'

LEGEND OF BORING OPERATIONS

LEGEND OF EARTH MATERIALS

CONSISTENCY CLASSIFICATION FOR SOILS

According to the Standard Penetration Test

Penetration Index (Blows / Ft)	Granular	Cohesive
0-4	Very loose	Very soft
5-9	Loose	Soft
10-19	Slightly compact	Stiff
20-34	Compact	Very stiff
35-69	Dense	Hard
>70	Very dense	Very hard

NOTE Classification of earth material as shown on this sheet is based upon field inspection and is not to be construed to imply mechanical analysis.

DIVISION OF NEW TECHNOLOGY, MATERIALS AND RESEARCH	OFFICE OF ENGINEERING GEOLOGY
DRAWN BY IRMA GAMARRA 2/94	
CHECKED BY	

FIELD INVESTIGATION BY: J. BOWMAN

State of CALIFORNIA DEPARTMENT OF TRANSPORTATION

DIVISION OF STRUCTURES STRUCTURE DESIGN

BRIDGE NO. 33-25

POST MILE 1.0/1.3

SFOBB - BENT E23 TO E39 RETROFIT

CROSS SECTIONS 17 OF 18

ORIGINAL SCALE IN INCHES FOR REDUCED PLANS 0 1 2 3

CU 04
EA 04343K

DISREGARD PRINTS BEARING EARLIER REVISION DATES

REVISION DATES (PRELIMINARY STAGE ONLY)

SHEET 119 OF 120

DIST.	COUNTY	ROUTE	POST MILES TOTAL PROJECT	SHEET NO.	TOTAL SHEETS
04	Ala	80			

CERTIFIED ENGINEERING GEOLOGIST

REGISTERED GEOLOGIST J. BOWMAN No. 1677 Exp. 6-30-94 CERTIFIED ENGINEERING GEOLOGIST STATE OF CALIFORNIA

PLANS APPROVAL DATE

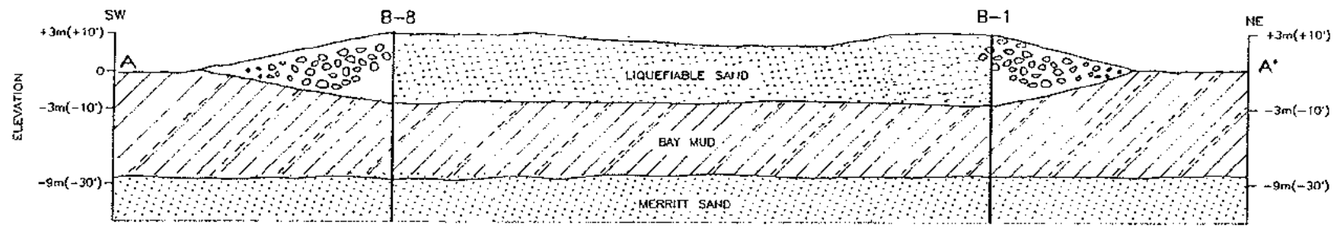

CROSS SECTION A-A'

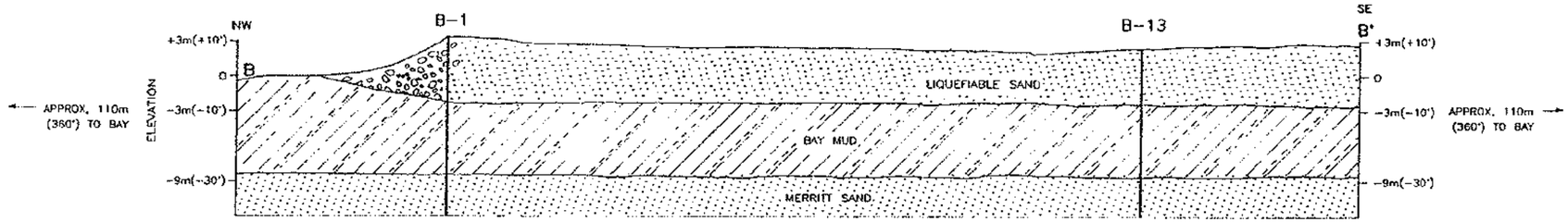

CROSS SECTION B-B'

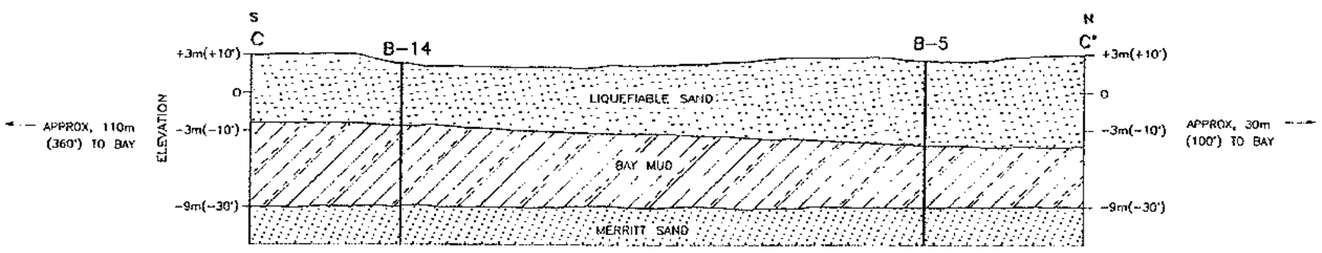

CROSS SECTION C-C'

SCALE 1:240

EXPLANATION

RIPRAP COMPOSED OF BOULDERS AVERAGE DIAMETER APPROX. 1m (3')

LIQUEFIABLE SAND; FINE TO MEDIUM GRAINED, POORLY GRADED N=6 TO 30 (CONSIDERABLE DEBRIS IN UPPER PART.) BECOMES LOOSER WITH DEPTH.

BAY MUD; CLAY TO SILTY CLAY; $q_u \simeq .25$ TSF.

MERRITT SAND; FINE TO MEDIUM SAND; POORLY GRADED, N>35 IN UPPER 2 m (6'); n=50 to 100+ below top 2 m (6')

NOTE: GROUND WATER LEVEL VARIES WITH THE TIDES APPROX. -1 TO +2 m (-3 to +6 feet)

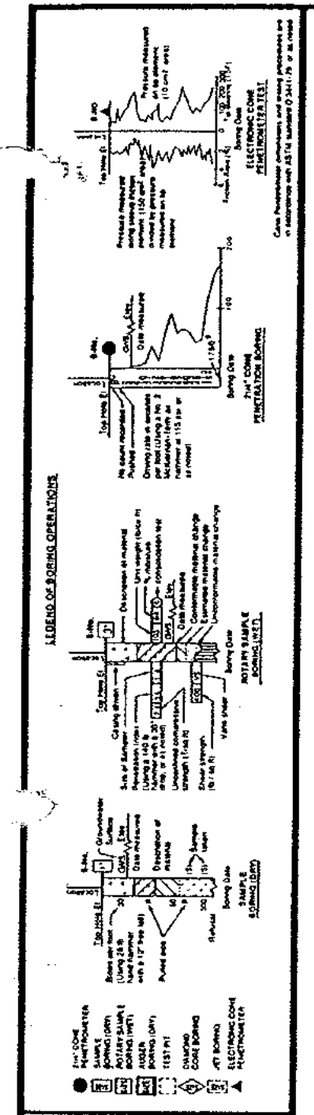

LEGEND OF EARTH MATERIALS

GRAVEL, SAND, SILT, CLAY, SANDY CLAY or CLAYEY SAND, SANDY SILT or SILTY SAND, SILTY CLAY, CLAYEY SILT, PEAT and/or ORGANIC MATTER, FILL MATERIAL, IGNEOUS ROCK, SEDIMENTARY ROCK, METAMORPHIC ROCK

CONSISTENCY CLASSIFICATION FOR SOILS

According to the Standard Penetration Test

Penetration Resistance (Blows/Ft)	Granular	Cohesive
0-4	Very loose	Very soft
5-9	Loose	Soft
10-19	Slightly compact	Stiff
20-34	Compact	Very stiff
35-69	Dense	Hard
>70	Very dense	Very hard

NOTE: Classification of earth material as shown on this sheet is based upon field inspection and is not to be construed to imply mechanical analysis.

DIVISION OF NEW TECHNOLOGY, MATERIALS AND RESEARCH	OFFICE OF ENGINEERING GEOLOGY
DRAWN BY IRMA GAMARRA 2/94	
CHECKED BY	

FIELD INVESTIGATION BY: J. BOWMAN

State of CALIFORNIA DEPARTMENT OF TRANSPORTATION

DIVISION OF STRUCTURES STRUCTURE DESIGN

BRIDGE NO.	SFOBB - BENT E23 TO E39 RETROFIT
33-25	
POST MILE 1.0/1.3	CROSS SECTIONS 18 OF 18

ORIGINAL SCALE IN INCHES FOR REDUCED PLANS 0 1 2 3

CU 04 EA 04343K

DISREGARD PRINTS BEARING EARLIER REVISION DATES

REVISION DATES (PRELIMINARY STAGE ONLY) 4-17-94

SHEET 120 OF 120