DIST	COUNTY	ROUTE	KILOMETER POST TOTAL PROJECT	SHEET No	TOTAL SHEETS

REGISTERED CIVIL ENGINEER

PLANS APPROVAL DATE

REGISTERED PROFESSIONAL ENGINEER NO. EXP. CIVIL STATE OF CALIFORNIA

The State of California or its officers or agents shall not be responsible for the accuracy or completeness of electronic copies of this plan sheet.

Caltrans now has a web site! To get to the web site, go to: http://www.dot.ca.gov

Caltrans Metric

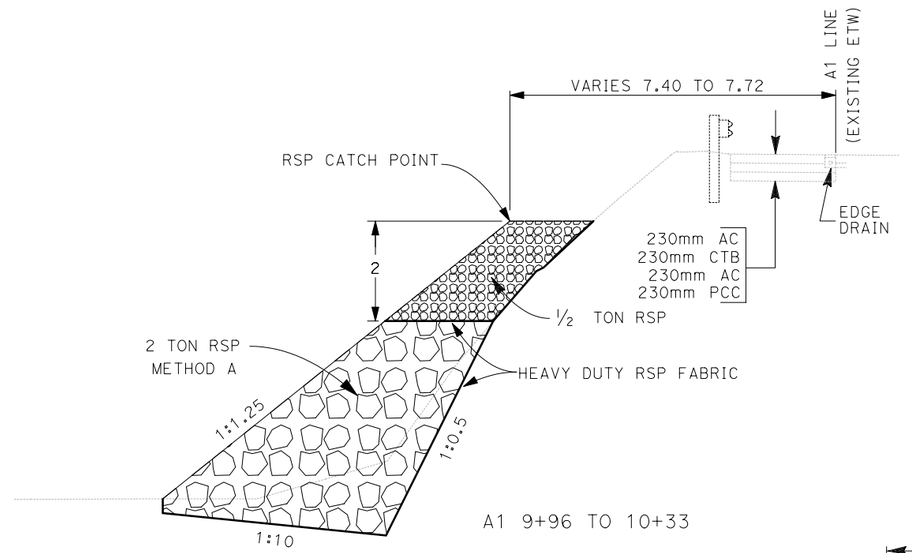

A1 9+96 TO 10+33

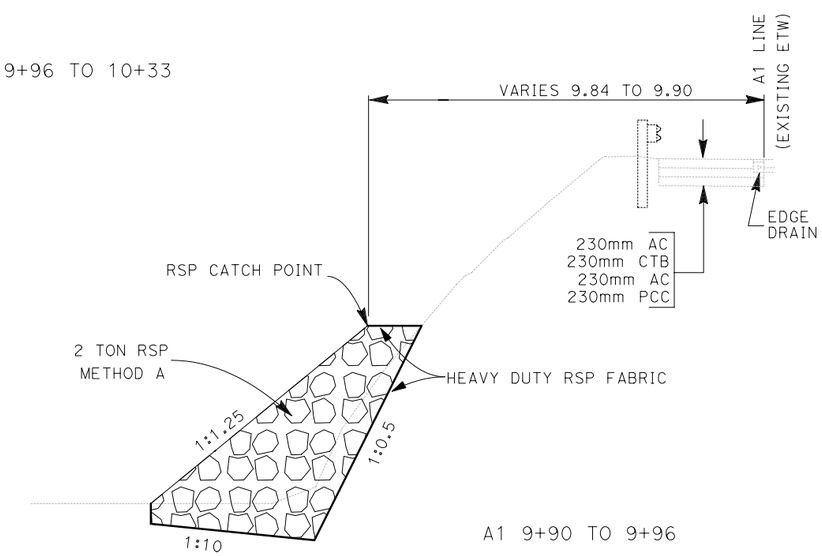

A1 9+90 TO 9+96

TYPICAL CROSS SECTIONS

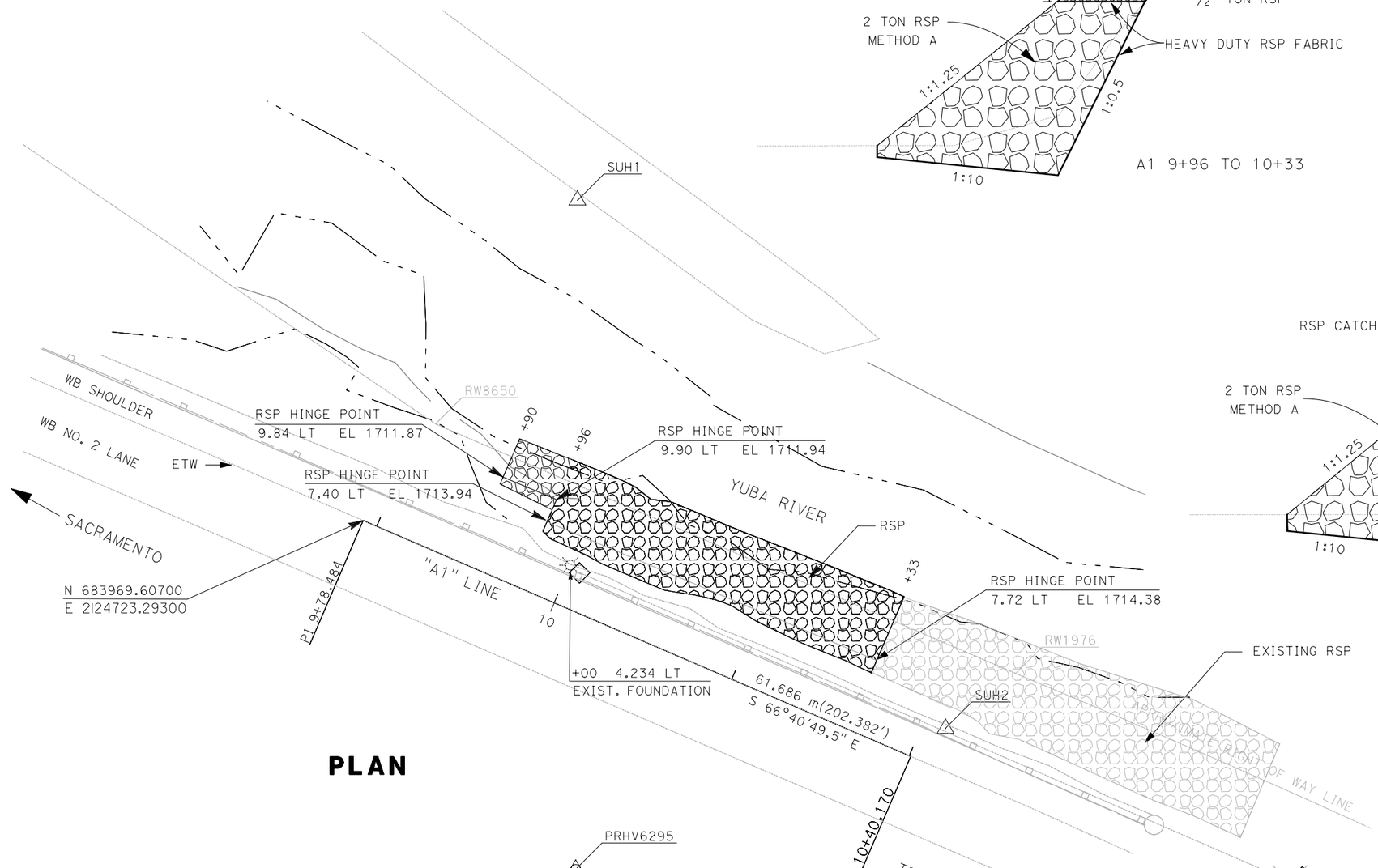

PLAN

METERS UNLESS OTHERWISE SHOWN

LAYOUT

L-1

STATE OF CALIFORNIA - DEPARTMENT OF TRANSPORTATION

Caltrans

PROJECT ENGINEER

CALCULATED/DESIGNED BY

CHECKED BY

REVISED BY

DATE REVISED

DATE

LAST REVISION 00-00-00

DATE PLOTTED => $DATE
TIME PLOTTED => $TIME

RELATIVE BORDER SCALE IS IN MILLIMETERS 0 20 40 60 80

USERNAME => $USER
DGN FILE => $REQUEST

CU 00000

EA 000000