DRAFT

"BOTTLENECK STUDY"

TRANSPORTATION INFRASTRUCTURE AND TRAFFIC MANAGEMENT ANALYSIS OF CROSS BORDER BOTTLENECKS

PREPARED BY

CALIFORNIA DEPARTMENT OF TRANSPORTATION
(CALTRANS DISTRICT 11)

PEDRO ORSO-DELGADO
DISTRICT DIRECTOR

(11/4/04)
NOVEMBER 2004

TABLE OF CONTENTS

I.	Executive Summary	iv
	Otay Mesa/Mesa de Otay Key Improvements	vi
	San Ysidro/Puerta Mexico Key Improvements	vi
	Challenges and Conclusions	xi
	Next Steps	xii
II.	Scope of Work	1
	Study Background	1
	Purpose and Need	1
	Study Objectives	1
III.	Methodology	2
	Assumptions	2
	Defining a Land Border Crossing System	2
	Tasks and Products	5
IV.	Phase I San Diego-Tijuana POE Gateway	7
V.	Task 1 System Definition and Data Collection	9
VI.	Task 2 Capacity Analysis	15
VI.	Task 3 Identify Bottlenecks and Proposed Improvements	22
VIII.	Challenges and Conclusions	26
	Next Steps	27
Appendix A		
	Data Collection and Procedures	28
Appendix B		
	Otay Mesa/Mesa de Otay Counts	
	San Ysidro/Puerta Mexico Counts	

LIST OF FIGURES AND TABLES

EXECUTIVE SUMMARY

ES-1	Otay Mesa/Mesa de Otay Short-Term Improvement Projects	vii
ES-2	Otay Mesa/Mesa de Otay Short-Term Improvement Locations	viii
ES-3	San Ysidro/Puerta Mexico Short-Term Improvement Projects	ix
ES-4	San Ysidro/Puerta Mexico Short-Term Improvement Locations	x

FIGURES

Figure 1	Methodology Flow Chart	v, 3
Figure 2	Otay Mesa Commercial Vehicle Case Example	3
Figure 3	San Diego/Tijuana POEs and Gateway	7
Figure 4	Otay Mesa/ Mesa de Otay POE	10
Figure 5	San Ysidro/ Puerta Mexico POE	13
Figure 6	Bottleneck Capacity Flow Chart	16
Figure A-1	Sample Classifications (Commercial Vehicles)	29

TABLES

Table 1	Sample Data Collection	5
Table 2	SB Otay Mesa/Mesa de Otay Count Methods and Staffing	11
Table 3	NB Mesa de Otay Count Methods and Staffing	11
Table 4	Southbound San Ysidro/Puerta Mexico Count Methods and Staffing	14
Table 5	Northbound Puerta Mexico Count Methods and Staffing	14
Table 6	Otay Mesa/Mesa de Otay POE – Commercial Crossing Analysis	18
Table 7	San Ysidro/Puerta Mexico POE – Passenger Crossing Analysis	19
Table 8	Queuing Data at Otay Mesa and San Ysidro POEs	21
Table 9	Otay Mesa/Mesa de Otay Short-Term Improvement Projects	23
Table 10	San Ysidro/Puerta Mexico Short-Term Improvement Projects	24

I. Executive Summary

The motivation behind the Transportation Infrastructure and Traffic Management Analysis of Cross Border Bottlenecks study was generated by the U.S.-Mexico Border Partnership Action Plan (Action item #2 of the 22-Point Smart Border Action Plan: Develop a prioritized list of infrastructure projects and take immediate action to relieve bottlenecks). In December 2002, the U.S.-Mexico Joint Working Committee (JWC)[1] approved the scope of work and methodology for the Bottleneck Study developed by the California Department of Transportation (Caltrans), District 11 to identify and address bottlenecks at the U.S.-Mexico ports of entry. For the purpose of this study, a bottleneck is defined as a condition that restricts the free movement of traffic, creating a point of congestion during specific periods of time. Addressing and alleviating this congestion in the highway system would enhance movement of people and goods. The study identifies a number of improvements in the operational efficiency and flow of vehicles traveling to and from the land ports of entry (POEs). Additionally, the JWC requested that Caltrans carry out the Phase I case study of the San Diego-Tijuana Gateway.

As approved by the JWC, the Bottleneck Study has five objectives:

- To develop a methodology capable of identifying low cost/high result recommendations for improvements to the transportation infrastructure and traffic management to and from the U.S./Mexico land POEs;
- To use the San Diego-Tijuana POE gateway as a test-bed for the developed methodology;
- To provide JWC member agencies with documentation of the study's findings and an archive of the obstacles and recommendations;
- To support the U.S. State Department effort to meet the requirements of the U.S.-Mexico Border Partnership Action Plan; and,
- To use this study as a common border-wide framework to substantiate funding requests for relief of bottlenecks at the U.S.-Mexico international boundary.

The methodology developed by Caltrans takes a step-by-step approach to quantify the bottlenecks or congested points within the transportation system that serves the federal ports of entry (POE) and then to identify recommendations for short-term improvements. The ultimate goal of this effort is to achieve a balanced transportation system. A balanced system is obtained when free flow is achieved or at least improved to provide optimal flow through the system. The following are the key steps or tasks of the methodology:

1. System Definition and Data collection;
2. System Capacity Analysis; and
3. Identify Bottlenecks and Propose Improvements

The "System Definition" identifies the different modes of transportation, points of entry and exit within the border crossing system. As illustrated in Figure 1, a binational border crossing land

[1] The JWC was created through a Memorandum of Understanding between the US Department of Transportation and Mexico's Secretariat of Communications and Transportation in 1994. The JWC consists of transportation and planning representatives from the ten border states (four in the US and six in Mexico), the US Federal Highway Administration, US Department of State, Mexican Secretariat of Communications and Transportation, and the Mexican Foreign Ministry. The formal charge of the JWC is "analyzing, developing and coordinating border transportation plans and programs reflecting the needs of both countries."

transportation system is defined as the area between N1 and N6. N1 is usually the point where traffic enters a designated route that directly leads to the POE. N6 is usually the exit point from the POE. For non-commercial (passenger vehicle and pedestrian) and commercial vehicle crossing systems, the intermediate points of N2 through N5 are defined as the federal POEs. For commercial vehicle crossings, the roadway connections between the U.S. and Mexico import/export facilities are specifically identified as N2 to N3, and N4 to N5. Once the system is defined, the conflict points in the transportation system can be identified and specific locations for data collection and analysis are determined. "Data collection" consists of field survey counts of cross-border volumes entering and exiting the system, and vehicle counts at intersections and designated routes leading to and from the international ports of entry. Other data collected include, queue lengths and time of delays.

FIGURE 1
Methodology Flow Chart

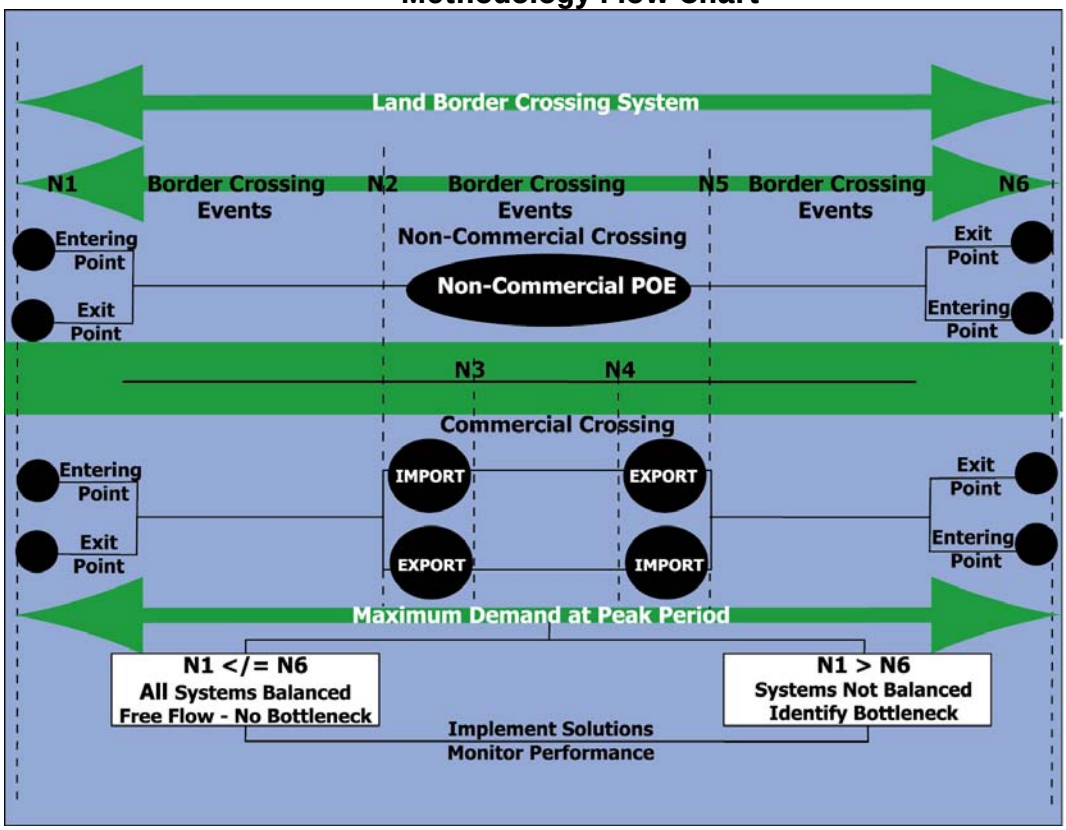

Following the system definition and data collection, the "System Capacity Analysis" is performed to determine the maximum demand at peak periods versus the processing capacity. The system capacity analysis can be applied across all modes of cross-border traffic (i.e., passenger or commercial vehicles, pedestrian and public transportation). The analysis determines whether the system is in balance (an equal number of border crossing events that enter and exit the system in a given length of time) or where imbalances or bottlenecks occur.

In the final step, solutions are proposed for those locations in the system where the demand exceeds the capacity. As demonstrated in the Phase I case study, other recommended improvements can be identified based on field observations to improve traffic flow using traffic engineering principles, such as, increasing a turning radius for trucks, adding vehicle storage capacity, and using concrete barriers to separate vehicles and reduce traffic conflicts. The proposed improvements are developed complete with cost estimates and time horizon for implementing the low-cost and short-term recommendations for processing traffic within the cross-border system are available at this point. Although the improvements are short-term and low-cost in nature, time horizon of need is critical to the prioritization process for funding (i.e., 1 month, 6 months, 1 to 2 years, etc.).

As solutions are implemented to the defined system, it is suggested that the methodology is re-applied to calibrate the system's capacity and performance, to determine effectiveness or the need to modify and bring maximum efficiency to the border crossing system.

The Phase I case study follows the developed methodology to analyze the transportation system serving the San Diego-Tijuana Gateway and its land POEs at Otay Mesa/Mesa de Otay and San Ysidro/Puerta Mexico.

The Otay Mesa/Mesa de Otay POE is the busiest commercial in the California/Baja California border region. At the Otay Mesa/Mesa de Otay POE, the Phase I study focused on the movement of commercial vehicles within the border system.

The San Ysidro/Puerta Mexico POE is known as the busiest land border crossing in the world. In 2003, the San Ysidro/Puerta Mexico POE processed over 46 million[2] people crossing northbound in passenger vehicles and on foot. At San Ysidro/Puerta Mexico, the study focused on passenger vehicles.

Addressed in the following tables and illustrations are the suggested short-term improvements to increase the operational flow of traffic at the Otay Mesa/Mesa de Otay and San Ysidro/Puerta Mexico POEs as determined in the Phase I case study. Tables ES-1 and ES-3 (pages vii and ix) describe location, and cross streets, U.S./Mexico boundaries, and direction of bottleneck for Otay Mesa/Mesa de Otay and San Ysidro/Puerta Mexico respectively. The tables also include a description of the proposed improvements with cost estimates and the time horizon for completion. Figures ES-2 and ES-4 (pages viii and x) provides a map illustration locating the proposed improvements at Otay Mesa/Mesa de Otay and San Ysidro/Puerta Mexico. A majority of the recommendations are operational and minor infrastructure improvements that are low-cost and can be accomplished in the short-term. Most recommendations were proposed because the travel demand has reached or exceeded the capacity, therefore causing a bottleneck. Some improvements were identified regardless of a low demand to capacity ratio and were primarily operational improvements that are considered opportunities to improve the flow and transition of vehicles, thus alleviating existing and potential bottlenecks.

[2] U.S. Customs and Border Protection, 2003

ES-1 OTAY MESA/MESA de OTAY SHORT-TERM IMPROVEMENT PROJECTS						
Location	**Cross Streets**	**U.S./ Mexico**	**NB/ SB**	**Description of Improvement**	**Cost Estimates**	**Time Horizon**
1	Otay Mesa Rd & La Media Rd	U.S.	SB	No Improvements Recommended	-	-
2	La Media Rd & Airway Rd	U.S.	SB	1-Improve turning radius at La Media and Airway 2-Restripe intersection	$20,000	6 months
3	La Media Rd & Siempre Viva Rd	U.S.	SB	1-Improve turning radius at La Media and Siempre Viva 2-Pave the western portion of Siempre Viva 3-Restripe intersection	$50,000	6 months
4,5,6	South Drucker Ln & entrance into U.S. export/Mexico import facility	U.S.	SB	1-Increase left turn radius SB to EB to prevent encroachment of loaded truck lane 2-Relocate secondary fence, switch empty & laden lanes, and add emergency lane 3-Improve turning radius from the U.S. export facility to the Mexico import facility	$20,000 $1.0M $20,000	9 months 1.5 years 1 year
7	Siempre Viva Rd & Otay Center Dr	U.S.	SB	No Improvements Recommended	-	-
8	Siempre Viva Rd & Paseo de las Americas	U.S.	NB	No Improvements Recommended	-	-
9	Siempre Viva Rd & Enrico Fermi Dr	U.S.	NB	No Improvements Recommended	-	-
6,11,12	Ave Aduana Garita & Blvd de las Bellas Artes	Mexico	SB	1- Re-route empties to exit on Lazaro Cardenas Norte 2- Add traffic signal to laden truck exit	$400,000 $100,000	2 years 2 years
10,13	Exit of Mexican export facility to U.S. Import facility	U.S.	NB	1-Improve turning radius, number of lanes, and re-route FAST lane/empty lane 2-Ultimate expansion to 8 lanes & improve turn radius NB to WB truck route	$600,000 $5.0 – 8.0M	Completed (Oct. 2004) Pending
14,15	Avenida Internacional	Mexico	NB	Separate lanes with concrete barriers	$20,000	6 months
16	Avenida Internacional	U.S.	NB	No Improvements Recommended	-	-
17	Avenida Internacional & Chilpancingo	Mexico	NB	Improve turn radius NB to WB truck route	$20,000	6 months
18	Blvd de las Bellas Artes & Chilpancingo	U.S.	NB	No Improvements Recommended	-	-

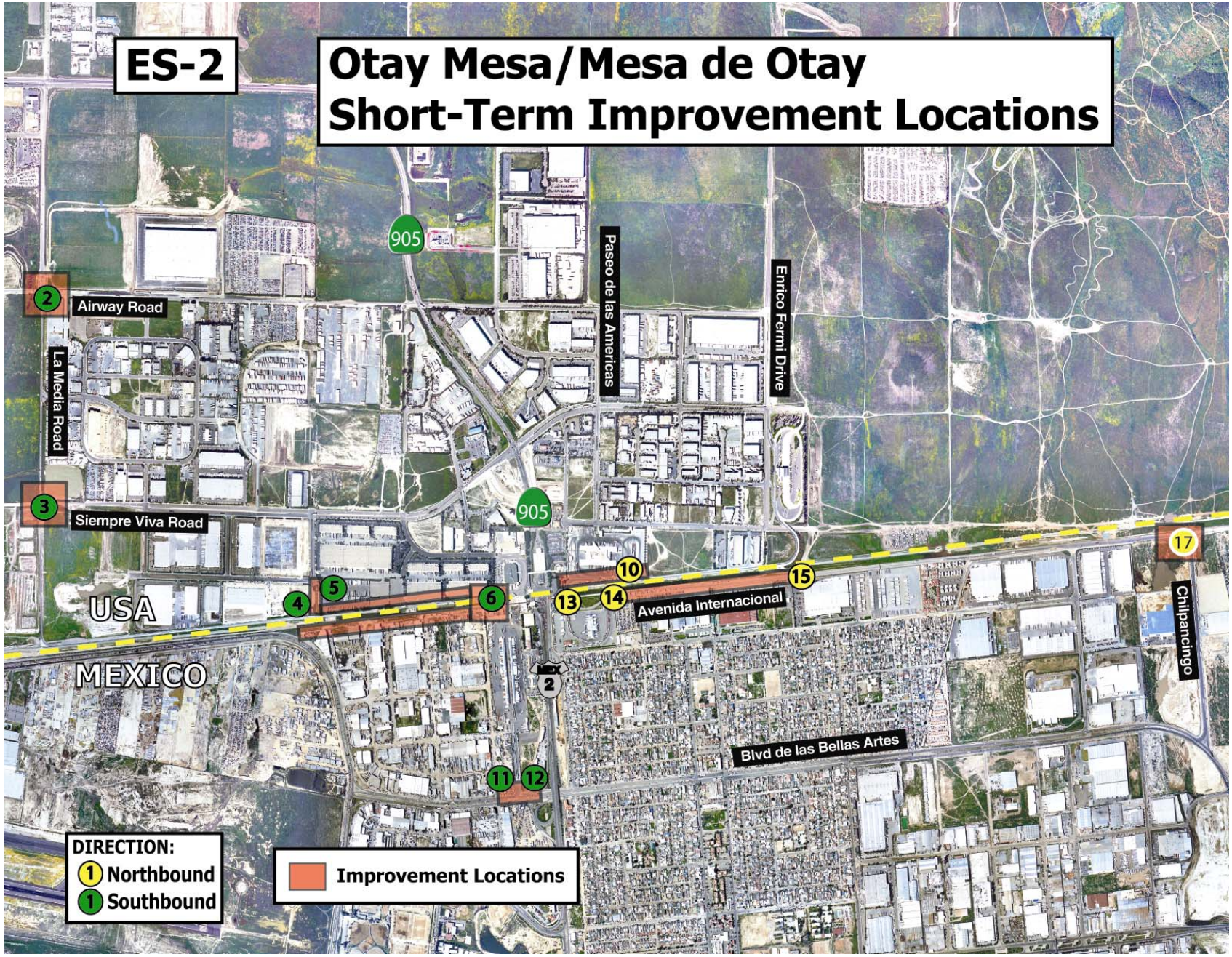
ES-2
Otay Mesa/Mesa de Otay
Short-Term Improvement Locations
905
Paseo de las Americas
Enrico Fermi Drive
Airway Road
La Media Road
Siempre Viva Road
905
USA
MEXICO
Avenida Internacional
Chilpancingo
Blvd de las Bellas Artes
DIRECTION:
Northbound
Southbound
Improvement Locations

ES-3 SAN YSIDRO/PUERTA MEXICO SHORT-TERM IMPROVEMENT PROJECTS						
Location	**Cross Streets**	**U.S./ Mexico**	**NB/ SB**	**Description of Improvement**	**Cost Estimates**	**Time Horizon**
1	I-5 SB @ Via de San Ysidro	U.S.	SB	No Improvements Recommended	-	-
2	I-5 SB @ Via de San Ysidro	U.S.	SB	Add traffic light and optimize signals	$100,000	2-3 years
3-9	Various U.S. SB locations	U.S.	SB	No Improvements Recommended	-	-
10	I-5 NB On-ramp from Transit Center	U.S.	NB	No Improvements Recommended	-	-
11,12	Puerta Mexico mainlanes & secondary lanes	Mexico	SB	1-Utilize existing SB thru lanes at secondary 2-Create turn pocket to enhance secondary inspection, eliminate lane closure to improve traffic flow[1] 3-Enforce no parking zones along the shoulder to improve traffic flow 4-Restriping of lanes	No Cost $3.0M* ($30 M pesos)[1] No Cost Minimal	1 month 1-3 years[1] 1 month 1 month
11,12	Auto entrance to U.S. POE	U.S.	NB	Proposed expansion of SENTRI from 2 to 4 lanes and realign HOV lanes	$150,000	9 months
11,12	Auto access to SENTRI	Mexico	NB	Expand access to new and existing SENTRI, and re-route HOV and SENTRI traffic leading to POE[2]	$200K-300K* ($2M-3M pesos)[2]	1-3 years[2]
11,12	Pedestrian Bridge	Mexico	NB	Extend pedestrian bridge & grade separation from HOV/SENTRI lanes[3]	$1.0M* ($10M pesos) [3]	1-3 years[3]
13	Ave Centenario (SENTRI Lane) – across the street from the Hotel Pueblo Amigo	U.S.	NB	No Improvements Recommended	-	-
14	Paseo de los Heroes at the first "Y" split north of Rio Tijuana bridge	Mexico	SB	Utilize existing SB through lanes and eliminate lane closure by the local Tijuana police department to improve traffic flow	No Cost	1 month
15-22	Various Mexico NB locations	U.S.	NB	No Improvements Recommended	-	-
23-24	Various U.S. SB locations	U.S.	SB	No Improvements Recommended	-	-

1-Source Comision de Avaluos de Bienes Nacionales (CABIN) and Aduana of MEXICO
2-Source Secretaria de Comunicaciones y Transportes (SCT) of MEXICO
3-Source Secretaria de Infraestructura y Desarrollo Urbano Estatal (SIDUE) of MEXICO

* Pesos converted to U.S. Dollars at a 10:1 ratio

ES-4
San Ysidro/Puerta Mexico
Short-Term Improvement Locations
5
USA
MEXICO
11
12
1
14
DIRECTION:
1 Northbound
1 Southbound
Improvement Locations
2 Not Shown

CHALLENGES and CONCLUSIONS

The focus of the methodology and case study was to examine Infrastructure Performance Deficiencies (IPD) and Traffic Jurisdictional Deficiencies (TJD) outside of the POEs. As previously acknowledged by the JWC, bottlenecks can also be due to National Enforcement Laws (NEL) enforced at the international ports of entry. Such laws and the ability to determine optimal crossing time are outside the purview of the transportation community and are not addressed in this study.

The following are some of the challenges encountered while conducting the case study at the Otay Mesa/Mesa de Otay and San Ysidro/Puerta Mexico POEs: Scheduling of data during peak demand periods, and inability to collect data due to major construction that disrupted flow at the POE. Similar issues may be encountered while conducting future cross-border bottleneck studies.

For the case study, the data collection and traffic counts were conducted in early November 2003 with two makeup counts collected in late January 2004. In order to meet the schedule for completing the study, it was not possible to perform the data collection during all of the various peak seasonal times of the year. Although counts were conducted during average seasonal demands, the analysis of determining potential bottlenecks can still be applied using appropriate assumptions regarding peak seasonal demand.

At Otay Mesa/Mesa de Otay, an example of capturing peaks for commercial goods movement, are seasonal changes during the mid to late spring and early fall. Spring traffic increases as agricultural products from the San Quintin/Santo Tomas Valley, which produces large quantities of fruits and vegetables for consumption in the United States. During the late summer and early fall, the commodities tend to shift to consumer goods, such as an increase in electronics for the year-end holiday season.

For San Ysidro/Puerta Mexico, where the focus was on passenger vehicles, the peak is concentrated around annual holidays and daily commutes to and from work or school. Holiday congestion usually occurs during spring break and other three-day weekend holidays in the U.S. For those commuting to work and going to school in California, peak traffic occurs early in the morning northbound commute and again in the evening southbound commute. The daily peaks at San Ysidro/Puerta Mexico were measured, but again not all seasonal peaks were captured.

At the San Ysidro/Puerta Mexico POE all modes of traffic including passenger vehicles, bicycles, pedestrians, and public transportation (bus and light rail transit) trips to and from the border were originally scheduled for data collection and analysis. However, a major construction project was underway at the San Ysidro Intermodal Transit Station, which serves the majority of pedestrian and bicycle crossings. The construction impacts precluded an accurate representation of transit ridership, bicycle, and pedestrian crossing data could not be captured. Thus, the focus at San Ysidro/Puerta Mexico was primarily on autos leading to and from the POE. Using the methodology, future studies could analyze the transit, bicycle and pedestrian data.

In closing, the Phase I case study demonstrates a process and common border-wide framework for carrying out the methodology, from system definition to data collection, and completion of

the capacity analysis to identify low cost and high result solutions to transportation infrastructure and traffic management bottlenecks leading to, from and between the U.S./Mexico land POEs. The case study was a successful endeavor that identified several critical improvements to the transportation infrastructure serving two of California's and Baja California's busiest land crossings. As the case study was nearing completion, one project has been completed and many other improvements have initiated stakeholder coordination and preliminary engineering toward completion.

NEXT STEPS

As previously recognized by the JWC, future bottleneck studies and analysis will be necessary to adequately support to the U.S. Department of State's effort to meet the requirements of the U.S.-Mexico Border Partnership Action Plan. With the completion of the Phase I case study, subsequent phases can now be considered for funding at other gateways along the U.S./Mexico border. Phase II proposes the selection of other border gateways along the U.S./Mexico border to conduct similar case studies using the bottleneck capacity analysis and methodology. For Phase II, it is proposed that the JWC will specifically determine:

a) Funding needs and resources available for future studies;
b) Method for selecting other border gateways; and,
c) Identification of JWC member agencies to conduct Phase II studies.

Pending available resources, Phase III proposes a border-wide U.S.–Mexico Bottleneck Report of findings from each of the subsequent case studies. Such a study may summarize and categorize improvements, leading to a prioritization of improvements on a regional, state or national level. This would provide an important layer of documentation of transportation needs and priorities. The availability of funding to improve the safe and efficient movement of people and goods through our border-wide infrastructure has a direct beneficial relation to the future of our binational economy.

II. Scope of Work

STUDY BACKGROUND

At the December 2002 meeting, the U.S.-Mexico JWC for Binational Planning and Programming requested that Caltrans develop a Scope of Work (Scope) to explain the methodology to carry out this Bottleneck Study. The JWC requested a study be developed to identify, and quantify short-term and low cost needs to solve road infrastructure and traffic management bottlenecks at U.S.-Mexico Land POEs.

This Scope of Work develops a methodology for addressing transportation bottlenecks as they exclusively relate to road infrastructure and traffic management operations at land international POEs between the U.S. and Mexico. The methodology is intended to be applicable to commercial, passenger, transit, pedestrian, and bicycle modes of transportation. By land international ports of entry we mean to include only, roads approaching POEs, access and exit points to POEs, and in the case of commercial POEs, routes between U.S. and Mexico sister commercial inspection facilities.

PURPOSE AND NEED

The purpose and need of this study are to address:

A) The JWC's realization of the existence of transportation infrastructure and traffic management bottlenecks that impact the efficiency of cross-border movements of people and goods;
B) The need to provide a universal methodology and framework capable of harmonizing a border-wide "Bottleneck Study." Transportation departments and federal inspection agencies will use the findings of this study as a technical tool to substantiate transportation bottlenecks.
C) The need to provide a technical framework for the Department of Homeland Security and State departments of transportation to obtain dedicated funding to address the various types of bottlenecks here studied.

STUDY OBJECTIVES

The Objectives of this study are to:

A) Develop a methodology capable of identifying low cost/high result solutions to Transportation Infrastructure and Traffic Management Bottlenecks leading to, from and between U.S. and Mexico Land Ports of Entry ;
B) Use the San Diego-Tijuana POE Gateway as test-bed for said methodology;
C) Provide JWC member agencies with documentation of study's findings and a memory of the study obstacles and recommendations for other JWC member agencies.
D) Support the U.S. Department of State's effort to meet the requirements of the U.S.-Mexico Border Action Plan.
E) Use this study as a common border-wide framework to substantiate future funding requests to relieve bottlenecks at U.S.- Mexico international land ports of entry.

III. Methodology

ASSUMPTIONS

The following are the basic assumptions used to develop the methodology for the Bottleneck Study:

1. Achieve a binational border crossing system without Transportation Infrastructure and Traffic Management Bottlenecks, which obstruct the flow of vehicles and people through the POEs.
2. Develop a balanced binational border crossing land transportation system that allows an equal number of ingresses and egresses of border crossers (same mode of transportation) in a given length of time.
3. Acknowledgment by the JWC of the existence of 3 types of bottlenecks. These are, National Enforcement Laws (NEL) to be enforced at international ports of entry, Road Infrastructure Performance Deficiencies (RIP), and Traffic Jurisdictional Deficiencies (TJD). This methodology focuses on the RIP and TJD bottlenecks, leaving NEL type of bottlenecks to be addressed by federal inspection services (FIS) separate from this study.

DEFINING A LAND BORDER CROSSING SYSTEM

A binational border crossing land transportation system is defined as the area between N1, entry into the system and N6, exit from the system as shown in Figure 1. N1 is usually the point where traffic enters a designated route that directly leads to the POE. N6 is usually the exit from the POE. For non-commercial (passenger vehicle and pedestrian) and commercial vehicle crossing systems, the intermediate points of N2 through N5 are defined as the federal POEs. For commercial vehicle crossings, the roadway connections between the U.S. and Mexico import/export facilities are specifically identified as N2 to N3, and N4 to N5. A balanced system is obtained when free flow is achieved or at least improved to provide optimal flow through the system. Figure 2 shows the system schematically. In this example, N1 is the entry road to the POE and N2 is the entrance to the POE facility. Because NEL's are excluded from this study, the specific segments that include the federal POEs are not evaluated as part of the system.

FIGURE 1
Methodology Flow Chart

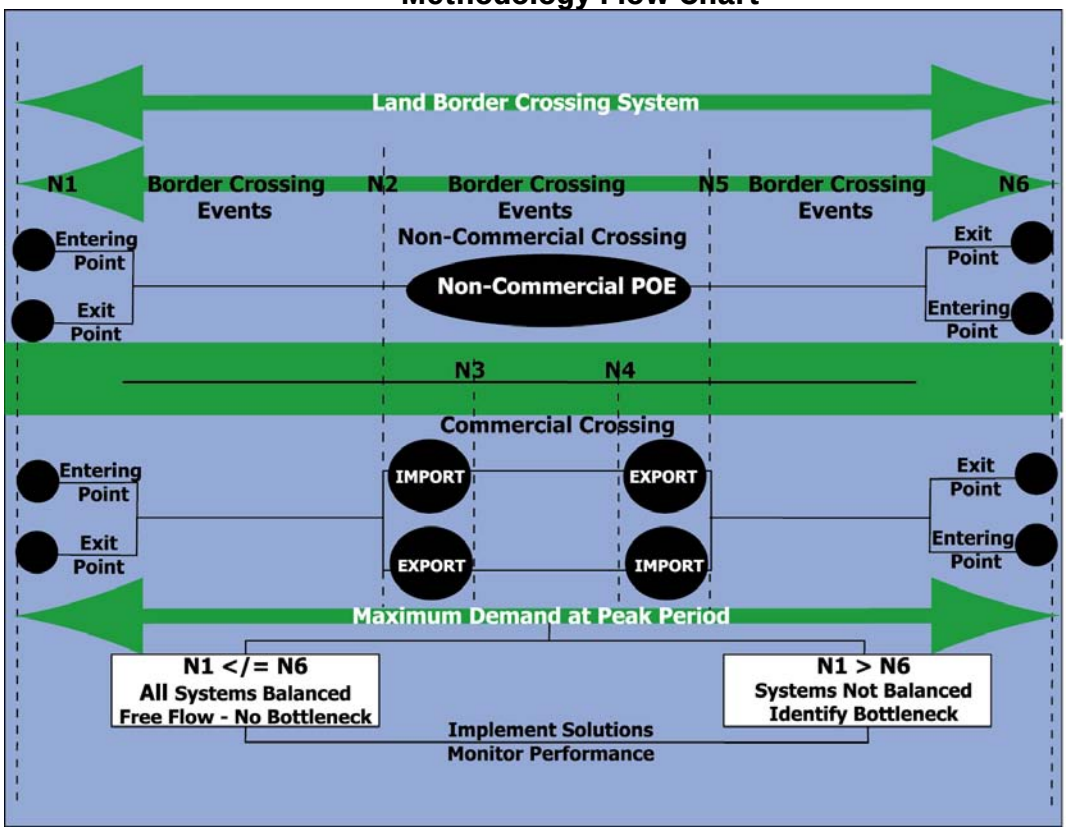

FIGURE 2
Otay Mesa Commercial Vehicle Case Example

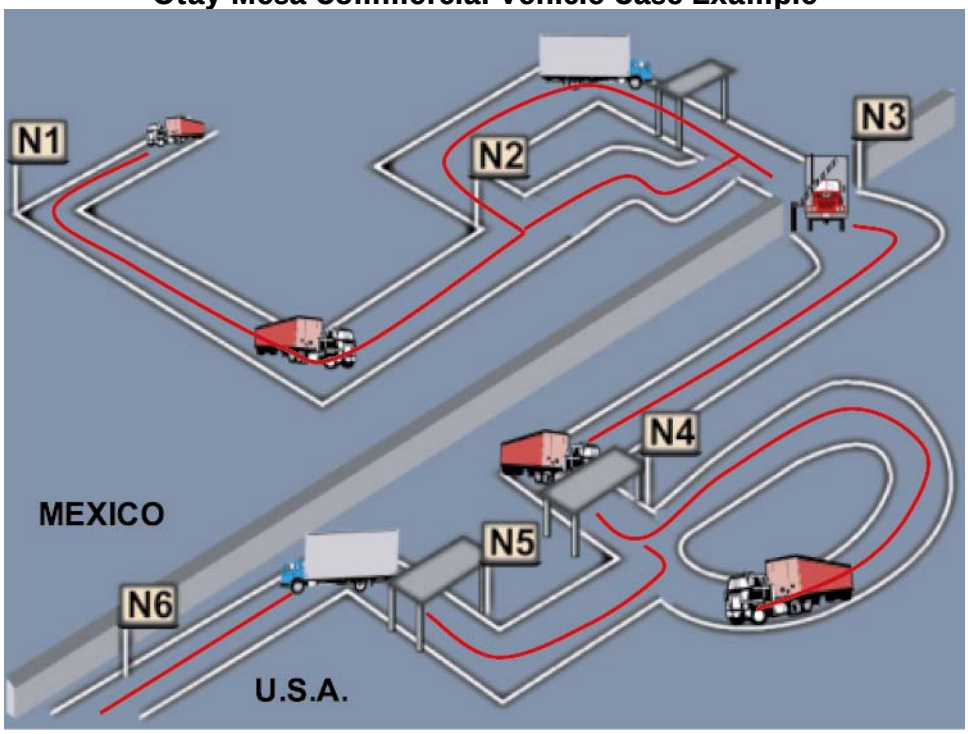

For the purposes of this study, a Land Border Crossing System is comprised of the following components:

N1) Starting Point(s) – The beginning of the border crossing system. Depending on the transportation mode to be studied, the "starting point(s)" will be analyzed as follows:

a) Passenger and commercial vehicles: the major roadways, intersection(s) used before entering the POE under study.
b) Transit, pedestrian and bikes: the transit terminal, bus stop, pedestrian, bike path or bike pick-up station(s) closest to the POE under study.

N2-N5) International Port of Entry facility (POE) - The specific U.S.-Mexico POE under study. If this location is a commercial crossing the import and export inspection facilities are identified as **N2 to N3, and N4 to N5**.

N1-N2)
N3-N4)
N5-N6)
Road Infrastructure and Traffic Management Devices- As they relate to the mode of transportation under study at that specific POE system.

N6) Point(s) of Exit – The point of exit is the end of the system, and depending on the mode of transportation to be analyzed, is described below.

a) For passenger and commercial vehicles: are major roadways and intersection(s) located immediately after exiting the POE under study.
b) For transit, pedestrian and bikes, "the point of exit" will be the transit terminal, bus stop, or pedestrian and bike facilities located immediately after the exit of the POE facility under study.

Once the physical system is determined, other factors such as optimum length of crossing and maximum system capacity at peak demand are determined. This is achieved by first collecting volume data by time period at the entry and exit points and those points with potential conflicts leading to or from and between the federal ports of entry. Next, a determination is made to see if system in balance (an equal number of border crossing events that enter and exit the system in a given length of time).

Finally, solutions are proposed for those locations in the system where imbalances or "bottlenecks" occur. As the solutions are implemented, the system's capacity performance is re-evaluated to see whether solutions are effective and to determine the need to modify and bring maximum efficiency to the border crossing system.

TASKS AND PRODUCTS

Using the methodology developed as outlined above, the following three work tasks were completed for the Phase I study.

TASK 1 – SYSTEM DEFINITION and DATA COLLECTION

Task 1 consists of the specific definition for the POE cross-border system studied and can be found in section V of this report. This task provides the opportunity for identification and agreement on the components of the system (Defining a land border crossing system).

The system definition is an opportunity to identify the different modes of transportation, points of entry and exit within the border crossing system. Once the system framework is defined additional potential conflict points in the transportation system can be identified and all the locations for data collection and analysis can be determined. Various types of field counts are needed to conduct the data collection, which include turn movements, vehicle classification, queuing, and volumes.

Table 1 shows the type of data that was collected for the case study.

TABLE 1
SAMPLE DATA COLLECTION

		DEMAND		CAPACITY (UNITS PER HOUR)			
Location	Mode	Peak Demand	Peak Period	Road in/out of Mexico	Processing Point(s)	Facility Roads	Road in/out of U.S.
Otay Mesa	Commercial Vehicles						
Mesa de Otay	Commercial Vehicles						
San Ysidro	Passenger Vehicles						
Puerta Mexico	Passenger Vehicles						

Product:

This interim product describes and graphically illustrates the POE system studied. The graphic depiction shows the road network (with number and direction of lanes) and other appropriate transportation facilities, the transportation mode studied, the traffic signalization network and other detailed road infrastructure and traffic management characteristics of the POE system.

TASK 2 – SYSTEM CAPACITY

Following the system definition and data collection, the system capacity analysis is performed to determine the maximum demand versus the processing capacity during a specific period of time. This system capacity methodology can be applied the same for all modes of cross-border traffic, i.e., passenger or commercial vehicles, pedestrian and public transportation.

Depending on the transportation mode this task requires extensive traffic data collection of cross-border volumes and vehicle counts at intersections and designated routes for autos and trucks entering and exiting the international ports of entry. Data was also collected for queue lengths and time of delays and used to develop additional points of interest in the system. Data collection and analysis was separated for northbound and southbound movements and performed simultaneously in U.S. and Mexico.

In Task 2, optimum length of crossing time and maximum system capacity of the cross-border system are identified and are located in section VI of this report. Task 2 provides answers to questions, such as: "What are the capacities of the road network and its intersections serving this POE system in the U.S. and in Mexico?" "How many cross-border events (i.e., passenger and commercial vehicles, and people crossing as a pedestrian using bicycles and public transportation) can be processed at that POE in the specified length of time at peak period?"

Product:
The report in section VI explains the findings and processes used to determine the bottlenecks within the various elements of the transportation system under study.

TASK 3 – IDENTIFY BOTTLENECKS AND PROPOSED IMPROVEMENTS
For the purpose of this study, a bottleneck in a land transportation system is a condition that restricts the free movement of traffic, creating a point of congestion where demand exceeds capacity in a given length of time, or where congestion regularly occurs even though capacity is not exceeded.

The study aims to identify low-cost and short-term solution(s) to bottlenecks that impede the free flow of people and vehicles in a given length of time throughout a cross-border land transportation system.

a) Roadway Infrastructure Bottlenecks: Determine type of improvement necessary and quantify the time needed to correct roadway infrastructure bottlenecks. Examples: matching same number of road lanes leaving, entering and in between commercial POE facilities; installing lane dividers or concrete barriers to contain segmented traffic for inspection purposes; or, designating pedestrian or bicycle access lanes to specific inspections booths, etc.
b) Traffic Operations Bottlenecks: Determine how and quantify the time frame for implementation. Examples: ramp metering devices directing traffic to designated lanes; traffic signals directing traffic at an intersection accessing (or leaving) a POE; changeable message signs informing crossers of the status of the number of inspection booths, etc.

Product:
Task 3 can be found in section VII of this report and identifies the target improvements needed (i.e., Road infrastructure and/or traffic management) to achieve a balanced system. The report identifies bottlenecks to be corrected, estimates funding needs, and estimates the time it would take to make the necessary improvements. The report will include and classify:

a) POE System Studied
b) Country (where the improvements are needed)
c) Type of Bottleneck (road infrastructure and/or traffic management)
d) Northbound or Southbound Traffic Direction (a further sub-category is needed to identify exporting and importing flows), and:
e) Mode of Transportation (commercial, passenger vehicle, transit, pedestrian and bicycle)

IV. Phase I San Diego-Tijuana POE Gateway

Cross-border activity is contained along a 150-mile border that is shared between California and Baja California, and includes the Counties of San Diego and Imperial, as well as the five Baja California municipalities of Tijuana, Playas de Rosarito, Ensenada, Tecate, and Mexicali. The combined population of this region is approximately five million people and is projected to grow to over eight million in 20 years.

There are six POEs located in the region, three in San Diego County (San Ysidro/Puerta Mexico, Otay Mesa/Mesa de Otay, and Tecate) and three in Imperial County (Calexico, Calexico East, and Andrade). The San Diego-Tijuana region, and the POEs of San Ysidro/Puerta Mexico and Otay Mesa/Mesa de Otay, was chosen to test the bottleneck methodology because the two POEs process the highest volumes of passenger vehicles, pedestrian, bus, bicycle, and commercial truck traffic along the California/Baja California border. Figure 1 shows the San Diego/Tijuana POEs examined in this study.

Figure 3
SAN DIEGO/TIJUANA PORTS OF ENTRY

Data was collected and analyzed for commercial crossings at the Otay Mesa/Mesa de Otay POE, and passenger vehicles at the San Ysidro/Puerta Mexico POE. Below are some highlights for these two ports of entry from California's perspective.

OTAY MESA

In 2003, California's total trade (import and export) with Baja California, Mexico was nearly $30 billion, of which $19.7 billion traveled through the Otay Mesa/Mesa de Otay POE.[3] The Otay Mesa/Mesa de Otay POE processes the highest amount of commercial truck traffic along the California/Baja California border, which in 2003 were 1.4 million[4] (two-way) trucks. Roughly 78%[5] of all trade transported by truck through the California/Baja California POEs have origins or destinations to locations outside of San Diego and Imperial Counties.

SAN YSIDRO

The San Ysidro/Puerta Mexico POE is one of the busiest land border crossings in the world. In 2003, this POE processed over 46 million[6] people crossing northbound in passenger vehicles and on foot.

[3] Bureau of Transportation Statistics (BTS), 2003.
[4] U.S. Customs and Border Protection, 2003.
[5] Caltrans, Survey and Analysis of Trade and Goods Movement between California and Baja California, Mexico, June 2003.
[6] U.S. Customs and Border Protection, 2003

V. Task 1 – System Definition and Data Collection

The following describes the critical locations selected for data collection and analysis in the Phase I case study.

Location Selection at Otay Mesa/Mesa de Otay

The selection of locations for southbound Otay Mesa/Mesa de Otay was aligned along the commercial vehicle truck route. Please see Figure 4 for locations. The selection of location 1 (signalized intersection) and location 2 (unsignalized intersection) were made because they are collector locations and starting points for the southbound commercial vehicle truck route. Location 3 (unsignalized intersection) serves as the main, one-way only, commercial vehicle entrance for SB vehicles. Location 4 (queue observations only) and location 5 (classification of empties) both did not have a stop control (signalized or unsignalized), but instead were chosen because they are located at the main entrance for empty commercial vehicle trailers. Between location 5 and 6 is a two-lane, one-way road leading the federal POE. Location 6 (classification of loaded and empty commercial vehicles) served as the last location before entering into the Federal POE (U.S. export). Our exit points were locations 11 and 12 (Unsignalized intersection) where the commercial vehicles made their way through the Mexican import facility (Aduana). Location 7 for southbound Otay Mesa/Mesa de Otay does not provide direct access to the POE, however, it was chosen to better understand general traffic patterns and flow of commercial vehicles within the border region.

The selection of locations for northbound Otay Mesa/Mesa de Otay was aligned along the commercial vehicle truck route. The starting points for the northbound truck route are location 18 (signalized intersection) and location 17 (unsignalized intersection). Location 17 is also the beginning of a one-way four-lane road leading to the Mexico export facility. Location 15 and location 16 both did not have any stop controls (signalized or unsignalized) and served strictly as queue observation posts. Location 14 (no stop controls) is the last point before entering the Mexican export facility. Locations 10 and 13 (no stop controls) defined the roadway in between Mexican exports and the U.S import facility. The exit point of the system is location 9 (signalized intersection) where every truck passes as they exit the California Highway Patrol (CHP) Commercial Vehicle Enforcement Facility (CVEF). Location 8 (signalized intersection) was chosen for the same reason as location 7, which was to analyze the flow with the border region.

Data Collection at Otay Mesa/Mesa de Otay

A total of 18 count locations (See Figure 4) were identified to conduct a combination of turn move classification, truck volume classification, queuing, and total volumes at Otay Mesa, California and Mesa de Otay, Baja California. These counts were completed November 4-5 utilizing 39 total staff. Each count location was identified as a part of the border system in the vicinity of the POEs, and is further identified as part of the southbound or northbound route.

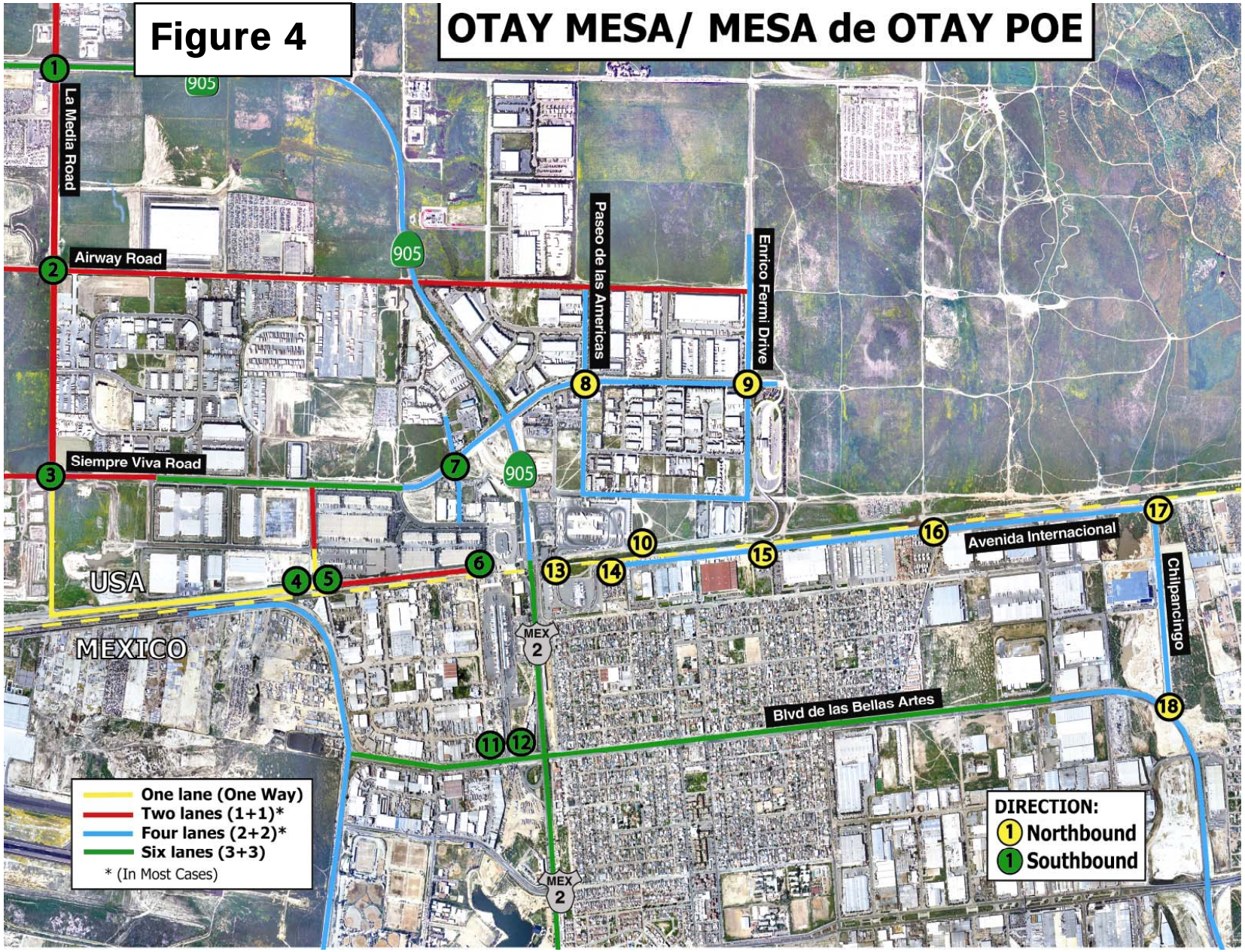
Figure 4
OTAY MESA/ MESA de OTAY POE
La Media Road
Airway Road
Siempre Viva Road
Paseo de las Americas
Enrico Fermi Drive
Avenida Internacional
Chilpancingo
Blvd de las Bellas Artes
905
MEX 2
USA
MEXICO
One lane (One Way)
Two lanes (1+1)*
Four lanes (2+2)*
Six lanes (3+3)
* (In Most Cases)
DIRECTION:
1 Northbound
1 Southbound

Tables 2 and 3 show the location, cross street, counting methods used for each location and the required staff needed to conduct the counts.

TABLE 2
Southbound Otay Mesa / Mesa de Otay
Count Methods and Staffing

Location	Cross Streets	Count Method	Staffing Needs	Total Staff
1	Otay Mesa Rd & La Media Rd	Turn Move Classification	4+Relief	5
2	Airway Rd & La Media Rd	Turn Move Classification Queue	2+Relief	3
3	Siempre Viva Rd & La Media Rd	Turn Move Classification Queue	1+Relief	2
4	Entrance of empty trucks @ Drucker Ln	Queue	1+Relief	2
5	Entrance of empty trucks @ Drucker Ln	Classification of Empties	1	1
6	Entrance to CBP export facility	Classification of All Trucks	1+Relief	2
7	Siempre Viva Rd & Otay Center Dr	Turn Move Classification	3+Relief	4
11	Ave Aduana Garita & Blvd de las Bellas Artes (Auto/small van)	Volumes	1+Relief	2
12	Ave Aduana Garita & Blvd de las Bellas Artes (2+ axle commercial vehicle)	Volumes	1	1
			TOTAL	22 Staff

TABLE 3
Northbound Mesa de Otay
Count Methods and Staffing

Location	Cross Streets	Count Method	Staffing Needs	Total Staff
8	Siempre Viva Rd & Paseo de las Americas	Turn Move Classification	2+Relief	3
9	Siempre Viva Rd & Enrico Fermi Dr	Turn Move Classification	2+Relief	3
10	Exit of CBP import facility	Classification of All Trucks	1	1
13	Exit of Mexican export facility	Volumes	1+Relief	2
14	Entrance to Mexican export facility	Volumes	1+Relief	2
15	Avenida Internacional	Queue	1	1
16	Avenida Internacional	Queue	1	1
17	Avenida Internacional & Chilpancingo	Volumes	1+Relief	2
18	Blvd de las Bellas Artes & Chilpancingo	Volumes	1+Relief	2
			TOTAL	17 Staff

Location Selection at San Ysidro/Puerta Mexico

The selection of locations for southbound passenger vehicles at San Ysidro/Puerta Mexico was along both the Interstate 5 (I-5) and I-805 freeways and major arterials serving the POE (See Figure 5 below). Location 1 (I-5 freeway mainlanes and off-ramp), location 3 (I-805 freeway mainlanes and off-ramp), location 4 (I-805 freeway mainlanes on-ramp), and location 7 (I-5 SB on-ramp) are the starting freeway points for SB San Ysidro/Puerta Mexico. Also selected are location 2 (signalized intersection), location 5 (I-5 SB off-ramp at Camino de la Plaza), location 6 (I-805 SB off-ramp at Camino de la Plaza), location 9 (signalized intersection), location 23 (I-5 SB freeway off-ramp and on-ramp), and location 24 (unsignalized intersection) because each one is a collector arterial supporting the border system. The exiting points to SB San Ysidro/Puerta Mexico are at location 11 and 12 (Mexico 1 freeway mainlanes). Location 8 (queue observations only) was on the Camino de la Plaza overcrossing to determine the back-up during pm peak commute periods.

Selected locations for northbound San Ysidro/Puerta Mexico included locations feeding the POE via mainlanes, HOV lanes, and SENTRI lanes. Location 13 (SENTRI lanes), location 14 (Mexico 1 mainlanes), location 15 (ramp), location 16 (HOV/mainlanes), location 17 (Mexico 1 mainlanes), location 18 (Mexico 1 mainlanes), and location 19 (HOV on-ramp) all directly feed into the POE. Another set of highly congested locations on the west side of the Rio Tijuana River, which feeds into the Mexico 1 mainlanes are location 20 (Mexico 1 mainlanes on-ramp), location 21 (merging ramps to Mexico 1), and location 22 (Signalized intersection). The last NB location chosen was location 10 (unsignalized intersection), which serves as the NB I-5 on-ramp from the San Ysidro Transit Station where bicyclists and pedestrian crossers can access the San Diego Trolley (Light Rail Transit system), and other public and private transportation services.

Data Collection at San Ysidro/Puerta Mexico

A total of 24 count locations (See Figure 5) were identified to conduct a combination of turn move classification, truck volume classification, queuing, and total volumes at San Ysidro, California and Puerta Mexico, Baja California. These counts were completed November 12-13 utilizing 47 total staff. Not all counts were conducted on the 12th and 13th and due to inclement weather a few counts were conducted (locations 23 and 24) at a follow-up date (January 21).

Each count location was identified as a part of the border system in the vicinity of the POEs, and is further identified as part of the southbound or northbound route. Tables 4 and 5 show the location with cross-streets, the counting methods used for each location and the required staff needed to conduct the counts.

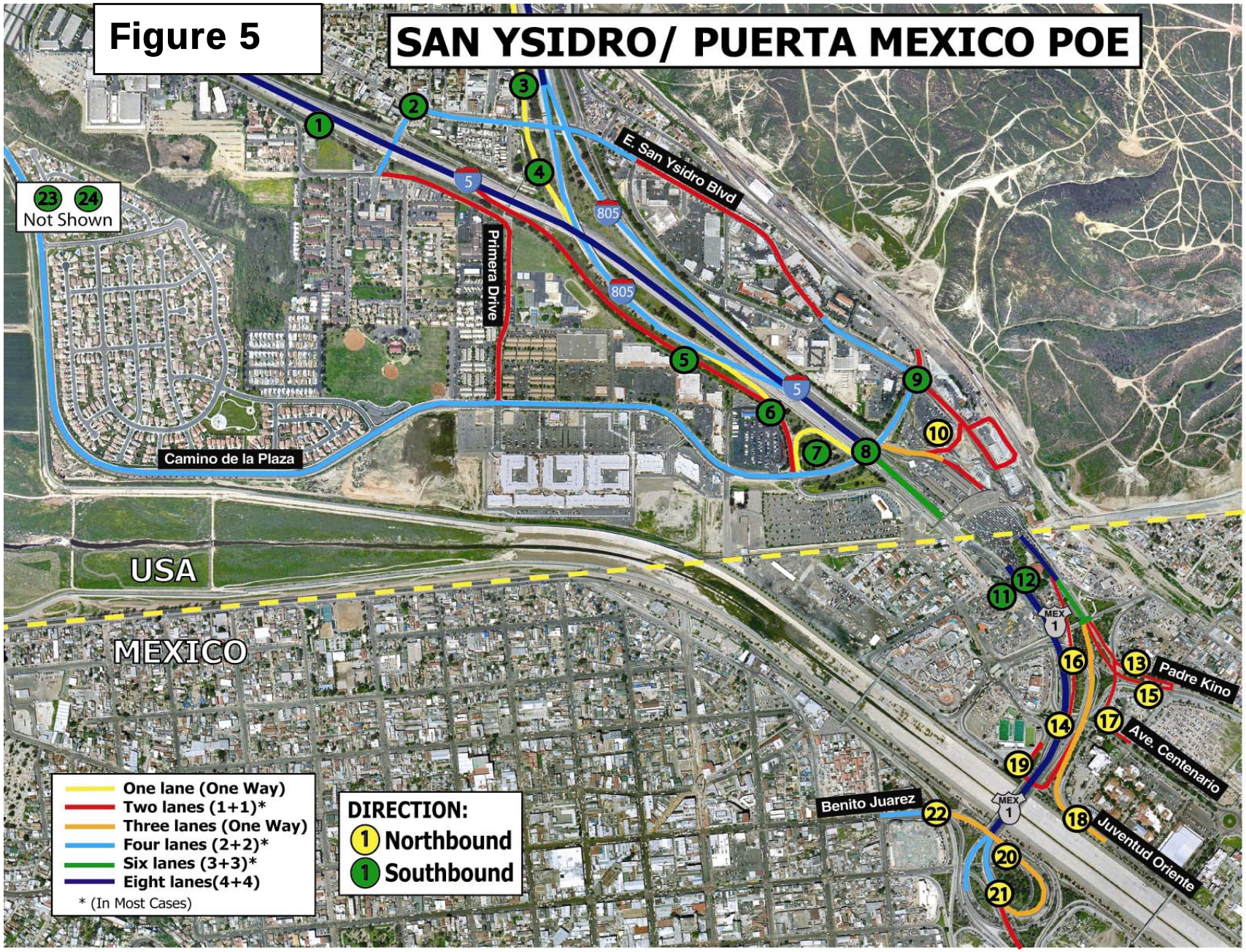
Figure 5
SAN YSIDRO/ PUERTA MEXICO POE
23 24
Not Shown
E. San Ysidro Blvd
Primera Drive
Camino de la Plaza
5
805
USA
MEXICO
MEX 1
Padre Kino
Ave. Centenario
Juventud Oriente
Benito Juarez
One lane (One Way)
Two lanes (1+1)*
Three lanes (One Way)
Four lanes (2+2)*
Six lanes (3+3)*
Eight lanes(4+4)
* (In Most Cases)
DIRECTION:
Northbound
Southbound

TABLE 4
Southbound San Ysidro/Puerta Mexico
Count Methods and Staffing

Location	Cross Streets	Count Method	Staffing Needs	Total Staff
1	I-5 SB @ Via de San Ysidro	Classification	2+Relief	3
2	Via de San Ysidro & W. San Ysidro Blvd	Turn Move Classification	3	3
3	I-805 SB @ San Ysidro Blvd (Mainlanes and off-ramp)	Classification	2+Relief	3
4	I-805 SB @ San Ysidro Blvd (On-ramp)	Classification	1	1
5	I-5 SB exiting to Camino de la Plaza	Classification	1+Relief	2
6	I-805 SB exiting to Camino de la Plaza	Classification	1	1
7	Camino de la Plaza to I-5 SB On-ramp	Classification	1+Relief	2
8	Camino de la Plaza overcrossing	Queue	1	1
9	Camino de la Plaza & E. San Ysidro Blvd	Turn Move Classification	4+Relief	5
11	Puerta Mexico mainlanes	Volumes	1+Relief	2
12	Puerta Mexico secondary lanes	Volumes	1	1
23	I-5 SB @ Dairy Mart Rd (Off-ramp and On-ramp)	Turn Move Classification	2	2
24	Dairy Mart Rd & Camino de la Plaza	Turn Move Classification	1+Relief	2
			TOTAL	28 Staff

TABLE 5
Northbound Puerta Mexico
Count Methods and Staffing

Location	Cross Streets	Count Method	Staffing Needs	Total Staff
10	I-5 NB On-ramp from Transit Center	Classification	1+Relief	2
13	Ave Centenario (SENTRI Lane) – across the street from the Hotel Pueblo Amigo	Volumes	1+Relief	2
14	Paseo de los Heroes at the first "Y" split north of the Rio Tijuana bridge	Volumes	2	2
15	At the beginning of the first ramp @ Ave Padre Kino (next to Calle Tercera to Colonia Libertad)	Volumes	1	1
16	Paseo de los Heroes at the "Y" split of the mainlanes/HOV lanes	Volumes	2+Relief	3
17	Ave Centenario at Alfonso Reyes	Volumes	1+Relief	2
18	End of Via Rapida Oriente (back of Hotel Pueblo Amigo next to disco with Mayan Façade)	Volumes	1	1
19	At the beginning of the existing re-routed HOV lanes next to the Allen Lloyd building	Volumes	1+Relief	2
20	Calle 2A-Benito Juarez before split at Via Rapida Poniente	Volumes	1+Relief	2
21	Paseo de los Heroes at the merge with Calle 2A-Benito Juarez	Volumes	1	1
22	Calle 2A-Benito Juarez at Melchor Ocampo	Volumes	1	1
			TOTAL	19 Staff

VI. Task 2 - Capacity Analysis

Task 2 addressed the maximum processing capacity and time before a breakdown in traffic flow can occur and congestion begins to queue. Several different components of roadway capacity can also influence the flow rate and congestion level within the border system: components such as roadway type (freeway or city street) and type of intersection (signalized or unsignalized intersection). A flow chart is provided in Figure 6 to help illustrate how capacities are determined and whether a bottleneck is present within the system.

The capacity flowchart is an illustrated version showing the process to determine if demand is in excess of the roadway capacity. First, the location is identified, then a determination of whether it is a crossing for commercial vehicles or passenger vehicles as both serve different purposes. From here the flowchart demonstrates a series of ways to determine the capacity. The main determination of capacity is based upon the type of facility ranging from a one-lane city street up to an eight-lane freeway facility. The capacity of facilities is further affected by cross traffic control devices such as signalized intersections and unsignalized intersections (2-way or 4-way stop sign). Signalized intersections can accommodate more traffic as well as cross traffic as opposed to an unsignalized intersection. Unsignalized intersections are used to facilitate cross traffic, but at lower traffic volumes. Capacity can also be determined for freeway on-ramps and off-ramps as the connection from freeway facilities to city streets.

Once the capacity of the facility is determined, it is compared to demand. Other factors such as unforeseen incidents and traffic accidents can affect capacity and cause congestion. Congestion causing bottleneck can also occur where the demand to capacity ratio does not exceed 1.0 because recurring congestion (queuing) is observed.

Figure 6

SYSTEM CAPACITY FLOW CHART

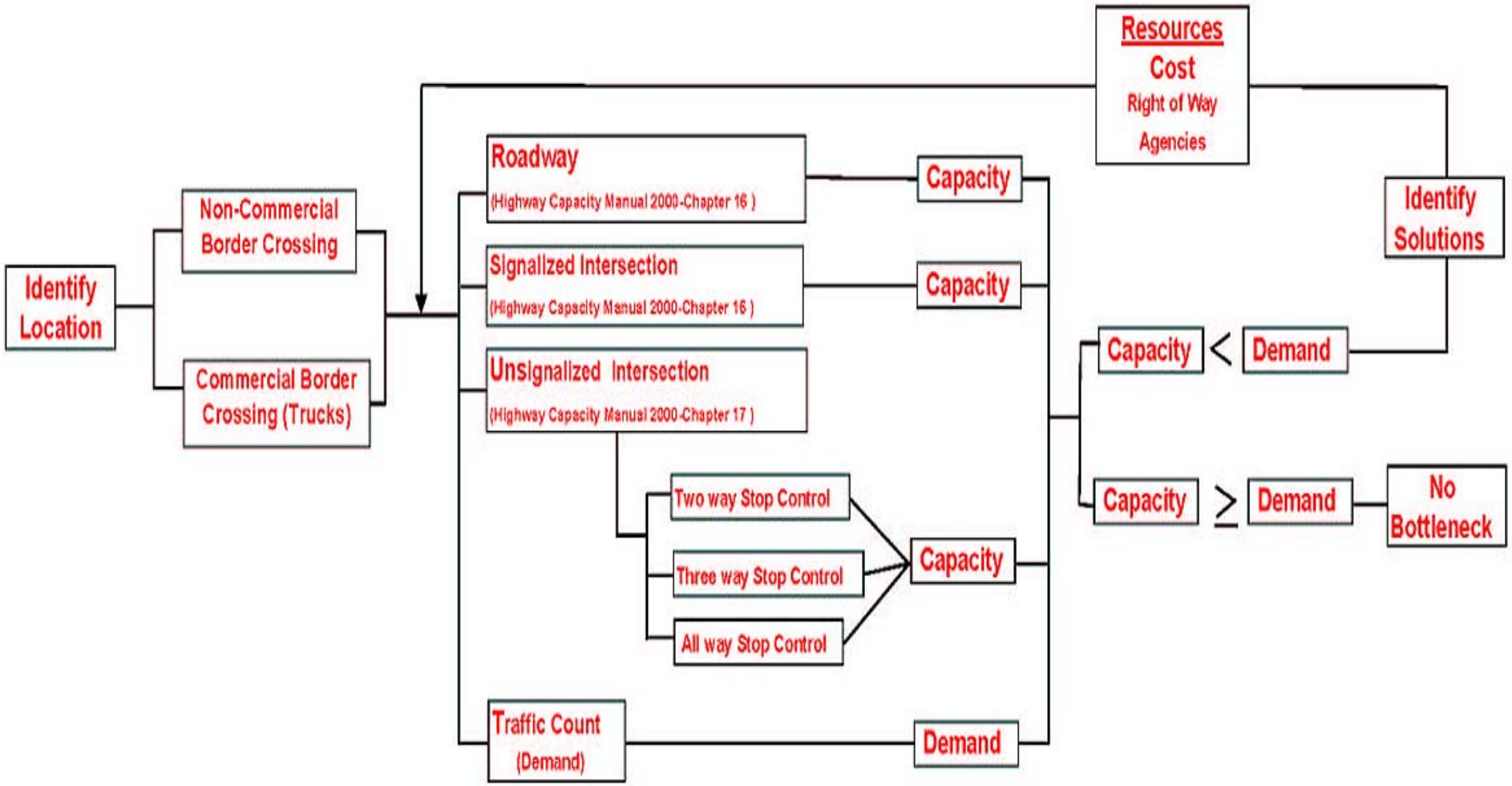

The recommended improvements to mitigate congestion were both a direct result of the traffic operations that were observed in the field and a compilation of the data gathered with counts. A majority of the solutions recommended here are operational and minor infrastructure improvements that are low-cost and can be accomplished in the short-term.

Phase I Capacity Analysis

Tables 6 and 7 summarize the capacity analysis for Otay Mesa/Mesa de Otay and San Ysidro/Puerta Mexico. Since Otay Mesa/Mesa de Otay focused on commercial vehicles the important information to take from Table 6 is the peak truck demand, peak truck hour, peak truck percentage, demand/capacity ratio, total demand of passenger vehicles and trucks, and level of service (LOS). Truck volumes were converted into passenger car equivalents using a factor of 1.5 and added to the existing passenger vehicles to equal the total demand on the particular roadway or intersection. This allows for different demands based on vehicle size. At the Otay Mesa/Mesa de Otay system commercial vehicle volumes are consistently congested all day from 0600 – 1800 northbound and southbound, especially noticeable during the midday hour and before the port closes for the day.

For San Ysidro/Puerta Mexico, the focus was on peak hour demand and peak hour of all vehicles using the system. The level of service (LOS) is derived from the Highway Capacity Manual (2000)[7]. For freeways, LOS is determined by density, which are passenger cars per lane, and mile. For signalized and unsignalized intersections LOS is determined by delay (seconds per vehicle). Suggested recommendations are usually proposed where the "demand to capacity" (D/C) ratio nears or exceeds 1.0, and where recurring congestion occurs regardless of a low D/C ratio. The San Ysidro/Puerta Mexico POE suffers from extreme peak congestion during the northbound morning commute to work in the San Diego region, and again in the southbound evening commute back to the Tijuana region.

[7] Highway Capacity Manual 2000, Chapters 16, 17, and 23.

TABLE 6 OTAY MESA / MESA DE OTAY POE COMMERCIAL VEHICLE ANALYSIS										
Location	Description	Direction (Country / SB or NB)	Peak Truck Volumes			[1] Peak Auto Volumes	[2]Total Demand	Total Capacity (Veh. / Hr.)	Demand / Capacity Ratio	Level of Service
			[1] Demand	Hour	%					
1	Signalized Intersection	U.S. SB	824	1100	31.6	1785	3021	4800	0.63	C
2	Unsignalized Intersection	U.S. SB	399	1300	44.5	498	1097	1600	0.69	D
3	Unsignalized Intersection	U.S. SB	295	1600	53.4	257	700	1200	0.58	C
4,5 Empties	One-Way lane	U.S. SB	138	1600	100	0	207	600	0.35	C
6 Loaded	One-Way lane	U.S. SB	308	1600	100	0	462	400	1.16	F
7	Signalized Intersection	U.S. SB	460	1400	41.1	658	1348	3200	0.42	C
8	Signalized Intersection	U.S. NB	445	1400	49.6	452	1120	4400	0.26	B
9	Signalized Intersection	U.S. NB	325	1300	78.1	91	579	3200	0.18	B
11,12	Unsignalized Intersection	Mexico SB	302	1600	100	-	453	600	0.76	D
10 13	One-Way lanes	Mexico NB	239 268	1200 0700	100 100	- -	453 402	600 450	0.76 0.89	D E
14,15	One-Way lanes	Mexico NB	280	0700/ 1400	100	-	420	400	1.05	F
17	Unsignalized Intersection	Mexico NB	271	1300	100	-	407	800	0.51	C
18	Signalized Intersection	Mexico NB	286	1400	100	-	429	800	0.54	C

1 Mexico data consisted of volume counts, not a classification between autos and commercial vehicles

2 Total Demand = Commercial Vehicle Demand * (1.5 passenger car equivalents) + Passenger Vehicle Demand * (1) [Commercial Vehicles account for 1.5 equivalents in comparison to one passenger vehicle].

TABLE 7 SAN YSIDRO/PUERTA MEXICO POE PASSENGER VEHICLE ANALYSIS									
Location	Description	Direction (Country/ SB or NB)	Demand				Total Capacity (Veh./Hr.)	Demand/ Capacity Ratio	Level of Service
			[1]Peak Autos	[1]Peak Trucks	[2] Peak Demand	Peak Hour			
1	Mainlanes	U.S. SB	2472	9	2486	1600	8000	0.31	B
1	Off-Ramp	U.S. SB	690	17	716	1500	1200	0.60	D
2	Signalized Intersection	U.S. SB	2271	92	2409	1600	2400	1.00	F
3	Mainlanes	U.S. SB	2271	38	2328	1500	8000	0.29	B
3	Off-Ramp	U.S. SB	900	24	936	1500	1400	0.67	C
4	On-Ramp	U.S. SB	707	4	713	1600	1200	0.59	C
5	Off-Ramp	U.S. SB	370	18	397	1600	1200	0.33	B
6	Off-Ramp	U.S. SB	517	16	541	1600	1200	0.45	B
7	On-Ramp	U.S. SB	746	8	758	1600	1200	0.63	E
9	Signalized Intersection	U.S. SB	1716	60	1806	1500	2800	0.65	D
10	Unsignalized Intersection	U.S. NB	544	8	556	1700	1000	0.56	C
11,12	Mainlanes	Mexico SB	-	-	5622	1600	6000	0.94	F
13	SENTRI lane	Mexico NB	-	-	881	0600	2000	0.44	B
14	Mainlanes	Mexico NB	-	-	2009	0900	6000	0.34	C
15	Ramp	Mexico NB	-	-	931	0600	2000	0.47	B
16	HOV/ Mainlanes	Mexico NB	-	-	2336	0700	3000	0.78	D
17	Mainlanes	Mexico NB	-	-	1552	0600	2400	0.65	C
18	Mainlanes	Mexico NB	-	-	1485	1700	3600	0.41	B
19	HOV Ramp	Mexico NB	-	-	135	0800	1600	0.08	A
20	Ramp	Mexico NB	-	-	1927	0900	2400	0.80	D
21	Ramps Merge	Mexico NB	-	-	4172	0800	4800	0.87	D
22	Signalized Intersection	Mexico NB	-	-	1622	1400	3000	0.54	C
23	Off-Ramp	U.S. SB	871	29	915	1600	1200	0.76	C
23	On-Ramp	U.S. SB	263	6	272	1600	1200	0.23	A
24	Unsignalized Intersection	U.S. SB	685	21	717	1700	1400	0.51	C

1 Mexico data consisted of volume counts, not a classification between autos and commercial vehicles

2 Peak Demand = Commercial Vehicle Demand * (1.5 passenger car equivalents) + Passenger Vehicle Demand * (1) [CommercialVehicles account for 1.5 equivalents in comparison to one passenger vehicle].

Table 8 Queuing Data at Otay Mesa/Mesa de Otay and San Ysidro/Puerta Mexico POE shows the location and cross streets, POE, direction of traffic, peak period, maximum queue, and any observations and comments of the queue counts collected.

TABLE 8
Queuing Data at Otay Mesa and San Ysidro POEs

Location	POE	Cross Streets	Country/Direction	Peak Hour	Max Queue	Queue Comments
4	Otay Mesa	Entrance of empty trucks @ Drucker Ln	U.S./ SB	1200	130	Congestion steady all day, especially midday and before port closure
13	Otay Mesa	Exit of Mexican export facility	Mexico/ NB	1500	35	Congestion steady all day, especially midday and before port closure
14	Otay Mesa	Entrance to Mexican export facility	Mexico/ NB	1515	70	Congestion steady all day, especially midday and before port closure
15	Otay Mesa	Avenida Internacional	Mexico/ NB	1500	45	Congestion steady all day, especially midday and before port closure
16	Otay Mesa	Avenida Internacional	Mexico/ NB	-	-	No Queue
8	San Ysidro	Camino de La Plaza overcrossing	U.S./ SB	1730	2000*	Evening congestion from 1515-1930 for I-5, I-805, and Camino de La Plaza
13	San Ysidro	Ave Centenario (SENTRI Lane entrance) – across the street from the Hotel Pueblo Amigo	Mexico/ NB	0715	50	Morning congestion from 0645-0800
14	San Ysidro	Paseo de los Heroes at the first "Y" split north of the Rio Tijuana bridge	Mexico/ NB	0700	200	Morning congestion from 0600-0930
15	San Ysidro	At the beginning of the first ramp @ Ave Padre Kino (next to Calle Tercera to Colonia Libertad)	Mexico/ NB	-	-	No Queue
16	San Ysidro	Paseo de los Heroes at the "Y" split of the mainlanes/HOV lanes	Mexico/ NB	0700	60	Morning congestion from 0600-0945
17	San Ysidro	Ave Centenario at Alfonso Reyes	Mexico/ NB	-	-	No Queue
18	San Ysidro	End of Via Rapida Oriente (back of Hotel Pueblo Amigo next to disco with Mayan Facade)	Mexico/ NB	0730	40	Morning congestion from 0600-0800
19	San Ysidro	At the beginning of the existing re-routed HOV lanes next to the Allen Lloyd building	Mexico/ NB	0600	80	Morning congestion from 0600-0930
20	San Ysidro	Calle 2A-Benito Juarez before split at Via Rapida Poniente	Mexico/ NB	0715	90	Morning congestion from 0600-0900
21	San Ysidro	Paseo de los Heroes at the merge with Calle 2A-Benito Juarez	Mexico/ NB	0730	70	Morning congestion from 0600-0830
22	San Ysidro	Calle 2A-Benito Juarez at Melchor Ocampo	Mexico/ NB	0700	125	Morning congestion from 0600-0830

* Queue was approximated by distance and converted into number of cars.

VII. Task 3 – Identify Bottlenecks and Proposed Improvements

Task 3 aims to identify roadway infrastructure and traffic operational bottlenecks, which obstruct the free flow of people and vehicles across the international border and within the study area. By reviewing the capacity analysis and queue analysis described in the previous section, bottleneck locations are identified. Recommendations are then proposed where D/C exceeds one and where congestion occurs regardless of D/C ratio. Other recommendations were based on field observations to improve traffic flow using traffic engineering principles, such as, increasing a turning radius for trucks, adding vehicle storage capacity, or realignment of access to reduce traffic conflicts.

Most recommendations at Otay Mesa/Mesa de Otay were operational improvements mixed with a few infrastructure improvements and one safety improvement. Recommendations for southbound flow at Otay Mesa/Mesa de Otay mostly focused on improving unsignalized traffic intersections (locations 2 and 3), access leading to the U.S. export facility (locations 5 and 6), and the re-routing of commercial empties within the Mexican import facility (locations 11 and 12). For northbound truck traffic at Otay Mesa/Mesa de Otay, the recommendations are focused on operational improvements. In the area between Mexico's Export facility and U.S. Import facility, there is a need to increase the capacity for trucks leaving from the Mexican export to U.S. import facilities (location 13) from 3 to 4 lanes, and ultimately to 8 lanes for a more efficient use of the existing inspection gates. Another improvement at this location is to re-route empty trucks to avoid entering secondary inspection compound, and passing through a new x-ray and CBP booth to expedite the processing of empty commercial vehicles. At locations 14 and 15, concrete separating barriers will help avoid weaving of trucks, which adds further delays and increases border wait times. At location 17 an increase in the turning radius at the WB move to Avenida Internacional is proposed.

Solutions recommended for San Ysidro/Puerta Mexico include a mix of operational, minor infrastructure, and safety solutions in close proximity to the POE. Northbound projects include the increase of SENTRI lanes from 2 to 4 lanes (realigning the HOV lanes) and expansion of access to these lanes. At locations 11 and 12, a NB improvement for San Ysidro/Puerta Mexico is an extension of the current pedestrian bridge to avoid pedestrian and vehicle conflicts in the NB mainlanes, as well as HOV and SENTRI lanes. Recommendations at SB San Ysidro/Puerta Mexico is Puerta Mexico secondary (locations 11 and 12) where a combination utilizing the current through lanes, creation of a secondary turn pocket, and the enforcement of the no parking zones would greatly improve the flow of evening commuters into Mexico. The addition of a traffic signal at location 2 is proposed at the I-5/Via de San Ysidro on/off-ramp, this would help alleviate current traffic congestion on the city street. Another improvement at location 14 would be to utilize all through lanes, instead of Tijuana police closing a lane specifically for a checkpoint.

Tables 9 and 10 identify cost and time horizon needed to implement low-cost & short-term recommendations, which improve the flow of people, vehicles, and goods through the cross-border transportation system. Long-term or major infrastructure improvements are not recommended, as they are not a focus of this study, instead solutions recommended are operational and minor infrastructure improvements that are low-cost and can be accomplished in the short-term. Suggested recommendations are usually proposed where the D/C ratio nears or exceeds 1.0, and where recurring congestion occurs regardless of a low D/C ratio.

TABLE 9 OTAY MESA / MESA de OTAY SHORT-TERM IMPROVEMENT PROJECTS						
Location	**Cross Streets**	**U.S. / Mexico**	**NB / SB**	**Description of Improvement**	**Cost Estimates**	**Time Horizon**
1	Otay Mesa Rd & La Media Rd	U.S.	SB	No Improvements Recommended	-	-
2	La Media Rd & Airway Rd	U.S.	SB	1-Improve turning radius at La Media and Airway 2-Restripe intersection	$20,000	6 months
3	La Media Rd & Siempre Viva Rd	U.S.	SB	1-Improve turning radius at La Media and Siempre Viva 2-Pave the western portion of Siempre Viva 3-Restripe intersection	$50,000	6 months
4,5,6	South Drucker Ln & entrance into U.S. export/Mexico import facility	U.S.	SB	1-Increase left turn radius SB to EB to prevent encroachment of loaded truck lane 2-Relocate secondary fence, switch empty & laden lanes, and add emergency lane 3-Improve turning radius from the U.S. export facility to the Mexico import facility	$20,000 $1.0M $20,000	9 months 1.5 years 1 year
7	Siempre Viva Rd & Otay Center Dr	U.S.	SB	No Improvements Recommended	-	-
8	Siempre Viva Rd & Paseo de las Americas	U.S.	NB	No Improvements Recommended	-	-
9	Siempre Viva Rd & Enrico Fermi Dr	U.S.	NB	No Improvements Recommended	-	-
6,11,12	Ave Aduana Garita & Blvd de las Bellas Artes	Mexico	SB	1- Re-route empties to exit on Lazaro Cardenas Norte 2- Add traffic signal to laden truck exit	$400,000 $100,000	2 years 2 years
10,13	Exit of Mexican export facility to U.S. Import facility	U.S.	NB	1-Improve turning radius, number of lanes, and re-route FAST lane/empty lane 2-Ultimate expansion to 8 lanes & improve turn radius NB to WB truck route	$600,000 $5.0 – 8.0M	Completed (Oct. 2004) Pending
14,15	Avenida Internacional	Mexico	NB	Separate lanes with concrete barriers	$20,000	6 months
16	Avenida Internacional	U.S.	NB	No Improvements Recommended	-	-
17	Avenida Internacional & Chilpancingo	Mexico	NB	Improve turn radius NB to WB truck route	$20,000	6 months
18	Blvd de las Bellas Artes & Chilpancingo	U.S.	NB	No Improvements Recommended	-	-

TABLE 10
SAN YSIDRO/PUERTA MEXICO
SHORT-TERM IMPROVEMENT PROJECTS

Location	Cross Streets	U.S./ Mexico	NB/SB	Description of Improvement	Cost Estimates	Time Horizon
1	I-5 SB @ Via de San Ysidro	U.S.	SB	No Improvements Recommended	-	-
2	I-5 SB @ Via de San Ysidro	U.S.	SB	Add traffic light and optimize signals	$100,000	2-3 years
3-9	Various U.S. SB locations	U.S.	SB	No Improvements Recommended	-	-
10	I-5 NB On-ramp from Transit Center	U.S.	NB	No Improvements Recommended	-	-
11,12	Puerta Mexico mainlanes & secondary lanes	Mexico	SB	1-Utilize existing SB thru lanes at secondary 2-Create turn pocket to enhance secondary inspection, eliminate lane closure to improve traffic flow[1] 3-Enforce no parking zones along the shoulder to improve traffic flow 4-Restriping of lanes	No Cost $3.0M* ($30 M pesos)[1] No Cost Minimal	1 month 1-3 years[1] 1 month 1 month
11,12	Auto entrance to U.S. POE	U.S.	NB	Proposed expansion of SENTRI from 2 to 4 lanes and realign HOV lanes	$150,000	9 months
11,12	Auto access to SENTRI	Mexico	NB	Expand access to new and existing SENTRI, and re-route HOV and SENTRI traffic leading to POE[2]	$200K-300K* ($2M-3M pesos)[2]	1-3 years[2]
11,12	Pedestrian Bridge	Mexico	NB	Extend pedestrian bridge & grade separation from HOV/SENTRI lanes[3]	$1.0M* ($10M pesos)[3]	1-3 years[3]
13	Ave Centenario (SENTRI Lane) – across the street from the Hotel Pueblo Amigo	U.S.	NB	No Improvements Recommended	-	-
14	Paseo de los Heroes at the first "Y" split north of Rio Tijuana bridge	Mexico	SB	Utilize existing SB through lanes and eliminate lane closure by the local Tijuana police department to improve traffic flow	No Cost	1 month
15-22	Various Mexico NB locations	U.S.	NB	No Improvements Recommended	-	-
23-24	Various U.S. SB locations	U.S.	SB	No Improvements Recommended	-	-

1-Source Comision de Avaluos de Bienes Nacionales (CABIN) and Aduana of MEXICO
2-Source Secretaria de Comunicaciones y Transportes (SCT) of MEXICO
3-Source Secretaria de Infraestructura y Desarrollo Urbano Estatal (SIDUE) of MEXICO

* Pesos converted to U.S. Dollars at a 10:1 ratio

VIII. Challenges and Conclusions

CHALLENGES and CONCLUSIONS

The focus of the methodology and case study was to examine Infrastructure Performance Deficiencies (IPD) and Traffic Jurisdictional Deficiencies (TJD) outside of the POEs. As previously acknowledged by the JWC, bottlenecks can also be due to National Enforcement Laws (NEL) enforced at the international ports of entry. Such laws and the ability to determine optimal crossing time are outside the purview of the transportation community and are not addressed in this study.

The following are some of the challenges encountered while conducting the case study at the Otay Mesa/Mesa de Otay and San Ysidro/Puerta Mexico POEs: Scheduling of data during peak demand periods, and inability to collect data due to major construction that disrupted flow at the POE. Similar issues may be encountered while conducting future cross-border bottleneck studies.

For the case study, the data collection and traffic counts were conducted in early November 2003 with two makeup counts collected in late January 2004. In order to meet the schedule for completing the study, it was not possible to perform the data collection during all of the various peak seasonal times of the year. Although counts were conducted during average seasonal demands, the analysis of determining potential bottlenecks can still be applied using appropriate assumptions regarding peak seasonal demand.

At Otay Mesa/Mesa de Otay, an example of capturing peaks for commercial goods movement, are seasonal changes during the mid to late spring and early fall. Spring traffic increases as agricultural products from the San Quintin/Santo Tomas Valley, which produces large quantities of fruits and vegetables for consumption in the United States. During the late summer and early fall, the commodities tend to shift to consumer goods, such as an increase in electronics for the year-end holiday season.

For San Ysidro/Puerta Mexico, where the focus was on passenger vehicles, the peak is concentrated around annual holidays and daily commutes to and from work or school. Holiday congestion usually occurs during spring break and other three-day weekend holidays in the U.S. For those commuting to work and going to school in California, peak traffic occurs early in the morning northbound commute and again in the evening southbound commute. The daily peaks at San Ysidro/Puerta Mexico were measured, but again not all seasonal peaks were captured.

At the San Ysidro/Puerta Mexico POE all modes of traffic including passenger vehicles, bicycles, pedestrians, and public transportation (bus and light rail transit) trips to and from the border were originally scheduled for data collection and analysis. However, a major construction project was underway at the San Ysidro Intermodal Transit Station, which serves the majority of pedestrian and bicycle crossings. The construction impacts precluded an accurate representation of transit ridership, bicycle, and pedestrian crossing data could not be captured. Thus, the focus at San Ysidro/Puerta Mexico was primarily on autos leading to and from the POE. Using the methodology, future studies could analyze the transit, bicycle and pedestrian data.

In closing, the Phase I case study demonstrates a process and common border-wide framework for carrying out the methodology, from system definition to data collection, and completion of the capacity analysis to identify low cost and high result solutions to transportation infrastructure and traffic management bottlenecks leading to, from and between the U.S./Mexico land POEs. The case study was a successful endeavor that identified several critical improvements to the transportation infrastructure serving two of California's and Baja California's busiest land crossings. As the case study was nearing completion, one project has been completed and many other improvements have initiated stakeholder coordination and preliminary engineering toward completion.

NEXT STEPS

As previously recognized by the JWC, future bottleneck studies and analysis will be necessary to adequately support to the U.S. Department of State's effort to meet the requirements of the U.S.-Mexico Border Partnership Action Plan. With the completion of the Phase I case study, subsequent phases can now be considered for funding at other gateways along the U.S./Mexico border. Phase II proposes the selection of other border gateways along the U.S./Mexico border to conduct similar case studies using the bottleneck capacity analysis and methodology. For Phase II, it is proposed that the JWC will specifically determine:

d) Funding needs and resources available for future studies;
e) Method for selecting other border gateways; and,
f) Identification of JWC member agencies to conduct Phase II studies.

Pending available resources, Phase III proposes a border-wide U.S.–Mexico Bottleneck Report of findings from each of the subsequent case studies. Such a study may summarize and categorize improvements, leading to a prioritization of improvements on a regional, state or national level. This would provide an important layer of documentation of transportation needs and priorities. The availability of funding to improve the safe and efficient movement of people and goods through our border-wide infrastructure has a direct beneficial relation to the future of our binational economy.

Appendix A

Data Collection and Procedures

Tasks completed before Caltrans commenced with the data collection portion include the notification of all agencies involved, safety training, and obtaining equipment for staff. The Caltrans public information office, U.S. Customs and Border Protection, GSA and the California Highway Patrol were all notified. Specific dates, times and counting locations were supplied so that each agency was aware of our presence in the field. Safety training was also conducted to prepare staff of the potential hazards and the correct methods of data collection. Provided to staff were field safety booklet, first aid kits, instruction in electronic/manual counters, map of count location, hours of count, type of count (volumes, classification, turn movements, queue), vehicle classification identification sheet, transportation to/from count location, count templates, queue forms, clipboards, pens & pencils, cell phones/emergency radio, and water.

After counting preparations were undertaken, count data was collected at selected roadway locations and intersections. Caltrans collected the data on the U.S. side of the border, and with the assistance from a consultant selected through the Request for Proposal (RFP) process, arranged for the collection of corresponding data from Baja California.

Scope of Work in Mexico

1. Perform two days of volume traffic counts and queues for a twelve-hour period (from 0600 to 1800 hours) at approximately 8 locations within the vicinity of Mesa de Otay and of the Otay Mesa/Mesa de Otay POE.
2. Perform two days of volume traffic counts and queues for a twelve-hour period (from 0600 to 1800 hours) at approximately 12 locations within the vicinity of Puerta Mexico and of the San Ysidro/Puerta Mexico POE.

Issues addressed by Caltrans and consultant included count dates available, site locations, type of counts needed, proper use of electronic *JAMAR Technologies Inc.* count-boards, appropriate agency notification, working permits required, number of staff needed, and standard safety equipment and processes used during traffic counting events. The counting boards that were utilized were the Traffic Data Collector 8 (TDC-8), which is able to collect up to 48 turn movement volumes, stop sign delay, signalized intersection delay, gap, classification and spot speed data, and travel time data.

Various types of field counts were needed to conduct the data collection, which included turn movements, vehicle classification, queuing, and volumes. For the Phase I case study, the type of data that was needed at the Mexico locations was primarily volume and queuing data to show the number of vehicles and the queuing locations where backups occurred. In the U.S., the type of data collected was turn movement at certain intersections within the system, classification of vehicles, and queuing locations where bottlenecks were occurring.

Before undertaking these counts, vehicle definitions were explained and thoroughly described (See Figure 4). Automobile was defined as any car, van, or motorcycle not transporting goods for commercial use. Commercial Vehicles (CV) were defined as 2-6 axle trucks/vans transporting goods for commercial use. Each count was conducted over a 12-hour period from 0600 to 1800.

The first of the four differing count types was a turn movement count. Turn movements at intersections were conducted to understand where the vehicles were headed at various locations within the defined system. Turn movements consisted of left-turns, through vehicles, and right-turns at each leg of the intersection.

The second type of count conducted was by classification, which delineated automobile, 2 axle CVs, 3 axle CVs, 4 axle CVs, 5 axle CVs, and 6+ axle CVs. Classifications helped to decide what specific types of vehicles were using the system and where they were using it.

The third counting method was queue volume. A majority of queue locations were taken alongside count locations, and were used to identify the amount of congestion and back up being caused within each system. A total number of vehicles were counted in order to ascertain the queue length at any given node.

The last method counts truck and passenger vehicle volumes traveling in one direction at each particular location. The volumes by time period allows you to determine the total volume of vehicles entering and exiting the system, the points leading to and from the federal ports of entry, and the volumes by peak period.

Figure A-1

SAMPLE CLASSIFICATIONS