INTERSTATE 5 NORTH COAST FLOODPLAIN STUDIES

PREPARED FOR:

Caltrans, District 11 Hydraulics
4050 Taylor Street
San Diego, CA 92110

PREPARED BY:

Dokken Engineering
5675 Ruffin Road
San Diego, CA 92123

February 2008

Book 1 of 3

DOKKEN ENGINEERING
www.dokkenengineering.com

SECTION 1

Soledad Canyon Location Hydraulic Study

SECTION 1: SOLEDAD CANYON LOCATION HYDRAULIC STUDY

1.0 PROJECT PURPOSE AND VICINITY MAP:

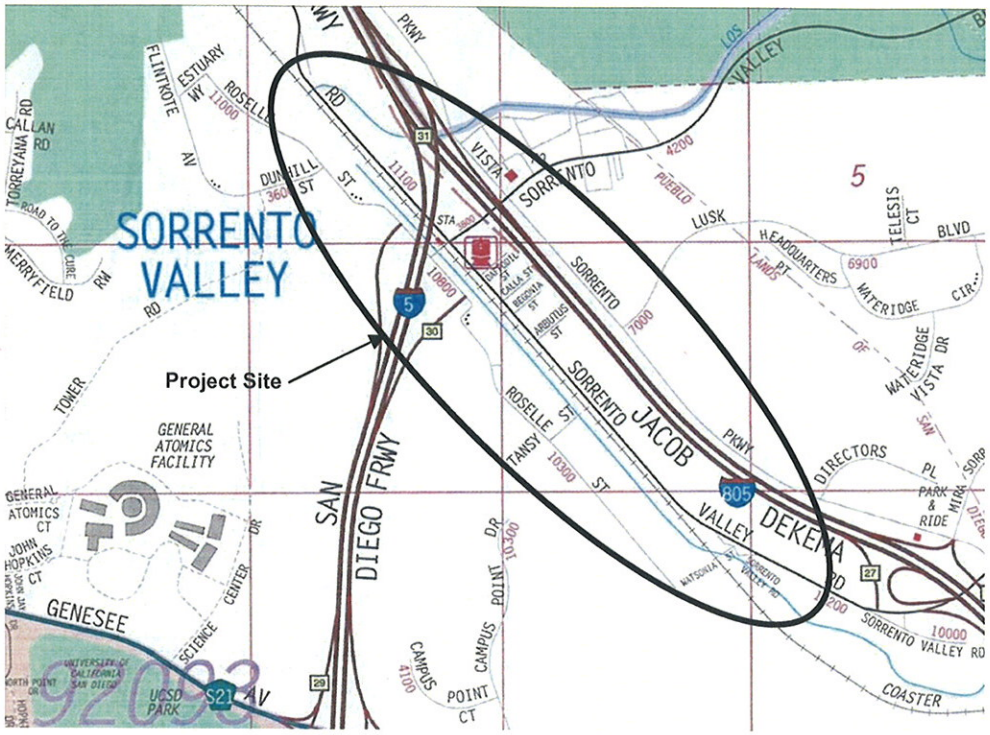

Figure 1: Project Vicinity Map

The Soledad Canyon is in Sorrento Valley in the City of San Diego, and the project site is located approximately 3 miles upstream of the mouth at the Pacific Ocean. (Thomas Guide page 1208: B-5, B-6, C-6, and C-7).

This study was prepared for the California Department of Transportation (Caltrans) to determine the impacts to the Soledad Canyon base (100-year) flood from the proposed I-5 Flyover Bridge for the Interstate-5 (I-5) corridor.

This study specifically addresses the following:

1) The Soledad Canyon 100-year floodplain as it presently exists.

2) The Soledad Canyon 100-year floodplain after the I-5 Flyover Bridge has been added.

3) Performing a risk assessment associated with any possible floodplain encroachment.

The proposed I-5 Flyover Bridge includes the construction of 10 additional piers within the floodplain. The proposed bridge would be approximately 863 ft long and built high above the 100-year floodplain of the Soledad Canyon.

1.1 DESCRIPTION OF WATERSHED:

Soledad Canyon (Hydraulic Unit 906.10-906.50) is located within the Penasquitos Watershed and covers a watershed area of 100 square miles. Soledad Canyon is fed by Carroll Canyon Creek, which originates south east of the Miramar Reservoir, in the City of San Diego in the neighborhood of Scripps Miramar Ranch and discharges into the Pacific Ocean via Los Penasquitos Lagoon (Figure 2).

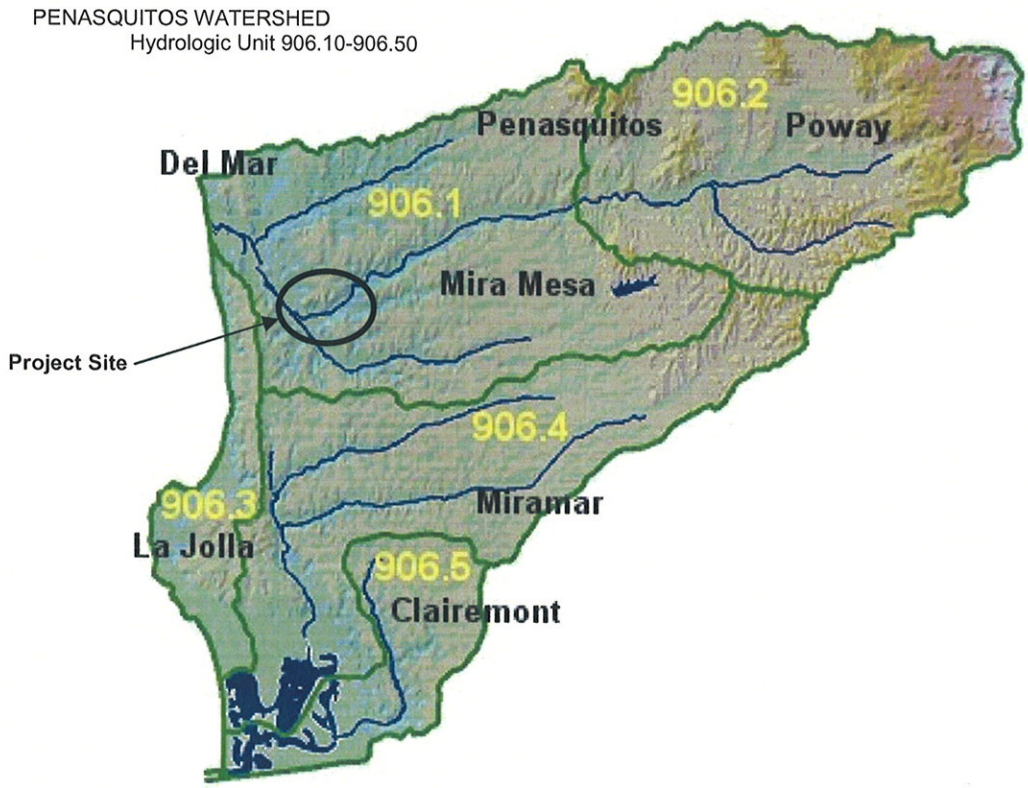

Figure 2: Regional Basin Area

Soledad Canyon has been channelized through Sorrento Valley in a concrete lined trapezoidal channel for approximately one half of a mile. Downstream of the project area the canyon joins with the Los Penasquitos Creek and flows in a natural channel until it reaches the Los Penasquitos Lagoon. The lagoon is 0.6 square miles and is identified as an impaired water body on the California 303(d) list for sedimentation. The lagoon contains extensive mudflats, saltpan, salt marsh, and one relic sand dune, with shallow water channels and broad tidal pans.

The watershed is drained by the Carmel Valley Creek, Los Penasquitos Creek, Carroll Canyon Creek and Soledad Canyon. The creeks accumulate storm water runoff from continuing residential and commercial development but typically remain low flow during the summer. The watershed is highly urbanized with a population of approximately 400,000 residents.

1.2 FLOODPLAIN MODELING METHODOLOGY:

The area of analysis ranges from approximately 4,000 feet upstream to 1,100 feet downstream of the I-5 crossing. In this region, 6,700 cfs flows from Carroll Canyon Creek into the upstream boundary of Soledad Canyon and is joined with the flows from the Los Penasquitos creek after the I-5 crossing for a total 100-year flow of 19,500 cfs. During the 100-year storm event the main channel will flow in the canyon's center through the middle of the Sorrento Valley Business Park, with velocities ranging from 5.2 ft/s to 12.3 ft/s. The structures in the overbanks will be flooded between 2 and 9 feet of water and the flow around the buildings will be significantly slower than the main stream. The overbanks have been designated as ineffective flow areas.

1.3 HEC-RAS INPUT

1.3.1 Cross Sectional Geometry:

Soledad Canyon is a FEMA Zone AE indicating that base flood elevations have been determined. All the FEMA cross section locations within the study area were duplicated in the model. Additional cross sections were cut perpendicular to the flow path at points that would be most representative of the bridges and obstructions of the flow. For this study, HEC-RAS v.3.1.3 was used to analyze the floodplain, using the Standard Step Method under subcritical flow conditions. Ineffective flow areas were designated to model the pooling and water storage that would occur in and around the flooded structures in both overbanks of the canyon.

The main channel is relatively straight with a constant width. Expansion/contraction coefficients of 0.1 and 0.3 were utilized throughout the model to represent energy losses due to gradual transitions in the geometry of the canyon channel.

ArcGIS 9.2 was used to cut the contours from topographic surveys provided by the San Diego Geographic Information Source (SanGIS). Measurements were converted to English units and final HEC-RAS input elevations were given based on the North American Vertical Datum of 1988 (NAVD 88). Topographic information was acquired from the City of San Diego as digital GIS topography in English units (NAVD 88), as well as digital topography compiled by AMCE Consulting Engineers in Metric units (NAVD 88). Individual topographic information was combined and scaled accordingly to create a complete topographic map of the canyon.

1.3.1.1 Bridges

The existing bridges within the study area include the Sorrento Valley Boulevard Bridge, the Sorrento Valley NCTD Pedestrian Bridge, and the North and South I-5 Bridges. The existing I-5 Bridge decks are entirely above the floodplain and only the piers cause any effect on the floodplain. Small diameter piers were modeled as twice their diameters and the larger diameter piers were increased by 40%. This approach was used to account for debris which could catch on the many bridge piers within the floodplain and provide

additional blockage to the flow. The Sorrento Valley Boulevard Bridge contains two rows of 1.25' piers that were modeled as 2.5' piers. The 5' piers of the I-5 Bridges were modeled as 7' obstructions. The Sorrento Valley NCTD Pedestrian Bridge is a single span bridge with no supports in the main channel of the Soledad Canyon. The Sorrento Valley Boulevard Bridge and the Sorrento Valley NCTD Pedestrian Bridge are inundated by the 100-year storm event and cause significant obstruction to the flow. The bridge analysis portion of the studied segment was modeled using the Energy Method.

The proposed I-5 Flyover Bridge deck is entirely above the 100-year floodplain. The twelve 4' proposed piers were modeled as obstructions 7' in diameter to account for possible debris.

1.3.1.2 Ineffective Flow Areas

As mentioned above, commercial and retail development has encroached on the Soledad Canyon floodplain. To account for this in the modeling, ineffective flow areas were placed throughout the cross sections. Theses areas model the water storage around the developed business park, upstream and downstream of I-5.

1.3.1.3 Flood Insurance Study Cross Sections

Detailed hydraulic analyses have been performed in this area, and a base floodplain elevation has been determined as shown in the Flood Insurance Rate Map (FIRM) in Appendix A. Downstream the model ties into Soledad Canyon FEMA cross section AB. Upstream, the model ends at Soledad Canyon FEMA cross section AS.

1.3.1.4 Existing Floodplain Conditions

Several trial hydraulic models were developed to determine the most accurate methods in which to depict the floodplain of the Soledad Canyon. HEC-2 model output (Appendix C) was received, dated April 1980, from FEMA per a backup data request that was submitted on 7/10/07. In addition to the HEC-2 model output, topography, and a plan view of the cut cross sections along the Carmel Valley Creek were requested. Upon further coordination with FEMA, it was concluded that all of the available data for the established federal floodway had been received and back-up topography or working maps were not available. Only the HEC-2 output was received. Attempts were made to salvage the HEC-2 data and match it up to FIRM cross sections and recent topography. Based on cross sections within the FIRM, recent topography and the HEC-2 stations, elevations and reach lengths, it was determined that the model could not be regenerated with reasonable certainty. Therefore, a new existing conditions model was created using more recent information. Communication with FEMA and approval to recreate the existing model from current up to date information was approved, and the record of conversation was recorded (see Appendix C).

1.3.2 Manning's Roughness Coefficient:

Each cross section contains a left overbank, main channel, and right overbank, which represent the different regions of the waterway in terms of roughness coefficients. The main channel is made up of reaches of heavily vegetated natural channel and a half of a mile reach of a concrete lined trapezoidal channel. The left and right overbanks are highly developed business parks, with commercial and retail structures within the floodplain. The main channel was modeled as a natural stream with roughness values ranging from 0.025 (Figure 3) to 0.06 (Figure 4), depending on the density of vegetation and undergrowth and as a concrete trapezoidal channel with a Manning's roughness value of 0.016 (Figure 5) and 0.025 (Figure 6) depending on the condition of the channel. For the left overbank (Figure 7) and the right overbank (Figure 8), a Manning's roughness value between 0.05 and 0.08 was used based on the density of structures and the anticipated difficulty of the flow to pass through the developed overbanks.

Figure 3: Clean Natural Stream

Figure 4: Scattered Brush and Heavy Reeds leading the trees and heavy brush

Figure 5: Concrete Trapezoidal Channel

Figure 6: Broken Concrete Bottom with Weeds

Figure 7: Typical Left Overbank Structure Layout

Figure 8: Typical Right Overbank Structure Layout

1.3.3 Starting Water Elevation:

The Soledad Canyon was run under a subcritical flow regime with a downstream starting water surface elevation, at FEMA cross section AB, of 36.3 ft (NAVD 88).

1.3.4 Discharge:

For the purposes of the floodplain analysis, 6,700 cfs was identified as the peak 100-year storm discharge at the upstream boundary condition. At FEMA cross section AE the discharge was identified as 19,500 cfs. This additional flow is due to the confluence with the Los Penasquitos Creek, which empties into the Soledad Canyon near FEMA cross section AE. Discharge information was obtained from the original basis HEC-2 model (April 1980), obtained from the FEMA Map Service Center and from the *Federal Emergency Management Agency Flood Insurance Study, San Diego County, California, Volume 1 of 7 (July 2002)*, at Carroll Canyon Creek and Soledad Canyon.

1.4 HEC-RAS OUTPUT

The water surface elevations, which are displayed in the appendices and output of this study, are based on flooding that would occur during a 100-year storm. Appendix B contains water surface elevations, channel velocity, top width, flow regime, and bottom elevations for each cross section. As shown in Table A, no significant changes to the existing 100-year floodplain would occur from the proposed I-5 Flyover Bridge.

TABLE A: Floodplain Comparison

FEMA Label	River Station	Q Total	Existing W.S. Elev.	Proposed W.S. Elev.	Change in Elevation	Existing Top Width	Proposed Top Width	Change in Width
		(cfs)	(ft)	(ft)	(ft)	(ft)	(ft)	(ft)
AS	**6394**	6700	60.31	60.31	0.00	383.8	383.8	0
AR	**6138**	6700	59.77	59.77	0.00	439.01	439.01	0
AQ	**5908**	6700	58.74	58.74	0.00	281.5	281.5	0
AP	**5508**	6700	56.35	56.35	0.00	380.98	380.98	0
AO	**4876**	6700	52.46	52.46	0.00	395.6	395.6	0
AN	**4298**	6700	47.5	47.5	0.00	354.46	354.46	0
AM	**4075**	6700	44.56	44.56	0.00	404.03	404.04	0.01
AL	**3824**	6700	44.25	44.25	0.00	441.36	441.38	0.02
AK	**3514**	6700	42.6	42.6	0.00	410.51	410.37	-0.14
AJ	**2999**	6700	40.82	40.84	0.02	749.92	750.45	0.53
AI	**2827**	6700	41.65	41.66	0.01	736.92	737.1	0.18
AH	**2712**	6700	41.51	41.52	0.01	479.83	479.87	0.04
	2566	6700	41.36	41.37	0.01	452.64	452.68	0.04
	2417*	6700	41.33	41.34	0.01	473.19	473.21	0.02
	2353	Sorrento Valley Boulevard Bridge						
	2299*	6700	40.92	40.94	0.02	513.97	514	0.03
AG	**2275***	6700	40.87	40.88	0.01	475.63	475.71	0.08
	2249*	6700	40.9	40.92	0.02	474.85	474.91	0.06
	2195**	6700	40.95	40.96	0.01	468.37	468.44	0.07
	2129**	6700	40.94	40.95	0.01	464.33	457.35	-6.98
AF	**2086****	6700	40.98	40.98	0.00	469.44	462.47	-6.97
	2054**	6700	40.95	40.96	0.01	722.11	715.14	-6.97
	2020**	6700	40.94	40.95	0.01	645.33	638.42	-6.91
	1987*	6700	40.92	40.93	0.01	599.26	599.34	0.08
	1954**	6700	40.99	40.98	-0.01	718.74	711.64	-7.1
	1906**	6700	40.98	40.97	-0.01	624.75	617.65	-7.1
	1852*	6700	40.95	40.97	0.02	580.1	580.24	0.14
AE	**1788****	19500	39.86	39.83	-0.03	442	434.73	-7.27
	1751**	19500	39.67	39.62	-0.05	497.42	489.21	-8.21
	1743	Sorrento Valley NCTD Pedestrian Bridge						
	1733*	19500	39.5	39.5	0.00	492.94	492.94	0
	1633*	19500	37.6	37.6	0.00	434.22	434.22	0
AD	**1458**	19500	37.56	37.56	0.00	864.98	864.98	0
AC	**1185**	19500	37.08	37.08	0.00	1056.53	1056.53	0
AB	**803**	19500	36.3	36.3	0.00	1061.22	1061.22	0

*** Cross sections that contain obstructions for existing I-5 Bridge Piers.**
**** Cross sections that contain obstructions for existing and proposed I-5 Bridge Piers.**

1.4.1 Warning Messages

Divided flow computed for this cross section, was displayed at cross section #6394, #6138, #5908, #5508, #4876, #4298, #4075, #3824, #3514, #2999, #2827, #2712, #2566, #2417, #2299, #2275, #2249, #2195, #2129, #2086, #2054, #2020, #1987, #1954, #1906, #1852, #1788, #1751, #1733, #1633, #1458, #1185 and #803. This occurred due to the railroad tracks being above and below the 100-year water surface elevation creating small islands at the upstream portion of the study, and structures within the floodplain dividing the flow.

The conveyance ratio (upstream conveyance divided by downstream conveyance) is less than 0.7 or greater than 1.4. This may indicate the need for additional cross sections, was displayed at cross section #6138, #4876, #4075, #3824, #2999, #2827, #2417, #2353, #1852, #1751, #1743, #1733 and #1633. Portions of the Soledad Canyon were relatively uniform and allowed for cross sections to be placed several hundred feet apart. These changes are appropriate based on the spacing of the cross sections

The energy loss was greater than 1.0 ft between the current and previous cross section. This may indicate the need for additional cross sections; was displayed at cross sections #5908, #5508, #4876, #4298, #4075, #3514, #1733 and #1633. This message occurred because of the changes and spacing of consecutive cross sections. This message was acceptable.

The velocity head has changed by more than 0.5 ft (0.15 m). This may indicate the need for additional cross sections; was displayed at cross sections #4876, #4075, #3824, #2999, #1852, #1733 and #1633. This message is common at obstructions such as bridges, piers and inundated structures and additional cross sections are not normally added. The change in velocity head was expected.

1.5 RISK ASSESSMENT

Within the Soledad Canyon, the widening to the I-5 Bridge would cause a negligible increase to flood water elevations upstream. The impacts to the floodplain would not be considered a significant or longitudinal encroachment. Since the 100-year flood would still be contained within the existing floodplain boundaries, there would be no increased risk to life or property associated with the proposed improvements. No additional roadways would flood upstream from the proposed I-5 Bridge widening. Therefore, no transportation routes will be interrupted or terminated beyond existing conditions.

Additionally, no floodplain values will be adversely impacted without mitigation. Natural and beneficial floodplain values, as defined in Chapter 17 "Definitions" in the Caltrans Standard Environmental Reference (SER), include fish, wildlife, plants, outdoor recreation, aquaculture, forestry, etc., that are found within a designated floodplain. Listed below are the beneficial uses of the Soledad Canyon obtained from the Water Quality Control Plan for the San Diego Basin along with a short description and determination of impacts.

- Agricultural supply. This includes the uses of water for farming, horticulture, or ranching including, but not limited to, irrigation, stock watering, or support of vegetation for range

grazing. There are no agricultural uses within the proposed construction area of the I-5 Flyover Bridge, and therefore no impact is anticipated from the proposed bridge.

- Cold freshwater habitat. This includes the uses of water that support cold water ecosystems including, but not limited to, preservation or enhancement of aquatic habitats, vegetation, fish, or wildlife, including invertebrates. The construction areas associated with the proposed bridge construction would be unlikely to impact any amount of biological habitats. Since, it would be located between the existing northbound and southbound I-5 Bridges, where the ground is all pavement or concrete and no habitats exist within the immediate construction areas. Currently, a Natural Environment Study (NES) is being prepared to support the I-5 North Coast Widening Project. The NES will assess if any biological habitats of special significance may be impacted and what mitigation measures, if any, are needed.

- Industrial service supply. This includes uses of water for industrial activities that do not depend primarily on water quality including, but not limited to, mining, cooling water supply, hydraulic conveyance, gravel washing, fire protection, or oil well re-pressurization. The I-5 Flyover Bridge will not restrict existing flows and therefore will not affect the industrial uses of the creek.

- Contact and non-contact water recreation. This includes the uses of water for recreational activities involving proximity to water and contact with water, where ingestion of water is reasonably possible. These uses include, but are not limited to, swimming, wading, water-skiing, skin and SCUBA diving, diving, surfing, white water activities, fishing, use of natural hot springs, picnicking, sunbathing, hiking, beachcombing, camping, boating, tidepool and marine life study, hunting, sightseeing, or aesthetic enjoyment in conjunction with the above activities. The construction of the I-5 Flyover Bridge will not have any effect on the creek's recreational uses.

- Warm freshwater habitat. This includes uses of water that support warm water ecosystems including, but not limited to, preservation or enhancement of aquatic habitats, vegetation, fish or wildlife, including invertebrates. The NES will assess if any warm freshwater habitat may be impacted and what mitigation measures, if any, are needed.

- Wildlife habitat. This includes uses of water that supports terrestrial ecosystems including, but not limited to, preservation and enhancement of terrestrial habitats, vegetation, wildlife, or wildlife water and food sources. The NES will assess if any wildlife habitat may be impacted and what mitigation measures, if any, are needed.

The proposed bridge has been designed to minimize disturbance to the floodplain. The bridge design has been through several iterations to select an alternative which is compatible with floodplain development and least harmful to the environment, while maintaining feasibility for improving I-5. Efforts should be made to limit the footprint of the construction site and reduce construction time in order to minimize impacts to natural and beneficial floodplain values, hazards to human life, and property loss.

1.6 SUMMARY AND CONCLUSION:

The two sources of topography were combined to generate hydrographic data of the canyon's bottom. The anticipated flow in Soledad Canyon is received from Carroll Canyon Creek and Los Penasquitos Creek, and then released into the Los Penasquitos Lagoon that is connected directly to the Pacific Ocean. The water surface profile of the Soledad Canyon within the studied reach drops approximately 24 feet over 6,500 feet. The overall schematic of the canyon during the 100-year storm can be described as a fast moving center stream with slower moving overbank flow flooding the structures in the left and right overbanks of the canyon.

Throughout a 100-year storm event, a water body flowing in a subcritical condition has been anticipated within the Soledad Canyon. From the water surface profiles generated by the HEC-RAS model, it was determined that only a slight change in water surface elevation upstream of the I-5 Flyover Bridge would occur during the 100-year storm event. The proposed bridge generates an insignificant hydraulic impact to the existing floodplain upstream of the proposed I-5 Flyover Bridge. Due to the slope of the Soledad Canyon geometry, a small increase in water surface elevation would require a significantly short distance upstream to taper back into the existing floodplain. Since the change is slight and the proposed floodplain remains inside the FEMA floodplain, impacts to the existing floodplain are considered negligible.

This report has been prepared under the direction of the following Registered Engineer. The Registered Civil Engineer attests to the technical information contained herein and the engineering data upon which recommendations, conclusions, and decisions are based.

Glen Parker

Glen Parker
Registered Civil Engineer

Date 3/5/08

REGISTERED PROFESSIONAL ENGINEER
GLEN P. PARKER
No. C66490
Exp. 6/30/08
CIVIL
STATE OF CALIFORNIA

TABLE OF CONTENTS

EXECUTIVE SUMMARY ..... **I**
INTRODUCTION ..... **II**
Project Location
Description of San Diego Watersheds
Report Format
FEMA Coordination

SECTION 1: SOLEDAD CANYON LOCATION HYDRAULIC STUDY

1.0 Project Purpose and Vicinity Map **1-1**
1.1 Description of Watershed. **1-2**
1.2 Floodplain Modeling Methodology **1-3**
1.3 HEC-RAS Input ..... **1-3 to 1-6**
1.3.1 Cross Section Geometry
1.3.1.1 Bridges
1.3.1.2 Ineffective Flow Area
1.3.1.3 Flood Insurance Study Cross Sections
1.3.1.4 Existing Floodplain Conditions
1.3.2 Manning's Roughness Coefficient
1.3.3 Starting Water Surface Elevation
1.3.4 Discharge
1.4 HEC-RAS Output ..... **1-7 to 1-8**
1.4.1 Warning Messages
1.5 Risk Assessment ..... **1-8 to 1-9**
1.6 Summary and Conclusion **1-10**

APPENDIX A: Cross Section Location Exhibits
Flood Insurance Rate Map
Flood Insurance Study
Summary of Discharges
APPENDIX B: Results Summary
HEC-RAS Cross Section Input/Output
APPENDIX C: Location Hydraulic Study Form
Floodplain Encroachment Form
Planning Study
As-builts
Backup Data

SECTION 2: LOS PENASQUITOS CREEK LOCATION HYDRAULIC STUDY

2.0 Project Purpose and Vicinity Map **2-1**
2.1 Description of Watershed. **2-2**
2.2 Floodplain Modeling Methodology **2-3**
2.3 HEC-RAS Input ..... **2-3 to 2-8**
2.3.1 Cross Section Geometry

2.3.1.1 Bridges
2.3.1.2 Ineffective Flow Area
2.3.1.3 Flood Insurance Study Cross Sections
2.3.1.4 Existing Floodplain Conditions
2.3.2 Manning's Roughness Coefficient
2.3.3 Starting Water Surface Elevation
2.3.4 Discharge
2.4 HEC-RAS Output . . . . . **2-9 to 2-10**
2.4.1 Warning Messages
2.5 Risk Assessment . . . . . **2-10 to 2-12**
2.6 Summary and Conclusion **2-12**

APPENDIX A: Cross Section Location Exhibits
Flood Insurance Rate Map
Flood Insurance Study
Summary of Discharges
APPENDIX B: Results Summary
HEC-RAS Cross Section Input/Output
APPENDIX C: Location Hydraulic Study Form
Floodplain Encroachment Form
As-builts
Planning Study
Backup Data

SECTION 3: CARMEL VALLEY CREEK LOCATION HYDRAULIC STUDY

3.0 Project Purpose and Vicinity Map **3-1**
3.1 Description of Watershed. **3-2**
3.2 Floodplain Modeling Methodology . . . . . **3-2 to 3-3**
3.3 HEC-RAS Input . . . . . **3-3 to 3-8**
3.3.1 Cross Section Geometry
3.3.1.1 Bridges
3.3.1.2 Ineffective Flow Area
3.3.1.3 Flood Insurance Study Cross Sections
3.3.1.4 Existing Floodplain Conditions
3.3.2 Manning's Roughness Coefficient
3.3.3 Starting Water Surface Elevation
3.3.4 Discharge
3.4 HEC-RAS Output . . . . . **3-9 to 3-10**
3.4.1 Warning Messages
3.5 Risk Assessment . . . . . **3-11 to 3-12**
3.6 Summary and Conclusion **3-12**

APPENDIX A: Cross Section Location Exhibits
Flood Insurance Rate Map
Flood Insurance Study
APPENDIX B: Results Summary

HEC-RAS Cross Section Input/Output
APPENDIX C: Location Hydraulic Study Form
Floodplain Encroachment Form
Planning Study
As-builts
Backup Data

SECTION 4: SAN DIEGUITO LAGOON LOCATION HYDRAULIC STUDY

4.0 Project Purpose and Vicinity Map **4-1**
4.1 Description of Watershed **4-2**
4.2 Floodplain Modeling Methodology **4-2**
4.3 HEC-RAS Input . . . . . **4-3 to 4-5**
4.3.1 Cross Section Geometry
4.3.1.1 Bridges
4.3.1.2 Ineffective Flow Area
4.3.1.3 Flood Insurance Study Cross Sections
4.3.1.4 Existing Floodplain Conditions
4.3.2 Manning's Roughness Coefficient
4.3.3 Starting Water Surface Elevation
4.3.4 Discharge
4.4 HEC-RAS Output . . . . . **4-6 to 4-7**
4.4.1 Warning Messages
4.5 Risk Assessment . . . . . **4-7 to 4-8**
4.6 Summary and Conclusion **4-9**

APPENDIX A: Cross Section Location Exhibits
Grading Plan
Flood Insurance Rate Maps
Flood Insurance Study
Summary of Discharges
APPENDIX B: Results Summary
HEC-RAS Cross Section Input/Output
APPENDIX C: Location Hydraulic Study Form
Floodplain Encroachment Form
As-builts
Backup Data

SECTION 5: SAN ELIJO LAGOON LOCATION HYDRAULIC STUDY

5.0 Project Purpose and Vicinity Map . . . . . **5-1 to 5-2**
5.1 Description of Watershed **5-2**
5.2 Floodplain Modeling Methodology . . . . . **5-2 to 5-3**
5.3 HEC-RAS Input . . . . . **5-3 to 5-8**
5.3.1 Cross Section Geometry
5.3.1.1 Bridges
5.3.1.2 Ineffective Flow Area

5.3.1.3 Flood Insurance Study Cross Sections
5.3.1.4 Existing Floodplain Conditions
5.3.2 Manning's Roughness Coefficient
5.3.3 Starting Water Surface Elevation
5.3.4 Discharge
5.4 HEC-RAS Output . . . . . **5-9 to 5-10**
5.4.1 Warning Messages
5.5 Risk Assessment . . . . . **5-11 to 5-12**
5.6 Summary and Conclusion **5-12**

APPENDIX A: Cross Section Location Exhibits
Flood Insurance Rate Maps
FEMA Floodway Data
APPENDIX B: Results Summary
HEC-RAS Cross Section Input/Output
APPENDIX C: Location Hydraulic Study Form
Floodplain Encroachment Form
As-builts

SECTION 6: COTTONWOOD CREEK CULVERT ANALYSIS

6.0 Project Purpose and Vicinity Map **6-1**
6.1 Description of Watershed **6-2**
6.2 Culvert Modeling Methodology . . . . . **6-2 to 6-6**
6.2.1 CulvertMaster
6.2.2 StormCAD
6.2.3 Tailwater Elevation
6.2.4 Discharge
6.3 Summary and Conclusion **6-7**

APPENDIX A: Inundation Exhibit
APPENDIX B: CulvertMaster Report
StormCAD Report
APPENDIX C: Backup Data
Hydrology Printout
Hydrology Map

SECTION 7: BATIQUITOS LAGOON LOCATION HYDRAULIC STUDY

7.0 Project Purpose and Vicinity Map **7-1**
7.1 Description of Watershed **7-2**
7.2 Floodplain Modeling Methodology **7-2**
7.3 HEC-RAS Input . . . . . **7-3 to 7-7**
7.3.1 Cross Section Geometry
7.3.1.1 Bridges
7.3.1.2 Ineffective Flow Area
7.3.1.3 Flood Insurance Study Cross Sections
7.3.1.4 Existing Floodplain Conditions

7.3.2 Manning's Roughness Coefficient
7.3.3 Starting Water Surface Elevation
7.3.4 Discharge
7.4 HEC-RAS Output ..... **7-7 to 7-8**
7.4.1 Warning Messages
7.5 Risk Assessment ..... **7-8 to 7-10**
7.6 Summary and Conclusion **7-10**

APPENDIX A: Cross Section Location Exhibits
Batiquitos Lagoon EIR/EIS Exhibit
Flood Insurance Rate Maps
USGS Map
APPENDIX B: Results Summary
HEC-RAS Cross Section Input/Output
APPENDIX C: Location Hydraulic Study Form
Floodplain Encroachment Form
As-builts
Planning Study
Backup Data

SECTION 8: AGUA HEDIONDA LAGOON LOCATION HYDRAULIC STUDY

8.0 Project Purpose and Vicinity Map **8-1**
8.1 Description of Watershed ..... **8-2 to 8-3**
8.2 Floodplain Modeling Methodology **8-3**
8.3 HEC-RAS Input ..... **8-3 to 8-8**
8.3.1 Cross Section Geometry
8.3.1.1 Bridges
8.3.1.2 Ineffective Flow Area
8.3.1.3 Flood Insurance Study Cross Sections
8.3.1.4 Existing Floodplain Conditions
8.3.2 Manning's Roughness Coefficient
8.3.3 Starting Water Surface Elevation
8.3.4 Discharge
8.4 HEC-RAS Output ..... **8-8 to 8-9**
8.4.1 Warning Messages
8.5 Risk Assessment ..... **8-9 to 8-11**
8.6 Summary and Conclusion **8-11**

APPENDIX A: Cross Section Location Exhibits
County Topography Exhibit
Encina Power Plant Topography Exhibit
Flood Insurance Rate Maps
Summary of Discharges
APPENDIX B: Results Summary
HEC-RAS Cross Section Input/Output
APPENDIX C: Location Hydraulic Study Form

Floodplain Encroachment Form
Planning Studies
As-builts
Backup Data

SECTION 9: BUENA VISTA LAGOON LOCATION HYDRAULIC STUDY

9.0 Project Purpose and Vicinity Map **9-1**
9.1 Description of Watershed **9-2**
9.2 Floodplain Modeling Methodology **9-3**
9.3 HEC-RAS Input . . . . . **9-3 to 9-8**
9.3.1 Cross Section Geometry
9.3.1.1 Bridges
9.3.1.2 Ineffective Flow Area
9.3.1.3 Flood Insurance Study Cross Sections
9.3.1.4 Existing Floodplain Conditions
9.3.2 Manning's Roughness Coefficient
9.3.3 Starting Water Surface Elevation
9.3.4 Discharge
9.4 HEC-RAS Output . . . . . **9-8 to 9-10**
9.4.1 Warning Messages
9.5 Risk Assessment . . . . . **9-11 to 9-12**
9.6 Summary and Conclusion **9-12**

APPENDIX A: Cross Section Location Exhibits
Flood Insurance Rate Maps
Summary of Discharges
APPENDIX B: Results Summary
HEC-RAS Cross Section Input/Output
APPENDIX C: Location Hydraulic Study Form
Floodplain Encroachment Form
As-builts
Backup Data

SECTION 10: LOMA ALTA CREEK LOCATION HYDRAULIC STUDY

10.0 Project Purpose and Vicinity Map **10-1**
10.1 Description of Watershed **10-2**
10.2 Floodplain Modeling Methodology **10-2**
10.3 HEC-RAS Input . . . . . **10-3 to 10-7**
10.3.1 Cross Section Geometry
10.3.1.1 Bridges
10.3.1.2 Ineffective Flow Area
10.3.1.3 Flood Insurance Study Cross Sections
10.3.1.4 Existing Floodplain Conditions
10.3.2 Manning's Roughness Coefficient
10.3.3 Starting Water Surface Elevation

10.3.4 Discharge
10.4 HEC-RAS Output ..... **10-7 to 10-9**
10.4.1 Warning Messages
10.5 Risk Assessment ..... **10-9 to 10-10**
10.6 Summary and Conclusion **10-11**

APPENDIX A: Cross Section Location Exhibits
Flood Insurance Rate Maps
Summary of Discharges
City of Oceanside Topography Maps
APPENDIX B: Results Summary
HEC-RAS Cross Section Input/Output
APPENDIX C: Location Hydraulic Study Form
Floodplain Encroachment Form
Planning Studies
Backup Data

SECTION 11: LOMA ALTA CREEK LOCATION HYDRAULIC STUDY

11.0 Project Purpose and Vicinity Map **11-1**
11.1 Description of Watershed **11-2**
11.2 Floodplain Modeling Methodology ..... **11-2 to 11-3**
11.3 HEC-RAS Input ..... **11-3 to 11-9**
11.3.1 Cross Section Geometry
11.3.1.1 Bridges
11.3.1.2 Ineffective Flow Area
11.3.1.3 Flood Insurance Study Cross Sections
11.3.1.4 Existing Floodplain Conditions
11.3.2 Manning's Roughness Coefficient
11.3.3 Starting Water Surface Elevation
11.3.4 Discharge
11.4 HEC-RAS Output ..... **11-10 to 11-11**
11.4.1 Warning Messages
11.5 Risk Assessment ..... **11-11 to 11-13**
11.6 Summary and Conclusion **11-13**

APPENDIX A: Cross Section Location Exhibits
Flood Insurance Rate Maps
Summary of Discharges
APPENDIX B: Results Summary
HEC-RAS Cross Section Input/Output
APPENDIX C: Location Hydraulic Study Form
Floodplain Encroachment Form
Planning Study
As-builts
Backup Data

SECTION 12: REFERENCES

Reference List

Coordination Matrix

CD of HEC-RAS FILES

EXECUTIVE SUMMARY

Five lagoons, five creeks, and one river were modeled for the California Department of Transportation (Caltrans) to determine the potential impacts created by the proposed widening of Interstate-5 (I-5) from Sorrento Valley to Oceanside in San Diego County. The proposed improvements will widen I-5 from an 8-lane (4 mixed flow lanes in each direction) to a 12-lane (4 mixed flow lanes and 2 high occupancy vehicle (HOV) lanes in each direction) or 14-lane facility (5 mixed flow lanes and 2 HOV lanes in each direction). Location Hydraulic Studies have been performed for Soledad Canyon, Los Penasquitos Creek, Carmel Valley Creek, San Dieguito Lagoon, San Elijo Lagoon, Batiquitos Lagoon, Agua Hedionda Lagoon, Buena Vista Lagoon, Loma Alta Creek, San Luis Rey River and a culvert analysis of Cottonwood Creek. Maximum changes to the water surface elevations (WSE) at these locations, due to the proposed widening of I-5 were determined as follows:

Soledad Canyon – A new flyover bridge for HOV traffic is proposed for the I-5 corridor crossing Soledad Canyon. The proposed bridge will connect proposed northbound and southbound HOV lanes through the I-5/ I-805 interchange. The I-5 Flyover Bridge would be built well above the WSE of the 100-year storm and include the construction of six rows of two piers per row within the floodplain of Soledad Canyon. The addition of these piers would create a backwater effect upstream of the I-5 corridor. Flood elevations would increase approximately one half of an inch and would not damage life or property beyond levels which currently exist. FEMA data was available for this segment of Soledad Canyon, located in a Zone AE floodplain.

Los Penasquitos Creek – A new flyover bridge for HOV traffic is proposed for the I-5 corridor crossing Los Penasquitos Creek. The proposed bridge will connect proposed northbound and southbound HOV lanes through the I-5/ I-805 interchange. The I-5 Flyover Bridge would be built well above the WSE of the 100-year storm and include the construction of two piers within the floodplain of Los Penasquitos Creek. The addition of these piers would have no effect on the floodplain upstream or downstream of the I-5 corridor. Flood elevations would remain at existing conditions. No damage to life or property beyond levels which currently exist would result from the proposed bridge. FEMA data was available for this segment of Soledad Canyon, located in a Zone AE floodplain.

Carmel Valley Creek – The I-5 proposed improvements at the Carmel Valley Creek crossing widen the existing bridge by approximately 6 feet on the western side and include the addition of one 18-inch pier at each of the bridge bents. As the I-5 Bridge deck and soffit remain above the 100-year floodplain, including connector ramps on both the east and west sides of the bridge, only the piers were a concern in the potential constricting of the Carmel Valley Creek. It was determined that no significant impacts to the FEMA designated Zone AE floodway would occur due to the relatively small widening. The hydraulic modeling in this reach indicates that the Sorrento Valley Road Culvert serves as the governing control for back water effects immediately downstream of the project area. The 40-foot wide and 8-foot deep triple box culvert forces the 100-year discharge to overtop the Sorrento Valley Road. In effect, the road acts as a dam or weir which regulates the passage of flow far more than the widening of I-5. In the modeling of proposed conditions, the Sorrento Valley Road Culvert was replaced by a bridge. Once the existing constriction was moved, the Carmel Valley Creek floodplain lowered in the vicinity of I-5 by 4 feet.

San Elijo Lagoon – The proposed improvement to the I-5 crossing at San Elijo Lagoon is to replace the existing bridges and widen the existing channel beneath the crossing. The proposed bridge will connect the current northbound and southbound bridges to a larger bridge between 283 to 327.5 feet wide, and a total length of 360 feet long. Pier size and configuration will remain the same, though seven additional piers will be added to each of the three rows. The widening of the channel and the lengthening of the bridge would reduce the 100-yr floodplain water surface elevations upstream in the lagoon. Flood elevations would decrease approximately 14 inches. No previous FEMA data was available for this segment of the San Elijo Lagoon, located in a Zone A floodplain.

San Dieguito Lagoon – For the I-5 North Coast Widening Project, it is proposed that the bridge crossing the San Dieguito River be replaced with a longer and wider bridge. The proposed bridge would lengthen the bridge approximately 20 feet on both ends to a total of 689 feet. The replacement bridge would also be 253 feet wide, 74 feet wider than current conditions. The I-5 Bridge currently has 10 pier walls, while the replacement bridge includes 5 rows of piers. The proposed conditions would reduce the backwater effects upstream in the floodplain due to the flatness of the channel. Flood elevations would decrease approximately 1.2 inches. No previous FEMA data was available for this segment of the San Dieguito River, located in a Zone A floodplain.

Cottonwood Creek – Cottonwood creek flows beneath the I-5 within a 10' Pipe Arch Culvert and the proposed improvements to the I-5 corridor will have no effect on the flood level anticipated during the 100-year storm. The analysis of this culvert system beneath the I-5 revealed that the water upstream of the I-5 would reach an elevation of 91.84 feet during the peak of the 100-year storm. The flood waters would be contained within the detention basin located in the southeastern quadrant of the I-5/ Encinitas Boulevard interchange and would not damage life or property beyond levels which currently exist. There is no existing floodplain, because the creek has not included in the standard FEMA floodplain documents.

Batiquitos Lagoon – The development of I-5 at its crossing with the Batiquitos Lagoon proposes that the existing bridge be replaced with a larger bridge. The proposed replacement bridge will be 62 feet wider and 14.5 feet longer at each end. Pier size would be increased by one foot in diameter, but the extended bridge allows for more floodwater conveyance. The bridge replacement would lower the floodplain around and upstream of the I-5 crossing by approximately 1 foot. It was determined that no significant impacts to the FEMA designated Zone A floodplain would occur.

Agua Hedionda Lagoon– Based on recent plan view geometry of the improvements provided by Caltrans, the I-5 Bridge over the Agua Hedionda Lagoon will be replaced with a wider and shorter bridge. The proposed bridge will be shorter by approximately 10 feet on each side. The existing berms will be extended to account for the shorter bridge. The pier configurations will also be restructured. The I-5 Bridge currently has 6 rows of piers, while the bridge replacement includes 2 rows of piers. The proposed conditions would create increased backwater effects upstream in the inner lagoon, due to the flat channel bottom slope. Flood elevations would increase less than 1 inch and would not damage life or property beyond levels which currently exist. No previous FEMA data was available for this segment of the Agua Hedionda Lagoon, located in a Zone A floodplain.

Buena Vista Lagoon – The I-5 proposed improvements at the Buena Vista Lagoon crossing include replacement of the existing bridge and repositioning of the two rows of piers. The longer bridge will allow for the Buena Vista Lagoon to better handle the 100 year flood. The bridge replacement would lower the floodplain upstream of the I-5 crossing approximately 6 inches. It was determined that no significant impacts to the FEMA designated Zone A floodplain would occur.

Loma Alta Creek – The development of I-5 at its crossing with the Loma Alta Creek proposes that the existing bridge be widened by approximately 30 feet on each side. Upstream of I-5, the main creek flows through a concrete channel while the rest flows through a commercial district. Downstream of I-5 the floodplain lies between two concrete channels which travel through the Cavalier Mobile Estates. The bridge widening would raise the floodplain around the I-5 crossing by 0.6 inches and would taper down to the existing FEMA floodplain. It was determined that no significant impacts to the FEMA designated Zone AE floodway would occur.

San Luis Rey River – Based on recent plan view geometry of the improvements provided by Caltrans, the I-5 Bridge over the San Luis Rey River will be widened to the east. The existing pier walls would be extended into the floodplain without a noticeable effect upstream. Flood elevations would change less than 0.4 inches and would not damage life or property beyond levels which currently exist. No previous FEMA data was available for this segment of the San Luis Rey River, located in a Zone A99 floodplain.

INTRODUCTION

Interstate 5, as it runs north and south through San Diego County, closely parallels the coast of the Pacific Ocean. Due to its proximity to the ocean, several waterways cross I-5 necessitating the many bridges up and down the interstate. Lagoons, creeks and rivers containing marshes, wetlands, sensitive habitats and outdoor recreation will be affected by the proposed improvements. It is the intent of this document to establish existing and proposed floodplain conditions to determine the compatibility of potentially sensitive lagoons and the future improvements to I-5.

PROJECT LOCATION:

From south to north these floodplains intersect I-5 in the following areas:

Sorrento Valley in the City of San Diego – Soledad Canyon
Sorrento Valley in the City of San Diego – Los Penasquitos Creek
City of San Diego – Carmel Valley Creek
City of Del Mar – San Dieguito Lagoon
Cardiff-by-the-Sea and City of Solana Beach – San Elijo Lagoon
City of Encinitas – Cottonwood Creek
City of Encinitas and City of Carlsbad – Batiquitos Lagoon
City of Carlsbad– Agua Hedionda Lagoon
City of Carlsbad and City of Oceanside – Buena Vista Lagoon
City of Oceanside – Loma Alta Creek
City of Oceanside – San Luis Rey River

DESCRIPTION OF SAN DIEGO WATERSHEDS:

Four major watersheds pass though the project limits: San Luis Rey, Carlsbad, San Dieguito and Penasquitos, totaling a cumulative area of 1214 square miles. The San Diego watersheds support a variety of water supply, economic, recreational, and habitat-related beneficial uses and contain several important natural areas that sustain a number of threatened and endangered species. To the west, the basins are highly urbanized containing some impaired water bodies on the California 303(d) list, while the eastern portions tend to be more undeveloped, open space or agricultural land.

REPORT FORMAT:

This document is the product of ten separate floodplain studies and one culvert analysis report. The introduction has been written to provide the general information and background for the more technical analyses included in sections 1, 2, 3, 4, 5, 6, 7, 8, 9, 10, and 11. The appendices include backup data to support the findings and conclusions presented in the following sections.

FEMA COORDINATION:

FEMA backup data was requested for the Zone AE floodplains to be used to recreate a duplicate effective model. The FEMA Project Library at the Michael Baker Corporation was only able to deliver HEC-2 output printouts. Attempts were made to salvage the HEC-2 data and match it up to FIRM cross sections, recent topography and the HEC-2 stations, elevations and reach lengths. It was determined that some models could not be regenerated with reasonable certainty. Upon further coordination with FEMA approval was given to recreate the existing models from current up to date information. Each section contains a narrative regarding FEMA data and Appendix C contains a record of conversation documenting missing backup data.

APPENDIX 'A'

Cross Section Locations Exhibits

Flood Insurance Rate Map (FIRM)

Flood Insurance Study (FIS)

Summary of Discharges

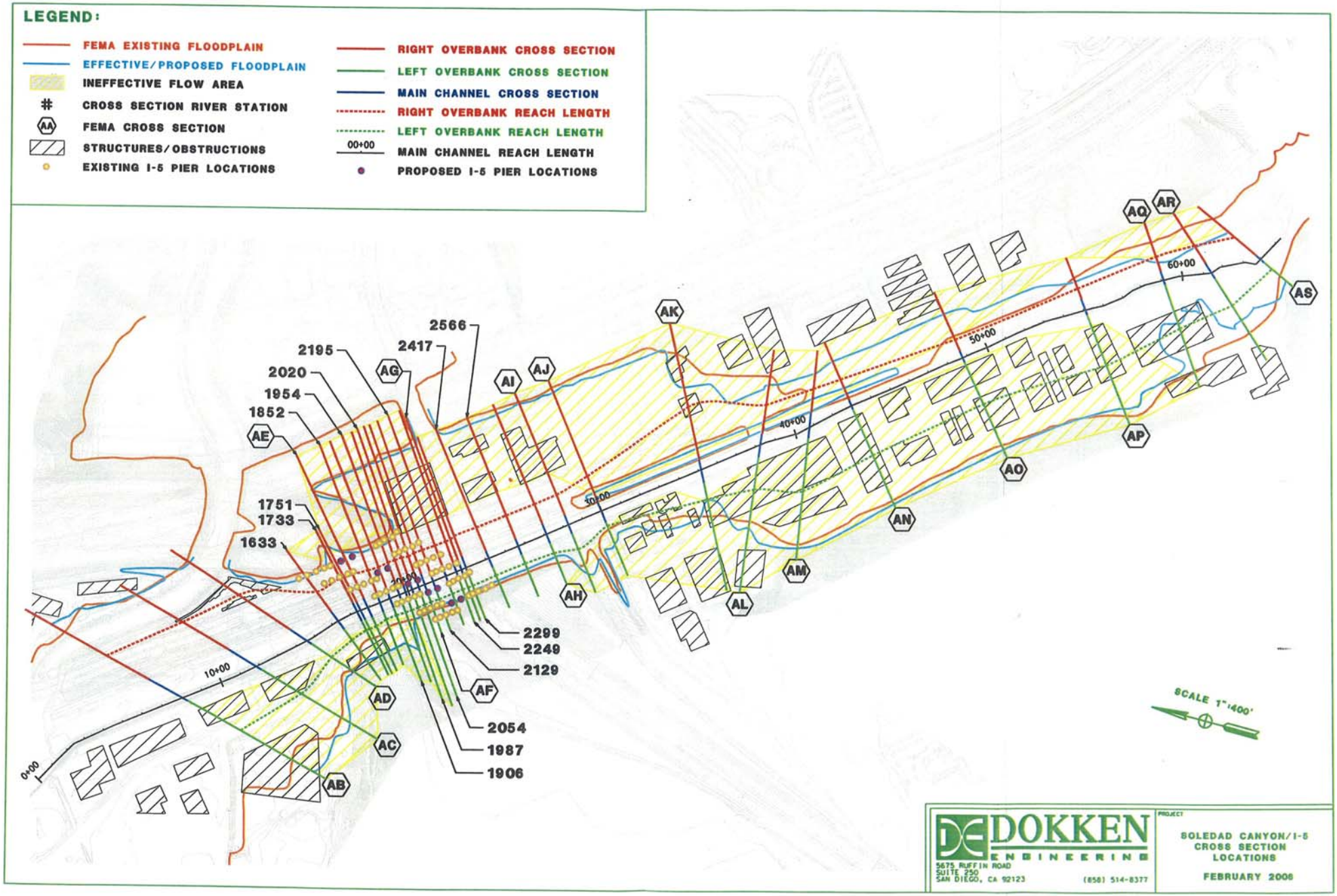
LEGEND:
FEMA EXISTING FLOODPLAIN
EFFECTIVE/PROPOSED FLOODPLAIN
INEFFECTIVE FLOW AREA
CROSS SECTION RIVER STATION
AA FEMA CROSS SECTION
STRUCTURES/OBSTRUCTIONS
EXISTING I-5 PIER LOCATIONS
RIGHT OVERBANK CROSS SECTION
LEFT OVERBANK CROSS SECTION
MAIN CHANNEL CROSS SECTION
RIGHT OVERBANK REACH LENGTH
LEFT OVERBANK REACH LENGTH
00+00 MAIN CHANNEL REACH LENGTH
PROPOSED I-5 PIER LOCATIONS
0+00
10+00
20+00
30+00
40+00
50+00
60+00
AB
AC
AD
AE
AF
AG
AH
AI
AJ
AK
AL
AM
AN
AO
AP
AQ
AR
AS
1633
1733
1751
1852
1954
2020
2195
2417
2566
2129
2249
2299
1906
1987
2054
SCALE 1"=400'
DOKKEN ENGINEERING
5675 RUFFIN ROAD
SUITE 250
SAN DIEGO, CA 92123
(858) 514-8377
PROJECT
SOLEDAD CANYON/I-5
CROSS SECTION
LOCATIONS
FEBRUARY 2006

LEGEND:

- FEMA EXISTING FLOODPLAIN
- EFFECTIVE/PROPOSED FLOODPLAIN
- INEFFECTIVE FLOW AREA
- # CROSS SECTION RIVER STATION
- (AA) FEMA CROSS SECTION
- STRUCTURES/OBSTRUCTIONS
- EXISTING I-5 PIER LOCATIONS
- RIGHT OVERBANK CROSS SECTION
- LEFT OVERBANK CROSS SECTION
- MAIN CHANNEL CROSS SECTION
- RIGHT OVERBANK REACH LENGTH
- LEFT OVERBANK REACH LENGTH
- 00+00 MAIN CHANNEL REACH LENGTH
- PROPOSED I-5 PIER LOCATIONS

DOKKEN ENGINEERING
5675 RUFFIN ROAD
SUITE 250
SAN DIEGO, CA 92123
(858) 514-8377

PROJECT

SOLEDAD CANYON/I-5
CROSS SECTION
LOCATIONS

FEBRUARY 2006

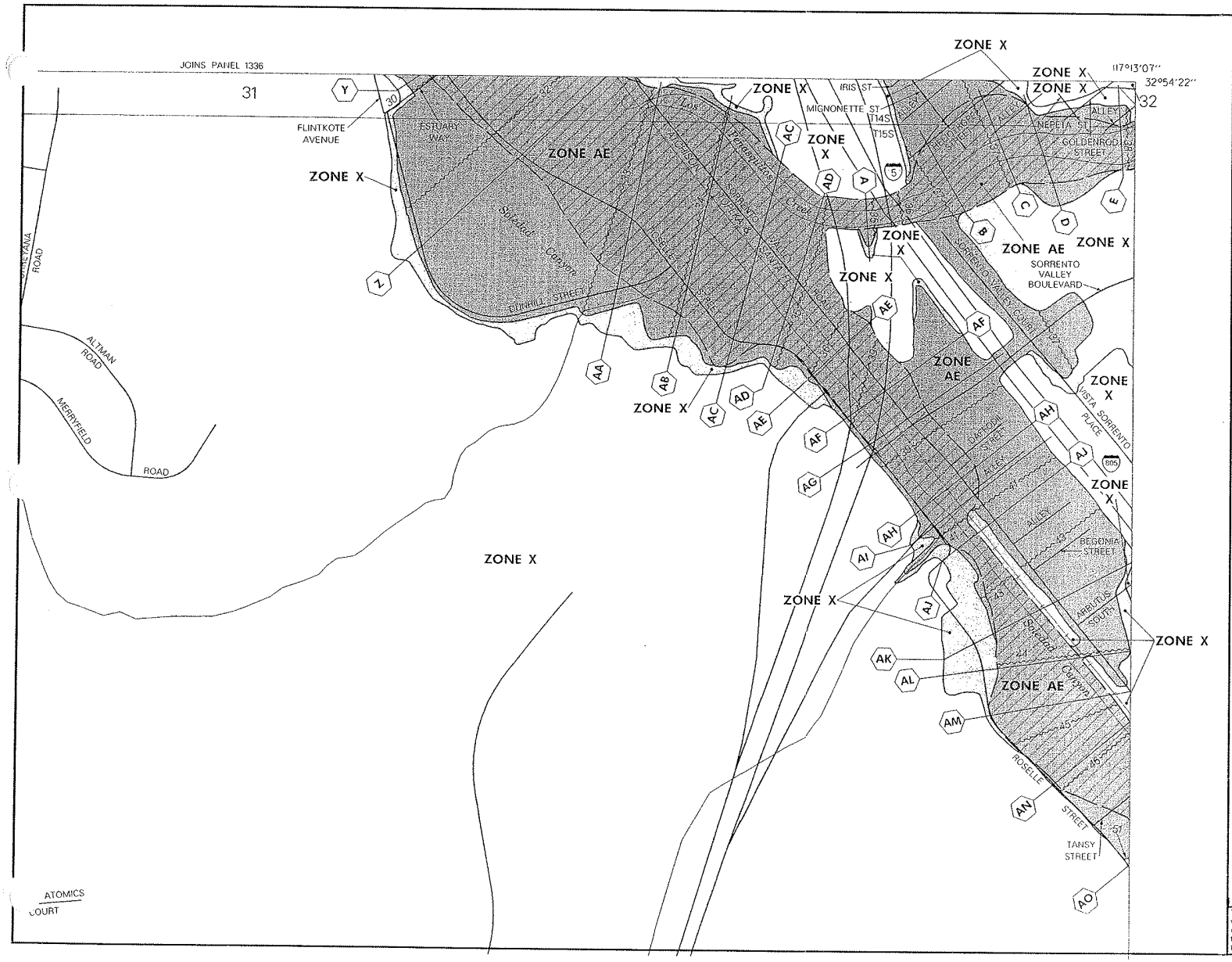

APPROXIMATE SCALE IN FEET

500 0 500

NATIONAL FLOOD INSURANCE PROGRAM

FIRM

FLOOD INSURANCE RATE MAP

SAN DIEGO COUNTY, CALIFORNIA AND INCORPORATED AREAS

PANEL 1338 OF 2375

(SEE MAP INDEX FOR PANELS NOT PRINTED)

COMMUNITY NUMBER PANEL SUFFIX

SAN DIEGO COUNTY, UNINCORPORATED AREAS 060284 1338 F

MAP NUMBER
06073C1338 F

EFFECTIVE DATE:
JUNE 19, 1997

Federal Emergency Management Agency

This is an official copy of a portion of the above referenced flood map. It was extracted using F-MIT On-Line. This map does not reflect changes or amendments which may have been made subsequent to the date on the title block. For the latest product information about National Flood Insurance Program flood maps check the FEMA Flood Map Store at www.msc.fema.gov

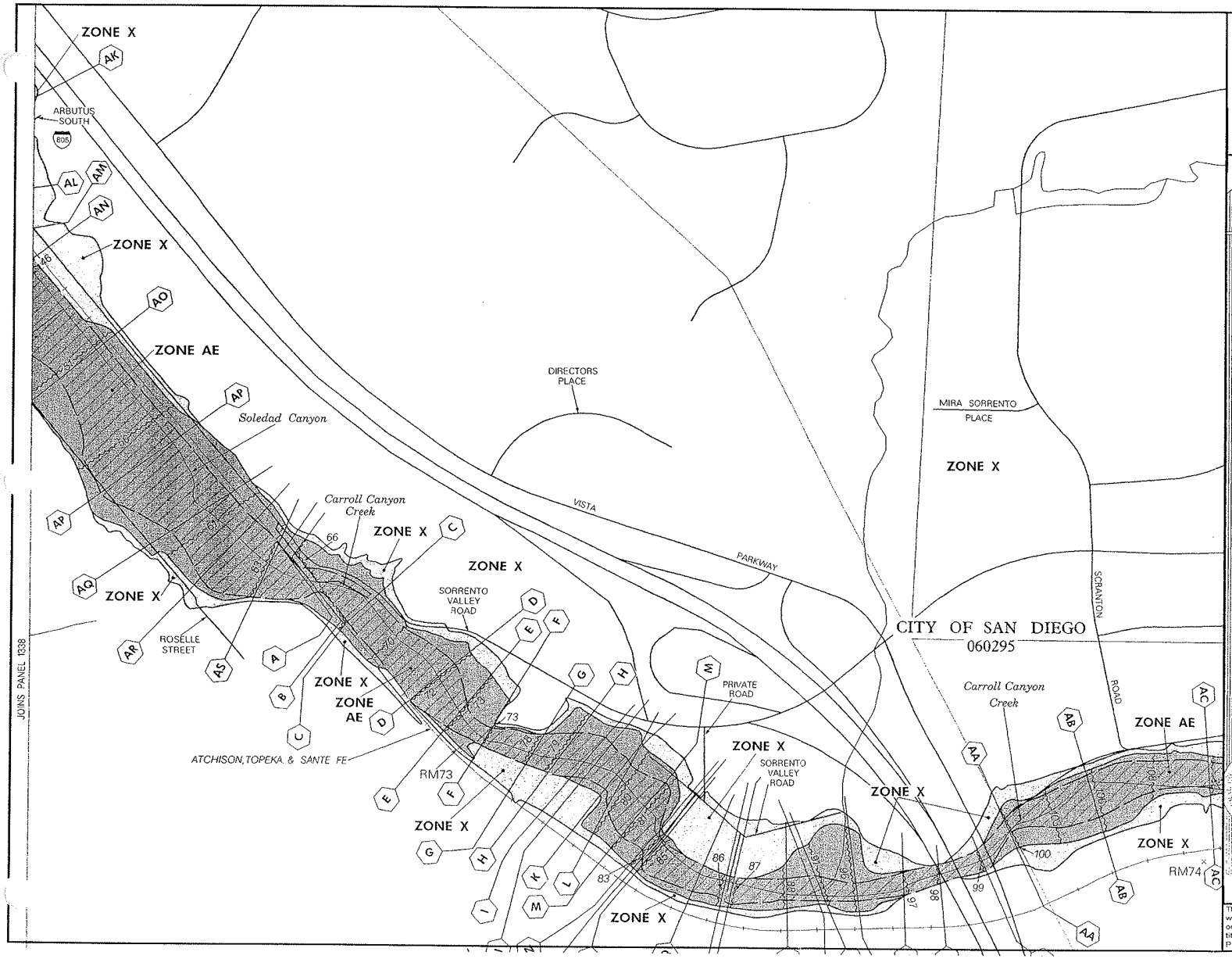

APPROXIMATE SCALE IN FEET

500 0 500

NATIONAL FLOOD INSURANCE PROGRAM

FIRM

FLOOD INSURANCE RATE MAP

SAN DIEGO COUNTY, CALIFORNIA AND INCORPORATED AREAS

PANEL 1339 OF 2375

(SEE MAP INDEX FOR PANELS NOT PRINTED)

CONTAINS COMMUNITY	NUMBER	PANEL	SUFFIX
SAN DIEGO, CITY OF	060295	1339	F

MAP NUMBER
06073C1339 F

EFFECTIVE DATE:
JUNE 19, 1997

Federal Emergency Management Agency

This is an official copy of a portion of the above referenced flood map. It was extracted using F-MIT On-Line. This map does not reflect changes or amendments which may have been made subsequent to the date on the title block. For the latest product information about National Flood Insurance Program flood maps check the FEMA Flood Map Store at www.msc.fema.gov

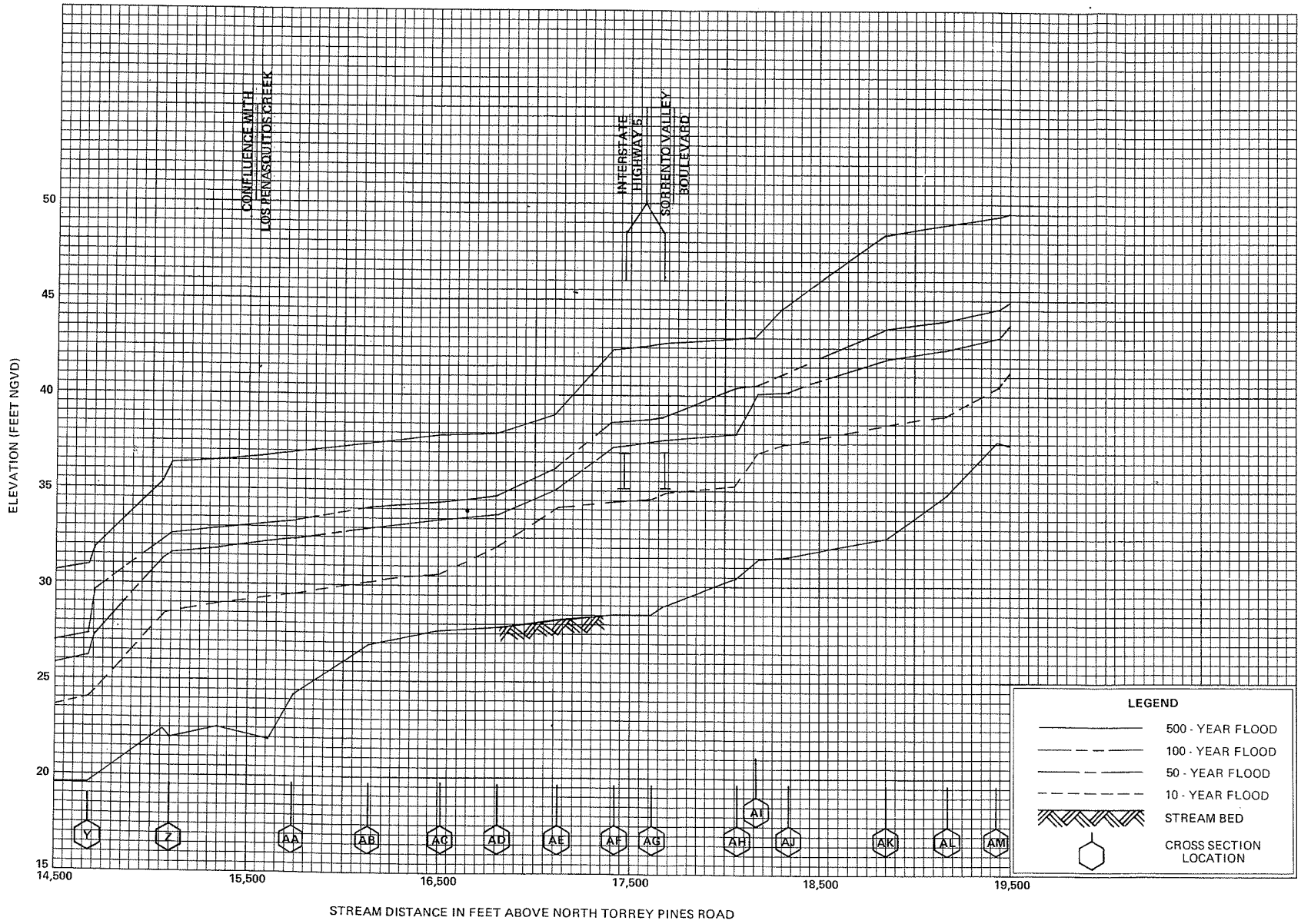

FLOOD PROFILES

SOLEDAD CANYON

FEDERAL EMERGENCY MANAGEMENT AGENCY

SAN DIEGO COUNTY, CA AND INCORPORATED AREAS

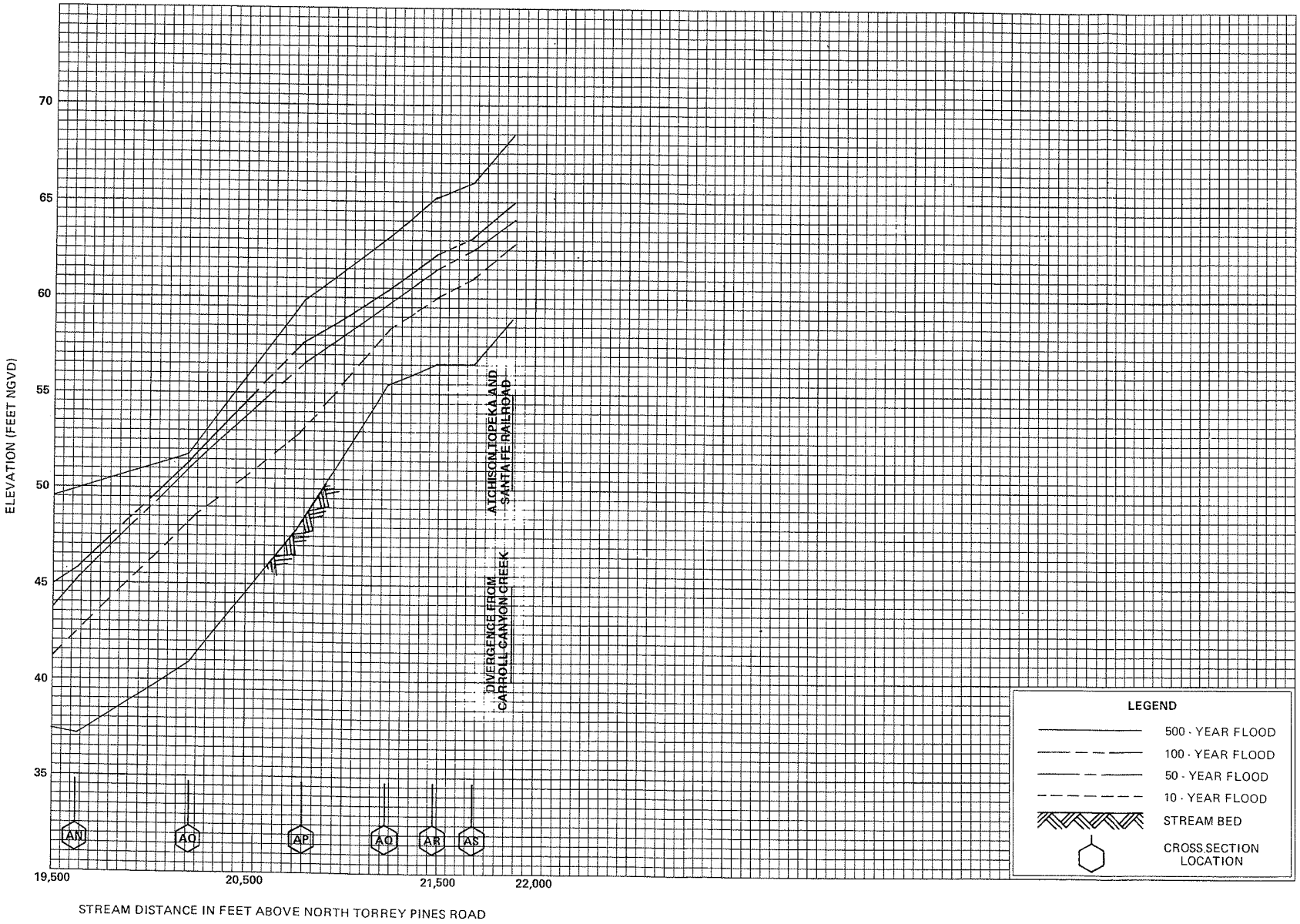

FLOOD PROFILES

SOLEDAD CANYON

FEDERAL EMERGENCY MANAGEMENT AGENCY

SAN DIEGO COUNTY, CA
AND INCORPORATED AREAS

425P

FLOODING SOURCE		FLOODWAY			BASE FLOOD WATER SURFACE ELEVATION			
CROSS SECTION	DISTANCE[1]	WIDTH (FEET)	SECTION AREA (SQUARE FEET)	MEAN VELOCITY (FEET PER SECOND)	REGULATORY	WITHOUT FLOODWAY (FEET NGVD)	WITH FLOODWAY (FEET NGVD)	INCREASE
Soledad Canyon (Cont'd)								
AA	15,740	1,033	5,383	3.6	33.4	33.4	34.1	0.7
AB	16,140	1,075	6,622	2.9	34.1	34.1	34.6	0.5
AC	16,520	1,163	6,695	2.9	34.4	34.4	34.9	0.5
AD	16,810	789	4,278	4.6	34.7	34.7	35.1	0.4
AE	17,120	386	1,784	10.9	36.2	36.2	36.2	0.0
AF	17,420	373	2,273	2.9	38.7	38.7	39.1	0.4
AG	17,620	362	1,379	4.9	38.7	38.7	39.1	0.4
AH	18,060	352	1,813	3.7	40.5	40.5	40.5	0.0
AI	18,160	296	1,475	4.5	40.5	40.5	40.5	0.0
AJ	18,340	146	644	10.4	40.5	40.5	40.5	0.0
AK	18,850	310	1,324	5.1	43.5	43.5	43.5	0.0
AL	19,177	478	1,707	3.9	44.0	44.0	44.0	0.0
AM	19,427	656	2,247	3.0	44.6	44.6	44.6	0.0
AN	19,630	553	1,204	5.6	45.7	45.7	45.7	0.0
AO	20,220	335	1,005	6.7	51.0	51.0	51.0	0.0
AP	20,805	556	1,196	5.6	57.7	57.7	57.7	0.0
AQ	21,230	354	1,008	6.6	60.2	60.2	60.2	0.0
AR	21,480	421	1,495	4.5	62.3	62.3	62.3	0.0
AS	21,690	286	1,074	6.2	63.2	63.2	63.2	0.0

[1]Feet Above North Torrey Pines Road

TABLE 8

FEDERAL EMERGENCY MANAGEMENT AGENCY

SAN DIEGO COUNTY, CA
AND INCORPORATED AREAS

FLOODWAY DATA

SOLEDAD CANYON

Table 4. Summary of Discharges (Cont'd)

Flooding Source and Location	Drainage Area (Square Miles)	Peak Discharges (cfs) 10-Year	50-Year	100-Year	500-Year
Buena Vista Creek Tributary 1					
At Confluence with Buena Vista Creek	2.6	460	1,180	1,510	2,020
At Intersection of Monte Vista Drive and Santa Fe Avenue	1.7	320	800	1,010	1,350
At Intersection of Monte Vista and Valley Drives	1.0	210	510	630	840
Buena Vista Creek Tributary 2					
At Confluence with Buena Vista Creek	0.8	110	410	530	700
At Intersection of Eucalyptus Avenue and Tiger Tail Road	0.5	110	280	360	480
Buena Vista Creek Tributary 3					
At Confluence with Buena Vista Creek	1.5	350	760	950	1,240
Approximately 1,000 feet Upstream of North Santa Fe Avenue	0.5	130	280	350	460
Buena Vista Creek Tributary 4					
At Confluence with Buena Vista Creek	2.5	570	1,210	1,450	1,860
Calavera Creek					
Upstream of Rancho Carlsbad Mobile Home Park	4.5	--[1]	--[1]	1,350	--[1]
Confluence with Agua Hedionda Creek	5.9	--[1]	--[1]	1,740	--[1]
Carmel Valley Creek					
Above Confluence with Soledad Canyon	15.7	2,100	6,500	9,800	21,300
Below Confluence with Shaw Valley Creek	11.0	1,400	4,200	6,300	13,700
Carroll Canyon Creek					
At Atchison, Topeka & Santa Fe Railway	17.8	1,500	4,500	6,700	18,700
At Interstate Highway 805	15.0	1,300	3,800	5,600	15,700
At Carroll Canyon Road	12.0	1,000	3,000	4,500	12,500
Coleman Creek					
Approximately 1,800 Feet Downstream of Highway 78	8.1	--[1]	--[1]	8,750	--[1]

[1]Data Not Available

Table 4. Summary of Discharges (Cont'd)

Flooding Source and Location	Drainage Area (Square Miles)	Peak Discharges (cfs) 10-Year	50-Year	100-Year	500-Year
Shallow Flooding Area - North					
Midway Wash at Midway Drive Crossing of Escondido Creek	2.0	350	1,060	1,520	2,020
Lincoln Avenue and Midway Drive	1.7	290	920	1,310	1,750
Maywood Wash at Intersection of East Lincoln Avenue and Nightingale Place	1.3	230	720	1,020	1,350
Shallow Flooding Area - West					
Country Club Creek at El Norte Parkway, 1,100 Feet Northwest of Bennett Avenue	2.1	540	1,330	1,700	2,220
Country Club Creek at Nutmeg Street, 1,200 Feet North of Golden Circle Drive	0.3	70	200	260	350
Unnamed Tributary at Intersection of Golden Circle Drive and Country Club Lane	0.9	240	590	770	990
Slaughterhouse Creek					
Approximately 1,800 Feet Upstream of Mouth	2.9	--[1]	--[1]	2,450	--[1]
Soledad Canyon					
At Mouth	95.5	5,000	15,400	23,000	51,500
Downstream of Confluence with Los Penasquitos Creek	76.1	4,200	13,100	19,000	43,700
South Branch Poway Creek					
Approximately 1,150 Feet Upstream of Sycamore Canyon Road	1.8	400	1,200	1,800	4,300
South Fork Moosa Canyon Creek					
0.3 Mile Above Mouth	7.1	1,200[2]	3,400	5,200[2]	10,400
At Oak Shadows Drive	4.3	700	2,100	3,200	6,500

[1]Data Not Available
[2]Flow Partially Controlled by Turner Dam

APPENDIX 'B'

Results Summary

HEC-RAS Cross Section Input/Output

Existing

Proposed

EXISTING

HEC-RAS Plan: 100yr_Exist River: CarrollCanyon Reach: Lower Profile: 100-yr

Reach	River Sta	Profile	Q Total	Min Ch El	W.S. Elev	Crit W.S.	E.G. Elev	E.G. Slope	Vel Chnl	Flow Area	Top Width	Froude # Chl
			(cfs)	(ft)	(ft)	(ft)	(ft)	(ft/ft)	(ft/s)	(sq ft)	(ft)	
Lower	6394	100-yr	6700.00	48.00	60.31	57.69	60.66	0.002715	5.90	1551.49	383.80	0.32
Lower	6138	100-yr	6700.00	46.00	59.77	56.96	60.07	0.002116	5.16	1753.11	439.01	0.29
Lower	5908	100-yr	6700.00	46.00	58.74	56.92	59.35	0.004268	7.05	1176.84	281.50	0.40
Lower	5508	100-yr	6700.00	44.00	56.35	54.21	57.23	0.006652	8.12	1027.70	380.98	0.50
Lower	4876	100-yr	6700.00	36.11	52.46	48.48	53.55	0.005099	8.67	844.58	395.60	0.45
Lower	4298	100-yr	6700.00	36.00	47.50	46.59	49.45	0.010008	12.32	688.35	354.46	0.73
Lower	4075	100-yr	6700.00	36.00	44.56	44.30	46.50	0.017509	11.19	611.66	404.03	0.90
Lower	3824	100-yr	6700.00	36.00	44.25	42.18	45.32	0.001530	8.37	880.49	441.36	0.56
Lower	3514	100-yr	6700.00	36.00	42.60	42.31	44.52	0.003916	11.23	682.78	410.51	0.86
Lower	2999	100-yr	6700.00	34.00	40.82	40.21	42.59	0.003428	10.73	681.01	749.92	0.80
Lower	2827	100-yr	6700.00	32.00	41.65	37.65	41.96	0.000534	5.52	2495.51	736.92	0.34
Lower	2712	100-yr	6700.00	32.00	41.51	37.21	41.91	0.000258	5.94	2494.78	479.83	0.37
Lower	2568	100-yr	6700.00	32.00	41.36	37.82	41.86	0.000289	6.69	2455.76	452.64	0.39
Lower	2417	100-yr	6700.00	30.00	41.33	37.43	41.83	0.000219	6.33	2382.11	473.19	0.35
Lower	2353 Sorrento Valley		Bridge									
Lower	2299	100-yr	6700.00	30.00	40.92	37.76	41.48	0.000386	6.58	1972.70	513.97	0.39
Lower	2275	100-yr	6700.00	30.00	40.87	37.52	41.46	0.000414	7.02	2052.72	475.63	0.38
Lower	2249	100-yr	6700.00	30.00	40.90	37.40	41.44	0.000376	6.73	2184.71	474.85	0.37
Lower	2195	100-yr	6700.00	30.00	40.95	37.01	41.39	0.000321	6.25	2370.18	468.37	0.34
Lower	2129	100-yr	6700.00	30.00	40.94	36.68	41.36	0.000234	5.89	2435.01	464.33	0.33
Lower	2086	100-yr	6700.00	30.00	40.98	36.34	41.34	0.000175	5.45	2681.73	469.44	0.31
Lower	2054	100-yr	6700.00	30.00	40.95	36.84	41.33	0.000265	5.98	2681.37	722.11	0.32
Lower	2020	100-yr	6700.00	30.00	40.94	36.75	41.32	0.000267	6.00	2663.18	645.33	0.33
Lower	1987	100-yr	6700.00	30.00	40.92	36.82	41.31	0.000272	6.05	2619.32	599.26	0.33
Lower	1954	100-yr	6700.00	30.00	40.99	36.64	41.27	0.000222	5.24	2627.32	718.74	0.29
Lower	1906	100-yr	6700.00	30.00	40.98	36.40	41.26	0.000156	5.16	2785.31	624.75	0.28
Lower	1852	100-yr	6700.00	28.00	40.95	35.45	41.25	0.000147	5.02	2633.16	580.10	0.26
Lower	1788	100-yr	19500.00	28.00	39.86	38.14	41.09	0.005032	10.87	2619.03	442.00	0.60
Lower	1751	100-yr	19500.00	28.00	39.67	38.11	40.89	0.005075	11.02	2653.48	497.42	0.60
Lower	1743 NCTD Pedestrian		Bridge									
Lower	1733	100-yr	19500.00	28.00	39.50	37.55	40.49	0.005990	9.56	2658.81	492.94	0.53
Lower	1633	100-yr	19500.00	28.00	37.60	37.04	39.37	0.016587	12.41	1971.80	434.22	0.78
Lower	1458	100-yr	19500.00	26.00	37.56	33.05	37.79	0.001641	3.77	5180.19	864.98	0.24
Lower	1185	100-yr	19500.00	26.00	37.08	32.61	37.31	0.001697	3.54	5155.96	1056.53	0.24
Lower	803	100-yr	19500.00	24.00	36.30	31.43	36.56	0.002187	4.56	4899.37	1061.22	0.28

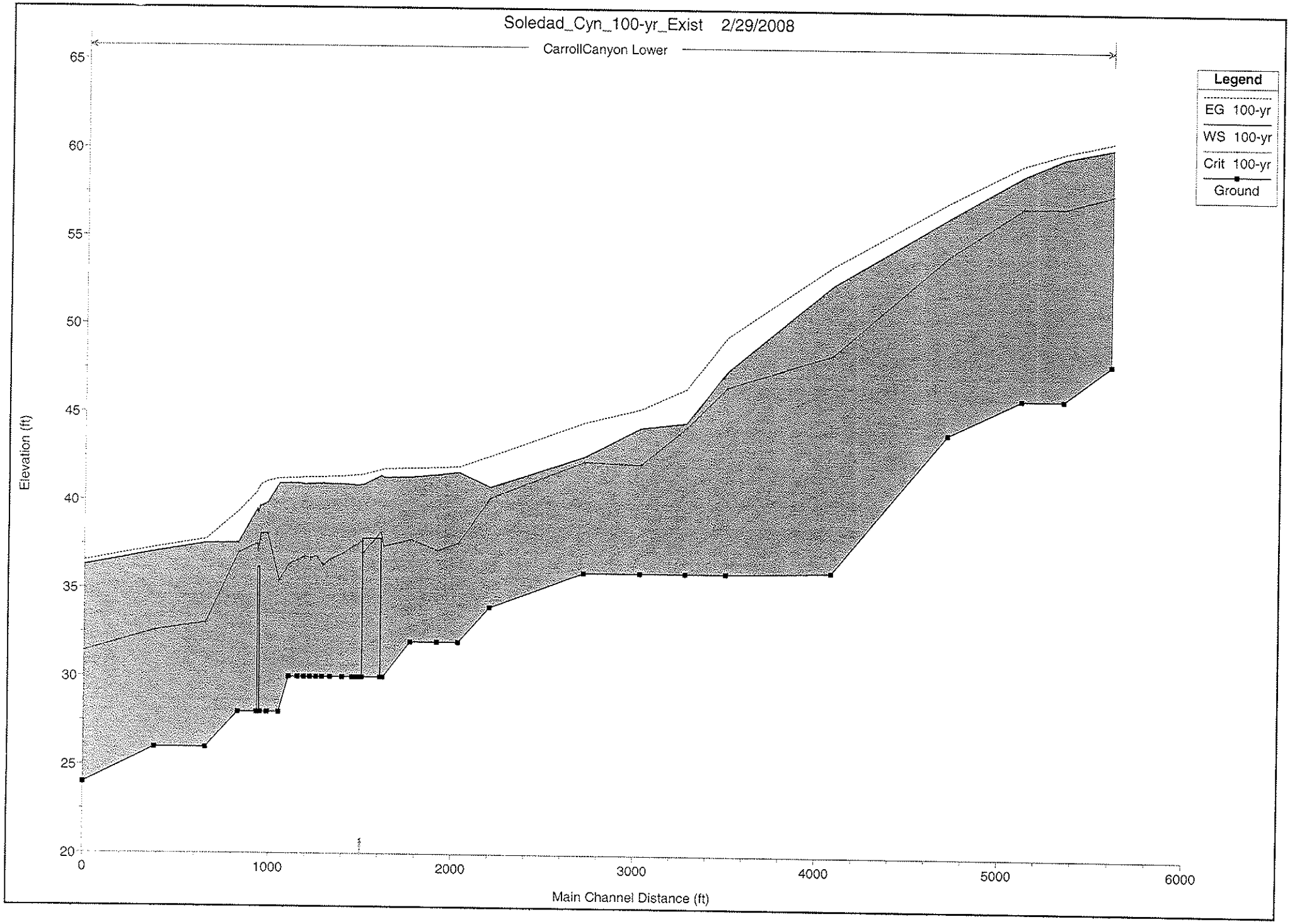
Soledad_Cyn_100-yr_Exist 2/29/2008
CarrollCanyon Lower
Legend
EG 100-yr
WS 100-yr
Crit 100-yr
Ground
Elevation (ft)
65
60
55
50
45
40
35
30
25
20
0
1000
2000
3000
4000
5000
6000
Main Channel Distance (ft)

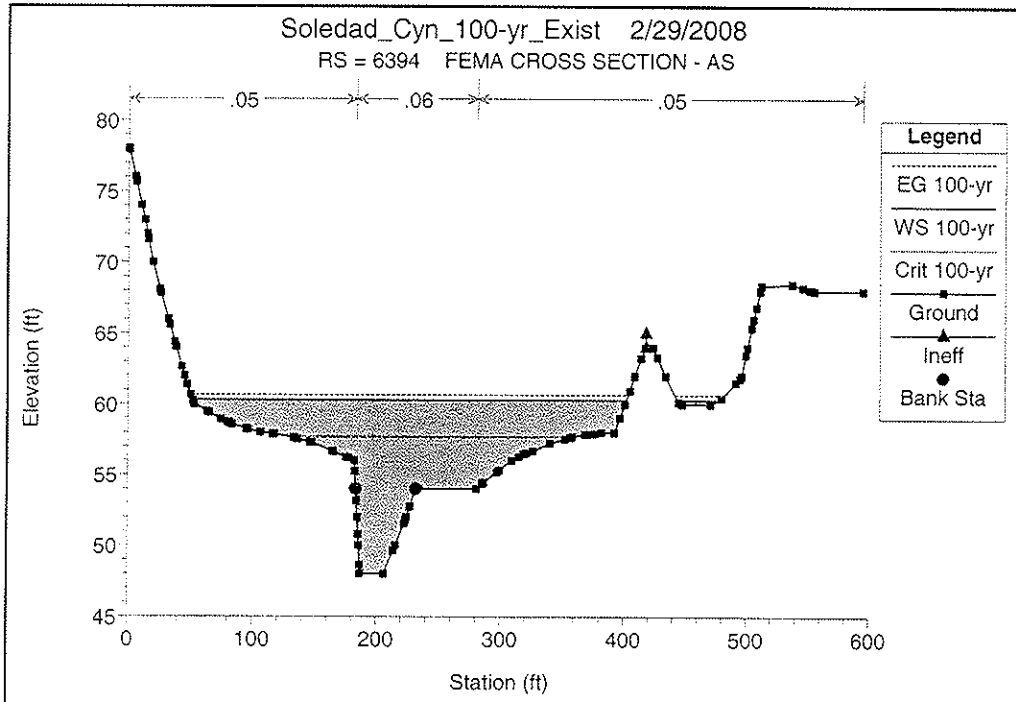
Soledad_Cyn_100-yr_Exist 2/29/2008
RS = 6394 FEMA CROSS SECTION - AS
.05
.06
.05
Legend
EG 100-yr
WS 100-yr
Crit 100-yr
Ground
Ineff
Bank Sta
Elevation (ft)
Station (ft)

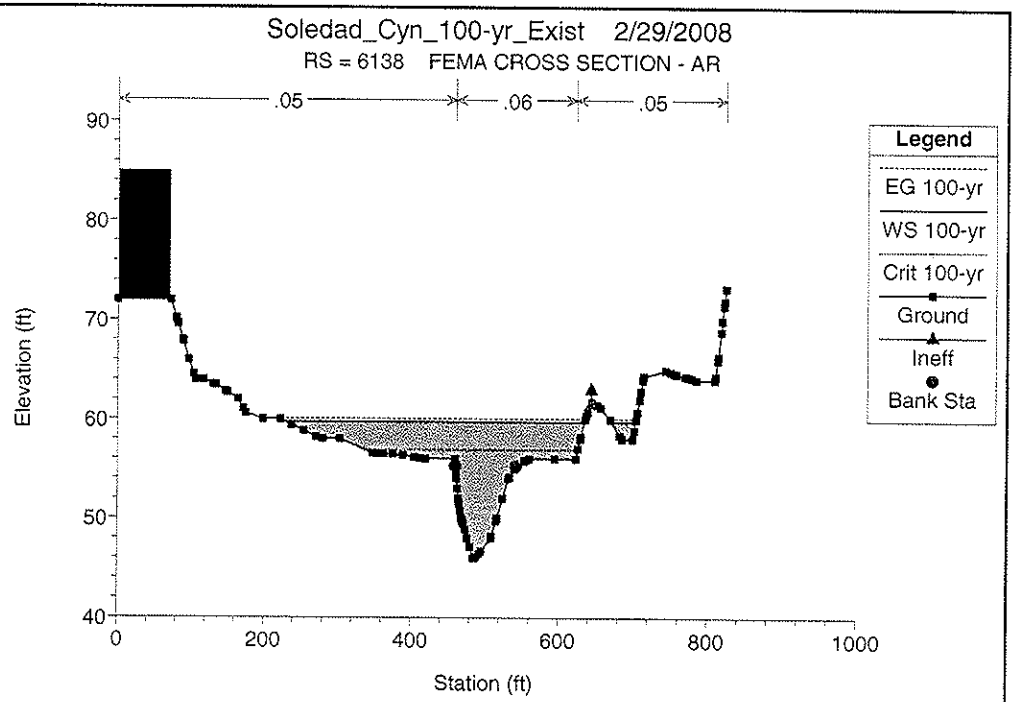
Soledad_Cyn_100-yr_Exist 2/29/2008
RS = 6138 FEMA CROSS SECTION - AR
.05
.06
.05
Legend
EG 100-yr
WS 100-yr
Crit 100-yr
Ground
Ineff
Bank Sta
Elevation (ft)
Station (ft)

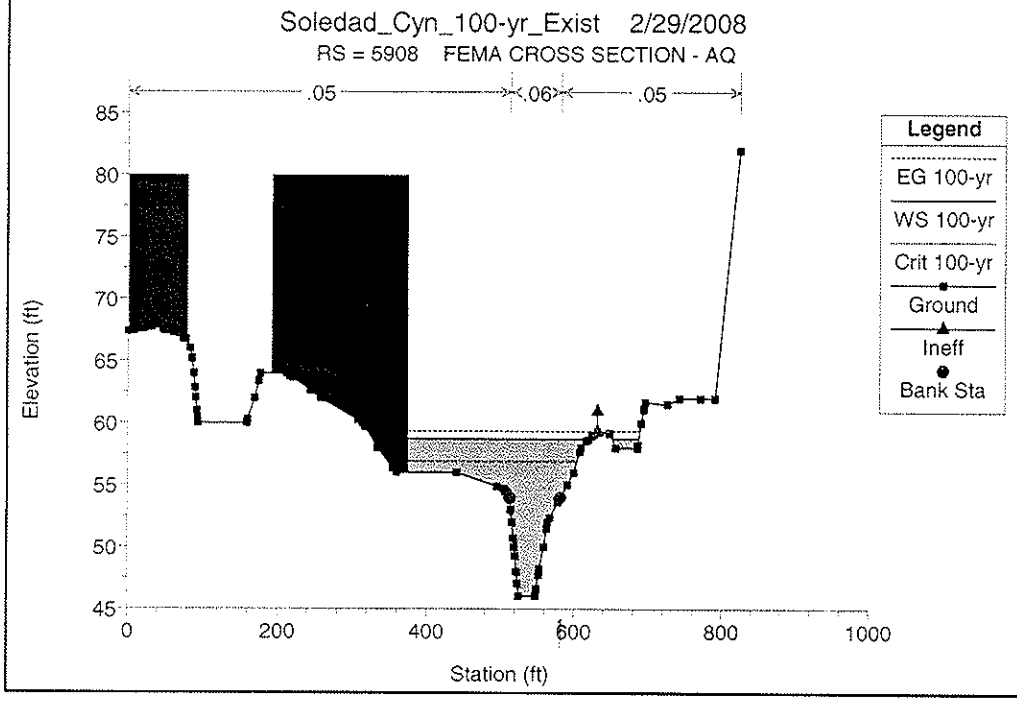
Soledad_Cyn_100-yr_Exist 2/29/2008
RS = 5908 FEMA CROSS SECTION - AQ
.05
.06
.05
Legend
EG 100-yr
WS 100-yr
Crit 100-yr
Ground
Ineff
Bank Sta
Elevation (ft)
Station (ft)

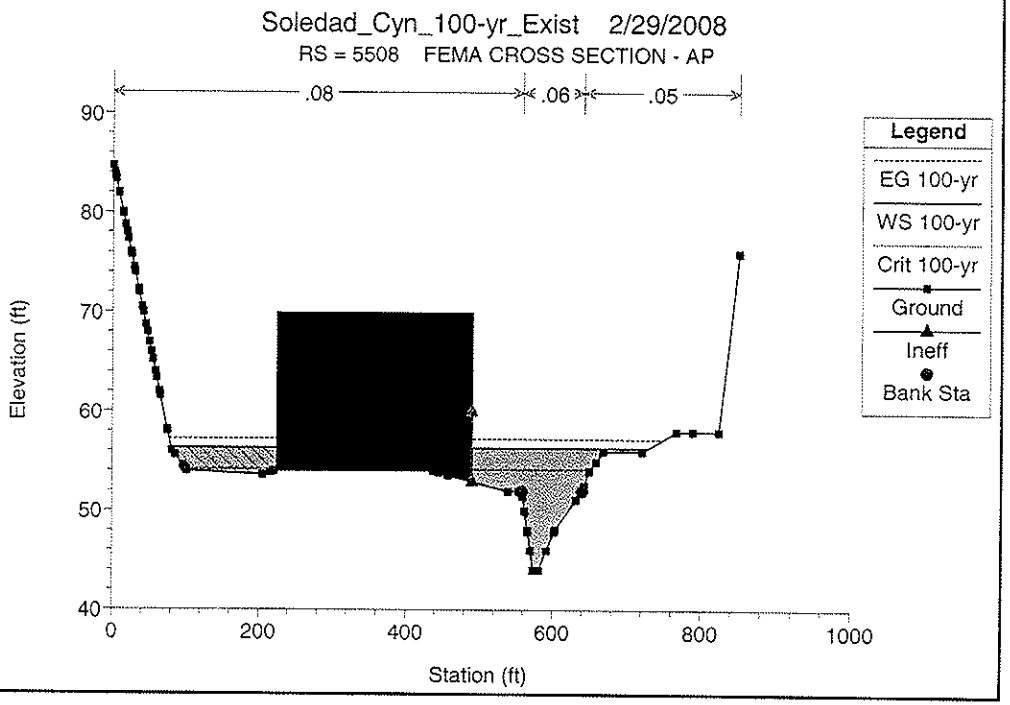
Soledad_Cyn_100-yr_Exist 2/29/2008
RS = 5508 FEMA CROSS SECTION - AP
.08
.06
.05
Legend
EG 100-yr
WS 100-yr
Crit 100-yr
Ground
Ineff
Bank Sta
Elevation (ft)
Station (ft)

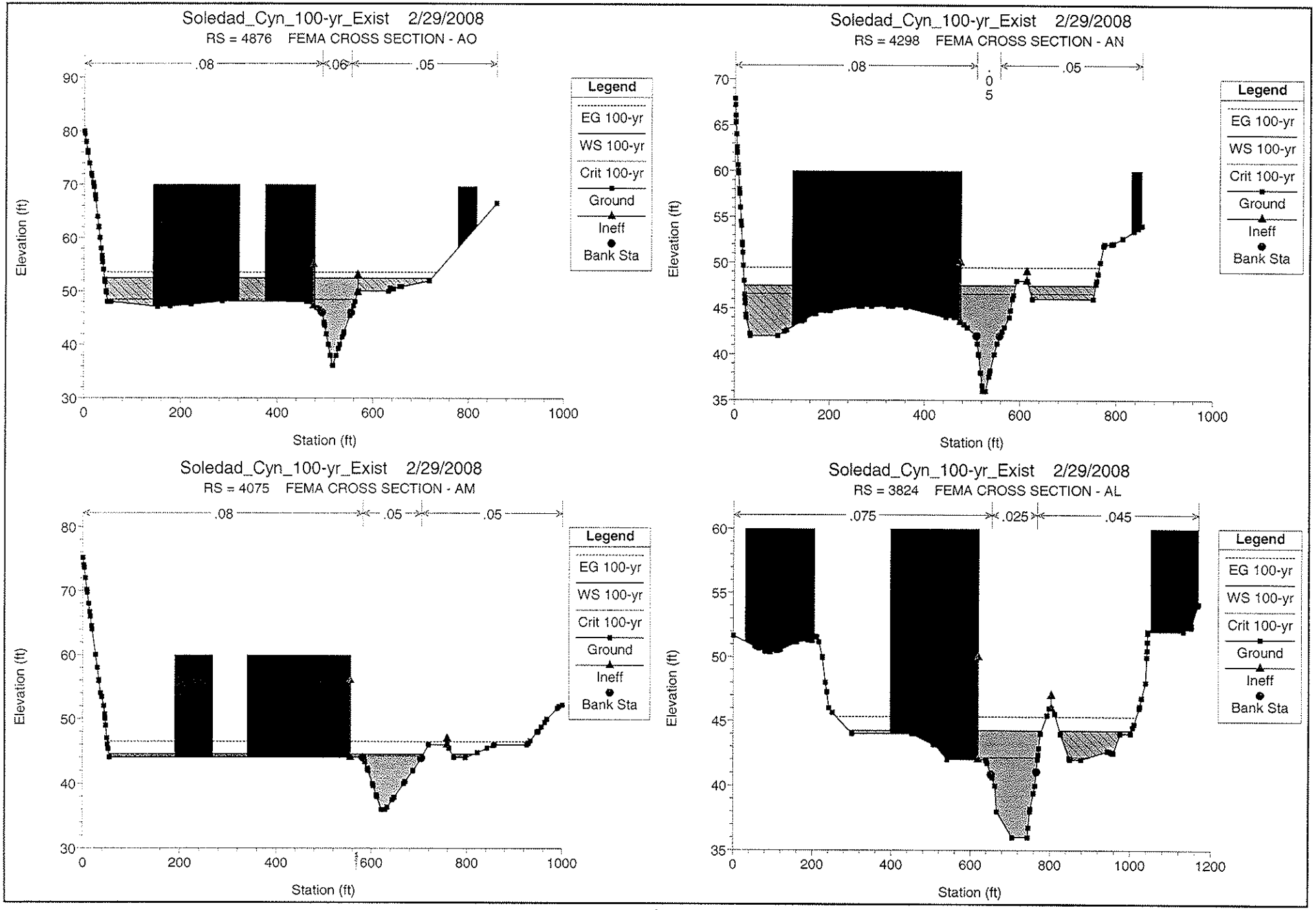
Soledad_Cyn_100-yr_Exist 2/29/2008
RS = 4876 FEMA CROSS SECTION - AO
.08
.06
.05
Legend
EG 100-yr
WS 100-yr
Crit 100-yr
Ground
Ineff
Bank Sta
Elevation (ft)
Station (ft)
Soledad_Cyn_100-yr_Exist 2/29/2008
RS = 4298 FEMA CROSS SECTION - AN
.08
.05
Legend
EG 100-yr
WS 100-yr
Crit 100-yr
Ground
Ineff
Bank Sta
Elevation (ft)
Station (ft)
Soledad_Cyn_100-yr_Exist 2/29/2008
RS = 4075 FEMA CROSS SECTION - AM
.08
.05
.05
Legend
EG 100-yr
WS 100-yr
Crit 100-yr
Ground
Ineff
Bank Sta
Elevation (ft)
Station (ft)
Soledad_Cyn_100-yr_Exist 2/29/2008
RS = 3824 FEMA CROSS SECTION - AL
.075
.025
.045
Legend
EG 100-yr
WS 100-yr
Crit 100-yr
Ground
Ineff
Bank Sta
Elevation (ft)
Station (ft)

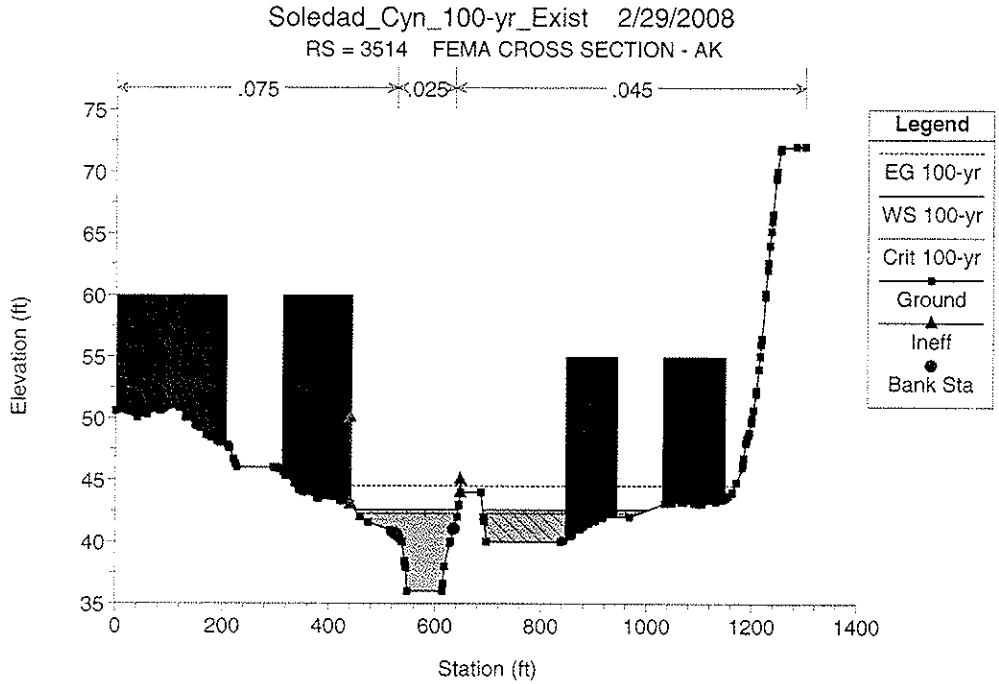
Soledad_Cyn_100-yr_Exist 2/29/2008
RS = 3514 FEMA CROSS SECTION - AK
.075
.025
.045
Elevation (ft)
Station (ft)
Legend
EG 100-yr
WS 100-yr
Crit 100-yr
Ground
Ineff
Bank Sta

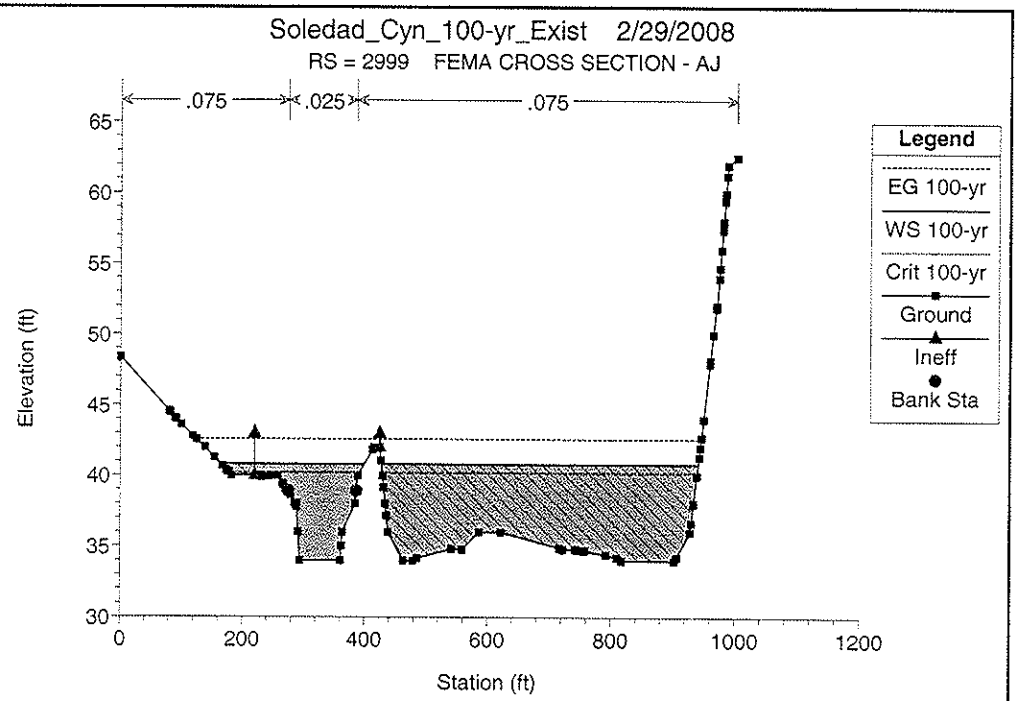
Soledad_Cyn_100-yr_Exist 2/29/2008
RS = 2999 FEMA CROSS SECTION - AJ
.075
.025
.075
Elevation (ft)
Station (ft)
Legend
EG 100-yr
WS 100-yr
Crit 100-yr
Ground
Ineff
Bank Sta

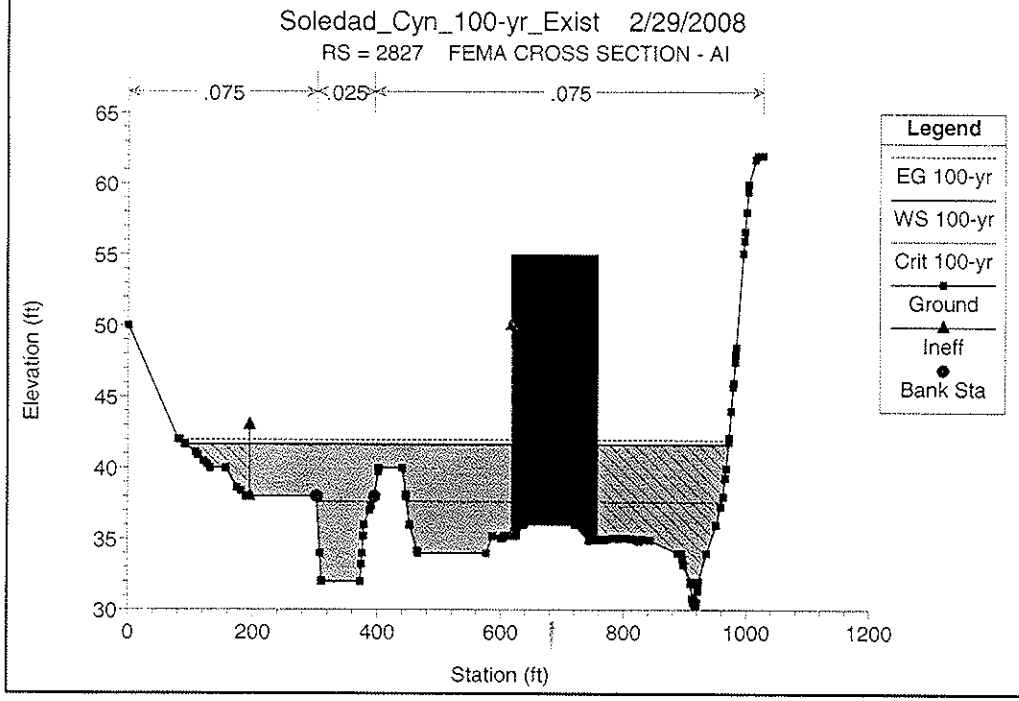
Soledad_Cyn_100-yr_Exist 2/29/2008
RS = 2827 FEMA CROSS SECTION - AI
.075
.025
.075
Elevation (ft)
Station (ft)
Legend
EG 100-yr
WS 100-yr
Crit 100-yr
Ground
Ineff
Bank Sta

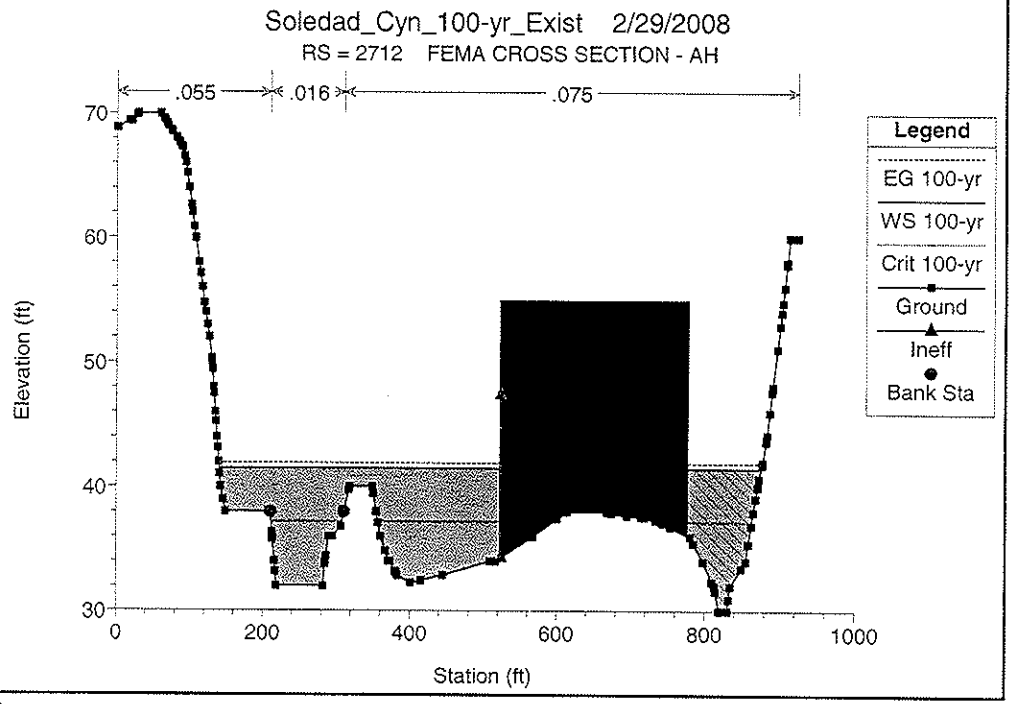
Soledad_Cyn_100-yr_Exist 2/29/2008
RS = 2712 FEMA CROSS SECTION - AH
.055
.016
.075
Elevation (ft)
Station (ft)
Legend
EG 100-yr
WS 100-yr
Crit 100-yr
Ground
Ineff
Bank Sta

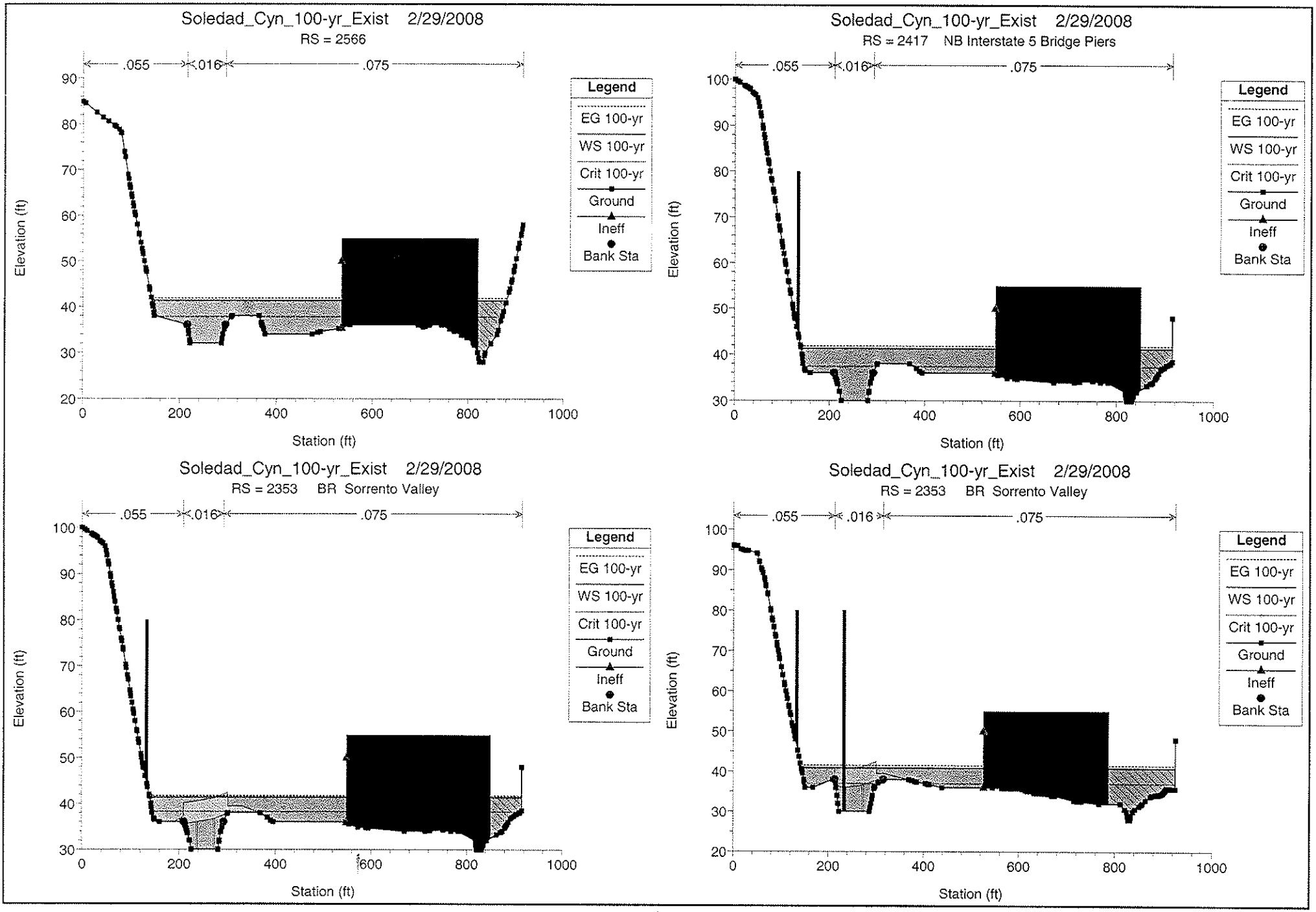
Soledad_Cyn_100-yr_Exist 2/29/2008
RS = 2566
.055
.016
.075
Elevation (ft)
Station (ft)
Legend
EG 100-yr
WS 100-yr
Crit 100-yr
Ground
Ineff
Bank Sta
Soledad_Cyn_100-yr_Exist 2/29/2008
RS = 2417 NB Interstate 5 Bridge Piers
.055
.016
.075
Elevation (ft)
Station (ft)
Legend
EG 100-yr
WS 100-yr
Crit 100-yr
Ground
Ineff
Bank Sta
Soledad_Cyn_100-yr_Exist 2/29/2008
RS = 2353 BR Sorrento Valley
.055
.016
.075
Elevation (ft)
Station (ft)
Legend
EG 100-yr
WS 100-yr
Crit 100-yr
Ground
Ineff
Bank Sta
Soledad_Cyn_100-yr_Exist 2/29/2008
RS = 2353 BR Sorrento Valley
.055
.016
.075
Elevation (ft)
Station (ft)
Legend
EG 100-yr
WS 100-yr
Crit 100-yr
Ground
Ineff
Bank Sta

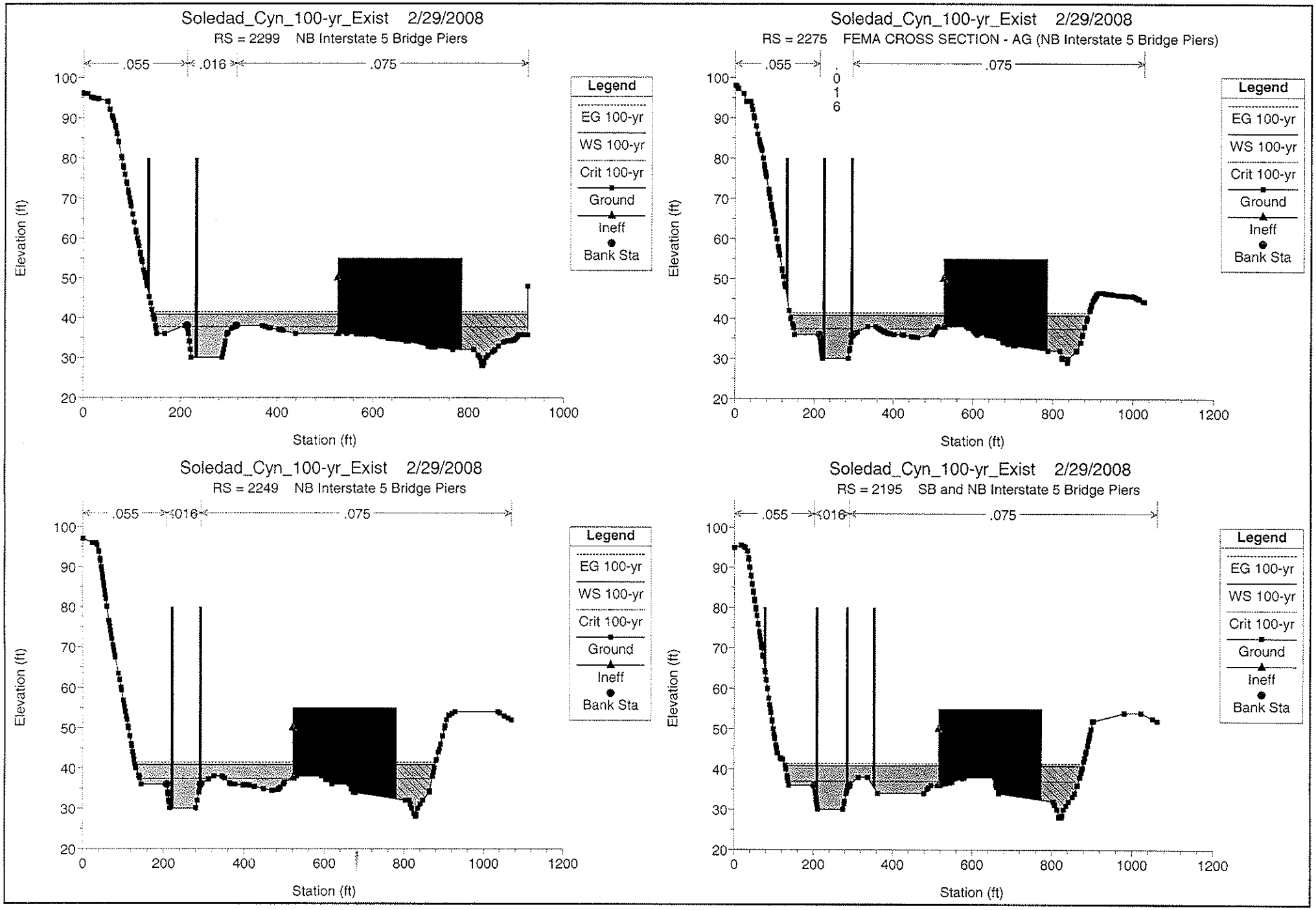
Soledad_Cyn_100-yr_Exist 2/29/2008
RS = 2299 NB Interstate 5 Bridge Piers
.055
.016
.075
Legend
EG 100-yr
WS 100-yr
Crit 100-yr
Ground
Ineff
Bank Sta
Elevation (ft)
Station (ft)
Soledad_Cyn_100-yr_Exist 2/29/2008
RS = 2275 FEMA CROSS SECTION - AG (NB Interstate 5 Bridge Piers)
.055
.016
.075
Legend
EG 100-yr
WS 100-yr
Crit 100-yr
Ground
Ineff
Bank Sta
Elevation (ft)
Station (ft)
Soledad_Cyn_100-yr_Exist 2/29/2008
RS = 2249 NB Interstate 5 Bridge Piers
.055
.016
.075
Legend
EG 100-yr
WS 100-yr
Crit 100-yr
Ground
Ineff
Bank Sta
Elevation (ft)
Station (ft)
Soledad_Cyn_100-yr_Exist 2/29/2008
RS = 2195 SB and NB Interstate 5 Bridge Piers
.055
.016
.075
Legend
EG 100-yr
WS 100-yr
Crit 100-yr
Ground
Ineff
Bank Sta
Elevation (ft)
Station (ft)

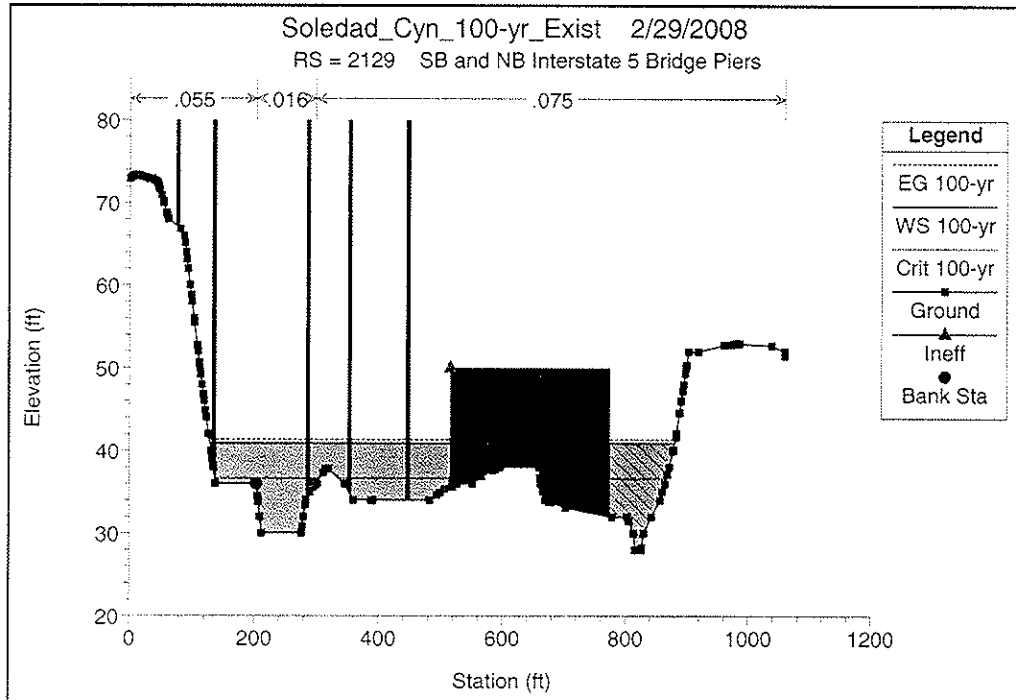
Soledad_Cyn_100-yr_Exist 2/29/2008
RS = 2129 SB and NB Interstate 5 Bridge Piers
.055
.016
.075
Elevation (ft)
Station (ft)
Legend
EG 100-yr
WS 100-yr
Crit 100-yr
Ground
Ineff
Bank Sta

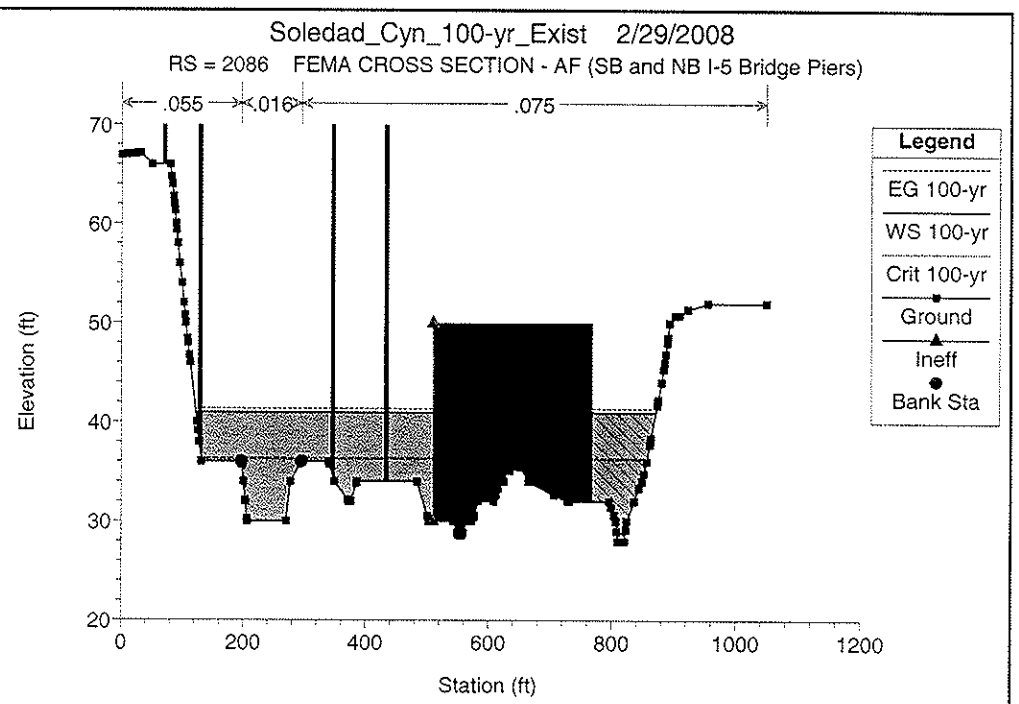
Soledad_Cyn_100-yr_Exist 2/29/2008
RS = 2086 FEMA CROSS SECTION - AF (SB and NB I-5 Bridge Piers)
.055
.016
.075
Elevation (ft)
Station (ft)
Legend
EG 100-yr
WS 100-yr
Crit 100-yr
Ground
Ineff
Bank Sta

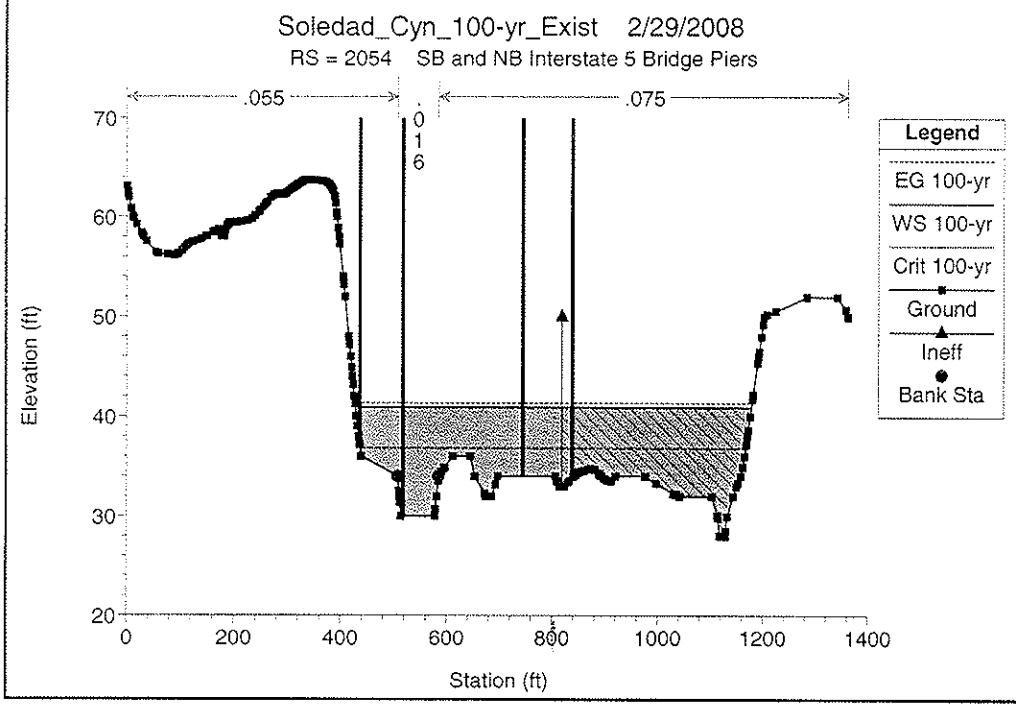
Soledad_Cyn_100-yr_Exist 2/29/2008
RS = 2054 SB and NB Interstate 5 Bridge Piers
.055
.016
.075
Elevation (ft)
Station (ft)
Legend
EG 100-yr
WS 100-yr
Crit 100-yr
Ground
Ineff
Bank Sta

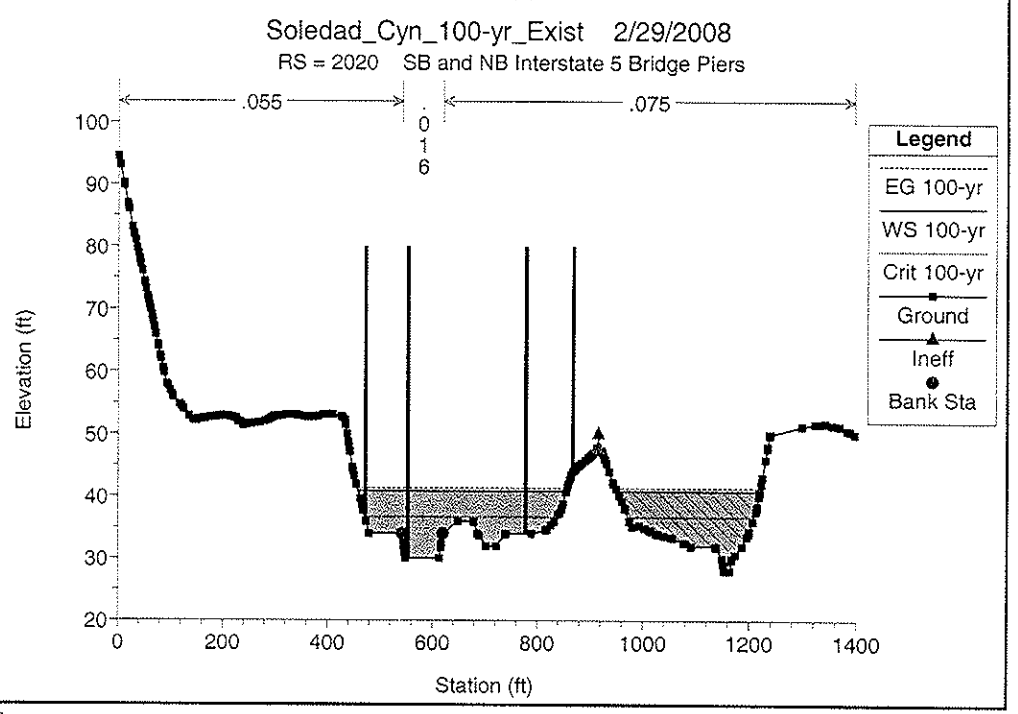
Soledad_Cyn_100-yr_Exist 2/29/2008
RS = 2020 SB and NB Interstate 5 Bridge Piers
.055
.016
.075
Elevation (ft)
Station (ft)
Legend
EG 100-yr
WS 100-yr
Crit 100-yr
Ground
Ineff
Bank Sta

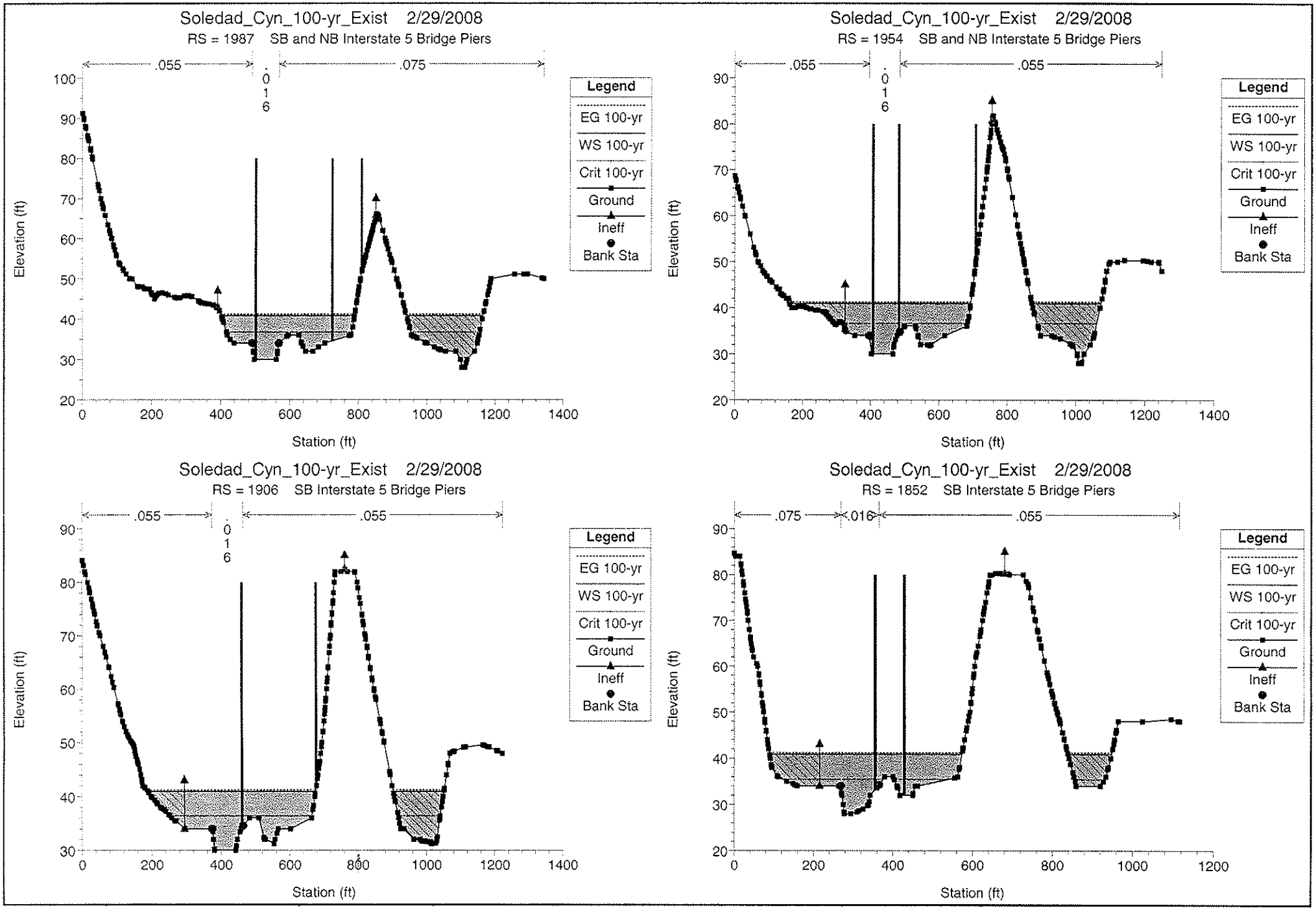
Soledad_Cyn_100-yr_Exist 2/29/2008
RS = 1987 SB and NB Interstate 5 Bridge Piers
.055
.016
.075
Legend
EG 100-yr
WS 100-yr
Crit 100-yr
Ground
Ineff
Bank Sta
Elevation (ft)
Station (ft)
Soledad_Cyn_100-yr_Exist 2/29/2008
RS = 1954 SB and NB Interstate 5 Bridge Piers
.055
.016
.055
Legend
EG 100-yr
WS 100-yr
Crit 100-yr
Ground
Ineff
Bank Sta
Elevation (ft)
Station (ft)
Soledad_Cyn_100-yr_Exist 2/29/2008
RS = 1906 SB Interstate 5 Bridge Piers
.055
.016
.055
Legend
EG 100-yr
WS 100-yr
Crit 100-yr
Ground
Ineff
Bank Sta
Elevation (ft)
Station (ft)
Soledad_Cyn_100-yr_Exist 2/29/2008
RS = 1852 SB Interstate 5 Bridge Piers
.075
.016
.055
Legend
EG 100-yr
WS 100-yr
Crit 100-yr
Ground
Ineff
Bank Sta
Elevation (ft)
Station (ft)

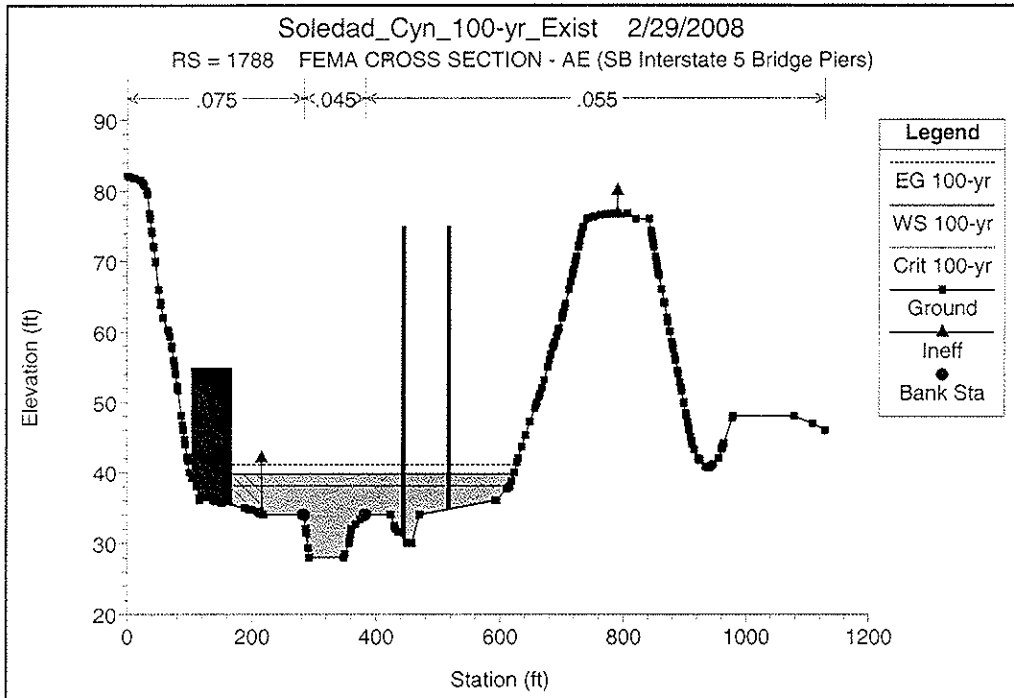
Soledad_Cyn_100-yr_Exist 2/29/2008
RS = 1788 FEMA CROSS SECTION - AE (SB Interstate 5 Bridge Piers)
.075
.045
.055
Legend
EG 100-yr
WS 100-yr
Crit 100-yr
Ground
Ineff
Bank Sta
Elevation (ft)
Station (ft)

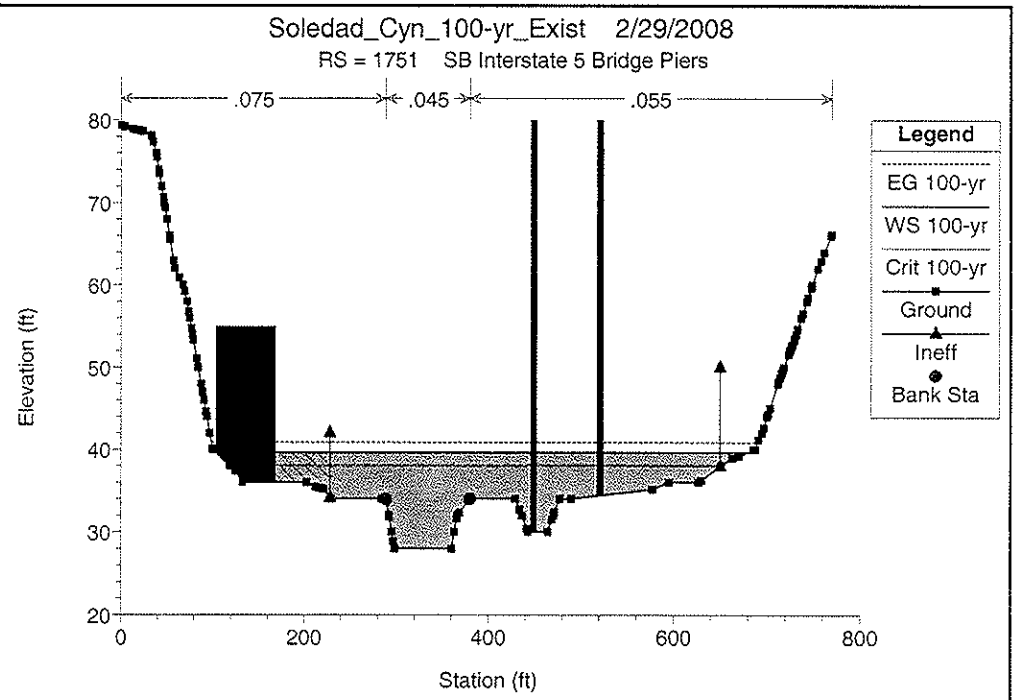
Soledad_Cyn_100-yr_Exist 2/29/2008
RS = 1751 SB Interstate 5 Bridge Piers
.075
.045
.055
Legend
EG 100-yr
WS 100-yr
Crit 100-yr
Ground
Ineff
Bank Sta
Elevation (ft)
Station (ft)

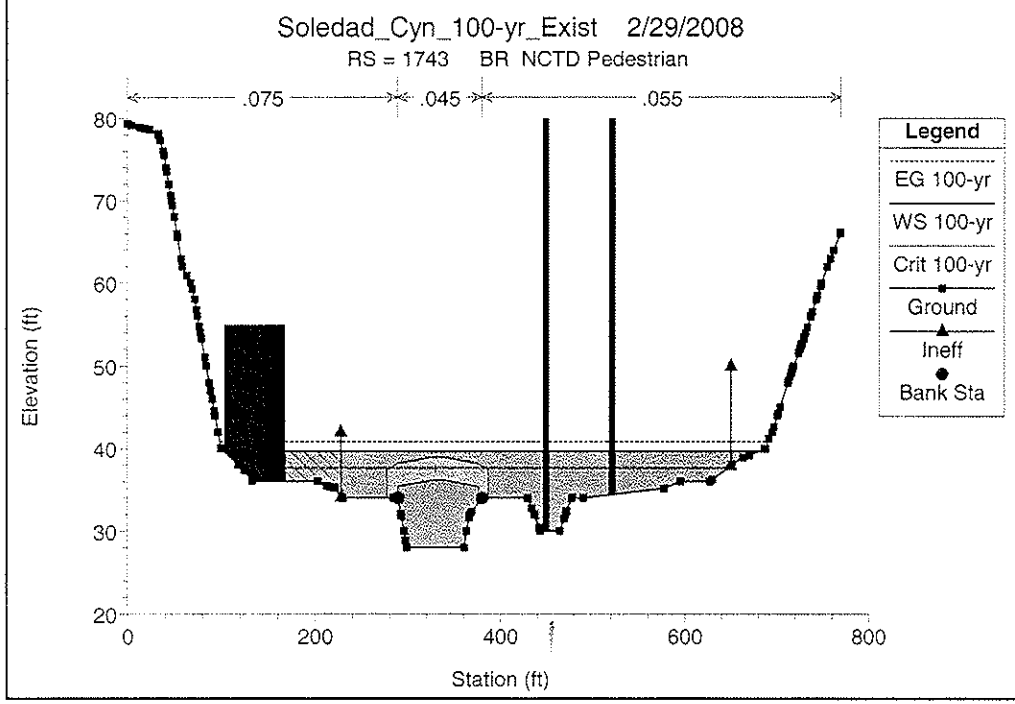
Soledad_Cyn_100-yr_Exist 2/29/2008
RS = 1743 BR NCTD Pedestrian
.075
.045
.055
Legend
EG 100-yr
WS 100-yr
Crit 100-yr
Ground
Ineff
Bank Sta
Elevation (ft)
Station (ft)

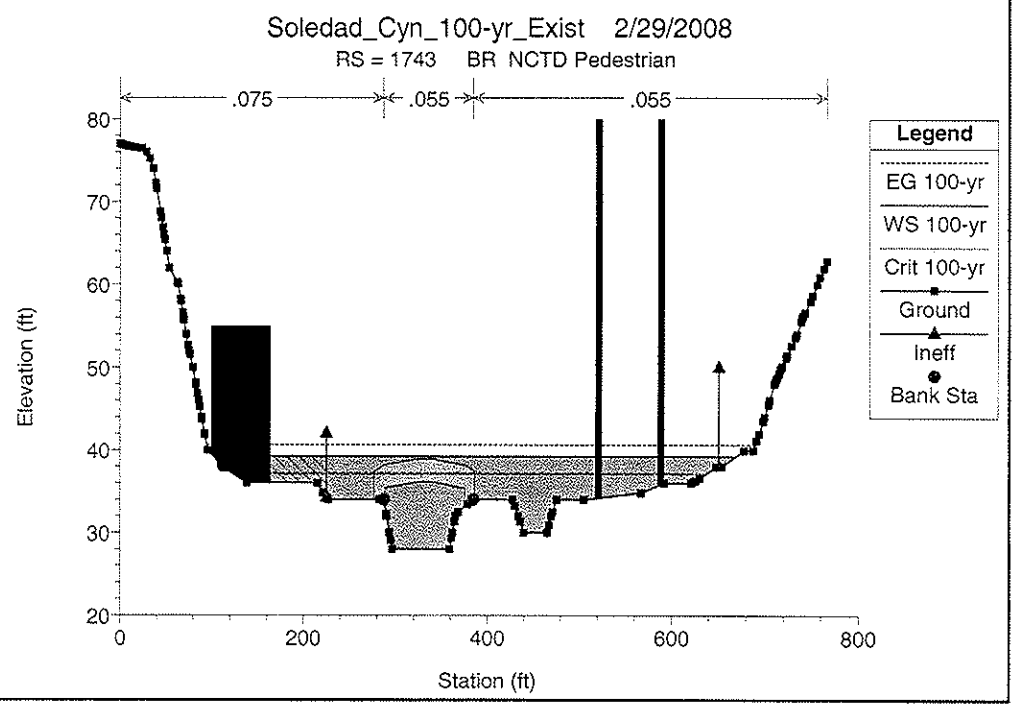
Soledad_Cyn_100-yr_Exist 2/29/2008
RS = 1743 BR NCTD Pedestrian
.075
.055
.055
Legend
EG 100-yr
WS 100-yr
Crit 100-yr
Ground
Ineff
Bank Sta
Elevation (ft)
Station (ft)

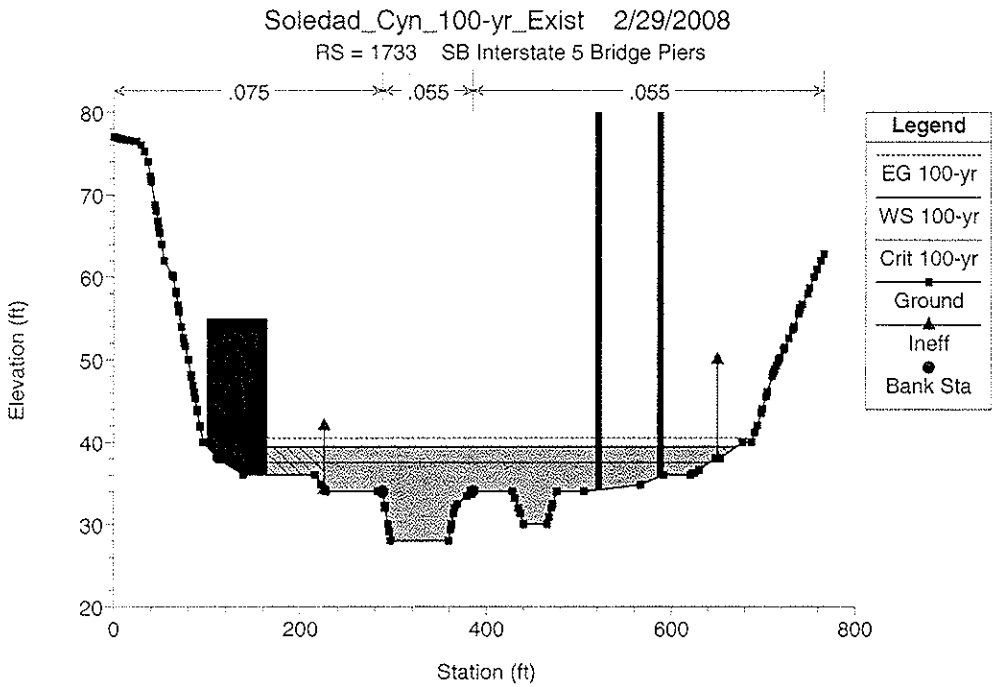
Soledad_Cyn_100-yr_Exist 2/29/2008
RS = 1733 SB Interstate 5 Bridge Piers
.075
.055
.055
Legend
EG 100-yr
WS 100-yr
Crit 100-yr
Ground
Ineff
Bank Sta
Elevation (ft)
Station (ft)

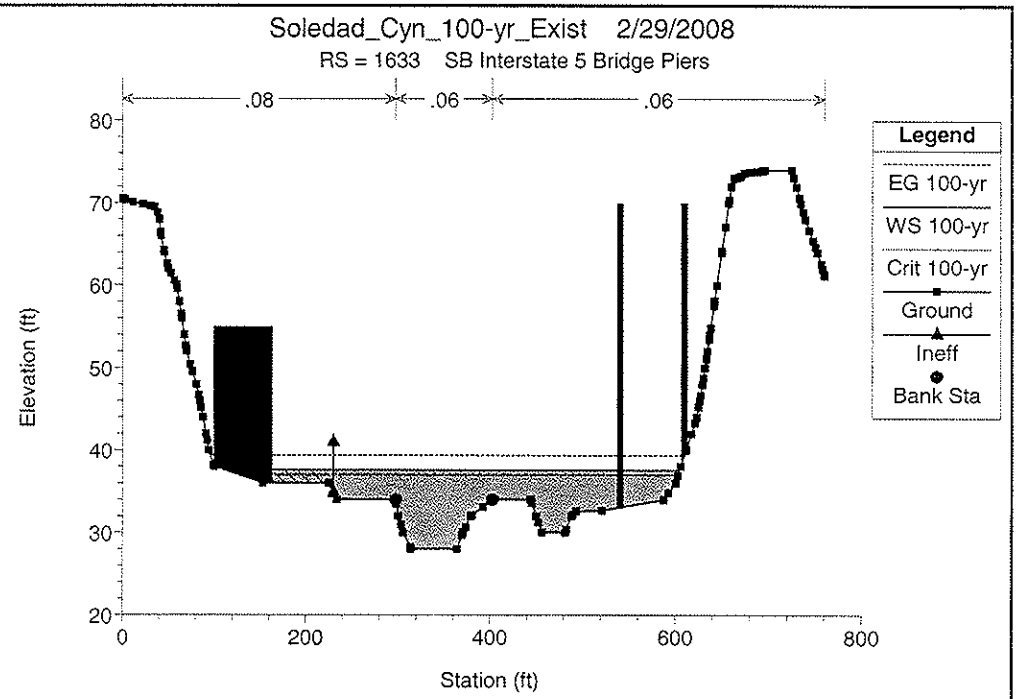
Soledad_Cyn_100-yr_Exist 2/29/2008
RS = 1633 SB Interstate 5 Bridge Piers
.08
.06
.06
Legend
EG 100-yr
WS 100-yr
Crit 100-yr
Ground
Ineff
Bank Sta
Elevation (ft)
Station (ft)

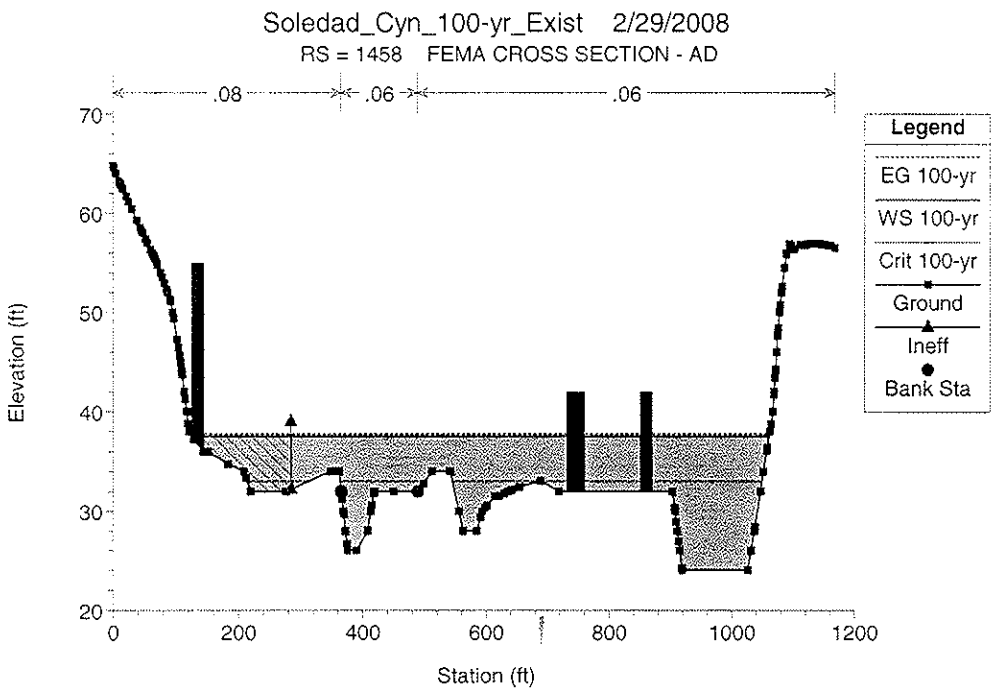
Soledad_Cyn_100-yr_Exist 2/29/2008
RS = 1458 FEMA CROSS SECTION - AD
.08
.06
.06
Legend
EG 100-yr
WS 100-yr
Crit 100-yr
Ground
Ineff
Bank Sta
Elevation (ft)
Station (ft)

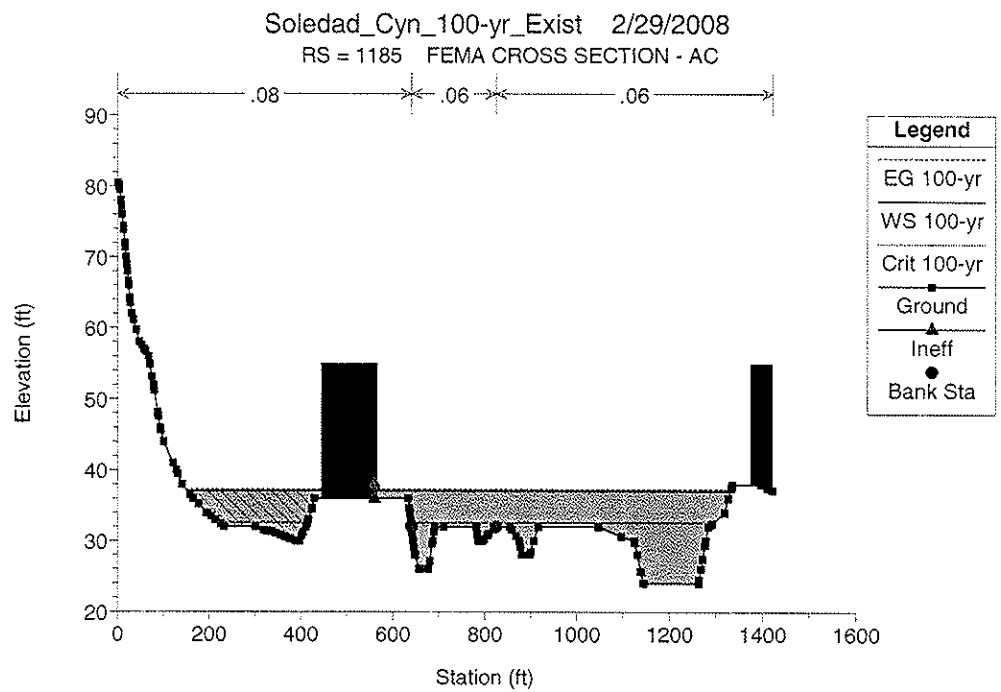
Soledad_Cyn_100-yr_Exist 2/29/2008
RS = 1185 FEMA CROSS SECTION - AC
.08
.06
.06
Legend
EG 100-yr
WS 100-yr
Crit 100-yr
Ground
Ineff
Bank Sta
Elevation (ft)
Station (ft)

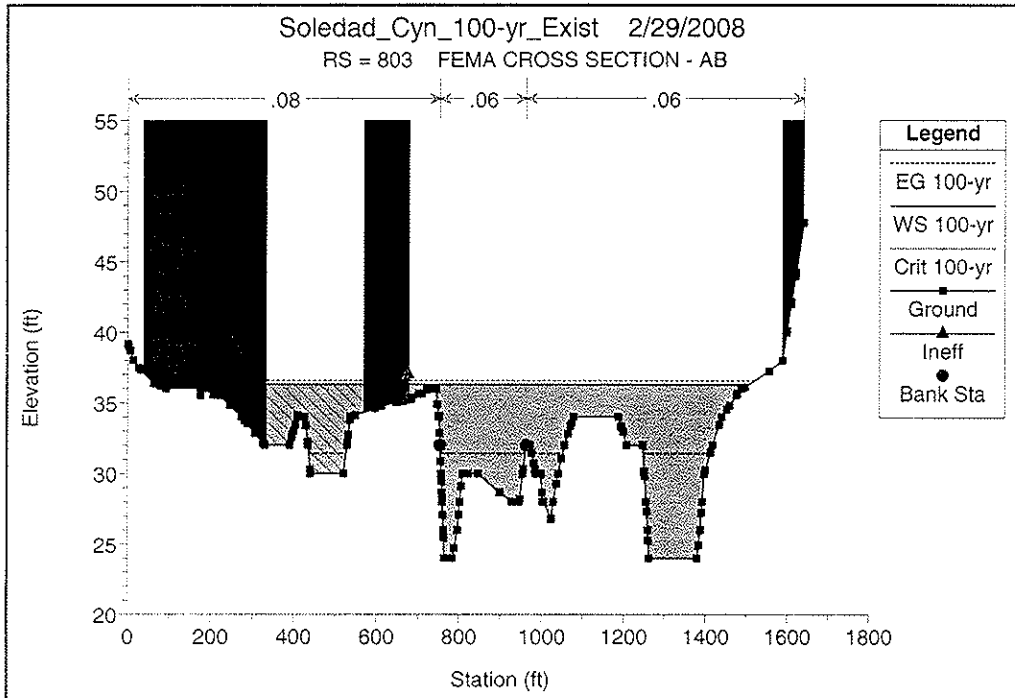
Soledad_Cyn_100-yr_Exist 2/29/2008
RS = 803 FEMA CROSS SECTION - AB
.08
.06
.06
Legend
EG 100-yr
WS 100-yr
Crit 100-yr
Ground
Ineff
Bank Sta
Elevation (ft)
55
50
45
40
35
30
25
20
0
200
400
600
800
1000
1200
1400
1600
1800
Station (ft)

SC_Exist.rep

HEC-RAS Version 3.1.3 May 2005
U.S. Army Corp of Engineers
Hydrologic Engineering Center
609 Second Street
Davis, California

```
X     X  XXXXXX    XXXX        XXXX       XX      XXXX
X     X  X        X    X      X   X     X  X    X
X     X  X        X           X   X    X    X   X
XXXXXXX  XXXX     X       XXX XXXX     XXXXXX    XXXX
X     X  X        X           X  X     X    X        X
X     X  X        X    X      X   X    X    X        X
X     X  XXXXXX    XXXX       X    X   X    X   XXXXX
```

PROJECT DATA
Project Title: Soledad_Canyon_Exist
Project File : SC_Exist.prj
Run Date and Time: 2/29/2008 12:57:57 PM

Project in English units

Project Description:
Existing 100yr Floodplain - Soledad Canyon Model

PLAN DATA

Plan Title: Soledad_Cyn_100-yr_Exist
Plan File : p:\1683_T064_I5_Floodplain\420_Env_
Stud\CarrollCanyon_SoledadCyn\HEC-RAS\Final\Existing\SC_Exist.p03

Geometry Title: Soledad_Canyon_Exist
Geometry File : p:\1683_T064_I5_Floodplain\420_Env_
Stud\CarrollCanyon_SoledadCyn\HEC-RAS\Final\Existing\SC_Exist.g01

Flow Title : SC_100yr
Flow File : p:\1683_T064_I5_Floodplain\420_Env_
Stud\CarrollCanyon_SoledadCyn\HEC-RAS\Final\Existing\SC_Exist.f01

Plan Summary Information:

Number of:	Cross Sections =	33	Multiple Openings =	0
	Culverts =	0	Inline Structures =	0
	Bridges =	2	Lateral Structures =	0

Computational Information
Water surface calculation tolerance = 0.01
Critical depth calculation tolerance = 0.01
Maximum number of iterations = 20
Maximum difference tolerance = 0.3
Flow tolerance factor = 0.001

Computation Options
Critical depth computed only where necessary
Conveyance Calculation Method: At breaks in n values only
Friction Slope Method: Average Conveyance
Computational Flow Regime: Subcritical Flow

FLOW DATA

Flow Title: SC_100yr
Flow File : p:\1683_T064_I5_Floodplain\420_Env_
Stud\CarrollCanyon_SoledadCyn\HEC-RAS\Final\Existing\SC_Exist.f01

Flow Data (cfs)

River	Reach	RS	100-yr
CarrollCanyon	Lower	6394	6700
CarrollCanyon	Lower	1788	19500

Boundary Conditions

River	Reach	Profile	Upstream	Downstream
CarrollCanyon	Lower	100-yr	Known WS = 65.4	Known WS = 36.3

GEOMETRY DATA

Geometry Title: Soledad_Canyon_Exist
Geometry File : p:\1683_T064_I5_Floodplain\420_Env_
Stud\CarrollCanyon_SoledadCyn\HEC-RAS\Final\Existing\SC_Exist.g01

CROSS SECTION

RIVER: CarrollCanyon
REACH: Lower RS: 6394

INPUT
Description: FEMA CROSS SECTION - AS
Station Elevation Data num= 118

Sta	Elev	Sta	Elev	Sta	Elev	Sta	Elev	Sta	Elev
0	78.02	.25	77.93	5.16	76	6.03	75.66	10.24	74
12.88	72.98	15.02	72	15.84	71.62	19.45	70	25.16	68.06
25.86	67.85	31.88	66	33.17	65.6	37.07	64.37	37.9	64.11
38.29	64	42.85	62.63	45.17	62	47.32	61.37	50.03	60.67
51.75	60.22	52.64	60	62.92	59.48	64.58	59.39	74.13	58.91
79.72	58.72	81.1	58.65	83.03	58.56	94.52	58.27	95.32	58.24
95.42	58.23	96.05	58.2	106.13	58	115.87	57.89	116.05	57.88
116.36	57.88	116.63	57.87	116.83	57.86	116.96	57.86	132.7	57.62
133.29	57.6	135.96	57.52	145.64	57.32	147.17	57.27	163.77	56.67
164.43	56.64	175.08	56.24	176.84	56.18	181.55	56	182.04	55.26
182.81	54	183.35	53.16	184.06	52	184.8	50.8	185.3	50
186.14	48.63	186.54	48	205.93	48	213.41	49.65	215.19	50
222.26	51.57	223.19	51.79	224	52	226.71	52.73	231.37	54
280.24	54	284.69	54.35	285.54	54.42	285.96	54.44	296.98	55.19
298.33	55.29	298.67	55.32	308.7	56	314.42	56.27	318.31	56.45
320.74	56.52	325.62	56.67	339.56	57.22	351.9	57.51	355.72	57.64

357.79	57.7	368.18	57.86	368.58	57.86	369.01	57.87	375.71	57.9
381.52	58	391.83	58	396.64	59.03	400.71	60	404.46	60.94
408.49	62	413.63	63.26	417.31	64	423.41	64	426.8	63.32
433.46	62	444.1	60.14	446.99	60	470	60	479.09	60.43
490.59	61.53	494.24	61.8	495.52	62	499	63.49	500.14	64
503.66	65.39	505.12	66	507.31	66.85	510.3	68	511.47	68.38
536.49	68.5	544.93	68.26	545.38	68.24	550.64	68.1	551.23	68.08
552.73	68.04	554.69	68	594.39	68				

Manning's n Values num= 3

Sta	n Val	Sta	n Val	Sta	n Val
0	.05	182.81	.06	280.24	.05

Bank Sta: Left	Right	Lengths: Left	Channel	Right	Coeff Contr.	Expan.
182.81	231.37	258.39	256.68	195.55	.1	.3

Ineffective Flow num= 1

Sta L	Sta R	Elev	Permanent
417.56	594.39	65	F

CROSS SECTION OUTPUT Profile #100-yr

E.G. Elev (ft)	60.66	Element	Left OB	Channel
Right OB				
Vel Head (ft)	0.36	Wt. n-Val.	0.050	0.060
0.055				
W.S. Elev (ft)	60.31	Reach Len. (ft)	258.39	256.68
195.55				
Crit W.S. (ft)	57.69	Flow Area (sq ft)	319.57	513.82
718.10				
E.G. Slope (ft/ft)	0.002715	Area (sq ft)	319.57	513.82
726.87				
Q Total (cfs)	6700.00	Flow (cfs)	889.50	3029.70
2780.80				
Top Width (ft)	383.80	Top Width (ft)	131.39	48.56
203.86				
Vel Total (ft/s)	4.32	Avg. Vel. (ft/s)	2.78	5.90
3.87				
Max Chl Dpth (ft)	12.31	Hydr. Depth (ft)	2.43	10.58
4.21				
Conv. Total (cfs)	128589.9	Conv. (cfs)	17071.7	58147.6
53370.6				
Length Wtd. (ft)	240.16	Wetted Per. (ft)	132.60	52.60
170.92				
Min Ch El (ft)	48.00	Shear (lb/sq ft)	0.41	1.66
0.71				
Alpha	1.23	Stream Power (lb/ft s)	1.14	9.76
2.76				
Frctn Loss (ft)	0.57	Cum Volume (acre-ft)	66.95	97.35
188.27				
C & E Loss (ft)	0.02	Cum SA (acres)	20.72	12.32
36.55				

Warning: Divided flow computed for this cross-section.
Note: Multiple critical depths were found at this location. The critical depth with the lowest, valid,
water surface was used.

CROSS SECTION

RIVER: CarrollCanyon
REACH: Lower RS: 6138

INPUT
Description: FEMA CROSS SECTION - AR
Station Elevation Data num= 119

Sta	Elev	Sta	Elev	Sta	Elev	Sta	Elev	Sta	Elev
0	72	72.14	72	79.62	70.2	80.18	70.07	80.46	70
82.07	69.6	88.6	68	89.3	67.83	96.54	66	103.86	64.54
105.98	64	117.12	64	129.86	63.53	133.93	63.44	147.08	62.8
149.37	62.72	163.75	62	170.92	61.07	174.55	60.62	197.74	60
222.21	60	236.86	59.43	253.24	58.85	270.33	58.21	278.96	58
302.53	58	347.17	56.6	352.16	56.57	358.69	56.57	361.08	56.54
362.77	56.54	375.21	56.49	388.64	56.36	403.91	56.18	411.42	56.09
411.59	56.09	419.03	56	459.31	56	459.93	55.25	460.63	54.65
461.24	54	462.37	53.01	464.06	52	464.74	51.67	465.35	51.39
466.94	50.68	468.45	50	469.89	49.73	470.12	49.67	471	49.43
473.43	48.87	476.34	48	480.01	47.12	484.29	46	486.39	46
487.54	46.06	488.05	46.1	492.09	46.4	495.19	46.66	508.49	48
509.29	48.18	515.76	49.72	516.84	49.97	516.94	50	517.06	50.03
524.4	52	532.02	54	532.66	54.1	533.43	54.17	539.91	54.96
541.33	55.12	542.35	55.24	553.32	55.74	553.83	55.78	554.2	55.81
555.11	55.88	560.16	56	594.15	56	622.65	56	625.77	57.05
628.7	58	629.61	58.28	635.11	60	636.73	60.36	638.83	60.7
644.28	61.72	651.87	61.47	656.36	61.19	668.83	60	681.32	58.35
685.02	58	699.2	58	701.23	58.87	703.88	60	705.53	60.71
708.55	62	710.55	62.85	713.22	64	714.26	64.39	743.82	65.01
750.51	64.81	755.22	64.65	757.9	64.57	770.08	64.35	770.45	64.35
773.68	64.28	774.78	64.28	779.25	64.16	779.31	64.16	785.02	64
809.89	64	810.84	64.36	813.85	66	814.47	66.4	818.3	68.9
819.98	70	822.23	71.46	823.05	72	824.91	73.25		

Manning's n Values num= 3

Sta	n Val	Sta	n Val	Sta	n Val
0	.05	459.93	.06	622.65	.05

Bank Sta: Left	Right	Lengths: Left	Channel	Right	Coeff Contr.	Expan.
459.93	542.35	270.79	229.34	188.56	.1	.3

Ineffective Flow num= 1

Sta L	Sta R	Elev	Permanent
643.51	824.91	63	F

Blocked Obstructions num= 1

Sta L	Sta R	Elev
0	70.71	85

CROSS SECTION OUTPUT Profile #100-yr

E.G. Elev (ft)	60.07	Element	Left OB	Channel
Right OB				
Vel Head (ft)	0.30	Wt. n-Val.	0.050	0.060
0.060				
W.S. Elev (ft)	59.77	Reach Len. (ft)	270.79	229.34
188.56				
Crit W.S. (ft)	56.96	Flow Area (sq ft)	598.13	824.30
330.68				
E.G. Slope (ft/ft)	0.002116	Area (sq ft)	598.13	824.30
372.96				
Q Total (cfs)	6700.00	Flow (cfs)	1536.53	4256.03
907.44				
Top Width (ft)	439.01	Top Width (ft)	231.80	82.42
124.79				
Vel Total (ft/s)	3.82	Avg. Vel. (ft/s)	2.57	5.16

2.74					
Max Chl Dpth (ft)	13.77	Hydr. Depth (ft)	2.58	10.00	3.59
Conv. Total (cfs)	145646.3	Conv. (cfs)	33401.5	92518.5	19726.2
Length Wtd. (ft)	235.87	Wetted Per. (ft)	232.21	85.44	92.63
Min Ch El (ft)	46.00	Shear (lb/sq ft)	0.34	1.27	0.47
Alpha	1.33	Stream Power (lb/ft s)	0.87	6.58	1.29
Frctn Loss (ft)	0.69	Cum Volume (acre-ft)	64.23	93.41	185.80
C & E Loss (ft)	0.03	Cum SA (acres)	19.64	11.93	35.82

Warning: Divided flow computed for this cross-section.
Warning: The conveyance ratio (upstream conveyance divided by downstream conveyance) is less than
0.7 or greater than 1.4. This may indicate the need for additional cross sections.
Note: Multiple critical depths were found at this location. The critical depth with the lowest, valid,
water surface was used.

CROSS SECTION

RIVER: CarrollCanyon
REACH: Lower RS: 5908

INPUT
Description: FEMA CROSS SECTION - AQ
Station Elevation Data num= 89

Sta	Elev	Sta	Elev	Sta	Elev	Sta	Elev	Sta	Elev
0	67.4	5.47	67.46	8.19	67.48	18.42	67.6	20.61	67.63
31.02	67.7	46.63	67.55	48.98	67.45	56.44	67.49	57.77	67.41
60.61	67.25	68.25	67.2	73.27	66.79	77.13	66.72	83.02	66
85.11	65.19	87.91	64	89.4	62.84	90.44	62	91.87	61
92.73	60.4	93.29	60	158.49	60	160.02	60.29	169.23	62
174.46	63.37	176.83	64	211.89	64	215.98	63.77	219.93	63.67
243.18	62.64	257.05	62	307.31	60.26	313.56	60	317.12	59.68
333.66	58	354.32	56.36	359.13	56	440.5	56	494.97	54.9
503.68	54.72	506.18	54.49	507	54.54	508.65	54.35	509.3	54.28
510.03	54.32	511.94	54	513.52	53	515.11	52	517.12	50.73
518.28	50	519.44	49.26	521.44	48	522.93	47.07	524.63	46
547.37	46	548.92	46.62	551.8	47.72	552.54	48	553.23	48.22
558.71	50	562.47	51.49	563.67	52	566.85	52.37	577.34	53.61
580.67	54	590.28	55.01	598.79	56	607.14	57.67	608.86	58
615.72	58.56	618.69	58.66	623.11	58.96	626.46	59.06	630.82	59.32
647.25	59.16	647.95	59.22	655.47	58	685.29	58	685.88	58.23
690.35	60	693.39	61.11	694.09	61.16	695.84	61.71	725.46	61.54
742.16	62	770.5	62	790.35	62	823.15	82		

Manning's n Values num= 3

Sta	n Val	Sta	n Val	Sta	n Val
0	.05	511.94	.06	580.67	.05

Bank Sta: Left	Right	Lengths: Left	Channel	Right	Coeff Contr.	Expan.
511.94	580.67	386.66	400.25	402.73	.1	.3

Ineffective Flow num= 1

Sta L	Sta R	Elev	Permanent
631	823.15	61	F

Blocked Obstructions num= 2

Sta L	Sta R	Elev	Sta L	Sta R	Elev
.89	79.67	80	192.07	374.68	80

CROSS SECTION OUTPUT Profile #100-yr

E.G. Elev (ft)	59.35	Element	Left OB	Channel
Right OB				
Vel Head (ft)	0.61	Wt. n-Val.	0.050	0.060
0.050				
W.S. Elev (ft)	58.74	Reach Len. (ft)	386.66	400.25
402.73				
Crit W.S. (ft)	56.92	Flow Area (sq ft)	429.84	657.63
89.37				
E.G. Slope (ft/ft)	0.004268	Area (sq ft)	429.84	657.63
113.90				
Q Total (cfs)	6700.00	Flow (cfs)	1762.34	4638.97
298.69				
Top Width (ft)	281.50	Top Width (ft)	137.26	68.73
75.51				
Vel Total (ft/s)	5.69	Avg. Vel. (ft/s)	4.10	7.05
3.34				
Max Chl Dpth (ft)	12.74	Hydr. Depth (ft)	3.13	9.57
2.28				
Conv. Total (cfs)	102555.7	Conv. (cfs)	26975.8	71007.9
4572.0				
Length Wtd. (ft)	397.54	Wetted Per. (ft)	140.07	72.24
39.57				
Min Ch El (ft)	46.00	Shear (lb/sq ft)	0.82	2.43
0.60				
Alpha	1.21	Stream Power (lb/ft s)	3.35	17.11
2.01				
Frctn Loss (ft)	2.09	Cum Volume (acre-ft)	61.03	89.51
184.75				
C & E Loss (ft)	0.03	Cum SA (acres)	18.49	11.54
35.38				

Warning: Divided flow computed for this cross-section.
Warning: The energy loss was greater than 1.0 ft (0.3 m). between the current and previous cross
section. This may indicate the need for additional cross sections.
Note: Multiple critical depths were found at this location. The critical depth with the lowest, valid,
water surface was used.

CROSS SECTION

RIVER: CarrollCanyon
REACH: Lower RS: 5508

INPUT
Description: FEMA CROSS SECTION - AP
Station Elevation Data num= 81

Sta	Elev	Sta	Elev	Sta	Elev	Sta	Elev	Sta	Elev
0	84.69	1.98	84	3.06	83.62	3.82	83.36	7.68	82
7.95	81.9	13.33	80	13.7	79.87	16.84	78.76	18.96	78
20.86	77.33	24.6	76	25.32	75.75	28.94	74.46	30.06	74.05

30.22	74	34.97	72.29	35.78	72	39.91	70.51	41.36	70
44.88	68.74	46.97	68	49.87	66.96	52.59	66	54.88	65.18
58.22	64	59.93	63.39	63.88	62	64.99	61.6	74.87	58.13
75.17	58.02	75.23	58	80.93	56	85.5	55.61	96.32	54.52
98.62	54.3	98.79	54.28	100.28	54.13	101.4	54	102.19	53.98
205.09	53.59	215.45	53.87	218.45	53.96	218.7	53.96	220.37	54
436.91	54	443.44	53.89	444.2	53.88	444.42	53.87	444.67	53.87
444.89	53.86	445.17	53.86	457.39	53.57	458.16	53.55	539.37	52
553.81	52	557.86	52	558.99	51.44	561.96	50	565.87	48.04
565.95	48	566.14	47.9	569.7	46	573.39	44	581.14	44
591.65	46	601.78	47.9	602.3	48	603.68	48.15	631.33	51.11
631.87	51.16	639.97	52	642.58	52.53	649.71	54	658.52	54.95
668.01	56	720.66	56	765.64	58	787.78	58	822.69	58
849.41	76								

Manning's n Values num= 3

Sta	n Val	Sta	n Val	Sta	n Val
0	.08	557.86	.06	639.97	.05

Bank Sta: Left	Right	Lengths: Left	Channel	Right	Coeff Contr.	Expan.
557.86	639.97	622.48	632.28	635.37	.1	.3

Ineffective Flow num= 1

Sta L	Sta R	Elev	Permanent
0	490	60	F

Blocked Obstructions num= 1

Sta L	Sta R	Elev
223.44	491.16	70

CROSS SECTION OUTPUT Profile #100-yr

E.G. Elev (ft)	57.23	Element	Left OB	Channel
Right OB				
Vel Head (ft)	0.88	Wt. n-Val.	0.080	0.060
0.050				
W.S. Elev (ft)	56.35	Reach Len. (ft)	622.48	632.28
635.37				
Crit W.S. (ft)	54.21	Flow Area (sq ft)	268.23	681.82
77.64				
E.G. Slope (ft/ft)	0.006652	Area (sq ft)	607.97	681.82
77.64				
Q Total (cfs)	6700.00	Flow (cfs)	993.71	5534.43
171.86				
Top Width (ft)	380.98	Top Width (ft)	210.22	82.11
88.65				
Vel Total (ft/s)	6.52	Avg. Vel. (ft/s)	3.70	8.12
2.21				
Max Chl Dpth (ft)	12.35	Hydr. Depth (ft)	4.02	8.30
0.88				
Conv. Total (cfs)	82146.0	Conv. (cfs)	12183.5	67855.4
2107.1				
Length Wtd. (ft)	631.47	Wetted Per. (ft)	70.14	84.64
88.97				
Min Ch El (ft)	44.00	Shear (lb/sq ft)	1.59	3.35
0.36				
Alpha	1.33	Stream Power (lb/ft s)	5.88	27.16
0.80				
Frctn Loss (ft)	3.66	Cum Volume (acre-ft)	56.43	83.35
183.86				
C & E Loss (ft)	0.02	Cum SA (acres)	16.95	10.84
34.62				

Warning: Divided flow computed for this cross-section.
Warning: The energy loss was greater than 1.0 ft (0.3 m). between the current and previous cross
section. This may indicate the need for additional cross sections.
Note: Multiple critical depths were found at this location. The critical depth with the lowest, valid,
water surface was used.

CROSS SECTION

RIVER: CarrollCanyon
REACH: Lower RS: 4876

INPUT
Description: FEMA CROSS SECTION - AO
Station Elevation Data num= 67

Sta	Elev	Sta	Elev	Sta	Elev	Sta	Elev	Sta	Elev
0	80.02	.88	79.51	3.47	78	6.3	76.36	6.91	76
10.35	74	14.25	72	15.27	71.57	18.25	70.33	18.97	70
19.68	69.52	22.28	68	23.24	67.24	27.34	64	29.77	62.07
29.85	62	29.91	61.95	32.36	60	34.86	58	36.55	56.64
37.35	56	38.11	55.39	39.85	54	42.17	52.14	42.34	52
42.7	51.72	44.84	50	45.2	49.71	47.33	48	55.86	48
151.89	47.03	177.47	47.14	220.74	47.49	285.81	48.13	460.54	48
482.25	46.87	487.65	46.59	493.12	46	496.97	44.15	497.29	44
498.12	43.6	501.52	42	505.84	40.01	510.41	38	515.02	36.11
515.8	36.14	522.73	38	527.56	39.32	530.14	40	535.62	41.41
537.9	42	539.3	42.36	551.47	45.41	553.84	46	558.9	47.25
561.78	48	567.73	49.72	568.71	50	631.84	50	635.34	50.56
635.44	50.55	642.08	50.36	642.23	50.36	655.61	50.82	659.32	50.84
717.31	51.92	858.304	66.5						

Manning's n Values num= 3

Sta	n Val	Sta	n Val	Sta	n Val
0	.08	493.12	.06	553.84	.05

Bank Sta: Left	Right	Lengths: Left	Channel	Right	Coeff Contr.	Expan.
493.12	553.84	579.89	577.85	577.3	.1	.3

Ineffective Flow num= 2

Sta L	Sta R	Elev	Permanent
0	475	55	F
568	858.304	53	F

Blocked Obstructions num= 3

Sta L	Sta R	Elev	Sta L	Sta R	Elev	Sta L	Sta R	Elev
141.32	320.97	70	373.4	478.93	70	776.54	817.17	69.61

CROSS SECTION OUTPUT Profile #100-yr

E.G. Elev (ft)	53.55	Element	Left OB	Channel
Right OB				
Vel Head (ft)	1.09	Wt. n-Val.	0.080	0.060
0.050				
W.S. Elev (ft)	52.46	Reach Len. (ft)	579.89	577.85
577.30				
Crit W.S. (ft)	48.48	Flow Area (sq ft)	82.96	696.00
65.62				
E.G. Slope (ft/ft)	0.005099	Area (sq ft)	781.08	696.00
339.53				
Q Total (cfs)	6700.00	Flow (cfs)	287.39	6034.43
378.18				

Top Width (ft)	395.60	Top Width (ft)	166.17	60.72	168.71
Vel Total (ft/s)	7.93	Avg. Vel. (ft/s)	3.46	8.67	5.76
Max Chl Dpth (ft)	16.35	Hydr. Depth (ft)	5.85	11.46	4.63
Conv. Total (cfs)	93827.9	Conv. (cfs)	4024.7	84507.2	5296.1
Length Wtd. (ft)	577.96	Wetted Per. (ft)	19.65	64.11	14.66
Min Ch El (ft)	36.11	Shear (lb/sq ft)	1.34	3.46	1.42
Alpha	1.11	Stream Power (lb/ft s)	4.66	29.96	8.21
Frctn Loss (ft)	4.01	Cum Volume (acre-ft)	46.50	73.35	180.82
C & E Loss (ft)	0.09	Cum SA (acres)	14.26	9.81	32.75

Warning: Divided flow computed for this cross-section.
Warning: The velocity head has changed by more than 0.5 ft (0.15 m). This may indicate the need for
additional cross sections.
Warning: The conveyance ratio (upstream conveyance divided by downstream conveyance) is less than
0.7 or greater than 1.4. This may indicate the need for additional cross sections.
Warning: The energy loss was greater than 1.0 ft (0.3 m). between the current and previous cross
section. This may indicate the need for additional cross sections.
Note: Multiple critical depths were found at this location. The critical depth with the lowest, valid,
water surface was used.

CROSS SECTION

RIVER: CarrollCanyon
REACH: Lower RS: 4298

INPUT
Description: FEMA CROSS SECTION - AN
Station Elevation Data num= 92

Sta	Elev	Sta	Elev	Sta	Elev	Sta	Elev	Sta	Elev
0	67.88	.51	67.18	1.36	66	1.85	65.34	2.85	64
3.96	62.57	4.5	62	5.87	60.65	6.52	60	6.79	59.75
9.2	58	9.9	57.5	11.31	56	12.83	54.47	13.32	54
15.32	52.17	15.48	52	15.62	51.86	16.46	51.05	17.9	49.65
19.51	48	20.95	46.5	21.41	46	21.96	45.5	23.36	44.26
23.66	44	32.43	42.23	33.28	42	91.36	42	105.11	42.47
110.13	42.6	142.29	43.56	147.57	43.7	169.3	44.39	171.77	44.38
186.33	44.77	192.24	44.74	201.95	44.72	262.45	45.22	265.9	45.22
269.26	45.21	288.79	45.19	323.57	45.23	332.61	45.21	361.02	45.09
444.65	44	462.1	44	482.35	43.24	489.75	42.9	509.05	42
510.89	41.15	513.23	40.06	513.36	40	513.43	39.96	517.6	38
520.53	36.59	521.78	36	528.06	36	535.02	37.58	536.85	38
537.94	38.24	546.22	40	552.2	41.17	557.27	42	562.66	42.47
566.95	42.91	577.46	44	579.66	44.76	583.89	46	585.83	46.41
592.64	48	614.37	48	614.76	47.93	625.66	46	752.17	46
758.18	47.66	759.43	48	762.17	48.76	766.52	50	773.85	51.8
775.66	52	790.48	52	792.53	52.06	792.68	52.07	793.03	52.08

793.82	52.1	813.41	52.64	837.03	53.44	845.2	53.74	845.43	53.75
852.18	54	853.49	54.04						

Manning's n Values num= 3

Sta	n Val	Sta	n Val	Sta	n Val
0	.08	509.05	.05	557.27	.05

Bank Sta: Left	Right	Lengths: Left	Channel	Right	Coeff Contr.	Expan.
509.05	557.27	372.34	223.32	134.47	.1	.3

Ineffective Flow num= 2

Sta L	Sta R	Elev	Permanent
0	475	50	F
614	853.49	49	F

Blocked Obstructions num= 2

Sta L	Sta R	Elev	Sta L	Sta R	Elev
120.51	476.93	60	830.89	853.07	60

CROSS SECTION OUTPUT Profile #100-yr

E.G. Elev (ft)	49.45	Element	Left OB	Channel
Right OB				
Vel Head (ft)	1.95	Wt. n-Val.	0.080	0.050
0.050				
W.S. Elev (ft)	47.50	Reach Len. (ft)	372.34	223.32
134.47				
Crit W.S. (ft)	46.59	Flow Area (sq ft)	152.70	423.32
112.33				
E.G. Slope (ft/ft)	0.010008	Area (sq ft)	668.17	423.32
312.14				
Q Total (cfs)	6700.00	Flow (cfs)	740.66	5215.52
743.83				
Top Width (ft)	354.46	Top Width (ft)	132.64	48.22
173.60				
Vel Total (ft/s)	9.73	Avg. Vel. (ft/s)	4.85	12.32
6.62				
Max Chl Dpth (ft)	11.50	Hydr. Depth (ft)	4.75	8.78
3.38				
Conv. Total (cfs)	66973.2	Conv. (cfs)	7403.6	52134.3
7435.3				
Length Wtd. (ft)	226.86	Wetted Per. (ft)	36.21	50.18
33.79				
Min Ch El (ft)	36.00	Shear (lb/sq ft)	2.64	5.27
2.08				
Alpha	1.33	Stream Power (lb/ft s)	12.78	64.94
13.75				
Frctn Loss (ft)	2.95	Cum Volume (acre-ft)	36.86	65.93
176.50				
C & E Loss (ft)	0.00	Cum SA (acres)	12.27	9.08
30.48				

Warning: Divided flow computed for this cross-section.
Warning: The energy loss was greater than 1.0 ft (0.3 m). between the current and previous cross
section. This may indicate the need for additional cross sections.
Note: Multiple critical depths were found at this location. The critical depth with the lowest, valid,
water surface was used.

CROSS SECTION

RIVER: CarrollCanyon
REACH: Lower RS: 4075

INPUT
Description: FEMA CROSS SECTION - AM
Station Elevation Data num= 71

Sta	Elev	Sta	Elev	Sta	Elev	Sta	Elev	Sta	Elev
0	75.13	1.9	74	2.53	73.64	5.29	72	8.39	70.19
8.7	70	9.15	69.74	12.15	68	14.43	66.69	15.61	66
18.25	64.49	19.11	64	26.19	60	29.72	58	33.18	56.05
33.26	56	33.47	55.88	36.8	54	38.87	53.42	43.58	52
45.22	50.68	46.06	50	47.35	48.97	49.81	46.98	50.94	46
52.3	45.32	54.78	44	580.96	44	585.09	43.33	590.28	42.35
591.03	42.21	592.03	42	601.42	40	602.96	39.67	609.62	38.26
610.82	38	620.2	36	628.64	36	632.52	36.38	643.2	37.47
646.65	37.83	647.17	37.88	667.31	40	670.29	40.31	686.31	42
686.51	42.02	702.28	43.73	703.97	43.92	704.7	44	704.78	44.01
719.05	46	758.64	46	761.84	45.51	772.14	44	796.49	44
821.7	44.8	842.01	45.49	854.72	45.9	857.25	46	925.86	46
928.87	46.28	932.89	46.64	946.3	48	948.06	48	949.79	48.15
955.95	48.79	963.24	49.53	967.58	50	989.55	51.73	993.2	52
999.9	52.26								

Manning's n Values num= 3

Sta	n Val	Sta	n Val	Sta	n Val
0	.08	580.96	.05	703.97	.05

Bank Sta: Left	Right	Lengths: Left	Channel	Right	Coeff Contr.	Expan.
580.96	703.97	235.95	250.93	239.15	.1	.3

Ineffective Flow num= 2

Sta L	Sta R	Elev	Permanent
0	555	56	F
758	999.9	47	F

Blocked Obstructions num= 2

Sta L	Sta R	Elev	Sta L	Sta R	Elev
189.51	269.25	60	339.53	556.68	60

CROSS SECTION OUTPUT Profile #100-yr

E.G. Elev (ft)	46.50	Element	Left OB	Channel
Right OB				
Vel Head (ft)	1.94	Wt. n-Val.	0.080	0.050
0.050				
W.S. Elev (ft)	44.56	Reach Len. (ft)	235.95	250.93
239.15				
Crit W.S. (ft)	44.30	Flow Area (sq ft)	13.65	596.44
1.58				
E.G. Slope (ft/ft)	0.017509	Area (sq ft)	129.21	596.44
21.33				
Q Total (cfs)	6700.00	Flow (cfs)	22.51	6674.54
2.95				
Top Width (ft)	404.03	Top Width (ft)	230.35	123.01
50.67				
Vel Total (ft/s)	10.95	Avg. Vel. (ft/s)	1.65	11.19
1.87				
Max Chl Dpth (ft)	8.56	Hydr. Depth (ft)	0.56	4.85
0.33				
Conv. Total (cfs)	50634.7	Conv. (cfs)	170.1	50442.3
22.3				
Length Wtd. (ft)	250.76	Wetted Per. (ft)	24.84	124.24
4.81				

Min Ch El (ft)	36.00	Shear (lb/sq ft)	0.60	5.25
0.36				
Alpha	1.04	Stream Power (lb/ft s)	0.99	58.72
0.67				
Frctn Loss (ft)	0.91	Cum Volume (acre-ft)	33.45	63.31
175.99				
C & E Loss (ft)	0.26	Cum SA (acres)	10.72	8.65
30.13				

Warning: Divided flow computed for this cross-section.
Warning: The velocity head has changed by more than 0.5 ft (0.15 m). This may indicate the need for
additional cross sections.
Warning: The conveyance ratio (upstream conveyance divided by downstream conveyance) is less than
0.7 or greater than 1.4. This may indicate the need for additional cross sections.
Warning: The energy loss was greater than 1.0 ft (0.3 m). between the current and previous cross
section. This may indicate the need for additional cross sections.
Note: Multiple critical depths were found at this location. The critical depth with the lowest, valid,
water surface was used.

CROSS SECTION

RIVER: CarrollCanyon
REACH: Lower RS: 3824

INPUT
Description: FEMA CROSS SECTION - AL
Station Elevation Data num= 87

Sta	Elev	Sta	Elev	Sta	Elev	Sta	Elev	Sta	Elev
0	51.65	54.25	50.8	58.51	50.76	64.09	50.66	79.28	50.43
81.92	50.4	93.45	50.35	108.73	50.47	110.84	50.49	115.24	50.51
119.52	50.55	160.11	51.14	188.36	51.3	190.45	51.37	199.13	51.25
199.63	51.26	208.79	51.59	211.06	51.54	216.1	51.18	224.85	50.02
224.93	50.02	225.01	50	225.26	49.94	232.77	48	236.39	47.24
241.5	46	250.33	45.65	299.69	44	451.12	44	505.81	43.17
509.71	43.17	540.95	42	638.52	42	639.89	41.91	642.05	41.72
652.09	40.87	654.57	40.64	661.57	40	666.05	38	705.12	36
743.93	36	745.97	36.76	749.69	38	751.04	38.2	758.86	39.42
762.34	40	765.72	41.08	768.71	42	770.09	42.39	771.78	42.88
775.41	44	792.11	45.42	797.2	46	802.26	46	811.22	45.55
825.49	44	825.56	43.99	825.69	43.98	848.06	42.1	849.58	42
877.7	42	942.89	42.66	946.13	42.64	952.39	42.57	955.5	42.52
957.23	42.51	973.75	44	999.69	44	1005.16	44.49	1008.05	44.74
1020.64	46	1020.74	46	1021.93	46.17	1026.4	46.79	1036.89	48
1039.24	50	1039.85	50.52	1040.63	51.19	1041.46	51.87	1041.64	52
1130.59	52	1143.19	52.34	1144.77	52.46	1149.02	52.31	1150.5	52.46
1165.97	54	1168.06	54.13						

Manning's n Values num= 3

Sta	n Val	Sta	n Val	Sta	n Val
0	.075	652.09	.025	765.72	.045

Bank Sta: Left	Right	Lengths: Left	Channel	Right	Coeff Contr.	Expan.
652.09	765.72	231.01	310.07	383.91	.1	.3

Ineffective Flow num= 2

Sta L	Sta R	Elev	Permanent

```
       0  618.87      50       F
     802 1168.06      47       F
Blocked Obstructions     num=       3
   Sta L   Sta R    Elev   Sta L   Sta R    Elev   Sta L   Sta R    Elev
   29.52   205.9      60  396.04  620.39      60 1048.67 1168.04      60
```

CROSS SECTION OUTPUT Profile #100-yr

E.G. Elev (ft)	45.32	Element	Left OB	Channel
Right OB				
Vel Head (ft)	1.07	Wt. n-Val.	0.075	0.025
0.045				
W.S. Elev (ft)	44.25	Reach Len. (ft)	231.01	310.07
383.91				
Crit W.S. (ft)	42.18	Flow Area (sq ft)	79.01	784.45
17.03				
E.G. Slope (ft/ft)	0.001530	Area (sq ft)	104.50	784.45
284.09				
Q Total (cfs)	6700.00	Flow (cfs)	107.41	6566.42
26.17				
Top Width (ft)	441.36	Top Width (ft)	135.66	113.63
192.07				
Vel Total (ft/s)	7.61	Avg. Vel. (ft/s)	1.36	8.37
1.54				
Max Chl Dpth (ft)	8.25	Hydr. Depth (ft)	2.49	6.90
1.34				
Conv. Total (cfs)	171297.8	Conv. (cfs)	2746.1	167882.4
669.2				
Length Wtd. (ft)	308.92	Wetted Per. (ft)	34.00	114.81
13.13				
Min Ch El (ft)	36.00	Shear (lb/sq ft)	0.22	0.65
0.12				
Alpha	1.19	Stream Power (lb/ft s)	0.30	5.46
0.19				
Frctn Loss (ft)	0.72	Cum Volume (acre-ft)	32.81	59.34
175.15				
C & E Loss (ft)	0.09	Cum SA (acres)	9.73	7.96
29.47				

Warning: Divided flow computed for this cross-section.
Warning: The velocity head has changed by more than 0.5 ft (0.15 m). This may indicate the need for
additional cross sections.
Warning: The conveyance ratio (upstream conveyance divided by downstream conveyance) is less than
0.7 or greater than 1.4. This may indicate the need for additional cross sections.
Note: Multiple critical depths were found at this location. The critical depth with the lowest, valid,
water surface was used.

CROSS SECTION

RIVER: CarrollCanyon
REACH: Lower RS: 3514

INPUT
Description: FEMA CROSS SECTION - AK
Station Elevation Data num= 165

Sta	Elev	Sta	Elev	Sta	Elev	Sta	Elev	Sta	Elev
0	50.6	39.94	50	58.41	50.28	81.23	50.68	81.86	50.77
83.48	50.6	85.76	50.77	90.23	50.71	92.43	50.9	98.54	51
100.52	51.13	104.04	51.18	106.23	51.18	107.9	51.17	110.26	51.16
111.43	51.15	112.8	51.1	114.09	51.05	117.99	50.82	130.6	50
148.51	49.45	151.22	49.35	156.44	49.21	168.95	48.58	178.11	48.4
190.08	48.13	195.39	48	200.57	48	209.93	47.81	211.62	47.63
213.11	47.57	220.76	46.68	224.03	46.32	226.64	46	295.36	46
297.46	45.95	297.53	45.95	300.01	46	301.43	46	306.14	45.93
306.6	45.92	307.31	45.88	313.48	45.62	317.84	45.32	334.32	44.66
342.32	44.27	343.91	44.23	345.57	44.2	350.97	44	377.03	43.55
380.25	43.5	420.58	43.34	423.02	43.31	429.2	43.35	440.35	43.01
458.15	42	473.32	41.57	514.16	40.94	516.68	40.77	519.33	40.85
521.31	40.88	525.54	40.62	528.83	40.44	529.31	40.42	529.95	40.4
532.66	40.26	535.92	40	537.06	40	542.17	38.43	543.63	38
543.75	37.94	547.53	36	614	36	615.15	36.61	617.78	38
627.75	39.93	628.12	40	628.33	40.03	635.35	41.05	641.96	42
644.4	42.94	644.62	43.03	647.13	44	685.79	44	691.06	42
691.9	41.66	696.09	40	836.52	40	840.54	40.09	840.61	40.09
841.95	40.12	842.23	40.12	842.81	40.14	854.95	40.43	856.71	40.48
859.89	40.59	874.14	40.99	881.11	41.22	890.41	41.44	899.75	41.64
900.85	41.65	902.44	41.66	915.2	41.92	915.7	41.92	918.1	42
967.63	42	1034.76	43.11	1036.77	43.12	1048.1	43.15	1048.35	43.15
1066.63	43.2	1070.44	43.2	1089.65	43.12	1095.29	43.13	1099.68	43.08
1099.87	43.08	1104.81	43.03	1131.63	43.25	1137.57	43.41	1140	43.37
1144	43.49	1146.26	43.46	1150.71	43.58	1155.13	43.72	1162.22	43.98
1162.33	43.98	1162.65	44	1162.77	44	1170.92	44.78	1181.92	46
1182.59	46.27	1184.08	46.75	1188.54	48	1189.93	48.25	1190.66	48.38
1193.06	48.6	1194.94	48.85	1198.43	49.66	1198.98	49.77	1199.92	50
1202.55	50.67	1207.14	52	1207.56	52.11	1208	52.25	1212.63	54
1214.97	55.03	1216.84	56	1217.7	56.45	1224.29	59.88	1224.52	60
1224.79	60.14	1228.48	62	1229.71	62.61	1232.7	64	1235.24	65.16
1237.14	66	1238.39	66.55	1244.81	69.4	1246.18	70	1252.58	71.68
1253.14	71.73	1253.61	71.84	1253.75	71.88	1282.46	72	1299.48	72

Manning's n Values num= 3

Sta	n Val	Sta	n Val	Sta	n Val
0	.075	525.54	.025	635.35	.045

Bank Sta: Left	Right	Lengths: Left	Channel	Right	Coeff Contr.	Expan.
525.54	635.35	493.03	515.02	582.81	.1	.3

Ineffective Flow num= 2

Sta L	Sta R	Elev	Permanent
0	440	50	F
647	1299.48	45	F

Blocked Obstructions num= 4

Sta L	Sta R	Elev	Sta L	Sta R	Elev	Sta L	Sta R	Elev
0	208.01	60	310.82	443.13	60	845	945	55
1030	1150	55						

CROSS SECTION OUTPUT Profile #100-yr

E.G. Elev (ft)	44.52	Element	Left OB	Channel
Right OB				
Vel Head (ft)	1.92	Wt. n-Val.	0.075	0.025
0.045				
W.S. Elev (ft)	42.60	Reach Len. (ft)	493.03	515.02
582.81				
Crit W.S. (ft)	42.31	Flow Area (sq ft)	90.99	584.21
7.59				
E.G. Slope (ft/ft)	0.003916	Area (sq ft)	90.99	584.21
427.28				

Q Total (cfs)	6700.00	Flow (cfs)	124.97	6560.33	14.70
Top Width (ft)	410.51	Top Width (ft)	77.99	109.81	222.70
Vel Total (ft/s)	9.81	Avg. Vel. (ft/s)	1.37	11.23	1.94
Max Chl Dpth (ft)	6.60	Hydr. Depth (ft)	1.17	5.32	0.93
Conv. Total (cfs)	107060.8	Conv. (cfs)	1996.9	104828.9	234.9
Length Wtd. (ft)	514.81	Wetted Per. (ft)	78.03	111.37	8.35
Min Ch El (ft)	36.00	Shear (lb/sq ft)	0.29	1.28	0.22
Alpha	1.28	Stream Power (lb/ft s)	0.39	14.40	0.43
Frctn Loss (ft)	1.88	Cum Volume (acre-ft)	32.30	54.47	172.01
C & E Loss (ft)	0.04	Cum SA (acres)	9.16	7.17	27.64

Warning: Divided flow computed for this cross-section.
Warning: The energy loss was greater than 1.0 ft (0.3 m). between the current and previous cross
section. This may indicate the need for additional cross sections.
Note: Multiple critical depths were found at this location. The critical depth with the lowest, valid,
water surface was used.

CROSS SECTION

RIVER: CarrollCanyon
REACH: Lower RS: 2999

INPUT
Description: FEMA CROSS SECTION - AJ
Station Elevation Data num= 102

Sta	Elev	Sta	Elev	Sta	Elev	Sta	Elev	Sta	Elev
0	48.36	80	44.57	82.12	44.46	89.31	44.1	90.16	44.06
91.36	44	91.55	44	100.3	43.6	118.76	42.79	125.36	42.53
138.24	42	138.31	42	138.49	41.99	138.58	41.99	154.16	41.28
166.79	40.68	173.1	40.39	175.14	40.3	177.24	40.23	177.69	40.23
182.07	40	227.59	40	229.32	39.89	233.06	39.92	237.47	39.94
242.53	39.95	246.19	40	257.6	40	265.47	39.43	265.93	39.4
266.52	39.35	270.38	39.09	273.53	38.95	274.33	38.9	275	38.86
275.99	38.82	278.28	38.62	285.28	38	287.85	38	288.11	37.8
290.91	36	293.6	34	360.56	34	361.99	35.02	363.36	36
384.18	38	386.21	38.9	388.53	40	412.79	41.85	414.88	42
424.14	42	426.34	41.04	428.65	40	430.5	39.16	433.08	38
434.86	37.18	437.45	36	462.64	34	478.68	34	485.18	34.17
541.5	34.83	558.61	34.79	586	36	621.47	36	716.73	34.89
721.93	34.79	742.26	34.8	745.77	34.73	751.93	34.73	755.82	34.71
756.89	34.69	792.13	34.43	809.84	34.22	817.28	34	902.54	34
906.7	34.24	927.67	36	929.61	36.65	933.47	38	933.63	38.05
939.04	40	942.58	41.32	944.53	42	946.39	42.72	949.64	44
959.32	47.9	959.57	48	959.98	48.16	964.8	50	969.96	51.89
970.27	52	970.35	52.04	974.25	54	975.48	54.71	977.68	56
980.08	57.4	981.1	58	983.64	59.48	984.52	60	986.65	61.24
987.95	62	1002.24	62.51						

Manning's n Values num= 3

Sta	n Val	Sta	n Val	Sta	n Val
0	.075	274.33	.025	386.21	.075

Bank Sta: Left	Right	Lengths: Left	Channel	Right	Coeff Contr.	Expan.
274.33	386.21	180.26	171.12	173.29	.1	.3

Ineffective Flow num= 2

Sta L	Sta R	Elev	Permanent
0	220	43	F
423.96	1002.24	43	F

CROSS SECTION OUTPUT Profile #100-yr

E.G. Elev (ft)	42.59	Element	Left OB	Channel
Right OB Vel Head (ft)	1.77	Wt. n-Val.	0.075	0.025
0.075 W.S. Elev (ft)	40.82	Reach Len. (ft)	180.26	171.12
173.29 Crit W.S. (ft)	40.21	Flow Area (sq ft)	55.62	617.79
7.61 E.G. Slope (ft/ft)	0.003428	Area (sq ft)	94.31	617.79
3014.52 Q Total (cfs)	6700.00	Flow (cfs)	65.49	6628.45
6.06 Top Width (ft)	749.92	Top Width (ft)	110.52	111.88
527.52 Vel Total (ft/s)	9.84	Avg. Vel. (ft/s)	1.18	10.73
0.80 Max Chl Dpth (ft)	6.82	Hydr. Depth (ft)	1.02	5.52
0.58 Conv. Total (cfs)	114441.1	Conv. (cfs)	1118.6	113219.0
103.5 Length Wtd. (ft)	171.77	Wetted Per. (ft)	54.37	114.10
13.38 Min Ch El (ft)	34.00	Shear (lb/sq ft)	0.22	1.16
0.12 Alpha	1.18	Stream Power (lb/ft s)	0.26	12.43
0.10 Frctn Loss (ft)	0.19	Cum Volume (acre-ft)	31.25	47.36
148.99 C & E Loss (ft)	0.44	Cum SA (acres)	8.10	5.86
22.62				

Warning: Divided flow computed for this cross-section.
Warning: The velocity head has changed by more than 0.5 ft (0.15 m). This may indicate the need for
additional cross sections.
Warning: The conveyance ratio (upstream conveyance divided by downstream conveyance) is less than
0.7 or greater than 1.4. This may indicate the need for additional cross sections.
Note: Multiple critical depths were found at this location. The critical depth with the lowest, valid,
water surface was used.

CROSS SECTION

RIVER: CarrollCanyon

REACH: Lower RS: 2827

INPUT
Description: FEMA CROSS SECTION - AI
Station Elevation Data num= 108

Sta	Elev	Sta	Elev	Sta	Elev	Sta	Elev	Sta	Elev
0	50	80	42.03	80.24	42	83.49	42	90.49	41.69
91.44	41.64	107.99	41.1	111.51	40.9	120.91	40.46	126.4	40.25
131.13	40	156.53	40	174.26	38.59	180.58	38.38	189.06	38
302.33	38	307.47	34	309.97	32.06	310.04	32	372.76	32
374.6	33.21	375.76	34	377.62	35.22	378.8	36	387.75	37.04
390.02	37.31	395.93	38	401.65	39.75	402.44	40	440.36	40
445.52	38.13	445.88	38	451.46	36	464.1	34.2	465.39	34
576.27	34	586.05	35.22	600.18	35.04	603.13	35.1	605.19	35.23
607.49	35.25	625.13	35.26	637.25	36	719.57	36	743.28	34.9
757.34	34.93	761.51	34.96	765.66	35.01	769.11	34.94	772.96	35.01
785.31	35.08	792.07	35.06	798.03	35.08	803.09	35.08	811.15	35.02
815.74	35	821.48	34.94	825.07	34.88	830.24	35	842.75	34.95
887.88	34	894.05	34	895.38	33.6	897.38	33.15	908.94	32
909.08	32	909.17	31.94	909.32	31.89	911.82	30.82	912.84	30.59
914.12	30.5	914.58	30.47	915.61	30.4	916.37	30.34	916.79	30.31
917.18	30.29	917.47	30.29	917.77	30.34	918.08	30.35	918.54	30.49
918.85	30.55	920.65	31.33	920.91	31.43	922.1	32	935.08	34
950.43	36	958.02	37.29	961.9	38	965.11	39.34	966.71	40
970.65	41.85	970.98	42	971.25	42.13	974.47	44	977.46	45.73
977.92	46	980.46	47.47	981.37	48	982.15	48.46	993.61	55.1
995.16	56	996.23	56.63	998.6	58	1001.14	59.48	1002.04	60
1013.22	61.72	1016.71	62	1025.21	62				

Manning's n Values num= 3

Sta	n Val	Sta	n Val	Sta	n Val
0	.075	302.33	.025	395.93	.075

Bank Sta: Left	Right	Lengths: Left	Channel	Right	Coeff Contr.	Expan.
302.33	395.93	118.67	115.88	115.6	.1	.3

Ineffective Flow num= 2

Sta L	Sta R	Elev	Permanent
0	195	43	F
616.51	1025.21	50	F

Blocked Obstructions num= 1

Sta L	Sta R	Elev
615.7	757.71	55

CROSS SECTION OUTPUT Profile #100-yr

E.G. Elev (ft)	41.96	Element	Left OB	Channel	Right OB
Vel Head (ft)	0.32	Wt. n-Val.	0.075	0.025	0.075
W.S. Elev (ft)	41.65	Reach Len. (ft)	118.67	115.88	115.60
Crit W.S. (ft)	37.65	Flow Area (sq ft)	391.54	782.21	1321.76
E.G. Slope (ft/ft)	0.000534	Area (sq ft)	576.39	782.21	2814.37
Q Total (cfs)	6700.00	Flow (cfs)	424.67	4319.55	1955.77
Top Width (ft)	736.92	Top Width (ft)	211.04	93.60	432.28
Vel Total (ft/s)	2.68	Avg. Vel. (ft/s)	1.08	5.52	1.48
Max Chl Dpth (ft)	11.36	Hydr. Depth (ft)	3.65	8.36	

6.01				
Conv. Total (cfs)	290025.3	Conv. (cfs)	18383.0	186982.0
84660.3				
Length Wtd. (ft)	115.94	Wetted Per. (ft)	107.33	96.98
227.39				
Min Ch El (ft)	32.00	Shear (lb/sq ft)	0.12	0.27
0.19				
Alpha	2.83	Stream Power (lb/ft s)	0.13	1.48
0.29				
Frctn Loss (ft)	0.04	Cum Volume (acre-ft)	29.86	44.61
137.40				
C & E Loss (ft)	0.01	Cum SA (acres)	7.43	5.45
20.71				

Warning: Divided flow computed for this cross-section.
Warning: The conveyance ratio (upstream conveyance divided by downstream conveyance) is less than
0.7 or greater than 1.4. This may indicate the need for additional cross sections.
Note: Multiple critical depths were found at this location. The critical depth with the lowest, valid,
water surface was used.

CROSS SECTION

RIVER: CarrollCanyon
REACH: Lower RS: 2712

INPUT
Description: FEMA CROSS SECTION - AH
Station Elevation Data num= 142

Sta	Elev	Sta	Elev	Sta	Elev	Sta	Elev	Sta	Elev
0	68.85	.83	68.84	16.85	69.42	17.35	69.42	17.99	69.41
18.79	69.41	20.36	69.39	26.94	69.9	27.34	69.89	28.85	70
59.31	70	59.85	69.92	64.07	69.59	65.71	69.43	67.91	69.19
69.69	68.97	73.95	68.65	75.28	68.5	80.65	68.09	80.81	68.06
81.76	68	84.57	67.7	85.67	67.61	87.92	67.34	89.29	67.23
92.06	66.55	93.85	66	95.55	65.18	98.23	64	98.35	64
101.39	62.66	102.88	62	105.52	60.84	107.38	60	107.58	59.91
111.89	58	114.05	57.1	116.61	56	119.48	54.72	121.33	54
123.8	52.96	126	52	129.63	50.31	130.25	50	130.86	49.43
132.44	48	133.04	47.5	134.75	46	135.63	45.26	137.07	44
138.15	43.11	139.42	42	140.51	41.05	141.79	40	145.16	38.97
148.49	38	210.19	38	212.38	36.34	212.83	36	213.11	35.79
215.52	34	216.6	33.19	218.22	32	282.03	32	284.98	33.8
285.31	34	286.27	34.42	289.91	36	295.1	36	306.35	36.8
310.45	38	317.01	39.8	318.16	40	348.91	40	350.12	39.47
353.78	38	356.32	37.09	359.85	36	366.45	34.84	370.75	34
372.82	34	379.8	33.19	380.25	33.18	381.34	33.06	381.7	33.12
382.74	32.85	401.13	32.28	415.2	32.45	444.54	32.88	509.14	34
516.66	34	567.33	36	600.24	37.42	614.6	38	667.49	38
673.59	37.89	674.31	37.89	695.05	37.68	713.99	37.59	718.43	37.55
732.92	37.32	741.84	37.1	753.23	36.79	779.81	36	784.36	35.47
797.16	34	809.42	32.37	812.35	32	813.71	31.59	818.96	30
830.24	30	832.08	30.93	833.84	32	848.32	33.42	854.49	34
858	35.41	861.68	36.92	864.43	38	867.4	39.09	869.8	40
871.58	40.66	875.64	41.8	875.85	41.86	876.35	42	880.78	43.67
881.09	43.79	881.89	44.2	885.43	46	888.72	47.66	889.31	47.95
889.41	48	889.58	48.08	895.62	51.11	899.28	52.94	901.37	54
902.92	54.79	905.24	56	908.53	57.84	908.81	58	908.89	58.05

912.21 60 923.03 60

Manning's n Values num= 3

Sta	n Val	Sta	n Val	Sta	n Val
0	.055	210.19	.016	310.45	.075

Bank Sta: Left	Right	Lengths: Left	Channel	Right	Coeff Contr.	Expan.
210.19	310.45	146.94	146.04	143.37	.1	.3

Ineffective Flow num= 1

Sta L	Sta R	Elev	Permanent
523.59	923.03	47.45	F

Blocked Obstructions num= 1

Sta L	Sta R	Elev
521.7	776.5	55

CROSS SECTION OUTPUT Profile #100-yr

E.G. Elev (ft)	41.91	Element	Left OB	Channel	Right OB
Vel Head (ft)	0.40	Wt. n-Val.	0.055	0.016	0.075
W.S. Elev (ft)	41.51	Reach Len. (ft)	146.94	146.04	143.37
Crit W.S. (ft)	37.21	Flow Area (sq ft)	234.94	820.16	1439.68
E.G. Slope (ft/ft)	0.000258	Area (sq ft)	234.94	820.16	2184.72
Q Total (cfs)	6700.00	Flow (cfs)	226.46	4868.67	1604.87
Top Width (ft)	479.83	Top Width (ft)	70.21	100.26	309.36
Vel Total (ft/s)	2.69	Avg. Vel. (ft/s)	0.96	5.94	1.11
Max Chl Dpth (ft)	11.51	Hydr. Depth (ft)	3.35	8.18	6.82
Conv. Total (cfs)	416809.2	Conv. (cfs)	14088.0	302881.7	99839.4
Length Wtd. (ft)	145.45	Wetted Per. (ft)	71.05	103.43	219.84
Min Ch El (ft)	32.00	Shear (lb/sq ft)	0.05	0.13	0.11
Alpha	3.60	Stream Power (lb/ft s)	0.05	0.76	0.12
Frctn Loss (ft)	0.04	Cum Volume (acre-ft)	28.75	42.48	130.76
C & E Loss (ft)	0.01	Cum SA (acres)	7.05	5.20	19.73

Warning: Divided flow computed for this cross-section.
Note: Multiple critical depths were found at this location. The critical depth with the lowest, valid,
water surface was used.

CROSS SECTION

RIVER: CarrollCanyon
REACH: Lower RS: 2566

INPUT

Description:

Station Elevation Data num= 112

Sta	Elev	Sta	Elev	Sta	Elev	Sta	Elev	Sta	Elev
0	84.9	4.57	84.52	27.73	82.54	40.74	81.46	51.82	80.6
63.95	79.7	65.36	79.58	67.73	79.34	73.88	78.82	77.5	78.22
78.4	78	84.5	74	86.26	72.83	92.14	68.96	93.59	68
95.68	66.68	96.78	66	99.13	64.61	100.18	64	102.52	62.66
103.69	62	106.05	60.69	107.28	60	111.01	58	114.76	56.05
114.86	56	115.21	55.82	118.79	54	121.3	52.7	122.64	52
123.48	51.51	126.1	50	128.87	48.44	129.64	48	130.37	47.61
136.54	44.28	137.58	43.72	140.71	42	143.24	40.57	144.26	40
145.98	38.72	146.83	38	214.83	36	216.74	34.74	217.84	34
219.74	32.71	220.61	32.13	220.79	32	285.87	32	287.42	33.05
288.76	34	291.78	35.07	294.45	36	306.13	37.68	308.3	38
363.65	38	368.17	36.51	369.68	36	370.58	35.74	372.35	35.13
375.85	34	473.61	34	485.41	34.37	485.58	34.37	491.38	34.57
491.44	34.57	529.08	35.22	530.95	35.22	552.56	36	695.13	36
705.24	35.54	705.48	35.54	709.98	35.73	710.28	35.72	717.37	35.95
717.44	35.95	719.57	36	743.84	36	761.09	35.09	770.42	34.65
786.08	33.77	797.25	33.25	810.09	32.2	812.37	32	813.48	31.68
819.73	30	822.25	28.8	824.05	28	831.81	28	835	29.41
836.32	30	847.82	32	860.8	34	863.27	34.93	868.72	36.96
871.49	38	874.2	39.01	879.23	40.9	885.53	43.25	887.55	44
890.69	45.45	891.94	46	895.22	47.76	895.68	48	897.49	48.94
900.67	50.6	905.05	52.87	907.21	54	910.53	55.73	911.05	56
913.09	57.07	914.49	58						

Manning's n Values num= 3

Sta	n Val	Sta	n Val	Sta	n Val
0	.055	214.83	.016	294.45	.075

Bank Sta: Left	Right	Lengths: Left	Channel	Right	Coeff Contr.	Expan.
214.83	294.45	148.59	148.97	152.01	.1	.3

Ineffective Flow num= 1

Sta L	Sta R	Elev	Permanent
535	914.49	50	F

Blocked Obstructions num= 1

Sta L	Sta R	Elev
535	821	55

CROSS SECTION OUTPUT Profile #100-yr

E.G. Elev (ft)	41.86	Element	Left OB	Channel
Right OB				
Vel Head (ft)	0.50	Wt. n-Val.	0.055	0.016
0.075				
W.S. Elev (ft)	41.36	Reach Len. (ft)	148.59	148.97
152.01				
Crit W.S. (ft)	37.82	Flow Area (sq ft)	304.37	713.57
1437.83				
E.G. Slope (ft/ft)	0.000289	Area (sq ft)	304.37	713.57
1936.14				
Q Total (cfs)	6700.00	Flow (cfs)	358.74	4775.18
1566.08				
Top Width (ft)	452.64	Top Width (ft)	72.99	79.62
300.02				
Vel Total (ft/s)	2.73	Avg. Vel. (ft/s)	1.18	6.69
1.09				
Max Chl Dpth (ft)	13.36	Hydr. Depth (ft)	4.17	8.96
5.98				
Conv. Total (cfs)	394002.9	Conv. (cfs)	21096.1	280811.3
92095.5				

Length Wtd. (ft)	149.52	Wetted Per. (ft)	74.07	81.80
247.35				
Min Ch El (ft)	32.00	Shear (lb/sq ft)	0.07	0.16
0.10				
Alpha	4.34	Stream Power (lb/ft s)	0.09	1.05
0.11				
Frctn Loss (ft)	0.04	Cum Volume (acre-ft)	27.85	39.91
123.98				
C & E Loss (ft)	0.00	Cum SA (acres)	6.81	4.89
18.72				

Warning: Divided flow computed for this cross-section.
Note: Multiple critical depths were found at this location. The critical depth with the lowest, valid,
water surface was used.

CROSS SECTION

RIVER: CarrollCanyon
REACH: Lower RS: 2417

INPUT
Description: NB Interstate 5 Bridge Piers
Station Elevation Data num= 138

Sta	Elev	Sta	Elev	Sta	Elev	Sta	Elev	Sta	Elev
0	100	.64	100	5.48	99.65	10.11	99.34	19.43	98.68
21.38	98.55	23.37	98.43	25.27	98.32	26.92	98.24	30.49	98
31.96	97.81	32.07	97.8	36.88	97.15	39.72	96.9	42.67	96.62
46.99	96	47.28	96	49.47	94.98	51.19	94	53.42	92.68
54.5	92	57.73	90	58.84	89.3	60.96	88	62.25	87.23
64.26	86	65.88	85	67.52	84	69.97	82.45	70.69	82
71.16	81.71	73.89	80	76.53	78.37	77.15	78	80.52	76
81.49	75.42	83.78	74	84.56	73.52	89.72	70.31	90.22	70
90.89	69.58	93.44	68	94.95	67.06	98.8	64.67	99.89	64
100.88	63.38	103.11	62	105.58	60.49	106.4	60	107.06	59.61
109.7	58	112.97	56.07	113.45	55.79	116.44	54	117.73	53.23
121.75	50.82	123.13	50	125.09	48.79	126.4	48	126.95	47.73
130.37	46	133.9	44.33	135.47	43.6	138.85	42	139.5	41.61
142.29	40	142.95	39.18	144	38	148	36.78	149.04	36.46
160.09	36	209.78	36	212.34	35.28	212.99	35.1	214.34	34.66
215.1	34.43	216.25	34	217.26	33.61	221.11	32	225	30
280.91	30	283.27	31.76	283.62	32	286.23	33.77	286.45	33.9
286.61	34	289.12	34.88	292.37	36	299.79	37.79	299.88	37.81
300.71	38	368.38	38	382.79	36.97	390.01	36.38	394.83	36
546.38	36	553.78	35.53	572.01	34.89	588.13	34.84	593.62	34.7
669.33	34	712.53	34	723.62	34.17	750.2	34.31	751.06	34.32
766.8	34	781.88	34	818.04	32	818.79	31.46	819.57	30.9
820.8	30	830.68	30	831.47	30.36	832.86	30.56	834.52	30.99
835.54	31.24	838.03	32	842.01	32	862.37	33.27	870.23	33.81
871.49	33.81	874.5	34	879.76	34.77	881.99	35.12	884.17	35.45
887.34	35.99	891.44	36.77	894.58	37.03	899.11	37.25	903.35	37.7
903.72	37.72	905	37.75	909.97	38	911.57	38.09	911.77	38.11
912.03	38.12	915.18	38.51	915.19	48				

Manning's n Values num= 3

Sta	n Val	Sta	n Val	Sta	n Val
0	.055	209.78	.016	292.37	.075

Bank Sta: Left	Right	Lengths: Left	Channel	Right	Coeff Contr.	Expan.
209.78	292.37	120.25	117.72	112.38	.1	.3

Ineffective Flow num= 1

Sta L	Sta R	Elev	Permanent
548	915.19	50	F

Blocked Obstructions num= 2

Sta L	Sta R	Elev	Sta L	Sta R	Elev
548	850	55	130	137	80

CROSS SECTION OUTPUT Profile #100-yr

E.G. Elev (ft)	41.83	Element	Left OB	Channel
Right OB				
Vel Head (ft)	0.50	Wt. n-Val.	0.055	0.016
0.075				
W.S. Elev (ft)	41.33	Reach Len. (ft)	13.50	13.50
13.50				
Crit W.S. (ft)	37.43	Flow Area (sq ft)	347.26	843.76
1191.10				
E.G. Slope (ft/ft)	0.000219	Area (sq ft)	347.26	843.76
1579.09				
Q Total (cfs)	6700.00	Flow (cfs)	398.95	5341.02
960.03				
Top Width (ft)	473.19	Top Width (ft)	69.79	82.59
320.81				
Vel Total (ft/s)	2.81	Avg. Vel. (ft/s)	1.15	6.33
0.81				
Max Chl Dpth (ft)	11.33	Hydr. Depth (ft)	4.98	10.22
4.66				
Conv. Total (cfs)	452677.3	Conv. (cfs)	26954.5	360859.3
64863.6				
Length Wtd. (ft)	13.50	Wetted Per. (ft)	71.31	85.38
261.38				
Min Ch El (ft)	30.00	Shear (lb/sq ft)	0.07	0.14
0.06				
Alpha	4.06	Stream Power (lb/ft s)	0.08	0.86
0.05				
Frctn Loss (ft)	0.01	Cum Volume (acre-ft)	26.73	37.25
117.85				
C & E Loss (ft)	0.05	Cum SA (acres)	6.56	4.62
17.64				

Warning: Divided flow computed for this cross-section.
Warning: The conveyance ratio (upstream conveyance divided by downstream conveyance) is less than
0.7 or greater than 1.4. This may indicate the need for additional cross sections.
Note: Multiple critical depths were found at this location. The critical depth with the lowest, valid,
energy was used.

BRIDGE

RIVER: CarrollCanyon
REACH: Lower RS: 2353

INPUT
Description:
Distance from Upstream XS = 13.5
Deck/Roadway Width = 100
Weir Coefficient = 2.6

Upstream Deck/Roadway Coordinates
num= 10

Sta	Hi Cord	Lo Cord	Sta	Hi Cord	Lo Cord	Sta	Hi Cord	Lo Cord
190	36		209	37.16		209.29	40.16	35.58
236.29	40.6	36.02	272.29	41.25	36.67	299.29	42.44	37.86
300.81	42.5		301	39.5		330	39.5	
368.38	38							

Upstream Bridge Cross Section Data
Station Elevation Data num= 138

Sta	Elev	Sta	Elev	Sta	Elev	Sta	Elev	Sta	Elev
0	100	.64	100	5.48	99.65	10.11	99.34	19.43	98.68
21.38	98.55	23.37	98.43	25.27	98.32	26.92	98.24	30.49	98
31.96	97.81	32.07	97.8	36.88	97.15	39.72	96.9	42.67	96.62
46.99	96	47.28	96	49.47	94.98	51.19	94	53.42	92.68
54.5	92	57.73	90	58.84	89.3	60.96	88	62.25	87.23
64.26	86	65.88	85	67.52	84	69.97	82.45	70.69	82
71.16	81.71	73.89	80	76.53	78.37	77.15	78	80.52	76
81.49	75.42	83.78	74	84.56	73.52	89.72	70.31	90.22	70
90.89	69.58	93.44	68	94.95	67.06	98.8	64.67	99.89	64
100.88	63.38	103.11	62	105.58	60.49	106.4	60	107.06	59.61
109.7	58	112.97	56.07	113.45	55.79	116.44	54	117.73	53.23
121.75	50.82	123.13	50	125.09	48.79	126.4	48	126.95	47.73
130.37	46	133.9	44.33	135.47	43.6	138.85	42	139.5	41.61
142.29	40	142.95	39.18	144	38	148	36.78	149.04	36.46
160.09	36	209.78	36	212.34	35.28	212.99	35.1	214.34	34.66
215.1	34.43	216.25	34	217.26	33.61	221.11	32	225	30
280.91	30	283.27	31.76	283.62	32	286.23	33.77	286.45	33.9
286.61	34	289.12	34.88	292.37	36	299.79	37.79	299.88	37.81
300.71	38	368.38	38	382.79	36.97	390.01	36.38	394.83	36
546.38	36	553.78	35.53	572.01	34.89	588.13	34.84	593.62	34.7
669.33	34	712.53	34	723.62	34.17	750.2	34.31	751.06	34.32
766.8	34	781.88	34	818.04	32	818.79	31.46	819.57	30.9
820.8	30	830.68	30	831.47	30.36	832.86	30.56	834.52	30.99
835.54	31.24	838.03	32	842.01	32	862.37	33.27	870.23	33.81
871.49	33.81	874.5	34	879.76	34.77	881.99	35.12	884.17	35.45
887.34	35.99	891.44	36.77	894.58	37.03	899.11	37.25	903.35	37.7
903.72	37.72	905	37.75	909.97	38	911.57	38.09	911.77	38.11
912.03	38.12	915.18	38.51	915.19	48				

Manning's n Values num= 3

Sta	n Val	Sta	n Val	Sta	n Val
0	.055	209.78	.016	292.37	.075

Bank Sta: Left	Right	Coeff Contr.	Expan.
209.78	292.37	.1	.3

Ineffective Flow num= 1

Sta L	Sta R	Elev	Permanent
548	915.19	50	F

Blocked Obstructions num= 2

Sta L	Sta R	Elev	Sta L	Sta R	Elev
548	850	55	130	137	80

Downstream Deck/Roadway Coordinates
num= 9

Sta	Hi Cord	Lo Cord	Sta	Hi Cord	Lo Cord	Sta	Hi Cord	Lo Cord
213.5	38		213.65	41	36.42	236.29	40.6	36.02
272.29	41.25	36.67	299.29	42.44	37.86	300.81	42.5	
301	39.5		315.77	39.5		368.93	38	

Downstream Bridge Cross Section Data
Station Elevation Data num= 176

Sta	Elev	Sta	Elev	Sta	Elev	Sta	Elev	Sta	Elev

0	96.15	1.31	96.01	1.37	96	8.37	96	14.56	95.18
16.6	95.08	19.64	94.94	22.23	94.84	24.06	94.83	26.57	94.75
28.95	94.69	30.95	94.77	48.5	94.1	49.38	94.14	49.8	94
53.8	92.1	54.05	92	58.08	90.44	59.51	90	61.83	89.29
64.78	88	65.71	87.57	68.06	86.23	68.48	86	71.53	84.19
71.84	84	77.69	80.34	78.23	80	81.36	78.05	81.43	78
82.22	77.51	84.63	76	84.91	75.82	87.83	74	88.53	73.56
91.03	72	92.21	71.26	94.23	70	95.97	68.91	97.43	68
100.62	66	103.79	64.02	107.1	62	108	61.46	110.4	60
112.2	58.92	113.72	58	116.43	56.38	117.06	56	119.43	54.59
120.41	54	123.79	52	124.98	51.3	127.18	50	129.31	48.76
130.59	48	135.34	45.23	138.09	43.65	140.95	42	143.55	40.64
144.8	40	145.45	39.54	148.08	38	149	37.34	150.94	36
167.79	36	209.08	38	213.65	38	214.67	37.23	216.09	36
216.19	35.91	218.06	34	220.06	32	221.96	30	286.22	30
287.93	30.99	289.65	32	291.62	33.12	293.13	34	296.18	35.75
296.63	36	297.17	36.15	298.81	36.31	304.64	37.14	306.83	37.46
315.62	38	368.93	38	375.28	37.73	376.09	37.71	381.85	37.49
384.6	37.38	385.4	37.35	403.63	37.03	406.01	36.96	409.89	36.8
412.56	36.74	438.71	36	544.77	36	545.54	35.97	564.24	35.91
565.04	35.84	572.59	35.81	578.45	35.81	582.86	35.83	583.71	35.74
592.14	35.82	596.61	35.88	597.16	35.89	601.99	35.8	602.63	35.8
607.64	35.6	608.37	35.57	609.09	35.55	613.79	35.29	615.95	35.29
618.14	35.11	622.08	35.12	631.96	34.67	637.27	34.66	638.18	34.67
642.85	34.65	647.03	34.62	648.22	34.6	651.56	34.58	653.97	34.56
655.42	34.52	660.48	34.45	668.64	34	675.02	34	715.17	32.79
721.74	32.61	729.84	32.57	766.97	32	811.17	32	820.21	30.58
824.01	30	826.07	28.98	827.5	28	830.76	28	832.59	28.71
836.79	30	841.18	30.61	849.69	31.37	853.43	31.77	856.26	32
862.89	32.82	873.14	33.8	876.61	34	876.8	34.02	881.98	34.19
882.53	34.23	888.71	34.19	889.42	34.26	894.15	34.31	895.05	34.42
898.13	34.59	899.3	34.77	901.94	35.16	902.72	35.27	903.73	35.42
904.87	35.61	904.99	35.62	905.45	35.72	905.51	35.73	905.61	35.75
905.69	35.75	906.83	35.8	907.01	35.8	908.88	35.81	909.16	35.81
911.72	35.77	914.95	35.74	916.42	35.72	920.44	35.69	924.42	35.67
924.43	48								

Manning's n Values num= 3

Sta	n Val	Sta	n Val	Sta	n Val
0	.055	213.65	.016	315.62	.075

Bank Sta: Left	Right	Coeff Contr.	Expan.
213.65	315.62	.1	.3

Ineffective Flow num= 1

Sta L	Sta R	Elev	Permanent
525.9	924.43	50	F

Blocked Obstructions num= 3

Sta L	Sta R	Elev	Sta L	Sta R	Elev	Sta L	Sta R	Elev
130	137	80	525.9	786.34	55	229.6	236.6	80

Upstream Embankment side slope = 0 horiz. to 1.0 vertical
Downstream Embankment side slope = 0 horiz. to 1.0 vertical
Maximum allowable submergence for weir flow = .95
Elevation at which weir flow begins =
Energy head used in spillway design =
Spillway height used in design =
Weir crest shape = Broad Crested

Number of Piers = 2

Pier Data
Pier Station Upstream= 236.29 Downstream= 236.29
Upstream num= 2

```
    Width    Elev     Width    Elev
     2.5      28       2.5    37.86
Downstream      num=        2
    Width    Elev     Width    Elev
     2.5      28       2.5    37.86

Pier Data
Pier Station      Upstream=  272.29    Downstream=  272.29
Upstream      num=        2
    Width    Elev     Width    Elev
     2.5      28       2.5    37.86
Downstream      num=        2
    Width    Elev     Width    Elev
     2.5      28       2.5    37.86

Number of Bridge Coefficient Sets =  1

Low Flow Methods and Data
       Energy
Selected Low Flow Methods = Highest Energy Answer

High Flow Method
       Energy Only

Additional Bridge Parameters
       Add Friction component to Momentum
       Do not add Weight component to Momentum
       Class B flow critical depth computations use critical depth
           inside the bridge at the upstream end
       Criteria to check for pressure flow = Upstream energy grade line

BRIDGE OUTPUT  Profile #100-yr


  E.G. US. (ft)                 41.83    Element                  Inside BR US
Inside BR DS
  W.S. US. (ft)                 41.33    E.G. Elev (ft)                41.77
41.49
  Q Total (cfs)               6700.00    W.S. Elev (ft)                41.44
40.90
  Q Bridge (cfs)              2822.27    Crit W.S. (ft)                38.23
37.03
  Q Weir (cfs)                           Max Chl Dpth (ft)             11.44
10.90
  Weir Sta Lft (ft)                      Vel Total (ft/s)               3.52
 4.37
  Weir Sta Rgt (ft)                      Flow Area (sq ft)           1904.76
1533.92
  Weir Submerg                           Froude # Chl                   0.20
 0.24
  Weir Max Depth (ft)                    Specif Force (cu ft)        7737.36
6576.39
  Min El Weir Flow (ft)         36.01    Hydr Depth (ft)                4.96
 4.77
  Min El Prs (ft)               37.86    W.P. Total (ft)              590.48
515.26
  Delta EG (ft)                  0.35    Conv. Total (cfs)          146089.5
121580.2
  Delta WS (ft)                  0.41    Top Width (ft)               449.05
459.85
  BR Open Area (sq ft)         407.88    Frctn Loss (ft)                0.25
 0.00
  BR Open Vel (ft/s)             6.92    C & E Loss (ft)                0.03
```

0.01
Coef of Q
0.56
Br Sel Method
2.47

Energy only

Shear Total (lb/sq ft) 0.42

Power Total (lb/ft s) 1.49

Note: Multiple critical depths were found at this location. The critical depth with the lowest, valid, energy was used.
Warning: The conveyance ratio (upstream conveyance divided by downstream conveyance) is less than 0.7 or greater than 1.4. This may indicate the need for additional cross sections.
Note: Multiple critical depths were found at this location. The critical depth with the lowest, valid, energy was used.

CROSS SECTION

RIVER: CarrollCanyon
REACH: Lower RS: 2299

INPUT
Description: NB Interstate 5 Bridge Piers
Station Elevation Data num= 176

Sta	Elev	Sta	Elev	Sta	Elev	Sta	Elev	Sta	Elev
0	96.15	1.31	96.01	1.37	96	8.37	96	14.56	95.18
16.6	95.08	19.64	94.94	22.23	94.84	24.06	94.83	26.57	94.75
28.95	94.69	30.95	94.77	48.5	94.1	49.38	94.14	49.8	94
53.8	92.1	54.05	92	58.08	90.44	59.51	90	61.83	89.29
64.78	88	65.71	87.57	68.06	86.23	68.48	86	71.53	84.19
71.84	84	77.69	80.34	78.23	80	81.36	78.05	81.43	78
82.22	77.51	84.63	76	84.91	75.82	87.83	74	88.53	73.56
91.03	72	92.21	71.26	94.23	70	95.97	68.91	97.43	68
100.62	66	103.79	64.02	107.1	62	108	61.46	110.4	60
112.2	58.92	113.72	58	116.43	56.38	117.06	56	119.43	54.59
120.41	54	123.79	52	124.98	51.3	127.18	50	129.31	48.76
130.59	48	135.34	45.23	138.09	43.65	140.95	42	143.55	40.64
144.8	40	145.45	39.54	148.08	38	149	37.34	150.94	36
167.79	36	209.08	38	213.65	38	214.67	37.23	216.09	36
216.19	35.91	218.06	34	220.06	32	221.96	30	286.22	30
287.93	30.99	289.65	32	291.62	33.12	293.13	34	296.18	35.75
296.63	36	297.17	36.15	298.81	36.31	304.64	37.14	306.83	37.46
315.62	38	368.93	38	375.28	37.73	376.09	37.71	381.85	37.49
384.6	37.38	385.4	37.35	403.63	37.03	406.01	36.96	409.89	36.8
412.56	36.74	438.71	36	544.77	36	545.54	35.97	564.24	35.91
565.04	35.84	572.59	35.81	578.45	35.81	582.86	35.83	583.71	35.74
592.14	35.82	596.61	35.88	597.16	35.89	601.99	35.8	602.63	35.8
607.64	35.6	608.37	35.57	609.09	35.55	613.79	35.29	615.95	35.29
618.14	35.11	622.08	35.12	631.96	34.67	637.27	34.66	638.18	34.67
642.85	34.65	647.03	34.62	648.22	34.6	651.56	34.58	653.97	34.56
655.42	34.52	660.48	34.45	668.64	34	675.02	34	715.17	32.79
721.74	32.61	729.84	32.57	766.97	32	811.17	32	820.21	30.58
824.01	30	826.07	28.98	827.5	28	830.76	28	832.59	28.71
836.79	30	841.18	30.61	849.69	31.37	853.43	31.77	856.26	32
862.89	32.82	873.14	33.8	876.61	34	876.8	34.02	881.98	34.19
882.53	34.23	888.71	34.19	889.42	34.26	894.15	34.31	895.05	34.42
898.13	34.59	899.3	34.77	901.94	35.16	902.72	35.27	903.73	35.42
904.87	35.61	904.99	35.62	905.45	35.72	905.51	35.73	905.61	35.75
905.69	35.75	906.83	35.8	907.01	35.8	908.88	35.81	909.16	35.81

911.72	35.77	914.95	35.74	916.42	35.72	920.44	35.69	924.42	35.67
924.43	48								

Manning's n Values num= 3

Sta	n Val	Sta	n Val	Sta	n Val
0	.055	213.65	.016	315.62	.075

Bank Sta: Left	Right	Lengths: Left	Channel	Right	Coeff Contr.	Expan.
213.65	315.62	24.05	23.62	24.97	.1	.3

Ineffective Flow num= 1

Sta L	Sta R	Elev	Permanent
525.9	924.43	50	F

Blocked Obstructions num= 3

Sta L	Sta R	Elev	Sta L	Sta R	Elev	Sta L	Sta R	Elev
130	137	80	525.9	786.34	55	229.6	236.6	80

CROSS SECTION OUTPUT Profile #100-yr

E.G. Elev (ft)	41.48	Element	Left OB	Channel
Right OB				
Vel Head (ft)	0.56	Wt. n-Val.	0.055	0.016
0.075				
W.S. Elev (ft)	40.92	Reach Len. (ft)	24.05	23.62
24.97				
Crit W.S. (ft)	37.76	Flow Area (sq ft)	276.70	834.34
861.66				
E.G. Slope (ft/ft)	0.000386	Area (sq ft)	276.70	834.34
2000.47				
Q Total (cfs)	6700.00	Flow (cfs)	360.16	5493.82
846.02				
Top Width (ft)	513.97	Top Width (ft)	70.64	94.97
348.36				
Vel Total (ft/s)	3.40	Avg. Vel. (ft/s)	1.30	6.58
0.98				
Max Chl Dpth (ft)	12.92	Hydr. Depth (ft)	3.92	8.79
4.10				
Conv. Total (cfs)	340864.8	Conv. (cfs)	18323.3	279500.1
43041.5				
Length Wtd. (ft)	23.84	Wetted Per. (ft)	72.10	121.79
215.23				
Min Ch El (ft)	30.00	Shear (lb/sq ft)	0.09	0.17
0.10				
Alpha	3.10	Stream Power (lb/ft s)	0.12	1.09
0.09				
Frctn Loss (ft)	0.01	Cum Volume (acre-ft)	25.89	35.96
113.20				
C & E Loss (ft)	0.00	Cum SA (acres)	6.37	4.46
16.75				

Warning: Divided flow computed for this cross-section.
Note: Multiple critical depths were found at this location. The critical depth with the lowest, valid,
energy was used.

CROSS SECTION

RIVER: CarrollCanyon
REACH: Lower RS: 2275

INPUT
Description: FEMA CROSS SECTION - AG (NB Interstate 5 Bridge Piers)
Station Elevation Data num= 207

Sta	Elev	Sta	Elev	Sta	Elev	Sta	Elev	Sta	Elev
0	98	1.72	98	3.44	97.81	7.82	97.34	21.3	96.01
21.41	96	21.52	95.96	27.68	94	39.14	94	41.6	92.88
43.52	92	46.74	90.53	47.91	90	52.28	88.01	52.34	87.98
56.75	86	59.96	84.6	61.29	84	62.87	83.36	63.86	83.01
65.14	82.53	65.66	82.35	66.84	82	66.95	81.97	70.15	80
72.73	78.44	73.42	78	74.88	77.22	76.34	76.42	77.1	76
78.1	75.44	83.87	72.22	84.27	72	85.65	71.23	87.44	70.21
87.81	70	90.53	68.45	91.33	68	93.05	67.02	94.85	66
95.97	65.36	98.37	64	99.15	63.56	101.89	62	102.39	61.71
105.41	60	105.68	59.84	108.93	58	109.01	57.95	110.65	57.02
112.35	56.05	112.44	56	112.63	55.89	118.73	52.43	119.48	52
122.01	50.56	125.33	48.68	126.52	48	137.08	42	140.62	40
145.12	38.67	147.62	38	148.14	37.67	150.56	36	213.98	36
214.87	35.19	216.25	34	217.06	33.31	218.58	32	219.72	31.02
221.05	30	286.11	30	289.59	32	290.36	32.42	293.22	34
296.17	35.51	296.67	35.76	297.14	36	300.03	36.16	305.1	36.4
308.87	36.59	335.46	38	355.29	38	361.79	37.59	366.73	37.26
370.45	37.07	373.96	36.84	377.18	36.67	379.94	36.53	384.57	36.38
386.39	36.3	391.46	36.2	392.13	36.17	392.45	36.16	392.55	36.16
401.74	36	422.02	36	425.97	35.9	445.67	35.52	450.19	35.42
452.34	35.38	461.06	35.25	495.77	36	498.97	36	501.45	36.47
504.14	36.9	507.7	37.52	511.07	38	584.54	38	588.51	37.61
589.46	37.62	590.38	37.62	591.26	37.63	600.89	36.97	605.94	36.44
608.72	36.23	610.64	36	634.45	36	636.9	35.89	637.35	35.89
639.92	35.9	640.57	35.9	644.22	35.83	644.9	35.83	649.7	35.69
657.19	35.59	657.93	35.59	664.3	35.23	674.84	34.17	675.27	34.14
676.5	34	687.38	33.66	701.36	33.29	705.54	33.27	787.5	32
817.99	32	822.66	30.23	822.82	30.16	823.25	30	823.43	29.93
824.63	30	836.28	28.97	838.69	30	858.22	31.8	860.12	32
860.4	32	869.66	34	873.36	35.69	874.13	36	878.99	37.87
879.43	38	884.54	39.49	886.3	40	886.5	40.07	892.67	42
893.97	42.52	895.68	43.19	897.07	43.63	899.7	44.45	900.17	44.6
902.02	44.85	902.7	44.94	903.77	45.13	904.87	45.3	906.54	45.63
906.95	45.7	908.3	46	909.26	46.21	913.92	46.42	915.39	46.49
920.3	46.49	923.85	46.5	925.22	46.5	930.28	46.41	931.06	46.39
931.78	46.38	937.21	46.28	938.19	46.26	944.05	46.17	944.6	46.16
950.78	46.07	951	46.06	964.16	45.92	964.34	45.91	964.52	45.91
971.02	45.86	971.61	45.86	977.96	45.81	978.52	45.8	987.18	45.74
987.92	45.74	992.91	45.71	993.78	45.71	995.38	45.72	995.66	45.72
997.26	45.71	997.52	45.71	999.1	45.68	999.47	45.67	1001.03	45.63
1002.1	45.58	1006.44	45.36	1010.74	45.12	1012.64	45.01	1014.88	44.89
1024.48	44.34	1027.35	44.28						

Manning's n Values num= 3

Sta	n Val	Sta	n Val	Sta	n Val
0	.055	213.98	.016	296.67	.075

Bank Sta: Left	Right	Lengths: Left	Channel	Right	Coeff Contr.	Expan.
213.98	296.67	26.96	25.98	24.75	.1	.3

Ineffective Flow num= 1

Sta L	Sta R	Elev	Permanent
526.28	1027.35	50	F

Blocked Obstructions num= 4

Sta L	Sta R	Elev	Sta L	Sta R	Elev	Sta L	Sta R	Elev
526.28	786.61	55	127.7	134.7	80	221.6	228.6	80
291.7	298.7	80						

CROSS SECTION OUTPUT Profile #100-yr

E.G. Elev (ft)	41.46	Element	Left OB	Channel	Right OB
Vel Head (ft)	0.60	Wt. n-Val.	0.055	0.016	0.075
W.S. Elev (ft)	40.87	Reach Len. (ft)	26.96	25.98	24.75
Crit W.S. (ft)	37.52	Flow Area (sq ft)	333.84	738.83	980.04
E.G. Slope (ft/ft)	0.000414	Area (sq ft)	333.84	738.83	1832.76
Q Total (cfs)	6700.00	Flow (cfs)	492.11	5185.82	1022.07
Top Width (ft)	475.63	Top Width (ft)	74.89	70.72	330.02
Vel Total (ft/s)	3.26	Avg. Vel. (ft/s)	1.47	7.02	1.04
Max Chl Dpth (ft)	11.90	Hydr. Depth (ft)	4.46	10.45	4.31
Conv. Total (cfs)	329306.1	Conv. (cfs)	24187.3	254883.9	50234.8
Length Wtd. (ft)	25.85	Wetted Per. (ft)	76.02	103.20	235.51
Min Ch El (ft)	30.00	Shear (lb/sq ft)	0.11	0.19	0.11
Alpha	3.61	Stream Power (lb/ft s)	0.17	1.30	0.11
Frctn Loss (ft)	0.01	Cum Volume (acre-ft)	25.72	35.53	112.10
C & E Loss (ft)	0.02	Cum SA (acres)	6.33	4.42	16.56

Warning: Divided flow computed for this cross-section.
Note: Multiple critical depths were found at this location. The critical depth with the lowest, valid,
water surface was used.

CROSS SECTION

RIVER: CarrollCanyon
REACH: Lower RS: 2249

INPUT
Description: NB Interstate 5 Bridge Piers
Station Elevation Data num= 143

Sta	Elev	Sta	Elev	Sta	Elev	Sta	Elev	Sta	Elev
0	97.07	22.95	96	32.51	96	34.57	95.39	38.56	94
39.21	93.76	42.51	92	43.51	91.42	45.51	90	46.64	89.2
48.34	88	49.52	87.17	51.17	86	52.29	85.21	54.01	84
55.47	82.96	56.84	82	59.56	80.08	59.67	80	64.52	76.57
65.33	76	66.65	75.11	68.23	74	69.83	72.98	71.46	72
74.11	70.55	75.13	70	76.82	69.12	78.98	68	79.97	67.48
87.75	63.44	90.51	62	90.8	61.85	94.31	60	95.54	59.34
100.28	56.82	101.79	56	103.4	55.12	105.51	54	107.76	52.77
109.2	52	112.12	50.4	112.86	50	116.49	48.01	116.61	47.95
120.09	46	120.96	45.51	123.67	44	125.35	43.05	127.23	42
129.09	40.95	130.79	40	138.98	38.21	139.87	38	141.29	37.47
144.7	36	208.61	36	208.66	35.96	209.05	35.62	210.94	34
211.46	33.57	213.39	32	214.12	31.46	216.18	30	280.02	30
280.28	30.13	284.32	32	288.32	34	290.58	35.12	292.33	36

312.22	37.26	325.75	38	345.35	38	346.05	37.9	346.77	37.84
351.34	37.45	364.17	36.26	368.14	36	377.33	36	397.63	35.78
398.03	35.79	398.72	35.81	399.5	35.84	405.37	35.85	413.37	35.73
425.61	35.4	448	34.87	469	34.43	472.32	34.38	484.3	34.65
484.79	34.69	485.36	34.75	486.85	34.89	490.74	35.27	498.06	36
500.43	36.47	531.11	38	592.65	38	602.95	37.06	619.75	36
661.52	36	666.95	34.97	668.63	34.73	671.97	34	674.41	34
675.64	33.98	678.43	33.94	803.16	32	812.82	32	815.89	31.02
818.74	30	824.66	28.73	828.22	28	829.85	28	830.82	28.44
834.34	30	840.71	31.04	846.88	32	863.98	34	864.67	34.35
871.91	38	873.88	38.99	876.05	40	880.72	41.89	880.99	42
881.26	42.1	886.28	44	888.19	44.75	891.45	46	896.38	47.97
896.62	48.06	901.62	50	902.93	50.51	906.23	52	911.85	53.12
913.26	53.17	920.49	53.57	927.82	54	1036.04	54	1040.93	53.69
1052.12	53.01	1062.08	52.5	1070.08	52				

Manning's n Values num= 3

Sta	n Val	Sta	n Val	Sta	n Val
0	.055	208.61	.016	292.33	.075

Bank Sta: Left	Right	Lengths: Left	Channel	Right	Coeff Contr.	Expan.
208.61	292.33	53.25	54.23	54.9	.1	.3

Ineffective Flow num= 1

Sta L	Sta R	Elev	Permanent
521.23	1070.08	50	F

Blocked Obstructions num= 3

Sta L	Sta R	Elev	Sta L	Sta R	Elev	Sta L	Sta R	Elev
218	225	80	521.23	781.48	55	287.9	294.9	80

CROSS SECTION OUTPUT Profile #100-yr

E.G. Elev (ft)	41.44	Element	Left OB	Channel
Right OB				
Vel Head (ft)	0.54	Wt. n-Val.	0.055	0.016
0.075				
W.S. Elev (ft)	40.90	Reach Len. (ft)	53.25	54.23
54.90				
Crit W.S. (ft)	37.40	Flow Area (sq ft)	349.79	751.54
1083.38				
E.G. Slope (ft/ft)	0.000376	Area (sq ft)	349.79	751.54
1911.19				
Q Total (cfs)	6700.00	Flow (cfs)	489.14	5056.51
1154.35				
Top Width (ft)	474.85	Top Width (ft)	79.43	72.29
323.12				
Vel Total (ft/s)	3.07	Avg. Vel. (ft/s)	1.40	6.73
1.07				
Max Chl Dpth (ft)	12.90	Hydr. Depth (ft)	4.40	10.40
4.79				
Conv. Total (cfs)	345314.0	Conv. (cfs)	25210.0	260609.4
59494.6				
Length Wtd. (ft)	54.29	Wetted Per. (ft)	80.28	104.16
234.77				
Min Ch El (ft)	30.00	Shear (lb/sq ft)	0.10	0.17
0.11				
Alpha	3.67	Stream Power (lb/ft s)	0.14	1.14
0.12				
Frctn Loss (ft)	0.02	Cum Volume (acre-ft)	25.51	35.09
111.04				
C & E Loss (ft)	0.03	Cum SA (acres)	6.28	4.38
16.37				

Warning: Divided flow computed for this cross-section.
Note: Multiple critical depths were found at this location. The critical depth with the lowest, valid,
water surface was used.

CROSS SECTION

RIVER: CarrollCanyon
REACH: Lower RS: 2195

INPUT
Description: SB and NB Interstate 5 Bridge Piers
Station Elevation Data num= 136

Sta	Elev	Sta	Elev	Sta	Elev	Sta	Elev	Sta	Elev
0	94.89	.67	94.91	17.25	95.49	24.15	95.25	27.37	94.85
32.83	94.09	33.37	94	35.82	92.36	36.34	92	39.15	90.11
39.32	90	42.3	88	42.56	87.82	45.28	86	45.7	85.72
48.25	84	48.78	83.65	51.24	82	51.84	81.59	54.21	80
54.89	79.55	57.19	78	60.09	76.06	60.18	76	60.41	75.84
63.15	74	64.8	72.9	66.13	72	67.83	70.86	69.12	70
71.91	68.12	72.24	67.9	77.35	64.43	77.97	64	80.54	62.24
80.9	62	83.81	60.01	83.91	59.94	87.35	57.59	89.67	56
91.21	54.94	92.6	54	95.22	52.2	95.53	52	95.75	51.85
98.49	50	100.53	48.63	101.61	48	102.5	47.51	105.17	46
106.6	45.24	108.97	44	110.46	44	115.92	42.75	118	42.8
119.79	42.43	122.76	42.53	128.51	40.98	130.74	40	133.83	38.37
134.44	38	134.73	37.84	136.01	37.18	138.03	36	202.72	36
204.21	34.8	205.2	34	207.11	32.61	207.96	32	209.3	31.11
210.99	30	275.02	30	277.82	31.4	279.03	32	282.95	34
285.24	34.7	290.2	36	313.81	38	337.19	38	362.5	34
478.67	34	486.37	34.98	490.63	35.43	496.65	36	514.6	36
519.29	36.1	519.88	36.11	533.82	36.38	543.46	36.63	550.12	36.84
576.04	37.79	578.17	37.86	579.2	37.91	581.58	38	657.25	38
659.74	36.63	660.87	36	662.32	35.54	666.12	34.35	667.2	34
803.58	32	807.11	31.2	812.93	30	817.93	28.19	818.55	28
824.74	28	826.02	28.52	829.68	30	835.84	31	842.21	32
851.69	33.24	857.41	34	863.56	35.97	863.64	36	863.77	36.05
869.63	38	872.68	39.15	874.89	40	875.75	40.37	879.59	42
881.65	42.89	884.2	44	885.53	44.59	888.69	46	891.3	47.25
892.93	48	894.35	48.69	897.02	50	900.9	51.93	900.98	51.98
901.03	52	903.57	52.06	979.74	54	1020.96	54	1050.32	52.61
1061.46	52								

Manning's n Values num= 3

Sta	n Val	Sta	n Val	Sta	n Val
0	.055	202.72	.016	290.2	.075

Bank Sta: Left	Right	Lengths: Left	Channel	Right	Coeff Contr.	Expan.
202.72	290.2	66.97	66.05	64.73	.1	.3

Ineffective Flow num= 1

Sta L	Sta R	Elev	Permanent
515.27	1061.46	50	F

Blocked Obstructions num= 5

Sta L	Sta R	Elev	Sta L	Sta R	Elev	Sta L	Sta R	Elev
282.5	289	80	515.27	774.92	55	74	81	80
205.7	212.7	80	349.6	356.6	80			

CROSS SECTION OUTPUT Profile #100-yr

E.G. Elev (ft)	41.39	Element	Left OB	Channel
Right OB				
Vel Head (ft)	0.44	Wt. n-Val.	0.055	0.016
0.075				
W.S. Elev (ft)	40.95	Reach Len. (ft)	66.97	66.05
64.73				
Crit W.S. (ft)	37.01	Flow Area (sq ft)	342.16	774.41
1253.61				
E.G. Slope (ft/ft)	0.000321	Area (sq ft)	342.16	774.41
2120.86				
Q Total (cfs)	6700.00	Flow (cfs)	454.21	4839.39
1406.40				
Top Width (ft)	468.37	Top Width (ft)	74.13	73.98
320.26				
Vel Total (ft/s)	2.83	Avg. Vel. (ft/s)	1.33	6.25
1.12				
Max Chl Dpth (ft)	12.95	Hydr. Depth (ft)	4.62	10.47
5.75				
Conv. Total (cfs)	373880.0	Conv. (cfs)	25346.4	270052.2
78481.4				
Length Wtd. (ft)	65.85	Wetted Per. (ft)	75.36	106.43
234.35				
Min Ch El (ft)	30.00	Shear (lb/sq ft)	0.09	0.15
0.11				
Alpha	3.58	Stream Power (lb/ft s)	0.12	0.91
0.12				
Frctn Loss (ft)	0.02	Cum Volume (acre-ft)	25.09	34.14
108.50				
C & E Loss (ft)	0.01	Cum SA (acres)	6.19	4.29
15.96				

Warning: Divided flow computed for this cross-section.
Note: Multiple critical depths were found at this location. The critical depth with the lowest, valid,
water surface was used.

CROSS SECTION

RIVER: CarrollCanyon
REACH: Lower RS: 2129

INPUT
Description: SB and NB Interstate 5 Bridge Piers
Station Elevation Data num= 137

Sta	Elev	Sta	Elev	Sta	Elev	Sta	Elev	Sta	Elev
0	72.94	1.61	73.06	3.89	73.2	6.44	73.35	9.56	73.38
12.97	73.29	15.67	73.33	19.34	73.17	22.92	73.11	26.1	73.05
31.11	72.85	33.48	72.85	35.92	72.93	39.49	72.71	41.24	72.61
43.62	72.44	44.1	72.37	45.16	72	45.56	72	46.02	71.89
46.37	71.8	47.31	71.57	50.25	70.93	52.83	70.17	53.38	70
58.17	68.75	59.57	68.43	61.03	68	61.82	68	80.44	66.8
86.66	66	87.9	65.16	89.68	64	91.09	63.09	92.85	62
96.05	60	97.98	58.8	99.26	58	102.47	56	103.27	55.5
107.72	52.73	108.88	52	111.1	50.62	112.09	50	113.38	49.2
115.33	48	117.39	46.78	118.7	46	120.76	44.82	122.21	44
125.82	42.02	125.89	41.98	129.53	40	131.38	39.01	133.25	38
136.98	36	202.29	36	204.51	34.45	205.15	34	205.43	33.82
208.18	32	211.26	30	275.2	30	276.68	30.77	278.98	32
281.56	33.42	282.6	34	289.08	34.95	293.81	35.54	297.42	36
298.15	36	309.88	37.31	313.93	37.78	318.34	37.82	344.28	36

344.59	35.95	358.23	34	387.64	34	389.33	33.92	389.77	34
481.56	34	493.37	34.63	497.69	34.87	498.82	34.93	505.79	35.36
526.04	36	551.32	36	565.43	36.89	584.63	37.61	588.64	37.77
595.13	38	658.43	38	660.03	36.75	661.2	36	664.62	35.04
668.77	34	675.75	33.78	677.81	33.76	702.37	33.12	777.11	32
802.04	32	804.81	31.48	812.52	30	815.04	28	825.38	28
825.64	28.13	825.91	28.26	829.44	30	841.86	32	855.43	34
859.94	35.07	863.82	36	867.7	37.15	870.51	38	876.87	40
877.29	40.15	881.34	41.7	882.13	42	882.35	42.11	887.2	44.58
889.92	46	892.26	47.2	893.83	48	896.58	49.39	897.8	50
898.55	50.37	901.8	52	917.88	52	959.57	52.84	972.62	52.85
977.2	52.97	980.18	52.99	981.15	53.02	985.09	52.99	1037.38	52.73
1058.87	52	1059.17	51.51						

Manning's n Values num= 3

Sta	n Val	Sta	n Val	Sta	n Val
0	.055	202.29	.016	297.42	.075

Bank Sta: Left	Right	Lengths: Left	Channel	Right	Coeff Contr.	Expan.
202.29	297.42	43.54	43.24	43.23	.1	.3

Ineffective Flow num= 1

Sta L	Sta R	Elev	Permanent
514.86	1059.17	50	F

Blocked Obstructions num= 6

Sta L	Sta R	Elev	Sta L	Sta R	Elev	Sta L	Sta R	Elev
73	80	80	349	356	80	514.86	774.1	50
131.3	138.3	80	282	289	80	442.9	449.9	80

CROSS SECTION OUTPUT Profile #100-yr

E.G. Elev (ft)	41.36	Element	Left OB	Channel	Right OB
Vel Head (ft)	0.42	Wt. n-Val.	0.055	0.016	0.075
W.S. Elev (ft)	40.94	Reach Len. (ft)	43.54	43.24	43.23
Crit W.S. (ft)	36.68	Flow Area (sq ft)	319.67	879.64	1235.71
E.G. Slope (ft/ft)	0.000234	Area (sq ft)	319.67	879.64	2123.26
Q Total (cfs)	6700.00	Flow (cfs)	362.30	5184.71	1153.00
Top Width (ft)	464.33	Top Width (ft)	67.49	88.13	308.70
Vel Total (ft/s)	2.75	Avg. Vel. (ft/s)	1.13	5.89	0.93
Max Chl Dpth (ft)	12.94	Hydr. Depth (ft)	4.74	9.98	6.07
Conv. Total (cfs)	437596.1	Conv. (cfs)	23662.7	338628.0	75305.5
Length Wtd. (ft)	43.25	Wetted Per. (ft)	74.81	104.23	235.16
Min Ch El (ft)	30.00	Shear (lb/sq ft)	0.06	0.12	0.08
Alpha	3.58	Stream Power (lb/ft s)	0.07	0.73	0.07
Frctn Loss (ft)	0.01	Cum Volume (acre-ft)	24.58	32.89	105.35
C & E Loss (ft)	0.02	Cum SA (acres)	6.08	4.16	15.50

Warning: Divided flow computed for this cross-section.
Note: Multiple critical depths were found at this location. The critical depth with the lowest, valid,
water surface was used.

CROSS SECTION

RIVER: CarrollCanyon
REACH: Lower RS: 2086

INPUT
Description: FEMA CROSS SECTION - AF (SB and NB I-5 Bridge Piers)
Station Elevation Data num= 125

Sta	Elev	Sta	Elev	Sta	Elev	Sta	Elev	Sta	Elev
0	66.94	.78	66.95	7.71	67	10.04	67.02	13.7	67.04
18.95	67.08	20.31	67.08	21.44	67.09	22.38	67.09	23.11	67.1
26.21	67.12	30.34	67.12	49.86	66	79.47	66	81.63	64.75
82.81	64	84.81	62.74	85.97	62	86.96	61.34	88.91	60
89.85	59.37	91.95	58	95.11	56	98.3	54	101.57	52
103.69	50.77	104.99	50	107.86	48.39	108.56	48	110.9	46.75
112.28	46	123.47	40	125.16	39.09	127.2	38	130.93	36
196.45	36	196.93	35.7	199.57	34	202.52	32.12	202.7	32
205.6	30.21	205.93	30	269.66	30	276.91	34	294.7	36
339.14	36	340.45	35.73	347.92	34	370.03	32.15	371.88	32
375.47	32	384.9	33.89	385.21	33.96	385.46	34	483.3	34
483.39	33.98	500.08	30.49	502.4	30	542.61	30	548.46	28.87
550.1	28.68	551.85	28.69	552.94	28.57	554.11	28.59	554.99	28.6
556.23	28.67	557.04	28.7	559.16	28.86	564.34	30	572	30
574.47	30.37	574.93	30.38	575.17	30.41	576.91	30.5	577.17	30.57
583.12	32	608.27	32	609.01	32.41	611.78	32.64	614.93	33.27
621.22	34	624.81	34	630.01	35.12	634.01	35.12	637.72	35.6
642.62	35.55	652.25	35.43	664.99	34	705.74	32.63	728.12	32.05
728.84	32.03	729.14	32.02	730.62	32	795.71	32	798.86	31.41
803.23	30.56	806.15	30	807.82	28.98	809.46	28	820.29	28
822.38	29.12	823.97	30	835.79	32	843.96	33.33	848.26	34
851.44	34.8	856.08	36	861.38	37.76	862.09	38	863.14	38.35
873.06	41.69	873.96	42	874.62	42.23	879.8	44	883.22	45.31
884.91	46	886.72	46.86	889.18	48	890.3	48.55	893.15	50
901.69	50.74	909.07	50.76	922.42	51.39	954.86	52	1049.29	52

Manning's n Values num= 3

Sta	n Val	Sta	n Val	Sta	n Val
0	.055	196.45	.016	294.7	.075

Bank Sta: Left	Right	Lengths: Left	Channel	Right	Coeff Contr.	Expan.
196.45	294.7	31.68	31.64	31.61	.1	.3

Ineffective Flow num= 1

Sta L	Sta R	Elev	Permanent
509.13	1049.29	50	F

Blocked Obstructions num= 5

Sta L	Sta R	Elev	Sta L	Sta R	Elev	Sta L	Sta R	Elev
125	132	70	509.13	767.99	50	66.6	73.6	70
342.2	349.2	70	429.6	436.6	70			

CROSS SECTION OUTPUT Profile #100-yr

E.G. Elev (ft)	41.34	Element	Left OB	Channel
Right OB				
Vel Head (ft)	0.36	Wt. n-Val.	0.055	0.016
0.075				

W.S. Elev (ft)	40.98	Reach Len. (ft)	31.68	31.64
31.61				
Crit W.S. (ft)	36.34	Flow Area (sq ft)	323.89	946.94
1410.90				
E.G. Slope (ft/ft)	0.000175	Area (sq ft)	323.89	946.94
2289.49				
Q Total (cfs)	6700.00	Flow (cfs)	318.55	5162.68
1218.77				
Top Width (ft)	469.44	Top Width (ft)	67.80	98.25
303.39				
Vel Total (ft/s)	2.50	Avg. Vel. (ft/s)	0.98	5.45
0.86				
Max Chl Dpth (ft)	12.98	Hydr. Depth (ft)	4.78	9.64
7.04				
Conv. Total (cfs)	507015.8	Conv. (cfs)	24105.8	390680.8
92229.2				
Length Wtd. (ft)	31.64	Wetted Per. (ft)	75.04	101.13
238.87				
Min Ch El (ft)	30.00	Shear (lb/sq ft)	0.05	0.10
0.06				
Alpha	3.70	Stream Power (lb/ft s)	0.05	0.56
0.06				
Frctn Loss (ft)	0.01	Cum Volume (acre-ft)	24.26	31.98
103.16				
C & E Loss (ft)	0.00	Cum SA (acres)	6.01	4.07
15.19				

Warning: Divided flow computed for this cross-section.
Note: Multiple critical depths were found at this location. The critical depth with the lowest, valid,
water surface was used.

CROSS SECTION

RIVER: CarrollCanyon
REACH: Lower RS: 2054

INPUT
Description: SB and NB Interstate 5 Bridge Piers
Station Elevation Data num= 251

Sta	Elev	Sta	Elev	Sta	Elev	Sta	Elev	Sta	Elev
0	63.12	1.56	62.48	2.77	62	7.67	60.81	11.55	60
12.91	59.86	18.42	59.28	27.31	58.39	29.19	58.22	30.76	58
36.13	57.54	53.98	56.44	58.84	56.27	75.46	56.21	76.84	56.21
82.86	56.17	83.44	56.17	88.81	56.11	89.05	56.12	89.52	56.15
95.23	56.24	96.78	56.34	102.62	56.61	106.89	56.9	111.22	57.11
114.8	57.26	120.27	57.44	123	57.51	131.2	57.62	138.6	57.78
146.38	58	149.31	58.09	149.72	58.1	160.43	58.48	162.45	58.54
163.99	58.56	170.22	58.75	176.32	58	181.89	58	183.94	58.68
184.03	58.71	184.15	58.73	185.47	59.12	188.22	59.14	189.46	59.35
190.99	59.43	197.91	59.47	201	59.5	203.67	59.48	211.11	59.53
213.22	59.54	215.08	59.53	224.13	59.65	226.15	59.65	233.49	59.84
233.65	59.84	233.75	59.85	239.22	60.1	239.82	60.13	245.95	60.5
248.74	60.65	254.04	61	258.94	61.29	261.97	61.5	267.75	61.91
268.12	61.93	269.7	62	274.06	62.21	274.46	62.22	279.65	62.32
280.23	62.33	280.8	62.33	285.81	62.26	286.2	62.26	289.99	62.23
290.27	62.23	290.49	62.24	292.84	62.24	293.02	62.25	293.16	62.25
294.08	62.29	294.28	62.3	295.04	62.33	295.62	62.35	296.04	62.37
296.57	62.39	297.21	62.42	298.01	62.45	302.09	62.62	305.9	62.77
307.98	62.84	310.71	62.96	312.95	63.03	315.84	63.15	318.02	63.22

320.78	63.32	324.66	63.45	325.66	63.48	327.85	63.55	330.42	63.64
332.08	63.69	332.79	63.7	335.43	63.73	339.97	63.73	344.58	63.7
345.82	63.7	351.18	63.67	352.34	63.67	358.41	63.64	359.43	63.64
366.15	63.61	367	63.61	367.93	63.59	373.16	63.5	374.38	63.44
377.91	63.31	379.7	63.16	381.66	63.01	383.52	62.86	384.58	62.71
386.05	62.62	388.59	62	388.8	62	390.01	61.37	391.88	60.41
392.69	60	394.89	58.87	396.61	58	398.12	57.23	404.49	54
404.74	53.88	405.21	53.66	405.76	53.36	406.09	53.17	408.21	52
415.41	48	416.91	47.16	419	46	421.01	44.88	422.6	44
424.13	43.15	426.19	42	427.56	41.25	429.86	40	431.92	39.02
433.96	38	435.61	37.18	438.08	36	507.03	34	509.38	32.5
510.17	32	511.1	31.4	513.26	30	577.24	30	578.49	30.69
580.84	32	583.55	33.56	584.33	34	589.34	34.44	594.44	34.79
595.75	34.89	611.08	36	643.97	36	652.45	34	671.47	32.27
674.26	32	684.79	32	691.91	33.17	696.67	34	805.31	34
807.94	33.54	808.9	33.42	813.47	33.1	814.69	32.95	818.63	33.09
820.31	33.02	822.85	33.06	829.93	33.42	831.91	33.53	839.41	33.93
839.62	33.94	839.74	33.95	840.61	34	844.04	34.16	844.38	34.19
845.55	34.28	845.9	34.29	847.99	34.37	850.85	34.42	851.92	34.45
855.55	34.5	857.5	34.54	861.2	34.59	868.21	34.71	871.81	34.78
875.36	34.76	879.84	34.66	887.36	34.28	888.53	34.23	889.23	34.18
891.62	34	898.13	33.75	898.86	33.76	904.47	33.56	905.57	33.61
908.51	33.51	909.48	33.59	910.75	33.5	911.59	33.57	919.55	34
975.91	34	996.67	33.3	1029.2	32.29	1031.47	32.23	1032.79	32.2
1034.32	32.17	1041.23	32	1102.12	32	1113.25	30.09	1113.77	30
1114.08	29.83	1117.28	28.06	1117.4	28	1128.21	28	1129.13	28.51
1131.77	30	1143.56	32	1149.77	32.97	1152.71	33.35	1157.61	34
1161.35	34.93	1165.45	36	1168.17	37.18	1170.23	38	1172.04	38.61
1176.09	40	1179.91	41.71	1180.68	42	1181.25	42.21	1189.54	45.37
1191.41	46	1192.62	46.49	1197.01	48	1199.83	49.21	1201.47	50
1206.82	50.25	1223.4	50.57	1283.44	52	1341.42	52	1356.77	50.73
1361.51	50								

Manning's n Values num= 3

Sta	n Val	Sta	n Val	Sta	n Val
0	.055	507.03	.016	584.33	.075

Bank Sta: Left	Right	Lengths: Left	Channel	Right	Coeff Contr.	Expan.
507.03	584.33	34.4	34.07	34.71	.1	.3

Ineffective Flow num= 1

Sta L	Sta R	Elev	Permanent
817.1	1361.51	50	F

Blocked Obstructions num= 4

Sta L	Sta R	Elev	Sta L	Sta R	Elev	Sta L	Sta R	Elev
740	747	70	433	440	70	514.2	521.2	70
833.7	840.7	70						

CROSS SECTION OUTPUT Profile #100-yr

E.G. Elev (ft)	41.33	Element	Left OB	Channel
Right OB				
Vel Head (ft)	0.38	Wt. n-Val.	0.055	0.016
0.075				
W.S. Elev (ft)	40.95	Reach Len. (ft)	34.40	34.07
34.71				
Crit W.S. (ft)	36.84	Flow Area (sq ft)	407.08	743.41
1530.88				
E.G. Slope (ft/ft)	0.000265	Area (sq ft)	407.08	743.41
4298.21				
Q Total (cfs)	6700.00	Flow (cfs)	555.81	4447.52
1696.67				
Top Width (ft)	722.11	Top Width (ft)	71.92	70.30

579.89					
Vel Total (ft/s)	2.50	Avg. Vel. (ft/s)	1.37	5.98	1.11
Max Chl Dpth (ft)	12.95	Hydr. Depth (ft)	5.66	10.57	6.78
Conv. Total (cfs)	411596.1	Conv. (cfs)	34144.6	273221.1	104230.5
Length Wtd. (ft)	34.26	Wetted Per. (ft)	80.02	94.43	240.31
Min Ch El (ft)	30.00	Shear (lb/sq ft)	0.08	0.13	0.11
Alpha	3.88	Stream Power (lb/ft s)	0.11	0.78	0.12
Frctn Loss (ft)	0.01	Cum Volume (acre-ft)	23.99	31.36	100.77
C & E Loss (ft)	0.00	Cum SA (acres)	5.96	4.01	14.87

Warning: Divided flow computed for this cross-section.
Note: Multiple critical depths were found at this location. The critical depth with the lowest, valid,
water surface was used.

CROSS SECTION

RIVER: CarrollCanyon
REACH: Lower RS: 2020

INPUT
Description: SB and NB Interstate 5 Bridge Piers
Station Elevation Data num= 296

Sta	Elev	Sta	Elev	Sta	Elev	Sta	Elev	Sta	Elev
0	94.52	.18	94.45	3.28	93.11	10.07	90.19	10.4	90.05
10.51	90	11.01	89.79	17.54	86.97	18.94	86.4	19.93	86
26.87	83.16	29.9	82	30.23	81.87	32.61	80.96	35.85	79.71
38.12	78.84	40.28	78	41.27	77.62	42.39	77.18	45.32	76.05
45.42	76.01	49.82	74.31	50.6	74	52.88	73.12	55.76	72
56.58	71.68	57.51	71.32	59.31	70.62	60.92	70	63.29	69.08
65.2	68.33	66.05	68	68.42	67.07	71.04	66.05	71.16	66
75.5	64.3	76.25	64	80.08	62.48	81.25	62	85.36	60.5
86.68	60	86.94	59.91	87.34	59.78	92.76	58	95.65	57.68
99.12	56.96	102.97	56.33	104.11	56	117.5	54.72	121.12	54.41
124.38	54	134.7	52.91	142.91	52.28	143.79	52.28	144.56	52.2
145.04	52.21	145.44	52.23	146.73	52.22	147.8	52.22	148.6	52.24
149.67	52.27	151.89	52.35	154.22	52.39	157.27	52.43	160.22	52.48
165.61	52.55	172.71	52.62	178.34	52.7	186.83	52.78	191.68	52.85
198.44	52.87	201.25	52.92	201.72	52.94	207.46	52.89	208.84	52.88
211.08	52.84	216.85	52.71	219.43	52.66	224.04	52.55	225.43	52.51
228.81	52	233.64	52	237.79	51.37	238.75	51.45	239.03	51.47
241.38	51.53	241.79	51.56	242.27	51.59	246.32	51.62	246.88	51.64
247.5	51.65	253.26	51.66	253.97	51.67	261.55	51.74	270.1	51.87
270.27	51.87	270.71	51.88	279.8	52.06	280	52.07	280.25	52.08
287.15	52.27	288.17	52.34	292.28	52.5	294.04	52.63	297.24	52.79
298.28	52.82	299.08	52.81	300.89	52.87	303.13	52.89	304.6	52.87
308.22	52.92	310.29	52.92	312.96	52.95	321.23	53.07	328.06	53.13
330.51	53.13	333.66	53.12	335.36	53.09	338.03	53.05	340.4	53.02
345.89	52.93	355.41	52.79	358.46	52.75	359.94	52.72	361.7	52.71
362.37	52.71	363.07	52.73	363.72	52.74	365.49	52.8	366.15	52.82
366.97	52.82	367.8	52.78	368.42	52.79	369.27	52.72	373.01	52.72
374.54	52.75	378.7	52.82	381.55	52.88	391.36	53.12	395.57	53.16

400.74	53.22	409.8	53.16	425.97	52.77	428.32	52.71	432.41	52.25
433.17	52	434.24	51.44	436.93	50	439.3	48.71	440.62	48
442	47.24	446.76	44.66	448.28	44	450.05	43.28	454.02	42
454.43	41.87	454.56	41.84	462.29	39.57	465.11	38.75	466.69	38.2
467.24	38	467.77	37.8	472.79	36	479.22	34	542.28	34
542.81	33.65	543.88	32.97	545.38	32	546.05	31.57	547.17	30.83
548.44	30	612.66	30	615.76	31.8	616.11	32	616.72	32.36
619.54	34	648.27	36	677.96	36	678.35	35.89	685.54	34
688.26	33.69	701.95	32	720.97	32	738.82	33.9	739.4	33.96
739.86	34	788.31	34	815.56	34.57	817.7	34.75	825.07	35.41
831.87	36	838.81	37.15	841.31	37.33	842.35	37.42	845.9	38
848.41	38.81	854.41	40.76	856.98	41.53	858.74	42	860.92	42.63
862.58	43.1	864.18	43.44	866.85	44	869.6	44.21	869.81	44.22
871.72	44.38	872.55	44.46	872.74	44.48	872.82	44.5	877.68	44.89
879.66	45.04	881.96	45.2	884.49	45.39	890.67	45.83	891.21	45.87
895.98	46.21	896.84	46.28	900.37	46.56	901.45	46.66	903	46.8
905.74	47.03	911.88	47.68	913.03	47.79	913.44	47.83	919.97	47.38
922.54	47.05	925.52	46.49	927.51	46	930.79	45.31	935.53	44.03
935.59	44.02	935.65	44	942.72	42.3	944.03	42	948.47	41.26
954.34	40.25	955.23	40.1	959.97	39.21	964.9	38.17	965.64	38
974.22	36	979.3	35.11	992.89	35.36	1002.83	34.92	1011.68	34.57
1014.84	34.45	1025.03	34	1028.65	33.9	1039.62	33.64	1052.25	33.43
1054.85	33.36	1077.2	32.59	1080.14	32.5	1090.35	32	1136.27	32
1136.61	31.95	1137.34	31.83	1149.01	30	1150.88	29.02	1152.86	28
1163.39	28	1166.63	29.67	1167.35	30	1173.15	30.61	1185.58	32
1194.96	33.54	1197.87	34	1199.39	34.37	1205.76	36	1211.71	37.58
1212.95	38	1213.63	38.38	1217.5	40	1218.74	40.66	1221.24	42
1223.33	43.11	1228.71	45.99	1232.3	47.75	1232.74	48	1236.88	49.8
1237.29	50	1237.65	50	1296.44	51.29	1296.63	51.29	1321.06	51.7
1330.58	51.7	1339.54	51.78	1341.11	51.77	1352.99	51.5	1355.1	51.42
1365.86	51.35	1366.58	51.32	1367.4	51.28	1381.19	50.65	1387.38	50.5
1395.31	50								

Manning's n Values num= 3

Sta	n Val	Sta	n Val	Sta	n Val
0	.055	542.28	.016	619.54	.075

Bank Sta: Left	Right	Lengths: Left	Channel	Right	Coeff Contr.	Expan.
542.28	619.54	33.53	32.93	32.9	.1	.3

Ineffective Flow num= 1

Sta L	Sta R	Elev	Permanent
914.68	1395.31	50	F

Blocked Obstructions num= 4

Sta L	Sta R	Elev	Sta L	Sta R	Elev	Sta L	Sta R	Elev
549.5	556.5	80	774	781	80	468.7	475.7	80
863.1	870.1	80						

CROSS SECTION OUTPUT Profile #100-yr

E.G. Elev (ft)	41.32	Element	Left OB	Channel
Right OB				
Vel Head (ft)	0.38	Wt. n-Val.	0.055	0.016
0.075				
W.S. Elev (ft)	40.94	Reach Len. (ft)	33.53	32.93
32.90				
Crit W.S. (ft)	36.75	Flow Area (sq ft)	478.58	742.61
1441.98				
E.G. Slope (ft/ft)	0.000267	Area (sq ft)	478.58	742.61
3442.66				
Q Total (cfs)	6700.00	Flow (cfs)	704.61	4453.73
1541.66				
Top Width (ft)	645.33	Top Width (ft)	77.66	70.26

497.42					
Vel Total (ft/s)	2.52	Avg. Vel. (ft/s)	1.47	6.00	1.07
Max Chl Dpth (ft)	12.94	Hydr. Depth (ft)	6.16	10.57	6.31
Conv. Total (cfs)	410355.8	Conv. (cfs)	43155.4	272777.9	94422.5
Length Wtd. (ft)	32.99	Wetted Per. (ft)	87.68	94.41	243.60
Min Ch El (ft)	30.00	Shear (lb/sq ft)	0.09	0.13	0.10
Alpha	3.86	Stream Power (lb/ft s)	0.13	0.79	0.11
Frctn Loss (ft)	0.01	Cum Volume (acre-ft)	23.64	30.78	97.68
C & E Loss (ft)	0.00	Cum SA (acres)	5.90	3.95	14.44

Warning: Divided flow computed for this cross-section.
Note: Multiple critical depths were found at this location. The critical depth with the lowest, valid,
water surface was used.

CROSS SECTION

RIVER: CarrollCanyon
REACH: Lower RS: 1987

INPUT
Description: SB and NB Interstate 5 Bridge Piers
Station Elevation Data num= 272

Sta	Elev	Sta	Elev	Sta	Elev	Sta	Elev	Sta	Elev
0	91.2	3.11	90	3.43	89.87	3.85	89.71	8.25	88
9.44	87.54	14.05	85.71	14.72	85.44	16.13	84.89	17.43	84.37
22.13	82.48	22.73	82.24	23.31	82	26.93	80.54	28.28	80
28.64	79.85	44.16	73.5	45.57	72.93	47.83	72	52.7	70.04
52.79	70	56.31	68.7	58.46	68	60.01	67.5	65.49	65.78
72.98	63.4	77.42	62	79.84	61.23	83.66	60	83.83	59.95
88.68	58.44	90.12	58	93	57.15	97.01	56	98.13	55.7
104.17	54	105.72	53.87	108.43	53.46	115.89	52.52	118.23	52
125.98	51.17	135.49	50.1	135.96	50.05	136.38	50	143.65	50
158.12	48.14	158.53	48.14	160.47	48	172.57	48	178.5	47.56
178.97	47.53	185.86	47.48	186.73	47.47	190.74	47.41	191.71	47.39
192.74	47.35	198.01	46.57	198.84	46.5	200.31	46	203.39	46
207.43	44.96	210.22	45.48	210.91	45.61	213.42	46	215.79	46.15
220.18	46.39	221.53	46.46	227.8	46.48	229.52	46.52	238.87	46.31
240.04	46.29	247.45	46	265.07	45.4	269.23	45.32	273.26	45.2
273.81	45.21	275.12	45.21	275.41	45.2	276.03	45.21	278.2	45.27
281.85	45.27	294.24	45.71	295.41	45.75	296.54	45.75	304.74	45.84
305.65	45.82	313.63	45.67	316.34	45.53	334.89	44.54	335.8	44.48
336.12	44.45	340.2	44.16	340.3	44.16	340.38	44.15	340.68	44.15
342.14	44.03	342.53	44	342.92	44	344.55	43.95	345.47	43.97
347.59	43.97	348.7	43.95	353.77	43.88	354.28	43.87	362.88	43.74
364.4	43.71	375.53	43.54	377.22	43.51	378.2	43.49	378.35	43.49
378.83	43.47	379.49	43.44	386.2	43.06	387.54	42.99	388.74	42.92
389.7	42.86	395.24	42	395.48	42	401.49	40.54	403.48	40.06
403.73	40	403.86	39.96	404.07	39.9	406.86	39.17	415.69	36.82
418.24	36	426.4	34.9	438.21	34	490.68	34	493.75	32
494.14	31.74	496.79	30	560.51	30	563.08	31.43	564.1	32
567.25	33.67	567.9	34	590.73	35.66	595.17	36	626.18	36

632.28	34.27	633.19	34	637.64	33.25	645.52	32	666.7	32
682.79	33.02	701.91	34	772.31	35.86	776.97	36	777.88	36.26
782.92	38	786.19	39.87	786.41	40	787.84	40.81	789.98	42
790.39	42.21	793.65	44	794.8	44.59	797.41	46	799.41	46.99
801.29	48	804.22	49.44	805.28	50	809.28	51.93	809.41	52
809.98	52.27	812.99	53.23	815.42	54	816.82	54.45	819.43	55.27
820.84	55.77	821.54	56	824.75	57.11	827.52	58	828.67	58.39
830.64	59.01	832.4	59.62	833.61	60	835.55	60.65	836.88	61.03
837.83	61.39	838.08	61.48	839.6	62	839.89	62.12	840.19	62.21
842.79	63.15	845.3	63.92	845.42	63.97	845.53	64	848.15	65
849.03	65.36	851.17	66	851.72	66.2	852.27	66.17	853.86	66
856.34	66	858.05	65.5	861.04	64.62	870	62	870.4	61.88
876.85	60	879.54	59.21	882.06	58.48	885.87	57.36	890.53	56
894.3	54.89	896.14	54.36	897.34	54	903.69	52.13	904.11	52
910.81	50	911.23	49.87	911.81	49.7	915.26	48.66	917.47	48
924.12	46	924.37	45.93	924.68	45.83	929.78	44	932.05	43.25
935.68	42	936.78	41.66	942	40	944.72	39.16	948.45	38
948.67	37.92	948.75	37.91	948.96	37.84	954.32	36	954.67	35.98
960.41	35.7	962.18	35.64	970.46	35.28	993.39	34.24	995.68	34.13
997.06	34	1000.25	34	1021.03	33.04	1032.91	32.57	1038.78	32.36
1054.18	32	1084.48	32	1097.47	30	1101.6	28.05	1101.72	28
1111.66	28	1114.77	29.14	1117.42	30	1139.25	31.99	1139.39	32
1147.59	34	1149.69	34.88	1152.41	36	1155.6	37.38	1161.92	40
1166.56	41.87	1166.89	42	1171.43	43.76	1172.08	44	1172.87	44.28
1177.57	46	1179.57	46.81	1182.2	47.8	1182.72	48	1184.98	49.05
1187.02	49.99	1256.32	51.15	1283.18	51.14	1289.23	51.2	1294.9	51.16
1337.62	50.19	1342.39	50.02						

Manning's n Values num= 3

Sta	n Val	Sta	n Val	Sta	n Val
0	.055	490.68	.016	567.9	.075

Bank Sta: Left	Right	Lengths: Left	Channel	Right	Coeff Contr.	Expan.
490.68	567.9	31.52	36.11	36.27	.1	.3

Ineffective Flow num= 2

Sta L	Sta R	Elev	Permanent
0	390	47	F
850	1342.39	70	F

Blocked Obstructions num= 3

Sta L	Sta R	Elev	Sta L	Sta R	Elev	Sta L	Sta R	Elev
497.3	504.3	80	805	812	80	719.8	726.8	80

CROSS SECTION OUTPUT Profile #100-yr

E.G. Elev (ft)	41.31	Element	Left OB	Channel
Right OB				
Vel Head (ft)	0.39	Wt. n-Val.	0.055	0.016
0.075				
W.S. Elev (ft)	40.92	Reach Len. (ft)	31.52	36.11
36.27				
Crit W.S. (ft)	36.82	Flow Area (sq ft)	527.79	739.84
1351.69				
E.G. Slope (ft/ft)	0.000272	Area (sq ft)	527.79	739.84
3084.03				
Q Total (cfs)	6700.00	Flow (cfs)	756.29	4475.53
1468.19				
Top Width (ft)	599.26	Top Width (ft)	90.77	70.22
438.26				
Vel Total (ft/s)	2.56	Avg. Vel. (ft/s)	1.43	6.05
1.09				
Max Chl Dpth (ft)	12.92	Hydr. Depth (ft)	5.81	10.54
6.34				

Conv. Total (cfs)	406199.5	Conv. (cfs)	45851.3	271336.7
89011.5				
Length Wtd. (ft)	35.65	Wetted Per. (ft)	91.53	94.28
227.56				
Min Ch El (ft)	30.00	Shear (lb/sq ft)	0.10	0.13
0.10				
Alpha	3.81	Stream Power (lb/ft s)	0.14	0.81
0.11				
Frctn Loss (ft)	0.01	Cum Volume (acre-ft)	23.26	30.22
95.22				
C & E Loss (ft)	0.03	Cum SA (acres)	5.84	3.90
14.09				

Warning: Divided flow computed for this cross-section.
Note: Multiple critical depths were found at this location. The critical depth with the lowest, valid,
water surface was used.

CROSS SECTION

RIVER: CarrollCanyon
REACH: Lower RS: 1954

INPUT
Description: SB and NB Interstate 5 Bridge Piers
Station Elevation Data num= 277

Sta	Elev	Sta	Elev	Sta	Elev	Sta	Elev	Sta	Elev
0	68.69	2.27	68	2.48	67.94	3.44	67.64	7.78	66.33
8.86	66	12.02	65.05	15.56	64	16.77	63.65	22.24	62.09
29.92	60	30.17	59.93	44.8	56	55.76	53.08	59.87	52
62.35	51.45	67.74	50	69.81	49.76	76.29	49.08	81.87	48
86.1	47.6	88.62	47.37	93.68	46.89	96.12	46.74	102.99	46
104.69	45.88	104.89	45.86	105.1	45.85	109.66	45.47	122.07	44.47
127.35	44	132.03	44	134.83	43.05	138.12	42.92	140.81	42.66
145.12	42.51	151.91	42	158.56	42	160.41	41.46	160.69	41.39
160.87	41.36	161.78	40.89	163.45	40.67	168.18	40	178.11	40
186.1	40.25	186.88	40.23	192.19	40.35	193.12	40.35	196.02	40.39
196.75	40.36	197.36	40.34	198.07	40.37	198.56	40.36	200.35	40.34
201.48	40.28	202.35	40.24	202.91	40.22	203.14	40.21	203.82	40.2
209.79	40.06	210.02	40.05	212.06	40	221.49	39.73	222.47	39.75
223.33	39.77	238.29	39.47	240.38	39.48	242.52	39.47	245.06	39.42
260.07	39.16	260.34	39.16	260.69	39.15	262.01	39.13	262.58	39.12
263.34	39.1	263.64	39.1	264.02	39.09	264.7	39.08	267.93	38.81
268.4	38.8	269.9	38.57	270.2	38.57	270.48	38.56	270.74	38.55
270.99	38.55	274.52	38.17	274.85	38.15	276.54	38	281.02	37.71
281.08	37.7	281.19	37.68	281.39	37.65	281.55	37.63	281.65	37.61
281.72	37.6	281.8	37.59	281.92	37.57	282.02	37.56	282.11	37.54
282.27	37.52	282.42	37.49	288.08	37.07	288.38	37.03	288.9	36.98
290.69	36.84	294.52	36.55	296.08	36.42	297.16	36.34	298.26	36.46
299.17	36.39	307.87	37.02	312.47	36.88	315.66	36.73	322.07	36.13
322.39	36.12	323.38	36	323.97	35.68	325.08	35.31	325.96	35.04
326.38	34.91	326.55	34.86	353.31	34	390.63	34	396.23	34
396.65	33.72	402.3	30	465.21	30	468.02	31.49	468.92	32
473.03	33.06	477.3	34	485.62	34.74	497.84	35.83	499.84	36
531.47	36	533.39	35.49	538.7	34	539.78	33.73	546.97	32
567.17	32	574.23	31.79	574.87	32	577.93	32	616.95	34
682.06	36	684.9	37.03	687.93	38	688.24	38.18	691.29	40
692.08	40.47	696.21	42.94	698	44	699.72	45.03	703.7	47.4
704.7	48	707.03	49.38	708.06	50	709.26	50.72	711.4	52
711.99	52.36	714.72	54	715.86	54.69	718.04	56	721.33	58

724.34	59.84	724.62	60	724.91	60.18	727.88	62	727.98	62.06
731.11	64	734.24	65.95	734.31	66	734.39	66.06	737.29	68
739.62	69.59	740.21	70	741.09	70.62	743.07	72	744.29	72.87
745.79	74	747.24	75.08	749.88	77.07	751.13	78	752.08	78.71
753.8	80	755.98	81.32	757.09	81.44	758.36	81.76	758.42	81.74
762.73	80.5	764.55	80	769.07	78.77	769.3	78.7	772.13	78
775.35	77.16	779.32	76.11	779.56	76.06	779.81	76	783.34	75.17
785.16	74.75	786.24	74.57	788.17	74.26	791.32	73.4	794.04	72.44
795.06	72	799.34	70.2	799.8	70	799.89	69.96	800.15	69.85
803.35	68.52	804.61	68	814.27	64	823.38	60.25	828.87	58
829.29	57.83	833.76	56	835.39	55.34	838.67	54	841.65	52.8
843.6	52	844.25	51.75	847.17	50.56	848.36	50.08	848.55	50
849.98	49.42	853.56	48	854.36	47.69	858.59	46	860.4	45.29
867.95	42.29	868.69	42	871.2	41.04	874.03	40	877.63	38.98
878.82	38.67	889.5	36	891	35.6	897.22	34	929.64	34
938.03	33.7	954.79	33.31	983.03	32.24	987.39	32.1	989.44	32
991.64	31.69	1003.43	30	1003.8	29.8	1007.33	28	1016.29	28
1017.44	28.29	1024.43	30	1041.96	32	1050.45	33.55	1052.89	34
1054.43	34.57	1069.76	39.96	1069.86	40	1070	40.04	1075.52	42
1079.4	43.54	1080.58	44	1084	45.6	1084.86	46	1084.98	46.06
1088.94	48	1095.6	49.53	1099.37	50	1120.76	50	1141.3	50.34
1194.03	50.31	1195.65	50.32	1207.58	50.24	1217.76	50	1239.49	50
1240.19	49.8	1248.63	48						

Manning's n Values num= 3

Sta	n Val	Sta	n Val	Sta	n Val
0	.055	396.23	.016	485.62	.055

Bank Sta: Left	Right	Lengths: Left	Channel	Right	Coeff Contr.	Expan.
396.23	485.62	46.88	48.33	51.51	.1	.3

Ineffective Flow num= 2

Sta L	Sta R	Elev	Permanent
0	325	45	F
755	1248.63	85	F

Blocked Obstructions num= 3

Sta L	Sta R	Elev	Sta L	Sta R	Elev	Sta L	Sta R	Elev
479.6	486.6	80	704.1	711.1	80	403.6	410.6	80

CROSS SECTION OUTPUT Profile #100-yr

E.G. Elev (ft)	41.27	Element	Left OB	Channel
Right OB				
Vel Head (ft)	0.28	Wt. n-Val.	0.055	0.016
0.055				
W.S. Elev (ft)	40.99	Reach Len. (ft)	46.88	48.33
51.51				
Crit W.S. (ft)	36.64	Flow Area (sq ft)	484.97	788.91
1353.44				
E.G. Slope (ft/ft)	0.000222	Area (sq ft)	833.45	788.91
2881.49				
Q Total (cfs)	6700.00	Flow (cfs)	701.28	4136.08
1862.64				
Top Width (ft)	718.74	Top Width (ft)	234.65	76.37
407.72				
Vel Total (ft/s)	2.55	Avg. Vel. (ft/s)	1.45	5.24
1.38				
Max Chl Dpth (ft)	12.99	Hydr. Depth (ft)	6.81	10.33
6.56				
Conv. Total (cfs)	449313.8	Conv. (cfs)	47029.3	277372.5
124911.9				
Length Wtd. (ft)	48.99	Wetted Per. (ft)	71.32	107.10
214.36				

Min Ch El (ft)	30.00	Shear (lb/sq ft)	0.09	0.10
0.09				
Alpha	2.72	Stream Power (lb/ft s)	0.14	0.54
0.12				
Frctn Loss (ft)	0.01	Cum Volume (acre-ft)	22.76	29.59
92.73				
C & E Loss (ft)	0.00	Cum SA (acres)	5.72	3.84
13.74				

Warning: Divided flow computed for this cross-section.
Note: Multiple critical depths were found at this location. The critical depth with the lowest, valid,
water surface was used.

CROSS SECTION

RIVER: CarrollCanyon
REACH: Lower RS: 1906

INPUT
Description: SB Interstate 5 Bridge Piers
Station Elevation Data num= 271

Sta	Elev	Sta	Elev	Sta	Elev	Sta	Elev	Sta	Elev
0	84.14	.51	84	3.54	83.14	7.62	82	9.62	81.45
14.84	80	18.5	79	19.99	78.59	21.46	78.17	21.68	78.11
22.06	78	25.99	76.87	28.95	76	29.82	75.74	31.08	75.37
33.81	74.56	35.44	74.07	35.67	74	40.18	72.66	42.45	72
43.23	71.81	48.44	70.6	51.12	70	59.99	68	64.55	66.96
65.6	66.71	68.55	66	68.61	65.99	68.66	65.98	75.94	64.17
76.64	64	83.34	62.32	87.41	61.29	91.4	60.29	103.43	57.24
104.09	57.07	107.49	56.21	107.9	56.11	108.32	56	110.4	55.47
111.79	55.13	116.45	54	116.8	53.92	117.24	53.83	121.56	52.91
126.28	52.07	126.41	52.05	126.5	52.04	126.76	52	130.65	51.45
132.75	51.11	135.3	50.82	138.94	50.33	139.75	50.26	142.95	50
143.59	49.95	143.75	49.93	146.83	49.65	147.12	49.62	147.26	49.59
148.87	49.39	149.37	49.25	149.92	49.12	151.44	48.63	152.09	48.43
153.35	48	155.03	47.48	157.88	46.84	159.95	46.36	161.73	46
165.52	45.09	168.81	44.07	169.03	44	171.59	43.1	172.58	42.75
174.42	42	179.39	41.7	180.76	41.57	188.31	41.08	191.98	40.66
198	40	201.03	39.79	208.12	39.33	214.16	38.84	216.82	38.62
224.63	38	227.04	37.88	227.56	37.87	227.87	37.86	234.93	37.56
235.42	37.54	240.33	37.24	248.58	36.6	251.1	36.46	256.59	36
257.42	36	265.85	35.42	269.21	35.44	293.27	34	368.96	34
374.13	34	374.96	33.45	377.18	32	379.93	30.19	380.22	30
442.15	30	443.88	30.76	446.57	32	454.07	33.46	457.14	34
463.93	34.55	482.13	36	508.8	36	523.15	32.36	524.58	32
527.67	32	553.88	31.2	556.29	32	562.17	33.13	565.34	34
601.49	34	663.23	36	666.96	37.58	668.76	38.35	672.59	40
673.65	40.48	677.14	42	679.97	43.31	681.53	44	683.96	45.15
685.58	46	686.45	46.48	689.29	48	691.31	49.2	692.7	50
695.84	51.93	695.95	52	696.02	52.05	698.84	54	700.53	55.27
701.56	56	702.32	56.55	703.81	57.71	704.14	58	704.38	58.21
706.47	60	707.96	61.28	708.81	62	711.01	63.89	711.1	63.96
711.18	64.03	711.3	64.14	714.38	66.78	715.81	68	717.46	69.42
718.14	70	720.36	71.91	720.47	72	720.98	72.44	722.81	74
723.1	74.25	725.14	76	725.75	76.52	727.47	78	729.81	80
731.43	81.39	731.91	81.81	732.14	82	749.49	82	760.77	82.47
768.16	82	788.93	82	789.49	81.8	796	80	798.54	78.9
802.79	77.09	805.32	76	810.03	74	810.24	73.91	810.46	73.82
813.17	72.68	814.77	72	818.79	70.32	819.55	70	821.28	69.28

824.37	68	825.11	67.69	828.96	66.1	829.15	66.02	829.77	65.77
834.11	64	834.72	63.75	839.14	62	840.05	61.65	844.6	60
844.75	59.94	845.72	59.61	848.93	58.48	849.75	58.22	850.46	58
862.09	54.32	862.77	54.1	863.06	54	864.6	53.48	869.03	52
870.09	51.65	874.22	50.27	875.01	50	890.98	44.66	892.45	44.15
892.87	44	898.59	42	902.81	40.61	904.6	40	907.78	39.03
914.48	37	917.76	36	920.77	34.93	924.3	34	933.79	34
961.67	32.06	961.78	32.06	962.88	32	980.73	32	985.77	31.7
986.04	31.69	986.17	31.68	986.28	31.68	986.5	31.66	995.58	31.69
996.15	31.65	997.38	31.59	1009.83	31.6	1011.46	31.47	1013.33	31.31
1014.75	31.2	1021.25	31.23	1022.33	31.26	1026.26	31.32	1027.24	31.34
1029.54	31.73	1030.5	32	1031.7	32.49	1038.2	35.66	1038.91	36
1039.6	36.34	1043.39	38	1045.92	39.05	1048.13	40	1050.8	41.13
1051.44	41.39	1051.79	41.53	1057.89	44	1062.53	45.82	1062.97	46
1063.2	46.09	1067.62	48	1075.62	48.3	1077.79	48.33	1080.96	48.38
1081.38	48.39	1108.18	49.15	1110.23	49.16	1113.46	49.19	1165.09	49.54
1170.11	49.42	1178.2	49.2	1182.5	49.17	1205.1	48.51	1208.49	48.44
1222.23	48								

Manning's n Values num= 3

Sta	n Val	Sta	n Val	Sta	n Val
0	.055	374.13	.016	463.93	.055

Bank Sta: Left	Right	Lengths: Left	Channel	Right	Coeff Contr.	Expan.
374.13	463.93	53.45	53.4	53.05	.1	.3

Ineffective Flow num= 2

Sta L	Sta R	Elev	Permanent
0	294	43	F
760	1222.23	85	F

Blocked Obstructions num= 2

Sta L	Sta R	Elev	Sta L	Sta R	Elev
457	464	80	672.2	679.2	80

CROSS SECTION OUTPUT Profile #100-yr

E.G. Elev (ft)	41.26	Element	Left OB	Channel
Right OB				
Vel Head (ft)	0.28	Wt. n-Val.	0.055	0.016
0.055				
W.S. Elev (ft)	40.98	Reach Len. (ft)	53.45	53.40
53.05				
Crit W.S. (ft)	36.40	Flow Area (sq ft)	559.17	861.86
1364.29				
E.G. Slope (ft/ft)	0.000156	Area (sq ft)	961.00	861.86
2460.71				
Q Total (cfs)	6700.00	Flow (cfs)	688.27	4447.74
1563.99				
Top Width (ft)	624.75	Top Width (ft)	184.93	82.87
356.95				
Vel Total (ft/s)	2.41	Avg. Vel. (ft/s)	1.23	5.16
1.15				
Max Chl Dpth (ft)	10.98	Hydr. Depth (ft)	6.98	10.40
6.55				
Conv. Total (cfs)	537028.6	Conv. (cfs)	55166.9	356502.2
125359.5				
Length Wtd. (ft)	53.33	Wetted Per. (ft)	80.13	91.69
217.51				
Min Ch El (ft)	30.00	Shear (lb/sq ft)	0.07	0.09
0.06				
Alpha	3.14	Stream Power (lb/ft s)	0.08	0.47
0.07				
Frctn Loss (ft)	0.01	Cum Volume (acre-ft)	21.80	28.67

89.58
C & E Loss (ft) 0.00 Cum SA (acres) 5.50 3.75
13.29

Warning: Divided flow computed for this cross-section.
Note: Multiple critical depths were found at this location. The critical depth with the lowest, valid,
water surface was used.

CROSS SECTION

RIVER: CarrollCanyon
REACH: Lower RS: 1852

INPUT
Description: SB Interstate 5 Bridge Piers
Station Elevation Data num= 201

Sta	Elev	Sta	Elev	Sta	Elev	Sta	Elev	Sta	Elev
0	84.69	3.22	84	13.58	84	16	82.27	16.42	82
18.45	80.81	19.63	80	22.05	78.46	22.75	78	23.34	77.64
25.8	76	27.94	74.67	28.98	74	30.62	73	31.96	72
32.72	71.54	34.79	70	37.74	68.05	37.82	68	40.44	66.35
40.97	66	42.75	64.89	44.26	64	45.43	63.44	48.42	62
55.78	60.53	58.56	60	61.51	58.3	61.97	58	64.06	56.53
64.81	56	67.69	54	68.2	53.65	70.63	52	71.84	51.22
73.74	50	76.37	48.35	76.94	48	77.41	47.71	80.2	46
80.55	45.78	83.46	44	85.09	43	86.79	42	89.06	40.7
90.37	40	93.04	38.58	94.17	38	107.97	36.21	109.82	36
131.85	35.03	148.04	34.48	152.79	34.21	153.53	34.2	153.94	34.19
158.71	34.01	159.08	34	263.6	34	268.39	34	270.83	32.39
271.43	32	274.46	30	276.99	28.34	277.51	28	294.23	28
309.55	28.41	314.27	28.67	324.64	29.03	335.4	29.76	337.08	29.84
338.88	30	340.1	30.61	342.99	32	358.85	33.58	363	34
365.11	34.25	379.13	36	399.84	36	402.87	35.33	409.98	34
411.62	33.57	417.75	32	449.42	32	450.82	32.38	455.77	34
462.27	34	555.56	35.77	562.87	36	566.47	37.67	567.16	38
574.63	41.61	575.47	42	575.98	42.24	579.76	44	584.16	46
585.5	46.6	588.69	48	591.22	49.12	593.23	50	595.59	51.93
595.67	52	595.8	52.11	597.96	54	599.26	55.14	602.12	57.6
602.63	58	603.03	58.3	605.2	60	607.91	61.99	609.46	62.64
610.37	63.01	613.52	64.44	617.9	66.59	619.47	67.4	620.64	68
624.52	70	627.15	71.38	628.35	72	629.79	72.75	632.2	74
636.04	76	638.54	77.29	639.87	78	640.41	78.3	640.67	78.45
643.31	79.91	643.48	80	647.83	80	657.07	80.34	658.03	80.31
669.03	80.31	670.13	80.28	671.06	80.26	687.17	80.25	691.64	80
726.42	80	733.82	78.61	738.33	78	740.05	77.25	745.33	74.97
750.52	72.75	752.28	72	756.3	70.28	756.96	70	761.64	68
762.74	67.55	766.56	66	766.62	65.98	766.76	65.92	770.44	64.52
771.8	64	779.23	61.18	786.1	58.6	787.72	58	789.69	57.26
793.07	56.02	797.02	54.63	798.88	54	800.97	53.27	804.82	52
804.98	51.95	805.28	51.85	808.86	50.78	811.49	50	813.13	49.51
816.59	48.49	817.64	48.12	817.97	48	819.41	47.5	825.09	45.51
828.8	44.22	829.23	44.06	829.41	44	833.4	42.61	835.13	42
837.86	41.06	840.9	40	845.29	38.7	850.75	36.95	853.69	36
856.49	35.06	859.51	34	920.2	34	926.76	35.03	933.57	36
938.29	37.64	939.15	37.94	939.34	38	945.24	40	945.35	40.04
950.27	42	952.67	43.11	954.61	44	957.94	45.52	959	46
959.23	46.1	963.38	48	1023.61	48	1094.96	48.49	1111.42	48.1
1115.62	48								

Manning's n Values num= 3

Sta	n Val	Sta	n Val	Sta	n Val
0	.075	268.39	.016	365.11	.055

Bank Sta: Left	Right	Lengths: Left	Channel	Right	Coeff Contr.	Expan.
268.39	365.11	58.12	63.94	76.38	.1	.3

Ineffective Flow num= 2

Sta L	Sta R	Elev	Permanent
0	215	43	F
680	1115.62	85	F

Blocked Obstructions num= 2

Sta L	Sta R	Elev	Sta L	Sta R	Elev
425.1	432.1	80	351.8	358.8	80

CROSS SECTION OUTPUT Profile #100-yr

E.G. Elev (ft)	41.25	Element	Left OB	Channel
Right OB				
Vel Head (ft)	0.30	Wt. n-Val.	0.075	0.016
0.055				
W.S. Elev (ft)	40.95	Reach Len. (ft)	58.12	63.94
76.38				
Crit W.S. (ft)	35.45	Flow Area (sq ft)	371.08	1009.88
1252.20				
E.G. Slope (ft/ft)	0.000147	Area (sq ft)	1124.48	1009.88
1861.78				
Q Total (cfs)	6700.00	Flow (cfs)	325.13	5068.54
1306.33				
Top Width (ft)	580.10	Top Width (ft)	179.77	89.72
310.62				
Vel Total (ft/s)	2.54	Avg. Vel. (ft/s)	0.88	5.02
1.04				
Max Chl Dpth (ft)	12.95	Hydr. Depth (ft)	6.95	11.26
6.23				
Conv. Total (cfs)	551764.6	Conv. (cfs)	26775.5	417409.2
107579.9				
Length Wtd. (ft)	67.22	Wetted Per. (ft)	53.39	107.56
221.06				
Min Ch El (ft)	28.00	Shear (lb/sq ft)	0.06	0.09
0.05				
Alpha	2.98	Stream Power (lb/ft s)	0.06	0.43
0.05				
Frctn Loss (ft)	0.07	Cum Volume (acre-ft)	20.52	27.53
86.94				
C & E Loss (ft)	0.09	Cum SA (acres)	5.27	3.65
12.88				

Warning: Divided flow computed for this cross-section.
Warning: The velocity head has changed by more than 0.5 ft (0.15 m). This may indicate the need for
additional cross sections.
Warning: The conveyance ratio (upstream conveyance divided by downstream conveyance) is less than
0.7 or greater than 1.4. This may indicate the need for additional cross sections.
Note: Multiple critical depths were found at this location. The critical depth with the lowest, valid,
water surface was used.

CROSS SECTION

RIVER: CarrollCanyon
REACH: Lower RS: 1788

INPUT
Description: FEMA CROSS SECTION - AE (SB Interstate 5 Bridge Piers)
Station Elevation Data num= 208

Sta	Elev	Sta	Elev	Sta	Elev	Sta	Elev	Sta	Elev
0	82.09	3.59	82	10.28	81.81	11.18	81.79	19.59	81.52
20.65	81.5	24.26	81.13	26.35	80.77	30.73	80	31.4	79.54
35.1	76.84	36.26	76	38.51	74.36	39.02	74	41.5	72.19
41.77	72	44.46	70.03	44.74	69.83	49.8	66.02	52.85	64.2
53.12	64	53.51	63.78	56.91	62	64.8	60.27	66.01	60
67.77	59.33	71.28	58	71.76	57.68	74.23	56	75.46	55.21
77.32	54	79.97	52.3	80.44	52	80.89	51.72	86.55	48.09
86.69	48	88.66	46.76	89.84	46	91.96	44.66	93.01	44
95.88	42.19	96.17	42	96.87	41.56	99.34	40	103.69	39.17
111.11	38	115.22	36.39	116.21	36	137.49	36	140.7	35.86
149.74	35.69	151.41	35.64	188.07	34.93	195.36	34.76	199.4	34.68
208.92	34.43	210.25	34.4	218.05	34	278.29	34	282.56	34
285.72	32	286.71	31.38	289.95	29.33	292.03	28	347.61	28
349.69	28.48	356.22	30	357.44	30.64	358.62	31.25	360.05	32
366.88	32.63	373.71	33.24	382.14	34	422.75	34	428.71	32.4
430.24	32	435.08	31.54	448.84	30	457.35	30	469.74	34
592.11	36	594.06	36	610.54	37.64	612.83	37.82	615.51	38
618.05	38.73	622.58	40	627.13	41.44	629.13	42	634.98	43.65
641.01	45.28	648.43	47.19	656.21	49.13	658.18	49.63	659.66	50
662.83	50.8	664.43	51.2	667.57	52	671.02	53.14	676.55	55.02
679.54	56	681.9	56.78	685.17	57.8	685.32	57.84	685.99	58
687.42	58.35	688.11	58.51	690.63	59.33	692.91	60	693.86	60.3
694.67	60.52	699.39	62	700.65	62.38	701.56	62.68	704	63.5
705.42	64	710.9	66	713.74	67.09	716.16	68	716.93	68.32
718.28	68.82	720.26	69.59	721.34	70	722.87	70.66	726.37	72
727.02	72.27	728.55	72.9	730.67	73.79	731.22	74	733.35	74.73
734.96	74.93	739.99	76	741.81	76.05	749.88	76.29	752.07	76.32
761.82	76.56	770.75	76.69	774.78	76.72	785.23	76.77	788.78	76.78
791.59	76.78	806.11	76.82	819.17	76	841.03	76	844.4	74.31
845.01	74	845.88	73.56	846.71	73.15	848.02	72.49	848.98	72
851.57	70.67	852.88	70	853.78	69.56	854.82	69.06	856.42	68.28
857.03	68	861.44	66.02	865.62	64.19	866.04	64	870.59	62
870.69	61.95	871.92	61.42	874.91	60.1	875.14	60	878.36	58.58
879.68	58	880.65	57.57	883.03	56.53	884.23	56	887.79	54.44
888.78	54	891.54	52.79	893.33	52	894.34	51.55	897.87	50
897.98	49.95	898.28	49.82	901.52	48.4	902.42	48	904.6	47.05
906.5	46.21	906.98	46	909.21	45.02	910.55	44.44	911.92	44
915.41	43.23	921.67	42	923.13	41.83	923.77	41.76	924.54	41.7
933.38	40.81	935.08	40.83	937.97	40.66	942	40.83	944.07	40.99
946.46	41.16	954.81	42	955	42	960.06	43.3	961.05	43.56
961.32	43.64	962.82	44	963.3	44.12	977.55	47.77	978.46	48
1077.9	48	1108.38	46.95	1128.84	46				

Manning's n Values num= 3

Sta	n Val	Sta	n Val	Sta	n Val
0	.075	282.56	.045	382.14	.055

Bank Sta: Left	Right	Lengths: Left	Channel	Right	Coeff Contr.	Expan.
282.56	382.14	34.21	37.32	43.59	.1	.3

Ineffective Flow num= 2

Sta L	Sta R	Elev	Permanent
0	215	42	F
790	1128.84	80	F

Blocked Obstructions num= 3

Sta L	Sta R	Elev	Sta L	Sta R	Elev	Sta L	Sta R	Elev
102.01	167.98	55	439.8	446.8	75	513.1	520.1	75

CROSS SECTION OUTPUT Profile #100-yr

E.G. Elev (ft)	41.09	Element	Left OB	Channel
Right OB				
Vel Head (ft)	1.23	Wt. n-Val.	0.075	0.045
0.055				
W.S. Elev (ft)	39.86	Reach Len. (ft)	34.21	37.32
43.59				
Crit W.S. (ft)	38.14	Flow Area (sq ft)	395.38	1021.50
1202.15				
E.G. Slope (ft/ft)	0.005032	Area (sq ft)	632.25	1021.50
1202.15				
Q Total (cfs)	19500.00	Flow (cfs)	1804.44	11107.05
6588.51				
Top Width (ft)	442.00	Top Width (ft)	116.49	99.58
225.93				
Vel Total (ft/s)	7.45	Avg. Vel. (ft/s)	4.56	10.87
5.48				
Max Chl Dpth (ft)	11.86	Hydr. Depth (ft)	5.85	10.26
5.32				
Conv. Total (cfs)	274899.3	Conv. (cfs)	25437.9	156580.5
92880.9				
Length Wtd. (ft)	39.31	Wetted Per. (ft)	67.56	102.13
255.90				
Min Ch El (ft)	28.00	Shear (lb/sq ft)	1.84	3.14
1.48				
Alpha	1.43	Stream Power (lb/ft s)	8.39	34.16
8.09				
Frctn Loss (ft)	0.20	Cum Volume (acre-ft)	19.35	26.04
84.26				
C & E Loss (ft)	0.00	Cum SA (acres)	5.07	3.51
12.41				

Warning: Divided flow computed for this cross-section.
Note: Multiple critical depths were found at this location. The critical depth with the lowest, valid,
water surface was used.

CROSS SECTION

RIVER: CarrollCanyon
REACH: Lower RS: 1751

INPUT
Description: SB Interstate 5 Bridge Piers
Station Elevation Data num= 127

Sta	Elev	Sta	Elev	Sta	Elev	Sta	Elev	Sta	Elev
0	79.36	3.91	79.2	12.95	78.91	16.61	78.81	20.54	78.72
23.55	78.63	32.43	78.13	32.73	78.12	33.36	78	34.72	77.34
37.89	76	38.61	75.52	40.85	74	41.55	73.53	43.82	72
45.81	70.65	46.78	70	47.65	69.4	49.72	68	52.65	66
53.32	65.54	57.14	62.9	58.45	62	63.19	60.92	67.47	60
68.99	59.25	71.94	58	73.73	56.77	74.84	56	76.65	54.74
77.67	54	78.89	53.29	82.5	51.04	84.15	50	87.34	48
88.96	46.98	90.51	46	92.77	44.58	93.69	44	96.85	42
99.96	40.05	100.05	40	100.18	39.98	118.16	38	124.46	37.34

132.86	36	202.65	36	212.42	35.46	215.68	35.34	219.33	35.26
220.29	35.25	220.91	35.23	228.8	34	284.35	34	288.81	34
291.83	32.03	291.88	32	292.13	31.84	294.96	30	296.7	28.88
298.04	28	360.17	28	363.16	30	365.86	31.62	366.47	32
368.51	32.32	379.98	33.98	380.14	34	429.21	34	433.57	32.71
436.23	32	441.44	30.4	442.97	30	464.35	30	468.92	31.5
470.48	32	471.66	32.37	476.93	34	489.69	34	577.39	35.15
595.11	36	626.71	36	629.9	36.25	650.97	38	663.21	38.93
669.88	39.16	686.41	40	687.7	40	691.16	41.2	694.88	42
696.64	42.66	700.57	44	701.57	44.33	703.61	45.06	711.91	48
712.65	48.25	714.19	48.74	715.51	49.2	715.95	49.34	716.98	49.69
718.05	50	723.46	51.59	724.8	52	725.22	52.14	725.36	52.18
726.1	52.42	726.55	52.55	726.82	52.61	727.26	52.74	729.02	53.22
729.44	53.38	729.81	53.51	731.19	54	733.09	54.67	736.8	56
738.43	56.54	742.5	58	743.88	58.49	747.3	59.64	748.04	59.89
748.38	60	754.78	61.98	754.84	62	758.06	62.94	761.75	64
768.77	66	769.12	66.17						

Manning's n Values num= 3

Sta	n Val	Sta	n Val	Sta	n Val
0	.075	288.81	.045	379.98	.055

Bank Sta: Left	Right	Lengths: Left	Channel	Right	Coeff Contr.	Expan.
288.81	379.98	18.27	17.69	17.81	.1	.3

Ineffective Flow num= 2

Sta L	Sta R	Elev	Permanent
0	228	42	F
650	769.12	50	F

Blocked Obstructions num= 3

Sta L	Sta R	Elev	Sta L	Sta R	Elev	Sta L	Sta R	Elev
103.36	168.78	55	517.3	524.3	80	445.7	452.7	80

CROSS SECTION OUTPUT Profile #100-yr

E.G. Elev (ft)	40.89	Element	Left OB	Channel	Right OB
Vel Head (ft)	1.22	Wt. n-Val.	0.075	0.045	0.055
W.S. Elev (ft)	39.67	Reach Len. (ft)	2.70	2.70	2.70
Crit W.S. (ft)	38.11	Flow Area (sq ft)	344.57	955.55	1353.36
E.G. Slope (ft/ft)	0.005075	Area (sq ft)	579.46	955.55	1376.41
Q Total (cfs)	19500.00	Flow (cfs)	1545.56	10528.83	7425.61
Top Width (ft)	497.42	Top Width (ft)	120.37	91.17	285.88
Vel Total (ft/s)	7.35	Avg. Vel. (ft/s)	4.49	11.02	5.49
Max Chl Dpth (ft)	11.67	Hydr. Depth (ft)	5.67	10.48	5.29
Conv. Total (cfs)	273725.9	Conv. (cfs)	21695.4	147795.6	104234.9
Length Wtd. (ft)	2.70	Wetted Per. (ft)	60.82	94.26	287.17
Min Ch El (ft)	28.00	Shear (lb/sq ft)	1.80	3.21	1.49
Alpha	1.46	Stream Power (lb/ft s)	8.05	35.39	8.19
Frctn Loss (ft)	0.02	Cum Volume (acre-ft)	18.87	25.19	82.97

C & E Loss (ft) 0.03 Cum SA (acres) 4.98 3.43
12.15

Warning: Divided flow computed for this cross-section.
Warning: The conveyance ratio (upstream conveyance divided by downstream conveyance) is less than
0.7 or greater than 1.4. This may indicate the need for additional cross sections.
Note: Multiple critical depths were found at this location. The critical depth with the lowest, valid,
energy was used.

BRIDGE

RIVER: CarrollCanyon
REACH: Lower RS: 1743

INPUT
Description:
Distance from Upstream XS = 2.7
Deck/Roadway Width = 11.35
Weir Coefficient = 2.6
Upstream Deck/Roadway Coordinates
num= 7

Sta	Hi Cord	Lo Cord	Sta	Hi Cord	Lo Cord	Sta	Hi Cord	Lo Cord
276.8	37.42		288.8	38.25	35.46	322.45	38.9	36.11
332.3	39	36.21	342.14	38.9	36.11	375.8	38.18	35.39
386	37.42							

Upstream Bridge Cross Section Data
Station Elevation Data num= 127

Sta	Elev	Sta	Elev	Sta	Elev	Sta	Elev	Sta	Elev
0	79.36	3.91	79.2	12.95	78.91	16.61	78.81	20.54	78.72
23.55	78.63	32.43	78.13	32.73	78.12	33.36	78	34.72	77.34
37.89	76	38.61	75.52	40.85	74	41.55	73.53	43.82	72
45.81	70.65	46.78	70	47.65	69.4	49.72	68	52.65	66
53.32	65.54	57.14	62.9	58.45	62	63.19	60.92	67.47	60
68.99	59.25	71.94	58	73.73	56.77	74.84	56	76.65	54.74
77.67	54	78.89	53.29	82.5	51.04	84.15	50	87.34	48
88.96	46.98	90.51	46	92.77	44.58	93.69	44	96.85	42
99.96	40.05	100.05	40	100.18	39.98	118.16	38	124.46	37.34
132.86	36	202.65	36	212.42	35.46	215.68	35.34	219.33	35.26
220.29	35.25	220.91	35.23	228.8	34	284.35	34	288.81	34
291.83	32.03	291.88	32	292.13	31.84	294.96	30	296.7	28.88
298.04	28	360.17	28	363.16	30	365.86	31.62	366.47	32
368.51	32.32	379.98	33.98	380.14	34	429.21	34	433.57	32.71
436.23	32	441.44	30.4	442.97	30	464.35	30	468.92	31.5
470.48	32	471.66	32.37	476.93	34	489.69	34	577.39	35.15
595.11	36	626.71	36	629.9	36.25	650.97	38	663.21	38.93
669.88	39.16	686.41	40	687.7	40	691.16	41.2	694.88	42
696.64	42.66	700.57	44	701.57	44.33	703.61	45.06	711.91	48
712.65	48.25	714.19	48.74	715.51	49.2	715.95	49.34	716.98	49.69
718.05	50	723.46	51.59	724.8	52	725.22	52.14	725.36	52.18
726.1	52.42	726.55	52.55	726.82	52.61	727.26	52.74	729.02	53.22
729.44	53.38	729.81	53.51	731.19	54	733.09	54.67	736.8	56
738.43	56.54	742.5	58	743.88	58.49	747.3	59.64	748.04	59.89
748.38	60	754.78	61.98	754.84	62	758.06	62.94	761.75	64
768.77	66	769.12	66.17						

Manning's n Values num= 3

Sta	n Val	Sta	n Val	Sta	n Val
0	.075	288.81	.045	379.98	.055

Bank Sta: Left Right Coeff Contr. Expan.
288.81 379.98 .1 .3

Ineffective Flow num= 2

Sta L	Sta R	Elev	Permanent
0	228	42	F
650	769.12	50	F

Blocked Obstructions num= 3

Sta L	Sta R	Elev	Sta L	Sta R	Elev	Sta L	Sta R	Elev
103.36	168.78	55	517.3	524.3	80	445.7	452.7	80

Downstream Deck/Roadway Coordinates
num= 7

Sta	Hi Cord	Lo Cord	Sta	Hi Cord	Lo Cord	Sta	Hi Cord	Lo Cord
276.8	37.42		288.8	38.25	35.46	322.45	38.9	36.11
332.3	39	36.21	342.14	38.9	36.11	375.8	38.18	35.39
386	37.42							

Downstream Bridge Cross Section Data
Station Elevation Data num= 122

Sta	Elev	Sta	Elev	Sta	Elev	Sta	Elev	Sta	Elev
0	77.03	2.22	76.93	3.72	76.88	6.52	76.82	9.42	76.73
13.81	76.65	15.94	76.6	22.26	76.5	23.79	76.47	28.8	76
32.64	75.26	36.21	74	38.74	72.27	39.13	72	39.66	71.63
43.8	68.77	44.91	68	46.57	66.84	47.79	66	48.65	65.4
50.68	64	53.56	62	62.06	60.26	63.32	60	66.12	58.22
66.45	58	68.39	56.57	69.16	56	69.49	55.74	71.77	54
74.05	52.64	75.09	52	76.04	51.59	79.38	50	82.27	48.18
82.56	48	82.79	47.86	84.42	46.83	85.74	46	86.88	45.29
88.93	44	89.32	43.75	92.1	42	92.28	41.89	95.33	40
109.55	38.25	110.88	38.08	111.62	38	112.85	37.87	138.41	36
215.1	36	221.25	34.84	225.3	34.22	226.65	34	282.86	34
287.43	34	290.13	32.24	290.5	32	293.57	30	294.95	29.08
296.52	28	359.18	28	361.31	29.38	362.24	30	364.27	31.31
365.36	32	368.47	32.45	378.45	33.4	384.66	34	427.77	34
430.19	33.18	433.99	32	435.92	31.33	439.82	30	465.26	30
467.25	30.92	469.94	32	471.24	32.45	475.63	34	505.04	34
566.79	34.82	591.55	36	620.66	36	623.74	36.22	625.35	36.27
629.92	36.64	647.62	38	652.84	38	653.07	38.03	677.37	40
687.1	40	690.28	41.2	693.01	42	697.29	43.53	698.67	44
702.82	45.5	704.16	46	704.38	46.09	709.49	48	710.41	48.34
711.37	48.64	712.13	48.81	713.89	49.25	715.57	49.73	716.67	50
717.65	50.21	721.95	51.21	722.85	51.45	727.23	52.59	731.9	53.65
733.24	54	733.33	54	738.07	55.58	739.02	56	739.9	56.26
741.88	56.64	748.27	58	750.23	58.66	754.91	60	758.19	60.95
762.65	62	765.72	62.83						

Manning's n Values num= 3

Sta	n Val	Sta	n Val	Sta	n Val
0	.075	287.43	.055	384.66	.055

Bank Sta: Left Right Coeff Contr. Expan.
287.43 384.66 .1 .3

Ineffective Flow num= 2

Sta L	Sta R	Elev	Permanent
0	225	42	F
650	765.72	50	F

Blocked Obstructions num= 3

Sta L	Sta R	Elev	Sta L	Sta R	Elev	Sta L	Sta R	Elev
99.06	164.3	55	517.3	524.3	80	584.4	591.4	80

```
Upstream Embankment side slope                =       0 horiz. to 1.0 vertical
Downstream Embankment side slope              =       0 horiz. to 1.0 vertical
Maximum allowable submergence for weir flow =     .95
Elevation at which weir flow begins           =
Energy head used in spillway design           =
Spillway height used in design                =
Weir crest shape                              = Broad Crested

Number of Bridge Coefficient Sets =  2

Low Flow Methods and Data
       Energy
Selected Low Flow Methods = Highest Energy Answer

High Flow Method
       Energy Only

Low Flow Methods and Data
       Energy
Selected Low Flow Methods = Highest Energy Answer

High Flow Method
       Energy Only

Additional Bridge Parameters
       Add Friction component to Momentum
       Do not add Weight component to Momentum
       Class B flow critical depth computations use critical depth
           inside the bridge at the upstream end
       Criteria to check for pressure flow = Upstream energy grade line

BRIDGE OUTPUT  Profile #100-yr

  E.G. US. (ft)                  40.89    Element                  Inside BR US
Inside BR DS
  W.S. US. (ft)                  39.67    E.G. Elev (ft)                 40.83
40.63
  Q Total (cfs)                19500.00   W.S. Elev (ft)                 39.72
39.29
  Q Bridge (cfs)                5182.15   Crit W.S. (ft)                 37.70
37.20
  Q Weir (cfs)                           Max Chl Dpth (ft)              11.72
11.29
  Weir Sta Lft (ft)                      Vel Total (ft/s)                8.31
 8.71
  Weir Sta Rgt (ft)                      Flow Area (sq ft)            2346.11
2239.07
  Weir Submerg                           Froude # Chl                    0.45
 0.48
  Weir Max Depth (ft)                    Specif Force (cu ft)        14427.11
14296.58
  Min El Weir Flow (ft)           30.01  Hydr Depth (ft)                 5.75
 5.45
  Min El Prs (ft)                 36.21  W.P. Total (ft)               626.85
617.95
  Delta EG (ft)                    0.40  Conv. Total (cfs)           162245.7
149140.4
  Delta WS (ft)                    0.16  Top Width (ft)               498.93
490.31
  BR Open Area (sq ft)           599.06  Frctn Loss (ft)                 0.18
 0.03
  BR Open Vel (ft/s)               8.65  C & E Loss (ft)                 0.02
```

0.11
Coef of Q
3.87
Br Sel Method Energy only
33.68

Shear Total (lb/sq ft) 3.38
Power Total (lb/ft s) 28.05

Note: Multiple critical depths were found at this location. The critical depth with the lowest, valid,
energy was used.
Warning: The conveyance ratio (upstream conveyance divided by downstream conveyance) is less than
0.7 or greater than 1.4. This may indicate the need for additional cross sections.
Note: Multiple critical depths were found at this location. The critical depth with the lowest, valid,
energy was used.

CROSS SECTION

RIVER: CarrollCanyon
REACH: Lower RS: 1733

INPUT
Description: SB Interstate 5 Bridge Piers
Station Elevation Data num= 122

Sta	Elev	Sta	Elev	Sta	Elev	Sta	Elev	Sta	Elev
0	77.03	2.22	76.93	3.72	76.88	6.52	76.82	9.42	76.73
13.81	76.65	15.94	76.6	22.26	76.5	23.79	76.47	28.8	76
32.64	75.26	36.21	74	38.74	72.27	39.13	72	39.66	71.63
43.8	68.77	44.91	68	46.57	66.84	47.79	66	48.65	65.4
50.68	64	53.56	62	62.06	60.26	63.32	60	66.12	58.22
66.45	58	68.39	56.57	69.16	56	69.49	55.74	71.77	54
74.05	52.64	75.09	52	76.04	51.59	79.38	50	82.27	48.18
82.56	48	82.79	47.86	84.42	46.83	85.74	46	86.88	45.29
88.93	44	89.32	43.75	92.1	42	92.28	41.89	95.33	40
109.55	38.25	110.88	38.08	111.62	38	112.85	37.87	138.41	36
215.1	36	221.25	34.84	225.3	34.22	226.65	34	282.86	34
287.43	34	290.13	32.24	290.5	32	293.57	30	294.95	29.08
296.52	28	359.18	28	361.31	29.38	362.24	30	364.27	31.31
365.36	32	368.47	32.45	378.45	33.4	384.66	34	427.77	34
430.19	33.18	433.99	32	435.92	31.33	439.82	30	465.26	30
467.25	30.92	469.94	32	471.24	32.45	475.63	34	505.04	34
566.79	34.82	591.55	36	620.66	36	623.74	36.22	625.35	36.27
629.92	36.64	647.62	38	652.84	38	653.07	38.03	677.37	40
687.1	40	690.28	41.2	693.01	42	697.29	43.53	698.67	44
702.82	45.5	704.16	46	704.38	46.09	709.49	48	710.41	48.34
711.37	48.64	712.13	48.81	713.89	49.25	715.57	49.73	716.67	50
717.65	50.21	721.95	51.21	722.85	51.45	727.23	52.59	731.9	53.65
733.24	54	733.33	54	738.07	55.58	739.02	56	739.9	56.26
741.88	56.64	748.27	58	750.23	58.66	754.91	60	758.19	60.95
762.65	62	765.72	62.83						

Manning's n Values num= 3

Sta	n Val	Sta	n Val	Sta	n Val
0	.075	287.43	.055	384.66	.055

Bank Sta: Left	Right	Lengths: Left	Channel	Right	Coeff Contr.	Expan.
287.43	384.66	83.44	100.26	128.99	.1	.3

Ineffective Flow num= 2

Sta L	Sta R	Elev	Permanent

0	225	42	F
650	765.72	50	F

Blocked Obstructions num= 3

Sta L	Sta R	Elev	Sta L	Sta R	Elev	Sta L	Sta R	Elev
99.06	164.3	55	517.3	524.3	80	584.4	591.4	80

CROSS SECTION OUTPUT Profile #100-yr

E.G. Elev (ft)	40.49	Element	Left OB	Channel
Right OB				
Vel Head (ft)	0.99	Wt. n-Val.	0.075	0.055
0.055				
W.S. Elev (ft)	39.50	Reach Len. (ft)	83.44	100.26
128.99				
Crit W.S. (ft)	37.55	Flow Area (sq ft)	343.36	980.84
1334.62				
E.G. Slope (ft/ft)	0.005990	Area (sq ft)	565.00	980.84
1352.62				
Q Total (cfs)	19500.00	Flow (cfs)	1640.11	9377.70
8482.19				
Top Width (ft)	492.94	Top Width (ft)	123.13	97.23
272.58				
Vel Total (ft/s)	7.33	Avg. Vel. (ft/s)	4.78	9.56
6.36				
Max Chl Dpth (ft)	11.50	Hydr. Depth (ft)	5.50	10.09
5.31				
Conv. Total (cfs)	251946.7	Conv. (cfs)	21190.8	121163.2
109592.8				
Length Wtd. (ft)	111.06	Wetted Per. (ft)	62.45	100.32
270.78				
Min Ch El (ft)	28.00	Shear (lb/sq ft)	2.06	3.66
1.84				
Alpha	1.18	Stream Power (lb/ft s)	9.82	34.96
11.71				
Frctn Loss (ft)	1.04	Cum Volume (acre-ft)	18.66	24.89
82.43				
C & E Loss (ft)	0.08	Cum SA (acres)	4.93	3.39
12.04				

Warning: Divided flow computed for this cross-section.
Warning: The velocity head has changed by more than 0.5 ft (0.15 m). This may indicate the need for
additional cross sections.
Warning: The conveyance ratio (upstream conveyance divided by downstream conveyance) is less than
0.7 or greater than 1.4. This may indicate the need for additional cross sections.
Warning: The energy loss was greater than 1.0 ft (0.3 m). between the current and previous cross
section. This may indicate the need for additional cross sections.
Note: Multiple critical depths were found at this location. The critical depth with the lowest, valid,
energy was used.

CROSS SECTION

RIVER: CarrollCanyon
REACH: Lower RS: 1633

INPUT
Description: SB Interstate 5 Bridge Piers
Station Elevation Data num= 134

Sta	Elev	Sta	Elev	Sta	Elev	Sta	Elev	Sta	Elev
0	70.55	1.98	70.42	3.27	70.36	11.43	70.09	21.75	69.85
22.29	69.84	22.89	69.82	29.93	69.63	31.13	69.59	34.92	69.47
38.13	68.83	40.2	68	41.36	66.42	41.67	66	44.92	64.23
45.23	64.06	45.34	64	48.5	62.65	49.87	62	52.43	61.4
56.18	60.57	58.72	60	59.37	59.57	62	58	63.99	56.5
64.66	56	67.24	54	68.93	52.68	69.53	52.21	69.8	52
73.8	50.39	76.09	49.53	80.47	48	83.01	46.69	84.39	46
85.8	45.15	87.69	44	90.87	42	92.31	41.13	94.19	40
99.3	38.14	99.6	38	153.22	36	224.64	36	224.86	35.95
233.56	34	296.86	34	297.59	34	298.37	33.5	300.52	32
303.38	30.96	305.57	30	313.6	28.22	314.38	28	364.29	28
370.02	29.71	370.74	29.91	371.09	30	373.72	30.65	379.22	32
380.48	32.09	392.29	33.1	402.89	34	443.84	34	445.18	33.56
449.99	32	452.47	31.2	456.21	30	481.68	30	482.61	30.33
488.02	32	489.63	32.18	493.49	32.59	520.92	32.67	587.58	34
593.03	34.86	600.37	36	602.95	36.91	606.01	38	611.6	39.97
611.7	40	611.9	40.07	617.54	42	621.11	43.33	622.88	44
625.2	45.29	626.38	46	627.34	46.69	629.17	48	630.21	48.75
631.89	50	633.35	51.1	634.54	52	636.41	53.43	637.14	54
638.21	54.83	641.67	57.53	642.14	57.89	642.28	58	642.47	58.14
644.85	60	649.99	64	650.24	64.2	654.03	67.14	657.69	70
658.25	70.43	660.26	72	663.56	73.02	666.03	73.11	668.6	73.21
671.18	73.3	674.13	73.65	679.78	73.74	680.81	73.83	688.08	73.87
693.39	73.94	693.76	73.96	693.85	73.96	696.33	74	724.88	74
727.06	73.07	730.15	72	733.19	70.68	734.79	70	737.45	68.93
739.97	68	744.07	66.7	748.24	65.47	750.62	64.67	752.6	64
756.71	62.62	758.3	62	759.87	61.38	760.15	61.18		

Manning's n Values num= 3

Sta	n Val	Sta	n Val	Sta	n Val
0	.08	297.59	.06	402.89	.06

Bank Sta: Left	Right	Lengths: Left	Channel	Right	Coeff Contr.	Expan.
297.59	402.89	126.5	174.94	377.94	.1	.3

Ineffective Flow num= 1

Sta L	Sta R	Elev	Permanent
0	230	41	F

Blocked Obstructions num= 3

Sta L	Sta R	Elev	Sta L	Sta R	Elev	Sta L	Sta R	Elev
99.16	163.67	55	606.4	613.4	70	537.2	544.2	70

CROSS SECTION OUTPUT Profile #100-yr

E.G. Elev (ft)	39.37	Element	Left OB	Channel
Right OB				
Vel Head (ft)	1.77	Wt. n-Val.	0.080	0.060
0.060				
W.S. Elev (ft)	37.60	Reach Len. (ft)	126.50	174.94
377.94				
Crit W.S. (ft)	37.04	Flow Area (sq ft)	242.05	822.54
907.21				
E.G. Slope (ft/ft)	0.016587	Area (sq ft)	351.54	822.54
907.21				
Q Total (cfs)	19500.00	Flow (cfs)	1354.14	10209.88
7935.98				
Top Width (ft)	434.22	Top Width (ft)	133.92	105.30
195.00				
Vel Total (ft/s)	9.89	Avg. Vel. (ft/s)	5.59	12.41

8.75				
Max Chl Dpth (ft)	9.60	Hydr. Depth (ft)	3.58	7.81
4.65				
Conv. Total (cfs)	151407.0	Conv. (cfs)	10514.2	79274.2
61618.6				
Length Wtd. (ft)	293.66	Wetted Per. (ft)	67.68	107.14
205.49				
Min Ch El (ft)	28.00	Shear (lb/sq ft)	3.70	7.95
4.57				
Alpha	1.17	Stream Power (lb/ft s)	20.72	98.68
39.99				
Frctn Loss (ft)	1.12	Cum Volume (acre-ft)	17.78	22.81
79.08				
C & E Loss (ft)	0.46	Cum SA (acres)	4.69	3.15
11.35				

Warning: Divided flow computed for this cross-section.
Warning: The velocity head has changed by more than 0.5 ft (0.15 m). This may indicate the need for
additional cross sections.
Warning: The conveyance ratio (upstream conveyance divided by downstream conveyance) is less than
0.7 or greater than 1.4. This may indicate the need for additional cross sections.
Warning: The energy loss was greater than 1.0 ft (0.3 m). between the current and previous cross
section. This may indicate the need for additional cross sections.
Note: Multiple critical depths were found at this location. The critical depth with the lowest, valid,
water surface was used.

CROSS SECTION

RIVER: CarrollCanyon
REACH: Lower RS: 1458

INPUT
Description: FEMA CROSS SECTION - AD
Station Elevation Data num= 161

Sta	Elev	Sta	Elev	Sta	Elev	Sta	Elev	Sta	Elev
0	64.8	1.27	64.56	4.4	64	9.09	63.19	10.71	63
11.7	62.89	14.67	62.51	15.3	62.42	20.69	61.69	24.49	61.14
29.68	60.4	38	59.28	43.28	58.53	45.27	58.27	47.23	58
51.87	57.38	54.62	56.98	59.8	56.32	62.41	56	62.47	55.99
64.35	55.76	65.32	55.65	66.8	55.41	68.84	55.09	70.63	54.8
75.3	54	78.11	53.55	81.7	52.93	84.79	52.32	86.08	52
87.11	52	90.69	51.27	91.55	51.1	94.77	50	96.39	49.37
101.94	47.22	104	46.43	106.04	45.66	106.21	45.59	106.36	45.53
107.74	44.94	109.11	44.36	109.89	44	110.5	43.71	113.78	42
115.07	41.31	117.52	40.04	117.59	40	119.87	38.81	121.43	38
129.2	37.24	144.79	36	151.75	36	184.32	34.77	209.34	34
212.76	33.34	220.42	32	277.03	32	348.46	34	361.1	34
362.21	34	365.12	32.2	365.45	32	366.69	31.23	368.69	30
369.19	29.71	372.06	28	374.39	26.67	375.59	26	389.87	26
408.03	28	408.2	28.07	413.34	30	415.06	30.61	418.55	31.84
419.01	32	449.83	32	489.16	32	498.15	32.75	511.99	34
540.92	34	554.69	30	561.48	28	584.45	28	590.54	29.36
593.43	30	597.2	30.34	601.24	30.56	614.24	31.49	620.47	31.54
628.81	31.77	634.52	32	640.4	32.11	640.89	32.13	641.43	32.14
652.66	32.42	654.1	32.45	687.42	33.05	687.95	33.05	717.73	32

902.56	32	905.93	30.33	906.61	30	908.81	28.91	910.58	28
912.61	26.92	914.41	26	918.45	24.18	918.72	24.06	918.84	24
1025.96	24	1031.28	25.93	1031.36	25.96	1031.47	26	1031.52	26.02
1036.55	28	1037.58	28.41	1046.78	32.01	1051.38	33.98	1057.19	36.13
1057.88	36.41	1061.95	38	1063.98	38.77	1066.88	40	1068.6	41.72
1068.87	42	1070.3	43.43	1070.9	44	1071.19	44.27	1073.01	46
1074.71	47.61	1075.12	48	1075.55	48.41	1077.54	50	1078.55	50.76
1080.71	52	1081.79	52.59	1085.94	54.51	1088.98	55.87	1089.18	55.97
1089.26	56	1093.83	56.89	1095.23	56.58	1096.53	56.77	1100.81	56.37
1102.62	56.47	1111.95	56.81	1112.9	56.83	1118.35	56.8	1120.42	56.84
1123.3	56.89	1125.58	56.92	1135.52	56.96	1143.92	56.91	1148.37	56.87
1150.66	56.84	1157.33	56.79	1159.19	56.77	1160.7	56.76	1161.83	56.75
1168.05	56.49								

Manning's n Values num= 3

Sta	n Val	Sta	n Val	Sta	n Val
0	.08	365.45	.06	489.16	.06

Bank Sta: Left	Right	Lengths: Left	Channel	Right	Coeff Contr.	Expan.
365.45	489.16	228.54	272.94	296.46	.1	.3

Ineffective Flow num= 1

Sta L	Sta R	Elev	Permanent
0	285	39	F

Blocked Obstructions num= 3

Sta L	Sta R	Elev	Sta L	Sta R	Elev	Sta L	Sta R	Elev
125.08	145.86	55	730	760	42	850	870	42

CROSS SECTION OUTPUT Profile #100-yr

E.G. Elev (ft)	37.79	Element	Left OB	Channel
Right OB				
Vel Head (ft)	0.23	Wt. n-Val.	0.080	0.060
0.060				
W.S. Elev (ft)	37.56	Reach Len. (ft)	228.54	272.94
296.46				
Crit W.S. (ft)	33.05	Flow Area (sq ft)	346.41	917.48
3916.30				
E.G. Slope (ft/ft)	0.001641	Area (sq ft)	915.47	917.48
3916.30				
Q Total (cfs)	19500.00	Flow (cfs)	686.45	3454.62
15358.92				
Top Width (ft)	864.98	Top Width (ft)	219.59	123.71
521.68				
Vel Total (ft/s)	3.76	Avg. Vel. (ft/s)	1.98	3.77
3.92				
Max Chl Dpth (ft)	13.56	Hydr. Depth (ft)	4.31	7.42
7.51				
Conv. Total (cfs)	481392.7	Conv. (cfs)	16946.4	85283.6
379162.8				
Length Wtd. (ft)	290.45	Wetted Per. (ft)	81.04	126.17
549.61				
Min Ch El (ft)	26.00	Shear (lb/sq ft)	0.44	0.74
0.73				
Alpha	1.04	Stream Power (lb/ft s)	0.87	2.80
2.86				
Frctn Loss (ft)	0.48	Cum Volume (acre-ft)	15.94	19.32
58.15				
C & E Loss (ft)	0.00	Cum SA (acres)	4.17	2.69
8.24				

Warning: Divided flow computed for this cross-section.
Note: Multiple critical depths were found at this location. The critical depth with the lowest, valid,
water surface was used.

CROSS SECTION

RIVER: CarrollCanyon
REACH: Lower RS: 1185

INPUT
Description: FEMA CROSS SECTION - AC
Station Elevation Data num= 142

Sta	Elev	Sta	Elev	Sta	Elev	Sta	Elev	Sta	Elev
0	80.47	1.9	80.15	2.63	80	3.35	79.59	6.06	78
7.32	77.22	9.09	76	11.43	74.38	11.91	74.08	12.02	74
12.17	73.89	15.06	72	15.95	71.38	18.01	70	19.51	68.94
20.9	68	22.91	66.57	23.74	66	26.18	64.24	26.53	64
27.21	63.53	29.46	62	30.11	62	33.77	61.11	39.85	59.7
46.77	58	47.01	57.98	52.75	57.53	57.63	57	61.16	56.66
67.06	56	70.06	54.81	74.17	53.17	77.12	52	77.87	51.7
79.23	51.16	86.91	48.15	87.31	48	88.46	47.55	92.44	46
93.82	45.61	100.6	44	121.2	41.02	127.82	40	131.29	39.46
140.34	38	157.34	36.54	164.48	36	176.07	35.24	193.21	34
196.12	34	203.8	33.49	212.8	33	224.46	32.42	231.48	32
301.07	32	318.54	31.51	326.92	31.41	335.48	31.32	345.28	31.11
356.38	30.84	365.11	30.6	374.56	30.35	375.83	30.32	388.15	30
396.84	30	401.44	30.8	404.6	31.21	411.03	32	413.36	32.47
415.91	33.03	423.03	34.49	423.58	34.61	429.46	36	632.85	36
633.09	36	635.4	34.67	636.55	34	638.48	32.91	640.07	32
641.59	31.15	643.63	30	645.48	28.98	646.89	28.2	647.73	27.88
656.82	26	658.65	26	677.8	26	680.15	27.07	685.85	29.62
686.71	30	689.63	31.29	691.22	32	710.57	32	781.28	32
783.4	30.89	785.73	30	795.41	30	798.91	30.31	804.68	30.8
805.9	30.87	808.44	31.07	818.45	31.99	818.55	32	824.11	32
854.78	32	859.09	31.56	867.61	30.69	874.61	30	876.99	29.16
880.06	28	897.89	28	899.72	28.45	906.48	30	915.93	32
1046.1	32	1096.21	30.64	1123.96	30	1124.59	29.81	1130.55	28
1138.43	25.65	1144.01	24	1263.08	24	1264.26	24.45	1268.16	26
1271.44	27.36	1276.2	29.39	1277.93	30	1284.29	32	1290.01	32.35
1290.18	32.36	1291.11	32.4	1317.67	33.97	1318.11	34	1318.41	34.08
1325.71	36	1332.28	37.52	1333.51	37.8	1334.4	38	1395.09	38
1409.19	37.44	1420.38	37.12						

Manning's n Values num= 3

Sta	n Val	Sta	n Val	Sta	n Val
0	.08	640.07	.06	824.11	.06

Bank Sta: Left	Right	Lengths: Left	Channel	Right	Coeff Contr.	Expan.
640.07	824.11	340.66	382.38	393.54	.1	.3

Ineffective Flow num= 1

Sta L	Sta R	Elev	Permanent
0	560	38	F

Blocked Obstructions num= 2

Sta L	Sta R	Elev	Sta L	Sta R	Elev
443.66	566.46	55	1372.42	1420.29	55

CROSS SECTION OUTPUT Profile #100-yr

E.G. Elev (ft) 37.31 Element Left OB Channel
Right OB

Vel Head (ft)	0.23	Wt. n-Val.	0.080	0.060
0.060				
W.S. Elev (ft)	37.08	Reach Len. (ft)	340.66	382.38
393.54				
Crit W.S. (ft)	32.61	Flow Area (sq ft)	93.53	1210.98
3851.45				
E.G. Slope (ft/ft)	0.001697	Area (sq ft)	1413.79	1210.98
3851.45				
Q Total (cfs)	19500.00	Flow (cfs)	82.36	4291.42
15126.21				
Top Width (ft)	1056.53	Top Width (ft)	366.22	184.04
506.27				
Vel Total (ft/s)	3.78	Avg. Vel. (ft/s)	0.88	3.54
3.93				
Max Chl Dpth (ft)	13.08	Hydr. Depth (ft)	1.27	6.58
7.61				
Conv. Total (cfs)	473313.3	Conv. (cfs)	1999.2	104163.5
367150.7				
Length Wtd. (ft)	389.96	Wetted Per. (ft)	75.76	187.08
509.99				
Min Ch El (ft)	26.00	Shear (lb/sq ft)	0.13	0.69
0.80				
Alpha	1.03	Stream Power (lb/ft s)	0.12	2.43
3.14				
Frctn Loss (ft)	0.75	Cum Volume (acre-ft)	9.83	12.65
31.72				
C & E Loss (ft)	0.00	Cum SA (acres)	2.64	1.73
4.74				

Warning: Divided flow computed for this cross-section.
Note: Multiple critical depths were found at this location. The critical depth with the lowest, valid,
water surface was used.

CROSS SECTION

RIVER: CarrollCanyon
REACH: Lower RS: 803

INPUT
Description: FEMA CROSS SECTION - AB
Station Elevation Data num= 169

Sta	Elev	Sta	Elev	Sta	Elev	Sta	Elev	Sta	Elev
0	39.16	2.5	38.97	6.18	38.68	13.37	38	26.08	37.46
30.91	37.3	62.4	36.36	63.68	36.36	66.25	36.33	76.79	36.19
77.17	36.19	77.57	36.18	77.98	36.18	91.71	36	174.06	36
174.38	35.63	174.43	35.55	174.49	35.51	178.47	36	197.07	36
205.67	35.54	207.7	35.64	218.28	35.51	245.07	34.81	273.09	34
280.13	33.73	286.79	33.5	305.52	32.8	325.34	32.13	326.96	32.08
329.13	32	388.73	32	388.84	32.01	393.87	32.53	395.38	32.67
398.67	33	402.73	33.44	408.04	34	408.83	34.12	409.48	34
425.09	34	427.48	33.39	432.15	32.22	432.6	32.1	433.05	32
438.43	30.3	439.45	30	519.34	30	528.1	32	528.56	32.1
528.85	32.18	531.01	32.74	535.26	33.8	535.96	34	536.79	34
546.13	34.09	547.33	34.11	595.22	34.58	610.81	34.76	646.45	35.04
663.83	35.09	679.38	35.33	682.91	35.34	684.64	35.35	700.97	35.62
702	35.63	708.8	35.65	720.32	35.92	720.85	35.92	723.85	36
737.37	36	738.05	36	742.8	36	745.51	34.89	749.22	34.065
749.51	34	751.13	32.86	752.39	32	753.93	30.88	755.13	30
755.33	29.857	755.87	29.47	757	28.63	757.54	28.24	757.86	28

759.13	27.07	760.6	26	761.33	25.47	763.35	24	783.45	24
788.04	24.74	795.97	26	798.91	27.1	801.33	28	804.63	29.12
807.2	30	820.86	30	845.1	30	897.18	28.69	897.78	28.67
926.19	28	945.5	28	946.32	28.19	954.05	30	955.46	30.32
962.46	32	970.96	32	974.56	31.45	979.74	30.73	983.19	30.24
985.04	30	997.42	30	1000.59	28.67	1002.2	28	1004.24	28
1022.9	26.77	1023.48	26.84	1028.27	28	1035.68	29.26	1039.75	30
1047.57	31.08	1055.49	31.99	1055.58	32	1063.94	32.8	1069.9	33.36
1072.3	33.57	1077.07	34	1186.41	34	1192.17	33.32	1194.13	33.26
1197.64	32.95	1205.43	32	1245.36	32	1249.6	30.14	1249.91	30
1250.27	29.83	1254.18	28	1255.43	27.32	1257.7	26	1258.9	25.27
1260.93	24	1379.42	24	1383.02	24.93	1386.74	26	1390.13	27.25
1391.89	28	1396.49	30	1399.06	30.252	1399.24	30.27	1411.88	31.49
1416.84	32	1433.16	33.45	1439.45	34	1451.76	34.55	1458.16	34.82
1474.68	35.54	1477.08	35.64	1485.39	36	1487.93	36	1495.95	36.11
1554.85	37.26	1587.28	38	1598.02	40	1598.57	40.1	1608.76	42
1609.7	42.17	1619.51	44	1620.88	44.25	1639.53	47.76		

Manning's n Values num= 3

Sta	n Val	Sta	n Val	Sta	n Val
0	.08	752.39	.06	962.46	.06

Bank Sta: Left	Right	Coeff Contr.	Expan.
752.39	962.46	.1	.3

Ineffective Flow num= 1

Sta L	Sta R	Elev	Permanent
0	675	37	F

Blocked Obstructions num= 3

Sta L	Sta R	Elev	Sta L	Sta R	Elev	Sta L	Sta R	Elev
36.86	333.73	55	567.35	678.08	55	1585.83	1639.76	55

CROSS SECTION OUTPUT Profile #100-yr

E.G. Elev (ft)	36.56	Element	Left OB	Channel
Right OB				
Vel Head (ft)	0.26	Wt. n-Val.	0.080	0.060
0.060				
W.S. Elev (ft)	36.30	Reach Len. (ft)		
Crit W.S. (ft)	31.43	Flow Area (sq ft)	56.93	1671.54
3170.91				
E.G. Slope (ft/ft)	0.002187	Area (sq ft)	1100.03	1671.54
3170.91				
Q Total (cfs)	19500.00	Flow (cfs)	40.69	7619.88
11839.43				
Top Width (ft)	1061.22	Top Width (ft)	307.93	210.07
543.22				
Vel Total (ft/s)	3.98	Avg. Vel. (ft/s)	0.71	4.56
3.73				
Max Chl Dpth (ft)	12.30	Hydr. Depth (ft)	0.77	7.96
5.84				
Conv. Total (cfs)	417016.1	Conv. (cfs)	870.2	162954.5
253191.4				
Length Wtd. (ft)		Wetted Per. (ft)	76.25	214.02
547.71				
Min Ch El (ft)	24.00	Shear (lb/sq ft)	0.10	1.07
0.79				
Alpha	1.05	Stream Power (lb/ft s)	0.07	4.86
2.95				
Frctn Loss (ft)		Cum Volume (acre-ft)		
C & E Loss (ft)		Cum SA (acres)		

Warning: Divided flow computed for this cross-section.
Note: Multiple critical depths were found at this location. The critical depth with the lowest, valid,
water surface was used.

SUMMARY OF MANNING'S N VALUES

River:CarrollCanyon

Reach	River Sta.	n1	n2	n3
Lower	6394	.05	.06	.05
Lower	6138	.05	.06	.05
Lower	5908	.05	.06	.05
Lower	5508	.08	.06	.05
Lower	4876	.08	.06	.05
Lower	4298	.08	.05	.05
Lower	4075	.08	.05	.05
Lower	3824	.075	.025	.045
Lower	3514	.075	.025	.045
Lower	2999	.075	.025	.075
Lower	2827	.075	.025	.075
Lower	2712	.055	.016	.075
Lower	2566	.055	.016	.075
Lower	2417	.055	.016	.075
Lower	2353	Bridge		
Lower	2299	.055	.016	.075
Lower	2275	.055	.016	.075
Lower	2249	.055	.016	.075
Lower	2195	.055	.016	.075
Lower	2129	.055	.016	.075
Lower	2086	.055	.016	.075
Lower	2054	.055	.016	.075
Lower	2020	.055	.016	.075
Lower	1987	.055	.016	.075
Lower	1954	.055	.016	.055
Lower	1906	.055	.016	.055
Lower	1852	.075	.016	.055
Lower	1788	.075	.045	.055
Lower	1751	.075	.045	.055
Lower	1743	Bridge		
Lower	1733	.075	.055	.055
Lower	1633	.08	.06	.06
Lower	1458	.08	.06	.06
Lower	1185	.08	.06	.06
Lower	803	.08	.06	.06

SUMMARY OF REACH LENGTHS

River: CarrollCanyon

Reach	River Sta.	Left	Channel	Right
Lower	6394	258.39	256.68	195.55

Lower	6138	270.79	229.34	188.56
Lower	5908	386.66	400.25	402.73
Lower	5508	622.48	632.28	635.37
Lower	4876	579.89	577.85	577.3
Lower	4298	372.34	223.32	134.47
Lower	4075	235.95	250.93	239.15
Lower	3824	231.01	310.07	383.91
Lower	3514	493.03	515.02	582.81
Lower	2999	180.26	171.12	173.29
Lower	2827	118.67	115.88	115.6
Lower	2712	146.94	146.04	143.37
Lower	2566	148.59	148.97	152.01
Lower	2417	120.25	117.72	112.38
Lower	2353	Bridge		
Lower	2299	24.05	23.62	24.97
Lower	2275	26.96	25.98	24.75
Lower	2249	53.25	54.23	54.9
Lower	2195	66.97	66.05	64.73
Lower	2129	43.54	43.24	43.23
Lower	2086	31.68	31.64	31.61
Lower	2054	34.4	34.07	34.71
Lower	2020	33.53	32.93	32.9
Lower	1987	31.52	36.11	36.27
Lower	1954	46.88	48.33	51.51
Lower	1906	53.45	53.4	53.05
Lower	1852	58.12	63.94	76.38
Lower	1788	34.21	37.32	43.59
Lower	1751	18.27	17.69	17.81
Lower	1743	Bridge		
Lower	1733	83.44	100.26	128.99
Lower	1633	126.5	174.94	377.94
Lower	1458	228.54	272.94	296.46
Lower	1185	340.66	382.38	393.54
Lower	803			

SUMMARY OF CONTRACTION AND EXPANSION COEFFICIENTS
River: CarrollCanyon

Reach	River Sta.	Contr.	Expan.
Lower	6394	.1	.3
Lower	6138	.1	.3
Lower	5908	.1	.3
Lower	5508	.1	.3
Lower	4876	.1	.3
Lower	4298	.1	.3
Lower	4075	.1	.3
Lower	3824	.1	.3
Lower	3514	.1	.3
Lower	2999	.1	.3
Lower	2827	.1	.3
Lower	2712	.1	.3
Lower	2566	.1	.3
Lower	2417	.1	.3
Lower	2353	Bridge	
Lower	2299	.1	.3
Lower	2275	.1	.3
Lower	2249	.1	.3
Lower	2195	.1	.3

Lower	2129		.1	.3
Lower	2086		.1	.3
Lower	2054		.1	.3
Lower	2020		.1	.3
Lower	1987		.1	.3
Lower	1954		.1	.3
Lower	1906		.1	.3
Lower	1852		.1	.3
Lower	1788		.1	.3
Lower	1751		.1	.3
Lower	1743	Bridge		
Lower	1733		.1	.3
Lower	1633		.1	.3
Lower	1458		.1	.3
Lower	1185		.1	.3
Lower	803		.1	.3

Profile Output Table - Standard Table 1

Reach	River Sta	Profile	Q Total	Min Ch El	W.S. Elev	Crit W.S.	E.G. Elev	E.G. Slope	Vel Chnl	Flow Area	Top Width	Froude # Chl
			(cfs)		(ft)							
(ft)		(ft)	(ft)	(ft/ft)	(ft/s)	(sq ft)	(ft)					
Lower	6394	100-yr	6700.00	48.00	60.31	57.69	60.66	0.002715	5.90	1551.49	383.80	0.32
Lower	6138	100-yr	6700.00	46.00	59.77	56.96	60.07	0.002116	5.16	1753.11	439.01	0.29
Lower	5908	100-yr	6700.00	46.00	58.74	56.92	59.35	0.004268	7.05	1176.84	281.50	0.40
Lower	5508	100-yr	6700.00	44.00	56.35	54.21	57.23	0.006652	8.12	1027.70	380.98	0.50
Lower	4876	100-yr	6700.00	36.11	52.46	48.48	53.55	0.005099	8.67	844.58	395.60	0.45
Lower	4298	100-yr	6700.00	36.00	47.50	46.59	49.45	0.010008	12.32	688.35	354.46	0.73
Lower	4075	100-yr	6700.00	36.00	44.56	44.30	46.50	0.017509	11.19	611.66	404.03	0.90
Lower	3824	100-yr	6700.00	36.00	44.25	42.18	45.32	0.001530	8.37	880.49	441.36	0.56
Lower	3514	100-yr	6700.00	36.00	42.60	42.31	44.52	0.003916	11.23	682.78	410.51	0.86
Lower	2999	100-yr	6700.00	34.00	40.82	40.21	42.59	0.003428	10.73	681.01	749.92	0.80
Lower	2827	100-yr	6700.00	32.00	41.65	37.65	41.96	0.000534	5.52	2495.51	736.92	

```
  0.34
 Lower          2712                          100-yr     6700.00        32.00
41.51        37.21        41.91      0.000258       5.94     2494.78       479.83
  0.37
 Lower          2566                          100-yr     6700.00        32.00
41.36        37.82        41.86      0.000289       6.69     2455.76       452.64
  0.39
 Lower          2417                          100-yr     6700.00        30.00
41.33        37.43        41.83      0.000219       6.33     2382.11       473.19
  0.35
 Lower          2353      Sorrento Valley                  Bridge


 Lower          2299                          100-yr     6700.00        30.00
40.92        37.76        41.48      0.000386       6.58     1972.70       513.97
  0.39
 Lower          2275                          100-yr     6700.00        30.00
40.87        37.52        41.46      0.000414       7.02     2052.72       475.63
  0.38
 Lower          2249                          100-yr     6700.00        30.00
40.90        37.40        41.44      0.000376       6.73     2184.71       474.85
  0.37
 Lower          2195                          100-yr     6700.00        30.00
40.95        37.01        41.39      0.000321       6.25     2370.18       468.37
  0.34
 Lower          2129                          100-yr     6700.00        30.00
40.94        36.68        41.36      0.000234       5.89     2435.01       464.33
  0.33
 Lower          2086                          100-yr     6700.00        30.00
40.98        36.34        41.34      0.000175       5.45     2681.73       469.44
  0.31
 Lower          2054                          100-yr     6700.00        30.00
40.95        36.84        41.33      0.000265       5.98     2681.37       722.11
  0.32
 Lower          2020                          100-yr     6700.00        30.00
40.94        36.75        41.32      0.000267       6.00     2663.18       645.33
  0.33
 Lower          1987                          100-yr     6700.00        30.00
40.92        36.82        41.31      0.000272       6.05     2619.32       599.26
  0.33
 Lower          1954                          100-yr     6700.00        30.00
40.99        36.64        41.27      0.000222       5.24     2627.32       718.74
  0.29
 Lower          1906                          100-yr     6700.00        30.00
40.98        36.40        41.26      0.000156       5.16     2785.31       624.75
  0.28
 Lower          1852                          100-yr     6700.00        28.00
40.95        35.45        41.25      0.000147       5.02     2633.16       580.10
  0.26
 Lower          1788                          100-yr    19500.00        28.00
39.86        38.14        41.09      0.005032      10.87     2619.03       442.00
  0.60
 Lower          1751                          100-yr    19500.00        28.00
39.67        38.11        40.89      0.005075      11.02     2653.48       497.42
  0.60
 Lower          1743      NCTD Pedestrian                  Bridge


 Lower          1733                          100-yr    19500.00        28.00
39.50        37.55        40.49      0.005990       9.56     2658.81       492.94
  0.53
 Lower          1633                          100-yr    19500.00        28.00
37.60        37.04        39.37      0.016587      12.41     1971.80       434.22
```

```
   0.78
  Lower          1458                          100-yr    19500.00        26.00
37.56        33.05        37.79      0.001641        3.77      5180.19       864.98
   0.24
  Lower          1185                          100-yr    19500.00        26.00
37.08        32.61        37.31      0.001697        3.54      5155.96      1056.53
   0.24
  Lower          803                           100-yr    19500.00        24.00
36.30        31.43        36.56      0.002187        4.56      4899.37      1061.22
   0.28
```

ERRORS WARNINGS AND NOTES
Errors Warnings and Notes for Plan : 100yr_Exist

```
River: CarrollCanyon  Reach: Lower     RS: 6394     Profile: 100-yr
     Warning:Divided flow computed for this cross-section.
     Note:   Multiple critical depths were found at this location.  The critical
depth with the lowest, valid, water surface was
             used.
River: CarrollCanyon  Reach: Lower     RS: 6138     Profile: 100-yr
     Warning:Divided flow computed for this cross-section.
     Warning:The conveyance ratio (upstream conveyance divided by downstream
conveyance) is less than 0.7 or greater than 1.4.
             This may indicate the need for additional cross sections.
     Note:   Multiple critical depths were found at this location.  The critical
depth with the lowest, valid, water surface was
             used.
River: CarrollCanyon  Reach: Lower     RS: 5908     Profile: 100-yr
     Warning:Divided flow computed for this cross-section.
     Warning:The energy loss was greater than 1.0 ft (0.3 m). between the current
and previous cross section.  This may indicate
             the need for additional cross sections.
     Note:   Multiple critical depths were found at this location.  The critical
depth with the lowest, valid, water surface was
             used.
River: CarrollCanyon  Reach: Lower     RS: 5508     Profile: 100-yr
     Warning:Divided flow computed for this cross-section.
     Warning:The energy loss was greater than 1.0 ft (0.3 m). between the current
and previous cross section.  This may indicate
             the need for additional cross sections.
     Note:   Multiple critical depths were found at this location.  The critical
depth with the lowest, valid, water surface was
             used.
River: CarrollCanyon  Reach: Lower     RS: 4876     Profile: 100-yr
     Warning:Divided flow computed for this cross-section.
     Warning:The velocity head has changed by more than 0.5 ft (0.15 m).  This may
indicate the need for additional cross sections.
     Warning:The conveyance ratio (upstream conveyance divided by downstream
conveyance) is less than 0.7 or greater than 1.4.
             This may indicate the need for additional cross sections.
     Warning:The energy loss was greater than 1.0 ft (0.3 m). between the current
and previous cross section.  This may indicate
             the need for additional cross sections.
     Note:   Multiple critical depths were found at this location.  The critical
depth with the lowest, valid, water surface was
             used.
River: CarrollCanyon  Reach: Lower     RS: 4298     Profile: 100-yr
     Warning:Divided flow computed for this cross-section.
```

Warning:The energy loss was greater than 1.0 ft (0.3 m). between the current and previous cross section. This may indicate
the need for additional cross sections.
Note: Multiple critical depths were found at this location. The critical depth with the lowest, valid, water surface was
used.
River: CarrollCanyon Reach: Lower RS: 4075 Profile: 100-yr
Warning:Divided flow computed for this cross-section.
Warning:The velocity head has changed by more than 0.5 ft (0.15 m). This may indicate the need for additional cross sections.
Warning:The conveyance ratio (upstream conveyance divided by downstream conveyance) is less than 0.7 or greater than 1.4.
This may indicate the need for additional cross sections.
Warning:The energy loss was greater than 1.0 ft (0.3 m). between the current and previous cross section. This may indicate
the need for additional cross sections.
Note: Multiple critical depths were found at this location. The critical depth with the lowest, valid, water surface was
used.
River: CarrollCanyon Reach: Lower RS: 3824 Profile: 100-yr
Warning:Divided flow computed for this cross-section.
Warning:The velocity head has changed by more than 0.5 ft (0.15 m). This may indicate the need for additional cross sections.
Warning:The conveyance ratio (upstream conveyance divided by downstream conveyance) is less than 0.7 or greater than 1.4.
This may indicate the need for additional cross sections.
Note: Multiple critical depths were found at this location. The critical depth with the lowest, valid, water surface was
used.
River: CarrollCanyon Reach: Lower RS: 3514 Profile: 100-yr
Warning:Divided flow computed for this cross-section.
Warning:The energy loss was greater than 1.0 ft (0.3 m). between the current and previous cross section. This may indicate
the need for additional cross sections.
Note: Multiple critical depths were found at this location. The critical depth with the lowest, valid, water surface was
used.
River: CarrollCanyon Reach: Lower RS: 2999 Profile: 100-yr
Warning:Divided flow computed for this cross-section.
Warning:The velocity head has changed by more than 0.5 ft (0.15 m). This may indicate the need for additional cross sections.
Warning:The conveyance ratio (upstream conveyance divided by downstream conveyance) is less than 0.7 or greater than 1.4.
This may indicate the need for additional cross sections.
Note: Multiple critical depths were found at this location. The critical depth with the lowest, valid, water surface was
used.
River: CarrollCanyon Reach: Lower RS: 2827 Profile: 100-yr
Warning:Divided flow computed for this cross-section.
Warning:The conveyance ratio (upstream conveyance divided by downstream conveyance) is less than 0.7 or greater than 1.4.
This may indicate the need for additional cross sections.
Note: Multiple critical depths were found at this location. The critical depth with the lowest, valid, water surface was
used.
River: CarrollCanyon Reach: Lower RS: 2712 Profile: 100-yr
Warning:Divided flow computed for this cross-section.
Note: Multiple critical depths were found at this location. The critical depth with the lowest, valid, water surface was
used.
River: CarrollCanyon Reach: Lower RS: 2566 Profile: 100-yr
Warning:Divided flow computed for this cross-section.
Note: Multiple critical depths were found at this location. The critical

depth with the lowest, valid, water surface was
used.
River: CarrollCanyon Reach: Lower RS: 2417 Profile: 100-yr
Warning:Divided flow computed for this cross-section.
Warning:The conveyance ratio (upstream conveyance divided by downstream conveyance) is less than 0.7 or greater than 1.4.
This may indicate the need for additional cross sections.
Note: Multiple critical depths were found at this location. The critical depth with the lowest, valid, energy was used.
River: CarrollCanyon Reach: Lower RS: 2353 Profile: 100-yr Upstream
Note: Multiple critical depths were found at this location. The critical depth with the lowest, valid, energy was used.
River: CarrollCanyon Reach: Lower RS: 2353 Profile: 100-yr Downstream
Warning:The conveyance ratio (upstream conveyance divided by downstream conveyance) is less than 0.7 or greater than 1.4.
This may indicate the need for additional cross sections.
Note: Multiple critical depths were found at this location. The critical depth with the lowest, valid, energy was used.
River: CarrollCanyon Reach: Lower RS: 2299 Profile: 100-yr
Warning:Divided flow computed for this cross-section.
Note: Multiple critical depths were found at this location. The critical depth with the lowest, valid, energy was used.
River: CarrollCanyon Reach: Lower RS: 2275 Profile: 100-yr
Warning:Divided flow computed for this cross-section.
Note: Multiple critical depths were found at this location. The critical depth with the lowest, valid, water surface was
used.
River: CarrollCanyon Reach: Lower RS: 2249 Profile: 100-yr
Warning:Divided flow computed for this cross-section.
Note: Multiple critical depths were found at this location. The critical depth with the lowest, valid, water surface was
used.
River: CarrollCanyon Reach: Lower RS: 2195 Profile: 100-yr
Warning:Divided flow computed for this cross-section.
Note: Multiple critical depths were found at this location. The critical depth with the lowest, valid, water surface was
used.
River: CarrollCanyon Reach: Lower RS: 2129 Profile: 100-yr
Warning:Divided flow computed for this cross-section.
Note: Multiple critical depths were found at this location. The critical depth with the lowest, valid, water surface was
used.
River: CarrollCanyon Reach: Lower RS: 2086 Profile: 100-yr
Warning:Divided flow computed for this cross-section.
Note: Multiple critical depths were found at this location. The critical depth with the lowest, valid, water surface was
used.
River: CarrollCanyon Reach: Lower RS: 2054 Profile: 100-yr
Warning:Divided flow computed for this cross-section.
Note: Multiple critical depths were found at this location. The critical depth with the lowest, valid, water surface was
used.
River: CarrollCanyon Reach: Lower RS: 2020 Profile: 100-yr
Warning:Divided flow computed for this cross-section.
Note: Multiple critical depths were found at this location. The critical depth with the lowest, valid, water surface was
used.
River: CarrollCanyon Reach: Lower RS: 1987 Profile: 100-yr
Warning:Divided flow computed for this cross-section.
Note: Multiple critical depths were found at this location. The critical depth with the lowest, valid, water surface was
used.
River: CarrollCanyon Reach: Lower RS: 1954 Profile: 100-yr

Warning:Divided flow computed for this cross-section.
Note: Multiple critical depths were found at this location. The critical depth with the lowest, valid, water surface was used.
River: CarrollCanyon Reach: Lower RS: 1906 Profile: 100-yr
Warning:Divided flow computed for this cross-section.
Note: Multiple critical depths were found at this location. The critical depth with the lowest, valid, water surface was used.
River: CarrollCanyon Reach: Lower RS: 1852 Profile: 100-yr
Warning:Divided flow computed for this cross-section.
Warning:The velocity head has changed by more than 0.5 ft (0.15 m). This may indicate the need for additional cross sections.
Warning:The conveyance ratio (upstream conveyance divided by downstream conveyance) is less than 0.7 or greater than 1.4. This may indicate the need for additional cross sections.
Note: Multiple critical depths were found at this location. The critical depth with the lowest, valid, water surface was used.
River: CarrollCanyon Reach: Lower RS: 1788 Profile: 100-yr
Warning:Divided flow computed for this cross-section.
Note: Multiple critical depths were found at this location. The critical depth with the lowest, valid, water surface was used.
River: CarrollCanyon Reach: Lower RS: 1751 Profile: 100-yr
Warning:Divided flow computed for this cross-section.
Warning:The conveyance ratio (upstream conveyance divided by downstream conveyance) is less than 0.7 or greater than 1.4. This may indicate the need for additional cross sections.
Note: Multiple critical depths were found at this location. The critical depth with the lowest, valid, energy was used.
River: CarrollCanyon Reach: Lower RS: 1743 Profile: 100-yr Upstream
Note: Multiple critical depths were found at this location. The critical depth with the lowest, valid, energy was used.
River: CarrollCanyon Reach: Lower RS: 1743 Profile: 100-yr Downstream
Warning:The conveyance ratio (upstream conveyance divided by downstream conveyance) is less than 0.7 or greater than 1.4. This may indicate the need for additional cross sections.
Note: Multiple critical depths were found at this location. The critical depth with the lowest, valid, energy was used.
River: CarrollCanyon Reach: Lower RS: 1733 Profile: 100-yr
Warning:Divided flow computed for this cross-section.
Warning:The velocity head has changed by more than 0.5 ft (0.15 m). This may indicate the need for additional cross sections.
Warning:The conveyance ratio (upstream conveyance divided by downstream conveyance) is less than 0.7 or greater than 1.4. This may indicate the need for additional cross sections.
Warning:The energy loss was greater than 1.0 ft (0.3 m). between the current and previous cross section. This may indicate the need for additional cross sections.
Note: Multiple critical depths were found at this location. The critical depth with the lowest, valid, energy was used.
River: CarrollCanyon Reach: Lower RS: 1633 Profile: 100-yr
Warning:Divided flow computed for this cross-section.
Warning:The velocity head has changed by more than 0.5 ft (0.15 m). This may indicate the need for additional cross sections.
Warning:The conveyance ratio (upstream conveyance divided by downstream conveyance) is less than 0.7 or greater than 1.4. This may indicate the need for additional cross sections.
Warning:The energy loss was greater than 1.0 ft (0.3 m). between the current and previous cross section. This may indicate the need for additional cross sections.
Note: Multiple critical depths were found at this location. The critical

depth with the lowest, valid, water surface was
used.
River: CarrollCanyon Reach: Lower RS: 1458 Profile: 100-yr
Warning:Divided flow computed for this cross-section.
Note: Multiple critical depths were found at this location. The critical
depth with the lowest, valid, water surface was
used.
River: CarrollCanyon Reach: Lower RS: 1185 Profile: 100-yr
Warning:Divided flow computed for this cross-section.
Note: Multiple critical depths were found at this location. The critical
depth with the lowest, valid, water surface was
used.
River: CarrollCanyon Reach: Lower RS: 803 Profile: 100-yr
Warning:Divided flow computed for this cross-section.
Note: Multiple critical depths were found at this location. The critical
depth with the lowest, valid, water surface was
used.

PROSPOSED

HEC-RAS Plan: SC_Prop River: CarrollCanyon Reach: Lower Profile: 100-yr

Reach	River Sta	Profile	Q Total	Min Ch El	W.S. Elev	Crit W.S.	E.G. Elev	E.G. Slope	Vel Chnl	Flow Area	Top Width	Froude # Chl
			(cfs)	(ft)	(ft)	(ft)	(ft)	(ft/ft)	(ft/s)	(sq ft)	(ft)	
Lower	6394	100-yr	6700.00	48.00	60.31	57.69	60.66	0.002715	5.90	1551.49	383.80	0.32
Lower	6138	100-yr	6700.00	46.00	59.77	56.96	60.07	0.002116	5.16	1753.11	439.01	0.29
Lower	5908	100-yr	6700.00	46.00	58.74	56.92	59.35	0.004268	7.05	1176.84	281.50	0.40
Lower	5508	100-yr	6700.00	44.00	56.35	54.21	57.23	0.006652	8.12	1027.70	380.98	0.50
Lower	4876	100-yr	6700.00	36.11	52.46	48.48	53.55	0.005099	8.67	844.58	395.60	0.45
Lower	4298	100-yr	6700.00	36.00	47.50	46.59	49.45	0.010008	12.32	688.34	354.46	0.73
Lower	4075	100-yr	6700.00	36.00	44.56	44.30	46.50	0.017506	11.19	611.69	404.04	0.90
Lower	3824	100-yr	6700.00	36.00	44.25	42.18	45.32	0.001530	8.37	880.53	441.38	0.56
Lower	3514	100-yr	6700.00	36.00	42.60	42.31	44.52	0.003921	11.23	682.47	410.37	0.86
Lower	2999	100-yr	6700.00	34.00	40.84	40.21	42.59	0.003398	10.70	683.45	750.45	0.80
Lower	2827	100-yr	6700.00	32.00	41.66	37.65	41.97	0.000532	5.51	2499.09	737.10	0.34
Lower	2712	100-yr	6700.00	32.00	41.52	37.21	41.92	0.000257	5.93	2498.15	479.87	0.37
Lower	2566	100-yr	6700.00	32.00	41.37	37.82	41.87	0.000288	6.68	2459.47	452.68	0.39
Lower	2417	100-yr	6700.00	30.00	41.34	37.43	41.83	0.000218	6.32	2386.02	473.21	0.35
Lower	2353 Sorrento Valley		Bridge									
Lower	2299	100-yr	6700.00	30.00	40.94	37.76	41.49	0.000384	6.57	1978.61	514.00	0.39
Lower	2275	100-yr	6700.00	30.00	40.88	37.52	41.48	0.000411	7.00	2058.73	475.71	0.38
Lower	2249	100-yr	6700.00	30.00	40.92	37.40	41.45	0.000374	6.71	2190.71	474.91	0.37
Lower	2195	100-yr	6700.00	30.00	40.96	37.01	41.40	0.000319	6.24	2375.84	468.44	0.34
Lower	2129	100-yr	6700.00	30.00	40.95	36.92	41.38	0.000311	6.08	2371.90	457.35	0.34
Lower	2086	100-yr	6700.00	30.00	40.98	36.50	41.35	0.000225	5.59	2622.33	462.47	0.32
Lower	2054	100-yr	6700.00	30.00	40.96	36.91	41.34	0.000304	6.05	2633.02	715.14	0.33
Lower	2020	100-yr	6700.00	30.00	40.95	36.80	41.33	0.000304	6.06	2615.12	638.42	0.33
Lower	1987	100-yr	6700.00	30.00	40.93	36.82	41.32	0.000271	6.04	2622.08	599.34	0.33
Lower	1954	100-yr	6700.00	30.00	40.98	36.69	41.28	0.000237	5.41	2561.68	711.64	0.30
Lower	1906	100-yr	6700.00	30.00	40.97	35.90	41.27	0.000164	5.29	2722.16	617.65	0.29
Lower	1852	100-yr	6700.00	28.00	40.97	35.45	41.26	0.000147	5.01	2638.40	580.24	0.26
Lower	1788	100-yr	19500.00	28.00	39.83	38.12	41.10	0.005187	11.02	2579.46	434.73	0.61
Lower	1751	100-yr	19500.00	28.00	39.62	38.09	40.89	0.005277	11.20	2608.78	489.21	0.61
Lower	1743 NCTD Pedestrian		Bridge									
Lower	1733	100-yr	19500.00	28.00	39.50	37.55	40.49	0.005990	9.56	2658.81	492.94	0.53
Lower	1633	100-yr	19500.00	28.00	37.60	37.04	39.37	0.016587	12.41	1971.80	434.22	0.78
Lower	1458	100-yr	19500.00	26.00	37.56	33.05	37.79	0.001641	3.77	5180.19	864.98	0.24
Lower	1185	100-yr	19500.00	26.00	37.08	32.61	37.31	0.001697	3.54	5155.96	1056.53	0.24
Lower	803	100-yr	19500.00	24.00	36.30	31.43	36.56	0.002187	4.56	4899.37	1061.22	0.28

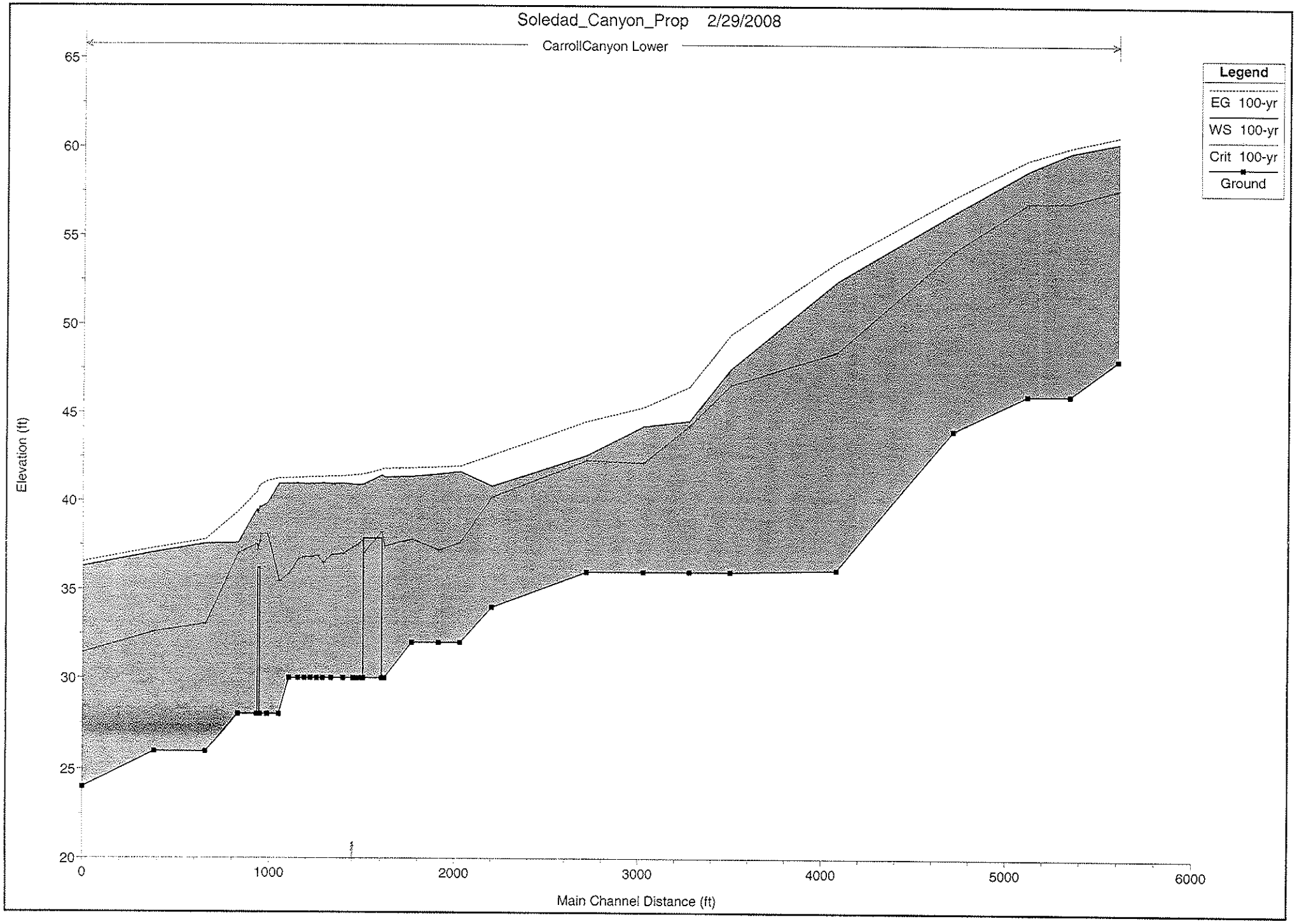
Soledad_Canyon_Prop 2/29/2008
CarrollCanyon Lower
Legend
EG 100-yr
WS 100-yr
Crit 100-yr
Ground
Elevation (ft)
65
60
55
50
45
40
35
30
25
20
0
1000
2000
3000
4000
5000
6000
Main Channel Distance (ft)

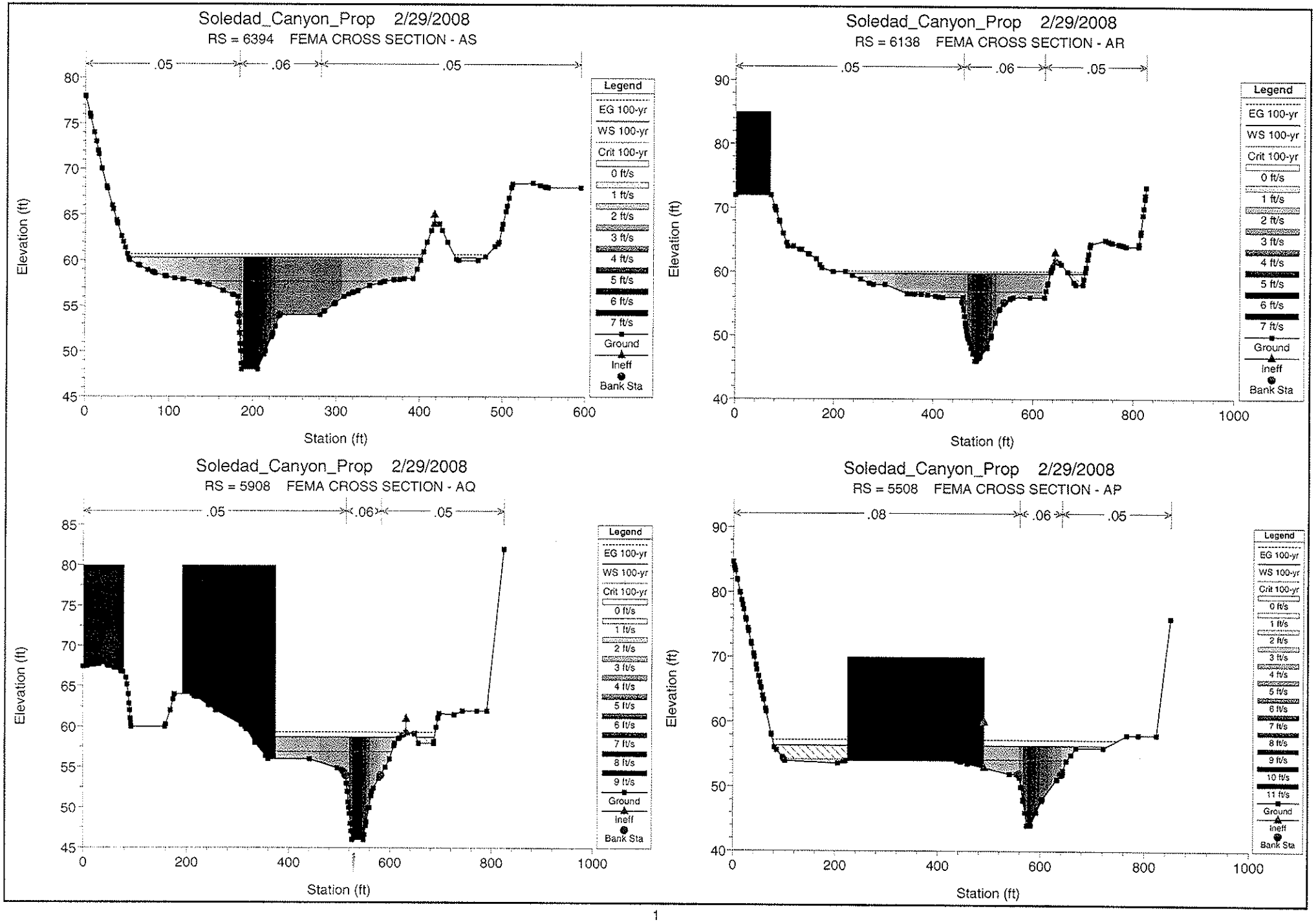
Soledad_Canyon_Prop 2/29/2008
RS = 6394 FEMA CROSS SECTION - AS
.05
.06
.05
Elevation (ft)
Station (ft)
Legend
EG 100-yr
WS 100-yr
Crit 100-yr
0 ft/s
1 ft/s
2 ft/s
3 ft/s
4 ft/s
5 ft/s
6 ft/s
7 ft/s
Ground
Ineff
Bank Sta
Soledad_Canyon_Prop 2/29/2008
RS = 6138 FEMA CROSS SECTION - AR
.05
.06
.05
Elevation (ft)
Station (ft)
Legend
EG 100-yr
WS 100-yr
Crit 100-yr
0 ft/s
1 ft/s
2 ft/s
3 ft/s
4 ft/s
5 ft/s
6 ft/s
7 ft/s
Ground
Ineff
Bank Sta
Soledad_Canyon_Prop 2/29/2008
RS = 5908 FEMA CROSS SECTION - AQ
.05
.06
.05
Elevation (ft)
Station (ft)
Legend
EG 100-yr
WS 100-yr
Crit 100-yr
0 ft/s
1 ft/s
2 ft/s
3 ft/s
4 ft/s
5 ft/s
6 ft/s
7 ft/s
8 ft/s
9 ft/s
Ground
Ineff
Bank Sta
Soledad_Canyon_Prop 2/29/2008
RS = 5508 FEMA CROSS SECTION - AP
.08
.06
.05
Elevation (ft)
Station (ft)
Legend
EG 100-yr
WS 100-yr
Crit 100-yr
0 ft/s
1 ft/s
2 ft/s
3 ft/s
4 ft/s
5 ft/s
6 ft/s
7 ft/s
8 ft/s
9 ft/s
10 ft/s
11 ft/s
Ground
Ineff
Bank Sta

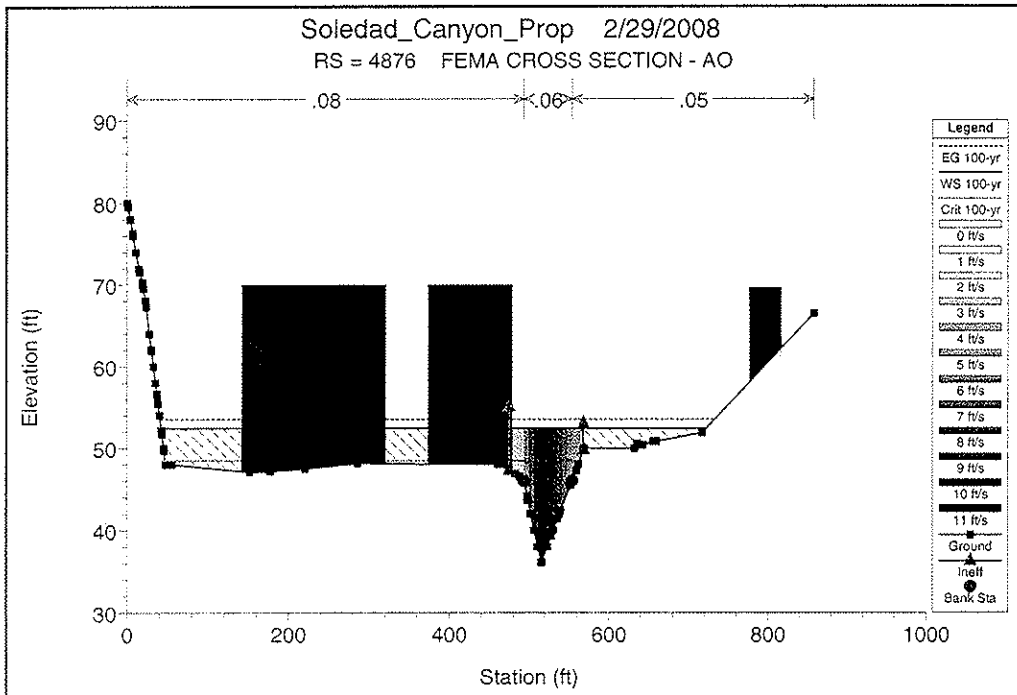
Soledad_Canyon_Prop 2/29/2008
RS = 4876 FEMA CROSS SECTION - AO
.08
.06
.05
Elevation (ft)
Station (ft)
Legend
EG 100-yr
WS 100-yr
Crit 100-yr
0 ft/s
1 ft/s
2 ft/s
3 ft/s
4 ft/s
5 ft/s
6 ft/s
7 ft/s
8 ft/s
9 ft/s
10 ft/s
11 ft/s
Ground
Ineff
Bank Sta

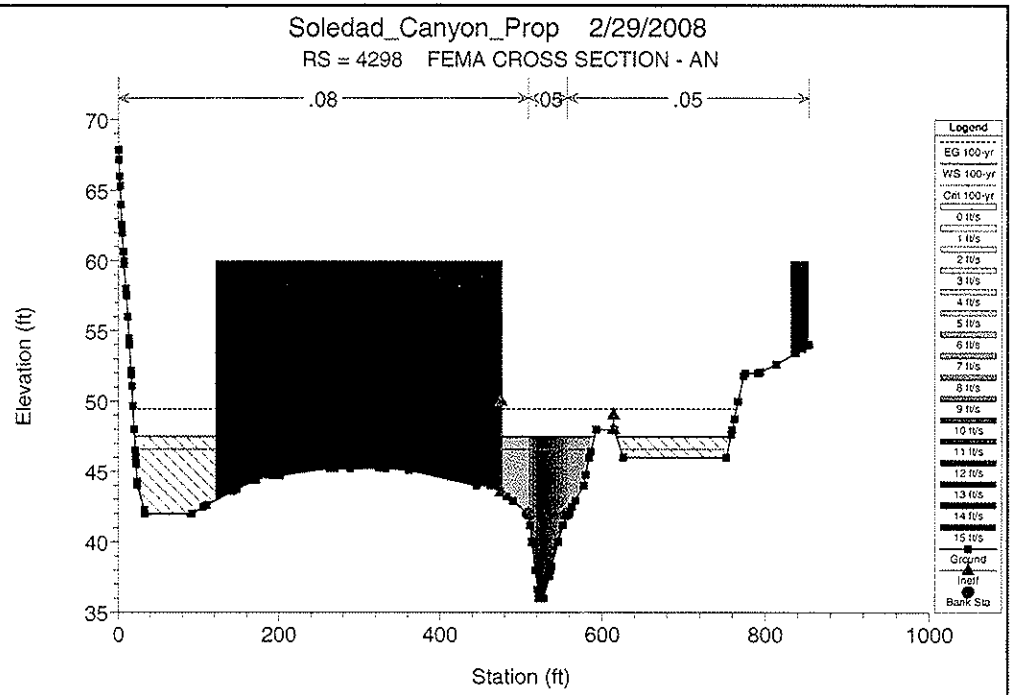
Soledad_Canyon_Prop 2/29/2008
RS = 4298 FEMA CROSS SECTION - AN
.08
.05
.05
Elevation (ft)
Station (ft)
Legend
EG 100-yr
WS 100-yr
Crit 100-yr
Ground
Ineff
Bank Sta

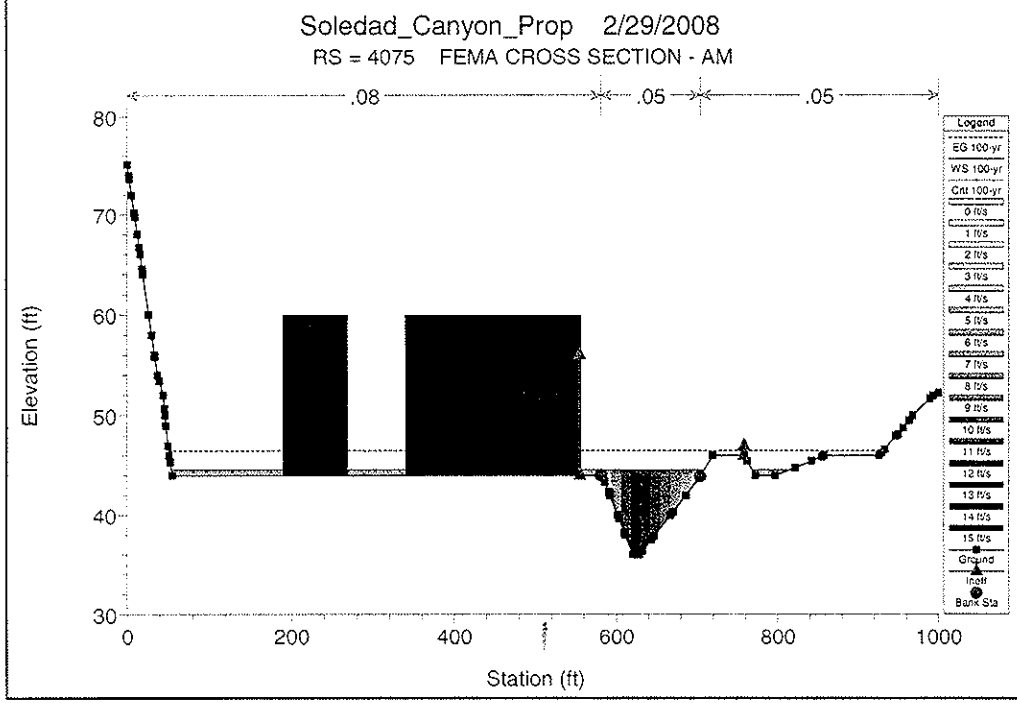
Soledad_Canyon_Prop 2/29/2008
RS = 4075 FEMA CROSS SECTION - AM
.08
.05
.05
Elevation (ft)
Station (ft)
Legend
EG 100-yr
WS 100-yr
Crit 100-yr
Ground
Ineff
Bank Sta

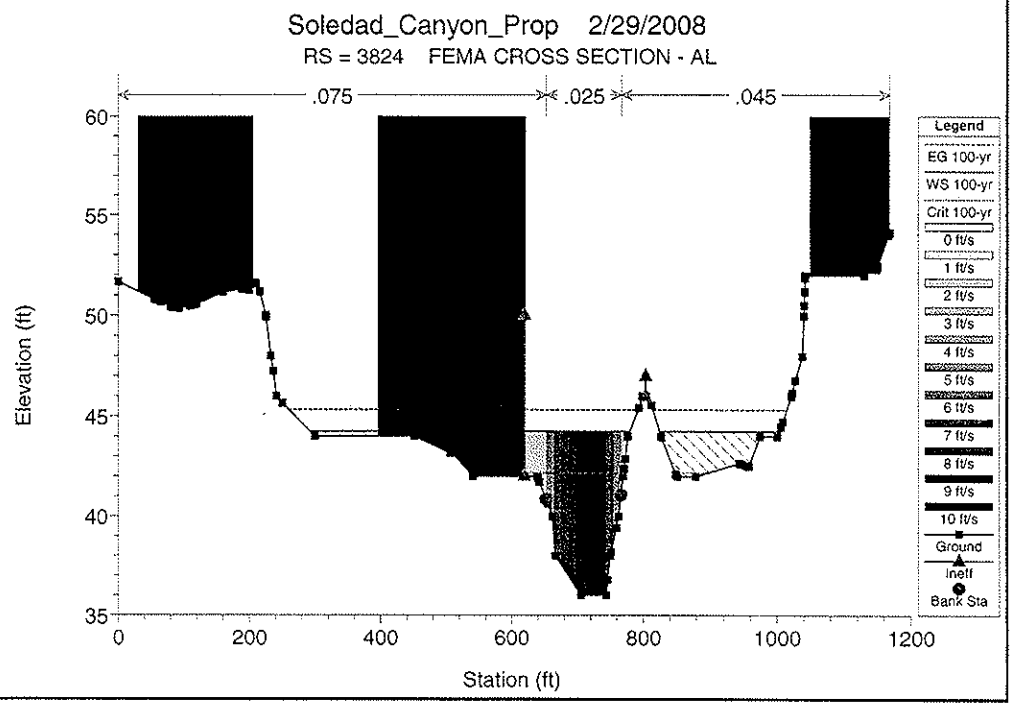
Soledad_Canyon_Prop 2/29/2008
RS = 3824 FEMA CROSS SECTION - AL
.075
.025
.045
Elevation (ft)
Station (ft)
Legend
EG 100-yr
WS 100-yr
Crit 100-yr
0 ft/s
1 ft/s
2 ft/s
3 ft/s
4 ft/s
5 ft/s
6 ft/s
7 ft/s
8 ft/s
9 ft/s
10 ft/s
Ground
Ineff
Bank Sta

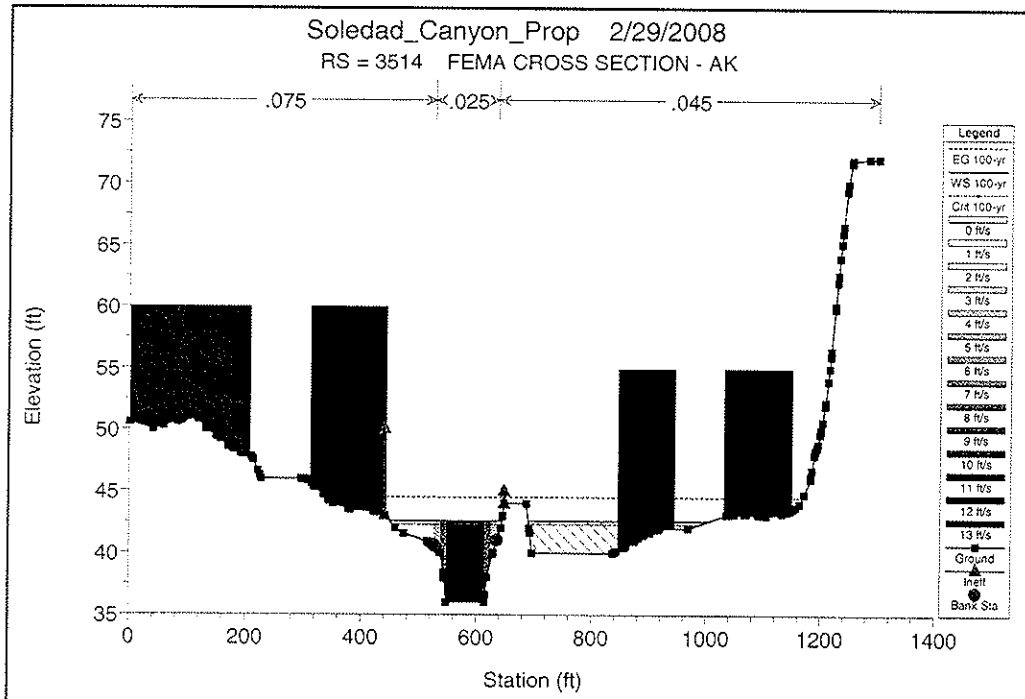
Soledad_Canyon_Prop 2/29/2008
RS = 3514 FEMA CROSS SECTION - AK
.075
.025
.045
Elevation (ft)
Station (ft)
Legend
EG 100-yr
WS 100-yr
Crit 100-yr
0 ft/s
1 ft/s
2 ft/s
3 ft/s
4 ft/s
5 ft/s
6 ft/s
7 ft/s
8 ft/s
9 ft/s
10 ft/s
11 ft/s
12 ft/s
13 ft/s
Ground
Ineff
Bank Sta

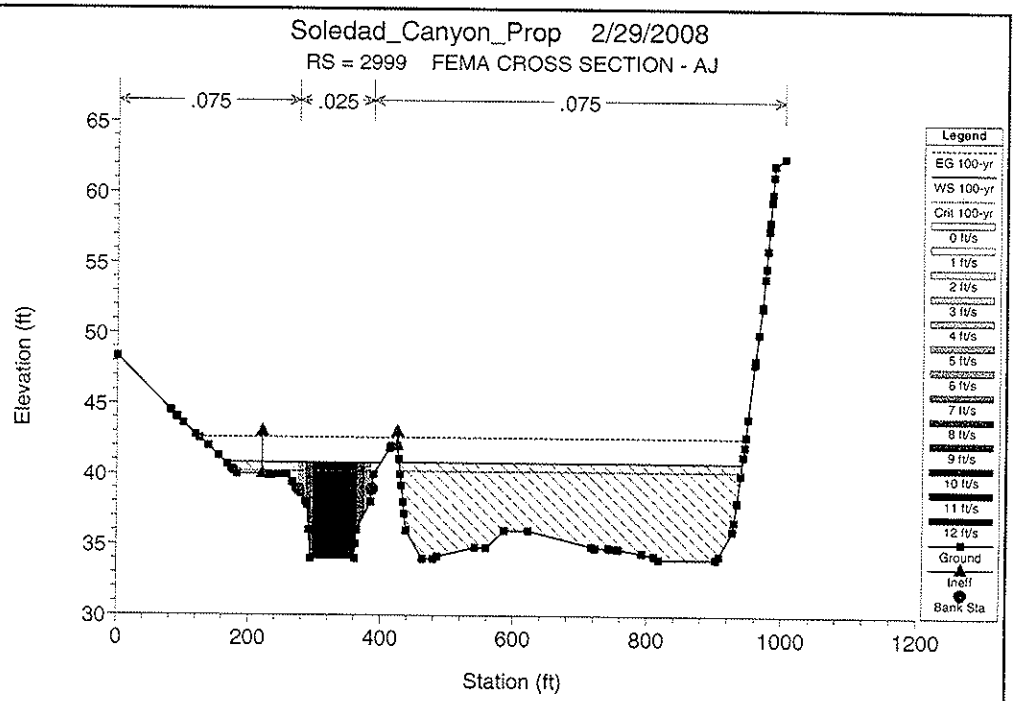
Soledad_Canyon_Prop 2/29/2008
RS = 2999 FEMA CROSS SECTION - AJ
.075
.025
.075
Elevation (ft)
Station (ft)
Legend
EG 100-yr
WS 100-yr
Crit 100-yr
0 ft/s
1 ft/s
2 ft/s
3 ft/s
4 ft/s
5 ft/s
6 ft/s
7 ft/s
8 ft/s
9 ft/s
10 ft/s
11 ft/s
12 ft/s
Ground
Ineff
Bank Sta

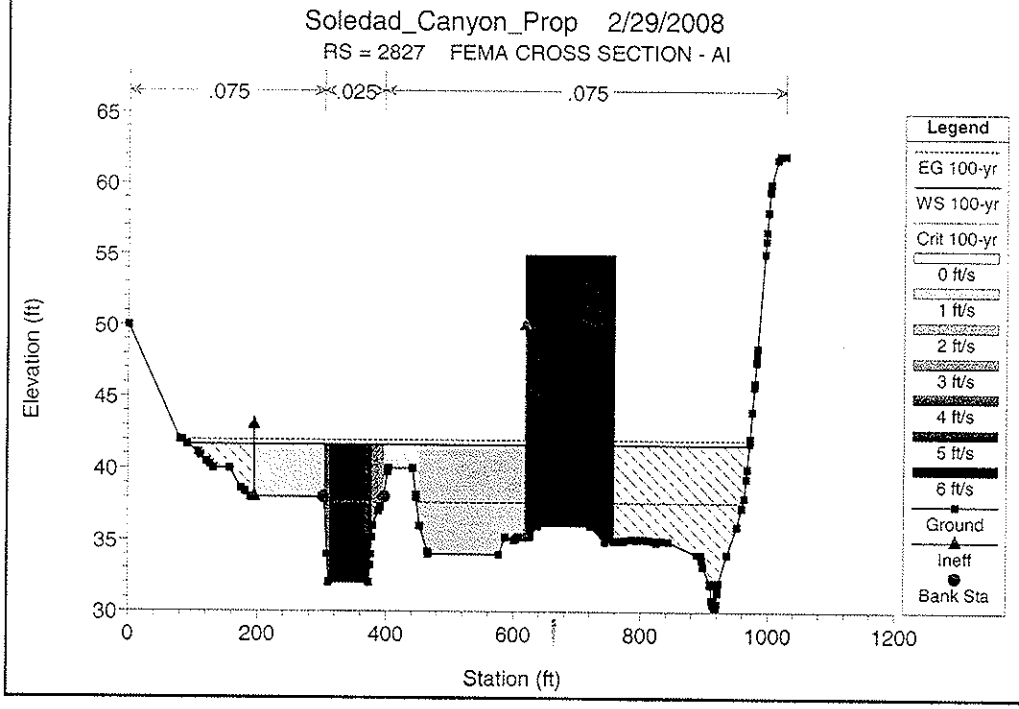
Soledad_Canyon_Prop 2/29/2008
RS = 2827 FEMA CROSS SECTION - AI
.075
.025
.075
Elevation (ft)
Station (ft)
Legend
EG 100-yr
WS 100-yr
Crit 100-yr
0 ft/s
1 ft/s
2 ft/s
3 ft/s
4 ft/s
5 ft/s
6 ft/s
Ground
Ineff
Bank Sta

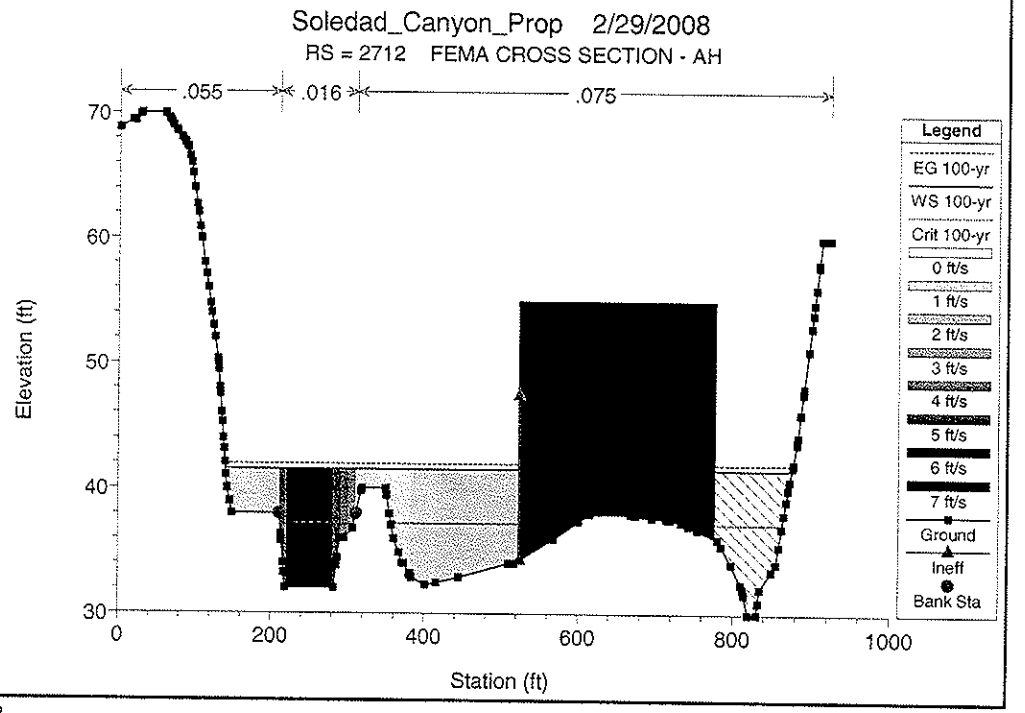
Soledad_Canyon_Prop 2/29/2008
RS = 2712 FEMA CROSS SECTION - AH
.055
.016
.075
Elevation (ft)
Station (ft)
Legend
EG 100-yr
WS 100-yr
Crit 100-yr
0 ft/s
1 ft/s
2 ft/s
3 ft/s
4 ft/s
5 ft/s
6 ft/s
7 ft/s
Ground
Ineff
Bank Sta

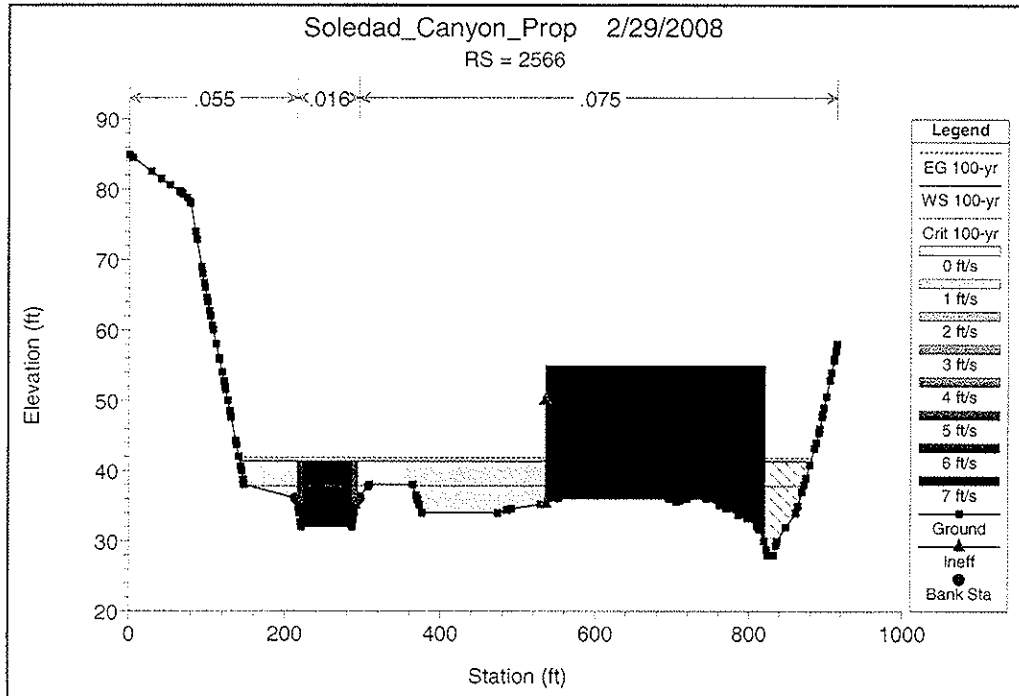
Soledad_Canyon_Prop 2/29/2008
RS = 2566
.055
.016
.075
Elevation (ft)
Station (ft)
Legend
EG 100-yr
WS 100-yr
Crit 100-yr
0 ft/s
1 ft/s
2 ft/s
3 ft/s
4 ft/s
5 ft/s
6 ft/s
7 ft/s
Ground
Ineff
Bank Sta

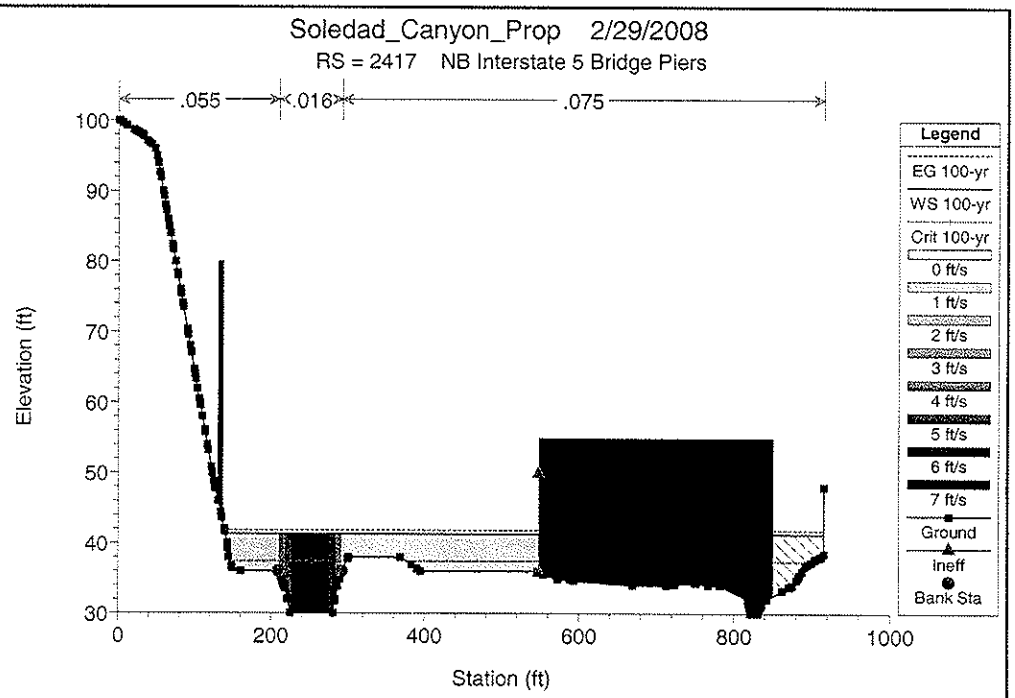
Soledad_Canyon_Prop 2/29/2008
RS = 2417 NB Interstate 5 Bridge Piers
.055
.016
.075
Elevation (ft)
Station (ft)
Legend
EG 100-yr
WS 100-yr
Crit 100-yr
0 ft/s
1 ft/s
2 ft/s
3 ft/s
4 ft/s
5 ft/s
6 ft/s
7 ft/s
Ground
Ineff
Bank Sta

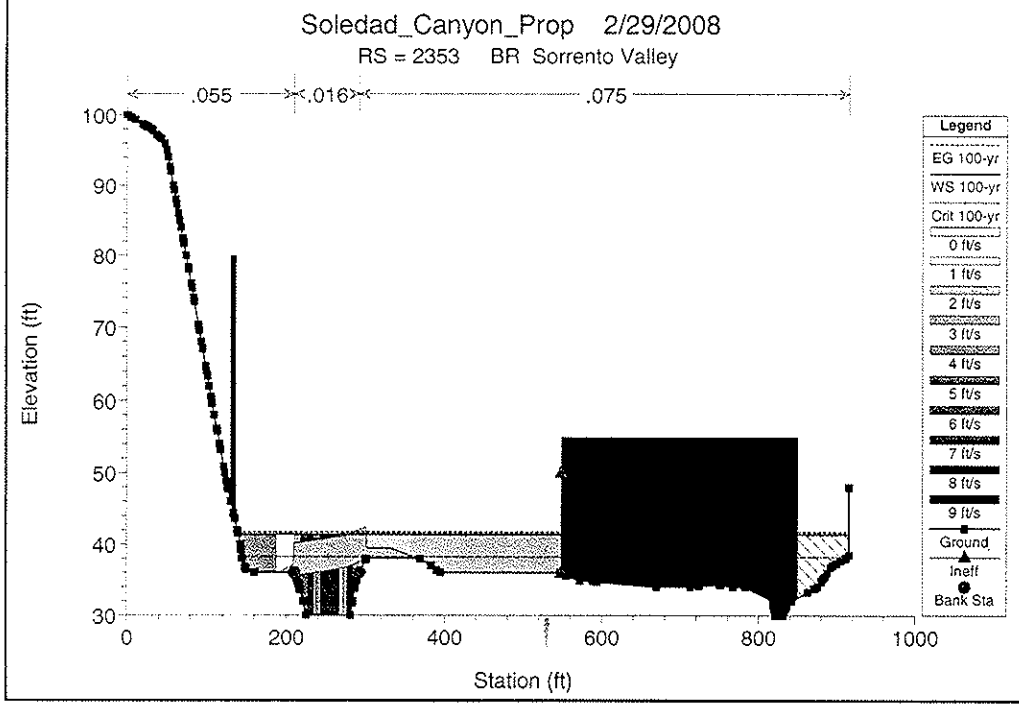
Soledad_Canyon_Prop 2/29/2008
RS = 2353 BR Sorrento Valley
.055
.016
.075
Elevation (ft)
Station (ft)
Legend
EG 100-yr
WS 100-yr
Crit 100-yr
0 ft/s
1 ft/s
2 ft/s
3 ft/s
4 ft/s
5 ft/s
6 ft/s
7 ft/s
8 ft/s
9 ft/s
Ground
Ineff
Bank Sta

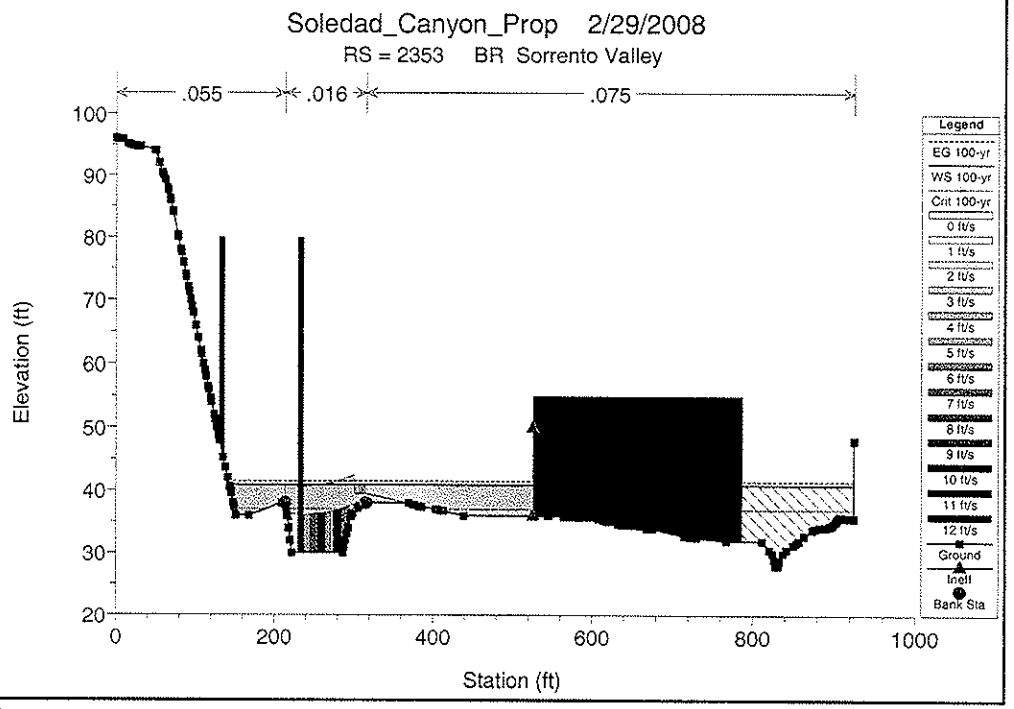
Soledad_Canyon_Prop 2/29/2008
RS = 2353 BR Sorrento Valley
.055
.016
.075
Elevation (ft)
Station (ft)
Legend
EG 100-yr
WS 100-yr
Crit 100-yr
0 ft/s
1 ft/s
2 ft/s
3 ft/s
4 ft/s
5 ft/s
6 ft/s
7 ft/s
8 ft/s
9 ft/s
10 ft/s
11 ft/s
12 ft/s
Ground
Ineff
Bank Sta

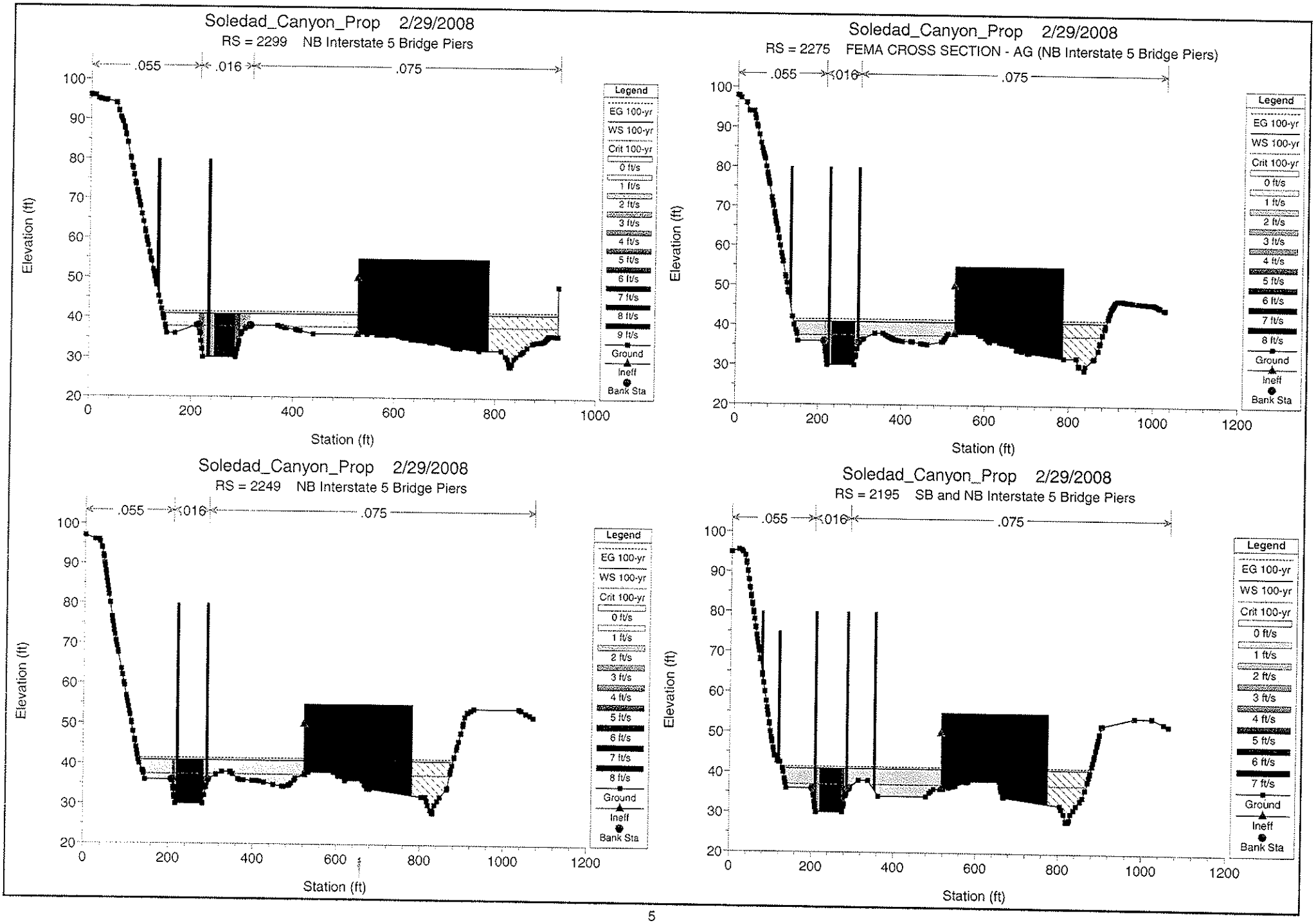
Soledad_Canyon_Prop 2/29/2008
RS = 2299 NB Interstate 5 Bridge Piers
.055
.016
.075
Elevation (ft)
Station (ft)
Legend
EG 100-yr
WS 100-yr
Crit 100-yr
0 ft/s
1 ft/s
2 ft/s
3 ft/s
4 ft/s
5 ft/s
6 ft/s
7 ft/s
8 ft/s
9 ft/s
Ground
Ineff
Bank Sta
Soledad_Canyon_Prop 2/29/2008
RS = 2275 FEMA CROSS SECTION - AG (NB Interstate 5 Bridge Piers)
.055
.016
.075
Elevation (ft)
Station (ft)
Legend
EG 100-yr
WS 100-yr
Crit 100-yr
0 ft/s
1 ft/s
2 ft/s
3 ft/s
4 ft/s
5 ft/s
6 ft/s
7 ft/s
8 ft/s
Ground
Ineff
Bank Sta
Soledad_Canyon_Prop 2/29/2008
RS = 2249 NB Interstate 5 Bridge Piers
.055
.016
.075
Elevation (ft)
Station (ft)
Legend
EG 100-yr
WS 100-yr
Crit 100-yr
0 ft/s
1 ft/s
2 ft/s
3 ft/s
4 ft/s
5 ft/s
6 ft/s
7 ft/s
8 ft/s
Ground
Ineff
Bank Sta
Soledad_Canyon_Prop 2/29/2008
RS = 2195 SB and NB Interstate 5 Bridge Piers
.055
.016
.075
Elevation (ft)
Station (ft)
Legend
EG 100-yr
WS 100-yr
Crit 100-yr
0 ft/s
1 ft/s
2 ft/s
3 ft/s
4 ft/s
5 ft/s
6 ft/s
7 ft/s
Ground
Ineff
Bank Sta

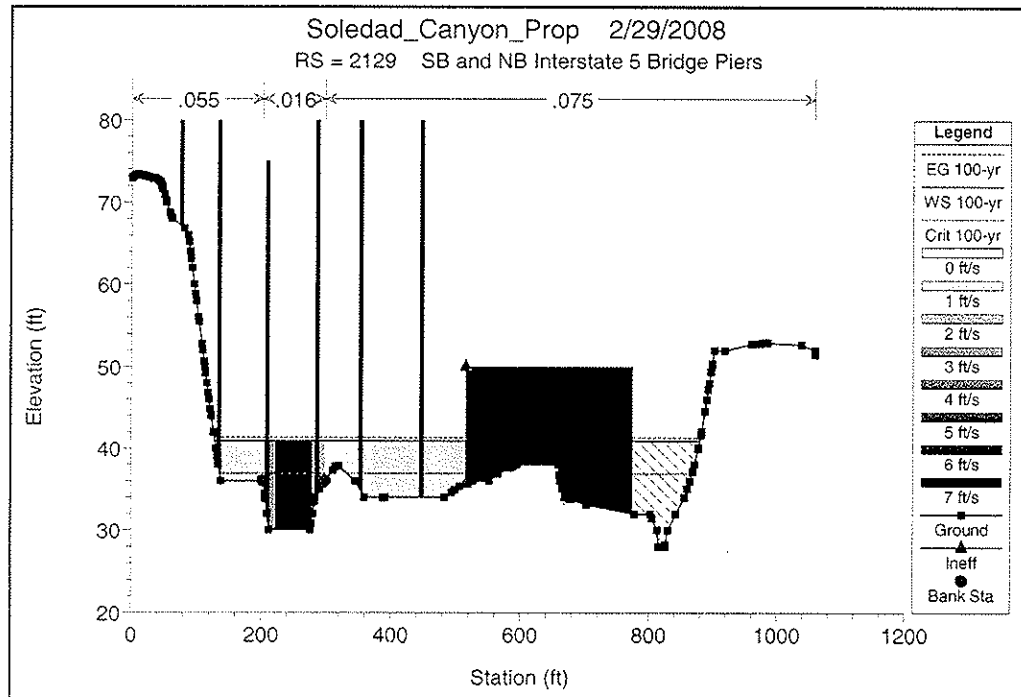
Soledad_Canyon_Prop 2/29/2008
RS = 2129 SB and NB Interstate 5 Bridge Piers
.055
.016
.075
Elevation (ft)
Station (ft)
Legend
EG 100-yr
WS 100-yr
Crit 100-yr
0 ft/s
1 ft/s
2 ft/s
3 ft/s
4 ft/s
5 ft/s
6 ft/s
7 ft/s
Ground
Ineff
Bank Sta

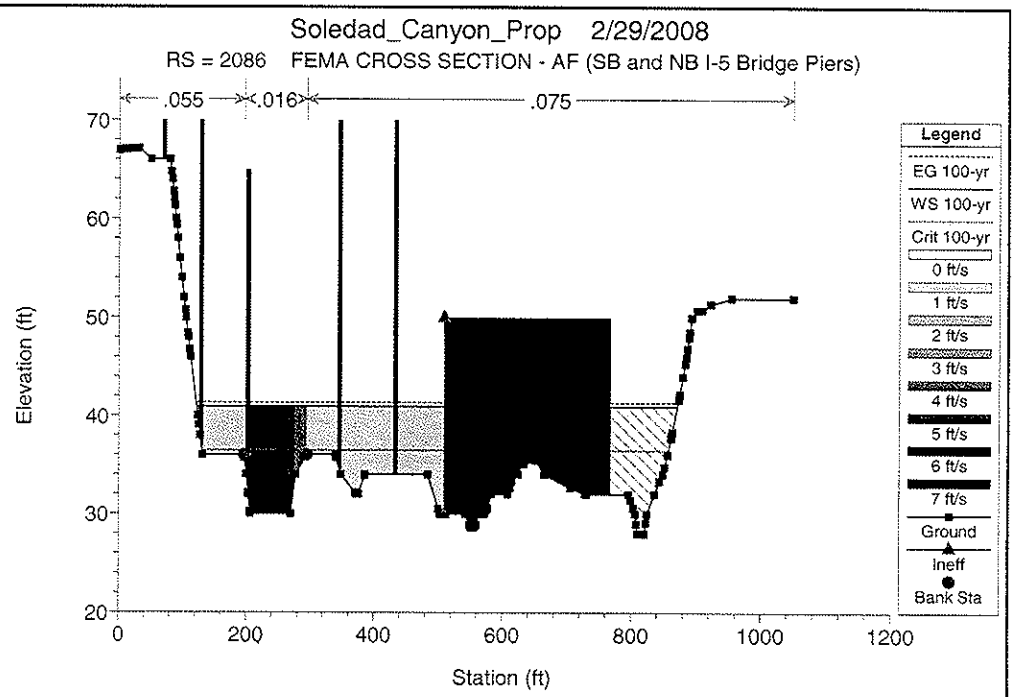
Soledad_Canyon_Prop 2/29/2008
RS = 2086 FEMA CROSS SECTION - AF (SB and NB I-5 Bridge Piers)
.055
.016
.075
Elevation (ft)
Station (ft)
Legend
EG 100-yr
WS 100-yr
Crit 100-yr
0 ft/s
1 ft/s
2 ft/s
3 ft/s
4 ft/s
5 ft/s
6 ft/s
7 ft/s
Ground
Ineff
Bank Sta

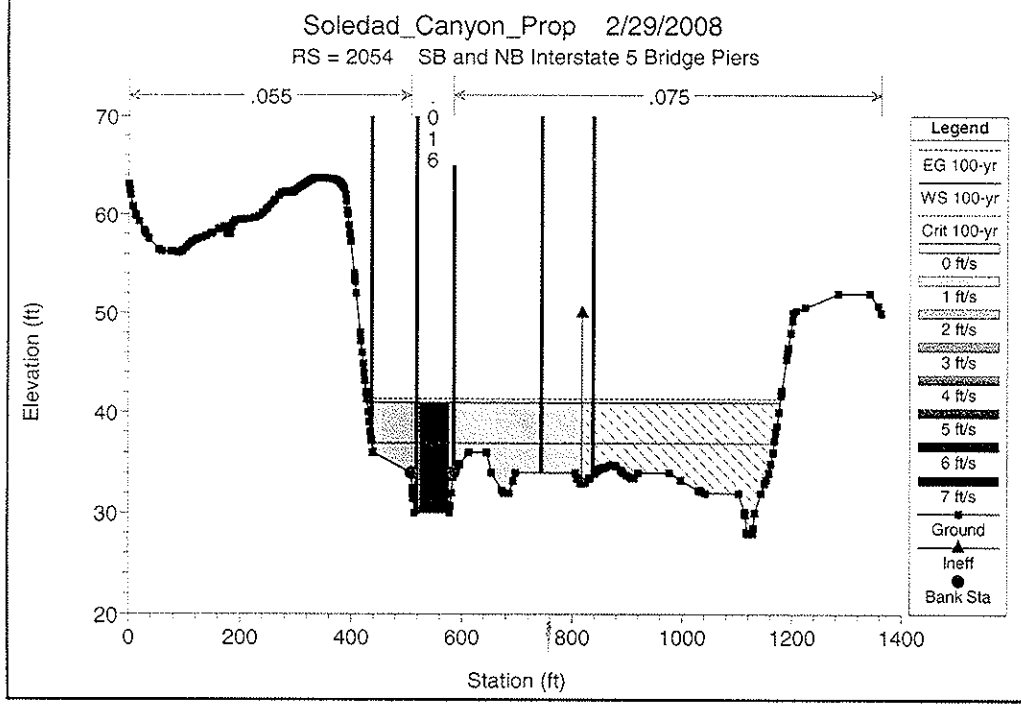
Soledad_Canyon_Prop 2/29/2008
RS = 2054 SB and NB Interstate 5 Bridge Piers
.055
.016
.075
Elevation (ft)
Station (ft)
Legend
EG 100-yr
WS 100-yr
Crit 100-yr
0 ft/s
1 ft/s
2 ft/s
3 ft/s
4 ft/s
5 ft/s
6 ft/s
7 ft/s
Ground
Ineff
Bank Sta

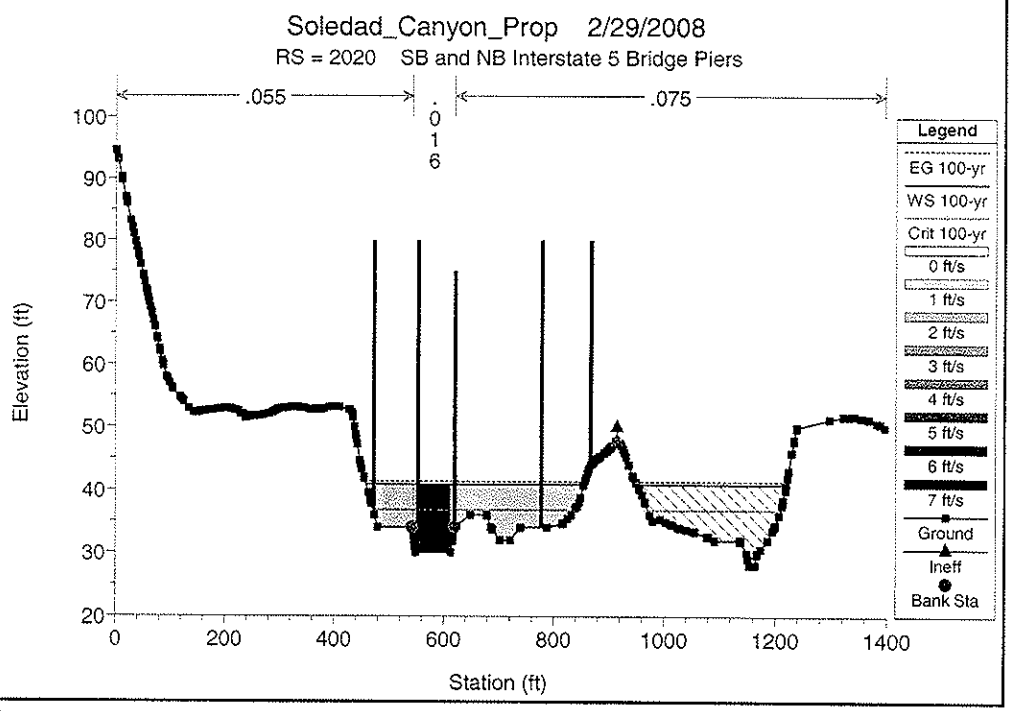
Soledad_Canyon_Prop 2/29/2008
RS = 2020 SB and NB Interstate 5 Bridge Piers
.055
.016
.075
Elevation (ft)
Station (ft)
Legend
EG 100-yr
WS 100-yr
Crit 100-yr
0 ft/s
1 ft/s
2 ft/s
3 ft/s
4 ft/s
5 ft/s
6 ft/s
7 ft/s
Ground
Ineff
Bank Sta

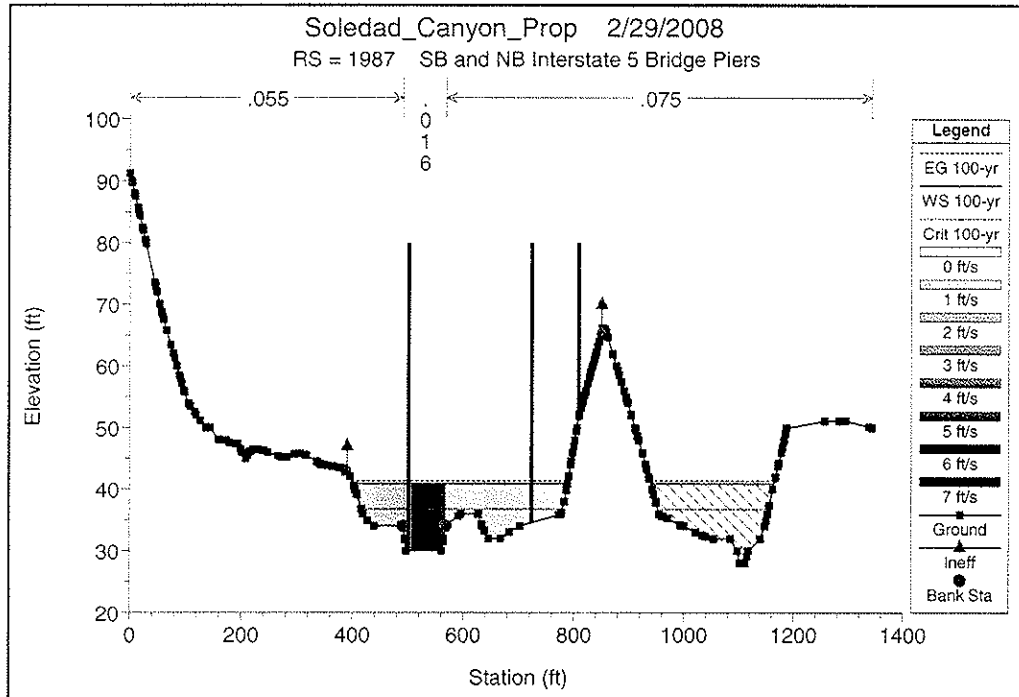
Soledad_Canyon_Prop 2/29/2008
RS = 1987 SB and NB Interstate 5 Bridge Piers
.055
.016
.075
Elevation (ft)
Station (ft)
Legend
EG 100-yr
WS 100-yr
Crit 100-yr
0 ft/s
1 ft/s
2 ft/s
3 ft/s
4 ft/s
5 ft/s
6 ft/s
7 ft/s
Ground
Ineff
Bank Sta

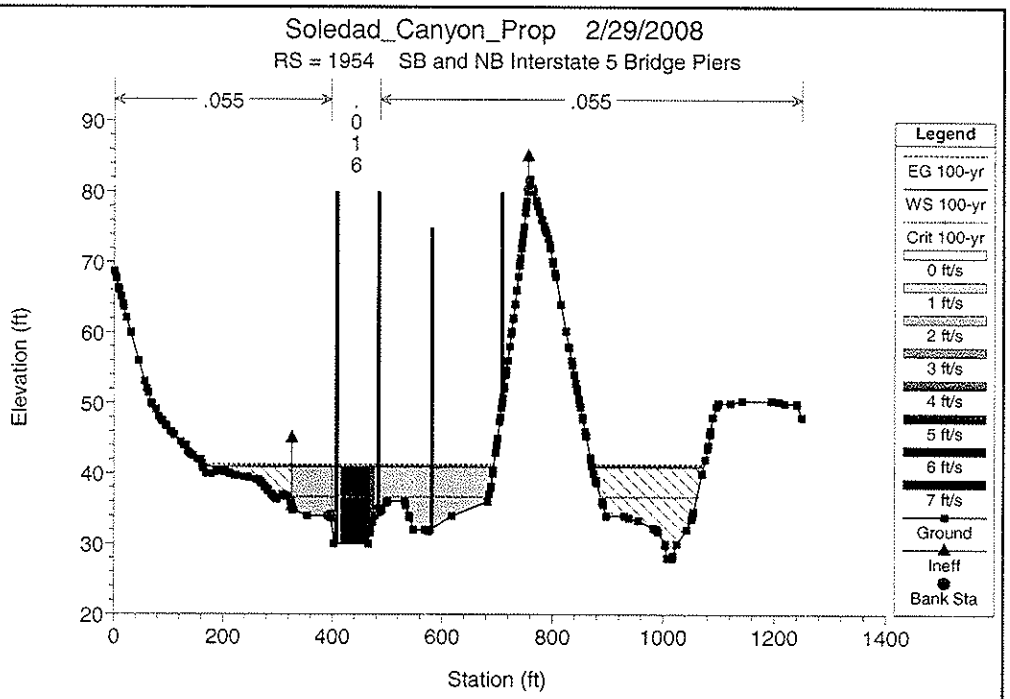
Soledad_Canyon_Prop 2/29/2008
RS = 1954 SB and NB Interstate 5 Bridge Piers
.055
.016
.055
Elevation (ft)
Station (ft)
Legend
EG 100-yr
WS 100-yr
Crit 100-yr
0 ft/s
1 ft/s
2 ft/s
3 ft/s
4 ft/s
5 ft/s
6 ft/s
7 ft/s
Ground
Ineff
Bank Sta

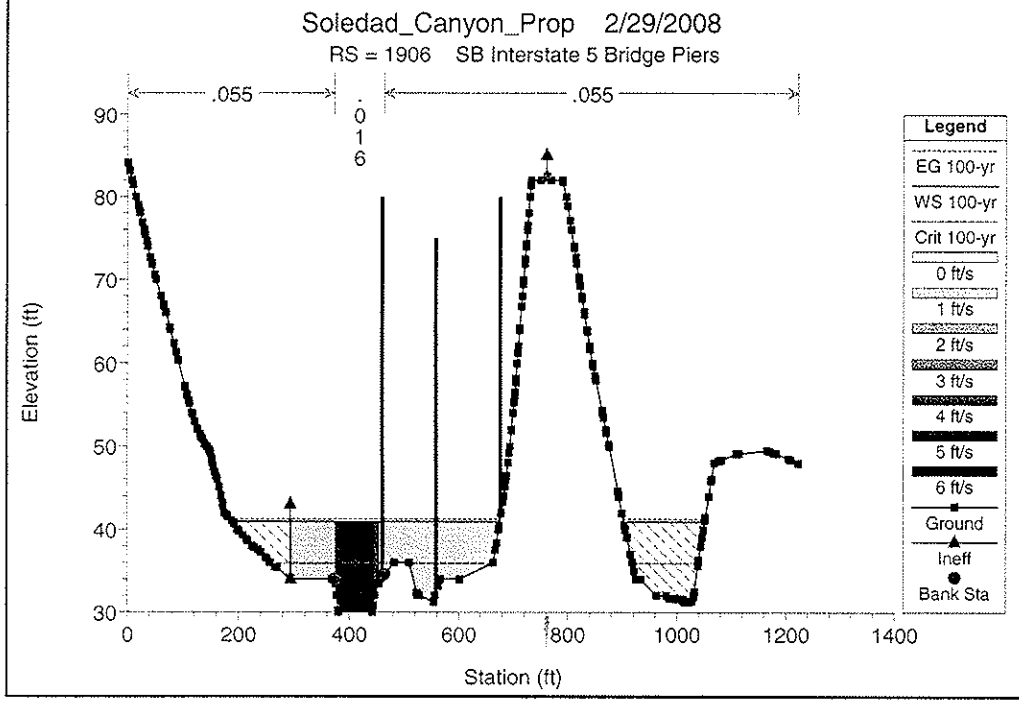
Soledad_Canyon_Prop 2/29/2008
RS = 1906 SB Interstate 5 Bridge Piers
.055
.016
.055
Elevation (ft)
Station (ft)
Legend
EG 100-yr
WS 100-yr
Crit 100-yr
0 ft/s
1 ft/s
2 ft/s
3 ft/s
4 ft/s
5 ft/s
6 ft/s
Ground
Ineff
Bank Sta

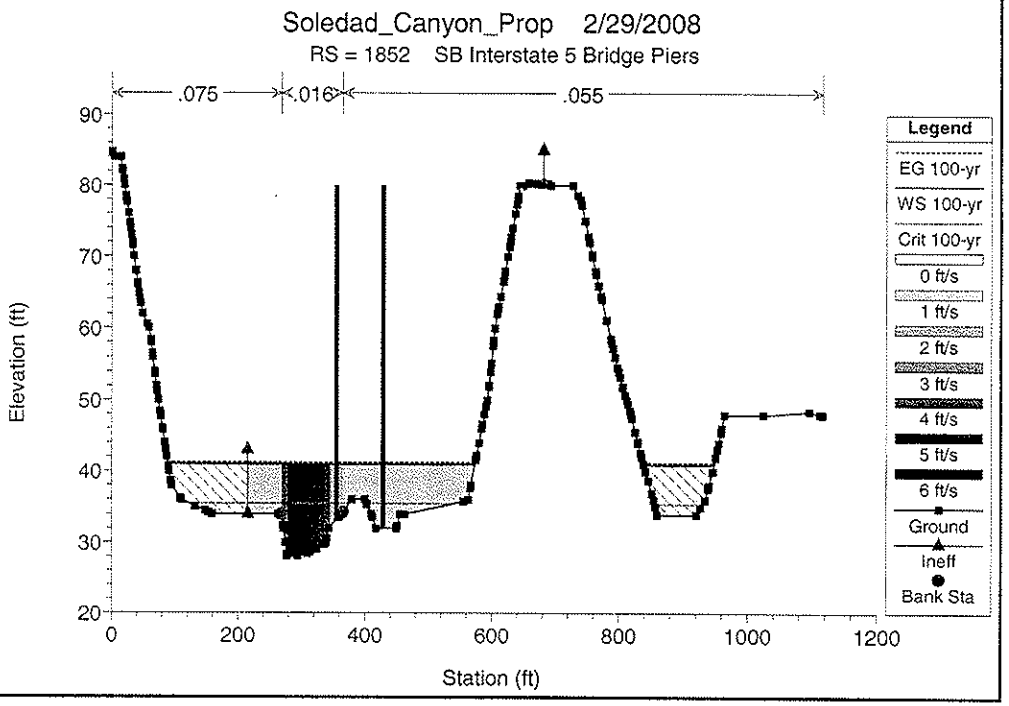
Soledad_Canyon_Prop 2/29/2008
RS = 1852 SB Interstate 5 Bridge Piers
.075
.016
.055
Elevation (ft)
Station (ft)
Legend
EG 100-yr
WS 100-yr
Crit 100-yr
0 ft/s
1 ft/s
2 ft/s
3 ft/s
4 ft/s
5 ft/s
6 ft/s
Ground
Ineff
Bank Sta

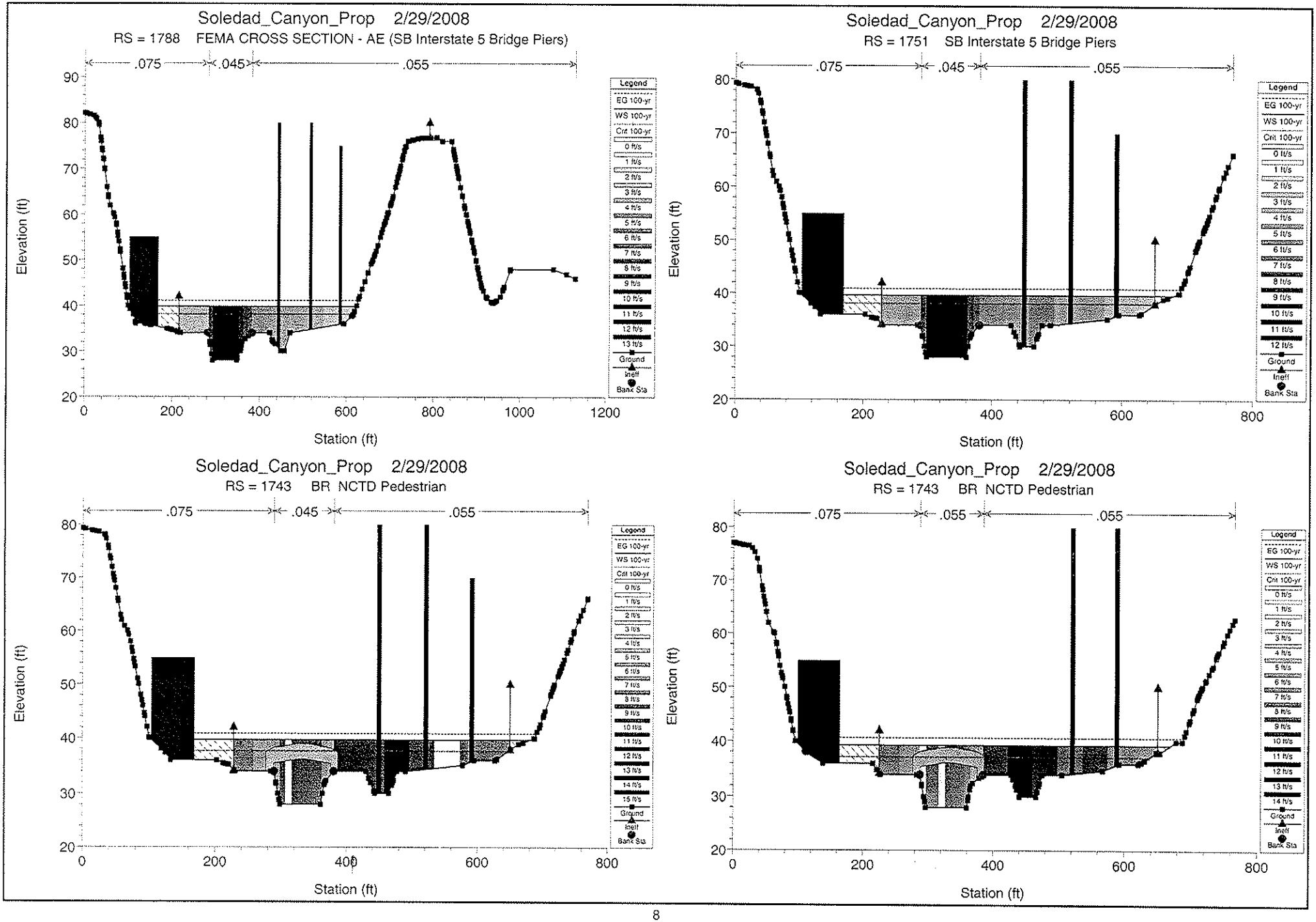
Soledad_Canyon_Prop 2/29/2008
RS = 1788 FEMA CROSS SECTION - AE (SB Interstate 5 Bridge Piers)
.075
.045
.055
Elevation (ft)
Station (ft)
Legend
EG 100-yr
WS 100-yr
Crit 100-yr
0 ft/s
1 ft/s
2 ft/s
3 ft/s
4 ft/s
5 ft/s
6 ft/s
7 ft/s
8 ft/s
9 ft/s
10 ft/s
11 ft/s
12 ft/s
13 ft/s
Ground
Ineff
Bank Sta
Soledad_Canyon_Prop 2/29/2008
RS = 1751 SB Interstate 5 Bridge Piers
.075
.045
.055
Elevation (ft)
Station (ft)
Legend
EG 100-yr
WS 100-yr
Crit 100-yr
0 ft/s
1 ft/s
2 ft/s
3 ft/s
4 ft/s
5 ft/s
6 ft/s
7 ft/s
8 ft/s
9 ft/s
10 ft/s
11 ft/s
12 ft/s
Ground
Ineff
Bank Sta
Soledad_Canyon_Prop 2/29/2008
RS = 1743 BR NCTD Pedestrian
.075
.045
.055
Elevation (ft)
Station (ft)
Legend
EG 100-yr
WS 100-yr
Crit 100-yr
0 ft/s
1 ft/s
2 ft/s
3 ft/s
4 ft/s
5 ft/s
6 ft/s
7 ft/s
8 ft/s
9 ft/s
10 ft/s
11 ft/s
12 ft/s
13 ft/s
14 ft/s
15 ft/s
Ground
Ineff
Bank Sta
Soledad_Canyon_Prop 2/29/2008
RS = 1743 BR NCTD Pedestrian
.075
.055
.055
Elevation (ft)
Station (ft)
Legend
EG 100-yr
WS 100-yr
Crit 100-yr
0 ft/s
1 ft/s
2 ft/s
3 ft/s
4 ft/s
5 ft/s
6 ft/s
7 ft/s
8 ft/s
9 ft/s
10 ft/s
11 ft/s
12 ft/s
13 ft/s
14 ft/s
Ground
Ineff
Bank Sta

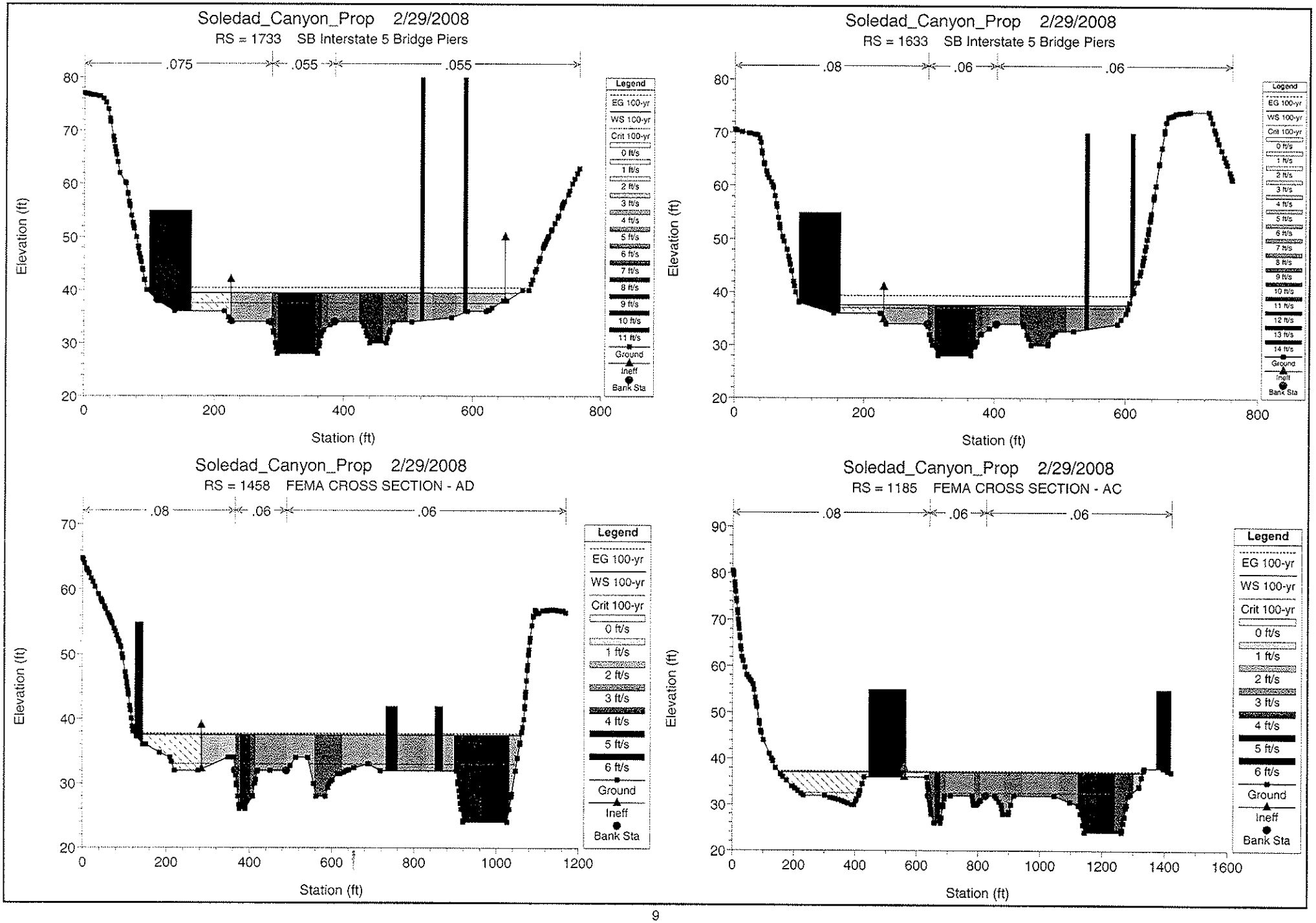
Soledad_Canyon_Prop 2/29/2008
RS = 1733 SB Interstate 5 Bridge Piers
.075
.055
.055
Elevation (ft)
Station (ft)
Legend
EG 100-yr
WS 100-yr
Crit 100-yr
0 ft/s
1 ft/s
2 ft/s
3 ft/s
4 ft/s
5 ft/s
6 ft/s
7 ft/s
8 ft/s
9 ft/s
10 ft/s
11 ft/s
Ground
Ineff
Bank Sta
Soledad_Canyon_Prop 2/29/2008
RS = 1633 SB Interstate 5 Bridge Piers
.08
.06
.06
Elevation (ft)
Station (ft)
Legend
EG 100-yr
WS 100-yr
Crit 100-yr
0 ft/s
1 ft/s
2 ft/s
3 ft/s
4 ft/s
5 ft/s
6 ft/s
7 ft/s
8 ft/s
9 ft/s
10 ft/s
11 ft/s
12 ft/s
13 ft/s
14 ft/s
Ground
Ineff
Bank Sta
Soledad_Canyon_Prop 2/29/2008
RS = 1458 FEMA CROSS SECTION - AD
.08
.06
.06
Elevation (ft)
Station (ft)
Legend
EG 100-yr
WS 100-yr
Crit 100-yr
0 ft/s
1 ft/s
2 ft/s
3 ft/s
4 ft/s
5 ft/s
6 ft/s
Ground
Ineff
Bank Sta
Soledad_Canyon_Prop 2/29/2008
RS = 1185 FEMA CROSS SECTION - AC
.08
.06
.06
Elevation (ft)
Station (ft)
Legend
EG 100-yr
WS 100-yr
Crit 100-yr
0 ft/s
1 ft/s
2 ft/s
3 ft/s
4 ft/s
5 ft/s
6 ft/s
Ground
Ineff
Bank Sta

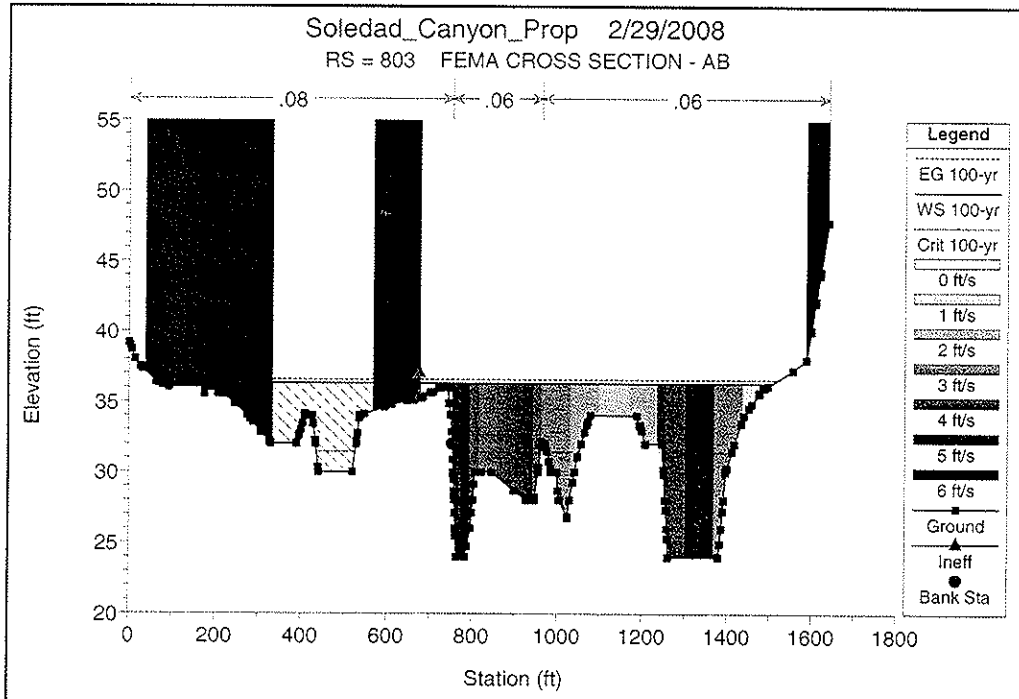
Soledad_Canyon_Prop 2/29/2008
RS = 803 FEMA CROSS SECTION - AB
.08
.06
.06
Elevation (ft)
Station (ft)
Legend
EG 100-yr
WS 100-yr
Crit 100-yr
0 ft/s
1 ft/s
2 ft/s
3 ft/s
4 ft/s
5 ft/s
6 ft/s
Ground
Ineff
Bank Sta

SC_Prop.rep

HEC-RAS Version 3.1.3 May 2005
U.S. Army Corp of Engineers
Hydrologic Engineering Center
609 Second Street
Davis, California

```
X     X  XXXXXX    XXXX        XXXX       XX      XXXX
X     X  X        X    X      X   X     X  X    X
X     X  X        X           X   X    X    X   X
XXXXXXX  XXXX     X       XXX XXXX     XXXXXX    XXXX
X     X  X        X           X  X     X    X        X
X     X  X        X    X      X   X    X    X        X
X     X  XXXXXX    XXXX       X    X   X    X   XXXXX
```

PROJECT DATA
Project Title: Soledad_Canyon_Proposed
Project File : SC_Prop.prj
Run Date and Time: 2/29/2008 1:09:32 PM

Project in English units

Project Description:
Proposed 100yr Floodplain - Soledad Canyon Model - Post I-5 Flyover Bridge

PLAN DATA

Plan Title: Soledad_Canyon_Prop
Plan File : p:\1683_T064_I5_Floodplain\420_Env_Stud\CarrollCanyon_SoledadCyn\HEC-RAS\Final\Proposed\SC_Prop.p02

Geometry Title: Soledad_Canyon_Prop
Geometry File : p:\1683_T064_I5_Floodplain\420_Env_Stud\CarrollCanyon_SoledadCyn\HEC-RAS\Final\Proposed\SC_Prop.g01

Flow Title : SC_100yr
Flow File : p:\1683_T064_I5_Floodplain\420_Env_Stud\CarrollCanyon_SoledadCyn\HEC-RAS\Final\Proposed\SC_Prop.f01

Plan Summary Information:

Number of:	Cross Sections =	33	Multiple Openings =	0
	Culverts =	0	Inline Structures =	0
	Bridges =	2	Lateral Structures =	0

Computational Information
Water surface calculation tolerance = 0.01
Critical depth calculation tolerance = 0.01
Maximum number of iterations = 20
Maximum difference tolerance = 0.3
Flow tolerance factor = 0.001

Computation Options
Critical depth computed only where necessary
Conveyance Calculation Method: At breaks in n values only
Friction Slope Method: Average Conveyance
Computational Flow Regime: Subcritical Flow

FLOW DATA

Flow Title: SC_100yr
Flow File : p:\1683_T064_I5_Floodplain\420_Env_
Stud\CarrollCanyon_SoledadCyn\HEC-RAS\Final\Proposed\SC_Prop.f01

Flow Data (cfs)

River	Reach	RS	100-yr
CarrollCanyon	Lower	6394	6700
CarrollCanyon	Lower	1788	19500

Boundary Conditions

River	Reach	Profile	Upstream	Downstream
CarrollCanyon	Lower	100-yr	Known WS = 65.4	Known WS = 36.3

GEOMETRY DATA

Geometry Title: Soledad_Canyon_Prop
Geometry File : p:\1683_T064_I5_Floodplain\420_Env_
Stud\CarrollCanyon_SoledadCyn\HEC-RAS\Final\Proposed\SC_Prop.g01

CROSS SECTION

RIVER: CarrollCanyon
REACH: Lower RS: 6394

INPUT
Description: FEMA CROSS SECTION - AS
Station Elevation Data num= 118

Sta	Elev	Sta	Elev	Sta	Elev	Sta	Elev	Sta	Elev
0	78.02	.25	77.93	5.16	76	6.03	75.66	10.24	74
12.88	72.98	15.02	72	15.84	71.62	19.45	70	25.16	68.06
25.86	67.85	31.88	66	33.17	65.6	37.07	64.37	37.9	64.11
38.29	64	42.85	62.63	45.17	62	47.32	61.37	50.03	60.67
51.75	60.22	52.64	60	62.92	59.48	64.58	59.39	74.13	58.91
79.72	58.72	81.1	58.65	83.03	58.56	94.52	58.27	95.32	58.24
95.42	58.23	96.05	58.2	106.13	58	115.87	57.89	116.05	57.88
116.36	57.88	116.63	57.87	116.83	57.86	116.96	57.86	132.7	57.62
133.29	57.6	135.96	57.52	145.64	57.32	147.17	57.27	163.77	56.67
164.43	56.64	175.08	56.24	176.84	56.18	181.55	56	182.04	55.26
182.81	54	183.35	53.16	184.06	52	184.8	50.8	185.3	50
186.14	48.63	186.54	48	205.93	48	213.41	49.65	215.19	50
222.26	51.57	223.19	51.79	224	52	226.71	52.73	231.37	54
280.24	54	284.69	54.35	285.54	54.42	285.96	54.44	296.98	55.19
298.33	55.29	298.67	55.32	308.7	56	314.42	56.27	318.31	56.45
320.74	56.52	325.62	56.67	339.56	57.22	351.9	57.51	355.72	57.64

357.79	57.7	368.18	57.86	368.58	57.86	369.01	57.87	375.71	57.9
381.52	58	391.83	58	396.64	59.03	400.71	60	404.46	60.94
408.49	62	413.63	63.26	417.31	64	423.41	64	426.8	63.32
433.46	62	444.1	60.14	446.99	60	470	60	479.09	60.43
490.59	61.53	494.24	61.8	495.52	62	499	63.49	500.14	64
503.66	65.39	505.12	66	507.31	66.85	510.3	68	511.47	68.38
536.49	68.5	544.93	68.26	545.38	68.24	550.64	68.1	551.23	68.08
552.73	68.04	554.69	68	594.39	68				

Manning's n Values num= 3

Sta	n Val	Sta	n Val	Sta	n Val
0	.05	182.81	.06	280.24	.05

Bank Sta: Left	Right	Lengths: Left	Channel	Right	Coeff Contr.	Expan.
182.81	231.37	258.39	256.68	195.55	.1	.3

Ineffective Flow num= 1

Sta L	Sta R	Elev	Permanent
417.56	594.39	65	F

CROSS SECTION OUTPUT Profile #100-yr

E.G. Elev (ft)	60.66	Element	Left OB	Channel
Right OB				
Vel Head (ft)	0.36	Wt. n-Val.	0.050	0.060
0.055				
W.S. Elev (ft)	60.31	Reach Len. (ft)	258.39	256.68
195.55				
Crit W.S. (ft)	57.69	Flow Area (sq ft)	319.57	513.82
718.10				
E.G. Slope (ft/ft)	0.002715	Area (sq ft)	319.57	513.82
726.87				
Q Total (cfs)	6700.00	Flow (cfs)	889.50	3029.70
2780.80				
Top Width (ft)	383.80	Top Width (ft)	131.39	48.56
203.86				
Vel Total (ft/s)	4.32	Avg. Vel. (ft/s)	2.78	5.90
3.87				
Max Chl Dpth (ft)	12.31	Hydr. Depth (ft)	2.43	10.58
4.21				
Conv. Total (cfs)	128589.9	Conv. (cfs)	17071.7	58147.6
53370.6				
Length Wtd. (ft)	240.16	Wetted Per. (ft)	132.60	52.60
170.92				
Min Ch El (ft)	48.00	Shear (lb/sq ft)	0.41	1.66
0.71				
Alpha	1.23	Stream Power (lb/ft s)	1.14	9.76
2.76				
Frctn Loss (ft)	0.57	Cum Volume (acre-ft)	66.97	97.20
188.15				
C & E Loss (ft)	0.02	Cum SA (acres)	20.72	12.30
36.52				

Warning: Divided flow computed for this cross-section.
Note: Multiple critical depths were found at this location. The critical depth with the lowest, valid,
water surface was used.

Profile #100-yr

Percent Conv	Pos Hydr Depth(ft)	Velocity (ft/s)	Left Sta (ft)	Right Sta (ft)	Flow (cfs)	Area (sq ft)	W.P. (ft)
1	LOB		36.56	54.84	0.60	0.98	3.46
0.01	0.29	0.61					
2	LOB		54.84	73.12	20.94	16.12	18.30
0.31	0.88	1.30					
3	LOB		73.12	91.41	61.43	30.73	18.29
0.92	1.68	2.00					
4	LOB		91.41	109.69	94.87	39.88	18.29
1.42	2.18	2.38					
5	LOB		109.69	127.97	116.94	45.21	18.28
1.75	2.47	2.59					
6	LOB		127.97	146.25	143.93	51.21	18.29
2.15	2.80	2.81					
7	LOB		146.25	164.53	192.19	60.92	18.29
2.87	3.33	3.15					
8	LOB		164.53	182.81	258.60	74.52	19.40
3.86	4.08	3.47					
9	Chan		182.81	187.67	198.02	48.54	8.19
2.96	10.00	4.08					
10	Chan		187.67	192.52	396.73	59.75	4.86
5.92	12.31	6.64					
11	Chan		192.52	197.38	396.73	59.75	4.86
5.92	12.31	6.64					
12	Chan		197.38	202.23	396.73	59.75	4.86
5.92	12.31	6.64					
13	Chan		202.23	207.09	393.58	59.61	4.88
5.87	12.27	6.60					
14	Chan		207.09	211.95	349.54	55.91	4.97
5.22	11.51	6.25					
15	Chan		211.95	216.80	298.39	50.81	4.96
4.45	10.46	5.87					
16	Chan		216.80	221.66	249.58	45.69	4.97
3.73	9.41	5.46					
17	Chan		221.66	226.51	200.30	40.16	5.01
2.99	8.27	4.99					
18	Chan		226.51	231.37	150.10	33.83	5.03
2.24	6.97	4.44					
19	ROB		231.37	268.61	996.42	234.80	37.24
14.87	6.31	4.24					
20	ROB		268.61	305.85	942.00	211.19	37.30
14.06	5.67	4.46					
21	ROB		305.85	343.08	485.24	136.72	37.27
7.24	3.67	3.55					
22	ROB		343.08	380.32	273.18	96.83	37.25
4.08	2.60	2.82					
23	ROB		380.32	417.56	83.96	38.56	21.87
1.25	1.78	2.18					
24	ROB		417.56	452.93	0.00	2.57	9.79
0.00	0.26	0.00					
25	ROB		452.93	488.29	0.00	6.20	23.53
0.00	0.26	0.00					

Warning: Divided flow computed for this cross-section.
Note: Multiple critical depths were found at this location. The critical depth with the lowest, valid,
water surface was used.

CROSS SECTION

RIVER: CarrollCanyon
REACH: Lower RS: 6138

INPUT
Description: FEMA CROSS SECTION - AR
Station Elevation Data num= 119

Sta	Elev	Sta	Elev	Sta	Elev	Sta	Elev	Sta	Elev
0	72	72.14	72	79.62	70.2	80.18	70.07	80.46	70
82.07	69.6	88.6	68	89.3	67.83	96.54	66	103.86	64.54
105.98	64	117.12	64	129.86	63.53	133.93	63.44	147.08	62.8
149.37	62.72	163.75	62	170.92	61.07	174.55	60.62	197.74	60
222.21	60	236.86	59.43	253.24	58.85	270.33	58.21	278.96	58
302.53	58	347.17	56.6	352.16	56.57	358.69	56.57	361.08	56.54
362.77	56.54	375.21	56.49	388.64	56.36	403.91	56.18	411.42	56.09
411.59	56.09	419.03	56	459.31	56	459.93	55.25	460.63	54.65
461.24	54	462.37	53.01	464.06	52	464.74	51.67	465.35	51.39
466.94	50.68	468.45	50	469.89	49.73	470.12	49.67	471	49.43
473.43	48.87	476.34	48	480.01	47.12	484.29	46	486.39	46
487.54	46.06	488.05	46.1	492.09	46.4	495.19	46.66	508.49	48
509.29	48.18	515.76	49.72	516.84	49.97	516.94	50	517.06	50.03
524.4	52	532.02	54	532.66	54.1	533.43	54.17	539.91	54.96
541.33	55.12	542.35	55.24	553.32	55.74	553.83	55.78	554.2	55.81
555.11	55.88	560.16	56	594.15	56	622.65	56	625.77	57.05
628.7	58	629.61	58.28	635.11	60	636.73	60.36	638.83	60.7
644.28	61.72	651.87	61.47	656.36	61.19	668.83	60	681.32	58.35
685.02	58	699.2	58	701.23	58.87	703.88	60	705.53	60.71
708.55	62	710.55	62.85	713.22	64	714.26	64.39	743.82	65.01
750.51	64.81	755.22	64.65	757.9	64.57	770.08	64.35	770.45	64.35
773.68	64.28	774.78	64.28	779.25	64.16	779.31	64.16	785.02	64
809.89	64	810.84	64.36	813.85	66	814.47	66.4	818.3	68.9
819.98	70	822.23	71.46	823.05	72	824.91	73.25		

Manning's n Values num= 3

Sta	n Val	Sta	n Val	Sta	n Val
0	.05	459.93	.06	622.65	.05

Bank Sta: Left	Right	Lengths: Left	Channel	Right	Coeff Contr.	Expan.
459.93	542.35	270.79	229.34	188.56	.1	.3

Ineffective Flow num= 1

Sta L	Sta R	Elev	Permanent
643.51	824.91	63	F

Blocked Obstructions num= 1

Sta L	Sta R	Elev
0	70.71	85

CROSS SECTION OUTPUT Profile #100-yr

E.G. Elev (ft)	60.07	Element	Left OB	Channel	Right OB
Vel Head (ft)	0.30	Wt. n-Val.	0.050	0.060	0.060
W.S. Elev (ft)	59.77	Reach Len. (ft)	270.79	229.34	188.56
Crit W.S. (ft)	56.96	Flow Area (sq ft)	598.13	824.30	330.68
E.G. Slope (ft/ft)	0.002116	Area (sq ft)	598.13	824.30	372.96
Q Total (cfs)	6700.00	Flow (cfs)	1536.53	4256.03	907.44
Top Width (ft)	439.01	Top Width (ft)	231.80	82.42	

124.79				
Vel Total (ft/s)	3.82	Avg. Vel. (ft/s)	2.57	5.16
2.74				
Max Chl Dpth (ft)	13.77	Hydr. Depth (ft)	2.58	10.00
3.59				
Conv. Total (cfs)	145646.3	Conv. (cfs)	33401.5	92518.5
19726.2				
Length Wtd. (ft)	235.87	Wetted Per. (ft)	232.21	85.44
92.63				
Min Ch El (ft)	46.00	Shear (lb/sq ft)	0.34	1.27
0.47				
Alpha	1.33	Stream Power (lb/ft s)	0.87	6.58
1.29				
Frctn Loss (ft)	0.69	Cum Volume (acre-ft)	64.25	93.26
185.69				
C & E Loss (ft)	0.03	Cum SA (acres)	19.64	11.92
35.78				

Warning: Divided flow computed for this cross-section.
Warning: The conveyance ratio (upstream conveyance divided by downstream conveyance) is less than
0.7 or greater than 1.4. This may indicate the need for additional cross sections.
Note: Multiple critical depths were found at this location. The critical depth with the lowest, valid,
water surface was used.

Profile #100-yr

Percent Conv	Pos Hydr Depth(ft)	Velocity (ft/s)	Left Sta (ft)	Right Sta (ft)	Flow (cfs)	Area (sq ft)	W.P. (ft)
1	LOB		183.97	229.97	0.01	0.07	1.84
0.00	0.04	0.13					
2	LOB		229.97	275.96	49.28	42.08	46.02
0.74	0.91	1.17					
3	LOB		275.96	321.95	166.03	87.20	46.00
2.48	1.90	1.90					
4	LOB		321.95	367.94	351.05	136.66	46.01
5.24	2.97	2.57					
5	LOB		367.94	413.94	450.37	158.68	46.00
6.72	3.45	2.84					
6	LOB		413.94	459.93	519.79	173.46	46.35
7.76	3.77	3.00					
7	Chan		459.93	468.17	228.89	61.90	9.80
3.42	7.51	3.70					
8	Chan		468.17	476.41	450.93	87.93	8.53
6.73	10.67	5.13					
9	Chan		476.41	484.66	612.88	105.51	8.49
9.15	12.80	5.81					
10	Chan		484.66	492.90	689.94	112.05	8.26
10.30	13.60	6.16					
11	Chan		492.90	501.14	632.69	106.49	8.28
9.44	12.92	5.94					
12	Chan		501.14	509.38	565.34	99.64	8.30
8.44	12.09	5.67					
13	Chan		509.38	517.62	446.92	87.26	8.48
6.67	10.59	5.12					
14	Chan		517.62	525.87	307.62	69.92	8.53

4.59	8.48	4.40					
15	Chan		525.87	534.11	190.25	52.24	8.47
2.84	6.34	3.64					
16	Chan		534.11	542.35	130.57	41.36	8.30
1.95	5.02	3.16					
17	ROB		542.35	567.64	292.11	101.57	25.31
4.36	4.02	2.88					
18	ROB		567.64	592.93	262.95	95.34	25.29
3.92	3.77	2.76					
19	ROB		592.93	618.22	262.95	95.34	25.29
3.92	3.77	2.76					
20	ROB		618.22	643.51	89.43	38.43	16.75
1.33	2.38	2.33					
21	ROB		643.51	673.74	0.00	0.66	3.20
0.00	0.21	0.00					
22	ROB		673.74	703.98	0.00	41.62	30.04
0.00	1.41	0.00					

Warning: Divided flow computed for this cross-section.
Warning: The conveyance ratio (upstream conveyance divided by downstream conveyance) is less than
0.7 or greater than 1.4. This may indicate the need for additional cross sections.
Note: Multiple critical depths were found at this location. The critical depth with the lowest, valid,
water surface was used.

CROSS SECTION

RIVER: CarrollCanyon
REACH: Lower RS: 5908

INPUT
Description: FEMA CROSS SECTION - AQ
Station Elevation Data num= 89

Sta	Elev	Sta	Elev	Sta	Elev	Sta	Elev	Sta	Elev
0	67.4	5.47	67.46	8.19	67.48	18.42	67.6	20.61	67.63
31.02	67.7	46.63	67.55	48.98	67.45	56.44	67.49	57.77	67.41
60.61	67.25	68.25	67.2	73.27	66.79	77.13	66.72	83.02	66
85.11	65.19	87.91	64	89.4	62.84	90.44	62	91.87	61
92.73	60.4	93.29	60	158.49	60	160.02	60.29	169.23	62
174.46	63.37	176.83	64	211.89	64	215.98	63.77	219.93	63.67
243.18	62.64	257.05	62	307.31	60.26	313.56	60	317.12	59.68
333.66	58	354.32	56.36	359.13	56	440.5	56	494.97	54.9
503.68	54.72	506.18	54.49	507	54.54	508.65	54.35	509.3	54.28
510.03	54.32	511.94	54	513.52	53	515.11	52	517.12	50.73
518.28	50	519.44	49.26	521.44	48	522.93	47.07	524.63	46
547.37	46	548.92	46.62	551.8	47.72	552.54	48	553.23	48.22
558.71	50	562.47	51.49	563.67	52	566.85	52.37	577.34	53.61
580.67	54	590.28	55.01	598.79	56	607.14	57.67	608.86	58
615.72	58.56	618.69	58.66	623.11	58.96	626.46	59.06	630.82	59.32
647.25	59.16	647.95	59.22	655.47	58	685.29	58	685.88	58.23
690.35	60	693.39	61.11	694.09	61.16	695.84	61.71	725.46	61.54
742.16	62	770.5	62	790.35	62	823.15	82		

Manning's n Values num= 3

Sta	n Val	Sta	n Val	Sta	n Val
0	.05	511.94	.06	580.67	.05

Bank Sta: Left Right Lengths: Left Channel Right Coeff Contr. Expan.

```
        511.94  580.67            386.66  400.25  402.73              .1        .3
Ineffective Flow     num=        1
   Sta L   Sta R    Elev  Permanent
     631  823.15      61        F
Blocked Obstructions     num=        2
   Sta L   Sta R    Elev   Sta L   Sta R    Elev
     .89   79.67      80  192.07  374.68      80
```

CROSS SECTION OUTPUT Profile #100-yr

E.G. Elev (ft)	59.35	Element	Left OB	Channel
Right OB				
Vel Head (ft)	0.61	Wt. n-Val.	0.050	0.060
0.050				
W.S. Elev (ft)	58.74	Reach Len. (ft)	386.66	400.25
402.73				
Crit W.S. (ft)	56.92	Flow Area (sq ft)	429.84	657.63
89.37				
E.G. Slope (ft/ft)	0.004268	Area (sq ft)	429.84	657.63
113.90				
Q Total (cfs)	6700.00	Flow (cfs)	1762.34	4638.97
298.69				
Top Width (ft)	281.50	Top Width (ft)	137.26	68.73
75.51				
Vel Total (ft/s)	5.69	Avg. Vel. (ft/s)	4.10	7.05
3.34				
Max Chl Dpth (ft)	12.74	Hydr. Depth (ft)	3.13	9.57
2.28				
Conv. Total (cfs)	102555.7	Conv. (cfs)	26975.8	71007.9
4572.0				
Length Wtd. (ft)	397.54	Wetted Per. (ft)	140.07	72.24
39.57				
Min Ch El (ft)	46.00	Shear (lb/sq ft)	0.82	2.43
0.60				
Alpha	1.21	Stream Power (lb/ft s)	3.35	17.11
2.01				
Frctn Loss (ft)	2.09	Cum Volume (acre-ft)	61.06	89.36
184.63				
C & E Loss (ft)	0.03	Cum SA (acres)	18.50	11.52
35.35				

Warning: Divided flow computed for this cross-section.
Warning: The energy loss was greater than 1.0 ft (0.3 m). between the current and previous cross
section. This may indicate the need for additional cross sections.
Note: Multiple critical depths were found at this location. The critical depth with the lowest, valid,
water surface was used.

Profile #100-yr

Percent Conv	Pos Hydr Depth(ft)	Velocity (ft/s)	Left Sta (ft)	Right Sta (ft)	Flow (cfs)	Area (sq ft)	W.P. (ft)
1	LOB		358.36	409.55	340.98	95.63	37.61
5.09	2.74	3.57					
2	LOB		409.55	460.75	552.58	144.52	51.20
8.25	2.82	3.82					

3	LOB	460.75	511.94	868.78	189.69	51.26	12.97	3.71	4.58
4	Chan	511.94	518.81	235.87	47.50	8.13	3.52	6.91	4.97
5	Chan	518.81	525.69	535.83	76.95	7.93	8.00	11.20	6.96
6	Chan	525.69	532.56	731.19	87.58	6.87	10.91	12.74	8.35
7	Chan	532.56	539.43	731.18	87.58	6.87	10.91	12.74	8.35
8	Chan	539.43	546.31	731.18	87.58	6.87	10.91	12.74	8.35
9	Chan	546.31	553.18	618.04	81.01	7.28	9.22	11.79	7.63
10	Chan	553.18	560.05	425.65	64.70	7.26	6.35	9.41	6.58
11	Chan	560.05	566.92	264.48	48.42	7.18	3.95	7.05	5.46
12	Chan	566.92	573.80	204.97	40.94	6.92	3.06	5.96	5.01
13	Chan	573.80	580.67	160.58	35.37	6.92	2.40	5.15	4.54
14	ROB	580.67	605.84	292.07	82.62	25.41	4.36	3.28	3.53
15	ROB	605.84	631.00	6.63	6.74	14.15	0.10	0.48	0.98
16	ROB	631.00	655.02	0.00	1.38	4.18	0.00	0.33	0.00
17	ROB	655.02	679.04	0.00	17.81	24.02	0.00	0.74	0.00
18	ROB	679.04	703.06	0.00	5.34	8.28	0.00	0.66	0.00

Warning: Divided flow computed for this cross-section.
Warning: The energy loss was greater than 1.0 ft (0.3 m). between the current and previous cross
section. This may indicate the need for additional cross sections.
Note: Multiple critical depths were found at this location. The critical depth with the lowest, valid,
water surface was used.

CROSS SECTION

RIVER: CarrollCanyon
REACH: Lower RS: 5508

INPUT
Description: FEMA CROSS SECTION - AP
Station Elevation Data num= 81

Sta	Elev	Sta	Elev	Sta	Elev	Sta	Elev	Sta	Elev
0	84.69	1.98	84	3.06	83.62	3.82	83.36	7.68	82
7.95	81.9	13.33	80	13.7	79.87	16.84	78.76	18.96	78
20.86	77.33	24.6	76	25.32	75.75	28.94	74.46	30.06	74.05
30.22	74	34.97	72.29	35.78	72	39.91	70.51	41.36	70
44.88	68.74	46.97	68	49.87	66.96	52.59	66	54.88	65.18
58.22	64	59.93	63.39	63.88	62	64.99	61.6	74.87	58.13
75.17	58.02	75.23	58	80.93	56	85.5	55.61	96.32	54.52
98.62	54.3	98.79	54.28	100.28	54.13	101.4	54	102.19	53.98
205.09	53.59	215.45	53.87	218.45	53.96	218.7	53.96	220.37	54
436.91	54	443.44	53.89	444.2	53.88	444.42	53.87	444.67	53.87

444.89	53.86	445.17	53.86	457.39	53.57	458.16	53.55	539.37	52
553.81	52	557.86	52	558.99	51.44	561.96	50	565.87	48.04
565.95	48	566.14	47.9	569.7	46	573.39	44	581.14	44
591.65	46	601.78	47.9	602.3	48	603.68	48.15	631.33	51.11
631.87	51.16	639.97	52	642.58	52.53	649.71	54	658.52	54.95
668.01	56	720.66	56	765.64	58	787.78	58	822.69	58
849.41	76								

Manning's n Values num= 3

Sta	n Val	Sta	n Val	Sta	n Val
0	.08	557.86	.06	639.97	.05

Bank Sta: Left	Right	Lengths: Left	Channel	Right	Coeff Contr.	Expan.
557.86	639.97	622.48	632.28	635.37	.1	.3

Ineffective Flow num= 1

Sta L	Sta R	Elev	Permanent
0	490	60	F

Blocked Obstructions num= 1

Sta L	Sta R	Elev
223.44	491.16	70

CROSS SECTION OUTPUT Profile #100-yr

E.G. Elev (ft)	57.23	Element	Left OB	Channel
Right OB				
Vel Head (ft)	0.88	Wt. n-Val.	0.080	0.060
0.050				
W.S. Elev (ft)	56.35	Reach Len. (ft)	622.48	632.28
635.37				
Crit W.S. (ft)	54.21	Flow Area (sq ft)	268.23	681.82
77.64				
E.G. Slope (ft/ft)	0.006652	Area (sq ft)	607.97	681.82
77.64				
Q Total (cfs)	6700.00	Flow (cfs)	993.71	5534.43
171.86				
Top Width (ft)	380.98	Top Width (ft)	210.22	82.11
88.65				
Vel Total (ft/s)	6.52	Avg. Vel. (ft/s)	3.70	8.12
2.21				
Max Chl Dpth (ft)	12.35	Hydr. Depth (ft)	4.02	8.30
0.88				
Conv. Total (cfs)	82145.9	Conv. (cfs)	12183.5	67855.3
2107.1				
Length Wtd. (ft)	631.47	Wetted Per. (ft)	70.14	84.64
88.97				
Min Ch El (ft)	44.00	Shear (lb/sq ft)	1.59	3.35
0.36				
Alpha	1.33	Stream Power (lb/ft s)	5.88	27.16
0.80				
Frctn Loss (ft)	3.66	Cum Volume (acre-ft)	56.45	83.20
183.75				
C & E Loss (ft)	0.02	Cum SA (acres)	16.95	10.83
34.59				

Warning: Divided flow computed for this cross-section.
Warning: The energy loss was greater than 1.0 ft (0.3 m). between the current and previous cross
section. This may indicate the need for additional cross sections.
Note: Multiple critical depths were found at this location. The critical depth with the lowest, valid,

water surface was used.

Profile #100-yr

Percent Conv	Pos Hydr Depth(ft)	Velocity (ft/s)	Left Sta (ft)	Right Sta (ft)	Flow (cfs)	Area (sq ft)	W.P. (ft)
1	LOB		54.44	108.89	0.00	45.08	29.13
0.00	1.56	0.00					
2	LOB		108.89	163.33	0.00	136.25	54.44
0.00	2.50	0.00					
3	LOB		163.33	217.78	0.00	145.00	54.45
0.00	2.66	0.00					
4	LOB		217.78	272.22	0.00	13.41	8.02
0.00	2.37	0.00					
5	LOB		272.22	326.67			
6	LOB		326.67	381.11			
7	LOB		381.11	435.56			
8	LOB		435.56	490.00			
9	LOB		490.00	557.86	993.71	268.23	70.14
14.83	4.02	3.70					
10	Chan		557.86	566.07	322.18	52.33	9.16
4.81	6.37	6.16					
11	Chan		566.07	574.28	749.23	86.98	9.20
11.18	10.59	8.61					
12	Chan		574.28	582.49	1039.58	101.26	8.24
15.52	12.33	10.27					
13	Chan		582.49	590.70	891.74	92.91	8.36
13.31	11.32	9.60					
14	Chan		590.70	598.92	697.36	80.15	8.35
10.41	9.76	8.70					
15	Chan		598.92	607.13	538.11	68.42	8.30
8.03	8.33	7.86					
16	Chan		607.13	615.34	442.51	60.73	8.26
6.60	7.40	7.29					
17	Chan		615.34	623.55	358.37	53.51	8.26
5.35	6.52	6.70					
18	Chan		623.55	631.76	281.51	46.29	8.26
4.20	5.64	6.08					
19	Chan		631.76	639.97	213.83	39.25	8.25
3.19	4.78	5.45					
20	ROB		639.97	660.91	150.32	52.30	21.21
2.24	2.50	2.87					
21	ROB		660.91	681.86	9.93	10.20	20.99
0.15	0.49	0.97					
22	ROB		681.86	702.80	5.84	7.41	20.94
0.09	0.35	0.79					
23	ROB		702.80	723.75	5.57	7.20	20.95
0.08	0.34	0.77					
24	ROB		723.75	744.69	0.19	0.53	4.88
0.00	0.11	0.36					

Warning: Divided flow computed for this cross-section.
Warning: The energy loss was greater than 1.0 ft (0.3 m). between the current and previous cross

section. This may indicate the need for additional cross sections.
Note: Multiple critical depths were found at this location. The critical depth with the lowest, valid,
water surface was used.

CROSS SECTION

RIVER: CarrollCanyon
REACH: Lower RS: 4876

INPUT
Description: FEMA CROSS SECTION - AO
Station Elevation Data num= 67

Sta	Elev	Sta	Elev	Sta	Elev	Sta	Elev	Sta	Elev
0	80.02	.88	79.51	3.47	78	6.3	76.36	6.91	76
10.35	74	14.25	72	15.27	71.57	18.25	70.33	18.97	70
19.68	69.52	22.28	68	23.24	67.24	27.34	64	29.77	62.07
29.85	62	29.91	61.95	32.36	60	34.86	58	36.55	56.64
37.35	56	38.11	55.39	39.85	54	42.17	52.14	42.34	52
42.7	51.72	44.84	50	45.2	49.71	47.33	48	55.86	48
151.89	47.03	177.47	47.14	220.74	47.49	285.81	48.13	460.54	48
482.25	46.87	487.65	46.59	493.12	46	496.97	44.15	497.29	44
498.12	43.6	501.52	42	505.84	40.01	510.41	38	515.02	36.11
515.8	36.14	522.73	38	527.56	39.32	530.14	40	535.62	41.41
537.9	42	539.3	42.36	551.47	45.41	553.84	46	558.9	47.25
561.78	48	567.73	49.72	568.71	50	631.84	50	635.34	50.56
635.44	50.55	642.08	50.36	642.23	50.36	655.61	50.82	659.32	50.84
717.31	51.92	858.304	66.5						

Manning's n Values num= 3

Sta	n Val	Sta	n Val	Sta	n Val
0	.08	493.12	.06	553.84	.05

Bank Sta: Left	Right	Lengths: Left	Channel	Right	Coeff Contr.	Expan.
493.12	553.84	579.89	577.85	577.3	.1	.3

Ineffective Flow num= 2

Sta L	Sta R	Elev	Permanent
0	475	55	F
568	858.304	53	F

Blocked Obstructions num= 3

Sta L	Sta R	Elev	Sta L	Sta R	Elev	Sta L	Sta R	Elev
141.32	320.97	70	373.4	478.93	70	776.54	817.17	69.61

CROSS SECTION OUTPUT Profile #100-yr

E.G. Elev (ft)	53.55	Element	Left OB	Channel
Right OB				
Vel Head (ft)	1.09	Wt. n-Val.	0.080	0.060
0.050				
W.S. Elev (ft)	52.46	Reach Len. (ft)	579.89	577.85
577.30				
Crit W.S. (ft)	48.48	Flow Area (sq ft)	82.96	696.00
65.62				
E.G. Slope (ft/ft)	0.005099	Area (sq ft)	781.08	696.00
339.54				
Q Total (cfs)	6700.00	Flow (cfs)	287.39	6034.43
378.18				
Top Width (ft)	395.60	Top Width (ft)	166.17	60.72
168.71				
Vel Total (ft/s)	7.93	Avg. Vel. (ft/s)	3.46	8.67
5.76				

Max Chl Dpth (ft)	16.35	Hydr. Depth (ft)	5.85	11.46
4.63				
Conv. Total (cfs)	93828.2	Conv. (cfs)	4024.7	84507.3
5296.1				
Length Wtd. (ft)	577.96	Wetted Per. (ft)	19.65	64.11
14.66				
Min Ch El (ft)	36.11	Shear (lb/sq ft)	1.34	3.46
1.42				
Alpha	1.11	Stream Power (lb/ft s)	4.66	29.96
8.21				
Frctn Loss (ft)	4.01	Cum Volume (acre-ft)	46.53	73.20
180.70				
C & E Loss (ft)	0.09	Cum SA (acres)	14.26	9.79
32.71				

Warning: Divided flow computed for this cross-section.
Warning: The velocity head has changed by more than 0.5 ft (0.15 m). This may indicate the need for additional cross sections.
Warning: The conveyance ratio (upstream conveyance divided by downstream conveyance) is less than 0.7 or greater than 1.4. This may indicate the need for additional cross sections.
Warning: The energy loss was greater than 1.0 ft (0.3 m). between the current and previous cross section. This may indicate the need for additional cross sections.
Note: Multiple critical depths were found at this location. The critical depth with the lowest, valid, water surface was used.

Profile #100-yr

Conv	Pos Hydr	Left Sta (ft)	Right Sta (ft)	Flow (cfs)	Area (sq ft)	W.P. (ft)	Percent Depth(ft)	Velocity (ft/s)
1	LOB	0.00	47.50	0.00	13.15	7.30	0.00	2.30
0.00								
2	LOB	47.50	95.00	0.00	219.66	47.50	0.00	4.62
0.00								
3	LOB	95.00	142.50	0.00	235.81	51.65	0.00	5.09
0.00								
4	LOB	142.50	190.00					
5	LOB	190.00	237.50					
6	LOB	237.50	285.00					
7	LOB	285.00	332.50	0.00	50.29	15.89	0.00	4.36
0.00								
8	LOB	332.50	380.00	0.00	179.20	45.30	0.00	4.38
0.00								
9	LOB	380.00	427.50					
10	LOB	427.50	475.00					
11	LOB	475.00	493.12	287.39	82.96	19.65	5.85	3.46
4.29								
12	Chan	493.12	499.19	304.72	48.08	6.73	7.92	6.34
4.55								

13	Chan	499.19	505.26	511.64	65.48	6.70	
7.64	10.78	7.81					
14	Chan	505.26	511.34	751.96	82.16	6.63	
11.22	13.53	9.15					
15	Chan	511.34	517.41	996.58	96.10	6.43	
14.87	15.83	10.37					
16	Chan	517.41	523.48	932.47	91.53	6.29	
13.92	15.07	10.19					
17	Chan	523.48	529.55	769.01	81.55	6.29	
11.48	13.43	9.43					
18	Chan	529.55	535.62	623.87	71.84	6.27	
9.31	11.83	8.68					
19	Chan	535.62	541.70	492.96	62.36	6.27	
7.36	10.27	7.91					
20	Chan	541.70	547.77	377.03	53.07	6.26	
5.63	8.74	7.10					
21	Chan	547.77	553.84	274.18	43.84	6.26	
4.09	7.22	6.25					
22	ROB	553.84	568.00	378.18	65.62	14.66	
5.64	4.63	5.76					
23	ROB	568.00	597.03	0.00	71.53	29.06	
0.00	2.46	0.00					
24	ROB	597.03	626.06	0.00	71.46	29.03	
0.00	2.46	0.00					
25	ROB	626.06	655.09	0.00	59.88	29.09	
0.00	2.06	0.00					
26	ROB	655.09	684.12	0.00	41.40	29.04	
0.00	1.43	0.00					
27	ROB	684.12	713.15	0.00	25.82	29.04	
0.00	0.89	0.00					
28	ROB	713.15	742.18	0.00	3.83	9.42	
0.00	0.41	0.00					

Warning: Divided flow computed for this cross-section.
Warning: The velocity head has changed by more than 0.5 ft (0.15 m). This may indicate the need for
additional cross sections.
Warning: The conveyance ratio (upstream conveyance divided by downstream conveyance) is less than
0.7 or greater than 1.4. This may indicate the need for additional cross sections.
Warning: The energy loss was greater than 1.0 ft (0.3 m). between the current and previous cross
section. This may indicate the need for additional cross sections.
Note: Multiple critical depths were found at this location. The critical depth with the lowest, valid,
water surface was used.

CROSS SECTION

RIVER: CarrollCanyon
REACH: Lower RS: 4298

INPUT
Description: FEMA CROSS SECTION - AN
Station Elevation Data num= 92

Sta	Elev	Sta	Elev	Sta	Elev	Sta	Elev	Sta	Elev
0	67.88	.51	67.18	1.36	66	1.85	65.34	2.85	64
3.96	62.57	4.5	62	5.87	60.65	6.52	60	6.79	59.75
9.2	58	9.9	57.5	11.31	56	12.83	54.47	13.32	54

15.32	52.17	15.48	52	15.62	51.86	16.46	51.05	17.9	49.65
19.51	48	20.95	46.5	21.41	46	21.96	45.5	23.36	44.26
23.66	44	32.43	42.23	33.28	42	91.36	42	105.11	42.47
110.13	42.6	142.29	43.56	147.57	43.7	169.3	44.39	171.77	44.38
186.33	44.77	192.24	44.74	201.95	44.72	262.45	45.22	265.9	45.22
269.26	45.21	288.79	45.19	323.57	45.23	332.61	45.21	361.02	45.09
444.65	44	462.1	44	482.35	43.24	489.75	42.9	509.05	42
510.89	41.15	513.23	40.06	513.36	40	513.43	39.96	517.6	38
520.53	36.59	521.78	36	528.06	36	535.02	37.58	536.85	38
537.94	38.24	546.22	40	552.2	41.17	557.27	42	562.66	42.47
566.95	42.91	577.46	44	579.66	44.76	583.89	46	585.83	46.41
592.64	48	614.37	48	614.76	47.93	625.66	46	752.17	46
758.18	47.66	759.43	48	762.17	48.76	766.52	50	773.85	51.8
775.66	52	790.48	52	792.53	52.06	792.68	52.07	793.03	52.08
793.82	52.1	813.41	52.64	837.03	53.44	845.2	53.74	845.43	53.75
852.18	54	853.49	54.04						

Manning's n Values num= 3

Sta	n Val	Sta	n Val	Sta	n Val
0	.08	509.05	.05	557.27	.05

Bank Sta: Left	Right	Lengths: Left	Channel	Right	Coeff Contr.	Expan.
509.05	557.27	372.34	223.32	134.47	.1	.3

Ineffective Flow num= 2

Sta L	Sta R	Elev	Permanent
0	475	50	F
614	853.49	49	F

Blocked Obstructions num= 2

Sta L	Sta R	Elev	Sta L	Sta R	Elev
120.51	476.93	60	830.89	853.07	60

CROSS SECTION OUTPUT Profile #100-yr

E.G. Elev (ft)	49.45	Element	Left OB	Channel
Right OB				
Vel Head (ft)	1.95	Wt. n-Val.	0.080	0.050
0.050				
W.S. Elev (ft)	47.50	Reach Len. (ft)	372.34	223.32
134.47				
Crit W.S. (ft)	46.59	Flow Area (sq ft)	152.70	423.32
112.32				
E.G. Slope (ft/ft)	0.010008	Area (sq ft)	668.17	423.32
312.14				
Q Total (cfs)	6700.00	Flow (cfs)	740.65	5215.53
743.82				
Top Width (ft)	354.46	Top Width (ft)	132.64	48.22
173.60				
Vel Total (ft/s)	9.73	Avg. Vel. (ft/s)	4.85	12.32
6.62				
Max Chl Dpth (ft)	11.50	Hydr. Depth (ft)	4.75	8.78
3.38				
Conv. Total (cfs)	66972.4	Conv. (cfs)	7403.5	52133.8
7435.2				
Length Wtd. (ft)	226.86	Wetted Per. (ft)	36.21	50.18
33.79				
Min Ch El (ft)	36.00	Shear (lb/sq ft)	2.64	5.27
2.08				
Alpha	1.33	Stream Power (lb/ft s)	12.78	64.94
13.75				
Frctn Loss (ft)	2.94	Cum Volume (acre-ft)	36.88	65.78
176.39				
C & E Loss (ft)	0.00	Cum SA (acres)	12.27	9.07

30.44

Warning: Divided flow computed for this cross-section.
Warning: The energy loss was greater than 1.0 ft (0.3 m). between the current and previous cross
section. This may indicate the need for additional cross sections.
Note: Multiple critical depths were found at this location. The critical depth with the lowest, valid,
water surface was used.

Profile #100-yr

Percent Conv	Pos Hydr Depth(ft)	Velocity (ft/s)	Left Sta (ft)	Right Sta (ft)	Flow (cfs)	Area (sq ft)	W.P. (ft)
1	LOB	0.00	52.78		0.00	156.88	34.40
0.00	4.79	0.00					
2	LOB	52.78	105.56		0.00	286.69	52.79
0.00	5.43	0.00					
3	LOB	105.56	158.33		0.00	71.90	19.55
0.00	4.81	0.00					
4	LOB	158.33	211.11				
5	LOB	211.11	263.89				
6	LOB	263.89	316.67				
7	LOB	316.67	369.44				
8	LOB	369.44	422.22				
9	LOB	422.22	475.00				
10	LOB	475.00	509.05		740.65	152.70	36.21
11.05	4.75	4.85					
11	Chan	509.05	513.87		304.53	31.90	5.32
4.55	6.62	9.55					
12	Chan	513.87	518.69		496.58	42.82	5.33
7.41	8.88	11.60					
13	Chan	518.69	523.52		728.84	53.18	5.16
10.88	11.03	13.71					
14	Chan	523.52	528.34		815.90	55.43	4.83
12.18	11.50	14.72					
15	Chan	528.34	533.16		733.52	52.50	4.94
10.95	10.89	13.97					
16	Chan	533.16	537.98		614.71	47.21	4.94
9.17	9.79	13.02					
17	Chan	537.98	542.80		509.29	42.12	4.93
7.60	8.74	12.09					
18	Chan	542.80	547.63		414.22	37.20	4.92
6.18	7.71	11.14					
19	Chan	547.63	552.45		332.20	32.55	4.91
4.96	6.75	10.21					
20	Chan	552.45	557.27		265.74	28.41	4.89
3.97	5.89	9.35					
21	ROB	557.27	585.64		738.71	109.58	28.81
11.03	3.86	6.74					
22	ROB	585.64	614.00		5.11	2.75	4.98
0.08	0.57	1.86					

23	ROB	614.00	643.94	0.00	33.70	26.86	0.00	1.26	0.00
24	ROB	643.94	673.87	0.00	44.82	29.94	0.00	1.50	0.00
25	ROB	673.87	703.81	0.00	44.82	29.94	0.00	1.50	0.00
26	ROB	703.81	733.75	0.00	44.82	29.94	0.00	1.50	0.00
27	ROB	733.75	763.68	0.00	31.65	24.05	0.00	1.33	0.00

Warning: Divided flow computed for this cross-section.
Warning: The energy loss was greater than 1.0 ft (0.3 m). between the current and previous cross
section. This may indicate the need for additional cross sections.
Note: Multiple critical depths were found at this location. The critical depth with the lowest, valid,
water surface was used.

CROSS SECTION

RIVER: CarrollCanyon
REACH: Lower RS: 4075

INPUT
Description: FEMA CROSS SECTION - AM
Station Elevation Data num= 71

Sta	Elev	Sta	Elev	Sta	Elev	Sta	Elev	Sta	Elev
0	75.13	1.9	74	2.53	73.64	5.29	72	8.39	70.19
8.7	70	9.15	69.74	12.15	68	14.43	66.69	15.61	66
18.25	64.49	19.11	64	26.19	60	29.72	58	33.18	56.05
33.26	56	33.47	55.88	36.8	54	38.87	53.42	43.58	52
45.22	50.68	46.06	50	47.35	48.97	49.81	46.98	50.94	46
52.3	45.32	54.78	44	580.96	44	585.09	43.33	590.28	42.35
591.03	42.21	592.03	42	601.42	40	602.96	39.67	609.62	38.26
610.82	38	620.2	36	628.64	36	632.52	36.38	643.2	37.47
646.65	37.83	647.17	37.88	667.31	40	670.29	40.31	686.31	42
686.51	42.02	702.28	43.73	703.97	43.92	704.7	44	704.78	44.01
719.05	46	758.64	46	761.84	45.51	772.14	44	796.49	44
821.7	44.8	842.01	45.49	854.72	45.9	857.25	46	925.86	46
928.87	46.28	932.89	46.64	946.3	48	948.06	48	949.79	48.15
955.95	48.79	963.24	49.53	967.58	50	989.55	51.73	993.2	52
999.9	52.26								

Manning's n Values num= 3

Sta	n Val	Sta	n Val	Sta	n Val
0	.08	580.96	.05	703.97	.05

Bank Sta: Left	Right	Lengths: Left	Channel	Right	Coeff Contr.	Expan.
580.96	703.97	235.95	250.93	239.15	.1	.3

Ineffective Flow num= 2

Sta L	Sta R	Elev	Permanent
0	555	56	F
758	999.9	47	F

Blocked Obstructions num= 2

Sta L	Sta R	Elev	Sta L	Sta R	Elev
189.51	269.25	60	339.53	556.68	60

CROSS SECTION OUTPUT Profile #100-yr

E.G. Elev (ft)	46.50	Element	Left OB	Channel
Right OB				
Vel Head (ft)	1.94	Wt. n-Val.	0.080	0.050
0.050				
W.S. Elev (ft)	44.56	Reach Len. (ft)	235.95	250.93
239.15				
Crit W.S. (ft)	44.30	Flow Area (sq ft)	13.66	596.46
1.58				
E.G. Slope (ft/ft)	0.017506	Area (sq ft)	129.25	596.46
21.34				
Q Total (cfs)	6700.00	Flow (cfs)	22.52	6674.53
2.95				
Top Width (ft)	404.04	Top Width (ft)	230.35	123.01
50.68				
Vel Total (ft/s)	10.95	Avg. Vel. (ft/s)	1.65	11.19
1.87				
Max Chl Dpth (ft)	8.56	Hydr. Depth (ft)	0.56	4.85
0.33				
Conv. Total (cfs)	50637.9	Conv. (cfs)	170.2	50445.4
22.3				
Length Wtd. (ft)	250.76	Wetted Per. (ft)	24.84	124.24
4.81				
Min Ch El (ft)	36.00	Shear (lb/sq ft)	0.60	5.25
0.36				
Alpha	1.04	Stream Power (lb/ft s)	0.99	58.72
0.67				
Frctn Loss (ft)	0.91	Cum Volume (acre-ft)	33.47	63.17
175.87				
C & E Loss (ft)	0.26	Cum SA (acres)	10.72	8.63
30.10				

Warning: Divided flow computed for this cross-section.
Warning: The velocity head has changed by more than 0.5 ft (0.15 m). This may indicate the need for
additional cross sections.
Warning: The conveyance ratio (upstream conveyance divided by downstream conveyance) is less than
0.7 or greater than 1.4. This may indicate the need for additional cross sections.
Warning: The energy loss was greater than 1.0 ft (0.3 m). between the current and previous cross
section. This may indicate the need for additional cross sections.
Note: Multiple critical depths were found at this location. The critical depth with the lowest, valid,
water surface was used.

Profile #100-yr

Percent Conv	Pos Hydr Depth(ft)	Velocity (ft/s)	Left Sta (ft)	Right Sta (ft)	Flow (cfs)	Area (sq ft)	W.P. (ft)
1	LOB	0.00	55.50	0.00	0.70	1.92	
0.00	0.40	0.00					
2	LOB	55.50	111.00	0.00	31.21	55.50	
0.00	0.56	0.00					
3	LOB	111.00	166.50	0.00	31.21	55.50	
0.00	0.56	0.00					
4	LOB	166.50	222.00	0.00	12.94	23.57	

0.00	0.56	0.00					
5	LOB	222.00	277.50	0.00	4.64	8.81	
0.00	0.56	0.00					
6	LOB	277.50	333.00	0.00	31.21	55.50	
0.00	0.56	0.00					
7	LOB	333.00	388.50	0.00	3.67	7.09	
0.00	0.56	0.00					
8	LOB	388.50	444.00				
9	LOB	444.00	499.50				
10	LOB	499.50	555.00				
11	LOB	555.00	580.96	22.52	13.66	24.84	
0.34	0.56	1.65					
12	Chan	580.96	593.26	95.40	20.13	12.51	
1.42	1.64	4.74					
13	Chan	593.26	605.56	445.54	50.86	12.58	
6.65	4.13	8.76					
14	Chan	605.56	617.86	1008.92	83.06	12.58	
15.06	6.75	12.15					
15	Chan	617.86	630.16	1499.69	104.63	12.36	
22.38	8.51	14.33					
16	Chan	630.16	642.47	1296.25	95.88	12.36	
19.35	7.79	13.52					
17	Chan	642.47	654.77	964.40	80.30	12.37	
14.39	6.53	12.01					
18	Chan	654.77	667.07	667.63	64.40	12.37	
9.96	5.24	10.37					
19	Chan	667.07	679.37	416.22	48.50	12.37	
6.21	3.94	8.58					
20	Chan	679.37	691.67	213.69	32.51	12.37	
3.19	2.64	6.57					
21	Chan	691.67	703.97	66.79	16.18	12.37	
1.00	1.32	4.13					
22	ROB	703.97	730.99	2.95	1.58	4.81	
0.04	0.33	1.87					
23	ROB	730.99	758.00				
24	ROB	758.00	788.24	0.00	10.13	19.97	
0.00	0.51	0.00					
25	ROB	788.24	818.48	0.00	9.63	25.98	
0.00	0.37	0.00					

Warning: Divided flow computed for this cross-section.
Warning: The velocity head has changed by more than 0.5 ft (0.15 m). This may indicate the need for
additional cross sections.
Warning: The conveyance ratio (upstream conveyance divided by downstream conveyance) is less than
0.7 or greater than 1.4. This may indicate the need for additional cross sections.
Warning: The energy loss was greater than 1.0 ft (0.3 m). between the current and previous cross
section. This may indicate the need for additional cross sections.
Note: Multiple critical depths were found at this location. The critical depth with the lowest, valid,
water surface was used.

CROSS SECTION

RIVER: CarrollCanyon
REACH: Lower RS: 3824

INPUT
Description: FEMA CROSS SECTION - AL
Station Elevation Data num= 87

Sta	Elev	Sta	Elev	Sta	Elev	Sta	Elev	Sta	Elev
0	51.65	54.25	50.8	58.51	50.76	64.09	50.66	79.28	50.43
81.92	50.4	93.45	50.35	108.73	50.47	110.84	50.49	115.24	50.51
119.52	50.55	160.11	51.14	188.36	51.3	190.45	51.37	199.13	51.25
199.63	51.26	208.79	51.59	211.06	51.54	216.1	51.18	224.85	50.02
224.93	50.02	225.01	50	225.26	49.94	232.77	48	236.39	47.24
241.5	46	250.33	45.65	299.69	44	451.12	44	505.81	43.17
509.71	43.17	540.95	42	638.52	42	639.89	41.91	642.05	41.72
652.09	40.87	654.57	40.64	661.57	40	666.05	38	705.12	36
743.93	36	745.97	36.76	749.69	38	751.04	38.2	758.86	39.42
762.34	40	765.72	41.08	768.71	42	770.09	42.39	771.78	42.88
775.41	44	792.11	45.42	797.2	46	802.26	46	811.22	45.55
825.49	44	825.56	43.99	825.69	43.98	848.06	42.1	849.58	42
877.7	42	942.89	42.66	946.13	42.64	952.39	42.57	955.5	42.52
957.23	42.51	973.75	44	999.69	44	1005.16	44.49	1008.05	44.74
1020.64	46	1020.74	46	1021.93	46.17	1026.4	46.79	1036.89	48
1039.24	50	1039.85	50.52	1040.63	51.19	1041.46	51.87	1041.64	52
1130.59	52	1143.19	52.34	1144.77	52.46	1149.02	52.31	1150.5	52.46
1165.97	54	1168.06	54.13						

Manning's n Values num= 3

Sta	n Val	Sta	n Val	Sta	n Val
0	.075	652.09	.025	765.72	.045

Bank Sta: Left	Right	Lengths: Left	Channel	Right	Coeff Contr.	Expan.
652.09	765.72	231.01	310.07	383.91	.1	.3

Ineffective Flow num= 2

Sta L	Sta R	Elev	Permanent
0	618.87	50	F
802	1168.06	47	F

Blocked Obstructions num= 3

Sta L	Sta R	Elev	Sta L	Sta R	Elev	Sta L	Sta R	Elev
29.52	205.9	60	396.04	620.39	60	1048.67	1168.04	60

CROSS SECTION OUTPUT Profile #100-yr

E.G. Elev (ft)	45.32	Element	Left OB	Channel
Right OB				
Vel Head (ft)	1.07	Wt. n-Val.	0.075	0.025
0.045				
W.S. Elev (ft)	44.25	Reach Len. (ft)	231.01	310.07
383.91				
Crit W.S. (ft)	42.18	Flow Area (sq ft)	79.02	784.47
17.04				
E.G. Slope (ft/ft)	0.001530	Area (sq ft)	104.53	784.47
284.14				
Q Total (cfs)	6700.00	Flow (cfs)	107.42	6566.40
26.18				
Top Width (ft)	441.38	Top Width (ft)	135.67	113.63
192.08				
Vel Total (ft/s)	7.61	Avg. Vel. (ft/s)	1.36	8.37
1.54				
Max Chl Dpth (ft)	8.25	Hydr. Depth (ft)	2.49	6.90
1.34				
Conv. Total (cfs)	171307.7	Conv. (cfs)	2746.5	167891.9

669.3				
Length Wtd. (ft)	308.93	Wetted Per. (ft)	34.00	114.81
13.13				
Min Ch El (ft)	36.00	Shear (lb/sq ft)	0.22	0.65
0.12				
Alpha	1.19	Stream Power (lb/ft s)	0.30	5.46
0.19				
Frctn Loss (ft)	0.72	Cum Volume (acre-ft)	32.84	59.19
175.03				
C & E Loss (ft)	0.09	Cum SA (acres)	9.73	7.95
29.43				

Warning: Divided flow computed for this cross-section.
Warning: The velocity head has changed by more than 0.5 ft (0.15 m). This may indicate the need for
additional cross sections.
Warning: The conveyance ratio (upstream conveyance divided by downstream conveyance) is less than
0.7 or greater than 1.4. This may indicate the need for additional cross sections.
Note: Multiple critical depths were found at this location. The critical depth with the lowest, valid,
water surface was used.

Profile #100-yr

Percent Conv	Pos Hydr Depth(ft)	Velocity (ft/s)	Left Sta (ft)	Right Sta (ft)	Flow (cfs)	Area (sq ft)	W.P. (ft)
1	LOB		275.05	343.82	0.00	12.21	51.75
0.00	0.24	0.00					
2	LOB		343.82	412.58	0.00	13.31	52.48
0.00	0.25	0.00					
3	LOB		412.58	481.34			
4	LOB		481.34	550.11			
5	LOB		550.11	618.87			
6	LOB		618.87	652.09	107.42	79.02	34.00
1.60	2.49	1.36					
7	Chan		652.09	663.45	251.64	45.03	11.58
3.76	3.96	5.59					
8	Chan		663.45	674.82	543.10	71.53	11.62
8.11	6.30	7.59					
9	Chan		674.82	686.18	656.48	79.48	11.38
9.80	6.99	8.26					
10	Chan		686.18	697.54	749.97	86.09	11.38
11.19	7.58	8.71					
11	Chan		697.54	708.91	843.04	92.33	11.37
12.58	8.13	9.13					
12	Chan		708.91	720.27	866.02	93.80	11.36
12.93	8.25	9.23					
13	Chan		720.27	731.63	866.02	93.80	11.36
12.93	8.25	9.23					
14	Chan		731.63	742.99	866.02	93.80	11.36
12.93	8.25	9.23					
15	Chan		742.99	754.36	607.99	76.90	11.76
9.07	6.77	7.91					

16	Chan	754.36	765.72	316.13	51.72	11.63
4.72	4.55	6.11				
17	ROB	765.72	802.00	26.18	17.04	13.13
0.39	1.34	1.54				
18	ROB	802.00	842.67	0.00	17.14	19.60
0.00	0.88	0.00				
19	ROB	842.67	883.35	0.00	89.71	40.70
0.00	2.21	0.00				
20	ROB	883.35	924.02	0.00	81.01	40.68
0.00	1.99	0.00				
21	ROB	924.02	964.69	0.00	66.26	40.71
0.00	1.63	0.00				
22	ROB	964.69	1005.37	0.00	12.98	37.89
0.00	0.34	0.00				

Warning: Divided flow computed for this cross-section.
Warning: The velocity head has changed by more than 0.5 ft (0.15 m). This may indicate the need for
additional cross sections.
Warning: The conveyance ratio (upstream conveyance divided by downstream conveyance) is less than
0.7 or greater than 1.4. This may indicate the need for additional cross sections.
Note: Multiple critical depths were found at this location. The critical depth with the lowest, valid,
water surface was used.

CROSS SECTION

RIVER: CarrollCanyon
REACH: Lower RS: 3514

INPUT
Description: FEMA CROSS SECTION - AK
Station Elevation Data num= 165

Sta	Elev	Sta	Elev	Sta	Elev	Sta	Elev	Sta	Elev
0	50.6	39.94	50	58.41	50.28	81.23	50.68	81.86	50.77
83.48	50.6	85.76	50.77	90.23	50.71	92.43	50.9	98.54	51
100.52	51.13	104.04	51.18	106.23	51.18	107.9	51.17	110.26	51.16
111.43	51.15	112.8	51.1	114.09	51.05	117.99	50.82	130.6	50
148.51	49.45	151.22	49.35	156.44	49.21	168.95	48.58	178.11	48.4
190.08	48.13	195.39	48	200.57	48	209.93	47.81	211.62	47.63
213.11	47.57	220.76	46.68	224.03	46.32	226.64	46	295.36	46
297.46	45.95	297.53	45.95	300.01	46	301.43	46	306.14	45.93
306.6	45.92	307.31	45.88	313.48	45.62	317.84	45.32	334.32	44.66
342.32	44.27	343.91	44.23	345.57	44.2	350.97	44	377.03	43.55
380.25	43.5	420.58	43.34	423.02	43.31	429.2	43.35	440.35	43.01
458.15	42	473.32	41.57	514.16	40.94	516.68	40.77	519.33	40.85
521.31	40.88	525.54	40.62	528.83	40.44	529.31	40.42	529.95	40.4
532.66	40.26	535.92	40	537.06	40	542.17	38.43	543.63	38
543.75	37.94	547.53	36	614	36	615.15	36.61	617.78	38
627.75	39.93	628.12	40	628.33	40.03	635.35	41.05	641.96	42
644.4	42.94	644.62	43.03	647.13	44	685.79	44	691.06	42
691.9	41.66	696.09	40	836.52	40	840.54	40.09	840.61	40.09
841.95	40.12	842.23	40.12	842.81	40.14	854.95	40.43	856.71	40.48
859.89	40.59	874.14	40.99	881.11	41.22	890.41	41.44	899.75	41.64
900.85	41.65	902.44	41.66	915.2	41.92	915.7	41.92	918.1	42
967.63	42	1034.76	43.11	1036.77	43.12	1048.1	43.15	1048.35	43.15
1066.63	43.2	1070.44	43.2	1089.65	43.12	1095.29	43.13	1099.68	43.08
1099.87	43.08	1104.81	43.03	1131.63	43.25	1137.57	43.41	1140	43.37

1144	43.49	1146.26	43.46	1150.71	43.58	1155.13	43.72	1162.22	43.98
1162.33	43.98	1162.65	44	1162.77	44	1170.92	44.78	1181.92	46
1182.59	46.27	1184.08	46.75	1188.54	48	1189.93	48.25	1190.66	48.38
1193.06	48.6	1194.94	48.85	1198.43	49.66	1198.98	49.77	1199.92	50
1202.55	50.67	1207.14	52	1207.56	52.11	1208	52.25	1212.63	54
1214.97	55.03	1216.84	56	1217.7	56.45	1224.29	59.88	1224.52	60
1224.79	60.14	1228.48	62	1229.71	62.61	1232.7	64	1235.24	65.16
1237.14	66	1238.39	66.55	1244.81	69.4	1246.18	70	1252.58	71.68
1253.14	71.73	1253.61	71.84	1253.75	71.88	1282.46	72	1299.48	72

Manning's n Values num= 3

Sta	n Val	Sta	n Val	Sta	n Val
0	.075	525.54	.025	635.35	.045

Bank Sta: Left	Right	Lengths: Left	Channel	Right	Coeff Contr.	Expan.
525.54	635.35	493.03	515.02	582.81	.1	.3

Ineffective Flow num= 2

Sta L	Sta R	Elev	Permanent
0	440	50	F
647	1299.48	45	F

Blocked Obstructions num= 4

Sta L	Sta R	Elev	Sta L	Sta R	Elev	Sta L	Sta R	Elev
0	208.01	60	310.82	443.13	60	845	945	55
1030	1150	55						

CROSS SECTION OUTPUT Profile #100-yr

E.G. Elev (ft)	44.52	Element	Left OB	Channel
Right OB				
Vel Head (ft)	1.92	Wt. n-Val.	0.075	0.025
0.045				
W.S. Elev (ft)	42.60	Reach Len. (ft)	493.03	515.02
582.81				
Crit W.S. (ft)	42.31	Flow Area (sq ft)	90.86	584.04
7.57				
E.G. Slope (ft/ft)	0.003921	Area (sq ft)	90.86	584.04
426.93				
Q Total (cfs)	6700.00	Flow (cfs)	124.79	6560.54
14.67				
Top Width (ft)	410.37	Top Width (ft)	77.96	109.81
222.60				
Vel Total (ft/s)	9.82	Avg. Vel. (ft/s)	1.37	11.23
1.94				
Max Chl Dpth (ft)	6.60	Hydr. Depth (ft)	1.17	5.32
0.93				
Conv. Total (cfs)	107004.8	Conv. (cfs)	1992.9	104777.5
234.3				
Length Wtd. (ft)	514.81	Wetted Per. (ft)	78.01	111.37
8.35				
Min Ch El (ft)	36.00	Shear (lb/sq ft)	0.29	1.28
0.22				
Alpha	1.28	Stream Power (lb/ft s)	0.39	14.42
0.43				
Frctn Loss (ft)	1.88	Cum Volume (acre-ft)	32.32	54.32
171.90				
C & E Loss (ft)	0.05	Cum SA (acres)	9.17	7.15
27.60				

Warning: Divided flow computed for this cross-section.
Warning: The energy loss was greater than 1.0 ft (0.3 m). between the current and

previous cross
section. This may indicate the need for additional cross sections.
Note: Multiple critical depths were found at this location. The critical depth with the lowest, valid,
water surface was used.

Profile #100-yr

Percent Conv	Pos Hydr Depth(ft)	Velocity (ft/s)	Left Sta (ft)	Right Sta (ft)	Flow (cfs)	Area (sq ft)	W.P. (ft)
1	LOB		440.00	482.77	24.73	25.96	35.22
0.37	0.74	0.95					
2	LOB		482.77	525.54	100.06	64.91	42.79
1.49	1.52	1.54					
3	Chan		525.54	536.52	151.40	25.02	11.00
2.26	2.28	6.05					
4	Chan		536.52	547.50	410.58	46.75	11.76
6.13	4.26	8.78					
5	Chan		547.50	558.48	892.07	72.47	10.98
13.31	6.60	12.31					
6	Chan		558.48	569.46	892.27	72.47	10.98
13.32	6.60	12.31					
7	Chan		569.46	580.44	892.26	72.47	10.98
13.32	6.60	12.31					
8	Chan		580.44	591.43	892.27	72.47	10.98
13.32	6.60	12.31					
9	Chan		591.43	602.41	892.27	72.47	10.98
13.32	6.60	12.31					
10	Chan		602.41	613.39	892.27	72.47	10.98
13.32	6.60	12.31					
11	Chan		613.39	624.37	483.80	51.31	11.60
7.22	4.67	9.43					
12	Chan		624.37	635.35	161.36	26.11	11.13
2.41	2.38	6.18					
13	ROB		635.35	647.00	14.67	7.57	8.35
0.22	0.93	1.94					
14	ROB		647.00	712.25	0.00	50.55	23.26
0.00	2.22	0.00					
15	ROB		712.25	777.50	0.00	169.64	65.25
0.00	2.60	0.00					
16	ROB		777.50	842.74	0.00	169.21	65.25
0.00	2.59	0.00					
17	ROB		842.74	907.99	0.00	5.49	4.66
0.00	2.43	0.00					
18	ROB		907.99	973.24	0.00	16.68	28.84
0.00	0.59	0.00					
19	ROB		973.24	1038.49	0.00	7.78	30.68
0.00	0.25	0.00					

Warning: Divided flow computed for this cross-section.
Warning: The energy loss was greater than 1.0 ft (0.3 m). between the current and previous cross
section. This may indicate the need for additional cross sections.
Note: Multiple critical depths were found at this location. The critical depth with the lowest, valid,
water surface was used.

CROSS SECTION

RIVER: CarrollCanyon
REACH: Lower RS: 2999

INPUT
Description: FEMA CROSS SECTION - AJ
Station Elevation Data num= 102

Sta	Elev	Sta	Elev	Sta	Elev	Sta	Elev	Sta	Elev
0	48.36	80	44.57	82.12	44.46	89.31	44.1	90.16	44.06
91.36	44	91.55	44	100.3	43.6	118.76	42.79	125.36	42.53
138.24	42	138.31	42	138.49	41.99	138.58	41.99	154.16	41.28
166.79	40.68	173.1	40.39	175.14	40.3	177.24	40.23	177.69	40.23
182.07	40	227.59	40	229.32	39.89	233.06	39.92	237.47	39.94
242.53	39.95	246.19	40	257.6	40	265.47	39.43	265.93	39.4
266.52	39.35	270.38	39.09	273.53	38.95	274.33	38.9	275	38.86
275.99	38.82	278.28	38.62	285.28	38	287.85	38	288.11	37.8
290.91	36	293.6	34	360.56	34	361.99	35.02	363.36	36
384.18	38	386.21	38.9	388.53	40	412.79	41.85	414.88	42
424.14	42	426.34	41.04	428.65	40	430.5	39.16	433.08	38
434.86	37.18	437.45	36	462.64	34	478.68	34	485.18	34.17
541.5	34.83	558.61	34.79	586	36	621.47	36	716.73	34.89
721.93	34.79	742.26	34.8	745.77	34.73	751.93	34.73	755.82	34.71
756.89	34.69	792.13	34.43	809.84	34.22	817.28	34	902.54	34
906.7	34.24	927.67	36	929.61	36.65	933.47	38	933.63	38.05
939.04	40	942.58	41.32	944.53	42	946.39	42.72	949.64	44
959.32	47.9	959.57	48	959.98	48.16	964.8	50	969.96	51.89
970.27	52	970.35	52.04	974.25	54	975.48	54.71	977.68	56
980.08	57.4	981.1	58	983.64	59.48	984.52	60	986.65	61.24
987.95	62	1002.24	62.51						

Manning's n Values num= 3

Sta	n Val	Sta	n Val	Sta	n Val
0	.075	274.33	.025	386.21	.075

Bank Sta: Left	Right	Lengths: Left	Channel	Right	Coeff Contr.	Expan.
274.33	386.21	180.26	171.12	173.29	.1	.3

Ineffective Flow num= 2

Sta L	Sta R	Elev	Permanent
0	220	43	F
423.96	1002.24	43	F

CROSS SECTION OUTPUT Profile #100-yr

E.G. Elev (ft)	42.59	Element	Left OB	Channel	Right OB
Vel Head (ft)	1.76	Wt. n-Val.	0.075	0.025	0.075
W.S. Elev (ft)	40.84	Reach Len. (ft)	180.26	171.12	173.29
Crit W.S. (ft)	40.21	Flow Area (sq ft)	56.35	619.31	7.79
E.G. Slope (ft/ft)	0.003398	Area (sq ft)	95.82	619.31	3021.68
Q Total (cfs)	6700.00	Flow (cfs)	66.66	6627.12	6.22
Top Width (ft)	750.45	Top Width (ft)	110.81	111.88	527.76
Vel Total (ft/s)	9.80	Avg. Vel. (ft/s)	1.18	10.70	0.80
Max Chl Dpth (ft)	6.84	Hydr. Depth (ft)	1.04	5.54	0.59

Conv. Total (cfs)	114933.7	Conv. (cfs)	1143.5	113683.6
106.7				
Length Wtd. (ft)	171.77	Wetted Per. (ft)	54.37	114.10
13.55				
Min Ch El (ft)	34.00	Shear (lb/sq ft)	0.22	1.15
0.12				
Alpha	1.18	Stream Power (lb/ft s)	0.26	12.32
0.10				
Frctn Loss (ft)	0.19	Cum Volume (acre-ft)	31.26	47.20
148.83				
C & E Loss (ft)	0.43	Cum SA (acres)	8.10	5.84
22.58				

Warning: Divided flow computed for this cross-section.
Warning: The velocity head has changed by more than 0.5 ft (0.15 m). This may indicate the need for
additional cross sections.
Warning: The conveyance ratio (upstream conveyance divided by downstream conveyance) is less than
0.7 or greater than 1.4. This may indicate the need for additional cross sections.
Note: Multiple critical depths were found at this location. The critical depth with the lowest, valid,
water surface was used.

Profile #100-yr

Percent Conv	Pos Hydr Depth(ft)	Velocity (ft/s)	Left Sta (ft)	Right Sta (ft)	Flow (cfs)	Area (sq ft)	W.P. (ft)
1	LOB		137.50	165.00	0.00	0.05	1.48
0.00	0.04	0.00					
2	LOB		165.00	192.50	0.00	16.44	27.52
0.00	0.60	0.00					
3	LOB		192.50	220.00	0.00	22.97	27.50
0.00	0.84	0.00					
4	LOB		220.00	247.17	24.88	23.82	27.17
0.37	0.88	1.04					
5	LOB		247.17	274.33	41.78	32.53	27.20
0.62	1.20	1.28					
6	Chan		274.33	285.52	154.31	26.48	11.23
2.30	2.37	5.83					
7	Chan		285.52	296.71	491.76	55.32	12.45
7.34	4.94	8.89					
8	Chan		296.71	307.89	905.69	76.47	11.19
13.52	6.84	11.84					
9	Chan		307.89	319.08	905.69	76.47	11.19
13.52	6.84	11.84					
10	Chan		319.08	330.27	905.69	76.47	11.19
13.52	6.84	11.84					
11	Chan		330.27	341.46	905.69	76.47	11.19
13.52	6.84	11.84					
12	Chan		341.46	352.65	905.69	76.47	11.19
13.52	6.84	11.84					
13	Chan		352.65	363.83	802.30	72.72	11.83
11.97	6.50	11.03					
14	Chan		363.83	375.02	409.37	47.58	11.24
6.11	4.25	8.60					
15	Chan		375.02	386.21	240.93	34.84	11.42

3.60	3.11	6.92				
16	ROB	386.21	423.96	6.22	7.79	13.55
0.09	0.59	0.80				
17	ROB	423.96	488.21	0.00	346.36	62.55
0.00	5.64	0.00				
18	ROB	488.21	552.47	0.00	402.64	64.26
0.00	6.27	0.00				
19	ROB	552.47	616.72	0.00	334.65	64.28
0.00	5.21	0.00				
20	ROB	616.72	680.97	0.00	331.32	64.26
0.00	5.16	0.00				
21	ROB	680.97	745.23	0.00	377.11	64.26
0.00	5.87	0.00				
22	ROB	745.23	809.48	0.00	405.34	64.26
0.00	6.31	0.00				
23	ROB	809.48	873.73	0.00	438.30	64.26
0.00	6.82	0.00				
24	ROB	873.73	937.99	0.00	376.16	64.95
0.00	5.85	0.00				
25	ROB	937.99	1002.24	0.00	2.02	3.51
0.00	0.61	0.00				

Warning: Divided flow computed for this cross-section.
Warning: The velocity head has changed by more than 0.5 ft (0.15 m). This may indicate the need for
additional cross sections.
Warning: The conveyance ratio (upstream conveyance divided by downstream conveyance) is less than
0.7 or greater than 1.4. This may indicate the need for additional cross sections.
Note: Multiple critical depths were found at this location. The critical depth with the lowest, valid,
water surface was used.

CROSS SECTION

RIVER: CarrollCanyon
REACH: Lower RS: 2827

INPUT
Description: FEMA CROSS SECTION - AI
Station Elevation Data num= 108

Sta	Elev	Sta	Elev	Sta	Elev	Sta	Elev	Sta	Elev
0	50	80	42.03	80.24	42	83.49	42	90.49	41.69
91.44	41.64	107.99	41.1	111.51	40.9	120.91	40.46	126.4	40.25
131.13	40	156.53	40	174.26	38.59	180.58	38.38	189.06	38
302.33	38	307.47	34	309.97	32.06	310.04	32	372.76	32
374.6	33.21	375.76	34	377.62	35.22	378.8	36	387.75	37.04
390.02	37.31	395.93	38	401.65	39.75	402.44	40	440.36	40
445.52	38.13	445.88	38	451.46	36	464.1	34.2	465.39	34
576.27	34	586.05	35.22	600.18	35.04	603.13	35.1	605.19	35.23
607.49	35.25	625.13	35.26	637.25	36	719.57	36	743.28	34.9
757.34	34.93	761.51	34.96	765.66	35.01	769.11	34.94	772.96	35.01
785.31	35.08	792.07	35.06	798.03	35.08	803.09	35.08	811.15	35.02
815.74	35	821.48	34.94	825.07	34.88	830.24	35	842.75	34.95
887.88	34	894.05	34	895.38	33.6	897.38	33.15	908.94	32
909.08	32	909.17	31.94	909.32	31.89	911.82	30.82	912.84	30.59
914.12	30.5	914.58	30.47	915.61	30.4	916.37	30.34	916.79	30.31
917.18	30.29	917.47	30.29	917.77	30.34	918.08	30.35	918.54	30.49
918.85	30.55	920.65	31.33	920.91	31.43	922.1	32	935.08	34

950.43	36	958.02	37.29	961.9	38	965.11	39.34	966.71	40
970.65	41.85	970.98	42	971.25	42.13	974.47	44	977.46	45.73
977.92	46	980.46	47.47	981.37	48	982.15	48.46	993.61	55.1
995.16	56	996.23	56.63	998.6	58	1001.14	59.48	1002.04	60
1013.22	61.72	1016.71	62	1025.21	62				

Manning's n Values num= 3

Sta	n Val	Sta	n Val	Sta	n Val
0	.075	302.33	.025	395.93	.075

Bank Sta: Left	Right	Lengths: Left	Channel	Right	Coeff Contr.	Expan.
302.33	395.93	118.67	115.88	115.6	.1	.3

Ineffective Flow num= 2

Sta L	Sta R	Elev	Permanent
0	195	43	F
616.51	1025.21	50	F

Blocked Obstructions num= 1

Sta L	Sta R	Elev
615.7	757.71	55

CROSS SECTION OUTPUT Profile #100-yr

E.G. Elev (ft)	41.97	Element	Left OB	Channel
Right OB				
Vel Head (ft)	0.32	Wt. n-Val.	0.075	0.025
0.075				
W.S. Elev (ft)	41.66	Reach Len. (ft)	118.67	115.88
115.60				
Crit W.S. (ft)	37.65	Flow Area (sq ft)	392.46	783.00
1323.64				
E.G. Slope (ft/ft)	0.000532	Area (sq ft)	578.19	783.00
2818.05				
Q Total (cfs)	6700.00	Flow (cfs)	425.47	4318.15
1956.38				
Top Width (ft)	737.10	Top Width (ft)	211.20	93.60
432.30				
Vel Total (ft/s)	2.68	Avg. Vel. (ft/s)	1.08	5.51
1.48				
Max Chl Dpth (ft)	11.37	Hydr. Depth (ft)	3.66	8.37
6.02				
Conv. Total (cfs)	290612.2	Conv. (cfs)	18454.5	187299.7
84858.0				
Length Wtd. (ft)	115.94	Wetted Per. (ft)	107.33	96.98
227.40				
Min Ch El (ft)	32.00	Shear (lb/sq ft)	0.12	0.27
0.19				
Alpha	2.83	Stream Power (lb/ft s)	0.13	1.48
0.29				
Frctn Loss (ft)	0.04	Cum Volume (acre-ft)	29.87	44.45
137.21				
C & E Loss (ft)	0.01	Cum SA (acres)	7.43	5.44
20.67				

Warning: Divided flow computed for this cross-section.
Warning: The conveyance ratio (upstream conveyance divided by downstream conveyance) is less than
0.7 or greater than 1.4. This may indicate the need for additional cross sections.
Note: Multiple critical depths were found at this location. The critical depth with the lowest, valid,

water surface was used.

Profile #100-yr

Percent Conv	Pos Hydr Depth(ft)	Velocity (ft/s)	Left Sta (ft)	Right Sta (ft)	Flow (cfs)	Area (sq ft)	W.P. (ft)
1	LOB		65.00	97.50	0.00	0.70	6.38
0.00	0.11	0.00					
2	LOB		97.50	130.00	0.00	28.08	32.53
0.00	0.86	0.00					
3	LOB		130.00	162.50	0.00	55.22	32.52
0.00	1.70	0.00					
4	LOB		162.50	195.00	0.00	101.72	32.55
0.00	3.13	0.00					
5	LOB		195.00	221.83	106.37	98.11	26.83
1.59	3.66	1.08					
6	LOB		221.83	248.67	106.37	98.11	26.83
1.59	3.66	1.08					
7	LOB		248.67	275.50	106.37	98.11	26.83
1.59	3.66	1.08					
8	LOB		275.50	302.33	106.37	98.11	26.83
1.59	3.66	1.08					
9	Chan		302.33	311.69	289.50	67.25	11.42
4.32	7.18	4.30					
10	Chan		311.69	321.05	541.07	90.38	9.36
8.08	9.66	5.99					
11	Chan		321.05	330.41	541.07	90.38	9.36
8.08	9.66	5.99					
12	Chan		330.41	339.77	541.07	90.39	9.36
8.08	9.66	5.99					
13	Chan		339.77	349.13	541.07	90.39	9.36
8.08	9.66	5.99					
14	Chan		349.13	358.49	541.07	90.38	9.36
8.08	9.66	5.99					
15	Chan		358.49	367.85	541.07	90.38	9.36
8.08	9.66	5.99					
16	Chan		367.85	377.21	449.15	83.82	10.25
6.70	8.96	5.36					
17	Chan		377.21	386.57	198.38	50.27	9.73
2.96	5.37	3.95					
18	Chan		386.57	395.93	134.70	39.35	9.42
2.01	4.20	3.42					
19	ROB		395.93	451.08	82.37	118.63	56.12
1.23	2.15	0.69					
20	ROB		451.08	506.22	650.11	407.39	55.31
9.70	7.39	1.60					
21	ROB		506.22	561.37	691.42	422.22	55.14
10.32	7.66	1.64					
22	ROB		561.37	616.51	532.48	375.39	60.82
7.95	6.91	1.42					
23	ROB		616.51	684.63			
24	ROB		684.63	752.74			
25	ROB		752.74	820.86	0.00	418.65	69.88
0.00	6.63	0.00					
26	ROB		820.86	888.98	0.00	479.19	68.13
0.00	7.03	0.00					
27	ROB		888.98	957.09	0.00	561.21	69.28
0.00	8.24	0.00					

28	ROB	957.09	1025.21	0.00	35.37	13.99
0.00	2.69	0.00				

Warning: Divided flow computed for this cross-section.
Warning: The conveyance ratio (upstream conveyance divided by downstream conveyance) is less than
0.7 or greater than 1.4. This may indicate the need for additional cross sections.
Note: Multiple critical depths were found at this location. The critical depth with the lowest, valid,
water surface was used.

CROSS SECTION

RIVER: CarrollCanyon
REACH: Lower RS: 2712

INPUT
Description: FEMA CROSS SECTION - AH
Station Elevation Data num= 142

Sta	Elev	Sta	Elev	Sta	Elev	Sta	Elev	Sta	Elev
0	68.85	.83	68.84	16.85	69.42	17.35	69.42	17.99	69.41
18.79	69.41	20.36	69.39	26.94	69.9	27.34	69.89	28.85	70
59.31	70	59.85	69.92	64.07	69.59	65.71	69.43	67.91	69.19
69.69	68.97	73.95	68.65	75.28	68.5	80.65	68.09	80.81	68.06
81.76	68	84.57	67.7	85.67	67.61	87.92	67.34	89.29	67.23
92.06	66.55	93.85	66	95.55	65.18	98.23	64	98.35	64
101.39	62.66	102.88	62	105.52	60.84	107.38	60	107.58	59.91
111.89	58	114.05	57.1	116.61	56	119.48	54.72	121.33	54
123.8	52.96	126	52	129.63	50.31	130.25	50	130.86	49.43
132.44	48	133.04	47.5	134.75	46	135.63	45.26	137.07	44
138.15	43.11	139.42	42	140.51	41.05	141.79	40	145.16	38.97
148.49	38	210.19	38	212.38	36.34	212.83	36	213.11	35.79
215.52	34	216.6	33.19	218.22	32	282.03	32	284.98	33.8
285.31	34	286.27	34.42	289.91	36	295.1	36	306.35	36.8
310.45	38	317.01	39.8	318.16	40	348.91	40	350.12	39.47
353.78	38	356.32	37.09	359.85	36	366.45	34.84	370.75	34
372.82	34	379.8	33.19	380.25	33.18	381.34	33.06	381.7	33.12
382.74	32.85	401.13	32.28	415.2	32.45	444.54	32.88	509.14	34
516.66	34	567.33	36	600.24	37.42	614.6	38	667.49	38
673.59	37.89	674.31	37.89	695.05	37.68	713.99	37.59	718.43	37.55
732.92	37.32	741.84	37.1	753.23	36.79	779.81	36	784.36	35.47
797.16	34	809.42	32.37	812.35	32	813.71	31.59	818.96	30
830.24	30	832.08	30.93	833.84	32	848.32	33.42	854.49	34
858	35.41	861.68	36.92	864.43	38	867.4	39.09	869.8	40
871.58	40.66	875.64	41.8	875.85	41.86	876.35	42	880.78	43.67
881.09	43.79	881.89	44.2	885.43	46	888.72	47.66	889.31	47.95
889.41	48	889.58	48.08	895.62	51.11	899.28	52.94	901.37	54
902.92	54.79	905.24	56	908.53	57.84	908.81	58	908.89	58.05
912.21	60	923.03	60						

Manning's n Values num= 3

Sta	n Val	Sta	n Val	Sta	n Val
0	.055	210.19	.016	310.45	.075

Bank Sta: Left	Right	Lengths: Left	Channel	Right	Coeff Contr.	Expan.
210.19	310.45	146.94	146.04	143.37	.1	.3

Ineffective Flow num= 1

Sta L	Sta R	Elev	Permanent
523.59	923.03	47.45	F

Blocked Obstructions num= 1

Sta L	Sta R	Elev
521.7	776.5	55

CROSS SECTION OUTPUT Profile #100-yr

E.G. Elev (ft)	41.92	Element	Left OB	Channel	Right OB
Vel Head (ft)	0.40	Wt. n-Val.	0.055	0.016	0.075
W.S. Elev (ft)	41.52	Reach Len. (ft)	146.94	146.04	143.37
Crit W.S. (ft)	37.21	Flow Area (sq ft)	235.56	821.05	1441.54
E.G. Slope (ft/ft)	0.000257	Area (sq ft)	235.56	821.05	2187.44
Q Total (cfs)	6700.00	Flow (cfs)	226.98	4867.88	1605.14
Top Width (ft)	479.87	Top Width (ft)	70.22	100.26	309.39
Vel Total (ft/s)	2.68	Avg. Vel. (ft/s)	0.96	5.93	1.11
Max Chl Dpth (ft)	11.52	Hydr. Depth (ft)	3.35	8.19	6.82
Conv. Total (cfs)	417625.8	Conv. (cfs)	14148.2	303425.7	100052.0
Length Wtd. (ft)	145.45	Wetted Per. (ft)	71.06	103.43	219.85
Min Ch El (ft)	32.00	Shear (lb/sq ft)	0.05	0.13	0.11
Alpha	3.60	Stream Power (lb/ft s)	0.05	0.76	0.12
Frctn Loss (ft)	0.04	Cum Volume (acre-ft)	28.76	42.32	130.57
C & E Loss (ft)	0.01	Cum SA (acres)	7.05	5.18	19.69

Warning: Divided flow computed for this cross-section.
Note: Multiple critical depths were found at this location. The critical depth with the lowest, valid, water surface was used.

Profile #100-yr

Conv	Pos Hydr	Depth(ft)	Left Sta Velocity (ft/s)	Right Sta (ft)	Flow (cfs)	Area (sq ft)	W.P. (ft)	Percent
1	LOB	126.11	147.13	8.56	13.86	7.95	0.13	1.93
2	LOB	147.13	168.15	72.43	73.72	21.08	1.08	3.51
3	LOB	168.15	189.17	73.00	73.99	21.02	1.09	3.52
4	LOB	189.17	210.19	73.00	73.99	21.02	1.09	3.52
5	Chan	210.19	220.22	338.15	71.50	12.02	5.05	7.13
6	Chan	220.22	230.24	617.71	95.45	10.03		

9.22	9.52	6.47				
7	Chan	230.24	240.27	617.71	95.45	10.03
9.22	9.52	6.47				
8	Chan	240.27	250.29	617.71	95.45	10.03
9.22	9.52	6.47				
9	Chan	250.29	260.32	617.71	95.45	10.03
9.22	9.52	6.47				
10	Chan	260.32	270.35	617.71	95.45	10.03
9.22	9.52	6.47				
11	Chan	270.35	280.37	617.71	95.45	10.03
9.22	9.52	6.47				
12	Chan	280.37	290.40	400.68	76.41	11.00
5.98	7.62	5.24				
13	Chan	290.40	300.42	241.33	54.34	10.04
3.60	5.42	4.44				
14	Chan	300.42	310.45	181.49	46.11	10.21
2.71	4.60	3.94				
15	ROB	310.45	381.50	184.66	261.71	72.26
2.76	3.68	0.71				
16	ROB	381.50	452.54	812.42	632.49	71.10
12.13	8.90	1.28				
17	ROB	452.54	523.59	608.06	547.33	76.49
9.08	7.91	1.11				
18	ROB	523.59	580.65			
19	ROB	580.65	637.72			
20	ROB	637.72	694.78			
21	ROB	694.78	751.84			
22	ROB	751.84	808.90	0.00	228.77	38.05
0.00	7.06	0.00				
23	ROB	808.90	865.97	0.00	505.10	58.88
0.00	8.85	0.00				
24	ROB	865.97	923.03	0.00	12.03	9.17
0.00	1.39	0.00				

Warning: Divided flow computed for this cross-section.
Note: Multiple critical depths were found at this location. The critical depth with the lowest, valid,
water surface was used.

CROSS SECTION

RIVER: CarrollCanyon
REACH: Lower RS: 2566

INPUT
Description:
Station Elevation Data num= 112

Sta	Elev	Sta	Elev	Sta	Elev	Sta	Elev	Sta	Elev
0	84.9	4.57	84.52	27.73	82.54	40.74	81.46	51.82	80.6
63.95	79.7	65.36	79.58	67.73	79.34	73.88	78.82	77.5	78.22
78.4	78	84.5	74	86.26	72.83	92.14	68.96	93.59	68
95.68	66.68	96.78	66	99.13	64.61	100.18	64	102.52	62.66
103.69	62	106.05	60.69	107.28	60	111.01	58	114.76	56.05
114.86	56	115.21	55.82	118.79	54	121.3	52.7	122.64	52
123.48	51.51	126.1	50	128.87	48.44	129.64	48	130.37	47.61
136.54	44.28	137.58	43.72	140.71	42	143.24	40.57	144.26	40

145.98	38.72	146.83	38	214.83	36	216.74	34.74	217.84	34
219.74	32.71	220.61	32.13	220.79	32	285.87	32	287.42	33.05
288.76	34	291.78	35.07	294.45	36	306.13	37.68	308.3	38
363.65	38	368.17	36.51	369.68	36	370.58	35.74	372.35	35.13
375.85	34	473.61	34	485.41	34.37	485.58	34.37	491.38	34.57
491.44	34.57	529.08	35.22	530.95	35.22	552.56	36	695.13	36
705.24	35.54	705.48	35.54	709.98	35.73	710.28	35.72	717.37	35.95
717.44	35.95	719.57	36	743.84	36	761.09	35.09	770.42	34.65
786.08	33.77	797.25	33.25	810.09	32.2	812.37	32	813.48	31.68
819.73	30	822.25	28.8	824.05	28	831.81	28	835	29.41
836.32	30	847.82	32	860.8	34	863.27	34.93	868.72	36.96
871.49	38	874.2	39.01	879.23	40.9	885.53	43.25	887.55	44
890.69	45.45	891.94	46	895.22	47.76	895.68	48	897.49	48.94
900.67	50.6	905.05	52.87	907.21	54	910.53	55.73	911.05	56
913.09	57.07	914.49	58						

Manning's n Values num= 3

Sta	n Val	Sta	n Val	Sta	n Val
0	.055	214.83	.016	294.45	.075

Bank Sta: Left	Right	Lengths: Left	Channel	Right	Coeff Contr.	Expan.
214.83	294.45	148.59	148.97	152.01	.1	.3

Ineffective Flow num= 1

Sta L	Sta R	Elev	Permanent
535	914.49	50	F

Blocked Obstructions num= 1

Sta L	Sta R	Elev
535	821	55

CROSS SECTION OUTPUT Profile #100-yr

E.G. Elev (ft)	41.87	Element	Left OB	Channel	Right OB
Vel Head (ft)	0.50	Wt. n-Val.	0.055	0.016	0.075
W.S. Elev (ft)	41.37	Reach Len. (ft)	148.59	148.97	152.01
Crit W.S. (ft)	37.82	Flow Area (sq ft)	305.05	714.32	1440.10
E.G. Slope (ft/ft)	0.000288	Area (sq ft)	305.05	714.32	1938.98
Q Total (cfs)	6700.00	Flow (cfs)	359.29	4773.76	1566.95
Top Width (ft)	452.68	Top Width (ft)	73.01	79.62	300.05
Vel Total (ft/s)	2.72	Avg. Vel. (ft/s)	1.18	6.68	1.09
Max Chl Dpth (ft)	13.37	Hydr. Depth (ft)	4.18	8.97	5.99
Conv. Total (cfs)	394813.1	Conv. (cfs)	21172.2	281304.9	92335.9
Length Wtd. (ft)	149.52	Wetted Per. (ft)	74.09	81.80	247.36
Min Ch El (ft)	32.00	Shear (lb/sq ft)	0.07	0.16	0.10
Alpha	4.34	Stream Power (lb/ft s)	0.09	1.05	0.11
Frctn Loss (ft)	0.04	Cum Volume (acre-ft)	27.85	39.74	123.78
C & E Loss (ft)	0.00	Cum SA (acres)	6.81	4.88	18.69

Warning: Divided flow computed for this cross-section.
Note: Multiple critical depths were found at this location. The critical depth with the lowest, valid,
water surface was used.

Profile #100-yr

Conv	Depth(ft)	Pos Hydr	Velocity (ft/s)	Left Sta (ft)	Right Sta (ft)	Flow (cfs)	Area (sq ft)	W.P. (ft)	Percent
1		LOB		128.90	150.38	14.36	19.87	9.61	
0.21	2.32		0.72						
2		LOB		150.38	171.86	88.27	81.49	21.49	
1.32	3.79		1.08						
3		LOB		171.86	193.35	114.12	95.06	21.49	
1.70	4.43		1.20						
4		LOB		193.35	214.83	142.55	108.64	21.49	
2.13	5.06		1.31						
5		Chan		214.83	222.79	351.44	62.63	9.18	
5.25	7.87		5.61						
6		Chan		222.79	230.75	517.49	74.63	7.96	
7.72	9.37		6.93						
7		Chan		230.75	238.72	517.49	74.63	7.96	
7.72	9.37		6.93						
8		Chan		238.72	246.68	517.49	74.63	7.96	
7.72	9.37		6.93						
9		Chan		246.68	254.64	517.49	74.63	7.96	
7.72	9.37		6.93						
10		Chan		254.64	262.60	517.49	74.63	7.96	
7.72	9.37		6.93						
11		Chan		262.60	270.56	517.49	74.63	7.96	
7.72	9.37		6.93						
12		Chan		270.56	278.53	517.49	74.63	7.96	
7.72	9.37		6.93						
13		Chan		278.53	286.49	510.52	74.50	8.09	
7.62	9.36		6.85						
14		Chan		286.49	294.45	289.39	54.80	8.80	
4.32	6.88		5.28						
15		ROB		294.45	354.59	165.85	216.73	60.28	
2.48	3.60		0.77						
16		ROB		354.59	414.73	425.71	382.82	60.78	
6.35	6.37		1.11						
17		ROB		414.73	474.86	547.59	443.36	60.14	
8.17	7.37		1.24						
18		ROB		474.86	535.00	427.80	397.20	66.16	
6.39	6.60		1.08						
19		ROB		535.00	598.25				
20		ROB		598.25	661.50				
21		ROB		661.50	724.75				
22		ROB		724.75	787.99				
23		ROB		787.99	851.24	0.00	348.74	43.16	
0.00	11.53		0.00						
24		ROB		851.24	914.49	0.00	150.14	30.70	
0.00	5.13		0.00						

Warning: Divided flow computed for this cross-section.
Note: Multiple critical depths were found at this location. The critical depth with the lowest, valid,
water surface was used.

CROSS SECTION

RIVER: CarrollCanyon
REACH: Lower RS: 2417

INPUT
Description: NB Interstate 5 Bridge Piers
Station Elevation Data num= 138

Sta	Elev	Sta	Elev	Sta	Elev	Sta	Elev	Sta	Elev
0	100	.64	100	5.48	99.65	10.11	99.34	19.43	98.68
21.38	98.55	23.37	98.43	25.27	98.32	26.92	98.24	30.49	98
31.96	97.81	32.07	97.8	36.88	97.15	39.72	96.9	42.67	96.62
46.99	96	47.28	96	49.47	94.98	51.19	94	53.42	92.68
54.5	92	57.73	90	58.84	89.3	60.96	88	62.25	87.23
64.26	86	65.88	85	67.52	84	69.97	82.45	70.69	82
71.16	81.71	73.89	80	76.53	78.37	77.15	78	80.52	76
81.49	75.42	83.78	74	84.56	73.52	89.72	70.31	90.22	70
90.89	69.58	93.44	68	94.95	67.06	98.8	64.67	99.89	64
100.88	63.38	103.11	62	105.58	60.49	106.4	60	107.06	59.61
109.7	58	112.97	56.07	113.45	55.79	116.44	54	117.73	53.23
121.75	50.82	123.13	50	125.09	48.79	126.4	48	126.95	47.73
130.37	46	133.9	44.33	135.47	43.6	138.85	42	139.5	41.61
142.29	40	142.95	39.18	144	38	148	36.78	149.04	36.46
160.09	36	209.78	36	212.34	35.28	212.99	35.1	214.34	34.66
215.1	34.43	216.25	34	217.26	33.61	221.11	32	225	30
280.91	30	283.27	31.76	283.62	32	286.23	33.77	286.45	33.9
286.61	34	289.12	34.88	292.37	36	299.79	37.79	299.88	37.81
300.71	38	368.38	38	382.79	36.97	390.01	36.38	394.83	36
546.38	36	553.78	35.53	572.01	34.89	588.13	34.84	593.62	34.7
669.33	34	712.53	34	723.62	34.17	750.2	34.31	751.06	34.32
766.8	34	781.88	34	818.04	32	818.79	31.46	819.57	30.9
820.8	30	830.68	30	831.47	30.36	832.86	30.56	834.52	30.99
835.54	31.24	838.03	32	842.01	32	862.37	33.27	870.23	33.81
871.49	33.81	874.5	34	879.76	34.77	881.99	35.12	884.17	35.45
887.34	35.99	891.44	36.77	894.58	37.03	899.11	37.25	903.35	37.7
903.72	37.72	905	37.75	909.97	38	911.57	38.09	911.77	38.11
912.03	38.12	915.18	38.51	915.19	48				

Manning's n Values num= 3

Sta	n Val	Sta	n Val	Sta	n Val
0	.055	209.78	.016	292.37	.075

Bank Sta: Left	Right	Lengths: Left	Channel	Right	Coeff Contr.	Expan.
209.78	292.37	120.25	117.72	112.38	.1	.3

Ineffective Flow num= 1

Sta L	Sta R	Elev	Permanent
548	915.19	50	F

Blocked Obstructions num= 2

Sta L	Sta R	Elev	Sta L	Sta R	Elev
548	850	55	130	137	80

CROSS SECTION OUTPUT Profile #100-yr

E.G. Elev (ft)	41.83	Element	Left OB	Channel

Right OB

Vel Head (ft)	0.50	Wt. n-Val.	0.055	0.016
0.075				
W.S. Elev (ft)	41.34	Reach Len. (ft)	13.50	13.50
13.50				
Crit W.S. (ft)	37.43	Flow Area (sq ft)	347.93	844.55
1193.54				
E.G. Slope (ft/ft)	0.000218	Area (sq ft)	347.93	844.55
1582.16				
Q Total (cfs)	6700.00	Flow (cfs)	399.39	5339.15
961.46				
Top Width (ft)	473.21	Top Width (ft)	69.81	82.59
320.81				
Vel Total (ft/s)	2.81	Avg. Vel. (ft/s)	1.15	6.32
0.81				
Max Chl Dpth (ft)	11.34	Hydr. Depth (ft)	4.98	10.23
4.67				
Conv. Total (cfs)	453542.6	Conv. (cfs)	27036.0	361422.6
65084.0				
Length Wtd. (ft)	13.50	Wetted Per. (ft)	71.33	85.38
261.39				
Min Ch El (ft)	30.00	Shear (lb/sq ft)	0.07	0.13
0.06				
Alpha	4.06	Stream Power (lb/ft s)	0.08	0.85
0.05				
Frctn Loss (ft)	0.01	Cum Volume (acre-ft)	26.74	37.08
117.64				
C & E Loss (ft)	0.05	Cum SA (acres)	6.56	4.60
17.60				

Warning: Divided flow computed for this cross-section.
Warning: The conveyance ratio (upstream conveyance divided by downstream conveyance) is less than
0.7 or greater than 1.4. This may indicate the need for additional cross sections.
Note: Multiple critical depths were found at this location. The critical depth with the lowest, valid,
energy was used.

Profile #100-yr

Percent Conv	Pos Hydr Depth(ft)	Velocity (ft/s)	Left Sta (ft)	Right Sta (ft)	Flow (cfs)	Area (sq ft)	W.P. (ft)
1	LOB		125.87	146.85	9.96	16.32	8.28
0.15	2.37	0.61					
2	LOB		146.85	167.82	123.94	107.68	21.09
1.85	5.13	1.15					
3	LOB		167.82	188.80	132.75	111.97	20.98
1.98	5.34	1.19					
4	LOB		188.80	209.78	132.75	111.97	20.98
1.98	5.34	1.19					
5	Chan		209.78	218.04	247.45	54.40	8.70
3.69	6.59	4.55					
6	Chan		218.04	226.30	475.80	81.63	9.00
7.10	9.88	5.83					
7	Chan		226.30	234.56	633.33	93.63	8.26
9.45	11.34	6.76					
8	Chan		234.56	242.82	633.33	93.63	8.26

```
9.45      11.34      6.76
9          Chan       242.82      251.08       633.33      93.63       8.26
9.45      11.34      6.76
10         Chan       251.08      259.33       633.33      93.63       8.26
9.45      11.34      6.76
11         Chan       259.33      267.59       633.33      93.63       8.26
9.45      11.34      6.76
12         Chan       267.59      275.85       633.33      93.63       8.26
9.45      11.34      6.76
13         Chan       275.85      284.11       557.37      89.84       9.02
8.32      10.88      6.20
14         Chan       284.11      292.37       258.55      56.87       9.10
3.86       6.89      4.55
15         ROB        292.37      356.28       146.29     221.57      64.14
2.18       3.47      0.66
16         ROB        356.28      420.19       229.07     289.70      63.98
3.42       4.53      0.79
17         ROB        420.19      484.09       300.97     341.09      63.91
4.49       5.34      0.88
18         ROB        484.09      548.00       285.13     341.18      69.35
4.26       5.34      0.84
19         ROB        548.00      609.20

20         ROB        609.20      670.40

21         ROB        670.40      731.60

22         ROB        731.60      792.79

23         ROB        792.79      853.99         0.00      34.79      12.84
0.00       8.71      0.00
24         ROB        853.99      915.19         0.00     353.83      64.37
0.00       5.78      0.00


Warning: Divided flow computed for this cross-section.
Warning: The conveyance ratio (upstream conveyance divided by downstream conveyance)
is less than
         0.7 or greater than 1.4.  This may indicate the need for additional cross
sections.
Note:    Multiple critical depths were found at this location.  The critical depth
with the lowest, valid,
         energy was used.

BRIDGE


RIVER: CarrollCanyon
REACH: Lower                RS: 2353

INPUT
Description:
Distance from Upstream XS =    13.5
Deck/Roadway Width        =     100
Weir Coefficient          =     2.6
Upstream  Deck/Roadway Coordinates
    num=      10
     Sta Hi Cord Lo Cord     Sta Hi Cord Lo Cord     Sta Hi Cord Lo Cord
     190      36             209   37.16          209.29   40.16   35.58
  236.29    40.6   36.02  272.29   41.25   36.67  299.29   42.44   37.86
  300.81    42.5             301    39.5             330    39.5
  368.38      38
```

Upstream Bridge Cross Section Data
Station Elevation Data num= 138

Sta	Elev	Sta	Elev	Sta	Elev	Sta	Elev	Sta	Elev
0	100	.64	100	5.48	99.65	10.11	99.34	19.43	98.68
21.38	98.55	23.37	98.43	25.27	98.32	26.92	98.24	30.49	98
31.96	97.81	32.07	97.8	36.88	97.15	39.72	96.9	42.67	96.62
46.99	96	47.28	96	49.47	94.98	51.19	94	53.42	92.68
54.5	92	57.73	90	58.84	89.3	60.96	88	62.25	87.23
64.26	86	65.88	85	67.52	84	69.97	82.45	70.69	82
71.16	81.71	73.89	80	76.53	78.37	77.15	78	80.52	76
81.49	75.42	83.78	74	84.56	73.52	89.72	70.31	90.22	70
90.89	69.58	93.44	68	94.95	67.06	98.8	64.67	99.89	64
100.88	63.38	103.11	62	105.58	60.49	106.4	60	107.06	59.61
109.7	58	112.97	56.07	113.45	55.79	116.44	54	117.73	53.23
121.75	50.82	123.13	50	125.09	48.79	126.4	48	126.95	47.73
130.37	46	133.9	44.33	135.47	43.6	138.85	42	139.5	41.61
142.29	40	142.95	39.18	144	38	148	36.78	149.04	36.46
160.09	36	209.78	36	212.34	35.28	212.99	35.1	214.34	34.66
215.1	34.43	216.25	34	217.26	33.61	221.11	32	225	30
280.91	30	283.27	31.76	283.62	32	286.23	33.77	286.45	33.9
286.61	34	289.12	34.88	292.37	36	299.79	37.79	299.88	37.81
300.71	38	368.38	38	382.79	36.97	390.01	36.38	394.83	36
546.38	36	553.78	35.53	572.01	34.89	588.13	34.84	593.62	34.7
669.33	34	712.53	34	723.62	34.17	750.2	34.31	751.06	34.32
766.8	34	781.88	34	818.04	32	818.79	31.46	819.57	30.9
820.8	30	830.68	30	831.47	30.36	832.86	30.56	834.52	30.99
835.54	31.24	838.03	32	842.01	32	862.37	33.27	870.23	33.81
871.49	33.81	874.5	34	879.76	34.77	881.99	35.12	884.17	35.45
887.34	35.99	891.44	36.77	894.58	37.03	899.11	37.25	903.35	37.7
903.72	37.72	905	37.75	909.97	38	911.57	38.09	911.77	38.11
912.03	38.12	915.18	38.51	915.19	48				

Manning's n Values num= 3

Sta	n Val	Sta	n Val	Sta	n Val
0	.055	209.78	.016	292.37	.075

Bank Sta: Left	Right	Coeff Contr.	Expan.
209.78	292.37	.1	.3

Ineffective Flow num= 1

Sta L	Sta R	Elev	Permanent
548	915.19	50	F

Blocked Obstructions num= 2

Sta L	Sta R	Elev	Sta L	Sta R	Elev
548	850	55	130	137	80

Downstream Deck/Roadway Coordinates
num= 9

Sta	Hi Cord	Lo Cord	Sta	Hi Cord	Lo Cord	Sta	Hi Cord	Lo Cord
213.5	38		213.65	41	36.42	236.29	40.6	36.02
272.29	41.25	36.67	299.29	42.44	37.86	300.81	42.5	
301	39.5		315.77	39.5		368.93	38	

Downstream Bridge Cross Section Data
Station Elevation Data num= 176

Sta	Elev	Sta	Elev	Sta	Elev	Sta	Elev	Sta	Elev
0	96.15	1.31	96.01	1.37	96	8.37	96	14.56	95.18
16.6	95.08	19.64	94.94	22.23	94.84	24.06	94.83	26.57	94.75
28.95	94.69	30.95	94.77	48.5	94.1	49.38	94.14	49.8	94
53.8	92.1	54.05	92	58.08	90.44	59.51	90	61.83	89.29
64.78	88	65.71	87.57	68.06	86.23	68.48	86	71.53	84.19
71.84	84	77.69	80.34	78.23	80	81.36	78.05	81.43	78
82.22	77.51	84.63	76	84.91	75.82	87.83	74	88.53	73.56

91.03	72	92.21	71.26	94.23	70	95.97	68.91	97.43	68
100.62	66	103.79	64.02	107.1	62	108	61.46	110.4	60
112.2	58.92	113.72	58	116.43	56.38	117.06	56	119.43	54.59
120.41	54	123.79	52	124.98	51.3	127.18	50	129.31	48.76
130.59	48	135.34	45.23	138.09	43.65	140.95	42	143.55	40.64
144.8	40	145.45	39.54	148.08	38	149	37.34	150.94	36
167.79	36	209.08	38	213.65	38	214.67	37.23	216.09	36
216.19	35.91	218.06	34	220.06	32	221.96	30	286.22	30
287.93	30.99	289.65	32	291.62	33.12	293.13	34	296.18	35.75
296.63	36	297.17	36.15	298.81	36.31	304.64	37.14	306.83	37.46
315.62	38	368.93	38	375.28	37.73	376.09	37.71	381.85	37.49
384.6	37.38	385.4	37.35	403.63	37.03	406.01	36.96	409.89	36.8
412.56	36.74	438.71	36	544.77	36	545.54	35.97	564.24	35.91
565.04	35.84	572.59	35.81	578.45	35.81	582.86	35.83	583.71	35.74
592.14	35.82	596.61	35.88	597.16	35.89	601.99	35.8	602.63	35.8
607.64	35.6	608.37	35.57	609.09	35.55	613.79	35.29	615.95	35.29
618.14	35.11	622.08	35.12	631.96	34.67	637.27	34.66	638.18	34.67
642.85	34.65	647.03	34.62	648.22	34.6	651.56	34.58	653.97	34.56
655.42	34.52	660.48	34.45	668.64	34	675.02	34	715.17	32.79
721.74	32.61	729.84	32.57	766.97	32	811.17	32	820.21	30.58
824.01	30	826.07	28.98	827.5	28	830.76	28	832.59	28.71
836.79	30	841.18	30.61	849.69	31.37	853.43	31.77	856.26	32
862.89	32.82	873.14	33.8	876.61	34	876.8	34.02	881.98	34.19
882.53	34.23	888.71	34.19	889.42	34.26	894.15	34.31	895.05	34.42
898.13	34.59	899.3	34.77	901.94	35.16	902.72	35.27	903.73	35.42
904.87	35.61	904.99	35.62	905.45	35.72	905.51	35.73	905.61	35.75
905.69	35.75	906.83	35.8	907.01	35.8	908.88	35.81	909.16	35.81
911.72	35.77	914.95	35.74	916.42	35.72	920.44	35.69	924.42	35.67
924.43	48								

Manning's n Values num= 3

Sta	n Val	Sta	n Val	Sta	n Val
0	.055	213.65	.016	315.62	.075

Bank Sta: Left	Right	Coeff Contr.	Expan.
213.65	315.62	.1	.3

Ineffective Flow num= 1

Sta L	Sta R	Elev	Permanent
525.9	924.43	50	F

Blocked Obstructions num= 3

Sta L	Sta R	Elev	Sta L	Sta R	Elev	Sta L	Sta R	Elev
130	137	80	525.9	786.34	55	229.6	236.6	80

Upstream Embankment side slope = 0 horiz. to 1.0 vertical
Downstream Embankment side slope = 0 horiz. to 1.0 vertical
Maximum allowable submergence for weir flow = .95
Elevation at which weir flow begins =
Energy head used in spillway design =
Spillway height used in design =
Weir crest shape = Broad Crested

Number of Piers = 2

Pier Data
Pier Station Upstream= 236.29 Downstream= 236.29
Upstream num= 2

Width	Elev	Width	Elev
2.5	28	2.5	37.86

Downstream num= 2

Width	Elev	Width	Elev
2.5	28	2.5	37.86

Pier Data

Pier Station Upstream= 272.29 Downstream= 272.29
Upstream num= 2

Width	Elev	Width	Elev
2.5	28	2.5	37.86

Downstream num= 2

Width	Elev	Width	Elev
2.5	28	2.5	37.86

Number of Bridge Coefficient Sets = 1

Low Flow Methods and Data
Energy
Selected Low Flow Methods = Highest Energy Answer

High Flow Method
Energy Only

Additional Bridge Parameters
Add Friction component to Momentum
Do not add Weight component to Momentum
Class B flow critical depth computations use critical depth inside the bridge at the upstream end
Criteria to check for pressure flow = Upstream energy grade line

BRIDGE OUTPUT Profile #100-yr

E.G. US. (ft)	41.83	Element	Inside BR US
Inside BR DS			
W.S. US. (ft)	41.34	E.G. Elev (ft)	41.78
41.50			
Q Total (cfs)	6700.00	W.S. Elev (ft)	41.45
40.92			
Q Bridge (cfs)	2815.54	Crit W.S. (ft)	38.23
37.03			
Q Weir (cfs)		Max Chl Dpth (ft)	11.45
10.92			
Weir Sta Lft (ft)		Vel Total (ft/s)	3.51
4.35			
Weir Sta Rgt (ft)		Flow Area (sq ft)	1908.50
1540.79			
Weir Submerg		Froude # Chl	0.20
0.24			
Weir Max Depth (ft)		Specif Force (cu ft)	7753.82
6599.02			
Min El Weir Flow (ft)	36.01	Hydr Depth (ft)	4.97
4.75			
Min El Prs (ft)	37.86	W.P. Total (ft)	590.74
517.82			
Delta EG (ft)	0.34	Conv. Total (cfs)	146492.0
121836.8			
Delta WS (ft)	0.40	Top Width (ft)	449.29
462.28			
BR Open Area (sq ft)	407.88	Frctn Loss (ft)	0.25
0.00			
BR Open Vel (ft/s)	6.90	C & E Loss (ft)	0.03
0.01			
Coef of Q		Shear Total (lb/sq ft)	0.42
0.56			
Br Sel Method	Energy only	Power Total (lb/ft s)	1.48
2.44			

Note: Multiple critical depths were found at this location. The critical depth with the lowest, valid,
energy was used.
Warning: The conveyance ratio (upstream conveyance divided by downstream conveyance) is less than
0.7 or greater than 1.4. This may indicate the need for additional cross sections.
Note: Multiple critical depths were found at this location. The critical depth with the lowest, valid,
energy was used.

CROSS SECTION

RIVER: CarrollCanyon
REACH: Lower RS: 2299

INPUT
Description: NB Interstate 5 Bridge Piers
Station Elevation Data num= 176

Sta	Elev	Sta	Elev	Sta	Elev	Sta	Elev	Sta	Elev
0	96.15	1.31	96.01	1.37	96	8.37	96	14.56	95.18
16.6	95.08	19.64	94.94	22.23	94.84	24.06	94.83	26.57	94.75
28.95	94.69	30.95	94.77	48.5	94.1	49.38	94.14	49.8	94
53.8	92.1	54.05	92	58.08	90.44	59.51	90	61.83	89.29
64.78	88	65.71	87.57	68.06	86.23	68.48	86	71.53	84.19
71.84	84	77.69	80.34	78.23	80	81.36	78.05	81.43	78
82.22	77.51	84.63	76	84.91	75.82	87.83	74	88.53	73.56
91.03	72	92.21	71.26	94.23	70	95.97	68.91	97.43	68
100.62	66	103.79	64.02	107.1	62	108	61.46	110.4	60
112.2	58.92	113.72	58	116.43	56.38	117.06	56	119.43	54.59
120.41	54	123.79	52	124.98	51.3	127.18	50	129.31	48.76
130.59	48	135.34	45.23	138.09	43.65	140.95	42	143.55	40.64
144.8	40	145.45	39.54	148.08	38	149	37.34	150.94	36
167.79	36	209.08	38	213.65	38	214.67	37.23	216.09	36
216.19	35.91	218.06	34	220.06	32	221.96	30	286.22	30
287.93	30.99	289.65	32	291.62	33.12	293.13	34	296.18	35.75
296.63	36	297.17	36.15	298.81	36.31	304.64	37.14	306.83	37.46
315.62	38	368.93	38	375.28	37.73	376.09	37.71	381.85	37.49
384.6	37.38	385.4	37.35	403.63	37.03	406.01	36.96	409.89	36.8
412.56	36.74	438.71	36	544.77	36	545.54	35.97	564.24	35.91
565.04	35.84	572.59	35.81	578.45	35.81	582.86	35.83	583.71	35.74
592.14	35.82	596.61	35.88	597.16	35.89	601.99	35.8	602.63	35.8
607.64	35.6	608.37	35.57	609.09	35.55	613.79	35.29	615.95	35.29
618.14	35.11	622.08	35.12	631.96	34.67	637.27	34.66	638.18	34.67
642.85	34.65	647.03	34.62	648.22	34.6	651.56	34.58	653.97	34.56
655.42	34.52	660.48	34.45	668.64	34	675.02	34	715.17	32.79
721.74	32.61	729.84	32.57	766.97	32	811.17	32	820.21	30.58
824.01	30	826.07	28.98	827.5	28	830.76	28	832.59	28.71
836.79	30	841.18	30.61	849.69	31.37	853.43	31.77	856.26	32
862.89	32.82	873.14	33.8	876.61	34	876.8	34.02	881.98	34.19
882.53	34.23	888.71	34.19	889.42	34.26	894.15	34.31	895.05	34.42
898.13	34.59	899.3	34.77	901.94	35.16	902.72	35.27	903.73	35.42
904.87	35.61	904.99	35.62	905.45	35.72	905.51	35.73	905.61	35.75
905.69	35.75	906.83	35.8	907.01	35.8	908.88	35.81	909.16	35.81
911.72	35.77	914.95	35.74	916.42	35.72	920.44	35.69	924.42	35.67
924.43	48								

Manning's n Values num= 3

Sta	n Val	Sta	n Val	Sta	n Val
0	.055	213.65	.016	315.62	.075

Bank Sta: Left	Right	Lengths: Left	Channel	Right	Coeff Contr.	Expan.
213.65	315.62	24.05	23.62	24.97	.1	.3

Ineffective Flow num= 1

Sta L	Sta R	Elev	Permanent
525.9	924.43	50	F

Blocked Obstructions num= 3

Sta L	Sta R	Elev	Sta L	Sta R	Elev	Sta L	Sta R	Elev
130	137	80	525.9	786.34	55	229.6	236.6	80

CROSS SECTION OUTPUT Profile #100-yr

E.G. Elev (ft)	41.49	Element	Left OB	Channel
Right OB				
Vel Head (ft)	0.55	Wt. n-Val.	0.055	0.016
0.075				
W.S. Elev (ft)	40.94	Reach Len. (ft)	24.05	23.62
24.97				
Crit W.S. (ft)	37.76	Flow Area (sq ft)	277.81	835.84
864.96				
E.G. Slope (ft/ft)	0.000384	Area (sq ft)	277.81	835.84
2005.95				
Q Total (cfs)	6700.00	Flow (cfs)	361.21	5490.32
848.47				
Top Width (ft)	514.00	Top Width (ft)	70.67	94.97
348.36				
Vel Total (ft/s)	3.39	Avg. Vel. (ft/s)	1.30	6.57
0.98				
Max Chl Dpth (ft)	12.94	Hydr. Depth (ft)	3.93	8.80
4.11				
Conv. Total (cfs)	342040.8	Conv. (cfs)	18440.2	280285.7
43314.9				
Length Wtd. (ft)	23.84	Wetted Per. (ft)	72.14	121.82
215.25				
Min Ch El (ft)	30.00	Shear (lb/sq ft)	0.09	0.16
0.10				
Alpha	3.10	Stream Power (lb/ft s)	0.12	1.08
0.09				
Frctn Loss (ft)	0.01	Cum Volume (acre-ft)	25.89	35.79
112.98				
C & E Loss (ft)	0.00	Cum SA (acres)	6.37	4.44
16.71				

Warning: Divided flow computed for this cross-section.
Note: Multiple critical depths were found at this location. The critical depth with the lowest, valid,
energy was used.

Profile #100-yr

Percent Conv	Pos Hydr Depth(ft)	Velocity (ft/s)	Left Sta (ft)	Right Sta (ft)	Flow (cfs)	Area (sq ft)	W.P. (ft)
1	LOB		128.19	149.56	8.72	12.43	7.70
0.13	1.89	0.70					
2	LOB		149.56	170.92	152.32	104.59	21.67
2.27	4.90	1.46					
3	LOB		170.92	192.29	122.26	91.20	21.39
1.82	4.27	1.34					

4	LOB	192.29	213.65	77.92	69.59	21.38	1.16	3.26	1.12
5	Chan	213.65	223.85	399.94	76.61	13.44	5.97	7.51	5.22
6	Chan	223.85	234.04	249.35	62.92	16.69	3.72	10.94	3.96
7	Chan	234.04	244.24	372.57	83.57	18.58	5.56	10.94	4.46
8	Chan	244.24	254.44	899.02	111.53	10.20	13.42	10.94	8.06
9	Chan	254.44	264.64	899.02	111.53	10.20	13.42	10.94	8.06
10	Chan	264.64	274.83	899.02	111.53	10.20	13.42	10.94	8.06
11	Chan	274.83	285.03	899.02	111.53	10.20	13.42	10.94	8.06
12	Chan	285.03	295.23	556.59	88.05	11.59	8.31	8.63	6.32
13	Chan	295.23	305.42	196.52	45.32	10.50	2.93	4.44	4.34
14	Chan	305.42	315.62	119.26	33.23	10.23	1.78	3.26	3.59
15	ROB	315.62	385.71	168.56	211.56	70.11	2.52	3.02	0.80
16	ROB	385.71	455.81	314.02	307.31	70.11	4.69	4.38	1.02
17	ROB	455.81	525.90	365.89	346.09	75.03	5.46	4.94	1.06
18	ROB	525.90	582.83						
19	ROB	582.83	639.77						
20	ROB	639.77	696.70						
21	ROB	696.70	753.63						
22	ROB	753.63	810.56	0.00	216.51	33.16	0.00	8.94	0.00
23	ROB	810.56	867.50	0.00	573.23	58.13	0.00	10.07	0.00
24	ROB	867.50	924.43	0.00	351.25	62.33	0.00	6.17	0.00

Warning: Divided flow computed for this cross-section.
Note: Multiple critical depths were found at this location. The critical depth with the lowest, valid,
energy was used.

CROSS SECTION

RIVER: CarrollCanyon
REACH: Lower RS: 2275

INPUT
Description: FEMA CROSS SECTION - AG (NB Interstate 5 Bridge Piers)
Station Elevation Data num= 207

Sta	Elev	Sta	Elev	Sta	Elev	Sta	Elev	Sta	Elev
0	98	1.72	98	3.44	97.81	7.82	97.34	21.3	96.01
21.41	96	21.52	95.96	27.68	94	39.14	94	41.6	92.88
43.52	92	46.74	90.53	47.91	90	52.28	88.01	52.34	87.98

56.75	86	59.96	84.6	61.29	84	62.87	83.36	63.86	83.01
65.14	82.53	65.66	82.35	66.84	82	66.95	81.97	70.15	80
72.73	78.44	73.42	78	74.88	77.22	76.34	76.42	77.1	76
78.1	75.44	83.87	72.22	84.27	72	85.65	71.23	87.44	70.21
87.81	70	90.53	68.45	91.33	68	93.05	67.02	94.85	66
95.97	65.36	98.37	64	99.15	63.56	101.89	62	102.39	61.71
105.41	60	105.68	59.84	108.93	58	109.01	57.95	110.65	57.02
112.35	56.05	112.44	56	112.63	55.89	118.73	52.43	119.48	52
122.01	50.56	125.33	48.68	126.52	48	137.08	42	140.62	40
145.12	38.67	147.62	38	148.14	37.67	150.56	36	213.98	36
214.87	35.19	216.25	34	217.06	33.31	218.58	32	219.72	31.02
221.05	30	286.11	30	289.59	32	290.36	32.42	293.22	34
296.17	35.51	296.67	35.76	297.14	36	300.03	36.16	305.1	36.4
308.87	36.59	335.46	38	355.29	38	361.79	37.59	366.73	37.26
370.45	37.07	373.96	36.84	377.18	36.67	379.94	36.53	384.57	36.38
386.39	36.3	391.46	36.2	392.13	36.17	392.45	36.16	392.55	36.16
401.74	36	422.02	36	425.97	35.9	445.67	35.52	450.19	35.42
452.34	35.38	461.06	35.25	495.77	36	498.97	36	501.45	36.47
504.14	36.9	507.7	37.52	511.07	38	584.54	38	588.51	37.61
589.46	37.62	590.38	37.62	591.26	37.63	600.89	36.97	605.94	36.44
608.72	36.23	610.64	36	634.45	36	636.9	35.89	637.35	35.89
639.92	35.9	640.57	35.9	644.22	35.83	644.9	35.83	649.7	35.69
657.19	35.59	657.93	35.59	664.3	35.23	674.84	34.17	675.27	34.14
676.5	34	687.38	33.66	701.36	33.29	705.54	33.27	787.5	32
817.99	32	822.66	30.23	822.82	30.16	823.25	30	823.43	29.93
824.63	30	836.28	28.97	838.69	30	858.22	31.8	860.12	32
860.4	32	869.66	34	873.36	35.69	874.13	36	878.99	37.87
879.43	38	884.54	39.49	886.3	40	886.5	40.07	892.67	42
893.97	42.52	895.68	43.19	897.07	43.63	899.7	44.45	900.17	44.6
902.02	44.85	902.7	44.94	903.77	45.13	904.87	45.3	906.54	45.63
906.95	45.7	908.3	46	909.26	46.21	913.92	46.42	915.39	46.49
920.3	46.49	923.85	46.5	925.22	46.5	930.28	46.41	931.06	46.39
931.78	46.38	937.21	46.28	938.19	46.26	944.05	46.17	944.6	46.16
950.78	46.07	951	46.06	964.16	45.92	964.34	45.91	964.52	45.91
971.02	45.86	971.61	45.86	977.96	45.81	978.52	45.8	987.18	45.74
987.92	45.74	992.91	45.71	993.78	45.71	995.38	45.72	995.66	45.72
997.26	45.71	997.52	45.71	999.1	45.68	999.47	45.67	1001.03	45.63
1002.1	45.58	1006.44	45.36	1010.74	45.12	1012.64	45.01	1014.88	44.89
1024.48	44.34	1027.35	44.28						

Manning's n Values num= 3

Sta	n Val	Sta	n Val	Sta	n Val
0	.055	213.98	.016	296.67	.075

Bank Sta: Left	Right	Lengths: Left	Channel	Right	Coeff Contr.	Expan.
213.98	296.67	26.96	25.98	24.75	.1	.3

Ineffective Flow num= 1

Sta L	Sta R	Elev	Permanent
526.28	1027.35	50	F

Blocked Obstructions num= 4

Sta L	Sta R	Elev	Sta L	Sta R	Elev	Sta L	Sta R	Elev
526.28	786.61	55	127.7	134.7	80	221.6	228.6	80
291.7	298.7	80						

CROSS SECTION OUTPUT Profile #100-yr

E.G. Elev (ft)	41.48	Element	Left OB	Channel
Right OB				
Vel Head (ft)	0.59	Wt. n-Val.	0.055	0.016
0.075				
W.S. Elev (ft)	40.88	Reach Len. (ft)	26.96	25.98
24.75				

Crit W.S. (ft)	37.52	Flow Area (sq ft)	335.05	739.97
983.71				
E.G. Slope (ft/ft)	0.000411	Area (sq ft)	335.05	739.97
1838.07				
Q Total (cfs)	6700.00	Flow (cfs)	493.40	5181.43
1025.17				
Top Width (ft)	475.71	Top Width (ft)	74.92	70.72
330.07				
Vel Total (ft/s)	3.25	Avg. Vel. (ft/s)	1.47	7.00
1.04				
Max Chl Dpth (ft)	11.91	Hydr. Depth (ft)	4.47	10.46
4.32				
Conv. Total (cfs)	330329.3	Conv. (cfs)	24326.2	255459.4
50543.7				
Length Wtd. (ft)	25.85	Wetted Per. (ft)	76.05	103.24
235.54				
Min Ch El (ft)	30.00	Shear (lb/sq ft)	0.11	0.18
0.11				
Alpha	3.61	Stream Power (lb/ft s)	0.17	1.29
0.11				
Frctn Loss (ft)	0.01	Cum Volume (acre-ft)	25.72	35.36
111.88				
C & E Loss (ft)	0.02	Cum SA (acres)	6.33	4.40
16.52				

Warning: Divided flow computed for this cross-section.
Note: Multiple critical depths were found at this location. The critical depth with the lowest, valid,
water surface was used.

Profile #100-yr

Percent Conv	Pos Hydr Depth(ft)	Velocity (ft/s)	Left Sta (ft)	Right Sta (ft)	Flow (cfs)	Area (sq ft)	W.P. (ft)
1	LOB		128.39	149.79	17.51	21.83	11.69
0.26	2.03	0.80					
2	LOB		149.79	171.18	157.74	104.27	21.56
2.35	4.87	1.51					
3	LOB		171.18	192.58	159.08	104.48	21.40
2.37	4.88	1.52					
4	LOB		192.58	213.98	159.08	104.48	21.40
2.37	4.88	1.52					
5	Chan		213.98	222.25	204.60	62.21	20.71
3.05	8.16	3.29					
6	Chan		222.25	230.52	45.68	20.87	12.80
0.68	10.88	2.19					
7	Chan		230.52	238.79	698.10	89.99	8.27
10.42	10.88	7.76					
8	Chan		238.79	247.06	698.10	89.99	8.27
10.42	10.88	7.76					
9	Chan		247.06	255.33	698.10	89.99	8.27
10.42	10.88	7.76					
10	Chan		255.33	263.59	698.10	89.99	8.27
10.42	10.88	7.76					
11	Chan		263.59	271.86	698.10	89.99	8.27
10.42	10.88	7.76					
12	Chan		271.86	280.13	698.10	89.99	8.27
10.42	10.88	7.76					

13	Chan	280.13	288.40	660.14	88.48	8.62	9.85	10.70
7.46								
14	Chan	288.40	296.67	82.39	28.49	11.50	1.23	8.64
2.89								
15	ROB	296.67	373.21	227.92	260.49	79.39	3.40	3.50
0.87								
16	ROB	373.21	449.74	423.00	372.08	76.56	6.31	4.86
1.14								
17	ROB	449.74	526.28	374.25	351.14	79.59	5.59	4.59
1.07								
18	ROB	526.28	597.86					
19	ROB	597.86	669.44					
20	ROB	669.44	741.02					
21	ROB	741.02	812.61	0.00	230.90	34.86	0.00	8.88
0.00								
22	ROB	812.61	884.19	0.00	619.72	73.52	0.00	8.66
0.00								
23	ROB	884.19	955.77	0.00	3.74	5.13	0.00	0.76
0.00								

Warning: Divided flow computed for this cross-section.
Note: Multiple critical depths were found at this location. The critical depth with the lowest, valid,
water surface was used.

CROSS SECTION

RIVER: CarrollCanyon
REACH: Lower RS: 2249

INPUT
Description: NB Interstate 5 Bridge Piers
Station Elevation Data num= 143

Sta	Elev	Sta	Elev	Sta	Elev	Sta	Elev	Sta	Elev
0	97.07	22.95	96	32.51	96	34.57	95.39	38.56	94
39.21	93.76	42.51	92	43.51	91.42	45.51	90	46.64	89.2
48.34	88	49.52	87.17	51.17	86	52.29	85.21	54.01	84
55.47	82.96	56.84	82	59.56	80.08	59.67	80	64.52	76.57
65.33	76	66.65	75.11	68.23	74	69.83	72.98	71.46	72
74.11	70.55	75.13	70	76.82	69.12	78.98	68	79.97	67.48
87.75	63.44	90.51	62	90.8	61.85	94.31	60	95.54	59.34
100.28	56.82	101.79	56	103.4	55.12	105.51	54	107.76	52.77
109.2	52	112.12	50.4	112.86	50	116.49	48.01	116.61	47.95
120.09	46	120.96	45.51	123.67	44	125.35	43.05	127.23	42
129.09	40.95	130.79	40	138.98	38.21	139.87	38	141.29	37.47
144.7	36	208.61	36	208.66	35.96	209.05	35.62	210.94	34
211.46	33.57	213.39	32	214.12	31.46	216.18	30	280.02	30
280.28	30.13	284.32	32	288.32	34	290.58	35.12	292.33	36
312.22	37.26	325.75	38	345.35	38	346.05	37.9	346.77	37.84
351.34	37.45	364.17	36.26	368.14	36	377.33	36	397.63	35.78
398.03	35.79	398.72	35.81	399.5	35.84	405.37	35.85	413.37	35.73
425.61	35.4	448	34.87	469	34.43	472.32	34.38	484.3	34.65
484.79	34.69	485.36	34.75	486.85	34.89	490.74	35.27	498.06	36
500.43	36.47	531.11	38	592.65	38	602.95	37.06	619.75	36
661.52	36	666.95	34.97	668.63	34.73	671.97	34	674.41	34
675.64	33.98	678.43	33.94	803.16	32	812.82	32	815.89	31.02
818.74	30	824.66	28.73	828.22	28	829.85	28	830.82	28.44

834.34	30	840.71	31.04	846.88	32	863.98	34	864.67	34.35
871.91	38	873.88	38.99	876.05	40	880.72	41.89	880.99	42
881.26	42.1	886.28	44	888.19	44.75	891.45	46	896.38	47.97
896.62	48.06	901.62	50	902.93	50.51	906.23	52	911.85	53.12
913.26	53.17	920.49	53.57	927.82	54	1036.04	54	1040.93	53.69
1052.12	53.01	1062.08	52.5	1070.08	52				

Manning's n Values num= 3

Sta	n Val	Sta	n Val	Sta	n Val
0	.055	208.61	.016	292.33	.075

Bank Sta: Left	Right	Lengths: Left	Channel	Right	Coeff Contr.	Expan.
208.61	292.33	53.25	54.23	54.9	.1	.3

Ineffective Flow num= 1

Sta L	Sta R	Elev	Permanent
521.23	1070.08	50	F

Blocked Obstructions num= 3

Sta L	Sta R	Elev	Sta L	Sta R	Elev	Sta L	Sta R	Elev
218	225	80	521.23	781.48	55	287.9	294.9	80

CROSS SECTION OUTPUT Profile #100-yr

E.G. Elev (ft)	41.45	Element	Left OB	Channel
Right OB				
Vel Head (ft)	0.53	Wt. n-Val.	0.055	0.016
0.075				
W.S. Elev (ft)	40.92	Reach Len. (ft)	53.25	54.23
54.90				
Crit W.S. (ft)	37.40	Flow Area (sq ft)	351.05	752.69
1086.97				
E.G. Slope (ft/ft)	0.000374	Area (sq ft)	351.05	752.69
1916.32				
Q Total (cfs)	6700.00	Flow (cfs)	490.45	5052.44
1157.11				
Top Width (ft)	474.91	Top Width (ft)	79.46	72.29
323.16				
Vel Total (ft/s)	3.06	Avg. Vel. (ft/s)	1.40	6.71
1.06				
Max Chl Dpth (ft)	12.92	Hydr. Depth (ft)	4.42	10.41
4.80				
Conv. Total (cfs)	346365.7	Conv. (cfs)	25354.7	261192.9
59818.1				
Length Wtd. (ft)	54.29	Wetted Per. (ft)	80.31	104.21
234.80				
Min Ch El (ft)	30.00	Shear (lb/sq ft)	0.10	0.17
0.11				
Alpha	3.67	Stream Power (lb/ft s)	0.14	1.13
0.12				
Frctn Loss (ft)	0.02	Cum Volume (acre-ft)	25.51	34.92
110.81				
C & E Loss (ft)	0.03	Cum SA (acres)	6.28	4.36
16.33				

Warning: Divided flow computed for this cross-section.
Note: Multiple critical depths were found at this location. The critical depth with the lowest, valid,
water surface was used.

Profile #100-yr

Percent Conv	Pos Hydr Depth(ft)	Velocity (ft/s)	Left Sta (ft)	Right Sta (ft)	Flow (cfs)	Area (sq ft)	W.P. (ft)
1	LOB		125.17	146.03	39.90	43.39	17.73
0.60	2.57	0.92					
2	LOB		146.03	166.89	150.18	102.56	20.86
2.24	4.92	1.46					
3	LOB		166.89	187.75	150.18	102.56	20.86
2.24	4.92	1.46					
4	LOB		187.75	208.61	150.18	102.56	20.86
2.24	4.92	1.46					
5	Chan		208.61	216.98	363.17	69.63	10.47
5.42	8.32	5.22					
6	Chan		216.98	225.35	16.49	14.98	23.20
0.25	10.92	1.10					
7	Chan		225.35	233.73	663.17	91.39	8.37
9.90	10.92	7.26					
8	Chan		233.73	242.10	663.17	91.39	8.37
9.90	10.92	7.26					
9	Chan		242.10	250.47	663.17	91.39	8.37
9.90	10.92	7.26					
10	Chan		250.47	258.84	663.17	91.39	8.37
9.90	10.92	7.26					
11	Chan		258.84	267.21	663.17	91.39	8.37
9.90	10.92	7.26					
12	Chan		267.21	275.59	663.17	91.39	8.37
9.90	10.92	7.26					
13	Chan		275.59	283.96	600.66	87.76	8.78
8.97	10.48	6.84					
14	Chan		283.96	292.33	93.08	31.97	11.53
1.39	8.11	2.91					
15	ROB		292.33	368.63	226.87	267.18	78.63
3.39	3.62	0.85					
16	ROB		368.63	444.93	456.51	401.62	76.31
6.81	5.26	1.14					
17	ROB		444.93	521.23	473.73	418.17	79.86
7.07	5.48	1.13					
18	ROB		521.23	599.64			
19	ROB		599.64	678.04			
20	ROB		678.04	756.45			
21	ROB		756.45	834.86	0.00	527.56	62.93
0.00	9.88	0.00					
22	ROB		834.86	913.27	0.00	301.79	45.31
0.00	6.94	0.00					

Warning: Divided flow computed for this cross-section.
Note: Multiple critical depths were found at this location. The critical depth with the lowest, valid,
water surface was used.

CROSS SECTION

RIVER: CarrollCanyon
REACH: Lower RS: 2195

INPUT
Description: SB and NB Interstate 5 Bridge Piers
Station Elevation Data num= 136

Sta	Elev	Sta	Elev	Sta	Elev	Sta	Elev	Sta	Elev
0	94.89	.67	94.91	17.25	95.49	24.15	95.25	27.37	94.85
32.83	94.09	33.37	94	35.82	92.36	36.34	92	39.15	90.11
39.32	90	42.3	88	42.56	87.82	45.28	86	45.7	85.72
48.25	84	48.78	83.65	51.24	82	51.84	81.59	54.21	80
54.89	79.55	57.19	78	60.09	76.06	60.18	76	60.41	75.84
63.15	74	64.8	72.9	66.13	72	67.83	70.86	69.12	70
71.91	68.12	72.24	67.9	77.35	64.43	77.97	64	80.54	62.24
80.9	62	83.81	60.01	83.91	59.94	87.35	57.59	89.67	56
91.21	54.94	92.6	54	95.22	52.2	95.53	52	95.75	51.85
98.49	50	100.53	48.63	101.61	48	102.5	47.51	105.17	46
106.6	45.24	108.97	44	110.46	44	115.92	42.75	118	42.8
119.79	42.43	122.76	42.53	128.51	40.98	130.74	40	133.83	38.37
134.44	38	134.73	37.84	136.01	37.18	138.03	36	202.72	36
204.21	34.8	205.2	34	207.11	32.61	207.96	32	209.3	31.11
210.99	30	275.02	30	277.82	31.4	279.03	32	282.95	34
285.24	34.7	290.2	36	313.81	38	337.19	38	362.5	34
478.67	34	486.37	34.98	490.63	35.43	496.65	36	514.6	36
519.29	36.1	519.88	36.11	533.82	36.38	543.46	36.63	550.12	36.84
576.04	37.79	578.17	37.86	579.2	37.91	581.58	38	657.25	38
659.74	36.63	660.87	36	662.32	35.54	666.12	34.35	667.2	34
803.58	32	807.11	31.2	812.93	30	817.93	28.19	818.55	28
824.74	28	826.02	28.52	829.68	30	835.84	31	842.21	32
851.69	33.24	857.41	34	863.56	35.97	863.64	36	863.77	36.05
869.63	38	872.68	39.15	874.89	40	875.75	40.37	879.59	42
881.65	42.89	884.2	44	885.53	44.59	888.69	46	891.3	47.25
892.93	48	894.35	48.69	897.02	50	900.9	51.93	900.98	51.98
901.03	52	903.57	52.06	979.74	54	1020.96	54	1050.32	52.61
1061.46	52								

Manning's n Values num= 3

Sta	n Val	Sta	n Val	Sta	n Val
0	.055	202.72	.016	290.2	.075

Bank Sta: Left	Right	Lengths: Left	Channel	Right	Coeff Contr.	Expan.
202.72	290.2	66.97	66.05	64.73	.1	.3

Ineffective Flow num= 1

Sta L	Sta R	Elev	Permanent
515.27	1061.46	50	F

Blocked Obstructions num= 6

Sta L	Sta R	Elev	Sta L	Sta R	Elev	Sta L	Sta R	Elev
282.5	289	80	515.27	774.92	55	74	81	80
205.7	212.7	80	349.6	356.6	80	116	123	75

CROSS SECTION OUTPUT Profile #100-yr

E.G. Elev (ft)	41.40	Element	Left OB	Channel
Right OB				
Vel Head (ft)	0.44	Wt. n-Val.	0.055	0.016
0.075				
W.S. Elev (ft)	40.96	Reach Len. (ft)	66.97	66.05
64.73				
Crit W.S. (ft)	37.01	Flow Area (sq ft)	343.30	775.56
1256.98				
E.G. Slope (ft/ft)	0.000319	Area (sq ft)	343.30	775.56
2125.81				
Q Total (cfs)	6700.00	Flow (cfs)	455.35	4836.21
1408.44				
Top Width (ft)	468.44	Top Width (ft)	74.17	73.98

320.29				
Vel Total (ft/s)	2.82	Avg. Vel. (ft/s)	1.33	6.24
1.12				
Max Chl Dpth (ft)	12.96	Hydr. Depth (ft)	4.63	10.48
5.76				
Conv. Total (cfs)	374901.8	Conv. (cfs)	25479.4	270612.3
78810.1				
Length Wtd. (ft)	65.84	Wetted Per. (ft)	75.40	106.49
234.39				
Min Ch El (ft)	30.00	Shear (lb/sq ft)	0.09	0.15
0.11				
Alpha	3.58	Stream Power (lb/ft s)	0.12	0.91
0.12				
Frctn Loss (ft)	0.02	Cum Volume (acre-ft)	25.09	33.97
108.26				
C & E Loss (ft)	0.00	Cum SA (acres)	6.19	4.27
15.93				

Warning: Divided flow computed for this cross-section.
Note: Multiple critical depths were found at this location. The critical depth with the lowest, valid,
water surface was used.

Profile #100-yr

Percent Conv	Pos Hydr Depth(ft)	Velocity (ft/s)	Left Sta (ft)	Right Sta (ft)	Flow (cfs)	Area (sq ft)	W.P. (ft)
1	LOB		121.63	141.90	39.61	41.58	14.58
0.59	3.11	0.95					
2	LOB		141.90	162.18	138.58	100.57	20.27
2.07	4.96	1.38					
3	LOB		162.18	182.45	138.58	100.57	20.27
2.07	4.96	1.38					
4	LOB		182.45	202.72	138.58	100.57	20.27
2.07	4.96	1.38					
5	Chan		202.72	211.47	35.70	18.35	11.13
0.53	6.16	1.94					
6	Chan		211.47	220.22	310.97	82.38	18.48
4.64	10.96	3.77					
7	Chan		220.22	228.96	659.29	95.89	8.75
9.84	10.96	6.88					
8	Chan		228.96	237.71	659.29	95.89	8.75
9.84	10.96	6.88					
9	Chan		237.71	246.46	659.29	95.89	8.75
9.84	10.96	6.88					
10	Chan		246.46	255.21	659.29	95.89	8.75
9.84	10.96	6.88					
11	Chan		255.21	263.96	659.28	95.89	8.75
9.84	10.96	6.88					
12	Chan		263.96	272.70	659.29	95.89	8.75
9.84	10.96	6.88					
13	Chan		272.70	281.45	515.19	85.53	9.52
7.69	9.78	6.02					
14	Chan		281.45	290.20	18.63	13.96	14.88
0.28	6.21	1.34					
15	ROB		290.20	365.22	212.86	268.95	79.29
3.18	3.95	0.79					
16	ROB		365.22	440.25	667.49	522.25	75.02

9.96	6.96	1.28				
17	ROB	440.25	515.27	528.09	465.78	80.08
7.88	6.21	1.13				
18	ROB	515.27	593.30			
19	ROB	593.30	671.32			
20	ROB	671.32	749.35			
21	ROB	749.35	827.38	0.00	524.48	61.77
0.00	10.00	0.00				
22	ROB	827.38	905.41	0.00	344.35	51.44
0.00	6.92	0.00				

Warning: Divided flow computed for this cross-section.
Note: Multiple critical depths were found at this location. The critical depth with the lowest, valid,
water surface was used.

CROSS SECTION

RIVER: CarrollCanyon
REACH: Lower RS: 2129

INPUT
Description: SB and NB Interstate 5 Bridge Piers
Station Elevation Data num= 137

Sta	Elev	Sta	Elev	Sta	Elev	Sta	Elev	Sta	Elev
0	72.94	1.61	73.06	3.89	73.2	6.44	73.35	9.56	73.38
12.97	73.29	15.67	73.33	19.34	73.17	22.92	73.11	26.1	73.05
31.11	72.85	33.48	72.85	35.92	72.93	39.49	72.71	41.24	72.61
43.62	72.44	44.1	72.37	45.16	72	45.56	72	46.02	71.89
46.37	71.8	47.31	71.57	50.25	70.93	52.83	70.17	53.38	70
58.17	68.75	59.57	68.43	61.03	68	61.82	68	80.44	66.8
86.66	66	87.9	65.16	89.68	64	91.09	63.09	92.85	62
96.05	60	97.98	58.8	99.26	58	102.47	56	103.27	55.5
107.72	52.73	108.88	52	111.1	50.62	112.09	50	113.38	49.2
115.33	48	117.39	46.78	118.7	46	120.76	44.82	122.21	44
125.82	42.02	125.89	41.98	129.53	40	131.38	39.01	133.25	38
136.98	36	202.29	36	204.51	34.45	205.15	34	205.43	33.82
208.18	32	211.26	30	275.2	30	276.68	30.77	278.98	32
281.56	33.42	282.6	34	289.08	34.95	293.81	35.54	297.42	36
298.15	36	309.88	37.31	313.93	37.78	318.34	37.82	344.28	36
344.59	35.95	358.23	34	387.64	34	389.33	33.92	389.77	34
481.56	34	493.37	34.63	497.69	34.87	498.82	34.93	505.79	35.36
526.04	36	551.32	36	565.43	36.89	584.63	37.61	588.64	37.77
595.13	38	658.43	38	660.03	36.75	661.2	36	664.62	35.04
668.77	34	675.75	33.78	677.81	33.76	702.37	33.12	777.11	32
802.04	32	804.81	31.48	812.52	30	815.04	28	825.38	28
825.64	28.13	825.91	28.26	829.44	30	841.86	32	855.43	34
859.94	35.07	863.82	36	867.7	37.15	870.51	38	876.87	40
877.29	40.15	881.34	41.7	882.13	42	882.35	42.11	887.2	44.58
889.92	46	892.26	47.2	893.83	48	896.58	49.39	897.8	50
898.55	50.37	901.8	52	917.88	52	959.57	52.84	972.62	52.85
977.2	52.97	980.18	52.99	981.15	53.02	985.09	52.99	1037.38	52.73
1058.87	52	1059.17	51.51						

Manning's n Values num= 3

Sta	n Val	Sta	n Val	Sta	n Val
0	.055	202.29	.016	297.42	.075

Bank Sta: Left	Right	Lengths: Left	Channel	Right	Coeff Contr.	Expan.
202.29	297.42	43.54	43.24	43.23	.1	.3

Ineffective Flow num= 1

Sta L	Sta R	Elev	Permanent
514.86	1059.17	50	F

Blocked Obstructions num= 7

Sta L	Sta R	Elev	Sta L	Sta R	Elev	Sta L	Sta R	Elev
73	80	80	349	356	80	514.86	774.1	50
131.3	138.3	80	282	289	80	442.9	449.9	80
205.3	212.3	75						

CROSS SECTION OUTPUT Profile #100-yr

E.G. Elev (ft)	41.38	Element	Left OB	Channel
Right OB				
Vel Head (ft)	0.43	Wt. n-Val.	0.055	0.016
0.075				
W.S. Elev (ft)	40.95	Reach Len. (ft)	43.54	43.24
43.23				
Crit W.S. (ft)	36.92	Flow Area (sq ft)	320.03	815.05
1236.81				
E.G. Slope (ft/ft)	0.000311	Area (sq ft)	320.03	815.05
2124.93				
Q Total (cfs)	6700.00	Flow (cfs)	418.04	4952.10
1329.85				
Top Width (ft)	457.35	Top Width (ft)	67.50	81.13
308.72				
Vel Total (ft/s)	2.82	Avg. Vel. (ft/s)	1.31	6.08
1.08				
Max Chl Dpth (ft)	12.95	Hydr. Depth (ft)	4.74	10.05
6.08				
Conv. Total (cfs)	379920.7	Conv. (cfs)	23705.0	280807.0
75408.8				
Length Wtd. (ft)	43.26	Wetted Per. (ft)	74.83	114.07
235.19				
Min Ch El (ft)	30.00	Shear (lb/sq ft)	0.08	0.14
0.10				
Alpha	3.46	Stream Power (lb/ft s)	0.11	0.84
0.11				
Frctn Loss (ft)	0.01	Cum Volume (acre-ft)	24.58	32.76
105.11				
C & E Loss (ft)	0.02	Cum SA (acres)	6.08	4.15
15.46				

Warning: Divided flow computed for this cross-section.
Note: Multiple critical depths were found at this location. The critical depth with the lowest, valid,
water surface was used.

Profile #100-yr

Percent Conv	Pos Hydr Depth(ft)	Velocity (ft/s)	Left Sta (ft)	Right Sta (ft)	Flow (cfs)	Area (sq ft)	W.P. (ft)
1	LOB		121.37	141.60	11.45	19.69	14.14
0.17	2.89	0.58					
2	LOB		141.60	161.83	135.53	100.11	20.23

2.02	4.95	1.35					
3	LOB		161.83	182.06	135.53	100.11	20.23
2.02	4.95	1.35					
4	LOB		182.06	202.29	135.53	100.11	20.23
2.02	4.95	1.35					
5	Chan		202.29	211.80	36.04	18.06	10.71
0.54	6.00	2.00					
6	Chan		211.80	221.32	403.70	98.72	19.96
6.03	10.95	4.09					
7	Chan		221.32	230.83	723.66	104.16	9.51
10.80	10.95	6.95					
8	Chan		230.83	240.34	723.66	104.16	9.51
10.80	10.95	6.95					
9	Chan		240.34	249.86	723.66	104.16	9.51
10.80	10.95	6.95					
10	Chan		249.86	259.37	723.66	104.16	9.51
10.80	10.95	6.95					
11	Chan		259.37	268.88	723.66	104.16	9.51
10.80	10.95	6.95					
12	Chan		268.88	278.39	673.37	101.48	9.93
10.05	10.67	6.64					
13	Chan		278.39	287.91	79.92	29.85	11.40
1.19	8.28	2.68					
14	Chan		287.91	297.42	140.75	46.16	14.50
2.10	5.48	3.05					
15	ROB		297.42	369.90	265.32	307.64	77.98
3.96	4.70	0.86					
16	ROB		369.90	442.38	633.64	503.75	72.49
9.46	6.95	1.26					
17	ROB		442.38	514.86	430.90	425.43	84.72
6.43	6.50	1.01					
18	ROB		514.86	592.62			
19	ROB		592.62	670.38			
20	ROB		670.38	748.14			
21	ROB		748.14	825.89	0.00	524.78	61.64
0.00	10.13	0.00					
22	ROB		825.89	903.65	0.00	363.34	55.21
0.00	6.79	0.00					

Warning: Divided flow computed for this cross-section.
Note: Multiple critical depths were found at this location. The critical depth with the lowest, valid,
water surface was used.

CROSS SECTION

RIVER: CarrollCanyon
REACH: Lower RS: 2086

INPUT
Description: FEMA CROSS SECTION - AF (SB and NB I-5 Bridge Piers)
Station Elevation Data num= 125

Sta	Elev	Sta	Elev	Sta	Elev	Sta	Elev	Sta	Elev
0	66.94	.78	66.95	7.71	67	10.04	67.02	13.7	67.04
18.95	67.08	20.31	67.08	21.44	67.09	22.38	67.09	23.11	67.1
26.21	67.12	30.34	67.12	49.86	66	79.47	66	81.63	64.75
82.81	64	84.81	62.74	85.97	62	86.96	61.34	88.91	60

89.85	59.37	91.95	58	95.11	56	98.3	54	101.57	52
103.69	50.77	104.99	50	107.86	48.39	108.56	48	110.9	46.75
112.28	46	123.47	40	125.16	39.09	127.2	38	130.93	36
196.45	36	196.93	35.7	199.57	34	202.52	32.12	202.7	32
205.6	30.21	205.93	30	269.66	30	276.91	34	294.7	36
339.14	36	340.45	35.73	347.92	34	370.03	32.15	371.88	32
375.47	32	384.9	33.89	385.21	33.96	385.46	34	483.3	34
483.39	33.98	500.08	30.49	502.4	30	542.61	30	548.46	28.87
550.1	28.68	551.85	28.69	552.94	28.57	554.11	28.59	554.99	28.6
556.23	28.67	557.04	28.7	559.16	28.86	564.34	30	572	30
574.47	30.37	574.93	30.38	575.17	30.41	576.91	30.5	577.17	30.57
583.12	32	608.27	32	609.01	32.41	611.78	32.64	614.93	33.27
621.22	34	624.81	34	630.01	35.12	634.01	35.12	637.72	35.6
642.62	35.55	652.25	35.43	664.99	34	705.74	32.63	728.12	32.05
728.84	32.03	729.14	32.02	730.62	32	795.71	32	798.86	31.41
803.23	30.56	806.15	30	807.82	28.98	809.46	28	820.29	28
822.38	29.12	823.97	30	835.79	32	843.96	33.33	848.26	34
851.44	34.8	856.08	36	861.38	37.76	862.09	38	863.14	38.35
873.06	41.69	873.96	42	874.62	42.23	879.8	44	883.22	45.31
884.91	46	886.72	46.86	889.18	48	890.3	48.55	893.15	50
901.69	50.74	909.07	50.76	922.42	51.39	954.86	52	1049.29	52

Manning's n Values num= 3

Sta	n Val	Sta	n Val	Sta	n Val
0	.055	196.45	.016	294.7	.075

Bank Sta: Left	Right	Lengths: Left	Channel	Right	Coeff Contr.	Expan.
196.45	294.7	31.68	31.64	31.61	.1	.3

Ineffective Flow num= 1

Sta L	Sta R	Elev	Permanent
509.13	1049.29	50	F

Blocked Obstructions num= 6

Sta L	Sta R	Elev	Sta L	Sta R	Elev	Sta L	Sta R	Elev
125	132	70	509.13	767.99	50	66.6	73.6	70
342.2	349.2	70	429.6	436.6	70	198.9	205.9	65

CROSS SECTION OUTPUT Profile #100-yr

E.G. Elev (ft)	41.35	Element	Left OB	Channel
Right OB				
Vel Head (ft)	0.36	Wt. n-Val.	0.055	0.016
0.075				
W.S. Elev (ft)	40.98	Reach Len. (ft)	31.68	31.64
31.61				
Crit W.S. (ft)	36.50	Flow Area (sq ft)	324.26	886.06
1412.01				
E.G. Slope (ft/ft)	0.000225	Area (sq ft)	324.26	886.06
2291.17				
Q Total (cfs)	6700.00	Flow (cfs)	362.46	4951.61
1385.93				
Top Width (ft)	462.47	Top Width (ft)	67.82	91.25
303.40				
Vel Total (ft/s)	2.55	Avg. Vel. (ft/s)	1.12	5.59
0.98				
Max Chl Dpth (ft)	12.98	Hydr. Depth (ft)	4.78	9.71
7.04				
Conv. Total (cfs)	446402.8	Conv. (cfs)	24149.4	329912.5
92340.8				
Length Wtd. (ft)	31.64	Wetted Per. (ft)	75.06	110.37
238.90				
Min Ch El (ft)	30.00	Shear (lb/sq ft)	0.06	0.11
0.08				

Alpha	3.58	Stream Power (lb/ft s)	0.07	0.63
0.08				
Frctn Loss (ft)	0.01	Cum Volume (acre-ft)	24.25	31.92
102.91				
C & E Loss (ft)	0.00	Cum SA (acres)	6.01	4.06
15.16				

Warning: Divided flow computed for this cross-section.
Note: Multiple critical depths were found at this location. The critical depth with the lowest, valid,
water surface was used.

Profile #100-yr

Conv	Pos Hydr	Left Sta (ft)	Right Sta (ft)	Flow (cfs)	Area (sq ft)	W.P. (ft)	Percent Depth(ft)	Velocity (ft/s)
1	LOB	117.87	137.52	18.73	30.53	16.13	0.28	3.44	0.61
2	LOB	137.52	157.16	114.57	97.91	19.65	1.71	4.98	1.17
3	LOB	157.16	176.81	114.57	97.91	19.64	1.71	4.98	1.17
4	LOB	176.81	196.45	114.57	97.91	19.65	1.71	4.98	1.17
5	Chan	196.45	206.28	20.37	18.24	20.81	0.30	6.46	1.12
6	Chan	206.28	216.10	650.06	107.92	9.83	9.70	10.98	6.02
7	Chan	216.10	225.93	650.06	107.92	9.82	9.70	10.98	6.02
8	Chan	225.93	235.75	650.06	107.92	9.82	9.70	10.98	6.02
9	Chan	235.75	245.58	650.06	107.92	9.83	9.70	10.98	6.02
10	Chan	245.58	255.40	650.06	107.92	9.82	9.70	10.98	6.02
11	Chan	255.40	265.23	650.06	107.92	9.82	9.70	10.98	6.02
12	Chan	265.23	275.05	543.71	99.90	10.59	8.12	10.17	5.44
13	Chan	275.05	284.88	280.53	66.01	10.14	4.19	6.72	4.25
14	Chan	284.88	294.70	206.65	54.39	9.89	3.08	5.54	3.80
15	ROB	294.70	366.18	312.14	370.19	77.36	4.66	5.74	0.84
16	ROB	366.18	437.65	471.87	477.53	78.66	7.04	7.41	0.99
17	ROB	437.65	509.13	601.92	564.29	82.88	8.98	7.89	1.07
18	ROB	509.13	586.30						
19	ROB	586.30	663.46						
20	ROB	663.46	740.63						
21	ROB	740.63	817.79	0.00	501.10	59.53	0.00	10.06	0.00

22	ROB	817.79	894.96	0.00	378.06	55.07
0.00	7.11	0.00				

Warning: Divided flow computed for this cross-section.
Note: Multiple critical depths were found at this location. The critical depth with the lowest, valid,
water surface was used.

CROSS SECTION

RIVER: CarrollCanyon
REACH: Lower RS: 2054

INPUT
Description: SB and NB Interstate 5 Bridge Piers
Station Elevation Data num= 251

Sta	Elev	Sta	Elev	Sta	Elev	Sta	Elev	Sta	Elev
0	63.12	1.56	62.48	2.77	62	7.67	60.81	11.55	60
12.91	59.86	18.42	59.28	27.31	58.39	29.19	58.22	30.76	58
36.13	57.54	53.98	56.44	58.84	56.27	75.46	56.21	76.84	56.21
82.86	56.17	83.44	56.17	88.81	56.11	89.05	56.12	89.52	56.15
95.23	56.24	96.78	56.34	102.62	56.61	106.89	56.9	111.22	57.11
114.8	57.26	120.27	57.44	123	57.51	131.2	57.62	138.6	57.78
146.38	58	149.31	58.09	149.72	58.1	160.43	58.48	162.45	58.54
163.99	58.56	170.22	58.75	176.32	58	181.89	58	183.94	58.68
184.03	58.71	184.15	58.73	185.47	59.12	188.22	59.14	189.46	59.35
190.99	59.43	197.91	59.47	201	59.5	203.67	59.48	211.11	59.53
213.22	59.54	215.08	59.53	224.13	59.65	226.15	59.65	233.49	59.84
233.65	59.84	233.75	59.85	239.22	60.1	239.82	60.13	245.95	60.5
248.74	60.65	254.04	61	258.94	61.29	261.97	61.5	267.75	61.91
268.12	61.93	269.7	62	274.06	62.21	274.46	62.22	279.65	62.32
280.23	62.33	280.8	62.33	285.81	62.26	286.2	62.26	289.99	62.23
290.27	62.23	290.49	62.24	292.84	62.24	293.02	62.25	293.16	62.25
294.08	62.29	294.28	62.3	295.04	62.33	295.62	62.35	296.04	62.37
296.57	62.39	297.21	62.42	298.01	62.45	302.09	62.62	305.9	62.77
307.98	62.84	310.71	62.96	312.95	63.03	315.84	63.15	318.02	63.22
320.78	63.32	324.66	63.45	325.66	63.48	327.85	63.55	330.42	63.64
332.08	63.69	332.79	63.7	335.43	63.73	339.97	63.73	344.58	63.7
345.82	63.7	351.18	63.67	352.34	63.67	358.41	63.64	359.43	63.64
366.15	63.61	367	63.61	367.93	63.59	373.16	63.5	374.38	63.44
377.91	63.31	379.7	63.16	381.66	63.01	383.52	62.86	384.58	62.71
386.05	62.62	388.59	62	388.8	62	390.01	61.37	391.88	60.41
392.69	60	394.89	58.87	396.61	58	398.12	57.23	404.49	54
404.74	53.88	405.21	53.66	405.76	53.36	406.09	53.17	408.21	52
415.41	48	416.91	47.16	419	46	421.01	44.88	422.6	44
424.13	43.15	426.19	42	427.56	41.25	429.86	40	431.92	39.02
433.96	38	435.61	37.18	438.08	36	507.03	34	509.38	32.5
510.17	32	511.1	31.4	513.26	30	577.24	30	578.49	30.69
580.84	32	583.55	33.56	584.33	34	589.34	34.44	594.44	34.79
595.75	34.89	611.08	36	643.97	36	652.45	34	671.47	32.27
674.26	32	684.79	32	691.91	33.17	696.67	34	805.31	34
807.94	33.54	808.9	33.42	813.47	33.1	814.69	32.95	818.63	33.09
820.31	33.02	822.85	33.06	829.93	33.42	831.91	33.53	839.41	33.93
839.62	33.94	839.74	33.95	840.61	34	844.04	34.16	844.38	34.19
845.55	34.28	845.9	34.29	847.99	34.37	850.85	34.42	851.92	34.45
855.55	34.5	857.5	34.54	861.2	34.59	868.21	34.71	871.81	34.78
875.36	34.76	879.84	34.66	887.36	34.28	888.53	34.23	889.23	34.18
891.62	34	898.13	33.75	898.86	33.76	904.47	33.56	905.57	33.61
908.51	33.51	909.48	33.59	910.75	33.5	911.59	33.57	919.55	34
975.91	34	996.67	33.3	1029.2	32.29	1031.47	32.23	1032.79	32.2

1034.32	32.17	1041.23	32	1102.12	32	1113.25	30.09	1113.77	30
1114.08	29.83	1117.28	28.06	1117.4	28	1128.21	28	1129.13	28.51
1131.77	30	1143.56	32	1149.77	32.97	1152.71	33.35	1157.61	34
1161.35	34.93	1165.45	36	1168.17	37.18	1170.23	38	1172.04	38.61
1176.09	40	1179.91	41.71	1180.68	42	1181.25	42.21	1189.54	45.37
1191.41	46	1192.62	46.49	1197.01	48	1199.83	49.21	1201.47	50
1206.82	50.25	1223.4	50.57	1283.44	52	1341.42	52	1356.77	50.73
1361.51	50								

Manning's n Values num= 3

Sta	n Val	Sta	n Val	Sta	n Val
0	.055	507.03	.016	584.33	.075

Bank Sta: Left	Right	Lengths: Left	Channel	Right	Coeff Contr.	Expan.
507.03	584.33	34.4	34.07	34.71	.1	.3

Ineffective Flow num= 1

Sta L	Sta R	Elev	Permanent
817.1	1361.51	50	F

Blocked Obstructions num= 5

Sta L	Sta R	Elev	Sta L	Sta R	Elev	Sta L	Sta R	Elev
740	747	70	433	440	70	514.2	521.2	70
833.7	840.7	70	581.1	588.1	65			

CROSS SECTION OUTPUT Profile #100-yr

E.G. Elev (ft)	41.34	Element	Left OB	Channel
Right OB				
Vel Head (ft)	0.38	Wt. n-Val.	0.055	0.016
0.075				
W.S. Elev (ft)	40.96	Reach Len. (ft)	34.40	34.07
34.71				
Crit W.S. (ft)	36.91	Flow Area (sq ft)	407.61	718.47
1506.94				
E.G. Slope (ft/ft)	0.000304	Area (sq ft)	407.61	718.47
4276.89				
Q Total (cfs)	6700.00	Flow (cfs)	596.65	4346.10
1757.25				
Top Width (ft)	715.14	Top Width (ft)	71.94	67.07
576.14				
Vel Total (ft/s)	2.54	Avg. Vel. (ft/s)	1.46	6.05
1.17				
Max Chl Dpth (ft)	12.96	Hydr. Depth (ft)	5.67	10.71
6.79				
Conv. Total (cfs)	384196.2	Conv. (cfs)	34213.7	249217.3
100765.3				
Length Wtd. (ft)	34.26	Wetted Per. (ft)	80.05	99.53
243.17				
Min Ch El (ft)	30.00	Shear (lb/sq ft)	0.10	0.14
0.12				
Alpha	3.75	Stream Power (lb/ft s)	0.14	0.83
0.14				
Frctn Loss (ft)	0.01	Cum Volume (acre-ft)	23.99	31.33
100.53				
C & E Loss (ft)	0.00	Cum SA (acres)	5.96	4.01
14.84				

Warning: Divided flow computed for this cross-section.
Note: Multiple critical depths were found at this location. The critical depth with the lowest, valid,
water surface was used.

Profile #100-yr

Percent Conv	Pos Hydr Depth(ft)	Velocity (ft/s)	Left Sta (ft)	Right Sta (ft)	Flow (cfs)	Area (sq ft)	W.P. (ft)
1	LOB		405.62	456.33	92.97	91.99	29.33
1.39	4.33	1.01					
2	LOB		456.33	507.03	503.68	315.63	50.72
7.52	6.22	1.60					
3	Chan		507.03	514.76	204.39	66.08	19.30
3.05	9.22	3.09					
4	Chan		514.76	522.49	21.19	14.14	12.25
0.32	10.96	1.50					
5	Chan		522.49	530.22	569.33	84.72	7.73
8.50	10.96	6.72					
6	Chan		530.22	537.95	569.32	84.72	7.73
8.50	10.96	6.72					
7	Chan		537.95	545.68	569.32	84.72	7.73
8.50	10.96	6.72					
8	Chan		545.68	553.41	569.33	84.72	7.73
8.50	10.96	6.72					
9	Chan		553.41	561.14	569.32	84.72	7.73
8.50	10.96	6.72					
10	Chan		561.14	568.87	569.32	84.72	7.73
8.50	10.96	6.72					
11	Chan		568.87	576.60	569.33	84.72	7.73
8.50	10.96	6.72					
12	Chan		576.60	584.33	135.26	45.19	13.87
2.02	10.04	2.99					
13	ROB		584.33	661.92	423.94	416.76	80.78
6.33	5.65	1.02					
14	ROB		661.92	739.51	777.43	590.74	77.81
11.60	7.61	1.32					
15	ROB		739.51	817.10	555.87	499.43	84.58
8.30	7.08	1.11					
16	ROB		817.10	894.87	0.00	480.28	85.12
0.00	6.79	0.00					
17	ROB		894.87	972.65	0.00	548.89	77.80
0.00	7.06	0.00					
18	ROB		972.65	1050.42	0.00	628.48	77.80
0.00	8.08	0.00					
19	ROB		1050.42	1128.19	0.00	762.58	78.46
0.00	9.81	0.00					
20	ROB		1128.19	1205.96	0.00	349.72	52.07
0.00	6.99	0.00					

Warning: Divided flow computed for this cross-section.
Note: Multiple critical depths were found at this location. The critical depth with the lowest, valid,
water surface was used.

CROSS SECTION

RIVER: CarrollCanyon
REACH: Lower RS: 2020

INPUT

Description: SB and NB Interstate 5 Bridge Piers

Station Elevation Data num= 296

Sta	Elev	Sta	Elev	Sta	Elev	Sta	Elev	Sta	Elev
0	94.52	.18	94.45	3.28	93.11	10.07	90.19	10.4	90.05
10.51	90	11.01	89.79	17.54	86.97	18.94	86.4	19.93	86
26.87	83.16	29.9	82	30.23	81.87	32.61	80.96	35.85	79.71
38.12	78.84	40.28	78	41.27	77.62	42.39	77.18	45.32	76.05
45.42	76.01	49.82	74.31	50.6	74	52.88	73.12	55.76	72
56.58	71.68	57.51	71.32	59.31	70.62	60.92	70	63.29	69.08
65.2	68.33	66.05	68	68.42	67.07	71.04	66.05	71.16	66
75.5	64.3	76.25	64	80.08	62.48	81.25	62	85.36	60.5
86.68	60	86.94	59.91	87.34	59.78	92.76	58	95.65	57.68
99.12	56.96	102.97	56.33	104.11	56	117.5	54.72	121.12	54.41
124.38	54	134.7	52.91	142.91	52.28	143.79	52.28	144.56	52.2
145.04	52.21	145.44	52.23	146.73	52.22	147.8	52.22	148.6	52.24
149.67	52.27	151.89	52.35	154.22	52.39	157.27	52.43	160.22	52.48
165.61	52.55	172.71	52.62	178.34	52.7	186.83	52.78	191.68	52.85
198.44	52.87	201.25	52.92	201.72	52.94	207.46	52.89	208.84	52.88
211.08	52.84	216.85	52.71	219.43	52.66	224.04	52.55	225.43	52.51
228.81	52	233.64	52	237.79	51.37	238.75	51.45	239.03	51.47
241.38	51.53	241.79	51.56	242.27	51.59	246.32	51.62	246.88	51.64
247.5	51.65	253.26	51.66	253.97	51.67	261.55	51.74	270.1	51.87
270.27	51.87	270.71	51.88	279.8	52.06	280	52.07	280.25	52.08
287.15	52.27	288.17	52.34	292.28	52.5	294.04	52.63	297.24	52.79
298.28	52.82	299.08	52.81	300.89	52.87	303.13	52.89	304.6	52.87
308.22	52.92	310.29	52.92	312.96	52.95	321.23	53.07	328.06	53.13
330.51	53.13	333.66	53.12	335.36	53.09	338.03	53.05	340.4	53.02
345.89	52.93	355.41	52.79	358.46	52.75	359.94	52.72	361.7	52.71
362.37	52.71	363.07	52.73	363.72	52.74	365.49	52.8	366.15	52.82
366.97	52.82	367.8	52.78	368.42	52.79	369.27	52.72	373.01	52.72
374.54	52.75	378.7	52.82	381.55	52.88	391.36	53.12	395.57	53.16
400.74	53.22	409.8	53.16	425.97	52.77	428.32	52.71	432.41	52.25
433.17	52	434.24	51.44	436.93	50	439.3	48.71	440.62	48
442	47.24	446.76	44.66	448.28	44	450.05	43.28	454.02	42
454.43	41.87	454.56	41.84	462.29	39.57	465.11	38.75	466.69	38.2
467.24	38	467.77	37.8	472.79	36	479.22	34	542.28	34
542.81	33.65	543.88	32.97	545.38	32	546.05	31.57	547.17	30.83
548.44	30	612.66	30	615.76	31.8	616.11	32	616.72	32.36
619.54	34	648.27	36	677.96	36	678.35	35.89	685.54	34
688.26	33.69	701.95	32	720.97	32	738.82	33.9	739.4	33.96
739.86	34	788.31	34	815.56	34.57	817.7	34.75	825.07	35.41
831.87	36	838.81	37.15	841.31	37.33	842.35	37.42	845.9	38
848.41	38.81	854.41	40.76	856.98	41.53	858.74	42	860.92	42.63
862.58	43.1	864.18	43.44	866.85	44	869.6	44.21	869.81	44.22
871.72	44.38	872.55	44.46	872.74	44.48	872.82	44.5	877.68	44.89
879.66	45.04	881.96	45.2	884.49	45.39	890.67	45.83	891.21	45.87
895.98	46.21	896.84	46.28	900.37	46.56	901.45	46.66	903	46.8
905.74	47.03	911.88	47.68	913.03	47.79	913.44	47.83	919.97	47.38
922.54	47.05	925.52	46.49	927.51	46	930.79	45.31	935.53	44.03
935.59	44.02	935.65	44	942.72	42.3	944.03	42	948.47	41.26
954.34	40.25	955.23	40.1	959.97	39.21	964.9	38.17	965.64	38
974.22	36	979.3	35.11	992.89	35.36	1002.83	34.92	1011.68	34.57
1014.84	34.45	1025.03	34	1028.65	33.9	1039.62	33.64	1052.25	33.43
1054.85	33.36	1077.2	32.59	1080.14	32.5	1090.35	32	1136.27	32
1136.61	31.95	1137.34	31.83	1149.01	30	1150.88	29.02	1152.86	28
1163.39	28	1166.63	29.67	1167.35	30	1173.15	30.61	1185.58	32
1194.96	33.54	1197.87	34	1199.39	34.37	1205.76	36	1211.71	37.58
1212.95	38	1213.63	38.38	1217.5	40	1218.74	40.66	1221.24	42
1223.33	43.11	1228.71	45.99	1232.3	47.75	1232.74	48	1236.88	49.8
1237.29	50	1237.65	50	1296.44	51.29	1296.63	51.29	1321.06	51.7
1330.58	51.7	1339.54	51.78	1341.11	51.77	1352.99	51.5	1355.1	51.42
1365.86	51.35	1366.58	51.32	1367.4	51.28	1381.19	50.65	1387.38	50.5
1395.31	50								

Manning's n Values num= 3

Sta	n Val	Sta	n Val	Sta	n Val
0	.055	542.28	.016	619.54	.075

Bank Sta: Left	Right	Lengths: Left	Channel	Right	Coeff Contr.	Expan.
542.28	619.54	33.53	32.93	32.9	.1	.3

Ineffective Flow num= 1

Sta L	Sta R	Elev	Permanent
914.68	1395.31	50	F

Blocked Obstructions num= 5

Sta L	Sta R	Elev	Sta L	Sta R	Elev	Sta L	Sta R	Elev
549.5	556.5	80	774	781	80	468.7	475.7	80
863.1	870.1	80	616.7	623.7	75			

CROSS SECTION OUTPUT Profile #100-yr

E.G. Elev (ft)	41.33	Element	Left OB	Channel
Right OB				
Vel Head (ft)	0.38	Wt. n-Val.	0.055	0.016
0.075				
W.S. Elev (ft)	40.95	Reach Len. (ft)	33.53	32.93
32.90				
Crit W.S. (ft)	36.80	Flow Area (sq ft)	479.06	720.96
1415.09				
E.G. Slope (ft/ft)	0.000304	Area (sq ft)	479.06	720.96
3417.42				
Q Total (cfs)	6700.00	Flow (cfs)	753.70	4365.49
1580.81				
Top Width (ft)	638.42	Top Width (ft)	77.68	67.42
493.32				
Vel Total (ft/s)	2.56	Avg. Vel. (ft/s)	1.57	6.06
1.12				
Max Chl Dpth (ft)	12.95	Hydr. Depth (ft)	6.17	10.69
6.31				
Conv. Total (cfs)	384195.3	Conv. (cfs)	43219.0	250328.4
90647.8				
Length Wtd. (ft)	32.99	Wetted Per. (ft)	87.72	99.73
246.12				
Min Ch El (ft)	30.00	Shear (lb/sq ft)	0.10	0.14
0.11				
Alpha	3.73	Stream Power (lb/ft s)	0.16	0.83
0.12				
Frctn Loss (ft)	0.01	Cum Volume (acre-ft)	23.64	30.77
97.47				
C & E Loss (ft)	0.00	Cum SA (acres)	5.90	3.95
14.41				

Warning: Divided flow computed for this cross-section.
Note: Multiple critical depths were found at this location. The critical depth with the lowest, valid,
water surface was used.

Profile #100-yr

Percent Conv	Pos Hydr Depth(ft)	Velocity (ft/s)	Left Sta (ft)	Right Sta (ft)	Flow (cfs)	Area (sq ft)	W.P. (ft)

1	LOB	433.82	488.05	102.32	102.33	33.49	1.53	4.36
1.00								
2	LOB	488.05	542.28	651.38	376.74	54.23	9.72	6.95
1.73								
3	Chan	542.28	550.01	207.70	66.68	19.35	3.10	9.23
3.12								
4	Chan	550.01	557.73	19.71	13.49	12.18	0.29	10.95
1.46								
5	Chan	557.73	565.46	569.43	84.58	7.73	8.50	10.95
6.73								
6	Chan	565.46	573.18	569.43	84.58	7.73	8.50	10.95
6.73								
7	Chan	573.18	580.91	569.43	84.58	7.73	8.50	10.95
6.73								
8	Chan	580.91	588.64	569.42	84.58	7.73	8.50	10.95
6.73								
9	Chan	588.64	596.36	569.43	84.58	7.73	8.50	10.95
6.73								
10	Chan	596.36	604.09	569.43	84.58	7.73	8.50	10.95
6.73								
11	Chan	604.09	611.81	569.42	84.58	7.73	8.50	10.95
6.73								
12	Chan	611.81	619.54	152.09	48.75	14.12	2.27	9.98
3.12								
13	ROB	619.54	693.33	389.22	392.22	76.66	5.81	5.63
0.99								
14	ROB	693.33	767.11	769.78	582.10	73.96	11.49	7.89
1.32								
15	ROB	767.11	840.90	405.53	410.65	80.85	6.05	6.15
0.99								
16	ROB	840.90	914.68	16.28	30.13	14.66	0.24	2.13
0.54								
17	ROB	914.68	994.79	0.00	171.03	45.09	0.00	3.84
0.00								
18	ROB	994.79	1074.89	0.00	567.07	80.15	0.00	7.08
0.00								
19	ROB	1074.89	1155.00	0.00	743.97	80.76	0.00	9.29
0.00								
20	ROB	1155.00	1235.10	0.00	520.26	66.22	0.00	8.09
0.00								

Warning: Divided flow computed for this cross-section.
Note: Multiple critical depths were found at this location. The critical depth with the lowest, valid,
water surface was used.

CROSS SECTION

RIVER: CarrollCanyon
REACH: Lower RS: 1987

INPUT
Description: SB and NB Interstate 5 Bridge Piers
Station Elevation Data num= 272

Sta	Elev	Sta	Elev	Sta	Elev	Sta	Elev	Sta	Elev
0	91.2	3.11	90	3.43	89.87	3.85	89.71	8.25	88
9.44	87.54	14.05	85.71	14.72	85.44	16.13	84.89	17.43	84.37
22.13	82.48	22.73	82.24	23.31	82	26.93	80.54	28.28	80
28.64	79.85	44.16	73.5	45.57	72.93	47.83	72	52.7	70.04
52.79	70	56.31	68.7	58.46	68	60.01	67.5	65.49	65.78

72.98	63.4	77.42	62	79.84	61.23	83.66	60	83.83	59.95
88.68	58.44	90.12	58	93	57.15	97.01	56	98.13	55.7
104.17	54	105.72	53.87	108.43	53.46	115.89	52.52	118.23	52
125.98	51.17	135.49	50.1	135.96	50.05	136.38	50	143.65	50
158.12	48.14	158.53	48.14	160.47	48	172.57	48	178.5	47.56
178.97	47.53	185.86	47.48	186.73	47.47	190.74	47.41	191.71	47.39
192.74	47.35	198.01	46.57	198.84	46.5	200.31	46	203.39	46
207.43	44.96	210.22	45.48	210.91	45.61	213.42	46	215.79	46.15
220.18	46.39	221.53	46.46	227.8	46.48	229.52	46.52	238.87	46.31
240.04	46.29	247.45	46	265.07	45.4	269.23	45.32	273.26	45.2
273.81	45.21	275.12	45.21	275.41	45.2	276.03	45.21	278.2	45.27
281.85	45.27	294.24	45.71	295.41	45.75	296.54	45.75	304.74	45.84
305.65	45.82	313.63	45.67	316.34	45.53	334.89	44.54	335.8	44.48
336.12	44.45	340.2	44.16	340.3	44.16	340.38	44.15	340.68	44.15
342.14	44.03	342.53	44	342.92	44	344.55	43.95	345.47	43.97
347.59	43.97	348.7	43.95	353.77	43.88	354.28	43.87	362.88	43.74
364.4	43.71	375.53	43.54	377.22	43.51	378.2	43.49	378.35	43.49
378.83	43.47	379.49	43.44	386.2	43.06	387.54	42.99	388.74	42.92
389.7	42.86	395.24	42	395.48	42	401.49	40.54	403.48	40.06
403.73	40	403.86	39.96	404.07	39.9	406.86	39.17	415.69	36.82
418.24	36	426.4	34.9	438.21	34	490.68	34	493.75	32
494.14	31.74	496.79	30	560.51	30	563.08	31.43	564.1	32
567.25	33.67	567.9	34	590.73	35.66	595.17	36	626.18	36
632.28	34.27	633.19	34	637.64	33.25	645.52	32	666.7	32
682.79	33.02	701.91	34	772.31	35.86	776.97	36	777.88	36.26
782.92	38	786.19	39.87	786.41	40	787.84	40.81	789.98	42
790.39	42.21	793.65	44	794.8	44.59	797.41	46	799.41	46.99
801.29	48	804.22	49.44	805.28	50	809.28	51.93	809.41	52
809.98	52.27	812.99	53.23	815.42	54	816.82	54.45	819.43	55.27
820.84	55.77	821.54	56	824.75	57.11	827.52	58	828.67	58.39
830.64	59.01	832.4	59.62	833.61	60	835.55	60.65	836.88	61.03
837.83	61.39	838.08	61.48	839.6	62	839.89	62.12	840.19	62.21
842.79	63.15	845.3	63.92	845.42	63.97	845.53	64	848.15	65
849.03	65.36	851.17	66	851.72	66.2	852.27	66.17	853.86	66
856.34	66	858.05	65.5	861.04	64.62	870	62	870.4	61.88
876.85	60	879.54	59.21	882.06	58.48	885.87	57.36	890.53	56
894.3	54.89	896.14	54.36	897.34	54	903.69	52.13	904.11	52
910.81	50	911.23	49.87	911.81	49.7	915.26	48.66	917.47	48
924.12	46	924.37	45.93	924.68	45.83	929.78	44	932.05	43.25
935.68	42	936.78	41.66	942	40	944.72	39.16	948.45	38
948.67	37.92	948.75	37.91	948.96	37.84	954.32	36	954.67	35.98
960.41	35.7	962.18	35.64	970.46	35.28	993.39	34.24	995.68	34.13
997.06	34	1000.25	34	1021.03	33.04	1032.91	32.57	1038.78	32.36
1054.18	32	1084.48	32	1097.47	30	1101.6	28.05	1101.72	28
1111.66	28	1114.77	29.14	1117.42	30	1139.25	31.99	1139.39	32
1147.59	34	1149.69	34.88	1152.41	36	1155.6	37.38	1161.92	40
1166.56	41.87	1166.89	42	1171.43	43.76	1172.08	44	1172.87	44.28
1177.57	46	1179.57	46.81	1182.2	47.8	1182.72	48	1184.98	49.05
1187.02	49.99	1256.32	51.15	1283.18	51.14	1289.23	51.2	1294.9	51.16
1337.62	50.19	1342.39	50.02						

Manning's n Values num= 3

Sta	n Val	Sta	n Val	Sta	n Val
0	.055	490.68	.016	567.9	.075

Bank Sta: Left	Right	Lengths: Left	Channel	Right	Coeff Contr.	Expan.
490.68	567.9	31.52	36.11	36.27	.1	.3

Ineffective Flow num= 2

Sta L	Sta R	Elev	Permanent
0	390	47	F
850	1342.39	70	F

Blocked Obstructions num= 3

Sta L	Sta R	Elev	Sta L	Sta R	Elev	Sta L	Sta R	Elev

497.3 504.3 80 805 812 80 719.8 726.8 80

CROSS SECTION OUTPUT Profile #100-yr

E.G. Elev (ft)	41.32	Element	Left OB	Channel
Right OB				
Vel Head (ft)	0.39	Wt. n-Val.	0.055	0.016
0.075				
W.S. Elev (ft)	40.93	Reach Len. (ft)	31.52	36.11
36.27				
Crit W.S. (ft)	36.82	Flow Area (sq ft)	528.46	740.36
1353.26				
E.G. Slope (ft/ft)	0.000271	Area (sq ft)	528.46	740.36
3087.26				
Q Total (cfs)	6700.00	Flow (cfs)	756.71	4474.34
1468.95				
Top Width (ft)	599.34	Top Width (ft)	90.80	70.22
438.32				
Vel Total (ft/s)	2.56	Avg. Vel. (ft/s)	1.43	6.04
1.09				
Max Chl Dpth (ft)	12.93	Hydr. Depth (ft)	5.82	10.54
6.35				
Conv. Total (cfs)	406738.9	Conv. (cfs)	45937.9	271625.1
89176.0				
Length Wtd. (ft)	35.64	Wetted Per. (ft)	91.57	94.29
227.59				
Min Ch El (ft)	30.00	Shear (lb/sq ft)	0.10	0.13
0.10				
Alpha	3.81	Stream Power (lb/ft s)	0.14	0.80
0.11				
Frctn Loss (ft)	0.01	Cum Volume (acre-ft)	23.25	30.22
95.01				
C & E Loss (ft)	0.03	Cum SA (acres)	5.84	3.90
14.06				

Warning: Divided flow computed for this cross-section.
Note: Multiple critical depths were found at this location. The critical depth with the lowest, valid,
water surface was used.

Profile #100-yr

Percent Conv	Pos Hydr Depth(ft)	Velocity (ft/s)	Left Sta (ft)	Right Sta (ft)	Flow (cfs)	Area (sq ft)	W.P. (ft)
1	LOB		390.00	440.34	207.34	179.53	41.23
3.09	4.44	1.15					
2	LOB		440.34	490.68	549.37	348.93	50.34
8.20	6.93	1.57					
3	Chan		490.68	498.40	174.94	60.12	18.74
2.61	9.08	2.91					
4	Chan		498.40	506.12	35.93	19.94	12.76
0.54	10.93	1.80					
5	Chan		506.12	513.85	556.26	84.41	7.72
8.30	10.93	6.59					
6	Chan		513.85	521.57	556.25	84.41	7.72
8.30	10.93	6.59					
7	Chan		521.57	529.29	556.26	84.41	7.72

8.30	10.93	6.59				
8	Chan	529.29	537.01	556.25	84.41	7.72
8.30	10.93	6.59				
9	Chan	537.01	544.73	556.25	84.41	7.72
8.30	10.93	6.59				
10	Chan	544.73	552.46	556.25	84.41	7.72
8.30	10.93	6.59				
11	Chan	552.46	560.18	556.26	84.41	7.72
8.30	10.93	6.59				
12	Chan	560.18	567.90	369.69	69.40	8.74
5.52	8.99	5.33				
13	ROB	567.90	638.43	394.07	395.01	70.95
5.88	5.60	1.00				
14	ROB	638.43	708.95	736.76	574.09	70.67
11.00	8.14	1.28				
15	ROB	708.95	779.48	328.02	364.49	76.41
4.90	5.74	0.90				
16	ROB	779.48	850.00	10.10	19.66	9.56
0.15	2.29	0.51				
17	ROB	850.00	932.07			
18	ROB	932.07	1014.13	0.00	411.63	75.90
0.00	5.48	0.00				
19	ROB	1014.13	1096.20	0.00	720.19	82.23
0.00	8.78	0.00				
20	ROB	1096.20	1178.26	0.00	602.18	70.55
0.00	8.85	0.00				

Warning: Divided flow computed for this cross-section.
Note: Multiple critical depths were found at this location. The critical depth with the lowest, valid,
water surface was used.

CROSS SECTION

RIVER: CarrollCanyon
REACH: Lower RS: 1954

INPUT
Description: SB and NB Interstate 5 Bridge Piers
Station Elevation Data num= 277

Sta	Elev	Sta	Elev	Sta	Elev	Sta	Elev	Sta	Elev
0	68.69	2.27	68	2.48	67.94	3.44	67.64	7.78	66.33
8.86	66	12.02	65.05	15.56	64	16.77	63.65	22.24	62.09
29.92	60	30.17	59.93	44.8	56	55.76	53.08	59.87	52
62.35	51.45	67.74	50	69.81	49.76	76.29	49.08	81.87	48
86.1	47.6	88.62	47.37	93.68	46.89	96.12	46.74	102.99	46
104.69	45.88	104.89	45.86	105.1	45.85	109.66	45.47	122.07	44.47
127.35	44	132.03	44	134.83	43.05	138.12	42.92	140.81	42.66
145.12	42.51	151.91	42	158.56	42	160.41	41.46	160.69	41.39
160.87	41.36	161.78	40.89	163.45	40.67	168.18	40	178.11	40
186.1	40.25	186.88	40.23	192.19	40.35	193.12	40.35	196.02	40.39
196.75	40.36	197.36	40.34	198.07	40.37	198.56	40.36	200.35	40.34
201.48	40.28	202.35	40.24	202.91	40.22	203.14	40.21	203.82	40.2
209.79	40.06	210.02	40.05	212.06	40	221.49	39.73	222.47	39.75
223.33	39.77	238.29	39.47	240.38	39.48	242.52	39.47	245.06	39.42
260.07	39.16	260.34	39.16	260.69	39.15	262.01	39.13	262.58	39.12
263.34	39.1	263.64	39.1	264.02	39.09	264.7	39.08	267.93	38.81
268.4	38.8	269.9	38.57	270.2	38.57	270.48	38.56	270.74	38.55
270.99	38.55	274.52	38.17	274.85	38.15	276.54	38	281.02	37.71

281.08	37.7	281.19	37.68	281.39	37.65	281.55	37.63	281.65	37.61
281.72	37.6	281.8	37.59	281.92	37.57	282.02	37.56	282.11	37.54
282.27	37.52	282.42	37.49	288.08	37.07	288.38	37.03	288.9	36.98
290.69	36.84	294.52	36.55	296.08	36.42	297.16	36.34	298.26	36.46
299.17	36.39	307.87	37.02	312.47	36.88	315.66	36.73	322.07	36.13
322.39	36.12	323.38	36	323.97	35.68	325.08	35.31	325.96	35.04
326.38	34.91	326.55	34.86	353.31	34	390.63	34	396.23	34
396.65	33.72	402.3	30	465.21	30	468.02	31.49	468.92	32
473.03	33.06	477.3	34	485.62	34.74	497.84	35.83	499.84	36
531.47	36	533.39	35.49	538.7	34	539.78	33.73	546.97	32
567.17	32	574.23	31.79	574.87	32	577.93	32	616.95	34
682.06	36	684.9	37.03	687.93	38	688.24	38.18	691.29	40
692.08	40.47	696.21	42.94	698	44	699.72	45.03	703.7	47.4
704.7	48	707.03	49.38	708.06	50	709.26	50.72	711.4	52
711.99	52.36	714.72	54	715.86	54.69	718.04	56	721.33	58
724.34	59.84	724.62	60	724.91	60.18	727.88	62	727.98	62.06
731.11	64	734.24	65.95	734.31	66	734.39	66.06	737.29	68
739.62	69.59	740.21	70	741.09	70.62	743.07	72	744.29	72.87
745.79	74	747.24	75.08	749.88	77.07	751.13	78	752.08	78.71
753.8	80	755.98	81.32	757.09	81.44	758.36	81.76	758.42	81.74
762.73	80.5	764.55	80	769.07	78.77	769.3	78.7	772.13	78
775.35	77.16	779.32	76.11	779.56	76.06	779.81	76	783.34	75.17
785.16	74.75	786.24	74.57	788.17	74.26	791.32	73.4	794.04	72.44
795.06	72	799.34	70.2	799.8	70	799.89	69.96	800.15	69.85
803.35	68.52	804.61	68	814.27	64	823.38	60.25	828.87	58
829.29	57.83	833.76	56	835.39	55.34	838.67	54	841.65	52.8
843.6	52	844.25	51.75	847.17	50.56	848.36	50.08	848.55	50
849.98	49.42	853.56	48	854.36	47.69	858.59	46	860.4	45.29
867.95	42.29	868.69	42	871.2	41.04	874.03	40	877.63	38.98
878.82	38.67	889.5	36	891	35.6	897.22	34	929.64	34
938.03	33.7	954.79	33.31	983.03	32.24	987.39	32.1	989.44	32
991.64	31.69	1003.43	30	1003.8	29.8	1007.33	28	1016.29	28
1017.44	28.29	1024.43	30	1041.96	32	1050.45	33.55	1052.89	34
1054.43	34.57	1069.76	39.96	1069.86	40	1070	40.04	1075.52	42
1079.4	43.54	1080.58	44	1084	45.6	1084.86	46	1084.98	46.06
1088.94	48	1095.6	49.53	1099.37	50	1120.76	50	1141.3	50.34
1194.03	50.31	1195.65	50.32	1207.58	50.24	1217.76	50	1239.49	50
1240.19	49.8	1248.63	48						

Manning's n Values num= 3

Sta	n Val	Sta	n Val	Sta	n Val
0	.055	396.23	.016	485.62	.055

Bank Sta: Left	Right	Lengths: Left	Channel	Right	Coeff Contr.	Expan.
396.23	485.62	46.88	48.33	51.51	.1	.3

Ineffective Flow num= 2

Sta L	Sta R	Elev	Permanent
0	325	45	F
755	1248.63	85	F

Blocked Obstructions num= 4

Sta L	Sta R	Elev	Sta L	Sta R	Elev	Sta L	Sta R	Elev
479.6	486.6	80	704.1	711.1	80	403.6	410.6	80
577.2	584.2	75						

CROSS SECTION OUTPUT Profile #100-yr

E.G. Elev (ft)	41.28	Element	Left OB	Channel	Right OB
Vel Head (ft)	0.30	Wt. n-Val.	0.055	0.016	0.055
W.S. Elev (ft)	40.98	Reach Len. (ft)	46.88	48.33	51.51

Crit W.S. (ft)	36.69	Flow Area (sq ft)	484.21	788.09
1289.37				
E.G. Slope (ft/ft)	0.000237	Area (sq ft)	830.95	788.09
2815.28				
Q Total (cfs)	6700.00	Flow (cfs)	721.77	4261.55
1716.68				
Top Width (ft)	711.64	Top Width (ft)	234.63	76.37
400.64				
Vel Total (ft/s)	2.62	Avg. Vel. (ft/s)	1.49	5.41
1.33				
Max Chl Dpth (ft)	12.98	Hydr. Depth (ft)	6.80	10.32
6.47				
Conv. Total (cfs)	435423.2	Conv. (cfs)	46906.9	276951.6
111564.6				
Length Wtd. (ft)	48.92	Wetted Per. (ft)	71.32	107.07
224.97				
Min Ch El (ft)	30.00	Shear (lb/sq ft)	0.10	0.11
0.08				
Alpha	2.82	Stream Power (lb/ft s)	0.15	0.59
0.11				
Frctn Loss (ft)	0.01	Cum Volume (acre-ft)	22.76	29.58
92.55				
C & E Loss (ft)	0.00	Cum SA (acres)	5.72	3.84
13.71				

Warning: Divided flow computed for this cross-section.
Note: Multiple critical depths were found at this location. The critical depth with the lowest, valid,
water surface was used.

Profile #100-yr

Percent Conv	Pos Hydr Depth(ft)	Velocity (ft/s)	Left Sta (ft)	Right Sta (ft)	Flow (cfs)	Area (sq ft)	W.P. (ft)
1	LOB		121.88	162.50	0.00	0.11	0.93
0.00	0.12	0.00					
2	LOB		162.50	203.13	0.00	31.24	40.69
0.00	0.77	0.00					
3	LOB		203.13	243.75	0.00	49.27	40.64
0.00	1.21	0.00					
4	LOB		243.75	284.38	0.00	90.59	40.72
0.00	2.23	0.00					
5	LOB		284.38	325.00	0.00	175.52	40.88
0.00	4.32	0.00					
6	LOB		325.00	360.62	344.20	235.50	35.70
5.14	6.61	1.46					
7	LOB		360.62	396.23	377.57	248.71	35.62
5.64	6.98	1.52					
8	Chan		396.23	405.17	197.24	68.82	19.55
2.94	9.34	2.87					
9	Chan		405.17	414.11	91.60	38.53	14.49
1.37	10.98	2.38					
10	Chan		414.11	423.05	600.92	98.18	8.94
8.97	10.98	6.12					
11	Chan		423.05	431.99	600.92	98.18	8.94
8.97	10.98	6.12					
12	Chan		431.99	440.93	600.92	98.18	8.94
8.97	10.98	6.12					

13	Chan	440.93	449.86	600.93	98.18	8.94	8.97	10.98	6.12
14	Chan	449.86	458.80	600.92	98.18	8.94	8.97	10.98	6.12
15	Chan	458.80	467.74	569.59	96.48	9.27	8.50	10.79	5.90
16	Chan	467.74	476.68	357.79	73.18	9.33	5.34	8.19	4.89
17	Chan	476.68	485.62	40.71	20.19	9.72	0.61	6.92	2.02
18	ROB	485.62	552.97	498.05	394.41	73.08	7.43	5.94	1.26
19	ROB	552.97	620.31	703.00	498.00	78.07	10.49	8.25	1.41
20	ROB	620.31	687.66	511.45	388.65	67.69	7.63	5.77	1.32
21	ROB	687.66	755.00	4.19	8.32	6.12	0.06	1.57	0.50
22	ROB	755.00	837.27						
23	ROB	837.27	919.54	0.00	250.35	49.13	0.00	5.20	0.00
24	ROB	919.54	1001.82	0.00	666.32	82.43	0.00	8.10	0.00
25	ROB	1001.82	1084.09	0.00	609.24	73.08	0.00	8.60	0.00

Warning: Divided flow computed for this cross-section.
Note: Multiple critical depths were found at this location. The critical depth with the lowest, valid,
water surface was used.

CROSS SECTION

RIVER: CarrollCanyon
REACH: Lower RS: 1906

INPUT
Description: SB Interstate 5 Bridge Piers
Station Elevation Data num= 271

Sta	Elev	Sta	Elev	Sta	Elev	Sta	Elev	Sta	Elev
0	84.14	.51	84	3.54	83.14	7.62	82	9.62	81.45
14.84	80	18.5	79	19.99	78.59	21.46	78.17	21.68	78.11
22.06	78	25.99	76.87	28.95	76	29.82	75.74	31.08	75.37
33.81	74.56	35.44	74.07	35.67	74	40.18	72.66	42.45	72
43.23	71.81	48.44	70.6	51.12	70	59.99	68	64.55	66.96
65.6	66.71	68.55	66	68.61	65.99	68.66	65.98	75.94	64.17
76.64	64	83.34	62.32	87.41	61.29	91.4	60.29	103.43	57.24
104.09	57.07	107.49	56.21	107.9	56.11	108.32	56	110.4	55.47
111.79	55.13	116.45	54	116.8	53.92	117.24	53.83	121.56	52.91
126.28	52.07	126.41	52.05	126.5	52.04	126.76	52	130.65	51.45
132.75	51.11	135.3	50.82	138.94	50.33	139.75	50.26	142.95	50
143.59	49.95	143.75	49.93	146.83	49.65	147.12	49.62	147.26	49.59
148.87	49.39	149.37	49.25	149.92	49.12	151.44	48.63	152.09	48.43
153.35	48	155.03	47.48	157.88	46.84	159.95	46.36	161.73	46
165.52	45.09	168.81	44.07	169.03	44	171.59	43.1	172.58	42.75
174.42	42	179.39	41.7	180.76	41.57	188.31	41.08	191.98	40.66
198	40	201.03	39.79	208.12	39.33	214.16	38.84	216.82	38.62
224.63	38	227.04	37.88	227.56	37.87	227.87	37.86	234.93	37.56
235.42	37.54	240.33	37.24	248.58	36.6	251.1	36.46	256.59	36

257.42	36	265.85	35.42	269.21	35.44	293.27	34	368.96	34
374.13	34	374.96	33.45	377.18	32	379.93	30.19	380.22	30
442.15	30	443.88	30.76	446.57	32	454.07	33.46	457.14	34
463.93	34.55	482.13	36	508.8	36	523.15	32.36	524.58	32
527.67	32	553.88	31.2	556.29	32	562.17	33.13	565.34	34
601.49	34	663.23	36	666.96	37.58	668.76	38.35	672.59	40
673.65	40.48	677.14	42	679.97	43.31	681.53	44	683.96	45.15
685.58	46	686.45	46.48	689.29	48	691.31	49.2	692.7	50
695.84	51.93	695.95	52	696.02	52.05	698.84	54	700.53	55.27
701.56	56	702.32	56.55	703.81	57.71	704.14	58	704.38	58.21
706.47	60	707.96	61.28	708.81	62	711.01	63.89	711.1	63.96
711.18	64.03	711.3	64.14	714.38	66.78	715.81	68	717.46	69.42
718.14	70	720.36	71.91	720.47	72	720.98	72.44	722.81	74
723.1	74.25	725.14	76	725.75	76.52	727.47	78	729.81	80
731.43	81.39	731.91	81.81	732.14	82	749.49	82	760.77	82.47
768.16	82	788.93	82	789.49	81.8	796	80	798.54	78.9
802.79	77.09	805.32	76	810.03	74	810.24	73.91	810.46	73.82
813.17	72.68	814.77	72	818.79	70.32	819.55	70	821.28	69.28
824.37	68	825.11	67.69	828.96	66.1	829.15	66.02	829.77	65.77
834.11	64	834.72	63.75	839.14	62	840.05	61.65	844.6	60
844.75	59.94	845.72	59.61	848.93	58.48	849.75	58.22	850.46	58
862.09	54.32	862.77	54.1	863.06	54	864.6	53.48	869.03	52
870.09	51.65	874.22	50.27	875.01	50	890.98	44.66	892.45	44.15
892.87	44	898.59	42	902.81	40.61	904.6	40	907.78	39.03
914.48	37	917.76	36	920.77	34.93	924.3	34	933.79	34
961.67	32.06	961.78	32.06	962.88	32	980.73	32	985.77	31.7
986.04	31.69	986.17	31.68	986.28	31.68	986.5	31.66	995.58	31.69
996.15	31.65	997.38	31.59	1009.83	31.6	1011.46	31.47	1013.33	31.31
1014.75	31.2	1021.25	31.23	1022.33	31.26	1026.26	31.32	1027.24	31.34
1029.54	31.73	1030.5	32	1031.7	32.49	1038.2	35.66	1038.91	36
1039.6	36.34	1043.39	38	1045.92	39.05	1048.13	40	1050.8	41.13
1051.44	41.39	1051.79	41.53	1057.89	44	1062.53	45.82	1062.97	46
1063.2	46.09	1067.62	48	1075.62	48.3	1077.79	48.33	1080.96	48.38
1081.38	48.39	1108.18	49.15	1110.23	49.16	1113.46	49.19	1165.09	49.54
1170.11	49.42	1178.2	49.2	1182.5	49.17	1205.1	48.51	1208.49	48.44
1222.23	48								

Manning's n Values num= 3

Sta	n Val	Sta	n Val	Sta	n Val
0	.055	374.13	.016	463.93	.055

Bank Sta: Left	Right	Lengths: Left	Channel	Right	Coeff Contr.	Expan.
374.13	463.93	53.45	53.4	53.05	.1	.3

Ineffective Flow num= 2

Sta L	Sta R	Elev	Permanent
0	294	43	F
760	1222.23	85	F

Blocked Obstructions num= 3

Sta L	Sta R	Elev	Sta L	Sta R	Elev	Sta L	Sta R	Elev
457	464	80	672.2	679.2	80	554.6	561.6	75

CROSS SECTION OUTPUT Profile #100-yr

E.G. Elev (ft)	41.27	Element	Left OB	Channel
Right OB				
Vel Head (ft)	0.30	Wt. n-Val.	0.055	0.016
0.055				
W.S. Elev (ft)	40.97	Reach Len. (ft)	53.45	53.40
53.05				
Crit W.S. (ft)	35.90	Flow Area (sq ft)	558.61	861.28
1302.27				
E.G. Slope (ft/ft)	0.000164	Area (sq ft)	959.71	861.28

2397.65				
Q Total (cfs)	6700.00	Flow (cfs)	704.59	4555.96
1439.45				
Top Width (ft)	617.65	Top Width (ft)	184.87	82.87
349.91				
Vel Total (ft/s)	2.46	Avg. Vel. (ft/s)	1.26	5.29
1.11				
Max Chl Dpth (ft)	10.97	Hydr. Depth (ft)	6.97	10.39
6.47				
Conv. Total (cfs)	523713.4	Conv. (cfs)	55075.0	356122.0
112516.3				
Length Wtd. (ft)	53.33	Wetted Per. (ft)	80.13	91.68
227.79				
Min Ch El (ft)	30.00	Shear (lb/sq ft)	0.07	0.10
0.06				
Alpha	3.21	Stream Power (lb/ft s)	0.09	0.51
0.06				
Frctn Loss (ft)	0.01	Cum Volume (acre-ft)	21.80	28.67
89.47				
C & E Loss (ft)	0.00	Cum SA (acres)	5.50	3.75
13.27				

Warning: Divided flow computed for this cross-section.
Note: Multiple critical depths were found at this location. The critical depth with the lowest, valid,
water surface was used.

Profile #100-yr

Percent Conv	Pos Hydr Depth(ft)	Velocity (ft/s)	Left Sta (ft)	Right Sta (ft)	Flow (cfs)	Area (sq ft)	W.P. (ft)
1	LOB		183.75	220.50	0.00	44.10	31.36
0.00	1.41	0.00					
2	LOB		220.50	257.25	0.00	137.69	36.83
0.00	3.75	0.00					
3	LOB		257.25	294.00	0.00	219.31	36.81
0.00	5.97	0.00					
4	LOB		294.00	334.07	352.29	279.31	40.07
5.26	6.97	1.26					
5	LOB		334.07	374.13	352.29	279.31	40.07
5.26	6.97	1.26					
6	Chan		374.13	383.11	404.87	86.34	10.18
6.04	9.61	4.69					
7	Chan		383.11	392.09	548.32	98.52	8.98
8.18	10.97	5.57					
8	Chan		392.09	401.07	548.32	98.52	8.98
8.18	10.97	5.57					
9	Chan		401.07	410.05	548.32	98.52	8.98
8.18	10.97	5.57					
10	Chan		410.05	419.03	548.32	98.52	8.98
8.18	10.97	5.57					
11	Chan		419.03	428.01	548.32	98.52	8.98
8.18	10.97	5.57					
12	Chan		428.01	436.99	548.32	98.52	8.98
8.18	10.97	5.57					
13	Chan		436.99	445.97	504.68	95.27	9.35
7.53	10.61	5.30					
14	Chan		445.97	454.95	333.60	73.82	9.19

4.98	8.22	4.52					
15	Chan		454.95	463.93	22.88	14.71	9.08
0.34	7.18	1.56					
16	ROB		463.93	537.95	519.22	467.37	80.92
7.75	6.32	1.11					
17	ROB		537.95	611.97	582.62	510.00	84.68
8.70	7.61	1.14					
18	ROB		611.97	685.98	337.61	324.90	62.19
5.04	5.39	1.04					
19	ROB		685.98	760.00			
20	ROB		760.00	837.04			
21	ROB		837.04	914.08	0.00	24.25	12.95
0.00	1.96	0.00					
22	ROB		914.08	991.12	0.00	609.99	77.59
0.00	7.92	0.00					
23	ROB		991.12	1068.15	0.00	461.14	61.33
0.00	7.78	0.00					

Warning: Divided flow computed for this cross-section.
Note: Multiple critical depths were found at this location. The critical depth with the lowest, valid,
water surface was used.

CROSS SECTION

RIVER: CarrollCanyon
REACH: Lower RS: 1852

INPUT
Description: SB Interstate 5 Bridge Piers
Station Elevation Data num= 201

Sta	Elev	Sta	Elev	Sta	Elev	Sta	Elev	Sta	Elev
0	84.69	3.22	84	13.58	84	16	82.27	16.42	82
18.45	80.81	19.63	80	22.05	78.46	22.75	78	23.34	77.64
25.8	76	27.94	74.67	28.98	74	30.62	73	31.96	72
32.72	71.54	34.79	70	37.74	68.05	37.82	68	40.44	66.35
40.97	66	42.75	64.89	44.26	64	45.43	63.44	48.42	62
55.78	60.53	58.56	60	61.51	58.3	61.97	58	64.06	56.53
64.81	56	67.69	54	68.2	53.65	70.63	52	71.84	51.22
73.74	50	76.37	48.35	76.94	48	77.41	47.71	80.2	46
80.55	45.78	83.46	44	85.09	43	86.79	42	89.06	40.7
90.37	40	93.04	38.58	94.17	38	107.97	36.21	109.82	36
131.85	35.03	148.04	34.48	152.79	34.21	153.53	34.2	153.94	34.19
158.71	34.01	159.08	34	263.6	34	268.39	34	270.83	32.39
271.43	32	274.46	30	276.99	28.34	277.51	28	294.23	28
309.55	28.41	314.27	28.67	324.64	29.03	335.4	29.76	337.08	29.84
338.88	30	340.1	30.61	342.99	32	358.85	33.58	363	34
365.11	34.25	379.13	36	399.84	36	402.87	35.33	409.98	34
411.62	33.57	417.75	32	449.42	32	450.82	32.38	455.77	34
462.27	34	555.56	35.77	562.87	36	566.47	37.67	567.16	38
574.63	41.61	575.47	42	575.98	42.24	579.76	44	584.16	46
585.5	46.6	588.69	48	591.22	49.12	593.23	50	595.59	51.93
595.67	52	595.8	52.11	597.96	54	599.26	55.14	602.12	57.6
602.63	58	603.03	58.3	605.2	60	607.91	61.99	609.46	62.64
610.37	63.01	613.52	64.44	617.9	66.59	619.47	67.4	620.64	68
624.52	70	627.15	71.38	628.35	72	629.79	72.75	632.2	74
636.04	76	638.54	77.29	639.87	78	640.41	78.3	640.67	78.45
643.31	79.91	643.48	80	647.83	80	657.07	80.34	658.03	80.31

669.03	80.31	670.13	80.28	671.06	80.26	687.17	80.25	691.64	80
726.42	80	733.82	78.61	738.33	78	740.05	77.25	745.33	74.97
750.52	72.75	752.28	72	756.3	70.28	756.96	70	761.64	68
762.74	67.55	766.56	66	766.62	65.98	766.76	65.92	770.44	64.52
771.8	64	779.23	61.18	786.1	58.6	787.72	58	789.69	57.26
793.07	56.02	797.02	54.63	798.88	54	800.97	53.27	804.82	52
804.98	51.95	805.28	51.85	808.86	50.78	811.49	50	813.13	49.51
816.59	48.49	817.64	48.12	817.97	48	819.41	47.5	825.09	45.51
828.8	44.22	829.23	44.06	829.41	44	833.4	42.61	835.13	42
837.86	41.06	840.9	40	845.29	38.7	850.75	36.95	853.69	36
856.49	35.06	859.51	34	920.2	34	926.76	35.03	933.57	36
938.29	37.64	939.15	37.94	939.34	38	945.24	40	945.35	40.04
950.27	42	952.67	43.11	954.61	44	957.94	45.52	959	46
959.23	46.1	963.38	48	1023.61	48	1094.96	48.49	1111.42	48.1
1115.62	48								

Manning's n Values num= 3

Sta	n Val	Sta	n Val	Sta	n Val
0	.075	268.39	.016	365.11	.055

Bank Sta: Left	Right	Lengths: Left	Channel	Right	Coeff Contr.	Expan.
268.39	365.11	58.12	63.94	76.38	.1	.3

Ineffective Flow num= 2

Sta L	Sta R	Elev	Permanent
0	215	43	F
680	1115.62	85	F

Blocked Obstructions num= 2

Sta L	Sta R	Elev	Sta L	Sta R	Elev
425.1	432.1	80	351.8	358.8	80

CROSS SECTION OUTPUT Profile #100-yr

E.G. Elev (ft)	41.26	Element	Left OB	Channel
Right OB				
Vel Head (ft)	0.30	Wt. n-Val.	0.075	0.016
0.055				
W.S. Elev (ft)	40.97	Reach Len. (ft)	58.12	63.94
76.38				
Crit W.S. (ft)	35.45	Flow Area (sq ft)	371.89	1011.25
1255.26				
E.G. Slope (ft/ft)	0.000147	Area (sq ft)	1127.22	1011.25
1866.51				
Q Total (cfs)	6700.00	Flow (cfs)	325.51	5066.36
1308.13				
Top Width (ft)	580.24	Top Width (ft)	179.79	89.72
310.73				
Vel Total (ft/s)	2.54	Avg. Vel. (ft/s)	0.88	5.01
1.04				
Max Chl Dpth (ft)	12.97	Hydr. Depth (ft)	6.97	11.27
6.24				
Conv. Total (cfs)	553142.6	Conv. (cfs)	26873.4	418271.8
107997.4				
Length Wtd. (ft)	67.15	Wetted Per. (ft)	53.39	107.59
221.13				
Min Ch El (ft)	28.00	Shear (lb/sq ft)	0.06	0.09
0.05				
Alpha	2.98	Stream Power (lb/ft s)	0.06	0.43
0.05				
Frctn Loss (ft)	0.07	Cum Volume (acre-ft)	20.51	27.52
86.87				
C & E Loss (ft)	0.10	Cum SA (acres)	5.27	3.65
12.86				

Warning: Divided flow computed for this cross-section.
Warning: The velocity head has changed by more than 0.5 ft (0.15 m). This may indicate the need for
additional cross sections.
Warning: The conveyance ratio (upstream conveyance divided by downstream conveyance) is less than
0.7 or greater than 1.4. This may indicate the need for additional cross sections.
Note: Multiple critical depths were found at this location. The critical depth with the lowest, valid,
water surface was used.

Profile #100-yr

Conv	Depth(ft)	Pos Hydr	Velocity (ft/s)	Left Sta (ft)	Right Sta (ft)	Flow (cfs)	Area (sq ft)	W.P. (ft)
1		LOB		80.63	107.50	0.00	59.42	19.76
0.00	3.14		0.00					
2		LOB		107.50	134.38	0.00	146.38	26.91
0.00	5.45		0.00					
3		LOB		134.38	161.25	0.00	175.12	26.89
0.00	6.52		0.00					
4		LOB		161.25	188.13	0.00	187.20	26.88
0.00	6.97		0.00					
5		LOB		188.13	215.00	0.00	187.20	26.88
0.00	6.97		0.00					
6		LOB		215.00	241.70	162.75	185.95	26.70
2.43	6.97		0.88					
7		LOB		241.70	268.39	162.75	185.95	26.70
2.43	6.97		0.88					
8		Chan		268.39	278.06	421.15	98.07	11.47
6.29	10.14		4.29					
9		Chan		278.06	287.73	710.74	125.40	9.67
10.61	12.97		5.67					
10		Chan		287.73	297.41	709.41	125.27	9.67
10.59	12.95		5.66					
11		Chan		297.41	307.08	691.10	123.33	9.68
10.31	12.75		5.60					
12		Chan		307.08	316.75	661.42	120.15	9.68
9.87	12.42		5.50					
13		Chan		316.75	326.42	627.49	116.41	9.68
9.37	12.04		5.39					
14		Chan		326.42	336.09	580.01	111.10	9.69
8.66	11.49		5.22					
15		Chan		336.09	345.77	443.10	96.30	10.15
6.61	9.96		4.60					
16		Chan		345.77	355.44	121.57	50.62	14.15
1.81	8.39		2.40					
17		Chan		355.44	365.11	100.36	44.58	13.74
1.50	7.07		2.25					
18		ROB		365.11	443.83	471.39	478.59	90.21
7.04	6.67		0.98					
19		ROB		443.83	522.56	613.30	531.59	79.04
9.15	6.75		1.15					
20		ROB		522.56	601.28	223.45	245.08	51.87
3.34	4.83		0.91					
21		ROB		601.28	680.00			

22	ROB	680.00	752.60			
23	ROB	752.60	825.21			
24	ROB	825.21	897.81	0.00	340.22	60.79
0.00	5.70	0.00				
25	ROB	897.81	970.41	0.00	271.04	50.86
0.00	5.44	0.00				

Warning: Divided flow computed for this cross-section.
Warning: The velocity head has changed by more than 0.5 ft (0.15 m). This may indicate the need for
additional cross sections.
Warning: The conveyance ratio (upstream conveyance divided by downstream conveyance) is less than
0.7 or greater than 1.4. This may indicate the need for additional cross sections.
Note: Multiple critical depths were found at this location. The critical depth with the lowest, valid,
water surface was used.

CROSS SECTION

RIVER: CarrollCanyon
REACH: Lower RS: 1788

INPUT
Description: FEMA CROSS SECTION - AE (SB Interstate 5 Bridge Piers)
Station Elevation Data num= 208

Sta	Elev	Sta	Elev	Sta	Elev	Sta	Elev	Sta	Elev
0	82.09	3.59	82	10.28	81.81	11.18	81.79	19.59	81.52
20.65	81.5	24.26	81.13	26.35	80.77	30.73	80	31.4	79.54
35.1	76.84	36.26	76	38.51	74.36	39.02	74	41.5	72.19
41.77	72	44.46	70.03	44.74	69.83	49.8	66.02	52.85	64.2
53.12	64	53.51	63.78	56.91	62	64.8	60.27	66.01	60
67.77	59.33	71.28	58	71.76	57.68	74.23	56	75.46	55.21
77.32	54	79.97	52.3	80.44	52	80.89	51.72	86.55	48.09
86.69	48	88.66	46.76	89.84	46	91.96	44.66	93.01	44
95.88	42.19	96.17	42	96.87	41.56	99.34	40	103.69	39.17
111.11	38	115.22	36.39	116.21	36	137.49	36	140.7	35.86
149.74	35.69	151.41	35.64	188.07	34.93	195.36	34.76	199.4	34.68
208.92	34.43	210.25	34.4	218.05	34	278.29	34	282.56	34
285.72	32	286.71	31.38	289.95	29.33	292.03	28	347.61	28
349.69	28.48	356.22	30	357.44	30.64	358.62	31.25	360.05	32
366.88	32.63	373.71	33.24	382.14	34	422.75	34	428.71	32.4
430.24	32	435.08	31.54	448.84	30	457.35	30	469.74	34
592.11	36	594.06	36	610.54	37.64	612.83	37.82	615.51	38
618.05	38.73	622.58	40	627.13	41.44	629.13	42	634.98	43.65
641.01	45.28	648.43	47.19	656.21	49.13	658.18	49.63	659.66	50
662.83	50.8	664.43	51.2	667.57	52	671.02	53.14	676.55	55.02
679.54	56	681.9	56.78	685.17	57.8	685.32	57.84	685.99	58
687.42	58.35	688.11	58.51	690.63	59.33	692.91	60	693.86	60.3
694.67	60.52	699.39	62	700.65	62.38	701.56	62.68	704	63.5
705.42	64	710.9	66	713.74	67.09	716.16	68	716.93	68.32
718.28	68.82	720.26	69.59	721.34	70	722.87	70.66	726.37	72
727.02	72.27	728.55	72.9	730.67	73.79	731.22	74	733.35	74.73
734.96	74.93	739.99	76	741.81	76.05	749.88	76.29	752.07	76.32
761.82	76.56	770.75	76.69	774.78	76.72	785.23	76.77	788.78	76.78
791.59	76.78	806.11	76.82	819.17	76	841.03	76	844.4	74.31

845.01	74	845.88	73.56	846.71	73.15	848.02	72.49	848.98	72
851.57	70.67	852.88	70	853.78	69.56	854.82	69.06	856.42	68.28
857.03	68	861.44	66.02	865.62	64.19	866.04	64	870.59	62
870.69	61.95	871.92	61.42	874.91	60.1	875.14	60	878.36	58.58
879.68	58	880.65	57.57	883.03	56.53	884.23	56	887.79	54.44
888.78	54	891.54	52.79	893.33	52	894.34	51.55	897.87	50
897.98	49.95	898.28	49.82	901.52	48.4	902.42	48	904.6	47.05
906.5	46.21	906.98	46	909.21	45.02	910.55	44.44	911.92	44
915.41	43.23	921.67	42	923.13	41.83	923.77	41.76	924.54	41.7
933.38	40.81	935.08	40.83	937.97	40.66	942	40.83	944.07	40.99
946.46	41.16	954.81	42	955	42	960.06	43.3	961.05	43.56
961.32	43.64	962.82	44	963.3	44.12	977.55	47.77	978.46	48
1077.9	48	1108.38	46.95	1128.84	46				

Manning's n Values num= 3

Sta	n Val	Sta	n Val	Sta	n Val
0	.075	282.56	.045	382.14	.055

Bank Sta: Left	Right	Lengths: Left	Channel	Right	Coeff Contr.	Expan.
282.56	382.14	34.21	37.32	43.59	.1	.3

Ineffective Flow num= 2

Sta L	Sta R	Elev	Permanent
0	215	42	F
790	1128.84	80	F

Blocked Obstructions num= 4

Sta L	Sta R	Elev	Sta L	Sta R	Elev	Sta L	Sta R	Elev
102.01	167.98	55	439.8	446.8	80	513.1	520.1	80
581.3	588.3	75						

CROSS SECTION OUTPUT Profile #100-yr

E.G. Elev (ft)	41.10	Element	Left OB	Channel
Right OB				
Vel Head (ft)	1.27	Wt. n-Val.	0.075	0.045
0.055				
W.S. Elev (ft)	39.83	Reach Len. (ft)	34.21	37.32
43.59				
Crit W.S. (ft)	38.12	Flow Area (sq ft)	393.33	1018.47
1167.67				
E.G. Slope (ft/ft)	0.005187	Area (sq ft)	628.71	1018.47
1167.67				
Q Total (cfs)	19500.00	Flow (cfs)	1816.17	11221.12
6462.71				
Top Width (ft)	434.73	Top Width (ft)	116.33	99.58
218.82				
Vel Total (ft/s)	7.56	Avg. Vel. (ft/s)	4.62	11.02
5.53				
Max Chl Dpth (ft)	11.83	Hydr. Depth (ft)	5.82	10.23
5.34				
Conv. Total (cfs)	270761.7	Conv. (cfs)	25218.0	155807.6
89736.2				
Length Wtd. (ft)	39.26	Wetted Per. (ft)	67.56	102.13
256.56				
Min Ch El (ft)	28.00	Shear (lb/sq ft)	1.89	3.23
1.47				
Alpha	1.43	Stream Power (lb/ft s)	8.70	35.58
8.16				
Frctn Loss (ft)	0.21	Cum Volume (acre-ft)	19.34	26.03
84.21				
C & E Loss (ft)	0.00	Cum SA (acres)	5.07	3.51
12.40				

Warning: Divided flow computed for this cross-section.
Note: Multiple critical depths were found at this location. The critical depth with the lowest, valid,
water surface was used.

Profile #100-yr

Percent Conv	Pos Hydr Depth(ft)	Velocity (ft/s)	Left Sta (ft)	Right Sta (ft)	Flow (cfs)	Area (sq ft)	W.P. (ft)
1	LOB		80.63	107.50	0.00	0.29	2.12
0.00	0.17	0.00					
2	LOB		107.50	134.38			
3	LOB		134.38	161.25			
4	LOB		161.25	188.13	0.00	94.71	24.66
0.00	4.70	0.00					
5	LOB		188.13	215.00	0.00	140.38	26.89
0.00	5.22	0.00					
6	LOB		215.00	248.78	907.13	196.54	33.78
4.65	5.82	4.62					
7	LOB		248.78	282.56	909.04	196.78	33.78
4.66	5.83	4.62					
8	Chan		282.56	292.52	801.16	89.29	11.70
4.11	8.97	8.97					
9	Chan		292.52	302.48	1414.70	117.76	9.96
7.25	11.83	12.01					
10	Chan		302.48	312.43	1414.70	117.76	9.96
7.25	11.83	12.01					
11	Chan		312.43	322.39	1414.70	117.76	9.96
7.25	11.83	12.01					
12	Chan		322.39	332.35	1414.70	117.76	9.96
7.25	11.83	12.01					
13	Chan		332.35	342.31	1414.70	117.76	9.96
7.25	11.83	12.01					
14	Chan		342.31	352.27	1353.67	115.25	10.08
6.94	11.57	11.75					
15	Chan		352.27	362.22	889.41	91.27	10.56
4.56	9.17	9.75					
16	Chan		362.22	372.18	612.76	71.40	10.00
3.14	7.17	8.58					
17	Chan		372.18	382.14	490.60	62.48	10.00
2.52	6.27	7.85					
18	ROB		382.14	463.71	3243.24	526.47	93.63
16.63	7.06	6.16					
19	ROB		463.71	545.28	2179.23	399.00	85.01
11.18	5.35	5.46					
20	ROB		545.28	626.86	1040.24	242.20	77.92
5.33	3.48	4.29					

Warning: Divided flow computed for this cross-section.
Note: Multiple critical depths were found at this location. The critical depth with the lowest, valid,
water surface was used.

CROSS SECTION

RIVER: CarrollCanyon
REACH: Lower RS: 1751

INPUT
Description: SB Interstate 5 Bridge Piers
Station Elevation Data num= 127

Sta	Elev	Sta	Elev	Sta	Elev	Sta	Elev	Sta	Elev
0	79.36	3.91	79.2	12.95	78.91	16.61	78.81	20.54	78.72
23.55	78.63	32.43	78.13	32.73	78.12	33.36	78	34.72	77.34
37.89	76	38.61	75.52	40.85	74	41.55	73.53	43.82	72
45.81	70.65	46.78	70	47.65	69.4	49.72	68	52.65	66
53.32	65.54	57.14	62.9	58.45	62	63.19	60.92	67.47	60
68.99	59.25	71.94	58	73.73	56.77	74.84	56	76.65	54.74
77.67	54	78.89	53.29	82.5	51.04	84.15	50	87.34	48
88.96	46.98	90.51	46	92.77	44.58	93.69	44	96.85	42
99.96	40.05	100.05	40	100.18	39.98	118.16	38	124.46	37.34
132.86	36	202.65	36	212.42	35.46	215.68	35.34	219.33	35.26
220.29	35.25	220.91	35.23	228.8	34	284.35	34	288.81	34
291.83	32.03	291.88	32	292.13	31.84	294.96	30	296.7	28.88
298.04	28	360.17	28	363.16	30	365.86	31.62	366.47	32
368.51	32.32	379.98	33.98	380.14	34	429.21	34	433.57	32.71
436.23	32	441.44	30.4	442.97	30	464.35	30	468.92	31.5
470.48	32	471.66	32.37	476.93	34	489.69	34	577.39	35.15
595.11	36	626.71	36	629.9	36.25	650.97	38	663.21	38.93
669.88	39.16	686.41	40	687.7	40	691.16	41.2	694.88	42
696.64	42.66	700.57	44	701.57	44.33	703.61	45.06	711.91	48
712.65	48.25	714.19	48.74	715.51	49.2	715.95	49.34	716.98	49.69
718.05	50	723.46	51.59	724.8	52	725.22	52.14	725.36	52.18
726.1	52.42	726.55	52.55	726.82	52.61	727.26	52.74	729.02	53.22
729.44	53.38	729.81	53.51	731.19	54	733.09	54.67	736.8	56
738.43	56.54	742.5	58	743.88	58.49	747.3	59.64	748.04	59.89
748.38	60	754.78	61.98	754.84	62	758.06	62.94	761.75	64
768.77	66	769.12	66.17						

Manning's n Values num= 3

Sta	n Val	Sta	n Val	Sta	n Val
0	.075	288.81	.045	379.98	.055

Bank Sta: Left	Right	Lengths: Left	Channel	Right	Coeff Contr.	Expan.
288.81	379.98	18.27	17.69	17.81	.1	.3

Ineffective Flow num= 2

Sta L	Sta R	Elev	Permanent
0	228	42	F
650	769.12	50	F

Blocked Obstructions num= 4

Sta L	Sta R	Elev	Sta L	Sta R	Elev	Sta L	Sta R	Elev
103.36	168.78	55	517.3	524.3	80	445.7	452.7	80
587.6	594.6	70						

CROSS SECTION OUTPUT Profile #100-yr

E.G. Elev (ft)	40.89	Element	Left OB	Channel
Right OB				
Vel Head (ft)	1.27	Wt. n-Val.	0.075	0.045
0.055				
W.S. Elev (ft)	39.62	Reach Len. (ft)	2.70	2.70
2.70				
Crit W.S. (ft)	38.09	Flow Area (sq ft)	341.89	951.53
1315.36				
E.G. Slope (ft/ft)	0.005277	Area (sq ft)	574.16	951.53

1337.11				
Q Total (cfs)	19500.00	Flow (cfs)	1555.60	10660.95
7283.45				
Top Width (ft)	489.21	Top Width (ft)	120.03	91.17
278.01				
Vel Total (ft/s)	7.47	Avg. Vel. (ft/s)	4.55	11.20
5.54				
Max Chl Dpth (ft)	11.62	Hydr. Depth (ft)	5.62	10.44
5.28				
Conv. Total (cfs)	268441.2	Conv. (cfs)	21414.8	146760.9
100265.5				
Length Wtd. (ft)	2.70	Wetted Per. (ft)	60.82	94.26
287.62				
Min Ch El (ft)	28.00	Shear (lb/sq ft)	1.85	3.33
1.51				
Alpha	1.46	Stream Power (lb/ft s)	8.43	37.26
8.34				
Frctn Loss (ft)	0.02	Cum Volume (acre-ft)	18.87	25.19
82.96				
C & E Loss (ft)	0.03	Cum SA (acres)	4.98	3.43
12.15				

Warning: Divided flow computed for this cross-section.
Warning: The conveyance ratio (upstream conveyance divided by downstream conveyance) is less than
0.7 or greater than 1.4. This may indicate the need for additional cross sections.
Note: Multiple critical depths were found at this location. The critical depth with the lowest, valid,
energy was used.

Profile #100-yr

Conv	Pos Hydr Depth(ft)	Left Sta (ft)	Right Sta (ft)	Flow (cfs)	Area (sq ft)	W.P. (ft)	Percent Velocity (ft/s)
1	LOB	142.50	171.00	0.00	8.04	5.84	0.00
0.00	3.62	0.00					
2	LOB	171.00	199.50	0.00	103.26	28.50	0.00
0.00	3.62	0.00					
3	LOB	199.50	228.00	0.00	120.97	28.60	0.00
0.00	4.24	0.00					
4	LOB	228.00	258.41	777.53	170.92	30.41	3.99
5.62	4.55						
5	LOB	258.41	288.81	778.07	170.97	30.41	3.99
5.62	4.55						
6	Chan	288.81	297.93	682.63	78.29	10.87	3.50
8.59	8.72						
7	Chan	297.93	307.04	1269.43	105.96	9.14	6.51
11.62	11.98						
8	Chan	307.04	316.16	1271.57	105.97	9.12	6.52
11.62	12.00						
9	Chan	316.16	325.28	1271.57	105.97	9.12	6.52
11.62	12.00						
10	Chan	325.28	334.40	1271.57	105.97	9.12	6.52
11.62	12.00						
11	Chan	334.40	343.51	1271.57	105.97	9.12	6.52
11.62	12.00						
12	Chan	343.51	352.63	1271.57	105.97	9.12	

6.52	11.62	12.00					
13	Chan	352.63	361.75	1226.46	105.14	9.44	
6.29	11.53	11.67					
14	Chan	361.75	370.86	669.23	74.85	10.01	
3.43	8.21	8.94					
15	Chan	370.86	379.98	455.37	57.46	9.21	
2.34	6.30	7.92					
16	ROB	379.98	418.55	1325.43	216.91	38.58	
6.80	5.62	6.11					
17	ROB	418.55	457.13	1240.19	233.77	51.39	
6.36	7.40	5.31					
18	ROB	457.13	495.70	1893.08	270.35	39.20	
9.71	7.01	7.00					
19	ROB	495.70	534.28	814.75	167.60	42.01	
4.18	5.31	4.86					
20	ROB	534.28	572.85	1012.96	184.60	38.58	
5.19	4.79	5.49					
21	ROB	572.85	611.43	520.19	124.57	39.22	
2.67	3.95	4.18					
22	ROB	611.43	650.00	476.86	117.56	38.65	
2.45	3.05	4.06					
23	ROB	650.00	689.71	0.00	21.75	29.05	
0.00	0.75	0.00					

Warning: Divided flow computed for this cross-section.
Warning: The conveyance ratio (upstream conveyance divided by downstream conveyance) is less than
0.7 or greater than 1.4. This may indicate the need for additional cross sections.
Note: Multiple critical depths were found at this location. The critical depth with the lowest, valid,
energy was used.

BRIDGE

RIVER: CarrollCanyon
REACH: Lower RS: 1743

INPUT
Description:
Distance from Upstream XS = 2.7
Deck/Roadway Width = 11.35
Weir Coefficient = 2.6
Upstream Deck/Roadway Coordinates
num= 7

Sta	Hi Cord	Lo Cord	Sta	Hi Cord	Lo Cord	Sta	Hi Cord	Lo Cord
276.8	37.42		288.8	38.25	35.46	322.45	38.9	36.11
332.3	39	36.21	342.14	38.9	36.11	375.8	38.18	35.39
386	37.42							

Upstream Bridge Cross Section Data
Station Elevation Data num= 127

Sta	Elev	Sta	Elev	Sta	Elev	Sta	Elev	Sta	Elev
0	79.36	3.91	79.2	12.95	78.91	16.61	78.81	20.54	78.72
23.55	78.63	32.43	78.13	32.73	78.12	33.36	78	34.72	77.34
37.89	76	38.61	75.52	40.85	74	41.55	73.53	43.82	72
45.81	70.65	46.78	70	47.65	69.4	49.72	68	52.65	66
53.32	65.54	57.14	62.9	58.45	62	63.19	60.92	67.47	60
68.99	59.25	71.94	58	73.73	56.77	74.84	56	76.65	54.74
77.67	54	78.89	53.29	82.5	51.04	84.15	50	87.34	48

88.96	46.98	90.51	46	92.77	44.58	93.69	44	96.85	42
99.96	40.05	100.05	40	100.18	39.98	118.16	38	124.46	37.34
132.86	36	202.65	36	212.42	35.46	215.68	35.34	219.33	35.26
220.29	35.25	220.91	35.23	228.8	34	284.35	34	288.81	34
291.83	32.03	291.88	32	292.13	31.84	294.96	30	296.7	28.88
298.04	28	360.17	28	363.16	30	365.86	31.62	366.47	32
368.51	32.32	379.98	33.98	380.14	34	429.21	34	433.57	32.71
436.23	32	441.44	30.4	442.97	30	464.35	30	468.92	31.5
470.48	32	471.66	32.37	476.93	34	489.69	34	577.39	35.15
595.11	36	626.71	36	629.9	36.25	650.97	38	663.21	38.93
669.88	39.16	686.41	40	687.7	40	691.16	41.2	694.88	42
696.64	42.66	700.57	44	701.57	44.33	703.61	45.06	711.91	48
712.65	48.25	714.19	48.74	715.51	49.2	715.95	49.34	716.98	49.69
718.05	50	723.46	51.59	724.8	52	725.22	52.14	725.36	52.18
726.1	52.42	726.55	52.55	726.82	52.61	727.26	52.74	729.02	53.22
729.44	53.38	729.81	53.51	731.19	54	733.09	54.67	736.8	56
738.43	56.54	742.5	58	743.88	58.49	747.3	59.64	748.04	59.89
748.38	60	754.78	61.98	754.84	62	758.06	62.94	761.75	64
768.77	66	769.12	66.17						

Manning's n Values num= 3

Sta	n Val	Sta	n Val	Sta	n Val
0	.075	288.81	.045	379.98	.055

Bank Sta: Left	Right	Coeff Contr.	Expan.
288.81	379.98	.1	.3

Ineffective Flow num= 2

Sta L	Sta R	Elev	Permanent
0	228	42	F
650	769.12	50	F

Blocked Obstructions num= 4

Sta L	Sta R	Elev	Sta L	Sta R	Elev	Sta L	Sta R	Elev
103.36	168.78	55	517.3	524.3	80	445.7	452.7	80
587.6	594.6	70						

Downstream Deck/Roadway Coordinates
num= 7

Sta	Hi Cord	Lo Cord	Sta	Hi Cord	Lo Cord	Sta	Hi Cord	Lo Cord
276.8	37.42		288.8	38.25	35.46	322.45	38.9	36.11
332.3	39	36.21	342.14	38.9	36.11	375.8	38.18	35.39
386	37.42							

Downstream Bridge Cross Section Data
Station Elevation Data num= 122

Sta	Elev	Sta	Elev	Sta	Elev	Sta	Elev	Sta	Elev
0	77.03	2.22	76.93	3.72	76.88	6.52	76.82	9.42	76.73
13.81	76.65	15.94	76.6	22.26	76.5	23.79	76.47	28.8	76
32.64	75.26	36.21	74	38.74	72.27	39.13	72	39.66	71.63
43.8	68.77	44.91	68	46.57	66.84	47.79	66	48.65	65.4
50.68	64	53.56	62	62.06	60.26	63.32	60	66.12	58.22
66.45	58	68.39	56.57	69.16	56	69.49	55.74	71.77	54
74.05	52.64	75.09	52	76.04	51.59	79.38	50	82.27	48.18
82.56	48	82.79	47.86	84.42	46.83	85.74	46	86.88	45.29
88.93	44	89.32	43.75	92.1	42	92.28	41.89	95.33	40
109.55	38.25	110.88	38.08	111.62	38	112.85	37.87	138.41	36
215.1	36	221.25	34.84	225.3	34.22	226.65	34	282.86	34
287.43	34	290.13	32.24	290.5	32	293.57	30	294.95	29.08
296.52	28	359.18	28	361.31	29.38	362.24	30	364.27	31.31
365.36	32	368.47	32.45	378.45	33.4	384.66	34	427.77	34
430.19	33.18	433.99	32	435.92	31.33	439.82	30	465.26	30
467.25	30.92	469.94	32	471.24	32.45	475.63	34	505.04	34
566.79	34.82	591.55	36	620.66	36	623.74	36.22	625.35	36.27
629.92	36.64	647.62	38	652.84	38	653.07	38.03	677.37	40

687.1	40	690.28	41.2	693.01	42	697.29	43.53	698.67	44
702.82	45.5	704.16	46	704.38	46.09	709.49	48	710.41	48.34
711.37	48.64	712.13	48.81	713.89	49.25	715.57	49.73	716.67	50
717.65	50.21	721.95	51.21	722.85	51.45	727.23	52.59	731.9	53.65
733.24	54	733.33	54	738.07	55.58	739.02	56	739.9	56.26
741.88	56.64	748.27	58	750.23	58.66	754.91	60	758.19	60.95
762.65	62	765.72	62.83						

Manning's n Values num= 3

Sta	n Val	Sta	n Val	Sta	n Val
0	.075	287.43	.055	384.66	.055

Bank Sta: Left	Right	Coeff Contr.	Expan.
287.43	384.66	.1	.3

Ineffective Flow num= 2

Sta L	Sta R	Elev	Permanent
0	225	42	F
650	765.72	50	F

Blocked Obstructions num= 3

Sta L	Sta R	Elev	Sta L	Sta R	Elev	Sta L	Sta R	Elev
99.06	164.3	55	517.3	524.3	80	584.4	591.4	80

Upstream Embankment side slope = 0 horiz. to 1.0 vertical
Downstream Embankment side slope = 0 horiz. to 1.0 vertical
Maximum allowable submergence for weir flow = .95
Elevation at which weir flow begins =
Energy head used in spillway design =
Spillway height used in design =
Weir crest shape = Broad Crested

Number of Bridge Coefficient Sets = 2

Low Flow Methods and Data
Energy
Selected Low Flow Methods = Highest Energy Answer

High Flow Method
Energy Only

Low Flow Methods and Data
Energy
Selected Low Flow Methods = Highest Energy Answer

High Flow Method
Energy Only

Additional Bridge Parameters
Add Friction component to Momentum
Do not add Weight component to Momentum
Class B flow critical depth computations use critical depth
inside the bridge at the upstream end
Criteria to check for pressure flow = Upstream energy grade line

BRIDGE OUTPUT Profile #100-yr

E.G. US. (ft)	40.89	Element	Inside BR US
Inside BR DS			
W.S. US. (ft)	39.62	E.G. Elev (ft)	40.84
40.63			
Q Total (cfs)	19500.00	W.S. Elev (ft)	39.68
39.29			
Q Bridge (cfs)	5320.60	Crit W.S. (ft)	37.68

37.20			
Q Weir (cfs)		Max Chl Dpth (ft)	11.68
11.29			
Weir Sta Lft (ft)		Vel Total (ft/s)	8.47
8.71			
Weir Sta Rgt (ft)		Flow Area (sq ft)	2302.99
2239.07			
Weir Submerg		Froude # Chl	0.46
0.48			
Weir Max Depth (ft)		Specif Force (cu ft)	14375.08
14296.58			
Min El Weir Flow (ft)	30.01	Hydr Depth (ft)	5.74
5.45			
Min El Prs (ft)	36.21	W.P. Total (ft)	627.43
617.95			
Delta EG (ft)	0.40	Conv. Total (cfs)	157750.5
149140.4			
Delta WS (ft)	0.12	Top Width (ft)	490.80
490.31			
BR Open Area (sq ft)	599.06	Frctn Loss (ft)	0.18
0.03			
BR Open Vel (ft/s)	8.88	C & E Loss (ft)	0.02
0.11			
Coef of Q		Shear Total (lb/sq ft)	3.50
3.87			
Br Sel Method	Energy only	Power Total (lb/ft s)	29.65
33.68			

Note: Multiple critical depths were found at this location. The critical depth with the lowest, valid,
energy was used.
Warning: The conveyance ratio (upstream conveyance divided by downstream conveyance) is less than
0.7 or greater than 1.4. This may indicate the need for additional cross sections.
Note: Multiple critical depths were found at this location. The critical depth with the lowest, valid,
energy was used.

CROSS SECTION

RIVER: CarrollCanyon
REACH: Lower RS: 1733

INPUT
Description: SB Interstate 5 Bridge Piers
Station Elevation Data num= 122

Sta	Elev	Sta	Elev	Sta	Elev	Sta	Elev	Sta	Elev
0	77.03	2.22	76.93	3.72	76.88	6.52	76.82	9.42	76.73
13.81	76.65	15.94	76.6	22.26	76.5	23.79	76.47	28.8	76
32.64	75.26	36.21	74	38.74	72.27	39.13	72	39.66	71.63
43.8	68.77	44.91	68	46.57	66.84	47.79	66	48.65	65.4
50.68	64	53.56	62	62.06	60.26	63.32	60	66.12	58.22
66.45	58	68.39	56.57	69.16	56	69.49	55.74	71.77	54
74.05	52.64	75.09	52	76.04	51.59	79.38	50	82.27	48.18
82.56	48	82.79	47.86	84.42	46.83	85.74	46	86.88	45.29
88.93	44	89.32	43.75	92.1	42	92.28	41.89	95.33	40
109.55	38.25	110.88	38.08	111.62	38	112.85	37.87	138.41	36
215.1	36	221.25	34.84	225.3	34.22	226.65	34	282.86	34
287.43	34	290.13	32.24	290.5	32	293.57	30	294.95	29.08

296.52	28	359.18	28	361.31	29.38	362.24	30	364.27	31.31
365.36	32	368.47	32.45	378.45	33.4	384.66	34	427.77	34
430.19	33.18	433.99	32	435.92	31.33	439.82	30	465.26	30
467.25	30.92	469.94	32	471.24	32.45	475.63	34	505.04	34
566.79	34.82	591.55	36	620.66	36	623.74	36.22	625.35	36.27
629.92	36.64	647.62	38	652.84	38	653.07	38.03	677.37	40
687.1	40	690.28	41.2	693.01	42	697.29	43.53	698.67	44
702.82	45.5	704.16	46	704.38	46.09	709.49	48	710.41	48.34
711.37	48.64	712.13	48.81	713.89	49.25	715.57	49.73	716.67	50
717.65	50.21	721.95	51.21	722.85	51.45	727.23	52.59	731.9	53.65
733.24	54	733.33	54	738.07	55.58	739.02	56	739.9	56.26
741.88	56.64	748.27	58	750.23	58.66	754.91	60	758.19	60.95
762.65	62	765.72	62.83						

Manning's n Values num= 3

Sta	n Val	Sta	n Val	Sta	n Val
0	.075	287.43	.055	384.66	.055

Bank Sta: Left	Right	Lengths: Left	Channel	Right	Coeff Contr.	Expan.
287.43	384.66	83.44	100.26	128.99	.1	.3

Ineffective Flow num= 2

Sta L	Sta R	Elev	Permanent
0	225	42	F
650	765.72	50	F

Blocked Obstructions num= 3

Sta L	Sta R	Elev	Sta L	Sta R	Elev	Sta L	Sta R	Elev
99.06	164.3	55	517.3	524.3	80	584.4	591.4	80

CROSS SECTION OUTPUT Profile #100-yr

E.G. Elev (ft)	40.49	Element	Left OB	Channel
Right OB				
Vel Head (ft)	0.99	Wt. n-Val.	0.075	0.055
0.055				
W.S. Elev (ft)	39.50	Reach Len. (ft)	83.44	100.26
128.99				
Crit W.S. (ft)	37.55	Flow Area (sq ft)	343.36	980.84
1334.62				
E.G. Slope (ft/ft)	0.005990	Area (sq ft)	565.00	980.84
1352.62				
Q Total (cfs)	19500.00	Flow (cfs)	1640.11	9377.70
8482.19				
Top Width (ft)	492.94	Top Width (ft)	123.13	97.23
272.58				
Vel Total (ft/s)	7.33	Avg. Vel. (ft/s)	4.78	9.56
6.36				
Max Chl Dpth (ft)	11.50	Hydr. Depth (ft)	5.50	10.09
5.31				
Conv. Total (cfs)	251946.7	Conv. (cfs)	21190.8	121163.2
109592.8				
Length Wtd. (ft)	111.06	Wetted Per. (ft)	62.45	100.32
270.78				
Min Ch El (ft)	28.00	Shear (lb/sq ft)	2.06	3.66
1.84				
Alpha	1.18	Stream Power (lb/ft s)	9.82	34.96
11.71				
Frctn Loss (ft)	1.04	Cum Volume (acre-ft)	18.66	24.89
82.43				
C & E Loss (ft)	0.08	Cum SA (acres)	4.93	3.39
12.04				

Warning: Divided flow computed for this cross-section.
Warning: The velocity head has changed by more than 0.5 ft (0.15 m). This may indicate the need for
additional cross sections.
Warning: The conveyance ratio (upstream conveyance divided by downstream conveyance) is less than
0.7 or greater than 1.4. This may indicate the need for additional cross sections.
Warning: The energy loss was greater than 1.0 ft (0.3 m). between the current and previous cross
section. This may indicate the need for additional cross sections.
Note: Multiple critical depths were found at this location. The critical depth with the lowest, valid,
energy was used.

Profile #100-yr

Percent Conv	Pos Hydr Depth(ft)	Velocity (ft/s)	Left Sta (ft)	Right Sta (ft)	Flow (cfs)	Area (sq ft)	W.P. (ft)
1	LOB		140.63	168.75	0.00	15.59	7.95
0.00	3.50	0.00					
2	LOB		168.75	196.88	0.00	98.53	28.13
0.00	3.50	0.00					
3	LOB		196.88	225.00	0.00	107.53	28.28
0.00	3.82	0.00					
4	LOB		225.00	256.22	818.99	171.57	31.24
4.20	5.50	4.77					
5	LOB		256.22	287.43	821.12	171.79	31.22
4.21	5.50	4.78					
6	Chan		287.43	297.15	646.33	84.32	11.53
3.31	8.67	7.67					
7	Chan		297.15	306.88	1159.34	111.85	9.72
5.95	11.50	10.37					
8	Chan		306.88	316.60	1159.34	111.85	9.72
5.95	11.50	10.37					
9	Chan		316.60	326.32	1159.34	111.85	9.72
5.95	11.50	10.37					
10	Chan		326.32	336.05	1159.34	111.85	9.72
5.95	11.50	10.37					
11	Chan		336.05	345.77	1159.34	111.85	9.72
5.95	11.50	10.37					
12	Chan		345.77	355.49	1159.34	111.85	9.72
5.95	11.50	10.37					
13	Chan		355.49	365.21	892.77	100.01	10.88
4.58	10.29	8.93					
14	Chan		365.21	374.94	494.96	67.36	9.81
2.54	6.93	7.35					
15	Chan		374.94	384.66	387.61	58.07	9.77
1.99	5.97	6.68					
16	ROB		384.66	422.57	1329.45	208.61	37.91
6.82	5.50	6.37					
17	ROB		422.57	460.47	2613.62	315.08	38.55
13.40	8.31	8.30					
18	ROB		460.47	498.38	1742.93	247.35	38.66
8.94	6.53	7.05					
19	ROB		498.38	536.28	847.28	165.07	41.50
4.35	5.34	5.13					
20	ROB		536.28	574.19	1062.71	182.40	37.92
5.45	4.81	5.83					

21	ROB	574.19	612.09	484.20	114.24	38.27
2.48	3.70	4.24				
22	ROB	612.09	650.00	402.00	101.86	37.98
2.06	2.69	3.95				
23	ROB	650.00	688.57	0.00	18.00	21.31
0.00	0.85	0.00				

Warning: Divided flow computed for this cross-section.
Warning: The velocity head has changed by more than 0.5 ft (0.15 m). This may indicate the need for
additional cross sections.
Warning: The conveyance ratio (upstream conveyance divided by downstream conveyance) is less than
0.7 or greater than 1.4. This may indicate the need for additional cross sections.
Warning: The energy loss was greater than 1.0 ft (0.3 m). between the current and previous cross
section. This may indicate the need for additional cross sections.
Note: Multiple critical depths were found at this location. The critical depth with the lowest, valid,
energy was used.

CROSS SECTION

RIVER: CarrollCanyon
REACH: Lower RS: 1633

INPUT
Description: SB Interstate 5 Bridge Piers
Station Elevation Data num= 134

Sta	Elev	Sta	Elev	Sta	Elev	Sta	Elev	Sta	Elev
0	70.55	1.98	70.42	3.27	70.36	11.43	70.09	21.75	69.85
22.29	69.84	22.89	69.82	29.93	69.63	31.13	69.59	34.92	69.47
38.13	68.83	40.2	68	41.36	66.42	41.67	66	44.92	64.23
45.23	64.06	45.34	64	48.5	62.65	49.87	62	52.43	61.4
56.18	60.57	58.72	60	59.37	59.57	62	58	63.99	56.5
64.66	56	67.24	54	68.93	52.68	69.53	52.21	69.8	52
73.8	50.39	76.09	49.53	80.47	48	83.01	46.69	84.39	46
85.8	45.15	87.69	44	90.87	42	92.31	41.13	94.19	40
99.3	38.14	99.6	38	153.22	36	224.64	36	224.86	35.95
233.56	34	296.86	34	297.59	34	298.37	33.5	300.52	32
303.38	30.96	305.57	30	313.6	28.22	314.38	28	364.29	28
370.02	29.71	370.74	29.91	371.09	30	373.72	30.65	379.22	32
380.48	32.09	392.29	33.1	402.89	34	443.84	34	445.18	33.56
449.99	32	452.47	31.2	456.21	30	481.68	30	482.61	30.33
488.02	32	489.63	32.18	493.49	32.59	520.92	32.67	587.58	34
593.03	34.86	600.37	36	602.95	36.91	606.01	38	611.6	39.97
611.7	40	611.9	40.07	617.54	42	621.11	43.33	622.88	44
625.2	45.29	626.38	46	627.34	46.69	629.17	48	630.21	48.75
631.89	50	633.35	51.1	634.54	52	636.41	53.43	637.14	54
638.21	54.83	641.67	57.53	642.14	57.89	642.28	58	642.47	58.14
644.85	60	649.99	64	650.24	64.2	654.03	67.14	657.69	70
658.25	70.43	660.26	72	663.56	73.02	666.03	73.11	668.6	73.21
671.18	73.3	674.13	73.65	679.78	73.74	680.81	73.83	688.08	73.87
693.39	73.94	693.76	73.96	693.85	73.96	696.33	74	724.88	74
727.06	73.07	730.15	72	733.19	70.68	734.79	70	737.45	68.93
739.97	68	744.07	66.7	748.24	65.47	750.62	64.67	752.6	64
756.71	62.62	758.3	62	759.87	61.38	760.15	61.18		

Manning's n Values num= 3

Sta	n Val	Sta	n Val	Sta	n Val
0	.08	297.59	.06	402.89	.06

Bank Sta: Left	Right	Lengths: Left	Channel	Right	Coeff Contr.	Expan.
297.59	402.89	126.5	174.94	377.94	.1	.3

Ineffective Flow num= 1

Sta L	Sta R	Elev	Permanent
0	230	41	F

Blocked Obstructions num= 3

Sta L	Sta R	Elev	Sta L	Sta R	Elev	Sta L	Sta R	Elev
99.16	163.67	55	606.4	613.4	70	537.2	544.2	70

CROSS SECTION OUTPUT Profile #100-yr

E.G. Elev (ft)	39.37	Element	Left OB	Channel
Right OB				
Vel Head (ft)	1.77	Wt. n-Val.	0.080	0.060
0.060				
W.S. Elev (ft)	37.60	Reach Len. (ft)	126.50	174.94
377.94				
Crit W.S. (ft)	37.04	Flow Area (sq ft)	242.05	822.54
907.21				
E.G. Slope (ft/ft)	0.016587	Area (sq ft)	351.54	822.54
907.21				
Q Total (cfs)	19500.00	Flow (cfs)	1354.14	10209.88
7935.98				
Top Width (ft)	434.22	Top Width (ft)	133.92	105.30
195.00				
Vel Total (ft/s)	9.89	Avg. Vel. (ft/s)	5.59	12.41
8.75				
Max Chl Dpth (ft)	9.60	Hydr. Depth (ft)	3.58	7.81
4.65				
Conv. Total (cfs)	151407.0	Conv. (cfs)	10514.2	79274.2
61618.6				
Length Wtd. (ft)	293.66	Wetted Per. (ft)	67.68	107.14
205.49				
Min Ch El (ft)	28.00	Shear (lb/sq ft)	3.70	7.95
4.57				
Alpha	1.17	Stream Power (lb/ft s)	20.72	98.68
39.99				
Frctn Loss (ft)	1.12	Cum Volume (acre-ft)	17.78	22.81
79.08				
C & E Loss (ft)	0.46	Cum SA (acres)	4.69	3.15
11.35				

Warning: Divided flow computed for this cross-section.
Warning: The velocity head has changed by more than 0.5 ft (0.15 m). This may indicate the need for
additional cross sections.
Warning: The conveyance ratio (upstream conveyance divided by downstream conveyance) is less than
0.7 or greater than 1.4. This may indicate the need for additional cross sections.
Warning: The energy loss was greater than 1.0 ft (0.3 m). between the current and previous cross
section. This may indicate the need for additional cross sections.
Note: Multiple critical depths were found at this location. The critical depth with the lowest, valid,
water surface was used.

Profile #100-yr

Percent Conv	Pos Hydr Depth(ft)	Velocity (ft/s)	Left Sta (ft)	Right Sta (ft)	Flow (cfs)	Area (sq ft)	W.P. (ft)
1	LOB		143.75	172.50	0.00	14.15	10.43
0.00	1.60	0.00					
2	LOB		172.50	201.25	0.00	46.06	28.75
0.00	1.60	0.00					
3	LOB		201.25	230.00	0.00	49.28	28.88
0.00	1.71	0.00					
4	LOB		230.00	263.80	669.86	120.31	33.88
3.44	3.56	5.57					
5	LOB		263.80	297.59	684.28	121.73	33.80
3.51	3.60	5.62					
6	Chan		297.59	308.12	654.33	66.65	11.59
3.36	6.33	9.82					
7	Chan		308.12	318.65	1279.47	96.49	10.69
6.56	9.16	13.26					
8	Chan		318.65	329.18	1397.47	101.11	10.53
7.17	9.60	13.82					
9	Chan		329.18	339.71	1397.47	101.11	10.53
7.17	9.60	13.82					
10	Chan		339.71	350.24	1397.47	101.11	10.53
7.17	9.60	13.82					
11	Chan		350.24	360.77	1397.47	101.11	10.53
7.17	9.60	13.82					
12	Chan		360.77	371.30	1210.64	93.80	10.82
6.21	8.91	12.91					
13	Chan		371.30	381.83	683.49	66.44	10.77
3.51	6.31	10.29					
14	Chan		381.83	392.36	461.49	52.09	10.57
2.37	4.95	8.86					
15	Chan		392.36	402.89	330.60	42.64	10.57
1.70	4.05	7.75					
16	ROB		402.89	438.62	940.59	128.69	35.73
4.82	3.60	7.31					
17	ROB		438.62	474.34	2377.37	226.05	36.36
12.19	6.33	10.52					
18	ROB		474.34	510.07	2101.11	209.23	36.07
10.77	5.86	10.04					
19	ROB		510.07	545.79	1023.06	138.44	37.80
5.25	4.82	7.39					
20	ROB		545.79	581.52	1157.21	145.74	35.73
5.93	4.08	7.94					
21	ROB		581.52	617.25	336.65	59.06	23.81
1.73	2.53	5.70					

Warning: Divided flow computed for this cross-section.
Warning: The velocity head has changed by more than 0.5 ft (0.15 m). This may indicate the need for
additional cross sections.
Warning: The conveyance ratio (upstream conveyance divided by downstream conveyance) is less than
0.7 or greater than 1.4. This may indicate the need for additional cross sections.
Warning: The energy loss was greater than 1.0 ft (0.3 m). between the current and previous cross
section. This may indicate the need for additional cross sections.

Note: Multiple critical depths were found at this location. The critical depth with the lowest, valid,
water surface was used.

CROSS SECTION

RIVER: CarrollCanyon
REACH: Lower RS: 1458

INPUT
Description: FEMA CROSS SECTION - AD
Station Elevation Data num= 161

Sta	Elev	Sta	Elev	Sta	Elev	Sta	Elev	Sta	Elev
0	64.8	1.27	64.56	4.4	64	9.09	63.19	10.71	63
11.7	62.89	14.67	62.51	15.3	62.42	20.69	61.69	24.49	61.14
29.68	60.4	38	59.28	43.28	58.53	45.27	58.27	47.23	58
51.87	57.38	54.62	56.98	59.8	56.32	62.41	56	62.47	55.99
64.35	55.76	65.32	55.65	66.8	55.41	68.84	55.09	70.63	54.8
75.3	54	78.11	53.55	81.7	52.93	84.79	52.32	86.08	52
87.11	52	90.69	51.27	91.55	51.1	94.77	50	96.39	49.37
101.94	47.22	104	46.43	106.04	45.66	106.21	45.59	106.36	45.53
107.74	44.94	109.11	44.36	109.89	44	110.5	43.71	113.78	42
115.07	41.31	117.52	40.04	117.59	40	119.87	38.81	121.43	38
129.2	37.24	144.79	36	151.75	36	184.32	34.77	209.34	34
212.76	33.34	220.42	32	277.03	32	348.46	34	361.1	34
362.21	34	365.12	32.2	365.45	32	366.69	31.23	368.69	30
369.19	29.71	372.06	28	374.39	26.67	375.59	26	389.87	26
408.03	28	408.2	28.07	413.34	30	415.06	30.61	418.55	31.84
419.01	32	449.83	32	489.16	32	498.15	32.75	511.99	34
540.92	34	554.69	30	561.48	28	584.45	28	590.54	29.36
593.43	30	597.2	30.34	601.24	30.56	614.24	31.49	620.47	31.54
628.81	31.77	634.52	32	640.4	32.11	640.89	32.13	641.43	32.14
652.66	32.42	654.1	32.45	687.42	33.05	687.95	33.05	717.73	32
902.56	32	905.93	30.33	906.61	30	908.81	28.91	910.58	28
912.61	26.92	914.41	26	918.45	24.18	918.72	24.06	918.84	24
1025.96	24	1031.28	25.93	1031.36	25.96	1031.47	26	1031.52	26.02
1036.55	28	1037.58	28.41	1046.78	32.01	1051.38	33.98	1057.19	36.13
1057.88	36.41	1061.95	38	1063.98	38.77	1066.88	40	1068.6	41.72
1068.87	42	1070.3	43.43	1070.9	44	1071.19	44.27	1073.01	46
1074.71	47.61	1075.12	48	1075.55	48.41	1077.54	50	1078.55	50.76
1080.71	52	1081.79	52.59	1085.94	54.51	1088.98	55.87	1089.18	55.97
1089.26	56	1093.83	56.89	1095.23	56.58	1096.53	56.77	1100.81	56.37
1102.62	56.47	1111.95	56.81	1112.9	56.83	1118.35	56.8	1120.42	56.84
1123.3	56.89	1125.58	56.92	1135.52	56.96	1143.92	56.91	1148.37	56.87
1150.66	56.84	1157.33	56.79	1159.19	56.77	1160.7	56.76	1161.83	56.75
1168.05	56.49								

Manning's n Values num= 3

Sta	n Val	Sta	n Val	Sta	n Val
0	.08	365.45	.06	489.16	.06

Bank Sta: Left	Right	Lengths: Left	Channel	Right	Coeff Contr.	Expan.
365.45	489.16	228.54	272.94	296.46	.1	.3

Ineffective Flow num= 1

Sta L	Sta R	Elev	Permanent
0	285	39	F

Blocked Obstructions num= 3

Sta L	Sta R	Elev	Sta L	Sta R	Elev	Sta L	Sta R	Elev
125.08	145.86	55	730	760	42	850	870	42

CROSS SECTION OUTPUT Profile #100-yr

E.G. Elev (ft)	37.79	Element	Left OB	Channel
Right OB				
Vel Head (ft)	0.23	Wt. n-Val.	0.080	0.060
0.060				
W.S. Elev (ft)	37.56	Reach Len. (ft)	228.54	272.94
296.46				
Crit W.S. (ft)	33.05	Flow Area (sq ft)	346.41	917.48
3916.30				
E.G. Slope (ft/ft)	0.001641	Area (sq ft)	915.47	917.48
3916.30				
Q Total (cfs)	19500.00	Flow (cfs)	686.45	3454.62
15358.92				
Top Width (ft)	864.98	Top Width (ft)	219.59	123.71
521.68				
Vel Total (ft/s)	3.76	Avg. Vel. (ft/s)	1.98	3.77
3.92				
Max Chl Dpth (ft)	13.56	Hydr. Depth (ft)	4.31	7.42
7.51				
Conv. Total (cfs)	481392.7	Conv. (cfs)	16946.4	85283.6
379162.8				
Length Wtd. (ft)	290.45	Wetted Per. (ft)	81.04	126.17
549.61				
Min Ch El (ft)	26.00	Shear (lb/sq ft)	0.44	0.74
0.73				
Alpha	1.04	Stream Power (lb/ft s)	0.87	2.80
2.86				
Frctn Loss (ft)	0.48	Cum Volume (acre-ft)	15.94	19.32
58.15				
C & E Loss (ft)	0.00	Cum SA (acres)	4.17	2.69
8.24				

Warning: Divided flow computed for this cross-section.
Note: Multiple critical depths were found at this location. The critical depth with the lowest, valid,
water surface was used.

Profile #100-yr

Percent Conv	Pos Hydr Depth(ft)	Velocity (ft/s)	Left Sta (ft)	Right Sta (ft)	Flow (cfs)	Area (sq ft)	W.P. (ft)
1	LOB		142.50	178.13	0.00	63.62	33.85
0.00	1.97	0.00					
2	LOB		178.13	213.75	0.00	113.73	35.72
0.00	3.19	0.00					
3	LOB		213.75	249.38	0.00	194.35	35.73
0.00	5.46	0.00					
4	LOB		249.38	285.00	0.00	197.35	35.63
0.00	5.54	0.00					
5	LOB		285.00	325.23	407.09	192.21	40.24
2.09	4.78	2.12					
6	LOB		325.23	365.45	279.36	154.20	40.80
1.43	3.83	1.81					
7	Chan		365.45	377.82	435.27	113.24	14.01
2.23	9.15	3.84					
8	Chan		377.82	390.19	698.28	143.06	12.37
3.58	11.56	4.88					
9	Chan		390.19	402.56	625.25	134.20	12.45

3.21	10.85	4.66				
10	Chan	402.56	414.93	445.76	111.01	12.87
2.29	8.97	4.02				
11	Chan	414.93	427.31	218.27	71.76	12.62
1.12	5.80	3.04				
12	Chan	427.31	439.68	206.36	68.84	12.37
1.06	5.56	3.00				
13	Chan	439.68	452.05	206.36	68.84	12.37
1.06	5.56	3.00				
14	Chan	452.05	464.42	206.36	68.84	12.37
1.06	5.56	3.00				
15	Chan	464.42	476.79	206.36	68.84	12.37
1.06	5.56	3.00				
16	Chan	476.79	489.16	206.36	68.84	12.37
1.06	5.56	3.00				
17	ROB	489.16	557.05	774.01	303.06	68.65
3.97	4.46	2.55				
18	ROB	557.05	624.94	2045.70	542.06	68.35
10.49	7.98	3.77				
19	ROB	624.94	692.83	967.88	345.06	67.91
4.96	5.08	2.80				
20	ROB	692.83	760.72	484.17	199.91	49.03
2.48	5.28	2.42				
21	ROB	760.72	828.61	1125.85	377.78	67.89
5.77	5.56	2.98				
22	ROB	828.61	896.49	690.90	266.49	59.02
3.54	5.56	2.59				
23	ROB	896.49	964.38	3927.76	808.25	69.75
20.14	11.91	4.86				
24	ROB	964.38	1032.27	4886.11	913.66	68.30
25.06	13.46	5.35				
25	ROB	1032.27	1100.16	456.53	160.03	30.70
2.34	5.60	2.85				

Warning: Divided flow computed for this cross-section.
Note: Multiple critical depths were found at this location. The critical depth with the lowest, valid,
water surface was used.

CROSS SECTION

RIVER: CarrollCanyon
REACH: Lower RS: 1185

INPUT
Description: FEMA CROSS SECTION - AC
Station Elevation Data num= 142

Sta	Elev	Sta	Elev	Sta	Elev	Sta	Elev	Sta	Elev
0	80.47	1.9	80.15	2.63	80	3.35	79.59	6.06	78
7.32	77.22	9.09	76	11.43	74.38	11.91	74.08	12.02	74
12.17	73.89	15.06	72	15.95	71.38	18.01	70	19.51	68.94
20.9	68	22.91	66.57	23.74	66	26.18	64.24	26.53	64
27.21	63.53	29.46	62	30.11	62	33.77	61.11	39.85	59.7
46.77	58	47.01	57.98	52.75	57.53	57.63	57	61.16	56.66
67.06	56	70.06	54.81	74.17	53.17	77.12	52	77.87	51.7
79.23	51.16	86.91	48.15	87.31	48	88.46	47.55	92.44	46
93.82	45.61	100.6	44	121.2	41.02	127.82	40	131.29	39.46
140.34	38	157.34	36.54	164.48	36	176.07	35.24	193.21	34
196.12	34	203.8	33.49	212.8	33	224.46	32.42	231.48	32
301.07	32	318.54	31.51	326.92	31.41	335.48	31.32	345.28	31.11

356.38	30.84	365.11	30.6	374.56	30.35	375.83	30.32	388.15	30
396.84	30	401.44	30.8	404.6	31.21	411.03	32	413.36	32.47
415.91	33.03	423.03	34.49	423.58	34.61	429.46	36	632.85	36
633.09	36	635.4	34.67	636.55	34	638.48	32.91	640.07	32
641.59	31.15	643.63	30	645.48	28.98	646.89	28.2	647.73	27.88
656.82	26	658.65	26	677.8	26	680.15	27.07	685.85	29.62
686.71	30	689.63	31.29	691.22	32	710.57	32	781.28	32
783.4	30.89	785.73	30	795.41	30	798.91	30.31	804.68	30.8
805.9	30.87	808.44	31.07	818.45	31.99	818.55	32	824.11	32
854.78	32	859.09	31.56	867.61	30.69	874.61	30	876.99	29.16
880.06	28	897.89	28	899.72	28.45	906.48	30	915.93	32
1046.1	32	1096.21	30.64	1123.96	30	1124.59	29.81	1130.55	28
1138.43	25.65	1144.01	24	1263.08	24	1264.26	24.45	1268.16	26
1271.44	27.36	1276.2	29.39	1277.93	30	1284.29	32	1290.01	32.35
1290.18	32.36	1291.11	32.4	1317.67	33.97	1318.11	34	1318.41	34.08
1325.71	36	1332.28	37.52	1333.51	37.8	1334.4	38	1395.09	38
1409.19	37.44	1420.38	37.12						

Manning's n Values num= 3

Sta	n Val	Sta	n Val	Sta	n Val
0	.08	640.07	.06	824.11	.06

Bank Sta: Left	Right	Lengths: Left	Channel	Right	Coeff Contr.	Expan.
640.07	824.11	340.66	382.38	393.54	.1	.3

Ineffective Flow num= 1

Sta L	Sta R	Elev	Permanent
0	560	38	F

Blocked Obstructions num= 2

Sta L	Sta R	Elev	Sta L	Sta R	Elev
443.66	566.46	55	1372.42	1420.29	55

CROSS SECTION OUTPUT Profile #100-yr

E.G. Elev (ft)	37.31	Element	Left OB	Channel
Right OB				
Vel Head (ft)	0.23	Wt. n-Val.	0.080	0.060
0.060				
W.S. Elev (ft)	37.08	Reach Len. (ft)	340.66	382.38
393.54				
Crit W.S. (ft)	32.61	Flow Area (sq ft)	93.53	1210.98
3851.45				
E.G. Slope (ft/ft)	0.001697	Area (sq ft)	1413.79	1210.98
3851.45				
Q Total (cfs)	19500.00	Flow (cfs)	82.36	4291.42
15126.21				
Top Width (ft)	1056.53	Top Width (ft)	366.22	184.04
506.27				
Vel Total (ft/s)	3.78	Avg. Vel. (ft/s)	0.88	3.54
3.93				
Max Chl Dpth (ft)	13.08	Hydr. Depth (ft)	1.27	6.58
7.61				
Conv. Total (cfs)	473313.3	Conv. (cfs)	1999.2	104163.5
367150.7				
Length Wtd. (ft)	389.96	Wetted Per. (ft)	75.76	187.08
509.99				
Min Ch El (ft)	26.00	Shear (lb/sq ft)	0.13	0.69
0.80				
Alpha	1.03	Stream Power (lb/ft s)	0.12	2.43
3.14				
Frctn Loss (ft)	0.75	Cum Volume (acre-ft)	9.83	12.65
31.72				
C & E Loss (ft)	0.00	Cum SA (acres)	2.64	1.73

Warning: Divided flow computed for this cross-section.
Note: Multiple critical depths were found at this location. The critical depth with the lowest, valid,
water surface was used.

Profile #100-yr

Percent Conv	Pos Hydr Depth(ft)	Velocity (ft/s)	Left Sta (ft)	Right Sta (ft)	Flow (cfs)	Area (sq ft)	W.P. (ft)
1	LOB		124.44	186.67	0.00	47.98	35.71
0.00	1.35	0.00					
2	LOB		186.67	248.89	0.00	261.30	62.30
0.00	4.20	0.00					
3	LOB		248.89	311.11	0.00	317.53	62.23
0.00	5.10	0.00					
4	LOB		311.11	373.33	0.00	371.59	62.24
0.00	5.97	0.00					
5	LOB		373.33	435.56	0.00	313.12	62.80
0.00	5.03	0.00					
6	LOB		435.56	497.78	0.00	8.76	9.18
0.00	1.08	0.00					
7	LOB		497.78	560.00			
8	LOB		560.00	640.07	82.36	93.53	75.76
0.42	1.27	0.88					
9	Chan		640.07	658.47	670.72	165.75	19.64
3.44	9.01	4.05					
10	Chan		658.47	676.88	989.51	203.92	18.40
5.07	11.08	4.85					
11	Chan		676.88	695.28	500.17	139.11	19.68
2.56	7.56	3.60					
12	Chan		695.28	713.69	269.77	93.50	18.40
1.38	5.08	2.89					
13	Chan		713.69	732.09	269.77	93.50	18.40
1.38	5.08	2.89					
14	Chan		732.09	750.49	269.77	93.50	18.40
1.38	5.08	2.89					
15	Chan		750.49	768.90	269.77	93.50	18.40
1.38	5.08	2.89					
16	Chan		768.90	787.30	304.24	101.44	18.84
1.56	5.51	3.00					
17	Chan		787.30	805.71	441.27	125.71	18.44
2.26	6.83	3.51					
18	Chan		805.71	824.11	306.44	101.04	18.45
1.57	5.49	3.03					
19	ROB		824.11	883.74	1081.39	353.88	60.08
5.55	5.93	3.06					
20	ROB		883.74	943.36	1297.17	394.66	60.07
6.65	6.62	3.29					
21	ROB		943.36	1002.99	838.79	302.93	59.63
4.30	5.08	2.77					
22	ROB		1002.99	1062.62	855.89	306.63	59.63
4.39	5.14	2.79					
23	ROB		1062.62	1122.25	1204.99	376.52	59.65
6.18	6.31	3.20					
24	ROB		1122.25	1181.87	3433.57	709.80	60.51

17.61	11.90	4.84				
25	ROB	1181.87	1241.50	4056.91	779.95	59.63
20.80	13.08	5.20				
26	ROB	1241.50	1301.13	2214.57	547.84	61.13
11.36	9.19	4.04				
27	ROB	1301.13	1360.75	142.93	79.24	29.67
0.73	2.71	1.80				

Warning: Divided flow computed for this cross-section.
Note: Multiple critical depths were found at this location. The critical depth with the lowest, valid,
water surface was used.

CROSS SECTION

RIVER: CarrollCanyon
REACH: Lower RS: 803

INPUT
Description: FEMA CROSS SECTION - AB
Station Elevation Data num= 169

Sta	Elev	Sta	Elev	Sta	Elev	Sta	Elev	Sta	Elev
0	39.16	2.5	38.97	6.18	38.68	13.37	38	26.08	37.46
30.91	37.3	62.4	36.36	63.68	36.36	66.25	36.33	76.79	36.19
77.17	36.19	77.57	36.18	77.98	36.18	91.71	36	174.06	36
174.38	35.63	174.43	35.55	174.49	35.51	178.47	36	197.07	36
205.67	35.54	207.7	35.64	218.28	35.51	245.07	34.81	273.09	34
280.13	33.73	286.79	33.5	305.52	32.8	325.34	32.13	326.96	32.08
329.13	32	388.73	32	388.84	32.01	393.87	32.53	395.38	32.67
398.67	33	402.73	33.44	408.04	34	408.83	34.12	409.48	34
425.09	34	427.48	33.39	432.15	32.22	432.6	32.1	433.05	32
438.43	30.3	439.45	30	519.34	30	528.1	32	528.56	32.1
528.85	32.18	531.01	32.74	535.26	33.8	535.96	34	536.79	34
546.13	34.09	547.33	34.11	595.22	34.58	610.81	34.76	646.45	35.04
663.83	35.09	679.38	35.33	682.91	35.34	684.64	35.35	700.97	35.62
702	35.63	708.8	35.65	720.32	35.92	720.85	35.92	723.85	36
737.37	36	738.05	36	742.8	36	745.51	34.89	749.22	34.065
749.51	34	751.13	32.86	752.39	32	753.93	30.88	755.13	30
755.33	29.857	755.87	29.47	757	28.63	757.54	28.24	757.86	28
759.13	27.07	760.6	26	761.33	25.47	763.35	24	783.45	24
788.04	24.74	795.97	26	798.91	27.1	801.33	28	804.63	29.12
807.2	30	820.86	30	845.1	30	897.18	28.69	897.78	28.67
926.19	28	945.5	28	946.32	28.19	954.05	30	955.46	30.32
962.46	32	970.96	32	974.56	31.45	979.74	30.73	983.19	30.24
985.04	30	997.42	30	1000.59	28.67	1002.2	28	1004.24	28
1022.9	26.77	1023.48	26.84	1028.27	28	1035.68	29.26	1039.75	30
1047.57	31.08	1055.49	31.99	1055.58	32	1063.94	32.8	1069.9	33.36
1072.3	33.57	1077.07	34	1186.41	34	1192.17	33.32	1194.13	33.26
1197.64	32.95	1205.43	32	1245.36	32	1249.6	30.14	1249.91	30
1250.27	29.83	1254.18	28	1255.43	27.32	1257.7	26	1258.9	25.27
1260.93	24	1379.42	24	1383.02	24.93	1386.74	26	1390.13	27.25
1391.89	28	1396.49	30	1399.06	30.252	1399.24	30.27	1411.88	31.49
1416.84	32	1433.16	33.45	1439.45	34	1451.76	34.55	1458.16	34.82
1474.68	35.54	1477.08	35.64	1485.39	36	1487.93	36	1495.95	36.11
1554.85	37.26	1587.28	38	1598.02	40	1598.57	40.1	1608.76	42
1609.7	42.17	1619.51	44	1620.88	44.25	1639.53	47.76		

Manning's n Values num= 3

Sta	n Val	Sta	n Val	Sta	n Val
0	.08	752.39	.06	962.46	.06

```
Bank Sta: Left   Right    Coeff Contr.   Expan.
        752.39  962.46             .1       .3
Ineffective Flow     num=       1
   Sta L   Sta R    Elev  Permanent
       0     675      37        F
Blocked Obstructions     num=       3
   Sta L   Sta R    Elev   Sta L   Sta R    Elev   Sta L   Sta R    Elev
   36.86  333.73      55  567.35  678.08      55 1585.83 1639.76      55
```

CROSS SECTION OUTPUT Profile #100-yr

E.G. Elev (ft)	36.56	Element	Left OB	Channel	Right OB
Vel Head (ft)	0.26	Wt. n-Val.	0.080	0.060	0.060
W.S. Elev (ft)	36.30	Reach Len. (ft)			
Crit W.S. (ft)	31.43	Flow Area (sq ft)	56.93	1671.54	3170.91
E.G. Slope (ft/ft)	0.002187	Area (sq ft)	1100.03	1671.54	3170.91
Q Total (cfs)	19500.00	Flow (cfs)	40.69	7619.88	11839.43
Top Width (ft)	1061.22	Top Width (ft)	307.93	210.07	543.22
Vel Total (ft/s)	3.98	Avg. Vel. (ft/s)	0.71	4.56	3.73
Max Chl Dpth (ft)	12.30	Hydr. Depth (ft)	0.77	7.96	5.84
Conv. Total (cfs)	417016.1	Conv. (cfs)	870.2	162954.5	253191.4
Length Wtd. (ft)		Wetted Per. (ft)	76.25	214.02	547.71
Min Ch El (ft)	24.00	Shear (lb/sq ft)	0.10	1.07	0.79
Alpha	1.05	Stream Power (lb/ft s)	0.07	4.86	2.95
Frctn Loss (ft)		Cum Volume (acre-ft)			
C & E Loss (ft)		Cum SA (acres)			

Warning: Divided flow computed for this cross-section.
Note: Multiple critical depths were found at this location. The critical depth with the lowest, valid,
water surface was used.

Profile #100-yr

Percent	Pos Hydr	Left Sta (ft)	Right Sta (ft)	Flow (cfs)	Area (sq ft)	W.P. (ft)	Velocity (ft/s)	Conv	Depth(ft)
1	LOB	300.00	375.00	0.00	177.46	45.57	0.00	4.30	0.00
2	LOB	375.00	450.00	0.00	288.87	75.68	0.00	3.85	0.00
3	LOB	450.00	525.00	0.00	468.84	75.15			

0.00	6.25	0.00				
4	LOB	525.00	600.00	0.00	107.93	44.68
0.00	2.55	0.00				
5	LOB	600.00	675.00			
6	LOB	675.00	752.39	40.69	56.93	76.25
0.21	0.77	0.71				
7	Chan	752.39	773.40	1058.94	214.57	23.62
5.43	10.21	4.94				
8	Chan	773.40	794.40	1458.42	248.76	21.15
7.48	11.84	5.86				
9	Chan	794.40	815.41	692.03	160.76	21.72
3.55	7.65	4.30				
10	Chan	815.41	836.42	511.68	132.34	21.01
2.62	6.30	3.87				
11	Chan	836.42	857.43	523.98	134.25	21.01
2.69	6.39	3.90				
12	Chan	857.43	878.43	591.62	144.41	21.01
3.03	6.87	4.10				
13	Chan	878.43	899.44	669.39	155.51	21.01
3.43	7.40	4.30				
14	Chan	899.44	920.45	748.63	166.31	21.01
3.84	7.92	4.50				
15	Chan	920.45	941.45	807.09	173.97	21.01
4.14	8.28	4.64				
16	Chan	941.45	962.46	558.10	140.65	21.47
2.86	6.70	3.97				
17	ROB	962.46	1030.17	1627.11	471.17	68.46
8.34	6.96	3.45				
18	ROB	1030.17	1097.87	646.34	270.16	68.07
3.31	3.99	2.39				
19	ROB	1097.87	1165.58	258.98	155.73	67.71
1.33	2.30	1.66				
20	ROB	1165.58	1233.29	494.85	229.81	67.82
2.54	3.39	2.15				
21	ROB	1233.29	1301.00	2885.76	669.15	69.67
14.80	9.88	4.31				
22	ROB	1301.00	1368.70	4235.40	832.80	67.71
21.72	12.30	5.09				
23	ROB	1368.70	1436.41	1621.92	471.59	68.94
8.32	6.97	3.44				
24	ROB	1436.41	1504.12	69.06	70.48	67.76
0.35	1.04	0.98				
25	ROB	1504.12	1571.82	0.00	0.02	1.57
0.00	0.02	0.06				

Warning: Divided flow computed for this cross-section.
Note: Multiple critical depths were found at this location. The critical depth with the lowest, valid,
water surface was used.

SUMMARY OF MANNING'S N VALUES

River:CarrollCanyon

Reach	River Sta.	n1	n2	n3
Lower	6394	.05	.06	.05
Lower	6138	.05	.06	.05

Lower	5908	.05	.06	.05
Lower	5508	.08	.06	.05
Lower	4876	.08	.06	.05
Lower	4298	.08	.05	.05
Lower	4075	.08	.05	.05
Lower	3824	.075	.025	.045
Lower	3514	.075	.025	.045
Lower	2999	.075	.025	.075
Lower	2827	.075	.025	.075
Lower	2712	.055	.016	.075
Lower	2566	.055	.016	.075
Lower	2417	.055	.016	.075
Lower	2353	Bridge		
Lower	2299	.055	.016	.075
Lower	2275	.055	.016	.075
Lower	2249	.055	.016	.075
Lower	2195	.055	.016	.075
Lower	2129	.055	.016	.075
Lower	2086	.055	.016	.075
Lower	2054	.055	.016	.075
Lower	2020	.055	.016	.075
Lower	1987	.055	.016	.075
Lower	1954	.055	.016	.055
Lower	1906	.055	.016	.055
Lower	1852	.075	.016	.055
Lower	1788	.075	.045	.055
Lower	1751	.075	.045	.055
Lower	1743	Bridge		
Lower	1733	.075	.055	.055
Lower	1633	.08	.06	.06
Lower	1458	.08	.06	.06
Lower	1185	.08	.06	.06
Lower	803	.08	.06	.06

SUMMARY OF REACH LENGTHS

River: CarrollCanyon

Reach	River Sta.	Left	Channel	Right
Lower	6394	258.39	256.68	195.55
Lower	6138	270.79	229.34	188.56
Lower	5908	386.66	400.25	402.73
Lower	5508	622.48	632.28	635.37
Lower	4876	579.89	577.85	577.3
Lower	4298	372.34	223.32	134.47
Lower	4075	235.95	250.93	239.15
Lower	3824	231.01	310.07	383.91
Lower	3514	493.03	515.02	582.81
Lower	2999	180.26	171.12	173.29
Lower	2827	118.67	115.88	115.6
Lower	2712	146.94	146.04	143.37
Lower	2566	148.59	148.97	152.01
Lower	2417	120.25	117.72	112.38
Lower	2353	Bridge		
Lower	2299	24.05	23.62	24.97
Lower	2275	26.96	25.98	24.75
Lower	2249	53.25	54.23	54.9
Lower	2195	66.97	66.05	64.73
Lower	2129	43.54	43.24	43.23

Lower	2086	31.68	31.64	31.61
Lower	2054	34.4	34.07	34.71
Lower	2020	33.53	32.93	32.9
Lower	1987	31.52	36.11	36.27
Lower	1954	46.88	48.33	51.51
Lower	1906	53.45	53.4	53.05
Lower	1852	58.12	63.94	76.38
Lower	1788	34.21	37.32	43.59
Lower	1751	18.27	17.69	17.81
Lower	1743	Bridge		
Lower	1733	83.44	100.26	128.99
Lower	1633	126.5	174.94	377.94
Lower	1458	228.54	272.94	296.46
Lower	1185	340.66	382.38	393.54
Lower	803			

SUMMARY OF CONTRACTION AND EXPANSION COEFFICIENTS
River: CarrollCanyon

Reach	River Sta.	Contr.	Expan.
Lower	6394	.1	.3
Lower	6138	.1	.3
Lower	5908	.1	.3
Lower	5508	.1	.3
Lower	4876	.1	.3
Lower	4298	.1	.3
Lower	4075	.1	.3
Lower	3824	.1	.3
Lower	3514	.1	.3
Lower	2999	.1	.3
Lower	2827	.1	.3
Lower	2712	.1	.3
Lower	2566	.1	.3
Lower	2417	.1	.3
Lower	2353	Bridge	
Lower	2299	.1	.3
Lower	2275	.1	.3
Lower	2249	.1	.3
Lower	2195	.1	.3
Lower	2129	.1	.3
Lower	2086	.1	.3
Lower	2054	.1	.3
Lower	2020	.1	.3
Lower	1987	.1	.3
Lower	1954	.1	.3
Lower	1906	.1	.3
Lower	1852	.1	.3
Lower	1788	.1	.3
Lower	1751	.1	.3
Lower	1743	Bridge	
Lower	1733	.1	.3
Lower	1633	.1	.3
Lower	1458	.1	.3
Lower	1185	.1	.3
Lower	803	.1	.3

Reach	River Sta	Profile	Q Total	Min Ch El	W.S. Elev	Crit W.S.	E.G. Elev	E.G. Slope	Vel Chnl	Flow Area	Top Width	Froude # Chl
	(ft)		(cfs)	(ft)	(ft)	(ft)	(ft)	(ft/ft)	(ft/s)	(sq ft)	(ft)	
Lower	6394	100-yr	6700.00	48.00	60.31	57.69	60.66	0.002715	5.90	1551.49	383.80	0.32
Lower	6138	100-yr	6700.00	46.00	59.77	56.96	60.07	0.002116	5.16	1753.11	439.01	0.29
Lower	5908	100-yr	6700.00	46.00	58.74	56.92	59.35	0.004268	7.05	1176.84	281.50	0.40
Lower	5508	100-yr	6700.00	44.00	56.35	54.21	57.23	0.006652	8.12	1027.70	380.98	0.50
Lower	4876	100-yr	6700.00	36.11	52.46	48.48	53.55	0.005099	8.67	844.58	395.60	0.45
Lower	4298	100-yr	6700.00	36.00	47.50	46.59	49.45	0.010008	12.32	688.34	354.46	0.73
Lower	4075	100-yr	6700.00	36.00	44.56	44.30	46.50	0.017506	11.19	611.69	404.04	0.90
Lower	3824	100-yr	6700.00	36.00	44.25	42.18	45.32	0.001530	8.37	880.53	441.38	0.56
Lower	3514	100-yr	6700.00	36.00	42.60	42.31	44.52	0.003921	11.23	682.47	410.37	0.86
Lower	2999	100-yr	6700.00	34.00	40.84	40.21	42.59	0.003398	10.70	683.45	750.45	0.80
Lower	2827	100-yr	6700.00	32.00	41.66	37.65	41.97	0.000532	5.51	2499.09	737.10	0.34
Lower	2712	100-yr	6700.00	32.00	41.52	37.21	41.92	0.000257	5.93	2498.15	479.87	0.37
Lower	2566	100-yr	6700.00	32.00	41.37	37.82	41.87	0.000288	6.68	2459.47	452.68	0.39
Lower	2417	100-yr	6700.00	30.00	41.34	37.43	41.83	0.000218	6.32	2386.02	473.21	0.35
Lower	2353	Sorrento Valley								Bridge		
Lower	2299	100-yr	6700.00	30.00	40.94	37.76	41.49	0.000384	6.57	1978.61	514.00	0.39
Lower	2275	100-yr	6700.00	30.00	40.88	37.52	41.48	0.000411	7.00	2058.73	475.71	0.38

Lower	2249			100-yr	6700.00	30.00		
40.92	37.40	41.45	0.000374	6.71	2190.71	474.91		
0.37								
Lower	2195			100-yr	6700.00	30.00		
40.96	37.01	41.40	0.000319	6.24	2375.84	468.44		
0.34								
Lower	2129			100-yr	6700.00	30.00		
40.95	36.92	41.38	0.000311	6.08	2371.90	457.35		
0.34								
Lower	2086			100-yr	6700.00	30.00		
40.98	36.50	41.35	0.000225	5.59	2622.33	462.47		
0.32								
Lower	2054			100-yr	6700.00	30.00		
40.96	36.91	41.34	0.000304	6.05	2633.02	715.14		
0.33								
Lower	2020			100-yr	6700.00	30.00		
40.95	36.80	41.33	0.000304	6.06	2615.12	638.42		
0.33								
Lower	1987			100-yr	6700.00	30.00		
40.93	36.82	41.32	0.000271	6.04	2622.08	599.34		
0.33								
Lower	1954			100-yr	6700.00	30.00		
40.98	36.69	41.28	0.000237	5.41	2561.68	711.64		
0.30								
Lower	1906			100-yr	6700.00	30.00		
40.97	35.90	41.27	0.000164	5.29	2722.16	617.65		
0.29								
Lower	1852			100-yr	6700.00	28.00		
40.97	35.45	41.26	0.000147	5.01	2638.40	580.24		
0.26								
Lower	1788			100-yr	19500.00	28.00		
39.83	38.12	41.10	0.005187	11.02	2579.46	434.73		
0.61								
Lower	1751			100-yr	19500.00	28.00		
39.62	38.09	40.89	0.005277	11.20	2608.78	489.21		
0.61								
Lower	1743	NCTD Pedestrian			Bridge			
Lower	1733			100-yr	19500.00	28.00		
39.50	37.55	40.49	0.005990	9.56	2658.81	492.94		
0.53								
Lower	1633			100-yr	19500.00	28.00		
37.60	37.04	39.37	0.016587	12.41	1971.80	434.22		
0.78								
Lower	1458			100-yr	19500.00	26.00		
37.56	33.05	37.79	0.001641	3.77	5180.19	864.98		
0.24								
Lower	1185			100-yr	19500.00	26.00		
37.08	32.61	37.31	0.001697	3.54	5155.96	1056.53		
0.24								
Lower	803			100-yr	19500.00	24.00		
36.30	31.43	36.56	0.002187	4.56	4899.37	1061.22		
0.28								

ERRORS WARNINGS AND NOTES
Errors Warnings and Notes for Plan : SC_Prop

River: CarrollCanyon Reach: Lower RS: 6394 Profile: 100-yr
Warning:Divided flow computed for this cross-section.
Note: Multiple critical depths were found at this location. The critical depth with the lowest, valid, water surface was used.

River: CarrollCanyon Reach: Lower RS: 6138 Profile: 100-yr
Warning:Divided flow computed for this cross-section.
Warning:The conveyance ratio (upstream conveyance divided by downstream conveyance) is less than 0.7 or greater than 1.4. This may indicate the need for additional cross sections.
Note: Multiple critical depths were found at this location. The critical depth with the lowest, valid, water surface was used.

River: CarrollCanyon Reach: Lower RS: 5908 Profile: 100-yr
Warning:Divided flow computed for this cross-section.
Warning:The energy loss was greater than 1.0 ft (0.3 m). between the current and previous cross section. This may indicate the need for additional cross sections.
Note: Multiple critical depths were found at this location. The critical depth with the lowest, valid, water surface was used.

River: CarrollCanyon Reach: Lower RS: 5508 Profile: 100-yr
Warning:Divided flow computed for this cross-section.
Warning:The energy loss was greater than 1.0 ft (0.3 m). between the current and previous cross section. This may indicate the need for additional cross sections.
Note: Multiple critical depths were found at this location. The critical depth with the lowest, valid, water surface was used.

River: CarrollCanyon Reach: Lower RS: 4876 Profile: 100-yr
Warning:Divided flow computed for this cross-section.
Warning:The velocity head has changed by more than 0.5 ft (0.15 m). This may indicate the need for additional cross sections.
Warning:The conveyance ratio (upstream conveyance divided by downstream conveyance) is less than 0.7 or greater than 1.4. This may indicate the need for additional cross sections.
Warning:The energy loss was greater than 1.0 ft (0.3 m). between the current and previous cross section. This may indicate the need for additional cross sections.
Note: Multiple critical depths were found at this location. The critical depth with the lowest, valid, water surface was used.

River: CarrollCanyon Reach: Lower RS: 4298 Profile: 100-yr
Warning:Divided flow computed for this cross-section.
Warning:The energy loss was greater than 1.0 ft (0.3 m). between the current and previous cross section. This may indicate the need for additional cross sections.
Note: Multiple critical depths were found at this location. The critical depth with the lowest, valid, water surface was used.

River: CarrollCanyon Reach: Lower RS: 4075 Profile: 100-yr
Warning:Divided flow computed for this cross-section.
Warning:The velocity head has changed by more than 0.5 ft (0.15 m). This may indicate the need for additional cross sections.
Warning:The conveyance ratio (upstream conveyance divided by downstream conveyance) is less than 0.7 or greater than 1.4. This may indicate the need for additional cross sections.
Warning:The energy loss was greater than 1.0 ft (0.3 m). between the current and previous cross section. This may indicate the need for additional cross sections.
Note: Multiple critical depths were found at this location. The critical depth with the lowest, valid, water surface was used.

River: CarrollCanyon Reach: Lower RS: 3824 Profile: 100-yr
Warning:Divided flow computed for this cross-section.
Warning:The velocity head has changed by more than 0.5 ft (0.15 m). This may indicate the need for additional cross sections.
Warning:The conveyance ratio (upstream conveyance divided by downstream conveyance) is less than 0.7 or greater than 1.4.
This may indicate the need for additional cross sections.
Note: Multiple critical depths were found at this location. The critical depth with the lowest, valid, water surface was
used.
River: CarrollCanyon Reach: Lower RS: 3514 Profile: 100-yr
Warning:Divided flow computed for this cross-section.
Warning:The energy loss was greater than 1.0 ft (0.3 m). between the current and previous cross section. This may indicate
the need for additional cross sections.
Note: Multiple critical depths were found at this location. The critical depth with the lowest, valid, water surface was
used.
River: CarrollCanyon Reach: Lower RS: 2999 Profile: 100-yr
Warning:Divided flow computed for this cross-section.
Warning:The velocity head has changed by more than 0.5 ft (0.15 m). This may indicate the need for additional cross sections.
Warning:The conveyance ratio (upstream conveyance divided by downstream conveyance) is less than 0.7 or greater than 1.4.
This may indicate the need for additional cross sections.
Note: Multiple critical depths were found at this location. The critical depth with the lowest, valid, water surface was
used.
River: CarrollCanyon Reach: Lower RS: 2827 Profile: 100-yr
Warning:Divided flow computed for this cross-section.
Warning:The conveyance ratio (upstream conveyance divided by downstream conveyance) is less than 0.7 or greater than 1.4.
This may indicate the need for additional cross sections.
Note: Multiple critical depths were found at this location. The critical depth with the lowest, valid, water surface was
used.
River: CarrollCanyon Reach: Lower RS: 2712 Profile: 100-yr
Warning:Divided flow computed for this cross-section.
Note: Multiple critical depths were found at this location. The critical depth with the lowest, valid, water surface was
used.
River: CarrollCanyon Reach: Lower RS: 2566 Profile: 100-yr
Warning:Divided flow computed for this cross-section.
Note: Multiple critical depths were found at this location. The critical depth with the lowest, valid, water surface was
used.
River: CarrollCanyon Reach: Lower RS: 2417 Profile: 100-yr
Warning:Divided flow computed for this cross-section.
Warning:The conveyance ratio (upstream conveyance divided by downstream conveyance) is less than 0.7 or greater than 1.4.
This may indicate the need for additional cross sections.
Note: Multiple critical depths were found at this location. The critical depth with the lowest, valid, energy was used.
River: CarrollCanyon Reach: Lower RS: 2353 Profile: 100-yr Upstream
Note: Multiple critical depths were found at this location. The critical depth with the lowest, valid, energy was used.
River: CarrollCanyon Reach: Lower RS: 2353 Profile: 100-yr Downstream
Warning:The conveyance ratio (upstream conveyance divided by downstream conveyance) is less than 0.7 or greater than 1.4.
This may indicate the need for additional cross sections.
Note: Multiple critical depths were found at this location. The critical depth with the lowest, valid, energy was used.
River: CarrollCanyon Reach: Lower RS: 2299 Profile: 100-yr

Warning:Divided flow computed for this cross-section.
Note: Multiple critical depths were found at this location. The critical depth with the lowest, valid, energy was used.
River: CarrollCanyon Reach: Lower RS: 2275 Profile: 100-yr
Warning:Divided flow computed for this cross-section.
Note: Multiple critical depths were found at this location. The critical depth with the lowest, valid, water surface was used.
River: CarrollCanyon Reach: Lower RS: 2249 Profile: 100-yr
Warning:Divided flow computed for this cross-section.
Note: Multiple critical depths were found at this location. The critical depth with the lowest, valid, water surface was used.
River: CarrollCanyon Reach: Lower RS: 2195 Profile: 100-yr
Warning:Divided flow computed for this cross-section.
Note: Multiple critical depths were found at this location. The critical depth with the lowest, valid, water surface was used.
River: CarrollCanyon Reach: Lower RS: 2129 Profile: 100-yr
Warning:Divided flow computed for this cross-section.
Note: Multiple critical depths were found at this location. The critical depth with the lowest, valid, water surface was used.
River: CarrollCanyon Reach: Lower RS: 2086 Profile: 100-yr
Warning:Divided flow computed for this cross-section.
Note: Multiple critical depths were found at this location. The critical depth with the lowest, valid, water surface was used.
River: CarrollCanyon Reach: Lower RS: 2054 Profile: 100-yr
Warning:Divided flow computed for this cross-section.
Note: Multiple critical depths were found at this location. The critical depth with the lowest, valid, water surface was used.
River: CarrollCanyon Reach: Lower RS: 2020 Profile: 100-yr
Warning:Divided flow computed for this cross-section.
Note: Multiple critical depths were found at this location. The critical depth with the lowest, valid, water surface was used.
River: CarrollCanyon Reach: Lower RS: 1987 Profile: 100-yr
Warning:Divided flow computed for this cross-section.
Note: Multiple critical depths were found at this location. The critical depth with the lowest, valid, water surface was used.
River: CarrollCanyon Reach: Lower RS: 1954 Profile: 100-yr
Warning:Divided flow computed for this cross-section.
Note: Multiple critical depths were found at this location. The critical depth with the lowest, valid, water surface was used.
River: CarrollCanyon Reach: Lower RS: 1906 Profile: 100-yr
Warning:Divided flow computed for this cross-section.
Note: Multiple critical depths were found at this location. The critical depth with the lowest, valid, water surface was used.
River: CarrollCanyon Reach: Lower RS: 1852 Profile: 100-yr
Warning:Divided flow computed for this cross-section.
Warning:The velocity head has changed by more than 0.5 ft (0.15 m). This may indicate the need for additional cross sections.
Warning:The conveyance ratio (upstream conveyance divided by downstream conveyance) is less than 0.7 or greater than 1.4. This may indicate the need for additional cross sections.
Note: Multiple critical depths were found at this location. The critical depth with the lowest, valid, water surface was used.

River: CarrollCanyon Reach: Lower RS: 1788 Profile: 100-yr
Warning:Divided flow computed for this cross-section.
Note: Multiple critical depths were found at this location. The critical depth with the lowest, valid, water surface was used.
River: CarrollCanyon Reach: Lower RS: 1751 Profile: 100-yr
Warning:Divided flow computed for this cross-section.
Warning:The conveyance ratio (upstream conveyance divided by downstream conveyance) is less than 0.7 or greater than 1.4. This may indicate the need for additional cross sections.
Note: Multiple critical depths were found at this location. The critical depth with the lowest, valid, energy was used.
River: CarrollCanyon Reach: Lower RS: 1743 Profile: 100-yr Upstream
Note: Multiple critical depths were found at this location. The critical depth with the lowest, valid, energy was used.
River: CarrollCanyon Reach: Lower RS: 1743 Profile: 100-yr Downstream
Warning:The conveyance ratio (upstream conveyance divided by downstream conveyance) is less than 0.7 or greater than 1.4. This may indicate the need for additional cross sections.
Note: Multiple critical depths were found at this location. The critical depth with the lowest, valid, energy was used.
River: CarrollCanyon Reach: Lower RS: 1733 Profile: 100-yr
Warning:Divided flow computed for this cross-section.
Warning:The velocity head has changed by more than 0.5 ft (0.15 m). This may indicate the need for additional cross sections.
Warning:The conveyance ratio (upstream conveyance divided by downstream conveyance) is less than 0.7 or greater than 1.4. This may indicate the need for additional cross sections.
Warning:The energy loss was greater than 1.0 ft (0.3 m). between the current and previous cross section. This may indicate the need for additional cross sections.
Note: Multiple critical depths were found at this location. The critical depth with the lowest, valid, energy was used.
River: CarrollCanyon Reach: Lower RS: 1633 Profile: 100-yr
Warning:Divided flow computed for this cross-section.
Warning:The velocity head has changed by more than 0.5 ft (0.15 m). This may indicate the need for additional cross sections.
Warning:The conveyance ratio (upstream conveyance divided by downstream conveyance) is less than 0.7 or greater than 1.4. This may indicate the need for additional cross sections.
Warning:The energy loss was greater than 1.0 ft (0.3 m). between the current and previous cross section. This may indicate the need for additional cross sections.
Note: Multiple critical depths were found at this location. The critical depth with the lowest, valid, water surface was used.
River: CarrollCanyon Reach: Lower RS: 1458 Profile: 100-yr
Warning:Divided flow computed for this cross-section.
Note: Multiple critical depths were found at this location. The critical depth with the lowest, valid, water surface was used.
River: CarrollCanyon Reach: Lower RS: 1185 Profile: 100-yr
Warning:Divided flow computed for this cross-section.
Note: Multiple critical depths were found at this location. The critical depth with the lowest, valid, water surface was used.
River: CarrollCanyon Reach: Lower RS: 803 Profile: 100-yr
Warning:Divided flow computed for this cross-section.
Note: Multiple critical depths were found at this location. The critical depth with the lowest, valid, water surface was used.

APPENDIX 'C'

Location Hydraulic Study Form

Floodplain Encroachment Form

Planning Study

As-builts

Backup Data

LOCATION HYDRAULIC STUDY FORM

Dist. *11* Co. *SD* Rte. *005* K.P.
EA Bridge No. *I-5 Flyover Bridge*
Floodplain Description:
A creek channelized in a concrete trapezoidal channel through the center of the Sorrento Valley Business Park with both commercial and recreational uses and several bridge crossings. Location of interest: I-5 / Soledad Canyon Intersection.

1. Description of Proposal (include any physical barriers i.e. concrete barriers, soundwalls, etc. and design elements to minimize floodplain impacts)
This project includes the construction of a proposed I-5 Flyover Bridge over the Soledad Canyon as part of the 10+4 buffer alternative. The alternative requires the construction of a new bridge for HOV traffic heading both Northbound and Southbound and would not have a significant impact to the existing floodplain.

2. ADT: Current **N/A (Bridge is not Existing)** Projected **25,900 (year 2030)**
(ADT values taken from Wilson & Company's Traffic Demand Forecasting Report for the I-5 North Coast Corridor Project, December 2006)

3. Hydraulic Data: Base Flood Q_{100}= **6,700** ft^3 / s (upstream of I-5 crossing)
Base Flood Q_{100}= **19,500** ft^3 / s (downstream of I-5 crossing)
Discharge values taken from the original basis HEC-2 printout Revised April 1980.

WSE_{100}= **40.92 feet (Upstream of Proposed I-5 Flyover Bridge)**
The flood of record, if greater than Q_{100}:
Q= *N/A* ft^3 / s WSE= *N/A*
Overtopping flood Q= *N/A* ft^3 / s WSE= ***(no increase from existing condition)***
The deck of I-5 Flyover Bridge is above the 100-year WSE, and there is no threat of overtopping.

Are NFIP maps and studies available? YES **X** NO_____

4. Is the highway location alternative within a regulatory floodway?
YES *X* NO_____

5. Attach map with flood limits outlined showing all buildings or other improvements within the base floodplain. ***(See Appendix 'A')***

Potential Q_{100} backwater damages:
A. Residences? NO___ YES ***(no increase from existing condition)***
B. Other Bldgs? NO___ YES ***(no increase from existing condition)***
C. Crops? NO *X* YES _____
D. Natural and beneficial

FLOODPLAIN VALUES? NO **X** YES_____

6. Type of Traffic:

A. Emergency supply or evacuation route? NO_____YES__X____
B. Emergency vehicle access? NO_____YES__X____
C. Practicable detour available? NO_____YES__X____
D. School bus or mail route? NO_____YES__X____

7. Estimated duration of traffic interruption for 100-year event hours: ***The I -5 Flyover Bridge crossing is above the floodplain, therefore, no traffic interruptions are anticipated.***

8. Estimated value of Q_{100} flood damages (if any) – moderate risk level.

A. Roadway $ ***(no increase from existing condition)***
B Property $ ***(no increase from existing condition)***
Total $ ***(no increase from existing condition)***

9. Assessment of Level of Risk Low__X____
Moderate____
High_____

For High Risk projects, during design phase, additional Design Study Risk Analysis may be necessary to determine design alternative.

Is there any longitudinal encroachment, significant encroachment, or any support of incompatible Floodplain development? NO___X____YES _____

If yes, provide evaluation and discussion of practicability of alternatives in accordance with 23 CFR 650.113

Information developed to comply with the Federal requirement for the Location Hydraulic Study shall be retained in the project files.

Signature – Hydraulic/Project Engineer_____Date_____

FLOODPLAIN ENCROACHMENT REPORT SUMMARY

Dist. *11* Co. *SD* Rte. *005* K.P.
Bridge No. ***I-5 Flyover Bridge***
Limits: ***I-5 / Soledad Canyon Intersection***

Floodplain Description: **A partially channelized creek which flows through the center of the Sorrento Valley Business Park with both commercial and recreational uses and several bridge crossings.**

		No	Yes
1.	Is the proposed action a longitudinal encroachment of the base floodplain?	X	
2.	Are the risks associated with the implementation of the proposed action significant?	X	
3.	Will the proposed action support probable incompatible floodplain development?	X	
4.	Are there any significant impacts on natural and beneficial floodplain values?	X	
5.	Routine construction procedures are required to minimize impacts on the floodplain. Are there any special mitigation measures necessary to minimize impacts or restore and preserve natural and beneficial floodplain values? If yes, explain.	X	
6.	Does the proposed action constitute a significant floodplain encroachment as defined in 23 CFR, Section 650.105(q).	X	
7.	Are Location Hydraulic Studies that document the above answers on file? If not explain.		X

PREPARED BY:

Signature - Dist. Hydraulic Engineer Date

Signature - Dist. Environmental Branch Chief Date

Signature - Dist. Project Engineer Date

STA OF CALIFORNIA - DEPARTMENT OF TRANSPORTATION - DIVISION OF STRUCTURES

REC 8-4-06

DIST.	COUNTY	ROUTE	KILOMETER POST TOTAL PROJECT
11	SD	5	

Caltrans Metric

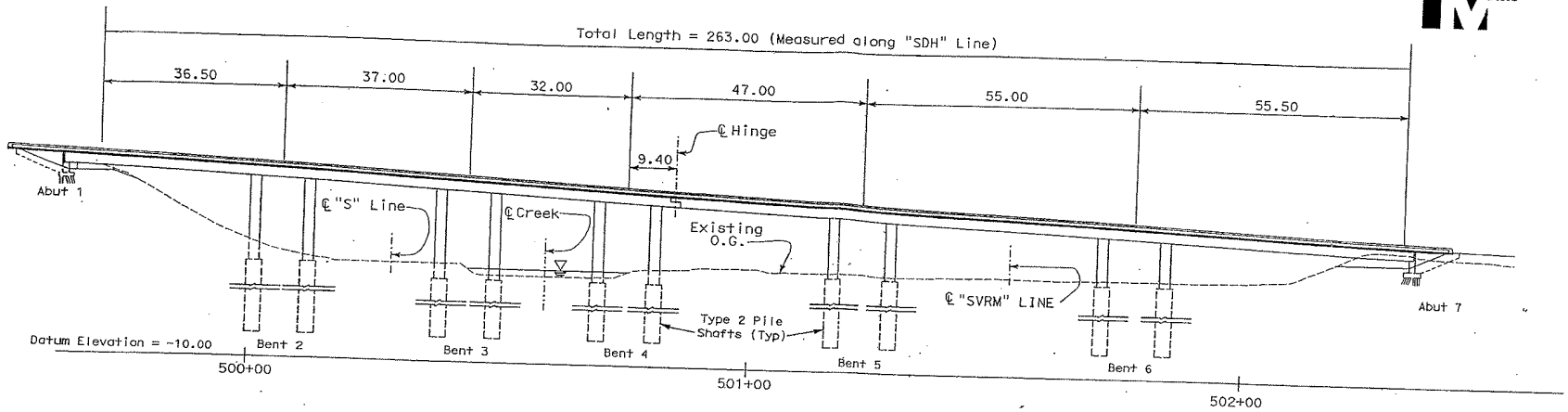

ELEVATION

Date of Estimate	7/13/06 - PGA
Structure Depth	2.200 M
Length	263.000 M
Width	17.70 M
Area	4655 Sq M
Bridge Removal Cost/SM Including 10% Mobilization & 25% Contongencies	N/A
	$ 2203
Total Cost	$ 10,253,000

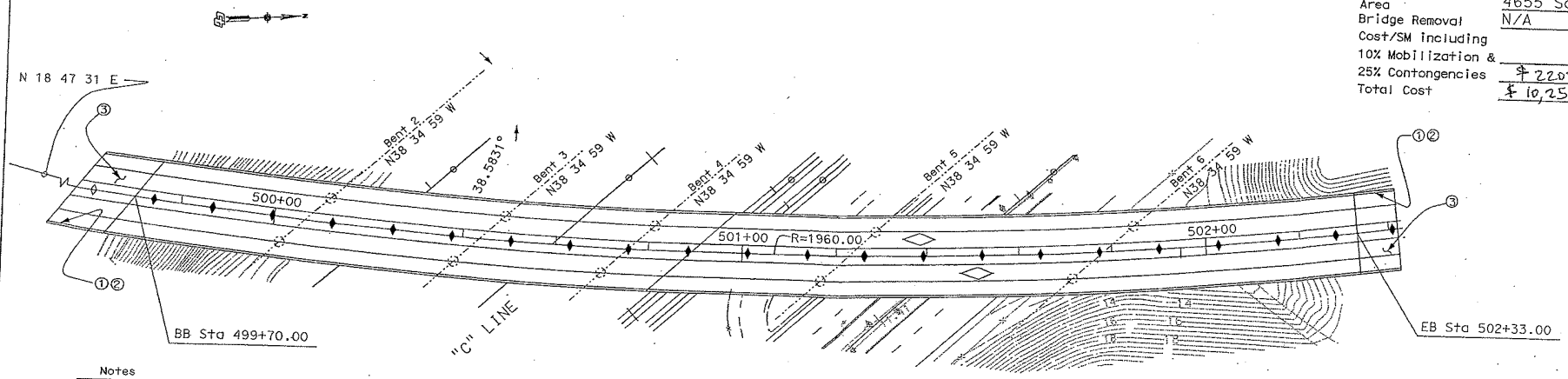

Notes

① Paint "I-5 Flyover"
② Paint "Br. No. 57-NEW"
③ Approach Slab Type N(9S)

PLAN

ALL DIMENSIONS ARE IN METERS UNLESS OTHERWISE SHOWN

DESIGNED BY	GARY HIGHT	DATE	June-2006
DRAWN BY	GARY HIGHT	DATE	June-2006
CHECKED BY		DATE	
APPROVED		DATE	

STRUCTURE DESIGN SECTION 18

PLANNING STUDY

I-5 FLYOVER (SDH-1) (1 OF 2)

BRIDGE No. 57-NEW | CU 11

SCALE: No Scale | EA 235800

USERNAME => ghight DATE PLOTTED => 23-JUN-2006 TIME PLOTTED => 13:24

STRUCTURES DESIGN ADVANCE PLANNING STUDY SHEET (METRIC) (REV. 9/2/98)

FILE => sd5 flyover-SDH1-layout.dgn

STATE OF CALIFORNIA - DEPARTMENT OF TRANSPORTATION - DIVISION OF STRUCTURES

REC 8-4-06

DIST.	COUNTY	ROUTE	KILOMETER POST TOTAL PROJECT
11	SD	5	

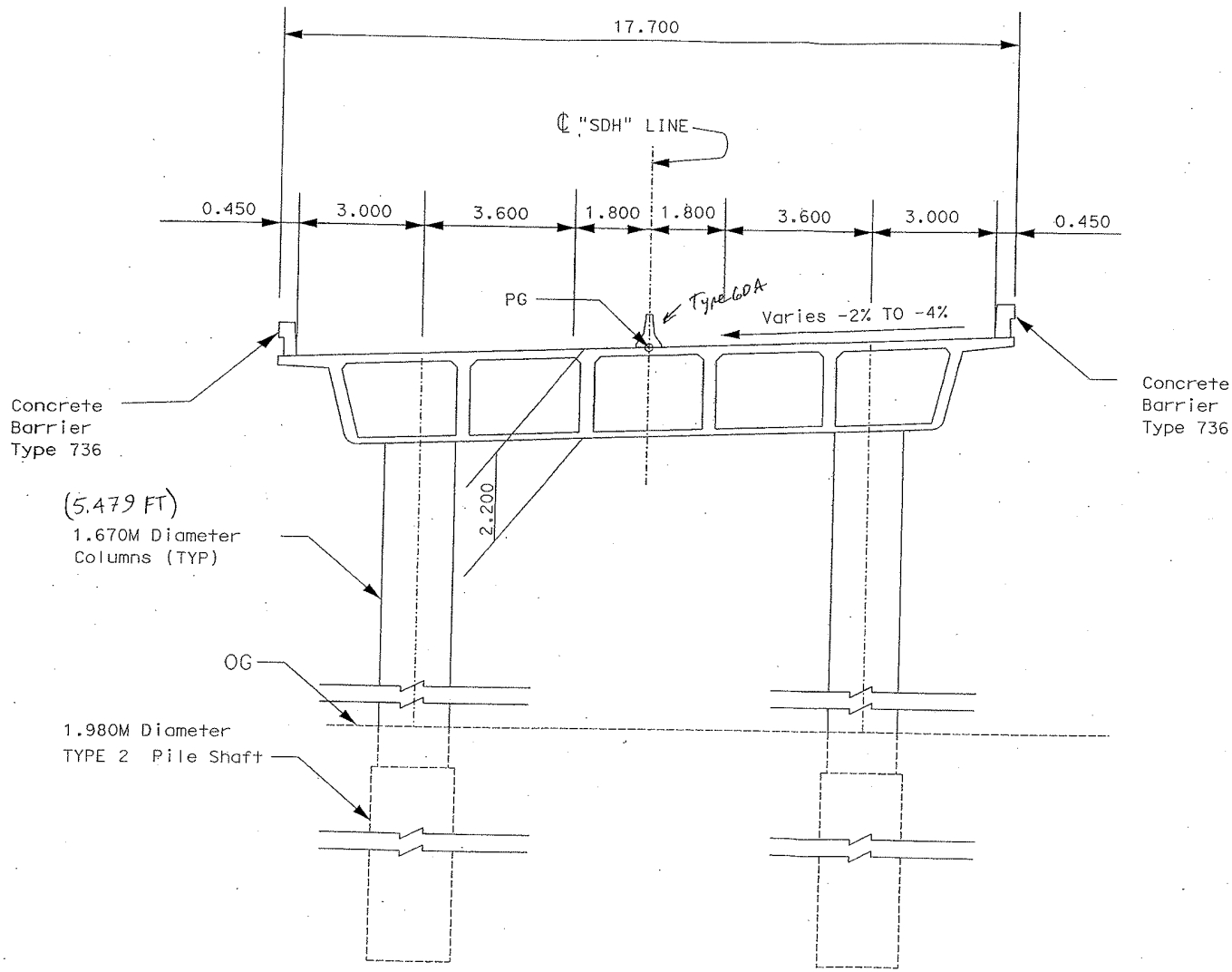

TYPICAL SECTION

ALL DIMENSIONS ARE IN METERS UNLESS OTHERWISE SHOWN

DESIGNED BY	GARY HIGHT	DATE	June-2006
DRAWN BY	GARY HIGHT	DATE	June-2006
CHECKED BY		DATE	
APPROVED		DATE	

STRUCTURE DESIGN SECTION 18

PLANNING STUDY

I-5 FLYOVER (SDH-1) (2 OF 2)

BRIDGE NO. 57-NEW | CU 11

SCALE: No Scale | EA 235800

SERNAME => ghight DATE PLOTTED => 23-JUN-2006 TIME PLOTTED => 13:24

DIST	COUNTY	ROUTE	KILOMETER POST TOTAL PROJECT	SHEET No.	TOTAL SHEETS
11	SD	5, 56, 805	Var	207	1549

Arturo G. Jacobo 04-23-01
REGISTERED CIVIL ENGINEER DATE

9-3-01
PLANS APPROVAL DATE

A G JACOBO No. 50225 Exp. 06-30-05 CIVIL STATE OF CALIFORNIA

The State of California or its officers or agents shall not be responsible for the accuracy or completeness of electronic copies of this plan sheet.

Caltrans now has a web site! To get to the web site, go to http://www.dot.ca.gov

Caltrans Metric

LEGEND

1/C-13 = DETAIL No. / SHEET No.

● = NEW COLUMNS ON CONCRETE

◎ = NEW COLUMNS ON ORIGINAL GROUND

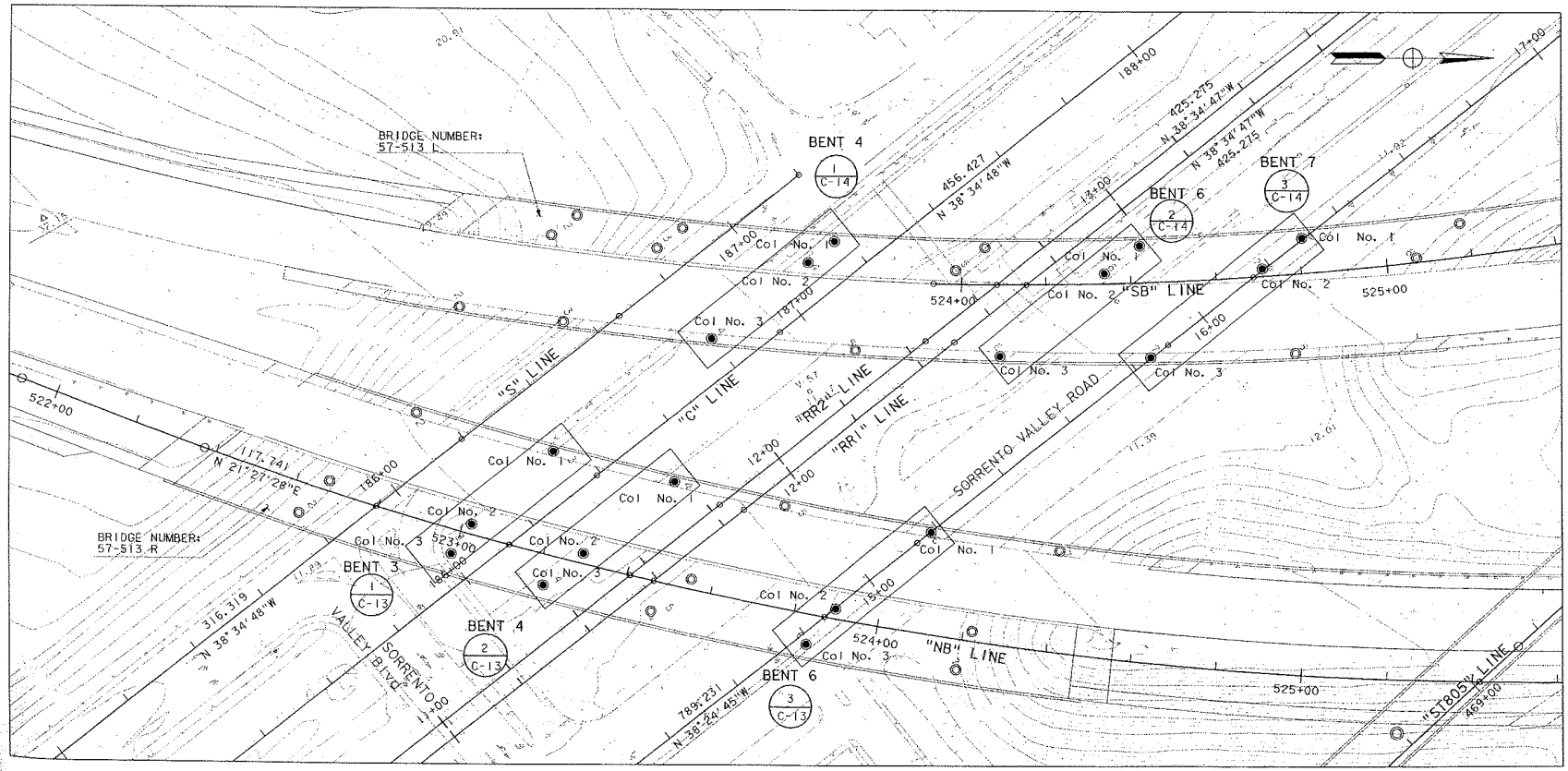

ALL DIMENSIONS ARE IN MILLIMETERS UNLESS OTHERWISE SHOWN

CONSTRUCTION DETAILS

SCALE 1:500

C-12

FOR REDUCED PLANS ORIGINAL SCALE IS IN MILLIMETERS 0 20 40 60 80

USERNAME = trleonard
DGN FILE = b0301ug12.dgn

CU 11275

EA 0301U1

LAST REVISION DATE PLOTTED = 14-SEP-2001
04-27-01 TIME PLOTTED = 09:28

A. G. JACOBO

EA 0301U1

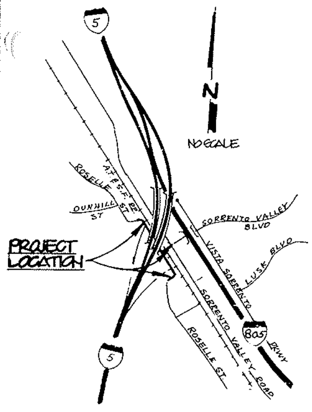

VICINITY MAP

SURVEY NOTES

KOSER	12-03-86	266-1701	W.O. 118901
KOSER	06-03-87	266-1701	W.O. 118903
KOSER	06-05-87	266-1701	W.O. 118903
DOOGS	07-22-87	266-1701	W.O. 118903
KOSER	03-22-88	266-1701	W.O. 118903

SHEET INDEX

SHEET NO.	DESCRIPTION
1.	Title Sheet
2.	Typical Street Sections
3.	Roselle Street - Beginning of Project to STA 20+75
4.	Roselle Street - STA 20+75 to STA 25+75
5.	Roselle Street - STA 25+75 to S.A 31+00
6.	Roselle Street - STA 31+00 to END of PROJECT
7.	Sorrento Valley Blvd Bridge - STA 0+00 to STA 2 + 65.75
8.	Bridge General Plan
9.	Bridge Slab Plan & Details
10.	Bridge Foundation Plan & Details
11.	Triple Box Culvert Plan & Details
12.	Access Ramp to Soledad Creek
13.	Traffic Control Plan
14	Traffic Signal Modification
15-16-17	STRIPING PLANS

GRADING AND GEOTECHNICAL SPECIFICATIONS

1. ALL GRADING SHALL BE DONE UNDER THE OBSERVATION OF A QUALIFIED SOILS ENGINEER AND ENGINEERING GEOLOGIST.
2. ALL FILL MATERIAL SHALL BE COMPACTED TO 90% OR BETTER EXCEPT FILL LOCATED WITHIN 50 FEET OF THE BRIDGE FOUNDATION SHALL BE COMPACTED TO 95% OR BETTER. REPORTS SHALL BE SUBMITTED TO THE CITY'S RESIDENT ENGINEER PRIOR TO THE ACCEPTANCE OF WORK.

TRAFFIC NOTES

1. SEE SHEET 13 FOR THE TRAFFIC CONTROL PLAN AND ADDITIONAL TRAFFIC CONTROL NOTES.
2. USE SIGNS, DELINEATORS, BARRICADES, ETC., AS PER CALIFORNIA DEPARTMENT OF TRANSPORTATION "MANUAL OF TRAFFIC CONTROLS FOR CONSTRUCTION AND MAINTENANCE WORK ZONES" DELINEATORS AND STEADY BURN LIGHTS TO OUTLINE THE TRAFFIC PATH, BARRICADES TO PROTECT THE WORK AREA.

MAINTAINING TRAFFIC: THE CONTRACTOR SHALL MAINTAIN ONE LANE IN EACH DIRECTION ON TWO LANE STREETS AND TWO LANES IN EACH DIRECTION FOR TRAFFIC ON ALL FOUR OR MORE LANES STREETS DURING THE WORKING HOURS OF 8:30 A.M. TO 3:30 P.M. FULL WIDTH OF ALL TRAVEL LANES ON EXISTING ROADWAYS MUST BE MAINTAINED DURING THE HOURS OF 3:30 P.M. TO 8:30 A.M. DAILY. AND ON SATURDAYS, SUNDAYS, AND DESIGNATED LEGAL HOLIDAYS, OR WHEN CONSTRUCTION OPERATIONS ARE NOT ACTIVELY IN PROGRESS ON WORKING DAYS. A FOUR FOOT WIDE PEDESTRIAN ACCESS SHALL BE PROVIDED AND MAINTAINED IN ACCORDANCE WITH SECTION 7-10.1 OF THE STANDARD SPECIFICATIONS. FOR CLARIFICATION OF THE ABOVE, THE CONTRACTOR MAY CONTACT TRAFFIC ENGINEERING AT 236 6040. ANY MODIFICATION OR CHANGE IN ALIGNMENT OF THE EXISTING PARKING OR TRAVEL LANES ON ONE WAY OR TWO WAY STREETS SHALL RECEIVE PRIOR APPROVAL FROM THE CITY TRAFFIC ENGINEER AND SHALL BE IN ACCORDANCE WITH SECTION 7-10.3 OF THE STANDARD SPECIFICATIONS (1985 EDITION).

3. ROSELLE STREET ADT = 20,000 SORRENTO VALLEY BLVD. ADT = 19,000

WATER NOTES

1. LOCATE WATER SERVICE CONNECTION OUT OF DRIVEWAY.

STREET LIGHT NOTES

1. CONTRACTOR INSTALLING THE STREET LIGHTING DISTRIBUTION SYSTEM SHALL NOTIFY FIELD ENGINEER (TELEPHONE 236-5520) A MINIMUM OF THREE (3) DAYS BEFORE BEGINNING OF WORK FOR APPROVAL OF CONDUIT LOCATION AND REQUIREMENTS.
2. CONTRACTOR SHALL VERIFY THAT ALL ST. LIGHTS ARE BURNING AND NOTIFY FIELD ENGINEER (TELEPHONE 236-5520) A MAXIMUM OF FOUR (4) WEEKS AFTER FINAL ELECTRICAL INSPECTION.
3. 3-90 WATTS (13,500 LUMENS) WITH TYPE 15 STEEL POLES LOW PRESSURE SODIUM VAPOR WITH CUTOFF FIXTURES PER CALTRANS STANDARD PLANS ES-6B, ES-6S, AND ES-7B (SEE SPECIFICATIONS).

EARTHWORK

EXCAVATION/EXPORT	1370 C.Y.
IMPORT	600 C.Y.

ABBREVIATIONS

∠	ANGLE	LT	LEFT
&	AND	L	LENGTH
@	AT	LF	LINEAR FEET
APPROX	APPROXIMATELY	MH	MANHOLE
AC	ASPHALT CONCRETE	MOD	MODIFIED
ABUT	ABUTMENT	MIN	MINIMUM
BF	BACK FACE	MAX	MAXIMUM
BEG	BEGINNING	NO.	NUMBER
BC	BEGINNING OF CURVE	N'LY	NORTHERLY
BCR	BEGINNING OF CURB RETURN	O.C.	ON CENTER
BVC	BEGIN VERTICAL CURVE	O/H	OVERHEAD
B/W	BACK OF WALL	PCC	PORTLAND CEMENT CONCRETE
BLVD.	BOULEVARD	PL	PROPERTY LINE
BTWN	BETWEEN	PMCTB	PLANT MIX CEMENT TREATED BASE
Cb	CURB	PI	POINT OF INTERSECTION
CI	CURB INLET	PRVC	POINT OF REVERSE VERTICAL CURVE
CO.	COMPANY	PT	POINT
CL	CENTERLINE	P.P.	POWER POLE
CTB	CEMENT TREATED BASE	PVMT	PAVEMENT
CTR	CENTER	PED	PEDESTRIAN
CONC	CONCRETE	RT	RIGHT
CONST	CONSTRUCT	RET	RETAINING
CLF	CHAIN LINK FENCE	R/W	RIGHT-OF-WAY
CF	CURB FACE	RCP	REINFORCED CONCRETE PIPE
C.O.	CLEAN OUT	RCB	REINFORCED CONCRETE BOX
CONN	CONNECTION	REINF	REINFORCEMENT
C&G	CURB & GUTTER	RR	RAILROAD
DWG	DRAWING	RD	ROAD
DEFL	DEFLECTION	R	RADIUS
DIA	DIAMETER	SD	STORM DRAIN
Δ	DELTA	SPECS	SPECIFICATIONS
EC	END OF CURVE	ST	STREET
ECR	END OF CURB RETURN	SHT	SHEET
EP	EDGE OF PAVEMENT	SDRSD	SAN DIEGO REGIONAL STANDARD DRAWINGS
EXST	EXISTING	STA	STATION
E'LY	EASTERLY	SL	STREET LIGHT
ELEV	ELEVATION	S'LY	SOUTHERLY
EVC	END VERTICAL CURVE	S/W	SIDEWALK
FL	FLOW LINE	T/W	TOP OF WALL
FG	FINISHED GRADE	TC	TOP OF CURB
FTG	FOOTING	TG	TOP OF GRATE
F/L	FLASHER LIGHT	TS	TRAFFIC SIGNAL
FM	FORCE MAIN	TYP	TYPICAL
GB	GRADE BREAK	U/G	UNDERGROUND
GR	GRADE	VC	VERTICAL CURVE
GUT	GUTTER	VCP	VITRIFIED CLAY PIPE
HT	HEIGHT	VERT	VERTICAL
HORIZ	HORIZONTAL	W/	WITH
IE	INVERT ELEVATION	W'LY	WESTERLY
IMP.	IMPROVEMENTS		
JT	JOINTS		

BENCHMARK:

BRASS PLUG AT S.E CORNER OF SORRENTO VALLEY BLVD BRIDGE OVER SOLEDAD CREEK.

ELEVATION 39 398 MSL

SPECIAL NOTES

THE FOLLOWING NOTES ARE PROVIDED TO GIVE DIRECTIONS TO THE CONTRACTOR BY THE ENGINEER OF WORK. THE CITY ENGINEER'S SIGNATURE ON THESE PLANS DOES NOT CONSTITUTE APPROVAL OF ANY OF THESE NOTES AND THE CITY WILL NOT BE RESPONSIBLE FOR THEIR ENFORCEMENT.

1. NEITHER THE CITY OF SAN DIEGO NOR THE ENGINEER OF WORK WILL ENFORCE SAFETY MEASURES OR REGULATIONS DURING THE COARSE OF CONSTRUCTION. THE CONTRACTOR SHALL DESIGN, CONSTRUCT AND MAINTAIN ALL SAFETY DEVICES, INCLUDING SHORING, AND SHALL BE SOLELY RESPONSIBLE FOR CONFORMING TO ALL LOCAL, STATE AND FEDERAL SAFETY AND HEALTH STANDARDS, LAWS AND REGULATIONS.
2. CONTRACTOR AGREES THAT HE SHALL ASSUME SOLE AND COMPLETE RESPONSIBILITY FOR JOB SITE CONDITIONS DURING THE COURSE OF CONSTRUCTION OF THIS PROJECT, INCLUDING SAFETY OF ALL PERSONS AND PROPERTY; THAT THIS REQUIREMENT SHALL APPLY CONTINUOUSLY AND NOT BE LIMITED TO NORMAL WORKING HOURS; AND THAT THE CONTRACTOR SHALL DEFEND, INDEMNIFY AND HOLD THE CITY OF SAN DIEGO AND THE ENGINEER OF WORK HARMLESS FROM ANY AND ALL LIABILITY, REAL OR ALLEGED, IN CONNECTION WITH PERFORMANCE OF WORK ON THIS PROJECT, EXCEPTING FOR LIABILITY ARISING FROM THE SOLE NEGLIGENCE OF THE CITY OF SAN DIEGO OR THE ENGINEER.
3. CONTRACTOR SHALL FIELD VERIFY THE LOCATION AND ELEVATION OF IMPROVEMENTS TO BE MET BY WORK TO BE DONE PRIOR TO CONSTRUCTION OF NEW WORK.
4. THE CONTRACTOR SHALL MAKE EXPLORATORY EXCAVATIONS AND LOCATE EXISTING UNDERGROUND FACILITIES SUFFICIENTLY AHEAD OF CONSTRUCTION TO PERMIT REVISIONS TO PLANS IF REVISIONS ARE NECESSARY DUE TO THE ACTUAL LOCATION OF EXISTING FACILITIES. THE EXISTENCE AND LOCATION OF THE UNDERGROUND FACILITIES SHOWN ON THESE PLANS WERE OBTAINED BY A SEARCH OF THE AVAILABLE RECORDS AND MAY NOT NECESSARILY BE IN THE EXACT LOCATION SHOWN. TO THE BEST OF OUR KNOWLEDGE, THERE ARE NO OTHER EXISTING UTILITIES EXCEPT AS SHOWN ON THESE PLANS.
5. CONTRACTOR IS REQUIRED TO TAKE PRECAUTIONARY MEASURES TO PROTECT AND MAINTAIN THE EXISTING UTILITY SERVICES SHOWN ON THESE PLANS AND ANY OTHERS NOT OF RECORD OR NOT SHOWN ON THESE PLANS. THE CONTRACTOR SHALL PROVIDE A MARK OUT OF ALL UNDERGROUND UTILITIES WITHIN THE AREA OF WORK PRIOR TO COMMENCING CONSTRUCTION.
6. CONTRACTOR SHALL NOTIFY THE SAN DIEGO GAS & ELECTRIC COMPANY AND THE PACIFIC TELEPHONE COMPANY PRIOR TO STARTING WORK NEAR EACH OF THE COMPANY FACILITIES AND SHALL COORDINATE HIS WORK WITH THE COMPANY REPRESENTATIVES AND REQUEST A LOCATION MARKOUT.
7. BEFORE EXCAVATING, THE CONTRACTOR SHALL VERIFY THE LOCATION OF UNDERGROUND UTILITIES BY CONTACTING:

UNDERGROUND SERVICE ALERT (USA)	1-800-442-4133
SAN DIEGO GAS & ELECTRIC	1-800-422-4133
PACIFIC TELEPHONE	1-800-422-4133
COMMUNICATIONS DIVISION, CITY OF SAN DIEGO	236-5505
WATER & SEWER	236-5650
FIRE	1-800-422-4133

8. CONTRACTOR SHALL ADJUST CITY OF SAN DIEGO MANHOLE RIMS, WATER METER BOXES, WATER VALVE COVERS, WATER CLEANOUT COVERS, SEWER M.H. COVERS, ETC., TO NEW GRADE AS REQUIRED. WATER METER BOXES AND VAULTS BROKEN OR DAMAGED DURING CONSTRUCTION SHALL BE REPLACED BY THE CONTRACTOR PER CITY OF SAN DIEGO STANDARD DRAWINGS.
9. ALL UTILITY POLE RELOCATIONS AND ELEVATION ADJUSTMENTS FOR ALL GAS, ELECTRIC AND TELEPHONE MANHOLES AND VAULTS ARE THE RESPONSIBILITY OF THE RESPECTIVE UTILITY (SAN DIEGO GAS & ELECTRIC COMPANY AND PACIFIC TELEPHONE COMPANY).
10. PAVEMENT MUST BE PLACED WITHIN FIVE WORKING DAYS AFTER GRADING OF THE SUBGRADE IS STARTED UNLESS OTHERWISE AUTHORIZED IN WRITING BY ENGINEER.
11. CONTRACTOR SHALL PLACE 1/2" PREFORMED JOINT FILLER MATERIAL AROUND BASE OF UTILITY POLES FOR FULL DEPTH OF CONCRETE BEFORE CONSTRUCTING CONCRETE IMPROVEMENTS.
12. CONTRACTOR SHALL NOT PERFORM ANY WORK WITHIN 25 FEET OF NEAREST R.R. TRACK CENTERLINE WITHOUT AN AT&SF FIELD INSPECTOR OR AN AT&SF FLAGMAN PRESENT. CONTACT AT&SF SAN BERNARDINO OFFICE ENGINEER TO MAKE ARRANGEMENTS TWO WORKING DAYS PRIOR TO CONSTRUCTION AT (714) 387-1258.
13. CONTRACTOR SHALL PROVIDE SILT SETTLING BASIN DOWN STREAM FROM PROJECT SITE AS PER CALIF. FISH & GAME RECOMMENDATION (ATTACHED TO SPECIFICATIONS); AND SHALL INCLUDE THE COST OF SILT SETTLEMENT BASIN IN COST FOR CLEARING AND GRUBBING.

REFERENCE DRAWINGS

CITY OF SAN DIEGO DRAWINGS:

6271A-D	17407-D
10754-2,-3-D	18360-D
11218-2-D	19964-1,-2,-3-D
11877-2-D	21086-1-D
12713-1-D	23154-2,-3-D
13517-2,-3-D	23474-1,-2-D
13644-38,-39-D	23475-D
13793-2,-3,-4-D	23476-D

CALTRANS DRAWINGS: 11-SD-5, PM 28.6-31.9

ENGINEER OF WORK

I HEREBY DECLARE THAT I AM THE ENGINEER OF WORK FOR THIS PROJECT, THAT I HAVE EXERCISED RESPONSIBLE CHARGE OVER THE DESIGN OF THE PROJECT AS DEFINED IN SECTION 6703 OF THE BUSINESS AND PROFESSIONS CODE, AND THAT THE DESIGN IS CONSISTENT WITH CURRENT STANDARDS.

I UNDERSTAND THAT THE CHECK OF PROJECT DRAWINGS AND SPECIFICATIONS BY THE CITY OF SAN DIEGO IS CONFINED TO A REVIEW ONLY AND DOES NOT RELIEVE ME, AS ENGINEER OF WORK, OF MY RESPONSIBILITIES FOR PROJECT DESIGN.

J ROGER HOCKING
5-17-88 — DATE
40098 — RCE

REGISTERED PROFESSIONAL ENGINEER — JON ROGER HOCKING — No. 40098 — CIVIL — STATE OF CALIFORNIA — EXP. 3/31/90

WORK TO BE DONE

THE IMPROVEMENTS CONSIST OF THE FOLLOWING WORK TO BE DONE ACCORDING TO THESE PLANS AND THE SPECIFICATIONS AND STANDARD DRAWINGS OF THE CITY OF SAN DIEGO.

STANDARD SPECIFICATIONS

1. STANDARD SPECIFICATIONS FOR PUBLIC WORKS CONSTRUCTION (1985 EDITION), INCLUDING REGIONAL STANDARD SPECIAL PROVISIONS (1986 EDITION), AND CITY OF SAN DIEGO STANDARD SPECIAL PROVISIONS, DOCUMENTS NO. 769345, FILED APRIL 7, 1986.
2. CALIFORNIA DEPARTMENT OF TRANSPORTATION, "MANUAL OF TRAFFIC CONTROLS FOR CONSTRUCTION AND MAINTENANCE WORK ZONES" (1985 EDITION), DOCUMENT NO. 769159, FILED APRIL 16, 1986.
3. CALIFORNIA DEPARTMENT OF TRANSPORTATION, STANDARD SPECIFICATIONS, JANUARY 1988, DOCUMENT No. 769692.

STANDARD DRAWINGS

1. CITY OF SAN DIEGO STANDARD DRAWINGS, DOCUMENT NO. 769374, FILED JUNE 3, 1986.
2. CALIFORNIA DEPARTMENT OF TRANSPORTATION, STANDARD PLANS JANUARY 1988 (SEE SPECIFICATION NO. 5714)

IMPROVEMENTS STD. DWG. SYMBOL

IMPROVEMENTS	STD. DWG.
MASONRY RETAINING WALL	~~G-2, G-7, G-8~~ Δ TYPE 6B WALL (PER CALTRANS)
Δ ~~GRAVITY RETAINING WALL~~ TYPE 6B WALL (PER CALTRANS STD DWG)	~~G-5~~
TYPE A CURB INLET	D-1, SDG-110
TYPE B CURB INLET	D-2, SDG-110
STORM DRAIN	D-60, SDG-10,
Δ ~~CURB OUTLET, TYPE A~~	~~D-25~~
STREET LIGHT	CALTRANS ES-6B, ES-6S, ES-7B
PEDESTRIAN BARRICADE	Δ ~~SDE-103~~ B9-5E CALTRANS
Δ PEDESTRIAN RAMP "A" ~~OR "C"~~ / PEDESTRIAN RAMP	SDG-101 CALTRANS CASE E &C
Δ AC PAVEMENT, 4" AC OR 11" PMCTB	
AC PAVED RAISED MEDIAN	SDG-112
TYPE H CURB & GUTTER	G-2, SDG-120
TYPE A AC BERM	G-5
Δ ~~TYPE B-2 CURB & GUTTER~~	~~G-6~~
SIDEWALK	G-7, G-9
DRIVEWAYS	G-14, G-26, SDG-100
GUARD RAIL	SDM-104, SDM-106, M-7
6' CHAIN LINK FENCE W/ RP HORIZONTAL RAIL	M-6
RIP RAP ENERGY DISSIPATOR W/ FILTER	D-40, SDD-100
CONC HEADWALL TYPE A	D-30
PIPE TO CHANNEL CONNECTION	D-73
TYPE B-3 CURB	G-6
EXTEND 1½" WATER SERVICE	W-25, W-2, SDW-100 W-15 (A-1)
DEMOUNTABLE POST	M-16
AC SPILLWAY	Δ ~~D-32~~ CALTRAN D87: B
BRIDGE IMPROVEMENTS	SEE SHT 8-10
TRIPLE BOX CULVERT	SEE SHT 11 D-18, D-19, D-80
ACCESS RAMP IMPROVEMENTS	SEE SHT 12
AC OVERLAY	

CITY CONTRACT SPECIFICATION NO. 5714

PLANS FOR THE IMPROVEMENT OF
SORRENTO VALLEY BLVD. BRIDGE
OVER SOLEDAD CREEK AND
ROSELLE STREET

CITY OF SAN DIEGO, CALIFORNIA
ENGINEERING DEPARTMENT
SHEET 1 OF 17 SHEETS

W.O. NO. 118903

FOR CITY ENGINEER — DATE 2-16-89

SECTION HEAD

PROJECT MANAGER

DESCRIPTION	BY	APPROVED	DATE	FILMED
ORIGINAL				
Δ AS BUILT	P&A			

CONTROL CERTIFICATION

268-1639 LAMBERT COORDINATES

POUNTNEY & ASSOCIATES
CONSULTING ENGINEERS
4455 MURPHY CANYON ROAD, SUITE 200
SAN DIEGO, CA 92123 (619) 576-9200
1987 POUNTNEY & ASSOCIATES, INC

CONTRACTOR T.C. PENICK CORP. DATE STARTED MAY 15, 1989
INSPECTOR GEORGE GEAR DATE COMPLETED MARCH 1, 1990

23914-1-D

AS BUILT

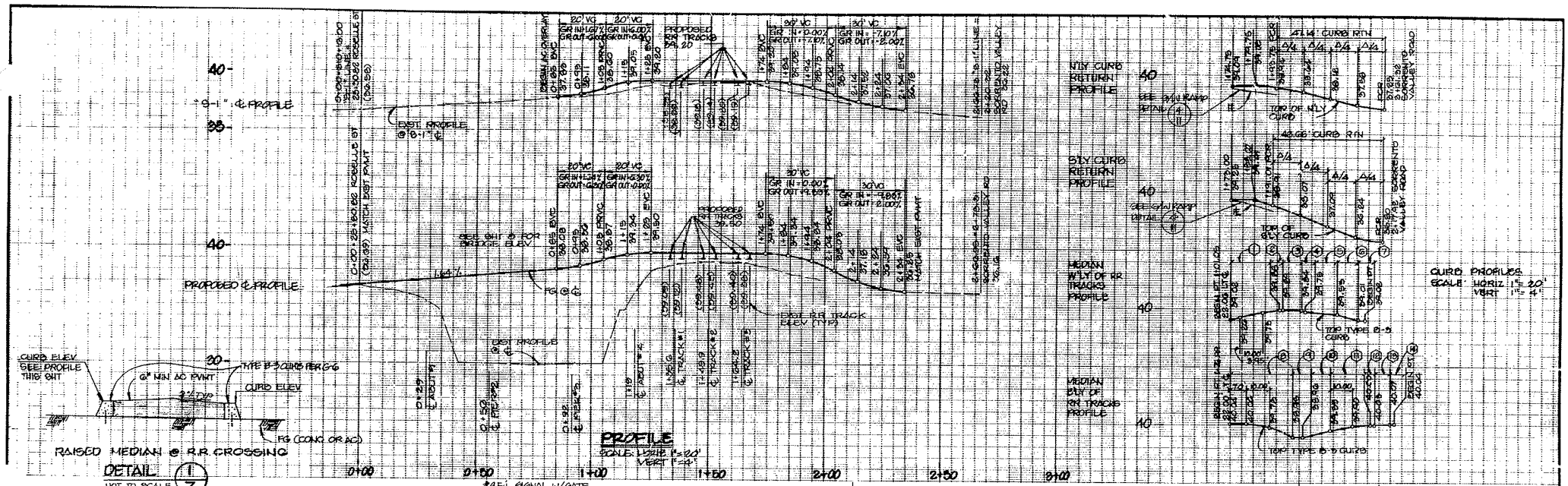

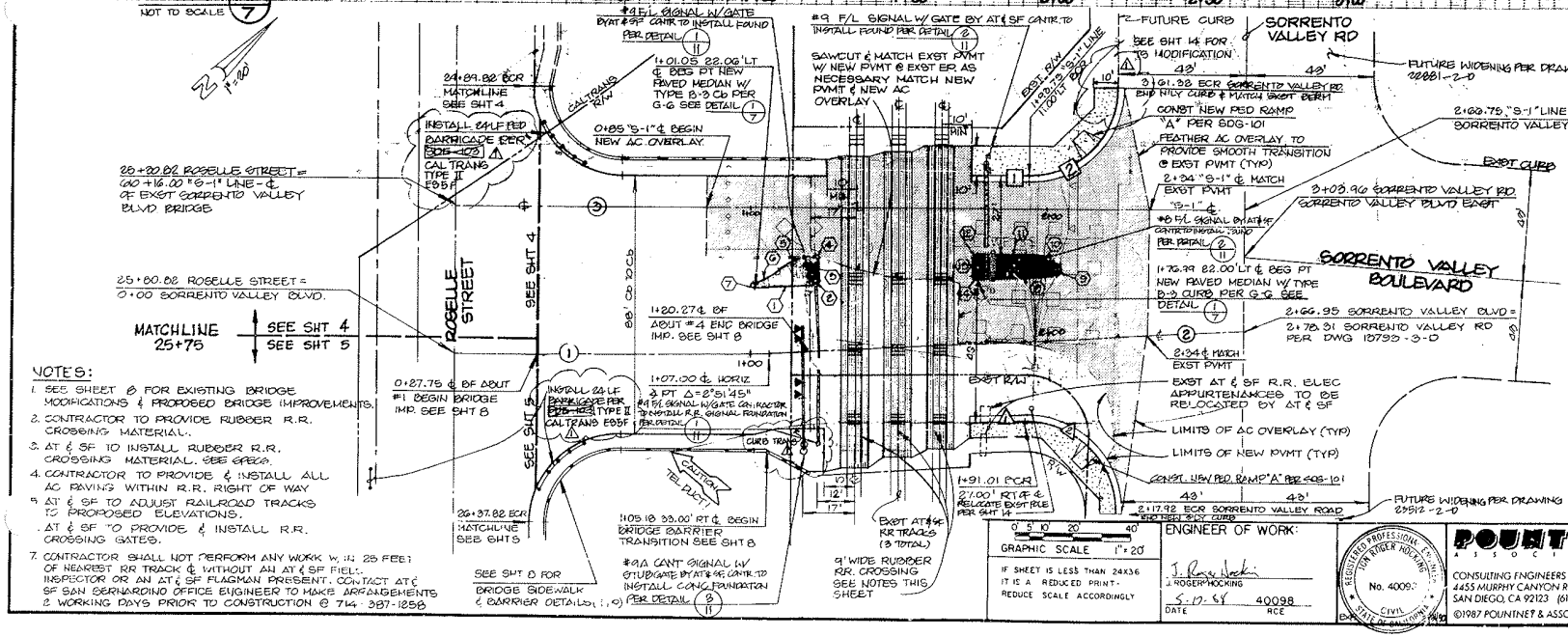

NOTES:

1. SEE SHEET 8 FOR EXISTING BRIDGE MODIFICATIONS & PROPOSED BRIDGE IMPROVEMENTS.
2. CONTRACTOR TO PROVIDE RUBBER R.R. CROSSING MATERIAL.
3. AT & SF TO INSTALL RUBBER R.R. CROSSING MATERIAL. SEE GP6G.
4. CONTRACTOR TO PROVIDE & INSTALL ALL AC PAVING WITHIN R.R. RIGHT OF WAY
5. AT & SF TO ADJUST RAILROAD TRACKS TO PROPOSED ELEVATIONS.
6. AT & SF TO PROVIDE & INSTALL R.R. CROSSING GATES.
7. CONTRACTOR SHALL NOT PERFORM ANY WORK WITHIN 25 FEET OF NEAREST RR TRACK ℄ WITHOUT AN AT & SF FIELD INSPECTOR OR AN AT & SF FLAGMAN PRESENT. CONTACT AT & SF SAN BERNARDINO OFFICE ENGINEER TO MAKE ARRANGEMENTS 2 WORKING DAYS PRIOR TO CONSTRUCTION @ 714-387-1258

N'LY CURB DATA

NO	Δ OR BEARING	R (ft)	L (ft)	REMARKS
1	N51°24'54"E		19.00	G" TYPE H CURB
2	90°00'04'	30.00	47.14	"

℄ DATA

NO	Δ OR BEARING	R (ft)	L (ft)	REMARKS
1	N51°24'54"E		107.00	PROPOSED ℄
2	N48°55'09"E		159.95	"
3	N51°24'54"E		266.75	EXIST "S-1" ℄

S'LY CURB DATA

NO	Δ OR BEARING	R (ft)	L (ft)	REMARKS
1	N48°55'09"E		16.01	G" TYPE H CURB
2	92°51'41"	30.00	48.62	"

RAISED MEDIAN CURB DATA

NO	Δ OR BEARING	R (ft)	L (ft)	REMARKS
1	N48°55'09"E		21.05	G" TYPE B-3 CURB
2	87°08'04"	1.00	1.52	"
3	N38°54'55"W		7.58	"
4	90°00'11"	1.00	1.57	"
5	40°20'10"	20.00	14.08	"
6	28°55'56"	20.00	9.40	"
7	169°27'33"	1.00	2.96	"
8	N48°55'09"		27.29	"
9	159°06'46"	2.00	4.64	"
10	39°01'27"	16.94	11.25	"
11	S51°24'54"W		18.00	"
12	89°59'49"	1.00	1.57	"
13	S38°54'55"E		6.53	"
14	92°51'56'	1.00	1.62	"

CITY CONTRACT

PLANS FOR THE IMPROVEMENT OF
SORRENTO VALLEY BLVD. BRIDGE
OVER SOLEDAD CREEK AND
ROSELLE STREET

CITY OF SAN DIEGO, CALIFORNIA
ENGINEERING DEPARTMENT
SHEET 7 OF 17 SHEETS

W.O. NO. 118903

DESCRIPTION	BY	APPROVED	DATE	FILMED
ORIGINAL				
1 AS BUILT	P&A	C.G.S.A.R.		

CONTROL CERTIFICATION
258-1699
CONTROL COORDINATES

CONTRACTOR T.B. PENICK & SON DATE STARTED MAY 15, 1984
INSPECTOR GEORGE, ROAR DATE COMPLETED MARCH 1, 1996

23914-7-D

ENGINEER OF WORK:
J. ROGER HOCKING
5-17-88 DATE
40098 RCE

REGISTERED PROFESSIONAL ENGINEER
JOHN ROGER HOCKING
No. 40098
CIVIL
STATE OF CALIFORNIA

POUNTNEY ASSOCIATES
CONSULTING ENGINEERS
4455 MURPHY CANYON ROAD, SUITE 200
SAN DIEGO, CA 92123 (619) 576-9200
©1987 POUNTNEY & ASSOCIATES, INC.

AS B1111.T

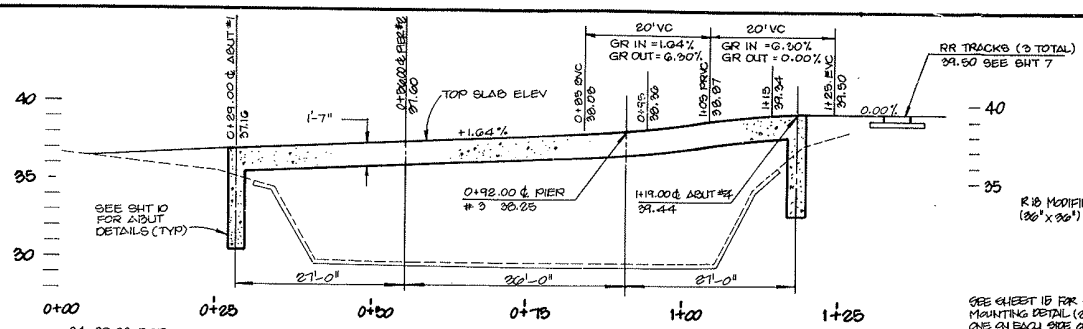

NEW BRIDGE ℄ PROFILE

SCALE: HORIZ 1" = 10'
VERT 1" = 4'

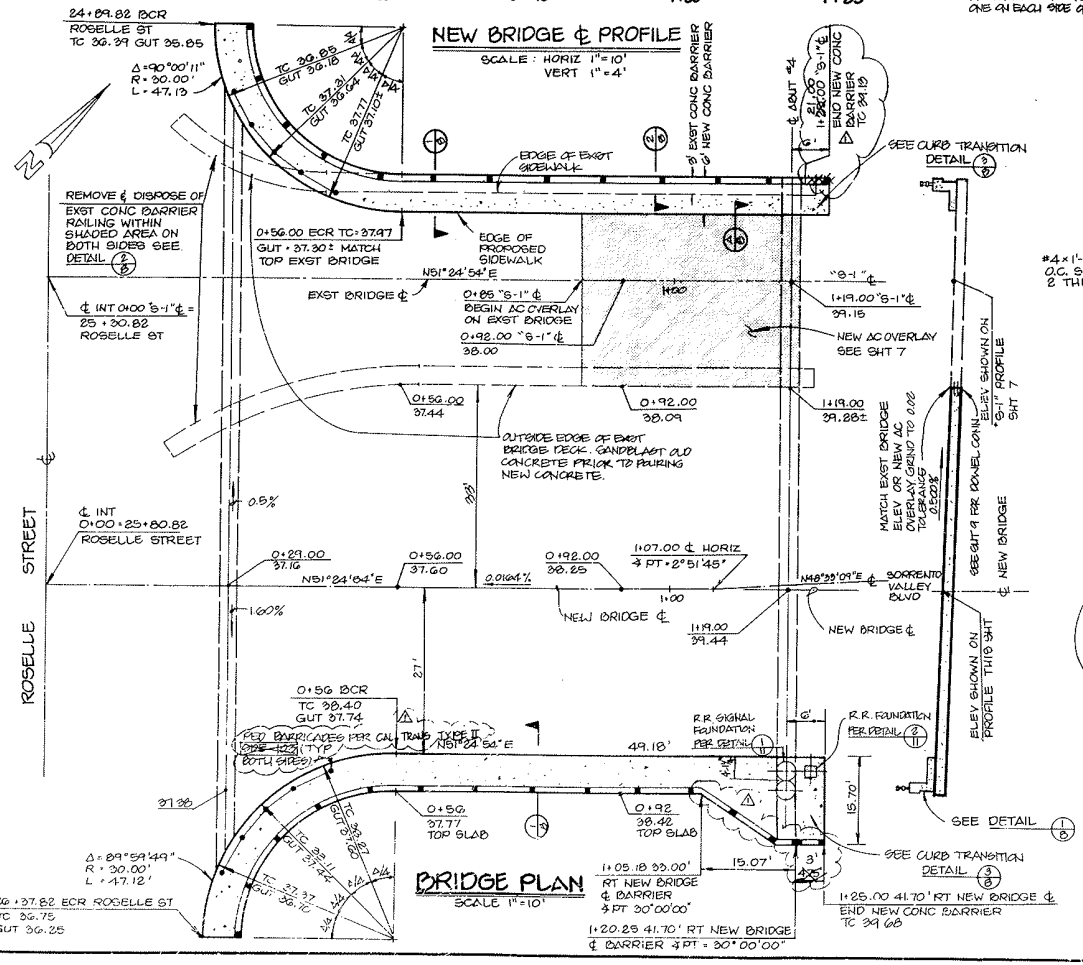

BRIDGE PLAN

SCALE 1" = 10'

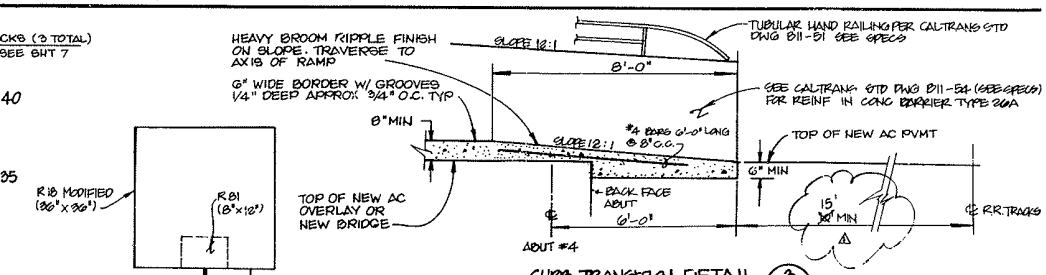

CURB TRANSITION DETAIL 3/8

1/2" = 1'-0"

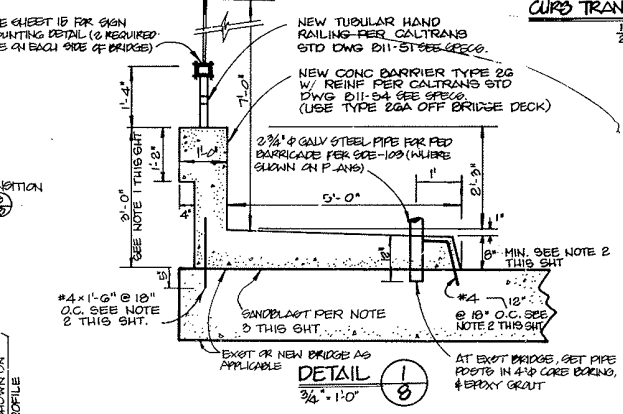

DETAIL 1/8

3/4" = 1'-0"

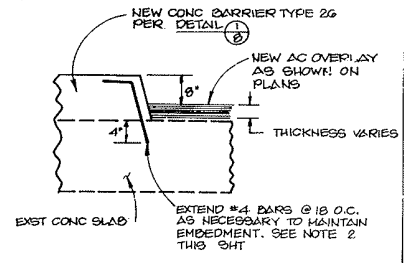

SECTION A/8

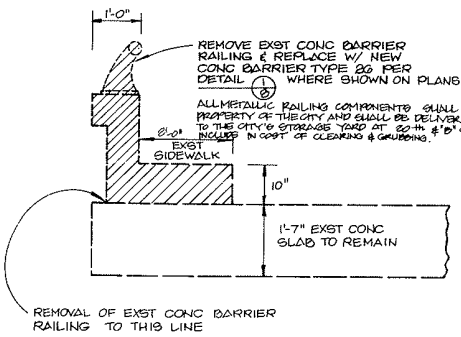

DETAIL 2/8

3/4" = 1'-0"

NOTES:

1. WHERE NEW AC OVERLAY PLACED ON EXST BRIDGE INCREASE THICKNESS OF NEW CONC BARRIER TYPE 26 TO MAINTAIN 8" CURB HT. SEE SECTION A/8
2. #4 BARS @ 18" O.C. TO BE DRILLED & EPOXY GROUTED INTO EXST BRIDGE DECK, PER CALTRANS SPECIFICATIONS 51-1.13.
3. SANDBLAST ALL LOCATIONS WHERE NEW CONCRETE IS TO BE PLACED AGAINST OLD CONCRETE INCLUDE IN COST OF NEW CONCRETE

CITY CONTRACT

PLANS FOR THE IMPROVEMENT OF
SORRENTO VALLEY BLVD. BRIDGE
OVER SOLEDAD CREEK AND
ROSELLE STREET

CITY OF SAN DIEGO, CALIFORNIA
ENGINEERING DEPARTMENT
SHEET 8 OF 17 SHEETS

W.O. NO. 118903

CITY ENGINEER — DATE — SECTION HEAD — PROJECT MANAGER

DESCRIPTION	BY	APPROVED	DATE	FILMED
ORIGINAL				
△ AS BUILT	P&A	[illegible]	[illegible]	

CONTROL CERTIFICATION

268-1099
LIBRARY COORDINATES

CONTRACTOR T.D. PERRY & SON — DATE STARTED MAY 15 1989
INSPECTOR GEORGE GOUS — DATE COMPLETED MARCH 1, 1990

23914-8-D

ENGINEER OF WORK:
J. ROGER HUCKING
5-17-88 — DATE
40098 — RCE

REGISTERED PROFESSIONAL ENGINEER — JOHN ROGER HUCKING — No. 40098 — CIVIL — STATE OF CALIFORNIA

POUNTNEY ASSOCIATES
CONSULTING ENGINEERS
4455 MURPHY CANYON ROAD, SUITE 200
SAN DIEGO, CA 92123 (619) 576-9200
©1987 POUNTNEY & ASSOCIATES, INC.

AS BUILT

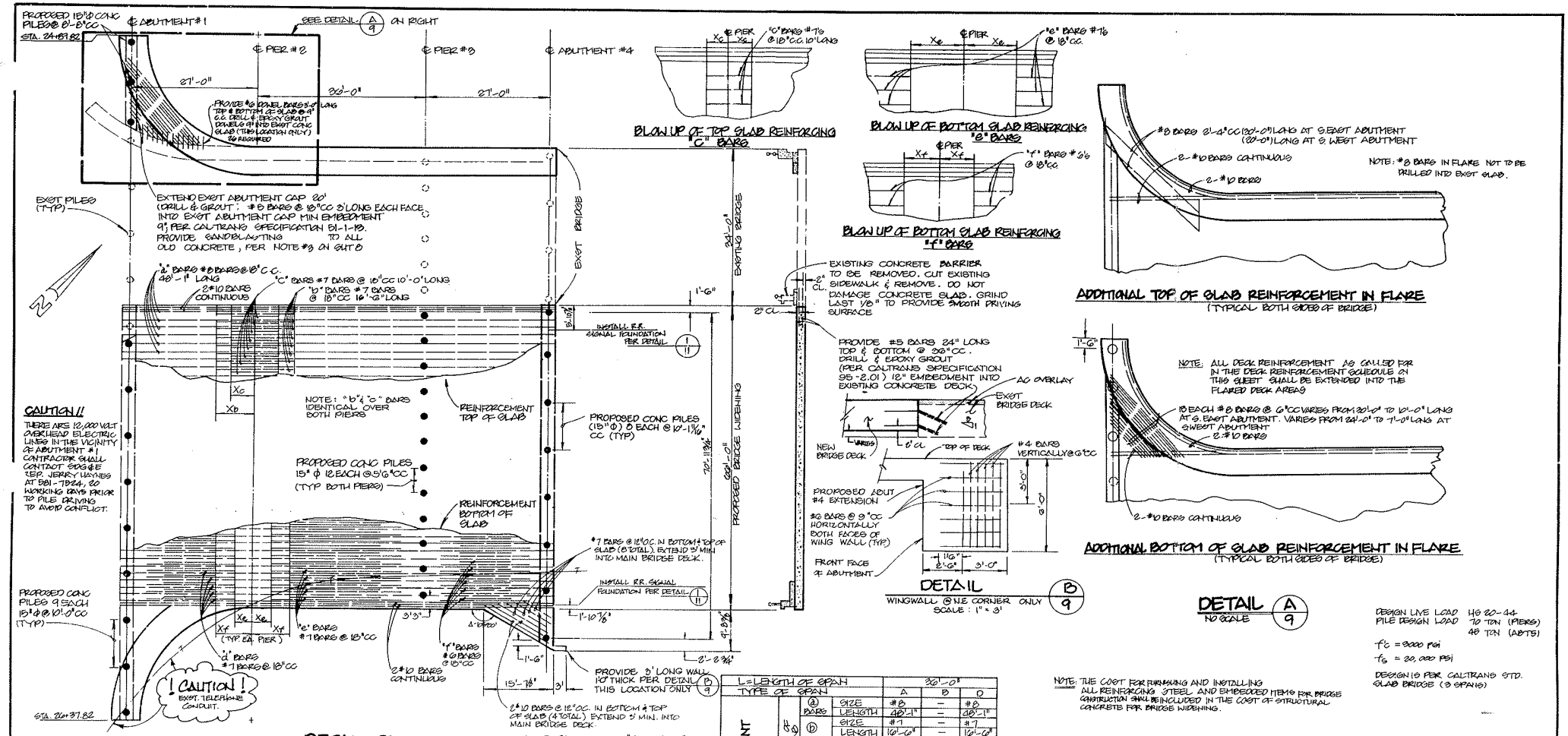

DECK PLAN

SCALE: 1" = 10'

ELEVATION

NO SCALE

BRIDGE SUPPORT	PLANNED PILE TIP ELEV. *
ABUT #1	±8 M.S.L.
PIER #2	-1 M.S.L.
PIER #3	-12 M.S.L.
PIER #4	-21 M.S.L.

* TO BE USED FOR BID PURPOSES ONLY. SEE SPECS.

BLOW UP OF TOP SLAB REINFORCING "C" BARS

BLOW UP OF BOTTOM SLAB REINFORCING "e" BARS

BLOW UP OF BOTTOM SLAB REINFORCING "f" BARS

ADDITIONAL TOP OF SLAB REINFORCEMENT IN FLARE
(TYPICAL BOTH SIDES OF BRIDGE)

ADDITIONAL BOTTOM OF SLAB REINFORCEMENT IN FLARE
(TYPICAL BOTH SIDES OF BRIDGE)

DETAIL B/9
WINGWALL @ N.E. CORNER ONLY
SCALE: 1" = 3'

DETAIL A/9
NO SCALE

DECK REINFORCEMENT SCHEDULE					
L = LENGTH OF SPAN			30'-0"		
TYPE OF SPAN			A	B	D
TOP OF SLAB	a BARS	SIZE	#8	—	#8
		LENGTH	48'-1"	—	48'-1"
	b BARS	SIZE	#7	—	#7
		LENGTH	16'-6"	—	16'-6"
		Xb	8'-6"	—	8'-6"
	c BARS	SIZE	#7	—	#7
		LENGTH	10'-0"	—	10'-0"
		Xc	5'-0"	—	5'-0"
BOTTOM OF SLAB	d BARS	SIZE	#7	#7	#7
		LENGTH	30'-0"	32'-0"	30'-0"
	e BARS	SIZE	#7	#7	#7
		LENGTH	28'-6"	27'-0"	28'-6"
		Xe	2'-6"	4'-6"	3'-6"
	f BARS	SIZE	#6	#6	#6
		LENGTH	18'-6"	19'-0"	18'-6"
		Xf	8'-0"	8'-6"	8'-0"
DISTRIBUTION STEEL SPACING (SIZE #6)			12"	12"	12"
T = THICKNESS OF SLAB			14"		
APPROX QUANTITIES PER FOOT OF WIDTH	CONC FT³		44.7	51.0	44.7
	STEEL LBS		2.10	1.60	2.10
ULTIMATE DEFLECTION @ MIDSPAN Δ			0.02'	0.04'	0.02'

NOTES: 1. LENGTH INCLUDES ALLOWANCE FOR ONE ADDITIONAL SPLICE IN "A" OR "D" SPAN. CONTRACTOR SHALL SUBMIT FALSEWORK DEFLECTION DATA 30 DAYS PRIOR TO POURING CONCRETE DECK.
2. DEFLECTIONS DO NOT INCLUDE FALSEWORK SETTLEMENT OR DEFLECTIONS.

NOTE: THE COST FOR FURNISHING AND INSTALLING ALL REINFORCING STEEL AND EMBEDDED ITEMS FOR BRIDGE CONSTRUCTION SHALL BE INCLUDED IN THE COST OF STRUCTURAL CONCRETE FOR BRIDGE WIDENING.

DESIGN LIVE LOAD HS 20-44
PILE DESIGN LOAD 70 TON (PIERS)
45 TON (ABTS)

f'_c = 3000 psi
f_s = 20,000 psi

DESIGN IS PER CALTRANS STD. SLAB BRIDGE (3 SPANS)

ENGINEER OF WORK:
J. ROGER HOCKING
DATE 5-7-88 RCE 40098

REGISTERED PROFESSIONAL ENGINEER J. ROGER HOCKING No. 40098 CIVIL STATE OF CALIFORNIA EXP 12/31/88

POUNTNEY ASSOCIATES
CONSULTING ENGINEERS
4455 MURPHY CANYON ROAD, SUITE 200
SAN DIEGO, CA 92123 (619) 570-9200
©1987 POUNTNEY & ASSOCIATES, INC.

CITY CONTRACT

PLANS FOR THE IMPROVEMENT OF
SORRENTO VALLEY BLVD. BRIDGE
OVER SOLEDAD CREEK AND
ROSELLE STREET

CITY OF SAN DIEGO, CALIFORNIA
ENGINEERING DEPARTMENT
SHEET 9 OF 17 SHEETS

W.O. NO 118903

CITY ENGINEER — DATE 6/28/88 — SECTION HEAD

DESCRIPTION	BY	APPROVED	DATE	FILMED
ORIGINAL				
△ AS-BUILT	P & A			

PROJECT MANAGER

CONTROL CONSTITUENT 268-1699

CONTRACTOR B. FRANCO & SON — DATE STARTED MAY 19, 1983
INSPECTOR OBORGE, OSCAR — DATE COMPLETED MARCH 1, 1984

LANDIST COORDINATOR 23914-9-D

AS BUILT

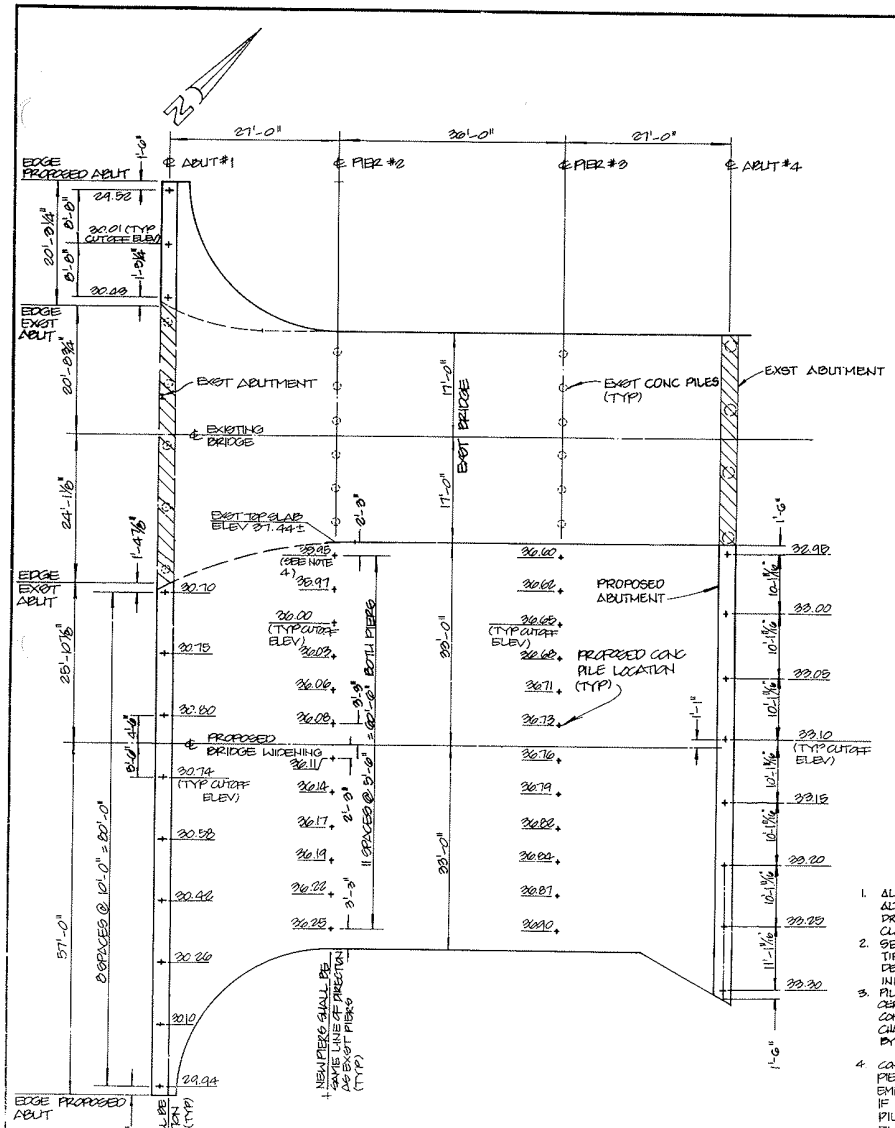

PILING LAYOUT

SCALE: 1" = 10'

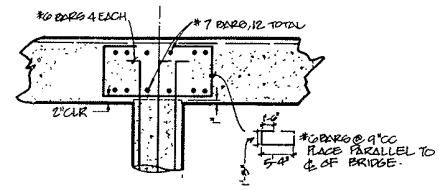

SECTION A-A

PIER CAP SECTION

NO SCALE

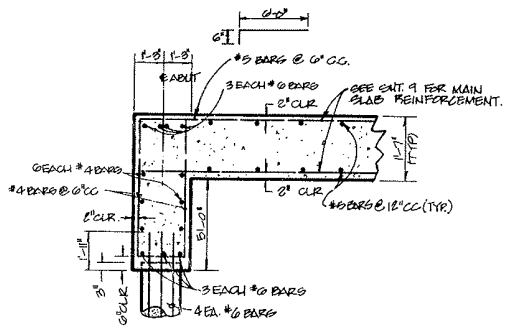

SECTION B-B

ABUTMENT SECTION

NO SCALE

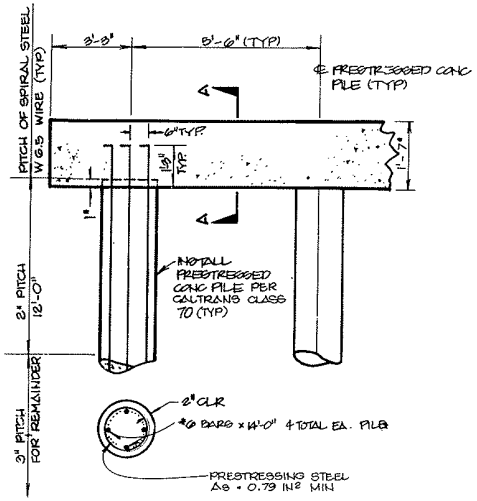

PIER ELEVATION VIEW

NO SCALE

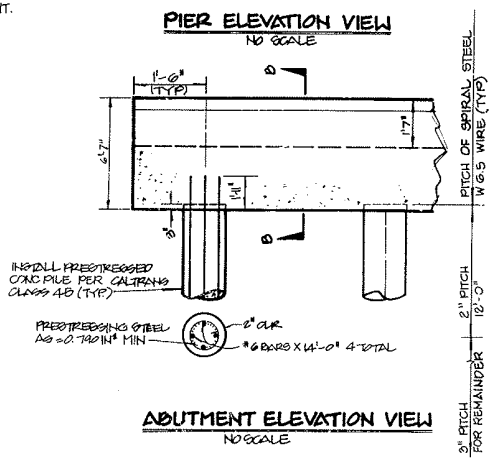

ABUTMENT ELEVATION VIEW

NO SCALE

PILE NOTES

1. ALL 18" PRESTRESSED CONCRETE PILES SHALL CONFORM TO ALTERNATIVE "F" OF CALTRANS PILE DETAILS & STANDARD DRAWING B2-5 FOR THE RESPECTIVE CLASS 45 AND CLASS 70 PILES. SEE SPECS.
2. SEE TABLE ON SHEET 9 FOR PLANNED PILE TIP ELEVATIONS, DYNAMIC PILE DRIVING FORMULA DETERMINATION, PILE DRIVEABILITY, AND OTHER PILE INFORMATION & REQUIREMENTS, PER SPECIFICATIONS.
3. PILE MANUFACTURER SELECTED BY CONTRACTOR SHALL SUBMIT CERTIFIED DESIGN FOR PILES BEING PROPOSED, TO CONFIRM CONFORMANCE WITH SPECIFICATIONS AND LOAD CARRYING CHARACTERISTICS. CERTIFICATION SHALL BE SIGNED BY A CALIFORNIA REGISTERED CIVIL ENGINEER.
4. CONTRACTOR SHALL FIELD VERIFY EXIST TOP SLAB ELEV @ ℄ PIER #2 PRIOR TO PILE CUTOFF. PILES SHALL MAINTAIN 1' MIN EMBEDMENT AS SHOWN IN PIER ELEVATION VIEW THIS SHT. IF EXIST TOP SLAB ELEV IS DIFFERENT AS SHOWN ON PILING LAYOUT, CONTRACTOR SHALL ADJUST PILE CUTOFF ELEV AS NECESSARY.

CITY CONTRACT

PLANS FOR THE IMPROVEMENT OF
SORRENTO VALLEY BLVD. BRIDGE
OVER SOLEDAD CREEK AND
ROSELLE STREET

CITY OF SAN DIEGO, CALIFORNIA
ENGINEERING DEPARTMENT
SHEET 10 OF 17 SHEETS

W.O. NO. 118903

ENGINEER OF WORK: J. ROGER HOCKING, 5-17-84, 40098 RCE

REGISTERED PROFESSIONAL ENGINEER JOHN ROGER HOCKING No. 40098 CIVIL STATE OF CALIFORNIA

POUNTNEY ASSOCIATES
CONSULTING ENGINEERS
4455 MURPHY CANYON ROAD, SUITE 200
SAN DIEGO, CA 92123 (619) 576-9200
©1987 POUNTNEY & ASSOCIATES, INC.

DESCRIPTION	BY	APPROVED	DATE	FILMED
ORIGINAL				
△1 AS BUILT	P&A	[redacted]		

CONTRACTOR T.B. PENICK & SON DATE STARTED MAY 15, 1984
INSPECTOR GEORGE OSAK DATE COMPLETED MAR 4, 1990

PROJECT MANAGER
SECTION HEAD
CONTROL CERTIFICATION 268-1699
LAMBERT COORDINATES 23914-10-D

AS BUILT

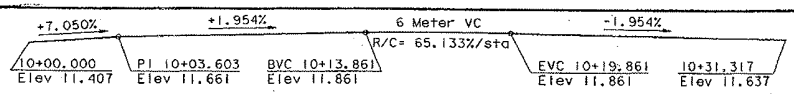

PROFILE GRADE

No Scale

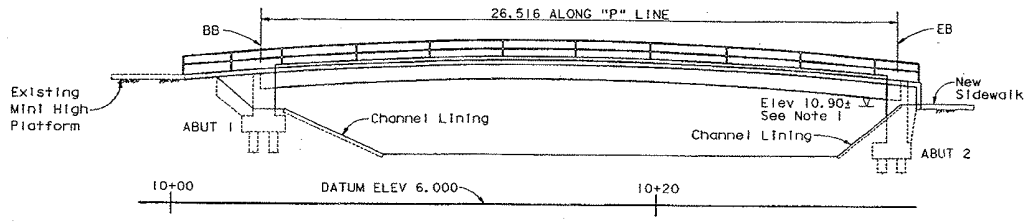

ELEVATION

1:100

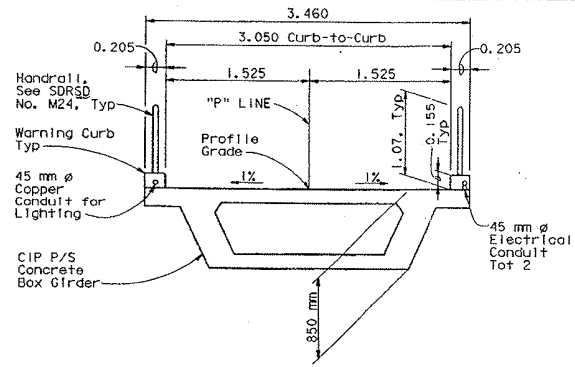

TYPICAL SECTION

1:25

INDEX TO PLANS

ST-1. GENERAL PLAN
ST-2. DECK CONTOURS
ST-3. FOUNDATION PLAN
ST-4. ABUTMENT DETAILS No. 1
ST-5. ABUTMENT DETAILS No. 2
ST-6. ABUTMENT DETAILS No. 3
ST-7. TYPICAL SECTION
ST-8. GIRDER LAYOUT
ST-9. STRUCTURE APPROACH
DRAINAGE DETAILS
LOTB-1. LOG OF TEST BORINGS 1 OF 2
LOTB-2. LOG OF TEST BORINGS 2 OF 2

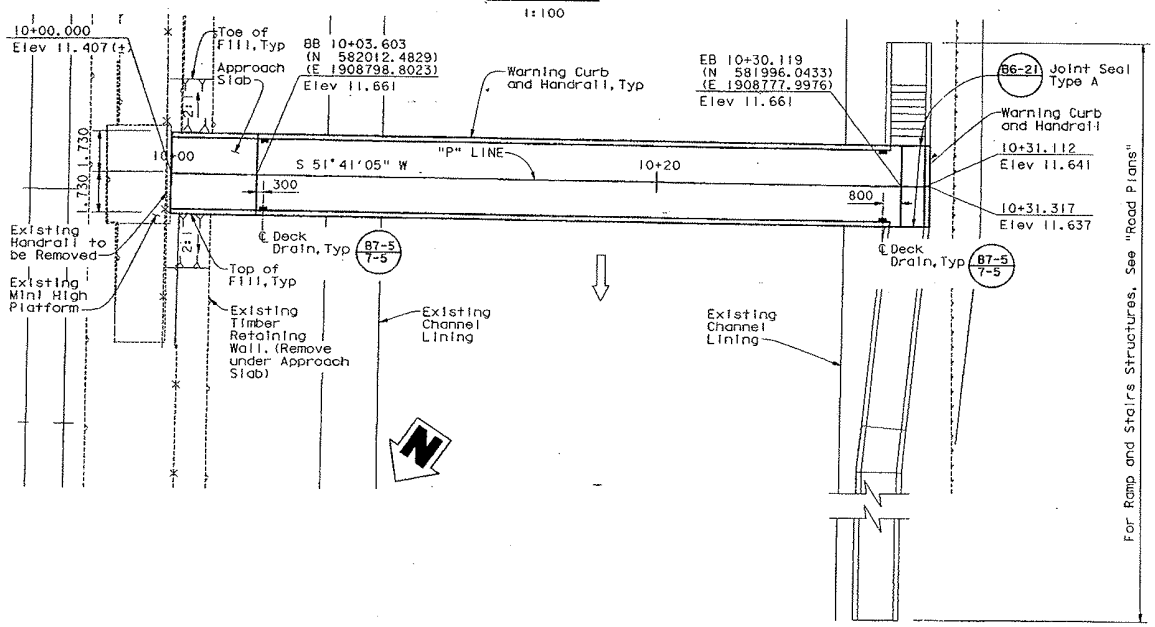

PLAN

1:100

PILE DATA TABLE

LOCATION	PILE TYPE	DESIGN LOADING	NOMINAL RESISTANCE COMPRESSION*	NOMINAL RESISTANCE TENSION	DESIGN TIP ELEVATION	SPECIFIED TIP ELEVATION
ABUTMENT 1	CLASS 400C (355 mm)	175kN	350kN	0	-2.896	-2.895
ABUTMENT 2	CLASS 400C (355 mm)	300kN	600kN	0	-0.762	-0.762

* NOTE: Nominal compression values have been reduced for design due to potential liquefaction and downdrag. piles should be driven to an ultimate static capacity of 1120 kN (Abutment 1) & 1200 kN (Abutment 2).

NOTES

1. ELEVATION SHOWN IS FOR 100-YEAR WATER SURFACE.
2. ⇨ INDICATES DIRECTION OF FLOW
3. STANDARD PLANS / DETAIL NUMBER
4. SDRSD DENOTES SAN DIEGO REGIONAL STANDARD DRAWING.

MTDB CONTRACT

PLANS FOR THE IMPROVEMENT OF:

SORRENTO VALLEY COASTER STATION

CITY OF SAN DIEGO, CALIFORNIA
ENGINEERING DEPARTMENT
SHEET OF SHEETS

W.O. NO. 410201

FOR CITY ENGINEER DATE

DESCRIPTION	BY	APPROVED	DATE	FILMED
ORIGINAL	PTG			

1856-6269
NAD 83 COORDINATES

262-1701
LAMBERT COORDINATES

AS-BUILT

CONTRACTOR DATE STARTED
INSPECTOR DATE COMPLETED

24676- -D

NO.	DATE	REVISIONS	BY	CHK	APRV
	2001	Conformed			

PARSONS TRANSPORTATION GROUP
110 WEST 'A' STREET, SUITE 1050
SAN DIEGO, CA 92101
(619) 685-0085

REGISTERED PROFESSIONAL ENGINEER MOHSEN MOHSENI No. 45999 Exp. 12/31/02 CIVIL STATE OF CALIFORNIA

		DATE
DESIGNED BY	A. LY	03/00
DRAWN BY	D. PEARMAN	04/00
CHECKED BY	S. HU	08/00
MTDB PRJ.ENG.	ERIC ADAMS	

MTDB
Metropolitan Transit Development Board
1255 Imperial Avenue, Suite 1000, San Diego, CA. 92101-7490

SORRENTO VALLEY COASTER STATION IMPROVEMENTS

GENERAL PLAN

SCALE

MTDB CONTRACT NO. LRT-465

DRAWING NO. ST-1

SHEET NO. 82

FOR REDUCED PLANS ORIGINAL SCALE IS IN CENTIMETERS 0 2 4 6 8

e:\open jobs\660752 - sorrento coaster station\snr\ped.bridge\01-general_plan.dgn
PLOT DATE >> 08/16/01 ******USER******

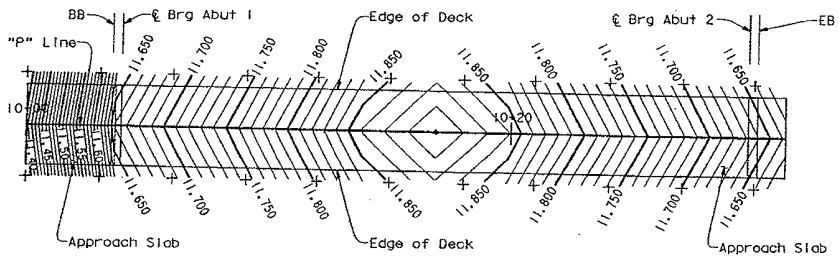

PLAN
1:100

NOTES

1. Minor Contour Intervals are 10 mm.
2. Contours do not include Camber.
3. + Indicates 3.0 m Intervals along "P" Line Station.

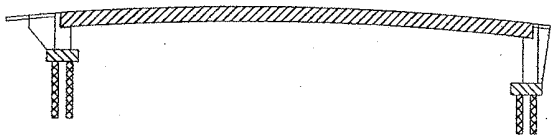

STANDARD PLANS DATED JULY 1999

A10A	ABBREVIATION
A10B	SYMBOLS
A62C	LIMITS OF PAYMENT FOR EXCAVATION AND BACKFILL-BRIDGE
B0-1	BRIDGE DETAILS
B0-3	BRIDGE DETAILS
B0-5	BRIDGE DETAILS
B0-13	BRIDGE DETAILS
B2-6	PILE DETAILS CLASS 400C AND CLASS 625C
B6-21	JOINT SEALS (MAXIMUM MOVEMENT RATING = 50mm)
B7-1	BOX GIRDER DETAILS
B7-5	DECK DRAINS
B8-5	CAST-IN-PLACE PRESTRESSED GIRDER DETAILS

GENERAL NOTES, LOAD FACTOR DESIGN

Design: Bridge Design Specifications (1992 Fifteenth Edition AASHTO with Interims and revisor by Caltrans)

Live Loading: 4.07 kPa

Seismic: Peak Rock Acceleration = 0.5g
Depth of Alluvium < 10.6m

Reinforced Concrete:
Fy = 414 MPa
Fc = 28 MPa (Unless Noted Otherwise)
N = 8

Prestressed Concrete: See "PRESTRESSING NOTES" in "GIRDER LAYOUT" Sheet.

CONCRETE STRENGTH AND TYPE LIMITS

- Structural Concrete, Bridge
- Structural Concrete, Bridge (35 MPa at 28 days)
- Structural Concrete, Bridge Footing
- Structural Concrete, Piles (42 MPa at 28 days)

MTDB CONTRACT

PLANS FOR THE IMPROVEMENT OF:
SORRENTO VALLEY COASTER STATION

CITY OF SAN DIEGO, CALIFORNIA
ENGINEERING DEPARTMENT
SHEET OF SHEETS

W.O. NO. 410201

FOR CITY ENGINEER _____ DATE _____

DESCRIPTION	BY	APPROVED	DATE	FILMED
ORIGINAL	PTG			
AS-BUILT				

1856-6269
NAD 83 COORDINATES
262-1701
LAMBERT COORDINATES

CONTRACTOR _____ DATE STARTED _____
INSPECTOR _____ DATE COMPLETED _____

24676- -D

NO.	DATE	REVISIONS	BY	CHK	APRV
	OCT 18 2001	Conformed			

PARSONS TRANSPORTATION GROUP
110 WEST "A" STREET, SUITE 1050
SAN DIEGO, CA 92101
(619) 685-0085

REGISTERED PROFESSIONAL ENGINEER MOHSEN MOHSENI No. 45999 CIVIL STATE OF CALIFORNIA

DESIGNED BY	A. LY	03/00
DRAWN BY	D. PEARMAN	04/00
CHECKED BY	S. HU	08/00
MTDB PRJ.ENG.	ERIC ADAMS	

MTDB
Metropolitan Transit Development Board
1255 Imperial Avenue, Suite 1000, San Diego, CA 92101-7490

SORRENTO VALLEY COASTER STATION IMPROVEMENTS

DECK CONTOURS

SCALE

MTDB CONTRACT NO. LRT-465

DRAWING NO. ST-2 | SHEET NO. 83

FOR REDUCED PLANS ORIGINAL SCALE IS IN CENTIMETERS 0 2 4 6 8

B:_OPEN JOBS\660152 - Sorrento Coaster Station\SHT\PED_BRIDGE\02-DECK-CONT.DGN
PLOT DATE >> 08/18/01 ******USER******

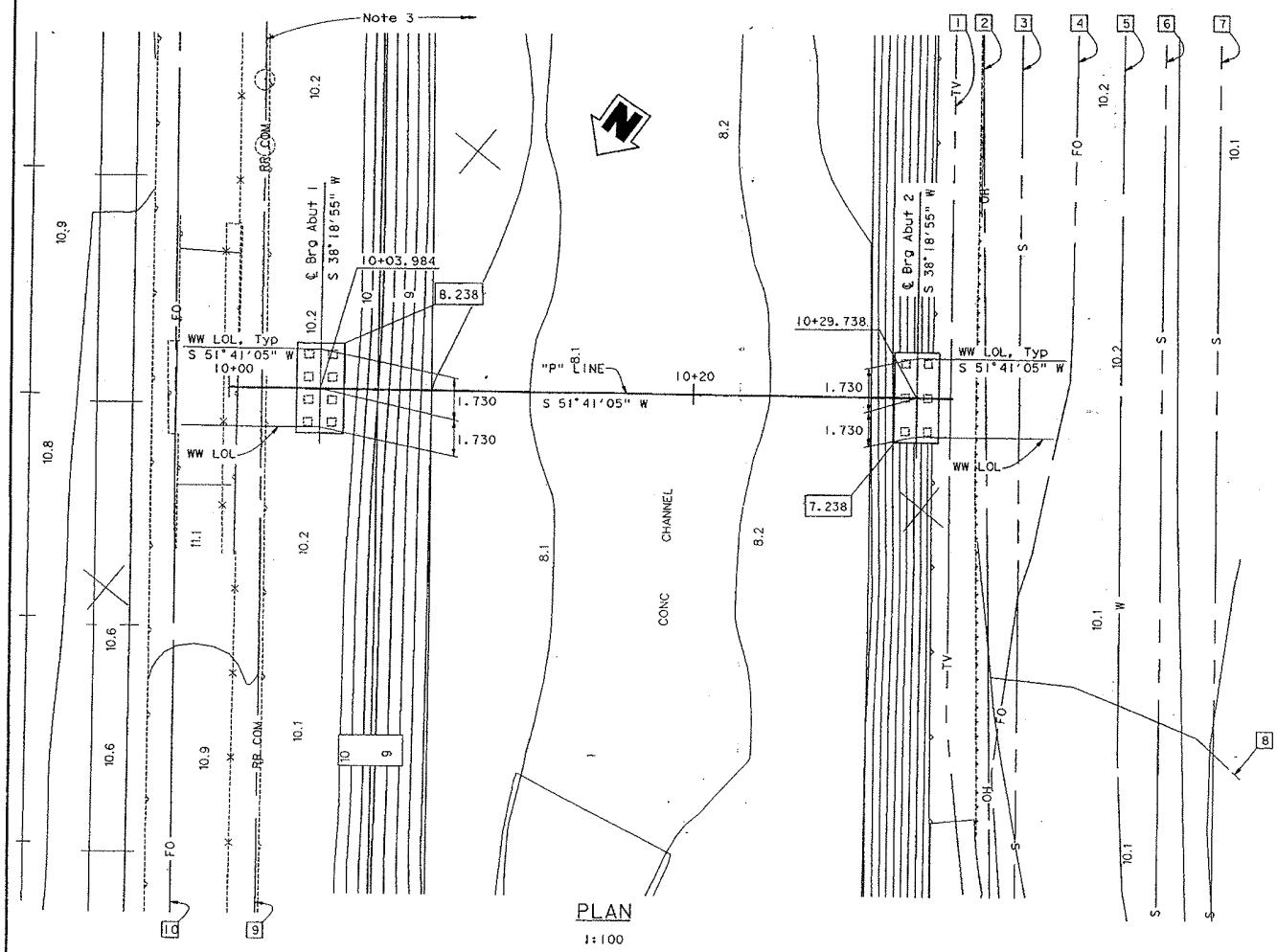

PLAN

1:100

NOTES

1. Contours shown represent approximate existing ground.
2. Utilities as shown are based on currently available records. Contractor shall verify exact location of all utilities prior to start of construction.
3. Contractor shall take all necessary measures to protect the various affected utilities.
4. ▭ Indicates bottom of footing elevation.
5. ☐ Indicates 400C Piles, 355mm Square, Alternative "X" Modified.

BENCH MARK	
DESCRIPTION:	NEBP (Northeast Brass Plug) CITY OF SAN DIEGO BENCH MARK
LOCATION:	SORRENTO VALLEY ROAD AND SORRENTO VALLEY BOULEVARD
RECORD FROM:	CITY OF SAN DIEGO VERT. CONTROL
ELEVATION:	35.654 DATUM: MSL

HORIZONTAL CONTROL

The Horizontal Control Point, per Record of Survey Map No. 14492, Station 620:
Brass Tag in Concrete in Monument Well at the Center of Sorrento Valley Boulevard.
The Coordinates are Northing 561 896.045, Easting 1 908 948.141.

EXISTING UTILITIES

1. TV (Time-Warner)
2. Overhead Electrical (SDG&E)
3. 750mm ø Force Main, Sewer
4. Fiber Optic (Pacific Bell)
5. 300mm ø ACP Water
6. 450mm ø VCP, Sewer
7. 600mm ø Force Main, Sewer
8. Electric (SDG&E)
9. Railroad Communications (SDNR)
10. Fiber Optic (MCI)

MTDB CONTRACT

PLANS FOR THE IMPROVEMENT OF:

SORRENTO VALLEY COASTER STATION

CITY OF SAN DIEGO, CALIFORNIA
ENGINEERING DEPARTMENT
SHEET OF SHEETS

W.O. NO. 410201

FOR CITY ENGINEER — DATE

DESCRIPTION	BY	APPROVED	DATE	FILMED
ORIGINAL	PTG			

1856-6269
NAD 83 COORDINATES

262-1701
LAMBERT COORDINATES

AS-BUILT
CONTRACTOR ____ DATE STARTED ____
INSPECTOR ____ DATE COMPLETED ____

24676- -D

NO.	DATE	REVISIONS	BY	CHK	APRV
	OCT 18 2001	Conformed			

PARSONS TRANSPORTATION GROUP
110 WEST "A" STREET, SUITE 1050
SAN DIEGO, CA 92101
(619) 685-0085

REGISTERED PROFESSIONAL ENGINEER — MOHSEN MOHSENI — No. 45999 — Exp. 12/31/02 — CIVIL — STATE OF CALIFORNIA

	DATE
DESIGNED BY A. LY	03/00
DRAWN BY D. PEARMAN	04/00
CHECKED BY S. HU	08/00
MTDB PRJ.ENG. ERIC ADAMS	

MTDB
Metropolitan Transit Development Board
1255 Imperial Avenue, Suite 1000, San Diego, CA 92101-7490

SORRENTO VALLEY COASTER STATION IMPROVEMENTS

FOUNDATION PLAN

SCALE

MTDB CONTRACT NO. LRT-465

DRAWING NO. ST-3 SHEET NO. 84

FOR REDUCED PLANS ORIGINAL SCALE IS IN CENTIMETERS 0 2 4 6 8

PLOT DATE >> 08/16/01 ******USER******

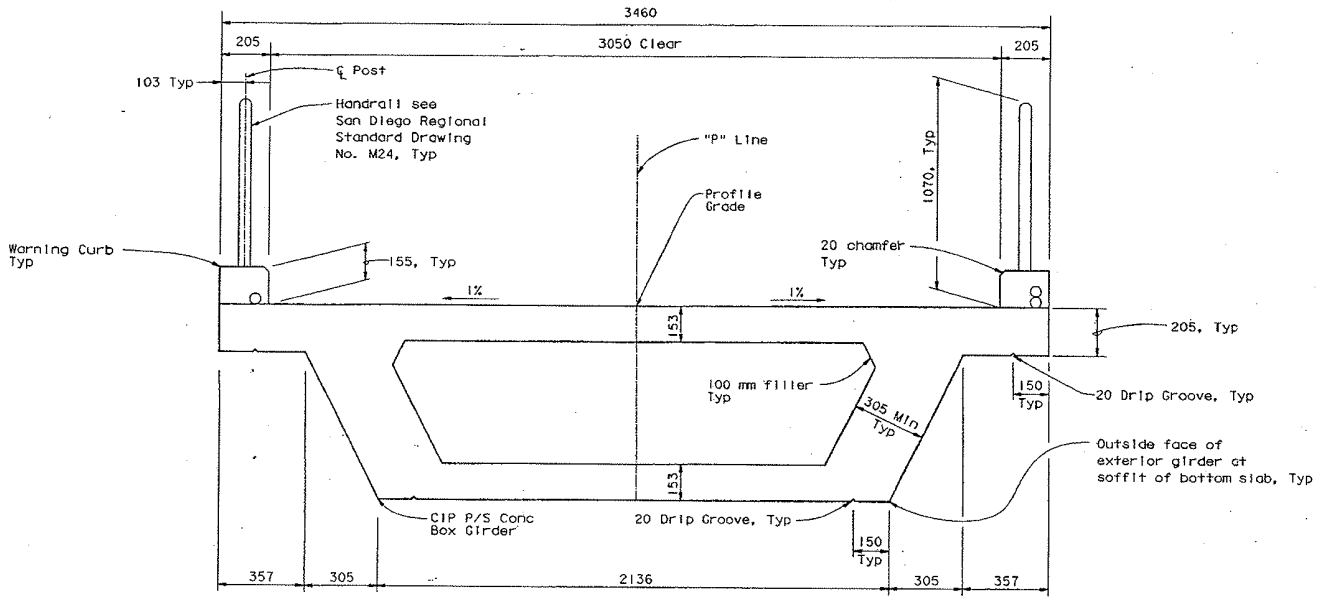

TYPICAL SECTION
1:10

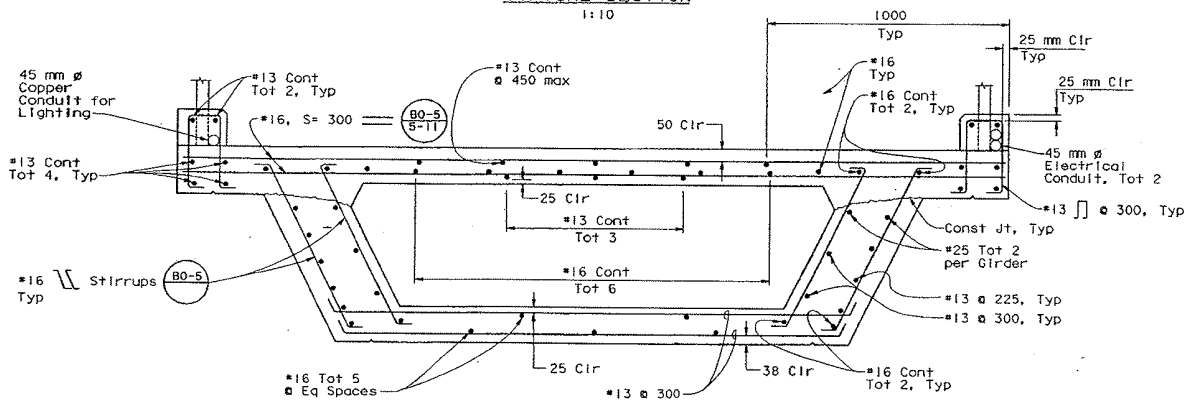

TYPICAL SECTION
1:10
B7-1 B-1 B7-1 S-2 B0-5

MTDB CONTRACT

PLANS FOR THE IMPROVEMENT OF:

SORRENTO VALLEY COASTER STATION

CITY OF SAN DIEGO, CALIFORNIA
ENGINEERING DEPARTMENT
SHEET OF SHEETS

W.O. NO. 410201

FOR CITY ENGINEER DATE

DESCRIPTION	BY	APPROVED	DATE	FILMED
ORIGINAL	PTG			

1856-6269
NAD 83 COORDINATES

262-1701
LAMBERT COORDINATES

AS-BUILT

CONTRACTOR DATE STARTED
INSPECTOR DATE COMPLETED

24676- -D

NO.	DATE	REVISIONS	BY	CHK	APRV
OCT 1 8 2001		Conformed			

PARSONS TRANSPORTATION GROUP
110 WEST "A" STREET, SUITE 1050
SAN DIEGO, CA 92101
(619) 685-0085

REGISTERED PROFESSIONAL ENGINEER
MOHSEN MOHSENI
No. 45999
Exp. 12/31/08
CIVIL
STATE OF CALIFORNIA

	DATE
DESIGNED BY A. LY	03/00
DRAWN BY D. PEARMAN	04/00
CHECKED BY S. HU	08/00
MTDB PRJ.ENG. ERIC ADAMS	

MTDB
Metropolitan Transit Development Board
1255 Imperial Avenue, Suite 1000, San Diego, CA 92101-7490

SORRENTO VALLEY
COASTER STATION IMPROVEMENTS

TYPICAL SECTION

SCALE

MTDB CONTRACT NO. LRT-465

DRAWING NO. ST-7

SHEET NO. 88

FOR REDUCED PLANS
ORIGINAL SCALE IS IN CENTIMETERS 0 2 4 6 8

st_open jobs\660752 - sorrento coaster station\sht\ped_bridge\07-typ-section.dgn
PLOT DATE >> 08/16/01 ******USER******

Photo A: Sorrento Valley Blvd. Bridge Crossing Soledad Canyon

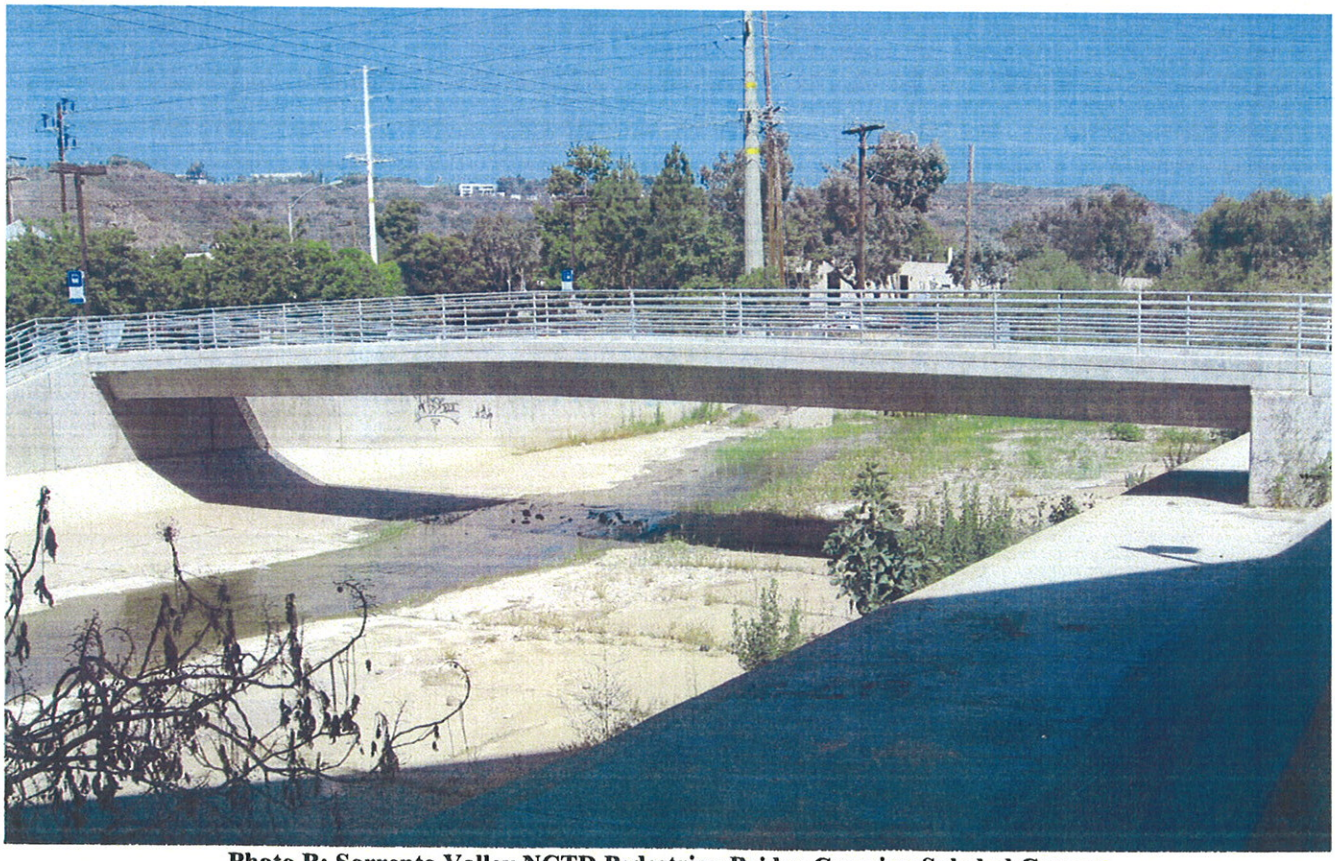

Photo B: Sorrento Valley NCTD Pedestrian Bridge Crossing Soledad Canyon

Photo C: North End of I-5 Bridges Crossing Soledad Canyon

Photo D: South End of I-5 Bridges Crossing Soledad Canyon

Soledad

Canyon

```
*****************************************************
  HEC2 RELEASE DATED NOV 76 UPDATED APRIL 1980
  ERROR CORR -  01,02,03,04
  MODIFICATION -  50,51,52,53,54
*****************************************************
T1
T2                    SOLEDAD CANYON COMBINDED LEFT&RIGHT SIDES
T3                  SAN DIEGO CITY-FLOOD INSURANCE STUDY
                          MULTIPLE PROFILES

J1  ICHECK    INQ       NINV      IDIR      STRT      METRIC    HVINS     Q         WSEL      FQ
     0.       2.        0.        0.   0.000000      0.00      0.0       0.        6.480     0.000
J2  NPROF     IPLOT     PRFVS     XSECV     XSECH     FN        ALLDC     IBW       CHNIM     ITRACE
     1.000    0.000    -1.000     0.000     0.000     0.000     0.000     0.000     0.000     15.000
J3  VARIABLE CODES FOR SUMMARY PRINTOUT
    150.000   0.000     0.000     0.000     0.000     0.000     0.000     0.000     0.000     0.000
GT    4.000   5000.000  15400.000 23000.000 31500.000 0.000     0.000     0.000     0.000     0.000
NC    0.040   0.040     0.035     0.100     0.300     0.000     0.000     0.000     0.000     0.000

X1   14.200   16.000    2336.800  2636.000  0.000     0.000     0.000     0.000     0.000     0.000
QX   10.200   0.000     23.700    217.200   20.500    400.500   18.600    644.500   17.800    826.500
GR   17.200   1162.000  17.200    1413.400  17.300    1735.900  16.600    2129.400  16.600    2336.800
GR    0.000   2336.900  0.000     2635.900  18.300    2636.000  18.000    2789.000  20.900    3057.600
GR   31.400   3281.700  0.000     0.000     0.000     0.000     0.000     0.000     0.000     0.000
```

X1	14.400	13.000	950.000	2480.000	1450.000	960.000	1060.000	0.000	0.000	0.000
GR	25.000	0.000	25.000	949.000	15.000	950.000	0.000	1000.000	0.000	1300.000
GR	3.500	1500.000	3.000	1750.000	0.000	1755.000	0.000	2000.000	3.000	2010.000
GR	3.000	2450.000	17.000	2480.000	17.000	2485.000	0.000	0.000	0.000	0.000
X1	14.550	13.000	2350.000	2600.000	90.000	300.000	450.000	0.000	0.000	0.000
GR	21.200	70.500	20.000	180.000	10.000	190.000	5.000	250.000	4.600	300.000
GR	4.600	2250.000	15.400	2255.100	15.400	2310.000	16.100	2350.000	0.600	2350.100
GR	0.600	2599.900	15.400	2600.000	14.200	2950.000	0.000	0.000	0.000	0.000
X1	15.000	36.000	2132.300	2524.800	100.000	700.000	575.000	0.000	0.000	0.000
GR	10.500	0.600	21.200	70.500	30.300	83.300	26.100	149.500	27.100	183.800
GR	11.000	208.200	5.300	241.600	4.600	302.000	4.000	585.500	6.300	907.000
GR	6.700	1175.000	2.700	1189.100	2.700	1251.100	5.800	1260.700	5.500	1375.000
GR	5.800	1658.800	5.700	1897.100	3.900	1999.500	3.900	2084.200	4.000	2094.500
GR	11.300	2116.500	14.200	2132.300	13.300	2146.400	8.500	2164.900	6.300	2205.600
GR	6.300	2309.800	4.200	2392.900	4.200	2518.500	6.600	2524.800	6.600	2590.100
GR	13.300	2630.600	12.900	2665.100	18.300	2762.700	19.300	2795.800	20.700	2817.500
GR	24.200	2847.400	0.000	0.000	0.000	0.000	0.000	0.000	0.000	0.000
X1	16.000	31.000	1923.200	2624.400	1220.000	620.000	450.000	0.000	0.000	0.000
GR	61.100	0.000	50.400	84.600	45.600	142.400	43.500	244.100	41.800	264.700
GR	6.500	333.500	4.900	345.400	3.800	690.200	3.800	842.300	3.800	858.000
GR	3.800	976.300	3.800	1443.400	3.100	1562.900	3.100	1658.200	3.100	1753.100
GR	3.400	1786.500	5.400	1864.500	6.900	1880.600	9.200	1908.300	9.300	1923.200
GR	3.700	1953.400	3.700	2009.400	3.700	2306.900	3.700	2388.400	7.100	2624.400
GR	12.700	2643.900	10.400	2681.400	13.700	2697.400	19.100	2810.200	27.100	2885.400
GR	31.000	2947.000	0.000	0.000	0.000	0.000	0.000	0.000	0.000	0.000

X1	17.000	25.000	1335.300	2436.400	900.000	1030.000	900.000	0.000	0.000	0.000
GR	76.600	0.000	17.900	108.200	12.900	176.100	10.600	331.300	3.600	421.900
GR	2.900	514.200	2.900	713.900	2.900	1056.500	3.000	1279.700	7.800	1292.200
GR	8.700	1335.300	2.900	1357.500	2.900	1569.700	2.900	1663.300	2.900	1862.100
GR	2.900	2168.400	2.900	2294.800	3.500	2314.200	5.900	2363.700	8.700	2436.400
GR	12.200	2452.900	11.300	2480.900	15.200	2510.500	19.100	2605.500	26.700	2723.900
X1	18.000	25.000	557.600	2160.300	920.000	900.000	910.000	0.000	0.000	0.000
GR	36.000	0.000	25.100	118.400	17.800	211.100	15.300	245.800	6.300	271.200
GR	5.800	373.100	4.900	504.000	10.700	518.600	11.400	557.600	3.100	577.100
GR	4.100	693.700	4.400	810.000	4.400	1019.100	2.400	1120.700	2.400	1298.300
GR	4.100	1731.300	4.100	1882.300	3.900	1963.900	4.700	2129.900	6.400	2160.300
GR	11.200	2182.900	10.900	2202.500	10.700	2228.900	22.800	2364.100	29.800	2439.500
X1	18.100	39.000	389.800	2287.500	160.000	1030.000	750.000	0.000	0.000	0.000
GR	34.000	0.000	25.300	150.300	6.800	180.100	5.400	232.800	6.200	341.200
GR	11.500	360.900	15.400	389.800	13.800	421.100	10.200	437.700	9.900	502.300
GR	8.300	563.600	6.600	592.300	6.300	683.000	6.400	865.600	5.500	972.400
GR	5.200	1022.700	6.000	1039.600	5.800	1100.900	5.500	1321.800	4.800	1383.100
GR	2.900	1397.000	5.900	1408.900	5.300	1528.200	6.900	1650.200	5.500	1728.500
GR	5.700	1801.100	5.700	1808.600	6.000	1886.200	6.000	1901.700	5.200	2145.100
GR	5.300	2266.700	12.700	2287.500	16.000	2311.500	13.500	2340.600	15.800	2353.900
GR	55.100	2412.100	73.200	2502.300	86.100	2560.600	85.600	2600.900	0.000	0.000
X1	18.200	37.000	365.900	3110.900	140.000	1000.000	350.000	0.000	0.000	0.000
GR	40.100	0.000	29.200	155.100	6.700	190.200	7.500	233.200	6.300	306.400
GR	6.600	353.400	14.700	365.900	13.900	420.700	11.300	437.800	9.500	509.400
GR	7.300	597.500	5.800	718.400	5.300	1050.200	6.000	1135.800	5.200	1248.900
GR	5.200	1405.800	5.200	1417.200	5.100	1656.900	4.300	1960.400	5.200	2163.100
GR	7.000	2235.700	7.500	2309.800	6.800	2427.500	7.100	2529.900	7.700	2654.100
GR	7.400	2843.800	7.000	2980.600	6.400	3075.100	9.900	3110.900	17.100	3163.500
GR	16.900	3200.500	18.700	3248.100	23.600	3316.000	26.300	3412.000	25.200	3419.300
GR	24.500	3442.900	30.300	3456.500	0.000	0.000	0.000	0.000	0.000	0.000

X1	19.000	37.000	390.900	2896.600	170.000	1000.000	430.000	0.000	0.000	0.000
GR	57.100	0.000	27.200	97.400	22.700	150.900	3.200	183.400	4.100	225.600
GR	2.100	232.700	2.900	237.100	4.400	252.600	4.700	298.900	5.000	346.200
GR	13.900	390.900	12.700	418.000	7.900	434.500	6.700	486.400	4.600	545.800
GR	4.000	566.700	2.500	674.300	3.400	840.700	3.600	991.300	3.700	1103.300
GR	3.200	1222.500	3.300	1407.400	4.500	1513.600	3.700	1635.200	4.400	1779.500
GR	3.700	1986.300	4.700	2030.600	6.400	2115.000	6.400	2150.500	4.600	2164.300
GR	4.600	2219.100	5.900	2406.500	5.700	2482.000	6.100	2623.500	7.800	2749.100
GR	6.700	2896.600	27.200	3116.600	0.000	0.000	0.000	0.000	0.000	0.000
X1	20.000	56.000	409.700	2476.300	450.000	450.000	450.000	0.000	0.000	0.000
GR	105.100	0.000	58.800	98.300	22.700	149.800	6.100	175.500	6.100	185.600
GR	5.200	228.100	3.400	245.500	3.300	359.000	3.100	370.200	5.000	373.500
GR	7.400	384.400	11.300	394.600	13.300	401.600	14.300	409.700	14.500	416.500
GR	7.400	424.600	3.900	447.500	0.600	471.400	3.700	482.900	3.400	500.900
GR	3.300	527.400	3.400	559.400	2.900	631.700	3.100	663.800	5.000	761.400
GR	4.100	887.700	3.500	1054.400	4.700	1212.600	4.000	1343.500	5.000	1445.200
GR	5.300	1597.400	4.000	1719.500	4.900	1793.700	4.000	1881.200	7.500	1925.800
GR	8.600	1932.300	8.600	1946.600	4.300	1968.300	4.300	1973.600	7.000	1979.700
GR	5.300	2132.200	4.800	2289.500	6.300	2351.500	8.200	2461.100	12.000	2476.300
GR	9.900	2537.900	17.200	2551.100	23.600	2591.100	23.600	2614.800	21.000	2653.800
GR	13.600	2668.300	16.000	2696.400	17.400	2743.100	18.800	2774.800	22.700	2852.100
GR	36.100	2888.600	0.000	0.000	0.000	0.000	0.000	0.000	0.000	0.000
GT	4.000	4290.000	13455.000	19500.000	43680.000	0.000	0.000	0.000	0.000	0.000
X1	21.000	41.000	417.300	2350.900	160.000	220.000	160.000	0.000	0.000	0.000
GR	78.600	0.000	47.400	81.800	24.200	112.200	4.700	144.300	4.700	153.700
GR	6.500	190.500	7.700	211.600	3.300	224.100	1.700	251.400	1.800	362.300
GR	1.000	392.000	4.000	402.100	5.800	413.300	14.600	417.300	14.600	421.700
GR	7.200	426.800	4.300	448.100	4.400	506.200	3.700	633.800	3.500	769.500
GR	3.900	940.700	3.800	1066.100	4.700	1193.800	4.800	1266.900	4.600	1382.700
GR	5.800	1536.900	4.100	1674.600	4.400	1755.100	5.400	1850.800	8.400	1881.000
GR	8.100	1909.100	5.100	1915.400	5.100	1968.300	5.300	2175.500	5.400	2268.200
GR	7.600	2336.800	12.700	2350.900	9.900	2403.000	9.800	2404.800	24.200	2439.000

GR	30.000	2464.400	0.000	0.000	0.000	0.000	0.000	0.000	0.000	0.000
X1	22.000	45.000	779.200	2627.900	560.000	700.000	640.000	0.000	0.000	0.000
GR	90.500	0.000	42.900	67.300	25.100	96.800	11.700	134.600	11.700	142.300
GR	9.800	168.700	5.800	178.900	3.600	210.900	2.600	293.200	4.200	387.800
GR	4.000	543.100	2.300	692.700	3.400	754.700	15.000	779.200	15.000	789.300
GR	13.100	794.600	13.100	805.200	4.400	824.700	5.700	843.000	4.600	903.700
GR	5.000	1069.900	4.800	1218.500	5.200	1349.500	5.800	1513.100	6.800	1641.600
GR	4.700	1837.200	5.800	1870.600	7.900	1884.500	7.900	1900.800	4.600	1914.600
GR	4.600	1960.400	6.300	2005.000	7.700	2011.200	7.800	2041.800	5.000	2051.600
GR	5.200	2181.500	4.700	2294.100	5.900	2422.600	6.100	2599.300	6.300	2610.000
GR	10.500	2627.900	8.900	2655.800	16.200	2670.500	25.000	2752.400	38.700	2833.100
NC	0.035	0.035	0.035	0.100	0.300	0.000	0.000	0.000	0.000	0.000
X1	23.100	59.000	1333.000	1530.000	620.000	680.000	600.000	0.000	0.000	0.000
GR	103.200	0.000	41.600	195.900	25.500	260.700	14.000	305.400	14.000	311.800
GR	10.700	322.400	6.900	376.900	5.800	416.300	5.800	494.400	8.100	524.100
GR	9.300	538.500	4.300	572.900	2.900	635.900	4.700	709.900	8.700	732.400
GR	9.800	757.100	8.700	783.300	7.300	817.100	3.700	829.500	3.700	923.400
GR	3.800	1040.100	3.400	1144.500	3.100	1153.400	15.700	1183.200	15.700	1333.000
GR	3.000	1353.000	3.000	1500.000	15.700	1530.000	15.000	1930.000	13.100	1935.300
GR	13.100	1945.900	4.400	1965.400	5.700	1983.700	4.600	2044.400	5.000	2210.600
GR	4.800	2359.200	5.200	2500.200	5.800	2663.800	6.800	2792.300	4.700	2987.900
GR	5.800	3021.300	7.900	3035.200	7.900	3051.500	4.600	3065.300	4.600	3111.100
GR	6.300	3155.700	7.700	3161.900	7.800	3192.500	5.000	3202.300	5.200	3332.200
GR	4.700	3444.800	5.900	3573.300	6.100	3750.000	6.300	3760.700	10.500	3778.600
GR	8.900	3806.500	16.200	3821.200	25.000	3900.100	38.700	3993.800	0.000	0.000
X1	24.000	50.000	407.800	1293.800	750.000	770.000	740.000	0.000	0.000	0.000
X3	0.000	0.000	0.000	0.000	0.000	1293.800	0.000	0.000	0.000	0.000
GR	39.700	0.000	28.900	77.600	26.000	101.200	16.400	121.400	14.800	142.700
GR	12.600	233.900	10.400	327.800	8.400	387.200	7.600	407.800	6.200	553.000
GR	7.200	650.900	7.700	771.100	9.200	792.400	10.400	795.300	10.400	803.600
GR	7.800	813.200	8.100	850.900	8.100	907.500	9.800	926.800	7.500	944.400
GR	7.300	1012.600	7.500	1129.900	7.000	1205.600	6.900	1223.200	5.100	1229.300

GR	8.200	1238.100	7.900	1248.900	8.300	1269.100	16.300	1293.800	16.300	1307.200
GR	12.700	1313.600	12.700	1324.400	5.700	1349.200	7.600	1420.300	5.400	1534.100
GR	6.200	1620.700	6.300	1690.900	5.300	1880.400	7.500	1948.900	6.800	1969.200
GR	5.800	2077.000	5.500	2202.800	9.700	2262.400	9.300	2337.500	9.700	2428.300
GR	10.600	2476.500	17.800	2488.200	19.400	2524.200	24.700	2565.600	31.200	2597.300
X1	25.000	41.000	413.000	1362.700	460.000	520.000	490.000	0.000	0.000	0.000
X3	0.000	0.000	0.000	0.000	0.000	1362.700	0.000	0.000	0.000	0.000
GR	37.700	0.000	29.700	69.500	24.700	128.000	18.300	173.700	17.500	198.200
GR	17.700	244.000	15.600	288.700	13.900	327.200	12.800	380.000	8.300	413.000
GR	8.500	495.500	8.600	558.400	8.600	591.900	10.100	600.700	10.300	625.700
GR	7.600	643.100	7.100	763.700	6.900	856.000	7.500	942.300	9.500	946.700
GR	9.500	959.500	7.300	965.000	7.500	1093.900	6.600	1324.700	16.700	1362.700
GR	16.700	1374.200	12.500	1383.600	12.500	1391.600	7.100	1419.700	6.800	1497.400
GR	6.100	1646.100	6.500	1767.800	5.900	1800.400	9.800	1820.600	7.100	1872.200
GR	7.200	1735.600	6.900	1975.200	14.600	1998.300	13.500	2041.900	26.800	2063.000
GR	42.100	2085.000	0.000	0.000	0.000	0.000	0.000	0.000	0.000	0.000
X1	26.000	35.000	1068.900	1387.200	950.000	460.000	540.000	0.000	0.000	0.000
X3	0.000	0.000	0.000	0.000	0.000	1387.200	0.000	0.000	0.000	0.000
GR	62.800	0.000	31.500	54.700	26.800	84.800	17.100	183.900	14.300	210.900
GR	13.600	214.200	14.700	226.900	12.600	239.800	8.900	269.700	7.600	305.800
GR	8.200	401.900	8.500	502.200	9.200	614.200	8.100	731.300	7.900	897.600
GR	9.100	978.000	8.800	1031.000	8.800	1068.900	8.300	1072.000	7.500	1164.400
GR	7.300	1265.200	8.000	1359.300	16.900	1387.200	15.000	1402.200	13.400	1414.100
GR	9.300	1429.500	8.200	1446.000	7.800	1474.300	7.500	1541.500	7.900	1606.600
GR	8.500	1640.600	10.900	1665.700	9.500	1683.200	26.800	1721.500	35.600	1731.600
NC	0.040	0.045	0.035	0.100	0.300	0.000	0.000	0.000	0.000	0.000
X1	27.000	28.000	1354.200	1446.800	500.000	400.000	450.000	0.000	0.000	0.000
X3	0.000	0.000	0.000	0.000	0.000	1446.800	0.000	0.000	0.000	0.000
GR	26.200	0.000	37.700	226.600	27.300	352.900	21.400	413.900	14.400	499.800
GR	10.300	558.100	10.300	633.000	10.100	691.100	10.200	811.900	9.900	895.700
GR	9.900	958.400	10.000	1006.300	10.000	1088.300	9.800	1153.500	9.600	1232.700
GR	10.000	1309.300	11.000	1354.200	8.000	1369.100	10.900	1376.400	8.800	1428.300

GR	17.400	1446.800	17.400	1474.500	9.800	1491.400	11.800	1561.100	13.500	1601.600
GR	34.500	1633.000	33.400	1662.200	36.400	1669.400	0.000	0.000	0.000	0.000
X1	28.000	26.000	1405.600	1487.400	900.000	900.000	990.000	0.000	0.000	0.000
X3	0.000	0.000	0.000	0.000	0.000	1487.400	0.000	0.000	0.000	0.000
GR	62.900	0.000	28.900	141.200	15.100	362.000	17.600	400.900	14.800	469.000
GR	14.600	657.600	16.300	699.300	12.600	709.200	16.200	718.900	15.900	840.600
GR	13.500	1091.300	12.800	1134.300	12.400	1217.900	14.700	1405.600	7.900	1423.900
GR	10.900	1434.900	14.800	1467.400	19.800	1487.400	18.400	1498.900	10.100	1533.100
GR	17.900	1554.200	18.400	1577.200	17.600	1634.300	19.100	1768.500	20.800	1833.300
GR	34.900	1866.200	0.000	0.000	0.000	0.000	0.000	0.000	0.000	0.000
X1	29.000	34.000	1168.700	1447.400	260.000	165.000	165.000	0.000	0.000	0.000
X3	0.000	0.000	0.000	0.000	0.000	1447.400	0.000	0.000	0.000	0.000
GR	62.400	0.000	27.400	122.600	22.800	144.200	21.600	188.500	17.600	306.300
GR	16.300	452.400	16.000	624.200	1.500	624.400	9.200	827.800	14.000	837.900
GR	15.000	995.900	12.300	1105.100	15.800	1168.700	9.400	1189.100	14.000	1197.100
GR	13.700	1282.800	16.200	1375.500	8.700	1389.800	15.100	1402.000	10.700	1430.400
GR	20.500	1447.400	18.200	1463.700	15.700	1474.100	14.200	1486.000	17.600	1496.400
GR	24.400	1522.000	20.400	1533.400	18.400	1574.100	17.700	1612.900	18.300	1860.800
GR	21.700	2031.100	23.400	2292.700	26.100	2335.700	39.300	2372.700	0.000	0.000
NC	0.040	0.050	0.065	0.100	0.300	0.000	0.000	0.000	0.000	0.000
X1	30.000	33.000	774.600	1277.700	770.000	740.000	745.000	0.000	0.000	0.000
X3	0.000	0.000	0.000	0.000	0.000	1533.400	0.000	0.000	0.000	0.000
GR	70.300	0.000	29.100	488.500	21.800	639.000	13.200	774.600	12.300	831.100
GR	13.300	921.100	14.800	995.200	14.800	1087.000	14.900	1155.600	14.300	1213.800
GR	11.000	1225.300	12.600	1239.600	14.600	1261.200	21.100	1277.700	20.500	1294.500
GR	18.200	1302.700	17.600	1311.700	19.800	1330.300	20.000	1371.500	19.000	1499.500
GR	23.400	1533.400	23.200	1649.400	20.200	1678.300	24.000	1764.500	23.300	1809.800
GR	21.900	1913.300	21.600	1952.300	23.700	1961.100	25.200	2010.500	24.[illegible]	2168.300
GR	23.700	2280.100	24.000	2342.700	29.500	2361.700	0.000	0.000	0.0[illegible]	0.000
NC	0.040	0.065	0.065	0.100	0.300	0.000	0.000	0.000	0.000	0.000

X1	31.000	30.000	843.400	1102.500	750.000	750.000	750.000	0.000	0.000	0.000
X3	0.000	0.000	0.000	0.000	0.000	1578.600	0.000	0.000	0.000	0.000
GR	117.200	0.000	31.100	532.200	27.200	553.500	20.000	595.800	24.300	611.700
GR	21.000	634.400	13.500	682.900	16.900	707.200	16.200	843.400	14.300	905.400
GR	13.500	1082.100	21.400	1102.500	20.400	1125.500	17.000	1150.700	21.200	1160.400
GR	23.700	1169.500	23.300	1259.000	21.700	1441.900	21.900	1554.800	24.400	1578.600
GR	24.400	1661.700	27.400	1689.600	27.400	1745.700	26.400	2077.400	25.400	2178.600
GR	22.400	2217.400	27.200	2228.400	27.200	2250.500	29.300	2266.000	33.100	2276.300
X1	32.000	29.000	622.200	951.200	630.000	630.000	630.000	0.000	0.000	0.000
X3	0.000	0.000	0.000	0.000	0.000	951.200	0.000	0.000	0.000	0.000
GR	250.300	0.000	32.600	386.600	22.300	404.100	22.900	423.200	17.000	441.300
GR	15.800	327.600	15.200	622.200	15.000	733.200	15.900	805.500	15.400	878.500
GR	12.200	912.500	23.000	951.200	23.600	970.300	20.500	986.500	21.600	1015.500
GR	24.900	1162.000	25.700	1295.200	27.800	1399.500	28.300	1423.200	27.000	1466.800
GR	27.000	1507.700	31.000	1526.800	28.200	1814.000	28.900	1951.000	27.900	1981.400
GR	27.200	1991.300	29.600	1998.200	27.800	2018.000	34.500	2034.400	0.000	0.000
X1	33.000	27.000	646.000	981.800	290.000	290.000	290.000	0.000	0.000	0.000
GR	217.800	0.000	26.800	369.200	22.900	376.600	25.000	388.100	21.800	402.600
GR	18.300	423.200	16.600	449.300	17.900	592.600	16.400	646.000	16.400	736.500
GR	18.100	797.800	17.700	877.000	18.700	910.500	15.700	933.900	24.200	981.800
GR	23.400	999.000	22.100	1013.700	21.300	1020.800	23.800	1022.800	24.500	1068.900
GR	26.300	1168.800	26.100	1338.400	27.800	1420.900	27.300	1454.700	28.500	1489.300
GR	27.800	1536.700	32.500	1534.400	0.000	0.000	0.000	0.000	0.000	0.000
NC	0.040	0.150	0.040	0.300	0.500	0.000	0.000	0.000	0.000	0.000
X1	34.000	28.000	1042.400	1089.000	730.000	730.000	730.000	0.000	0.000	0.000
GR	163.500	0.000	46.800	360.200	37.600	377.400	27.600	387.500	29.400	412.900
GR	23.400	447.700	20.700	572.400	20.720	580.000	20.820	605.000	20.920	630.000
GR	21.110	680.000	21.310	730.000	21.500	770.000	21.600	802.400	18.600	824.500
GR	19.500	845.900	20.400	880.500	20.700	972.900	20.300	1023.200	28.800	1042.400
GR	18.900	1089.000	20.800	1191.500	23.000	1222.600	26.300	1230.800	27.800	1246.700

GR	26.400	1263.400	36.200	1295.000	39.000	1374.600	0.000	0.000	0.000	0.000
X1	34.500	20.000	1080.000	1250.000	275.000	240.000	250.000	0.000	0.000	0.000
GR	32.060	461.800	24.260	588.200	21.360	810.600	20.900	880.000	20.460	980.000
GR	20.360	997.000	21.000	1030.000	21.260	1080.000	22.060	1091.200	21.860	1186.400
GR	21.210	1250.000	20.990	1270.000	20.760	1292.300	19.560	1298.700	21.860	1309.300
GR	21.660	1346.800	24.460	1365.100	23.960	1382.500	26.460	1393.600	28.060	1406.100
NC	0.035	0.150	0.040	0.300	0.500	0.000	0.000	0.000	0.000	0.000
X1	35.000	32.000	1091.200	1270.000	188.000	188.000	188.000	0.000	0.000	0.000
GR	60.500	0.000	39.000	330.900	41.300	340.700	33.300	358.400	33.300	378.000
GR	35.500	391.900	32.060	461.800	24.260	588.200	21.360	810.600	20.900	880.000
GR	20.460	980.000	20.360	997.000	21.000	1030.000	21.260	1080.000	22.060	1091.200
GR	21.860	1186.400	21.210	1250.000	20.990	1270.000	20.760	1292.300	19.560	1298.700
GR	21.860	1309.300	21.660	1346.800	24.460	1365.100	23.960	1382.500	26.460	1393.600
GR	28.060	1406.100	29.800	1413.400	25.700	1437.800	34.900	1455.600	34.300	1472.500
GR	36.800	1482.700	42.400	1496.600	0.000	0.000	0.000	0.000	0.000	0.000
X1	35.200	20.000	1120.000	1270.000	32.000	32.000	32.000	0.000	0.000	0.000
GR	28.000	735.000	28.000	830.000	28.000	880.000	28.000	930.000	27.880	1000.000
GR	28.000	1030.000	27.900	1080.000	28.100	1100.000	28.100	1120.000	22.000	1126.000
GR	22.070	1186.400	21.200	1270.000	20.970	1292.300	19.770	1298.700	22.070	1309.300
GR	21.870	1346.800	24.670	1365.100	24.170	1382.500	26.670	1393.600	28.270	1406.100
NC	0.036	0.150	0.040	0.100	0.300	0.000	0.000	0.000	0.000	0.000
X1	35.800	21.000	1098.000	1248.000	350.000	350.000	350.000	0.000	0.000	0.000
GR	26.300	715.000	26.440	750.000	27.500	786.000	28.000	836.000	27.400	886.000
GR	28.100	937.000	27.800	987.000	26.400	1037.000	26.300	1076.000	29.100	1083.000
GR	29.100	1098.000	24.790	1186.400	24.150	1248.000	23.690	1292.300	22.190	1298.700
GR	24.790	1309.300	24.590	1346.800	27.390	1365.100	26.890	1382.500	29.390	1393.600
GR	30.990	1406.100	0.000	0.000	0.000	0.000	0.000	0.000	0.000	0.000

X1	36.000	40.000	1412.800	1580.000	40.000	40.000	40.000	0.000	0.000	0.000
GR	52.100	0.000	94.500	45.200	43.800	76.900	40.000	215.200	38.200	256.500
GR	34.700	286.900	32.700	324.000	30.700	338.300	32.200	363.900	32.200	387.600
GR	32.600	500.000	30.800	680.900	30.800	797.800	30.700	937.400	26.500	1066.200
GR	27.500	1100.000	27.200	1112.600	27.900	1135.000	27.600	1136.900	28.000	1212.000
GR	28.400	1340.600	28.200	1405.000	29.600	1412.800	28.600	1423.400	22.000	1448.700
GR	22.600	1523.900	22.600	1580.000	22.600	1593.900	23.000	1665.100	23.500	1683.000
GR	24.700	1692.400	25.500	1703.600	29.000	1715.000	29.600	1723.000	25.000	1746.000
GR	30.500	1760.600	34.200	1776.700	32.000	1807.600	36.300	1830.300	43.000	1839.600
NC	0.035	0.150	0.040	0.100	0.300	0.000	0.000	0.000	0.000	0.000
X1	36.500	23.000	1400.000	1550.000	230.000	200.000	250.000	0.000	0.000	0.000
GR	52.000	0.000	40.000	215.000	32.700	324.000	32.600	500.000	30.800	798.000
GR	27.900	1070.000	27.500	1180.000	28.500	1193.000	28.500	1265.000	27.300	1373.000
GR	27.000	1390.000	29.500	1395.000	29.500	1400.000	28.000	1410.000	24.000	1418.000
GR	22.500	1494.000	22.820	1550.000	23.000	1580.000	23.000	1600.000	25.500	1680.000
GR	29.600	1694.000	29.500	1703.000	34.200	1776.700	0.000	0.000	0.000	0.000
NC	0.035	0.058	0.060	0.100	0.300	0.000	0.000	0.000	0.000	0.000
X1	36.750	26.000	1167.300	1476.400	450.000	210.000	270.000	0.000	0.000	0.000
GR	48.100	0.000	41.200	92.700	37.400	136.200	34.300	233.700	32.200	292.500
GR	30.900	332.400	30.800	375.200	31.800	382.800	29.900	559.700	29.300	700.400
GR	29.000	786.900	29.000	810.500	29.400	864.200	29.600	877.000	29.700	970.000
GR	30.000	1118.000	31.500	1128.000	30.000	1146.000	25.000	1167.300	23.400	1205.200
GR	24.100	1327.800	22.000	1423.400	30.200	1476.400	30.100	1508.800	35.600	1555.000
GR	38.200	1578.600	0.000	0.000	0.000	0.000	0.000	0.000	0.000	0.000
NC	0.035	0.050	0.060	0.100	0.030	0.000	0.000	0.000	0.000	0.000
X1	37.000	28.000	1102.700	1502.800	120.000	120.000	120.000	0.000	0.000	0.000
GR	48.700	0.000	41.800	53.300	38.400	122.000	36.900	236.000	35.900	357.300
GR	29.700	376.300	33.200	395.700	32.000	450.600	31.500	524.300	30.600	655.100
GR	31.000	735.100	31.000	777.100	30.000	931.800	30.000	835.000	31.600	1065.000
GR	25.100	1102.700	25.700	1260.800	31.000	1297.800	28.500	1318.600	25.500	1340.600

GR	26.900	1398.300	24.300	1441.000	25.200	1502.800	32.900	1526.100	35.100	1565.200
GR	36.500	1613.100	43.600	1643.600	43.600	1643.700	0.000	0.000	0.000	0.000
NC	0.035	0.059	0.060	0.100	0.300	0.000	0.000	0.000	0.000	0.000
X1	38.000	35.000	733.000	1025.600	400.000	400.000	400.000	0.000	0.000	0.000
GR	48.200	0.000	39.000	74.100	37.100	235.500	33.500	269.900	30.900	369.200
GR	30.100	448.600	29.100	530.100	29.400	571.000	29.700	733.000	28.600	809.700
GR	26.900	823.200	28.000	991.900	32.200	1025.600	30.000	1044.400	28.000	1064.900
GR	26.600	1090.700	29.600	1112.300	30.200	1137.300	26.700	1169.500	29.300	1203.000
GR	30.800	1253.500	31.900	1284.800	32.600	1294.300	22.700	1333.200	24.600	1450.700
GR	31.700	1476.600	34.500	1540.500	42.900	1565.300	44.700	1628.300	36.200	1646.800
GR	37.100	1717.400	37.100	1742.200	59.000	1777.800	59.000	1822.300	43.900	1878.200
NH	5.000	0.035	549.600	0.070	812.800	0.035	1064.000	0.055	1242.600	0.035
NH	1528.600	0.000	0.000	0.000	0.000	0.000	0.000	0.000	0.000	0.000
X1	39.000	32.000	549.600	775.300	410.000	400.000	380.000	0.000	0.000	0.000
X3	0.000	0.000	0.000	0.000	0.000	1321.700	0.000	0.000	0.000	0.000
GR	58.200	0.000	38.500	82.100	30.100	198.900	29.800	305.700	31.500	312.500
GR	30.500	320.000	30.400	346.000	27.700	365.500	28.600	549.600	27.700	612.900
GR	28.200	758.500	32.800	775.300	33.400	812.800	32.800	825.700	27.200	834.200
GR	27.300	855.100	30.200	871.500	30.000	904.500	26.600	928.400	29.400	950.600
GR	29.400	1001.800	32.300	1034.500	33.200	1064.000	24.300	1102.600	25.500	1218.400
GR	32.600	1242.600	34.500	1292.800	40.800	1321.700	41.000	1434.600	35.600	1458.000
GR	36.200	1494.200	46.700	1528.600	0.000	0.000	0.000	0.000	0.000	0.000
NH	5.000	0.035	389.500	0.070	631.000	0.035	992.800	0.055	1167.300	0.035
NH	1184.700	0.000	0.000	0.000	0.000	0.000	0.000	0.000	0.000	0.000
X1	40.000	29.000	366.600	631.000	290.000	320.000	290.000	0.000	0.000	0.000
X3	10.000	0.000	0.000	0.000	0.000	0.000	0.000	0.000	0.000	0.000
GR	84.200	0.000	42.200	194.500	35.300	228.500	33.400	293.500	30.400	333.700
GR	34.300	366.600	31.000	389.500	29.600	434.500	27.800	487.400	30.800	557.400
GR	32.500	579.700	33.200	598.600	33.600	631.000	29.700	653.500	27.200	664.800
GR	27.400	676.500	30.200	696.500	30.500	725.900	27.200	754.100	29.600	773.100
GR	30.400	896.600	32.100	930.500	33.100	956.800	33.500	971.200	33.500	992.800
GR	24.100	1017.500	24.000	1120.900	44.500	1167.300	52.400	1184.700	0.000	0.000

NC	0.030	0.035	0.025	0.100	0.300	0.000	0.000	0.000	0.000	0.000
X1	41.000	24.000	385.500	464.700	280.000	390.000	310.000	0.000	0.000	0.000
X3	10.000	0.000	0.000	0.000	0.000	0.000	0.000	0.000	0.000	0.000
GR	98.700	0.000	40.100	203.800	36.500	213.300	34.500	273.200	34.800	304.400
GR	34.300	338.100	34.400	349.600	33.700	385.500	28.300	397.700	28.300	455.100
GR	33.800	464.700	34.200	483.200	36.100	495.000	36.200	510.400	33.100	527.600
GR	33.100	541.500	29.200	549.400	31.800	568.600	31.800	594.000	28.600	615.800
GR	29.600	631.800	30.700	689.900	34.500	751.900	44.300	796.700	0.000	0.000
MH	4.000	0.030	373.800	0.025	468.200	0.035	800.000	100.000	1064.500	0.000
GT	4.000	1500.000	4500.000	6700.000	18700.000	0.000	0.000	0.000	0.000	0.000
X1	42.000	23.000	373.800	468.200	290.000	320.000	300.000	0.000	0.000	0.000
X3	10.000	0.000	0.000	0.000	0.000	0.000	0.000	0.000	0.000	0.000
GR	67.700	0.000	40.700	297.500	37.500	373.800	29.900	391.300	28.500	420.200
GR	30.700	448.200	36.200	468.200	38.700	519.500	31.000	536.700	35.500	571.900
GR	34.700	606.900	30.900	629.000	30.900	656.800	30.600	706.700	33.700	731.600
GR	34.300	778.800	34.200	828.900	34.400	886.900	34.400	963.000	27.000	992.600
GR	32.900	1014.300	33.400	1039.000	46.100	1064.500	0.000	0.000	0.000	0.000
NC	0.030	0.035	0.025	0.100	0.300	0.000	0.000	0.000	0.000	0.000
X1	42.100	18.000	380.000	464.500	200.000	200.000	200.000	0.000	0.000	0.000
X3	10.000	0.000	0.000	0.000	0.000	0.000	0.000	0.000	0.000	0.000
GR	97.000	0.000	36.800	298.100	36.200	367.400	28.900	380.000	28.500	408.900
GR	29.600	440.400	37.900	464.500	39.000	505.700	37.000	528.900	37.300	561.100
GR	35.700	604.300	35.700	652.000	34.300	806.400	32.600	967.600	26.100	992.100
GR	34.800	1018.400	34.200	1000.100	49.100	1066.500	0.000	0.000	0.000	0.000
SB	0.900	1.500	2.800	0.000	25.600	5.000	175.800	2.000	28.700	28.500
NC	0.040	0.040	0.025	0.100	0.300	0.000	0.000	0.000	0.000	0.000

X1	42.200	15.000	359.900	465.400	57.000	57.000	57.000	0.000	0.000	0.000
X2	0.000	0.000	1.000	0.000	0.000	0.000	0.000	0.000	0.000	0.000
ET	10.000	0.000	101.400	101.400	309.000	35.500	35.500	359.900	37.000	35.100
BT	465.400	37.000	35.100	516.800	37.200	37.200	548.500	37.600	37.600	582.700
BT	36.300	36.300	801.100	33.500	33.500	939.800	31.800	31.800	1059.500	31.900
BT	31.900	0.000	0.000	0.000	0.000	0.000	0.000	0.000	0.000	0.000
GR	101.400	0.000	35.500	309.000	36.400	359.900	33.300	383.100	29.200	387.300
GR	28.700	412.900	30.600	444.600	37.500	465.400	37.200	516.800	37.600	548.500
GR	36.300	582.700	33.500	801.100	31.800	939.800	31.900	1059.500	40.000	1060.000
NC	0.040	0.040	0.020	0.100	0.300	0.000	0.000	0.000	0.000	0.000
X1	42.300	0.000	0.000	0.000	5.000	5.000	5.000	0.000	0.000	0.000
NC	0.040	0.080	0.040	0.100	0.300	0.000	0.000	0.000	0.000	0.000
X1	43.000	29.000	343.600	486.400	365.000	385.000	375.000	0.000	0.000	0.000
X3	10.000	0.000	0.000	0.000	0.000	0.000	0.000	0.000	0.000	0.000
GR	70.200	0.000	55.500	278.700	39.800	311.500	40.700	343.600	34.900	385.000
GR	33.100	391.400	33.100	406.800	30.400	422.000	36.400	456.100	38.400	475.900
GR	40.400	486.400	40.400	516.000	39.400	518.100	39.000	525.900	32.500	541.700
GR	32.000	555.000	35.300	568.500	35.300	582.700	33.500	595.200	34.200	678.200
GR	33.400	777.800	30.900	848.000	32.800	891.500	38.400	915.500	37.700	960.700
GR	27.900	995.500	32.700	1000.400	34.400	1027.100	45.500	1064.600	0.000	0.000
X1	44.000	25.000	376.300	457.200	115.000	110.000	110.000	0.000	0.000	0.000
X3	10.000	0.000	0.000	0.000	0.000	0.000	0.000	0.000	0.000	0.000
GR	52.800	0.000	48.800	98.000	41.700	199.100	38.900	296.200	39.200	320.000
GR	40.100	345.400	38.400	376.300	32.800	386.600	32.800	404.900	31.400	411.100
GR	31.400	429.600	32.800	434.900	32.800	447.100	37.200	457.200	40.000	493.800
GR	40.000	511.500	37.900	529.100	33.700	552.800	35.100	566.400	35.100	652.000
GR	34.900	844.200	35.200	969.200	33.300	993.000	35.800	1026.900	50.800	1057.900

X1	45.000	21.000	373.700	477.300	180.000	180.000	180.000	0.000	0.000	0.000
X3	0.000	0.000	0.000	0.000	0.000	477.300	0.000	0.000	0.000	0.000
GR	51.100	0.000	46.400	152.800	40.900	316.200	38.700	373.700	31.600	388.200
GR	32.400	396.700	31.700	412.500	31.700	424.900	37.100	453.400	38.800	470.600
GR	41.200	477.300	41.900	512.000	35.300	532.100	34.200	549.600	35.300	562.100
GR	35.300	580.000	34.100	649.200	35.000	784.000	34.600	910.800	34.700	1015.600
GR	50.500	1053.100	0.000	0.000	0.000	0.000	0.000	0.000	0.000	0.000
X1	46.000	26.000	380.800	462.500	490.000	510.000	500.000	0.000	0.000	0.000
X3	0.000	0.000	0.000	0.000	0.000	491.200	0.000	0.000	0.000	0.000
GR	48.900	0.000	45.300	136.500	41.700	215.900	39.600	380.800	33.100	393.900
GR	32.500	415.900	33.000	432.100	34.100	452.100	40.000	462.500	39.700	478.400
GR	44.700	491.200	43.000	527.600	38.900	536.600	35.800	549.000	40.600	573.200
GR	40.300	591.400	36.100	644.900	37.900	747.900	34.000	756.900	38.400	779.600
GR	38.300	869.100	39.200	940.900	41.600	979.000	43.600	996.800	47.000	1014.400
GR	49.600	1024.800	0.000	0.000	0.000	0.000	0.000	0.000	0.000	0.000
NC	0.045	0.040	0.025	0.100	0.300	0.000	0.000	0.000	0.000	0.000
X1	47.000	26.000	318.400	611.900	300.000	340.000	330.000	0.000	0.000	0.000
X3	0.000	0.000	0.000	0.000	0.000	645.600	0.000	0.000	0.000	0.000
GR	50.300	0.100	48.700	77.600	44.300	90.600	44.300	134.400	44.000	156.100
GR	42.600	210.400	40.900	299.100	40.300	430.900	41.200	318.400	35.400	531.800
GR	35.400	555.100	34.800	562.200	34.800	578.300	36.300	584.500	37.000	602.600
GR	40.800	611.900	40.800	631.600	46.300	645.600	46.300	679.300	41.000	716.300
GR	44.200	734.900	44.200	762.300	42.000	818.500	44.900	881.400	45.500	928.800
GR	51.400	972.700	0.000	0.000	0.000	0.000	0.000	0.000	0.000	0.000
NC	0.040	0.045	0.035	0.100	0.300	0.000	0.000	0.000	0.000	0.000
X1	48.000	20.000	707.800	773.900	260.000	230.000	250.000	0.000	0.000	0.000
X3	0.000	0.000	0.000	0.000	0.000	773.900	0.000	0.000	0.000	0.000
GR	96.900	0.000	44.000	111.800	44.100	129.400	45.300	172.900	42.600	178.600
GR	44.000	323.700	38.400	343.000	40.100	485.100	40.000	588.200	40.300	674.300
GR	40.900	707.800	37.600	708.700	37.700	732.900	45.900	773.900	47.500	826.600

GR	42.600	854.500	44.900	867.500	45.300	890.800	48.600	1000.700	51.600	1079.000
X1	49.000	24.000	640.100	692.800	210.000	200.000	200.000	0.000	0.000	0.000
X3	0.000	0.000	0.000	0.000	0.000	719.500	0.000	0.000	0.000	0.000
GR	165.300	0.000	60.300	136.300	41.800	164.700	43.600	179.500	43.400	212.600
GR	44.700	312.100	43.600	432.500	44.800	618.000	43.000	627.900	43.300	640.100
GR	37.200	656.000	38.600	672.600	42.300	692.800	43.200	711.500	47.100	719.500
GR	47.300	752.000	46.400	763.400	43.700	786.900	45.300	797.800	45.900	815.400
GR	45.900	843.400	47.800	924.500	49.800	981.100	51.700	1003.100	0.000	0.000
X1	50.000	18.000	628.100	701.100	590.000	590.000	590.000	0.000	0.000	0.000
X3	10.000	0.000	0.000	0.000	0.000	0.000	0.000	0.000	0.000	0.000
GR	167.600	0.000	68.600	156.000	47.000	188.500	47.900	238.900	48.300	455.300
GR	49.300	614.500	51.000	628.100	40.800	656.200	50.000	701.100	50.200	748.700
GR	49.500	774.100	52.000	784.400	51.500	804.700	53.500	812.700	58.200	879.100
GR	55.200	888.000	59.800	895.800	61.800	949.100	0.000	0.000	0.000	0.000
NC	0.040	0.040	0.025	0.100	0.300	0.000	0.000	0.000	0.000	0.000
X1	51.000	25.000	642.700	696.900	580.000	590.000	590.000	0.000	0.000	0.000
X3	0.000	0.000	0.000	0.000	0.000	790.500	0.000	0.000	0.000	0.000
GR	134.700	0.000	74.300	115.200	59.800	163.400	57.400	231.400	58.600	242.500
GR	57.100	285.700	56.900	375.900	55.500	373.800	55.200	590.400	53.100	602.200
GR	53.500	642.700	48.400	652.500	48.400	668.400	51.000	679.200	55.100	696.900
GR	54.700	728.400	54.800	743.500	57.400	759.800	58.000	790.500	55.000	804.600
GR	56.700	823.000	57.700	853.500	58.600	864.700	69.300	878.900	74.400	911.300
NC	0.040	0.040	0.050	0.100	0.300	0.000	0.000	0.000	0.000	0.000
X1	52.000	23.000	279.800	745.600	450.000	400.000	425.000	0.000	0.000	0.000
X3	0.000	0.000	0.000	0.000	0.000	785.500	0.000	0.000	0.000	0.000
GR	97.800	0.000	70.100	72.400	67.600	174.000	62.900	232.100	63.000	279.800
GR	60.500	379.000	57.600	459.300	56.900	511.600	56.800	593.900	56.800	656.500
GR	55.500	665.600	57.100	674.400	57.000	734.600	62.700	745.600	62.700	785.500
GR	53.800	805.600	53.700	820.800	59.000	829.400	58.000	849.500	59.800	857.000
GR	61.300	871.600	71.400	911.500	79.700	940.400	0.000	0.000	0.000	0.000

X1	53.000	23.000	290.300	767.800	320.000	200.000	250.000	0.000	0.000	0.000
X3	0.000	0.000	0.000	0.000	0.000	767.800	0.000	0.000	0.000	0.000
GR	78.300	0.000	73.300	134.500	71.900	158.100	69.000	174.000	68.200	228.500
GR	67.300	269.400	68.300	279.500	64.600	290.300	59.600	397.000	58.200	360.700
GR	56.600	631.500	56.600	643.600	57.500	651.300	58.000	677.100	58.000	717.300
GR	60.900	756.100	64.800	767.800	64.600	785.400	62.600	796.600	57.600	818.200
GR	59.900	830.700	59.900	849.200	62.300	858.200	65.200	888.000	71.100	914.000

X1	54.000	17.000	420.200	697.600	310.000	170.000	210.000	0.000	0.000	0.000
X3	0.000	0.000	0.000	0.000	0.000	713.400	0.000	0.000	0.000	0.000
GR	262.700	0.000	65.600	378.900	60.700	420.200	59.100	512.500	58.700	573.900
GR	56.500	602.100	58.900	628.600	60.800	676.200	66.800	697.600	66.800	713.400
GR	65.100	729.400	60.200	740.200	62.300	766.700	63.700	791.600	66.500	807.400
GR	69.200	846.100	74.300	888.400	0.000	0.000	0.000	0.000	0.000	0.000
EJ	0.000	0.000	0.000	0.000	0.000	0.000	0.000	0.000	0.000	0.000

```
*****************************************************
  HEC2 RELEASE DATED NOV 76 UPDATED APRIL 1980
  ERROR CORR -  01,02,03,04
  MODIFICATION -  50,51,52,53,54
*****************************************************
T1                SOLEDAD CANYON LEFT SIDE&RIGHT SIDE COMBINDED
T2                 SAN DIEGO CITY CA. FLOOD INSURANCE STUDY
T3                50 YEAR FLOOD

J1  ICHECK    INQ       NINV      IDIR      STRT      METRIC    HVINS     Q         WSEL      FQ
                3.        0.        0.   0.000000      0.00      0.0       0.      9.180     0.000
            IPLOT     PRFVS     XSECV     XSECH     FN        ALLDC     IBW       CHNIM     ITRACE
    2.000    0.000    -1.000     0.000     0.000     0.000     0.000     0.000     0.000    15.000
```

```
*****************************************************
  HEC2 RELEASE DATED NOV 76 UPDATED APRIL 1980
  ERROR CORR -  01,02,03,04
  MODIFICATION -  50,51,52,53,54
*****************************************************
T1                    SOLEDAD CANYON COMBINED LEFT & RIGHT SIDES
T2                    SAN DIEGO CITY FLOOD INSURANCE STUTY
T3                    100 YEAR FLOOD

J1  ICHECK    INQ      NINV     IDIR     STRT     METRIC   HVINS    Q        WSEL     FQ
      0.       4.       0.       0.   0.000000    0.00     0.0      0.      10.800   0.000
J2  NPROF     IPLOT    PRFVS    XSECV    XSECH    FN       ALLDC    IBW      CHNIM    ITRACE
     3.000    0.000   -1.000    0.000    0.000    0.000    0.000    0.000    0.000   15.000
```

```
*****************************************************
  HEC2 RELEASE DATED NOV 76 UPDATED APRIL 1980
  ERROR CORR -  01,02,03,04
  MODIFICATION -  50,51,52,53,54
*****************************************************
T1                    SOLEDAD CANYON COMBINED LEFT & RIGHT SIDES
T2                    SAN DIEGO CITY FLOOD INSURANCE STUDY
T3                    500 YEAR FLOOD

J1  ICHECK    ING      NINV     IDIR     STRT     METRIC   HVINS    Q        WSEL     FQ
      0.       5.       0.       0.   0.000000    0.00     0.0      0.     15.660   0.000
J2  NPROF     IPLOT    PRFVS    XSECV    XSECH    FN       ALLDC    IBW      CHNIM    ITRACE
    15.000    0.000   -1.000    0.000    0.000    0.000    0.000    0.000    0.000    15.000
```

```
*****************************************************
  HEC2 RELEASE DATED NOV 76 UPDATED APRIL 1980
  ERROR CORR -  01,02,03,04
  MODIFICATION -  50,51,52,53,54
*****************************************************
NOTE- ASTERISK (*) AT LEFT OF CROSS-SECTION NUMBER INDICATES MESSAGE IN SUMMARY OF ERRORS LIST
```

SUMMARY PRINTOUT TABLE 150

SECNO	XLCH	ELTRD	ELLC	ELMIN	Q	CWSEL	CRIWS	EG	10K*S	VCH	AREA	QTR
14.200	0.00	0.00	0.00	0.00	5000.00	6.48	0.00	6.58	3.23	2.58	1937.76	2780.71
14.200	0.00	0.00	0.00	0.00	15400.00	9.18	0.00	9.67	9.83	5.61	2745.30	4912.07
14.200	0.00	0.00	0.00	0.00	23000.00	10.80	0.00	11.57	12.92	7.12	3232.77	6377.56
14.200	0.00	0.00	0.00	0.00	51500.00	15.66	0.00	17.46	18.99	10.84	4923.57	11817.75
14.400	1060.00	0.00	0.00	0.00	5000.00	6.66	0.00	6.67	0.32	0.69	7245.70	8857.50
14.400	1060.00	0.00	0.00	0.00	15400.00	9.85	0.00	9.87	0.57	1.29	11983.97	20317.62
14.400	1060.00	0.00	0.00	0.00	23000.00	11.80	0.00	11.84	0.62	1.54	14923.42	29140.04
14.400	1060.00	0.00	0.00	0.00	51500.00	17.76	0.00	17.83	0.65	2.15	23998.91	63648.25
14.550	450.00	0.00	0.00	0.60	5000.00	6.67	0.00	6.69	1.19	1.49	5675.46	4582.98
14.550	450.00	0.00	0.00	0.60	15400.00	9.87	0.00	9.90	0.92	1.71	12996.65	16079.50
14.550	450.00	0.00	0.00	0.60	23000.00	11.83	0.00	11.86	0.78	1.78	17537.70	25987.93
14.550	450.00	0.00	0.00	0.60	51500.00	17.81	0.00	17.85	0.57	1.98	32674.78	68211.23
15.000	570.00	0.00	0.00	2.70	5000.00	6.72	0.00	6.76	7.52	1.52	3203.81	1893.84
15.000	570.00	0.00	0.00	2.70	15400.00	9.89	0.00	9.92	1.91	1.58	10558.67	11147.67
15.000	570.00	0.00	0.00	2.70	23000.00	11.85	0.00	11.88	1.31	1.65	15199.36	20107.16
15.000	570.00	0.00	0.00	2.70	51500.00	17.82	0.00	17.87	0.73	1.88	30207.76	60421.01
16.000	450.00	0.00	0.00	3.10	5000.00	6.94	0.00	6.94	0.77	0.79	6884.22	5712.14
16.000	450.00	0.00	0.00	3.10	15400.00	10.02	0.00	10.04	0.73	1.21	13898.33	18045.81
16.000	450.00	0.00	0.00	3.10	23000.00	11.93	0.00	11.98	0.65	1.37	18391.41	28546.26
16.000	450.00	0.00	0.00	3.10	51500.00	17.89	0.00	17.93	0.50	1.75	32672.44	72512.15

SECNO	XLCH	ELTRD	ELLC	ELMIN	Q	CWSEL	CRIWS	EQ	10K*S	VCH	AREA	.01K
17.000	900.00	0.00	0.00	2.90	5000.00	6.99	0.00	6.99	0.44	0.69	7623.32	7560.13
17.000	900.00	0.00	0.00	2.90	15400.00	10.08	0.00	10.10	0.59	1.17	13954.31	19980.61
17.000	900.00	0.00	0.00	2.90	23000.00	12.01	0.00	12.03	0.57	1.36	18105.46	30376.41
17.000	900.00	0.00	0.00	2.90	51500.00	17.93	0.00	17.97	0.48	1.75	32154.80	74502.05
18.000	910.00	0.00	0.00	2.40	5000.00	7.04	0.00	7.05	0.92	0.91	5657.38	5214.05
18.000	910.00	0.00	0.00	2.40	15400.00	10.14	0.00	10.17	0.91	1.40	11401.81	16163.38
18.000	910.00	0.00	0.00	2.40	23000.00	12.06	0.00	12.10	0.82	1.58	15124.93	25374.41
18.000	910.00	0.00	0.00	2.40	51500.00	17.97	0.00	18.03	0.64	1.99	27176.23	64518.24
18.100	750.00	0.00	0.00	2.90	5000.00	7.17	0.00	7.23	14.03	1.98	2558.82	1334.92
18.100	750.00	0.00	0.00	2.90	15400.00	10.23	0.00	10.28	2.87	1.86	8385.60	9092.78
18.100	750.00	0.00	0.00	2.90	23000.00	12.13	0.00	12.19	1.83	1.90	12261.77	17001.90
18.100	750.00	0.00	0.00	2.90	51500.00	18.02	0.00	18.08	0.94	2.12	24842.22	53240.27
18.200	350.00	0.00	0.00	4.30	5000.00	7.48	0.00	7.51	5.10	1.32	3838.93	2214.16
18.200	350.00	0.00	0.00	4.30	15400.00	10.32	0.00	10.35	1.49	1.34	11589.61	12605.10
18.200	350.00	0.00	0.00	4.30	23000.00	12.20	0.00	12.23	0.97	1.37	16936.53	23383.54
18.200	350.00	0.00	0.00	4.30	51500.00	18.07	0.00	18.11	0.49	1.52	34305.13	73682.30
19.000	430.00	0.00	0.00	2.10	5000.00	7.55	0.00	7.56	0.52	0.64	7853.20	6942.05
19.000	430.00	0.00	0.00	2.10	15400.00	10.37	0.00	10.39	0.55	1.01	15402.27	20750.67
19.000	430.00	0.00	0.00	2.10	23000.00	12.24	0.00	12.26	0.48	1.14	20506.07	33161.71
19.000	430.00	0.00	0.00	2.10	51500.00	18.10	0.00	18.13	0.35	1.42	37033.27	86623.07
20.000	450.00	0.00	0.00	0.60	5000.00	7.58	0.00	7.59	0.76	0.76	6538.71	5717.79
20.000	450.00	0.00	0.00	0.60	15400.00	10.40	0.00	10.42	0.80	1.20	12873.42	17176.15
20.000	450.00	0.00	0.00	0.60	23000.00	12.26	0.00	12.29	0.70	1.35	17221.05	27575.12
20.000	450.00	0.00	0.00	0.60	51500.00	18.11	0.00	18.15	0.50	1.69	31297.21	72637.70
21.000	160.00	0.00	0.00	1.00	4290.00	7.59	0.00	7.60	0.49	0.61	6723.62	6150.76
21.000	160.00	0.00	0.00	1.00	13455.00	10.41	0.00	10.43	0.59	1.04	12881.33	17537.15
21.000	160.00	0.00	0.00	1.00	19500.00	12.28	0.00	12.30	0.50	1.15	17048.56	27677.91
21.000	160.00	0.00	0.00	1.00	43680.00	18.13	0.00	18.16	0.38	1.46	30433.27	71320.27
22.000	640.00	0.00	0.00	2.30	4290.00	7.63	0.00	7.64	0.69	0.60	6326.80	5165.65
22.000	640.00	0.00	0.00	2.30	13455.00	10.45	0.00	10.47	0.65	1.00	13133.49	16647.16
22.000	640.00	0.00	0.00	2.30	19500.00	12.31	0.00	12.33	0.52	1.09	17738.42	27160.86
22.000	640.00	0.00	0.00	2.30	43680.00	18.15	0.00	18.18	0.36	1.37	32551.84	73063.45

SLOPE	XLCH	ELTRD	ELLC	ELMIN	Q	CWSEL	CRIWS	EQ	10K*S	VCH	AREA	.01K
23.100	600.00	0.00	0.00	2.90	4290.00	7.67	0.00	7.67	0.31	0.81	6907.72	6007.22
23.100	600.00	0.00	0.00	2.90	13455.00	10.49	0.00	10.50	0.48	1.05	14748.40	19306.72
23.100	600.00	0.00	0.00	2.90	19500.00	12.34	0.00	12.36	0.38	1.06	20108.14	31660.97
23.100	600.00	0.00	0.00	2.90	43680.00	18.18	0.00	18.20	0.25	1.18	38881.80	87654.60
24.000	740.00	0.00	0.00	5.10	4290.00	8.27	8.27	8.74	174.78	5.50	782.37	324.50
24.000	740.00	0.00	0.00	5.10	13455.00	10.32	0.00	10.74	37.19	5.26	2593.91	2206.31
24.000	740.00	0.00	0.00	5.10	19500.00	12.23	0.00	12.53	13.88	4.46	4473.61	5203.62
24.000	740.00	0.00	0.00	5.10	43680.00	18.07	0.00	18.32	4.09	4.10	11092.58	21606.48
25.000	490.00	0.00	0.00	6.60	4290.00	9.81	0.00	9.88	8.30	2.11	2037.44	1486.97
25.000	490.00	0.00	0.00	6.60	13455.00	11.54	0.00	11.75	12.54	3.71	3646.60	3779.39
25.000	490.00	0.00	0.00	6.60	19500.00	12.86	0.00	13.10	9.89	3.99	4918.88	6201.43
25.000	490.00	0.00	0.00	6.60	43680.00	18.26	0.00	18.53	4.29	4.20	10698.44	21081.00
26.000	540.00	0.00	0.00	7.30	4290.00	10.32	0.00	10.38	6.69	2.09	2322.45	1650.71
26.000	540.00	0.00	0.00	7.30	13455.00	12.27	0.00	12.41	7.67	3.21	4504.27	4807.47
26.000	540.00	0.00	0.00	7.30	19500.00	13.49	0.00	13.66	6.72	3.49	5887.67	7524.26
26.000	540.00	0.00	0.00	7.30	43680.00	18.59	0.00	18.80	3.41	3.74	11944.68	23644.41
27.000	450.00	0.00	0.00	8.00	4290.00	10.99	10.95	11.38	167.60	6.28	865.10	331.38
27.000	450.00	0.00	0.00	8.00	13455.00	12.84	0.00	13.28	50.63	6.17	2527.19	1870.87
27.000	450.00	0.00	0.00	8.00	19500.00	13.92	0.00	14.39	36.01	6.29	3523.72	3249.33
27.000	450.00	0.00	0.00	8.00	43680.00	18.71	0.00	19.15	11.87	5.82	8160.34	12680.23
28.000	990.00	0.00	0.00	7.90	4290.00	15.62	0.00	15.79	22.21	4.67	1447.53	910.30
28.000	990.00	0.00	0.00	7.90	13455.00	16.91	0.00	17.31	38.82	7.22	2778.51	2159.55
28.000	990.00	0.00	0.00	7.90	19500.00	17.50	0.00	18.04	44.24	8.17	3438.26	2931.70
28.000	990.00	0.00	0.00	7.90	43680.00	20.16	0.00	20.86	30.24	8.39	6595.27	7942.92
29.000	165.00	0.00	0.00	1.50	4290.00	15.84	0.00	15.87	0.97	0.69	3297.50	4361.14
29.000	165.00	0.00	0.00	1.50	13455.00	17.45	0.00	17.57	4.07	1.98	4907.05	6671.94
29.000	165.00	0.00	0.00	1.50	19500.00	18.20	0.00	18.39	5.83	2.69	5769.69	8076.59
29.000	165.00	0.00	0.00	1.50	43680.00	20.90	0.00	21.26	9.03	4.56	8994.22	14537.43
30.000	745.00	0.00	0.00	11.00	4290.00	15.93	0.00	16.18	117.10	3.99	1062.41	396.45
30.000	745.00	0.00	0.00	11.00	13455.00	17.99	0.00	18.57	107.66	6.04	2202.15	1296.75
30.000	745.00	0.00	0.00	11.00	19500.00	18.95	0.00	19.73	108.50	6.97	2777.63	1872.08
30.000	745.00	0.00	0.00	11.00	43680.00	21.92	0.00	23.10	93.44	8.76	5151.77	4518.69

SECNO	XLCH	ELTRD	ELLC	ELMIN	Q	CWBEL	CRIWS	EQ	10K*S	VCH	AREA	.01K
31.000	750.00	0.00	0.00	13.50	4290.00	18.80	0.00	18.91	17.35	2.57	1622.11	1030.02
31.000	750.00	0.00	0.00	13.50	13455.00	21.59	0.00	21.92	24.03	4.12	3013.74	2744.83
31.000	750.00	0.00	0.00	13.50	19500.00	22.82	0.00	23.27	26.02	4.77	3890.36	3823.10
31.000	750.00	0.00	0.00	13.50	43680.00	26.01	0.00	26.79	29.90	6.35	7007.88	7987.67
32.000	630.00	0.00	0.00	12.20	4290.00	19.60	0.00	19.68	8.98	1.83	2043.53	1431.93
32.000	630.00	0.00	0.00	12.20	13455.00	22.77	0.00	23.01	12.87	3.09	3669.70	3751.02
32.000	630.00	0.00	0.00	12.20	19500.00	24.16	0.00	24.50	14.89	3.70	4421.47	5054.15
32.000	630.00	0.00	0.00	12.20	43680.00	27.62	0.00	28.46	23.18	5.73	6333.91	9073.09
33.000	290.00	0.00	0.00	15.70	4290.00	19.97	0.00	20.13	28.22	2.33	1446.37	807.52
33.000	290.00	0.00	0.00	15.70	13455.00	23.18	0.00	23.50	20.02	3.22	3267.60	3006.76
33.000	290.00	0.00	0.00	15.70	19500.00	24.61	0.00	25.02	19.86	3.70	4181.13	4375.81
33.000	290.00	0.00	0.00	15.70	43680.00	28.41	0.00	29.11	20.49	5.04	7694.63	9648.51
34.000	730.00	0.00	0.00	18.60	4290.00	22.60	0.00	22.83	48.94	3.86	1275.54	613.23
34.000	730.00	0.00	0.00	18.60	13455.00	24.95	0.00	25.34	31.45	4.29	3005.91	2299.38
34.000	730.00	0.00	0.00	18.60	19500.00	26.23	0.00	26.70	26.14	4.45	3999.50	3813.96
34.000	730.00	0.00	0.00	18.60	43680.00	29.92	0.00	30.68	21.55	5.65	7113.46	9497.11
34.500	250.00	0.00	0.00	19.56	4290.00	23.62	0.00	23.78	25.84	2.84	1500.24	843.93
34.500	250.00	0.00	0.00	19.56	13455.00	25.78	0.00	26.11	24.73	4.65	3208.52	2705.45
34.500	250.00	0.00	0.00	19.56	19500.00	26.96	0.00	27.37	22.27	5.24	4199.18	4132.19
34.500	250.00	0.00	0.00	19.56	43680.00	30.58	0.00	31.25	18.77	6.86	7419.42	10063.43
35.000	188.00	0.00	0.00	19.56	4290.00	24.00	0.00	24.11	11.99	2.24	1781.76	1239.16
35.000	188.00	0.00	0.00	19.56	13455.00	26.21	0.00	26.47	13.90	3.77	3566.39	3603.50
35.000	188.00	0.00	0.00	19.56	19500.00	27.36	0.00	27.71	13.59	4.34	4560.07	5290.19
35.000	188.00	0.00	0.00	19.56	43680.00	30.96	0.00	31.35	12.74	5.84	7888.77	12233.99
* 35.200	32.00	0.00	0.00	19.77	4290.00	24.32	24.32	25.61	211.04	9.88	606.00	295.31
* 35.200	32.00	0.00	0.00	19.77	13455.00	27.26	27.26	29.88	156.95	14.11	1389.94	1073.99
* 35.200	32.00	0.00	0.00	19.77	19500.00	29.62	29.62	31.22	58.59	11.85	2691.34	2354.49
* 35.200	32.00	0.00	0.00	19.77	43680.00	31.83	31.83	34.60	91.04	16.16	4177.92	4578.03
35.800	350.00	0.00	0.00	22.49	4290.00	28.48	0.00	28.73	46.60	5.05	1315.05	628.47
35.800	350.00	0.00	0.00	22.49	13455.00	31.38	0.00	31.74	22.15	5.42	3287.61	2858.71
35.800	350.00	0.00	0.00	22.49	19500.00	32.21	0.00	32.76	27.06	6.57	3854.68	3748.32
35.800	350.00	0.00	0.00	22.49	43680.00	35.33	0.00	36.46	29.99	9.06	6010.42	7976.69

SECNO	XLCH	ELTRD	ELLC	ELMIN	Q	CWSEL	CRIWS	EQ	10K*S	VCH	AREA	.01K
36.000	40.00	0.00	0.00	22.00	4290.00	28.64	0.00	28.81	9.10	3.58	1970.44	1471.74
36.000	40.00	0.00	0.00	22.00	13455.00	31.59	0.00	31.82	10.06	4.81	4550.10	4242.07
36.000	40.00	0.00	0.00	22.00	19500.00	32.58	0.00	32.85	11.01	5.43	5815.74	5877.30
36.000	40.00	0.00	0.00	22.00	43680.00	36.29	0.00	36.60	7.70	5.68	11467.93	15739.38
36.500	250.00	0.00	0.00	22.50	4290.00	28.89	0.00	29.06	11.34	3.88	1843.51	1273.93
36.500	250.00	0.00	0.00	22.50	13455.00	31.83	0.00	32.05	10.17	4.83	4456.95	4217.57
36.500	250.00	0.00	0.00	22.50	19500.00	32.84	0.00	33.11	10.96	5.41	5697.85	5870.73
36.500	250.00	0.00	0.00	22.50	43680.00	36.46	0.00	36.79	7.97	5.75	11051.64	15467.05
36.750	270.00	0.00	0.00	22.00	4290.00	29.28	0.00	29.38	11.26	2.56	1701.38	1278.46
36.750	270.00	0.00	0.00	22.00	13455.00	32.27	0.00	32.41	10.14	3.22	4668.14	4225.07
36.750	270.00	0.00	0.00	22.00	19500.00	33.33	0.00	33.50	10.10	3.49	5992.87	6134.30
36.750	270.00	0.00	0.00	22.00	43680.00	36.84	0.00	37.10	8.20	3.88	10702.30	15252.08
37.000	120.00	0.00	0.00	24.30	4290.00	29.44	0.00	29.58	24.31	2.91	1168.72	870.07
37.000	120.00	0.00	0.00	24.30	13455.00	32.37	0.00	32.58	22.12	3.99	3670.34	2860.56
37.000	120.00	0.00	0.00	24.30	19500.00	33.41	0.00	33.67	20.30	4.23	4868.76	4328.38
37.000	120.00	0.00	0.00	24.30	43680.00	36.87	0.00	37.23	14.03	4.34	9113.43	11660.40
38.000	400.00	0.00	0.00	22.70	4290.00	30.19	0.00	30.27	12.92	1.48	2011.72	1193.48
38.000	400.00	0.00	0.00	22.70	13455.00	33.05	0.00	33.16	9.72	2.21	3154.06	4316.34
38.000	400.00	0.00	0.00	22.70	19500.00	34.09	0.00	34.24	10.29	2.58	6453.17	6079.53
38.000	400.00	0.00	0.00	22.70	43680.00	37.44	0.00	37.71	10.06	3.45	10863.05	13771.02
39.000	380.00	0.00	0.00	24.30	4290.00	30.62	0.00	30.69	8.47	1.15	2223.84	1473.87
39.000	380.00	0.00	0.00	24.30	13455.00	33.38	0.00	33.51	7.66	1.76	4944.62	4862.98
39.000	380.00	0.00	0.00	24.30	19500.00	34.44	0.00	34.61	8.33	2.07	6146.48	6757.89
39.000	380.00	0.00	0.00	24.30	43680.00	37.78	0.00	38.10	8.81	2.84	10106.94	14719.75
40.000	290.00	0.00	0.00	27.80	4290.00	32.11	32.11	33.38	525.72	9.04	474.76	187.10
40.000	290.00	0.00	0.00	27.80	13455.00	33.72	33.72	34.04	19.27	2.08	3256.33	3064.78
40.000	290.00	0.00	0.00	24.00	19500.00	34.67	0.00	35.07	20.87	2.57	4205.06	4268.21
40.000	290.00	0.00	0.00	24.00	43680.00	37.94	0.00	38.60	20.18	3.80	7230.78	9722.44
41.000	310.00	0.00	0.00	28.30	4290.00	34.16	0.00	34.46	9.56	5.34	1105.36	1387.14
41.000	310.00	0.00	0.00	28.30	13455.00	35.06	35.06	36.78	47.02	13.19	1476.74	1962.15
41.000	310.00	0.00	0.00	28.30	19500.00	36.18	36.18	38.12	44.72	14.41	2033.16	2915.94
41.000	310.00	0.00	0.00	28.30	43680.00	38.90	38.90	41.88	48.65	18.64	3540.84	6262.37

SECNO	XLCH	ELTRD	ELLC	ELMIN	Q	CWSEL	CRIWS	EQ	10K*S	VCH	AREA	.01K
42.000	300.00	0.00	0.00	28.50	1500.00	34.44	0.00	34.75	8.66	4.46	336.21	507.70
42.000	300.00	0.00	0.00	28.50	4500.00	37.33	0.00	37.42	2.97	3.44	2789.60	2610.24
42.000	300.00	0.00	0.00	27.00	6700.00	38.65	0.00	38.77	3.14	4.00	3677.05	3703.95
42.000	300.00	0.00	0.00	27.00	18700.00	42.41	0.00	42.70	4.79	6.46	8487.19	9546.57
42.100	200.00	0.00	0.00	26.10	1500.00	34.67	0.00	34.88	4.51	2.74	415.40	706.24
42.100	200.00	0.00	0.00	26.10	4500.00	36.91	0.00	37.75	12.49	7.53	646.49	1273.49
42.100	200.00	0.00	0.00	26.10	6700.00	38.73	0.00	38.82	1.96	3.42	3228.30	4787.39
42.100	200.00	0.00	0.00	26.10	18700.00	42.60	0.00	42.77	2.39	4.85	6191.14	12096.54
42.200	57.00	31.80	101.40	28.70	1500.00	34.83	0.00	34.88	2.08	2.21	1094.18	1009.29
42.200	57.00	31.80	101.40	28.70	4500.00	37.70	0.00	37.75	1.79	2.61	2813.64	3347.93
42.200	57.00	31.80	101.40	28.70	6700.00	38.83	0.00	38.90	1.90	3.02	3676.67	4814.41
42.200	57.00	31.80	101.40	28.70	18700.00	42.77	0.00	42.93	2.41	4.54	6736.44	12039.87
42.300	5.00	0.00	0.00	28.70	1500.00	34.82	0.00	34.88	1.62	2.44	1094.90	1180.32
42.300	5.00	0.00	0.00	28.70	4500.00	37.69	0.00	37.76	1.50	2.99	2809.23	3676.89
42.300	5.00	0.00	0.00	28.70	6700.00	38.81	0.00	38.91	1.62	3.48	3671.87	5284.79
42.300	5.00	0.00	0.00	28.70	18700.00	42.74	0.00	42.94	2.12	5.31	6713.51	12837.15
43.000	375.00	0.00	0.00	30.40	1500.00	35.32	35.32	36.58	131.85	9.02	166.38	111.23
43.000	375.00	0.00	0.00	30.40	4500.00	38.07	38.07	39.96	157.00	11.04	407.57	359.14
43.000	375.00	0.00	0.00	30.40	6700.00	40.47	40.47	40.52	4.84	2.38	4114.86	3046.59
43.000	375.00	0.00	0.00	27.90	18700.00	42.92	0.00	43.10	12.09	4.88	5939.78	5377.70
44.000	110.00	0.00	0.00	31.40	1500.00	36.92	0.00	37.27	25.39	4.71	318.47	297.71
44.000	110.00	0.00	0.00	31.40	4500.00	40.22	0.00	40.27	3.73	2.62	3414.87	2329.09
44.000	110.00	0.00	0.00	31.40	6700.00	40.51	0.00	40.60	6.93	3.67	3638.82	2544.54
44.000	110.00	0.00	0.00	31.40	18700.00	43.01	0.00	43.27	14.19	6.35	5724.34	4963.51
45.000	180.00	0.00	0.00	31.60	1500.00	37.39	0.00	37.73	25.74	4.68	320.40	295.68
45.000	180.00	0.00	0.00	31.60	4500.00	39.65	0.00	40.76	57.34	8.45	541.97	594.27
45.000	180.00	0.00	0.00	31.60	6700.00	39.63	39.63	42.11	129.47	12.66	538.23	588.83
45.000	180.00	0.00	0.00	31.60	18700.00	44.51	44.51	47.44	80.19	14.80	1492.13	2088.19
46.000	500.00	0.00	0.00	32.50	1500.00	38.48	0.00	38.75	16.33	4.14	362.49	371.15
46.000	500.00	0.00	0.00	32.50	4500.00	41.83	0.00	42.42	20.69	6.45	865.32	989.21
46.000	500.00	0.00	0.00	32.50	6700.00	43.54	0.00	44.08	16.29	6.54	1367.15	1659.92
46.000	500.00	0.00	0.00	32.50	18700.00	48.38	0.00	49.05	14.01	7.99	3226.09	4995.40

	47.000	330.00	0.00	0.00	34.80	1500.00	38.92	0.00	39.45	22.16	5.84	236.70	318.64
	47.000	330.00	0.00	0.00	34.80	4500.00	42.33	0.00	42.93	12.03	6.74	1017.47	1297.65
	47.000	330.00	0.00	0.00	34.80	6700.00	43.97	0.00	44.44	8.16	6.51	1752.40	2345.87
	47.000	330.00	0.00	0.00	34.80	18700.00	48.84	0.00	49.34	5.76	7.59	4460.07	7790.45
*	48.000	250.00	0.00	0.00	37.60	1500.00	40.52	40.52	40.89	85.19	6.58	359.26	169.52
	48.000	250.00	0.00	0.00	37.60	4500.00	43.15	0.00	43.29	12.65	3.68	1481.87	1265.44
	48.000	250.00	0.00	0.00	37.60	6700.00	44.55	0.00	44.69	8.48	3.43	2283.13	2300.29
	48.000	250.00	0.00	0.00	37.60	18700.00	49.32	0.00	49.50	4.85	3.81	5451.98	8494.50
*	49.000	200.00	0.00	0.00	37.20	1500.00	42.48	42.48	43.95	123.93	9.74	156.21	134.54
*	49.000	200.00	0.00	0.00	37.20	4500.00	45.23	45.23	45.99	44.20	8.78	930.00	676.90
*	49.000	200.00	0.00	0.00	37.20	6700.00	45.73	45.73	46.60	51.35	10.01	1206.22	994.96
	49.000	200.00	0.00	0.00	37.20	18700.00	49.18	0.00	49.83	23.37	9.10	3152.48	3868.62
*	50.000	590.00	0.00	0.00	40.80	1500.00	48.03	0.00	48.90	39.39	7.52	199.37	194.65
*	50.000	590.00	0.00	0.00	40.80	4500.00	51.00	51.00	51.15	10.51	4.14	1651.76	1387.90
*	50.000	590.00	0.00	0.00	40.80	6700.00	51.32	51.32	51.58	16.93	5.46	1842.96	1627.34
	50.000	590.00	0.00	0.00	40.80	18700.00	51.72	51.72	53.26	92.08	13.31	2081.69	1940.77
*	51.000	590.00	0.00	0.00	48.40	1500.00	53.22	53.22	54.82	64.03	10.16	148.38	187.46
*	51.000	590.00	0.00	0.00	48.40	4500.00	56.54	56.54	57.90	31.42	10.62	664.00	800.03
*	51.000	590.00	0.00	0.00	48.40	6700.00	57.58	57.58	58.87	27.93	11.16	1110.69	1267.29
	51.000	590.00	0.00	0.00	48.40	18700.00	59.88	59.88	61.72	36.97	15.53	2456.25	3075.64
*	52.000	425.00	0.00	0.00	55.50	1500.00	58.31	57.87	58.53	115.31	3.83	391.72	139.69
	52.000	425.00	0.00	0.00	55.50	4500.00	59.72	58.91	60.17	96.48	5.34	842.41	458.14
	52.000	425.00	0.00	0.00	55.50	6700.00	60.39	0.00	61.00	102.32	6.23	1075.13	662.37
	52.000	425.00	0.00	0.00	55.50	18700.00	63.16	0.00	64.25	99.48	8.38	2252.53	1874.90
	53.000	250.00	0.00	0.00	56.60	1500.00	59.98	0.00	60.08	37.92	2.56	386.47	243.60
	53.000	250.00	0.00	0.00	56.60	4500.00	61.48	0.00	61.71	41.91	3.89	1155.37	695.10
	53.000	250.00	0.00	0.00	56.60	6700.00	62.29	0.00	62.60	42.70	4.50	1487.27	1025.33
	53.000	250.00	0.00	0.00	56.60	18700.00	65.24	0.00	65.92	46.10	6.60	2833.58	2754.26
	54.000	210.00	0.00	0.00	56.50	1500.00	60.92	0.00	61.10	61.16	3.36	446.51	191.80
	54.000	210.00	0.00	0.00	56.50	4500.00	62.44	0.00	62.88	68.15	5.32	851.27	545.12
	54.000	210.00	0.00	0.00	56.50	6700.00	63.23	0.00	63.84	72.27	6.31	1073.33	788.15
	54.000	210.00	0.00	0.00	56.50	18700.00	66.01	0.00	67.51	91.88	9.94	1914.39	1950.89

SUMMARY PRINTOUT TABLE 150

SECNO	Q	CWSEL	DIFWSP	DIFWSX	DIFKWS	TOPWID	XLCH
14.200	5000.00	6.48	0.00	0.00	0.00	299.07	0.00
14.200	15400.00	9.18	2.70	0.00	0.00	299.11	0.00
14.200	23000.00	10.80	1.62	0.00	0.00	308.78	0.00
14.200	51500.00	15.66	4.86	0.00	0.00	387.03	0.00
14.400	5000.00	6.66	0.00	0.18	0.00	1480.06	1060.00
14.400	15400.00	9.85	3.18	0.67	0.00	1497.49	1060.00
14.400	23000.00	11.80	1.96	1.00	0.00	1508.20	1060.00
14.400	51500.00	17.76	5.96	2.10	0.00	1536.38	1060.00
14.550	5000.00	6.67	0.00	0.01	0.00	2270.96	450.00
14.550	15400.00	9.87	3.20	0.02	0.00	2310.96	450.00
14.550	23000.00	11.83	1.96	0.03	0.00	2315.20	450.00
14.550	51500.00	17.81	5.98	0.05	0.00	2767.81	450.00
15.000	5000.00	6.72	0.00	0.05	0.00	2234.52	570.00
15.000	15400.00	9.89	3.17	0.02	0.00	2348.14	570.00
15.000	23000.00	11.85	1.96	0.01	0.00	2391.49	570.00
15.000	51500.00	17.82	5.97	0.01	0.00	2604.68	570.00
16.000	5000.00	6.94	0.00	0.21	0.00	2235.06	450.00
16.000	15400.00	10.02	3.08	0.13	0.00	2307.93	450.00
16.000	23000.00	11.95	1.93	0.10	0.00	2351.24	450.00
16.000	51500.00	17.89	5.94	0.07	0.00	2473.39	450.00
17.000	5000.00	6.99	0.00	0.05	0.00	1962.12	900.00
17.000	15400.00	10.08	3.09	0.06	0.00	2104.86	900.00
17.000	23000.00	12.01	1.93	0.05	0.00	2242.85	900.00
17.000	51500.00	17.93	5.93	0.04	0.00	2469.10	900.00
18.000	5000.00	7.04	0.00	0.05	0.00	1835.78	910.00
18.000	15400.00	10.14	3.10	0.06	0.00	1874.17	910.00
18.000	23000.00	12.06	1.92	0.05	0.00	1989.17	910.00
18.000	51500.00	17.97	5.91	0.04	0.00	2101.35	910.00

[illegible]	[illegible] 00	7.17	[illegible]	0.14	0.00	[illegible] 71	750.00
18.100	[illegible] 00	10.23	3.00	0.09	0.00	2324.57	750.00
18.100	23000.00	12.13	1.90	0.07	0.00	2051.15	750.00
18.100	51500.00	18.02	5.89	0.05	0.00	2195.14	750.00
18.200	5000.00	7.48	0.00	0.31	0.00	2471.47	350.00
18.200	15400.00	10.32	2.84	0.10	0.00	2811.83	350.00
18.200	23000.00	12.20	1.88	0.07	0.00	2876.18	350.00
18.200	51500.00	18.07	5.87	0.06	0.00	3058.85	350.00
19.000	5000.00	7.55	0.00	0.07	0.00	2587.99	430.00
19.000	15400.00	10.37	2.82	0.05	0.00	2711.73	430.00
19.000	23000.00	12.24	1.87	0.04	0.00	2750.71	430.00
19.000	51500.00	18.10	5.86	0.02	0.00	2860.44	430.00
20.000	5000.00	7.58	0.00	0.03	0.00	2187.16	450.00
20.000	15400.00	10.40	2.82	0.03	0.00	2287.56	450.00
20.000	23000.00	12.26	1.86	0.02	0.00	2355.16	450.00
20.000	51500.00	18.11	5.85	0.01	0.00	2507.95	450.00
21.000	4290.00	7.59	0.00	0.01	0.00	2145.09	160.00
21.000	13455.00	10.41	2.82	0.02	0.00	2213.18	160.00
21.000	19500.00	12.28	1.86	0.02	0.00	2262.60	160.00
21.000	43680.00	18.13	5.85	0.02	0.00	2302.36	160.00
22.000	4290.00	7.63	0.00	0.03	0.00	2336.97	640.00
22.000	13455.00	10.45	2.82	0.04	0.00	2456.93	640.00
22.000	19500.00	12.31	1.86	0.03	0.00	2496.39	640.00
22.000	43680.00	18.15	5.84	0.03	0.00	2572.29	640.00
23.100	4290.00	7.67	0.00	0.04	0.00	2609.02	600.00
23.100	13455.00	10.49	2.83	0.04	0.00	2879.77	600.00
23.100	19500.00	12.34	1.85	0.03	0.00	2907.76	600.00
23.100	43680.00	18.18	5.84	0.03	0.00	3550.44	600.00
24.000	4290.00	8.27	0.00	0.61	0.00	816.08	740.00
24.000	13455.00	10.32	2.05	-0.17	0.00	936.53	740.00
24.000	19500.00	12.23	1.91	-0.12	0.00	1031.43	740.00
24.000	43680.00	18.07	5.84	-0.11	0.00	1175.92	740.00

[illegible]	[illegible]	[illegible]	[illegible]	[illegible]	[illegible]	[illegible]	[illegible]
25.000	[illegible].00	12.86	[illegible]	0.63	0.00	[illegible]	490.00
25.000	43680.00	18.26	5.40	0.19	0.00	1183.91	490.00
26.000	4290.00	10.32	0.00	0.51	0.00	1108.39	540.00
26.000	13455.00	12.27	1.95	0.74	0.00	1130.25	540.00
26.000	19500.00	13.49	1.22	0.63	0.00	1142.18	540.00
26.000	43680.00	18.59	5.10	0.33	0.00	1218.53	540.00
27.000	4290.00	10.99	0.00	0.67	0.00	884.25	450.00
27.000	13455.00	12.84	1.85	0.56	0.00	914.97	450.00
27.000	19500.00	13.92	1.08	0.43	0.00	932.63	450.00
27.000	43680.00	18.71	4.79	0.12	0.00	999.86	450.00
28.000	4290.00	15.62	0.00	4.63	0.00	867.81	990.00
28.000	13455.00	16.91	1.29	4.07	0.00	1115.75	990.00
28.000	19500.00	17.50	0.59	3.59	0.00	1150.62	990.00
28.000	43680.00	20.16	2.66	1.46	0.00	1206.57	990.00
29.000	4290.00	15.84	0.00	0.22	0.00	800.93	165.00
29.000	13455.00	17.45	1.61	0.54	0.00	1118.64	165.00
29.000	19500.00	18.20	0.76	0.70	0.00	1154.87	165.00
29.000	43680.00	20.90	2.69	0.73	0.00	1238.20	165.00
30.000	4290.00	15.93	0.00	0.09	0.00	532.97	745.00
30.000	13455.00	17.99	2.06	0.54	0.00	579.84	745.00
30.000	19500.00	18.95	0.96	0.75	0.00	611.50	745.00
30.000	43680.00	21.92	2.97	1.02	0.00	885.65	745.00
31.000	4290.00	18.80	0.00	2.87	0.00	464.63	750.00
31.000	13455.00	21.59	2.79	3.60	0.00	546.65	750.00
31.000	19500.00	22.82	1.23	3.86	0.00	820.55	750.00
31.000	43680.00	26.01	3.19	4.09	0.00	1018.08	750.00
32.000	4290.00	19.60	0.00	0.80	0.00	501.56	630.00
32.000	13455.00	22.77	3.17	1.19	0.00	536.86	630.00
32.000	19500.00	24.16	1.38	1.34	0.00	547.71	630.00
32.000	43680.00	27.62	3.46	1.61	0.00	556.13	630.00

				DIFWBX			XLCH
33.000	4290.00	19.97	0.00	0.36	0.00	544.65	290.00
33.000	13455.00	23.18	3.21	0.40	0.00	602.34	290.00
33.000	19500.00	24.61	1.43	0.45	0.00	691.89	290.00
33.000	43680.00	28.41	3.81	0.80	0.00	1164.49	290.00
34.000	4290.00	22.60	0.00	2.63	0.00	688.85	730.00
34.000	13455.00	24.95	2.35	1.77	0.00	761.78	730.00
34.000	19500.00	26.23	1.28	1.63	0.00	78[illegible].42	730.00
34.000	43680.00	29.92	3.68	1.50	0.00	8[illegible].57	730.00
34.500	4290.00	23.62	0.00	1.03	0.00	722.56	250.00
34.500	13455.00	25.78	2.15	0.83	0.00	826.93	250.00
34.500	19500.00	26.96	1.18	0.73	0.00	852.97	250.00
34.500	43680.00	30.58	3.62	0.66	0.00	920.25	250.00
35.000	4290.00	24.00	0.00	0.38	0.00	756.01	188.00
35.000	13455.00	26.21	2.20	0.43	0.00	839.78	188.00
35.000	19500.00	27.36	1.16	0.41	0.00	873.89	188.00
35.000	43680.00	30.96	3.59	0.38	0.00	968.26	188.00
35.200	4290.00	24.32	0.00	0.31	0.00	244.83	32.00
35.200	13455.00	27.26	2.94	1.05	0.00	277.35	32.00
35.200	19500.00	29.62	2.36	2.25	0.00	671.10	32.00
35.200	43680.00	31.83	2.22	0.88	0.00	671.10	32.00
35.800	4290.00	28.48	0.00	4.16	0.00	645.23	350.00
35.800	13455.00	31.38	2.90	4.13	0.00	691.10	350.00
35.800	19500.00	32.21	0.83	2.59	0.00	691.10	350.00
35.800	43680.00	35.33	3.12	3.49	0.00	691.10	350.00
36.000	4290.00	28.66	0.00	0.18	0.00	726.77	40.00
36.000	13455.00	31.59	2.93	0.21	0.00	1185.16	40.00
36.000	19500.00	32.58	0.99	0.37	0.00	1447.06	40.00
36.000	43680.00	36.29	3.71	0.97	0.00	1557.27	40.00
36.500	4290.00	28.89	0.00	0.23	0.00	703.34	250.00
36.500	13455.00	31.83	2.94	0.24	0.00	1111.98	250.00
36.500	19500.00	32.84	1.01	0.26	0.00	1433.39	250.00
36.500	43680.00	36.46	3.63	0.17	0.00	1508.84	250.00

SECND	Q	CWSEL	DIFWSP	DIFWSX	DIFKWS	TOPWID	XLCH
36.750	4290.00	29.28	0.00	0.40	0.00	465.01	270.00
36.750	13455.00	32.27	2.99	0.44	0.00	1236.60	270.00
36.750	19500.00	33.33	1.05	0.49	0.00	1274.99	270.00
36.750	43680.00	36.84	3.51	0.37	0.00	1412.31	270.00
37.000	4290.00	29.44	0.00	0.16	0.00	414.30	120.00
37.000	13455.00	32.37	2.92	0.09	0.00	1113.57	120.00
37.000	19500.00	33.41	1.05	0.09	0.00	1170.30	120.00
37.000	43680.00	36.87	3.45	0.03	0.00	1374.62	120.00
38.000	4290.00	30.19	0.00	0.74	0.00	926.14	400.00
38.000	13455.00	33.05	2.86	0.68	0.00	1220.29	400.00
38.000	19500.00	34.09	1.04	0.68	0.00	1266.91	400.00
38.000	43680.00	37.44	3.35	0.57	0.00	1441.28	400.00
39.000	4290.00	30.62	0.00	0.43	0.00	912.66	380.00
39.000	13455.00	33.38	2.76	0.33	0.00	1108.12	380.00
39.000	19500.00	34.44	1.06	0.35	0.00	1152.72	380.00
39.000	43680.00	37.78	3.34	0.34	0.00	1215.81	380.00
* 40.000	4290.00	32.11	0.00	1.49	0.00	192.86	290.00
* 40.000	13455.00	33.72	1.61	0.34	0.00	772.28	290.00
40.000	19500.00	34.67	0.95	0.22	0.00	894.84	290.00
40.000	43680.00	37.94	3.28	0.16	0.00	936.98	290.00
41.000	4290.00	34.16	0.00	2.05	0.00	344.55	310.00
* 41.000	13455.00	35.06	0.90	1.34	0.00	469.82	310.00
* 41.000	19500.00	36.18	1.12	1.52	0.00	533.65	310.00
* 41.000	43680.00	38.90	2.72	0.96	0.00	565.04	310.00
42.000	1500.00	34.44	0.00	0.27	0.00	80.96	300.00
42.000	4500.00	37.33	2.89	2.27	0.00	641.36	300.00
42.000	6700.00	38.65	1.32	2.47	0.00	701.94	300.00
42.000	18700.00	42.41	3.76	3.51	0.00	778.45	300.00
42.100	1500.00	34.67	0.00	0.23	0.00	85.07	200.00
42.100	4500.00	36.91	2.25	-0.41	0.00	164.10	200.00
42.100	6700.00	38.73	1.82	0.08	0.00	739.43	200.00
42.100	18700.00	42.60	3.87	0.18	0.00	781.22	200.00

	SECNO	G	CWSEL	DIFWSP	DIFWSX	DIFKWS	TOPWID	XLCH
	42.200	1500.00	34.83	0.00	0.16	0.00	448.09	57.00
*	42.200	4500.00	37.70	2.86	0.78	0.00	761.16	57.00
*	42.200	6700.00	38.83	1.13	0.10	0.00	766.53	57.00
	42.200	18700.00	42.77	3.94	0.18	0.00	785.10	57.00
	42.300	1500.00	34.82	0.00	-0.01	0.00	448.24	5.00
	42.300	4500.00	37.69	2.86	-0.01	0.00	761.14	5.00
	42.300	6700.00	38.81	1.13	-0.01	0.00	766.50	5.00
	42.300	18700.00	42.74	3.93	-0.03	0.00	784.96	5.00
*	43.000	1500.00	35.32	0.00	0.50	0.00	67.97	375.00
*	43.000	4500.00	38.07	2.75	0.38	0.00	110.26	375.00
*	43.000	6700.00	40.47	2.40	1.66	0.00	702.40	375.00
	43.000	18700.00	42.92	2.44	0.17	0.00	750.88	375.00
	44.000	1500.00	36.92	0.00	1.60	0.00	77.54	110.00
	44.000	4500.00	40.22	3.30	2.15	0.00	785.69	110.00
	44.000	6700.00	40.51	0.28	0.03	0.00	796.09	110.00
	44.000	18700.00	43.01	2.51	0.10	0.00	861.24	110.00
	45.000	1500.00	37.39	0.00	0.46	0.00	79.93	180.00
	45.000	4500.00	39.65	2.27	-0.57	0.00	124.42	180.00
*	45.000	6700.00	39.63	-0.02	-0.87	0.00	123.55	180.00
*	45.000	18700.00	44.51	4.87	1.49	0.00	268.21	180.00
	46.000	1500.00	38.48	0.00	1.09	0.00	76.76	500.00
	46.000	4500.00	41.83	3.35	2.18	0.00	270.86	500.00
	46.000	6700.00	43.54	1.71	3.91	0.00	313.16	500.00
	46.000	18700.00	48.38	4.84	3.88	0.00	471.59	500.00
	47.000	1500.00	38.92	0.00	0.44	0.00	83.73	330.00
	47.000	4500.00	42.33	3.41	0.50	0.00	410.94	330.00
	47.000	6700.00	43.97	1.63	0.42	0.00	482.35	330.00
	47.000	18700.00	48.84	4.87	0.45	0.00	574.66	330.00
*	48.000	1500.00	40.52	0.00	1.60	0.00	389.80	250.00
	48.000	4500.00	43.15	2.63	0.81	0.00	491.36	250.00
	48.000	6700.00	44.55	1.41	0.59	0.00	627.96	250.00
	48.000	18700.00	49.32	4.77	0.48	0.00	673.34	250.00

	SECNO	G	CWSEL	DIFWSP	DIFWSX	DIFKWS	TOPWID	XLCH
*	49.000	1500.00	42.48	0.00	1.97	0.00	61.07	200.00
*	49.000	4500.00	45.23	2.75	2.09	0.00	556.24	200.00
*	49.000	6700.00	45.73	0.50	1.17	0.00	558.02	200.00
	49.000	18700.00	49.18	3.46	-0.14	0.00	566.14	200.00
	50.000	1500.00	48.03	0.00	5.54	0.00	55.18	590.00
*	50.000	4500.00	51.00	2.97	5.77	0.00	597.80	590.00
*	50.000	6700.00	51.32	0.32	5.59	0.00	599.60	590.00
*	50.000	18700.00	51.72	0.40	2.53	0.00	611.41	590.00
*	51.000	1500.00	53.22	0.00	5.19	0.00	58.37	590.00
*	51.000	4500.00	56.54	3.32	5.54	0.00	327.78	590.00
*	51.000	6700.00	57.58	1.04	6.26	0.00	504.41	590.00
*	51.000	18700.00	59.88	2.29	8.16	0.00	627.36	590.00
*	52.000	1500.00	58.31	0.00	5.09	0.00	297.46	425.00
	52.000	4500.00	59.72	1.42	3.18	0.00	339.39	425.00
	52.000	6700.00	60.39	0.67	2.81	0.00	359.12	425.00
	52.000	18700.00	63.16	2.77	3.28	0.00	556.59	425.00
	53.000	1500.00	59.98	0.00	1.67	0.00	354.80	250.00
	53.000	4500.00	61.48	1.50	1.75	0.00	400.85	250.00
	53.000	6700.00	62.29	0.81	1.89	0.00	420.52	250.00
	53.000	18700.00	65.24	2.96	2.09	0.00	479.46	250.00
	54.000	1500.00	60.92	0.00	0.95	0.00	258.32	210.00
	54.000	4500.00	62.44	1.52	0.97	0.00	276.48	210.00
	54.000	6700.00	63.23	0.79	0.94	0.00	285.95	210.00
	54.000	18700.00	66.01	2.78	0.76	0.00	316.66	210.00

	SECNO	Q	CWSEL	DIFWSP	DIFWSX	DIFKWS	TOPWID	XLCH
*	49.000	1500.00	42.48	0.00	1.97	0.00	61.07	200.00
*	49.000	4500.00	45.23	2.75	2.09	0.00	536.24	200.00
*	49.000	6700.00	45.73	0.50	1.17	0.00	558.02	200.00
	49.000	18700.00	49.18	3.46	-0.14	0.00	566.14	200.00
	50.000	1500.00	48.03	0.00	5.54	0.00	55.18	590.00
*	50.000	4500.00	51.00	2.97	5.77	0.00	597.80	590.00
*	50.000	6700.00	51.32	0.32	5.59	0.00	599.60	590.00
*	50.000	18700.00	51.72	0.40	2.53	0.00	611.41	590.00
*	51.000	1500.00	53.22	0.00	5.19	0.00	58.37	590.00
*	51.000	4500.00	56.54	3.32	5.54	0.00	327.78	590.00
*	51.000	6700.00	57.58	1.04	6.26	0.00	504.41	590.00
*	51.000	18700.00	59.88	2.29	8.16	0.00	627.36	590.00
*	52.000	1500.00	58.31	0.00	5.09	0.00	297.46	425.00
	52.000	4500.00	59.72	1.42	3.18	0.00	339.39	425.00
	52.000	6700.00	60.39	0.67	2.81	0.00	359.12	425.00
	52.000	18700.00	63.16	2.77	3.28	0.00	556.59	425.00
	53.000	1500.00	59.98	0.00	1.67	0.00	354.80	250.00
	53.000	4500.00	61.48	1.50	1.75	0.00	400.85	250.00
	53.000	6700.00	62.29	0.81	1.89	0.00	420.52	250.00
	53.000	18700.00	65.24	2.96	2.09	0.00	479.46	250.00
	54.000	1500.00	60.92	0.00	0.95	0.00	258.32	210.00
	54.000	4500.00	62.44	1.52	0.97	0.00	276.48	210.00
	54.000	6700.00	63.23	0.79	0.94	0.00	285.95	210.00
	54.000	18700.00	66.01	2.78	0.76	0.00	316.66	210.00

```
*****************************************************
  HEC2 RELEASE DATED NOV 76 UPDATED APRIL 1980
  ERROR CORR -  01,02,03,04
  MODIFICATION -  50,51,52,53,54
*****************************************************
T1                    SOLEDAD CANYON COMBINDED LEFT&RIGHT SIDES
T2                 SAN DIEGO CITY-FLOOD INSURANCE STUDY
T3                              FLOODWAY

J1  ICHECK    INQ      NINV     IDIR     STRT     METRIC   HVINS    Q        WSEL     FQ
      0.       2.       0.       0.   0.000000    0.00     0.0      0.     10.800   0.000

J2  NPROF     IPLOT    PRFVS    XSECV    XSECH    FN       ALLDC    IBW      CHNIM    ITRACE
    1.000    0.000   -1.000    0.000    0.000    0.000    0.000    0.000    0.000    15.000

J3  VARIABLE CODES FOR SUMMARY PRINTOUT

    110.000  200.000    0.000    0.000    0.000    0.000    0.000    0.000    0.000    0.000

QT      2.000  23000.000  23000.000      0.000      0.000      0.000      0.000      0.000      0.000      0.000
ET      0.000      0.000     10.400      0.000      0.000      0.000      0.000      0.000      0.000      0.000
NC      0.040      0.040      0.035      0.100      0.300      0.000      0.000      0.000      0.000      0.000

X1     14.200     16.000   2336.800   2636.000      0.000      0.000      0.000      0.000      0.000      0.000
GR     10.200      0.000     23.700    217.200     20.500    400.500     18.600    644.500     17.800    826.500
GR     17.200   1162.000     17.200   1413.400     17.300   1735.900     16.600   2129.400     16.600   2336.800
GR      0.000   2336.900      0.000   2635.900     18.300   2636.000     18.000   2789.000     20.900   3057.600
GR     31.400   3281.700      0.000      0.000      0.000      0.000      0.000      0.000      0.000      0.000
ET      0.000      0.000      9.100      0.000      0.000      0.000      0.000      0.000    950.000   2420.000
```

X1	14.400	13.000	950.000	2480.000	1450.000	960.000	1060.000	0.000	0.000	0.000
GR	25.000	0.000	25.000	945.000	15.300	950.000	0.000	1000.000	0.000	1300.000
GR	3.500	1500.000	3.000	1750.600	0.000	1755.000	0.000	2000.000	3.000	2010.000
GR	3.000	2450.000	17.000	2480.000	17.000	2485.000	0.000	0.000	0.000	0.000
ET	0.000	0.000	9.100	0.000	0.000	0.000	0.000	0.000	1110.000	2670.000
X1	14.550	13.000	2350.000	2600.090	90.000	300.000	450.000	0.000	0.000	0.000
GR	21.200	70.500	20.000	180.000	10.000	190.000	5.000	250.000	4.600	300.000
GR	4.600	2250.000	15.400	2255.100	15.400	2310.000	16.100	2350.000	0.600	2350.100
GR	0.600	2599.900	15.400	2600.000	14.200	2950.000	0.000	0.000	0.000	0.000
ET	0.000	0.000	9.100	0.000	0.000	0.000	0.000	0.000	1210.000	2530.000
X1	15.000	36.000	2132.300	2524.800	100.000	700.000	570.000	0.000	0.000	0.000
GR	10.500	0.000	21.200	70.500	30.300	83.300	26.100	149.500	27.100	183.800
GR	11.000	208.200	5.300	241.600	4.600	332.000	4.000	585.500	6.300	907.000
GR	6.700	1175.000	2.700	1189.100	2.700	1251.100	6.800	1260.700	5.500	1376.000
GR	5.800	1658.800	5.700	1897.100	3.900	1999.500	3.900	2084.200	4.000	2094.500
GR	11.300	2116.500	14.200	2132.300	13.300	2146.400	8.500	2164.900	6.300	2205.600
GR	6.300	2309.800	4.200	2392.900	4.200	2518.500	6.600	2524.800	6.600	2590.100
GR	13.300	2630.600	12.900	2665.100	18.300	2762.700	19.300	2795.800	20.700	2817.500
GR	24.200	2847.400	0.000	0.000	0.000	0.000	0.000	0.000	0.000	0.000
ET	0.000	0.000	9.100	0.000	0.000	0.000	0.000	0.000	1290.000	2580.000
X1	16.000	31.000	1923.200	2624.400	1220.000	620.000	450.000	0.000	0.000	0.000
GR	61.100	0.000	50.400	84.600	45.600	142.400	43.500	244.100	41.800	264.700
GR	6.500	333.500	4.900	345.400	3.800	690.200	3.800	842.300	3.800	858.000
GR	3.800	976.300	3.800	1443.400	3.100	1562.900	3.100	1658.200	3.100	1753.100
GR	3.400	1786.500	5.400	1864.500	6.900	1880.600	9.200	1908.300	9.300	1923.200
GR	3.700	1953.400	3.700	2009.400	3.700	2306.900	3.700	2388.400	7.100	2624.400
GR	12.700	2643.900	10.400	2681.400	13.700	2697.400	19.100	2810.200	27.100	2885.400
GR	31.000	2947.000	0.000	0.000	0.000	0.000	0.000	0.000	0.000	0.000
ET	0.000	0.000	9.100	0.000	0.000	0.000	0.000	0.000	990.000	2310.000

X1	17.000	25.000	1335.300	2436.400	900.000	1030.000	900.000	0.000	0.000	0.000
GR	76.600	0.000	17.900	108.200	12.900	176.100	10.600	331.300	3.600	421.900
GR	2.900	514.200	2.900	713.900	2.900	1056.500	3.000	1279.700	7.800	1292.200
GR	8.700	1335.300	2.900	1357.500	2.900	1569.700	2.900	1663.300	2.900	1862.100
GR	2.900	2168.400	2.900	2294.800	3.500	2314.200	5.900	2363.700	8.700	2436.400
GR	12.200	2452.900	11.300	2480.900	15.200	2510.500	19.100	2605.500	26.700	2723.900
ET	0.000	0.000	9.100	0.000	0.000	0.000	0.000	0.000	360.000	1970.000
X1	18.000	25.000	557.600	2160.300	920.000	900.000	910.000	0.000	0.000	0.000
GR	36.000	0.000	25.100	118.400	17.800	211.100	15.300	245.800	6.300	271.200
GR	5.800	373.100	4.900	504.000	10.700	518.600	11.400	557.600	3.100	577.100
GR	4.100	693.700	4.400	810.000	4.400	1019.100	2.400	1120.700	2.400	1298.300
GR	4.100	1731.300	4.100	1882.300	3.900	1963.900	4.700	2129.900	6.400	2160.300
GR	11.200	2192.900	10.900	2202.500	10.700	2228.900	22.800	2364.100	29.800	2439.500
ET	0.000	0.000	9.100	0.000	0.000	0.000	0.000	0.000	200.000	2030.000
X1	18.100	39.000	389.800	2287.500	160.000	1030.000	750.000	0.000	0.000	0.000
GR	34.000	0.000	25.300	150.300	6.800	180.100	5.400	232.800	6.200	341.200
GR	11.500	360.900	15.400	389.800	13.800	421.100	10.200	437.700	9.900	502.300
GR	8.300	563.600	6.600	592.300	6.300	683.000	6.400	865.600	5.500	972.400
GR	5.200	1022.700	6.000	1039.600	5.800	1100.900	5.500	1321.800	4.800	1383.100
GR	2.900	1397.000	5.900	1408.900	5.300	1528.200	6.900	1650.200	5.500	1728.500
GR	5.700	1801.100	5.700	1808.600	6.000	1886.200	6.000	1901.700	5.200	2143.100
GR	5.300	2266.700	12.700	2287.500	16.000	2311.500	13.500	2340.600	15.800	2353.900
GR	55.100	2412.100	73.200	2502.300	86.100	2560.600	85.600	2600.900	0.000	0.000
ET	0.000	0.000	9.100	0.000	0.000	0.000	0.000	0.000	170.000	2190.000
X1	18.200	37.000	365.900	3110.900	140.000	1000.000	350.000	0.000	0.000	0.000
GR	40.100	0.000	29.200	155.100	6.700	190.200	7.500	233.200	6.300	306.400
GR	6.600	353.400	14.700	365.900	13.900	420.700	11.300	437.800	9.500	509.400
GR	7.300	597.500	5.800	718.400	5.300	1050.200	6.000	1135.800	5.200	1248.900
GR	5.200	1405.800	5.200	1417.200	5.100	1656.900	4.300	1960.400	5.800	2163.100
GR	7.000	2235.700	7.500	2309.800	6.800	2427.500	7.100	2529.900	7.700	2654.100

CR	7.400	2843.800	7.000	2980.600	[illegible] 400	3075.100	9.900	3110.900	17.100	3163.500
GR	16.900	3200.500	18.700	3258.100	23.600	3316.000	26.300	3412.000	25.200	3419.300
GP	24.500	3442.900	30.300	3456.500	0.000	0.000	0.000	0.000	0.000	0.000
ET	0.000	0.000	9.100	0.000	0.000	0.000	0.000	0.000	170.000	2140.000
X1	19.000	37.000	390.900	2896.600	170.000	1000.000	430.000	0.000	0.000	0.000
GR	57.100	0.000	27.200	97.400	22.700	130.900	3.200	183.400	4.100	225.600
GR	2.100	232.700	2.900	237.100	4.400	252.600	4.700	298.900	5.000	346.200
GR	13.900	390.900	12.700	418.000	7.900	434.500	6.700	486.400	4.[illegible]00	545.800
GR	4.000	566.700	2.500	674.300	3.400	840.700	3.600	991.300	3.700	1103.300
GR	3.200	1222.500	3.300	1407.400	4.500	1513.600	3.700	1635.200	4.400	1779.500
GR	3.700	1986.300	4.700	2030.600	6.400	2115.000	6.400	2150.500	4.600	2164.300
GR	4.600	2219.100	5.900	2406.500	5.700	2482.000	6.100	2623.500	7.800	2749.100
GR	6.700	2896.600	27.200	3116.600	0.000	0.000	0.000	0.000	0.000	0.000
ET	0.000	0.000	9.100	0.000	0.000	0.000	0.000	0.000	170.000	1920.000
X1	20.000	56.000	409.700	2476.300	450.000	450.000	450.000	0.000	0.000	0.000
GR	105.100	0.000	58.800	98.300	22.700	149.800	6.100	175.500	6.100	185.600
GR	5.200	228.100	3.400	245.500	3.300	359.000	3.100	370.200	5.000	373.500
GR	7.400	384.400	11.300	394.600	13.300	401.600	14.500	409.700	14.500	416.500
GR	7.400	424.600	3.900	447.500	0.600	471.400	3.700	482.900	3.400	500.900
GR	3.300	527.400	3.400	559.400	2.900	631.700	3.100	663.800	5.000	761.400
GR	4.100	887.700	3.500	1054.400	4.700	1212.600	4.000	1343.500	5.000	1445.200
GR	5.300	1397.400	4.000	1719.500	4.900	1793.700	4.000	1881.200	7.500	1925.800
GR	8.600	1932.300	8.600	1946.600	4.300	1968.300	4.300	1973.600	7.000	1979.700
GR	5.300	2132.200	4.800	2289.500	6.300	2351.500	8.200	2461.100	12.000	2476.300
GR	9.900	2537.900	17.200	2551.100	23.600	2591.100	23.600	2614.800	21.000	2653.800
GR	15.600	2668.300	16.000	2696.400	17.400	2743.100	18.800	2794.800	22.700	2852.100
GR	36.100	2888.600	0.000	0.000	0.000	0.000	0.000	0.000	0.000	0.000
QT	2.000	19500.000	19500.000	0.000	0.000	0.000	0.000	0.000	0.000	0.000
ET	0.000	0.000	9.100	0.000	0.000	0.000	0.000	0.000	130.000	1860.000

X1	21.000	41.000	417.300	2350.900	160.000	220.000	160.000	0.000	0.000	0.000
GR	78.600	0.000	47.400	81.800	24.200	112.200	4.700	144.300	4.700	153.700
GR	6.500	190.500	7.700	211.600	3.300	224.100	1.700	251.400	1.800	362.300
GR	1.000	392.000	4.000	402.100	5.800	413.300	14.600	417.300	14.600	421.700
GR	7.200	426.800	4.300	448.100	4.400	506.200	3.700	633.800	3.500	769.500
GR	3.900	940.700	3.800	1066.100	4.700	1193.800	4.800	1266.900	4.600	1382.700
GR	5.800	1536.900	4.100	1674.600	4.400	1753.100	5.400	1850.800	8.400	1881.000
GR	8.100	1909.100	5.100	1915.400	5.100	1968.300	5.300	2175.500	5.400	2268.200
GR	7.600	2336.800	12.700	2350.900	9.900	2403.000	9.900	2404.800	24.200	2439.000
GR	30.000	2464.400	0.000	0.000	0.000	0.000	0.000	0.000	0.000	0.000
ET	0.000	0.000	9.100	0.000	0.000	0.000	0.000	0.000	470.000	1980.000
X1	22.000	45.000	779.200	2627.900	560.000	700.000	340.000	0.000	0.000	0.000
GR	90.500	0.000	42.900	67.300	25.100	96.800	11.700	134.600	11.700	142.300
GR	9.800	168.700	5.800	178.900	3.600	210.90	2.600	293.200	4.200	387.800
GR	4.000	543.100	2.300	692.700	3.400	734.700	15.000	779.200	15.000	789.300
GR	13.100	794.600	13.100	805.200	4.400	824.700	5.700	843.000	4.600	903.700
GR	5.000	1069.900	4.800	1218.500	5.200	1349.500	5.800	1513.100	6.800	1641.600
GR	4.700	1837.200	5.800	1870.600	7.900	1884.500	7.900	1900.800	3.600	1914.600
GR	4.600	1960.400	6.300	2005.000	7.700	2011.200	7.800	2041.800	5.000	2051.600
GR	5.200	2181.500	4.700	2294.100	5.900	2422.600	6.100	2599.300	6.300	2610.000
GR	10.500	2627.900	8.900	2655.800	16.200	2670.500	25.000	2752.400	38.700	2833.100
NC	0.035	0.035	0.035	0.100	0.300	0.000	0.000	0.000	0.000	0.000
ET	0.000	0.000	10.400	0.000	0.000	0.000	0.000	0.000	0.000	0.000
X1	23.100	59.000	1333.000	1530.000	620.000	680.000	600.000	0.000	0.000	0.000
GR	103.200	0.000	41.600	195.900	25.500	260.700	14.000	305.400	14.000	311.800
GR	10.700	322.400	6.900	376.900	5.800	416.300	5.800	494.400	8.100	524.100
GR	9.300	538.500	4.300	572.900	2.900	635.900	4.700	709.900	8.700	732.400
GR	9.800	757.100	8.700	783.300	7.300	817.100	3.700	829.500	3.700	923.400
GR	3.800	1040.100	3.400	1144.500	3.100	1153.400	15.700	1183.200	15.700	1333.000
GR	3.000	1353.000	3.000	1500.000	15.700	1530.000	15.000	1930.000	13.100	1935.300
GR	13.100	1945.900	4.400	1965.400	5.700	1983.700	4.600	2044.400	5.000	2210.600
GR	4.800	2359.200	5.200	2500.200	5.800	2663.800	6.800	2792.300	4.700	2987.900

GR	5.800	3021.300	7.900	3035.200	7.900	3051.500	4.600	3065.300	4.600	3111.100
GR	6.300	3155.700	7.700	3161.900	7.800	3192.500	5.000	3202.300	5.200	3332.200
GR	4.700	3444.800	5.900	3573.300	6.100	3750.000	6.300	3760.700	10.500	3778.600
GR	8.900	3806.500	16.200	3821.200	25.000	3903.100	38.700	3993.800	0.000	0.000
X1	24.000	50.000	407.800	1293.800	750.000	770.000	740.000	0.000	0.000	0.000
X3	0.000	0.000	0.000	0.000	0.000	1293.800	0.000	0.000	0.000	0.000
GR	39.700	0.000	28.900	77.600	26.000	101.200	16.400	121.400	14.800	142.700
GR	12.600	233.900	10.400	327.800	8.400	387.200	7.600	407.800	6.200	553.000
GR	7.200	650.900	7.700	771.100	9.200	792.400	10.400	795.300	10.400	803.600
GR	7.800	813.200	8.100	850.900	8.100	907.500	9.800	926.800	7.500	944.400
GR	7.300	1012.600	7.500	1129.900	7.000	1205.600	6.900	1223.200	5.100	1229.300
GR	8.200	1238.100	7.900	1248.900	8.300	1269.100	16.300	1293.800	16.300	1307.200
GR	12.700	1313.600	12.700	1324.400	5.700	1349.200	7.600	1420.300	5.400	1534.100
GR	6.200	1620.700	6.300	1690.900	5.300	1880.400	[illegible]500	1948.900	6.800	1969.200
GR	5.800	2077.000	5.500	2202.800	9.700	2262.400	[illegible]200	2337.500	9.700	2428.300
GR	10.600	2476.500	17.800	2488.300	19.400	2524.200	24.700	2565.600	31.200	2597.500
X1	25.000	41.000	413.000	1362.700	460.000	520.000	490.000	0.000	0.000	0.000
X3	0.000	0.000	0.000	0.000	0.000	1362.700	0.000	0.000	0.000	0.000
GR	37.700	0.000	29.700	69.500	24.700	128.000	18.300	175.700	17.500	198.200
GR	17.900	244.000	15.600	288.700	13.900	327.200	12.800	380.000	8.300	413.000
GR	8.500	495.500	8.600	558.400	8.600	591.900	10.100	600.700	10.300	625.700
GR	7.600	643.100	7.100	763.700	6.900	856.000	7.500	942.300	9.500	946.700
GR	9.500	959.500	7.300	965.000	7.500	1093.900	6.600	1324.700	16.700	1362.700
GR	16.700	1374.200	12.500	1383.600	12.500	1391.600	7.100	1419.700	6.800	1497.400
GR	6.100	1646.100	6.500	1767.800	5.900	1800.400	9.900	1820.600	7.100	1872.200
GR	7.200	1935.600	6.900	1975.200	14.600	1998.300	13.500	2041.900	26.800	2063.000
GR	42.100	2085.000	0.000	0.000	0.000	0.000	0.000	0.000	0.000	0.000
X1	26.000	35.000	1068.900	1387.200	950.000	460.000	540.000	0.000	0.000	0.000
X3	0.000	0.000	0.000	0.000	0.000	1387.200	0.000	0.000	0.000	0.000
GR	62.800	0.000	31.500	54.700	26.800	84.800	17.100	183.900	14.300	210.900
GR	13.600	214.200	14.700	226.900	12.600	239.800	8.900	269.700	7.600	305.800
GR	8.200	401.900	8.500	502.200	9.200	614.200	8.100	731.300	7.900	897.600

GR	9.100	978.000	8.800	1031.000	8.800	1068.900	8.300	1072.000	7.500	1164.400
GR	7.300	1265.200	8.000	1359.300	16.900	1387.200	15.000	1402.200	13.400	1414.100
GR	9.300	1429.500	8.200	1446.000	7.800	1474.300	7.500	1541.500	7.900	1606.600
GR	8.500	1640.600	10.900	1665.700	9.500	1683.200	26.800	1721.500	35.600	1731.600
NC	0.040	0.045	0.035	0.100	0.300	0.000	0.000	0.000	0.000	0.000
X1	27.000	28.000	1354.200	1446.800	500.000	400.000	450.000	0.000	0.000	0.000
X3	0.000	0.000	0.000	0.000	0.000	1446.800	0.000	0.000	0.000	0.000
GR	26.200	0.000	37.700	226.600	27.300	352.900	21.400	413.900	14.400	499.800
GR	10.300	558.100	10.300	633.000	10.100	691.100	10.200	811.900	9.900	895.700
GR	9.900	958.400	10.000	1062.300	10.000	1088.300	9.800	1153.500	9.600	1232.700
GR	10.000	1309.300	11.000	1354.200	8.000	1369.100	10.900	1376.400	8.800	1428.300
GR	17.400	1446.800	17.400	1474.500	9.800	1491.400	11.800	1561.100	13.500	1601.600
GR	34.500	1633.000	33.400	1662.200	36.400	1569.400	0.000	0.000	0.000	0.000
X1	28.000	26.000	1405.600	1487.400	900.000	900.000	990.000	0.000	0.000	0.000
X3	0.000	0.000	0.000	0.000	0.000	1487.400	0.000	0.000	0.000	0.000
GR	62.900	0.000	28.900	141.200	15.100	362.000	17.600	400.900	14.800	469.000
GR	14.600	657.600	16.300	699.300	12.600	709.200	16.200	718.900	15.900	840.600
GR	13.500	1091.300	12.800	1134.300	12.400	1217.900	14.700	1405.600	7.900	1423.900
GR	10.900	1434.900	14.800	1467.400	19.800	1487.400	15.400	1498.900	10.100	1533.100
GR	17.900	1554.200	18.400	1577.200	17.600	1634.300	19.100	1768.500	20.800	1833.300
GR	34.900	1866.200	0.000	0.000	0.000	0.000	0.000	0.000	0.000	0.000
X1	29.000	54.000	1168.700	1447.400	260.000	165.000	165.000	0.000	0.000	0.000
X3	0.000	0.000	0.000	0.000	0.000	1447.400	0.000	0.000	0.000	0.000
GR	62.400	0.000	27.400	122.600	22.800	144.200	21.600	188.500	17.600	306.300
GR	16.300	452.400	16.000	624.200	1.500	624.400	9.200	827.800	14.000	837.900
GR	15.000	995.900	12.300	1105.100	15.800	1168.700	9.400	1189.100	14.000	1197.100
GR	13.700	1282.800	16.200	1375.500	8.700	1389.800	15.100	1402.000	10.700	1430.400
GR	20.500	1447.400	18.200	1463.700	15.700	1474.100	14.200	1486.000	17.600	1496.400
GR	24.400	1522.000	20.400	1533.400	18.400	1574.100	17.700	1612.900	18.300	1860.800
GR	21.700	2031.100	23.400	2292.700	26.100	2335.700	39.300	2372.700	0.000	0.000
NC	0.040	0.050	0.035	0.100	0.300	0.000	0.000	0.000	0.000	0.000

X1	30.000	33.000	774.600	1277.700	770.000	740.000	745.000	0.000	0.000	0.000
X3	0.000	0.000	0.000	0.000	0.000	1533.400	0.000	0.000	0.000	0.000
GR	70.300	0.000	29.100	486.500	21.800	639.000	13.200	774.600	12.300	831.100
GR	13.300	921.100	14.800	995.200	14.800	1087.000	14.900	1155.600	14.300	1213.800
GR	11.000	1225.300	12.600	1239.600	14.600	1261.200	21.100	1277.700	20.500	1294.500
GR	18.200	1302.700	17.600	1311.700	19.800	1330.300	20.000	1371.500	19.000	1499.500
GR	23.400	1533.400	23.200	1649.400	20.200	1678.300	24.000	1764.500	23.300	1809.800
GR	21.900	1913.300	21.600	1952.300	23.700	1961.100	25.200	2010.500	24.700	2168.300
GR	23.700	2280.100	24.000	2342.700	29.500	2361.700	0.000	0.000	0.000	0.000
NC	0.040	0.065	0.065	0.100	0.300	0.000	0.000	0.000	0.000	0.000
ET	0.000	0.000	9.100	0.000	0.000	0.000	0.000	0.000	580.000	1100.000

X1	31.000	30.000	843.400	1102.500	750.000	750.000	750.000	0.000	0.000	0.000
GR	117.200	0.000	31.100	532.200	27.200	553.500	20.000	595.800	24.300	611.700
GR	21.000	634.400	13.500	682.900	15.900	707.200	16.200	843.400	14.300	905.400
GR	13.500	1082.100	21.400	1102.500	20.400	1125.500	17.000	1150.700	21.200	1160.400
GR	23.700	1169.500	23.300	1259.000	21.700	1441.900	21.900	1554.800	24.400	1578.600
GR	24.400	1661.700	27.400	1689.600	27.400	1745.700	26.400	2077.400	25.400	2178.600
GR	22.400	2217.400	27.200	2228.400	27.200	2250.500	29.300	2266.000	33.100	2276.300
ET	0.000	0.000	9.100	0.000	0.000	0.000	0.000	0.000	400.000	948.000

X1	32.000	29.000	622.200	951.200	630.000	630.000	630.000	0.000	0.000	0.000
X3	0.000	0.000	0.000	0.000	0.000	951.200	0.000	0.000	0.000	0.000
GR	250.300	0.000	32.600	386.600	22.300	404.100	22.900	423.200	17.000	441.300
GR	15.800	527.600	15.200	622.200	15.000	733.200	15.900	805.500	15.400	878.500
GR	12.200	912.500	25.000	951.200	23.600	970.300	20.500	986.500	21.600	1015.500
GR	24.900	1162.000	25.700	1295.200	27.800	1399.500	28.300	1423.200	27.000	1466.800
GR	27.000	1507.700	31.000	1526.800	28.200	1814.000	28.900	1951.000	27.900	1981.400
GR	27.200	1991.300	29.600	1998.200	27.800	2018.000	34.500	2034.400	0.000	0.000
ET	0.000	0.000	9.100	0.000	0.000	0.000	0.000	0.000	485.000	981.000

X1	33.000	27.000	646.000	981.8[illegible]	290.000	290.000	290.000	0.000	0.000	0.000
GR	217.800	0.000	26.800	369.200	22.900	376.600	25.000	388.100	21.800	402.600
GR	18.300	423.200	16.600	449.300	17.900	592.600	16.400	646.000	16.400	736.500
GR	18.100	797.800	17.700	877.000	18.700	910.500	15.700	923.900	24.200	981.800
GR	23.400	999.000	22.100	1013.700	21.300	1020.800	23.800	1022.800	24.600	1068.900
GR	26.300	1168.800	26.100	1338.400	27.800	1420.900	27.300	14[illegible].700	28.500	1489.300
GR	27.800	1536.700	32.500	1554.400	0.000	0.000	0.000	0.000	0.000	0.000
NC	0.040	0.150	0.040	0.300	0.500	0.000	0.000	0.000	0.000	0.000
ET	0.000	0.000	9.100	0.000	0.000	0.000	0.000	0.000	600.000	1200.000
X1	34.000	28.000	1042.400	1089.000	730.000	730.000	730.000	0.000	0.000	0.000
GR	163.500	0.000	46.800	360.200	37.600	377.400	27.600	387.500	29.400	412.900
GR	23.400	447.700	20.700	572.400	20.720	580.000	20.820	605.000	20.920	630.000
GR	21.110	680.000	21.310	730.000	21.500	770.000	21.600	802.400	18.600	824.500
GR	19.500	845.900	20.400	880.500	20.700	972.900	20.300	1023.200	28.800	1042.400
GR	18.900	1089.000	20.800	1191.500	23.000	1222.600	26.300	1230.800	27.800	1246.700
GR	26.400	1263.400	36.200	1295.000	39.000	1374.600	0.000	0.000	0.000	0.000
ET	0.000	0.000	9.100	0.000	0.000	0.000	0.000	0.000	560.000	1350.000
X1	34.500	20.000	1080.000	1250.000	275.000	240.000	250.000	0.000	0.000	0.000
GR	32.060	461.800	24.260	588.200	21.360	810.600	20.900	880.000	20.460	980.000
GR	20.360	997.000	21.000	1030.000	21.260	1080.000	22.060	1091.200	21.860	1186.400
GR	21.210	1250.000	20.990	1270.000	20.760	1292.300	19.560	1298.700	21.860	1309.300
GR	21.660	1346.800	24.460	1365.100	23.960	1382.500	26.460	1393.600	28.060	1406.100
NC	0.035	0.150	0.040	0.300	0.500	0.000	0.000	0.000	0.000	0.000
ET	0.000	0.000	9.100	0.000	0.000	0.000	0.000	0.000	660.000	1440.000
X1	35.000	32.000	1091.200	1270.000	188.000	188.000	188.000	0.000	0.000	0.000
GR	60.500	0.000	39.000	333.900	41.300	340.700	33.300	358.400	33.300	378.000
GR	35.500	391.900	32.060	461.800	24.260	588.200	21.360	810.600	20.900	880.000
GR	20.460	980.000	20.360	997.000	21.000	1030.000	21.260	1080.000	22.060	1091.200
GR	21.860	1186.400	21.210	1250.000	20.990	1270.000	20.760	1292.300	19.560	1299.700
GR	21.860	1309.300	21.660	1346.800	24.460	1365.100	23.960	1382.500	26.460	1393.600

GR	28.060	1406.100	29.800	1413.400	25.700	1437.800	34.900	1455.600	34.300	1472.500
GR	36.800	1482.700	42.400	1496.600	0.000	0.000	0.000	0.000	0.000	0.000
ET	0.000	0.000	9.100	0.000	0.000	0.000	0.000	0.000	746.000	1400.000
XI	35.200	20.000	1120.000	1270.000	32.000	32.000	32.000	0.000	0.000	0.000
GR	28.000	735.000	28.000	830.000	28.000	880.000	28.000	930.000	27.880	1000.000
GR	28.000	1030.000	27.900	1020.000	28.100	1100.000	28.100	1120.000	22.000	1126.000
GR	22.070	1186.400	21.200	1270.000	20.970	1292.300	19.770	1298.700	22.070	1309.300
GR	21.870	1346.800	24.670	1365.100	24.170	1382.500	26.670	1393.600	20.270	1406.100
NC	0.036	0.150	0.040	0.100	0.300	0.000	0.000	0.000	0.000	0.000
ET	0.000	0.000	9.100	0.000	0.000	0.000	0.000	0.000	930.000	1700.000
XI	35.800	21.000	1098.000	1248.000	350.000	350.000	350.000	0.000	0.000	0.000
GR	26.300	715.000	26.440	750.000	27.500	786.000	28.000	836.000	27.400	886.000
GR	28.100	937.000	27.800	987.000	26.400	1037.000	26.300	1076.000	29.100	1083.000
GR	29.100	1098.000	24.790	1186.400	24.150	1248.000	23.690	1292.300	22.490	1298.700
GR	24.790	1309.300	24.590	1346.800	27.390	1365.100	26.890	1382.500	29.390	1393.600
GR	30.990	1406.100	0.000	0.000	0.000	0.000	0.000	0.000	0.000	0.000
ET	0.000	0.000	9.100	0.000	0.000	0.000	0.000	0.000	1000.000	1700.000
XI	35.000	40.000	1412.800	1580.000	40.000	40.000	40.000	0.000	0.000	0.000
GR	32.100	0.000	54.500	45.200	43.800	76.900	40.000	215.200	38.200	256.500
GR	34.700	286.900	32.700	324.000	30.700	338.300	32.200	363.900	32.200	387.600
GR	32.600	500.000	30.800	680.900	30.800	797.800	30.700	937.400	26.500	1066.200
GR	27.500	1100.000	27.200	1112.600	27.900	1135.000	27.600	1136.900	28.000	1212.000
GR	28.400	1340.600	28.200	1405.000	29.600	1412.800	28.600	1423.400	22.000	1448.700
GR	22.600	1523.900	22.600	1580.000	22.600	1593.900	23.000	1665.100	23.500	1683.000
GR	24.700	1692.400	25.500	1703.600	29.000	1715.000	29.600	1723.000	25.000	1746.000
GR	30.500	1760.600	34.200	1776.700	32.000	1807.600	36.300	1830.300	43.000	1839.600
NC	0.035	0.150	0.040	0.100	0.300	0.000	0.000	0.000	0.000	0.000
ET	0.000	0.000	1.400	0.000	0.000	0.000	0.000	0.000	0.000	0.000

X1	36.500	23.000	1400.000	1550.000	230.000	200.000	250.000	0.000	0.000	0.000
GR	52.000	0.000	40.000	215.000	32.700	324.000	32.600	500.000	30.800	798.000
GR	27.900	1070.000	27.500	1180.000	28.500	1195.000	28.500	1265.000	27.300	1373.000
GR	27.000	1390.000	29.500	1395.000	29.500	1400.000	28.000	1410.000	24.000	1418.000
GR	22.500	1494.000	22.820	1550.000	23.000	1580.000	23.000	1600.000	25.500	1680.000
GR	29.600	1694.000	29.500	1703.000	34.200	1776.700	0.000	0.000	0.000	0.000
NC	0.035	0.058	0.060	0.100	0.300	0.000	0.000	0.000	0.000	0.000

X1	36.750	26.000	1167.300	1476.400	450.000	210.000	270.000	0.000	0.000	0.000
GR	48.100	0.000	41.200	92.700	37.400	136.200	34.300	233.700	32.200	292.500
GR	30.900	332.400	30.800	375.200	31.800	382.800	29.900	559.700	29.300	700.400
GR	29.000	786.900	29.000	810.500	29.400	864.200	29.600	877.000	29.700	970.000
GR	30.000	1118.000	31.500	1128.000	30.000	1146.000	25.000	1167.300	23.400	1205.200
GR	24.100	1327.800	22.000	1423.400	30.200	1476.400	30.100	1508.800	35.600	1555.000
GR	38.200	1578.600	0.000	0.000	0.000	0.000	0.000	0.000	0.000	0.000
NC	0.035	0.050	0.060	0.100	0.030	0.000	0.000	0.000	0.000	0.000

X1	37.000	28.000	1102.700	1502.800	120.000	120.000	120.000	0.000	0.000	0.000
GR	48.700	0.000	41.800	53.300	38.400	122.000	36.900	236.000	35.900	357.300
GR	29.700	376.300	33.200	395.700	32.000	450.600	31.500	524.300	30.600	653.100
GR	31.000	735.100	31.000	777.100	30.000	831.800	30.000	835.000	31.600	1065.000
GR	25.100	1102.700	25.700	1260.800	31.000	1297.800	28.500	1318.600	25.500	1340.600
GR	26.700	1398.300	24.300	1441.000	25.200	1502.800	32.900	1526.100	35.100	1565.200
GR	36.500	1613.100	43.600	1643.600	43.600	1643.700	0.000	0.000	0.000	0.000
NC	0.035	0.059	0.060	0.100	0.300	0.000	0.000	0.000	0.000	0.000
ET	0.000	0.000	2.400	0.000	0.000	0.000	0.000	0.000	0.000	0.000

X1	38.000	35.000	733.000	1025.600	400.000	400.000	400.000	0.000	0.000	0.000
GR	48.200	0.000	39.000	74.100	37.100	235.500	33.500	269.900	30.900	369.200
GR	30.100	448.600	29.100	530.100	29.400	571.000	29.700	733.000	28.600	809.700
GR	26.900	823.200	28.000	991.900	32.200	1025.600	30.000	1044.400	28.000	1064.900
GR	26.600	1090.700	29.600	1112.300	30.200	1137.300	26.700	1169.500	29.300	1203.000
GR	30.800	1253.500	31.900	1284.800	32.600	1294.300	22.700	1333.200	24.600	1450.700

GR	31.700	1476.600	34.500	1540.500	42.900	1565.300	44.700	1628.300	36.200	1646.800
GR	37.100	1717.400	37.100	1742.200	59.000	1777.800	59.000	1822.300	43.900	1878.200
NH	5.000	0.035	549.600	0.070	812.800	0.035	1064.000	0.055	1242.600	0.035
NH	1528.600	0.000	0.000	0.000	0.000	0.000	0.000	0.000	0.000	0.000
X1	39.000	32.000	549.600	775.300	410.000	400.000	380.000	0.000	0.000	0.000
X3	0.000	0.000	0.000	0.000	0.000	1321.700	0.000	0.000	0.000	0.000
GR	58.200	0.000	38.500	82.100	30.100	198.900	29.800	305.700	31.500	312.500
GR	30.500	320.000	30.400	346.000	27.700	365.500	28.600	549.600	27.700	612.900
GR	28.200	758.500	32.800	775.300	33.400	812.800	32.800	825.700	27.200	834.200
GR	27.300	855.100	30.200	871.500	30.000	904.500	26.600	928.400	29.400	950.600
GR	29.400	1001.800	32.300	1034.500	33.200	1064.000	24.300	1102.600	25.500	1218.400
GR	32.600	1242.600	34.500	1292.800	40.800	1321.700	41.000	1434.600	35.100	1453.000
GR	36.200	1494.200	46.700	1528.600	0.000	0.000	0.000	0.000	0.000	0.000
NH	0.000	0.035	389.500	0.070	631.000	0.035	992.800	0.055	1167.300	0.035
NH	1184.700	0.000	0.000	0.000	0.000	0.000	0.000	0.000	0.000	0.000
X1	40.000	29.000	366.600	631.000	290.000	320.000	290.000	0.000	0.000	0.000
X3	10.000	0.000	0.000	0.000	0.000	0.000	0.000	0.000	0.000	0.000
GR	84.200	0.000	42.200	194.500	35.300	228.500	33.400	293.500	30.400	330.700
GR	34.300	366.600	31.000	389.500	29.600	434.500	27.800	487.400	33.800	557.400
GR	32.500	579.700	33.200	598.600	33.600	631.000	29.700	653.500	27.200	664.300
GR	27.400	676.500	30.200	696.500	30.500	725.900	27.200	754.100	29.600	773.100
GR	30.400	896.600	32.100	930.500	33.100	956.800	33.500	971.200	33.500	992.800
GR	24.100	1017.500	24.000	1120.900	44.500	1167.300	52.400	1184.700	0.000	0.000
NC	0.030	0.035	0.025	0.100	0.300	0.000	0.000	0.000	0.000	0.000
X1	41.000	24.000	385.500	464.700	280.000	390.000	310.000	0.000	0.000	0.000
X3	10.000	0.000	0.000	0.000	0.000	0.000	0.000	0.000	0.000	0.000
GR	98.700	0.000	40.100	203.800	36.500	213.300	34.500	273.200	34.800	304.400
GR	34.300	338.100	34.400	349.600	33.700	385.500	28.300	397.700	29.300	455.100
GR	33.800	464.700	34.200	483.200	36.100	495.000	36.200	510.400	33.100	527.600
GR	33.100	541.500	29.200	549.400	31.800	568.600	31.800	594.000	28.600	615.800
GR	29.600	651.800	30.700	689.900	34.500	751.900	44.300	796.700	0.000	0.000
NH	4.000	0.030	373.800	0.025	468.200	0.035	800.000	100.000	1064.500	0.000

QT	2.000	6700.000	6700.000	0.000	0.000	0.000	0.000	0.000	0.000	0.000
X1	42.000	23.000	373.800	468.200	290.000	320.000	300.000	0.000	0.000	0.000
X3	10.000	0.000	0.000	0.000	0.000	0.000	0.000	0.000	0.000	0.000
GR	67.700	0.000	40.700	277.500	37.500	373.800	29.900	391.300	28.500	420.200
GR	30.700	448.200	36.200	468.200	38.700	519.500	31.000	536.700	35.500	571.900
GR	34.700	506.900	30.900	629.000	30.900	656.800	30.600	706.700	33.700	731.600
GR	34.300	778.800	34.200	828.900	34.400	886.900	34.400	963.000	27.000	992.600
GR	32.900	1014.300	33.400	1039.000	46.100	1063.500	0.000	0.000	0.000	0.000
NC	0.030	0.035	0.025	0.100	0.300	0.000	0.000	0.000	0.000	0.000
ET	0.000	0.000	30.400	0.000	0.000	0.000	0.000	0.000	0.000	0.000
X1	42.100	18.000	380.000	464.500	200.000	200.000	200.000	0.000	0.000	0.000
X3	10.000	0.000	0.000	0.000	0.000	0.000	0.000	0.000	0.000	0.000
GR	97.000	0.000	36.800	298.100	36.200	367.400	28.900	380.000	28.500	408.900
GR	29.600	440.400	37.900	464.500	39.000	505.700	37.000	528.900	37.300	561.100
GR	35.700	604.300	35.700	652.000	34.300	806.400	32.600	967.600	26.100	992.100
GR	34.800	1018.400	34.200	1030.100	49.100	1066.500	0.000	0.000	0.000	0.000
SB	0.900	1.500	2.800	0.000	25.600	5.000	175.800	2.000	28.700	28.500
NC	0.040	0.040	0.025	0.100	0.300	0.000	0.000	0.000	0.000	0.000
X1	42.200	15.000	359.900	465.400	57.000	57.000	57.000	0.000	0.000	0.000
X2	0.000	0.000	1.000	0.000	0.000	0.000	0.000	0.000	0.000	0.000
BT	10.000	0.000	101.400	101.400	309.000	35.500	35.500	359.900	37.000	35.100
BT	465.400	37.000	35.100	516.800	37.200	37.200	548.500	37.600	37.600	582.700
BT	36.300	36.300	801.100	33.500	33.500	939.800	31.800	31.800	1059.500	31.900
BT	31.900	0.000	0.000	0.000	0.000	0.000	0.000	0.000	0.000	0.000
GR	101.400	0.000	35.500	309.000	36.400	359.900	33.300	383.100	29.200	387.300
GR	28.700	412.900	30.600	444.600	37.500	465.400	37.200	516.800	37.600	548.500
GR	36.300	582.700	33.500	801.100	31.800	939.800	31.900	1059.500	40.000	1060.000
NC	0.040	0.040	0.020	0.100	0.300	0.000	0.000	0.000	0.000	0.000

X1	42.300	0.000	0.000	0.000	5.000	5.000	5.000	0.000	0.000	0.000
NC	0.040	0.080	0.040	0.100	0.300	0.000	0.000	0.000	0.000	0.000
X1	43.000	29.000	343.600	486.400	365.000	385.000	375.000	0.000	0.000	0.000
X3	10.000	0.000	0.000	0.000	0.000	0.000	0.000	0.000	0.000	0.000
GR	70.200	0.000	55.500	278.700	39.800	311.500	40.700	343.600	34.900	395.000
GR	33.100	391.400	33.100	406.800	30.400	422.000	36.400	456.100	38.400	475.700
GR	40.400	486.400	40.400	516.000	39.400	518.100	39.000	525.900	32.500	541.700
GR	32.000	555.000	35.300	568.500	35.300	582.700	33.500	595.200	34.200	678.200
GR	33.400	777.800	30.900	848.000	32.800	891.500	38.400	915.500	37.700	960.700
GR	27.900	995.500	32.700	1000.400	34.400	1027.100	45.500	1064.600	0.000	0.000
X1	44.000	25.000	376.300	457.200	115.000	110.000	110.000	0.000	0.000	0.000
X3	10.000	0.000	0.000	0.000	0.000	0.000	0.000	0.000	0.000	0.000
GR	52.800	0.000	48.800	98.000	41.700	199.100	38.900	296.200	39.200	320.000
GR	40.100	345.400	38.400	376.300	32.800	386.600	32.800	404.900	31.400	411.100
GR	31.400	429.600	32.800	434.900	32.800	447.100	37.200	457.200	40.000	493.800
GR	40.000	511.500	37.900	529.100	33.700	552.800	35.100	566.400	35.100	652.000
GR	34.800	844.200	35.200	969.200	33.300	993.000	33.800	1026.900	50.800	1057.900
X1	45.000	21.000	373.700	477.300	180.000	180.000	180.000	0.000	0.000	0.000
X3	0.000	0.000	0.000	0.000	0.000	477.300	0.000	0.000	0.000	0.000
GR	51.100	0.000	46.400	152.800	40.900	316.200	38.700	373.700	31.600	388.200
GR	32.400	396.700	31.700	412.300	31.700	424.900	37.100	453.400	38.800	470.600
GR	41.200	477.300	41.900	512.000	35.300	532.100	34.200	549.600	35.300	562.100
GR	35.300	580.000	34.100	649.200	35.000	784.000	34.600	910.800	34.700	1015.600
GR	50.500	1053.100	0.000	0.000	0.000	0.000	0.000	0.000	0.000	0.000
ET	0.000	0.000	9.100	0.000	0.000	0.000	0.000	0.000	370.000	491.200

X1	46.000	26.000	380.800	462.500	490.000	510.000	500.000	0.000	0.000	0.000
X3	0.000	0.000	0.000	0.000	0.000	491.200	0.000	0.000	0.000	0.000
GR	48.900	0.000	45.300	136.500	41.700	215.900	39.600	380.800	33.100	393.900
GR	32.500	415.900	33.000	432.100	34.100	452.100	40.000	462.500	39.700	478.400
GR	44.700	491.200	43.000	527.600	38.900	536.600	35.800	549.000	40.600	573.200
GR	40.300	591.400	36.100	644.900	37.900	747.900	34.000	756.900	38.400	779.600
GR	39.300	869.100	39.200	940.900	41.600	979.000	43.600	996.800	47.000	1014.400
GR	49.600	1024.800	0.000	0.000	0.000	0.000	0.000	0.000	0.000	0.000
NC	0.045	0.040	0.025	0.100	0.300	0.000	0.000	0.000	0.000	0.000
ET	0.000	0.000	9.100	0.000	0.000	0.000	0.000	0.000	510.000	645.600

X1	47.000	26.000	518.400	611.900	300.000	340.000	330.000	0.000	0.000	0.000
X3	0.000	0.000	0.000	0.000	0.000	645.600	0.000	0.000	0.000	0.000
GR	50.300	0.100	48.700	77.600	44.300	90.600	44.300	134.400	44.000	156.100
GR	42.600	210.400	40.900	299.100	40.300	430.900	41.200	518.400	35.400	531.600
GR	35.400	555.100	34.800	562.200	34.800	578.300	36.300	584.500	37.000	602.800
GR	40.800	611.900	40.800	631.600	46.300	645.600	46.300	679.300	41.000	716.300
GR	44.200	734.900	44.200	762.300	42.000	818.500	44.900	881.400	45.500	928.800
GR	51.400	972.700	0.000	0.000	0.000	0.000	0.000	0.000	0.000	0.000
NC	0.040	0.045	0.035	0.100	0.300	0.000	0.000	0.000	0.000	0.000
ET	0.000	0.000	9.100	0.000	0.000	0.000	0.000	0.000	680.000	773.900

X1	43.000	20.000	707.800	773.900	260.000	230.000	250.000	0.000	0.000	0.000
X3	0.000	0.000	0.000	0.000	0.000	773.900	0.000	0.000	0.000	0.000
GR	96.900	0.000	44.000	111.800	44.100	129.400	45.300	172.900	42.600	178.600
GR	44.000	323.700	38.400	343.000	40.100	485.100	40.000	588.200	40.300	674.300
GR	40.900	707.800	37.600	708.700	37.700	732.900	45.900	773.900	47.500	826.600
GR	42.600	854.500	44.900	867.500	45.300	890.800	48.600	1000.700	51.000	1079.000
ET	0.000	0.000	9.100	0.000	0.000	0.000	0.000	0.000	600.000	711.500

X1	49.000	24.000	640.100	692.800	210.000	200.000	200.000	0.000	0.000	0.000
X3	0.000	0.000	0.000	0.000	0.000	711.500	0.000	0.000	0.000	0.000
GR	165.300	0.000	60.300	136.300	41.800	164.700	43.600	179.500	43.400	212.600
GR	44.700	312.100	43.600	432.500	44.800	618.000	43.000	627.900	43.300	640.100
GR	37.200	656.000	38.600	672.600	42.500	692.800	43.200	711.500	47.100	719.500
GR	47.300	752.000	46.400	763.400	43.700	786.900	45.300	797.800	45.900	815.400
GR	45.900	843.400	47.800	924.500	49.800	981.100	51.700	1003.100	0.000	0.000
ET	0.000	0.000	10.400	0.000	0.000	0.000	0.000	0.000	0.000	0.000
X1	50.000	18.000	628.100	701.100	580.000	590.000	590.000	0.000	0.000	0.000
X3	10.000	0.000	0.000	0.000	0.000	0.000	0.000	0.000	0.000	0.000
GR	167.600	0.000	68.600	156.000	47.000	188.500	47.900	238.900	48.300	455.300
GR	49.300	614.500	51.000	628.100	40.800	656.200	50.000	701.100	50.200	748.700
GR	49.300	774.100	52.000	784.400	51.500	804.700	53.500	812.700	58.200	879.100
GR	55.200	888.000	59.800	895.800	61.800	949.100	0.000	0.000	0.000	0.000
NC	0.040	0.040	0.025	0.100	0.300	0.000	0.000	0.000	0.000	0.000
ET	0.000	0.000	9.100	0.000	0.000	0.000	0.000	0.000	620.000	790.500
X1	51.000	25.000	642.700	696.900	580.000	590.000	590.000	0.000	0.000	0.000
X3	0.000	0.000	0.000	0.000	0.000	790.500	0.000	0.000	0.000	0.000
GR	134.700	0.000	74.300	115.200	59.800	163.400	57.400	231.400	58.600	242.500
GR	57.100	285.700	56.900	375.900	55.500	573.800	55.200	590.400	53.100	602.200
GR	53.500	642.700	48.400	652.500	48.400	668.400	51.000	679.200	55.100	696.900
GR	54.700	728.400	54.800	743.500	57.400	759.800	58.000	790.500	55.000	804.600
GR	56.700	923.000	57.700	853.500	58.600	864.700	69.300	878.900	74.400	911.300
NC	0.040	0.040	0.050	0.100	0.300	0.000	0.000	0.000	0.000	0.000
ET	0.000	0.000	9.100	0.000	0.000	0.000	0.000	0.000	600.000	785.500
X1	52.000	23.000	279.800	745.600	450.000	400.000	425.000	0.000	0.000	0.000
X3	0.000	0.000	0.000	0.000	0.000	785.500	0.000	0.000	0.000	0.000
GR	97.800	0.000	70.100	72.400	67.600	174.000	62.900	232.100	63.000	279.800
GR	60.500	379.000	57.600	459.300	56.900	311.600	56.800	393.900	56.800	656.500
GR	55.500	665.600	57.100	674.400	57.000	734.600	62.700	745.600	62.700	785.500

GR	53.800	805.600	53.700	820.800	59.000	829.400	58.000	849.500	59.800	857.000
GR	61.300	871.600	71.400	911.500	79.700	940.400	0.000	0.000	0.000	0.000
ET	0.000	0.000	9.100	0.000	0.000	0.000	0.000	0.000	600.000	767.800
X1	53.000	25.000	290.300	767.800	320.000	200.000	250.000	0.000	0.000	0.000
X3	0.000	0.000	0.000	0.000	0.000	767.800	0.000	0.000	0.000	0.000
GR	78.300	0.000	73.300	134.500	71.900	158.100	69.000	174.000	68.200	228.500
GR	67.300	269.400	68.300	279.000	64.600	290.300	59.600	397.000	58.200	560.700
GR	56.600	631.900	56.600	643.600	57.300	651.300	58.000	677.100	58.000	717.300
GR	60.900	756.100	64.800	767.800	64.600	785.400	62.600	796.600	57.600	818.200
GR	59.900	830.700	59.900	849.200	62.300	858.200	65.200	888.000	71.100	914.000
ET	0.000	0.000	9.100	0.000	0.000	0.000	0.000	0.000	500.000	713.400
X1	54.000	17.000	420.200	697.600	310.000	170.000	210.000	0.000	0.000	0.000
X3	0.000	0.000	0.000	0.000	0.000	713.400	0.000	0.000	0.000	0.000
GR	262.700	0.000	65.600	378.900	60.700	420.200	59.100	512.500	58.700	575.900
GR	56.500	602.100	58.900	628.600	60.800	676.200	66.800	697.600	66.800	713.400
GR	65.100	729.400	60.200	740.200	62.300	766.700	63.700	791.600	66.500	807.400
GR	69.200	846.100	74.300	888.400	0.000	0.000	0.000	0.000	0.000	0.000
EJ	0.000	0.000	0.000	0.000	0.000	0.000	0.000	0.000	0.000	0.000

```
*****************************************************
HEC2 RELEASE DATED NOV 76 UPDATED APRIL 1980
ERROR CORR -  01,02,03,04
MODIFICATION -  50,51,52,53,54
*****************************************************
T1
T2              SOLEDAD CANYON LEFT SIDE&RIGHT SIDE COMBINDED
T3               SAN DIEGO CITY CA. FLOOD INSURANCE STUDY
                FLOODWAY
```

J1	ICHECK	INQ	NINV	IDIR	STRT	METRIC	HVINS	Q	WSEL	FQ
	0.	3.	0.	0.	0.000000	0.00	0.0	0.	10.800	0.000
J2	NPROF	IPLOT	PRFVS	XSECV	XSECH	FN	ALLDC	IBW	CHNIM	ITRACE
	15.000	0.000	-1.000	0.000	0.000	0.000	0.000	0.000	0.000	15.000

```
*****************************************************
  HEC2 RELEASE DATED NOV.76 UPDATED APRIL 1980
  ERROR CORR -  01,02,03,04
  MODIFICATION -  50,51,52,53,54
*****************************************************
NOTE- ASTERISK (*) AT LEFT OF CROSS-SECTION NUMBER INDICATES MESSAGE IN SUMMARY OF ERRORS LIST
```

SUMMARY PRINTOUT TABLE 110

SECNO	CWSEL	DIFKWS	EG	TOPWID	QLOB	QCH	QROB	PERENC	STENCL	STCHL	STCHR	STENCR
14.200	10.80	0.00	11.59	308.78	1.66	22998.34	0.00	0.00	0.00	2336.80	2636.00	0.00
14.200	10.80	0.00	11.59	299.12	0.00	23000.00	0.00	0.00	2336.80	2336.80	2636.00	2636.00
14.400	11.80	0.00	11.84	1508.20	0.00	23000.00	0.00	0.00	0.00	950.00	2480.00	0.00
14.400	11.81	0.00	11.85	1459.35	0.00	23000.00	0.00	1470.00	950.00	950.00	2480.00	2420.00
14.550	11.83	0.00	11.86	2315.20	18003.54	4996.46	0.00	0.00	0.00	2350.00	2600.00	0.00
14.550	11.82	-0.02	11.89	1393.36	15381.88	7618.11	0.00	1560.00	1110.00	2350.00	2600.00	2670.00
15.000	11.85	0.00	11.88	2391.49	18649.44	3842.53	508.03	0.00	0.00	2132.30	2524.80	0.00
15.000	11.85	0.00	11.97	1287.51	15925.77	7033.88	40.34	1320.00	1210.00	2132.30	2524.80	2530.00
16.000	11.95	0.00	11.98	2351.24	15230.90	7741.12	27.97	0.00	0.00	1923.20	2624.40	0.00
16.000	12.14	0.19	12.21	1290.00	10486.71	12513.29	0.00	1290.00	1290.00	1923.20	2624.40	2580.00
17.000	12.01	0.00	12.03	2242.85	10049.86	12938.82	11.33	0.00	0.00	1335.30	2436.40	0.00
17.000	12.28	0.28	12.34	1320.00	4950.75	18049.25	0.00	1320.00	990.00	1335.30	2436.40	2310.00
18.000	12.06	0.00	12.10	1989.17	1831.08	21092.63	76.29	0.00	0.00	557.60	2160.30	0.00
18.000	12.39	0.33	12.44	1610.00	1392.13	21607.87	0.00	1610.00	360.00	557.60	2160.30	1970.00
18.100	12.13	0.00	12.19	2051.15	1799.36	21200.64	0.00	0.00	0.00	389.80	2287.50	0.00
18.100	12.47	0.34	12.54	1770.78	1857.99	21142.01	0.00	1830.00	200.00	389.80	2287.50	2030.00
18.200	12.20	0.00	12.23	2876.18	1014.73	21977.60	7.67	0.00	0.00	363.90	3110.90	0.00
18.200	12.55	0.35	12.60	1941.91	1354.13	21645.87	0.00	2020.00	170.00	363.90	3110.90	2190.00

SECNO	CWSEL	DIFKWS	EQ	TOPWID	GLOB	QCH	QROB	PERENC	STENCL	STCHL	STCHR	STENCR
19.000	12.24	0.00	12.26	2750.71	1477.71	21438.82	83.46	0.00	0.00	390.90	2896.60	0.00
19.000	12.61	0.37	12.64	1936.08	1853.81	21146.19	0.00	1970.00	170.00	390.90	2896.60	2140.00
20.000	12.26	0.00	12.29	2355.16	2161.69	20806.53	31.78	0.00	0.00	409.70	2476.30	0.00
20.000	12.63	0.37	12.67	1730.68	2601.17	20398.83	0.00	1750.00	170.00	409.70	2476.30	1930.00
21.000	12.28	0.00	12.30	2262.60	2886.45	16594.11	19.44	0.00	0.00	417.30	2350.90	0.00
21.000	12.66	0.38	12.69	1722.16	3435.49	16044.51	0.00	1730.00	130.00	417.30	2350.90	1860.00
22.000	12.31	0.00	12.33	2496.39	5900.04	13558.88	41.07	0.00	0.00	779.20	2627.90	0.00
22.000	12.70	0.39	12.74	1478.27	4817.30	14682.70	0.00	1510.00	470.00	779.20	2627.90	1900.00
23.100	12.34	0.00	12.36	2907.76	5947.12	1643.43	11909.45	0.00	0.00	1333.00	1530.00	0.00
23.100	12.77	0.43	12.79	2239.38	5018.96	1997.16	12483.88	0.20	644.72	1333.00	1530.00	3463.92
24.000	12.23	0.00	12.53	1031.43	997.24	18502.76	0.00	1293.80	0.00	407.80	1293.80	1293.80
24.000	12.71	0.48	12.96	1053.47	1122.49	18377.51	0.00	1293.80	0.00	407.80	1293.80	1293.80
25.000	12.86	0.00	13.10	970.94	176.28	19323.72	0.00	1362.70	0.00	413.00	1362.70	1362.70
25.000	13.19	0.32	13.39	987.57	199.46	19300.54	0.00	1362.70	0.00	413.00	1362.70	1362.70
26.000	13.49	0.00	13.66	1142.18	13419.58	6080.42	0.00	1387.20	0.00	1068.90	1387.20	1387.20
26.000	13.71	0.22	13.87	1146.03	13458.44	6041.56	0.00	1387.20	0.00	1068.90	1387.20	1387.20
27.000	13.92	0.00	14.39	932.63	17377.95	2122.04	0.00	1446.80	0.00	1354.20	1446.80	1446.80
27.000	14.07	0.16	14.51	935.18	17386.93	2113.07	0.00	1446.80	0.00	1354.20	1446.80	1446.80
28.000	17.50	0.00	18.04	1150.62	16489.81	3010.19	0.00	1487.40	0.00	1405.60	1487.40	1487.40
28.000	17.45	-0.05	18.01	1147.53	16460.03	3039.97	0.00	1487.40	0.00	1405.60	1487.40	1487.40
29.000	18.20	0.00	18.39	1154.87	16277.58	3222.42	0.00	1447.40	0.00	1168.70	1447.40	1447.40
29.000	18.18	-0.03	18.36	1154.01	16289.29	3210.71	0.00	1447.40	0.00	1168.70	1447.40	1447.40
30.000	18.95	0.00	19.73	611.50	2040.20	17409.45	50.35	1533.40	0.00	774.60	1277.70	1533.40
30.000	18.94	-0.01	19.72	611.07	2036.80	17413.88	39.32	1533.40	0.00	774.60	1277.70	1533.40
31.000	22.82	0.00	23.27	826.88	8548.60	10268.68	682.72	0.00	0.00	843.40	1102.50	0.00
31.000	22.88	0.06	23.38	504.97	8897.66	10602.34	0.00	520.00	580.00	843.40	1102.50	1100.00

SECNO	CHBEL	DIFKUB	E9	TOPWID	GLOB	GCH	GROB	PERENC	STENCL	STCHL	STCHR	STENCR
32.000	24.16	0.00	24.50	547.71	9045.64	10454.36	0.00	951.20	0.00	622.20	951.20	951.20
32.000	24.27	0.11	24.60	548.24	9060.77	10439.23	0.00	951.20	0.00	622.20	951.20	951.20
33.000	24.61	0.00	25.02	491.89	10735.70	8652.28	112.01	0.00	0.00	644.00	981.80	0.00
33.000	24.69	0.08	25.25	496.00	8766.37	10733.63	0.00	496.00	445.00	644.00	981.80	900.00
34.000	26.23	0.00	26.70	781.42	17609.27	562.36	1328.36	0.00	0.00	1042.40	1089.00	0.00
34.000	26.79	0.56	27.41	595.95	17341.15	720.11	1438.74	600.00	600.00	1042.40	1089.00	1200.00
34.500	26.76	0.00	27.37	852.97	13909.19	4614.05	976.76	0.00	0.00	1090.00	1250.00	0.00
34.500	27.71	0.76	28.04	770.00	14006.36	4655.48	838.15	770.00	540.00	1090.00	1250.00	1350.00
35.000	27.36	0.00	27.71	813.89	14394.55	4390.57	714.88	0.00	0.00	1091.20	1270.00	0.00
35.000	27.74	0.38	28.28	740.70	14039.31	4687.30	773.38	780.00	600.00	1091.20	1270.00	1440.00
35.200	29.62	0.00	31.22	671.10	2066.90	13661.61	2771.49	0.00	0.00	1120.00	1270.00	0.00
35.200	29.48	-0.14	31.29	692.00	2694.80	13986.77	2818.43	652.00	740.00	1120.00	1270.00	1400.00
35.800	32.21	0.00	32.76	471.10	11246.68	6190.22	2063.10	0.00	0.00	1094.00	1248.00	0.00
35.800	32.41	0.20	33.61	456.10	6893.31	9471.34	3135.35	750.00	950.00	1094.00	1248.00	1700.00
36.000	32.38	0.00	32.99	1447.06	7098.79	8432.99	1978.22	0.00	0.00	1412.80	1580.00	0.00
36.000	33.47	0.70	33.77	700.00	8904.22	8864.46	1731.22	700.00	1000.00	1412.80	1580.00	1700.00
36.500	32.84	0.00	33.11	1492.30	10151.28	7543.40	1825.23	0.00	0.00	1400.00	1550.00	0.00
36.500	33.75	0.91	33.97	948.34	11017.38	7060.23	1422.40	0.00	720.01	1400.00	1550.00	1668.36
36.750	33.33	0.00	33.50	1274.99	9210.47	10039.46	230.07	0.00	0.00	1167.30	1476.40	0.00
36.750	34.09	0.76	34.23	1110.73	10392.25	9407.75	0.00	0.00	369.67	1167.30	1476.40	1476.40
37.000	33.41	0.00	33.67	1170.30	6647.96	12499.66	352.38	0.00	0.00	1102.70	1502.80	0.00
37.000	34.14	0.73	34.34	1032.83	7609.58	11889.99	0.43	0.04	470.12	1102.70	1502.80	1502.96
38.000	34.09	0.00	34.24	1266.91	6178.26	4444.29	8877.44	0.00	0.00	733.00	1025.60	0.00
38.000	34.63	0.54	34.77	1079.38	6205.15	4653.41	8641.44	0.06	379.10	733.00	1025.60	1454.48
39.000	34.44	0.00	34.61	1192.72	7569.11	2923.16	9011.73	1321.70	0.00	549.60	775.30	1391.70
39.000	34.92	0.47	35.06	1162.75	7647.50	2895.15	8957.36	1321.70	0.00	549.60	775.30	1391.70

	SECND	CHSEL	DIFKWB	EO	TOPWID	OLOB	QCH	QROB	PERENC	STENCL	STCHL	STCHR	STENCR
	40.000	34.67	0.00	35.07	894.84	720.75	2768.64	16010.61	0.00	0.00	366.60	631.00	0.00
	40.000	35.05	0.39	35.45	768.68	232.39	3023.56	16244.05	0.06	336.68	366.60	631.00	1125.36
*	41.000	36.18	0.00	36.12	733.65	1110.97	8141.17	10247.87	0.00	0.00	385.50	464.70	0.00
*	41.000	36.14	-0.04	36.48	377.04	605.19	8652.85	10241.97	0.06	330.47	385.50	464.70	716.30
	42.000	38.65	0.00	38.77	761.94	9.52	2866.58	3823.90	0.00	0.00	373.80	468.20	0.00
	42.000	39.02	0.37	39.18	373.08	0.00	2964.54	3735.46	0.05	373.80	373.80	468.20	746.00
	42.100	38.73	0.00	38.92	739.43	354.64	2444.73	3900.62	0.00	0.00	360.00	464.50	0.00
	42.100	38.82	0.09	39.41	339.28	0.00	3008.85	1691.14	0.33	360.00	360.00	464.50	741.00
*	42.200	38.83	0.00	38.70	744.53	170.37	2318.65	4210.97	0.00	0.00	359.90	465.40	0.00
*	42.200	38.92	0.09	39.40	362.22	0.00	4934.48	1765.52	0.53	359.90	359.90	465.40	742.10
	42.300	38.81	0.00	38.71	744.50	156.50	2668.57	3874.94	0.00	0.00	359.90	465.40	0.00
	42.300	38.78	-0.03	39.47	359.49	0.00	3538.77	1161.23	0.51	359.90	359.90	465.40	710.30
*	43.000	40.47	0.00	40.32	762.40	0.00	1696.26	3003.74	0.00	0.00	343.60	486.40	0.00
*	43.000	40.44	-0.03	40.70	332.36	0.00	3520.34	3179.66	0.49	343.60	343.60	486.40	697.80
	44.000	40.51	0.00	40.60	776.09	144.47	2222.27	4333.25	0.00	0.00	376.30	457.20	0.00
	44.000	40.50	0.00	41.09	275.50	0.00	4333.26	2366.74	0.54	376.30	376.30	457.20	671.80
*	45.000	39.63	0.00	42.11	123.93	28.73	6671.27	0.00	477.30	0.00	373.70	477.30	477.30
	45.000	40.41	0.78	42.32	146.20	116.30	6583.70	0.00	477.30	0.00	373.70	477.30	477.30
	46.000	43.54	0.00	44.08	313.16	1511.96	5061.53	126.50	491.20	0.00	380.80	462.50	491.20
	46.000	43.41	-0.13	43.98	307.73	1442.98	5134.27	122.75	491.20	0.00	380.80	462.50	491.20
	47.000	43.97	0.00	44.44	462.35	1862.38	4677.17	160.46	645.60	0.00	318.40	611.90	645.60
	47.000	43.87	-0.09	44.38	478.43	1817.02	4724.17	156.80	645.60	0.00	318.40	611.90	645.60
	48.000	44.55	0.00	44.69	627.96	3706.85	993.15	0.00	773.90	0.00	707.80	773.90	773.90
	48.000	44.50	-0.06	44.64	625.36	3701.47	998.53	0.00	773.90	0.00	707.80	773.90	773.90
*	49.000	45.73	0.00	46.62	552.84	3196.31	3251.87	251.81	711.50	0.00	640.10	692.80	711.50
*	49.000	45.74	0.00	46.62	552.84	3196.83	3251.36	251.80	711.50	0.00	640.10	692.80	711.50

	SECNO	CWSEL	DIFKWS	EO	TOPWID	GLOB	QCH	QROR	PERENC	STENCL	STCHL	STCHR	STENCH
*	50.000	51.01	0.00	51.34	597.84	4149.41	2429.85	121.74	0.00	0.00	628.10	701.10	0.00
*	50.000	51.00	0.00	51.93	334.76	2989.61	3710.39	0.00	0.37	366.35	628.10	701.10	701.10
*	51.000	57.75	0.00	58.86	523.89	2061.09	4047.15	571.76	790.50	0.00	642.70	696.90	790.50
*	51.000	57.75	0.00	58.86	523.90	2061.42	4044.76	571.81	790.50	0.00	642.70	696.90	790.50
	52.000	60.21	0.00	60.90	393.57	0.00	6700.00	0.00	785.50	0.00	279.80	749.60	785.50
	52.000	60.21	0.00	60.90	393.58	0.00	6700.00	0.00	785.50	0.00	279.80	749.60	785.50
	53.000	62.30	0.00	62.61	420.97	0.00	6700.00	0.00	767.80	0.00	290.30	767.80	767.80
	53.000	62.30	0.00	62.62	420.97	0.00	6700.00	0.00	767.80	0.00	290.30	767.80	767.80
	54.000	63.23	0.00	63.84	289.98	98.97	6601.01	0.00	713.40	0.00	420.20	677.60	713.40
	54.000	63.23	0.00	63.84	289.99	98.99	6601.01	0.00	713.40	0.00	420.20	677.60	713.40

FLOODWAY DATA,
PROFILE NO. 2

STATION	FLOODWAY WIDTH	FLOODWAY SECTION AREA	FLOODWAY MEAN VELOCITY	WATER SURFACE ELEVATION WITH FLOODWAY	WITHOUT FLOODWAY	DIFFERENCE
14.200	299.	3230.	7.1	10.8	10.8	0.0
14.400	1459	14382.	1.6	11.8	11.8	0.0
14.550	1490	11041.	2.1	11.8	11.8	0.0
15.000	1320	8236.	2.8	11.8	11.8	0.0
16.000	1290.	10649.	2.2	12.2	12.0	0.2
17.000	1320	12044.	1.9	12.3	12.0	0.3
18.000	1610.	13502.	1.7	12.4	12.1	0.3
18.100	1830.	11040.	2.1	12.4	12.1	0.3
18.200	2009.	13024.	1.8	12.5	12.2	0.3
19.000	1970.	16383.	1.4	12.6	12.2	0.4
20.000	1750.	14397.	1.6	12.7	12.3	0.4
21.000	1729.	14479.	1.3	12.7	12.3	0.4
22.000	1510.	11307.	1.7	12.7	12.3	0.4
23.100	2824.	17019.	1.1	12.7	12.3	0.4
24.000	1053.	4970.	3.9	12.7	12.2	0.5
25.000	988.	5234.	3.7	13.2	12.9	0.3
26.000	1164.	6140.	3.2	13.7	13.5	0.2
27.000	935.	3669.	5.3	14.1	13.9	0.2
28.000	1154.	3381.	5.8	17.5	17.5	0.0
29.000	1154.	5738.	3.4	18.2	18.2	0.0
30.000	639.	2769.	7.0	19.0	19.0	0.0
31.000	520.	3539.	5.5	22.9	22.8	0.1
32.000	548.	4483.	4.3	24.3	24.2	0.1
33.000	496	3548.	5.5	24.7	24.6	0.1
34.000	600.	3524.	5.5	26.8	26.2	0.6
34.500	790.	4667.	4.2	27.8	27.0	0.8
35.000	780.	4661.	4.2	28.0	27.4	0.6
35.200	652.	2568.	7.6	29.6	29.6	0.0
35.800	456	2825.	6.9	32.4	32.2	0.2
36.000	700.	5258.	3.7	33.5	32.6	0.9
36.500	948.	6051.	3.2	33.7	32.8	0.9
36.750	1111.	6521.	3.0	34.1	33.3	0.8
37.000	1033.	5303.	3.6	34.1	33.4	0.7
38.000	1075.	6622.	2.9	34.6	34.1	0.5
39.000	1163.	6695.	2.9	34.9	34.4	0.5
40.000	[illegible]	4278	4.6	35.1	34.7	0.4
41.000	[illegible]	1754	10.9	36.2	36.2	0.0
42.000	373.	2273.	2.9	39.1	38.7	0.4
42.100	362	1379.	4.9	38.8	38.7	0.1
42.200	[illegible]	1554.	4.3	38.9	38.8	0.1
42.300	[illegible]	[illegible]	4.9	38.8	38.8	0.0
43.000	352.	1313.	3.7	40.3	40.3	0.0

FLOODWAY DATA.
PROFILE NO. 2

STATION	FLOODWAY WIDTH	FLOODWAY SECTION AREA	FLOODWAY MEAN VELOCITY	WATER SURFACE ELEVATION WITH FLOODWAY	WITHOUT FLOODWAY	DIFFERENCE
44.000	296.	1475.	4.5	40.5	40.5	0.0
45.000	146.	644.	10.4	40.4	39.6	0.8
46.000	310.	1324.	5.1	43.5	43.5	0.0
47.000	478.	1707.	3.9	44.0	44.0	0.0
48.000	656.	2247.	3.0	44.6	44.6	0.0
49.000	553.	1204.	5.6	45.7	45.7	0.0
50.000	335.	1003.	6.7	51.0	51.0	0.0
51.000	556.	1196.	5.6	57.7	57.7	0.0
52.000	354.	1008.	6.6	60.2	60.2	0.0
53.000	421.	1493.	4.5	62.3	62.3	0.0
54.000	286.	1074.	6.2	63.2	63.2	0.0

I-5 North Coast Widening Floodplain Studies
Caltrans
DE Project 1683

RECORD OF CONVERSATION

DATE: 09/21/07 **TIME:** 8:30 AM **DE FILE No.** 1683-300

RECORDED BY: Glen Parker

SPOKE WITH: Ray Martinez

TELEPHONE No. 703-317-6251

NATURE OF CALL: ☐ Incoming ☒ Outgoing ☐ Meeting

DISTRIBUTION: Ray Martinez (Michael Baker), Glen Parker (Dokken Engineering), Tim Brownson (Caltrans), Wen Cheng (Michael Baker), Mike Skowronek (Michael Baker)

SUBJECT OF CONVERSATION: Acceptable FEMA floodplain modeling procedures

ITEMS DISCUSSED:

Available Backup Data to generate previously approved floodplain models: Glen explained that a formal request has been submitted for backup floodplain information for lagoons and creeks along I-5 with Zone AE floodplains between San Diego and Oceanside. In some cases the HEC-2 data provided by Michael Baker Corporation was limited and did not have enough information to recreate previously generated floodplain models with reasonable accuracy. Glen said in these cases, Dokken Engineering would prefer to create HEC-RAS models which tie in with FEMA cross sections to use as a basis for existing conditions. Ray said Dokken Engineering must use their expertise to decide whether the existing FEMA data can be reused and to document efforts in a Technical Studies Data Notebook (TSDN). There have been past situations which required an existing model to be recreated and it is acceptable to FEMA as long as the appropriate documentation supports the procedure. Glen agreed to document the scenarios where existing models could not be used with accuracy.

Coordination with FEMA and Caltrans: Glen said that Caltrans is in the planning phase for the I-5 North Coast Widening, which will widen I-5 from San Diego to Oceanside. At this point in time, a preferred alternative has not been identified and therefore no coordination has occurred between Caltrans and FEMA to begin processing LOMRs. Glen said the final design of this project would likely occur in different phases several years in the future. It would be beneficial to coordinate with FEMA when needed during the process. Glen asked who the appropriate FEMA contacts may be to continue coordination when needed throughout the process. Ray said to coordinate with Wen Chen and Michael Skowronek, who work at the RMC for FEMA Region IX and can act as Outreach Coordinators on behalf of FEMA, when appropriate depending on the development of the project.

SECTION 2

Los Penasquitos Creek Location Hydraulic Study

SECTION 2: LOS PENASQUITOS LOCATION HYDRAULIC STUDY

2.0 PROJECT PURPOSE AND VICINITY MAP:

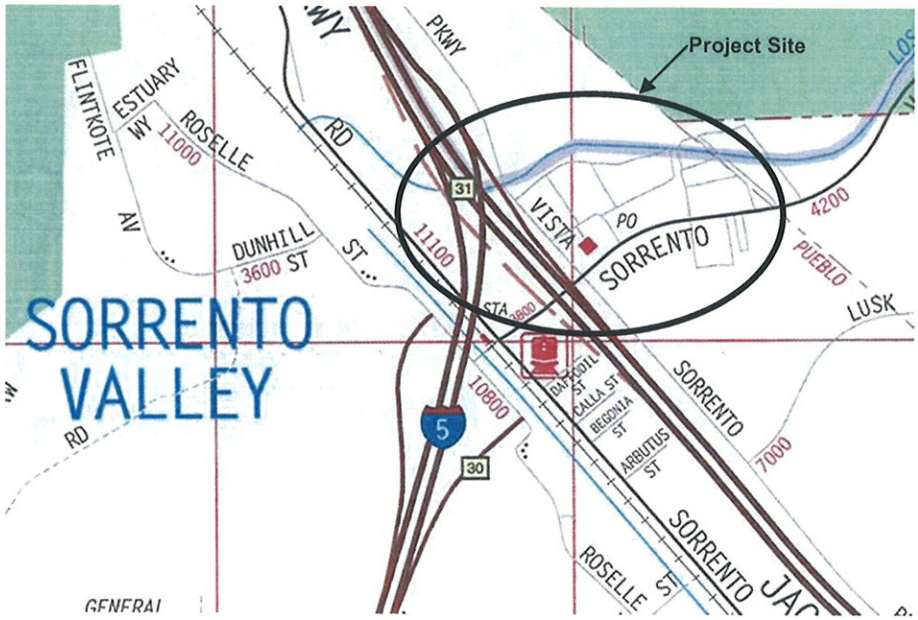

Figure 1: Project Vicinity Map

The Los Penasquitos Creek is located in the City of San Diego just north of Sorrento Valley Road. (Thomas Guide, page 1208: B5 and C5).

This study was prepared for Caltrans for the purpose of determining impacts to the Los Penasquitos Creek 100-year floodplain resulting from the proposed I-5 Flyover Bridge to the Interstate-5 (I-5) corridor.

This study specifically addresses the following:

1.) The Los Penasquitos Creek 100-year floodplain as it presently exists.

2.) The Los Penasquitos Creek 100-year floodplain after the construction of the proposed I-5 Flyover Bridge.

3.) Performing a risk assessment associated with any possible encroachment.

The proposed I-5 Flyover Bridge requires 2 additional piers within the floodplain. The proposed bridge would be 3376 ft long and built above the existing I-5 median and high above the 100-year floodplain of the Los Penasquitos Creek.

Hydrological data was obtained from a Flood Insurance Study (FIS) (*San Diego County-California and Unincorporated Areas, dated July 2, 2002*) and a Letter of Map Revision for Vista Sorrento Parkway Bridge (LOMR, 2003). HEC-RAS v3.1.3 software was used to perform the hydraulic computations.

2.1 DESCRIPTION OF WATERSHED:

The Los Penasquitos Creek is located within the Los Penasquitos watershed basin, designated as the Regional Water Quality Control Board's (RWQCB) Hydrologic Unit 906.10-906.50 (Figure 2). The 170 square mile hydrologic unit includes the cities of San Diego, Poway, Del Mar and unincorporated regions of San Diego County. The major basins within the Los Penasquitos Lagoon watershed are Carroll (Soledad) Canyon, Los Penasquitos Canyon, and Carmel Valley. These basins flow in a westerly direction towards the Pacific Ocean. These watersheds drain a highly urbanized region located almost entirely west of Interstate 15 in coastal San Diego County. Elevations within the watershed range from 2,900 feet above mean sea level in the upper watershed to mean sea level. Collectively and individually, they support a variety of water supply, economic, recreational, and habitat-related beneficial uses. Los Penasquitos water bodies are especially sensitive to the effects of pollutants due to restricted or intermittent tidal flushing.

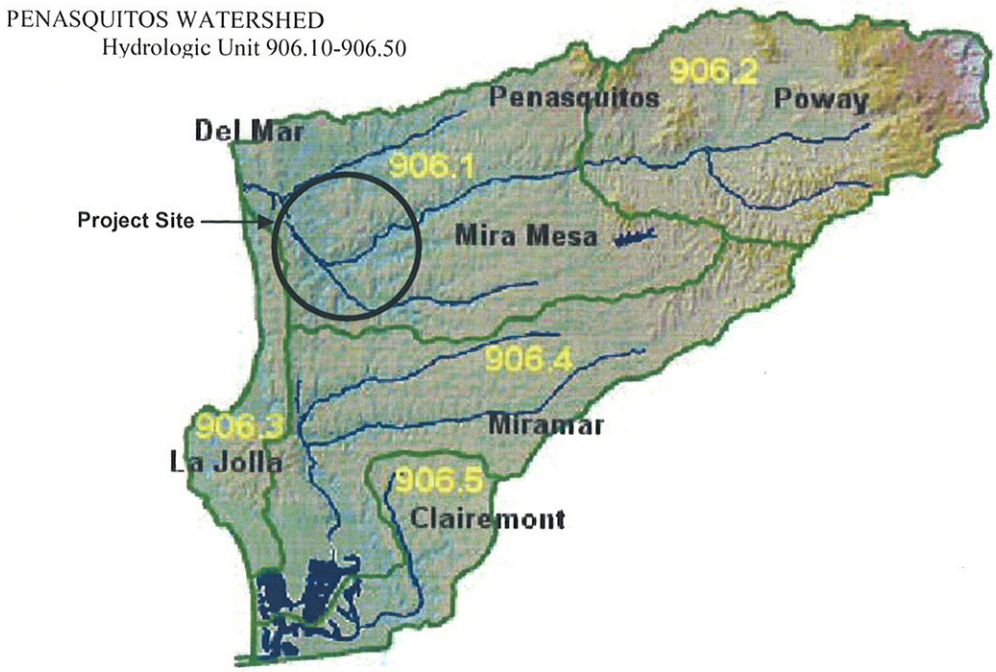

Figure 2: Regional Basin Area.

The Los Penasquitos Creek watershed encompasses a land area of approximately 67 square miles including portions of the cities San Diego, Poway, and Del Mar. The watershed is highly urbanized with a population of approximately 400,000 residents. The creek discharges to a 0.6 square mile lagoon that is identified as an impaired water body on the California 303(d) list for sedimentation. Los Penasquitos Creek contains extensive mudflats, saltpan, salt marsh, and one relic sand dune, with shallow water channels and broad tidal pans. The creek was historically intermittent; however, due to development within the upper watershed, the creek now supports year-round flow. Los Penasquitos Creek is concrete-lined along two stretches in its lower reach. Urban runoff from storm drains contributes inflows during winter storms as well as runoff from local landscaping.

2.2 FLOODPLAIN MODELING METHODOLOGY:

The area of analysis ranges from approximately 2,400 feet upstream of the Vista Sorrento Parkway Bridge crossing to 280 feet downstream of the southbound I-5 crossing. The creek narrows as it passes beneath the I-5/I-805 Bridges. The bridges were modeled using either the highest energy answer from the HEC-RAS Bridge modeling options, or as conveyance obstructions for the piers of the bridges that cross above the decks of the lower bridges.

Within the study reach, the effective model completed by Chang Consultants (LOMR, 2003) included four California Department of Transportation (Caltrans) highway bridges: South I-5, South I-805, North I-5, North I-805 and one off site crossing, the Vista Sorrento Parkway Bridge. However, a field investigation revealed that the effective model did not reflect current conditions. The South I-5 and North I-5 Bridges have since been widened and a new bridge connecting North I-805 traffic to North I-5 or SR-56 has been added within the floodplain. These changes were addressed and a new effective model was created. This existing condition model was used for comparison with the proposed addition of the I-5 Flyover Bridge.

The bridge of interest is the I-5 Flyover Bridge. The I-5 Flyover Bridge could not be modeled as a bridge in HEC-RAS because it is proposed to span over the top of the existing I-5 bridges. Since the bottom soffit of this bridge will be built far above any anticipated 100-year flood levels, only the piers of the bridge were input into HEC-RAS. The geometry of the piers was included as conveyance obstructions in cross section #1402.

The downstream boundary of the model was taken to be at cross section #931 (FEMA Cross Section AC of Soledad Canyon), approximately 280 feet downstream of the west edge of the South I-5 Bridge, the model terminates as the Los Penasquitos Creek ties into Soledad Canyon. For this study, HEC-RAS was analyzed with the Standard Step Method under steady flow conditions.

2.3 HEC-RAS INPUT

2.3.1 Cross Sectional Geometry:

Because of the curvature of the main channel as well as skewed bridges and complex topography, it was difficult to extend all cross sections perpendicular to contours which varied in direction. In these circumstances, an average perpendicular cut was made from the contours that best fit the overall channel. Contours were gathered from topographic surveys provided by the LOMR (2 foot contours, NGVD 29), as well as digital topography supplied by Caltrans (0.5 meter contours, NAVD 88). Elevations given in HEC-RAS are in NAVD 88. Ineffective flow areas were obtained from the 2003 LOMR. Expansion (0.3) and contraction (0.1) coefficients were compiled from the 2003 LOMR; the coefficients were increased for the contraction at cross section #1888 to 0.3 and for the expansion at cross section #1181 to 0.5. These increases model the drastic change in floodplain width at the cross sections upstream of the Vista Sorrento Parkway Bridge and downstream of the South I-5 Bridge.

2.3.1.1 Bridges

Seven bridges exist within the vicinity of the Proposed I-5 Flyover Bridge study area. They include the southbound I-5 Bridge, the southbound I-5 to I-805 Tuck Connector Bridge, the southbound and northbound I-805 Bridges, the northbound I-5 Bridge, the northbound I-805 to I-5 Truck Connector Bridge, and the Vista Sorrento Parkway Bridge.

The piers of the southbound I-5 to I-805 Tuck Connector Bridge, the northbound I-5 Bridge, and the northbound I-805 to I-5 Truck Connector Bridge are modeled as obstructions in HEC-RAS. They were modeled as obstructions because the northbound I-5 Bridge crosses above the I-805 Bridges, the southbound I-5 to I-805 Tuck Connector Bridge crosses above the southbound I-5 Bridge and the northbound I-805 to I-5 Truck Connector Bridge deck is built high above the Los Penasquitos Creek floodplain. Modeling the bridge piers as obstructions simplifies the multiple bridge crossings in the study area and effectively models the anticipated flow constriction.

The bridges are modeled at the following cross sections:

- Cross section #1278 - southbound I-5 Bridge.
- Cross section #1351 - southbound I-5 to I-805 Truck Connector Bridge pier.
- Cross section #1402 - proposed I-5 Flyover Bridge piers.
- Cross sections #1537 and #1626 - existing southbound and northbound I-805 Bridges.
- Cross sections #1578 and #1656 - northbound I-5 Bridge piers.
- Cross section #1780 - northbound I-805 to I-5 Truck Connector Bridge piers.
- Cross section #1850 - existing Vista Sorrento Parkway Bridge.

The bridge piers modeled in the above referenced cross sections were bound upstream and downstream with cross sections to define the dimensions of the piers.

The as-builts were not completed yet for the widening and construction of the interstate bridges and truck connectors at the time of this study. The construction plans for EA 11-0301U4 were used to model the existing interstate bridges (see Appendix C). However as-builts were available for the modeling of the Vista Sorrento Bridge. In addition, no clogging factors were utilized in the HEC-RAS analysis of any of these bridges.

The southbound I-5 Bridge piers consisted of two sizes. The exterior piers have a diameter of 5.5 feet, while the interior piers are 4 feet in diameter (Figure 3). The 5.5 foot diameter piers were modeled throughout the width of the bridge.

The southbound I-5 to I-805 Truck Connector Bridge piers are elongated in shape (7 feet x 10.5 feet). The effective pier diameters in the direction of flow were modeled as 7 foot piers. The bridge deck of this connector is entirely above the floodplain and is not included in the model. The standard bridge modeling option was not used for this connector. Instead, the geometry of the piers was delineated as conveyance obstructions in cross section #1351 (see Appendix B).

Figure 3: South I-5 and South I-5/I-805 Truck Connector Piers (Far Left), Cross Section # 1278, n = 0.03 (Reeds and rubble sides).

The southbound and northbound I-805 Bridge piers consist of two column diameters. The upstream pier has a 5.5 foot diameter and the other three piers have a 5 foot diameter. The northbound I-805 Bridge was modeled with a 5.5 foot diameter upstream pier width and a 5 foot downstream pier width. The southbound I-805 bridge piers were all modeled with 5 foot diameters.

Figure 4: North I-5 Bridge above North I-805 Bridge, Cross Section # 1656, n = 0.04 (Earth bottom and rubble sides).

The northbound I-5 Bridge crosses above the I-805 Bridges (Figure 4), and because the bridge deck is entirely above the floodplain, it was not included in the model. The standard bridge modeling option was not used for this connector. Instead, the geometry of the piers (5.5 foot diameter) was delineated as conveyance obstructions in cross section #1578 (Figure 6) and #1656 (see Appendix B).

The northbound I-805 to I-5 Truck Connector Bridge piers are elliptical shaped piers (5.5 feet by 8.25 feet). The effective pier diameters in the direction of flow were modeled as 5.5 foot piers. The standard bridge modeling option was not used for this connector. Instead, the geometry of the piers was delineated as conveyance obstructions in cross section #1780 (see Appendix B).

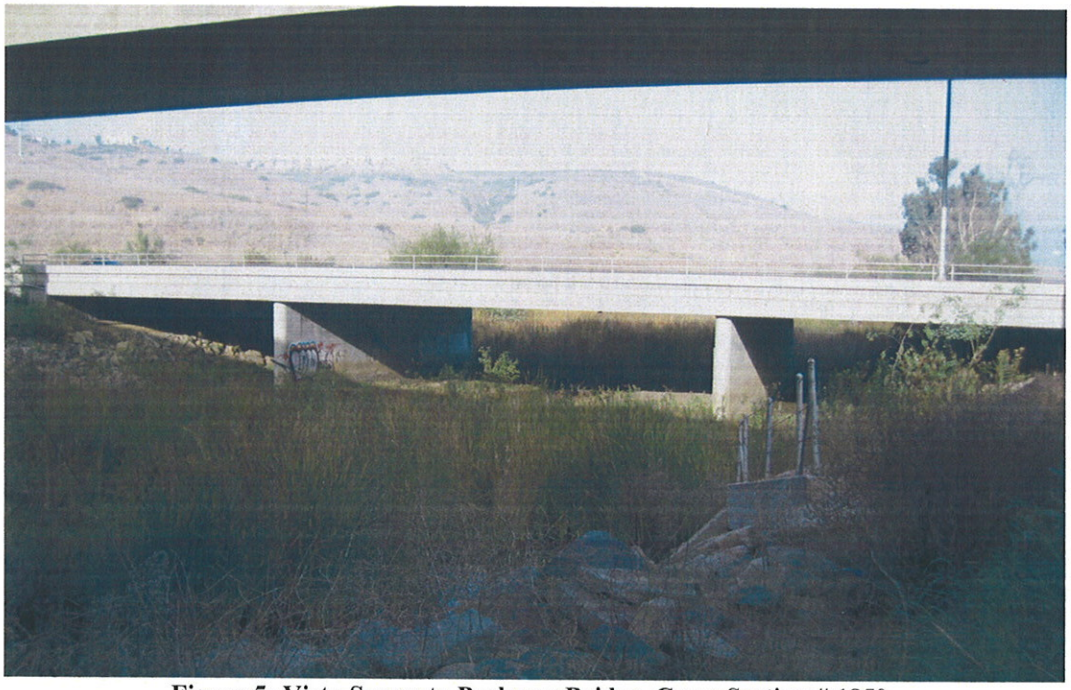

Figure 5: Vista Sorrento Parkway Bridge, Cross Section # 1850, n = 0.04 (Dense weeds and shrubs).

The Vista Sorrento Parkway Bridge is the furthest upstream bridge in the study area and is supported by two, 2 foot wide pier walls (Figure 5). This bridge was modeled using the Energy (Standard Step) Method for both low flow and high flow conditions.

Finally, the proposed I-5 Flyover Bridge was located upstream of the South I-5/ South I-805 Truck Connector Bridge. The deck of the flyover would be entirely above the floodplain and was not included in the model. The I-5 Flyover Advanced Planning Study, dated 6/05, was used to model the proposed bridge piers. The 9.84 foot (3 meter) concrete piers were modeled on the fringes of the 100-yr floodplain (see Appendix C). The pier geometries were delineated by conveyance obstructions in cross section #1402 (see Appendix B).

2.3.1.2 Ineffective Flow Areas

Commercial and retail development has encroached in to the Los Penasquitos Creek floodplain, south of the creek. To account for this in the modeling, ineffective flow areas were placed throughout the cross sections. Theses areas model the water storage around and within the developed business park, upstream of the Vista Sorrento Parkway Bridge.

2.3.1.3 Flood Insurance Study Cross Sections

Detailed hydraulic analyses have been performed in this area, and a base floodplain elevation has been determined as shown in the Flood Insurance Rate Map (FIRM) (see Appendix A). In 2003, a Letter of Map Revision (LOMR) was approved by FEMA for the construction of the Vista Sorrento Parkway Bridge over the Los Penasquitos Creek, which is located directly upstream of Caltrans right of way.

The 2003 LOMR Corrected Effective model raised the existing 100-year water surface elevation of the Los Penasquitos floodplain by a range of approximately 1 to 5.6 feet, upstream of the Vista Sorrento Parkway Bridge. This increased the area of the floodplain to include most of the structures between the Los Penasquitos Creek and Sorrento Valley Boulevard.

The downstream boundary of the I-5 Flyover Bridge models tie into the Soledad Canyon FEMA cross section AC, river station 931. Upstream the models tie into the Los Penasquitos Creek FEMA cross section H, river station 4331.

2.3.1.4 Existing Floodplain Conditions

The 2003 LOMR post project conditions model was updated to represent current field conditions. Two truck connector bridges were constructed, and the southbound and northbound I-5 bridges were widened after the completion of the Vista Sorrento Parkway LOMR was finalized. A duplicate model was created from the 2003 LOMR post project conditions model, including additional cross sections required to model the current bridge conditions. This duplicate model was corrected to reflect the existing conditions within the project area. This corrected effective model produced a maximum increase to the existing 100-year floodplain water elevation of 1.78 feet upstream of the northbound I-5 Bridge. The existing model included all seven of the existing bridge crossings over the Los Penasquitos Creek, and was used for comparison with the proposed improvements of the I-5 Flyover Bridge.

2.3.2 Manning's Roughness Coefficient:

Each cross section contained a left overbank, main channel, and right overbank, which represented the different regions of the waterway in terms of roughness coefficients. The main channel was simulated as the creek bottom and the left and right overbanks were the side slopes. Manning's Roughness Coefficients were obtained from the 2003 LOMR and updated based on current field conditions. For the north and south side slopes of the channel, a minimum roughness value of 0.035 was used to mimic a floodplain pasture with short grass. The overbanks which inundated commercial properties had values from (0.045 to 0.065) depending on the density of inundated structures. The main channel is a floodway with areas of bare earth and reeds to light brush and trees (0.03 to 0.065). Manning's Roughness Coefficients were adjusted in the main channel from the 2003 LOMR to reflect current field conditions. The most notable changes occurred in the main channel, because of the construction and widening of the I-5/ I-805 Bridges the vegetation growth was removed and the shade from the structures will hinder its re-growth in the future. These changes lowered the Manning's values within the main channel from that of the 2003 LOMR.

Figure 6: Beneath I-805 Bridges showing the North I-5 Bridge Piers, Cross Section #1578, n = 0.03 (Earth bottom and rubble sides).

2.3.3 Starting Water Surface Elevation:

The Los Penasquitos Creek model was run under a subcritical flow regime with a downstream starting water surface elevation, at Soledad Canyon FEMA cross section AC, of 36.53 ft (NAVD 88).

2.3.4 Discharge:

A flow of 16,800 cfs was input as the peak 100-year storm discharge, as identified in the Los Penasquitos Creek Flood Insurance Study (see Appendix A). The discharge was increased to 19,000 cfs at the downstream boundary cross section, to model the backwater effects from the confluence with Soledad Canyon.

2.4 HEC-RAS OUTPUT

The water surface elevations which are displayed in the Appendices and Output of this study are based on flooding that would occur during the peak 100-year storm event. Appendix B contains water surface elevations of each cross section, as well as other hydraulic results for comparison. As shown in Table A, no substantial increase to the existing 100-year floodplain would result from the proposed I-5 Flyover Bridge. Possible impacts are only expected from and during construction of the proposed bridge (see *Los Penasquitos Creek Cross Section Locations* exhibit).

TABLE A: EXISTING AND PROPOSED FLOODPLAIN COMPARISON

FEMA XS	River Station	Q Total (cfs)	Existing W.S. Elev. (ft)	Proposed W.S. Elev. (ft)	Change in Elevation (ft)	Existing Top Width (ft)	Proposed Top Width (ft)	Change in Width (ft)
H	**4337**	16800	47.65	47.65	0.00	1039.43	1039.43	0
	3919	16800	46.23	46.23	0.00	838.7	838.7	0
G	**3639**	16800	45.62	45.62	0.00	662.35	662.35	0
F	**3242**	16800	44.63	44.63	0.00	549.02	549.02	0
E	**2903**	16800	43.77	43.77	0.00	1246.44	1246.44	0
D	**2488**	16800	43.12	43.12	0.00	1382.44	1382.44	0
C	**2291**	16800	43.16	43.16	0.00	1580.49	1580.5	0.01
	2040	16800	42.91	42.91	0.00	1578.54	1578.54	0
B	**1952**	16800	42.17	42.17	0.00	1587.42	1587.43	0.01
	1888	16800	41.79	41.79	0.00	1138.04	1138.05	0.01
	1850	**Vista Sorrento Parkway Bridge**						
	1809	16800	41.30	41.30	0.00	1078.92	1078.92	0
	1783	16800	40.91	40.91	0.00	606.55	606.55	0
	1780	16800	40.86	40.86	0.00	582.44	582.44	0
	1777	16800	40.87	40.87	0.00	604.79	604.79	0
	1659	16800	40.82	40.82	0.00	214.85	214.85	0
	1656	16800	40.43	40.43	0.00	189.67	189.67	0
	1653	16800	40.63	40.63	0.00	213.32	213.32	0
	1626	**I-805 northbound Bridge**						
	1585	16800	39.77	39.77	0.00	181.63	181.63	0
	1581	16800	39.76	39.76	0.00	181.57	181.57	0
	1578	16800	38.70	38.70	0.00	152.49	152.49	0
	1575	16800	39.25	39.25	0.00	178.14	178.14	0
	1537	**I-805 southbound Bridge**						
	1493	16800	38.16	38.16	0.00	161	161	0
	1408	16800	37.84	37.84	0.00	165.89	165.9	0.01
	1402	16800	37.82	37.82	0.00	165.75	157.44	-8.31
	1397	16800	37.80	37.80	0.00	165.61	165.61	0
	1360	16800	37.93	37.93	0.00	159.57	159.57	0
	1357	16800	37.76	37.76	0.00	151.89	151.89	0
	1353	16800	37.83	37.83	0.00	159.19	159.19	0
	1278	**I-5 southbound Bridge**						
	1181		36.15	36.15	0.00	332.64	332.64	0
*AC**	**931**	19000	36.53	36.53	0.00	950.58	950.58	0

*** FEMA cross section taken from the FEMA designated Soledad Canyon Floodplain.**

2.4.1 Warning Messages

Divided flow computed for this cross section, was displayed at cross section # 4337, #2903, #1888, #1809, #1783, #1780, #1777, #1656, #1578, #1402, #1357, and #931. This occurred due to areas of the commercial properties south of the creek and the earthen berm alongside the creek, within the floodplain, being above and below the 100-year water surface elevation. The floodwaters are able to flow around these high points, creating small islands throughout the study area, effectively dividing the flow.

The conveyance ratio (upstream conveyance divided by downstream conveyance) is less than 0.7 or greater than 1.4. This may indicate the need for additional cross sections, displayed at cross sections #4337, ##2488, #2040, #1888, #1659, #1656, #1581, #1578 and #1181. These warnings are appropriate as the size of the cross sections change drastically in these ranges. Portions of the Los Penasquitos Creek were relatively uniform and allowed for cross sections to be placed several hundred feet apart.

The velocity head has changed by more than 0.5 feet (0.15 m). This may indicate the need for additional cross sections, displayed at cross sections #4337, #2040, #1581, #1578 and #1181. This message is common at obstructions such as bridges, piers and inundated structures and additional cross sections are not normally added.

The energy loss was greater than 1.0 ft between the current and previous cross section. This may indicate the need for additional cross sections; was displayed at cross section #1181. This message is occurring at the cross section downstream of the bridges, where the creek widens before the confluence with Soledad Canyon.

2.5 RISK ASSESSMENT:

Within the Los Penasquitos Creek floodplain the I-5 Flyover Bridge would cause no increase to the water surface elevation upstream. The impacts to the floodplain would not be considered a significant or longitudinal encroachment. The 100-year flood currently causes property flooding within the project vicinity. The proposed bridge would not impact the existing flooding conditions, and there would be no increased risk to life or property associated with the improvements. No additional roadways would flood upstream of I-5, therefore no transportation routes will be interrupted or terminated, beyond existing conditions, due to the I-5 Bridge widening.

Encroachment is defined by the Federal Emergency Management Agency (FEMA) as "construction, placement of fill, or similar alteration of topography in the floodplain that reduces the area available to convey floodwaters," and by the Federal Highway Administration (FHWA) as "an action within the base floodplain" (*Environmental Handbook Vol. 1*). Since the Proposed I-5 Flyover Bridge would be entirely above the 100-yr floodplain, a minimal amount of permanent impacts will occur below the 100-year floodplain elevation. As proven in the hydraulic analysis provided in Appendix B, the addition of piers would not prevent the Los Penasquitos Creek from conveying the 100-year storm within the same limits as current conditions, both upstream and downstream of the proposed improvements. Although the

proposed work can be interpreted as an encroachment by both definitions, it is not a significant encroachment and does not create any greater risks.

Additionally, no floodplain values will be adversely impacted without mitigation. Natural and beneficial floodplain values, as defined in Chapter 17 "Definitions" in the Caltrans Standard Environmental Reference (SER), include fish, wildlife, plants, outdoor recreation, aquaculture, forestry, etc., that are found within a designated floodplain. Listed below are the beneficial uses of the San Elijo Lagoon obtained from the Water Quality Control Plan for the San Diego Basin along with a short description and determination of impacts.

- Agricultural supply. This includes the uses of water for farming, horticulture, or ranching including, but not limited to, irrigation, stock watering, or support of vegetation for range grazing. There are no agricultural uses within the proposed construction area of the I-5 Flyover Bridge, and therefore no impact is anticipated from the proposed bridge.

- Contact and non-contact water recreation. This includes the uses of water for recreational activities involving proximity to water and contact with water, where ingestion of water is reasonably possible. These uses include, but are not limited to, swimming, wading, water-skiing, skin and SCUBA diving, diving, surfing, white water activities, fishing, use of natural hot springs, picnicking, sunbathing, hiking, beachcombing, camping, boating, tide pool and marine life study, hunting, sightseeing, or aesthetic enjoyment in conjunction with the above activities. The construction of the I-5 Flyover Bridge will not have any effect on the creek's recreational uses.

- Warm freshwater habitat. This includes uses of water that support warm water ecosystems including, but not limited to, preservation or enhancement of aquatic habitats, vegetation, fish or wildlife, including invertebrates. Currently, a Natural Environment Study (NES) is being prepared to support the I-5 North Coast Widening Project. The NES will assess if any warm freshwater habitat may be impacted and what mitigation measures, if any, are needed.

- Cold freshwater habitat. This includes the uses of water that support cold water ecosystems including, but not limited to, preservation or enhancement of aquatic habitats, vegetation, fish, or wildlife, including invertebrates. The construction areas associated with the proposed bridge construction could possible have an impact to the biological habitats present beneath the I-5 and I-805 Bridges. The NES will assess if any biological habitats of special significance may be impacted and what mitigation measures, if any, are needed.

- Wildlife habitat. This includes uses of water that supports terrestrial ecosystems including, but not limited to, preservation and enhancement of terrestrial habitats, vegetation, wildlife, or wildlife water and food sources. The NES will assess if any wildlife habitat may be impacted and what mitigation measures, if any, are needed.

The proposed bridge has been designed to minimize disturbance to the floodplain. The bridge design has been through several iterations to select an alternative which is compatible with floodplain development and least harmful to the environment, while maintaining feasibility for improving I-5. Efforts should be made to limit the footprint of the construction site and reduce

construction time in order to minimize impacts to natural and beneficial floodplain values, hazards to human life, and property loss.

2.6 SUMMARY AND CONCLUSION:

Hydraulic models, topography, and floodplain working maps of Los Penasquitos Creek were obtained through coordination with Federal Emergency Management Agency (FEMA), Caltrans, the City of San Diego, and Chang Consultants. Flood Insurance Studies and a Letter of Map Revision for Vista Sorrento Parkway Bridge were attained from FEMA and from the technical contractor, Chang Consultants, who performed the study. The geometric data from the 2003 LOMR did not contain the most recent information available, and it was necessary to re-model the existing conditions. The recreated existing conditions model includes all seven bridges currently crossing the Los Penasquitos Creek within the project vicinity.

The piers of the I-5 Flyover Bridge would be placed in the outer limits of the overbanks. These improvements would not alter the ability of the Los Penasquitos Creek to convey the 100-year storm event, and no increase of the 100-year floodplain is anticipated from the proposed improvements. Impacts to floodplain values should be low. Necessary mitigation, if any, will be determined in the Environmental Document for the I-5 North Coast Widening Project.

APPENDIX A

Cross Section Locations Exhibits

Flood Insurance Rate Map (FIRM)

Flood Insurance Study (FIS)

Summary of Discharges

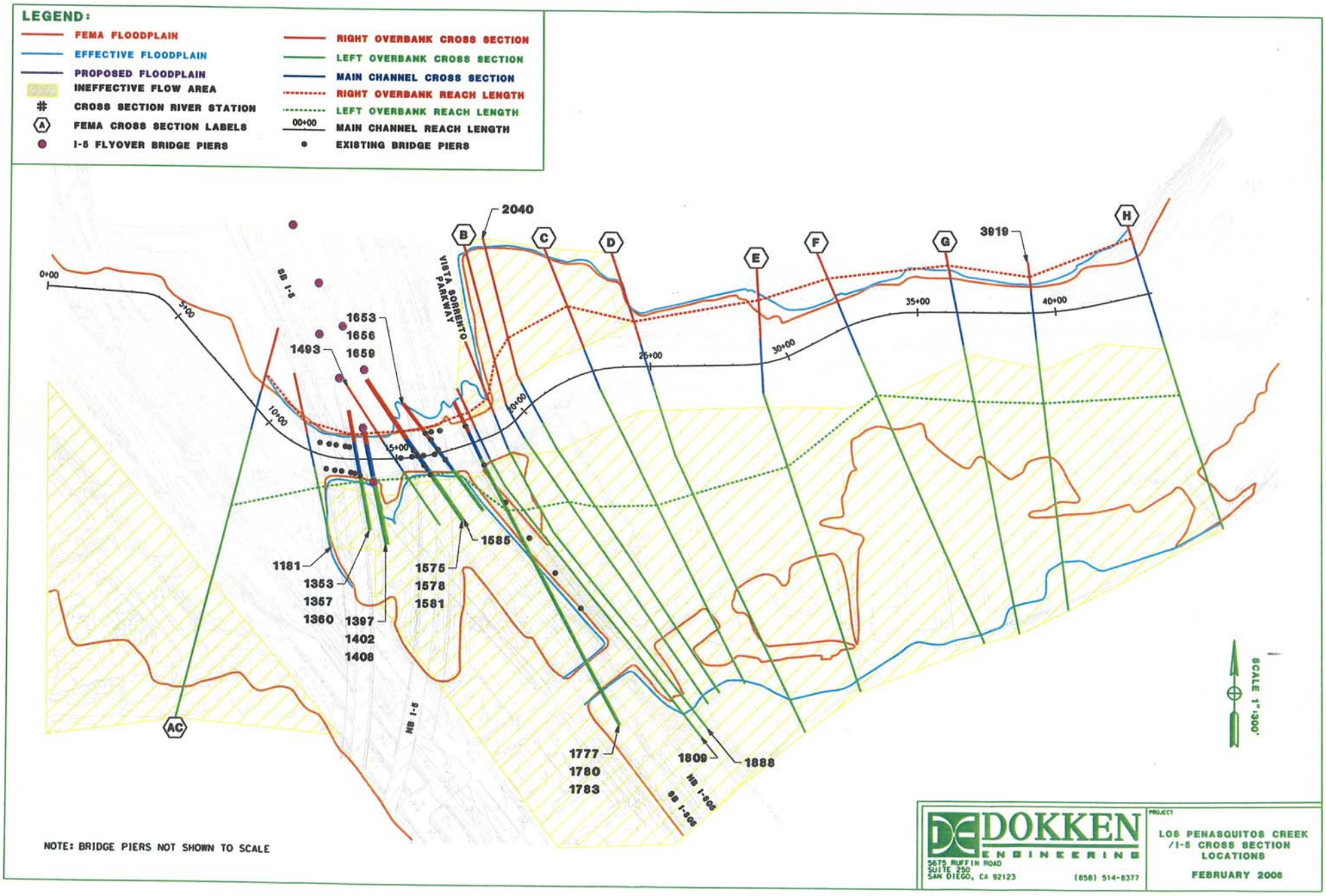
LEGEND:
FEMA FLOODPLAIN
EFFECTIVE FLOODPLAIN
PROPOSED FLOODPLAIN
INEFFECTIVE FLOW AREA
CROSS SECTION RIVER STATION
A FEMA CROSS SECTION LABELS
I-5 FLYOVER BRIDGE PIERS
RIGHT OVERBANK CROSS SECTION
LEFT OVERBANK CROSS SECTION
MAIN CHANNEL CROSS SECTION
RIGHT OVERBANK REACH LENGTH
LEFT OVERBANK REACH LENGTH
00+00 MAIN CHANNEL REACH LENGTH
EXISTING BRIDGE PIERS
0+00
5+00
10+00
15+00
20+00
25+00
30+00
35+00
40+00
SB I-5
NB I-5
VISTA SORRENTO PARKWAY
NB I-805
SB I-805
B
C
D
E
F
G
H
AC
2040
3919
1653
1656
1659
1493
1181
1353
1357
1360
1397
1402
1408
1575
1578
1581
1585
1777
1780
1783
1809
1888
SCALE 1"=300'
NOTE: BRIDGE PIERS NOT SHOWN TO SCALE
DOKKEN ENGINEERING
5675 RUFFIN ROAD
SUITE 250
SAN DIEGO, CA 92123
(858) 514-8377
PROJECT
LOS PENASQUITOS CREEK
/I-5 CROSS SECTION
LOCATIONS
FEBRUARY 2008

LEGEND:

- FEMA FLOODPLAIN
- EFFECTIVE FLOODPLAIN
- PROPOSED FLOODPLAIN
- INEFFECTIVE FLOW AREA
- # CROSS SECTION RIVER STATION
- (A) FEMA CROSS SECTION LABELS
- I-5 FLYOVER BRIDGE PIERS
- RIGHT OVERBANK CROSS SECTION
- LEFT OVERBANK CROSS SECTION
- MAIN CHANNEL CROSS SECTION
- RIGHT OVERBANK REACH LENGTH
- LEFT OVERBANK REACH LENGTH
- 00+00 MAIN CHANNEL REACH LENGTH
- EXISTING BRIDGE PIERS

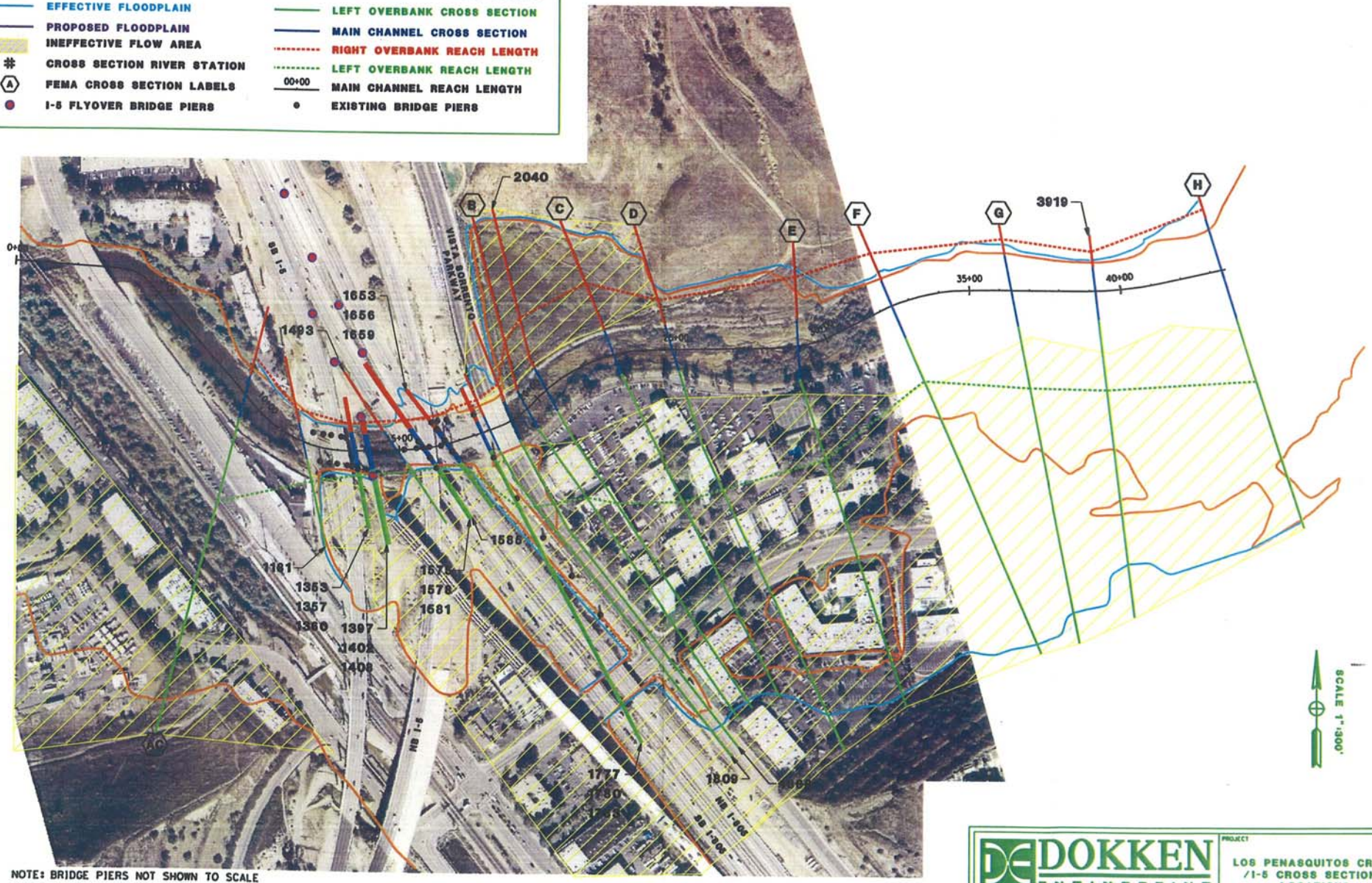

NOTE: BRIDGE PIERS NOT SHOWN TO SCALE

DOKKEN ENGINEERING
5675 RUFFIN ROAD
SUITE 250
SAN DIEGO, CA 92123
(858) 514-8377

PROJECT
LOS PENASQUITOS CREEK
/I-5 CROSS SECTION
LOCATIONS

FEBRUARY 2006

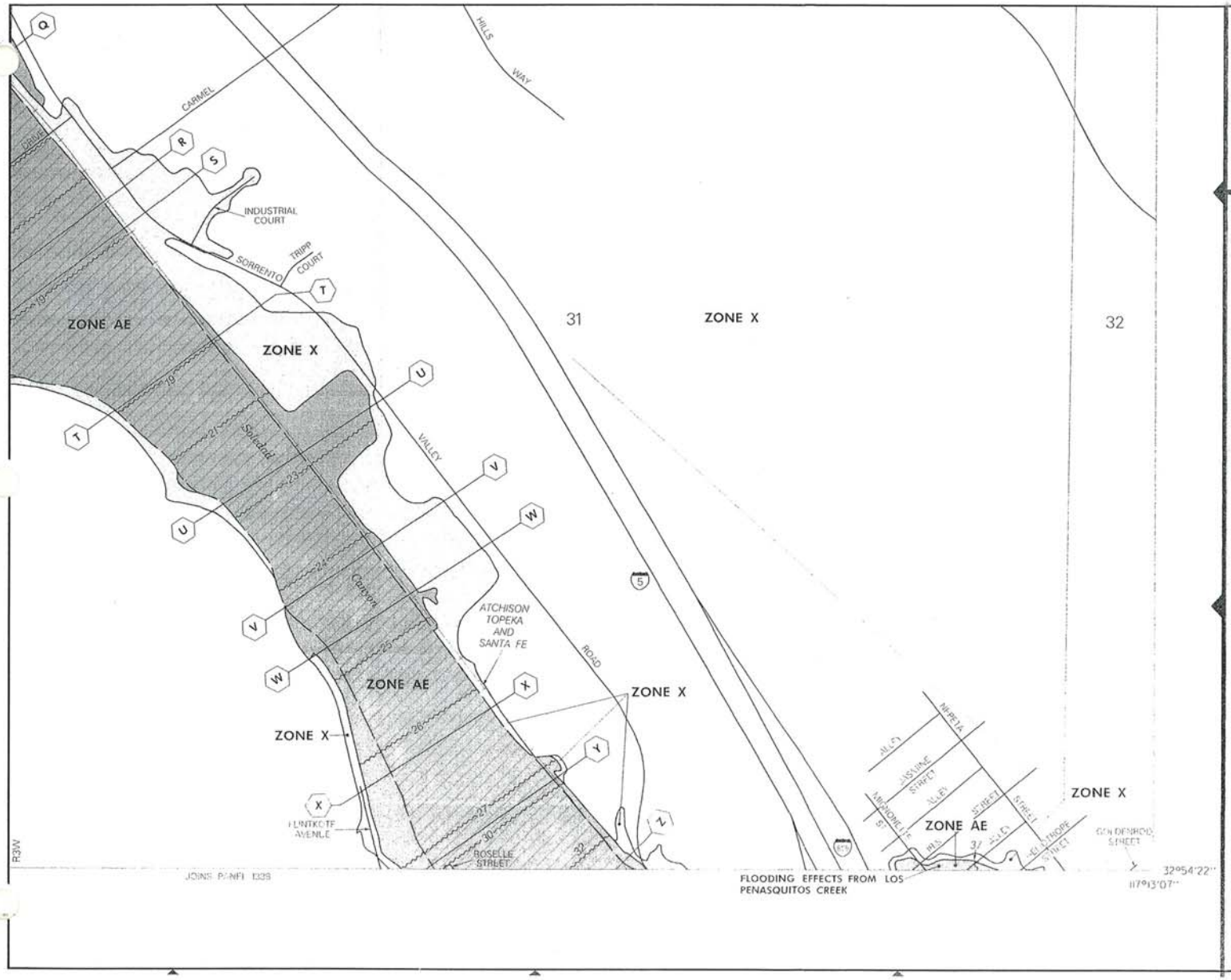

APPROXIMATE SCALE IN FEET

500 0 500

NATIONAL FLOOD INSURANCE PROGRAM

FIRM

FLOOD INSURANCE RATE MAP

SAN DIEGO COUNTY, CALIFORNIA AND INCORPORATED AREAS

PANEL 1336 OF 2375

(SEE MAP INDEX FOR PANELS NOT PRINTED)

CONTAINS COMMUNITY	NUMBER	PANEL	SUFFIX
SAN DIEGO CITY OF	060295	1336	F
SAN DIEGO COUNTY UNINCORPORATED AREAS	060284	1336	F

MAP NUMBER 06073C1336 F

EFFECTIVE DATE: JUNE 19, 1997

Federal Emergency Management Agency

This is an official copy of a portion of the above referenced flood map. It was extracted using F-MIT On-Line. This map does not reflect changes or amendments which may have been made subsequent to the date on the title block. For the latest product information about National Flood Insurance Program flood maps check the FEMA Flood Map Store at www.msc.fema.gov

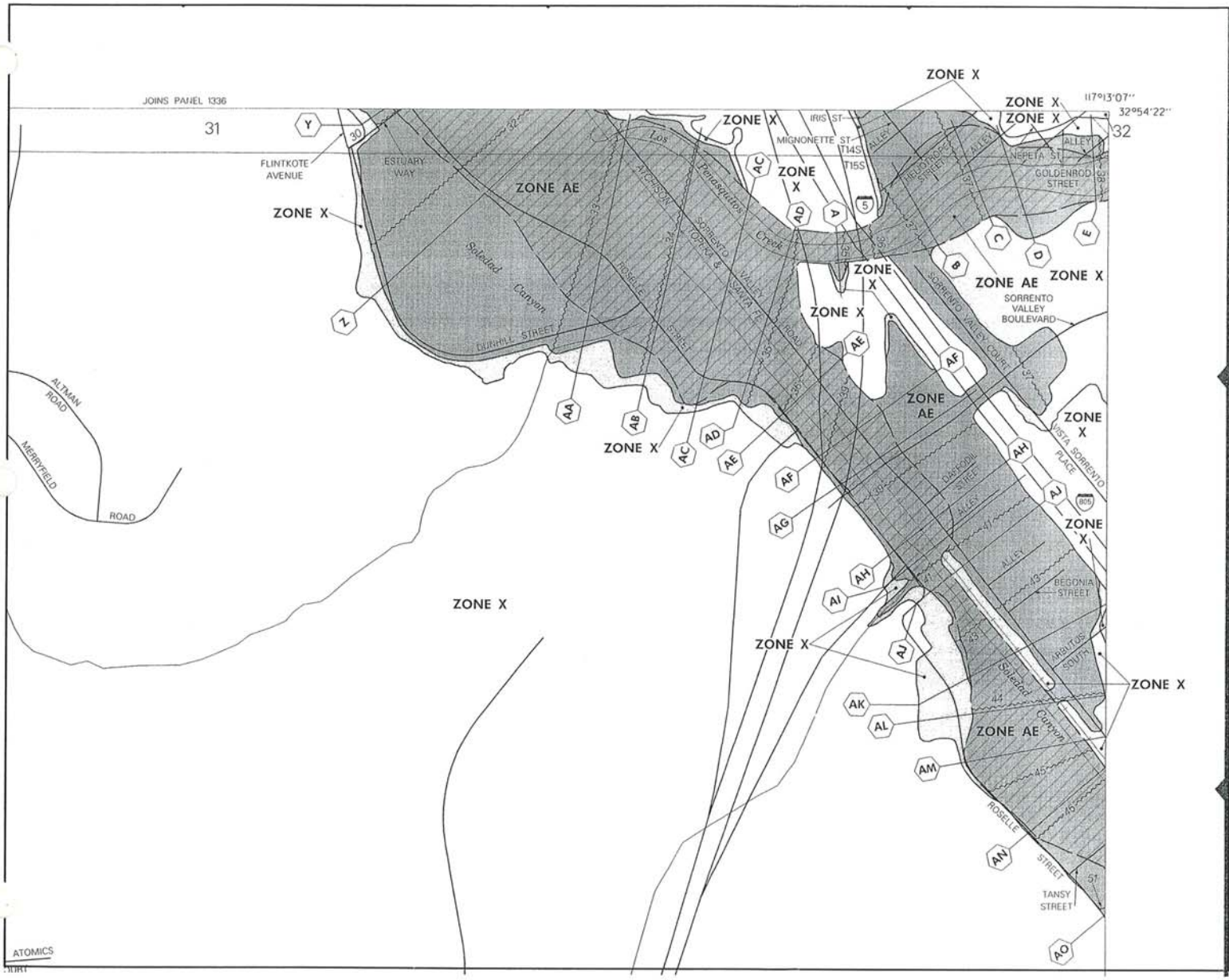

APPROXIMATE SCALE IN FEET

500 0 500

NATIONAL FLOOD INSURANCE PROGRAM

FIRM

FLOOD INSURANCE RATE MAP

SAN DIEGO COUNTY, CALIFORNIA AND INCORPORATED AREAS

PANEL 1338 OF 2375

(SEE MAP INDEX FOR PANELS NOT PRINTED)

COMMUNITY NUMBER PANEL SUFFIX

MAP NUMBER
06073C1338 F

EFFECTIVE DATE:
JUNE 19, 1997

Federal Emergency Management Agency

This is an official copy of a portion of the above referenced flood map. It was extracted using F-MIT On-Line. This map does not reflect changes or amendments which may have been made subsequent to the date on the title block. For the latest product information about National Flood Insurance Program flood maps check the FEMA Flood Map Store at www.msc.fema.gov

APPROXIMATE SCALE IN FEET

500 0 500

NATIONAL FLOOD INSURANCE PROGRAM

FIRM

FLOOD INSURANCE RATE MAP

SAN DIEGO COUNTY, CALIFORNIA AND INCORPORATED AREAS

PANEL 1339 OF 2375

(SEE MAP INDEX FOR PANELS NOT PRINTED)

COMMUNITY	NUMBER	PANEL	SUFFIX
SAN DIEGO, CITY OF	140040	1339	F

MAP NUMBER
06073C1339 F

EFFECTIVE DATE:
JUNE 19, 1997

Federal Emergency Management Agency

This is an official copy of a portion of the above referenced flood map. It was extracted using F-MIT On-Line. This map does not reflect changes or amendments which may have been made subsequent to the date on the title block. For the latest product information about National Flood Insurance Program flood maps check the FEMA Flood Map Store at www.msc.fema.gov

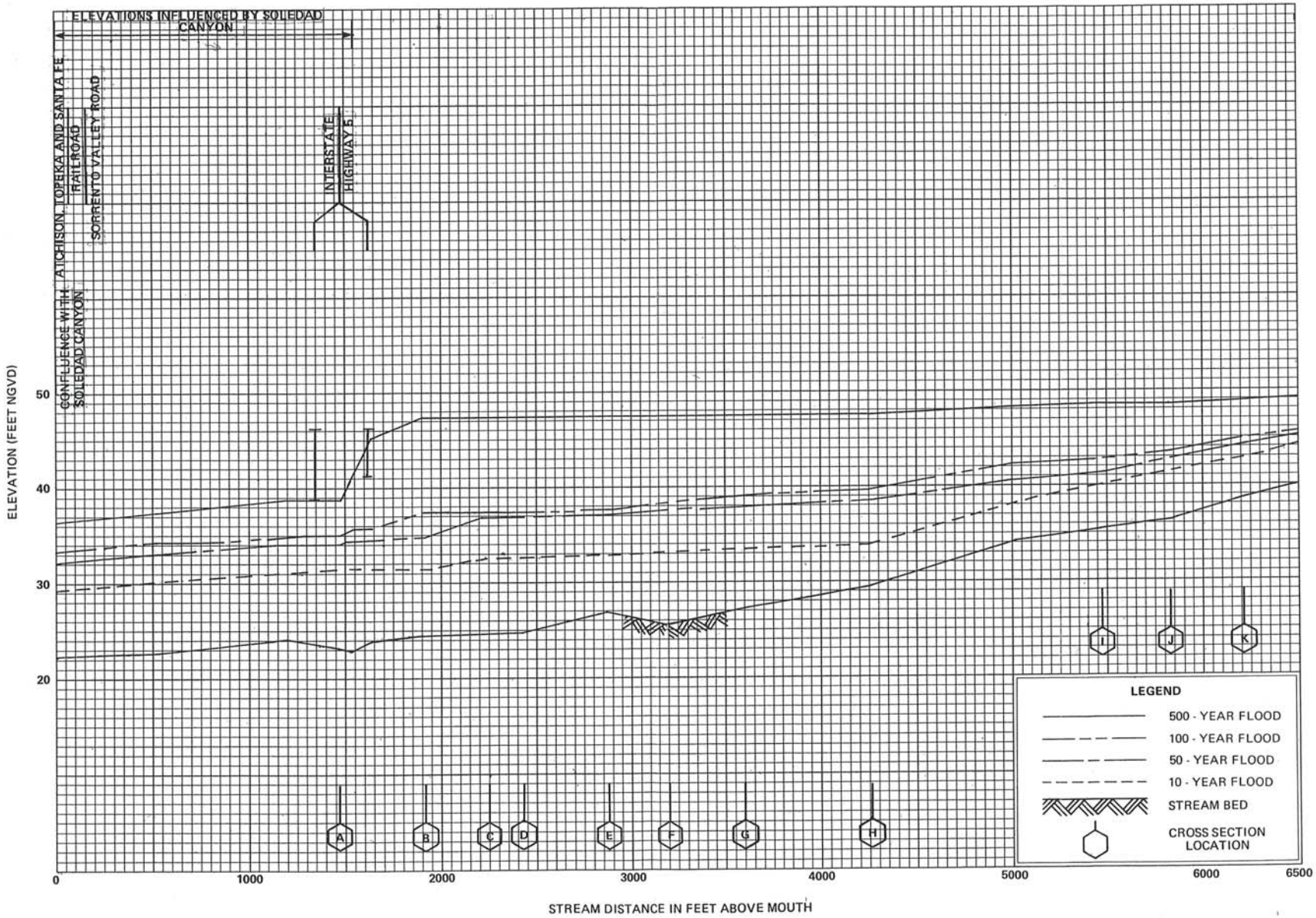

FLOOD PROFILES

LOS PENASQUITOS CREEK

FEDERAL EMERGENCY MANAGEMENT AGENCY

SAN DIEGO COUNTY, CA
AND INCORPORATED AREAS

170P

Table 4. Summary of Discharges (Cont'd)

Flooding Source and Location	Drainage Area (Square Miles)	Peak Discharges (cfs) 10-Year	50-Year	100-Year	500-Year
Las Puleta Creek					
At San Diego and Arizona Eastern Railroad	2.8	550	1,200	1,400	2,500
Downstream of Confluence with Logan Avenue Branch	1.5	300	730	870	1,690
At 47th Street	0.8	160	390	470	910
0.6 Mile Upstream of Cervantes Avenue	0.1	20	50	60	120
Lawson Valley Creek					
Approximately 7,200 Feet Upstream of Mouth	10.2	--[1]	--[1]	9,000	--[1]
Loma Alta Creek					
At Mouth	9.1	800	2,500	3,800	8,200
Downstream of El Camino Real	4.7	450	1,500	2,200	4,800
Upstream of El Camino Real	2.9	350	1,100	1,700	3,700
Los Penasquitos Creek					
Above Confluence with Soledad Canyon	58.3	3,700	11,300	16,800	37,600
At U.S. Highway 395	42.7	3,100	10,000	15,400	35,800
Upstream of Confluence with Chicarita Creek	33.6	2,500	8,700	14,000	34,000
Lusardi Creek					
At Mouth	8.6	--[1]	--[1]	5,680	--[1]
Mexican Canyon Creek					
At Confluence with Sweetwater River	4.7	360	1,480	2,250	3,300
At U.S. Highway 94, 9,600 Feet Upstream of Confluence	2.0	160	700	1,060	1,470

[1]Data Not Available

Table 4. Summary of Discharges (Cont'd)

Flooding Source and Location	Drainage Area (Square Miles)	Peak Discharges (cfs) 10-Year	50-Year	100-Year	500-Year
Shallow Flooding Area - North					
Midway Wash at Midway Drive Crossing of Escondido Creek	2.0	350	1,060	1,520	2,020
Lincoln Avenue and Midway Drive	1.7	290	920	1,310	1,750
Maywood Wash at Intersection of East Lincoln Avenue and Nightingale Place	1.3	230	720	1,020	1,350
Shallow Flooding Area - West					
Country Club Creek at El Norte Parkway, 1,100 Feet Northwest of Bennett Avenue	2.1	540	1,330	1,700	2,220
Country Club Creek at Nutmeg Street, 1,200 Feet North of Golden Circle Drive	0.3	70	200	260	350
Unnamed Tributary at Intersection of Golden Circle Drive and Country Club Lane	0.9	240	590	770	990
Slaughterhouse Creek					
Approximately 1,800 Feet Upstream of Mouth	2.9	--[1]	--[1]	2,450	--[1]
Soledad Canyon					
At Mouth	95.5	5,000	15,400	23,000	51,500
Downstream of Confluence with Los Penasquitos Creek	76.1	4,200	13,100	19,000	43,700
South Branch Poway Creek					
Approximately 1,150 Feet Upstream of Sycamore Canyon Road	1.8	400	1,200	1,800	4,300
South Fork Moosa Canyon Creek					
0.3 Mile Above Mouth	7.1	1,200[2]	3,400	5,200[2]	10,400
At Oak Shadows Drive	4.3	700	2,100	3,200	6,500

[1]Data Not Available
[2]Flow Partially Controlled by Turner Dam

APPENDIX B

Results Summary

HEC-RAS Cross Section Input/Output

Existing

Proposed

EXISTING

HEC-RAS Plan: ExistNoClog River: Los Penasquitos Reach: Lower Profile: 100-yr

Reach	River Sta	Profile	Q Total	Min Ch El	W.S. Elev	Crit W.S.	E.G. Elev	E.G. Slope	Vel Chnl	Flow Area	Top Width	Froude # Chl
			(cfs)	(ft)	(ft)	(ft)	(ft)	(ft/ft)	(ft/s)	(sq ft)	(ft)	
Lower	4337.4	100-yr	16800.00	32.23	47.65		47.93	0.001175	4.29	4015.86	1039.43	0.22
Lower	3918.5	100-yr	16800.00	31.33	46.23		47.03	0.004128	7.36	2370.01	838.70	0.39
Lower	3639.3	100-yr	16800.00	30.83	45.62		46.10	0.002292	5.63	3038.88	662.35	0.29
Lower	3241.5	100-yr	16800.00	29.93	44.63		45.16	0.002466	6.02	2966.66	549.02	0.30
Lower	2903.2	100-yr	16800.00	29.33	43.77		44.32	0.002418	6.09	2957.39	1246.44	0.30
Lower	2488.4	100-yr	16800.00	28.13	43.12		43.58	0.001293	5.88	3270.34	1382.44	0.29
Lower	2290.5	100-yr	16800.00	28.13	43.16		43.34	0.000469	3.60	5008.78	1580.49	0.17
Lower	2040.2	100-yr	16800.00	28.13	42.91		43.21	0.000563	3.91	4033.69	1578.54	0.19
Lower	1951.5	100-yr	16800.00	28.13	42.17	36.68	43.07	0.001513	7.92	2309.75	1587.42	0.38
Lower	1888	100-yr	16800.00	28.13	41.79	36.72	42.93	0.001873	8.78	2045.83	1138.04	0.43
Lower	1850		Bridge									
Lower	1808.5	100-yr	16800.00	28.13	41.30		42.52	0.002113	9.26	1980.73	1078.92	0.46
Lower	1782.95	100-yr	16800.00	28.13	40.91	36.93	42.42	0.002665	10.48	1863.78	606.55	0.52
Lower	1780.2	100-yr	16800.00	28.13	40.86	36.88	42.41	0.002720	10.56	1814.66	582.44	0.52
Lower	1777.45	100-yr	16800.00	28.13	40.87	36.93	42.39	0.002697	10.52	1855.73	604.79	0.52
Lower	1658.9	100-yr	16800.00	27.93	40.82		41.99	0.002099	8.92	2053.16	214.85	0.45
Lower	1656.1	100-yr	16800.00	27.93	40.43		41.94	0.005024	10.18	1756.90	189.67	0.52
Lower	1653.3	100-yr	16800.00	27.93	40.63	36.27	41.84	0.002222	9.08	2012.58	213.32	0.46
Lower	1626		Bridge									
Lower	1584.6	100-yr	16800.00	25.93	39.77		41.31	0.001611	10.01	1756.61	181.63	0.52
Lower	1581	100-yr	16800.00	25.93	39.76		41.30	0.001616	10.02	1754.99	181.57	0.52
Lower	1578.2	100-yr	16800.00	25.93	38.70		41.20	0.005637	12.77	1356.67	152.49	0.71
Lower	1575.4	100-yr	16800.00	25.93	39.25	35.82	40.95	0.001894	10.52	1662.24	178.14	0.56
Lower	1537		Bridge									
Lower	1492.7	100-yr	16800.00	25.93	38.16		40.17	0.002237	11.50	1547.22	161.00	0.61
Lower	1407.6	100-yr	16800.00	25.93	37.84		39.96	0.002265	11.85	1524.07	165.89	0.62
Lower	1402.1	100-yr	16800.00	25.93	37.82		39.95	0.002278	11.88	1521.04	165.75	0.62
Lower	1396.6	100-yr	16800.00	25.93	37.80		39.94	0.002291	11.90	1518.09	165.61	0.62
Lower	1360	100-yr	16800.00	25.13	37.93		39.78	0.001852	11.14	1632.16	159.57	0.57
Lower	1356.5	100-yr	16800.00	25.13	37.76		39.76	0.002007	11.48	1558.04	151.89	0.59
Lower	1353	100-yr	16800.00	25.13	37.83	34.37	39.72	0.001904	11.23	1616.94	159.19	0.57
Lower	1278		Bridge									
Lower	1181.3	100-yr	16800.00	25.13	36.15	34.25	38.56	0.003008	12.74	1474.60	332.64	0.70
Lower	931.4	100-yr	19000.00	25.13	36.53	34.38	37.26	0.001183	8.21	4104.13	950.58	0.44

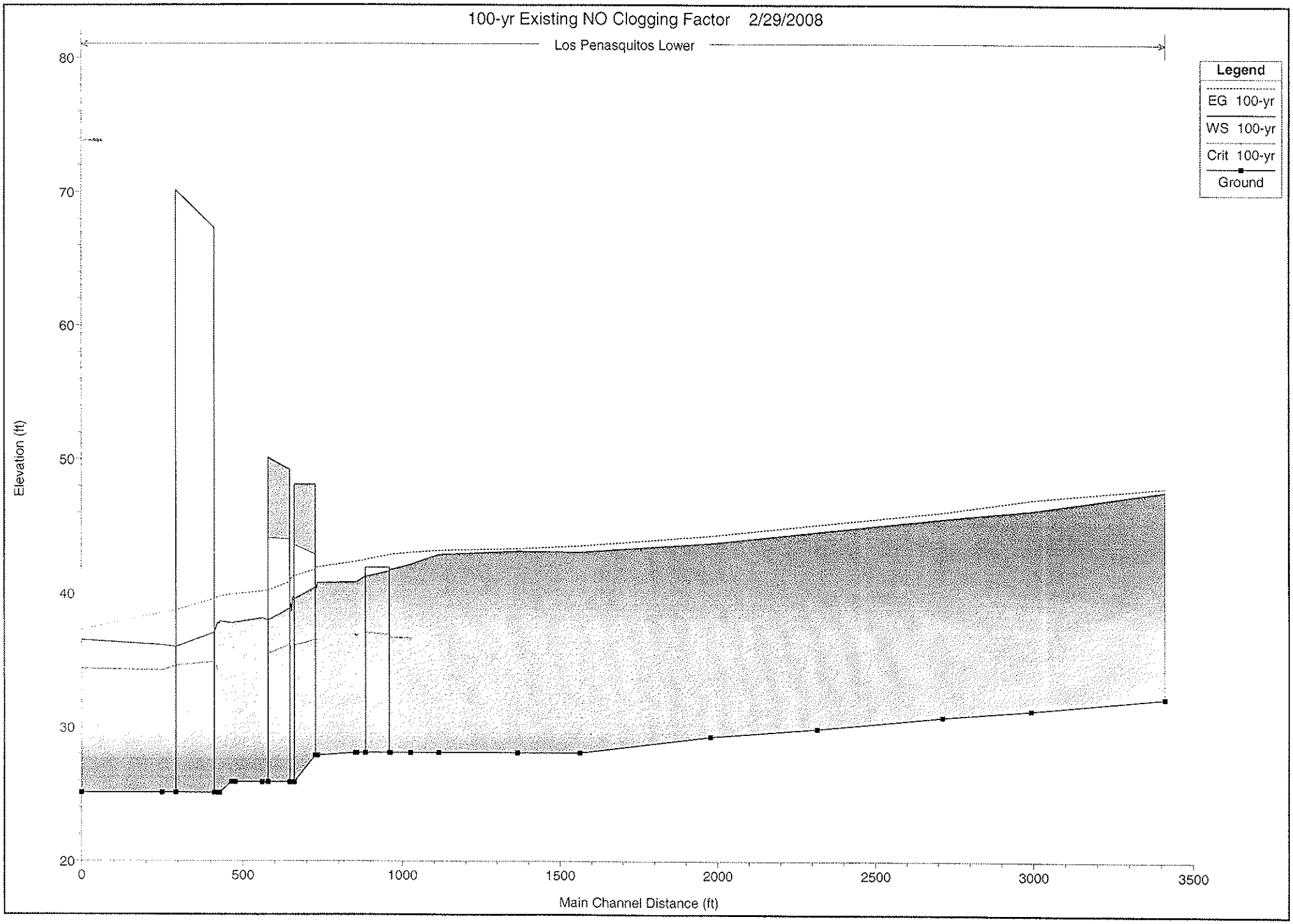
100-yr Existing NO Clogging Factor 2/29/2008
Los Penasquitos Lower
Legend
EG 100-yr
WS 100-yr
Crit 100-yr
Ground
Elevation (ft)
80
70
60
50
40
30
20
0
500
1000
1500
2000
2500
3000
3500
Main Channel Distance (ft)

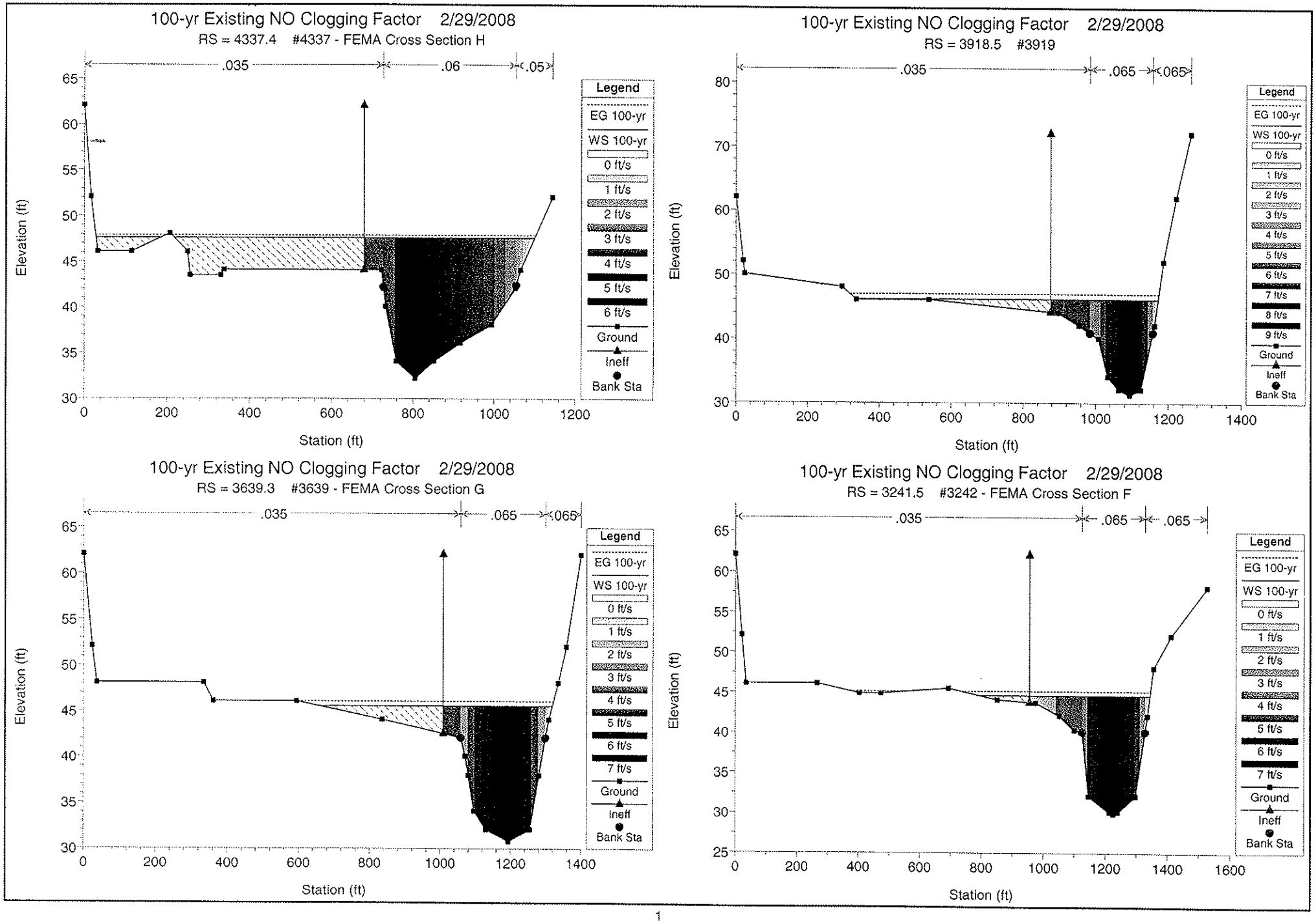
100-yr Existing NO Clogging Factor 2/29/2008
RS = 4337.4 #4337 - FEMA Cross Section H
.035
.06
.05
Elevation (ft)
Station (ft)
Legend
EG 100-yr
WS 100-yr
0 ft/s
1 ft/s
2 ft/s
3 ft/s
4 ft/s
5 ft/s
6 ft/s
Ground
Ineff
Bank Sta
100-yr Existing NO Clogging Factor 2/29/2008
RS = 3918.5 #3919
.035
.065
.065
Elevation (ft)
Station (ft)
Legend
EG 100-yr
WS 100-yr
0 ft/s
1 ft/s
2 ft/s
3 ft/s
4 ft/s
5 ft/s
6 ft/s
7 ft/s
8 ft/s
9 ft/s
Ground
Ineff
Bank Sta
100-yr Existing NO Clogging Factor 2/29/2008
RS = 3639.3 #3639 - FEMA Cross Section G
.035
.065
.065
Elevation (ft)
Station (ft)
Legend
EG 100-yr
WS 100-yr
0 ft/s
1 ft/s
2 ft/s
3 ft/s
4 ft/s
5 ft/s
6 ft/s
7 ft/s
Ground
Ineff
Bank Sta
100-yr Existing NO Clogging Factor 2/29/2008
RS = 3241.5 #3242 - FEMA Cross Section F
.035
.065
.065
Elevation (ft)
Station (ft)
Legend
EG 100-yr
WS 100-yr
0 ft/s
1 ft/s
2 ft/s
3 ft/s
4 ft/s
5 ft/s
6 ft/s
7 ft/s
Ground
Ineff
Bank Sta

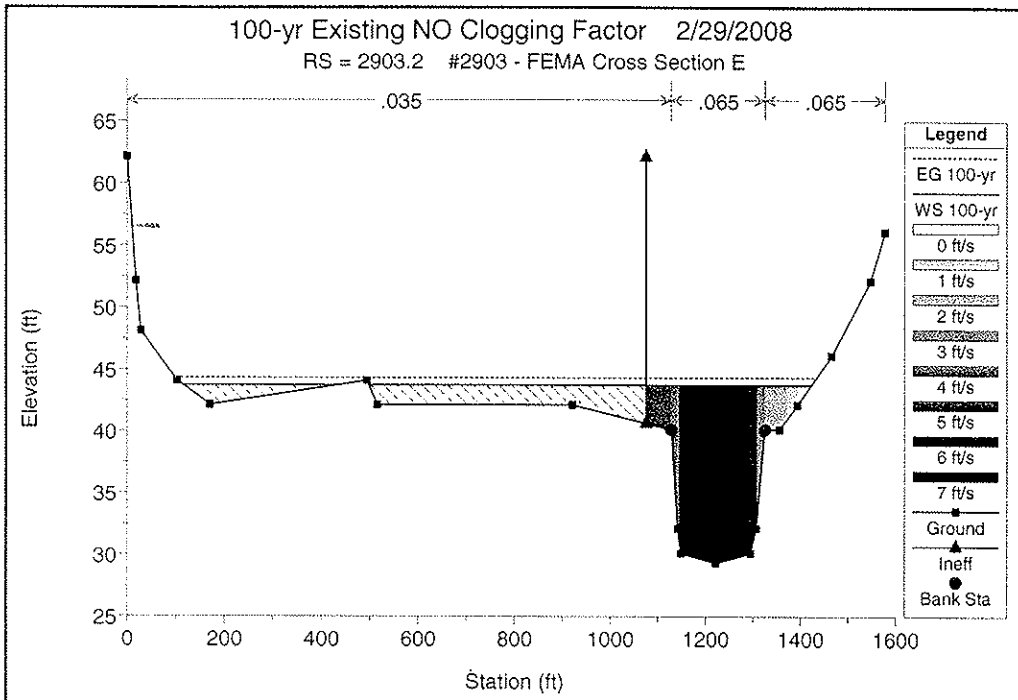
100-yr Existing NO Clogging Factor 2/29/2008
RS = 2903.2 #2903 - FEMA Cross Section E
.035
.065
.065
Elevation (ft)
Station (ft)
Legend
EG 100-yr
WS 100-yr
0 ft/s
1 ft/s
2 ft/s
3 ft/s
4 ft/s
5 ft/s
6 ft/s
7 ft/s
Ground
Ineff
Bank Sta

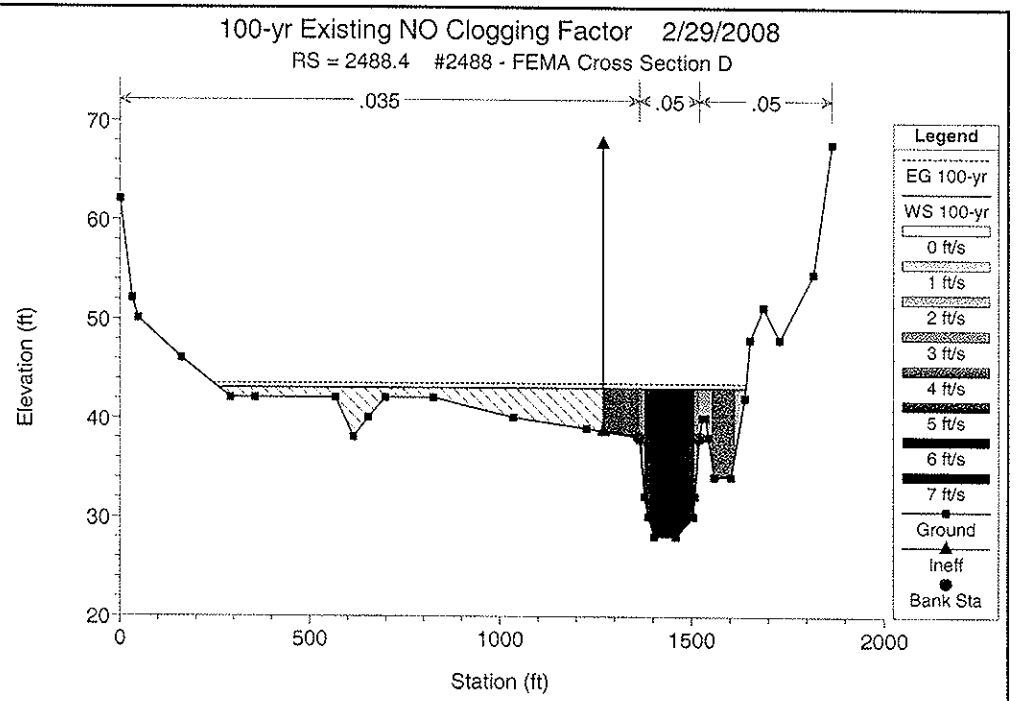
100-yr Existing NO Clogging Factor 2/29/2008
RS = 2488.4 #2488 - FEMA Cross Section D
.035
.05
.05
Elevation (ft)
Station (ft)
Legend
EG 100-yr
WS 100-yr
0 ft/s
1 ft/s
2 ft/s
3 ft/s
4 ft/s
5 ft/s
6 ft/s
7 ft/s
Ground
Ineff
Bank Sta

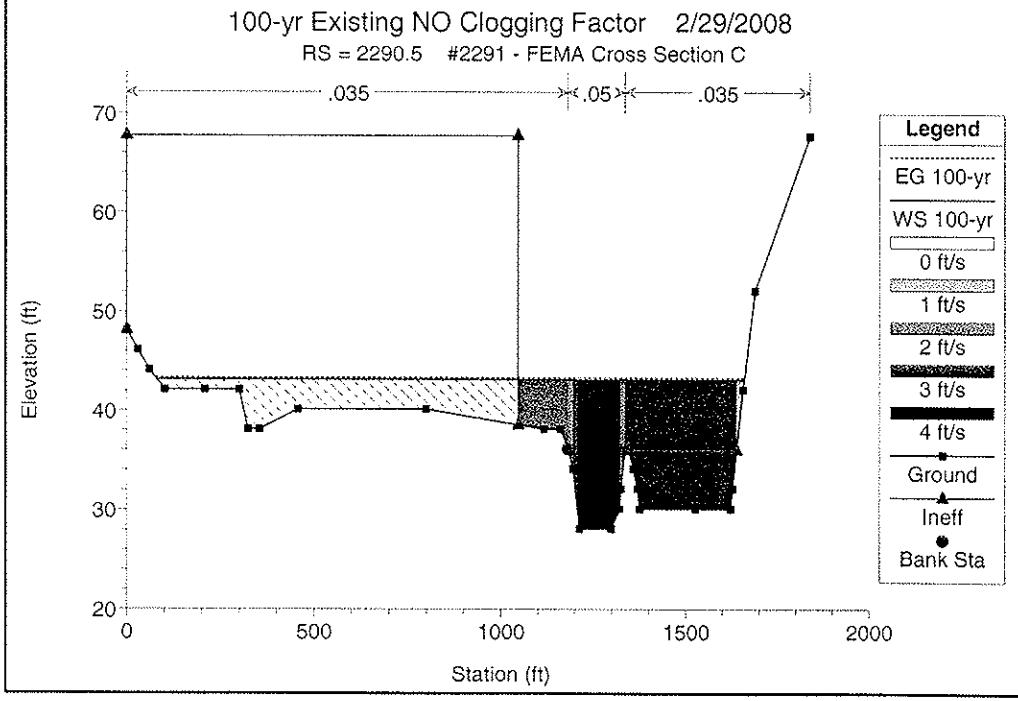
100-yr Existing NO Clogging Factor 2/29/2008
RS = 2290.5 #2291 - FEMA Cross Section C
.035
.05
.035
Elevation (ft)
Station (ft)
Legend
EG 100-yr
WS 100-yr
0 ft/s
1 ft/s
2 ft/s
3 ft/s
4 ft/s
Ground
Ineff
Bank Sta

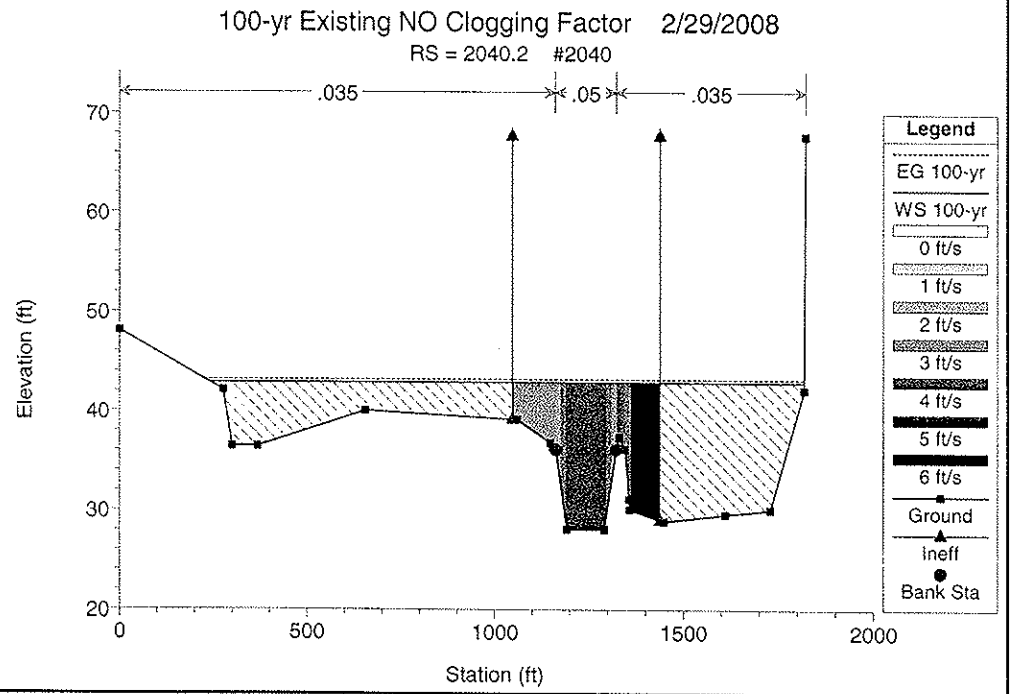
100-yr Existing NO Clogging Factor 2/29/2008
RS = 2040.2 #2040
.035
.05
.035
Elevation (ft)
Station (ft)
Legend
EG 100-yr
WS 100-yr
0 ft/s
1 ft/s
2 ft/s
3 ft/s
4 ft/s
5 ft/s
6 ft/s
Ground
Ineff
Bank Sta

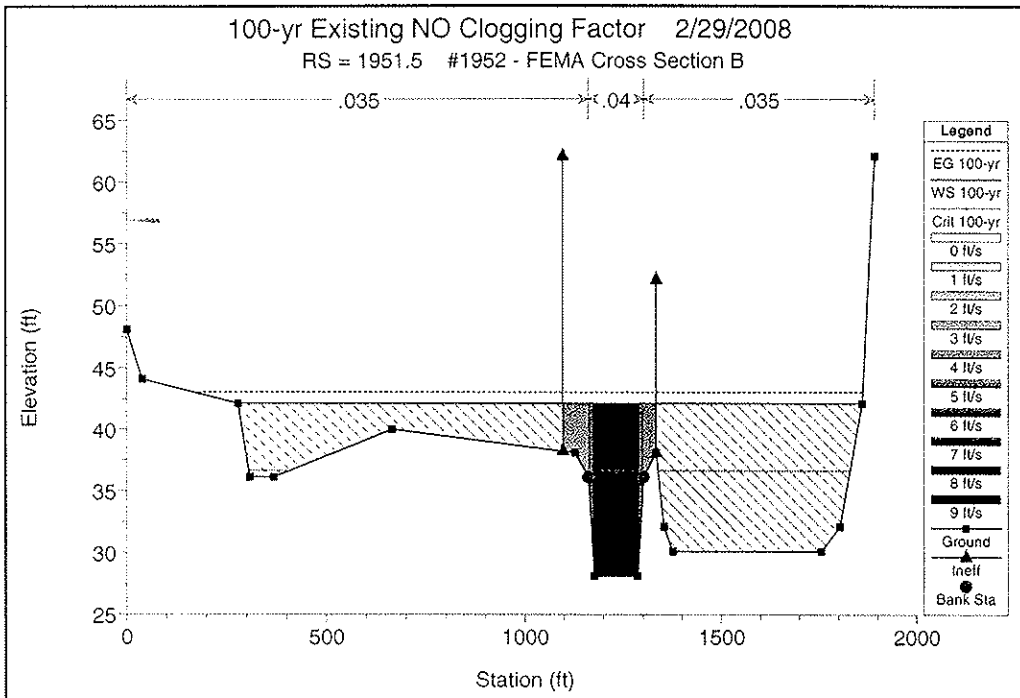
100-yr Existing NO Clogging Factor 2/29/2008
RS = 1951.5 #1952 - FEMA Cross Section B
.035
.04
.035
Elevation (ft)
Station (ft)
Legend
EG 100-yr
WS 100-yr
Crit 100-yr
0 ft/s
1 ft/s
2 ft/s
3 ft/s
4 ft/s
5 ft/s
6 ft/s
7 ft/s
8 ft/s
9 ft/s
Ground
Ineff
Bank Sta

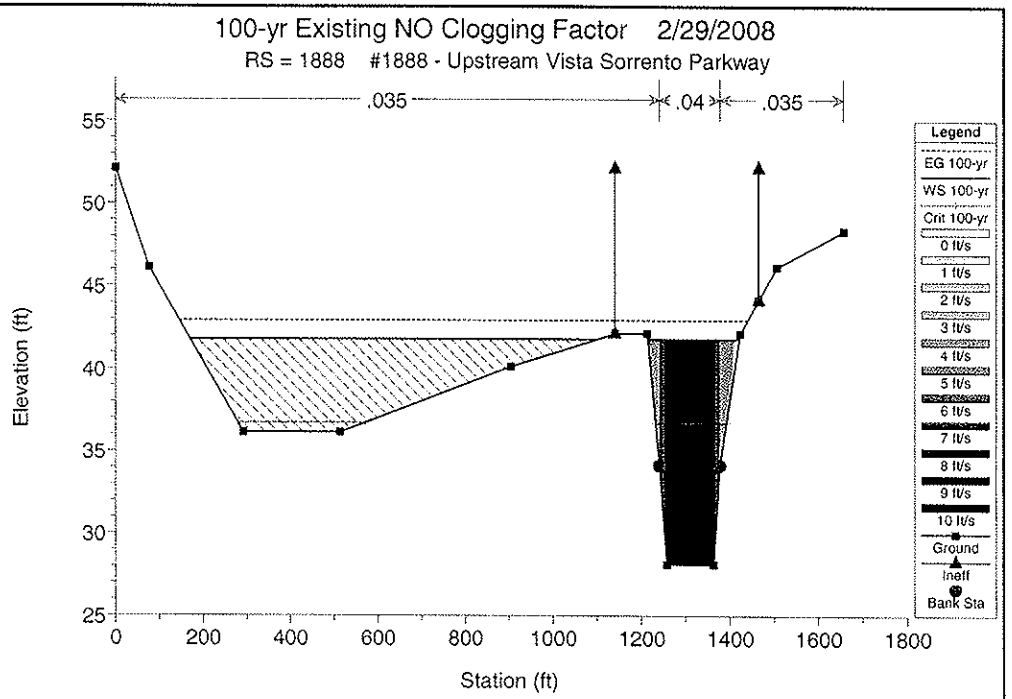
100-yr Existing NO Clogging Factor 2/29/2008
RS = 1888 #1888 - Upstream Vista Sorrento Parkway
.035
.04
.035
Elevation (ft)
Station (ft)
Legend
EG 100-yr
WS 100-yr
Crit 100-yr
0 ft/s
1 ft/s
2 ft/s
3 ft/s
4 ft/s
5 ft/s
6 ft/s
7 ft/s
8 ft/s
9 ft/s
10 ft/s
Ground
Ineff
Bank Sta

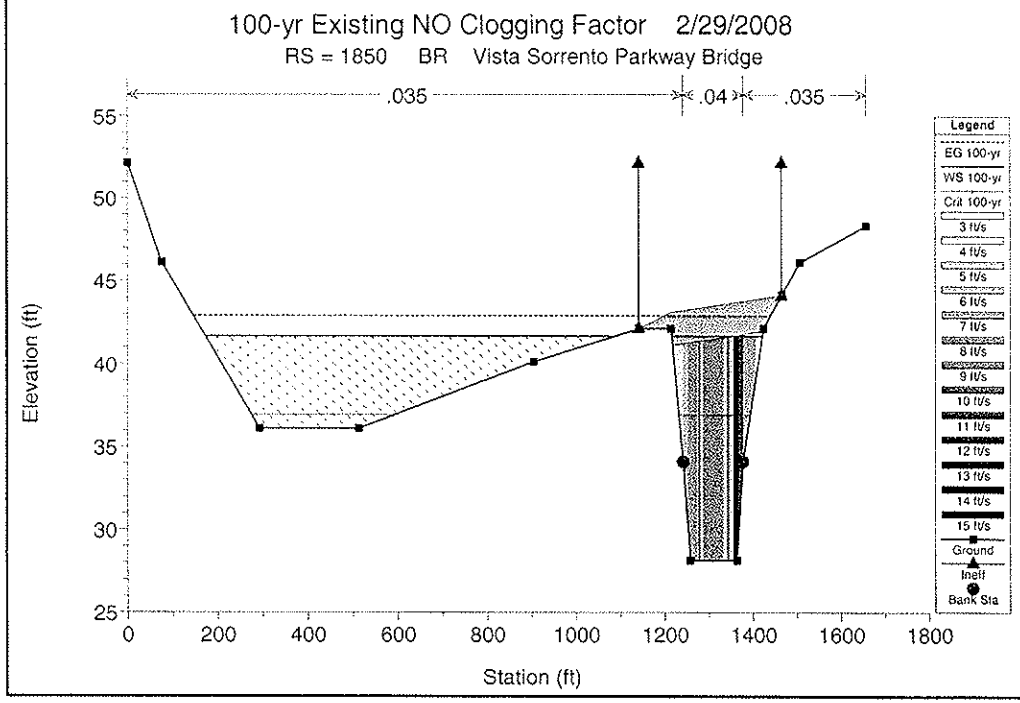
100-yr Existing NO Clogging Factor 2/29/2008
RS = 1850 BR Vista Sorrento Parkway Bridge
.035
.04
.035
Elevation (ft)
Station (ft)
Legend
EG 100-yr
WS 100-yr
Crit 100-yr
3 ft/s
4 ft/s
5 ft/s
6 ft/s
7 ft/s
8 ft/s
9 ft/s
10 ft/s
11 ft/s
12 ft/s
13 ft/s
14 ft/s
15 ft/s
Ground
Ineff
Bank Sta

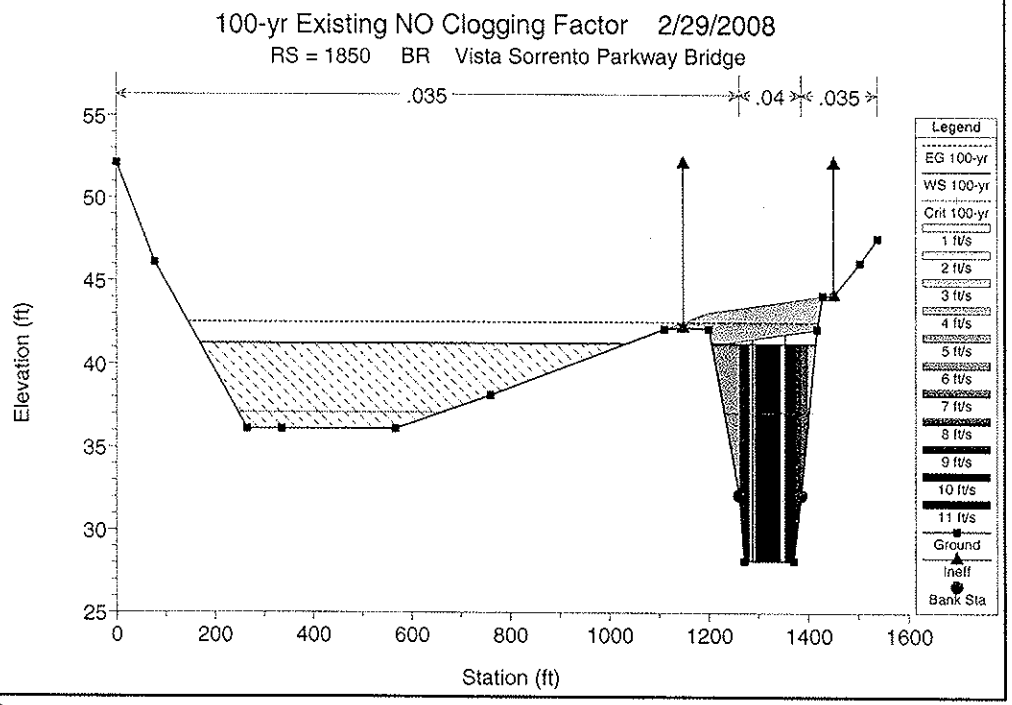
100-yr Existing NO Clogging Factor 2/29/2008
RS = 1850 BR Vista Sorrento Parkway Bridge
.035
.04
.035
Elevation (ft)
Station (ft)
Legend
EG 100-yr
WS 100-yr
Crit 100-yr
1 ft/s
2 ft/s
3 ft/s
4 ft/s
5 ft/s
6 ft/s
7 ft/s
8 ft/s
9 ft/s
10 ft/s
11 ft/s
Ground
Ineff
Bank Sta

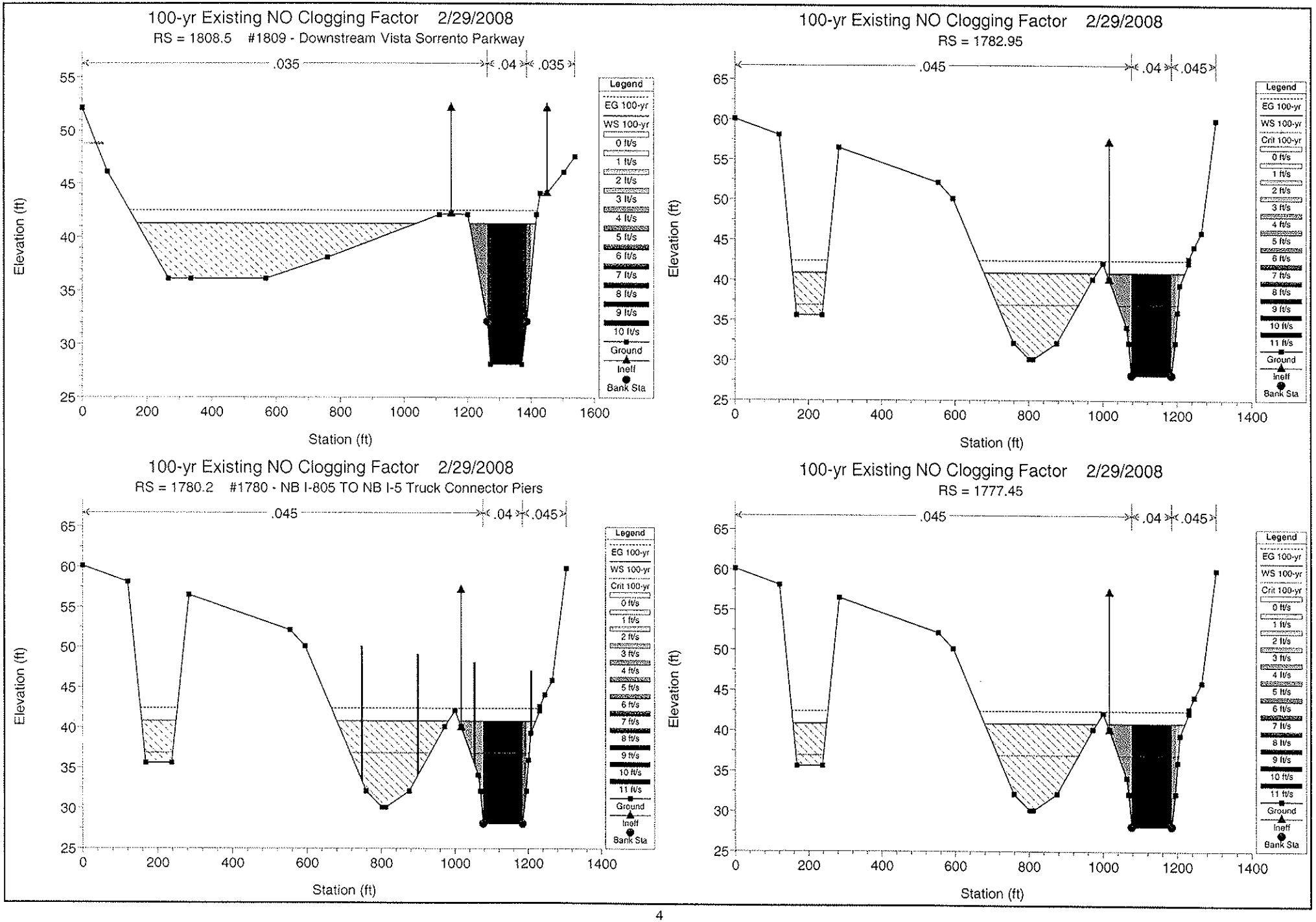
100-yr Existing NO Clogging Factor 2/29/2008
RS = 1808.5 #1809 - Downstream Vista Sorrento Parkway
.035
.04
.035
Elevation (ft)
Station (ft)
Legend
EG 100-yr
WS 100-yr
0 ft/s
1 ft/s
2 ft/s
3 ft/s
4 ft/s
5 ft/s
6 ft/s
7 ft/s
8 ft/s
9 ft/s
10 ft/s
Ground
Ineff
Bank Sta
100-yr Existing NO Clogging Factor 2/29/2008
RS = 1782.95
.045
.04
.045
Elevation (ft)
Station (ft)
Legend
EG 100-yr
WS 100-yr
Crit 100-yr
0 ft/s
1 ft/s
2 ft/s
3 ft/s
4 ft/s
5 ft/s
6 ft/s
7 ft/s
8 ft/s
9 ft/s
10 ft/s
11 ft/s
Ground
Ineff
Bank Sta
100-yr Existing NO Clogging Factor 2/29/2008
RS = 1780.2 #1780 - NB I-805 TO NB I-5 Truck Connector Piers
.045
.04
.045
Elevation (ft)
Station (ft)
Legend
EG 100-yr
WS 100-yr
Crit 100-yr
0 ft/s
1 ft/s
2 ft/s
3 ft/s
4 ft/s
5 ft/s
6 ft/s
7 ft/s
8 ft/s
9 ft/s
10 ft/s
11 ft/s
Ground
Ineff
Bank Sta
100-yr Existing NO Clogging Factor 2/29/2008
RS = 1777.45
.045
.04
.045
Elevation (ft)
Station (ft)
Legend
EG 100-yr
WS 100-yr
Crit 100-yr
0 ft/s
1 ft/s
2 ft/s
3 ft/s
4 ft/s
5 ft/s
6 ft/s
7 ft/s
8 ft/s
9 ft/s
10 ft/s
11 ft/s
Ground
Ineff
Bank Sta

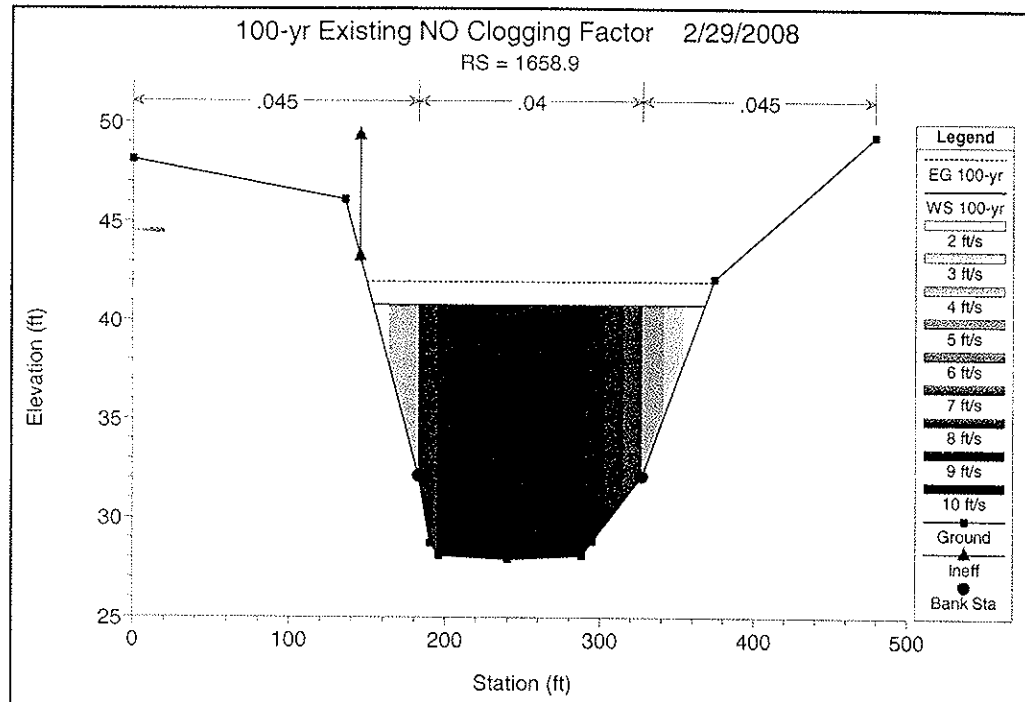
100-yr Existing NO Clogging Factor 2/29/2008
RS = 1658.9
.045
.04
.045
Elevation (ft)
Station (ft)
Legend
EG 100-yr
WS 100-yr
2 ft/s
3 ft/s
4 ft/s
5 ft/s
6 ft/s
7 ft/s
8 ft/s
9 ft/s
10 ft/s
Ground
Ineff
Bank Sta

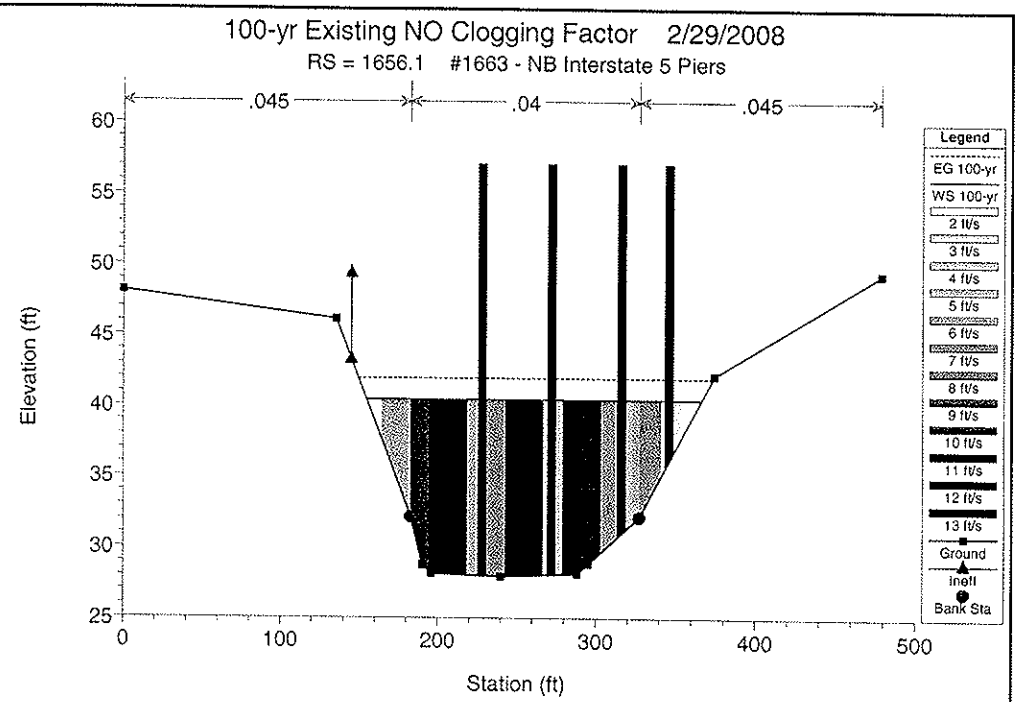
100-yr Existing NO Clogging Factor 2/29/2008
RS = 1656.1 #1663 - NB Interstate 5 Piers
.045
.04
.045
Elevation (ft)
Station (ft)
Legend
EG 100-yr
WS 100-yr
2 ft/s
3 ft/s
4 ft/s
5 ft/s
6 ft/s
7 ft/s
8 ft/s
9 ft/s
10 ft/s
11 ft/s
12 ft/s
13 ft/s
Ground
Ineff
Bank Sta

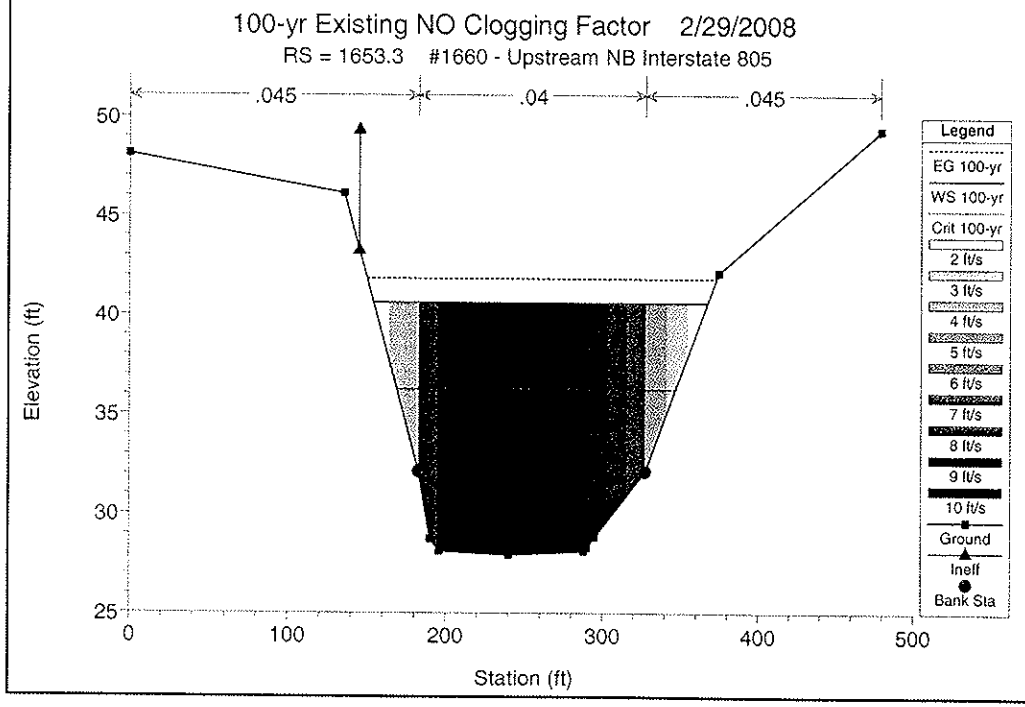
100-yr Existing NO Clogging Factor 2/29/2008
RS = 1653.3 #1660 - Upstream NB Interstate 805
.045
.04
.045
Elevation (ft)
Station (ft)
Legend
EG 100-yr
WS 100-yr
Crit 100-yr
2 ft/s
3 ft/s
4 ft/s
5 ft/s
6 ft/s
7 ft/s
8 ft/s
9 ft/s
10 ft/s
Ground
Ineff
Bank Sta

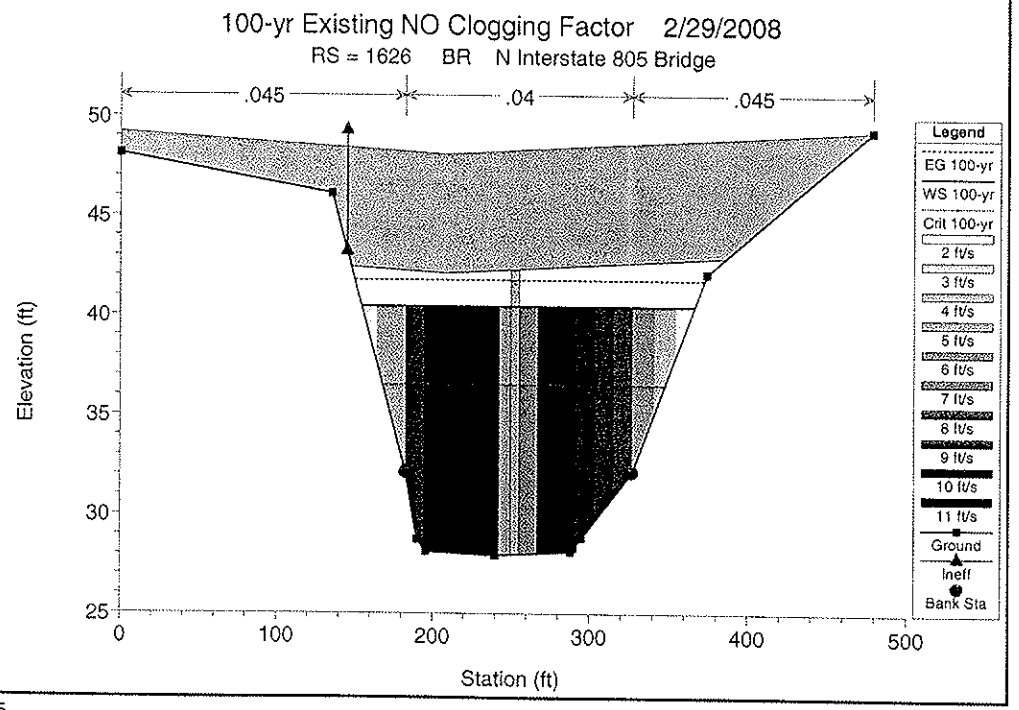
100-yr Existing NO Clogging Factor 2/29/2008
RS = 1626 BR N Interstate 805 Bridge
.045
.04
.045
Elevation (ft)
Station (ft)
Legend
EG 100-yr
WS 100-yr
Crit 100-yr
2 ft/s
3 ft/s
4 ft/s
5 ft/s
6 ft/s
7 ft/s
8 ft/s
9 ft/s
10 ft/s
11 ft/s
Ground
Ineff
Bank Sta

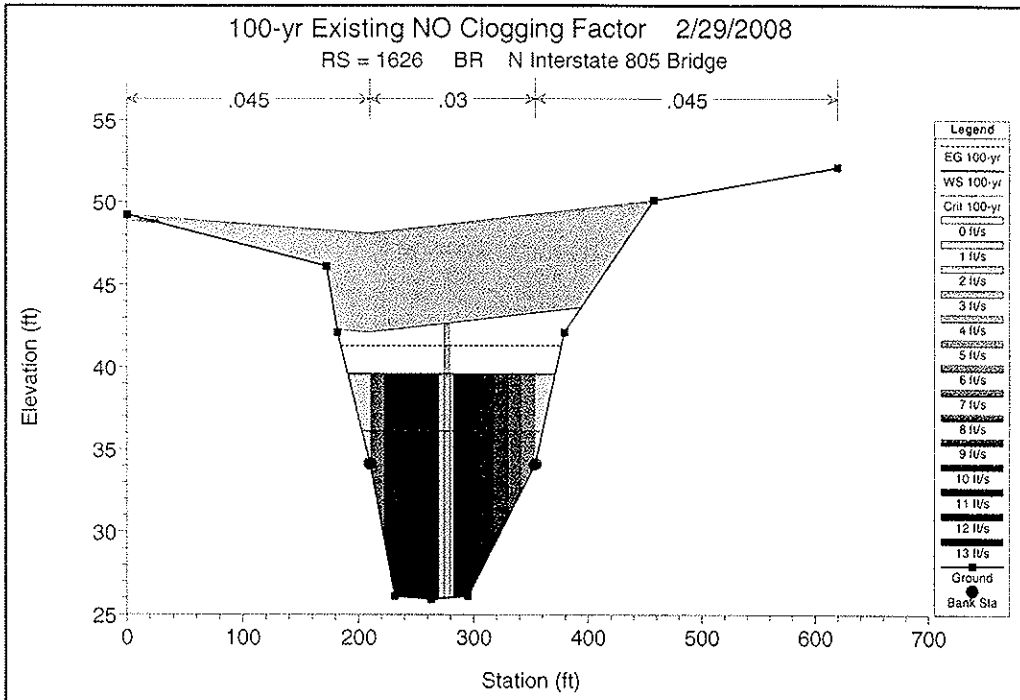
100-yr Existing NO Clogging Factor 2/29/2008
RS = 1626 BR N Interstate 805 Bridge
.045
.03
.045
Elevation (ft)
Station (ft)
Legend
EG 100-yr
WS 100-yr
Crit 100-yr
0 ft/s
1 ft/s
2 ft/s
3 ft/s
4 ft/s
5 ft/s
6 ft/s
7 ft/s
8 ft/s
9 ft/s
10 ft/s
11 ft/s
12 ft/s
13 ft/s
Ground
Bank Sta

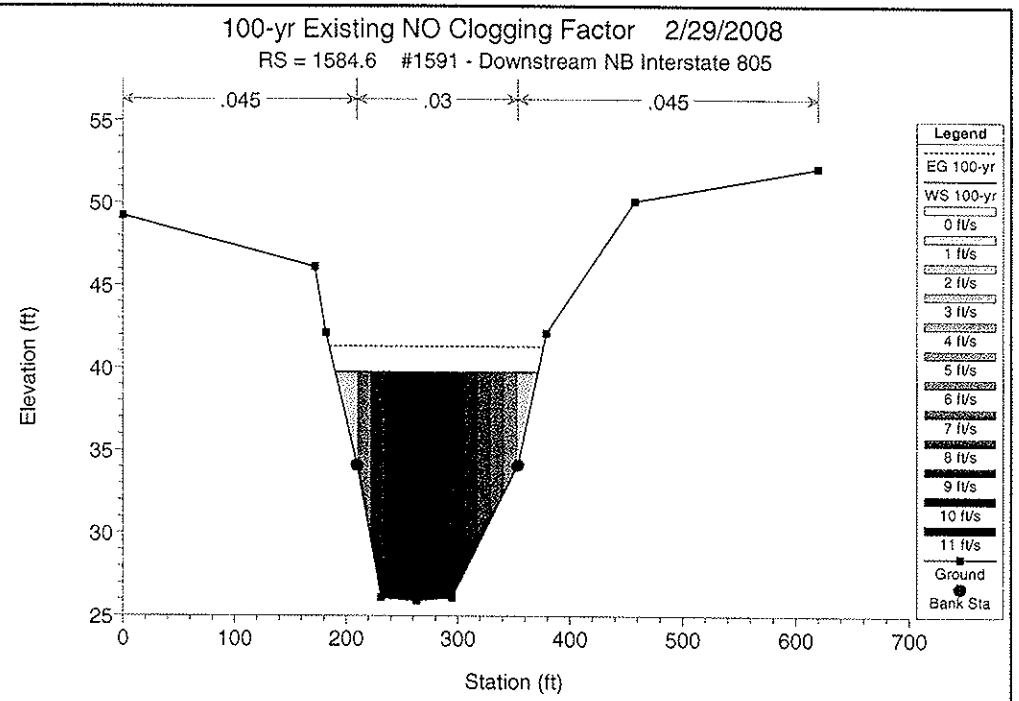
100-yr Existing NO Clogging Factor 2/29/2008
RS = 1584.6 #1591 - Downstream NB Interstate 805
.045
.03
.045
Elevation (ft)
Station (ft)
Legend
EG 100-yr
WS 100-yr
0 ft/s
1 ft/s
2 ft/s
3 ft/s
4 ft/s
5 ft/s
6 ft/s
7 ft/s
8 ft/s
9 ft/s
10 ft/s
11 ft/s
Ground
Bank Sta

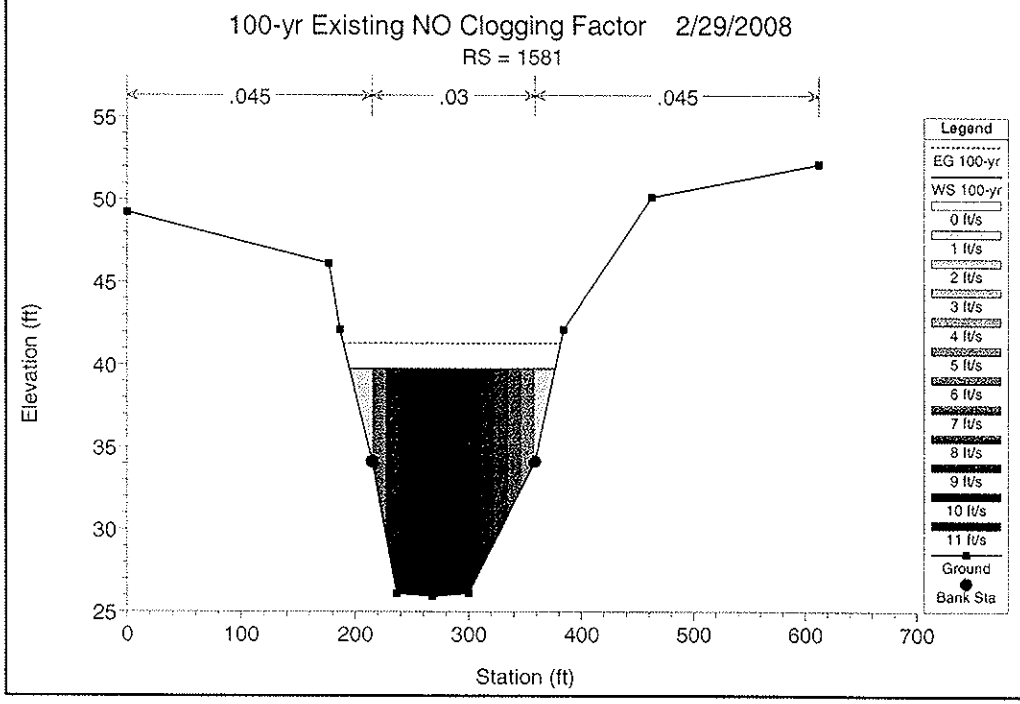
100-yr Existing NO Clogging Factor 2/29/2008
RS = 1581
.045
.03
.045
Elevation (ft)
Station (ft)
Legend
EG 100-yr
WS 100-yr
0 ft/s
1 ft/s
2 ft/s
3 ft/s
4 ft/s
5 ft/s
6 ft/s
7 ft/s
8 ft/s
9 ft/s
10 ft/s
11 ft/s
Ground
Bank Sta

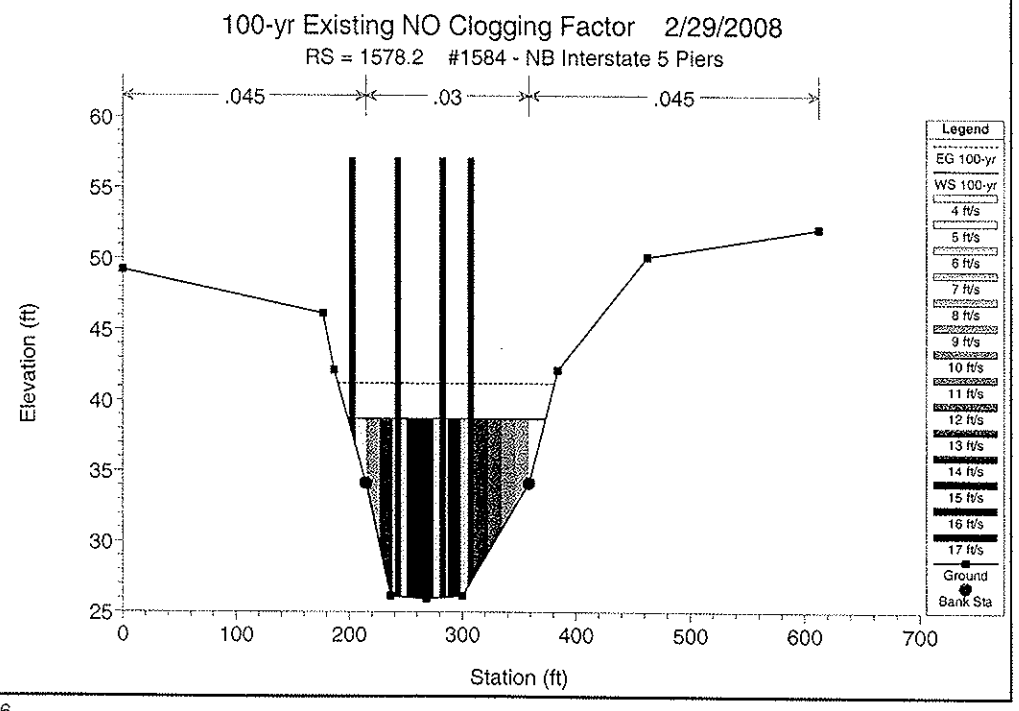
100-yr Existing NO Clogging Factor 2/29/2008
RS = 1578.2 #1584 - NB Interstate 5 Piers
.045
.03
.045
Elevation (ft)
Station (ft)
Legend
EG 100-yr
WS 100-yr
4 ft/s
5 ft/s
6 ft/s
7 ft/s
8 ft/s
9 ft/s
10 ft/s
11 ft/s
12 ft/s
13 ft/s
14 ft/s
15 ft/s
16 ft/s
17 ft/s
Ground
Bank Sta

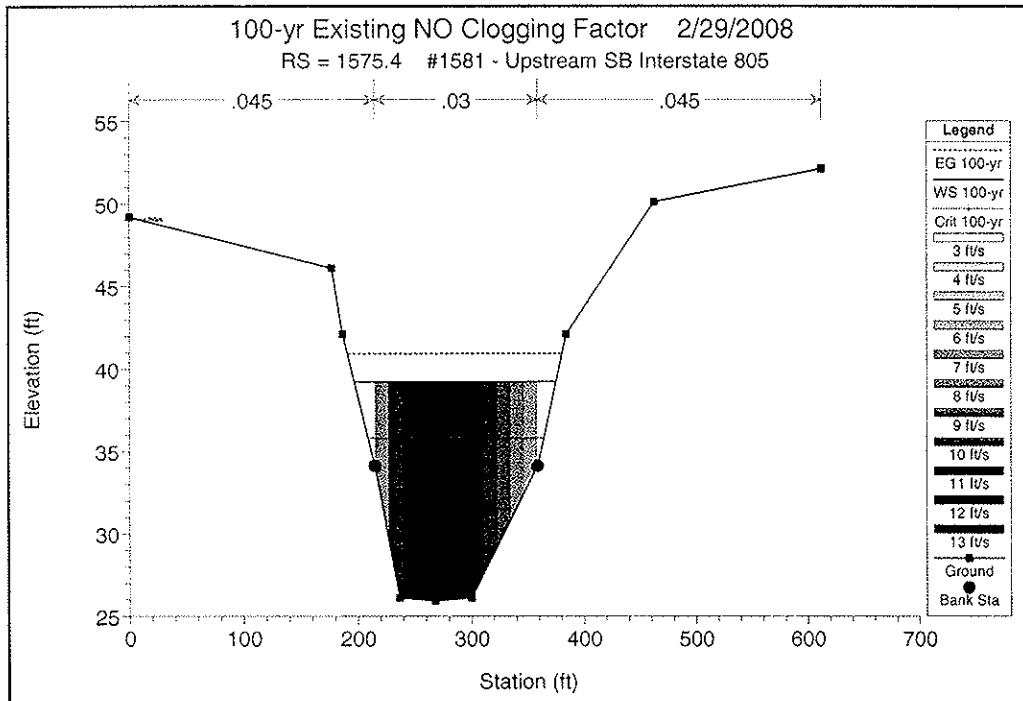
100-yr Existing NO Clogging Factor 2/29/2008
RS = 1575.4 #1581 - Upstream SB Interstate 805
.045
.03
.045
Elevation (ft)
Station (ft)
Legend
EG 100-yr
WS 100-yr
Crit 100-yr
3 ft/s
4 ft/s
5 ft/s
6 ft/s
7 ft/s
8 ft/s
9 ft/s
10 ft/s
11 ft/s
12 ft/s
13 ft/s
Ground
Bank Sta

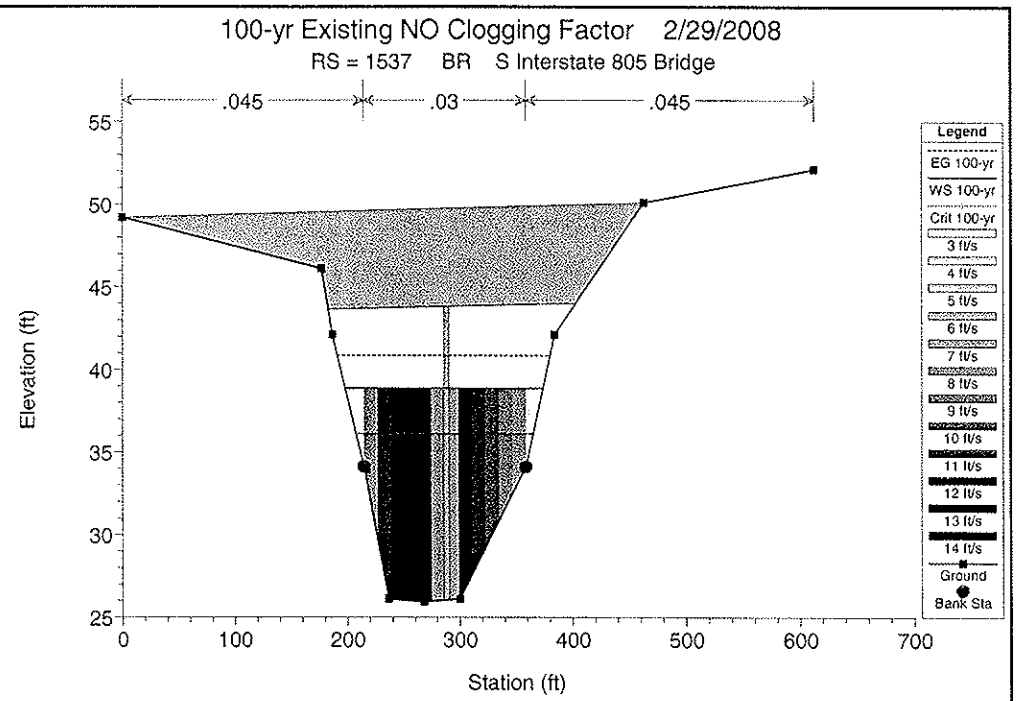
100-yr Existing NO Clogging Factor 2/29/2008
RS = 1537 BR S Interstate 805 Bridge
.045
.03
.045
Elevation (ft)
Station (ft)
Legend
EG 100-yr
WS 100-yr
Crit 100-yr
3 ft/s
4 ft/s
5 ft/s
6 ft/s
7 ft/s
8 ft/s
9 ft/s
10 ft/s
11 ft/s
12 ft/s
13 ft/s
14 ft/s
Ground
Bank Sta

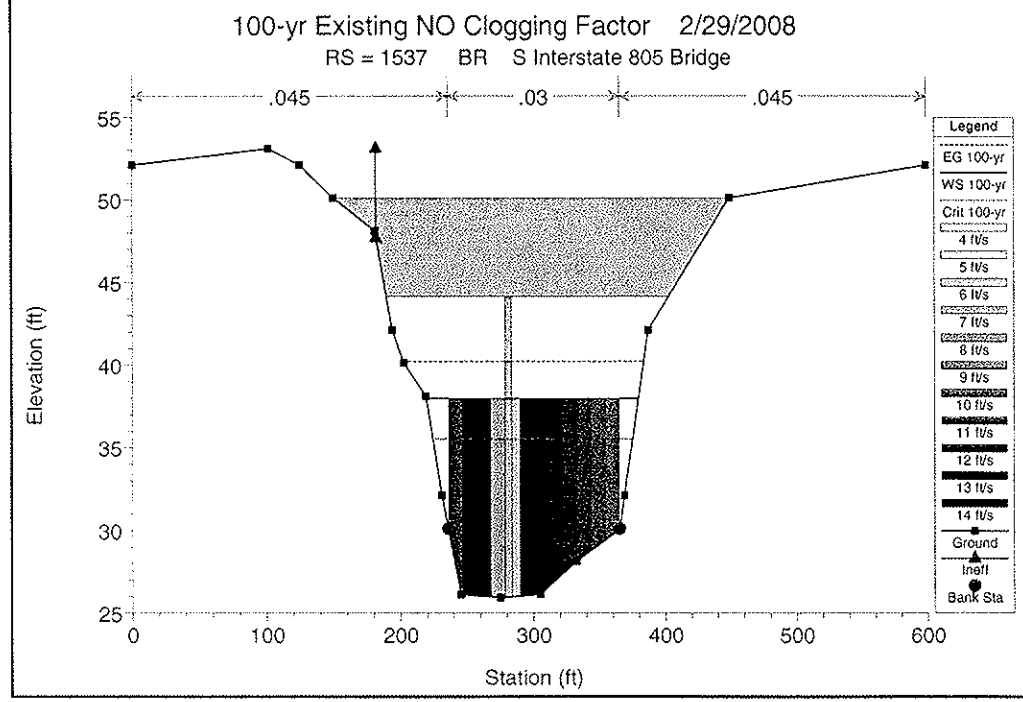
100-yr Existing NO Clogging Factor 2/29/2008
RS = 1537 BR S Interstate 805 Bridge
.045
.03
.045
Elevation (ft)
Station (ft)
Legend
EG 100-yr
WS 100-yr
Crit 100-yr
4 ft/s
5 ft/s
6 ft/s
7 ft/s
8 ft/s
9 ft/s
10 ft/s
11 ft/s
12 ft/s
13 ft/s
14 ft/s
Ground
Ineff
Bank Sta

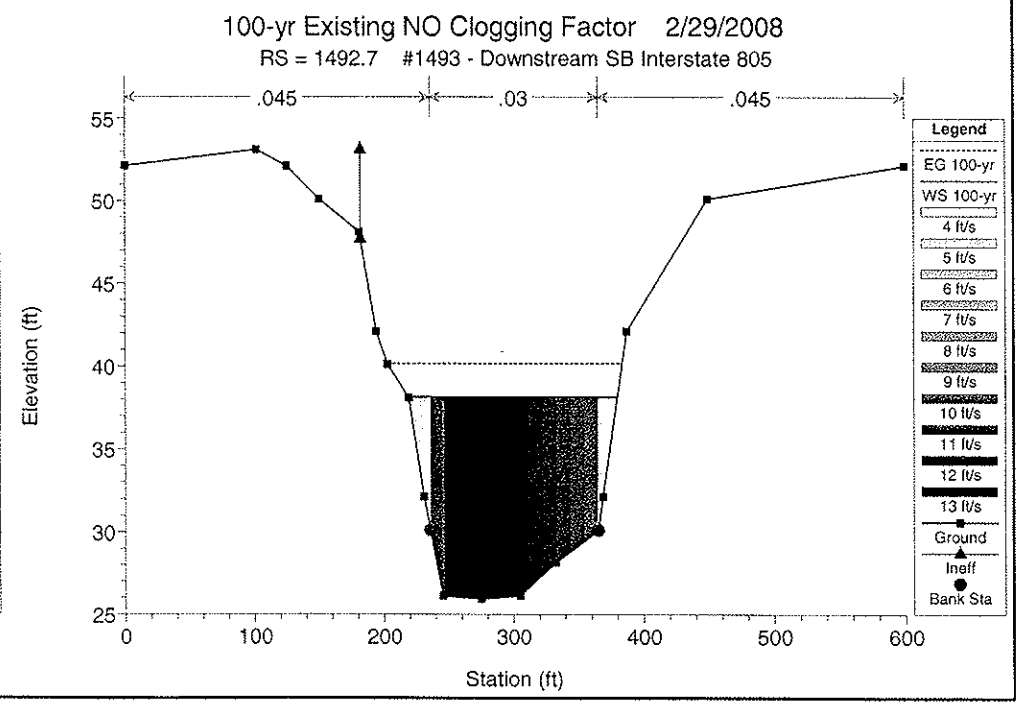
100-yr Existing NO Clogging Factor 2/29/2008
RS = 1492.7 #1493 - Downstream SB Interstate 805
.045
.03
.045
Elevation (ft)
Station (ft)
Legend
EG 100-yr
WS 100-yr
4 ft/s
5 ft/s
6 ft/s
7 ft/s
8 ft/s
9 ft/s
10 ft/s
11 ft/s
12 ft/s
13 ft/s
Ground
Ineff
Bank Sta

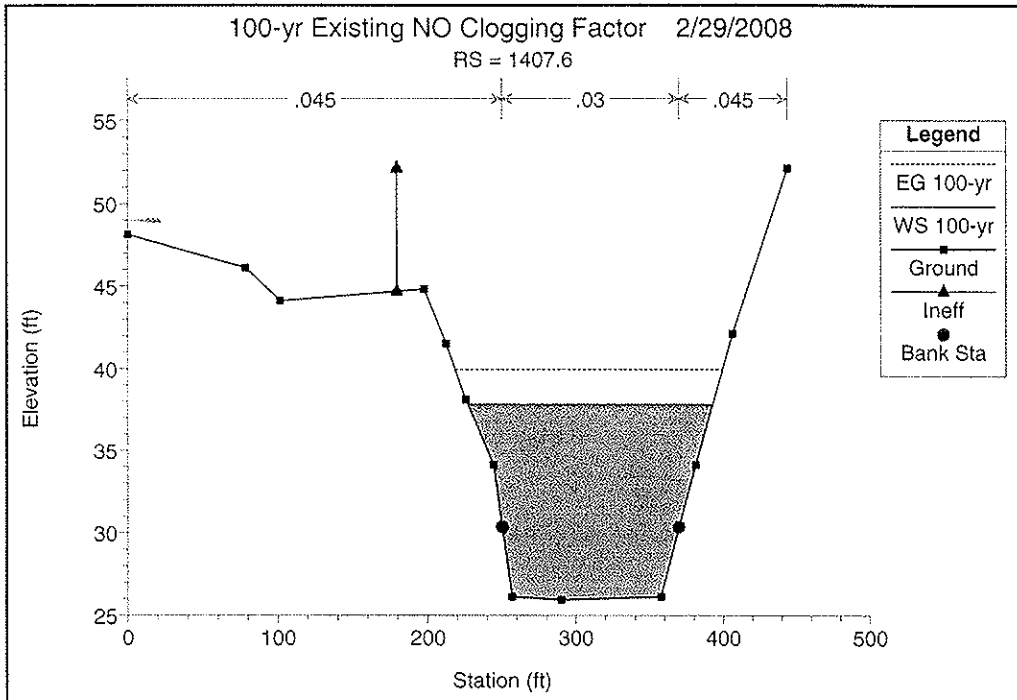
100-yr Existing NO Clogging Factor 2/29/2008
RS = 1407.6
.045
.03
.045
Legend
EG 100-yr
WS 100-yr
Ground
Ineff
Bank Sta
Elevation (ft)
Station (ft)

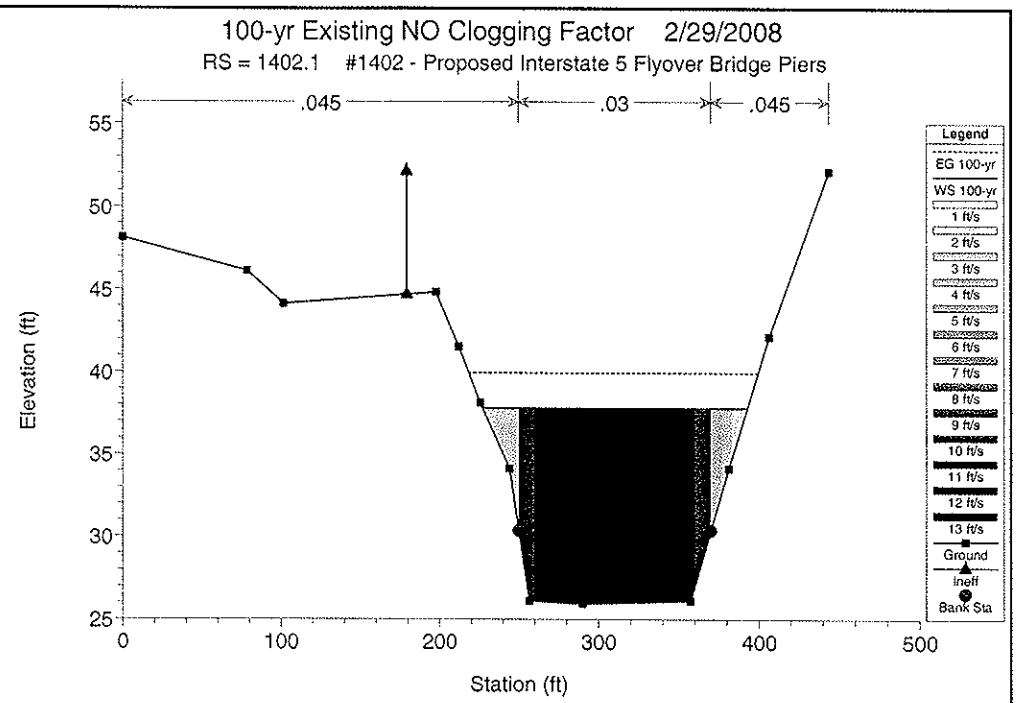
100-yr Existing NO Clogging Factor 2/29/2008
RS = 1402.1 #1402 - Proposed Interstate 5 Flyover Bridge Piers
.045
.03
.045
Legend
EG 100-yr
WS 100-yr
1 ft/s
2 ft/s
3 ft/s
4 ft/s
5 ft/s
6 ft/s
7 ft/s
8 ft/s
9 ft/s
10 ft/s
11 ft/s
12 ft/s
13 ft/s
Ground
Ineff
Bank Sta
Elevation (ft)
Station (ft)

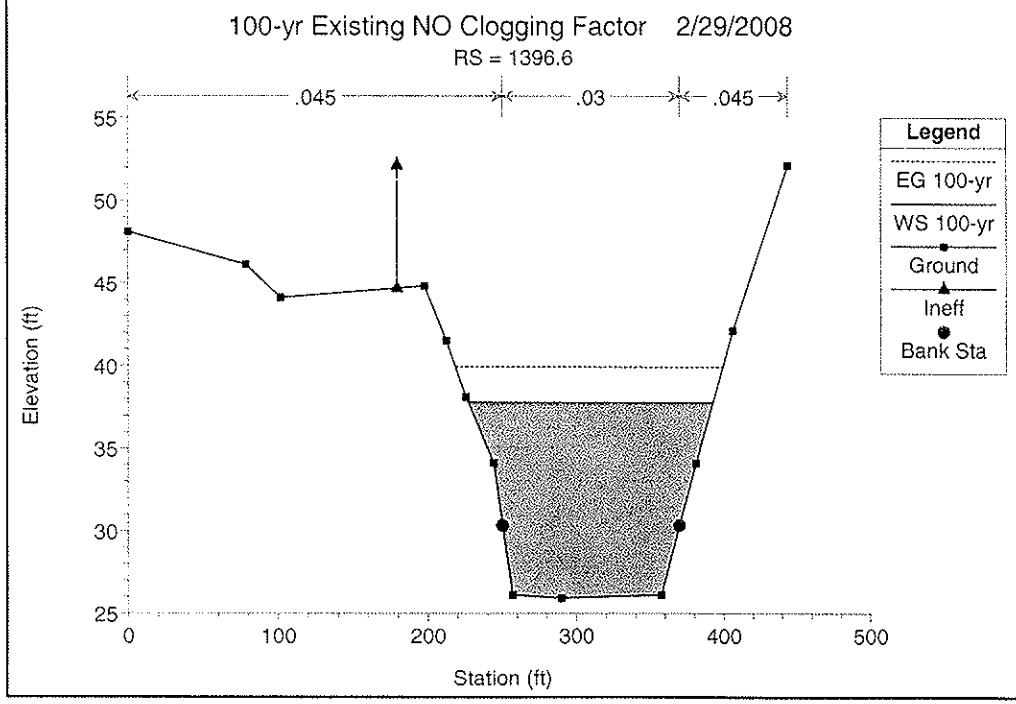
100-yr Existing NO Clogging Factor 2/29/2008
RS = 1396.6
.045
.03
.045
Legend
EG 100-yr
WS 100-yr
Ground
Ineff
Bank Sta
Elevation (ft)
Station (ft)

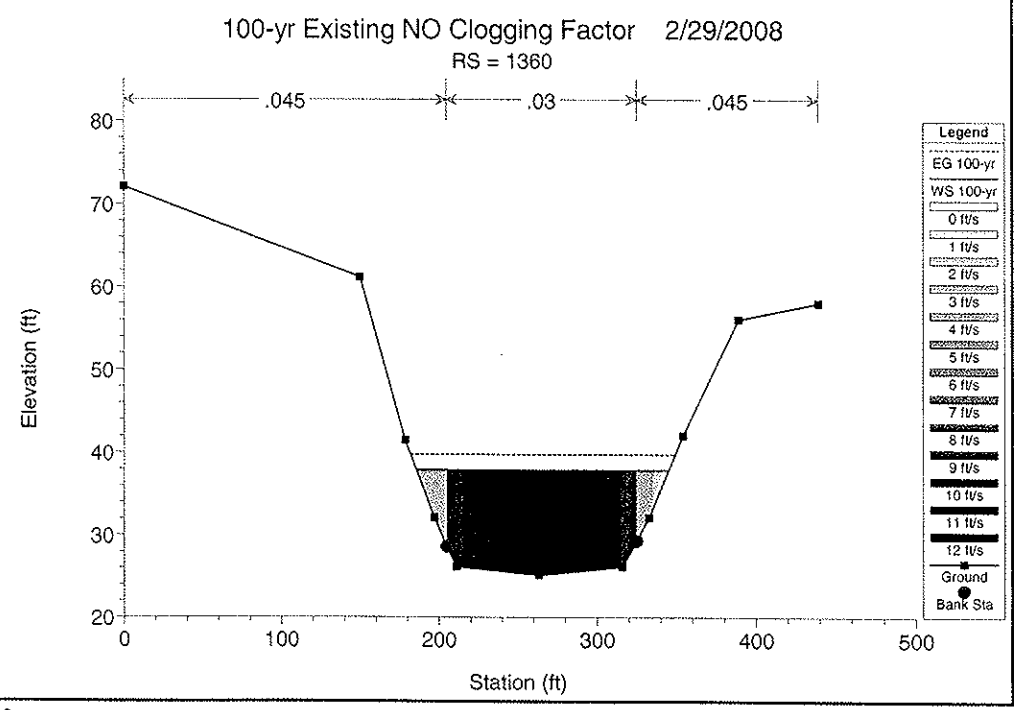
100-yr Existing NO Clogging Factor 2/29/2008
RS = 1360
.045
.03
.045
Legend
EG 100-yr
WS 100-yr
0 ft/s
1 ft/s
2 ft/s
3 ft/s
4 ft/s
5 ft/s
6 ft/s
7 ft/s
8 ft/s
9 ft/s
10 ft/s
11 ft/s
12 ft/s
Ground
Bank Sta
Elevation (ft)
Station (ft)

100-yr Existing NO Clogging Factor 2/29/2008

RS = 1356.5 #1351 - SB I-5 to SB I-805 Truck Connector Piers

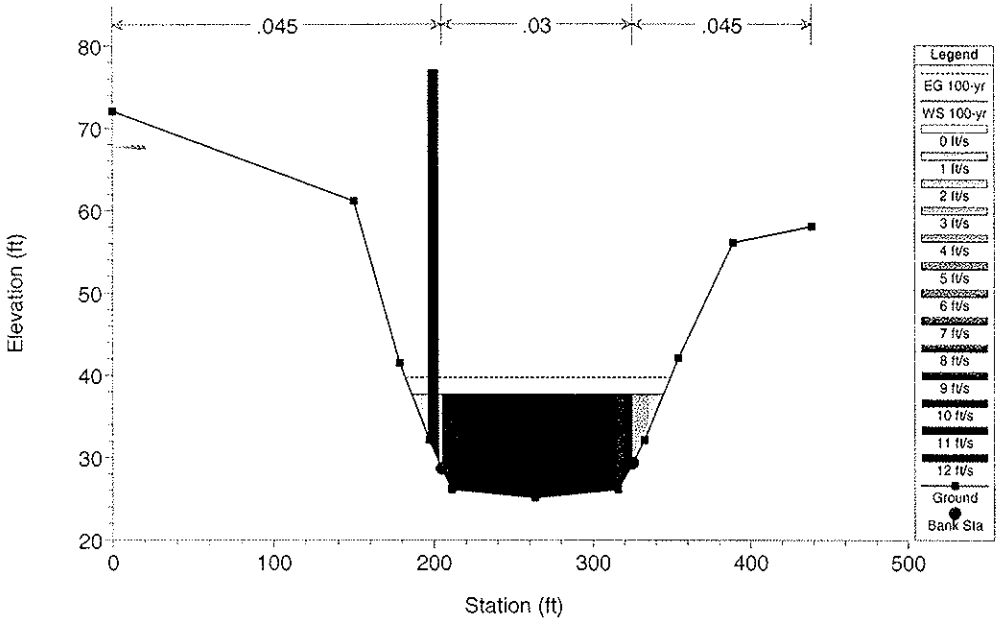

100-yr Existing NO Clogging Factor 2/29/2008

RS = 1353 #1347 - Upstream SB Interstate 5

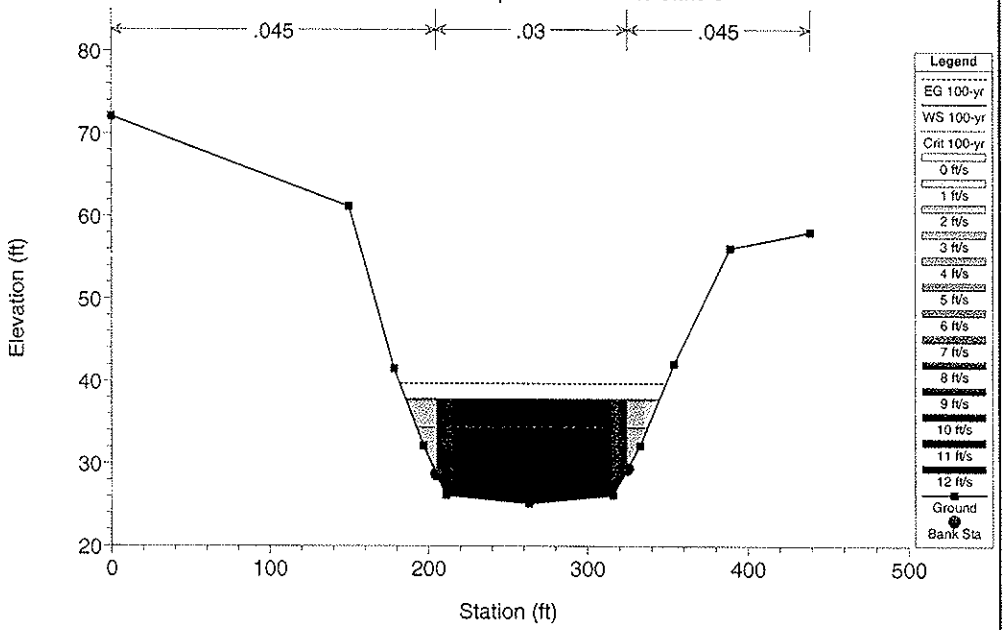

100-yr Existing NO Clogging Factor 2/29/2008

RS = 1278 BR S Interstate 5 Bridge

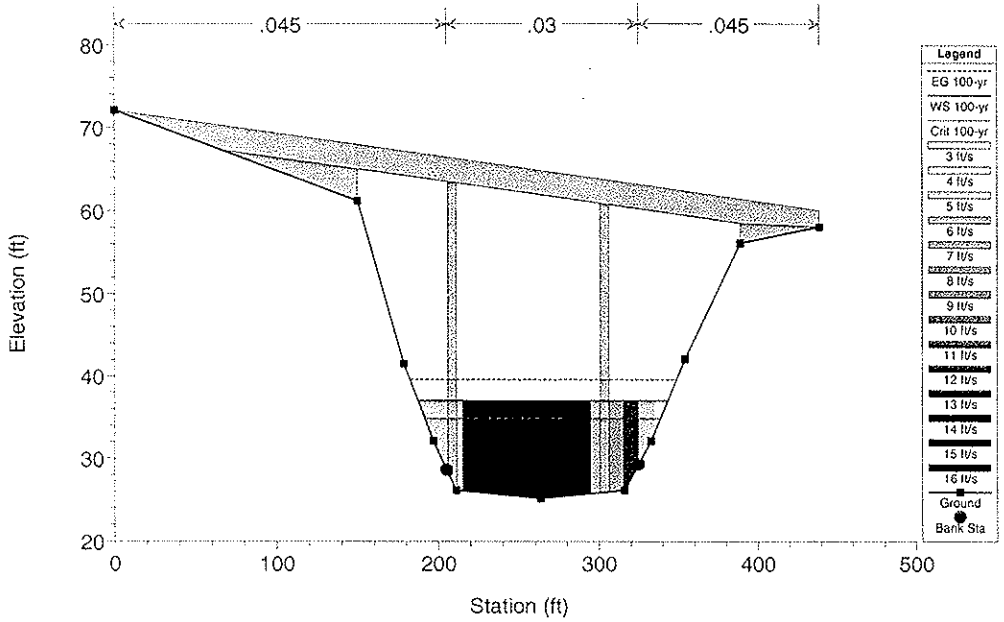

100-yr Existing NO Clogging Factor 2/29/2008

RS = 1278 BR S Interstate 5 Bridge

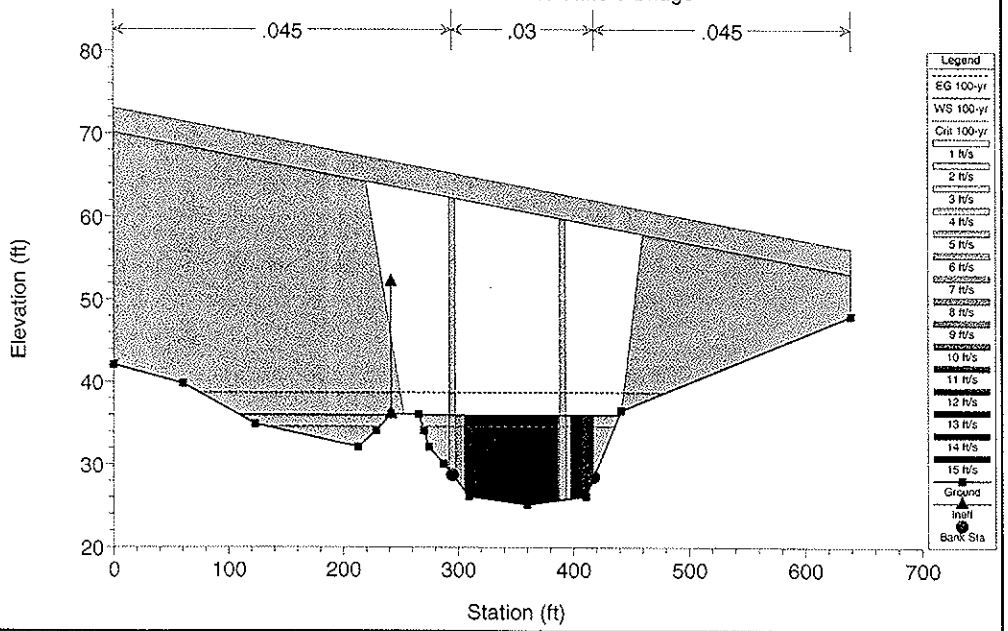

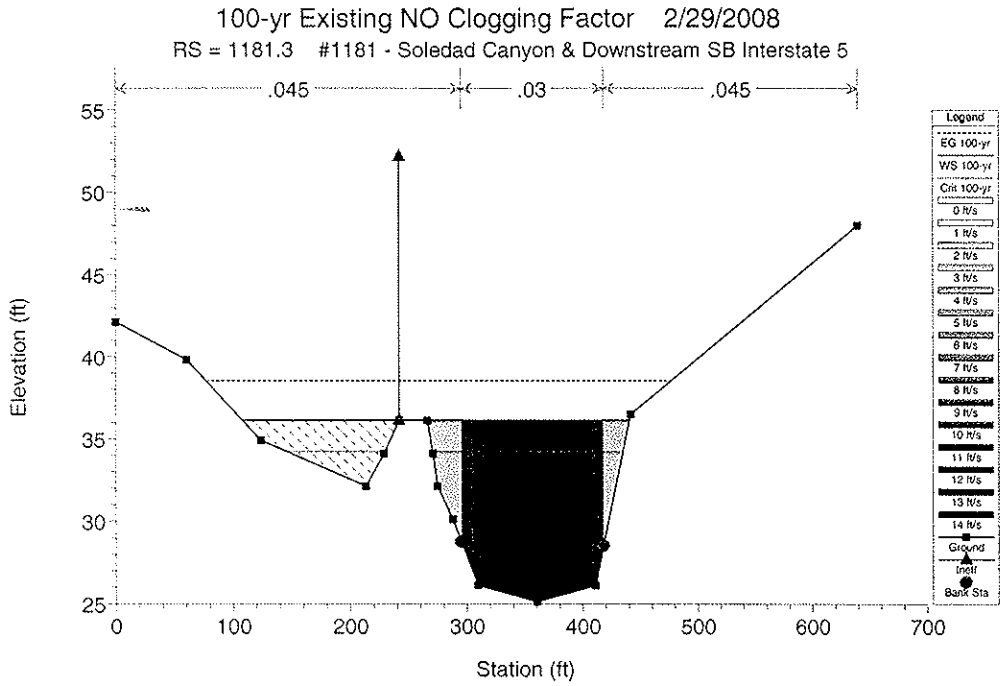
100-yr Existing NO Clogging Factor 2/29/2008
RS = 1181.3 #1181 - Soledad Canyon & Downstream SB Interstate 5
.045
.03
.045
Elevation (ft)
Station (ft)
Legend
EG 100-yr
WS 100-yr
Crit 100-yr
0 ft/s
1 ft/s
2 ft/s
3 ft/s
4 ft/s
5 ft/s
6 ft/s
7 ft/s
8 ft/s
9 ft/s
10 ft/s
11 ft/s
12 ft/s
13 ft/s
14 ft/s
Ground
Ineff
Bank Sta

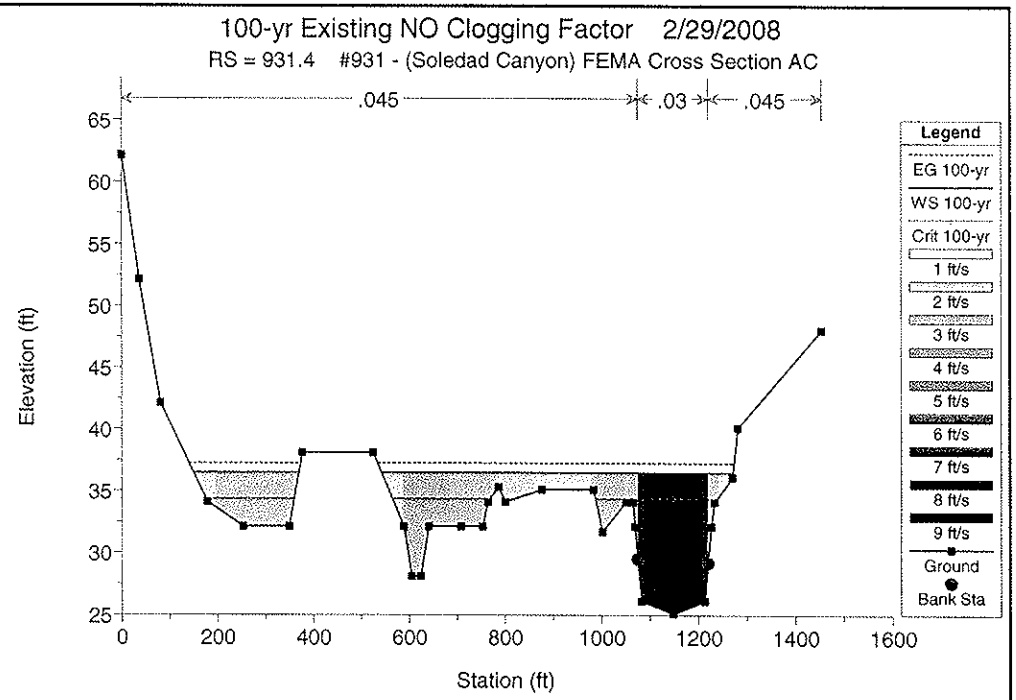
100-yr Existing NO Clogging Factor 2/29/2008
RS = 931.4 #931 - (Soledad Canyon) FEMA Cross Section AC
.045
.03
.045
Elevation (ft)
Station (ft)
Legend
EG 100-yr
WS 100-yr
Crit 100-yr
1 ft/s
2 ft/s
3 ft/s
4 ft/s
5 ft/s
6 ft/s
7 ft/s
8 ft/s
9 ft/s
Ground
Bank Sta

HEC-RAS Version 3.1.3 May 2005
U.S. Army Corp of Engineers
Hydrologic Engineering Center
609 Second Street
Davis, California

```
X     X  XXXXXX    XXXX        XXXX       XX      XXXX
X     X  X        X    X       X   X     X  X    X
X     X  X        X            X   X    X    X   X
XXXXXXX  XXXX     X       XXX  XXXX     XXXXXX    XXXX
X     X  X        X            X  X     X    X       X
X     X  X        X    X       X   X    X    X       X
X     X  XXXXXX    XXXX        X    X   X    X   XXXXX
```

PROJECT DATA
Project Title: LosPenasquitosCreek_Exist
Project File : LP_Exist.prj
Run Date and Time: 2/29/2008 1:59:26 PM

Project in English units

Project Description:
LOS PENASQUITOS CREEK - Existing - (CITY OF SAN DIEGO, CA)
DUPLICATE
EFFECTIVE ANALYSIS (FLOODPLAIN)
FEBRUARY 25, 2003 FILENAME:
LPCDE.HC2
LOS PENASQUITOS CREEK CITY OF SAN DIEGO, CA

DUPLICATE EFFECTIVE ANALYSIS (FLOODPLAIN)
FEBRUARY 25, 2003
FILENAME: LPCDE.HC2
LOS PENASQUITOS CREEK (CITY OF SAN DIEGO, CA)

DUPLICATE EFFECTIVE ANALYSIS (FLOODPLAIN)
FEBRUARY 25, 2003
FILENAME: LPCDE.HC2

PLAN DATA

Plan Title: 100-yr Existing NO Clogging Factor
Plan File : p:\1683_T064_I5_Floodplain\420_Env_ Stud\Los Penasquitos\HEC-RAS\Final\Existing\LP_Exist.p05

Geometry Title: Existing Condition NO Clogging Factor
Geometry File : p:\1683_T064_I5_Floodplain\420_Env_ Stud\Los Penasquitos\HEC-RAS\Final\Existing\LP_Exist.g05

Flow Title : 100-year w/ Influence from Soledad Cyn
Flow File : p:\1683_T064_I5_Floodplain\420_Env_ Stud\Los Penasquitos\HEC-RAS\Final\Existing\LP_Exist.f05

Plan Summary Information:
Number of: Cross Sections = 30 Multiple Openings = 0

Culverts = 0 Inline Structures = 0
Bridges = 4 Lateral Structures = 0

Computational Information
Water surface calculation tolerance = 0.01
Critical depth calculation tolerance = 0.01
Maximum number of iterations = 20
Maximum difference tolerance = 0.3
Flow tolerance factor = 0.001

Computation Options
Critical depth computed only where necessary
Conveyance Calculation Method: At breaks in n values only
Friction Slope Method: Average Conveyance
Computational Flow Regime: Subcritical Flow

Encroachment Data
Equal Conveyance = True
Left Offset = 0
Right Offset = 0

River = RIVER-1 Reach = Reach-1

RS	Profile	Method	Value1	Value2
22	PF 2	1	350	900
21	PF 2	1	250	840
20	PF 2	1	400	1000
19	PF 2	1	600	1200
18	PF 2	1	610	1140
17	PF 2	1	600	1100
16	PF 2	1	500	1000
11.5210	PF 2	1	721.98	
11.5200	PF 2	1	1002.31	
11.5190	PF 2	1	1061.76	
11.5180	PF 2	1	1106.23	
11.5170	PF 2	1	1128.96	1329.96
11.5160	PF 2	1	1354.74	1834.74
11.5150	PF 2	1	1460.06	1820
11.514	PF 2	1	1441.26	1729
10.513	PF 2	1	1286.05	1492.79
10.512	PF 2	1	1303.8	1490.19
9.4	PF 2	1	330	

FLOW DATA

Flow Title: 100-year w/ Influence from Soledad Cyn
Flow File : p:\1683_TO64_I5_Floodplain\420_Env_ Stud\Los Penasquitos\HEC-RAS\Final\Existing\LP_Exist.f05

Flow Data (cfs)

River	Reach	RS	100-yr
Los Penasquitos	Lower	4337.4	16800
Los Penasquitos	Lower	931.4	19000

Boundary Conditions

River	Reach	Profile	Upstream	Downstream

Los Penasquitos Lower 100-yr
Known WS = 36.53

GEOMETRY DATA

Geometry Title: Existing Condition NO Clogging Factor
Geometry File : p:\1683_T064_I5_Floodplain\420_Env_ Stud\Los Penasquitos\HEC-RAS\Final\Existing\LP_Exist.g05

CROSS SECTION

RIVER: Los Penasquitos
REACH: Lower RS: 4337.4

INPUT
Description: #4337 - FEMA Cross Section H
Station Elevation Data num= 21

Sta	Elev	Sta	Elev	Sta	Elev	Sta	Elev	Sta	Elev
0	62.13	16	52.13	32	46.13	114	46.13	207	48.13
249	46.13	255.3	43.53	329.6	43.53	337.4	44.13	721.6	44.13
726.61	42.239	732.2	40.13	758.3	34.13	805	32.23	851.5	34.13
916	36.13	993.5	38.13	1052.5	42.13	1054.56	42.462	1064.9	44.13
1144	52.13								

Manning's n Values num= 3

Sta	n Val	Sta	n Val	Sta	n Val
0	.035	726.61	.06	1054.56	.05

Bank Sta: Left	Right	Lengths: Left	Channel	Right	Coeff Contr.	Expan.
726.61	1054.56	490.4	418.9	390.5	.1	.3

Ineffective Flow num= 1

Sta L	Sta R	Elev	Permanent
0	679		T

CROSS SECTION OUTPUT Profile #100-yr

E.G. Elev (ft)	47.93	Element	Left OB	Channel	Right OB
Vel Head (ft)	0.28	Wt. n-Val.	0.035	0.060	0.050
W.S. Elev (ft)	47.65	Reach Len. (ft)	490.40	418.90	390.50
Crit W.S. (ft)		Flow Area (sq ft)	172.37	3737.17	106.32
E.G. Slope (ft/ft)	0.001175	Area (sq ft)	1934.75	3737.17	106.32
Q Total (cfs)	16800.00	Flow (cfs)	588.58	16020.62	190.80
Top Width (ft)	1039.43	Top Width (ft)	666.33	327.95	45.15
Vel Total (ft/s)	4.18	Avg. Vel. (ft/s)	3.41	4.29	1.79
Max Chl Dpth (ft)	15.42	Hydr. Depth (ft)	3.62	11.40	2.35
Conv. Total (cfs)	490126.0	Conv. (cfs)	17171.2	467388.3	

5566.5				
Length Wtd. (ft)	424.60	Wetted Per. (ft)	47.95	329.31
45.46				
Min Ch El (ft)	32.23	Shear (lb/sq ft)	0.26	0.83
0.17				
Alpha	1.03	Stream Power (lb/ft s)	0.90	3.57
0.31				
Frctn Loss (ft)	0.85	Cum Volume (acre-ft)	117.84	168.51
71.83				
C & E Loss (ft)	0.05	Cum SA (acres)	46.96	13.84
8.28				

Warning: Divided flow computed for this cross-section.
Warning: The velocity head has changed by more than 0.5 ft (0.15 m). This may indicate the need for
additional cross sections.
Warning: The conveyance ratio (upstream conveyance divided by downstream conveyance) is less than
0.7 or greater than 1.4. This may indicate the need for additional cross sections.

Profile #100-yr

Percent Conv	Pos Hydr Depth(ft)	Velocity (ft/s)	Left Sta (ft)	Right Sta (ft)	Flow (cfs)	Area (sq ft)	W.P. (ft)
1	LOB	0.00	67.90		0.00	57.69	40.23
0.00	1.44	0.00					
2	LOB	0.00	67.90	135.80	0.00	98.16	67.91
0.00	1.45	0.00					
3	LOB	0.00	135.80	203.70	0.00	25.74	48.93
0.00	0.53	0.00					
4	LOB	0.00	203.70	271.60	0.00	109.23	55.09
0.00	2.00	0.00					
5	LOB	0.00	271.60	339.50	0.00	276.21	67.92
0.00	4.07	0.00					
6	LOB	0.00	339.50	407.40	0.00	239.07	67.90
0.00	3.52	0.00					
7	LOB	0.00	407.40	475.30	0.00	239.07	67.90
0.00	3.52	0.00					
8	LOB	0.00	475.30	543.20	0.00	239.07	67.90
0.00	3.52	0.00					
9	LOB	0.00	543.20	611.10	0.00	239.07	67.90
0.00	3.52	0.00					
10	LOB	0.00	611.10	679.00	0.00	239.07	67.90
0.00	3.52	0.00					
11	LOB	3.41	679.00	726.61	588.58	172.37	47.95
3.50	3.62	3.56					
12	Chan	3.56	726.61	753.94	904.12	253.97	28.28
5.38	9.29	4.73					
13	Chan	4.73	753.94	781.27	1789.41	378.06	27.46
10.65	13.83	5.01					
14	Chan	5.01	781.27	808.60	2051.55	409.72	27.35
12.21	14.99	4.95					
15	Chan	4.95	808.60	835.93	1988.88	402.17	27.35
11.84	14.72	4.70					
16	Chan	4.70	835.93	863.26	1749.26	372.33	27.35
10.41	13.62						
17	Chan		863.26	890.59	1562.96	347.97	27.34

```
  9.30      12.73      4.49
  18          Chan       890.59      917.91      1393.54     324.82      27.34
  8.29      11.89      4.29
  19          Chan       917.91      945.24      1247.08     303.87      27.34
  7.42      11.12      4.10
  20          Chan       945.24      972.57      1118.05     284.60      27.34
  6.66      10.41      3.93
  21          Chan       972.57      999.90       989.05     264.46      27.35
  5.89       9.68      3.74
  22          Chan       999.90      1027.23      743.73     223.02      27.39
  4.43       8.16      3.33
  23          Chan       1027.23     1054.56      483.00     172.19      27.41
  2.87       6.30      2.81
  24          ROB        1054.56     1062.69       85.04      36.86       8.24
  0.51       4.53      2.31
  25          ROB        1062.69     1070.82       51.60      27.25       8.19
  0.31       3.35      1.89
  26          ROB        1070.82     1078.95       31.93      20.42       8.17
  0.19       2.51      1.56
  27          ROB        1078.95     1087.08       16.48      13.73       8.17
  0.10       1.69      1.20
  28          ROB        1087.08     1095.22        5.42       7.04       8.17
  0.03       0.87      0.77
  29          ROB        1095.22     1103.35        0.32       1.02       4.52
  0.00       0.23      0.32


Warning: Divided flow computed for this cross-section.
Warning: The velocity head has changed by more than 0.5 ft (0.15 m).  This may
indicate the need for
         additional cross sections.
Warning: The conveyance ratio (upstream conveyance divided by downstream conveyance)
is less than
         0.7 or greater than 1.4.  This may indicate the need for additional cross
sections.

CROSS SECTION


RIVER: Los Penasquitos
REACH: Lower              RS: 3918.5

INPUT
Description: #3919
Station Elevation Data    num=      19
     Sta    Elev     Sta    Elev     Sta    Elev     Sta    Elev     Sta    Elev
       0   62.13    19.2   52.13    23.7   50.13     295   48.13     335   46.13
     538   46.13   895.3   44.13   953.4   42.13  983.88  40.997  1007.2   40.13
    1033   34.13  1063.7   32.13    1094   31.33  1124.3   32.13 1157.57  41.026
  1161.7   42.13  1186.2   52.13  1221.4   62.13  1262.1   72.13

Manning's n Values        num=       3
     Sta   n Val     Sta   n Val     Sta   n Val
       0    .035  983.88    .065 1157.57    .065

Bank Sta: Left   Right    Lengths: Left Channel   Right     Coeff Contr.   Expan.
        983.88 1157.57            254.1   279.2   299.7              .1       .3
Ineffective Flow     num=       1
   Sta L   Sta R    Elev  Permanent
       0     876               T

CROSS SECTION OUTPUT  Profile #100-yr
```

E.G. Elev (ft)	47.03	Element	Left OB	Channel
Right OB				
Vel Head (ft)	0.80	Wt. n-Val.	0.035	0.065
0.065				
W.S. Elev (ft)	46.23	Reach Len. (ft)	254.10	279.20
299.70				
Crit W.S. (ft)		Flow Area (sq ft)	361.64	1968.60
39.78				
E.G. Slope (ft/ft)	0.004128	Area (sq ft)	734.59	1968.60
39.78				
Q Total (cfs)	16800.00	Flow (cfs)	2208.64	14480.01
111.34				
Top Width (ft)	838.70	Top Width (ft)	650.84	173.69
14.17				
Vel Total (ft/s)	7.09	Avg. Vel. (ft/s)	6.11	7.36
2.80				
Max Chl Dpth (ft)	14.90	Hydr. Depth (ft)	3.35	11.33
2.81				
Conv. Total (cfs)	261488.4	Conv. (cfs)	34377.1	225378.3
1733.1				
Length Wtd. (ft)	277.11	Wetted Per. (ft)	107.94	175.65
15.12				
Min Ch El (ft)	31.33	Shear (lb/sq ft)	0.86	2.89
0.68				
Alpha	1.03	Stream Power (lb/ft s)	5.27	21.24
1.90				
Frctn Loss (ft)	0.83	Cum Volume (acre-ft)	102.82	141.08
71.18				
C & E Loss (ft)	0.10	Cum SA (acres)	39.54	11.43
8.02				

Profile #100-yr

Conv	Pos Hydr Depth(ft)	Velocity (ft/s)	Left Sta (ft)	Right Sta (ft)	Flow (cfs)	Area (sq ft)	W.P. (ft)	Percent
1	LOB	0.00	262.80	350.40	0.00	1.61	17.37	0.00
2	LOB	0.00	350.40	438.00	0.00	8.60	87.60	0.00
3	LOB	0.00	438.00	525.60	0.00	8.60	87.60	0.00
4	LOB	0.00	525.60	613.20	0.00	24.43	87.60	0.00
5	LOB	0.00	613.20	700.80	0.00	66.95	87.60	0.00
6	LOB	0.00	700.80	788.40	0.00	109.91	87.60	0.00
7	LOB	0.00	788.40	876.00	0.00	152.86	87.60	0.00
8	LOB	13.15	876.00	983.88	2208.64	361.64	107.94	3.35
9	Chan	2.06	983.88	998.35	346.42	79.61	14.48	5.50
10	Chan	2.54	998.35	1012.83	426.03	90.49	14.63	6.25
11	Chan		1012.83	1027.30	786.74	131.57	14.86	

4.68	9.09	5.98					
12	Chan	1027.30	1041.78	1263.94	173.84	14.64	
7.52	12.01	7.27					
13	Chan	1041.78	1056.25	1477.85	190.21	14.50	
8.80	13.14	7.77					
14	Chan	1056.25	1070.73	1646.76	202.90	14.49	
9.80	14.02	8.12					
15	Chan	1070.73	1085.20	1738.15	209.51	14.48	
10.35	14.47	8.30					
16	Chan	1085.20	1099.67	1803.38	214.19	14.48	
10.73	14.80	8.42					
17	Chan	1099.67	1114.15	1754.70	210.70	14.48	
10.44	14.56	8.33					
18	Chan	1114.15	1128.62	1636.72	202.92	14.63	
9.74	14.02	8.07					
19	Chan	1128.62	1143.10	1076.45	159.33	14.98	
6.41	11.01	6.76					
20	Chan	1143.10	1157.57	522.87	103.31	14.98	
3.11	7.14	5.06					
21	ROB	1157.57	1167.07	106.03	35.33	10.08	
0.63	3.72	3.00					
22	ROB	1167.07	1176.58	5.32	4.45	5.04	
0.03	0.95	1.20					

CROSS SECTION

RIVER: Los Penasquitos
REACH: Lower RS: 3639.3

INPUT
Description: #3639 - FEMA Cross Section G
Station Elevation Data num= 20

Sta	Elev	Sta	Elev	Sta	Elev	Sta	Elev	Sta	Elev
0	62.13	23.8	52.13	37.4	48.13	334.7	48.13	360.9	46.13
594.4	46.13	835.5	44.13	1057.5	42.13	1070	40.13	1079.04	38.003
1095.5	34.13	1129.7	32.13	1193	30.83	1255	32.13	1280.99	37.997
1299.3	42.13	1308.6	44.13	1335.7	48.13	1358.5	52.13	1400	62.13

Manning's n Values num= 3

Sta	n Val	Sta	n Val	Sta	n Val
0	.035	1057.5	.065	1299.3	.065

Bank Sta: Left	Right	Lengths: Left	Channel	Right	Coeff Contr.	Expan.
1057.5	1299.3	348.2	397.8	434.4	.1	.3

Ineffective Flow num= 1

Sta L	Sta R	Elev	Permanent
0	1008		T

CROSS SECTION OUTPUT Profile #100-yr

E.G. Elev (ft)	46.10	Element	Left OB	Channel
Right OB				
Vel Head (ft)	0.48	Wt. n-Val.	0.035	0.065
0.065				
W.S. Elev (ft)	45.62	Reach Len. (ft)	348.20	397.80
434.40				
Crit W.S. (ft)		Flow Area (sq ft)	161.54	2846.74
30.61				
E.G. Slope (ft/ft)	0.002292	Area (sq ft)	685.12	2846.74

30.61				
Q Total (cfs)	16800.00	Flow (cfs)	722.32	16032.73
44.95				
Top Width (ft)	662.35	Top Width (ft)	401.18	241.80
19.37				
Vel Total (ft/s)	5.53	Avg. Vel. (ft/s)	4.47	5.63
1.47				
Max Chl Dpth (ft)	14.79	Hydr. Depth (ft)	3.26	11.77
1.58				
Conv. Total (cfs)	350919.0	Conv. (cfs)	15087.9	334892.3
938.8				
Length Wtd. (ft)	394.45	Wetted Per. (ft)	49.50	243.86
19.69				
Min Ch El (ft)	30.83	Shear (lb/sq ft)	0.47	1.67
0.22				
Alpha	1.02	Stream Power (lb/ft s)	2.09	9.41
0.33				
Frctn Loss (ft)	0.94	Cum Volume (acre-ft)	98.67	125.64
70.94				
C & E Loss (ft)	0.00	Cum SA (acres)	36.47	10.10
7.90				

Profile #100-yr

Percent Conv	Pos Hydr Depth(ft)	Velocity (ft/s)	Left Sta (ft)	Right Sta (ft)	Flow (cfs)	Area (sq ft)	W.P. (ft)
1	LOB		604.80	705.60	0.00	10.07	49.28
0.00	0.20	0.00					
2	LOB		705.60	806.40	0.00	83.35	100.80
0.00	0.83	0.00					
3	LOB		806.40	907.20	0.00	169.47	100.80
0.00	1.68	0.00					
4	LOB		907.20	1008.00	0.00	260.70	100.80
0.00	2.59	0.00					
5	LOB		1008.00	1057.50	722.32	161.54	49.50
4.30	3.26	4.47					
6	Chan		1057.50	1077.65	326.10	104.93	20.52
1.94	5.21	3.11					
7	Chan		1077.65	1097.80	905.46	194.12	20.64
5.39	9.63	4.66					
8	Chan		1097.80	1117.95	1364.22	246.03	20.18
8.12	12.21	5.54					
9	Chan		1117.95	1138.10	1578.17	268.44	20.17
9.39	13.32	5.88					
10	Chan		1138.10	1158.25	1687.98	279.40	20.15
10.05	13.87	6.04					
11	Chan		1158.25	1178.40	1772.78	287.73	20.15
10.55	14.28	6.16					
12	Chan		1178.40	1198.55	1852.54	295.43	20.15
11.03	14.66	6.27					
13	Chan		1198.55	1218.70	1809.98	291.34	20.15
10.77	14.46	6.21					
14	Chan		1218.70	1238.85	1722.69	282.83	20.15
10.25	14.04	6.09					
15	Chan		1238.85	1259.00	1615.54	272.68	20.25
9.62	13.53	5.92					
16	Chan		1259.00	1279.15	1013.19	207.73	20.66
6.03	10.31	4.88					

17	Chan	1279.15	1299.30	384.08	116.07	20.66
2.29	5.76	3.31				
18	ROB	1299.30	1308.46	38.70	22.90	9.36
0.23	2.50	1.69				
19	ROB	1308.46	1317.61	6.23	7.62	9.26
0.04	0.83	0.82				
20	ROB	1317.61	1326.76	0.01	0.08	1.07
0.00	0.08	0.17				

CROSS SECTION

RIVER: Los Penasquitos
REACH: Lower RS: 3241.5

INPUT
Description: #3242 - FEMA Cross Section F
Station Elevation Data num= 22

Sta	Elev	Sta	Elev	Sta	Elev	Sta	Elev	Sta	Elev
0	62.13	21.5	52.13	34.9	46.13	266	46.13	402.4	44.93
473.2	44.93	693	45.53	851.3	44.13	975	43.73	1051.6	42.13
1100	40.33	1125.2	40.13	1145.9	32.13	1212.7	30.13	1225.5	29.93
1239.1	30.13	1296.8	32.13	1328	40.13	1335.8	42.13	1355.1	48.13
1411.2	52.13	1526.6	58.13						

Manning's n Values num= 3

Sta	n Val	Sta	n Val	Sta	n Val
0	.035	1125.2	.065	1328	.065

Bank Sta: Left	Right	Lengths: Left	Channel	Right	Coeff Contr.	Expan.
1125.2	1328	413.4	338.3	260.2	.1	.3

Ineffective Flow num= 1

Sta L	Sta R	Elev	Permanent
0	956		T

CROSS SECTION OUTPUT Profile #100-yr

E.G. Elev (ft)	45.16	Element	Left OB	Channel	Right OB
Vel Head (ft)	0.53	Wt. n-Val.	0.035	0.065	0.065
W.S. Elev (ft)	44.63	Reach Len. (ft)	413.40	338.30	260.20
Crit W.S. (ft)		Flow Area (sq ft)	422.09	2507.23	37.34
E.G. Slope (ft/ft)	0.002466	Area (sq ft)	506.21	2507.23	37.34
Q Total (cfs)	16800.00	Flow (cfs)	1636.41	15090.43	73.16
Top Width (ft)	549.02	Top Width (ft)	330.38	202.80	15.84
Vel Total (ft/s)	5.66	Avg. Vel. (ft/s)	3.88	6.02	1.96
Max Chl Dpth (ft)	14.70	Hydr. Depth (ft)	2.49	12.36	2.36
Conv. Total (cfs)	338317.0	Conv. (cfs)	32954.0	303889.8	1473.3
Length Wtd. (ft)	342.58	Wetted Per. (ft)	169.25	205.37	16.47
Min Ch El (ft)	29.93	Shear (lb/sq ft)	0.38	1.88	

0.35				
Alpha	1.06	Stream Power (lb/ft s)	1.49	11.31
0.68				
Frctn Loss (ft)	0.84	Cum Volume (acre-ft)	93.91	101.20
70.60				
C & E Loss (ft)	0.00	Cum SA (acres)	33.55	8.07
7.73				

Profile #100-yr

Conv	Pos Hydr	Left Sta (ft)	Right Sta (ft)	Flow (cfs)	Area (sq ft)	W.P. (ft)	Percent Depth(ft)	Velocity (ft/s)
1	LOB	743.56	849.78	0.00	13.35	54.96	0.24	0.00
2	LOB	849.78	956.00	0.00	70.77	106.22	0.67	0.00
3	LOB	956.00	1040.60	291.34	120.46	84.61	1.42	2.42
4	LOB	1040.60	1125.20	1345.07	301.63	84.64	3.57	4.46
5	Chan	1125.20	1142.10	542.80	131.23	18.12	7.77	4.14
6	Chan	1142.10	1159.00	1241.21	211.02	17.18	12.49	5.88
7	Chan	1159.00	1175.90	1366.65	222.14	16.91	13.14	6.15
8	Chan	1175.90	1192.80	1455.46	230.70	16.91	13.65	6.31
9	Chan	1192.80	1209.70	1546.48	239.25	16.91	14.16	6.46
10	Chan	1209.70	1226.60	1624.57	246.40	16.90	14.58	6.59
11	Chan	1226.60	1243.50	1618.54	245.85	16.90	14.55	6.58
12	Chan	1243.50	1260.40	1527.69	237.51	16.91	14.05	6.43
13	Chan	1260.40	1277.30	1423.05	227.61	16.91	13.47	6.25
14	Chan	1277.30	1294.20	1321.38	217.71	16.91	12.88	6.07
15	Chan	1294.20	1311.10	990.96	185.14	17.36	10.96	5.35
16	Chan	1311.10	1328.00	431.63	112.66	17.45	6.67	3.83
17	ROB	1328.00	1346.06	73.16	37.34	16.47	2.36	1.96

CROSS SECTION

RIVER: Los Penasquitos
REACH: Lower RS: 2903.2

INPUT
Description: #2903 - FEMA Cross Section E
Station Elevation Data num= 20

Sta	Elev	Sta	Elev	Sta	Elev	Sta	Elev	Sta	Elev
0	62.13	17.5	52.13	27.9	48.13	102.5	44.13	170	42.13
493.8	44.13	515	42.13	920.8	42.13	1128	40.13	1141	32.13
1148.1	30.13	1221.5	29.33	1294.9	30.13	1306.8	32.13	1325.6	40.13
1355.7	40.13	1393.6	42.13	1465.9	46.13	1547.2	52.13	1578.1	56.13

Manning's n Values num= 3

Sta	n Val	Sta	n Val	Sta	n Val
0	.035	1128	.065	1325.6	.065

Bank Sta: Left	Right	Lengths: Left	Channel	Right	Coeff Contr.	Expan.
1128	1325.6	352.6	414.8	460.3	.1	.3

Ineffective Flow num= 1

Sta L	Sta R	Elev	Permanent
0	1075		T

CROSS SECTION OUTPUT Profile #100-yr

E.G. Elev (ft)	44.32	Element	Left OB	Channel
Right OB				
Vel Head (ft)	0.55	Wt. n-Val.	0.035	0.065
0.065				
W.S. Elev (ft)	43.77	Reach Len. (ft)	352.60	414.80
460.30				
Crit W.S. (ft)		Flow Area (sq ft)	179.35	2544.14
233.90				
E.G. Slope (ft/ft)	0.002418	Area (sq ft)	1489.66	2544.14
233.90				
Q Total (cfs)	16800.00	Flow (cfs)	843.99	15485.53
470.48				
Top Width (ft)	1246.44	Top Width (ft)	951.20	197.60
97.64				
Vel Total (ft/s)	5.68	Avg. Vel. (ft/s)	4.71	6.09
2.01				
Max Chl Dpth (ft)	14.44	Hydr. Depth (ft)	3.38	12.88
2.40				
Conv. Total (cfs)	341617.6	Conv. (cfs)	17162.0	314888.7
9566.9				
Length Wtd. (ft)	414.16	Wetted Per. (ft)	53.00	201.95
97.74				
Min Ch El (ft)	29.33	Shear (lb/sq ft)	0.51	1.90
0.36				
Alpha	1.10	Stream Power (lb/ft s)	2.40	11.58
0.73				
Frctn Loss (ft)	0.71	Cum Volume (acre-ft)	84.44	81.58
69.79				
C & E Loss (ft)	0.03	Cum SA (acres)	27.47	6.51
7.39				

Warning: Divided flow computed for this cross-section.

Profile #100-yr

Percent Conv	Pos Hydr Depth(ft)	Velocity (ft/s)	Left Sta (ft)	Right Sta (ft)	Flow (cfs)	Area (sq ft)	W.P. (ft)
1	LOB		107.50	215.00	0.00	112.91	100.37
0.00	1.13	0.00					

2	LOB	215.00	322.50	0.00	110.71	107.50	0.00
1.03	0.00						
3	LOB	322.50	430.00	0.00	39.33	107.50	0.00
0.37	0.00						
4	LOB	430.00	537.50	0.00	51.24	45.44	0.00
1.13	0.00						
5	LOB	537.50	645.00	0.00	176.27	107.50	0.00
1.64	0.00						
6	LOB	645.00	752.50	0.00	176.27	107.50	0.00
1.64	0.00						
7	LOB	752.50	860.00	0.00	176.27	107.50	0.00
1.64	0.00						
8	LOB	860.00	967.50	0.00	186.80	107.50	0.00
1.74	0.00						
9	LOB	967.50	1075.00	0.00	280.51	107.51	0.00
2.61	0.00						
10	LOB	1075.00	1128.00	843.99	179.35	53.00	5.02
3.38	4.71						
11	Chan	1128.00	1144.47	592.98	141.36	18.87	3.53
8.58	4.19						
12	Chan	1144.47	1160.93	1386.64	223.64	16.61	8.25
13.58	6.20						
13	Chan	1160.93	1177.40	1444.19	228.38	16.47	8.60
13.87	6.32						
14	Chan	1177.40	1193.87	1475.47	231.34	16.47	8.78
14.05	6.38						
15	Chan	1193.87	1210.33	1507.02	234.29	16.47	8.97
14.23	6.43						
16	Chan	1210.33	1226.80	1535.53	236.94	16.47	9.14
14.39	6.48						
17	Chan	1226.80	1243.27	1518.31	235.34	16.47	9.04
14.29	6.45						
18	Chan	1243.27	1259.73	1486.68	232.39	16.47	8.85
14.11	6.40						
19	Chan	1259.73	1276.20	1455.31	229.44	16.47	8.66
13.93	6.34						
20	Chan	1276.20	1292.67	1424.20	226.48	16.47	8.48
13.75	6.29						
21	Chan	1292.67	1309.13	1207.05	206.90	16.84	7.18
12.57	5.83						
22	Chan	1309.13	1325.60	452.16	117.63	17.90	2.69
7.14	3.84						
23	ROB	1325.60	1348.56	195.04	83.55	22.95	1.16
3.64	2.33						
24	ROB	1348.56	1371.51	169.96	76.95	22.98	1.01
3.35	2.21						
25	ROB	1371.51	1394.46	84.19	50.50	22.99	0.50
2.20	1.67						
26	ROB	1394.46	1417.42	21.03	21.97	22.99	0.13
0.96	0.96						
27	ROB	1417.42	1440.37	0.27	0.94	5.83	0.00
0.16	0.29						

Warning: Divided flow computed for this cross-section.

CROSS SECTION

RIVER: Los Penasquitos
REACH: Lower RS: 2488.4

INPUT
Description: #2488 - FEMA Cross Section D
Station Elevation Data num= 32

Sta	Elev	Sta	Elev	Sta	Elev	Sta	Elev	Sta	Elev
0	62.13	31.4	52.13	47.6	50.13	160.8	46.13	290.3	42.13
355.3	42.13	567.5	42.13	614.2	38.13	653.6	40.13	698.1	42.13
825	42.13	1035	40.13	1226	39.03	1364.2	38.13	1377.2	32.13
1386.2	30.13	1403.4	28.13	1459.3	28.13	1504.2	30.13	1508	32.13
1520.1	38.13	1528.6	40.13	1536.1	40.13	1543.3	38.13	1558.4	34.13
1602.7	34.13	1638.3	42.13	1652.1	48.03	1687.1	51.33	1729.1	48.03
1816.1	54.63	1864.1	67.73						

Manning's n Values num= 3

Sta	n Val	Sta	n Val	Sta	n Val
0	.035	1364.2	.05	1520.1	.05

Bank Sta: Left	Right	Lengths: Left	Channel	Right	Coeff Contr.	Expan.
1364.2	1520.1	138.5	197.9	244.6	.1	.3

Ineffective Flow num= 1

Sta L	Sta R	Elev	Permanent
0	1270		T

CROSS SECTION OUTPUT Profile #100-yr

E.G. Elev (ft)	43.58	Element	Left OB	Channel
Right OB				
Vel Head (ft)	0.45	Wt. n-Val.	0.035	0.050
0.050				
W.S. Elev (ft)	43.12	Reach Len. (ft)	138.50	197.90
244.60				
Crit W.S. (ft)		Flow Area (sq ft)	441.36	2061.06
767.91				
E.G. Slope (ft/ft)	0.001293	Area (sq ft)	2525.07	2061.06
767.91				
Q Total (cfs)	16800.00	Flow (cfs)	1886.25	12126.42
2787.34				
Top Width (ft)	1382.44	Top Width (ft)	1106.02	155.90
120.52				
Vel Total (ft/s)	5.14	Avg. Vel. (ft/s)	4.27	5.88
3.63				
Max Chl Dpth (ft)	14.99	Hydr. Depth (ft)	4.69	13.22
6.37				
Conv. Total (cfs)	467287.6	Conv. (cfs)	52465.4	337293.2
77529.0				
Length Wtd. (ft)	205.50	Wetted Per. (ft)	94.20	159.50
122.64				
Min Ch El (ft)	28.13	Shear (lb/sq ft)	0.38	1.04
0.51				
Alpha	1.11	Stream Power (lb/ft s)	1.62	6.14
1.83				
Frctn Loss (ft)	0.15	Cum Volume (acre-ft)	68.19	59.65
64.49				
C & E Loss (ft)	0.08	Cum SA (acres)	19.14	4.83
6.23				

Warning: The conveyance ratio (upstream conveyance divided by downstream conveyance) is less than
0.7 or greater than 1.4. This may indicate the need for additional cross sections.

Profile #100-yr

Percent Conv	Pos Hydr Depth(ft)	Velocity (ft/s)	Left Sta (ft)	Right Sta (ft)	Flow (cfs)	Area (sq ft)	W.P. (ft)
1	LOB		254.00	381.00	0.00	105.91	122.83
0.00	0.86	0.00					
2	LOB		381.00	508.00	0.00	125.99	127.00
0.00	0.99	0.00					
3	LOB		508.00	635.00	0.00	291.61	127.20
0.00	2.30	0.00					
4	LOB		635.00	762.00	0.00	216.47	127.07
0.00	1.70	0.00					
5	LOB		762.00	889.00	0.00	145.50	127.00
0.00	1.15	0.00					
6	LOB		889.00	1016.00	0.00	280.21	127.01
0.00	2.21	0.00					
7	LOB		1016.00	1143.00	0.00	411.86	127.00
0.00	3.24	0.00					
8	LOB		1143.00	1270.00	0.00	506.16	127.00
0.00	3.99	0.00					
9	LOB		1270.00	1364.20	1886.25	441.36	94.20
11.23	4.69	4.27					
10	Chan		1364.20	1377.19	404.76	103.81	14.31
2.41	7.99	3.90					
11	Chan		1377.19	1390.18	883.08	160.69	13.24
5.26	12.37	5.50					
12	Chan		1390.18	1403.18	1121.94	184.62	13.08
6.68	14.21	6.08					
13	Chan		1403.18	1416.17	1232.04	194.77	12.99
7.33	14.99	6.33					
14	Chan		1416.17	1429.16	1232.16	194.77	12.99
7.33	14.99	6.33					
15	Chan		1429.16	1442.15	1232.15	194.77	12.99
7.33	14.99	6.33					
16	Chan		1442.15	1455.14	1232.16	194.77	12.99
7.33	14.99	6.33					
17	Chan		1455.14	1468.13	1213.35	193.03	13.00
7.22	14.86	6.29					
18	Chan		1468.13	1481.13	1139.31	185.90	13.00
6.78	14.31	6.13					
19	Chan		1481.13	1494.12	1063.55	178.38	13.00
6.33	13.73	5.96					
20	Chan		1494.12	1507.11	952.06	168.83	13.38
5.67	13.00	5.64					
21	Chan		1507.11	1520.10	419.85	106.71	14.51
2.50	8.21	3.93					
22	ROB		1520.10	1551.37	343.10	134.05	32.06
2.04	4.29	2.56					
23	ROB		1551.37	1582.65	1147.07	274.67	31.52
6.83	8.78	4.18					
24	ROB		1582.65	1613.92	1093.81	267.07	31.55
6.51	8.54	4.10					
25	ROB		1613.92	1645.19	203.36	92.13	27.51
1.21	3.45	2.21					

Warning: The conveyance ratio (upstream conveyance divided by downstream conveyance) is less than
0.7 or greater than 1.4. This may indicate the need for additional cross

sections.

CROSS SECTION

RIVER: Los Penasquitos
REACH: Lower RS: 2290.5

INPUT
Description: #2291 - FEMA Cross Section C
Station Elevation Data num= 29

Sta	Elev	Sta	Elev	Sta	Elev	Sta	Elev	Sta	Elev
0	48.13	29.8	46.13	60.4	44.13	101.1	42.13	208.4	42.13
299.8	42.13	323.4	38.13	353.86	38.13	457.6	40.13	798.3	40.13
1117	38.13	1161	38.13	1181.6	36.13	1194.1	34.13	1212.4	28.13
1299	28.13	1321.1	30.13	1325.4	32.13	1336.3	36.13	1345	36.13
1357.7	34.13	1369.45	32.13	1375.69	30.13	1526.67	30.13	1623.36	30.13
1628.1	32.13	1657.16	42.13	1689.8	52.13	1839.4	67.73		

Manning's n Values num= 3

Sta	n Val	Sta	n Val	Sta	n Val
0	.035	1181.6	.05	1336.3	.035

Bank Sta: Left	Right	Lengths: Left	Channel	Right	Coeff Contr.	Expan.
1181.6	1336.3	222.8	250.3	243.7	.1	.3

Ineffective Flow num= 2

Sta L	Sta R	Elev	Permanent
0	1047		T
1345	1640	36	T

CROSS SECTION OUTPUT Profile #100-yr

E.G. Elev (ft)	43.34	Element	Left OB	Channel	Right OB
Vel Head (ft)	0.18	Wt. n-Val.	0.035	0.050	0.035
W.S. Elev (ft)	43.16	Reach Len. (ft)	222.80	250.30	243.70
Crit W.S. (ft)		Flow Area (sq ft)	682.90	2083.08	2242.81
E.G. Slope (ft/ft)	0.000469	Area (sq ft)	3525.69	2083.08	3818.73
Q Total (cfs)	16800.00	Flow (cfs)	1852.20	7508.62	7439.18
Top Width (ft)	1580.49	Top Width (ft)	1101.56	154.70	324.24
Vel Total (ft/s)	3.35	Avg. Vel. (ft/s)	2.71	3.60	3.32
Max Chl Dpth (ft)	15.03	Hydr. Depth (ft)	5.07	13.47	6.92
Conv. Total (cfs)	776074.8	Conv. (cfs)	85562.2	346860.3	343652.3
Length Wtd. (ft)	244.61	Wetted Per. (ft)	134.70	157.06	327.11
Min Ch El (ft)	28.13	Shear (lb/sq ft)	0.15	0.39	0.20
Alpha	1.02	Stream Power (lb/ft s)	0.40	1.40	0.67
Frctn Loss (ft)	0.13	Cum Volume (acre-ft)	58.57	50.24	51.62
C & E Loss (ft)	0.01	Cum SA (acres)	15.63	4.12	4.99

Profile #100-yr

Percent Conv	Pos Hydr Depth(ft)	Velocity (ft/s)	Left Sta (ft)	Right Sta (ft)	Flow (cfs)	Area (sq ft)	W.P. (ft)
1	LOB		0.00	104.70	0.00	14.62	24.68
0.00	0.59	0.00					
2	LOB		104.70	209.40	0.00	108.34	104.70
0.00	1.03	0.00					
3	LOB		209.40	314.10	0.00	125.67	104.90
0.00	1.20	0.00					
4	LOB		314.10	418.80	0.00	479.16	104.84
0.00	4.58	0.00					
5	LOB		418.80	523.50	0.00	332.25	104.71
0.00	3.17	0.00					
6	LOB		523.50	628.20	0.00	317.74	104.70
0.00	3.03	0.00					
7	LOB		628.20	732.90	0.00	317.74	104.70
0.00	3.03	0.00					
8	LOB		732.90	837.60	0.00	322.58	104.70
0.00	3.08	0.00					
9	LOB		837.60	942.30	0.00	377.96	104.70
0.00	3.61	0.00					
10	LOB		942.30	1047.00	0.00	446.75	104.70
0.00	4.27	0.00					
11	LOB		1047.00	1181.60	1852.20	682.90	134.70
11.03	5.07	2.71					
12	Chan		1181.60	1194.49	261.17	104.00	13.07
1.55	8.07	2.51					
13	Chan		1194.49	1207.38	445.22	145.37	13.57
2.65	11.28	3.06					
14	Chan		1207.38	1220.28	708.18	189.70	13.15
4.22	14.71	3.73					
15	Chan		1220.28	1233.17	743.97	193.82	12.89
4.43	15.03	3.84					
16	Chan		1233.17	1246.06	743.97	193.82	12.89
4.43	15.03	3.84					
17	Chan		1246.06	1258.95	743.97	193.82	12.89
4.43	15.03	3.84					
18	Chan		1258.95	1271.84	743.97	193.82	12.89
4.43	15.03	3.84					
19	Chan		1271.84	1284.73	743.97	193.82	12.89
4.43	15.03	3.84					
20	Chan		1284.73	1297.63	743.97	193.82	12.89
4.43	15.03	3.84					
21	Chan		1297.63	1310.52	704.26	187.82	12.94
4.19	14.57	3.75					
22	Chan		1310.52	1323.41	600.21	171.87	13.17
3.57	13.33	3.49					
23	Chan		1323.41	1336.30	325.78	121.38	13.81
1.94	9.42	2.68					
24	ROB		1336.30	1345.00	204.10	61.20	8.70
1.21	7.03	3.33					
25	ROB		1345.00	1394.17	1174.40	351.44	49.80
6.99	7.15	3.34					
26	ROB		1394.17	1443.33	1189.18	352.27	49.17
7.08	7.16	3.38					
27	ROB		1443.33	1492.50	1189.18	352.27	49.17

```
7.08        7.16        3.38
28           ROB          1492.50     1541.67     1189.18     352.27      49.17
7.08        7.16        3.38
29           ROB          1541.67     1590.83     1189.18     352.27      49.17
7.08        7.16        3.38
30           ROB          1590.83     1640.00     1164.51     350.93      50.26
6.93        7.14        3.32
31           ROB          1640.00     1689.85      139.46      70.17      21.68
0.83        3.42        1.99


CROSS SECTION


RIVER: Los Penasquitos
REACH: Lower              RS: 2040.2

INPUT
Description: #2040
Station Elevation Data    num=      20
     Sta    Elev     Sta    Elev     Sta    Elev     Sta    Elev     Sta    Elev
       0   48.13   275.5   42.13     300   36.43     368   36.43     655   40.03
  1059.6   39.13    1148   36.78    1162   36.13  1192.3   28.13    1291   28.13
  1323.3   36.13    1330   37.33  1345.6   36.13  1356.2   31.13  1357.8   30.13
  1448.3   28.93    1611   29.63    1729   30.13    1818   42.13  1822.2   67.73

Manning's n Values        num=       3
     Sta   n Val     Sta   n Val     Sta   n Val
       0    .035    1162     .05  1323.3    .035

Bank Sta: Left   Right    Lengths: Left Channel   Right     Coeff Contr.   Expan.
          1162  1323.3              98.5    88.7    94.2              .1       .3
Ineffective Flow     num=       2
   Sta L   Sta R    Elev  Permanent
       0    1047               F
    1438  1822.2               F

CROSS SECTION OUTPUT  Profile #100-yr


  E.G. Elev (ft)              43.21    Element                    Left OB    Channel
Right OB
  Vel Head (ft)                0.29    Wt. n-Val.                  0.035      0.050
  0.035
  W.S. Elev (ft)              42.91    Reach Len. (ft)             98.50      88.70
  94.20
  Crit W.S. (ft)                       Flow Area (sq ft)          576.08    2133.95
1323.67
  E.G. Slope (ft/ft)       0.000563    Area (sq ft)              3764.31    2133.95
5826.35
  Q Total (cfs)           16800.00     Flow (cfs)                1699.10    8350.60
6750.31
  Top Width (ft)           1578.54     Top Width (ft)             922.41     161.30
 494.83
  Vel Total (ft/s)            4.16     Avg. Vel. (ft/s)             2.95       3.91
   5.10
  Max Chl Dpth (ft)          14.78     Hydr. Depth (ft)             5.01      13.23
  11.54
  Conv. Total (cfs)       707793.1     Conv. (cfs)               71584.0   351815.1
284394.0
  Length Wtd. (ft)           90.82     Wetted Per. (ft)           115.05     163.31
 116.27
```

Min Ch El (ft)	28.13	Shear (lb/sq ft)	0.18	0.46
0.40				
Alpha	1.09	Stream Power (lb/ft s)	0.52	1.80
2.04				
Frctn Loss (ft)	0.08	Cum Volume (acre-ft)	39.93	38.13
24.64				
C & E Loss (ft)	0.06	Cum SA (acres)	10.46	3.21
2.69				

Warning: The velocity head has changed by more than 0.5 ft (0.15 m). This may indicate the need for
additional cross sections.
Warning: The conveyance ratio (upstream conveyance divided by downstream conveyance) is less than
0.7 or greater than 1.4. This may indicate the need for additional cross sections.

Profile #100-yr

Percent Conv	Pos Hydr Depth(ft)	Velocity (ft/s)	Left Sta (ft)	Right Sta (ft)	Flow (cfs)	Area (sq ft)	W.P. (ft)
1	LOB		209.40	314.10	0.00	194.42	75.17
0.00	2.61	0.00					
2	LOB		314.10	418.80	0.00	662.49	104.70
0.00	6.33	0.00					
3	LOB		418.80	523.50	0.00	543.20	104.71
0.00	5.19	0.00					
4	LOB		523.50	628.20	0.00	405.70	104.71
0.00	3.87	0.00					
5	LOB		628.20	732.90	0.00	313.01	104.70
0.00	2.99	0.00					
6	LOB		732.90	837.60	0.00	332.09	104.70
0.00	3.17	0.00					
7	LOB		837.60	942.30	0.00	356.47	104.70
0.00	3.40	0.00					
8	LOB		942.30	1047.00	0.00	380.85	104.70
0.00	3.64	0.00					
9	LOB		1047.00	1162.00	1699.10	576.08	115.05
10.11	5.01	2.95					
10	Chan		1162.00	1175.44	325.21	115.01	13.90
1.94	8.56	2.83					
11	Chan		1175.44	1188.88	579.83	162.72	13.90
3.45	12.11	3.56					
12	Chan		1188.88	1202.33	811.89	197.15	13.56
4.83	14.67	4.12					
13	Chan		1202.33	1215.77	827.27	198.70	13.44
4.92	14.78	4.16					
14	Chan		1215.77	1229.21	827.26	198.70	13.44
4.92	14.78	4.16					
15	Chan		1229.21	1242.65	827.26	198.70	13.44
4.92	14.78	4.16					
16	Chan		1242.65	1256.09	827.26	198.70	13.44
4.92	14.78	4.16					
17	Chan		1256.09	1269.53	827.26	198.70	13.44
4.92	14.78	4.16					
18	Chan		1269.53	1282.98	827.27	198.70	13.44
4.92	14.78	4.16					
19	Chan		1282.98	1296.42	795.76	195.06	13.61

```
  4.74      14.51      4.08
  20          Chan       1296.42     1309.86      555.21     158.29      13.85
  3.30      11.78      3.51
  21          Chan       1309.86     1323.30      319.11     113.54      13.85
  1.90       8.45      2.81
  22          ROB        1323.30     1361.53     1149.34     303.71      39.79
  6.84       7.94      3.78
  23          ROB        1361.53     1399.77     2711.81     500.29      38.24
 16.14      13.09      5.42
  24          ROB        1399.77     1438.00     2889.16     519.67      38.24
 17.20      13.59      5.56
  25          ROB        1438.00     1486.03        0.00     667.72      48.03
  0.00      13.90      0.00
  26          ROB        1486.03     1534.05        0.00     658.73      48.03
  0.00      13.72      0.00
  27          ROB        1534.05     1582.08        0.00     648.81      48.03
  0.00      13.51      0.00
  28          ROB        1582.08     1630.10        0.00     638.90      48.03
  0.00      13.30      0.00
  29          ROB        1630.10     1678.13        0.00     629.10      48.03
  0.00      13.10      0.00
  30          ROB        1678.13     1726.15        0.00     619.32      48.03
  0.00      12.90      0.00
  31          ROB        1726.15     1774.18        0.00     476.30      48.43
  0.00       9.92      0.00
  32          ROB        1774.18     1822.20        0.00     163.80      45.01
  0.00       3.73      0.00


Warning: The velocity head has changed by more than 0.5 ft (0.15 m).  This may
indicate the need for
         additional cross sections.
Warning: The conveyance ratio (upstream conveyance divided by downstream conveyance)
is less than
         0.7 or greater than 1.4.  This may indicate the need for additional cross
sections.

CROSS SECTION


RIVER: Los Penasquitos
REACH: Lower                RS: 1951.5

INPUT
Description: #1952 - FEMA Cross Section B
Station Elevation Data     num=      18
     Sta    Elev     Sta    Elev     Sta    Elev     Sta    Elev     Sta    Elev
       0   48.13      38   44.13   278.5   42.13   307.3   36.13   368.1   36.13
   664.7   40.03  1126.5   38.13    1161   36.13  1175.8   28.13  1286.5   28.13
  1301.6   36.13  1333.2   38.13  1352.8   32.13  1375.6   30.13  1755.6   30.13
  1803.6   32.13  1860.6   42.13  1892.3   62.13

Manning's n Values         num=       3
     Sta   n Val     Sta   n Val     Sta   n Val
       0    .035    1161     .04  1301.6    .035

Bank Sta: Left   Right    Lengths: Left Channel   Right     Coeff Contr.   Expan.
          1161  1301.6             107.1    63.5     138              .1       .3
Ineffective Flow     num=       2
   Sta L   Sta R    Elev  Permanent
       0    1096               F
  1333.2  1892.3   52.13       F
```

CROSS SECTION OUTPUT Profile #100-yr

E.G. Elev (ft)	43.07	Element	Left OB	Channel
Right OB				
Vel Head (ft)	0.89	Wt. n-Val.	0.035	0.040
0.035				
W.S. Elev (ft)	42.17	Reach Len. (ft)	107.10	63.50
138.00				
Crit W.S. (ft)	36.68	Flow Area (sq ft)	295.43	1854.94
159.38				
E.G. Slope (ft/ft)	0.001513	Area (sq ft)	3272.10	1854.94
5943.43				
Q Total (cfs)	16800.00	Flow (cfs)	1337.97	14688.89
773.14				
Top Width (ft)	1587.42	Top Width (ft)	887.75	140.60
559.07				
Vel Total (ft/s)	7.27	Avg. Vel. (ft/s)	4.53	7.92
4.85				
Max Chl Dpth (ft)	14.04	Hydr. Depth (ft)	4.55	13.19
5.04				
Conv. Total (cfs)	431854.0	Conv. (cfs)	34393.4	377586.7
19873.9				
Length Wtd. (ft)	69.17	Wetted Per. (ft)	65.06	144.61
31.66				
Min Ch El (ft)	28.13	Shear (lb/sq ft)	0.43	1.21
0.48				
Alpha	1.09	Stream Power (lb/ft s)	1.94	9.60
2.31				
Frctn Loss (ft)	0.12	Cum Volume (acre-ft)	31.97	34.06
11.91				
C & E Loss (ft)	0.02	Cum SA (acres)	8.41	2.91
1.56				

Note: Multiple critical depths were found at this location. The critical depth with the lowest, valid,
water surface was used.

Profile #100-yr

Percent Conv	Pos Hydr Depth(ft)	Velocity (ft/s)	Left Sta (ft)	Right Sta (ft)	Flow (cfs)	Area (sq ft)	W.P. (ft)
1	LOB		219.20	328.80	0.00	217.71	56.17
0.00	3.92	0.00					
2	LOB		328.80	438.40	0.00	629.90	109.61
0.00	5.75	0.00					
3	LOB		438.40	548.00	0.00	482.10	109.61
0.00	4.40	0.00					
4	LOB		548.00	657.60	0.00	324.16	109.61
0.00	2.96	0.00					
5	LOB		657.60	767.20	0.00	256.89	109.60
0.00	2.34	0.00					
6	LOB		767.20	876.80	0.00	305.88	109.60
0.00	2.79	0.00					
7	LOB		876.80	986.40	0.00	355.30	109.60
0.00	3.24	0.00					
8	LOB		986.40	1096.00	0.00	404.72	109.60

0.00	3.69	0.00						
9	LOB	1096.00	1161.00	1337.97	295.43	65.06		
7.96	4.55	4.53						
10	Chan	1161.00	1172.72	618.05	107.91	13.32		
3.68	9.21	5.73						
11	Chan	1172.72	1184.43	1293.74	161.98	12.14		
7.70	13.82	7.99						
12	Chan	1184.43	1196.15	1359.80	164.55	11.72		
8.09	14.04	8.26						
13	Chan	1196.15	1207.87	1359.80	164.55	11.72		
8.09	14.04	8.26						
14	Chan	1207.87	1219.58	1359.80	164.55	11.72		
8.09	14.04	8.26						
15	Chan	1219.58	1231.30	1359.80	164.55	11.72		
8.09	14.04	8.26						
16	Chan	1231.30	1243.02	1359.78	164.54	11.72		
8.09	14.04	8.26						
17	Chan	1243.02	1254.73	1359.80	164.55	11.72		
8.09	14.04	8.26						
18	Chan	1254.73	1266.45	1359.80	164.55	11.72		
8.09	14.04	8.26						
19	Chan	1266.45	1278.17	1359.80	164.55	11.72		
8.09	14.04	8.26						
20	Chan	1278.17	1289.88	1285.90	161.51	12.16		
7.65	13.78	7.96						
21	Chan	1289.88	1301.60	612.85	107.18	13.26		
3.65	9.15	5.72						
22	ROB	1301.60	1333.20	773.14	159.38	31.66		
4.60	5.04	4.85						
23	ROB	1333.20	1389.11	0.00	552.56	56.90		
0.00	9.88	0.00						
24	ROB	1389.11	1445.02	0.00	673.36	55.91		
0.00	12.04	0.00						
25	ROB	1445.02	1500.93	0.00	673.36	55.91		
0.00	12.04	0.00						
26	ROB	1500.93	1556.84	0.00	673.36	55.91		
0.00	12.04	0.00						
27	ROB	1556.84	1612.75	0.00	673.36	55.91		
0.00	12.04	0.00						
28	ROB	1612.75	1668.66	0.00	673.36	55.91		
0.00	12.04	0.00						
29	ROB	1668.66	1724.57	0.00	673.36	55.91		
0.00	12.04	0.00						
30	ROB	1724.57	1780.48	0.00	660.47	55.93		
0.00	11.81	0.00						
31	ROB	1780.48	1836.39	0.00	478.37	56.43		
0.00	8.56	0.00						
32	ROB	1836.39	1892.30	0.00	52.47	24.66		
0.00	2.16	0.00						

Note: Multiple critical depths were found at this location. The critical depth with the lowest, valid,
water surface was used.

CROSS SECTION

RIVER: Los Penasquitos
REACH: Lower RS: 1888

INPUT

Description: #1888 - Upstream Vista Sorrento Parkway

Station Elevation Data num= 15

Sta	Elev	Sta	Elev	Sta	Elev	Sta	Elev	Sta	Elev
0	52.13	75.85	46.13	292.35	36.13	513.35	36.13	904.05	40.13
1140.85	42.13	1213.35	42.13	1240.65	34.13	1257.45	28.13	1362.95	28.13
1377.75	34.13	1423.35	42.13	1464.89	44.13	1506.35	46.13	1656.35	48.33

Manning's n Values num= 3

Sta	n Val	Sta	n Val	Sta	n Val
0	.035	1240.65	.04	1377.75	.035

Bank Sta: Left	Right	Lengths: Left	Channel	Right	Coeff Contr.	Expan.
1240.65	1377.75	57.3	79.5	88.2	.3	.3

Ineffective Flow num= 2

Sta L	Sta R	Elev	Permanent
0	1140.85		T
1464.75	1656.35		T

CROSS SECTION OUTPUT Profile #100-yr

E.G. Elev (ft)	42.93	Element	Left OB	Channel
Right OB				
Vel Head (ft)	1.13	Wt. n-Val.	0.035	0.040
0.035				
W.S. Elev (ft)	41.79	Reach Len. (ft)	3.00	3.00
3.00				
Crit W.S. (ft)	36.72	Flow Area (sq ft)	100.18	1778.32
167.33				
E.G. Slope (ft/ft)	0.001873	Area (sq ft)	3293.16	1778.32
167.33				
Q Total (cfs)	16800.00	Flow (cfs)	438.48	15616.30
745.22				
Top Width (ft)	1138.04	Top Width (ft)	957.27	137.10
43.68				
Vel Total (ft/s)	8.21	Avg. Vel. (ft/s)	4.38	8.78
4.45				
Max Chl Dpth (ft)	13.66	Hydr. Depth (ft)	3.83	12.97
3.83				
Conv. Total (cfs)	388175.5	Conv. (cfs)	10131.3	360825.3
17218.9				
Length Wtd. (ft)	3.00	Wetted Per. (ft)	27.25	139.31
44.34				
Min Ch El (ft)	28.13	Shear (lb/sq ft)	0.43	1.49
0.44				
Alpha	1.08	Stream Power (lb/ft s)	1.88	13.11
1.97				
Frctn Loss (ft)	0.01	Cum Volume (acre-ft)	23.90	31.42
2.23				
C & E Loss (ft)	0.02	Cum SA (acres)	6.14	2.70
0.60				

Warning: Divided flow computed for this cross-section.
Warning: The conveyance ratio (upstream conveyance divided by downstream conveyance) is less than
0.7 or greater than 1.4. This may indicate the need for additional cross sections.

Profile #100-yr

Percent Conv	Pos Hydr Depth(ft)	Velocity (ft/s)	Left Sta (ft)	Right Sta (ft)	Flow (cfs)	Area (sq ft)	W.P. (ft)
1	LOB		114.09	228.17	0.00	78.80	58.47
0.00	1.35	0.00					
2	LOB		228.17	342.26	0.00	550.87	114.15
0.00	4.83	0.00					
3	LOB		342.26	456.34	0.00	646.00	114.09
0.00	5.66	0.00					
4	LOB		456.34	570.43	0.00	629.32	114.09
0.00	5.52	0.00					
5	LOB		570.43	684.51	0.00	512.71	114.09
0.00	4.49	0.00					
6	LOB		684.51	798.60	0.00	379.45	114.09
0.00	3.33	0.00					
7	LOB		798.60	912.68	0.00	246.27	114.09
0.00	2.16	0.00					
8	LOB		912.68	1026.77	0.00	126.38	114.09
0.00	1.11	0.00					
9	LOB		1026.77	1140.85	0.00	23.20	74.12
0.00	0.31	0.00					
10	LOB		1140.85	1240.65	438.48	100.18	27.25
2.61	3.83	4.38					
11	Chan		1240.65	1252.08	771.44	110.85	12.13
4.59	9.70	6.96					
12	Chan		1252.08	1263.50	1317.57	150.93	11.76
7.84	13.21	8.73					
13	Chan		1263.50	1274.93	1420.41	156.09	11.43
8.45	13.66	9.10					
14	Chan		1274.93	1286.35	1420.39	156.09	11.42
8.45	13.66	9.10					
15	Chan		1286.35	1297.78	1420.41	156.09	11.43
8.45	13.66	9.10					
16	Chan		1297.78	1309.20	1420.39	156.09	11.42
8.45	13.66	9.10					
17	Chan		1309.20	1320.63	1420.41	156.09	11.43
8.45	13.66	9.10					
18	Chan		1320.63	1332.05	1420.41	156.09	11.43
8.45	13.66	9.10					
19	Chan		1332.05	1343.48	1420.39	156.09	11.42
8.45	13.66	9.10					
20	Chan		1343.48	1354.90	1420.41	156.09	11.43
8.45	13.66	9.10					
21	Chan		1354.90	1366.33	1364.39	153.78	11.69
8.12	13.46	8.87					
22	Chan		1366.33	1377.75	799.71	114.00	12.33
4.76	9.98	7.01					
23	ROB		1377.75	1406.75	709.25	148.44	29.44
4.22	5.12	4.78					
24	ROB		1406.75	1435.75	35.97	18.89	14.90
0.21	1.29	1.90					

Warning: Divided flow computed for this cross-section.
Warning: The conveyance ratio (upstream conveyance divided by downstream conveyance) is less than
0.7 or greater than 1.4. This may indicate the need for additional cross sections.

BRIDGE

```
RIVER: Los Penasquitos
REACH: Lower              RS: 1850

INPUT
Description: Vista Sorrento Parkway Bridge
Distance from Upstream XS =        3
Deck/Roadway Width        =    74.75
Weir Coefficient          =      2.6
Upstream  Deck/Roadway Coordinates
    num=        3
     Sta Hi Cord Lo Cord     Sta Hi Cord Lo Cord     Sta Hi Cord Lo Cord
 1140.85   42.13   40.13 1213.35   43.13   41.13 1464.89   44.13   42.13

Upstream Bridge Cross Section Data
Station Elevation Data    num=       15
     Sta    Elev     Sta    Elev     Sta    Elev     Sta    Elev     Sta    Elev
       0   52.13   75.85   46.13  292.35   36.13  513.35   36.13  904.05   40.13
 1140.85   42.13 1213.35   42.13 1240.65   34.13 1257.45   28.13 1362.95   28.13
 1377.75   34.13 1423.35   42.13 1464.89   44.13 1506.35   46.13 1656.35   48.33

Manning's n Values        num=        3
     Sta   n Val     Sta   n Val     Sta   n Val
       0    .035 1240.65     .04 1377.75    .035

Bank Sta: Left   Right    Coeff Contr.   Expan.
       1240.65 1377.75             .3       .3
Ineffective Flow     num=        2
   Sta L   Sta R    Elev  Permanent
       0 1140.85               T
 1464.75 1656.35               T

Downstream  Deck/Roadway Coordinates
    num=        3
     Sta Hi Cord Lo Cord     Sta Hi Cord Lo Cord     Sta Hi Cord Lo Cord
 1110.68   42.13   40.13 1200.08   43.13   41.13 1428.78   44.13   42.13

Downstream Bridge Cross Section Data
Station Elevation Data    num=       18
     Sta    Elev     Sta    Elev     Sta    Elev     Sta    Elev     Sta    Elev
       0   52.13   77.28   46.13  265.28   36.13  335.28   36.13  566.88   36.13
  759.58   38.13 1110.68   42.13 1148.28   42.23 1200.08   42.13 1261.38   32.13
 1271.28   28.13 1370.58   28.13 1386.18   32.13 1417.38   42.13 1428.78   44.13
 1450.18   44.13 1503.08   46.13 1538.08    47.6

Manning's n Values        num=        3
     Sta   n Val     Sta   n Val     Sta   n Val
       0    .035 1261.38     .04 1386.18    .035

Bank Sta: Left   Right    Coeff Contr.   Expan.
       1261.38 1386.18             .1       .3
Ineffective Flow     num=        2
   Sta L   Sta R    Elev  Permanent
       0 1148.28               T
 1450.88 1538.08               T

Upstream Embankment side slope              =       0 horiz. to 1.0 vertical
Downstream Embankment side slope            =       0 horiz. to 1.0 vertical
Maximum allowable submergence for weir flow =     .95
Elevation at which weir flow begins         =   41.13
Energy head used in spillway design         =
Spillway height used in design              =
Weir crest shape                            = Broad Crested
```

Number of Piers = 2

Pier Data
Pier Station Upstream= 1277.7 Downstream= 1288.43
Upstream num= 2

Width	Elev	Width	Elev
2	22.13	2	42.13

Downstream num= 2

Width	Elev	Width	Elev
2	22.13	2	42.13

Pier Data
Pier Station Upstream= 1342.7 Downstream= 1353.43
Upstream num= 2

Width	Elev	Width	Elev
2	22.13	2	42.13

Downstream num= 2

Width	Elev	Width	Elev
2	22.13	2	42.13

Number of Bridge Coefficient Sets = 1

Low Flow Methods and Data
Energy
Selected Low Flow Methods = Highest Energy Answer

High Flow Method
Energy Only

Additional Bridge Parameters
Add Friction component to Momentum
Do not add Weight component to Momentum
Class B flow critical depth computations use critical depth
inside the bridge at the upstream end
Criteria to check for pressure flow = Upstream energy grade line

BRIDGE OUTPUT Profile #100-yr

E.G. US. (ft)	42.93	Element	Inside BR US	Inside BR DS
W.S. US. (ft)	41.79	E.G. Elev (ft)	42.90	42.54
Q Total (cfs)	16800.00	W.S. Elev (ft)	41.69	41.26
Q Bridge (cfs)	16800.00	Crit W.S. (ft)	36.94	37.11
Q Weir (cfs)		Max Chl Dpth (ft)	13.56	13.13
Weir Sta Lft (ft)		Vel Total (ft/s)	8.69	8.75
Weir Sta Rgt (ft)		Flow Area (sq ft)	1932.93	1919.62
Weir Submerg		Froude # Chl	0.49	0.51
Weir Max Depth (ft)		Specif Force (cu ft)	16372.61	15677.84
Min El Weir Flow (ft)	42.56	Hydr Depth (ft)	28.81	10.63
Min El Prs (ft)	41.96	W.P. Total (ft)	390.55	284.68
Delta EG (ft)	0.41	Conv. Total (cfs)	220530.7	

280978.6			
Delta WS (ft)	0.50	Top Width (ft)	67.09
180.53			
BR Open Area (sq ft)	1942.08	Frctn Loss (ft)	0.34
0.00			
BR Open Vel (ft/s)	8.75	C & E Loss (ft)	0.02
0.02			
Coef of Q		Shear Total (lb/sq ft)	1.79
1.50			
Br Sel Method	Energy only	Power Total (lb/ft s)	15.58
13.17			

CROSS SECTION

RIVER: Los Penasquitos
REACH: Lower RS: 1808.5

INPUT
Description: #1809 - Downstream Vista Sorrento Parkway
Station Elevation Data num= 18

Sta	Elev	Sta	Elev	Sta	Elev	Sta	Elev	Sta	Elev
0	52.13	77.28	46.13	265.28	36.13	335.28	36.13	566.88	36.13
759.58	38.13	1110.68	42.13	1148.28	42.23	1200.08	42.13	1261.38	32.13
1271.28	28.13	1370.58	28.13	1386.18	32.13	1417.38	42.13	1428.78	44.13
1450.18	44.13	1503.08	46.13	1538.08	47.6				

Manning's n Values num= 3

Sta	n Val	Sta	n Val	Sta	n Val
0	.035	1261.38	.04	1386.18	.035

Bank Sta: Left	Right	Lengths: Left	Channel	Right	Coeff Contr.	Expan.
1261.38	1386.18	56.3	25.6	26.7	.1	.3

Ineffective Flow num= 2

Sta L	Sta R	Elev	Permanent
0	1148.28		T
1450.88	1538.08		T

CROSS SECTION OUTPUT Profile #100-yr

E.G. Elev (ft)	42.52	Element	Left OB	Channel
Right OB				
Vel Head (ft)	1.22	Wt. n-Val.	0.035	0.040
0.035				
W.S. Elev (ft)	41.30	Reach Len. (ft)	56.30	25.60
26.70				
Crit W.S. (ft)		Flow Area (sq ft)	257.52	1592.14
131.07				
E.G. Slope (ft/ft)	0.002113	Area (sq ft)	3309.29	1592.14
131.07				
Q Total (cfs)	16800.00	Flow (cfs)	1374.48	14742.43
683.09				
Top Width (ft)	1078.92	Top Width (ft)	925.52	124.80
28.60				
Vel Total (ft/s)	8.48	Avg. Vel. (ft/s)	5.34	9.26
5.21				
Max Chl Dpth (ft)	13.17	Hydr. Depth (ft)	4.58	12.76
4.58				
Conv. Total (cfs)	365488.8	Conv. (cfs)	29902.2	320725.8
14860.8				

Length Wtd. (ft)	28.29	Wetted Per. (ft)	56.93	126.08
30.03				
Min Ch El (ft)	28.13	Shear (lb/sq ft)	0.60	1.67
0.58				
Alpha	1.09	Stream Power (lb/ft s)	3.18	15.42
3.00				
Frctn Loss (ft)	0.07	Cum Volume (acre-ft)	23.42	28.47
1.96				
C & E Loss (ft)	0.03	Cum SA (acres)	6.06	2.57
0.53				

Warning: Divided flow computed for this cross-section.

Profile #100-yr

Conv	Pos Hydr	Left Sta (ft)	Right Sta (ft)	Flow (cfs)	Area (sq ft)	W.P. (ft)	Percent
Depth(ft)	Velocity (ft/s)						
1	LOB	114.83	229.66	0.00	100.59	61.59	0.00
1.64	0.00						
2	LOB	229.66	344.48	0.00	559.47	114.88	0.00
4.87	0.00						
3	LOB	344.48	459.31	0.00	593.22	114.83	0.00
5.17	0.00						
4	LOB	459.31	574.14	0.00	592.95	114.83	0.00
5.16	0.00						
5	LOB	574.14	688.97	0.00	516.14	114.83	0.00
4.49	0.00						
6	LOB	688.97	803.80	0.00	378.30	114.83	0.00
3.29	0.00						
7	LOB	803.80	918.62	0.00	230.61	114.84	0.00
2.01	0.00						
8	LOB	918.62	1033.45	0.00	80.39	114.84	0.00
0.70	0.00						
9	LOB	1033.45	1148.28	0.00	0.09	4.04	0.00
0.02	0.00						
10	LOB	1148.28	1261.38	1374.48	257.52	56.93	8.18
4.58	5.34						
11	Chan	1261.38	1271.78	953.88	117.13	11.18	5.68
11.26	8.14						
12	Chan	1271.78	1282.18	1298.44	136.93	10.40	7.73
13.17	9.48						
13	Chan	1282.18	1292.58	1298.44	136.93	10.40	7.73
13.17	9.48						
14	Chan	1292.58	1302.98	1298.43	136.93	10.40	7.73
13.17	9.48						
15	Chan	1302.98	1313.38	1298.44	136.93	10.40	7.73
13.17	9.48						
16	Chan	1313.38	1323.78	1298.44	136.93	10.40	7.73
13.17	9.48						
17	Chan	1323.78	1334.18	1298.44	136.93	10.40	7.73
13.17	9.48						
18	Chan	1334.18	1344.58	1298.44	136.93	10.40	7.73
13.17	9.48						
19	Chan	1344.58	1354.98	1298.43	136.93	10.40	7.73
13.17	9.48						
20	Chan	1354.98	1365.38	1298.44	136.93	10.40	7.73
13.17	9.48						
21	Chan	1365.38	1375.78	1230.88	133.46	10.57	

7.33	12.83	9.22					
22	Chan		1375.78	1386.18	871.74	109.20	10.74
5.19	10.50	7.98					
23	ROB		1386.18	1399.12	553.95	91.78	13.59
3.30	7.09	6.04					
24	ROB		1399.12	1412.06	128.02	38.11	13.59
0.76	2.95	3.36					
25	ROB		1412.06	1425.00	1.11	1.18	2.85
0.01	0.44	0.94					

Warning: Divided flow computed for this cross-section.

CROSS SECTION

RIVER: Los Penasquitos
REACH: Lower RS: 1782.95

INPUT
Description:
Station Elevation Data num= 26

Sta	Elev	Sta	Elev	Sta	Elev	Sta	Elev	Sta	Elev
0	60.13	120.6	58.13	167.8	35.63	237	35.63	283.6	56.53
554.2	52.13	594.3	50.13	759.2	32.13	802	30.13	812	30.13
876	32.13	972	40.13	1000	42.13	1016.4	40.13	1063.5	34.13
1069.2	32.13	1077	28.13	1184.5	28.13	1195	32.13	1201	36
1207.3	39.37	1231	42.13	1231.2	42.65	1245.4	44.13	1265.4	45.9
1304.2	59.9								

Manning's n Values num= 3

Sta	n Val	Sta	n Val	Sta	n Val
0	.045	1077	.04	1184.5	.045

Bank Sta: Left	Right	Lengths: Left	Channel	Right	Coeff Contr.	Expan.
1077	1184.5	2.75	2.75	2.75	.1	.3

Ineffective Flow num= 1

Sta L	Sta R	Elev	Permanent
0	1017	57.13	F

CROSS SECTION OUTPUT Profile #100-yr

E.G. Elev (ft)	42.42	Element	Left OB	Channel
Right OB				
Vel Head (ft)	1.52	Wt. n-Val.	0.045	0.040
0.045				
W.S. Elev (ft)	40.91	Reach Len. (ft)	2.75	2.75
2.75				
Crit W.S. (ft)	36.93	Flow Area (sq ft)	305.74	1373.42
184.62				
E.G. Slope (ft/ft)	0.002665	Area (sq ft)	2701.36	1373.42
184.62				
Q Total (cfs)	16800.00	Flow (cfs)	1515.14	14394.54
890.32				
Top Width (ft)	606.55	Top Width (ft)	463.06	107.50
35.99				
Vel Total (ft/s)	9.01	Avg. Vel. (ft/s)	4.96	10.48
4.82				
Max Chl Dpth (ft)	12.78	Hydr. Depth (ft)	5.10	12.78
5.13				
Conv. Total (cfs)	325422.2	Conv. (cfs)	29348.8	278827.6

17245.8

Length Wtd. (ft)	2.75	Wetted Per. (ft)	61.68	107.50
38.80				
Min Ch El (ft)	28.13	Shear (lb/sq ft)	0.82	2.13
0.79				
Alpha	1.20	Stream Power (lb/ft s)	4.09	22.28
3.82				
Frctn Loss (ft)	0.01	Cum Volume (acre-ft)	19.54	27.60
1.87				
C & E Loss (ft)	0.00	Cum SA (acres)	5.16	2.50
0.52				

Warning: Divided flow computed for this cross-section.
Note: Multiple critical depths were found at this location. The critical depth with the lowest, valid,
water surface was used.

Profile #100-yr

Percent Conv	Pos Hydr Depth(ft)	Velocity (ft/s)	Left Sta (ft)	Right Sta (ft)	Flow (cfs)	Area (sq ft)	W.P. (ft)
1	LOB		101.70	203.40	0.00	217.02	47.86
0.00	4.65	0.00					
2	LOB		203.40	305.10	0.00	208.31	46.49
0.00	4.59	0.00					
3	LOB		305.10	406.80			
4	LOB		406.80	508.50			
5	LOB		508.50	610.20			
6	LOB		610.20	711.90	0.00	59.79	33.29
0.00	1.81	0.00					
7	LOB		711.90	813.60	0.00	836.37	102.03
0.00	8.22	0.00					
8	LOB		813.60	915.30	0.00	889.01	101.87
0.00	8.74	0.00					
9	LOB		915.30	1017.00	0.00	185.13	74.80
0.00	2.48	0.00					
10	LOB		1017.00	1077.00	1515.14	305.74	61.68
9.02	5.10	4.96					
11	Chan		1077.00	1085.96	1199.55	114.45	8.96
7.14	12.78	10.48					
12	Chan		1085.96	1094.92	1199.54	114.45	8.96
7.14	12.78	10.48					
13	Chan		1094.92	1103.88	1199.55	114.45	8.96
7.14	12.78	10.48					
14	Chan		1103.88	1112.83	1199.55	114.45	8.96
7.14	12.78	10.48					
15	Chan		1112.83	1121.79	1199.54	114.45	8.96
7.14	12.78	10.48					
16	Chan		1121.79	1130.75	1199.55	114.45	8.96
7.14	12.78	10.48					
17	Chan		1130.75	1139.71	1199.55	114.45	8.96
7.14	12.78	10.48					
18	Chan		1139.71	1148.67	1199.54	114.45	8.96
7.14	12.78	10.48					
19	Chan		1148.67	1157.63	1199.55	114.45	8.96

```
 7.14      12.78      10.48
 20          Chan        1157.63     1166.58      1199.55     114.45       8.96
 7.14      12.78      10.48
 21          Chan        1166.58     1175.54      1199.54     114.45       8.96
 7.14      12.78      10.48
 22          Chan        1175.54     1184.50      1199.55     114.45       8.96
 7.14      12.78      10.48
 23          ROB         1184.50     1195.38       683.24     116.45      11.69
 4.07      10.70       5.87
 24          ROB         1195.38     1206.26       192.18      56.16      12.65
 1.14       5.16       3.42
 25          ROB         1206.26     1217.15        14.63      11.36      11.09
 0.09       1.04       1.29
 26          ROB         1217.15     1228.03         0.28       0.65       3.37
 0.00       0.19       0.42


Warning: Divided flow computed for this cross-section.
Note:    Multiple critical depths were found at this location.  The critical depth
with the lowest, valid,
         water surface was used.

CROSS SECTION


RIVER: Los Penasquitos
REACH: Lower              RS: 1780.2

INPUT
Description: #1780 - NB I-805 TO NB I-5 Truck Connector Piers
Station Elevation Data    num=      26
     Sta    Elev     Sta    Elev     Sta    Elev     Sta    Elev     Sta    Elev
       0   60.13   120.6   58.13   167.8   35.63     237   35.63   283.6   56.53
   554.2   52.13   594.3   50.13   759.2   32.13     802   30.13     812   30.13
     876   32.13     972   40.13    1000   42.13  1016.4   40.13  1063.5   34.13
  1069.2   32.13    1077   28.13  1184.5   28.13    1195   32.13    1201      36
  1207.3   39.37    1231   42.13  1231.2   42.65  1245.4   44.13  1265.4    45.9
  1304.2    59.9

Manning's n Values        num=       3
     Sta   n Val     Sta   n Val     Sta   n Val
       0    .045    1077     .04  1184.5    .045

Bank Sta: Left   Right    Lengths: Left Channel   Right     Coeff Contr.   Expan.
          1077  1184.5             2.75    2.75    2.75              .1       .3
Ineffective Flow     num=       1
   Sta L   Sta R    Elev  Permanent
       0    1017   57.13       F
Blocked Obstructions     num=       4
   Sta L   Sta R    Elev   Sta L   Sta R    Elev   Sta L   Sta R    Elev
  744.75  750.25   50.13  896.75  902.25   49.13 1050.75 1056.25   48.13
 1204.75 1210.25   47.13

CROSS SECTION OUTPUT  Profile #100-yr


  E.G. Elev (ft)             42.41    Element                    Left OB    Channel
Right OB
  Vel Head (ft)               1.55    Wt. n-Val.                  0.045      0.040
  0.045
  W.S. Elev (ft)             40.86    Reach Len. (ft)              2.75       2.75
   2.75
```

Crit W.S. (ft)	36.88	Flow Area (sq ft)	272.88	1368.30 173.49
E.G. Slope (ft/ft)	0.002720	Area (sq ft)	2571.11	1368.30 173.49
Q Total (cfs)	16800.00	Flow (cfs)	1327.01	14450.94 1022.05
Top Width (ft)	582.44	Top Width (ft)	444.86	107.50 30.08
Vel Total (ft/s)	9.26	Avg. Vel. (ft/s)	4.86	10.56 5.89
Max Chl Dpth (ft)	12.73	Hydr. Depth (ft)	5.01	12.73 5.77
Conv. Total (cfs)	322138.3	Conv. (cfs)	25445.2	277095.3 19597.7
Length Wtd. (ft)	2.75	Wetted Per. (ft)	67.05	107.50 36.52
Min Ch El (ft)	28.13	Shear (lb/sq ft)	0.69	2.16 0.81
Alpha	1.17	Stream Power (lb/ft s)	3.36	22.83 4.75
Frctn Loss (ft)	0.01	Cum Volume (acre-ft)	19.37	27.51 1.85
C & E Loss (ft)	0.01	Cum SA (acres)	5.14	2.49 0.51

Warning: Divided flow computed for this cross-section.
Note: Multiple critical depths were found at this location. The critical depth with the lowest, valid,
water surface was used.

Profile #100-yr

Percent Conv	Pos Hydr Depth(ft)	Velocity (ft/s)	Left Sta (ft)	Right Sta (ft)	Flow (cfs)	Area (sq ft)	W.P. (ft)
1	LOB		101.70	203.40	0.00	214.80	47.75
0.00	4.61	0.00					
2	LOB		203.40	305.10	0.00	206.15	46.38
0.00	4.55	0.00					
3	LOB		305.10	406.80			
4	LOB		406.80	508.50			
5	LOB		508.50	610.20			
6	LOB		610.20	711.90	0.00	58.22	32.86
0.00	1.78	0.00					
7	LOB		711.90	813.60	0.00	790.54	111.40
0.00	8.22	0.00					
8	LOB		813.60	915.30	0.00	846.92	109.89
0.00	8.80	0.00					
9	LOB		915.30	1017.00	0.00	181.60	73.74
0.00	2.47	0.00					
10	LOB		1017.00	1077.00	1327.01	272.88	67.05
7.90	5.01	4.86					
11	Chan		1077.00	1085.96	1204.25	114.03	8.96
7.17	12.73	10.56					
12	Chan		1085.96	1094.92	1204.23	114.02	8.96
7.17	12.73	10.56					

```
13          Chan        1094.92     1103.88      1204.25      114.03       8.96
7.17      12.73      10.56
14          Chan        1103.88     1112.83      1204.25      114.03       8.96
7.17      12.73      10.56
15          Chan        1112.83     1121.79      1204.23      114.02       8.96
7.17      12.73      10.56
16          Chan        1121.79     1130.75      1204.25      114.03       8.96
7.17      12.73      10.56
17          Chan        1130.75     1139.71      1204.25      114.03       8.96
7.17      12.73      10.56
18          Chan        1139.71     1148.67      1204.23      114.02       8.96
7.17      12.73      10.56
19          Chan        1148.67     1157.63      1204.25      114.03       8.96
7.17      12.73      10.56
20          Chan        1157.63     1166.58      1204.25      114.03       8.96
7.17      12.73      10.56
21          Chan        1166.58     1175.54      1204.23      114.02       8.96
7.17      12.73      10.56
22          Chan        1175.54     1184.50      1204.25      114.03       8.96
7.17      12.73      10.56
23          ROB         1184.50     1195.38       822.74      115.93      11.69
4.90      10.65       7.10
24          ROB         1195.38     1206.26       193.26       51.93      13.79
1.15       5.54       3.72
25          ROB         1206.26     1217.15         5.81        5.13       8.09
0.03       0.74       1.13
26          ROB         1217.15     1228.03         0.24        0.50       2.95
0.00       0.17       0.47


Warning: Divided flow computed for this cross-section.
Note:    Multiple critical depths were found at this location.  The critical depth
with the lowest, valid,
         water surface was used.

CROSS SECTION


RIVER: Los Penasquitos
REACH: Lower                RS: 1777.45

INPUT
Description:
Station Elevation Data     num=      26
     Sta    Elev     Sta    Elev     Sta    Elev     Sta    Elev     Sta    Elev
       0   60.13   120.6   58.13   167.8   35.63     237   35.63   283.6   56.53
   554.2   52.13   594.3   50.13   759.2   32.13     802   30.13     812   30.13
     876   32.13     972   40.13    1000   42.13  1016.4   40.13  1063.5   34.13
  1069.2   32.13    1077   28.13  1184.5   28.13    1195   32.13    1201      36
  1207.3   39.37    1231   42.13  1231.2   42.65  1245.4   44.13  1265.4    45.9
  1304.2    59.9

Manning's n Values         num=       3
     Sta   n Val     Sta   n Val     Sta   n Val
       0    .045    1077     .04  1184.5    .045

Bank Sta: Left   Right    Lengths: Left Channel   Right     Coeff Contr.   Expan.
          1077  1184.5             233.1   118.6     137              .1       .3
Ineffective Flow     num=       1
   Sta L   Sta R    Elev  Permanent
       0    1017   57.13        F
```

CROSS SECTION OUTPUT Profile #100-yr

E.G. Elev (ft)	42.39	Element	Left OB	Channel	Right OB
Vel Head (ft)	1.53	Wt. n-Val.	0.045	0.040	0.045
W.S. Elev (ft)	40.87	Reach Len. (ft)	233.10	118.60	137.00
Crit W.S. (ft)	36.93	Flow Area (sq ft)	303.36	1369.17	183.20
E.G. Slope (ft/ft)	0.002697	Area (sq ft)	2683.06	1369.17	183.20
Q Total (cfs)	16800.00	Flow (cfs)	1504.53	14406.02	889.45
Top Width (ft)	604.79	Top Width (ft)	461.64	107.50	35.65
Vel Total (ft/s)	9.05	Avg. Vel. (ft/s)	4.96	10.52	4.86
Max Chl Dpth (ft)	12.74	Hydr. Depth (ft)	5.06	12.74	5.14
Conv. Total (cfs)	323485.1	Conv. (cfs)	28969.7	277388.9	17126.4
Length Wtd. (ft)	126.30	Wetted Per. (ft)	61.68	107.50	38.46
Min Ch El (ft)	28.13	Shear (lb/sq ft)	0.83	2.14	0.80
Alpha	1.20	Stream Power (lb/ft s)	4.11	22.57	3.89
Frctn Loss (ft)	0.30	Cum Volume (acre-ft)	19.21	27.43	1.84
C & E Loss (ft)	0.11	Cum SA (acres)	5.11	2.49	0.51

Warning: Divided flow computed for this cross-section.
Note: Multiple critical depths were found at this location. The critical depth with the lowest, valid, water surface was used.

Profile #100-yr

Percent Conv	Pos Hydr Depth(ft)	Velocity (ft/s)	Left Sta (ft)	Right Sta (ft)	Flow (cfs)	Area (sq ft)	W.P. (ft)
1	LOB		101.70	203.40	0.00	215.18	47.77
0.00	4.62	0.00					
2	LOB		203.40	305.10	0.00	206.51	46.40
0.00	4.56	0.00					
3	LOB		305.10	406.80			
4	LOB		406.80	508.50			
5	LOB		508.50	610.20			
6	LOB		610.20	711.90	0.00	58.49	32.93
0.00	1.79	0.00					
7	LOB		711.90	813.60	0.00	832.35	102.03
0.00	8.18	0.00					
8	LOB		813.60	915.30	0.00	884.98	101.87

0.00	8.70	0.00					
9	LOB	915.30	1017.00	0.00	182.19	73.92	
0.00	2.47	0.00					
10	LOB	1017.00	1077.00	1504.53	303.36	61.68	
8.96	5.06	4.96					
11	Chan	1077.00	1085.96	1200.51	114.10	8.96	
7.15	12.74	10.52					
12	Chan	1085.96	1094.92	1200.49	114.10	8.96	
7.15	12.74	10.52					
13	Chan	1094.92	1103.88	1200.51	114.10	8.96	
7.15	12.74	10.52					
14	Chan	1103.88	1112.83	1200.51	114.10	8.96	
7.15	12.74	10.52					
15	Chan	1112.83	1121.79	1200.49	114.10	8.96	
7.15	12.74	10.52					
16	Chan	1121.79	1130.75	1200.51	114.10	8.96	
7.15	12.74	10.52					
17	Chan	1130.75	1139.71	1200.51	114.10	8.96	
7.15	12.74	10.52					
18	Chan	1139.71	1148.67	1200.49	114.10	8.96	
7.15	12.74	10.52					
19	Chan	1148.67	1157.63	1200.51	114.10	8.96	
7.15	12.74	10.52					
20	Chan	1157.63	1166.58	1200.51	114.10	8.96	
7.15	12.74	10.52					
21	Chan	1166.58	1175.54	1200.49	114.10	8.96	
7.15	12.74	10.52					
22	Chan	1175.54	1184.50	1200.51	114.10	8.96	
7.15	12.74	10.52					
23	ROB	1184.50	1195.38	684.24	116.02	11.69	
4.07	10.66	5.90					
24	ROB	1195.38	1206.26	191.18	55.72	12.65	
1.14	5.12	3.43					
25	ROB	1206.26	1217.15	13.82	10.93	11.09	
0.08	1.00	1.26					
26	ROB	1217.15	1228.03	0.21	0.53	3.02	
0.00	0.17	0.40					

Warning: Divided flow computed for this cross-section.
Note: Multiple critical depths were found at this location. The critical depth with the lowest, valid,
water surface was used.

CROSS SECTION

RIVER: Los Penasquitos
REACH: Lower RS: 1658.9

INPUT
Description:
Station Elevation Data num= 11

Sta	Elev	Sta	Elev	Sta	Elev	Sta	Elev	Sta	Elev
0	48.13	135.3	46.13	182.5	32.13	190	28.747	195.8	28.13
240	27.93	288.1	28.13	295	28.836	327.2	32.13	374.2	42.13
478.8	49.33								

Manning's n Values num= 3

Sta	n Val	Sta	n Val	Sta	n Val
0	.045	182.5	.04	327.2	.045

```
Bank Sta: Left   Right    Lengths: Left Channel   Right     Coeff Contr.   Expan.
        182.5   327.2              2.75    2.75    2.75              .1       .3
Ineffective Flow     num=       1
   Sta L   Sta R    Elev  Permanent
       0     145               T
Skew Angle = 20
Sediment Elevation = 2.13
```

CROSS SECTION OUTPUT Profile #100-yr

E.G. Elev (ft)	41.99	Element	Left OB	Channel	Right OB
Vel Head (ft)	1.16	Wt. n-Val.	0.045	0.040	0.045
W.S. Elev (ft)	40.82	Reach Len. (ft)	2.75	2.75	2.75
Crit W.S. (ft)		Flow Area (sq ft)	127.33	1748.32	177.51
E.G. Slope (ft/ft)	0.002099	Area (sq ft)	127.33	1748.32	177.51
Q Total (cfs)	16800.00	Flow (cfs)	498.69	15596.75	704.56
Top Width (ft)	214.85	Top Width (ft)	29.30	144.70	40.85
Vel Total (ft/s)	8.18	Avg. Vel. (ft/s)	3.92	8.92	3.97
Max Chl Dpth (ft)	12.89	Hydr. Depth (ft)	4.35	12.08	4.35
Conv. Total (cfs)	366725.9	Conv. (cfs)	10886.0	340460.2	15379.7
Length Wtd. (ft)	2.75	Wetted Per. (ft)	30.56	145.67	41.76
Min Ch El (ft)	27.93	Shear (lb/sq ft)	0.55	1.57	0.56
Alpha	1.12	Stream Power (lb/ft s)	2.14	14.03	2.21
Frctn Loss (ft)	0.01	Cum Volume (acre-ft)	11.69	23.18	1.28
C & E Loss (ft)	0.03	Cum SA (acres)	3.79	2.14	0.39

Warning: The conveyance ratio (upstream conveyance divided by downstream conveyance) is less than
0.7 or greater than 1.4. This may indicate the need for additional cross sections.

Profile #100-yr

Conv	Pos Hydr Depth(ft)	Velocity (ft/s)	Left Sta (ft)	Right Sta (ft)	Flow (cfs)	Area (sq ft)	W.P. (ft)	Percent
1	LOB	1.75	145.00	163.75	28.86	16.51	11.01	0.17
2	LOB	4.24	163.75	182.50	469.83	110.82	19.56	2.80
3	Chan	8.09	182.50	194.56	1084.69	134.01	12.81	6.46
4	Chan		194.56	206.62	1411.29	153.22	12.07	11.11

8.40	12.71	9.21					
5	Chan	206.62	218.68	1423.16	153.95	12.06	
8.47	12.77	9.24					
6	Chan	218.68	230.73	1433.31	154.61	12.06	
8.53	12.82	9.27					
7	Chan	230.73	242.79	1442.97	155.23	12.06	
8.59	12.87	9.30					
8	Chan	242.79	254.85	1439.38	155.00	12.06	
8.57	12.85	9.29					
9	Chan	254.85	266.91	1430.03	154.40	12.06	
8.51	12.80	9.26					
10	Chan	266.91	278.97	1420.71	153.79	12.06	
8.46	12.75	9.24					
11	Chan	278.97	291.03	1403.79	152.77	12.07	
8.36	12.67	9.19					
12	Chan	291.03	303.08	1239.32	141.99	12.12	
7.38	11.77	8.73					
13	Chan	303.08	315.14	1030.58	127.11	12.12	
6.13	10.54	8.11					
14	Chan	315.14	327.20	837.53	112.24	12.12	
4.99	9.31	7.46					
15	ROB	327.20	340.98	474.95	99.57	14.09	
2.83	7.22	4.77					
16	ROB	340.98	354.76	199.43	59.16	14.09	
1.19	4.29	3.37					
17	ROB	354.76	368.55	30.18	18.77	13.58	
0.18	1.41	1.61					

Warning: The conveyance ratio (upstream conveyance divided by downstream conveyance) is less than
0.7 or greater than 1.4. This may indicate the need for additional cross sections.

CROSS SECTION

RIVER: Los Penasquitos
REACH: Lower RS: 1656.1

INPUT
Description: #1663 - NB Interstate 5 Piers
Station Elevation Data num= 11

Sta	Elev	Sta	Elev	Sta	Elev	Sta	Elev	Sta	Elev
0	48.13	135.3	46.13	182.5	32.13	190	28.747	195.8	28.13
240	27.93	288.1	28.13	295	28.836	327.2	32.13	374.2	42.13
478.8	49.33								

Manning's n Values num= 3

Sta	n Val	Sta	n Val	Sta	n Val
0	.045	182.5	.04	327.2	.045

Bank Sta: Left	Right	Lengths: Left	Channel	Right	Coeff Contr.	Expan.
182.5	327.2	2.75	2.75	2.75	.1	.3

Ineffective Flow num= 1

Sta L	Sta R	Elev	Permanent
0	145		T

Blocked Obstructions num= 4

Sta L	Sta R	Elev	Sta L	Sta R	Elev	Sta L	Sta R	Elev
225.25	230.75	57.13	269.25	274.75	57.13	313.25	318.75	57.13
343.05	348.55	57.13						

Skew Angle = 20

Sediment Elevation = 2.13

CROSS SECTION OUTPUT Profile #100-yr

E.G. Elev (ft)	41.94	Element	Left OB	Channel	Right OB
Vel Head (ft)	1.51	Wt. n-Val.	0.045	0.040	0.045
W.S. Elev (ft)	40.43	Reach Len. (ft)	2.75	2.75	2.75
Crit W.S. (ft)		Flow Area (sq ft)	116.05	1502.94	137.91
E.G. Slope (ft/ft)	0.005024	Area (sq ft)	116.05	1502.94	137.91
Q Total (cfs)	16800.00	Flow (cfs)	681.78	15302.58	815.63
Top Width (ft)	189.67	Top Width (ft)	27.97	128.20	33.50
Vel Total (ft/s)	9.56	Avg. Vel. (ft/s)	5.88	10.18	5.91
Max Chl Dpth (ft)	12.50	Hydr. Depth (ft)	4.15	11.72	4.12
Conv. Total (cfs)	237031.5	Conv. (cfs)	9619.3	215904.4	11507.8
Length Wtd. (ft)	2.75	Wetted Per. (ft)	29.18	197.64	42.93
Min Ch El (ft)	27.93	Shear (lb/sq ft)	1.25	2.38	1.01
Alpha	1.07	Stream Power (lb/ft s)	7.33	24.28	5.96
Frctn Loss (ft)	0.01	Cum Volume (acre-ft)	11.68	23.08	1.27
C & E Loss (ft)	0.09	Cum SA (acres)	3.79	2.14	0.39

Warning: Divided flow computed for this cross-section.
Warning: The conveyance ratio (upstream conveyance divided by downstream conveyance) is less than
0.7 or greater than 1.4. This may indicate the need for additional cross sections.

Profile #100-yr

Percent Conv	Pos Hydr Depth(ft)	Velocity (ft/s)	Left Sta (ft)	Right Sta (ft)	Flow (cfs)	Area (sq ft)	W.P. (ft)
1	LOB		145.00	163.75	31.31	12.62	9.62
0.19	1.37	2.48					
2	LOB		163.75	182.50	650.47	103.43	19.56
3.87	5.52	6.29					
3	Chan		182.50	194.56	1387.04	129.26	12.81
8.26	10.72	10.73					
4	Chan		194.56	206.62	1818.55	148.47	12.07
10.82	12.31	12.25					
5	Chan		206.62	218.68	1834.32	149.20	12.06
10.92	12.37	12.29					
6	Chan		218.68	230.73	495.71	81.63	19.01
2.95	12.42	6.07					

7	Chan	230.73	242.79	1157.32	150.28	24.50
6.89	12.48	7.70				
8	Chan	242.79	254.85	1855.89	150.25	12.06
11.05	12.46	12.35				
9	Chan	254.85	266.91	1843.46	149.65	12.06
10.97	12.41	12.32				
10	Chan	266.91	278.97	351.28	81.04	31.29
2.09	12.36	4.33				
11	Chan	278.97	291.03	1808.62	148.02	12.07
10.77	12.28	12.22				
12	Chan	291.03	303.08	1590.22	137.24	12.12
9.47	11.38	11.59				
13	Chan	303.08	315.14	720.44	104.15	19.94
4.29	10.24	6.92				
14	Chan	315.14	327.20	439.73	73.76	17.66
2.62	8.73	5.96				
15	ROB	327.20	340.98	693.46	94.14	14.09
4.13	6.83	7.37				
16	ROB	340.98	354.76	89.76	29.86	17.15
0.53	3.61	3.01				
17	ROB	354.76	368.55	32.42	13.91	11.69
0.19	1.22	2.33				

Warning: Divided flow computed for this cross-section.
Warning: The conveyance ratio (upstream conveyance divided by downstream conveyance) is less than
0.7 or greater than 1.4. This may indicate the need for additional cross sections.

CROSS SECTION

RIVER: Los Penasquitos
REACH: Lower RS: 1653.3

INPUT
Description: #1660 - Upstream NB Interstate 805
Station Elevation Data num= 12

Sta	Elev	Sta	Elev	Sta	Elev	Sta	Elev	Sta	Elev
0	48.13	135.3	46.13	182.5	32.13	190	28.747	195.8	28.13
240	27.93	288.1	28.13	290	28.324	295	28.836	327.2	32.13
374.2	42.13	478.8	49.33						

Manning's n Values num= 3

Sta	n Val	Sta	n Val	Sta	n Val
0	.045	182.5	.04	327.2	.045

Bank Sta: Left	Right	Lengths: Left	Channel	Right	Coeff Contr.	Expan.
182.5	327.2	73.4	68.7	67.6	.1	.3

Ineffective Flow num= 1

Sta L	Sta R	Elev	Permanent
0	145		T

Skew Angle = 20
Sediment Elevation = 2.13

CROSS SECTION OUTPUT Profile #100-yr

E.G. Elev (ft)	41.84	Element	Left OB	Channel	Right OB
Vel Head (ft)	1.21	Wt. n-Val.	0.045	0.040	

0.045				
W.S. Elev (ft)	40.63	Reach Len. (ft)	1.00	1.00
1.00				
Crit W.S. (ft)	36.27	Flow Area (sq ft)	121.84	1720.90
169.85				
E.G. Slope (ft/ft)	0.002222	Area (sq ft)	121.84	1720.90
169.85				
Q Total (cfs)	16800.00	Flow (cfs)	483.88	15632.50
683.63				
Top Width (ft)	213.32	Top Width (ft)	28.66	144.70
39.96				
Vel Total (ft/s)	8.35	Avg. Vel. (ft/s)	3.97	9.08
4.02				
Max Chl Dpth (ft)	12.70	Hydr. Depth (ft)	4.25	11.89
4.25				
Conv. Total (cfs)	356371.5	Conv. (cfs)	10264.3	331605.7
14501.5				
Length Wtd. (ft)	1.00	Wetted Per. (ft)	29.90	145.67
40.85				
Min Ch El (ft)	27.93	Shear (lb/sq ft)	0.57	1.64
0.58				
Alpha	1.12	Stream Power (lb/ft s)	2.25	14.89
2.32				
Frctn Loss (ft)		Cum Volume (acre-ft)	11.67	22.98
1.26				
C & E Loss (ft)		Cum SA (acres)	3.79	2.13
0.39				

Profile #100-yr

Conv	Pos Hydr Depth(ft)	Left Sta Velocity (ft/s)	Right Sta (ft)	Flow (cfs)	Area (sq ft)	W.P. (ft)	Percent
1	LOB	145.00	163.75	25.19	14.57	10.34	0.15
	1.47	1.73					
2	LOB	163.75	182.50	458.69	107.27	19.56	2.73
	5.72	4.28					
3	Chan	182.50	194.56	1084.48	131.73	12.81	6.46
	10.92	8.23					
4	Chan	194.56	206.62	1416.13	150.93	12.07	8.43
	12.52	9.38					
5	Chan	206.62	218.68	1428.22	151.67	12.06	8.50
	12.58	9.42					
6	Chan	218.68	230.73	1438.56	152.32	12.06	8.56
	12.63	9.44					
7	Chan	230.73	242.79	1448.39	152.95	12.06	8.62
	12.68	9.47					
8	Chan	242.79	254.85	1444.74	152.72	12.06	8.60
	12.66	9.46					
9	Chan	254.85	266.91	1435.22	152.11	12.06	8.54
	12.61	9.44					
10	Chan	266.91	278.97	1425.73	151.51	12.06	8.49
	12.56	9.41					
11	Chan	278.97	291.03	1408.52	150.48	12.07	8.38
	12.48	9.36					
12	Chan	291.03	303.08	1241.09	139.70	12.12	7.39
	11.59	8.88					
13	Chan	303.08	315.14	1028.76	124.83	12.12	6.12
	10.35	8.24					

```
14          Chan        315.14      327.20        832.67      109.95      12.12
4.96        9.12        7.57
15          ROB         327.20      340.98        467.50       96.96      14.09
2.78        7.04        4.82
16          ROB         340.98      354.76        190.32       56.55      14.09
1.13        4.10        3.37
17          ROB         354.76      368.55         25.80       16.34      12.67
0.15        1.32        1.58


BRIDGE


RIVER: Los Penasquitos
REACH: Lower                RS: 1626

INPUT
Description: N Interstate 805 Bridge
Distance from Upstream XS =        1
Deck/Roadway Width        =       66
Weir Coefficient          =      2.5
Upstream  Deck/Roadway Coordinates
    num=        3
     Sta Hi Cord Lo Cord     Sta Hi Cord Lo Cord     Sta Hi Cord Lo Cord
       0   49.23   43.23     209   48.13   42.13   478.8   49.33   43.33

Upstream Bridge Cross Section Data
Station Elevation Data    num=       12
     Sta    Elev     Sta    Elev     Sta    Elev     Sta    Elev     Sta    Elev
       0   48.13   135.3   46.13   182.5   32.13     190  28.747   195.8   28.13
     240   27.93   288.1   28.13     290  28.324     295  28.836   327.2   32.13
   374.2   42.13   478.8   49.33

Manning's n Values        num=        3
     Sta   n Val     Sta   n Val     Sta   n Val
       0    .045   182.5     .04   327.2    .045

Bank Sta: Left   Right    Coeff Contr.   Expan.
         182.5   327.2             .1       .3
Ineffective Flow     num=        1
   Sta L   Sta R    Elev  Permanent
       0     145                T
Skew Angle = 20
Sediment Elevation = 2.13

Downstream  Deck/Roadway Coordinates
    num=        3
     Sta Hi Cord Lo Cord     Sta Hi Cord Lo Cord     Sta Hi Cord Lo Cord
       0   49.23   43.23     209   48.13   42.13   457.6   50.13   44.13

Downstream Bridge Cross Section Data
Station Elevation Data    num=       11
     Sta    Elev     Sta    Elev     Sta    Elev     Sta    Elev     Sta    Elev
       0   49.23   171.9   46.13   181.7   42.13   209.7   34.13   231.3   26.13
     263   25.93     295   26.13   353.8   34.13     379   42.13   457.6   50.13
   619.6   52.13

Manning's n Values        num=        3
     Sta   n Val     Sta   n Val     Sta   n Val
       0    .045   209.7     .03   353.8    .045

Bank Sta: Left   Right    Coeff Contr.   Expan.
```

```
        209.7   353.8              .1        .3
Skew Angle = 20
Sediment Elevation = 2.13

Upstream Embankment side slope                =       0 horiz. to 1.0 vertical
Downstream Embankment side slope              =       0 horiz. to 1.0 vertical
Maximum allowable submergence for weir flow =     .95
Elevation at which weir flow begins           =
Energy head used in spillway design           =
Spillway height used in design                =
Weir crest shape                              = Broad Crested

Number of Piers =  1

Pier Data
Pier Station     Upstream=   252.5    Downstream=   276.6
Upstream     num=       2
    Width   Elev    Width   Elev
     5.5   24.93     5.5   43.33
Downstream     num=       2
    Width   Elev    Width   Elev
       5   24.93       5   43.33

Number of Bridge Coefficient Sets =  1

Low Flow Methods and Data
       Energy
       Momentum                Cd   =     1.2
       Yarnell                 KVal =    1.05
Selected Low Flow Methods = Highest Energy Answer

High Flow Method
       Pressure and Weir flow
           Submerged Inlet Cd           =
           Submerged Inlet + Outlet Cd =       .8
           Max Low Cord                 =

Additional Bridge Parameters
       Add Friction component to Momentum
       Do not add Weight component to Momentum
       Class B flow critical depth computations use critical depth
           inside the bridge at the upstream end
       Criteria to check for pressure flow = Upstream energy grade line

BRIDGE OUTPUT  Profile #100-yr


  E.G. US. (ft)                 41.84    Element                 Inside BR US
Inside BR DS
  W.S. US. (ft)                 40.63    E.G. Elev (ft)                41.80
41.32
  Q Total (cfs)             16800.00     W.S. Elev (ft)                40.48
39.61
  Q Bridge (cfs)            16800.00     Crit W.S. (ft)                36.53
36.14
  Q Weir (cfs)                           Max Chl Dpth (ft)             12.55
13.68
  Weir Sta Lft (ft)                      Vel Total (ft/s)               8.79
10.13
  Weir Sta Rgt (ft)                      Flow Area (sq ft)           1911.41
1659.14
  Weir Submerg                           Froude # Chl                   0.49
 0.56
```

Weir Max Depth (ft)		Specif Force (cu ft)	15188.00
14870.13			
Min El Weir Flow (ft)	48.14	Hydr Depth (ft)	9.25
9.45			
Min El Prs (ft)	42.92	W.P. Total (ft)	234.64
206.33			
Delta EG (ft)	0.53	Conv. Total (cfs)	302224.3
347006.3			
Delta WS (ft)	0.86	Top Width (ft)	206.59
175.54			
BR Open Area (sq ft)	2248.09	Frctn Loss (ft)	
BR Open Vel (ft/s)	10.13	C & E Loss (ft)	
Coef of Q		Shear Total (lb/sq ft)	1.57
1.18			
Br Sel Method	Momentum	Power Total (lb/ft s)	13.81
11.91			

CROSS SECTION

RIVER: Los Penasquitos
REACH: Lower RS: 1584.6

INPUT
Description: #1591 - Downstream NB Interstate 805
Station Elevation Data num= 11

Sta	Elev	Sta	Elev	Sta	Elev	Sta	Elev	Sta	Elev
0	49.23	171.9	46.13	181.7	42.13	209.7	34.13	231.3	26.13
263	25.93	295	26.13	353.8	34.13	379	42.13	457.6	50.13
619.6	52.13								

Manning's n Values num= 3

Sta	n Val	Sta	n Val	Sta	n Val
0	.045	209.7	.03	353.8	.045

Bank Sta: Left	Right	Lengths: Left	Channel	Right	Coeff Contr.	Expan.
209.7	353.8	3.6	3.6	3.6	.1	.3

Skew Angle = 20
Sediment Elevation = 2.13

CROSS SECTION OUTPUT Profile #100-yr

E.G. Elev (ft)	41.31	Element	Left OB	Channel
Right OB				
Vel Head (ft)	1.53	Wt. n-Val.	0.045	0.030
0.045				
W.S. Elev (ft)	39.77	Reach Len. (ft)	3.60	3.60
3.60				
Crit W.S. (ft)		Flow Area (sq ft)	55.73	1650.73
50.15				
E.G. Slope (ft/ft)	0.001611	Area (sq ft)	55.73	1650.73
50.15				
Q Total (cfs)	16800.00	Flow (cfs)	143.68	16527.75
128.56				
Top Width (ft)	181.63	Top Width (ft)	19.75	144.10
17.78				
Vel Total (ft/s)	9.56	Avg. Vel. (ft/s)	2.58	10.01
2.56				

Max Chl Dpth (ft)	13.84	Hydr. Depth (ft)	2.82	11.46
2.82				
Conv. Total (cfs)	418513.9	Conv. (cfs)	3579.4	411731.8
3202.7				
Length Wtd. (ft)	3.60	Wetted Per. (ft)	20.54	146.08
18.65				
Min Ch El (ft)	25.93	Shear (lb/sq ft)	0.27	1.14
0.27				
Alpha	1.08	Stream Power (lb/ft s)	0.70	11.38
0.69				
Frctn Loss (ft)	0.01	Cum Volume (acre-ft)	11.54	20.46
1.09				
C & E Loss (ft)	0.00	Cum SA (acres)	3.75	1.91
0.34				

Profile #100-yr

Percent Conv	Pos Hydr Depth(ft)	Velocity (ft/s)	Left Sta (ft)	Right Sta (ft)	Flow (cfs)	Area (sq ft)	W.P. (ft)
1	LOB		171.57	190.64	0.02	0.07	0.71
0.00	0.10	0.27					
2	LOB		190.64	209.70	143.67	55.66	19.83
0.86	2.92	2.58					
3	Chan		209.70	221.71	689.89	94.47	12.81
4.11	7.87	7.30					
4	Chan		221.71	233.72	1450.64	146.81	12.65
8.63	12.23	9.88					
5	Chan		233.72	245.73	1814.34	164.47	12.01
10.80	13.70	11.03					
6	Chan		245.73	257.73	1831.10	165.38	12.01
10.90	13.77	11.07					
7	Chan		257.73	269.74	1842.63	166.00	12.01
10.97	13.82	11.10					
8	Chan		269.74	281.75	1829.20	165.28	12.01
10.89	13.76	11.07					
9	Chan		281.75	293.76	1812.61	164.37	12.01
10.79	13.69	11.03					
10	Chan		293.76	305.77	1651.37	155.95	12.11
9.83	12.99	10.59					
11	Chan		305.77	317.78	1320.64	136.43	12.12
7.86	11.36	9.68					
12	Chan		317.78	329.78	1019.54	116.81	12.12
6.07	9.73	8.73					
13	Chan		329.78	341.79	750.44	97.19	12.12
4.47	8.09	7.72					
14	Chan		341.79	353.80	515.37	77.57	12.12
3.07	6.46	6.64					
15	ROB		353.80	377.96	128.56	50.15	18.65
0.77	2.82	2.56					

CROSS SECTION

RIVER: Los Penasquitos
REACH: Lower RS: 1581

INPUT
Description:
Station Elevation Data num= 11

Sta	Elev	Sta	Elev	Sta	Elev	Sta	Elev	Sta	Elev
0	49.23	176.9	46.13	186.7	42.13	214.7	34.13	236.3	26.13
268	25.93	300	26.13	358.8	34.13	384	42.13	462.6	50.13
612.2	52.13								

Manning's n Values num= 3

Sta	n Val	Sta	n Val	Sta	n Val
0	.045	214.7	.03	358.8	.045

Bank Sta: Left	Right	Lengths: Left	Channel	Right	Coeff Contr.	Expan.
214.7	358.8	2.75	2.75	2.75	.1	.3

Skew Angle = 20
Sediment Elevation = 2.13

CROSS SECTION OUTPUT Profile #100-yr

E.G. Elev (ft)	41.30	Element	Left OB	Channel
Right OB				
Vel Head (ft)	1.54	Wt. n-Val.	0.045	0.030
0.045				
W.S. Elev (ft)	39.76	Reach Len. (ft)	2.75	2.75
2.75				
Crit W.S. (ft)		Flow Area (sq ft)	55.55	1649.44
49.99				
E.G. Slope (ft/ft)	0.001616	Area (sq ft)	55.55	1649.44
49.99				
Q Total (cfs)	16800.00	Flow (cfs)	143.27	16528.54
128.19				
Top Width (ft)	181.57	Top Width (ft)	19.72	144.10
17.75				
Vel Total (ft/s)	9.57	Avg. Vel. (ft/s)	2.58	10.02
2.56				
Max Chl Dpth (ft)	13.83	Hydr. Depth (ft)	2.82	11.45
2.82				
Conv. Total (cfs)	417947.9	Conv. (cfs)	3564.2	411194.5
3189.1				
Length Wtd. (ft)	2.75	Wetted Per. (ft)	20.51	146.08
18.62				
Min Ch El (ft)	25.93	Shear (lb/sq ft)	0.27	1.14
0.27				
Alpha	1.08	Stream Power (lb/ft s)	0.70	11.41
0.69				
Frctn Loss (ft)	0.01	Cum Volume (acre-ft)	11.54	20.32
1.09				
C & E Loss (ft)	0.10	Cum SA (acres)	3.75	1.90
0.34				

Warning: The velocity head has changed by more than 0.5 ft (0.15 m). This may indicate the need for
additional cross sections.
Warning: The conveyance ratio (upstream conveyance divided by downstream conveyance) is less than
0.7 or greater than 1.4. This may indicate the need for additional cross sections.

Profile #100-yr

Percent Conv	Pos Hydr Depth(ft)	Velocity (ft/s)	Left Sta (ft)	Right Sta (ft)	Flow (cfs)	Area (sq ft)	W.P. (ft)
1	LOB		175.66	195.18	0.00	0.01	0.21
0.00	0.03	0.12					
2	LOB		195.18	214.70	143.27	55.54	20.30
0.85	2.85	2.58					
3	Chan		214.70	226.71	689.48	94.36	12.81
4.10	7.86	7.31					
4	Chan		226.71	238.72	1450.76	146.70	12.65
8.64	12.22	9.89					
5	Chan		238.72	250.73	1814.73	164.36	12.01
10.80	13.69	11.04					
6	Chan		250.73	262.73	1831.50	165.27	12.01
10.90	13.76	11.08					
7	Chan		262.73	274.74	1843.04	165.89	12.01
10.97	13.81	11.11					
8	Chan		274.74	286.75	1829.60	165.17	12.01
10.89	13.75	11.08					
9	Chan		286.75	298.76	1812.99	164.27	12.01
10.79	13.68	11.04					
10	Chan		298.76	310.77	1651.62	155.84	12.11
9.83	12.98	10.60					
11	Chan		310.77	322.78	1320.62	136.32	12.12
7.86	11.35	9.69					
12	Chan		322.78	334.78	1019.31	116.70	12.12
6.07	9.72	8.73					
13	Chan		334.78	346.79	750.04	97.08	12.12
4.46	8.08	7.73					
14	Chan		346.79	358.80	514.85	77.47	12.12
3.06	6.45	6.65					
15	ROB		358.80	381.84	128.19	49.99	18.62
0.76	2.82	2.56					

Warning: The velocity head has changed by more than 0.5 ft (0.15 m). This may indicate the need for
additional cross sections.
Warning: The conveyance ratio (upstream conveyance divided by downstream conveyance) is less than
0.7 or greater than 1.4. This may indicate the need for additional cross sections.

CROSS SECTION

RIVER: Los Penasquitos
REACH: Lower RS: 1578.2

INPUT
Description: #1584 - NB Interstate 5 Piers
Station Elevation Data num= 11

Sta	Elev	Sta	Elev	Sta	Elev	Sta	Elev	Sta	Elev
0	49.23	176.9	46.13	186.7	42.13	214.7	34.13	236.3	26.13
268	25.93	300	26.13	358.8	34.13	384	42.13	462.6	50.13
612.2	52.13								

Manning's n Values num= 3

Sta	n Val	Sta	n Val	Sta	n Val
0	.045	214.7	.03	358.8	.045

```
Bank Sta: Left   Right    Lengths: Left Channel   Right     Coeff Contr.   Expan.
         214.7   358.8             2.75    2.75    2.75            .1        .3
Blocked Obstructions     num=       4
   Sta L   Sta R    Elev   Sta L   Sta R    Elev   Sta L   Sta R    Elev
  304.75  310.25   57.13   240.3   245.8   57.13  279.85  285.35   57.13
  199.95  205.45   57.13
Skew Angle = 20
Sediment Elevation = 2.13

CROSS SECTION OUTPUT  Profile #100-yr


  E.G. Elev (ft)              41.20    Element                    Left OB    Channel
Right OB
  Vel Head (ft)                2.50    Wt. n-Val.                  0.045      0.030
  0.045
  W.S. Elev (ft)              38.70    Reach Len. (ft)             2.75       2.75
   2.75
  Crit W.S. (ft)                       Flow Area (sq ft)          30.27    1293.50
  32.90
  E.G. Slope (ft/ft)       0.005637    Area (sq ft)               30.27    1293.50
  32.90
  Q Total (cfs)            16800.00    Flow (cfs)                141.10   16521.86
 137.03
  Top Width (ft)             152.49    Top Width (ft)             10.50     127.60
  14.40
  Vel Total (ft/s)            12.38    Avg. Vel. (ft/s)            4.66      12.77
   4.17
  Max Chl Dpth (ft)           12.77    Hydr. Depth (ft)            2.88      10.14
   2.29
  Conv. Total (cfs)        223756.0    Conv. (cfs)               1879.3   220051.5
 1825.1
  Length Wtd. (ft)             2.75    Wetted Per. (ft)           13.20     203.21
  15.10
  Min Ch El (ft)              25.93    Shear (lb/sq ft)            0.81       2.24
   0.77
  Alpha                        1.05    Stream Power (lb/ft s)      3.76      28.61
   3.19
  Frctn Loss (ft)              0.01    Cum Volume (acre-ft)       11.53      20.23
   1.08
  C & E Loss (ft)              0.24    Cum SA (acres)              3.75       1.89
   0.34


Warning: Divided flow computed for this cross-section.
Warning: The velocity head has changed by more than 0.5 ft (0.15 m).  This may
indicate the need for
         additional cross sections.
Warning: The conveyance ratio (upstream conveyance divided by downstream conveyance)
is less than
         0.7 or greater than 1.4.  This may indicate the need for additional cross
sections.

  Profile #100-yr


              Pos          Left Sta    Right Sta       Flow       Area       W.P.
Percent       Hydr   Velocity
                           (ft)        (ft)           (cfs)    (sq ft)       (ft)
  Conv  Depth(ft)      (ft/s)
  1           LOB         195.18      214.70         141.10      30.27      13.20
```

```
  0.84       2.88       4.66
  2          Chan       214.70      226.71       858.04      81.58      12.81
  5.11       6.79      10.52
  3          Chan       226.71      238.72      1976.68     133.93      12.65
 11.77      11.15      14.76
  4          Chan       238.72      250.73       474.60      82.21      31.73
  2.83      12.63       5.77
  5          Chan       250.73      262.73      2540.16     152.49      12.01
 15.12      12.70      16.66
  6          Chan       262.73      274.74      2557.52     153.12      12.01
 15.22      12.75      16.70
  7          Chan       274.74      286.75       477.55      82.66      31.87
  2.84      12.70       5.78
  8          Chan       286.75      298.76      2512.35     151.49      12.01
 14.95      12.62      16.58
  9          Chan       298.76      310.77       469.91      79.54      29.66
  2.80      12.22       5.91
  10         Chan       310.77      322.78      1777.63     123.55      12.12
 10.58      10.29      14.39
  11         Chan       322.78      334.78      1332.52     103.93      12.12
  7.93       8.65      12.82
  12         Chan       334.78      346.79       940.25      84.31      12.12
  5.60       7.02      11.15
  13         Chan       346.79      358.80       604.66      64.69      12.12
  3.60       5.39       9.35
  14         ROB        358.80      381.84       137.03      32.90      15.10
  0.82       2.29       4.17


Warning: Divided flow computed for this cross-section.
Warning: The velocity head has changed by more than 0.5 ft (0.15 m).  This may
indicate the need for
         additional cross sections.
Warning: The conveyance ratio (upstream conveyance divided by downstream conveyance)
is less than
         0.7 or greater than 1.4.  This may indicate the need for additional cross
sections.

CROSS SECTION


RIVER: Los Penasquitos
REACH: Lower              RS: 1575.4

INPUT
Description: #1581 - Upstream SB Interstate 805
Station Elevation Data    num=      11
     Sta    Elev     Sta    Elev     Sta    Elev     Sta    Elev     Sta    Elev
       0   49.23   176.9   46.13   186.7   42.13   214.7   34.13   236.3   26.13
     268   25.93     300   26.13   358.8   34.13     384   42.13   462.6   50.13
   612.2   52.13

Manning's n Values        num=       3
     Sta   n Val     Sta   n Val     Sta   n Val
       0    .045   214.7     .03   358.8    .045

Bank Sta: Left   Right    Lengths: Left Channel   Right     Coeff Contr.   Expan.
         214.7   358.8                80    88.7      86              .1       .3
Skew Angle = 20
Sediment Elevation = 2.13

CROSS SECTION OUTPUT  Profile #100-yr
```

E.G. Elev (ft)	40.95	Element	Left OB	Channel
Right OB				
Vel Head (ft)	1.70	Wt. n-Val.	0.045	0.030
0.045				
W.S. Elev (ft)	39.25	Reach Len. (ft)	3.00	3.00
3.00				
Crit W.S. (ft)	35.82	Flow Area (sq ft)	45.85	1575.13
41.26				
E.G. Slope (ft/ft)	0.001894	Area (sq ft)	45.85	1575.13
41.26				
Q Total (cfs)	16800.00	Flow (cfs)	120.09	16572.46
107.45				
Top Width (ft)	178.14	Top Width (ft)	17.91	144.10
16.12				
Vel Total (ft/s)	10.11	Avg. Vel. (ft/s)	2.62	10.52
2.60				
Max Chl Dpth (ft)	13.32	Hydr. Depth (ft)	2.56	10.93
2.56				
Conv. Total (cfs)	386014.0	Conv. (cfs)	2759.3	380785.8
2468.9				
Length Wtd. (ft)	3.00	Wetted Per. (ft)	18.63	146.08
16.92				
Min Ch El (ft)	25.93	Shear (lb/sq ft)	0.29	1.28
0.29				
Alpha	1.07	Stream Power (lb/ft s)	0.76	13.42
0.75				
Frctn Loss (ft)		Cum Volume (acre-ft)	11.53	20.14
1.08				
C & E Loss (ft)		Cum SA (acres)	3.75	1.88
0.34				

Profile #100-yr

Percent Conv	Pos Hydr Depth(ft)	Velocity (ft/s)	Left Sta (ft)	Right Sta (ft)	Flow (cfs)	Area (sq ft)	W.P. (ft)
1	LOB		195.18	214.70	120.09	45.85	18.63
0.71	2.56	2.62					
2	Chan		214.70	226.71	664.75	88.17	12.81
3.96	7.34	7.54					
3	Chan		226.71	238.72	1457.63	140.51	12.65
8.68	11.70	10.37					
4	Chan		238.72	250.73	1837.72	158.17	12.01
10.94	13.17	11.62					
5	Chan		250.73	262.73	1855.37	159.08	12.01
11.04	13.25	11.66					
6	Chan		262.73	274.74	1867.53	159.70	12.01
11.12	13.30	11.69					
7	Chan		274.74	286.75	1853.38	158.98	12.01
11.03	13.24	11.66					
8	Chan		286.75	298.76	1835.90	158.07	12.01
10.93	13.16	11.61					
9	Chan		298.76	310.77	1666.59	149.65	12.11
9.92	12.46	11.14					
10	Chan		310.77	322.78	1319.46	130.13	12.12
7.85	10.84	10.14					
11	Chan		322.78	334.78	1004.87	110.51	12.12

```
5.98        9.20        9.09
12           Chan        334.78      346.79        725.51      90.89      12.12
4.32        7.57        7.98
13           Chan        346.79      358.80        483.77      71.27      12.12
2.88        5.94        6.79
14           ROB         358.80      381.84        107.45      41.26      16.92
0.64        2.56        2.60


BRIDGE


RIVER: Los Penasquitos
REACH: Lower                RS: 1537

INPUT
Description: S Interstate 805 Bridge
Distance from Upstream XS =       3
Deck/Roadway Width        =      68
Weir Coefficient          =     2.5
Upstream  Deck/Roadway Coordinates
    num=        2
     Sta Hi Cord Lo Cord     Sta Hi Cord Lo Cord
       0   49.23   43.33   462.6   50.13   44.13

Upstream Bridge Cross Section Data
Station Elevation Data    num=      11
     Sta    Elev     Sta    Elev     Sta    Elev     Sta    Elev     Sta    Elev
       0   49.23   176.9   46.13   186.7   42.13   214.7   34.13   236.3   26.13
     268   25.93     300   26.13   358.8   34.13     384   42.13   462.6   50.13
   612.2   52.13

Manning's n Values        num=       3
     Sta   n Val     Sta   n Val     Sta   n Val
       0    .045   214.7     .03   358.8    .045

Bank Sta: Left   Right    Coeff Contr.   Expan.
         214.7   358.8             .1       .3
Skew Angle = 20
Sediment Elevation = 2.13

Downstream  Deck/Roadway Coordinates
    num=        2
     Sta Hi Cord Lo Cord     Sta Hi Cord Lo Cord
     150   50.13   44.13   448.9   50.13   44.13

Downstream Bridge Cross Section Data
Station Elevation Data    num=      19
     Sta    Elev     Sta    Elev     Sta    Elev     Sta    Elev     Sta    Elev
       0   52.13   101.5   53.13     125   52.13     150   50.13     181   48.13
     194   42.13   202.7   40.13     219   38.13   230.9   32.13  235.75   30.12
   245.3   26.13     275   25.93     305   26.13   332.5   28.13   365.3   30.13
   368.7   32.13     387   42.13   448.9   50.13   598.9   52.13

Manning's n Values        num=       3
     Sta   n Val     Sta   n Val     Sta   n Val
       0    .045  235.75     .03   365.3    .045

Bank Sta: Left   Right    Coeff Contr.   Expan.
         235.75  365.3             .1       .3
Ineffective Flow     num=       1
   Sta L   Sta R    Elev  Permanent
```

```
       0   181.9                T
Skew Angle = 20
Sediment Elevation = 2.13

Upstream Embankment side slope              =       0 horiz. to 1.0 vertical
Downstream Embankment side slope            =       0 horiz. to 1.0 vertical
Maximum allowable submergence for weir flow =     .95
Elevation at which weir flow begins         =   48.33
Energy head used in spillway design         =
Spillway height used in design              =
Weir crest shape                            = Broad Crested

Number of Piers =  1

Pier Data
Pier Station     Upstream=   288.2    Downstream=   281.2
Upstream     num=       2
    Width   Elev    Width   Elev
       5   24.93       5   50.93
Downstream     num=       2
    Width   Elev    Width   Elev
       5   24.93       5   50.93

Number of Bridge Coefficient Sets =  1

Low Flow Methods and Data
       Energy
       Momentum                Cd   =     1.2
       Yarnell                 KVal =    1.05
Selected Low Flow Methods = Highest Energy Answer

High Flow Method
       Pressure and Weir flow
           Submerged Inlet Cd          =
           Submerged Inlet + Outlet Cd =      .8
           Max Low Cord                =

Additional Bridge Parameters
       Add Friction component to Momentum
       Do not add weight component to Momentum
       Class B flow critical depth computations use critical depth
           inside the bridge at the upstream end
       Criteria to check for pressure flow = Upstream energy grade line

BRIDGE OUTPUT  Profile #100-yr


  E.G. US. (ft)                 40.95    Element                 Inside BR US
Inside BR DS
  W.S. US. (ft)                 39.25    E.G. Elev (ft)                40.88
40.23
  Q Total (cfs)              16800.00    W.S. Elev (ft)                38.91
38.00
  Q Bridge (cfs)             16800.00    Crit W.S. (ft)                36.14
35.54
  Q Weir (cfs)                           Max Chl Dpth (ft)             12.98
12.07
  Weir Sta Lft (ft)                      Vel Total (ft/s)              10.93
11.50
  Weir Sta Rgt (ft)                      Flow Area (sq ft)           1537.63
1460.42
  Weir Submerg                           Froude # Chl                  0.62
 0.65
```

Weir Max Depth (ft)		Specif Force (cu ft)	14154.11 13843.63
Min El Weir Flow (ft)	50.14	Hydr Depth (ft)	9.00 9.41
Min El Prs (ft)	44.03	W.P. Total (ft)	199.96 183.99
Delta EG (ft)	0.78	Conv. Total (cfs)	312123.0 295085.4
Delta WS (ft)	1.09	Top Width (ft)	170.87 155.17
BR Open Area (sq ft)	2468.63	Frctn Loss (ft)	
BR Open Vel (ft/s)	11.50	C & E Loss (ft)	
Coef of Q		Shear Total (lb/sq ft)	1.39 1.61
Br Sel Method	Momentum	Power Total (lb/ft s)	15.20 18.48

CROSS SECTION

RIVER: Los Penasquitos
REACH: Lower RS: 1492.7

INPUT
Description: #1493 - Downstream SB Interstate 805
Station Elevation Data num= 19

Sta	Elev	Sta	Elev	Sta	Elev	Sta	Elev	Sta	Elev
0	52.13	101.5	53.13	125	52.13	150	50.13	181	48.13
194	42.13	202.7	40.13	219	38.13	230.9	32.13	235.75	30.12
245.3	26.13	275	25.93	305	26.13	332.5	28.13	365.3	30.13
368.7	32.13	387	42.13	448.9	50.13	598.9	52.13		

Manning's n Values num= 3

Sta	n Val	Sta	n Val	Sta	n Val
0	.045	235.75	.03	365.3	.045

Bank Sta: Left	Right	Lengths: Left	Channel	Right	Coeff Contr.	Expan.
235.75	365.3	117	85.1	41.1	.1	.3

Ineffective Flow num= 1

Sta L	Sta R	Elev	Permanent
0	181.9		T

Skew Angle = 20
Sediment Elevation = 2.13

CROSS SECTION OUTPUT Profile #100-yr

E.G. Elev (ft)	40.17	Element	Left OB	Channel	Right OB
Vel Head (ft)	2.00	Wt. n-Val.	0.045	0.030	0.045
W.S. Elev (ft)	38.16	Reach Len. (ft)	117.00	85.10	41.10
Crit W.S. (ft)		Flow Area (sq ft)	70.22	1419.80	57.20
E.G. Slope (ft/ft)	0.002237	Area (sq ft)	70.22	1419.80	57.20
Q Total (cfs)	16800.00	Flow (cfs)	263.60	16331.95	204.45

Top Width (ft)	161.00	Top Width (ft)	17.01	129.55
14.44				
Vel Total (ft/s)	10.86	Avg. Vel. (ft/s)	3.75	11.50
3.57				
Max Chl Dpth (ft)	12.23	Hydr. Depth (ft)	4.13	10.96
3.96				
Conv. Total (cfs)	355206.8	Conv. (cfs)	5573.4	345310.7
4322.7				
Length Wtd. (ft)	84.87	Wetted Per. (ft)	18.84	130.48
16.52				
Min Ch El (ft)	25.93	Shear (lb/sq ft)	0.52	1.52
0.48				
Alpha	1.09	Stream Power (lb/ft s)	1.95	17.48
1.73				
Frctn Loss (ft)	0.19	Cum Volume (acre-ft)	11.42	17.29
0.99				
C & E Loss (ft)	0.01	Cum SA (acres)	3.72	1.61
0.31				

Profile #100-yr

Percent Conv	Pos Hydr Depth(ft)	Velocity (ft/s)	Left Sta (ft)	Right Sta (ft)	Flow (cfs)	Area (sq ft)	W.P. (ft)
1	LOB		217.80	235.75	263.60	70.22	18.84
1.57	4.13	3.75					
2	Chan		235.75	246.55	1159.40	110.85	11.60
6.90	10.27	10.46					
3	Chan		246.55	257.34	1593.61	130.38	10.80
9.49	12.08	12.22					
4	Chan		257.34	268.14	1609.64	131.17	10.80
9.58	12.15	12.27					
5	Chan		268.14	278.93	1623.59	131.85	10.80
9.66	12.21	12.31					
6	Chan		278.93	289.73	1614.13	131.39	10.80
9.61	12.17	12.29					
7	Chan		289.73	300.53	1598.25	130.61	10.80
9.51	12.10	12.24					
8	Chan		300.53	311.32	1554.13	128.51	10.81
9.25	11.90	12.09					
9	Chan		311.32	322.12	1398.82	120.70	10.82
8.33	11.18	11.59					
10	Chan		322.12	332.91	1239.00	112.22	10.82
7.37	10.39	11.04					
11	Chan		332.91	343.71	1100.43	104.48	10.82
6.55	9.68	10.53					
12	Chan		343.71	354.50	978.53	97.37	10.82
5.82	9.02	10.05					
13	Chan		354.50	365.30	862.42	90.27	10.82
5.13	8.36	9.55					
14	ROB		365.30	386.54	204.45	57.20	16.52
1.22	3.96	3.57					

CROSS SECTION

RIVER: Los Penasquitos

REACH: Lower RS: 1407.6

INPUT
Description:
Station Elevation Data num= 15

Sta	Elev	Sta	Elev	Sta	Elev	Sta	Elev	Sta	Elev
0	48.13	78.4	46.13	101.6	44.13	197.8	44.83	212.3	41.53
225.6	38.13	244.1	34.13	250	30.354	256.6	26.13	290	25.93
357.5	26.13	370	30.349	381.2	34.13	406.3	42.13	443.5	52.13

Manning's n Values num= 3

Sta	n Val	Sta	n Val	Sta	n Val
0	.045	250	.03	370	.045

Bank Sta: Left	Right	Lengths: Left	Channel	Right	Coeff Contr.	Expan.
250	370	5.5	5.5	5.5	.1	.3

Ineffective Flow num= 1

Sta L	Sta R	Elev	Permanent
0	179.4		T

Sediment Elevation = 2.13

CROSS SECTION OUTPUT Profile #100-yr

E.G. Elev (ft)	39.96	Element	Left OB	Channel
Right OB				
Vel Head (ft)	2.12	Wt. n-Val.	0.045	0.030
0.045				
W.S. Elev (ft)	37.84	Reach Len. (ft)	5.50	5.50
5.50				
Crit W.S. (ft)		Flow Area (sq ft)	64.85	1374.92
84.31				
E.G. Slope (ft/ft)	0.002265	Area (sq ft)	64.85	1374.92
84.31				
Q Total (cfs)	16800.00	Flow (cfs)	194.70	16299.42
305.88				
Top Width (ft)	165.89	Top Width (ft)	23.06	120.00
22.84				
Vel Total (ft/s)	11.02	Avg. Vel. (ft/s)	3.00	11.85
3.63				
Max Chl Dpth (ft)	11.91	Hydr. Depth (ft)	2.81	11.46
3.69				
Conv. Total (cfs)	352967.3	Conv. (cfs)	4090.7	342450.1
6426.5				
Length Wtd. (ft)	5.50	Wetted Per. (ft)	24.56	121.93
24.04				
Min Ch El (ft)	25.93	Shear (lb/sq ft)	0.37	1.59
0.50				
Alpha	1.12	Stream Power (lb/ft s)	1.12	18.91
1.80				
Frctn Loss (ft)	0.01	Cum Volume (acre-ft)	11.23	14.56
0.92				
C & E Loss (ft)	0.00	Cum SA (acres)	3.66	1.37
0.29				

Profile #100-yr

Percent	Pos Hydr	Velocity (ft)	Left Sta (ft)	Right Sta (ft)	Flow (cfs)	Area (sq ft)	W.P. (ft)

Conv Depth(ft) (ft/s)

CROSS SECTION

RIVER: Los Penasquitos
REACH: Lower RS: 1402.1

INPUT
Description: #1402 - Proposed Interstate 5 Flyover Bridge Piers
Station Elevation Data num= 15

Sta	Elev	Sta	Elev	Sta	Elev	Sta	Elev	Sta	Elev
0	48.13	78.4	46.13	101.6	44.13	197.8	44.83	212.3	41.53
225.6	38.13	244.1	34.13	250	30.354	256.6	26.13	290	25.93
357.5	26.13	370	30.349	381.2	34.13	406.3	42.13	443.5	52.13

Manning's n Values num= 3

Sta	n Val	Sta	n Val	Sta	n Val
0	.045	250	.03	370	.045

Bank Sta: Left	Right	Lengths: Left	Channel	Right	Coeff Contr.	Expan.
250	370	5.5	5.5	5.5	.1	.3

Ineffective Flow num= 1

Sta L	Sta R	Elev	Permanent
0	179.4		T

Sediment Elevation = 2.13

CROSS SECTION OUTPUT Profile #100-yr

E.G. Elev (ft)	39.95	Element	Left OB	Channel	Right OB
Vel Head (ft)	2.13	Wt. n-Val.	0.045	0.030	0.045
W.S. Elev (ft)	37.82	Reach Len. (ft)	5.50	5.50	5.50
Crit W.S. (ft)		Flow Area (sq ft)	64.42	1372.73	83.89
E.G. Slope (ft/ft)	0.002278	Area (sq ft)	64.42	1372.73	83.89
Q Total (cfs)	16800.00	Flow (cfs)	193.60	16301.69	304.72
Top Width (ft)	165.75	Top Width (ft)	22.97	120.00	22.78
Vel Total (ft/s)	11.05	Avg. Vel. (ft/s)	3.00	11.88	3.63
Max Chl Dpth (ft)	11.89	Hydr. Depth (ft)	2.80	11.44	3.68
Conv. Total (cfs)	351979.7	Conv. (cfs)	4056.1	341539.5	6384.2
Length Wtd. (ft)	5.50	Wetted Per. (ft)	24.47	121.93	23.98
Min Ch El (ft)	25.93	Shear (lb/sq ft)	0.37	1.60	0.50
Alpha	1.12	Stream Power (lb/ft s)	1.13	19.02	1.81
Frctn Loss (ft)	0.01	Cum Volume (acre-ft)	11.23	14.39	0.91
C & E Loss (ft)	0.00	Cum SA (acres)	3.66	1.35	

0.29

Profile #100-yr

Conv	Pos Hydr	Left Sta (ft)	Right Sta (ft)	Flow (cfs)	Area (sq ft)	W.P. (ft)	Percent Depth(ft)	Velocity (ft/s)
1	LOB	226.47	250.00	193.60	64.42	24.47	1.15	2.80	3.00
2	Chan	250.00	260.00	1060.99	103.01	11.24	6.32	10.30	10.30
3	Chan	260.00	270.00	1426.29	117.42	10.00	8.49	11.74	12.15
4	Chan	270.00	280.00	1438.43	118.01	10.00	8.56	11.80	12.19
5	Chan	280.00	290.00	1450.62	118.61	10.00	8.63	11.86	12.23
6	Chan	290.00	300.00	1453.72	118.76	10.00	8.65	11.88	12.24
7	Chan	300.00	310.00	1447.68	118.47	10.00	8.62	11.85	12.22
8	Chan	310.00	320.00	1441.65	118.17	10.00	8.58	11.82	12.20
9	Chan	320.00	330.00	1435.63	117.88	10.00	8.55	11.79	12.18
10	Chan	330.00	340.00	1429.62	117.58	10.00	8.51	11.76	12.16
11	Chan	340.00	350.00	1423.62	117.28	10.00	8.47	11.73	12.14
12	Chan	350.00	360.00	1383.82	115.94	10.14	8.24	11.59	11.94
13	Chan	360.00	370.00	909.63	91.60	10.55	5.41	9.16	9.93
14	ROB	370.00	376.68	187.36	42.39	7.05	1.12	6.34	4.42
15	ROB	376.68	383.36	90.44	27.36	7.04	0.54	4.10	3.31
16	ROB	383.36	390.05	26.03	12.94	7.01	0.15	1.94	2.01
17	ROB	390.05	396.73	0.89	1.19	2.87	0.01	0.44	0.74

CROSS SECTION

RIVER: Los Penasquitos
REACH: Lower RS: 1396.6

INPUT
Description:
Station Elevation Data num= 15

Sta	Elev	Sta	Elev	Sta	Elev	Sta	Elev	Sta	Elev
0	48.13	78.4	46.13	101.6	44.13	197.8	44.83	212.3	41.53
225.6	38.13	244.1	34.13	250	30.354	256.6	26.13	290	25.93
357.5	26.13	370	30.349	381.2	34.13	406.3	42.13	443.5	52.13

Manning's n Values num= 3

Sta	n Val	Sta	n Val	Sta	n Val
0	.045	250	.03	370	.045

Bank Sta: Left	Right	Lengths: Left	Channel	Right	Coeff Contr.	Expan.
250	370	37.9	36.6	33.9	.1	.3

Ineffective Flow num= 1

Sta L	Sta R	Elev	Permanent
0	179.4		T

Sediment Elevation = 2.13

CROSS SECTION OUTPUT Profile #100-yr

E.G. Elev (ft)	39.94	Element	Left OB	Channel
Right OB				
Vel Head (ft)	2.14	Wt. n-Val.	0.045	0.030
0.045				
W.S. Elev (ft)	37.80	Reach Len. (ft)	37.90	36.60
33.90				
Crit W.S. (ft)		Flow Area (sq ft)	64.02	1370.59
83.48				
E.G. Slope (ft/ft)	0.002291	Area (sq ft)	64.02	1370.59
83.48				
Q Total (cfs)	16800.00	Flow (cfs)	192.52	16303.89
303.59				
Top Width (ft)	165.61	Top Width (ft)	22.89	120.00
22.73				
Vel Total (ft/s)	11.07	Avg. Vel. (ft/s)	3.01	11.90
3.64				
Max Chl Dpth (ft)	11.87	Hydr. Depth (ft)	2.80	11.42
3.67				
Conv. Total (cfs)	351019.8	Conv. (cfs)	4022.5	340654.0
6343.3				
Length Wtd. (ft)	36.57	Wetted Per. (ft)	24.39	121.93
23.92				
Min Ch El (ft)	25.93	Shear (lb/sq ft)	0.38	1.61
0.50				
Alpha	1.12	Stream Power (lb/ft s)	1.13	19.12
1.82				
Frctn Loss (ft)	0.08	Cum Volume (acre-ft)	11.22	14.21
0.90				
C & E Loss (ft)	0.08	Cum SA (acres)	3.66	1.34
0.29				

Profile #100-yr

Percent Conv	Pos Hydr Depth(ft)	Velocity (ft/s)	Left Sta (ft)	Right Sta (ft)	Flow (cfs)	Area (sq ft)	W.P. (ft)

CROSS SECTION

RIVER: Los Penasquitos
REACH: Lower RS: 1360

INPUT
Description:
Station Elevation Data num= 13

Sta	Elev	Sta	Elev	Sta	Elev	Sta	Elev	Sta	Elev
0	72.13	150	61.23	178.5	41.53	196.8	32.13	205	28.665
211	26.13	263.5	25.13	316	26.13	325	29.344	332.8	32.13
354	42.13	389	56.13	439	58.13				

Manning's n Values num= 3

Sta	n Val	Sta	n Val	Sta	n Val
0	.045	205	.03	325	.045

Bank Sta: Left	Right	Lengths: Left	Channel	Right	Coeff Contr.	Expan.
205	325	3.5	3.5	3.5	.1	.3

CROSS SECTION OUTPUT Profile #100-yr

E.G. Elev (ft)	39.78	Element	Left OB	Channel	Right OB
Vel Head (ft)	1.85	Wt. n-Val.	0.045	0.030	0.045
W.S. Elev (ft)	37.93	Reach Len. (ft)	3.50	3.50	3.50
Crit W.S. (ft)		Flow Area (sq ft)	94.44	1446.02	91.69
E.G. Slope (ft/ft)	0.001852	Area (sq ft)	94.44	1446.02	91.69
Q Total (cfs)	16800.00	Flow (cfs)	358.97	16102.25	338.78
Top Width (ft)	159.57	Top Width (ft)	19.48	120.00	20.09
Vel Total (ft/s)	10.29	Avg. Vel. (ft/s)	3.80	11.14	3.69
Max Chl Dpth (ft)	12.80	Hydr. Depth (ft)	4.85	12.05	4.56
Conv. Total (cfs)	390405.0	Conv. (cfs)	8341.8	374190.5	7872.7
Length Wtd. (ft)	3.50	Wetted Per. (ft)	21.59	121.09	21.87
Min Ch El (ft)	25.13	Shear (lb/sq ft)	0.51	1.38	0.48
Alpha	1.13	Stream Power (lb/ft s)	1.92	15.37	1.79
Frctn Loss (ft)	0.01	Cum Volume (acre-ft)	11.15	13.03	0.83
C & E Loss (ft)	0.01	Cum SA (acres)	3.64	1.24	0.27

Profile #100-yr

Conv	Pos Hydr Depth(ft)	Left Sta (ft)	Right Sta (ft)	Flow (cfs)	Area (sq ft)	W.P. (ft)	Percent Velocity (ft/s)
1	LOB	167.73	186.36	0.09	0.18	0.95	0.00
2	LOB	186.36	205.00	358.88	94.26	20.63	0.46
	0.22						2.14
	5.06						3.81

3	Chan	205.00	215.00	1126.89	110.51	10.51	6.71	11.05	10.20
4	Chan	215.00	225.00	1330.54	119.68	10.00	7.92	11.97	11.12
5	Chan	225.00	235.00	1366.02	121.58	10.00	8.13	12.16	11.24
6	Chan	235.00	245.00	1401.87	123.49	10.00	8.34	12.35	11.35
7	Chan	245.00	255.00	1438.10	125.39	10.00	8.56	12.54	11.47
8	Chan	255.00	265.00	1473.86	127.26	10.00	8.77	12.73	11.58
9	Chan	265.00	275.00	1463.67	126.73	10.00	8.71	12.67	11.55
10	Chan	275.00	285.00	1427.19	124.82	10.00	8.50	12.48	11.43
11	Chan	285.00	295.00	1391.08	122.92	10.00	8.28	12.29	11.32
12	Chan	295.00	305.00	1355.34	121.01	10.00	8.07	12.10	11.20
13	Chan	305.00	315.00	1319.97	119.11	10.00	7.86	11.91	11.08
14	Chan	315.00	325.00	1007.72	103.51	10.56	6.00	10.35	9.74
15	ROB	325.00	335.36	293.51	69.39	11.12	1.75	6.70	4.23
16	ROB	335.36	345.73	45.27	22.31	10.75	0.27	2.29	2.03

CROSS SECTION

RIVER: Los Penasquitos
REACH: Lower RS: 1356.5

INPUT
Description: #1351 - SB I-5 to SB I-805 Truck Connector Piers
Station Elevation Data num= 13

Sta	Elev	Sta	Elev	Sta	Elev	Sta	Elev	Sta	Elev
0	72.13	150	61.23	178.5	41.53	196.8	32.13	205	28.665
211	26.13	263.5	25.13	316	26.13	325	29.344	332.8	32.13
354	42.13	389	56.13	439	58.13				

Manning's n Values num= 3

Sta	n Val	Sta	n Val	Sta	n Val
0	.045	205	.03	325	.045

Bank Sta: Left	Right	Lengths: Left	Channel	Right	Coeff Contr.	Expan.
205	325	3.5	3.5	3.5	.1	.3

Blocked Obstructions num= 1

Sta L	Sta R	Elev
196	203	77.13

CROSS SECTION OUTPUT Profile #100-yr

E.G. Elev (ft)	39.76	Element	Left OB	Channel
Right OB				
Vel Head (ft)	2.00	Wt. n-Val.	0.045	0.030
0.045				
W.S. Elev (ft)	37.76	Reach Len. (ft)	3.50	3.50

3.50				
Crit W.S. (ft)		Flow Area (sq ft)	43.84	1425.85
88.35				
E.G. Slope (ft/ft)	0.002007	Area (sq ft)	43.84	1425.85
88.35				
Q Total (cfs)	16800.00	Flow (cfs)	89.49	16374.98
335.53				
Top Width (ft)	151.89	Top Width (ft)	12.16	120.00
19.73				
Vel Total (ft/s)	10.78	Avg. Vel. (ft/s)	2.04	11.48
3.80				
Max Chl Dpth (ft)	12.63	Hydr. Depth (ft)	3.61	11.88
4.48				
Conv. Total (cfs)	375019.4	Conv. (cfs)	1997.6	365531.9
7489.9				
Length Wtd. (ft)	3.50	Wetted Per. (ft)	27.06	121.09
21.48				
Min Ch El (ft)	25.13	Shear (lb/sq ft)	0.20	1.48
0.52				
Alpha	1.11	Stream Power (lb/ft s)	0.41	16.94
1.96				
Frctn Loss (ft)	0.01	Cum Volume (acre-ft)	11.14	12.92
0.82				
C & E Loss (ft)	0.03	Cum SA (acres)	3.64	1.23
0.27				

Warning: Divided flow computed for this cross-section.

Profile #100-yr

Conv	Pos Hydr Depth(ft)	Left Sta (ft)	Right Sta (ft)	Flow (cfs)	Area (sq ft)	W.P. (ft)	Percent Velocity (ft/s)
1	LOB	167.73	186.36	0.02	0.07	0.59	0.00
	0.13	0.35					
2	LOB	186.36	205.00	89.46	43.77	26.47	0.53
	3.76	2.04					
3	Chan	205.00	215.00	1143.46	108.83	10.51	6.81
	10.88	10.51					
4	Chan	215.00	225.00	1352.77	118.00	10.00	8.05
	11.80	11.46					
5	Chan	225.00	235.00	1389.36	119.90	10.00	8.27
	11.99	11.59					
6	Chan	235.00	245.00	1426.34	121.81	10.00	8.49
	12.18	11.71					
7	Chan	245.00	255.00	1463.71	123.71	10.00	8.71
	12.37	11.83					
8	Chan	255.00	265.00	1500.61	125.58	10.00	8.93
	12.56	11.95					
9	Chan	265.00	275.00	1490.09	125.05	10.00	8.87
	12.50	11.92					
10	Chan	275.00	285.00	1452.46	123.14	10.00	8.65
	12.31	11.80					
11	Chan	285.00	295.00	1415.21	121.24	10.00	8.42
	12.12	11.67					
12	Chan	295.00	305.00	1378.34	119.33	10.00	8.20
	11.93	11.55					
13	Chan	305.00	315.00	1341.87	117.43	10.00	7.99
	11.74	11.43					

14	Chan	315.00	325.00	1020.76	101.83	10.56
6.08	10.18	10.02				
15	ROB	325.00	335.36	292.87	67.65	11.12
1.74	6.53	4.33				
16	ROB	335.36	345.73	42.66	20.70	10.36
0.25	2.21	2.06				

Warning: Divided flow computed for this cross-section.

CROSS SECTION

RIVER: Los Penasquitos
REACH: Lower RS: 1353

INPUT
Description: #1347 - Upstream SB Interstate 5
Station Elevation Data num= 13

Sta	Elev	Sta	Elev	Sta	Elev	Sta	Elev	Sta	Elev
0	72.13	150	61.23	178.5	41.53	196.8	32.13	205	28.665
211	26.13	263.5	25.13	316	26.13	325	29.344	332.8	32.13
354	42.13	389	56.13	439	58.13				

Manning's n Values num= 3

Sta	n Val	Sta	n Val	Sta	n Val
0	.045	205	.03	325	.045

Bank Sta: Left	Right	Lengths: Left	Channel	Right	Coeff Contr.	Expan.
205	325	156	171.7	181.6	.1	.3

CROSS SECTION OUTPUT Profile #100-yr

E.G. Elev (ft)	39.72	Element	Left OB	Channel	Right OB
Vel Head (ft)	1.89	Wt. n-Val.	0.045	0.030	0.045
W.S. Elev (ft)	37.83	Reach Len. (ft)	10.00	10.00	10.00
Crit W.S. (ft)	34.37	Flow Area (sq ft)	92.59	1434.56	89.79
E.G. Slope (ft/ft)	0.001904	Area (sq ft)	92.59	1434.56	89.79
Q Total (cfs)	16800.00	Flow (cfs)	354.45	16111.60	333.95
Top Width (ft)	159.19	Top Width (ft)	19.30	120.00	19.89
Vel Total (ft/s)	10.39	Avg. Vel. (ft/s)	3.83	11.23	3.72
Max Chl Dpth (ft)	12.70	Hydr. Depth (ft)	4.80	11.95	4.51
Conv. Total (cfs)	385040.5	Conv. (cfs)	8123.6	369263.0	7653.9
Length Wtd. (ft)	10.00	Wetted Per. (ft)	21.38	121.09	21.65
Min Ch El (ft)	25.13	Shear (lb/sq ft)	0.51	1.41	0.49
Alpha	1.13	Stream Power (lb/ft s)	1.97	15.81	1.83
Frctn Loss (ft)		Cum Volume (acre-ft)	11.14	12.80	0.81

C & E Loss (ft) Cum SA (acres) 3.63 1.22
0.27

Profile #100-yr

Conv	Pos Hydr	Left Sta (ft)	Right Sta (ft)	Flow (cfs)	Area (sq ft)	W.P. (ft)	Percent Depth(ft)	Velocity (ft/s)
1	LOB	167.73	186.36	0.05	0.11	0.74	0.00	0.17	0.40
2	LOB	186.36	205.00	354.40	92.48	20.63	2.11	4.96	3.83
3	Chan	205.00	215.00	1126.15	109.56	10.51	6.70	10.96	10.28
4	Chan	215.00	225.00	1331.14	118.73	10.00	7.92	11.87	11.21
5	Chan	225.00	235.00	1366.93	120.63	10.00	8.14	12.06	11.33
6	Chan	235.00	245.00	1403.09	122.53	10.00	8.35	12.25	11.45
7	Chan	245.00	255.00	1439.63	124.44	10.00	8.57	12.44	11.57
8	Chan	255.00	265.00	1475.71	126.30	10.00	8.78	12.63	11.68
9	Chan	265.00	275.00	1465.43	125.77	10.00	8.72	12.58	11.65
10	Chan	275.00	285.00	1428.63	123.87	10.00	8.50	12.39	11.53
11	Chan	285.00	295.00	1392.20	121.96	10.00	8.29	12.20	11.41
12	Chan	295.00	305.00	1356.15	120.06	10.00	8.07	12.01	11.30
13	Chan	305.00	315.00	1320.48	118.15	10.00	7.86	11.82	11.18
14	Chan	315.00	325.00	1006.07	102.56	10.56	5.99	10.26	9.81
15	ROB	325.00	335.36	290.55	68.40	11.12	1.73	6.60	4.25
16	ROB	335.36	345.73	43.40	21.39	10.53	0.26	2.25	2.03

BRIDGE

RIVER: Los Penasquitos
REACH: Lower RS: 1278

INPUT
Description: S Interstate 5 Bridge
Distance from Upstream XS = 10
Deck/Roadway Width = 119
Weir Coefficient = 2.6
Upstream Deck/Roadway Coordinates
num= 2

Sta	Hi Cord	Lo Cord	Sta	Hi Cord	Lo Cord
0	72.13	69.13	439	60.13	57.13

Upstream Bridge Cross Section Data
Station Elevation Data num= 13

Sta	Elev	Sta	Elev	Sta	Elev	Sta	Elev	Sta	Elev
0	72.13	150	61.23	178.5	41.53	196.8	32.13	205	28.665
211	26.13	263.5	25.13	316	26.13	325	29.344	332.8	32.13
354	42.13	389	56.13	439	58.13				

Manning's n Values num= 3

Sta	n Val	Sta	n Val	Sta	n Val
0	.045	205	.03	325	.045

Bank Sta: Left	Right	Coeff Contr.	Expan.
205	325	.1	.3

Downstream Deck/Roadway Coordinates
num= 2

Sta	Hi Cord	Lo Cord	Sta	Hi Cord	Lo Cord
0	73.13	70.13	639.3	56.13	53.13

Downstream Bridge Cross Section Data
Station Elevation Data num= 17

Sta	Elev	Sta	Elev	Sta	Elev	Sta	Elev	Sta	Elev
0	42.13	60.4	39.83	123.4	34.93	213.2	32.13	228.6	34.13
241.6	36.13	265.7	36.13	270.3	34.13	274.4	32.13	287.5	30.13
295	28.76	309.4	26.13	360.2	25.13	411	26.13	418	28.517
441.5	36.53	639.3	48.03						

Manning's n Values num= 3

Sta	n Val	Sta	n Val	Sta	n Val
0	.045	295	.03	418	.045

Bank Sta: Left	Right	Coeff Contr.	Expan.
295	418	.1	.5

Ineffective Flow num= 1

Sta L	Sta R	Elev	Permanent
0	241.6	52.13	F

Upstream Embankment side slope = 0 horiz. to 1.0 vertical
Downstream Embankment side slope = 0 horiz. to 1.0 vertical
Maximum allowable submergence for weir flow = .95
Elevation at which weir flow begins = 58.13
Energy head used in spillway design =
Spillway height used in design =
Weir crest shape = Broad Crested

Number of Abutments = 2

Abutment Data
Upstream num= 2

Sta	Elev	Sta	Elev
66.18	67.32	150	65.03

Downstream num= 3

Sta	Elev	Sta	Elev	Sta	Elev
0	70.13	220	64.28	253	36.13

Abutment Data
Upstream num= 2

Sta	Elev	Sta	Elev
389	58.5	439	58.13

Downstream num= 3

Sta	Elev	Sta	Elev	Sta	Elev
441.5	36.53	460	57.9	639.3	53.13

```
Number of Piers =  2

Pier Data
Pier Station     Upstream=   208.5    Downstream=     295
Upstream     num=       2
    Width   Elev    Width   Elev
     5.5   13.13     5.5   67.13
Downstream     num=       2
    Width   Elev    Width   Elev
     5.5   13.13     5.5   63.13

Pier Data
Pier Station     Upstream=   303.7    Downstream=     391
Upstream     num=       2
    Width   Elev    Width   Elev
     5.5   13.13     5.5   67.13
Downstream     num=       2
    Width   Elev    Width   Elev
     5.5   13.13     5.5   63.13

Number of Bridge Coefficient Sets =  1

Low Flow Methods and Data
       Energy
       Momentum                Cd   =     1.2
       Yarnell                 KVal =    1.05
Selected Low Flow Methods = Highest Energy Answer

High Flow Method
       Pressure and Weir flow
           Submerged Inlet Cd          =
           Submerged Inlet + Outlet Cd =      .8
           Max Low Cord                =

Additional Bridge Parameters
       Add Friction component to Momentum
       Do not add Weight component to Momentum
       Class B flow critical depth computations use critical depth
           inside the bridge at the upstream end
       Criteria to check for pressure flow = Upstream energy grade line

BRIDGE OUTPUT  Profile #100-yr


  E.G. US. (ft)                 39.72    Element                 Inside BR US
Inside BR DS
  W.S. US. (ft)                 37.83    E.G. Elev (ft)               39.59
38.75
  Q Total (cfs)             16800.00     W.S. Elev (ft)               37.06
36.01
  Q Bridge (cfs)            16800.00     Crit W.S. (ft)               34.88
34.62
  Q Weir (cfs)                           Max Chl Dpth (ft)            11.93
10.88
  Weir Sta Lft (ft)                      Vel Total (ft/s)             12.17
12.42
  Weir Sta Rgt (ft)                      Flow Area (sq ft)          1380.25
1353.00
  Weir Submerg                           Froude # Chl                 0.68
 0.76
  Weir Max Depth (ft)                    Specif Force (cu ft)       13960.81
13235.41
  Min El Weir Flow (ft)         60.14    Hydr Depth (ft)               9.51
```

8.30			
Min El Prs (ft)	67.32	W.P. Total (ft)	191.18
200.94			
Delta EG (ft)	1.16	Conv. Total (cfs)	257396.3
245836.2			
Delta WS (ft)	1.68	Top Width (ft)	145.06
162.98			
BR Open Area (sq ft)	6130.76	Frctn Loss (ft)	
BR Open Vel (ft/s)	12.42	C & E Loss (ft)	
Coef of Q		Shear Total (lb/sq ft)	1.92
1.96			
Br Sel Method	Momentum	Power Total (lb/ft s)	23.37
24.38			

CROSS SECTION

RIVER: Los Penasquitos
REACH: Lower RS: 1181.3

INPUT
Description: #1181 - Soledad Canyon & Downstream SB Interstate 5
Station Elevation Data num= 17

Sta	Elev	Sta	Elev	Sta	Elev	Sta	Elev	Sta	Elev
0	42.13	60.4	39.83	123.4	34.93	213.2	32.13	228.6	34.13
241.6	36.13	265.7	36.13	270.3	34.13	274.4	32.13	287.5	30.13
295	28.76	309.4	26.13	360.2	25.13	411	26.13	418	28.517
441.5	36.53	639.3	48.03						

Manning's n Values num= 3

Sta	n Val	Sta	n Val	Sta	n Val
0	.045	295	.03	418	.045

Bank Sta: Left	Right	Lengths: Left	Channel	Right	Coeff Contr.	Expan.
295	418	320.7	249.9	217.8	.1	.5

Ineffective Flow num= 1

Sta L	Sta R	Elev	Permanent
0	241.6	52.13	F

CROSS SECTION OUTPUT Profile #100-yr

E.G. Elev (ft)	38.56	Element	Left OB	Channel
Right OB				
Vel Head (ft)	2.41	Wt. n-Val.	0.045	0.030
0.045				
W.S. Elev (ft)	36.15	Reach Len. (ft)	320.70	249.90
217.80				
Crit W.S. (ft)	34.25	Flow Area (sq ft)	133.49	1255.71
85.39				
E.G. Slope (ft/ft)	0.003008	Area (sq ft)	437.83	1255.71
85.39				
Q Total (cfs)	16800.00	Flow (cfs)	439.03	15996.97
364.00				
Top Width (ft)	332.64	Top Width (ft)	187.26	123.00
22.38				
Vel Total (ft/s)	11.39	Avg. Vel. (ft/s)	3.29	12.74
4.26				
Max Chl Dpth (ft)	11.02	Hydr. Depth (ft)	2.50	10.21

3.82					
Conv. Total (cfs)	306308.3	Conv. (cfs)	8004.6	291666.9	6636.7
Length Wtd. (ft)	262.21	Wetted Per. (ft)	54.55	123.65	23.64
Min Ch El (ft)	25.13	Shear (lb/sq ft)	0.46	1.91	0.68
Alpha	1.20	Stream Power (lb/ft s)	1.51	24.30	2.89
Frctn Loss (ft)	0.46	Cum Volume (acre-ft)	10.59	8.05	0.50
C & E Loss (ft)	0.84	Cum SA (acres)	3.47	0.77	0.18

Warning: The velocity head has changed by more than 0.5 ft (0.15 m). This may indicate the need for
additional cross sections.
Warning: The conveyance ratio (upstream conveyance divided by downstream conveyance) is less than
0.7 or greater than 1.4. This may indicate the need for additional cross sections.
Warning: The energy loss was greater than 1.0 ft (0.3 m). between the current and previous cross
section. This may indicate the need for additional cross sections.
Note: Multiple critical depths were found at this location. The critical depth with the lowest, valid,
energy was used.

Profile #100-yr

Conv	Pos Hydr	Left Sta (ft)	Right Sta (ft)	Flow (cfs)	Area (sq ft)	W.P. (ft)	Percent Depth(ft)	Velocity (ft/s)
1	LOB	107.38	134.22	0.00	24.54	26.53	0.93	0.00
2	LOB	134.22	161.07	0.00	52.99	26.86	1.97	0.00
3	LOB	161.07	187.91	0.00	75.46	26.86	2.81	0.00
4	LOB	187.91	214.76	0.00	97.73	26.87	3.64	0.00
5	LOB	214.76	241.60	0.00	53.62	27.11	2.00	0.00
6	LOB	241.60	268.30	0.40	1.95	26.94	0.07	0.20
7	LOB	268.30	295.00	438.63	131.55	27.62	4.93	3.33
8	Chan	295.00	305.25	938.31	85.32	10.42	8.32	11.00
9	Chan	305.25	315.50	1260.82	101.48	10.32	9.90	12.42
10	Chan	315.50	325.75	1339.40	104.95	10.25	10.24	12.76
11	Chan	325.75	336.00	1383.68	107.02	10.25	10.44	12.93
12	Chan	336.00	346.25	1428.54	109.08	10.25	10.64	13.10
13	Chan	346.25	356.50	1473.96	111.15	10.25	10.84	13.26

14	Chan	356.50	366.75	1501.10	112.38	10.25	8.94	10.96
13.36								
15	Chan	366.75	377.00	1461.27	110.58	10.25	8.70	10.79
13.21								
16	Chan	377.00	387.25	1416.01	108.51	10.25	8.43	10.59
13.05								
17	Chan	387.25	397.50	1371.31	106.44	10.25	8.16	10.38
12.88								
18	Chan	397.50	407.75	1327.19	104.37	10.25	7.90	10.18
12.72								
19	Chan	407.75	418.00	1095.37	94.43	10.65	6.52	9.21
11.60								
20	ROB	418.00	438.12	363.24	84.52	21.26	2.16	4.20
4.30								
21	ROB	438.12	458.24	0.76	0.87	2.39	0.00	0.39
0.87								

Warning: The velocity head has changed by more than 0.5 ft (0.15 m). This may indicate the need for
additional cross sections.
Warning: The conveyance ratio (upstream conveyance divided by downstream conveyance) is less than
0.7 or greater than 1.4. This may indicate the need for additional cross sections.
Warning: The energy loss was greater than 1.0 ft (0.3 m). between the current and previous cross
section. This may indicate the need for additional cross sections.
Note: Multiple critical depths were found at this location. The critical depth with the lowest, valid,
energy was used.

CROSS SECTION

RIVER: Los Penasquitos
REACH: Lower RS: 931.4

INPUT
Description: #931 - (Soledad Canyon) FEMA Cross Section AC
Station Elevation Data num= 33

Sta	Elev	Sta	Elev	Sta	Elev	Sta	Elev	Sta	Elev
0	62.13	36.7	52.13	80.9	42.13	177.9	34.13	253.1	32.13
349.9	32.13	376.7	38.13	524.3	38.13	588.9	32.13	605.4	28.13
624.4	28.13	640.8	32.13	707.8	32.13	753.5	32.13	764.5	34.13
786.4	35.33	800.6	34.13	876	35.13	983.7	35.13	1002	31.73
1050	34.13	1065	34.13	1069	32.13	1075	29.502	1082.7	26.13
1148	25.13	1213.4	26.13	1220	29.2	1226.3	32.13	1234	34.13
1270.2	36.13	1281.7	40.13	1453.4	48.03				

Manning's n Values num= 3

Sta	n Val	Sta	n Val	Sta	n Val
0	.045	1075	.03	1220	.045

Bank Sta: Left	Right	Coeff Contr.	Expan.
1075	1220	.1	.3

CROSS SECTION OUTPUT Profile #100-yr

E.G. Elev (ft) 37.26 Element Left OB Channel
Right OB

Vel Head (ft)	0.73	Wt. n-Val.	0.045	0.030
0.045				
W.S. Elev (ft)	36.53	Reach Len. (ft)		
Crit W.S. (ft)	34.38	Flow Area (sq ft)	2439.85	1550.24
114.04				
E.G. Slope (ft/ft)	0.001183	Area (sq ft)	2439.85	1550.24
114.04				
Q Total (cfs)	19000.00	Flow (cfs)	6048.23	12734.21
217.56				
Top Width (ft)	950.58	Top Width (ft)	754.23	145.00
51.35				
Vel Total (ft/s)	4.63	Avg. Vel. (ft/s)	2.48	8.21
1.91				
Max Chl Dpth (ft)	11.40	Hydr. Depth (ft)	3.23	10.69
2.22				
Conv. Total (cfs)	552447.2	Conv. (cfs)	175859.2	370262.1
6325.8				
Length Wtd. (ft)		Wetted Per. (ft)	757.67	146.40
52.38				
Min Ch El (ft)	25.13	Shear (lb/sq ft)	0.24	0.78
0.16				
Alpha	2.20	Stream Power (lb/ft s)	0.59	6.42
0.31				
Frctn Loss (ft)		Cum Volume (acre-ft)		
C & E Loss (ft)		Cum SA (acres)		

Warning: Divided flow computed for this cross-section.

Profile #100-yr

Percent Conv	Pos Hydr Depth(ft)	Velocity (ft/s)	Left Sta (ft)	Right Sta (ft)	Flow (cfs)	Area (sq ft)	W.P. (ft)
1	LOB		97.73	195.45	120.93	81.15	46.76
0.64	1.74	1.49					
2	LOB		195.45	293.18	994.34	385.81	97.75
5.23	3.95	2.58					
3	LOB		293.18	390.91	736.99	292.80	76.86
3.88	3.83	2.52					
4	LOB		390.91	488.64			
5	LOB		488.64	586.36	156.64	93.36	45.03
0.82	2.08	1.68					
6	LOB		586.36	684.09	1901.69	571.50	98.70
10.01	5.85	3.33					
7	LOB		684.09	781.82	951.96	376.15	97.93
5.01	3.85	2.53					
8	LOB		781.82	879.55	278.61	179.86	97.79
1.47	1.84	1.55					
9	LOB		879.55	977.27	176.69	136.82	97.73
0.93	1.40	1.29					
10	LOB		977.27	1075.00	730.38	322.41	99.12
3.84	3.30	2.27					
11	Chan		1075.00	1087.08	818.04	112.83	12.79
4.31	9.34	7.25					
12	Chan		1087.08	1099.17	1042.80	127.59	12.08

5.49	10.56	8.17				
13	Chan	1099.17	1111.25	1073.44	129.83	12.08
5.65	10.74	8.27				
14	Chan	1111.25	1123.33	1104.43	132.07	12.08
5.81	10.93	8.36				
15	Chan	1123.33	1135.42	1135.76	134.30	12.08
5.98	11.11	8.46				
16	Chan	1135.42	1147.50	1167.46	136.54	12.08
6.14	11.30	8.55				
17	Chan	1147.50	1159.58	1170.06	136.72	12.08
6.16	11.31	8.56				
18	Chan	1159.58	1171.67	1138.44	134.49	12.08
5.99	11.13	8.46				
19	Chan	1171.67	1183.75	1107.13	132.26	12.08
5.83	10.95	8.37				
20	Chan	1183.75	1195.83	1076.15	130.03	12.08
5.66	10.76	8.28				
21	Chan	1195.83	1207.92	1045.53	127.80	12.08
5.50	10.58	8.18				
22	Chan	1207.92	1220.00	855.00	115.77	12.76
4.50	9.58	7.39				
23	ROB	1220.00	1241.22	177.87	79.01	22.13
0.94	3.72	2.25				
24	ROB	1241.22	1262.44	36.43	30.03	21.25
0.19	1.42	1.21				
25	ROB	1262.44	1283.66	3.26	5.00	8.99
0.02	0.56	0.65				

Warning: Divided flow computed for this cross-section.

SUMMARY OF MANNING'S N VALUES

River:Los Penasquitos

Reach	River Sta.	n1	n2	n3
Lower	4337.4	.035	.06	.05
Lower	3918.5	.035	.065	.065
Lower	3639.3	.035	.065	.065
Lower	3241.5	.035	.065	.065
Lower	2903.2	.035	.065	.065
Lower	2488.4	.035	.05	.05
Lower	2290.5	.035	.05	.035
Lower	2040.2	.035	.05	.035
Lower	1951.5	.035	.04	.035
Lower	1888	.035	.04	.035
Lower	1850	Bridge		
Lower	1808.5	.035	.04	.035
Lower	1782.95	.045	.04	.045
Lower	1780.2	.045	.04	.045
Lower	1777.45	.045	.04	.045
Lower	1658.9	.045	.04	.045
Lower	1656.1	.045	.04	.045
Lower	1653.3	.045	.04	.045
Lower	1626	Bridge		
Lower	1584.6	.045	.03	.045
Lower	1581	.045	.03	.045
Lower	1578.2	.045	.03	.045
Lower	1575.4	.045	.03	.045

Lower	1537	Bridge		
Lower	1492.7	.045	.03	.045
Lower	1407.6	.045	.03	.045
Lower	1402.1	.045	.03	.045
Lower	1396.6	.045	.03	.045
Lower	1360	.045	.03	.045
Lower	1356.5	.045	.03	.045
Lower	1353	.045	.03	.045
Lower	1278	Bridge		
Lower	1181.3	.045	.03	.045
Lower	931.4	.045	.03	.045

SUMMARY OF REACH LENGTHS

River: Los Penasquitos

Reach	River Sta.	Left	Channel	Right
Lower	4337.4	490.4	418.9	390.5
Lower	3918.5	254.1	279.2	299.7
Lower	3639.3	348.2	397.8	434.4
Lower	3241.5	413.4	338.3	260.2
Lower	2903.2	352.6	414.8	460.3
Lower	2488.4	138.5	197.9	244.6
Lower	2290.5	222.8	250.3	243.7
Lower	2040.2	98.5	88.7	94.2
Lower	1951.5	107.1	63.5	138
Lower	1888	57.3	79.5	88.2
Lower	1850	Bridge		
Lower	1808.5	56.3	25.6	26.7
Lower	1782.95	2.75	2.75	2.75
Lower	1780.2	2.75	2.75	2.75
Lower	1777.45	233.1	118.6	137
Lower	1658.9	2.75	2.75	2.75
Lower	1656.1	2.75	2.75	2.75
Lower	1653.3	73.4	68.7	67.6
Lower	1626	Bridge		
Lower	1584.6	3.6	3.6	3.6
Lower	1581	2.75	2.75	2.75
Lower	1578.2	2.75	2.75	2.75
Lower	1575.4	80	88.7	86
Lower	1537	Bridge		
Lower	1492.7	117	85.1	41.1
Lower	1407.6	5.5	5.5	5.5
Lower	1402.1	5.5	5.5	5.5
Lower	1396.6	37.9	36.6	33.9
Lower	1360	3.5	3.5	3.5
Lower	1356.5	3.5	3.5	3.5
Lower	1353	156	171.7	181.6
Lower	1278	Bridge		
Lower	1181.3	320.7	249.9	217.8
Lower	931.4			

SUMMARY OF CONTRACTION AND EXPANSION COEFFICIENTS
River: Los Penasquitos

Reach	River Sta.		Contr.	Expan.
Lower	4337.4		.1	.3
Lower	3918.5		.1	.3
Lower	3639.3		.1	.3
Lower	3241.5		.1	.3
Lower	2903.2		.1	.3
Lower	2488.4		.1	.3
Lower	2290.5		.1	.3
Lower	2040.2		.1	.3
Lower	1951.5		.1	.3
Lower	1888		.3	.3
Lower	1850	Bridge		
Lower	1808.5		.1	.3
Lower	1782.95		.1	.3
Lower	1780.2		.1	.3
Lower	1777.45		.1	.3
Lower	1658.9		.1	.3
Lower	1656.1		.1	.3
Lower	1653.3		.1	.3
Lower	1626	Bridge		
Lower	1584.6		.1	.3
Lower	1581		.1	.3
Lower	1578.2		.1	.3
Lower	1575.4		.1	.3
Lower	1537	Bridge		
Lower	1492.7		.1	.3
Lower	1407.6		.1	.3
Lower	1402.1		.1	.3
Lower	1396.6		.1	.3
Lower	1360		.1	.3
Lower	1356.5		.1	.3
Lower	1353		.1	.3
Lower	1278	Bridge		
Lower	1181.3		.1	.5
Lower	931.4		.1	.3

Profile Output Table - Standard Table 1

Reach	River Sta	Profile	Q Total	Min Ch El	W.S. Elev	Crit W.S.
E.G. Elev	E.G. Slope	Vel Chnl	Flow Area	Top Width	Froude # Chl	
(ft)	(ft/ft)	(ft/s)	(cfs) (sq ft)	(ft) (ft)	(ft)	(ft)
Lower	4337.4	100-yr	16800.00	32.23	47.65	
47.93	0.001175	4.29	4015.86	1039.43	0.22	
Lower	3918.5	100-yr	16800.00	31.33	46.23	
47.03	0.004128	7.36	2370.01	838.70	0.39	
Lower	3639.3	100-yr	16800.00	30.83	45.62	
46.10	0.002292	5.63	3038.88	662.35	0.29	
Lower	3241.5	100-yr	16800.00	29.93	44.63	
45.16	0.002466	6.02	2966.66	549.02	0.30	
Lower	2903.2	100-yr	16800.00	29.33	43.77	
44.32	0.002418	6.09	2957.39	1246.44	0.30	
Lower	2488.4	100-yr	16800.00	28.13	43.12	
43.58	0.001293	5.88	3270.34	1382.44	0.29	
Lower	2290.5	100-yr	16800.00	28.13	43.16	
43.34	0.000469	3.60	5008.78	1580.49	0.17	
Lower	2040.2	100-yr	16800.00	28.13	42.91	
43.21	0.000563	3.91	4033.69	1578.54	0.19	

Lower	1951.5	100-yr	16800.00	28.13	42.17	36.68
43.07	0.001513	7.92	2309.75	1587.42	0.38	
Lower	1888	100-yr	16800.00	28.13	41.79	36.72
42.93	0.001873	8.78	2045.83	1138.04	0.43	
Lower	1850		Bridge			
Lower	1808.5	100-yr	16800.00	28.13	41.30	
42.52	0.002113	9.26	1980.73	1078.92	0.46	
Lower	1782.95	100-yr	16800.00	28.13	40.91	36.93
42.42	0.002665	10.48	1863.78	606.55	0.52	
Lower	1780.2	100-yr	16800.00	28.13	40.86	36.88
42.41	0.002720	10.56	1814.66	582.44	0.52	
Lower	1777.45	100-yr	16800.00	28.13	40.87	36.93
42.39	0.002697	10.52	1855.73	604.79	0.52	
Lower	1658.9	100-yr	16800.00	27.93	40.82	
41.99	0.002099	8.92	2053.16	214.85	0.45	
Lower	1656.1	100-yr	16800.00	27.93	40.43	
41.94	0.005024	10.18	1756.90	189.67	0.52	
Lower	1653.3	100-yr	16800.00	27.93	40.63	36.27
41.84	0.002222	9.08	2012.58	213.32	0.46	
Lower	1626		Bridge			
Lower	1584.6	100-yr	16800.00	25.93	39.77	
41.31	0.001611	10.01	1756.61	181.63	0.52	
Lower	1581	100-yr	16800.00	25.93	39.76	
41.30	0.001616	10.02	1754.99	181.57	0.52	
Lower	1578.2	100-yr	16800.00	25.93	38.70	
41.20	0.005637	12.77	1356.67	152.49	0.71	
Lower	1575.4	100-yr	16800.00	25.93	39.25	35.82
40.95	0.001894	10.52	1662.24	178.14	0.56	
Lower	1537		Bridge			
Lower	1492.7	100-yr	16800.00	25.93	38.16	
40.17	0.002237	11.50	1547.22	161.00	0.61	
Lower	1407.6	100-yr	16800.00	25.93	37.84	
39.96	0.002265	11.85	1524.07	165.89	0.62	
Lower	1402.1	100-yr	16800.00	25.93	37.82	
39.95	0.002278	11.88	1521.04	165.75	0.62	
Lower	1396.6	100-yr	16800.00	25.93	37.80	
39.94	0.002291	11.90	1518.09	165.61	0.62	
Lower	1360	100-yr	16800.00	25.13	37.93	
39.78	0.001852	11.14	1632.16	159.57	0.57	
Lower	1356.5	100-yr	16800.00	25.13	37.76	
39.76	0.002007	11.48	1558.04	151.89	0.59	
Lower	1353	100-yr	16800.00	25.13	37.83	34.37
39.72	0.001904	11.23	1616.94	159.19	0.57	
Lower	1278		Bridge			
Lower	1181.3	100-yr	16800.00	25.13	36.15	34.25
38.56	0.003008	12.74	1474.60	332.64	0.70	
Lower	931.4	100-yr	19000.00	25.13	36.53	34.38
37.26	0.001183	8.21	4104.13	950.58	0.44	

ERRORS WARNINGS AND NOTES
Errors Warnings and Notes for Plan : ExistNoClog

River: Los Penasquitos Reach: Lower RS: 4337.4 Profile: 100-yr
Warning:Divided flow computed for this cross-section.
Warning:The velocity head has changed by more than 0.5 ft (0.15 m). This may

indicate the need for additional cross sections.
Warning:The conveyance ratio (upstream conveyance divided by downstream conveyance) is less than 0.7 or greater than 1.4.
This may indicate the need for additional cross sections.
River: Los Penasquitos Reach: Lower RS: 2903.2 Profile: 100-yr
Warning:Divided flow computed for this cross-section.
River: Los Penasquitos Reach: Lower RS: 2488.4 Profile: 100-yr
Warning:The conveyance ratio (upstream conveyance divided by downstream conveyance) is less than 0.7 or greater than 1.4.
This may indicate the need for additional cross sections.
River: Los Penasquitos Reach: Lower RS: 2040.2 Profile: 100-yr
Warning:The velocity head has changed by more than 0.5 ft (0.15 m). This may indicate the need for additional cross sections.
Warning:The conveyance ratio (upstream conveyance divided by downstream conveyance) is less than 0.7 or greater than 1.4.
This may indicate the need for additional cross sections.
River: Los Penasquitos Reach: Lower RS: 1951.5 Profile: 100-yr
Note: Multiple critical depths were found at this location. The critical depth with the lowest, valid, water surface was
used.
River: Los Penasquitos Reach: Lower RS: 1888 Profile: 100-yr
Warning:Divided flow computed for this cross-section.
Warning:The conveyance ratio (upstream conveyance divided by downstream conveyance) is less than 0.7 or greater than 1.4.
This may indicate the need for additional cross sections.
River: Los Penasquitos Reach: Lower RS: 1808.5 Profile: 100-yr
Warning:Divided flow computed for this cross-section.
River: Los Penasquitos Reach: Lower RS: 1782.95 Profile: 100-yr
Warning:Divided flow computed for this cross-section.
Note: Multiple critical depths were found at this location. The critical depth with the lowest, valid, water surface was
used.
River: Los Penasquitos Reach: Lower RS: 1780.2 Profile: 100-yr
Warning:Divided flow computed for this cross-section.
Note: Multiple critical depths were found at this location. The critical depth with the lowest, valid, water surface was
used.
River: Los Penasquitos Reach: Lower RS: 1777.45 Profile: 100-yr
Warning:Divided flow computed for this cross-section.
Note: Multiple critical depths were found at this location. The critical depth with the lowest, valid, water surface was
used.
River: Los Penasquitos Reach: Lower RS: 1658.9 Profile: 100-yr
Warning:The conveyance ratio (upstream conveyance divided by downstream conveyance) is less than 0.7 or greater than 1.4.
This may indicate the need for additional cross sections.
River: Los Penasquitos Reach: Lower RS: 1656.1 Profile: 100-yr
Warning:Divided flow computed for this cross-section.
Warning:The conveyance ratio (upstream conveyance divided by downstream conveyance) is less than 0.7 or greater than 1.4.
This may indicate the need for additional cross sections.
River: Los Penasquitos Reach: Lower RS: 1581 Profile: 100-yr
Warning:The velocity head has changed by more than 0.5 ft (0.15 m). This may indicate the need for additional cross sections.
Warning:The conveyance ratio (upstream conveyance divided by downstream conveyance) is less than 0.7 or greater than 1.4.
This may indicate the need for additional cross sections.
River: Los Penasquitos Reach: Lower RS: 1578.2 Profile: 100-yr
Warning:Divided flow computed for this cross-section.
Warning:The velocity head has changed by more than 0.5 ft (0.15 m). This may indicate the need for additional cross sections.
Warning:The conveyance ratio (upstream conveyance divided by downstream conveyance) is less than 0.7 or greater than 1.4.

This may indicate the need for additional cross sections.
River: Los Penasquitos Reach: Lower RS: 1356.5 Profile: 100-yr
Warning:Divided flow computed for this cross-section.
River: Los Penasquitos Reach: Lower RS: 1181.3 Profile: 100-yr
Warning:The velocity head has changed by more than 0.5 ft (0.15 m). This may indicate the need for additional cross sections.
Warning:The conveyance ratio (upstream conveyance divided by downstream conveyance) is less than 0.7 or greater than 1.4.
This may indicate the need for additional cross sections.
Warning:The energy loss was greater than 1.0 ft (0.3 m). between the current and previous cross section. This may indicate
the need for additional cross sections.
Note: Multiple critical depths were found at this location. The critical depth with the lowest, valid, energy was used.
River: Los Penasquitos Reach: Lower RS: 931.4 Profile: 100-yr
Warning:Divided flow computed for this cross-section.

PROSPOSED

HEC-RAS Plan: PropNoClog River: Los Penasquitos Reach: Lower Profile: 100-yr

Reach	River Sta	Profile	Q Total	Min Ch El	W.S. Elev	Crit W.S.	E.G. Elev	E.G. Slope	Vel Chnl	Flow Area	Top Width	Froude # Chl
			(cfs)	(ft)	(ft)	(ft)	(ft)	(ft/ft)	(ft/s)	(sq ft)	(ft)	
Lower	4337.4	100-yr	16800.00	32.23	47.65		47.93	0.001175	4.29	4015.86	1039.43	0.22
Lower	3918.5	100-yr	16800.00	31.33	46.23		47.03	0.004128	7.36	2370.01	838.70	0.39
Lower	3639.3	100-yr	16800.00	30.83	45.62		46.10	0.002292	5.63	3038.88	662.35	0.29
Lower	3241.5	100-yr	16800.00	29.93	44.63		45.16	0.002466	6.02	2966.66	549.02	0.30
Lower	2903.2	100-yr	16800.00	29.33	43.77		44.32	0.002418	6.09	2957.39	1246.44	0.30
Lower	2488.4	100-yr	16800.00	28.13	43.12		43.58	0.001293	5.88	3270.34	1382.44	0.29
Lower	2290.5	100-yr	16800.00	28.13	43.16		43.34	0.000469	3.60	5008.79	1580.50	0.17
Lower	2040.2	100-yr	16800.00	28.13	42.91		43.21	0.000563	3.91	4033.69	1578.54	0.19
Lower	1951.5	100-yr	16800.00	28.13	42.17	36.68	43.07	0.001513	7.92	2309.75	1587.43	0.38
Lower	1888	100-yr	16800.00	28.13	41.79	36.72	42.93	0.001873	8.78	2045.83	1138.05	0.43
Lower	1850		Bridge									
Lower	1808.5	100-yr	16800.00	28.13	41.30		42.52	0.002113	9.26	1980.73	1078.92	0.46
Lower	1782.95	100-yr	16800.00	28.13	40.91	36.93	42.42	0.002665	10.48	1863.78	606.55	0.52
Lower	1780.2	100-yr	16800.00	28.13	40.86	36.88	42.41	0.002720	10.56	1814.67	582.44	0.52
Lower	1777.45	100-yr	16800.00	28.13	40.87	36.93	42.39	0.002697	10.52	1855.73	604.79	0.52
Lower	1658.9	100-yr	16800.00	27.93	40.82		41.99	0.002099	8.92	2053.16	214.85	0.45
Lower	1656.1	100-yr	16800.00	27.93	40.43		41.94	0.005023	10.18	1756.90	189.67	0.52
Lower	1653.3	100-yr	16800.00	27.93	40.63	36.27	41.84	0.002222	9.08	2012.58	213.32	0.46
Lower	1626		Bridge									
Lower	1584.6	100-yr	16800.00	25.93	39.77		41.31	0.001611	10.01	1756.62	181.63	0.52
Lower	1581	100-yr	16800.00	25.93	39.76		41.30	0.001616	10.02	1754.99	181.57	0.52
Lower	1578.2	100-yr	16800.00	25.93	38.70		41.20	0.005637	12.77	1356.68	152.49	0.71
Lower	1575.4	100-yr	16800.00	25.93	39.25	35.82	40.95	0.001894	10.52	1662.25	178.14	0.56
Lower	1537		Bridge									
Lower	1492.7	100-yr	16800.00	25.93	38.16		40.17	0.002237	11.50	1547.23	161.00	0.61
Lower	1407.6	100-yr	16800.00	25.93	37.84		39.96	0.002265	11.85	1524.08	165.90	0.62
Lower	1402.1	100-yr	16800.00	25.93	37.82		39.95	0.002280	11.88	1511.76	157.44	0.62
Lower	1396.6	100-yr	16800.00	25.93	37.80		39.94	0.002291	11.90	1518.09	165.61	0.62
Lower	1360	100-yr	16800.00	25.13	37.93		39.78	0.001852	11.14	1632.16	159.57	0.57
Lower	1356.5	100-yr	16800.00	25.13	37.76		39.76	0.002007	11.48	1558.04	151.89	0.59
Lower	1353	100-yr	16800.00	25.13	37.83	34.37	39.72	0.001904	11.23	1616.94	159.19	0.57
Lower	1278		Bridge									
Lower	1181.3	100-yr	16800.00	25.13	36.15	34.25	38.56	0.003008	12.74	1474.60	332.64	0.70
Lower	931.4	100-yr	19000.00	25.13	36.53	34.38	37.26	0.001183	8.21	4104.13	950.58	0.44

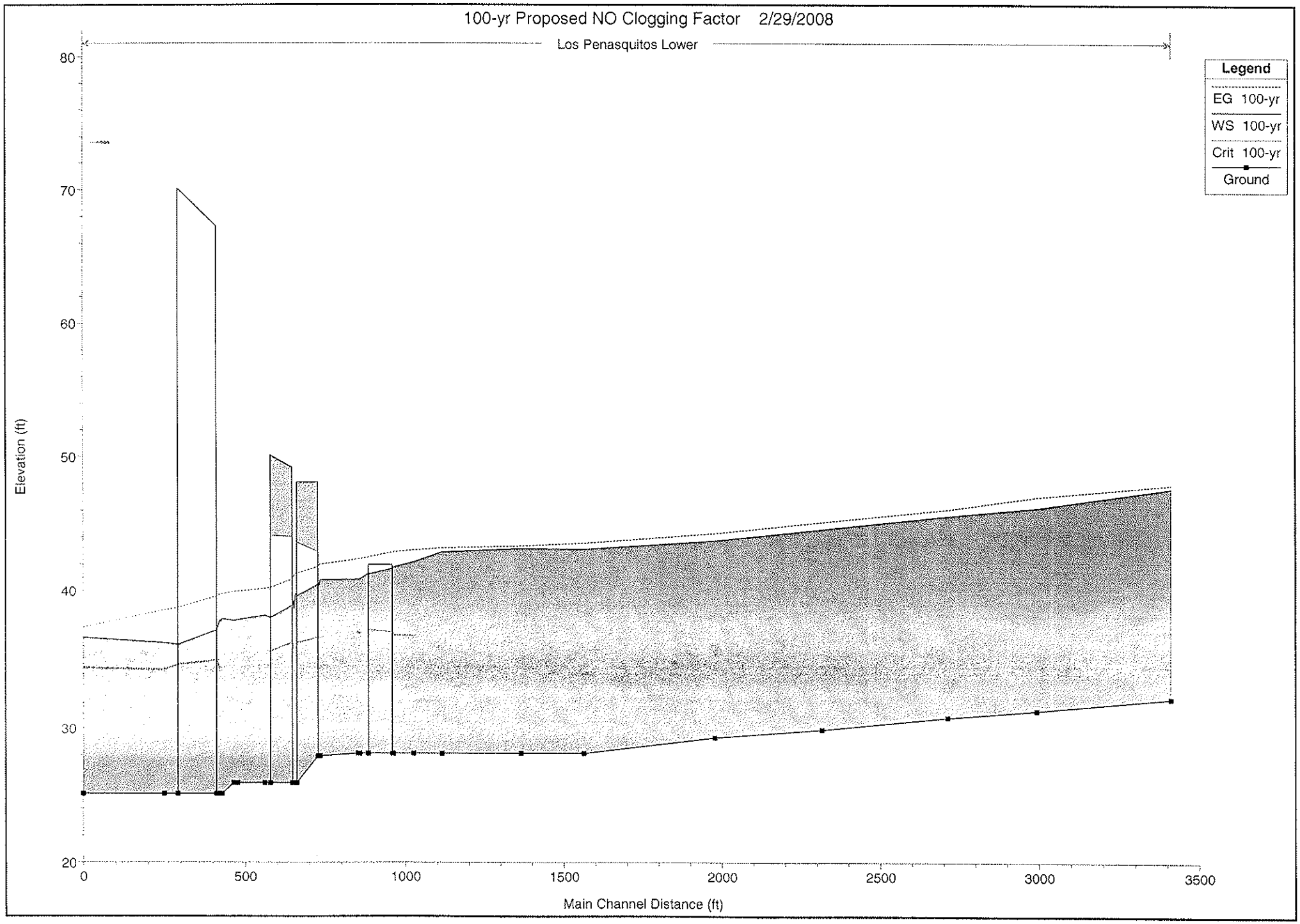
100-yr Proposed NO Clogging Factor 2/29/2008
Los Penasquitos Lower
Legend
EG 100-yr
WS 100-yr
Crit 100-yr
Ground
Elevation (ft)
80
70
60
50
40
30
20
0
500
1000
1500
2000
2500
3000
3500
Main Channel Distance (ft)

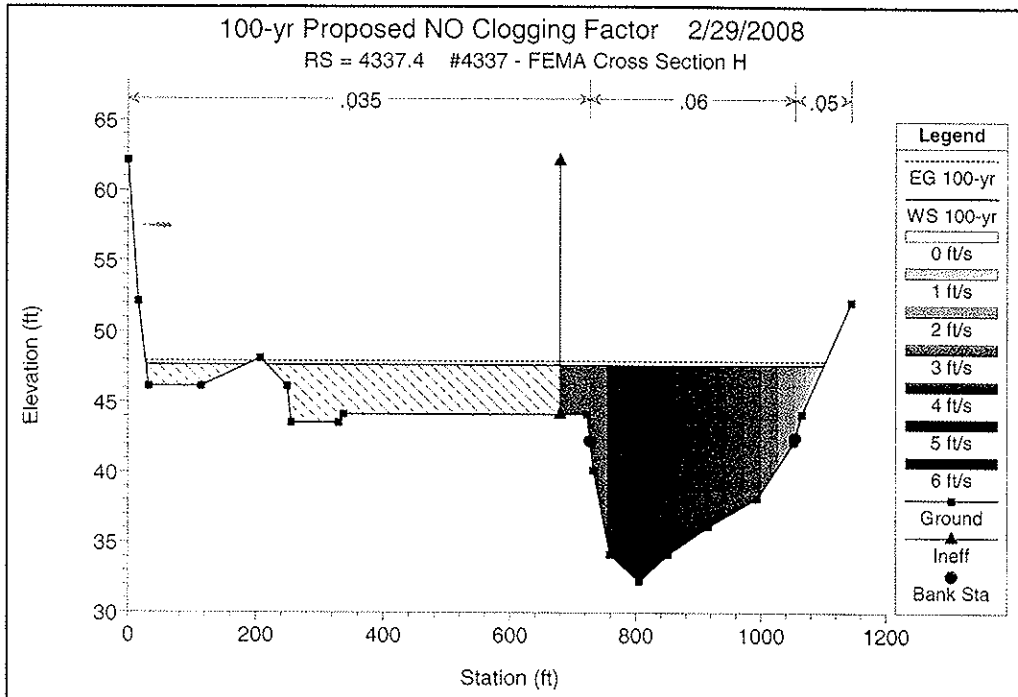
100-yr Proposed NO Clogging Factor 2/29/2008
RS = 4337.4 #4337 - FEMA Cross Section H
.035
.06
.05
Elevation (ft)
Station (ft)
Legend
EG 100-yr
WS 100-yr
0 ft/s
1 ft/s
2 ft/s
3 ft/s
4 ft/s
5 ft/s
6 ft/s
Ground
Ineff
Bank Sta

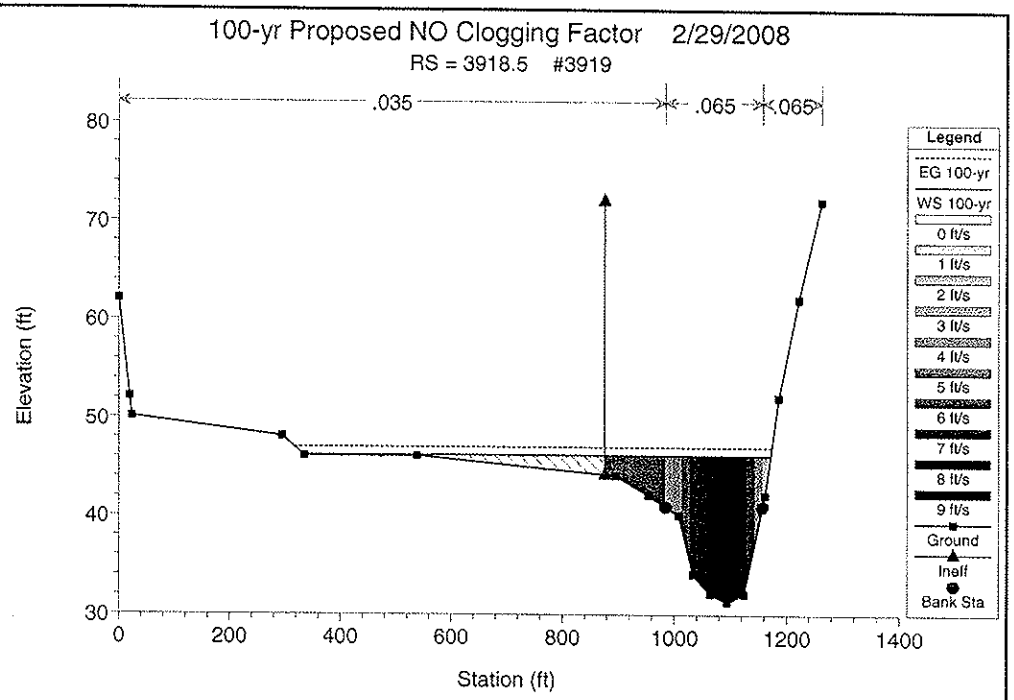
100-yr Proposed NO Clogging Factor 2/29/2008
RS = 3918.5 #3919
.035
.065
.065
Elevation (ft)
Station (ft)
Legend
EG 100-yr
WS 100-yr
0 ft/s
1 ft/s
2 ft/s
3 ft/s
4 ft/s
5 ft/s
6 ft/s
7 ft/s
8 ft/s
9 ft/s
Ground
Ineff
Bank Sta

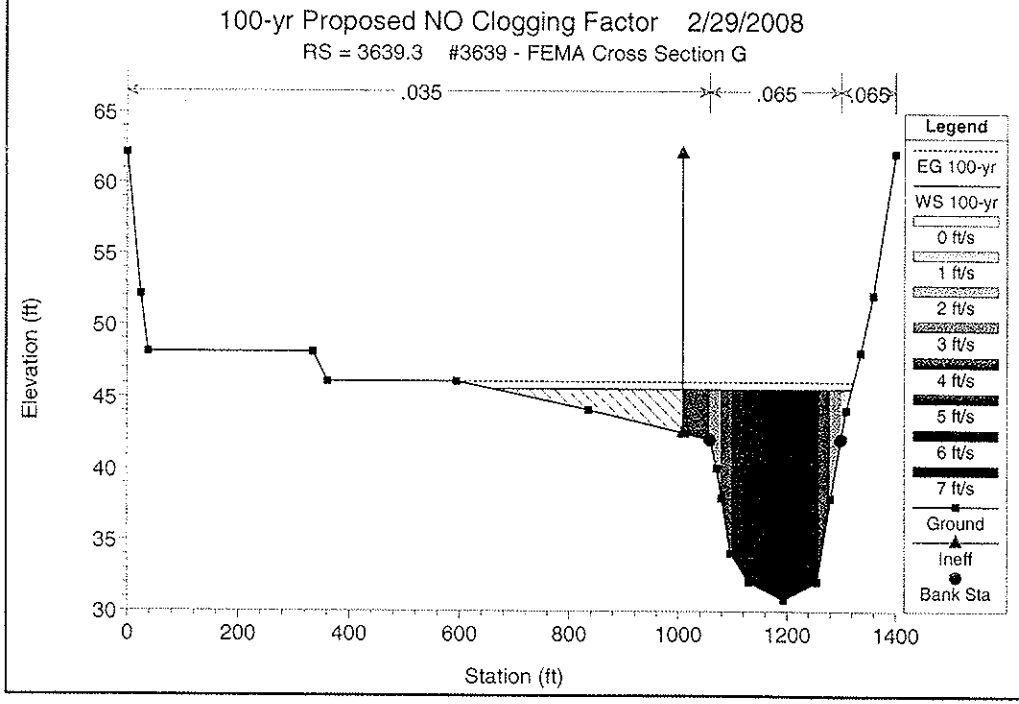
100-yr Proposed NO Clogging Factor 2/29/2008
RS = 3639.3 #3639 - FEMA Cross Section G
.035
.065
.065
Elevation (ft)
Station (ft)
Legend
EG 100-yr
WS 100-yr
0 ft/s
1 ft/s
2 ft/s
3 ft/s
4 ft/s
5 ft/s
6 ft/s
7 ft/s
Ground
Ineff
Bank Sta

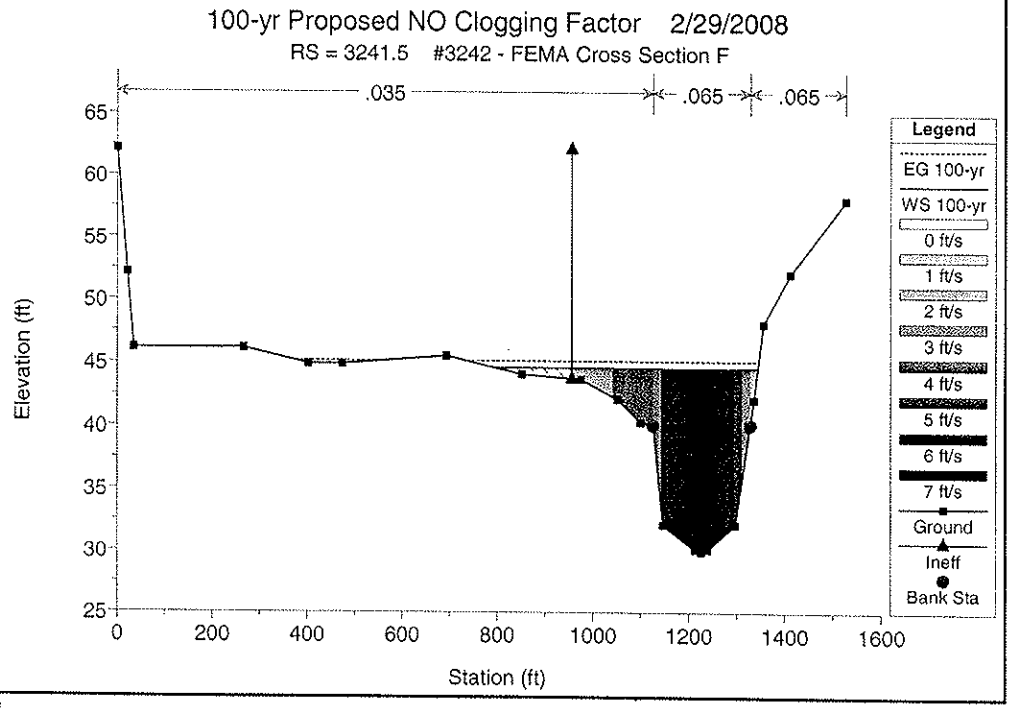
100-yr Proposed NO Clogging Factor 2/29/2008
RS = 3241.5 #3242 - FEMA Cross Section F
.035
.065
.065
Elevation (ft)
Station (ft)
Legend
EG 100-yr
WS 100-yr
0 ft/s
1 ft/s
2 ft/s
3 ft/s
4 ft/s
5 ft/s
6 ft/s
7 ft/s
Ground
Ineff
Bank Sta

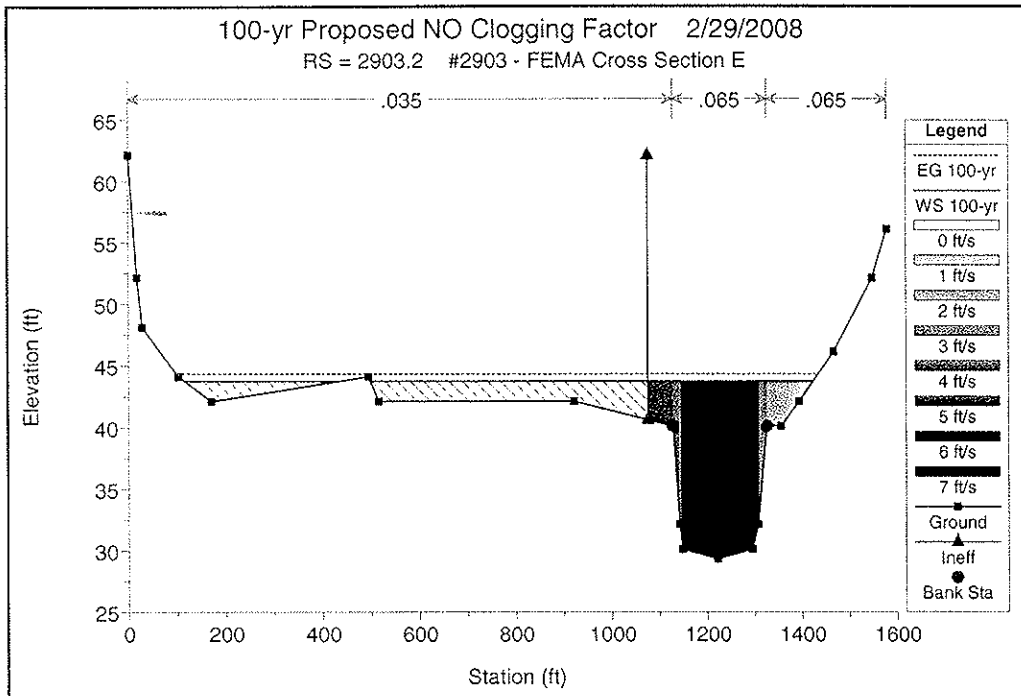
100-yr Proposed NO Clogging Factor 2/29/2008
RS = 2903.2 #2903 - FEMA Cross Section E
.035
.065
.065
Elevation (ft)
Station (ft)
Legend
EG 100-yr
WS 100-yr
0 ft/s
1 ft/s
2 ft/s
3 ft/s
4 ft/s
5 ft/s
6 ft/s
7 ft/s
Ground
Ineff
Bank Sta

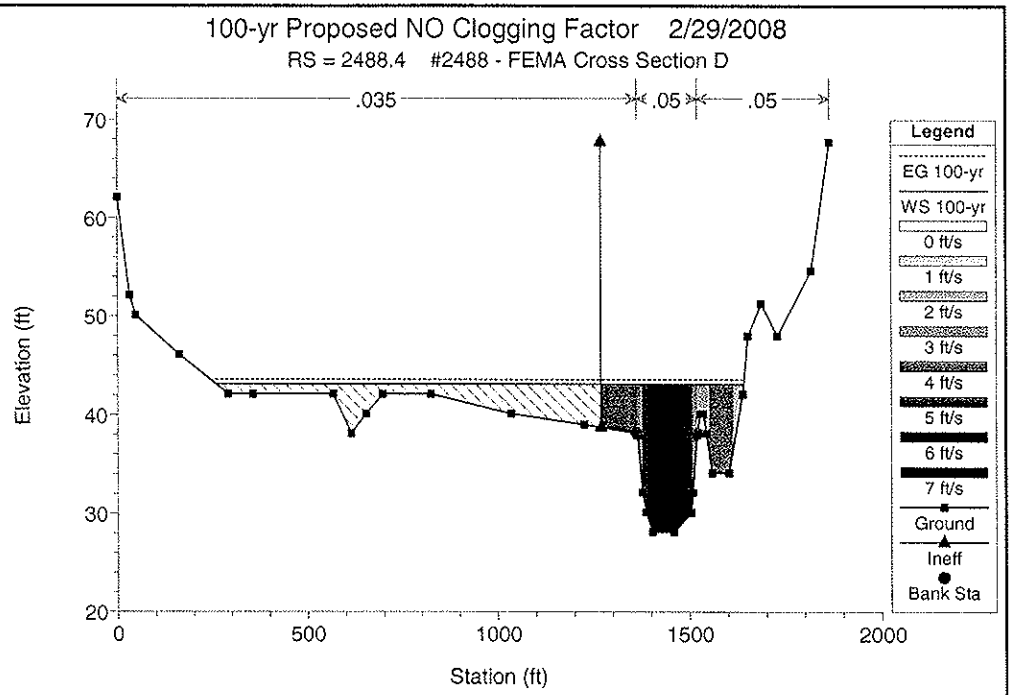
100-yr Proposed NO Clogging Factor 2/29/2008
RS = 2488.4 #2488 - FEMA Cross Section D
.035
.05
.05
Elevation (ft)
Station (ft)
Legend
EG 100-yr
WS 100-yr
0 ft/s
1 ft/s
2 ft/s
3 ft/s
4 ft/s
5 ft/s
6 ft/s
7 ft/s
Ground
Ineff
Bank Sta

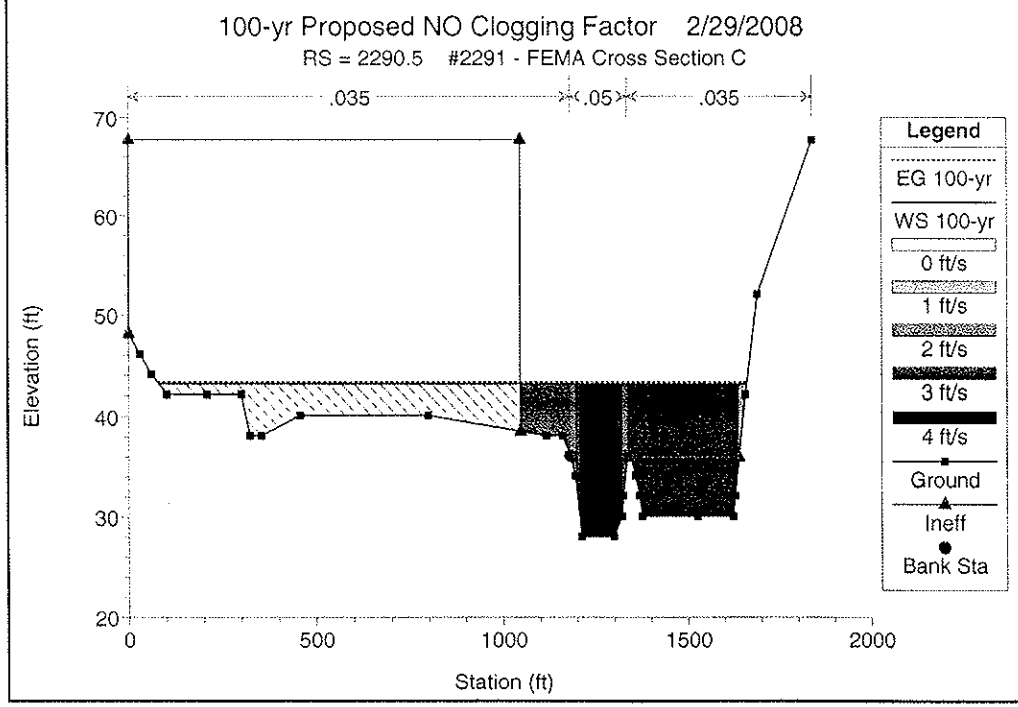
100-yr Proposed NO Clogging Factor 2/29/2008
RS = 2290.5 #2291 - FEMA Cross Section C
.035
.05
.035
Elevation (ft)
Station (ft)
Legend
EG 100-yr
WS 100-yr
0 ft/s
1 ft/s
2 ft/s
3 ft/s
4 ft/s
Ground
Ineff
Bank Sta

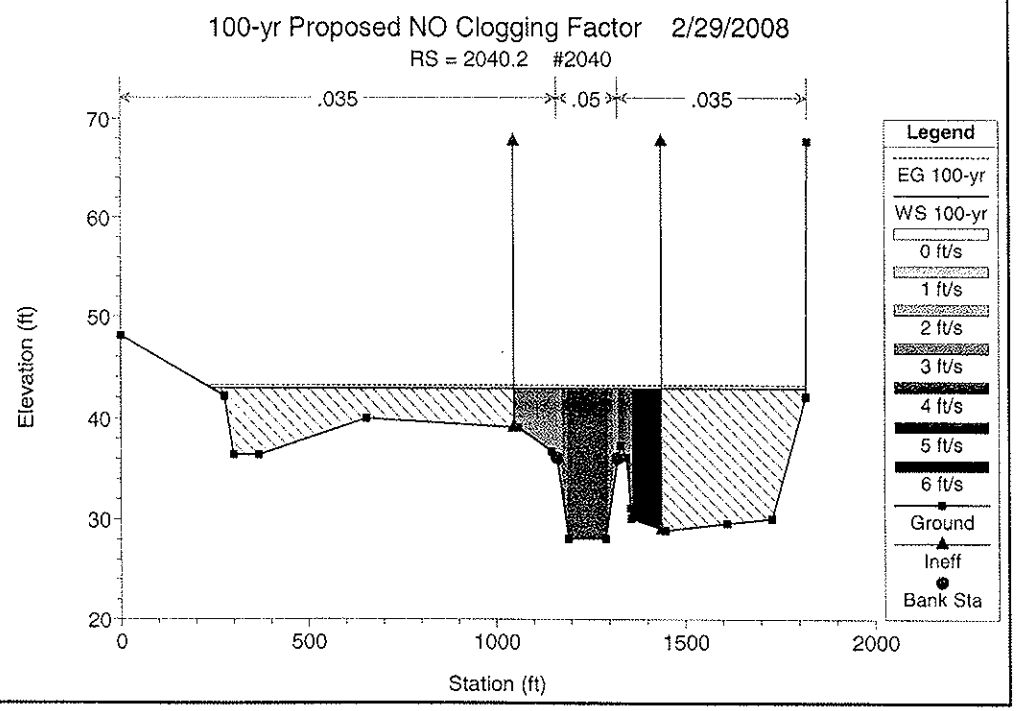
100-yr Proposed NO Clogging Factor 2/29/2008
RS = 2040.2 #2040
.035
.05
.035
Elevation (ft)
Station (ft)
Legend
EG 100-yr
WS 100-yr
0 ft/s
1 ft/s
2 ft/s
3 ft/s
4 ft/s
5 ft/s
6 ft/s
Ground
Ineff
Bank Sta

100-yr Proposed NO Clogging Factor 2/29/2008

RS = 1951.5 #1952 - FEMA Cross Section B

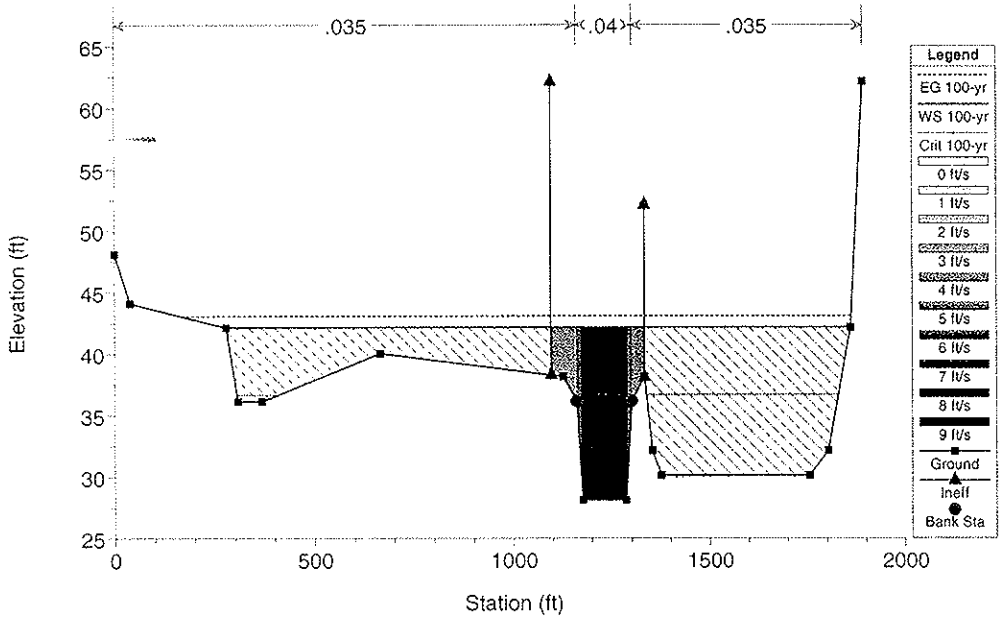

100-yr Proposed NO Clogging Factor 2/29/2008

RS = 1888 #1888 - Upstream Vista Sorrento Parkway

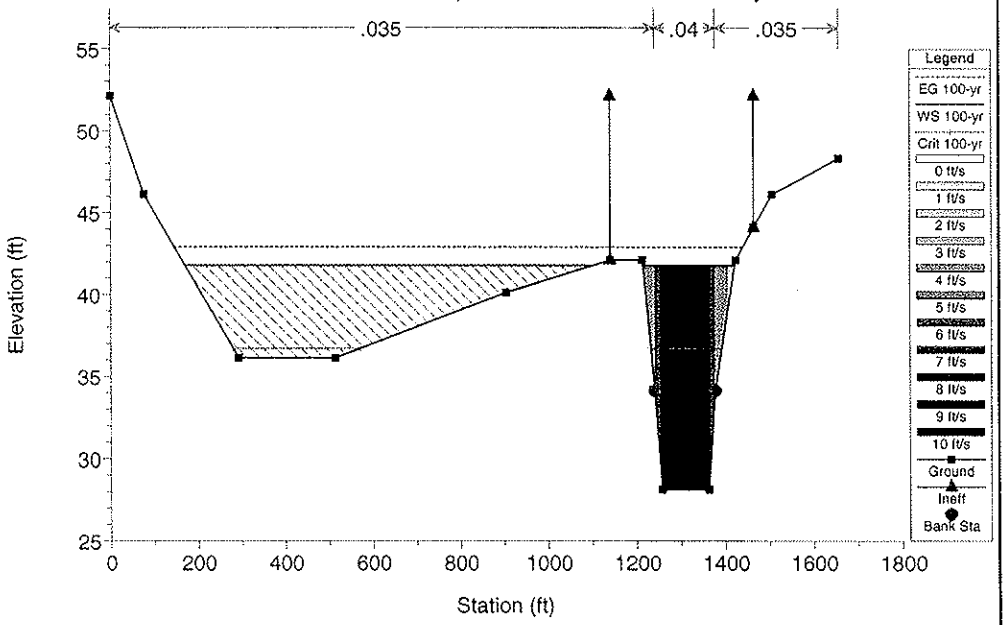

100-yr Proposed NO Clogging Factor 2/29/2008

RS = 1850 BR Vista Sorrento Parkway Bridge

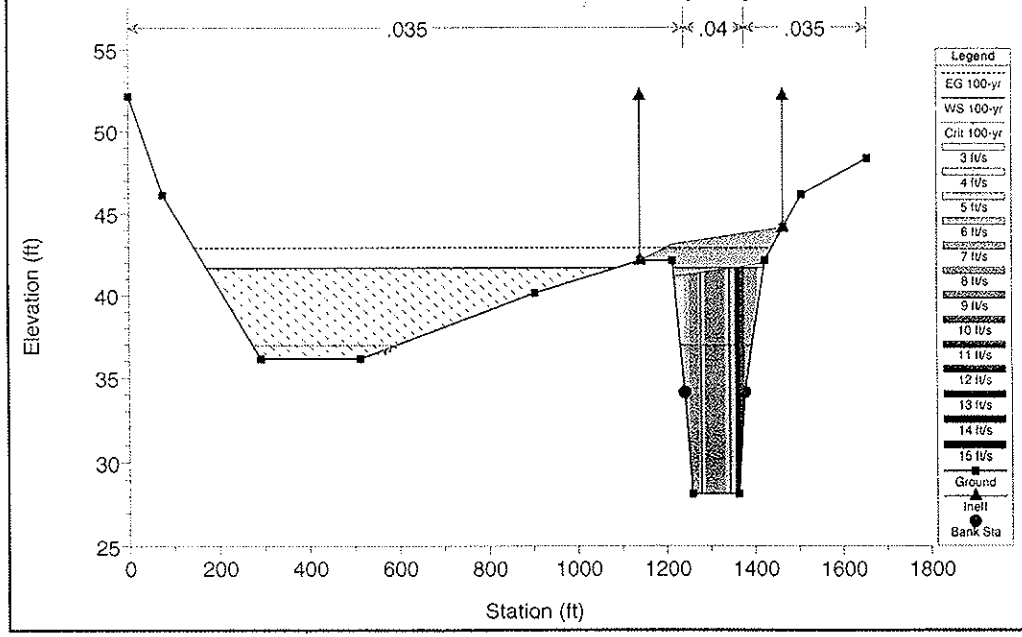

100-yr Proposed NO Clogging Factor 2/29/2008

RS = 1850 BR Vista Sorrento Parkway Bridge

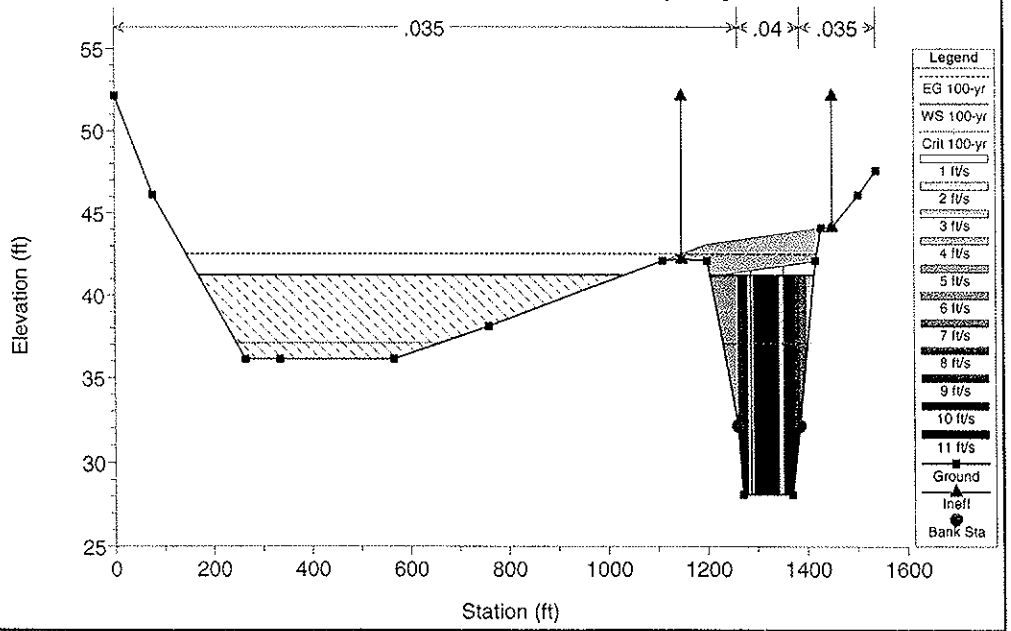

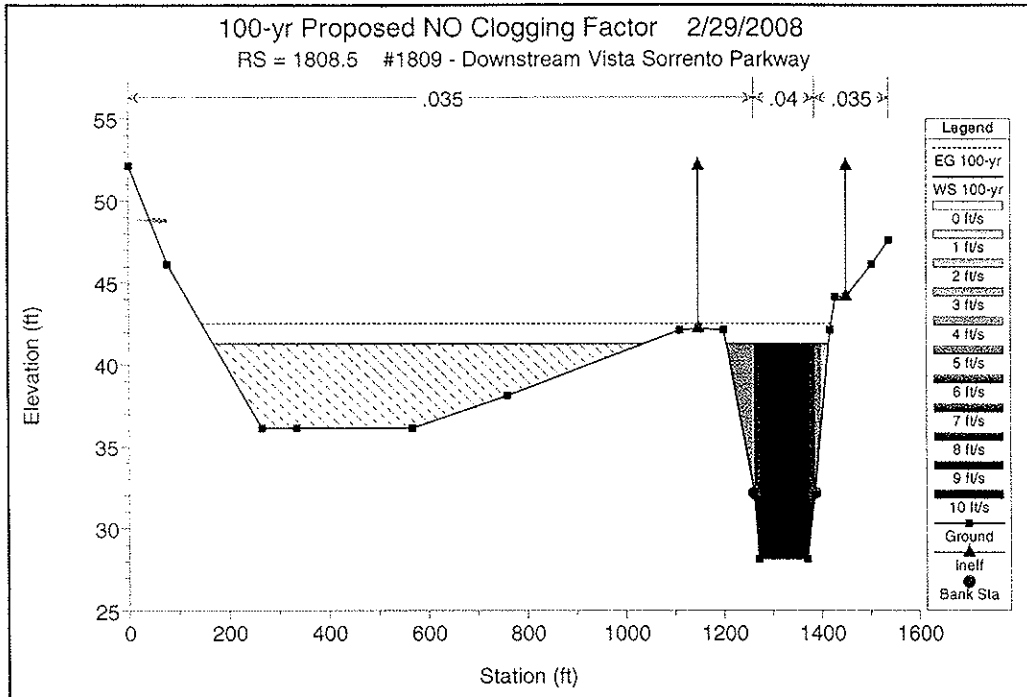
100-yr Proposed NO Clogging Factor 2/29/2008
RS = 1808.5 #1809 - Downstream Vista Sorrento Parkway
.035
.04
.035
Elevation (ft)
Station (ft)
Legend
EG 100-yr
WS 100-yr
0 ft/s
1 ft/s
2 ft/s
3 ft/s
4 ft/s
5 ft/s
6 ft/s
7 ft/s
8 ft/s
9 ft/s
10 ft/s
Ground
Ineff
Bank Sta

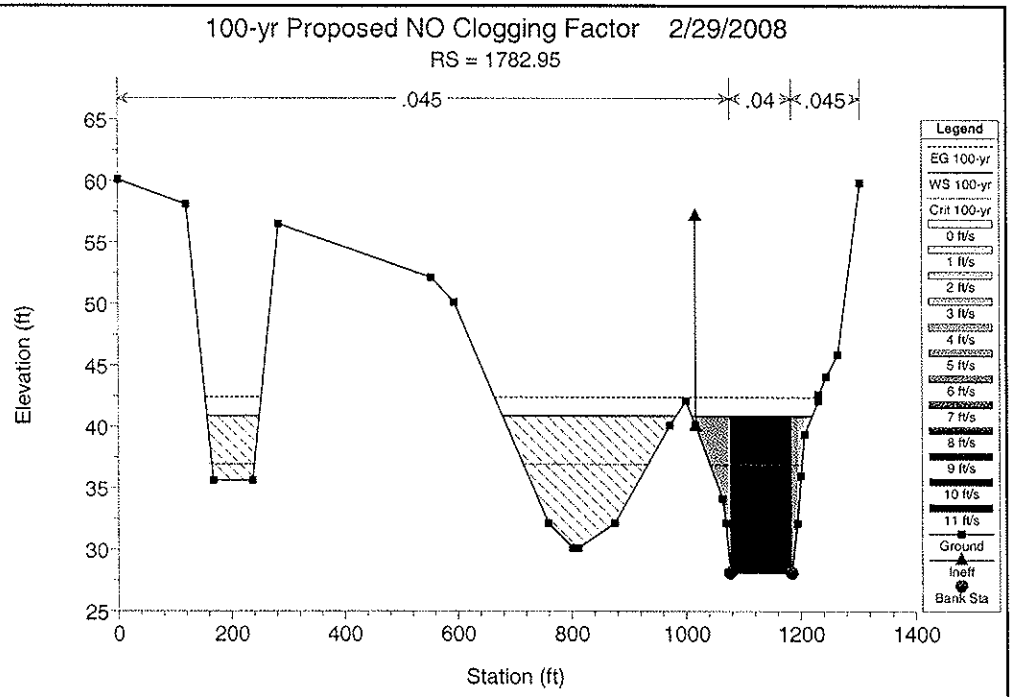
100-yr Proposed NO Clogging Factor 2/29/2008
RS = 1782.95
.045
.04
.045
Elevation (ft)
Station (ft)
Legend
EG 100-yr
WS 100-yr
Crit 100-yr
0 ft/s
1 ft/s
2 ft/s
3 ft/s
4 ft/s
5 ft/s
6 ft/s
7 ft/s
8 ft/s
9 ft/s
10 ft/s
11 ft/s
Ground
Ineff
Bank Sta

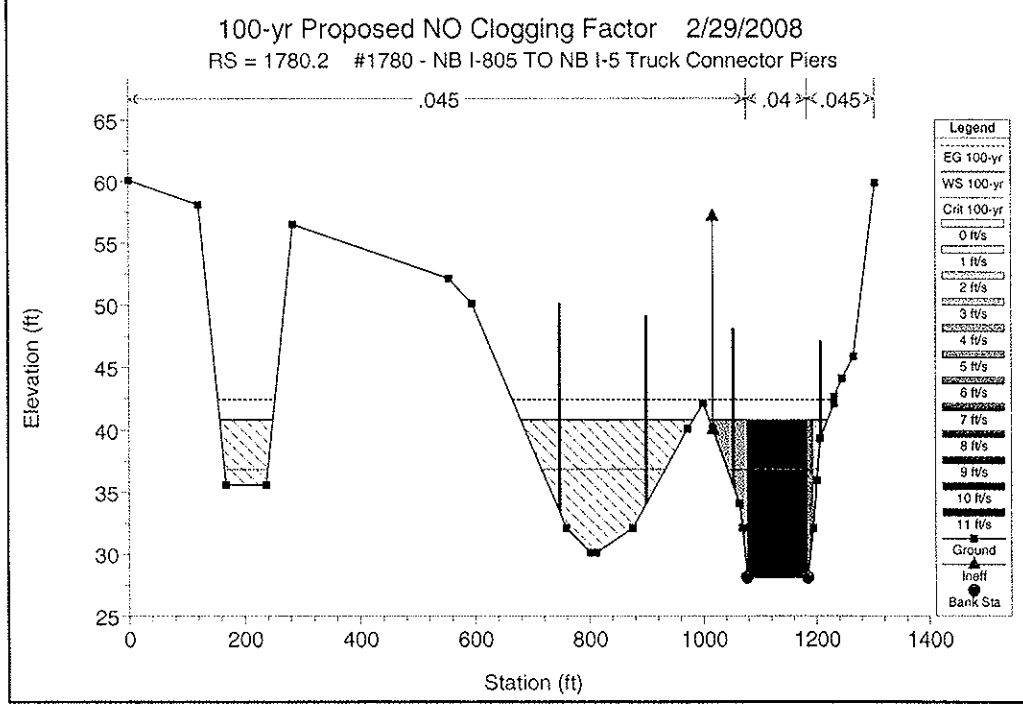
100-yr Proposed NO Clogging Factor 2/29/2008
RS = 1780.2 #1780 - NB I-805 TO NB I-5 Truck Connector Piers
.045
.04
.045
Elevation (ft)
Station (ft)
Legend
EG 100-yr
WS 100-yr
Crit 100-yr
0 ft/s
1 ft/s
2 ft/s
3 ft/s
4 ft/s
5 ft/s
6 ft/s
7 ft/s
8 ft/s
9 ft/s
10 ft/s
11 ft/s
Ground
Ineff
Bank Sta

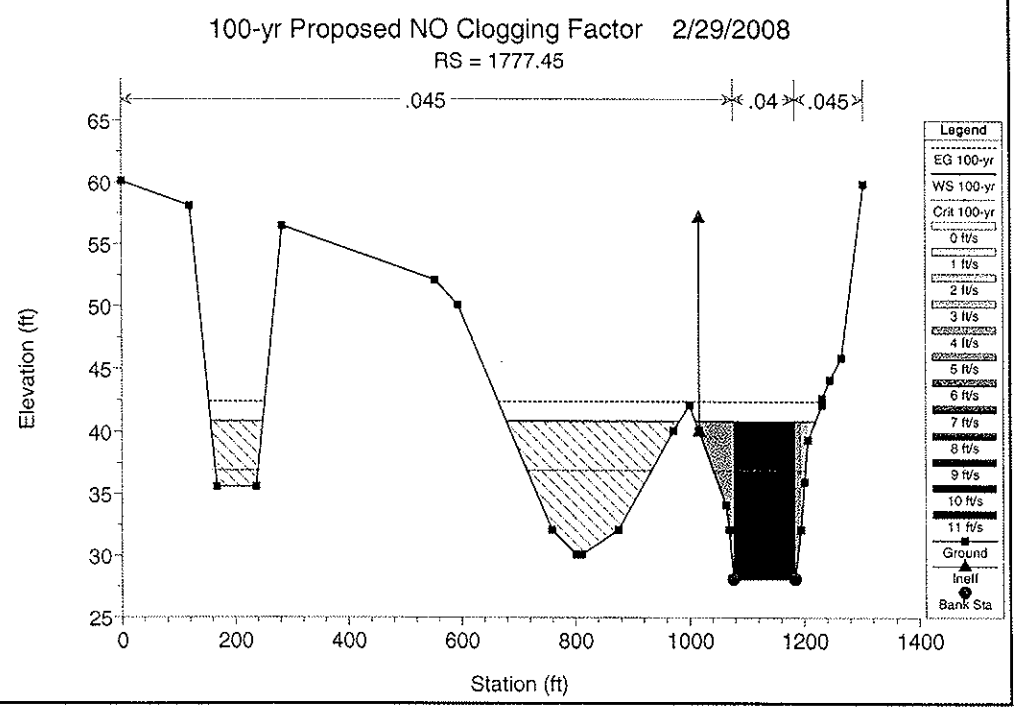
100-yr Proposed NO Clogging Factor 2/29/2008
RS = 1777.45
.045
.04
.045
Elevation (ft)
Station (ft)
Legend
EG 100-yr
WS 100-yr
Crit 100-yr
0 ft/s
1 ft/s
2 ft/s
3 ft/s
4 ft/s
5 ft/s
6 ft/s
7 ft/s
8 ft/s
9 ft/s
10 ft/s
11 ft/s
Ground
Ineff
Bank Sta

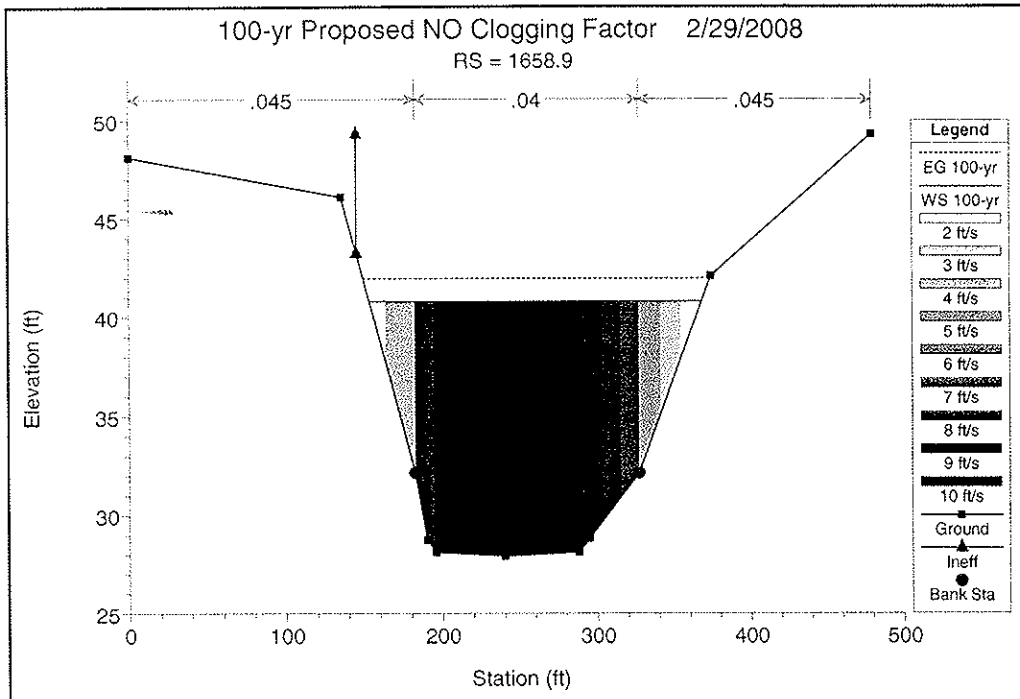
100-yr Proposed NO Clogging Factor 2/29/2008
RS = 1658.9
.045
.04
.045
Elevation (ft)
Station (ft)
Legend
EG 100-yr
WS 100-yr
2 ft/s
3 ft/s
4 ft/s
5 ft/s
6 ft/s
7 ft/s
8 ft/s
9 ft/s
10 ft/s
Ground
Ineff
Bank Sta

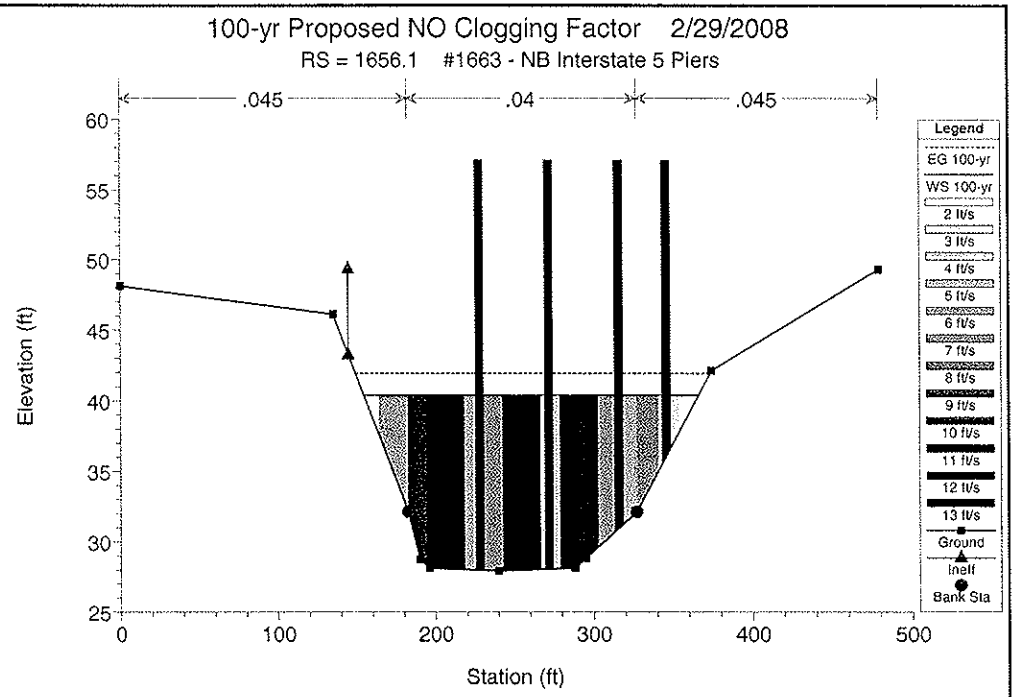
100-yr Proposed NO Clogging Factor 2/29/2008
RS = 1656.1 #1663 - NB Interstate 5 Piers
.045
.04
.045
Elevation (ft)
Station (ft)
Legend
EG 100-yr
WS 100-yr
2 ft/s
3 ft/s
4 ft/s
5 ft/s
6 ft/s
7 ft/s
8 ft/s
9 ft/s
10 ft/s
11 ft/s
12 ft/s
13 ft/s
Ground
Ineff
Bank Sta

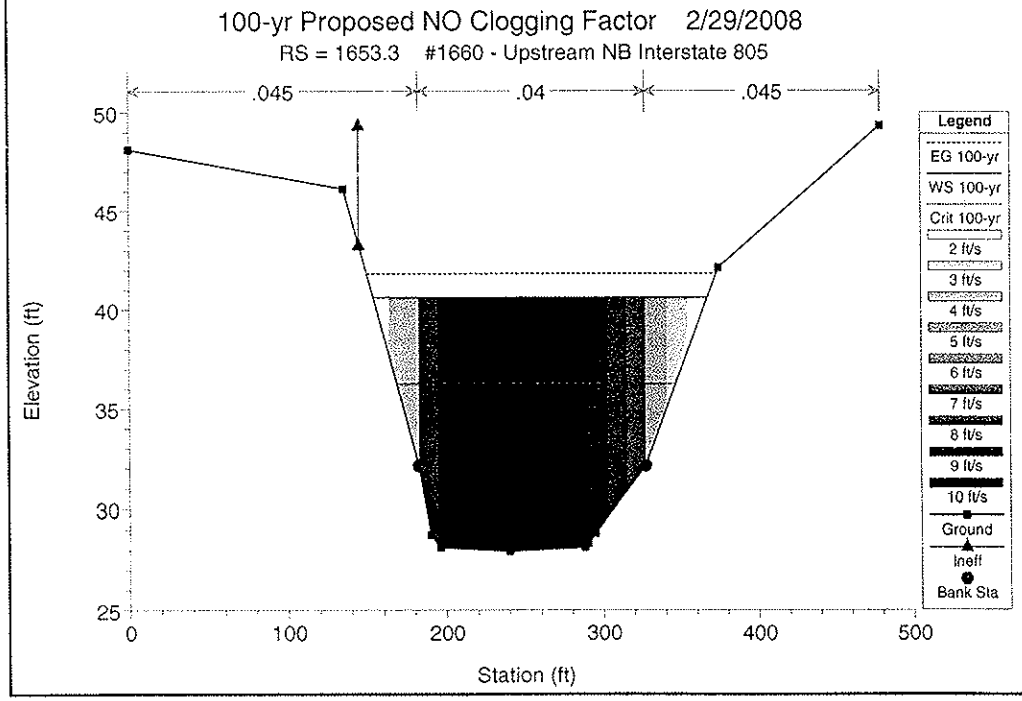
100-yr Proposed NO Clogging Factor 2/29/2008
RS = 1653.3 #1660 - Upstream NB Interstate 805
.045
.04
.045
Elevation (ft)
Station (ft)
Legend
EG 100-yr
WS 100-yr
Crit 100-yr
2 ft/s
3 ft/s
4 ft/s
5 ft/s
6 ft/s
7 ft/s
8 ft/s
9 ft/s
10 ft/s
Ground
Ineff
Bank Sta

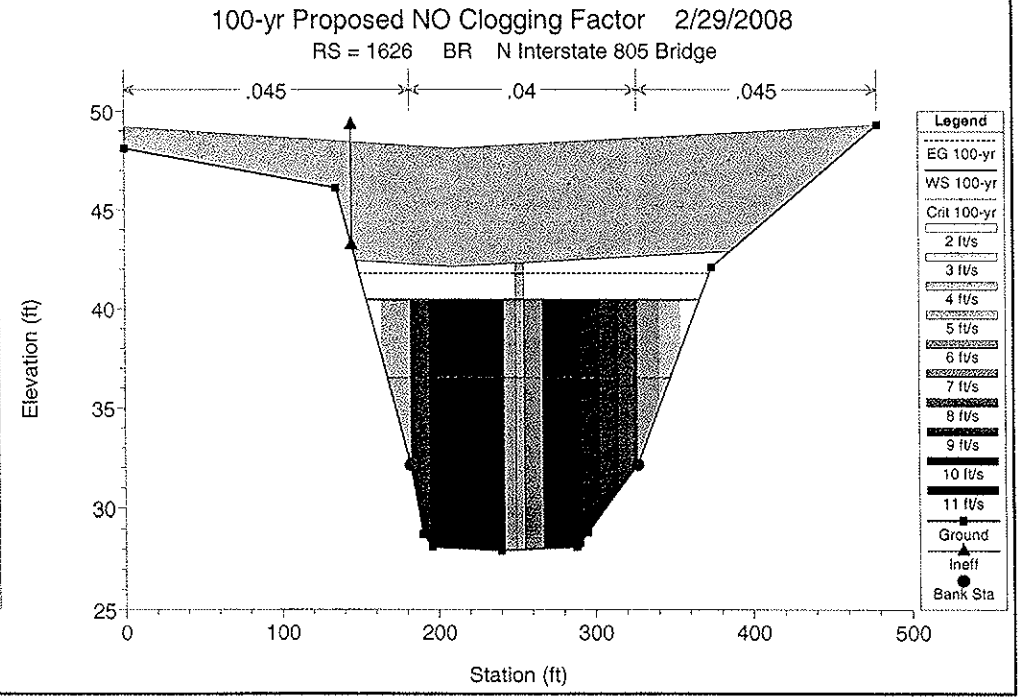
100-yr Proposed NO Clogging Factor 2/29/2008
RS = 1626 BR N Interstate 805 Bridge
.045
.04
.045
Elevation (ft)
Station (ft)
Legend
EG 100-yr
WS 100-yr
Crit 100-yr
2 ft/s
3 ft/s
4 ft/s
5 ft/s
6 ft/s
7 ft/s
8 ft/s
9 ft/s
10 ft/s
11 ft/s
Ground
Ineff
Bank Sta

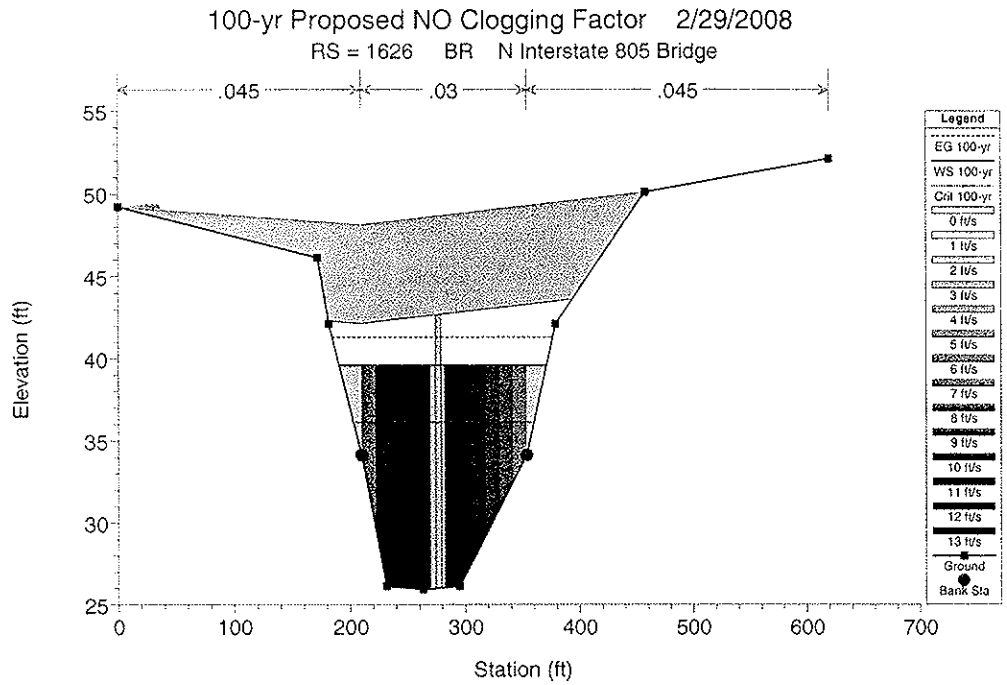
100-yr Proposed NO Clogging Factor 2/29/2008
RS = 1626 BR N Interstate 805 Bridge
.045
.03
.045
Elevation (ft)
Station (ft)
Legend
EG 100-yr
WS 100-yr
Crit 100-yr
0 ft/s
1 ft/s
2 ft/s
3 ft/s
4 ft/s
5 ft/s
6 ft/s
7 ft/s
8 ft/s
9 ft/s
10 ft/s
11 ft/s
12 ft/s
13 ft/s
Ground
Bank Sta

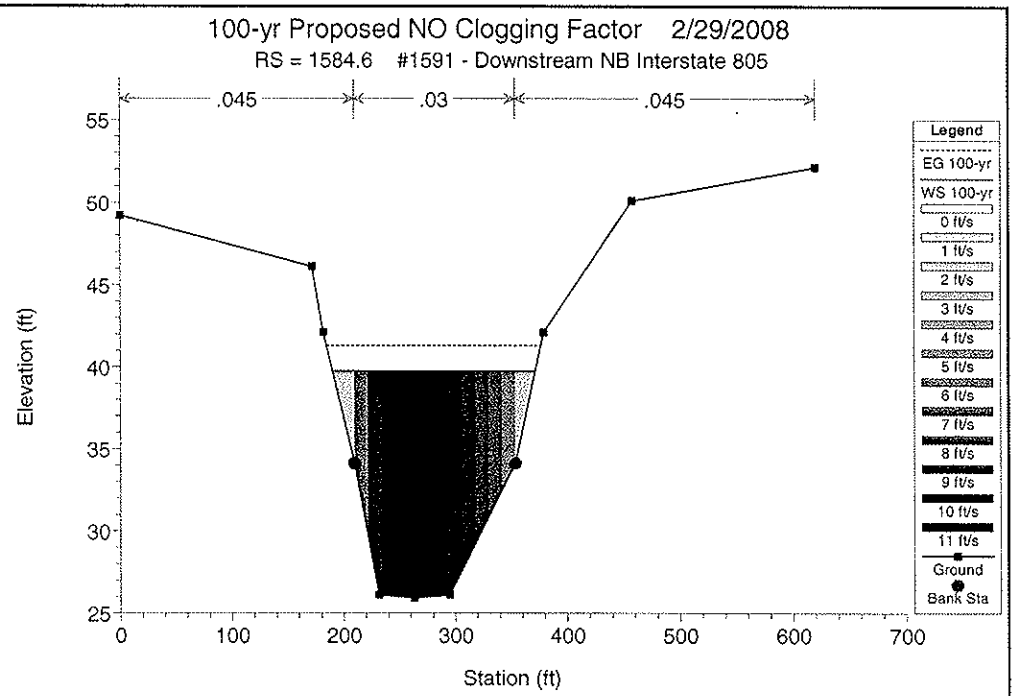
100-yr Proposed NO Clogging Factor 2/29/2008
RS = 1584.6 #1591 - Downstream NB Interstate 805
.045
.03
.045
Elevation (ft)
Station (ft)
Legend
EG 100-yr
WS 100-yr
0 ft/s
1 ft/s
2 ft/s
3 ft/s
4 ft/s
5 ft/s
6 ft/s
7 ft/s
8 ft/s
9 ft/s
10 ft/s
11 ft/s
Ground
Bank Sta

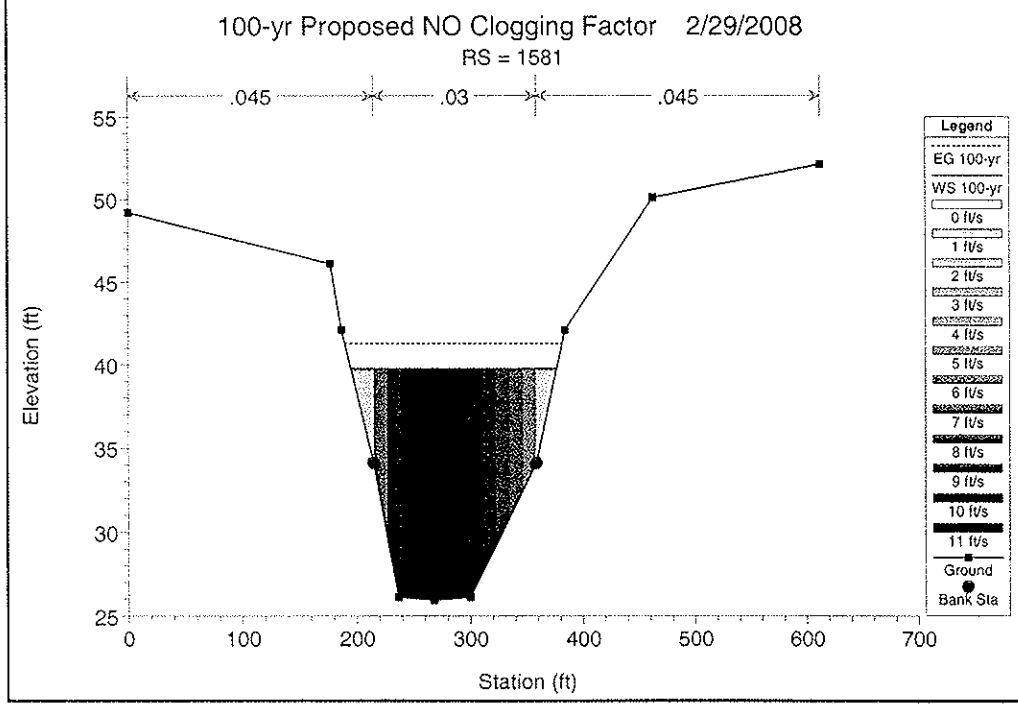
100-yr Proposed NO Clogging Factor 2/29/2008
RS = 1581
.045
.03
.045
Elevation (ft)
Station (ft)
Legend
EG 100-yr
WS 100-yr
0 ft/s
1 ft/s
2 ft/s
3 ft/s
4 ft/s
5 ft/s
6 ft/s
7 ft/s
8 ft/s
9 ft/s
10 ft/s
11 ft/s
Ground
Bank Sta

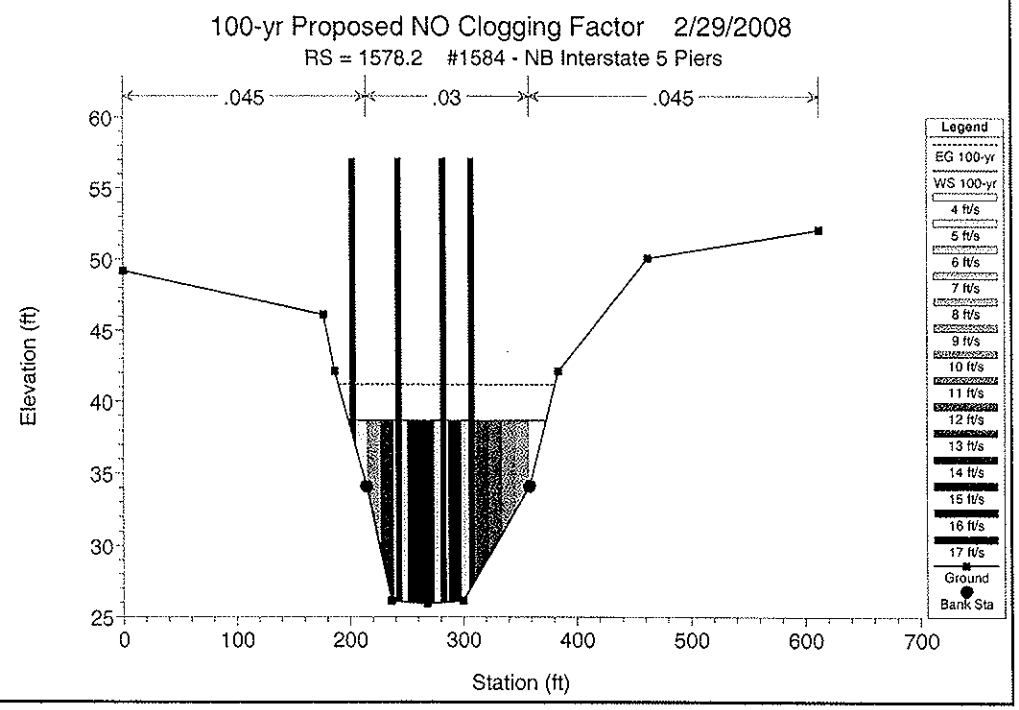
100-yr Proposed NO Clogging Factor 2/29/2008
RS = 1578.2 #1584 - NB Interstate 5 Piers
.045
.03
.045
Elevation (ft)
Station (ft)
Legend
EG 100-yr
WS 100-yr
4 ft/s
5 ft/s
6 ft/s
7 ft/s
8 ft/s
9 ft/s
10 ft/s
11 ft/s
12 ft/s
13 ft/s
14 ft/s
15 ft/s
16 ft/s
17 ft/s
Ground
Bank Sta

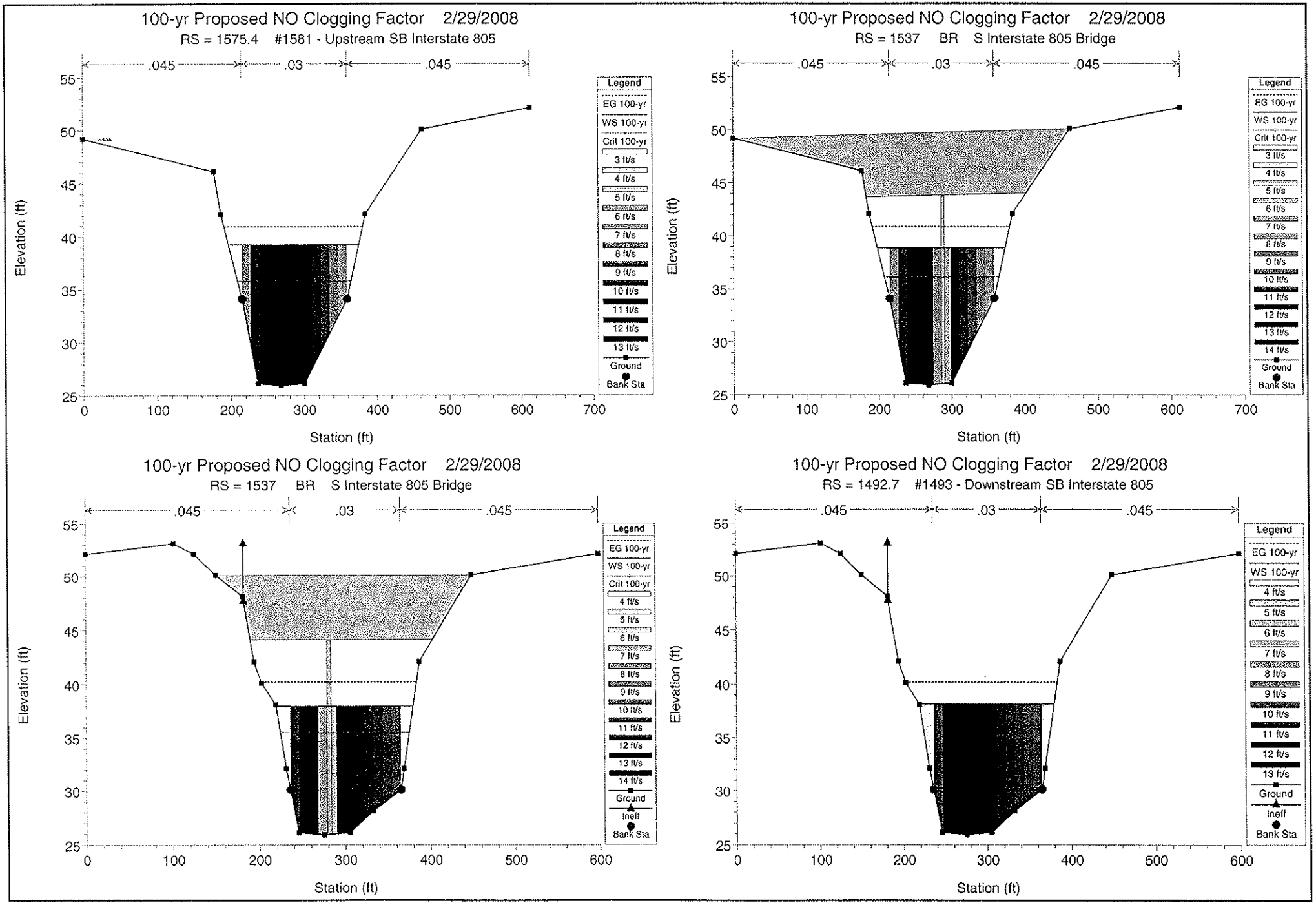
100-yr Proposed NO Clogging Factor 2/29/2008
RS = 1575.4 #1581 - Upstream SB Interstate 805
.045
.03
.045
Elevation (ft)
Station (ft)
Legend
EG 100-yr
WS 100-yr
Crit 100-yr
3 ft/s
4 ft/s
5 ft/s
6 ft/s
7 ft/s
8 ft/s
9 ft/s
10 ft/s
11 ft/s
12 ft/s
13 ft/s
Ground
Bank Sta
100-yr Proposed NO Clogging Factor 2/29/2008
RS = 1537 BR S Interstate 805 Bridge
.045
.03
.045
Elevation (ft)
Station (ft)
Legend
EG 100-yr
WS 100-yr
Crit 100-yr
3 ft/s
4 ft/s
5 ft/s
6 ft/s
7 ft/s
8 ft/s
9 ft/s
10 ft/s
11 ft/s
12 ft/s
13 ft/s
14 ft/s
Ground
Bank Sta
100-yr Proposed NO Clogging Factor 2/29/2008
RS = 1537 BR S Interstate 805 Bridge
.045
.03
.045
Elevation (ft)
Station (ft)
Legend
EG 100-yr
WS 100-yr
Crit 100-yr
4 ft/s
5 ft/s
6 ft/s
7 ft/s
8 ft/s
9 ft/s
10 ft/s
11 ft/s
12 ft/s
13 ft/s
14 ft/s
Ground
Ineff
Bank Sta
100-yr Proposed NO Clogging Factor 2/29/2008
RS = 1492.7 #1493 - Downstream SB Interstate 805
.045
.03
.045
Elevation (ft)
Station (ft)
Legend
EG 100-yr
WS 100-yr
4 ft/s
5 ft/s
6 ft/s
7 ft/s
8 ft/s
9 ft/s
10 ft/s
11 ft/s
12 ft/s
13 ft/s
Ground
Ineff
Bank Sta

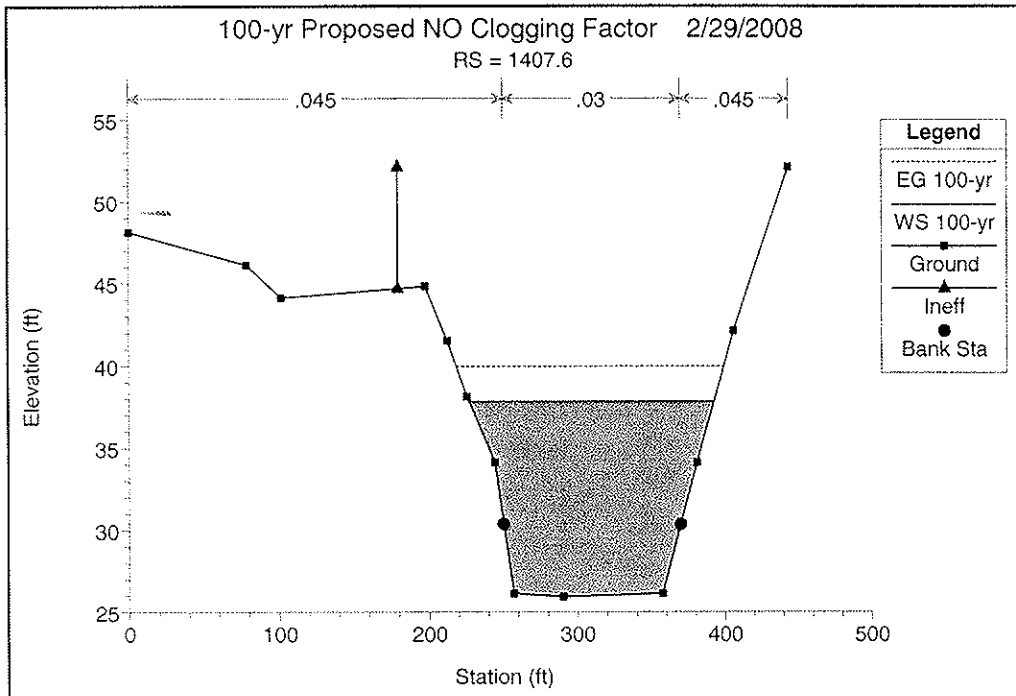
100-yr Proposed NO Clogging Factor 2/29/2008
RS = 1407.6
.045
.03
.045
Legend
EG 100-yr
WS 100-yr
Ground
Ineff
Bank Sta
Elevation (ft)
Station (ft)

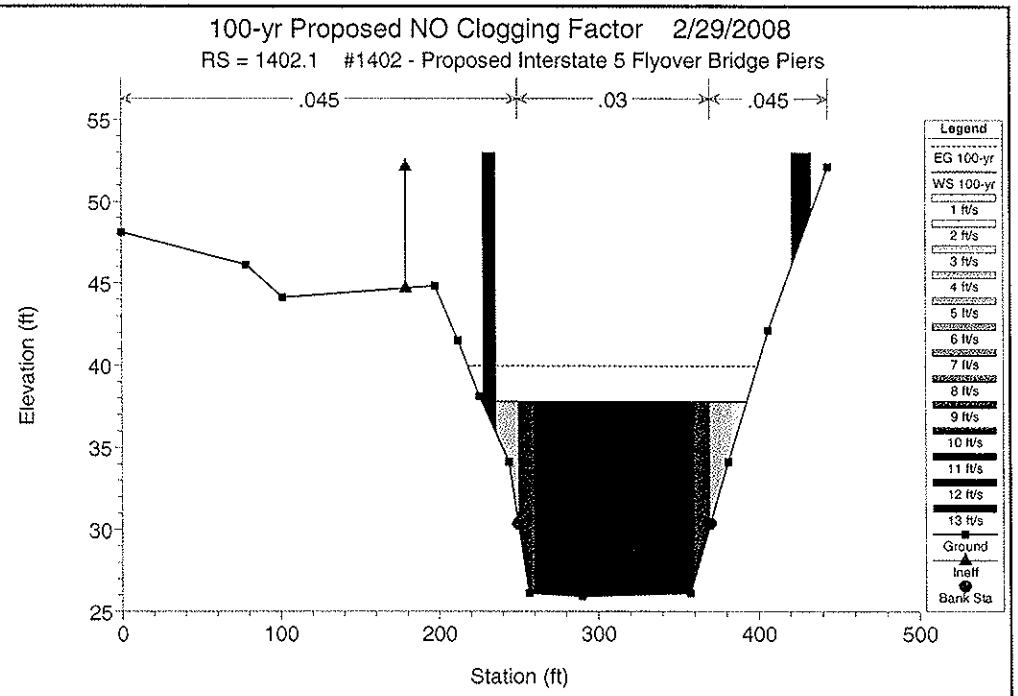
100-yr Proposed NO Clogging Factor 2/29/2008
RS = 1402.1 #1402 - Proposed Interstate 5 Flyover Bridge Piers
.045
.03
.045
Legend
EG 100-yr
WS 100-yr
1 ft/s
2 ft/s
3 ft/s
4 ft/s
5 ft/s
6 ft/s
7 ft/s
8 ft/s
9 ft/s
10 ft/s
11 ft/s
12 ft/s
13 ft/s
Ground
Ineff
Bank Sta
Elevation (ft)
Station (ft)

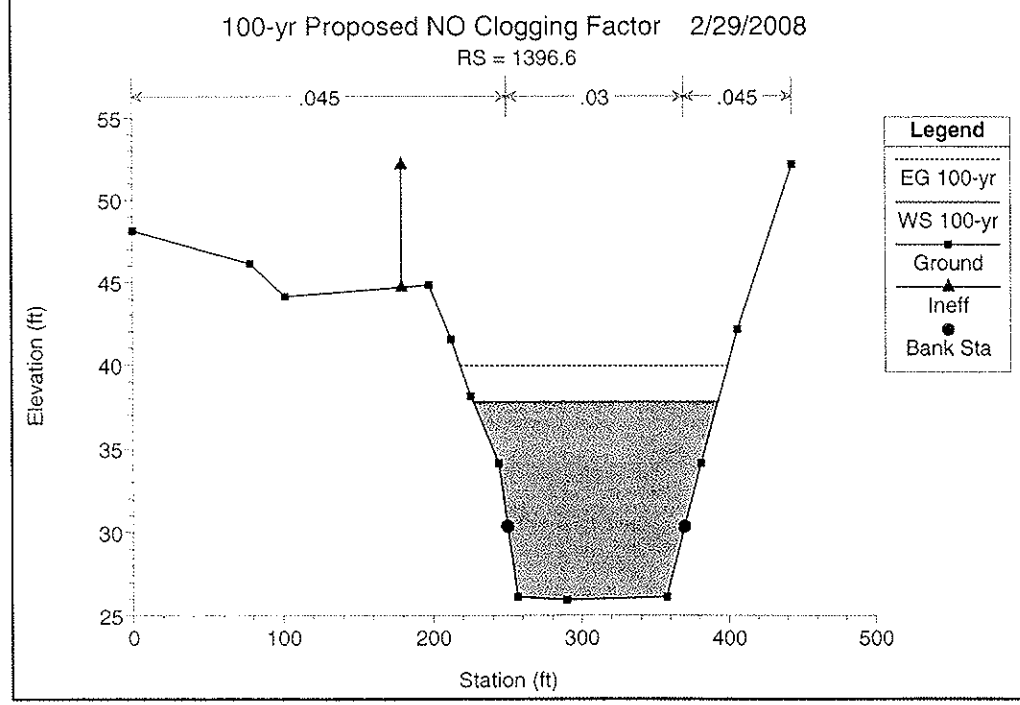
100-yr Proposed NO Clogging Factor 2/29/2008
RS = 1396.6
.045
.03
.045
Legend
EG 100-yr
WS 100-yr
Ground
Ineff
Bank Sta
Elevation (ft)
Station (ft)

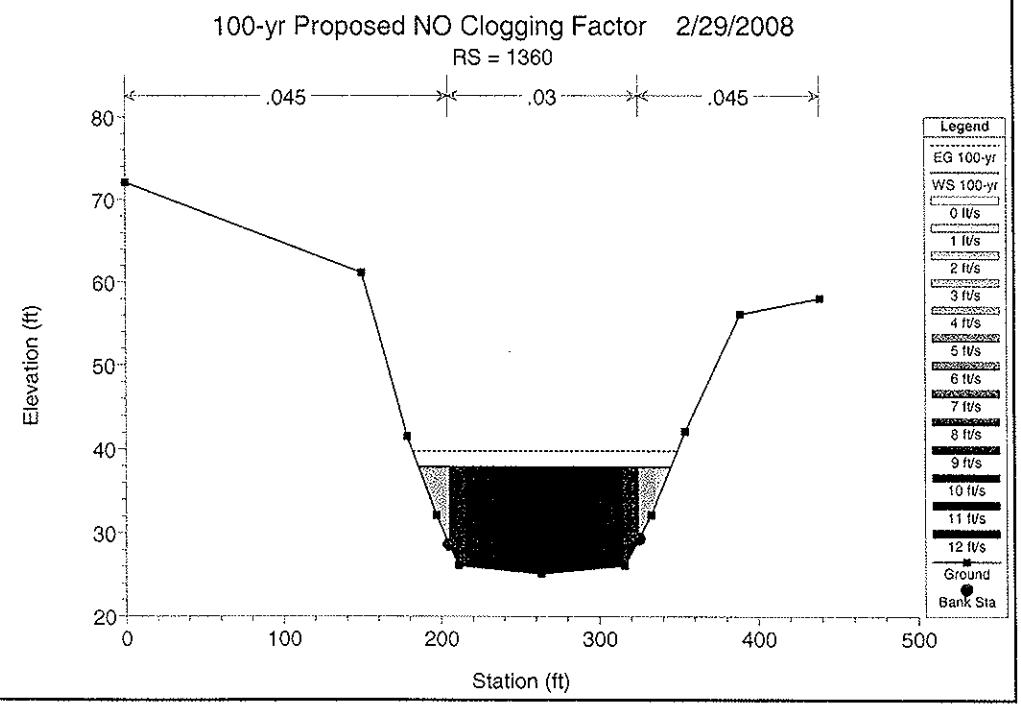
100-yr Proposed NO Clogging Factor 2/29/2008
RS = 1360
.045
.03
.045
Legend
EG 100-yr
WS 100-yr
0 ft/s
1 ft/s
2 ft/s
3 ft/s
4 ft/s
5 ft/s
6 ft/s
7 ft/s
8 ft/s
9 ft/s
10 ft/s
11 ft/s
12 ft/s
Ground
Bank Sta
Elevation (ft)
Station (ft)

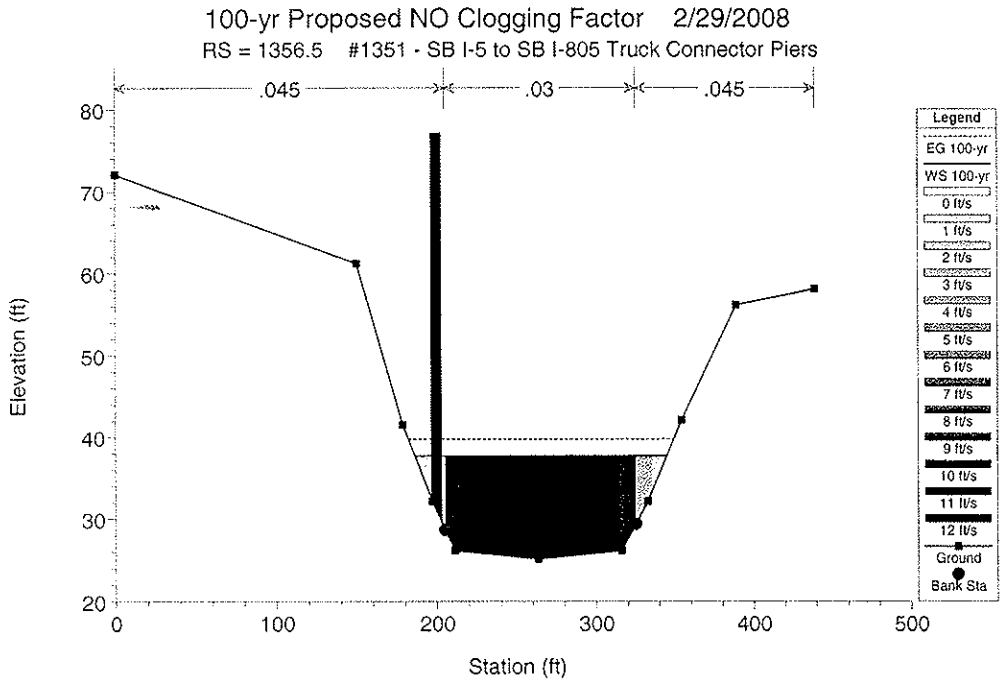
100-yr Proposed NO Clogging Factor 2/29/2008
RS = 1356.5 #1351 - SB I-5 to SB I-805 Truck Connector Piers
.045
.03
.045
Elevation (ft)
Station (ft)
Legend
EG 100-yr
WS 100-yr
0 ft/s
1 ft/s
2 ft/s
3 ft/s
4 ft/s
5 ft/s
6 ft/s
7 ft/s
8 ft/s
9 ft/s
10 ft/s
11 ft/s
12 ft/s
Ground
Bank Sta

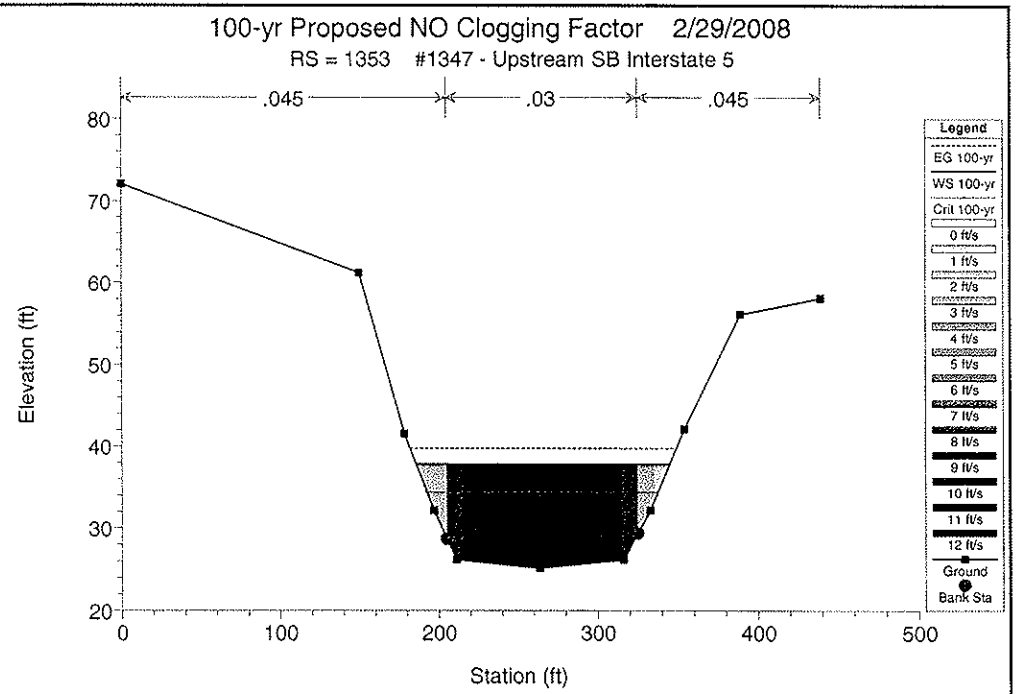
100-yr Proposed NO Clogging Factor 2/29/2008
RS = 1353 #1347 - Upstream SB Interstate 5
.045
.03
.045
Elevation (ft)
Station (ft)
Legend
EG 100-yr
WS 100-yr
Crit 100-yr
0 ft/s
1 ft/s
2 ft/s
3 ft/s
4 ft/s
5 ft/s
6 ft/s
7 ft/s
8 ft/s
9 ft/s
10 ft/s
11 ft/s
12 ft/s
Ground
Bank Sta

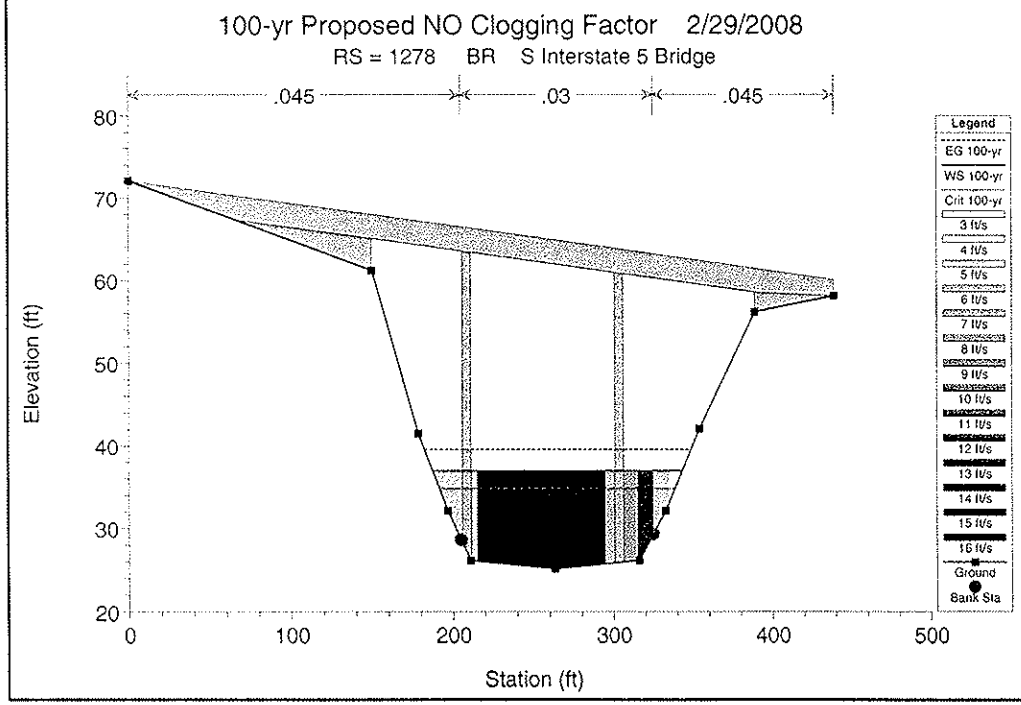
100-yr Proposed NO Clogging Factor 2/29/2008
RS = 1278 BR S Interstate 5 Bridge
.045
.03
.045
Elevation (ft)
Station (ft)
Legend
EG 100-yr
WS 100-yr
Crit 100-yr
3 ft/s
4 ft/s
5 ft/s
6 ft/s
7 ft/s
8 ft/s
9 ft/s
10 ft/s
11 ft/s
12 ft/s
13 ft/s
14 ft/s
15 ft/s
16 ft/s
Ground
Bank Sta

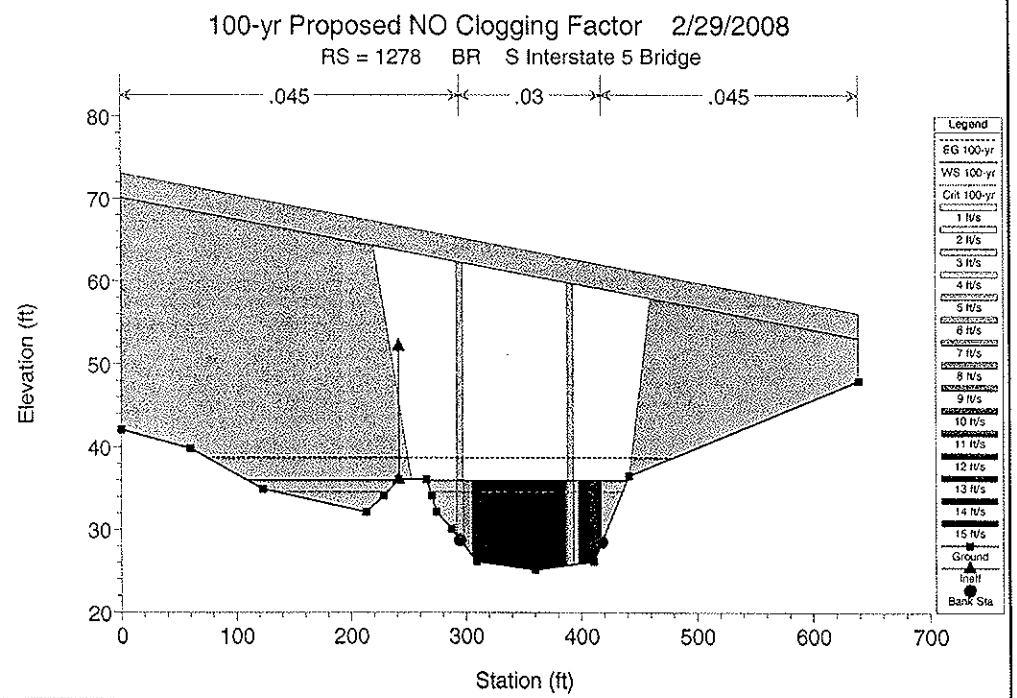
100-yr Proposed NO Clogging Factor 2/29/2008
RS = 1278 BR S Interstate 5 Bridge
.045
.03
.045
Elevation (ft)
Station (ft)
Legend
EG 100-yr
WS 100-yr
Crit 100-yr
1 ft/s
2 ft/s
3 ft/s
4 ft/s
5 ft/s
6 ft/s
7 ft/s
8 ft/s
9 ft/s
10 ft/s
11 ft/s
12 ft/s
13 ft/s
14 ft/s
15 ft/s
Ground
Ineff
Bank Sta

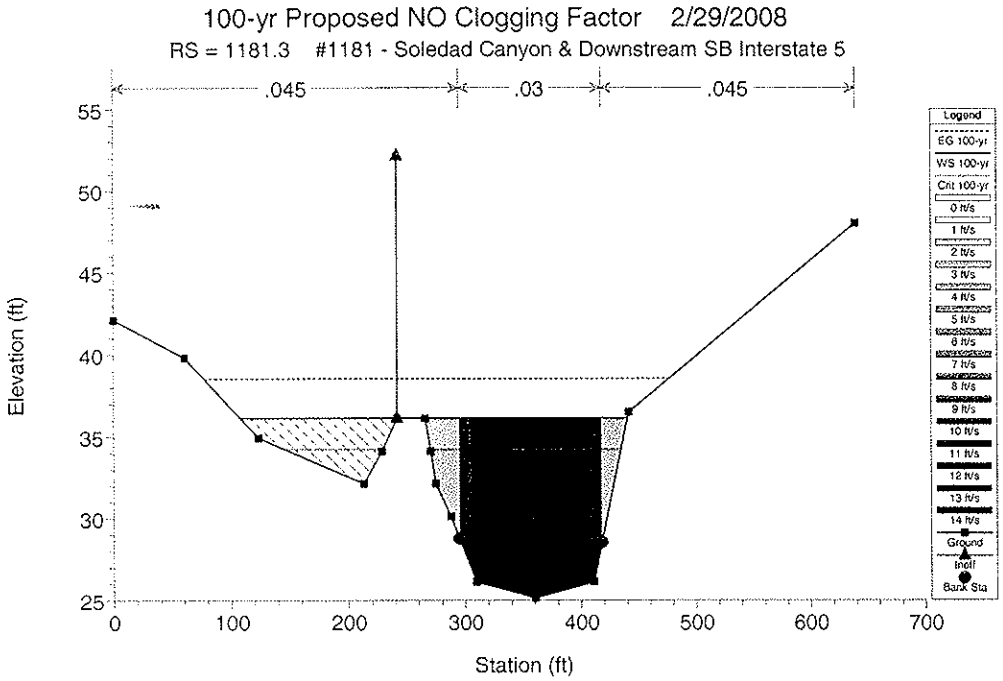
100-yr Proposed NO Clogging Factor 2/29/2008
RS = 1181.3 #1181 - Soledad Canyon & Downstream SB Interstate 5
.045
.03
.045
Elevation (ft)
Station (ft)
Legend
EG 100-yr
WS 100-yr
Crit 100-yr
0 ft/s
1 ft/s
2 ft/s
3 ft/s
4 ft/s
5 ft/s
6 ft/s
7 ft/s
8 ft/s
9 ft/s
10 ft/s
11 ft/s
12 ft/s
13 ft/s
14 ft/s
Ground
Ineff
Bank Sta

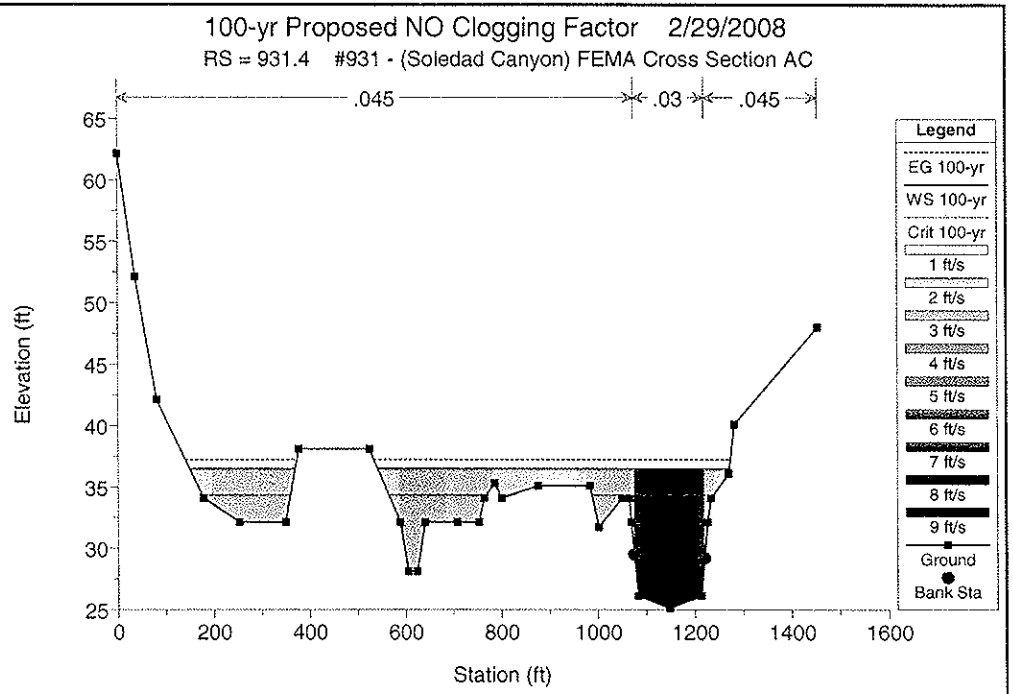
100-yr Proposed NO Clogging Factor 2/29/2008
RS = 931.4 #931 - (Soledad Canyon) FEMA Cross Section AC
.045
.03
.045
Elevation (ft)
Station (ft)
Legend
EG 100-yr
WS 100-yr
Crit 100-yr
1 ft/s
2 ft/s
3 ft/s
4 ft/s
5 ft/s
6 ft/s
7 ft/s
8 ft/s
9 ft/s
Ground
Bank Sta

LP_Prop.rep

HEC-RAS Version 3.1.3 May 2005
U.S. Army Corp of Engineers
Hydrologic Engineering Center
609 Second Street
Davis, California

```
X     X  XXXXXX    XXXX        XXXX       XX      XXXX
X     X  X        X    X       X   X     X  X    X
X     X  X        X            X   X    X    X   X
XXXXXXX  XXXX     X       XXX  XXXX     XXXXXX    XXXX
X     X  X        X            X  X     X    X       X
X     X  X        X    X       X   X    X    X       X
X     X  XXXXXX    XXXX        X    X   X    X   XXXXX
```

PROJECT DATA
Project Title: LosPenasquitosCreek_Proposed
Project File : LP_Prop.prj
Run Date and Time: 2/29/2008 2:12:17 PM

Project in English units

Project Description:
LOS PENASQUITOS CREEK - Proposed - (CITY OF SAN DIEGO, CA)
DUPLICATE
EFFECTIVE ANALYSIS (FLOODPLAIN)
FEBRUARY 25, 2003 FILENAME:
LPCDE.HC2
LOS PENASQUITOS CREEK CITY OF SAN DIEGO, CA

DUPLICATE EFFECTIVE ANALYSIS (FLOODPLAIN)
FEBRUARY 25, 2003
FILENAME: LPCDE.HC2
LOS PENASQUITOS CREEK (CITY OF SAN DIEGO, CA)

DUPLICATE EFFECTIVE ANALYSIS (FLOODPLAIN)
FEBRUARY 25, 2003
FILENAME: LPCDE.HC2

PLAN DATA

Plan Title: 100-yr Proposed NO Clogging Factor
Plan File : p:\1683_T064_I5_Floodplain\420_Env_ Stud\Los Penasquitos\HEC-RAS\Final\Proposed\LP_Prop.p06

Geometry Title: Proposed Condition NO Clogging Factor
Geometry File : p:\1683_T064_I5_Floodplain\420_Env_ Stud\Los Penasquitos\HEC-RAS\Final\Proposed\LP_Prop.g06

Flow Title : 100-year w/ Influence from Soledad Cyn
Flow File : p:\1683_T064_I5_Floodplain\420_Env_ Stud\Los Penasquitos\HEC-RAS\Final\Proposed\LP_Prop.f05

Plan Summary Information:
Number of: Cross Sections = 30 Multiple Openings = 0

Culverts = 0 Inline Structures = 0
Bridges = 4 Lateral Structures = 0

Computational Information
Water surface calculation tolerance = 0.01
Critical depth calculation tolerance = 0.01
Maximum number of iterations = 20
Maximum difference tolerance = 0.3
Flow tolerance factor = 0.001

Computation Options
Critical depth computed only where necessary
Conveyance Calculation Method: At breaks in n values only
Friction Slope Method: Average Conveyance
Computational Flow Regime: Subcritical Flow

Encroachment Data
Equal Conveyance = True
Left Offset = 0
Right Offset = 0

River = RIVER-1 Reach = Reach-1

RS	Profile	Method	Value1	Value2
22	PF 2	1	350	900
21	PF 2	1	250	840
20	PF 2	1	400	1000
19	PF 2	1	600	1200
18	PF 2	1	610	1140
17	PF 2	1	600	1100
16	PF 2	1	500	1000
11.5210	PF 2	1	721.98	
11.5200	PF 2	1	1002.31	
11.5190	PF 2	1	1061.76	
11.5180	PF 2	1	1106.23	
11.5170	PF 2	1	1128.96	1329.96
11.5160	PF 2	1	1354.74	1834.74
11.5150	PF 2	1	1460.06	1820
11.514	PF 2	1	1441.26	1729
10.513	PF 2	1	1286.05	1492.79
10.512	PF 2	1	1303.8	1490.19
9.4	PF 2	1	330	

FLOW DATA

Flow Title: 100-year w/ Influence from Soledad Cyn
Flow File : p:\1683_T064_I5_Floodplain\420_Env_ Stud\Los Penasquitos\HEC-RAS\Final\Proposed\LP_Prop.f05

Flow Data (cfs)

River	Reach	RS	100-yr
Los Penasquitos	Lower	4337.4	16800
Los Penasquitos	Lower	931.4	19000

Boundary Conditions

River	Reach	Profile	Upstream	Downstream

Los Penasquitos Lower 100-yr
Known WS = 36.53

GEOMETRY DATA

Geometry Title: Proposed Condition NO Clogging Factor
Geometry File : p:\1683_T064_I5_Floodplain\420_Env_ Stud\Los Penasquitos\HEC-RAS\Final\Proposed\LP_Prop.g06

CROSS SECTION

RIVER: Los Penasquitos
REACH: Lower RS: 4337.4

INPUT
Description: #4337 - FEMA Cross Section H
Station Elevation Data num= 21

Sta	Elev	Sta	Elev	Sta	Elev	Sta	Elev	Sta	Elev
0	62.13	16	52.13	32	46.13	114	46.13	207	48.13
249	46.13	255.3	43.53	329.6	43.53	337.4	44.13	721.6	44.13
726.61	42.239	732.2	40.13	758.3	34.13	805	32.23	851.5	34.13
916	36.13	993.5	38.13	1052.5	42.13	1054.56	42.462	1064.9	44.13
1144	52.13								

Manning's n Values num= 3

Sta	n Val	Sta	n Val	Sta	n Val
0	.035	726.61	.06	1054.56	.05

Bank Sta: Left Right Lengths: Left Channel Right Coeff Contr. Expan.
726.61 1054.56 490.4 418.9 390.5 .1 .3
Ineffective Flow num= 1

Sta L	Sta R	Elev	Permanent
0	679		T

CROSS SECTION OUTPUT Profile #100-yr

E.G. Elev (ft)	47.93	Element	Left OB	Channel
Right OB				
Vel Head (ft)	0.28	Wt. n-Val.	0.035	0.060
0.050				
W.S. Elev (ft)	47.65	Reach Len. (ft)	490.40	418.90
390.50				
Crit W.S. (ft)		Flow Area (sq ft)	172.37	3737.18
106.32				
E.G. Slope (ft/ft)	0.001175	Area (sq ft)	1934.75	3737.18
106.32				
Q Total (cfs)	16800.00	Flow (cfs)	588.58	16020.62
190.80				
Top Width (ft)	1039.43	Top Width (ft)	666.33	327.95
45.15				
Vel Total (ft/s)	4.18	Avg. Vel. (ft/s)	3.41	4.29
1.79				
Max Chl Dpth (ft)	15.42	Hydr. Depth (ft)	3.62	11.40
2.35				
Conv. Total (cfs)	490126.4	Conv. (cfs)	17171.2	467388.6

5566.5				
Length Wtd. (ft)	424.60	Wetted Per. (ft)	47.95	329.31
45.46				
Min Ch El (ft)	32.23	Shear (lb/sq ft)	0.26	0.83
0.17				
Alpha	1.03	Stream Power (lb/ft s)	0.90	3.57
0.31				
Frctn Loss (ft)	0.85	Cum Volume (acre-ft)	117.84	168.51
71.83				
C & E Loss (ft)	0.05	Cum SA (acres)	46.95	13.84
8.28				

Warning: Divided flow computed for this cross-section.
Warning: The velocity head has changed by more than 0.5 ft (0.15 m). This may indicate the need for
additional cross sections.
Warning: The conveyance ratio (upstream conveyance divided by downstream conveyance) is less than
0.7 or greater than 1.4. This may indicate the need for additional cross sections.

Profile #100-yr

Percent Conv	Pos Hydr Depth(ft)	Velocity (ft/s)	Left Sta (ft)	Right Sta (ft)	Flow (cfs)	Area (sq ft)	W.P. (ft)
1	LOB		0.00	67.90	0.00	57.69	40.23
0.00	1.44	0.00					
2	LOB		67.90	135.80	0.00	98.16	67.91
0.00	1.45	0.00					
3	LOB		135.80	203.70	0.00	25.74	48.93
0.00	0.53	0.00					
4	LOB		203.70	271.60	0.00	109.23	55.09
0.00	2.00	0.00					
5	LOB		271.60	339.50	0.00	276.21	67.92
0.00	4.07	0.00					
6	LOB		339.50	407.40	0.00	239.07	67.90
0.00	3.52	0.00					
7	LOB		407.40	475.30	0.00	239.07	67.90
0.00	3.52	0.00					
8	LOB		475.30	543.20	0.00	239.07	67.90
0.00	3.52	0.00					
9	LOB		543.20	611.10	0.00	239.07	67.90
0.00	3.52	0.00					
10	LOB		611.10	679.00	0.00	239.07	67.90
0.00	3.52	0.00					
11	LOB		679.00	726.61	588.58	172.37	47.95
3.50	3.62	3.41					
12	Chan		726.61	753.94	904.12	253.97	28.28
5.38	9.29	3.56					
13	Chan		753.94	781.27	1789.41	378.06	27.46
10.65	13.83	4.73					
14	Chan		781.27	808.60	2051.55	409.72	27.35
12.21	14.99	5.01					
15	Chan		808.60	835.93	1988.88	402.17	27.35
11.84	14.72	4.95					
16	Chan		835.93	863.26	1749.26	372.33	27.35
10.41	13.62	4.70					
17	Chan		863.26	890.59	1562.96	347.97	27.34

9.30	12.73	4.49					
18	Chan		890.59	917.91	1393.54	324.82	27.34
8.29	11.89	4.29					
19	Chan		917.91	945.24	1247.08	303.87	27.34
7.42	11.12	4.10					
20	Chan		945.24	972.57	1118.05	284.60	27.34
6.66	10.41	3.93					
21	Chan		972.57	999.90	989.05	264.46	27.35
5.89	9.68	3.74					
22	Chan		999.90	1027.23	743.73	223.02	27.39
4.43	8.16	3.33					
23	Chan		1027.23	1054.56	483.00	172.19	27.41
2.87	6.30	2.81					
24	ROB		1054.56	1062.69	85.04	36.86	8.24
0.51	4.53	2.31					
25	ROB		1062.69	1070.82	51.60	27.25	8.19
0.31	3.35	1.89					
26	ROB		1070.82	1078.95	31.93	20.42	8.17
0.19	2.51	1.56					
27	ROB		1078.95	1087.08	16.48	13.73	8.17
0.10	1.69	1.20					
28	ROB		1087.08	1095.22	5.42	7.04	8.17
0.03	0.87	0.77					
29	ROB		1095.22	1103.35	0.32	1.02	4.52
0.00	0.23	0.32					

Warning: Divided flow computed for this cross-section.
Warning: The velocity head has changed by more than 0.5 ft (0.15 m). This may indicate the need for
additional cross sections.
Warning: The conveyance ratio (upstream conveyance divided by downstream conveyance) is less than
0.7 or greater than 1.4. This may indicate the need for additional cross sections.

CROSS SECTION

RIVER: Los Penasquitos
REACH: Lower RS: 3918.5

INPUT
Description: #3919
Station Elevation Data num= 19

Sta	Elev	Sta	Elev	Sta	Elev	Sta	Elev	Sta	Elev
0	62.13	19.2	52.13	23.7	50.13	295	48.13	335	46.13
538	46.13	895.3	44.13	953.4	42.13	983.88	40.997	1007.2	40.13
1033	34.13	1063.7	32.13	1094	31.33	1124.3	32.13	1157.57	41.026
1161.7	42.13	1186.2	52.13	1221.4	62.13	1262.1	72.13		

Manning's n Values num= 3

Sta	n Val	Sta	n Val	Sta	n Val
0	.035	983.88	.065	1157.57	.065

Bank Sta: Left	Right	Lengths: Left	Channel	Right	Coeff Contr.	Expan.
983.88	1157.57	254.1	279.2	299.7	.1	.3

Ineffective Flow num= 1

Sta L	Sta R	Elev	Permanent
0	876		T

CROSS SECTION OUTPUT Profile #100-yr

E.G. Elev (ft)	47.03	Element	Left OB	Channel
Right OB				
Vel Head (ft)	0.80	Wt. n-Val.	0.035	0.065
0.065				
W.S. Elev (ft)	46.23	Reach Len. (ft)	254.10	279.20
299.70				
Crit W.S. (ft)		Flow Area (sq ft)	361.64	1968.60
39.78				
E.G. Slope (ft/ft)	0.004128	Area (sq ft)	734.59	1968.60
39.78				
Q Total (cfs)	16800.00	Flow (cfs)	2208.65	14480.01
111.34				
Top Width (ft)	838.70	Top Width (ft)	650.84	173.69
14.17				
Vel Total (ft/s)	7.09	Avg. Vel. (ft/s)	6.11	7.36
2.80				
Max Chl Dpth (ft)	14.90	Hydr. Depth (ft)	3.35	11.33
2.81				
Conv. Total (cfs)	261488.6	Conv. (cfs)	34377.1	225378.4
1733.1				
Length Wtd. (ft)	277.11	Wetted Per. (ft)	107.94	175.65
15.12				
Min Ch El (ft)	31.33	Shear (lb/sq ft)	0.86	2.89
0.68				
Alpha	1.03	Stream Power (lb/ft s)	5.27	21.24
1.90				
Frctn Loss (ft)	0.83	Cum Volume (acre-ft)	102.81	141.08
71.18				
C & E Loss (ft)	0.10	Cum SA (acres)	39.54	11.43
8.02				

Profile #100-yr

Percent Conv	Pos Hydr Depth(ft)	Velocity (ft/s)	Left Sta (ft)	Right Sta (ft)	Flow (cfs)	Area (sq ft)	W.P. (ft)
1	LOB		262.80	350.40	0.00	1.61	17.37
0.00	0.09	0.00					
2	LOB		350.40	438.00	0.00	8.60	87.60
0.00	0.10	0.00					
3	LOB		438.00	525.60	0.00	8.60	87.60
0.00	0.10	0.00					
4	LOB		525.60	613.20	0.00	24.43	87.60
0.00	0.28	0.00					
5	LOB		613.20	700.80	0.00	66.95	87.60
0.00	0.76	0.00					
6	LOB		700.80	788.40	0.00	109.91	87.60
0.00	1.25	0.00					
7	LOB		788.40	876.00	0.00	152.86	87.60
0.00	1.74	0.00					
8	LOB		876.00	983.88	2208.65	361.64	107.94
13.15	3.35	6.11					
9	Chan		983.88	998.35	346.42	79.61	14.48
2.06	5.50	4.35					
10	Chan		998.35	1012.83	426.03	90.49	14.63
2.54	6.25	4.71					
11	Chan		1012.83	1027.30	786.74	131.57	14.86

4.68	9.09	5.98					
12	Chan		1027.30	1041.78	1263.94	173.85	14.64
7.52	12.01	7.27					
13	Chan		1041.78	1056.25	1477.85	190.21	14.50
8.80	13.14	7.77					
14	Chan		1056.25	1070.73	1646.76	202.90	14.49
9.80	14.02	8.12					
15	Chan		1070.73	1085.20	1738.15	209.51	14.48
10.35	14.47	8.30					
16	Chan		1085.20	1099.67	1803.38	214.19	14.48
10.73	14.80	8.42					
17	Chan		1099.67	1114.15	1754.70	210.70	14.48
10.44	14.56	8.33					
18	Chan		1114.15	1128.62	1636.72	202.92	14.63
9.74	14.02	8.07					
19	Chan		1128.62	1143.10	1076.45	159.33	14.98
6.41	11.01	6.76					
20	Chan		1143.10	1157.57	522.87	103.31	14.98
3.11	7.14	5.06					
21	ROB		1157.57	1167.07	106.03	35.33	10.08
0.63	3.72	3.00					
22	ROB		1167.07	1176.58	5.32	4.45	5.04
0.03	0.95	1.20					

CROSS SECTION

RIVER: Los Penasquitos
REACH: Lower RS: 3639.3

INPUT
Description: #3639 - FEMA Cross Section G
Station Elevation Data num= 20

Sta	Elev	Sta	Elev	Sta	Elev	Sta	Elev	Sta	Elev
0	62.13	23.8	52.13	37.4	48.13	334.7	48.13	360.9	46.13
594.4	46.13	835.5	44.13	1057.5	42.13	1070	40.13	1079.04	38.003
1095.5	34.13	1129.7	32.13	1193	30.83	1255	32.13	1280.99	37.997
1299.3	42.13	1308.6	44.13	1335.7	48.13	1358.5	52.13	1400	62.13

Manning's n Values num= 3

Sta	n Val	Sta	n Val	Sta	n Val
0	.035	1057.5	.065	1299.3	.065

Bank Sta: Left	Right	Lengths: Left	Channel	Right	Coeff Contr.	Expan.
1057.5	1299.3	348.2	397.8	434.4	.1	.3

Ineffective Flow num= 1

Sta L	Sta R	Elev	Permanent
0	1008		T

CROSS SECTION OUTPUT Profile #100-yr

E.G. Elev (ft)	46.10	Element	Left OB	Channel	Right OB
Vel Head (ft)	0.48	Wt. n-Val.	0.035	0.065	0.065
W.S. Elev (ft)	45.62	Reach Len. (ft)	348.20	397.80	434.40
Crit W.S. (ft)		Flow Area (sq ft)	161.54	2846.74	30.61
E.G. Slope (ft/ft)	0.002292	Area (sq ft)	685.12	2846.74	

30.61				
Q Total (cfs)	16800.00	Flow (cfs)	722.32	16032.73
44.95				
Top Width (ft)	662.35	Top Width (ft)	401.18	241.80
19.37				
Vel Total (ft/s)	5.53	Avg. Vel. (ft/s)	4.47	5.63
1.47				
Max Chl Dpth (ft)	14.79	Hydr. Depth (ft)	3.26	11.77
1.58				
Conv. Total (cfs)	350919.2	Conv. (cfs)	15087.9	334892.5
938.8				
Length Wtd. (ft)	394.45	Wetted Per. (ft)	49.50	243.86
19.69				
Min Ch El (ft)	30.83	Shear (lb/sq ft)	0.47	1.67
0.22				
Alpha	1.02	Stream Power (lb/ft s)	2.09	9.41
0.33				
Frctn Loss (ft)	0.94	Cum Volume (acre-ft)	98.67	125.64
70.94				
C & E Loss (ft)	0.00	Cum SA (acres)	36.47	10.10
7.90				

Profile #100-yr

Percent Conv	Pos Hydr Depth(ft)	Velocity (ft/s)	Left Sta (ft)	Right Sta (ft)	Flow (cfs)	Area (sq ft)	W.P. (ft)
1	LOB		604.80	705.60	0.00	10.07	49.28
0.00	0.20	0.00					
2	LOB		705.60	806.40	0.00	83.35	100.80
0.00	0.83	0.00					
3	LOB		806.40	907.20	0.00	169.47	100.80
0.00	1.68	0.00					
4	LOB		907.20	1008.00	0.00	260.70	100.80
0.00	2.59	0.00					
5	LOB		1008.00	1057.50	722.32	161.54	49.50
4.30	3.26	4.47					
6	Chan		1057.50	1077.65	326.10	104.93	20.52
1.94	5.21	3.11					
7	Chan		1077.65	1097.80	905.46	194.12	20.64
5.39	9.63	4.66					
8	Chan		1097.80	1117.95	1364.22	246.03	20.18
8.12	12.21	5.54					
9	Chan		1117.95	1138.10	1578.17	268.44	20.17
9.39	13.32	5.88					
10	Chan		1138.10	1158.25	1687.98	279.40	20.15
10.05	13.87	6.04					
11	Chan		1158.25	1178.40	1772.77	287.73	20.15
10.55	14.28	6.16					
12	Chan		1178.40	1198.55	1852.54	295.43	20.15
11.03	14.66	6.27					
13	Chan		1198.55	1218.70	1809.98	291.34	20.15
10.77	14.46	6.21					
14	Chan		1218.70	1238.85	1722.69	282.83	20.15
10.25	14.04	6.09					
15	Chan		1238.85	1259.00	1615.54	272.68	20.25
9.62	13.53	5.92					
16	Chan		1259.00	1279.15	1013.19	207.73	20.66
6.03	10.31	4.88					

17	Chan	1279.15	1299.30	384.09	116.07	20.66
2.29	5.76	3.31				
18	ROB	1299.30	1308.46	38.70	22.90	9.36
0.23	2.50	1.69				
19	ROB	1308.46	1317.61	6.23	7.62	9.26
0.04	0.83	0.82				
20	ROB	1317.61	1326.76	0.01	0.08	1.07
0.00	0.08	0.17				

CROSS SECTION

RIVER: Los Penasquitos
REACH: Lower RS: 3241.5

INPUT
Description: #3242 - FEMA Cross Section F
Station Elevation Data num= 22

Sta	Elev	Sta	Elev	Sta	Elev	Sta	Elev	Sta	Elev
0	62.13	21.5	52.13	34.9	46.13	266	46.13	402.4	44.93
473.2	44.93	693	45.53	851.3	44.13	975	43.73	1051.6	42.13
1100	40.33	1125.2	40.13	1145.9	32.13	1212.7	30.13	1225.5	29.93
1239.1	30.13	1296.8	32.13	1328	40.13	1335.8	42.13	1355.1	48.13
1411.2	52.13	1526.6	58.13						

Manning's n Values num= 3

Sta	n Val	Sta	n Val	Sta	n Val
0	.035	1125.2	.065	1328	.065

Bank Sta: Left	Right	Lengths: Left	Channel	Right	Coeff Contr.	Expan.
1125.2	1328	413.4	338.3	260.2	.1	.3

Ineffective Flow num= 1

Sta L	Sta R	Elev	Permanent
0	956		T

CROSS SECTION OUTPUT Profile #100-yr

E.G. Elev (ft)	45.16	Element	Left OB	Channel	Right OB
Vel Head (ft)	0.53	Wt. n-Val.	0.035	0.065	0.065
W.S. Elev (ft)	44.63	Reach Len. (ft)	413.40	338.30	260.20
Crit W.S. (ft)		Flow Area (sq ft)	422.09	2507.23	37.34
E.G. Slope (ft/ft)	0.002466	Area (sq ft)	506.21	2507.23	37.34
Q Total (cfs)	16800.00	Flow (cfs)	1636.42	15090.42	73.16
Top Width (ft)	549.02	Top Width (ft)	330.38	202.80	15.84
Vel Total (ft/s)	5.66	Avg. Vel. (ft/s)	3.88	6.02	1.96
Max Chl Dpth (ft)	14.70	Hydr. Depth (ft)	2.49	12.36	2.36
Conv. Total (cfs)	338317.2	Conv. (cfs)	32954.0	303889.9	1473.3
Length Wtd. (ft)	342.58	Wetted Per. (ft)	169.25	205.37	16.47
Min Ch El (ft)	29.93	Shear (lb/sq ft)	0.38	1.88	

0.35				
Alpha	1.06	Stream Power (lb/ft s)	1.49	11.31
0.68				
Frctn Loss (ft)	0.84	Cum Volume (acre-ft)	93.91	101.20
70.60				
C & E Loss (ft)	0.00	Cum SA (acres)	33.55	8.07
7.73				

Profile #100-yr

Conv	Pos Hydr	Left Sta (ft)	Right Sta (ft)	Flow (cfs)	Area (sq ft)	W.P. (ft)	Percent Depth(ft)	Velocity (ft/s)
1	LOB	743.56	849.78	0.00	13.35	54.96	0.24	0.00
2	LOB	849.78	956.00	0.00	70.77	106.22	0.67	0.00
3	LOB	956.00	1040.60	291.34	120.46	84.61	1.42	2.42
4	LOB	1040.60	1125.20	1345.07	301.63	84.64	3.57	4.46
5	Chan	1125.20	1142.10	542.80	131.23	18.12	7.77	4.14
6	Chan	1142.10	1159.00	1241.21	211.02	17.18	12.49	5.88
7	Chan	1159.00	1175.90	1366.65	222.14	16.91	13.14	6.15
8	Chan	1175.90	1192.80	1455.46	230.70	16.91	13.65	6.31
9	Chan	1192.80	1209.70	1546.48	239.25	16.91	14.16	6.46
10	Chan	1209.70	1226.60	1624.57	246.40	16.90	14.58	6.59
11	Chan	1226.60	1243.50	1618.54	245.85	16.90	14.55	6.58
12	Chan	1243.50	1260.40	1527.69	237.51	16.91	14.05	6.43
13	Chan	1260.40	1277.30	1423.05	227.61	16.91	13.47	6.25
14	Chan	1277.30	1294.20	1321.38	217.71	16.91	12.88	6.07
15	Chan	1294.20	1311.10	990.96	185.14	17.36	10.96	5.35
16	Chan	1311.10	1328.00	431.63	112.66	17.45	6.67	3.83
17	ROB	1328.00	1346.06	73.16	37.34	16.47	2.36	1.96

CROSS SECTION

RIVER: Los Penasquitos
REACH: Lower RS: 2903.2

INPUT
Description: #2903 - FEMA Cross Section E
Station Elevation Data num= 20

Sta	Elev	Sta	Elev	Sta	Elev	Sta	Elev	Sta	Elev
0	62.13	17.5	52.13	27.9	48.13	102.5	44.13	170	42.13
493.8	44.13	515	42.13	920.8	42.13	1128	40.13	1141	32.13
1148.1	30.13	1221.5	29.33	1294.9	30.13	1306.8	32.13	1325.6	40.13
1355.7	40.13	1393.6	42.13	1465.9	46.13	1547.2	52.13	1578.1	56.13

Manning's n Values num= 3

Sta	n Val	Sta	n Val	Sta	n Val
0	.035	1128	.065	1325.6	.065

Bank Sta: Left	Right	Lengths: Left	Channel	Right	Coeff Contr.	Expan.
1128	1325.6	352.6	414.8	460.3	.1	.3

Ineffective Flow num= 1

Sta L	Sta R	Elev	Permanent
0	1075		T

CROSS SECTION OUTPUT Profile #100-yr

E.G. Elev (ft)	44.32	Element	Left OB	Channel
Right OB				
Vel Head (ft)	0.55	Wt. n-Val.	0.035	0.065
0.065				
W.S. Elev (ft)	43.77	Reach Len. (ft)	352.60	414.80
460.30				
Crit W.S. (ft)		Flow Area (sq ft)	179.35	2544.14
233.90				
E.G. Slope (ft/ft)	0.002418	Area (sq ft)	1489.66	2544.14
233.90				
Q Total (cfs)	16800.00	Flow (cfs)	843.99	15485.53
470.48				
Top Width (ft)	1246.44	Top Width (ft)	951.20	197.60
97.64				
Vel Total (ft/s)	5.68	Avg. Vel. (ft/s)	4.71	6.09
2.01				
Max Chl Dpth (ft)	14.44	Hydr. Depth (ft)	3.38	12.88
2.40				
Conv. Total (cfs)	341617.8	Conv. (cfs)	17162.0	314888.8
9567.0				
Length Wtd. (ft)	414.16	Wetted Per. (ft)	53.00	201.95
97.74				
Min Ch El (ft)	29.33	Shear (lb/sq ft)	0.51	1.90
0.36				
Alpha	1.10	Stream Power (lb/ft s)	2.40	11.58
0.73				
Frctn Loss (ft)	0.71	Cum Volume (acre-ft)	84.44	81.58
69.79				
C & E Loss (ft)	0.03	Cum SA (acres)	27.47	6.51
7.39				

Warning: Divided flow computed for this cross-section.

Profile #100-yr

Percent Conv	Pos Hydr Depth(ft)	Velocity (ft/s)	Left Sta (ft)	Right Sta (ft)	Flow (cfs)	Area (sq ft)	W.P. (ft)
1	LOB		107.50	215.00	0.00	112.91	100.37
0.00	1.13	0.00					

2	LOB	215.00	322.50	0.00	110.71	107.50	0.00	1.03	0.00
3	LOB	322.50	430.00	0.00	39.33	107.50	0.00	0.37	0.00
4	LOB	430.00	537.50	0.00	51.24	45.44	0.00	1.13	0.00
5	LOB	537.50	645.00	0.00	176.27	107.50	0.00	1.64	0.00
6	LOB	645.00	752.50	0.00	176.27	107.50	0.00	1.64	0.00
7	LOB	752.50	860.00	0.00	176.27	107.50	0.00	1.64	0.00
8	LOB	860.00	967.50	0.00	186.80	107.50	0.00	1.74	0.00
9	LOB	967.50	1075.00	0.00	280.51	107.51	0.00	2.61	0.00
10	LOB	1075.00	1128.00	843.99	179.35	53.00	5.02	3.38	4.71
11	Chan	1128.00	1144.47	592.98	141.36	18.87	3.53	8.58	4.19
12	Chan	1144.47	1160.93	1386.64	223.64	16.61	8.25	13.58	6.20
13	Chan	1160.93	1177.40	1444.19	228.38	16.47	8.60	13.87	6.32
14	Chan	1177.40	1193.87	1475.47	231.34	16.47	8.78	14.05	6.38
15	Chan	1193.87	1210.33	1507.02	234.29	16.47	8.97	14.23	6.43
16	Chan	1210.33	1226.80	1535.53	236.94	16.47	9.14	14.39	6.48
17	Chan	1226.80	1243.27	1518.31	235.34	16.47	9.04	14.29	6.45
18	Chan	1243.27	1259.73	1486.68	232.39	16.47	8.85	14.11	6.40
19	Chan	1259.73	1276.20	1455.31	229.44	16.47	8.66	13.93	6.34
20	Chan	1276.20	1292.67	1424.20	226.48	16.47	8.48	13.75	6.29
21	Chan	1292.67	1309.13	1207.05	206.90	16.84	7.18	12.57	5.83
22	Chan	1309.13	1325.60	452.16	117.63	17.90	2.69	7.14	3.84
23	ROB	1325.60	1348.56	195.04	83.55	22.95	1.16	3.64	2.33
24	ROB	1348.56	1371.51	169.96	76.95	22.98	1.01	3.35	2.21
25	ROB	1371.51	1394.46	84.19	50.50	22.99	0.50	2.20	1.67
26	ROB	1394.46	1417.42	21.03	21.97	22.99	0.13	0.96	0.96
27	ROB	1417.42	1440.37	0.27	0.94	5.83	0.00	0.16	0.29

Warning: Divided flow computed for this cross-section.

CROSS SECTION

RIVER: Los Penasquitos
REACH: Lower RS: 2488.4

INPUT
Description: #2488 - FEMA Cross Section D
Station Elevation Data num= 32

Sta	Elev	Sta	Elev	Sta	Elev	Sta	Elev	Sta	Elev
0	62.13	31.4	52.13	47.6	50.13	160.8	46.13	290.3	42.13
355.3	42.13	567.5	42.13	614.2	38.13	653.6	40.13	698.1	42.13
825	42.13	1035	40.13	1226	39.03	1364.2	38.13	1377.2	32.13
1386.2	30.13	1403.4	28.13	1459.3	28.13	1504.2	30.13	1508	32.13
1520.1	38.13	1528.6	40.13	1536.1	40.13	1543.3	38.13	1558.4	34.13
1602.7	34.13	1638.3	42.13	1652.1	48.03	1687.1	51.33	1729.1	48.03
1816.1	54.63	1864.1	67.73						

Manning's n Values num= 3

Sta	n Val	Sta	n Val	Sta	n Val
0	.035	1364.2	.05	1520.1	.05

Bank Sta: Left	Right	Lengths: Left	Channel	Right	Coeff Contr.	Expan.
1364.2	1520.1	138.5	197.9	244.6	.1	.3

Ineffective Flow num= 1

Sta L	Sta R	Elev	Permanent
0	1270		T

CROSS SECTION OUTPUT Profile #100-yr

E.G. Elev (ft)	43.58	Element	Left OB	Channel
Right OB				
Vel Head (ft)	0.45	Wt. n-Val.	0.035	0.050
0.050				
W.S. Elev (ft)	43.12	Reach Len. (ft)	138.50	197.90
244.60				
Crit W.S. (ft)		Flow Area (sq ft)	441.36	2061.07
767.91				
E.G. Slope (ft/ft)	0.001293	Area (sq ft)	2525.08	2061.07
767.91				
Q Total (cfs)	16800.00	Flow (cfs)	1886.25	12126.42
2787.34				
Top Width (ft)	1382.44	Top Width (ft)	1106.02	155.90
120.52				
Vel Total (ft/s)	5.14	Avg. Vel. (ft/s)	4.27	5.88
3.63				
Max Chl Dpth (ft)	14.99	Hydr. Depth (ft)	4.69	13.22
6.37				
Conv. Total (cfs)	467288.2	Conv. (cfs)	52465.6	337293.5
77529.1				
Length Wtd. (ft)	205.50	Wetted Per. (ft)	94.20	159.50
122.64				
Min Ch El (ft)	28.13	Shear (lb/sq ft)	0.38	1.04
0.51				
Alpha	1.11	Stream Power (lb/ft s)	1.62	6.14
1.83				
Frctn Loss (ft)	0.15	Cum Volume (acre-ft)	68.19	59.65
64.49				
C & E Loss (ft)	0.08	Cum SA (acres)	19.14	4.83
6.23				

Warning: The conveyance ratio (upstream conveyance divided by downstream conveyance) is less than
0.7 or greater than 1.4. This may indicate the need for additional cross sections.

Profile #100-yr

Percent Conv	Pos Hydr Depth(ft)	Velocity (ft/s)	Left Sta (ft)	Right Sta (ft)	Flow (cfs)	Area (sq ft)	W.P. (ft)
1	LOB		254.00	381.00	0.00	105.91	122.83
0.00	0.86	0.00					
2	LOB		381.00	508.00	0.00	125.99	127.00
0.00	0.99	0.00					
3	LOB		508.00	635.00	0.00	291.61	127.20
0.00	2.30	0.00					
4	LOB		635.00	762.00	0.00	216.47	127.07
0.00	1.70	0.00					
5	LOB		762.00	889.00	0.00	145.50	127.00
0.00	1.15	0.00					
6	LOB		889.00	1016.00	0.00	280.21	127.01
0.00	2.21	0.00					
7	LOB		1016.00	1143.00	0.00	411.86	127.00
0.00	3.24	0.00					
8	LOB		1143.00	1270.00	0.00	506.16	127.00
0.00	3.99	0.00					
9	LOB		1270.00	1364.20	1886.25	441.36	94.20
11.23	4.69	4.27					
10	Chan		1364.20	1377.19	404.76	103.81	14.31
2.41	7.99	3.90					
11	Chan		1377.19	1390.18	883.08	160.70	13.24
5.26	12.37	5.50					
12	Chan		1390.18	1403.18	1121.94	184.62	13.08
6.68	14.21	6.08					
13	Chan		1403.18	1416.17	1232.04	194.77	12.99
7.33	14.99	6.33					
14	Chan		1416.17	1429.16	1232.16	194.77	12.99
7.33	14.99	6.33					
15	Chan		1429.16	1442.15	1232.15	194.77	12.99
7.33	14.99	6.33					
16	Chan		1442.15	1455.14	1232.16	194.77	12.99
7.33	14.99	6.33					
17	Chan		1455.14	1468.13	1213.35	193.03	13.00
7.22	14.86	6.29					
18	Chan		1468.13	1481.13	1139.31	185.90	13.00
6.78	14.31	6.13					
19	Chan		1481.13	1494.12	1063.55	178.38	13.00
6.33	13.73	5.96					
20	Chan		1494.12	1507.11	952.06	168.83	13.38
5.67	13.00	5.64					
21	Chan		1507.11	1520.10	419.85	106.72	14.51
2.50	8.21	3.93					
22	ROB		1520.10	1551.37	343.10	134.05	32.06
2.04	4.29	2.56					
23	ROB		1551.37	1582.65	1147.07	274.67	31.52
6.83	8.78	4.18					
24	ROB		1582.65	1613.92	1093.81	267.07	31.55
6.51	8.54	4.10					
25	ROB		1613.92	1645.19	203.36	92.13	27.51
1.21	3.45	2.21					

Warning: The conveyance ratio (upstream conveyance divided by downstream conveyance) is less than
0.7 or greater than 1.4. This may indicate the need for additional cross

sections.

CROSS SECTION

RIVER: Los Penasquitos
REACH: Lower RS: 2290.5

INPUT
Description: #2291 - FEMA Cross Section C
Station Elevation Data num= 29

Sta	Elev	Sta	Elev	Sta	Elev	Sta	Elev	Sta	Elev
0	48.13	29.8	46.13	60.4	44.13	101.1	42.13	208.4	42.13
299.8	42.13	323.4	38.13	353.86	38.13	457.6	40.13	798.3	40.13
1117	38.13	1161	38.13	1181.6	36.13	1194.1	34.13	1212.4	28.13
1299	28.13	1321.1	30.13	1325.4	32.13	1336.3	36.13	1345	36.13
1357.7	34.13	1369.45	32.13	1375.69	30.13	1526.67	30.13	1623.36	30.13
1628.1	32.13	1657.16	42.13	1689.8	52.13	1839.4	67.73		

Manning's n Values num= 3

Sta	n Val	Sta	n Val	Sta	n Val
0	.035	1181.6	.05	1336.3	.035

Bank Sta: Left	Right	Lengths: Left	Channel	Right	Coeff Contr.	Expan.
1181.6	1336.3	222.8	250.3	243.7	.1	.3

Ineffective Flow num= 2

Sta L	Sta R	Elev	Permanent
0	1047		T
1345	1640	36	T

CROSS SECTION OUTPUT Profile #100-yr

E.G. Elev (ft)	43.34	Element	Left OB	Channel
Right OB				
Vel Head (ft)	0.18	Wt. n-Val.	0.035	0.050
0.035				
W.S. Elev (ft)	43.16	Reach Len. (ft)	222.80	250.30
243.70				
Crit W.S. (ft)		Flow Area (sq ft)	682.90	2083.08
2242.81				
E.G. Slope (ft/ft)	0.000469	Area (sq ft)	3525.70	2083.08
3818.73				
Q Total (cfs)	16800.00	Flow (cfs)	1852.20	7508.62
7439.18				
Top Width (ft)	1580.50	Top Width (ft)	1101.56	154.70
324.24				
Vel Total (ft/s)	3.35	Avg. Vel. (ft/s)	2.71	3.60
3.32				
Max Chl Dpth (ft)	15.03	Hydr. Depth (ft)	5.07	13.47
6.92				
Conv. Total (cfs)	776075.9	Conv. (cfs)	85562.4	346860.5
343652.9				
Length Wtd. (ft)	244.61	Wetted Per. (ft)	134.70	157.06
327.11				
Min Ch El (ft)	28.13	Shear (lb/sq ft)	0.15	0.39
0.20				
Alpha	1.02	Stream Power (lb/ft s)	0.40	1.40
0.67				
Frctn Loss (ft)	0.13	Cum Volume (acre-ft)	58.57	50.24
51.62				
C & E Loss (ft)	0.01	Cum SA (acres)	15.63	4.12
4.99				

Profile #100-yr

Percent Conv	Pos Hydr Depth(ft)	Velocity (ft/s)	Left Sta (ft)	Right Sta (ft)	Flow (cfs)	Area (sq ft)	W.P. (ft)
1	LOB		0.00	104.70	0.00	14.62	24.68
0.00	0.59	0.00					
2	LOB		104.70	209.40	0.00	108.34	104.70
0.00	1.03	0.00					
3	LOB		209.40	314.10	0.00	125.67	104.90
0.00	1.20	0.00					
4	LOB		314.10	418.80	0.00	479.16	104.84
0.00	4.58	0.00					
5	LOB		418.80	523.50	0.00	332.25	104.71
0.00	3.17	0.00					
6	LOB		523.50	628.20	0.00	317.74	104.70
0.00	3.03	0.00					
7	LOB		628.20	732.90	0.00	317.74	104.70
0.00	3.03	0.00					
8	LOB		732.90	837.60	0.00	322.58	104.70
0.00	3.08	0.00					
9	LOB		837.60	942.30	0.00	377.96	104.70
0.00	3.61	0.00					
10	LOB		942.30	1047.00	0.00	446.75	104.70
0.00	4.27	0.00					
11	LOB		1047.00	1181.60	1852.20	682.90	134.70
11.03	5.07	2.71					
12	Chan		1181.60	1194.49	261.17	104.00	13.07
1.55	8.07	2.51					
13	Chan		1194.49	1207.38	445.22	145.37	13.57
2.65	11.28	3.06					
14	Chan		1207.38	1220.28	708.18	189.70	13.15
4.22	14.71	3.73					
15	Chan		1220.28	1233.17	743.97	193.82	12.89
4.43	15.03	3.84					
16	Chan		1233.17	1246.06	743.97	193.82	12.89
4.43	15.03	3.84					
17	Chan		1246.06	1258.95	743.97	193.82	12.89
4.43	15.03	3.84					
18	Chan		1258.95	1271.84	743.97	193.82	12.89
4.43	15.03	3.84					
19	Chan		1271.84	1284.73	743.97	193.82	12.89
4.43	15.03	3.84					
20	Chan		1284.73	1297.63	743.97	193.82	12.89
4.43	15.03	3.84					
21	Chan		1297.63	1310.52	704.26	187.82	12.94
4.19	14.57	3.75					
22	Chan		1310.52	1323.41	600.21	171.87	13.17
3.57	13.33	3.49					
23	Chan		1323.41	1336.30	325.78	121.38	13.81
1.94	9.42	2.68					
24	ROB		1336.30	1345.00	204.10	61.20	8.70
1.21	7.03	3.33					
25	ROB		1345.00	1394.17	1174.40	351.44	49.80
6.99	7.15	3.34					
26	ROB		1394.17	1443.33	1189.18	352.27	49.17
7.08	7.16	3.38					
27	ROB		1443.33	1492.50	1189.18	352.27	49.17

7.08	7.16	3.38				
28	ROB	1492.50	1541.67	1189.18	352.27	49.17
7.08	7.16	3.38				
29	ROB	1541.67	1590.83	1189.18	352.27	49.17
7.08	7.16	3.38				
30	ROB	1590.83	1640.00	1164.51	350.93	50.26
6.93	7.14	3.32				
31	ROB	1640.00	1689.85	139.46	70.17	21.68
0.83	3.42	1.99				

CROSS SECTION

RIVER: Los Penasquitos
REACH: Lower RS: 2040.2

INPUT
Description: #2040
Station Elevation Data num= 20

Sta	Elev	Sta	Elev	Sta	Elev	Sta	Elev	Sta	Elev
0	48.13	275.5	42.13	300	36.43	368	36.43	655	40.03
1059.6	39.13	1148	36.78	1162	36.13	1192.3	28.13	1291	28.13
1323.3	36.13	1330	37.33	1345.6	36.13	1356.2	31.13	1357.8	30.13
1448.3	28.93	1611	29.63	1729	30.13	1818	42.13	1822.2	67.73

Manning's n Values num= 3

Sta	n Val	Sta	n Val	Sta	n Val
0	.035	1162	.05	1323.3	.035

Bank Sta: Left	Right	Lengths: Left	Channel	Right	Coeff Contr.	Expan.
1162	1323.3	98.5	88.7	94.2	.1	.3

Ineffective Flow num= 2

Sta L	Sta R	Elev	Permanent
0	1047		F
1438	1822.2		F

CROSS SECTION OUTPUT Profile #100-yr

E.G. Elev (ft)	43.21	Element	Left OB	Channel	Right OB
Vel Head (ft)	0.29	Wt. n-Val.	0.035	0.050	0.035
W.S. Elev (ft)	42.91	Reach Len. (ft)	98.50	88.70	94.20
Crit W.S. (ft)		Flow Area (sq ft)	576.08	2133.95	1323.67
E.G. Slope (ft/ft)	0.000563	Area (sq ft)	3764.31	2133.95	5826.35
Q Total (cfs)	16800.00	Flow (cfs)	1699.10	8350.59	6750.31
Top Width (ft)	1578.54	Top Width (ft)	922.41	161.30	494.83
Vel Total (ft/s)	4.16	Avg. Vel. (ft/s)	2.95	3.91	5.10
Max Chl Dpth (ft)	14.78	Hydr. Depth (ft)	5.01	13.23	11.54
Conv. Total (cfs)	707793.9	Conv. (cfs)	71584.2	351815.4	284394.3
Length Wtd. (ft)	90.82	Wetted Per. (ft)	115.05	163.31	116.27

Min Ch El (ft)	28.13	Shear (lb/sq ft)	0.18	0.46
0.40				
Alpha	1.09	Stream Power (lb/ft s)	0.52	1.80
2.04				
Frctn Loss (ft)	0.08	Cum Volume (acre-ft)	39.93	38.13
24.64				
C & E Loss (ft)	0.06	Cum SA (acres)	10.45	3.21
2.69				

Warning: The velocity head has changed by more than 0.5 ft (0.15 m). This may indicate the need for additional cross sections.
Warning: The conveyance ratio (upstream conveyance divided by downstream conveyance) is less than 0.7 or greater than 1.4. This may indicate the need for additional cross sections.

Profile #100-yr

Percent Conv	Pos Hydr Depth(ft)	Velocity (ft/s)	Left Sta (ft)	Right Sta (ft)	Flow (cfs)	Area (sq ft)	W.P. (ft)
1	LOB		209.40	314.10	0.00	194.42	75.17
0.00	2.61	0.00					
2	LOB		314.10	418.80	0.00	662.49	104.70
0.00	6.33	0.00					
3	LOB		418.80	523.50	0.00	543.20	104.71
0.00	5.19	0.00					
4	LOB		523.50	628.20	0.00	405.70	104.71
0.00	3.87	0.00					
5	LOB		628.20	732.90	0.00	313.01	104.70
0.00	2.99	0.00					
6	LOB		732.90	837.60	0.00	332.09	104.70
0.00	3.17	0.00					
7	LOB		837.60	942.30	0.00	356.47	104.70
0.00	3.40	0.00					
8	LOB		942.30	1047.00	0.00	380.85	104.70
0.00	3.64	0.00					
9	LOB		1047.00	1162.00	1699.10	576.08	115.05
10.11	5.01	2.95					
10	Chan		1162.00	1175.44	325.21	115.01	13.90
1.94	8.56	2.83					
11	Chan		1175.44	1188.88	579.83	162.72	13.90
3.45	12.11	3.56					
12	Chan		1188.88	1202.33	811.89	197.15	13.56
4.83	14.67	4.12					
13	Chan		1202.33	1215.77	827.27	198.70	13.44
4.92	14.78	4.16					
14	Chan		1215.77	1229.21	827.26	198.70	13.44
4.92	14.78	4.16					
15	Chan		1229.21	1242.65	827.26	198.70	13.44
4.92	14.78	4.16					
16	Chan		1242.65	1256.09	827.26	198.70	13.44
4.92	14.78	4.16					
17	Chan		1256.09	1269.53	827.26	198.70	13.44
4.92	14.78	4.16					
18	Chan		1269.53	1282.98	827.27	198.70	13.44
4.92	14.78	4.16					
19	Chan		1282.98	1296.42	795.76	195.06	13.61

```
  4.74      14.51      4.08
  20          Chan       1296.42     1309.86      555.21     158.29      13.85
  3.30      11.78      3.51
  21          Chan       1309.86     1323.30      319.11     113.54      13.85
  1.90       8.45      2.81
  22          ROB        1323.30     1361.53     1149.34     303.71      39.79
  6.84       7.94      3.78
  23          ROB        1361.53     1399.77     2711.81     500.29      38.24
 16.14      13.09      5.42
  24          ROB        1399.77     1438.00     2889.16     519.67      38.24
 17.20      13.59      5.56
  25          ROB        1438.00     1486.03        0.00     667.72      48.03
  0.00      13.90      0.00
  26          ROB        1486.03     1534.05        0.00     658.73      48.03
  0.00      13.72      0.00
  27          ROB        1534.05     1582.08        0.00     648.81      48.03
  0.00      13.51      0.00
  28          ROB        1582.08     1630.10        0.00     638.90      48.03
  0.00      13.30      0.00
  29          ROB        1630.10     1678.13        0.00     629.10      48.03
  0.00      13.10      0.00
  30          ROB        1678.13     1726.15        0.00     619.32      48.03
  0.00      12.90      0.00
  31          ROB        1726.15     1774.18        0.00     476.30      48.43
  0.00       9.92      0.00
  32          ROB        1774.18     1822.20        0.00     163.81      45.01
  0.00       3.73      0.00


Warning: The velocity head has changed by more than 0.5 ft (0.15 m).  This may
indicate the need for
         additional cross sections.
Warning: The conveyance ratio (upstream conveyance divided by downstream conveyance)
is less than
         0.7 or greater than 1.4.  This may indicate the need for additional cross
sections.

CROSS SECTION


RIVER: Los Penasquitos
REACH: Lower              RS: 1951.5

INPUT
Description: #1952 - FEMA Cross Section B
Station Elevation Data    num=      18
     Sta    Elev     Sta    Elev     Sta    Elev     Sta    Elev     Sta    Elev
       0   48.13      38   44.13   278.5   42.13   307.3   36.13   368.1   36.13
   664.7   40.03  1126.5   38.13    1161   36.13  1175.8   28.13  1286.5   28.13
  1301.6   36.13  1333.2   38.13  1352.8   32.13  1375.6   30.13  1755.6   30.13
  1803.6   32.13  1860.6   42.13  1892.3   62.13

Manning's n Values        num=       3
     Sta   n Val     Sta   n Val     Sta   n Val
       0    .035    1161     .04  1301.6    .035

Bank Sta: Left   Right    Lengths: Left Channel   Right     Coeff Contr.   Expan.
          1161  1301.6             107.1    63.5     138              .1       .3
Ineffective Flow     num=       2
   Sta L   Sta R    Elev  Permanent
       0    1096               F
  1333.2  1892.3   52.13       F
```

CROSS SECTION OUTPUT Profile #100-yr

E.G. Elev (ft)	43.07	Element	Left OB	Channel
Right OB				
Vel Head (ft)	0.89	Wt. n-Val.	0.035	0.040
0.035				
W.S. Elev (ft)	42.17	Reach Len. (ft)	107.10	63.50
138.00				
Crit W.S. (ft)	36.68	Flow Area (sq ft)	295.43	1854.95
159.38				
E.G. Slope (ft/ft)	0.001513	Area (sq ft)	3272.11	1854.95
5943.43				
Q Total (cfs)	16800.00	Flow (cfs)	1337.98	14688.89
773.14				
Top Width (ft)	1587.43	Top Width (ft)	887.76	140.60
559.07				
Vel Total (ft/s)	7.27	Avg. Vel. (ft/s)	4.53	7.92
4.85				
Max Chl Dpth (ft)	14.04	Hydr. Depth (ft)	4.55	13.19
5.04				
Conv. Total (cfs)	431854.5	Conv. (cfs)	34393.5	377587.1
19874.0				
Length Wtd. (ft)	69.17	Wetted Per. (ft)	65.06	144.61
31.66				
Min Ch El (ft)	28.13	Shear (lb/sq ft)	0.43	1.21
0.48				
Alpha	1.09	Stream Power (lb/ft s)	1.94	9.60
2.31				
Frctn Loss (ft)	0.12	Cum Volume (acre-ft)	31.97	34.06
11.91				
C & E Loss (ft)	0.02	Cum SA (acres)	8.41	2.91
1.56				

Note: Multiple critical depths were found at this location. The critical depth with the lowest, valid,
water surface was used.

Profile #100-yr

Percent Conv	Pos Hydr Depth(ft)	Velocity (ft/s)	Left Sta (ft)	Right Sta (ft)	Flow (cfs)	Area (sq ft)	W.P. (ft)
1	LOB		219.20	328.80	0.00	217.71	56.17
0.00	3.92	0.00					
2	LOB		328.80	438.40	0.00	629.90	109.61
0.00	5.75	0.00					
3	LOB		438.40	548.00	0.00	482.10	109.61
0.00	4.40	0.00					
4	LOB		548.00	657.60	0.00	324.16	109.61
0.00	2.96	0.00					
5	LOB		657.60	767.20	0.00	256.89	109.60
0.00	2.34	0.00					
6	LOB		767.20	876.80	0.00	305.88	109.60
0.00	2.79	0.00					
7	LOB		876.80	986.40	0.00	355.30	109.60
0.00	3.24	0.00					
8	LOB		986.40	1096.00	0.00	404.73	109.60

0.00	3.69	0.00						
9	LOB	1096.00	1161.00	1337.98	295.43	65.06		
7.96	4.55	4.53						
10	Chan	1161.00	1172.72	618.05	107.91	13.32		
3.68	9.21	5.73						
11	Chan	1172.72	1184.43	1293.74	161.98	12.14		
7.70	13.82	7.99						
12	Chan	1184.43	1196.15	1359.80	164.55	11.72		
8.09	14.04	8.26						
13	Chan	1196.15	1207.87	1359.80	164.55	11.72		
8.09	14.04	8.26						
14	Chan	1207.87	1219.58	1359.80	164.55	11.72		
8.09	14.04	8.26						
15	Chan	1219.58	1231.30	1359.80	164.55	11.72		
8.09	14.04	8.26						
16	Chan	1231.30	1243.02	1359.78	164.54	11.72		
8.09	14.04	8.26						
17	Chan	1243.02	1254.73	1359.80	164.55	11.72		
8.09	14.04	8.26						
18	Chan	1254.73	1266.45	1359.80	164.55	11.72		
8.09	14.04	8.26						
19	Chan	1266.45	1278.17	1359.80	164.55	11.72		
8.09	14.04	8.26						
20	Chan	1278.17	1289.88	1285.90	161.51	12.16		
7.65	13.78	7.96						
21	Chan	1289.88	1301.60	612.85	107.18	13.26		
3.65	9.15	5.72						
22	ROB	1301.60	1333.20	773.14	159.38	31.66		
4.60	5.04	4.85						
23	ROB	1333.20	1389.11	0.00	552.56	56.90		
0.00	9.88	0.00						
24	ROB	1389.11	1445.02	0.00	673.36	55.91		
0.00	12.04	0.00						
25	ROB	1445.02	1500.93	0.00	673.36	55.91		
0.00	12.04	0.00						
26	ROB	1500.93	1556.84	0.00	673.36	55.91		
0.00	12.04	0.00						
27	ROB	1556.84	1612.75	0.00	673.36	55.91		
0.00	12.04	0.00						
28	ROB	1612.75	1668.66	0.00	673.36	55.91		
0.00	12.04	0.00						
29	ROB	1668.66	1724.57	0.00	673.36	55.91		
0.00	12.04	0.00						
30	ROB	1724.57	1780.48	0.00	660.47	55.93		
0.00	11.81	0.00						
31	ROB	1780.48	1836.39	0.00	478.37	56.43		
0.00	8.56	0.00						
32	ROB	1836.39	1892.30	0.00	52.47	24.66		
0.00	2.16	0.00						

Note: Multiple critical depths were found at this location. The critical depth with the lowest, valid,
water surface was used.

CROSS SECTION

RIVER: Los Penasquitos
REACH: Lower RS: 1888

INPUT

Description: #1888 - Upstream Vista Sorrento Parkway

Station Elevation Data num= 15

Sta	Elev	Sta	Elev	Sta	Elev	Sta	Elev	Sta	Elev
0	52.13	75.85	46.13	292.35	36.13	513.35	36.13	904.05	40.13
1140.85	42.13	1213.35	42.13	1240.65	34.13	1257.45	28.13	1362.95	28.13
1377.75	34.13	1423.35	42.13	1464.89	44.13	1506.35	46.13	1656.35	48.33

Manning's n Values num= 3

Sta	n Val	Sta	n Val	Sta	n Val
0	.035	1240.65	.04	1377.75	.035

Bank Sta: Left	Right	Lengths: Left	Channel	Right	Coeff Contr.	Expan.
1240.65	1377.75	57.3	79.5	88.2	.3	.3

Ineffective Flow num= 2

Sta L	Sta R	Elev	Permanent
0	1140.85		T
1464.75	1656.35		T

CROSS SECTION OUTPUT Profile #100-yr

E.G. Elev (ft)	42.93	Element	Left OB	Channel
Vel Head (ft)	1.13	Wt. n-Val.	0.035	0.040
W.S. Elev (ft)	41.79	Reach Len. (ft)	3.00	3.00
Crit W.S. (ft)	36.72	Flow Area (sq ft)	100.18	1778.32
E.G. Slope (ft/ft)	0.001873	Area (sq ft)	3293.17	1778.32
Q Total (cfs)	16800.00	Flow (cfs)	438.48	15616.30
Top Width (ft)	1138.05	Top Width (ft)	957.27	137.10
Vel Total (ft/s)	8.21	Avg. Vel. (ft/s)	4.38	8.78
Max Chl Dpth (ft)	13.66	Hydr. Depth (ft)	3.83	12.97
Conv. Total (cfs)	388175.9	Conv. (cfs)	10131.3	360825.7
Length Wtd. (ft)	3.00	Wetted Per. (ft)	27.25	139.31
Min Ch El (ft)	28.13	Shear (lb/sq ft)	0.43	1.49
Alpha	1.08	Stream Power (lb/ft s)	1.88	13.11
Frctn Loss (ft)	0.01	Cum Volume (acre-ft)	23.90	31.42
C & E Loss (ft)	0.02	Cum SA (acres)	6.14	2.70

Warning: Divided flow computed for this cross-section.
Warning: The conveyance ratio (upstream conveyance divided by downstream conveyance) is less than
0.7 or greater than 1.4. This may indicate the need for additional cross sections.

Profile #100-yr

Conv	Pos Hydr	Left Sta (ft)	Right Sta (ft)	Flow (cfs)	Area (sq ft)	W.P. (ft)	Percent Depth(ft)	Velocity (ft/s)
1	LOB	114.09	228.17	0.00	78.80	58.47	0.00	1.35
0.00								
2	LOB	228.17	342.26	0.00	550.87	114.15	0.00	4.83
0.00								
3	LOB	342.26	456.34	0.00	646.00	114.09	0.00	5.66
0.00								
4	LOB	456.34	570.43	0.00	629.32	114.09	0.00	5.52
0.00								
5	LOB	570.43	684.51	0.00	512.71	114.09	0.00	4.49
0.00								
6	LOB	684.51	798.60	0.00	379.45	114.09	0.00	3.33
0.00								
7	LOB	798.60	912.68	0.00	246.27	114.09	0.00	2.16
0.00								
8	LOB	912.68	1026.77	0.00	126.38	114.09	0.00	1.11
0.00								
9	LOB	1026.77	1140.85	0.00	23.20	74.12	0.00	0.31
0.00								
10	LOB	1140.85	1240.65	438.48	100.18	27.25	2.61	3.83
2.61								
11	Chan	1240.65	1252.08	771.44	110.85	12.13	4.59	9.70
4.59								
12	Chan	1252.08	1263.50	1317.57	150.93	11.76	7.84	13.21
7.84								
13	Chan	1263.50	1274.93	1420.41	156.09	11.43	8.45	13.66
8.45								
14	Chan	1274.93	1286.35	1420.39	156.09	11.42	8.45	13.66
8.45								
15	Chan	1286.35	1297.78	1420.41	156.09	11.43	8.45	13.66
8.45								
16	Chan	1297.78	1309.20	1420.39	156.09	11.42	8.45	13.66
8.45								
17	Chan	1309.20	1320.63	1420.41	156.09	11.43	8.45	13.66
8.45								
18	Chan	1320.63	1332.05	1420.41	156.09	11.43	8.45	13.66
8.45								
19	Chan	1332.05	1343.48	1420.39	156.09	11.42	8.45	13.66
8.45								
20	Chan	1343.48	1354.90	1420.41	156.09	11.43	8.45	13.66
8.45								
21	Chan	1354.90	1366.33	1364.39	153.78	11.69	8.12	13.46
8.12								
22	Chan	1366.33	1377.75	799.71	114.00	12.33	4.76	9.98
4.76								
23	ROB	1377.75	1406.75	709.25	148.44	29.44	4.22	5.12
4.22								
24	ROB	1406.75	1435.75	35.97	18.89	14.90	0.21	1.29
0.21								

Warning: Divided flow computed for this cross-section.
Warning: The conveyance ratio (upstream conveyance divided by downstream conveyance) is less than
0.7 or greater than 1.4. This may indicate the need for additional cross sections.

BRIDGE

```
RIVER: Los Penasquitos
REACH: Lower              RS: 1850

INPUT
Description: Vista Sorrento Parkway Bridge
Distance from Upstream XS =       3
Deck/Roadway Width        =   74.75
Weir Coefficient          =     2.6
Upstream  Deck/Roadway Coordinates
    num=       3
     Sta Hi Cord Lo Cord     Sta Hi Cord Lo Cord     Sta Hi Cord Lo Cord
 1140.85   42.13   40.13 1213.35   43.13   41.13 1464.89   44.13   42.13

Upstream Bridge Cross Section Data
Station Elevation Data    num=      15
     Sta    Elev     Sta    Elev     Sta    Elev     Sta    Elev     Sta    Elev
       0   52.13   75.85   46.13  292.35   36.13  513.35   36.13  904.05   40.13
 1140.85   42.13 1213.35   42.13 1240.65   34.13 1257.45   28.13 1362.95   28.13
 1377.75   34.13 1423.35   42.13 1464.89   44.13 1506.35   46.13 1656.35   48.33

Manning's n Values        num=       3
     Sta   n Val     Sta   n Val     Sta   n Val
       0    .035 1240.65     .04 1377.75    .035

Bank Sta: Left   Right    Coeff Contr.   Expan.
       1240.65 1377.75             .3       .3
Ineffective Flow     num=       2
   Sta L   Sta R    Elev  Permanent
       0 1140.85               T
 1464.75 1656.35               T

Downstream  Deck/Roadway Coordinates
    num=       3
     Sta Hi Cord Lo Cord     Sta Hi Cord Lo Cord     Sta Hi Cord Lo Cord
 1110.68   42.13   40.13 1200.08   43.13   41.13 1428.78   44.13   42.13

Downstream Bridge Cross Section Data
Station Elevation Data    num=      18
     Sta    Elev     Sta    Elev     Sta    Elev     Sta    Elev     Sta    Elev
       0   52.13   77.28   46.13  265.28   36.13  335.28   36.13  566.88   36.13
  759.58   38.13 1110.68   42.13 1148.28   42.23 1200.08   42.13 1261.38   32.13
 1271.28   28.13 1370.58   28.13 1386.18   32.13 1417.38   42.13 1428.78   44.13
 1450.18   44.13 1503.08   46.13 1538.08    47.6

Manning's n Values        num=       3
     Sta   n Val     Sta   n Val     Sta   n Val
       0    .035 1261.38     .04 1386.18    .035

Bank Sta: Left   Right    Coeff Contr.   Expan.
       1261.38 1386.18             .1       .3
Ineffective Flow     num=       2
   Sta L   Sta R    Elev  Permanent
       0 1148.28               T
 1450.88 1538.08               T

Upstream Embankment side slope              =       0 horiz. to 1.0 vertical
Downstream Embankment side slope            =       0 horiz. to 1.0 vertical
Maximum allowable submergence for weir flow =     .95
Elevation at which weir flow begins         =   41.13
Energy head used in spillway design         =
Spillway height used in design              =
Weir crest shape                            = Broad Crested
```

```
Number of Piers =  2

Pier Data
Pier Station     Upstream=  1277.7    Downstream= 1288.43
Upstream     num=       2
    Width   Elev    Width   Elev
       2   22.13       2   42.13
Downstream     num=       2
    Width   Elev    Width   Elev
       2   22.13       2   42.13

Pier Data
Pier Station     Upstream=  1342.7    Downstream= 1353.43
Upstream     num=       2
    Width   Elev    Width   Elev
       2   22.13       2   42.13
Downstream     num=       2
    Width   Elev    Width   Elev
       2   22.13       2   42.13

Number of Bridge Coefficient Sets =  1

Low Flow Methods and Data
       Energy
Selected Low Flow Methods = Highest Energy Answer

High Flow Method
       Energy Only

Additional Bridge Parameters
       Add Friction component to Momentum
       Do not add Weight component to Momentum
       Class B flow critical depth computations use critical depth
           inside the bridge at the upstream end
       Criteria to check for pressure flow = Upstream energy grade line

BRIDGE OUTPUT  Profile #100-yr


  E.G. US. (ft)                 42.93    Element                 Inside BR US
Inside BR DS
  W.S. US. (ft)                 41.79    E.G. Elev (ft)                42.90
42.54
  Q Total (cfs)             16800.00    W.S. Elev (ft)                41.69
41.26
  Q Bridge (cfs)            16800.00    Crit W.S. (ft)                36.94
37.11
  Q Weir (cfs)                          Max Chl Dpth (ft)             13.56
13.13
  Weir Sta Lft (ft)                     Vel Total (ft/s)               8.69
 8.75
  Weir Sta Rgt (ft)                     Flow Area (sq ft)           1932.93
1919.62
  Weir Submerg                          Froude # Chl                   0.49
 0.51
  Weir Max Depth (ft)                   Specif Force (cu ft)       16372.63
15677.85
  Min El Weir Flow (ft)         42.56   Hydr Depth (ft)               28.81
10.63
  Min El Prs (ft)               41.96   W.P. Total (ft)              390.55
284.68
  Delta EG (ft)                  0.41   Conv. Total (cfs)          220529.9
```

280978.6			
Delta WS (ft)	0.50	Top Width (ft)	67.09
180.53			
BR Open Area (sq ft)	1942.08	Frctn Loss (ft)	0.34
0.00			
BR Open Vel (ft/s)	8.75	C & E Loss (ft)	0.02
0.02			
Coef of Q		Shear Total (lb/sq ft)	1.79
1.50			
Br Sel Method	Energy only	Power Total (lb/ft s)	15.58
13.17			

CROSS SECTION

RIVER: Los Penasquitos
REACH: Lower RS: 1808.5

INPUT
Description: #1809 - Downstream Vista Sorrento Parkway
Station Elevation Data num= 18

Sta	Elev	Sta	Elev	Sta	Elev	Sta	Elev	Sta	Elev
0	52.13	77.28	46.13	265.28	36.13	335.28	36.13	566.88	36.13
759.58	38.13	1110.68	42.13	1148.28	42.23	1200.08	42.13	1261.38	32.13
1271.28	28.13	1370.58	28.13	1386.18	32.13	1417.38	42.13	1428.78	44.13
1450.18	44.13	1503.08	46.13	1538.08	47.6				

Manning's n Values num= 3

Sta	n Val	Sta	n Val	Sta	n Val
0	.035	1261.38	.04	1386.18	.035

Bank Sta: Left	Right	Lengths: Left	Channel	Right	Coeff Contr.	Expan.
1261.38	1386.18	56.3	25.6	26.7	.1	.3

Ineffective Flow num= 2

Sta L	Sta R	Elev	Permanent
0	1148.28		T
1450.88	1538.08		T

CROSS SECTION OUTPUT Profile #100-yr

E.G. Elev (ft)	42.52	Element	Left OB	Channel
Right OB				
Vel Head (ft)	1.22	Wt. n-Val.	0.035	0.040
0.035				
W.S. Elev (ft)	41.30	Reach Len. (ft)	56.30	25.60
26.70				
Crit W.S. (ft)		Flow Area (sq ft)	257.52	1592.14
131.07				
E.G. Slope (ft/ft)	0.002113	Area (sq ft)	3309.30	1592.14
131.07				
Q Total (cfs)	16800.00	Flow (cfs)	1374.48	14742.43
683.09				
Top Width (ft)	1078.92	Top Width (ft)	925.52	124.80
28.60				
Vel Total (ft/s)	8.48	Avg. Vel. (ft/s)	5.34	9.26
5.21				
Max Chl Dpth (ft)	13.17	Hydr. Depth (ft)	4.58	12.76
4.58				
Conv. Total (cfs)	365489.3	Conv. (cfs)	29902.3	320726.2
14860.9				

Length Wtd. (ft)	28.29	Wetted Per. (ft)	56.93	126.08
30.03				
Min Ch El (ft)	28.13	Shear (lb/sq ft)	0.60	1.67
0.58				
Alpha	1.09	Stream Power (lb/ft s)	3.18	15.42
3.00				
Frctn Loss (ft)	0.07	Cum Volume (acre-ft)	23.42	28.47
1.96				
C & E Loss (ft)	0.03	Cum SA (acres)	6.06	2.57
0.53				

Warning: Divided flow computed for this cross-section.

Profile #100-yr

Percent Conv	Pos Hydr Depth(ft)	Velocity (ft/s)	Left Sta (ft)	Right Sta (ft)	Flow (cfs)	Area (sq ft)	W.P. (ft)
1	LOB		114.83	229.66	0.00	100.59	61.59
0.00	1.64	0.00					
2	LOB		229.66	344.48	0.00	559.47	114.88
0.00	4.87	0.00					
3	LOB		344.48	459.31	0.00	593.22	114.83
0.00	5.17	0.00					
4	LOB		459.31	574.14	0.00	592.95	114.83
0.00	5.16	0.00					
5	LOB		574.14	688.97	0.00	516.14	114.83
0.00	4.49	0.00					
6	LOB		688.97	803.80	0.00	378.30	114.83
0.00	3.29	0.00					
7	LOB		803.80	918.62	0.00	230.61	114.84
0.00	2.01	0.00					
8	LOB		918.62	1033.45	0.00	80.39	114.84
0.00	0.70	0.00					
9	LOB		1033.45	1148.28	0.00	0.09	4.04
0.00	0.02	0.00					
10	LOB		1148.28	1261.38	1374.48	257.52	56.93
8.18	4.58	5.34					
11	Chan		1261.38	1271.78	953.88	117.13	11.18
5.68	11.26	8.14					
12	Chan		1271.78	1282.18	1298.44	136.93	10.40
7.73	13.17	9.48					
13	Chan		1282.18	1292.58	1298.44	136.93	10.40
7.73	13.17	9.48					
14	Chan		1292.58	1302.98	1298.43	136.93	10.40
7.73	13.17	9.48					
15	Chan		1302.98	1313.38	1298.44	136.93	10.40
7.73	13.17	9.48					
16	Chan		1313.38	1323.78	1298.44	136.93	10.40
7.73	13.17	9.48					
17	Chan		1323.78	1334.18	1298.44	136.93	10.40
7.73	13.17	9.48					
18	Chan		1334.18	1344.58	1298.44	136.93	10.40
7.73	13.17	9.48					
19	Chan		1344.58	1354.98	1298.43	136.93	10.40
7.73	13.17	9.48					
20	Chan		1354.98	1365.38	1298.44	136.93	10.40
7.73	13.17	9.48					
21	Chan		1365.38	1375.78	1230.88	133.46	10.57

7.33	12.83	9.22				
22	Chan	1375.78	1386.18	871.74	109.20	10.74
5.19	10.50	7.98				
23	ROB	1386.18	1399.12	553.95	91.78	13.59
3.30	7.09	6.04				
24	ROB	1399.12	1412.06	128.03	38.11	13.59
0.76	2.95	3.36				
25	ROB	1412.06	1425.00	1.11	1.18	2.85
0.01	0.44	0.94				

Warning: Divided flow computed for this cross-section.

CROSS SECTION

RIVER: Los Penasquitos
REACH: Lower RS: 1782.95

INPUT
Description:
Station Elevation Data num= 26

Sta	Elev	Sta	Elev	Sta	Elev	Sta	Elev	Sta	Elev
0	60.13	120.6	58.13	167.8	35.63	237	35.63	283.6	56.53
554.2	52.13	594.3	50.13	759.2	32.13	802	30.13	812	30.13
876	32.13	972	40.13	1000	42.13	1016.4	40.13	1063.5	34.13
1069.2	32.13	1077	28.13	1184.5	28.13	1195	32.13	1201	36
1207.3	39.37	1231	42.13	1231.2	42.65	1245.4	44.13	1265.4	45.9
1304.2	59.9								

Manning's n Values num= 3

Sta	n Val	Sta	n Val	Sta	n Val
0	.045	1077	.04	1184.5	.045

Bank Sta: Left	Right	Lengths: Left	Channel	Right	Coeff Contr.	Expan.
1077	1184.5	2.75	2.75	2.75	.1	.3

Ineffective Flow num= 1

Sta L	Sta R	Elev	Permanent
0	1017	57.13	F

CROSS SECTION OUTPUT Profile #100-yr

E.G. Elev (ft)	42.42	Element	Left OB	Channel
Right OB				
Vel Head (ft)	1.52	Wt. n-Val.	0.045	0.040
0.045				
W.S. Elev (ft)	40.91	Reach Len. (ft)	2.75	2.75
2.75				
Crit W.S. (ft)	36.93	Flow Area (sq ft)	305.74	1373.42
184.62				
E.G. Slope (ft/ft)	0.002665	Area (sq ft)	2701.37	1373.42
184.62				
Q Total (cfs)	16800.00	Flow (cfs)	1515.14	14394.54
890.32				
Top Width (ft)	606.55	Top Width (ft)	463.06	107.50
35.99				
Vel Total (ft/s)	9.01	Avg. Vel. (ft/s)	4.96	10.48
4.82				
Max Chl Dpth (ft)	12.78	Hydr. Depth (ft)	5.10	12.78
5.13				
Conv. Total (cfs)	325422.8	Conv. (cfs)	29348.9	278828.0

17245.8

Length Wtd. (ft)	2.75	Wetted Per. (ft)	61.68	107.50
38.80				
Min Ch El (ft)	28.13	Shear (lb/sq ft)	0.82	2.13
0.79				
Alpha	1.20	Stream Power (lb/ft s)	4.09	22.28
3.82				
Frctn Loss (ft)	0.01	Cum Volume (acre-ft)	19.54	27.60
1.87				
C & E Loss (ft)	0.00	Cum SA (acres)	5.16	2.50
0.52				

Warning: Divided flow computed for this cross-section.
Note: Multiple critical depths were found at this location. The critical depth with the lowest, valid,
water surface was used.

Profile #100-yr

Percent Conv	Pos Hydr Depth(ft)	Velocity (ft/s)	Left Sta (ft)	Right Sta (ft)	Flow (cfs)	Area (sq ft)	W.P. (ft)
1	LOB		101.70	203.40	0.00	217.02	47.86
0.00	4.65	0.00					
2	LOB		203.40	305.10	0.00	208.31	46.49
0.00	4.59	0.00					
3	LOB		305.10	406.80			
4	LOB		406.80	508.50			
5	LOB		508.50	610.20			
6	LOB		610.20	711.90	0.00	59.79	33.29
0.00	1.81	0.00					
7	LOB		711.90	813.60	0.00	836.37	102.03
0.00	8.22	0.00					
8	LOB		813.60	915.30	0.00	889.01	101.87
0.00	8.74	0.00					
9	LOB		915.30	1017.00	0.00	185.13	74.80
0.00	2.48	0.00					
10	LOB		1017.00	1077.00	1515.14	305.74	61.68
9.02	5.10	4.96					
11	Chan		1077.00	1085.96	1199.55	114.45	8.96
7.14	12.78	10.48					
12	Chan		1085.96	1094.92	1199.53	114.45	8.96
7.14	12.78	10.48					
13	Chan		1094.92	1103.88	1199.55	114.45	8.96
7.14	12.78	10.48					
14	Chan		1103.88	1112.83	1199.55	114.45	8.96
7.14	12.78	10.48					
15	Chan		1112.83	1121.79	1199.53	114.45	8.96
7.14	12.78	10.48					
16	Chan		1121.79	1130.75	1199.55	114.45	8.96
7.14	12.78	10.48					
17	Chan		1130.75	1139.71	1199.55	114.45	8.96
7.14	12.78	10.48					
18	Chan		1139.71	1148.67	1199.53	114.45	8.96
7.14	12.78	10.48					
19	Chan		1148.67	1157.63	1199.55	114.45	8.96

7.14	12.78	10.48					
20	Chan		1157.63	1166.58	1199.55	114.45	8.96
7.14	12.78	10.48					
21	Chan		1166.58	1175.54	1199.53	114.45	8.96
7.14	12.78	10.48					
22	Chan		1175.54	1184.50	1199.55	114.45	8.96
7.14	12.78	10.48					
23	ROB		1184.50	1195.38	683.24	116.45	11.69
4.07	10.70	5.87					
24	ROB		1195.38	1206.26	192.18	56.16	12.65
1.14	5.16	3.42					
25	ROB		1206.26	1217.15	14.63	11.36	11.09
0.09	1.04	1.29					
26	ROB		1217.15	1228.03	0.28	0.65	3.37
0.00	0.19	0.42					

Warning: Divided flow computed for this cross-section.
Note: Multiple critical depths were found at this location. The critical depth with the lowest, valid,
water surface was used.

CROSS SECTION

RIVER: Los Penasquitos
REACH: Lower RS: 1780.2

INPUT
Description: #1780 - NB I-805 TO NB I-5 Truck Connector Piers
Station Elevation Data num= 26

Sta	Elev	Sta	Elev	Sta	Elev	Sta	Elev	Sta	Elev
0	60.13	120.6	58.13	167.8	35.63	237	35.63	283.6	56.53
554.2	52.13	594.3	50.13	759.2	32.13	802	30.13	812	30.13
876	32.13	972	40.13	1000	42.13	1016.4	40.13	1063.5	34.13
1069.2	32.13	1077	28.13	1184.5	28.13	1195	32.13	1201	36
1207.3	39.37	1231	42.13	1231.2	42.65	1245.4	44.13	1265.4	45.9
1304.2	59.9								

Manning's n Values num= 3

Sta	n Val	Sta	n Val	Sta	n Val
0	.045	1077	.04	1184.5	.045

Bank Sta: Left	Right	Lengths: Left	Channel	Right	Coeff Contr.	Expan.
1077	1184.5	2.75	2.75	2.75	.1	.3

Ineffective Flow num= 1

Sta L	Sta R	Elev	Permanent
0	1017	57.13	F

Blocked Obstructions num= 4

Sta L	Sta R	Elev	Sta L	Sta R	Elev	Sta L	Sta R	Elev
744.75	750.25	50.13	896.75	902.25	49.13	1050.75	1056.25	48.13
1204.75	1210.25	47.13						

CROSS SECTION OUTPUT Profile #100-yr

E.G. Elev (ft)	42.41	Element	Left OB	Channel	Right OB
Vel Head (ft)	1.55	Wt. n-Val.	0.045	0.040	0.045
W.S. Elev (ft)	40.86	Reach Len. (ft)	2.75	2.75	2.75

Crit W.S. (ft)	36.88	Flow Area (sq ft)	272.88	1368.30	173.49
E.G. Slope (ft/ft)	0.002720	Area (sq ft)	2571.11	1368.30	173.49
Q Total (cfs)	16800.00	Flow (cfs)	1327.01	14450.94	1022.05
Top Width (ft)	582.44	Top Width (ft)	444.86	107.50	30.08
Vel Total (ft/s)	9.26	Avg. Vel. (ft/s)	4.86	10.56	5.89
Max Chl Dpth (ft)	12.73	Hydr. Depth (ft)	5.01	12.73	5.77
Conv. Total (cfs)	322138.8	Conv. (cfs)	25445.3	277095.7	19597.8
Length Wtd. (ft)	2.75	Wetted Per. (ft)	67.05	107.50	36.52
Min Ch El (ft)	28.13	Shear (lb/sq ft)	0.69	2.16	0.81
Alpha	1.17	Stream Power (lb/ft s)	3.36	22.83	4.75
Frctn Loss (ft)	0.01	Cum Volume (acre-ft)	19.37	27.51	1.85
C & E Loss (ft)	0.01	Cum SA (acres)	5.13	2.49	0.51

Warning: Divided flow computed for this cross-section.
Note: Multiple critical depths were found at this location. The critical depth with the lowest, valid, water surface was used.

Profile #100-yr

Percent Conv	Pos Hydr Depth(ft)	Velocity (ft/s)	Left Sta (ft)	Right Sta (ft)	Flow (cfs)	Area (sq ft)	W.P. (ft)
1	LOB		101.70	203.40	0.00	214.80	47.75
0.00	4.61	0.00					
2	LOB		203.40	305.10	0.00	206.15	46.38
0.00	4.55	0.00					
3	LOB		305.10	406.80			
4	LOB		406.80	508.50			
5	LOB		508.50	610.20			
6	LOB		610.20	711.90	0.00	58.22	32.86
0.00	1.78	0.00					
7	LOB		711.90	813.60	0.00	790.54	111.40
0.00	8.22	0.00					
8	LOB		813.60	915.30	0.00	846.92	109.89
0.00	8.80	0.00					
9	LOB		915.30	1017.00	0.00	181.60	73.74
0.00	2.47	0.00					
10	LOB		1017.00	1077.00	1327.01	272.88	67.05
7.90	5.01	4.86					
11	Chan		1077.00	1085.96	1204.25	114.03	8.96
7.17	12.73	10.56					
12	Chan		1085.96	1094.92	1204.23	114.02	8.96
7.17	12.73	10.56					

```
13          Chan        1094.92     1103.88      1204.25      114.03       8.96
7.17      12.73      10.56
14          Chan        1103.88     1112.83      1204.25      114.03       8.96
7.17      12.73      10.56
15          Chan        1112.83     1121.79      1204.23      114.02       8.96
7.17      12.73      10.56
16          Chan        1121.79     1130.75      1204.25      114.03       8.96
7.17      12.73      10.56
17          Chan        1130.75     1139.71      1204.25      114.03       8.96
7.17      12.73      10.56
18          Chan        1139.71     1148.67      1204.23      114.02       8.96
7.17      12.73      10.56
19          Chan        1148.67     1157.63      1204.25      114.03       8.96
7.17      12.73      10.56
20          Chan        1157.63     1166.58      1204.25      114.03       8.96
7.17      12.73      10.56
21          Chan        1166.58     1175.54      1204.23      114.02       8.96
7.17      12.73      10.56
22          Chan        1175.54     1184.50      1204.25      114.03       8.96
7.17      12.73      10.56
23          ROB         1184.50     1195.38       822.74      115.93      11.69
4.90      10.65       7.10
24          ROB         1195.38     1206.26       193.26       51.93      13.79
1.15       5.54       3.72
25          ROB         1206.26     1217.15         5.81        5.13       8.09
0.03       0.74       1.13
26          ROB         1217.15     1228.03         0.24        0.50       2.95
0.00       0.17       0.47


Warning: Divided flow computed for this cross-section.
Note:    Multiple critical depths were found at this location.  The critical depth
with the lowest, valid,
         water surface was used.

CROSS SECTION


RIVER: Los Penasquitos
REACH: Lower                RS: 1777.45

INPUT
Description:
Station Elevation Data     num=      26
     Sta    Elev     Sta    Elev     Sta    Elev     Sta    Elev     Sta    Elev
       0   60.13   120.6   58.13   167.8   35.63     237   35.63   283.6   56.53
   554.2   52.13   594.3   50.13   759.2   32.13     802   30.13     812   30.13
     876   32.13     972   40.13    1000   42.13  1016.4   40.13  1063.5   34.13
  1069.2   32.13    1077   28.13  1184.5   28.13    1195   32.13    1201      36
  1207.3   39.37    1231   42.13  1231.2   42.65  1245.4   44.13  1265.4    45.9
  1304.2    59.9

Manning's n Values         num=       3
     Sta   n Val     Sta   n Val     Sta   n Val
       0    .045    1077     .04  1184.5    .045

Bank Sta: Left   Right    Lengths: Left Channel   Right     Coeff Contr.   Expan.
          1077  1184.5             233.1   118.6     137             .1       .3
Ineffective Flow     num=       1
   Sta L   Sta R    Elev  Permanent
       0    1017   57.13       F
```

CROSS SECTION OUTPUT Profile #100-yr

E.G. Elev (ft)	42.39	Element	Left OB	Channel
Right OB				
Vel Head (ft)	1.53	Wt. n-Val.	0.045	0.040
0.045				
W.S. Elev (ft)	40.87	Reach Len. (ft)	233.10	118.60
137.00				
Crit W.S. (ft)	36.93	Flow Area (sq ft)	303.36	1369.17
183.20				
E.G. Slope (ft/ft)	0.002697	Area (sq ft)	2683.06	1369.17
183.20				
Q Total (cfs)	16800.00	Flow (cfs)	1504.53	14406.02
889.45				
Top Width (ft)	604.79	Top Width (ft)	461.64	107.50
35.65				
Vel Total (ft/s)	9.05	Avg. Vel. (ft/s)	4.96	10.52
4.86				
Max Chl Dpth (ft)	12.74	Hydr. Depth (ft)	5.06	12.74
5.14				
Conv. Total (cfs)	323485.6	Conv. (cfs)	28969.8	277389.3
17126.5				
Length Wtd. (ft)	126.30	Wetted Per. (ft)	61.68	107.50
38.46				
Min Ch El (ft)	28.13	Shear (lb/sq ft)	0.83	2.14
0.80				
Alpha	1.20	Stream Power (lb/ft s)	4.11	22.57
3.89				
Frctn Loss (ft)	0.30	Cum Volume (acre-ft)	19.21	27.43
1.84				
C & E Loss (ft)	0.11	Cum SA (acres)	5.11	2.49
0.51				

Warning: Divided flow computed for this cross-section.
Note: Multiple critical depths were found at this location. The critical depth with the lowest, valid,
water surface was used.

Profile #100-yr

Percent Conv	Pos Hydr Depth(ft)	Velocity (ft/s)	Left Sta (ft)	Right Sta (ft)	Flow (cfs)	Area (sq ft)	W.P. (ft)
1	LOB		101.70	203.40	0.00	215.18	47.77
0.00	4.62	0.00					
2	LOB		203.40	305.10	0.00	206.51	46.40
0.00	4.56	0.00					
3	LOB		305.10	406.80			
4	LOB		406.80	508.50			
5	LOB		508.50	610.20			
6	LOB		610.20	711.90	0.00	58.49	32.93
0.00	1.79	0.00					
7	LOB		711.90	813.60	0.00	832.35	102.03
0.00	8.18	0.00					
8	LOB		813.60	915.30	0.00	884.98	101.87

0.00	8.70	0.00					
9	LOB	915.30	1017.00	0.00	182.19	73.92	
0.00	2.47	0.00					
10	LOB	1017.00	1077.00	1504.53	303.36	61.68	
8.96	5.06	4.96					
11	Chan	1077.00	1085.96	1200.51	114.10	8.96	
7.15	12.74	10.52					
12	Chan	1085.96	1094.92	1200.49	114.10	8.96	
7.15	12.74	10.52					
13	Chan	1094.92	1103.88	1200.51	114.10	8.96	
7.15	12.74	10.52					
14	Chan	1103.88	1112.83	1200.51	114.10	8.96	
7.15	12.74	10.52					
15	Chan	1112.83	1121.79	1200.49	114.10	8.96	
7.15	12.74	10.52					
16	Chan	1121.79	1130.75	1200.51	114.10	8.96	
7.15	12.74	10.52					
17	Chan	1130.75	1139.71	1200.51	114.10	8.96	
7.15	12.74	10.52					
18	Chan	1139.71	1148.67	1200.49	114.10	8.96	
7.15	12.74	10.52					
19	Chan	1148.67	1157.63	1200.51	114.10	8.96	
7.15	12.74	10.52					
20	Chan	1157.63	1166.58	1200.51	114.10	8.96	
7.15	12.74	10.52					
21	Chan	1166.58	1175.54	1200.49	114.10	8.96	
7.15	12.74	10.52					
22	Chan	1175.54	1184.50	1200.51	114.10	8.96	
7.15	12.74	10.52					
23	ROB	1184.50	1195.38	684.24	116.02	11.69	
4.07	10.66	5.90					
24	ROB	1195.38	1206.26	191.18	55.72	12.65	
1.14	5.12	3.43					
25	ROB	1206.26	1217.15	13.82	10.93	11.09	
0.08	1.00	1.26					
26	ROB	1217.15	1228.03	0.21	0.53	3.02	
0.00	0.17	0.40					

Warning: Divided flow computed for this cross-section.
Note: Multiple critical depths were found at this location. The critical depth with the lowest, valid,
water surface was used.

CROSS SECTION

RIVER: Los Penasquitos
REACH: Lower RS: 1658.9

INPUT
Description:
Station Elevation Data num= 11

Sta	Elev	Sta	Elev	Sta	Elev	Sta	Elev	Sta	Elev
0	48.13	135.3	46.13	182.5	32.13	190	28.747	195.8	28.13
240	27.93	288.1	28.13	295	28.836	327.2	32.13	374.2	42.13
478.8	49.33								

Manning's n Values num= 3

Sta	n Val	Sta	n Val	Sta	n Val
0	.045	182.5	.04	327.2	.045

```
Bank Sta: Left   Right    Lengths: Left Channel   Right     Coeff Contr.   Expan.
         182.5   327.2             2.75    2.75    2.75            .1        .3
Ineffective Flow     num=       1
   Sta L   Sta R    Elev  Permanent
       0     145               T
Skew Angle = 20
Sediment Elevation = 2.13
```

CROSS SECTION OUTPUT Profile #100-yr

E.G. Elev (ft)	41.99	Element	Left OB	Channel	Right OB
Vel Head (ft)	1.16	Wt. n-Val.	0.045	0.040	0.045
W.S. Elev (ft)	40.82	Reach Len. (ft)	2.75	2.75	2.75
Crit W.S. (ft)		Flow Area (sq ft)	127.33	1748.32	177.51
E.G. Slope (ft/ft)	0.002099	Area (sq ft)	127.33	1748.32	177.51
Q Total (cfs)	16800.00	Flow (cfs)	498.70	15596.75	704.56
Top Width (ft)	214.85	Top Width (ft)	29.30	144.70	40.85
Vel Total (ft/s)	8.18	Avg. Vel. (ft/s)	3.92	8.92	3.97
Max Chl Dpth (ft)	12.89	Hydr. Depth (ft)	4.35	12.08	4.35
Conv. Total (cfs)	366726.5	Conv. (cfs)	10886.0	340460.7	15379.8
Length Wtd. (ft)	2.75	Wetted Per. (ft)	30.56	145.67	41.76
Min Ch El (ft)	27.93	Shear (lb/sq ft)	0.55	1.57	0.56
Alpha	1.12	Stream Power (lb/ft s)	2.14	14.03	2.21
Frctn Loss (ft)	0.01	Cum Volume (acre-ft)	11.69	23.18	1.28
C & E Loss (ft)	0.03	Cum SA (acres)	3.79	2.14	0.39

Warning: The conveyance ratio (upstream conveyance divided by downstream conveyance) is less than
0.7 or greater than 1.4. This may indicate the need for additional cross sections.

Profile #100-yr

Conv	Pos Hydr Depth(ft)	Velocity (ft/s)	Left Sta (ft)	Right Sta (ft)	Flow (cfs)	Area (sq ft)	W.P. (ft)	Percent
1	LOB	1.75	145.00	163.75	28.86	16.51	11.01	0.17
2	LOB	4.24	163.75	182.50	469.83	110.82	19.56	2.80
3	Chan	8.09	182.50	194.56	1084.69	134.01	12.81	6.46
4	Chan	11.11	194.56	206.62	1411.29	153.22	12.07	5.91

```
  8.40      12.71      9.21
  5          Chan       206.62     218.68     1423.16    153.95     12.06
  8.47      12.77      9.24
  6          Chan       218.68     230.73     1433.31    154.61     12.06
  8.53      12.82      9.27
  7          Chan       230.73     242.79     1442.97    155.23     12.06
  8.59      12.87      9.30
  8          Chan       242.79     254.85     1439.38    155.00     12.06
  8.57      12.85      9.29
  9          Chan       254.85     266.91     1430.03    154.40     12.06
  8.51      12.80      9.26
  10         Chan       266.91     278.97     1420.71    153.79     12.06
  8.46      12.75      9.24
  11         Chan       278.97     291.03     1403.79    152.77     12.07
  8.36      12.67      9.19
  12         Chan       291.03     303.08     1239.32    141.99     12.12
  7.38      11.77      8.73
  13         Chan       303.08     315.14     1030.58    127.11     12.12
  6.13      10.54      8.11
  14         Chan       315.14     327.20      837.53    112.24     12.12
  4.99       9.31      7.46
  15         ROB        327.20     340.98      474.95     99.57     14.09
  2.83       7.22      4.77
  16         ROB        340.98     354.76      199.43     59.16     14.09
  1.19       4.29      3.37
  17         ROB        354.76     368.55       30.18     18.77     13.58
  0.18       1.41      1.61


Warning: The conveyance ratio (upstream conveyance divided by downstream conveyance)
is less than
        0.7 or greater than 1.4.  This may indicate the need for additional cross
sections.

CROSS SECTION


RIVER: Los Penasquitos
REACH: Lower              RS: 1656.1

INPUT
Description: #1663 - NB Interstate 5 Piers
Station Elevation Data    num=      11
     Sta    Elev     Sta    Elev     Sta    Elev     Sta    Elev     Sta    Elev
       0   48.13   135.3   46.13   182.5   32.13     190  28.747   195.8   28.13
     240   27.93   288.1   28.13     295  28.836   327.2   32.13   374.2   42.13
   478.8   49.33

Manning's n Values        num=       3
     Sta   n Val     Sta   n Val     Sta   n Val
       0    .045   182.5     .04   327.2    .045

Bank Sta: Left   Right    Lengths: Left Channel   Right     Coeff Contr.   Expan.
         182.5   327.2             2.75    2.75    2.75              .1       .3
Ineffective Flow     num=       1
   Sta L   Sta R    Elev  Permanent
       0     145               T
Blocked Obstructions     num=       4
   Sta L   Sta R    Elev   Sta L   Sta R    Elev   Sta L   Sta R    Elev
  225.25  230.75   57.13  269.25  274.75   57.13  313.25  318.75   57.13
  343.05  348.55   57.13
Skew Angle = 20
```

Sediment Elevation = 2.13

CROSS SECTION OUTPUT Profile #100-yr

E.G. Elev (ft)	41.94	Element	Left OB	Channel	Right OB
Vel Head (ft)	1.51	Wt. n-Val.	0.045	0.040	0.045
W.S. Elev (ft)	40.43	Reach Len. (ft)	2.75	2.75	2.75
Crit W.S. (ft)		Flow Area (sq ft)	116.05	1502.94	137.91
E.G. Slope (ft/ft)	0.005023	Area (sq ft)	116.05	1502.94	137.91
Q Total (cfs)	16800.00	Flow (cfs)	681.78	15302.58	815.64
Top Width (ft)	189.67	Top Width (ft)	27.97	128.20	33.50
Vel Total (ft/s)	9.56	Avg. Vel. (ft/s)	5.88	10.18	5.91
Max Chl Dpth (ft)	12.50	Hydr. Depth (ft)	4.15	11.72	4.12
Conv. Total (cfs)	237031.8	Conv. (cfs)	9619.3	215904.7	11507.8
Length Wtd. (ft)	2.75	Wetted Per. (ft)	29.18	197.64	42.93
Min Ch El (ft)	27.93	Shear (lb/sq ft)	1.25	2.38	1.01
Alpha	1.07	Stream Power (lb/ft s)	7.33	24.28	5.96
Frctn Loss (ft)	0.01	Cum Volume (acre-ft)	11.68	23.08	1.27
C & E Loss (ft)	0.09	Cum SA (acres)	3.79	2.14	0.39

Warning: Divided flow computed for this cross-section.
Warning: The conveyance ratio (upstream conveyance divided by downstream conveyance) is less than
0.7 or greater than 1.4. This may indicate the need for additional cross sections.

Profile #100-yr

Conv	Pos Hydr	Left Sta (ft)	Right Sta (ft)	Flow (cfs)	Area (sq ft)	W.P. (ft)	Percent Depth(ft)	Velocity (ft/s)
1	LOB	145.00	163.75	31.31	12.62	9.62	0.19	1.37
2	LOB	163.75	182.50	650.47	103.43	19.56	3.87	5.52
3	Chan	182.50	194.56	1387.04	129.26	12.81	8.26	10.72
4	Chan	194.56	206.62	1818.55	148.47	12.07	10.82	12.31
5	Chan	206.62	218.68	1834.32	149.20	12.06	10.92	12.37
6	Chan	218.68	230.73	495.71	81.63	19.01	2.95	12.42

```
  7          Chan        230.73      242.79       1157.32      150.28       24.50
  6.89      12.48       7.70
  8          Chan        242.79      254.85       1855.89      150.25       12.06
 11.05      12.46      12.35
  9          Chan        254.85      266.91       1843.46      149.65       12.06
 10.97      12.41      12.32
  10         Chan        266.91      278.97        351.28       81.04       31.29
  2.09      12.36       4.33
  11         Chan        278.97      291.03       1808.62      148.02       12.07
 10.77      12.28      12.22
  12         Chan        291.03      303.08       1590.22      137.24       12.12
  9.47      11.38      11.59
  13         Chan        303.08      315.14        720.44      104.15       19.94
  4.29      10.24       6.92
  14         Chan        315.14      327.20        439.73       73.76       17.66
  2.62       8.73       5.96
  15         ROB         327.20      340.98        693.46       94.14       14.09
  4.13       6.83       7.37
  16         ROB         340.98      354.76         89.76       29.86       17.15
  0.53       3.61       3.01
  17         ROB         354.76      368.55         32.42       13.91       11.69
  0.19       1.22       2.33


Warning: Divided flow computed for this cross-section.
Warning: The conveyance ratio (upstream conveyance divided by downstream conveyance)
is less than
         0.7 or greater than 1.4.  This may indicate the need for additional cross
sections.

CROSS SECTION


RIVER: Los Penasquitos
REACH: Lower              RS: 1653.3

INPUT
Description: #1660 - Upstream NB Interstate 805
Station Elevation Data    num=      12
     Sta    Elev     Sta    Elev     Sta    Elev     Sta    Elev     Sta    Elev
       0   48.13   135.3   46.13   182.5   32.13     190  28.747   195.8   28.13
     240   27.93   288.1   28.13     290  28.324     295  28.836   327.2   32.13
   374.2   42.13   478.8   49.33

Manning's n Values        num=       3
     Sta   n Val     Sta   n Val     Sta   n Val
       0    .045   182.5     .04   327.2    .045

Bank Sta: Left   Right    Lengths: Left Channel   Right     Coeff Contr.   Expan.
         182.5   327.2             73.4    68.7    67.6              .1       .3
Ineffective Flow     num=       1
   Sta L   Sta R    Elev  Permanent
       0     145               T
Skew Angle = 20
Sediment Elevation = 2.13

CROSS SECTION OUTPUT  Profile #100-yr


  E.G. Elev (ft)              41.84    Element                    Left OB    Channel
Right OB
  Vel Head (ft)                1.21    Wt. n-Val.                  0.045      0.040
```

0.045				
W.S. Elev (ft)	40.63	Reach Len. (ft)	1.00	1.00
1.00				
Crit W.S. (ft)	36.27	Flow Area (sq ft)	121.84	1720.90
169.85				
E.G. Slope (ft/ft)	0.002222	Area (sq ft)	121.84	1720.90
169.85				
Q Total (cfs)	16800.00	Flow (cfs)	483.88	15632.49
683.63				
Top Width (ft)	213.32	Top Width (ft)	28.66	144.70
39.96				
Vel Total (ft/s)	8.35	Avg. Vel. (ft/s)	3.97	9.08
4.02				
Max Chl Dpth (ft)	12.70	Hydr. Depth (ft)	4.25	11.89
4.25				
Conv. Total (cfs)	356372.2	Conv. (cfs)	10264.4	331606.3
14501.5				
Length Wtd. (ft)	1.00	Wetted Per. (ft)	29.90	145.67
40.85				
Min Ch El (ft)	27.93	Shear (lb/sq ft)	0.57	1.64
0.58				
Alpha	1.12	Stream Power (lb/ft s)	2.25	14.89
2.32				
Frctn Loss (ft)		Cum Volume (acre-ft)	11.67	22.98
1.26				
C & E Loss (ft)		Cum SA (acres)	3.79	2.13
0.39				

Profile #100-yr

Percent Conv	Pos Hydr Depth(ft)	Velocity (ft/s)	Left Sta (ft)	Right Sta (ft)	Flow (cfs)	Area (sq ft)	W.P. (ft)
1	LOB		145.00	163.75	25.19	14.57	10.34
0.15	1.47	1.73					
2	LOB		163.75	182.50	458.69	107.27	19.56
2.73	5.72	4.28					
3	Chan		182.50	194.56	1084.48	131.73	12.81
6.46	10.92	8.23					
4	Chan		194.56	206.62	1416.13	150.93	12.07
8.43	12.52	9.38					
5	Chan		206.62	218.68	1428.22	151.67	12.06
8.50	12.58	9.42					
6	Chan		218.68	230.73	1438.56	152.32	12.06
8.56	12.63	9.44					
7	Chan		230.73	242.79	1448.39	152.95	12.06
8.62	12.68	9.47					
8	Chan		242.79	254.85	1444.74	152.72	12.06
8.60	12.66	9.46					
9	Chan		254.85	266.91	1435.22	152.11	12.06
8.54	12.61	9.44					
10	Chan		266.91	278.97	1425.73	151.51	12.06
8.49	12.56	9.41					
11	Chan		278.97	291.03	1408.52	150.48	12.07
8.38	12.48	9.36					
12	Chan		291.03	303.08	1241.09	139.70	12.12
7.39	11.59	8.88					
13	Chan		303.08	315.14	1028.76	124.83	12.12
6.12	10.35	8.24					

```
14          Chan        315.14      327.20        832.67      109.95      12.12
4.96        9.12        7.57
15          ROB         327.20      340.98        467.50       96.96      14.09
2.78        7.04        4.82
16          ROB         340.98      354.76        190.32       56.55      14.09
1.13        4.10        3.37
17          ROB         354.76      368.55         25.80       16.34      12.67
0.15        1.32        1.58


BRIDGE


RIVER: Los Penasquitos
REACH: Lower                RS: 1626

INPUT
Description: N Interstate 805 Bridge
Distance from Upstream XS =       1
Deck/Roadway Width        =      66
Weir Coefficient          =     2.5
Upstream  Deck/Roadway Coordinates
    num=        3
     Sta Hi Cord Lo Cord     Sta Hi Cord Lo Cord     Sta Hi Cord Lo Cord
       0   49.23   43.23     209   48.13   42.13   478.8   49.33   43.33

Upstream Bridge Cross Section Data
Station Elevation Data    num=      12
     Sta    Elev     Sta    Elev     Sta    Elev     Sta    Elev     Sta    Elev
       0   48.13   135.3   46.13   182.5   32.13     190  28.747   195.8   28.13
     240   27.93   288.1   28.13     290  28.324     295  28.836   327.2   32.13
   374.2   42.13   478.8   49.33

Manning's n Values        num=       3
     Sta   n Val     Sta   n Val     Sta   n Val
       0    .045   182.5     .04   327.2    .045

Bank Sta: Left   Right    Coeff Contr.   Expan.
         182.5   327.2             .1       .3
Ineffective Flow     num=       1
   Sta L   Sta R    Elev  Permanent
       0     145                T
Skew Angle = 20
Sediment Elevation = 2.13

Downstream  Deck/Roadway Coordinates
    num=        3
     Sta Hi Cord Lo Cord     Sta Hi Cord Lo Cord     Sta Hi Cord Lo Cord
       0   49.23   43.23     209   48.13   42.13   457.6   50.13   44.13

Downstream Bridge Cross Section Data
Station Elevation Data    num=      11
     Sta    Elev     Sta    Elev     Sta    Elev     Sta    Elev     Sta    Elev
       0   49.23   171.9   46.13   181.7   42.13   209.7   34.13   231.3   26.13
     263   25.93     295   26.13   353.8   34.13     379   42.13   457.6   50.13
   619.6   52.13

Manning's n Values        num=       3
     Sta   n Val     Sta   n Val     Sta   n Val
       0    .045   209.7     .03   353.8    .045

Bank Sta: Left   Right    Coeff Contr.   Expan.
```

```
        209.7   353.8              .1       .3
Skew Angle = 20
Sediment Elevation = 2.13

Upstream Embankment side slope                =       0 horiz. to 1.0 vertical
Downstream Embankment side slope              =       0 horiz. to 1.0 vertical
Maximum allowable submergence for weir flow =     .95
Elevation at which weir flow begins           =
Energy head used in spillway design           =
Spillway height used in design                =
Weir crest shape                              = Broad Crested

Number of Piers =  1

Pier Data
Pier Station     Upstream=   252.5    Downstream=   276.6
Upstream     num=       2
    Width   Elev    Width   Elev
     5.5   24.93     5.5   43.33
Downstream     num=       2
    Width   Elev    Width   Elev
       5   24.93       5   43.33

Number of Bridge Coefficient Sets =  1

Low Flow Methods and Data
       Energy
       Momentum                Cd   =     1.2
       Yarnell                 KVal =    1.05
Selected Low Flow Methods = Highest Energy Answer

High Flow Method
       Pressure and Weir flow
           Submerged Inlet Cd          =
           Submerged Inlet + Outlet Cd =       .8
           Max Low Cord                =

Additional Bridge Parameters
       Add Friction component to Momentum
       Do not add Weight component to Momentum
       Class B flow critical depth computations use critical depth
           inside the bridge at the upstream end
       Criteria to check for pressure flow = Upstream energy grade line

BRIDGE OUTPUT  Profile #100-yr


  E.G. US. (ft)                 41.84    Element                 Inside BR US
Inside BR DS
  W.S. US. (ft)                 40.63    E.G. Elev (ft)                41.80
41.32
  Q Total (cfs)              16800.00    W.S. Elev (ft)                40.48
39.61
  Q Bridge (cfs)             16800.00    Crit W.S. (ft)                36.53
36.14
  Q Weir (cfs)                           Max Chl Dpth (ft)             12.55
13.68
  Weir Sta Lft (ft)                      Vel Total (ft/s)               8.79
10.13
  Weir Sta Rgt (ft)                      Flow Area (sq ft)           1911.41
1659.14
  Weir Submerg                           Froude # Chl                   0.49
 0.56
```

Weir Max Depth (ft)		Specif Force (cu ft)	15188.02
14870.15			
Min El Weir Flow (ft)	48.14	Hydr Depth (ft)	9.25
9.45			
Min El Prs (ft)	42.92	W.P. Total (ft)	234.64
206.33			
Delta EG (ft)	0.53	Conv. Total (cfs)	302224.9
347007.4			
Delta WS (ft)	0.86	Top Width (ft)	206.59
175.54			
BR Open Area (sq ft)	2248.09	Frctn Loss (ft)	
BR Open Vel (ft/s)	10.13	C & E Loss (ft)	
Coef of Q		Shear Total (lb/sq ft)	1.57
1.18			
Br Sel Method	Momentum	Power Total (lb/ft s)	13.81
11.91			

CROSS SECTION

RIVER: Los Penasquitos
REACH: Lower RS: 1584.6

INPUT
Description: #1591 - Downstream NB Interstate 805
Station Elevation Data num= 11

Sta	Elev	Sta	Elev	Sta	Elev	Sta	Elev	Sta	Elev
0	49.23	171.9	46.13	181.7	42.13	209.7	34.13	231.3	26.13
263	25.93	295	26.13	353.8	34.13	379	42.13	457.6	50.13
619.6	52.13								

Manning's n Values num= 3

Sta	n Val	Sta	n Val	Sta	n Val
0	.045	209.7	.03	353.8	.045

Bank Sta: Left	Right	Lengths: Left	Channel	Right	Coeff Contr.	Expan.
209.7	353.8	3.6	3.6	3.6	.1	.3

Skew Angle = 20
Sediment Elevation = 2.13

CROSS SECTION OUTPUT Profile #100-yr

E.G. Elev (ft)	41.31	Element	Left OB	Channel	Right OB
Vel Head (ft)	1.53	Wt. n-Val.	0.045	0.030	0.045
W.S. Elev (ft)	39.77	Reach Len. (ft)	3.60	3.60	3.60
Crit W.S. (ft)		Flow Area (sq ft)	55.73	1650.74	50.15
E.G. Slope (ft/ft)	0.001611	Area (sq ft)	55.73	1650.74	50.15
Q Total (cfs)	16800.00	Flow (cfs)	143.69	16527.75	128.56
Top Width (ft)	181.63	Top Width (ft)	19.75	144.10	17.78
Vel Total (ft/s)	9.56	Avg. Vel. (ft/s)	2.58	10.01	2.56

Max Chl Dpth (ft)	13.84	Hydr. Depth (ft)	2.82	11.46	2.82
Conv. Total (cfs)	418515.3	Conv. (cfs)	3579.4	411733.2	3202.7
Length Wtd. (ft)	3.60	Wetted Per. (ft)	20.54	146.08	18.65
Min Ch El (ft)	25.93	Shear (lb/sq ft)	0.27	1.14	0.27
Alpha	1.08	Stream Power (lb/ft s)	0.70	11.38	0.69
Frctn Loss (ft)	0.01	Cum Volume (acre-ft)	11.54	20.46	1.09
C & E Loss (ft)	0.00	Cum SA (acres)	3.75	1.91	0.34

Profile #100-yr

Percent Conv	Pos Hydr Depth(ft)	Velocity (ft/s)	Left Sta (ft)	Right Sta (ft)	Flow (cfs)	Area (sq ft)	W.P. (ft)
1	LOB	0.27	171.57	190.64	0.02	0.07	0.71
0.00	0.10						
2	LOB	2.58	190.64	209.70	143.67	55.66	19.83
0.86	2.92						
3	Chan	7.30	209.70	221.71	689.89	94.47	12.81
4.11	7.87						
4	Chan	9.88	221.71	233.72	1450.64	146.81	12.65
8.63	12.23						
5	Chan	11.03	233.72	245.73	1814.34	164.47	12.01
10.80	13.70						
6	Chan	11.07	245.73	257.73	1831.10	165.38	12.01
10.90	13.77						
7	Chan	11.10	257.73	269.74	1842.63	166.00	12.01
10.97	13.82						
8	Chan	11.07	269.74	281.75	1829.20	165.28	12.01
10.89	13.76						
9	Chan	11.03	281.75	293.76	1812.60	164.37	12.01
10.79	13.69						
10	Chan	10.59	293.76	305.77	1651.37	155.95	12.11
9.83	12.99						
11	Chan	9.68	305.77	317.78	1320.64	136.43	12.12
7.86	11.36						
12	Chan	8.73	317.78	329.78	1019.54	116.81	12.12
6.07	9.73						
13	Chan	7.72	329.78	341.79	750.44	97.19	12.12
4.47	8.09						
14	Chan	6.64	341.79	353.80	515.37	77.57	12.12
3.07	6.46						
15	ROB	2.56	353.80	377.96	128.56	50.15	18.65
0.77	2.82						

CROSS SECTION

RIVER: Los Penasquitos
REACH: Lower RS: 1581

INPUT
Description:
Station Elevation Data num= 11

Sta	Elev	Sta	Elev	Sta	Elev	Sta	Elev	Sta	Elev
0	49.23	176.9	46.13	186.7	42.13	214.7	34.13	236.3	26.13
268	25.93	300	26.13	358.8	34.13	384	42.13	462.6	50.13
612.2	52.13								

Manning's n Values num= 3

Sta	n Val	Sta	n Val	Sta	n Val
0	.045	214.7	.03	358.8	.045

Bank Sta: Left	Right	Lengths: Left	Channel	Right	Coeff Contr.	Expan.
214.7	358.8	2.75	2.75	2.75	.1	.3

Skew Angle = 20
Sediment Elevation = 2.13

CROSS SECTION OUTPUT Profile #100-yr

E.G. Elev (ft)	41.30	Element	Left OB	Channel	Right OB
Vel Head (ft)	1.54	Wt. n-Val.	0.045	0.030	0.045
W.S. Elev (ft)	39.76	Reach Len. (ft)	2.75	2.75	2.75
Crit W.S. (ft)		Flow Area (sq ft)	55.55	1649.44	50.00
E.G. Slope (ft/ft)	0.001616	Area (sq ft)	55.55	1649.44	50.00
Q Total (cfs)	16800.00	Flow (cfs)	143.27	16528.54	128.19
Top Width (ft)	181.57	Top Width (ft)	19.72	144.10	17.75
Vel Total (ft/s)	9.57	Avg. Vel. (ft/s)	2.58	10.02	2.56
Max Chl Dpth (ft)	13.83	Hydr. Depth (ft)	2.82	11.45	2.82
Conv. Total (cfs)	417949.3	Conv. (cfs)	3564.3	411195.9	3189.2
Length Wtd. (ft)	2.75	Wetted Per. (ft)	20.51	146.08	18.62
Min Ch El (ft)	25.93	Shear (lb/sq ft)	0.27	1.14	0.27
Alpha	1.08	Stream Power (lb/ft s)	0.70	11.41	0.69
Frctn Loss (ft)	0.01	Cum Volume (acre-ft)	11.53	20.32	1.09
C & E Loss (ft)	0.10	Cum SA (acres)	3.75	1.90	0.34

Warning: The velocity head has changed by more than 0.5 ft (0.15 m). This may indicate the need for
additional cross sections.
Warning: The conveyance ratio (upstream conveyance divided by downstream conveyance) is less than
0.7 or greater than 1.4. This may indicate the need for additional cross sections.

Profile #100-yr

Percent Conv	Pos Hydr Depth(ft)	Velocity (ft/s)	Left Sta (ft)	Right Sta (ft)	Flow (cfs)	Area (sq ft)	W.P. (ft)
1	LOB		175.66	195.18	0.00	0.01	0.21
0.00	0.03	0.12					
2	LOB		195.18	214.70	143.27	55.54	20.30
0.85	2.85	2.58					
3	Chan		214.70	226.71	689.48	94.36	12.81
4.10	7.86	7.31					
4	Chan		226.71	238.72	1450.76	146.70	12.65
8.64	12.22	9.89					
5	Chan		238.72	250.73	1814.72	164.36	12.01
10.80	13.69	11.04					
6	Chan		250.73	262.73	1831.50	165.27	12.01
10.90	13.76	11.08					
7	Chan		262.73	274.74	1843.04	165.89	12.01
10.97	13.81	11.11					
8	Chan		274.74	286.75	1829.60	165.17	12.01
10.89	13.75	11.08					
9	Chan		286.75	298.76	1812.99	164.27	12.01
10.79	13.68	11.04					
10	Chan		298.76	310.77	1651.62	155.84	12.11
9.83	12.98	10.60					
11	Chan		310.77	322.78	1320.62	136.32	12.12
7.86	11.35	9.69					
12	Chan		322.78	334.78	1019.31	116.70	12.12
6.07	9.72	8.73					
13	Chan		334.78	346.79	750.04	97.08	12.12
4.46	8.08	7.73					
14	Chan		346.79	358.80	514.85	77.47	12.12
3.06	6.45	6.65					
15	ROB		358.80	381.84	128.19	50.00	18.62
0.76	2.82	2.56					

Warning: The velocity head has changed by more than 0.5 ft (0.15 m). This may indicate the need for
additional cross sections.
Warning: The conveyance ratio (upstream conveyance divided by downstream conveyance) is less than
0.7 or greater than 1.4. This may indicate the need for additional cross sections.

CROSS SECTION

RIVER: Los Penasquitos
REACH: Lower RS: 1578.2

INPUT
Description: #1584 - NB Interstate 5 Piers
Station Elevation Data num= 11

Sta	Elev	Sta	Elev	Sta	Elev	Sta	Elev	Sta	Elev
0	49.23	176.9	46.13	186.7	42.13	214.7	34.13	236.3	26.13
268	25.93	300	26.13	358.8	34.13	384	42.13	462.6	50.13
612.2	52.13								

Manning's n Values num= 3

Sta	n Val	Sta	n Val	Sta	n Val
0	.045	214.7	.03	358.8	.045

```
Bank Sta: Left   Right    Lengths: Left Channel   Right     Coeff Contr.   Expan.
         214.7   358.8             2.75    2.75    2.75             .1       .3
Blocked Obstructions     num=       4
   Sta L   Sta R    Elev   Sta L   Sta R    Elev   Sta L   Sta R    Elev
  304.75  310.25   57.13   240.3   245.8   57.13  279.85  285.35   57.13
  199.95  205.45   57.13
Skew Angle = 20
Sediment Elevation = 2.13
```

CROSS SECTION OUTPUT Profile #100-yr

```
  E.G. Elev (ft)              41.20    Element                    Left OB    Channel
Right OB
  Vel Head (ft)                2.50    Wt. n-Val.                  0.045      0.030
  0.045
  W.S. Elev (ft)              38.70    Reach Len. (ft)              2.75       2.75
   2.75
  Crit W.S. (ft)                       Flow Area (sq ft)           30.27    1293.51
  32.90
  E.G. Slope (ft/ft)        0.005637   Area (sq ft)                30.27    1293.51
  32.90
  Q Total (cfs)             16800.00   Flow (cfs)                 141.10   16521.86
 137.04
  Top Width (ft)              152.49   Top Width (ft)              10.50     127.60
  14.40
  Vel Total (ft/s)             12.38   Avg. Vel. (ft/s)             4.66      12.77
   4.17
  Max Chl Dpth (ft)            12.77   Hydr. Depth (ft)             2.88      10.14
   2.29
  Conv. Total (cfs)         223757.5   Conv. (cfs)                1879.3   220052.9
 1825.2
  Length Wtd. (ft)              2.75   Wetted Per. (ft)            13.20     203.21
  15.10
  Min Ch El (ft)               25.93   Shear (lb/sq ft)             0.81       2.24
   0.77
  Alpha                         1.05   Stream Power (lb/ft s)       3.76      28.61
   3.19
  Frctn Loss (ft)               0.01   Cum Volume (acre-ft)        11.53      20.23
   1.08
  C & E Loss (ft)               0.24   Cum SA (acres)               3.75       1.89
   0.34
```

Warning: Divided flow computed for this cross-section.
Warning: The velocity head has changed by more than 0.5 ft (0.15 m). This may indicate the need for
additional cross sections.
Warning: The conveyance ratio (upstream conveyance divided by downstream conveyance) is less than
0.7 or greater than 1.4. This may indicate the need for additional cross sections.

Profile #100-yr

```
              Pos          Left Sta    Right Sta       Flow       Area       W.P.
Percent       Hydr   Velocity
                           (ft)        (ft)           (cfs)    (sq ft)       (ft)
  Conv  Depth(ft)     (ft/s)
  1           LOB         195.18      214.70         141.10      30.27      13.20
```

```
  0.84       2.88       4.66
  2           Chan        214.70      226.71       858.04      81.58      12.81
  5.11       6.79      10.52
  3           Chan        226.71      238.72      1976.68     133.93      12.65
 11.77      11.15      14.76
  4           Chan        238.72      250.73       474.60      82.21      31.73
  2.83      12.63       5.77
  5           Chan        250.73      262.73      2540.16     152.50      12.01
 15.12      12.70      16.66
  6           Chan        262.73      274.74      2557.52     153.12      12.01
 15.22      12.75      16.70
  7           Chan        274.74      286.75       477.55      82.66      31.87
  2.84      12.70       5.78
  8           Chan        286.75      298.76      2512.35     151.49      12.01
 14.95      12.62      16.58
  9           Chan        298.76      310.77       469.91      79.54      29.66
  2.80      12.22       5.91
  10          Chan        310.77      322.78      1777.63     123.55      12.12
 10.58      10.29      14.39
  11          Chan        322.78      334.78      1332.52     103.93      12.12
  7.93       8.65      12.82
  12          Chan        334.78      346.79       940.25      84.31      12.12
  5.60       7.02      11.15
  13          Chan        346.79      358.80       604.66      64.69      12.12
  3.60       5.39       9.35
  14          ROB         358.80      381.84       137.04      32.90      15.10
  0.82       2.29       4.17


Warning: Divided flow computed for this cross-section.
Warning: The velocity head has changed by more than 0.5 ft (0.15 m).  This may
indicate the need for
         additional cross sections.
Warning: The conveyance ratio (upstream conveyance divided by downstream conveyance)
is less than
         0.7 or greater than 1.4.  This may indicate the need for additional cross
sections.

CROSS SECTION


RIVER: Los Penasquitos
REACH: Lower              RS: 1575.4

INPUT
Description: #1581 - Upstream SB Interstate 805
Station Elevation Data    num=      11
     Sta    Elev     Sta    Elev     Sta    Elev     Sta    Elev     Sta    Elev
       0   49.23   176.9   46.13   186.7   42.13   214.7   34.13   236.3   26.13
     268   25.93     300   26.13   358.8   34.13     384   42.13   462.6   50.13
   612.2   52.13

Manning's n Values        num=       3
     Sta   n Val     Sta   n Val     Sta   n Val
       0    .045   214.7     .03   358.8    .045

Bank Sta: Left   Right    Lengths: Left Channel   Right     Coeff Contr.   Expan.
         214.7   358.8                80    88.7      86              .1       .3
Skew Angle = 20
Sediment Elevation = 2.13

CROSS SECTION OUTPUT  Profile #100-yr
```

E.G. Elev (ft)	40.95	Element	Left OB	Channel
Right OB				
Vel Head (ft)	1.70	Wt. n-Val.	0.045	0.030
0.045				
W.S. Elev (ft)	39.25	Reach Len. (ft)	3.00	3.00
3.00				
Crit W.S. (ft)	35.82	Flow Area (sq ft)	45.85	1575.14
41.26				
E.G. Slope (ft/ft)	0.001894	Area (sq ft)	45.85	1575.14
41.26				
Q Total (cfs)	16800.00	Flow (cfs)	120.09	16572.46
107.45				
Top Width (ft)	178.14	Top Width (ft)	17.91	144.10
16.12				
Vel Total (ft/s)	10.11	Avg. Vel. (ft/s)	2.62	10.52
2.60				
Max Chl Dpth (ft)	13.32	Hydr. Depth (ft)	2.56	10.93
2.56				
Conv. Total (cfs)	386016.3	Conv. (cfs)	2759.3	380788.1
2468.9				
Length Wtd. (ft)	3.00	Wetted Per. (ft)	18.63	146.08
16.92				
Min Ch El (ft)	25.93	Shear (lb/sq ft)	0.29	1.28
0.29				
Alpha	1.07	Stream Power (lb/ft s)	0.76	13.42
0.75				
Frctn Loss (ft)		Cum Volume (acre-ft)	11.53	20.14
1.08				
C & E Loss (ft)		Cum SA (acres)	3.75	1.88
0.34				

Profile #100-yr

Percent Conv	Pos Hydr Depth(ft)	Velocity (ft/s)	Left Sta (ft)	Right Sta (ft)	Flow (cfs)	Area (sq ft)	W.P. (ft)
1	LOB		195.18	214.70	120.09	45.85	18.63
0.71	2.56	2.62					
2	Chan		214.70	226.71	664.75	88.17	12.81
3.96	7.34	7.54					
3	Chan		226.71	238.72	1457.63	140.51	12.65
8.68	11.70	10.37					
4	Chan		238.72	250.73	1837.72	158.17	12.01
10.94	13.17	11.62					
5	Chan		250.73	262.73	1855.37	159.08	12.01
11.04	13.25	11.66					
6	Chan		262.73	274.74	1867.52	159.70	12.01
11.12	13.30	11.69					
7	Chan		274.74	286.75	1853.38	158.98	12.01
11.03	13.24	11.66					
8	Chan		286.75	298.76	1835.90	158.07	12.01
10.93	13.16	11.61					
9	Chan		298.76	310.77	1666.59	149.65	12.11
9.92	12.46	11.14					
10	Chan		310.77	322.78	1319.46	130.13	12.12
7.85	10.84	10.14					
11	Chan		322.78	334.78	1004.87	110.51	12.12

```
5.98        9.20        9.09
12           Chan        334.78      346.79        725.51      90.89      12.12
4.32        7.57        7.98
13           Chan        346.79      358.80        483.77      71.27      12.12
2.88        5.94        6.79
14           ROB         358.80      381.84        107.45      41.26      16.92
0.64        2.56        2.60


BRIDGE


RIVER: Los Penasquitos
REACH: Lower                RS: 1537

INPUT
Description: S Interstate 805 Bridge
Distance from Upstream XS =        3
Deck/Roadway Width        =       68
Weir Coefficient          =      2.5
Upstream  Deck/Roadway Coordinates
    num=        2
     Sta Hi Cord Lo Cord     Sta Hi Cord Lo Cord
       0   49.23   43.33   462.6   50.13   44.13

Upstream Bridge Cross Section Data
Station Elevation Data    num=       11
     Sta    Elev     Sta    Elev     Sta    Elev     Sta    Elev     Sta    Elev
       0   49.23   176.9   46.13   186.7   42.13   214.7   34.13   236.3   26.13
     268   25.93     300   26.13   358.8   34.13     384   42.13   462.6   50.13
   612.2   52.13

Manning's n Values        num=        3
     Sta   n Val     Sta   n Val     Sta   n Val
       0    .045   214.7     .03   358.8    .045

Bank Sta: Left   Right    Coeff Contr.   Expan.
         214.7   358.8              .1       .3
Skew Angle = 20
Sediment Elevation = 2.13

Downstream  Deck/Roadway Coordinates
    num=        2
     Sta Hi Cord Lo Cord     Sta Hi Cord Lo Cord
     150   50.13   44.13   448.9   50.13   44.13

Downstream Bridge Cross Section Data
Station Elevation Data    num=       19
     Sta    Elev     Sta    Elev     Sta    Elev     Sta    Elev     Sta    Elev
       0   52.13   101.5   53.13     125   52.13     150   50.13     181   48.13
     194   42.13   202.7   40.13     219   38.13   230.9   32.13  235.75   30.12
   245.3   26.13     275   25.93     305   26.13   332.5   28.13   365.3   30.13
   368.7   32.13     387   42.13   448.9   50.13   598.9   52.13

Manning's n Values        num=        3
     Sta   n Val     Sta   n Val     Sta   n Val
       0    .045  235.75     .03   365.3    .045

Bank Sta: Left   Right    Coeff Contr.   Expan.
        235.75   365.3              .1       .3
Ineffective Flow     num=        1
   Sta L   Sta R    Elev  Permanent
```

```
       0   181.9                T
Skew Angle = 20
Sediment Elevation = 2.13

Upstream Embankment side slope                =       0 horiz. to 1.0 vertical
Downstream Embankment side slope              =       0 horiz. to 1.0 vertical
Maximum allowable submergence for weir flow =      .95
Elevation at which weir flow begins           =   48.33
Energy head used in spillway design           =
Spillway height used in design                =
Weir crest shape                              = Broad Crested

Number of Piers =  1

Pier Data
Pier Station     Upstream=   288.2    Downstream=   281.2
Upstream     num=       2
    Width   Elev    Width   Elev
       5   24.93       5   50.93
Downstream     num=       2
    Width   Elev    Width   Elev
       5   24.93       5   50.93

Number of Bridge Coefficient Sets =  1

Low Flow Methods and Data
       Energy
       Momentum                Cd   =     1.2
       Yarnell                 KVal =    1.05
Selected Low Flow Methods = Highest Energy Answer

High Flow Method
       Pressure and Weir flow
           Submerged Inlet Cd          =
           Submerged Inlet + Outlet Cd =      .8
           Max Low Cord                =

Additional Bridge Parameters
       Add Friction component to Momentum
       Do not add Weight component to Momentum
       Class B flow critical depth computations use critical depth
           inside the bridge at the upstream end
       Criteria to check for pressure flow = Upstream energy grade line

BRIDGE OUTPUT  Profile #100-yr


  E.G. US. (ft)                 40.95    Element                 Inside BR US
Inside BR DS
  W.S. US. (ft)                 39.25    E.G. Elev (ft)                40.88
40.23
  Q Total (cfs)             16800.00    W.S. Elev (ft)                38.91
38.00
  Q Bridge (cfs)            16800.00    Crit W.S. (ft)                36.14
35.54
  Q Weir (cfs)                          Max Chl Dpth (ft)             12.98
12.07
  Weir Sta Lft (ft)                     Vel Total (ft/s)              10.93
11.50
  Weir Sta Rgt (ft)                     Flow Area (sq ft)           1537.64
1460.43
  Weir Submerg                          Froude # Chl                  0.62
 0.65
```

Weir Max Depth (ft)	13843.68	Specif Force (cu ft)	14154.15
Min El Weir Flow (ft)	50.14	Hydr Depth (ft)	9.00
Min El Prs (ft)	44.03	W.P. Total (ft)	199.96
Delta EG (ft)	0.78	Conv. Total (cfs)	312125.2
Delta WS (ft)	1.09	Top Width (ft)	170.87
BR Open Area (sq ft)	2468.63	Frctn Loss (ft)	
BR Open Vel (ft/s)	11.50	C & E Loss (ft)	
Coef of Q	1.61	Shear Total (lb/sq ft)	1.39
Br Sel Method	Momentum	Power Total (lb/ft s)	18.48

CROSS SECTION

RIVER: Los Penasquitos
REACH: Lower RS: 1492.7

INPUT
Description: #1493 - Downstream SB Interstate 805
Station Elevation Data num= 19

Sta	Elev	Sta	Elev	Sta	Elev	Sta	Elev	Sta	Elev
0	52.13	101.5	53.13	125	52.13	150	50.13	181	48.13
194	42.13	202.7	40.13	219	38.13	230.9	32.13	235.75	30.12
245.3	26.13	275	25.93	305	26.13	332.5	28.13	365.3	30.13
368.7	32.13	387	42.13	448.9	50.13	598.9	52.13		

Manning's n Values num= 3

Sta	n Val	Sta	n Val	Sta	n Val
0	.045	235.75	.03	365.3	.045

Bank Sta: Left	Right	Lengths: Left	Channel	Right	Coeff Contr.	Expan.
235.75	365.3	117	85.1	41.1	.1	.3

Ineffective Flow num= 1

Sta L	Sta R	Elev	Permanent
0	181.9		T

Skew Angle = 20
Sediment Elevation = 2.13

CROSS SECTION OUTPUT Profile #100-yr

E.G. Elev (ft)	40.17	Element	Left OB	Channel	Right OB
Vel Head (ft)	2.00	Wt. n-Val.	0.045	0.030	0.045
W.S. Elev (ft)	38.16	Reach Len. (ft)	117.00	85.10	41.10
Crit W.S. (ft)		Flow Area (sq ft)	70.22	1419.80	57.21
E.G. Slope (ft/ft)	0.002237	Area (sq ft)	70.22	1419.80	57.21
Q Total (cfs)	16800.00	Flow (cfs)	263.60	16331.95	204.45

Top Width (ft)	161.00	Top Width (ft)	17.01	129.55
14.44				
Vel Total (ft/s)	10.86	Avg. Vel. (ft/s)	3.75	11.50
3.57				
Max Chl Dpth (ft)	12.23	Hydr. Depth (ft)	4.13	10.96
3.96				
Conv. Total (cfs)	355209.3	Conv. (cfs)	5573.4	345313.1
4322.8				
Length Wtd. (ft)	84.87	Wetted Per. (ft)	18.84	130.48
16.52				
Min Ch El (ft)	25.93	Shear (lb/sq ft)	0.52	1.52
0.48				
Alpha	1.09	Stream Power (lb/ft s)	1.95	17.48
1.73				
Frctn Loss (ft)	0.19	Cum Volume (acre-ft)	11.41	17.29
0.99				
C & E Loss (ft)	0.01	Cum SA (acres)	3.71	1.61
0.31				

Profile #100-yr

Percent Conv	Pos Hydr Depth(ft)	Velocity (ft/s)	Left Sta (ft)	Right Sta (ft)	Flow (cfs)	Area (sq ft)	W.P. (ft)
1	LOB		217.80	235.75	263.60	70.22	18.84
1.57	4.13	3.75					
2	Chan		235.75	246.55	1159.40	110.85	11.60
6.90	10.27	10.46					
3	Chan		246.55	257.34	1593.61	130.38	10.80
9.49	12.08	12.22					
4	Chan		257.34	268.14	1609.63	131.17	10.80
9.58	12.15	12.27					
5	Chan		268.14	278.93	1623.59	131.85	10.80
9.66	12.21	12.31					
6	Chan		278.93	289.73	1614.13	131.39	10.80
9.61	12.17	12.29					
7	Chan		289.73	300.53	1598.25	130.61	10.80
9.51	12.10	12.24					
8	Chan		300.53	311.32	1554.13	128.51	10.81
9.25	11.90	12.09					
9	Chan		311.32	322.12	1398.82	120.70	10.82
8.33	11.18	11.59					
10	Chan		322.12	332.91	1239.00	112.22	10.82
7.37	10.39	11.04					
11	Chan		332.91	343.71	1100.43	104.48	10.82
6.55	9.68	10.53					
12	Chan		343.71	354.50	978.53	97.38	10.82
5.82	9.02	10.05					
13	Chan		354.50	365.30	862.42	90.27	10.82
5.13	8.36	9.55					
14	ROB		365.30	386.54	204.45	57.21	16.52
1.22	3.96	3.57					

CROSS SECTION

RIVER: Los Penasquitos

REACH: Lower RS: 1407.6

INPUT
Description:
Station Elevation Data num= 15

Sta	Elev	Sta	Elev	Sta	Elev	Sta	Elev	Sta	Elev
0	48.13	78.4	46.13	101.6	44.13	197.8	44.83	212.3	41.53
225.6	38.13	244.1	34.13	250	30.354	256.6	26.13	290	25.93
357.5	26.13	370	30.349	381.2	34.13	406.3	42.13	443.5	52.13

Manning's n Values num= 3

Sta	n Val	Sta	n Val	Sta	n Val
0	.045	250	.03	370	.045

Bank Sta: Left	Right	Lengths: Left	Channel	Right	Coeff Contr.	Expan.
250	370	5.5	5.5	5.5	.1	.3

Ineffective Flow num= 1

Sta L	Sta R	Elev	Permanent
0	179.4		T

Sediment Elevation = 2.13

CROSS SECTION OUTPUT Profile #100-yr

E.G. Elev (ft)	39.96	Element	Left OB	Channel	Right OB
Vel Head (ft)	2.12	Wt. n-Val.	0.045	0.030	0.045
W.S. Elev (ft)	37.84	Reach Len. (ft)	5.50	5.50	5.50
Crit W.S. (ft)		Flow Area (sq ft)	64.85	1374.93	84.31
E.G. Slope (ft/ft)	0.002265	Area (sq ft)	64.85	1374.93	84.31
Q Total (cfs)	16800.00	Flow (cfs)	194.70	16299.42	305.88
Top Width (ft)	165.90	Top Width (ft)	23.06	120.00	22.84
Vel Total (ft/s)	11.02	Avg. Vel. (ft/s)	3.00	11.85	3.63
Max Chl Dpth (ft)	11.91	Hydr. Depth (ft)	2.81	11.46	3.69
Conv. Total (cfs)	352970.0	Conv. (cfs)	4090.8	342452.6	6426.6
Length Wtd. (ft)	5.50	Wetted Per. (ft)	24.56	121.93	24.04
Min Ch El (ft)	25.93	Shear (lb/sq ft)	0.37	1.59	0.50
Alpha	1.12	Stream Power (lb/ft s)	1.12	18.91	1.80
Frctn Loss (ft)	0.01	Cum Volume (acre-ft)	11.23	14.56	0.92
C & E Loss (ft)	0.00	Cum SA (acres)	3.66	1.37	0.29

Profile #100-yr

Percent	Pos Hydr	Velocity	Left Sta (ft)	Right Sta (ft)	Flow (cfs)	Area (sq ft)	W.P. (ft)

Conv Depth(ft) (ft/s)

CROSS SECTION

RIVER: Los Penasquitos
REACH: Lower RS: 1402.1

INPUT
Description: #1402 - Proposed Interstate 5 Flyover Bridge Piers
Station Elevation Data num= 15

Sta	Elev	Sta	Elev	Sta	Elev	Sta	Elev	Sta	Elev
0	48.13	78.4	46.13	101.6	44.13	197.8	44.83	212.3	41.53
225.6	38.13	244.1	34.13	250	30.354	256.6	26.13	290	25.93
357.5	26.13	370	30.349	381.2	34.13	406.3	42.13	443.5	52.13

Manning's n Values num= 3

Sta	n Val	Sta	n Val	Sta	n Val
0	.045	250	.03	370	.045

Bank Sta: Left	Right	Lengths: Left	Channel	Right	Coeff Contr.	Expan.
250	370	5.5	5.5	5.5	.1	.3

Ineffective Flow num= 1

Sta L	Sta R	Elev	Permanent
0	179.4		T

Blocked Obstructions num= 2

Sta L	Sta R	Elev	Sta L	Sta R	Elev
227.91	236.21	53	421	433.3	53

Sediment Elevation = 2.13

CROSS SECTION OUTPUT Profile #100-yr

E.G. Elev (ft)	39.95	Element	Left OB	Channel	Right OB
Vel Head (ft)	2.13	Wt. n-Val.	0.045	0.030	0.045
W.S. Elev (ft)	37.82	Reach Len. (ft)	5.50	5.50	5.50
Crit W.S. (ft)		Flow Area (sq ft)	55.37	1372.54	83.85
E.G. Slope (ft/ft)	0.002280	Area (sq ft)	55.37	1372.54	83.85
Q Total (cfs)	16800.00	Flow (cfs)	190.93	16304.41	304.67
Top Width (ft)	157.44	Top Width (ft)	14.66	120.00	22.78
Vel Total (ft/s)	11.11	Avg. Vel. (ft/s)	3.45	11.88	3.63
Max Chl Dpth (ft)	11.89	Hydr. Depth (ft)	3.78	11.44	3.68
Conv. Total (cfs)	351839.8	Conv. (cfs)	3998.5	341460.7	6380.6
Length Wtd. (ft)	5.50	Wetted Per. (ft)	18.14	121.93	23.97
Min Ch El (ft)	25.93	Shear (lb/sq ft)	0.43	1.60	0.50
Alpha	1.11	Stream Power (lb/ft s)	1.50	19.03	1.81

Frctn Loss (ft)	0.01	Cum Volume (acre-ft)	11.23	14.39
0.91				
C & E Loss (ft)	0.00	Cum SA (acres)	3.66	1.35
0.29				

Warning: Divided flow computed for this cross-section.

Profile #100-yr

Percent Conv	Pos Hydr Depth(ft)	Velocity (ft/s)	Left Sta (ft)	Right Sta (ft)	Flow (cfs)	Area (sq ft)	W.P. (ft)
1	LOB		226.47	250.00	190.93	55.37	18.14
1.14	3.78	3.45					
2	Chan		250.00	260.00	1061.14	102.99	11.24
6.32	10.30	10.30					
3	Chan		260.00	270.00	1426.53	117.40	10.00
8.49	11.74	12.15					
4	Chan		270.00	280.00	1438.68	118.00	10.00
8.56	11.80	12.19					
5	Chan		280.00	290.00	1450.87	118.60	10.00
8.64	11.86	12.23					
6	Chan		290.00	300.00	1453.97	118.75	10.00
8.65	11.87	12.24					
7	Chan		300.00	310.00	1447.93	118.45	10.00
8.62	11.85	12.22					
8	Chan		310.00	320.00	1441.90	118.16	10.00
8.58	11.82	12.20					
9	Chan		320.00	330.00	1435.88	117.86	10.00
8.55	11.79	12.18					
10	Chan		330.00	340.00	1429.86	117.56	10.00
8.51	11.76	12.16					
11	Chan		340.00	350.00	1423.86	117.27	10.00
8.48	11.73	12.14					
12	Chan		350.00	360.00	1384.06	115.92	10.14
8.24	11.59	11.94					
13	Chan		360.00	370.00	909.73	91.58	10.55
5.42	9.16	9.93					
14	ROB		370.00	376.68	187.36	42.38	7.05
1.12	6.34	4.42					
15	ROB		376.68	383.36	90.42	27.35	7.04
0.54	4.09	3.31					
16	ROB		383.36	390.05	26.00	12.93	7.01
0.15	1.94	2.01					
17	ROB		390.05	396.73	0.88	1.19	2.87
0.01	0.44	0.74					

Warning: Divided flow computed for this cross-section.

CROSS SECTION

RIVER: Los Penasquitos
REACH: Lower RS: 1396.6

INPUT
Description:

Station Elevation Data num= 15

Sta	Elev	Sta	Elev	Sta	Elev	Sta	Elev	Sta	Elev
0	48.13	78.4	46.13	101.6	44.13	197.8	44.83	212.3	41.53
225.6	38.13	244.1	34.13	250	30.354	256.6	26.13	290	25.93
357.5	26.13	370	30.349	381.2	34.13	406.3	42.13	443.5	52.13

Manning's n Values num= 3

Sta	n Val	Sta	n Val	Sta	n Val
0	.045	250	.03	370	.045

Bank Sta: Left	Right	Lengths: Left	Channel	Right	Coeff Contr.	Expan.
250	370	37.9	36.6	33.9	.1	.3

Ineffective Flow num= 1

Sta L	Sta R	Elev	Permanent
0	179.4		T

Sediment Elevation = 2.13

CROSS SECTION OUTPUT Profile #100-yr

E.G. Elev (ft)	39.94	Element	Left OB	Channel
Right OB				
Vel Head (ft)	2.14	Wt. n-Val.	0.045	0.030
0.045				
W.S. Elev (ft)	37.80	Reach Len. (ft)	37.90	36.60
33.90				
Crit W.S. (ft)		Flow Area (sq ft)	64.02	1370.59
83.48				
E.G. Slope (ft/ft)	0.002291	Area (sq ft)	64.02	1370.59
83.48				
Q Total (cfs)	16800.00	Flow (cfs)	192.52	16303.89
303.59				
Top Width (ft)	165.61	Top Width (ft)	22.89	120.00
22.73				
Vel Total (ft/s)	11.07	Avg. Vel. (ft/s)	3.01	11.90
3.64				
Max Chl Dpth (ft)	11.87	Hydr. Depth (ft)	2.80	11.42
3.67				
Conv. Total (cfs)	351019.8	Conv. (cfs)	4022.5	340654.0
6343.3				
Length Wtd. (ft)	36.57	Wetted Per. (ft)	24.39	121.93
23.92				
Min Ch El (ft)	25.93	Shear (lb/sq ft)	0.38	1.61
0.50				
Alpha	1.12	Stream Power (lb/ft s)	1.13	19.12
1.82				
Frctn Loss (ft)	0.08	Cum Volume (acre-ft)	11.22	14.21
0.90				
C & E Loss (ft)	0.08	Cum SA (acres)	3.66	1.34
0.29				

Profile #100-yr

Percent Conv	Pos Hydr Depth(ft)	Velocity (ft/s)	Left Sta (ft)	Right Sta (ft)	Flow (cfs)	Area (sq ft)	W.P. (ft)

CROSS SECTION

RIVER: Los Penasquitos
REACH: Lower RS: 1360

INPUT
Description:
Station Elevation Data num= 13

Sta	Elev	Sta	Elev	Sta	Elev	Sta	Elev	Sta	Elev
0	72.13	150	61.23	178.5	41.53	196.8	32.13	205	28.665
211	26.13	263.5	25.13	316	26.13	325	29.344	332.8	32.13
354	42.13	389	56.13	439	58.13				

Manning's n Values num= 3

Sta	n Val	Sta	n Val	Sta	n Val
0	.045	205	.03	325	.045

Bank Sta: Left	Right	Lengths: Left	Channel	Right	Coeff Contr.	Expan.
205	325	3.5	3.5	3.5	.1	.3

CROSS SECTION OUTPUT Profile #100-yr

E.G. Elev (ft)	39.78	Element	Left OB	Channel
Right OB				
Vel Head (ft)	1.85	Wt. n-Val.	0.045	0.030
0.045				
W.S. Elev (ft)	37.93	Reach Len. (ft)	3.50	3.50
3.50				
Crit W.S. (ft)		Flow Area (sq ft)	94.44	1446.02
91.69				
E.G. Slope (ft/ft)	0.001852	Area (sq ft)	94.44	1446.02
91.69				
Q Total (cfs)	16800.00	Flow (cfs)	358.97	16102.25
338.78				
Top Width (ft)	159.57	Top Width (ft)	19.48	120.00
20.09				
Vel Total (ft/s)	10.29	Avg. Vel. (ft/s)	3.80	11.14
3.69				
Max Chl Dpth (ft)	12.80	Hydr. Depth (ft)	4.85	12.05
4.56				
Conv. Total (cfs)	390405.0	Conv. (cfs)	8341.8	374190.5
7872.7				
Length Wtd. (ft)	3.50	Wetted Per. (ft)	21.59	121.09
21.87				
Min Ch El (ft)	25.13	Shear (lb/sq ft)	0.51	1.38
0.48				
Alpha	1.13	Stream Power (lb/ft s)	1.92	15.37
1.79				
Frctn Loss (ft)	0.01	Cum Volume (acre-ft)	11.15	13.03
0.83				
C & E Loss (ft)	0.01	Cum SA (acres)	3.64	1.24
0.27				

Profile #100-yr

Pos	Left Sta	Right Sta	Flow	Area	W.P.

Percent Conv	Hydr Depth(ft)	Velocity (ft/s)	(ft)	(ft)	(cfs)	(sq ft)	(ft)
1	LOB		167.73	186.36	0.09	0.18	0.95
0.00	0.22	0.46					
2	LOB		186.36	205.00	358.88	94.26	20.63
2.14	5.06	3.81					
3	Chan		205.00	215.00	1126.89	110.51	10.51
6.71	11.05	10.20					
4	Chan		215.00	225.00	1330.54	119.68	10.00
7.92	11.97	11.12					
5	Chan		225.00	235.00	1366.02	121.58	10.00
8.13	12.16	11.24					
6	Chan		235.00	245.00	1401.87	123.49	10.00
8.34	12.35	11.35					
7	Chan		245.00	255.00	1438.10	125.39	10.00
8.56	12.54	11.47					
8	Chan		255.00	265.00	1473.86	127.26	10.00
8.77	12.73	11.58					
9	Chan		265.00	275.00	1463.67	126.73	10.00
8.71	12.67	11.55					
10	Chan		275.00	285.00	1427.19	124.82	10.00
8.50	12.48	11.43					
11	Chan		285.00	295.00	1391.08	122.92	10.00
8.28	12.29	11.32					
12	Chan		295.00	305.00	1355.34	121.01	10.00
8.07	12.10	11.20					
13	Chan		305.00	315.00	1319.97	119.11	10.00
7.86	11.91	11.08					
14	Chan		315.00	325.00	1007.72	103.51	10.56
6.00	10.35	9.74					
15	ROB		325.00	335.36	293.51	69.39	11.12
1.75	6.70	4.23					
16	ROB		335.36	345.73	45.27	22.31	10.75
0.27	2.29	2.03					

CROSS SECTION

RIVER: Los Penasquitos
REACH: Lower RS: 1356.5

INPUT
Description: #1351 - SB I-5 to SB I-805 Truck Connector Piers
Station Elevation Data num= 13

Sta	Elev	Sta	Elev	Sta	Elev	Sta	Elev	Sta	Elev
0	72.13	150	61.23	178.5	41.53	196.8	32.13	205	28.665
211	26.13	263.5	25.13	316	26.13	325	29.344	332.8	32.13
354	42.13	389	56.13	439	58.13				

Manning's n Values num= 3

Sta	n Val	Sta	n Val	Sta	n Val
0	.045	205	.03	325	.045

Bank Sta: Left	Right	Lengths: Left	Channel	Right	Coeff Contr.	Expan.
205	325	3.5	3.5	3.5	.1	.3

Blocked Obstructions num= 1

Sta L	Sta R	Elev
196	203	77.13

CROSS SECTION OUTPUT Profile #100-yr

E.G. Elev (ft)	39.76	Element	Left OB	Channel	Right OB
Vel Head (ft)	2.00	Wt. n-Val.	0.045	0.030	0.045
W.S. Elev (ft)	37.76	Reach Len. (ft)	3.50	3.50	3.50
Crit W.S. (ft)		Flow Area (sq ft)	43.84	1425.85	88.35
E.G. Slope (ft/ft)	0.002007	Area (sq ft)	43.84	1425.85	88.35
Q Total (cfs)	16800.00	Flow (cfs)	89.49	16374.98	335.53
Top Width (ft)	151.89	Top Width (ft)	12.16	120.00	19.73
Vel Total (ft/s)	10.78	Avg. Vel. (ft/s)	2.04	11.48	3.80
Max Chl Dpth (ft)	12.63	Hydr. Depth (ft)	3.61	11.88	4.48
Conv. Total (cfs)	375019.4	Conv. (cfs)	1997.6	365531.9	7489.9
Length Wtd. (ft)	3.50	Wetted Per. (ft)	27.06	121.09	21.48
Min Ch El (ft)	25.13	Shear (lb/sq ft)	0.20	1.48	0.52
Alpha	1.11	Stream Power (lb/ft s)	0.41	16.94	1.96
Frctn Loss (ft)	0.01	Cum Volume (acre-ft)	11.14	12.92	0.82
C & E Loss (ft)	0.03	Cum SA (acres)	3.64	1.23	0.27

Warning: Divided flow computed for this cross-section.

Profile #100-yr

Conv	Pos Hydr	Left Sta (ft)	Right Sta (ft)	Flow (cfs)	Area (sq ft)	W.P. (ft)	Percent Depth(ft)	Velocity (ft/s)
1	LOB	167.73	186.36	0.02	0.07	0.59	0.00	0.13	0.35
2	LOB	186.36	205.00	89.46	43.77	26.47	0.53	3.76	2.04
3	Chan	205.00	215.00	1143.46	108.83	10.51	6.81	10.88	10.51
4	Chan	215.00	225.00	1352.77	118.00	10.00	8.05	11.80	11.46
5	Chan	225.00	235.00	1389.36	119.90	10.00	8.27	11.99	11.59
6	Chan	235.00	245.00	1426.34	121.81	10.00	8.49	12.18	11.71
7	Chan	245.00	255.00	1463.71	123.71	10.00	8.71	12.37	11.83
8	Chan	255.00	265.00	1500.61	125.58	10.00	8.93	12.56	11.95
9	Chan	265.00	275.00	1490.09	125.05	10.00	8.87	12.50	11.92
10	Chan	275.00	285.00	1452.46	123.14	10.00			

8.65	12.31	11.80				
11	Chan	285.00	295.00	1415.21	121.24	10.00
8.42	12.12	11.67				
12	Chan	295.00	305.00	1378.34	119.33	10.00
8.20	11.93	11.55				
13	Chan	305.00	315.00	1341.87	117.43	10.00
7.99	11.74	11.43				
14	Chan	315.00	325.00	1020.76	101.83	10.56
6.08	10.18	10.02				
15	ROB	325.00	335.36	292.87	67.65	11.12
1.74	6.53	4.33				
16	ROB	335.36	345.73	42.66	20.70	10.36
0.25	2.21	2.06				

Warning: Divided flow computed for this cross-section.

CROSS SECTION

RIVER: Los Penasquitos
REACH: Lower RS: 1353

INPUT
Description: #1347 - Upstream SB Interstate 5
Station Elevation Data num= 13

Sta	Elev	Sta	Elev	Sta	Elev	Sta	Elev	Sta	Elev
0	72.13	150	61.23	178.5	41.53	196.8	32.13	205	28.665
211	26.13	263.5	25.13	316	26.13	325	29.344	332.8	32.13
354	42.13	389	56.13	439	58.13				

Manning's n Values num= 3

Sta	n Val	Sta	n Val	Sta	n Val
0	.045	205	.03	325	.045

Bank Sta: Left	Right	Lengths: Left	Channel	Right	Coeff Contr.	Expan.
205	325	156	171.7	181.6	.1	.3

CROSS SECTION OUTPUT Profile #100-yr

E.G. Elev (ft)	39.72	Element	Left OB	Channel	Right OB
Vel Head (ft)	1.89	Wt. n-Val.	0.045	0.030	0.045
W.S. Elev (ft)	37.83	Reach Len. (ft)	10.00	10.00	10.00
Crit W.S. (ft)	34.37	Flow Area (sq ft)	92.59	1434.56	89.79
E.G. Slope (ft/ft)	0.001904	Area (sq ft)	92.59	1434.56	89.79
Q Total (cfs)	16800.00	Flow (cfs)	354.45	16111.60	333.95
Top Width (ft)	159.19	Top Width (ft)	19.30	120.00	19.89
Vel Total (ft/s)	10.39	Avg. Vel. (ft/s)	3.83	11.23	3.72
Max Chl Dpth (ft)	12.70	Hydr. Depth (ft)	4.80	11.95	4.51
Conv. Total (cfs)	385040.5	Conv. (cfs)	8123.6	369263.0	7653.9
Length Wtd. (ft)	10.00	Wetted Per. (ft)	21.38	121.09	

21.65				
Min Ch El (ft)	25.13	Shear (lb/sq ft)	0.51	1.41
0.49				
Alpha	1.13	Stream Power (lb/ft s)	1.97	15.81
1.83				
Frctn Loss (ft)		Cum Volume (acre-ft)	11.14	12.80
0.81				
C & E Loss (ft)		Cum SA (acres)	3.63	1.22
0.27				

Profile #100-yr

Percent Conv	Pos Hydr Depth(ft)	Velocity (ft/s)	Left Sta (ft)	Right Sta (ft)	Flow (cfs)	Area (sq ft)	W.P. (ft)
1	LOB		167.73	186.36	0.05	0.11	0.74
0.00	0.17	0.40					
2	LOB		186.36	205.00	354.40	92.48	20.63
2.11	4.96	3.83					
3	Chan		205.00	215.00	1126.15	109.56	10.51
6.70	10.96	10.28					
4	Chan		215.00	225.00	1331.14	118.73	10.00
7.92	11.87	11.21					
5	Chan		225.00	235.00	1366.93	120.63	10.00
8.14	12.06	11.33					
6	Chan		235.00	245.00	1403.09	122.53	10.00
8.35	12.25	11.45					
7	Chan		245.00	255.00	1439.63	124.44	10.00
8.57	12.44	11.57					
8	Chan		255.00	265.00	1475.71	126.30	10.00
8.78	12.63	11.68					
9	Chan		265.00	275.00	1465.43	125.77	10.00
8.72	12.58	11.65					
10	Chan		275.00	285.00	1428.63	123.87	10.00
8.50	12.39	11.53					
11	Chan		285.00	295.00	1392.20	121.96	10.00
8.29	12.20	11.41					
12	Chan		295.00	305.00	1356.15	120.06	10.00
8.07	12.01	11.30					
13	Chan		305.00	315.00	1320.48	118.15	10.00
7.86	11.82	11.18					
14	Chan		315.00	325.00	1006.07	102.56	10.56
5.99	10.26	9.81					
15	ROB		325.00	335.36	290.55	68.40	11.12
1.73	6.60	4.25					
16	ROB		335.36	345.73	43.40	21.39	10.53
0.26	2.25	2.03					

BRIDGE

RIVER: Los Penasquitos
REACH: Lower RS: 1278

INPUT
Description: S Interstate 5 Bridge
Distance from Upstream XS = 10

```
Deck/Roadway Width          =     119
Weir Coefficient            =     2.6
Upstream  Deck/Roadway Coordinates
    num=       2
     Sta Hi Cord Lo Cord     Sta Hi Cord Lo Cord
       0   72.13   69.13     439   60.13   57.13

Upstream Bridge Cross Section Data
Station Elevation Data    num=      13
     Sta    Elev     Sta    Elev     Sta    Elev     Sta    Elev     Sta    Elev
       0   72.13     150   61.23   178.5   41.53   196.8   32.13     205  28.665
     211   26.13   263.5   25.13     316   26.13     325  29.344   332.8   32.13
     354   42.13     389   56.13     439   58.13

Manning's n Values        num=       3
     Sta   n Val     Sta   n Val     Sta   n Val
       0    .045     205     .03     325    .045

Bank Sta: Left   Right    Coeff Contr.   Expan.
           205     325             .1       .3

Downstream  Deck/Roadway Coordinates
    num=       2
     Sta Hi Cord Lo Cord     Sta Hi Cord Lo Cord
       0   73.13   70.13   639.3   56.13   53.13

Downstream Bridge Cross Section Data
Station Elevation Data    num=      17
     Sta    Elev     Sta    Elev     Sta    Elev     Sta    Elev     Sta    Elev
       0   42.13    60.4   39.83   123.4   34.93   213.2   32.13   228.6   34.13
   241.6   36.13   265.7   36.13   270.3   34.13   274.4   32.13   287.5   30.13
     295   28.76   309.4   26.13   360.2   25.13     411   26.13     418  28.517
   441.5   36.53   639.3   48.03

Manning's n Values        num=       3
     Sta   n Val     Sta   n Val     Sta   n Val
       0    .045     295     .03     418    .045

Bank Sta: Left   Right    Coeff Contr.   Expan.
           295     418             .1       .5
Ineffective Flow     num=       1
   Sta L   Sta R    Elev  Permanent
       0   241.6   52.13       F

Upstream Embankment side slope              =       0 horiz. to 1.0 vertical
Downstream Embankment side slope            =       0 horiz. to 1.0 vertical
Maximum allowable submergence for weir flow =     .95
Elevation at which weir flow begins         =   58.13
Energy head used in spillway design         =
Spillway height used in design              =
Weir crest shape                            = Broad Crested

Number of Abutments =  2

Abutment Data
Upstream     num=       2
     Sta    Elev     Sta    Elev
   66.18   67.32     150   65.03
Downstream     num=       3
     Sta    Elev     Sta    Elev     Sta    Elev
       0   70.13     220   64.28     253   36.13

Abutment Data
```

```
Upstream      num=        2
     Sta     Elev      Sta     Elev
     389     58.5      439    58.13
Downstream      num=        3
     Sta     Elev      Sta     Elev      Sta     Elev
   441.5    36.53      460     57.9    639.3    53.13

Number of Piers =  2

Pier Data
Pier Station      Upstream=   208.5    Downstream=     295
Upstream      num=        2
    Width    Elev     Width    Elev
     5.5    13.13      5.5    67.13
Downstream      num=        2
    Width    Elev     Width    Elev
     5.5    13.13      5.5    63.13

Pier Data
Pier Station      Upstream=   303.7    Downstream=     391
Upstream      num=        2
    Width    Elev     Width    Elev
     5.5    13.13      5.5    67.13
Downstream      num=        2
    Width    Elev     Width    Elev
     5.5    13.13      5.5    63.13

Number of Bridge Coefficient Sets =  1

Low Flow Methods and Data
       Energy
       Momentum                Cd   =     1.2
       Yarnell                 KVal =    1.05
Selected Low Flow Methods = Highest Energy Answer

High Flow Method
       Pressure and Weir flow
           Submerged Inlet Cd           =
           Submerged Inlet + Outlet Cd =       .8
           Max Low Cord                 =

Additional Bridge Parameters
       Add Friction component to Momentum
       Do not add Weight component to Momentum
       Class B flow critical depth computations use critical depth
           inside the bridge at the upstream end
       Criteria to check for pressure flow = Upstream energy grade line

BRIDGE OUTPUT  Profile #100-yr


  E.G. US. (ft)                  39.72    Element                  Inside BR US
Inside BR DS
  W.S. US. (ft)                  37.83    E.G. Elev (ft)                 39.59
38.75
  Q Total (cfs)               16800.00    W.S. Elev (ft)                 37.06
36.01
  Q Bridge (cfs)              16800.00    Crit W.S. (ft)                 34.88
34.62
  Q Weir (cfs)                            Max Chl Dpth (ft)              11.93
10.88
  Weir Sta Lft (ft)                       Vel Total (ft/s)               12.17
12.42
```

Weir Sta Rgt (ft)	1353.00	Flow Area (sq ft)	1380.25
Weir Submerg	0.76	Froude # Chl	0.68
Weir Max Depth (ft)	13235.41	Specif Force (cu ft)	13960.81
Min El Weir Flow (ft)	60.14	Hydr Depth (ft)	9.51
Min El Prs (ft)	8.30	W.P. Total (ft)	191.18
Delta EG (ft)	200.94	Conv. Total (cfs)	257396.3
Delta WS (ft)	245836.2	Top Width (ft)	145.06
BR Open Area (sq ft)	162.98	Frctn Loss (ft)	
BR Open Vel (ft/s)	6130.76	C & E Loss (ft)	
Coef of Q	12.42	Shear Total (lb/sq ft)	1.92
Br Sel Method	1.96 Momentum	Power Total (lb/ft s)	23.37

24.38

CROSS SECTION

RIVER: Los Penasquitos
REACH: Lower RS: 1181.3

INPUT
Description: #1181 - Soledad Canyon & Downstream SB Interstate 5
Station Elevation Data num= 17

Sta	Elev	Sta	Elev	Sta	Elev	Sta	Elev	Sta	Elev
0	42.13	60.4	39.83	123.4	34.93	213.2	32.13	228.6	34.13
241.6	36.13	265.7	36.13	270.3	34.13	274.4	32.13	287.5	30.13
295	28.76	309.4	26.13	360.2	25.13	411	26.13	418	28.517
441.5	36.53	639.3	48.03						

Manning's n Values num= 3

Sta	n Val	Sta	n Val	Sta	n Val
0	.045	295	.03	418	.045

Bank Sta: Left	Right	Lengths: Left	Channel	Right	Coeff Contr.	Expan.
295	418	320.7	249.9	217.8	.1	.5

Ineffective Flow num= 1

Sta L	Sta R	Elev	Permanent
0	241.6	52.13	F

CROSS SECTION OUTPUT Profile #100-yr

E.G. Elev (ft)	38.56	Element	Left OB	Channel	Right OB
Vel Head (ft)	2.41	Wt. n-Val.	0.045	0.030	0.045
W.S. Elev (ft)	36.15	Reach Len. (ft)	320.70	249.90	217.80
Crit W.S. (ft)	34.25	Flow Area (sq ft)	133.49	1255.71	85.39
E.G. Slope (ft/ft)	0.003008	Area (sq ft)	437.83	1255.71	85.39

Q Total (cfs)	16800.00	Flow (cfs)	439.03	15996.97	364.00
Top Width (ft)	332.64	Top Width (ft)	187.26	123.00	22.38
Vel Total (ft/s)	11.39	Avg. Vel. (ft/s)	3.29	12.74	4.26
Max Chl Dpth (ft)	11.02	Hydr. Depth (ft)	2.50	10.21	3.82
Conv. Total (cfs)	306308.3	Conv. (cfs)	8004.6	291666.9	6636.7
Length Wtd. (ft)	262.21	Wetted Per. (ft)	54.55	123.65	23.64
Min Ch El (ft)	25.13	Shear (lb/sq ft)	0.46	1.91	0.68
Alpha	1.20	Stream Power (lb/ft s)	1.51	24.30	2.89
Frctn Loss (ft)	0.46	Cum Volume (acre-ft)	10.59	8.05	0.50
C & E Loss (ft)	0.84	Cum SA (acres)	3.47	0.77	0.18

Warning: The velocity head has changed by more than 0.5 ft (0.15 m). This may indicate the need for additional cross sections.
Warning: The conveyance ratio (upstream conveyance divided by downstream conveyance) is less than 0.7 or greater than 1.4. This may indicate the need for additional cross sections.
Warning: The energy loss was greater than 1.0 ft (0.3 m). between the current and previous cross section. This may indicate the need for additional cross sections.
Note: Multiple critical depths were found at this location. The critical depth with the lowest, valid, energy was used.

Profile #100-yr

Conv	Pos Hydr	Left Sta (ft)	Right Sta (ft)	Flow (cfs)	Area (sq ft)	W.P. (ft)	Percent Depth(ft)	Velocity (ft/s)
1	LOB	107.38	134.22	0.00	24.54	26.53	0.93	0.00
2	LOB	134.22	161.07	0.00	52.99	26.86	1.97	0.00
3	LOB	161.07	187.91	0.00	75.46	26.86	2.81	0.00
4	LOB	187.91	214.76	0.00	97.73	26.87	3.64	0.00
5	LOB	214.76	241.60	0.00	53.62	27.11	2.00	0.00
6	LOB	241.60	268.30	0.40	1.95	26.94	0.07	0.20
7	LOB	268.30	295.00	438.63	131.55	27.62	4.93	3.33
8	Chan	295.00	305.25	938.31	85.32	10.42	8.32	11.00
9	Chan	305.25	315.50	1260.82	101.48	10.32	9.90	12.42
10	Chan	315.50	325.75	1339.40	104.95	10.25		

7.97	10.24	12.76					
11	Chan	325.75	336.00	1383.68	107.02	10.25	
8.24	10.44	12.93					
12	Chan	336.00	346.25	1428.54	109.08	10.25	
8.50	10.64	13.10					
13	Chan	346.25	356.50	1473.96	111.15	10.25	
8.77	10.84	13.26					
14	Chan	356.50	366.75	1501.10	112.38	10.25	
8.94	10.96	13.36					
15	Chan	366.75	377.00	1461.27	110.58	10.25	
8.70	10.79	13.21					
16	Chan	377.00	387.25	1416.01	108.51	10.25	
8.43	10.59	13.05					
17	Chan	387.25	397.50	1371.31	106.44	10.25	
8.16	10.38	12.88					
18	Chan	397.50	407.75	1327.19	104.37	10.25	
7.90	10.18	12.72					
19	Chan	407.75	418.00	1095.37	94.43	10.65	
6.52	9.21	11.60					
20	ROB	418.00	438.12	363.24	84.52	21.26	
2.16	4.20	4.30					
21	ROB	438.12	458.24	0.76	0.87	2.39	
0.00	0.39	0.87					

Warning: The velocity head has changed by more than 0.5 ft (0.15 m). This may indicate the need for
additional cross sections.
Warning: The conveyance ratio (upstream conveyance divided by downstream conveyance) is less than
0.7 or greater than 1.4. This may indicate the need for additional cross sections.
Warning: The energy loss was greater than 1.0 ft (0.3 m). between the current and previous cross
section. This may indicate the need for additional cross sections.
Note: Multiple critical depths were found at this location. The critical depth with the lowest, valid,
energy was used.

CROSS SECTION

RIVER: Los Penasquitos
REACH: Lower RS: 931.4

INPUT
Description: #931 - (Soledad Canyon) FEMA Cross Section AC
Station Elevation Data num= 33

Sta	Elev	Sta	Elev	Sta	Elev	Sta	Elev	Sta	Elev
0	62.13	36.7	52.13	80.9	42.13	177.9	34.13	253.1	32.13
349.9	32.13	376.7	38.13	524.3	38.13	588.9	32.13	605.4	28.13
624.4	28.13	640.8	32.13	707.8	32.13	753.5	32.13	764.5	34.13
786.4	35.33	800.6	34.13	876	35.13	983.7	35.13	1002	31.73
1050	34.13	1065	34.13	1069	32.13	1075	29.502	1082.7	26.13
1148	25.13	1213.4	26.13	1220	29.2	1226.3	32.13	1234	34.13
1270.2	36.13	1281.7	40.13	1453.4	48.03				

Manning's n Values num= 3

Sta	n Val	Sta	n Val	Sta	n Val
0	.045	1075	.03	1220	.045

Bank Sta: Left Right Coeff Contr. Expan.

1075 1220 .1 .3

CROSS SECTION OUTPUT Profile #100-yr

E.G. Elev (ft)	37.26	Element	Left OB	Channel
Right OB				
Vel Head (ft)	0.73	Wt. n-Val.	0.045	0.030
0.045				
W.S. Elev (ft)	36.53	Reach Len. (ft)		
Crit W.S. (ft)	34.38	Flow Area (sq ft)	2439.85	1550.24
114.04				
E.G. Slope (ft/ft)	0.001183	Area (sq ft)	2439.85	1550.24
114.04				
Q Total (cfs)	19000.00	Flow (cfs)	6048.23	12734.21
217.56				
Top Width (ft)	950.58	Top Width (ft)	754.23	145.00
51.35				
Vel Total (ft/s)	4.63	Avg. Vel. (ft/s)	2.48	8.21
1.91				
Max Chl Dpth (ft)	11.40	Hydr. Depth (ft)	3.23	10.69
2.22				
Conv. Total (cfs)	552447.2	Conv. (cfs)	175859.2	370262.1
6325.8				
Length Wtd. (ft)		Wetted Per. (ft)	757.67	146.40
52.38				
Min Ch El (ft)	25.13	Shear (lb/sq ft)	0.24	0.78
0.16				
Alpha	2.20	Stream Power (lb/ft s)	0.59	6.42
0.31				
Frctn Loss (ft)		Cum Volume (acre-ft)		
C & E Loss (ft)		Cum SA (acres)		

Warning: Divided flow computed for this cross-section.

Profile #100-yr

Percent Conv	Pos Hydr Depth(ft)	Velocity (ft/s)	Left Sta (ft)	Right Sta (ft)	Flow (cfs)	Area (sq ft)	W.P. (ft)
1	LOB		97.73	195.45	120.93	81.15	46.76
0.64	1.74	1.49					
2	LOB		195.45	293.18	994.34	385.81	97.75
5.23	3.95	2.58					
3	LOB		293.18	390.91	736.99	292.80	76.86
3.88	3.83	2.52					
4	LOB		390.91	488.64			
5	LOB		488.64	586.36	156.64	93.36	45.03
0.82	2.08	1.68					
6	LOB		586.36	684.09	1901.69	571.50	98.70
10.01	5.85	3.33					
7	LOB		684.09	781.82	951.96	376.15	97.93
5.01	3.85	2.53					
8	LOB		781.82	879.55	278.61	179.86	97.79
1.47	1.84	1.55					

9	LOB	879.55	977.27	176.69	136.82	97.73
0.93	1.40	1.29				
10	LOB	977.27	1075.00	730.38	322.41	99.12
3.84	3.30	2.27				
11	Chan	1075.00	1087.08	818.04	112.83	12.79
4.31	9.34	7.25				
12	Chan	1087.08	1099.17	1042.80	127.59	12.08
5.49	10.56	8.17				
13	Chan	1099.17	1111.25	1073.44	129.83	12.08
5.65	10.74	8.27				
14	Chan	1111.25	1123.33	1104.43	132.07	12.08
5.81	10.93	8.36				
15	Chan	1123.33	1135.42	1135.76	134.30	12.08
5.98	11.11	8.46				
16	Chan	1135.42	1147.50	1167.46	136.54	12.08
6.14	11.30	8.55				
17	Chan	1147.50	1159.58	1170.06	136.72	12.08
6.16	11.31	8.56				
18	Chan	1159.58	1171.67	1138.44	134.49	12.08
5.99	11.13	8.46				
19	Chan	1171.67	1183.75	1107.13	132.26	12.08
5.83	10.95	8.37				
20	Chan	1183.75	1195.83	1076.15	130.03	12.08
5.66	10.76	8.28				
21	Chan	1195.83	1207.92	1045.53	127.80	12.08
5.50	10.58	8.18				
22	Chan	1207.92	1220.00	855.00	115.77	12.76
4.50	9.58	7.39				
23	ROB	1220.00	1241.22	177.87	79.01	22.13
0.94	3.72	2.25				
24	ROB	1241.22	1262.44	36.43	30.03	21.25
0.19	1.42	1.21				
25	ROB	1262.44	1283.66	3.26	5.00	8.99
0.02	0.56	0.65				

Warning: Divided flow computed for this cross-section.

SUMMARY OF MANNING'S N VALUES

River:Los Penasquitos

Reach	River Sta.	n1	n2	n3
Lower	4337.4	.035	.06	.05
Lower	3918.5	.035	.065	.065
Lower	3639.3	.035	.065	.065
Lower	3241.5	.035	.065	.065
Lower	2903.2	.035	.065	.065
Lower	2488.4	.035	.05	.05
Lower	2290.5	.035	.05	.035
Lower	2040.2	.035	.05	.035
Lower	1951.5	.035	.04	.035
Lower	1888	.035	.04	.035
Lower	1850	Bridge		
Lower	1808.5	.035	.04	.035
Lower	1782.95	.045	.04	.045
Lower	1780.2	.045	.04	.045
Lower	1777.45	.045	.04	.045
Lower	1658.9	.045	.04	.045

Lower	1656.1	.045	.04	.045
Lower	1653.3	.045	.04	.045
Lower	1626	Bridge		
Lower	1584.6	.045	.03	.045
Lower	1581	.045	.03	.045
Lower	1578.2	.045	.03	.045
Lower	1575.4	.045	.03	.045
Lower	1537	Bridge		
Lower	1492.7	.045	.03	.045
Lower	1407.6	.045	.03	.045
Lower	1402.1	.045	.03	.045
Lower	1396.6	.045	.03	.045
Lower	1360	.045	.03	.045
Lower	1356.5	.045	.03	.045
Lower	1353	.045	.03	.045
Lower	1278	Bridge		
Lower	1181.3	.045	.03	.045
Lower	931.4	.045	.03	.045

SUMMARY OF REACH LENGTHS

River: Los Penasquitos

Reach	River Sta.	Left	Channel	Right
Lower	4337.4	490.4	418.9	390.5
Lower	3918.5	254.1	279.2	299.7
Lower	3639.3	348.2	397.8	434.4
Lower	3241.5	413.4	338.3	260.2
Lower	2903.2	352.6	414.8	460.3
Lower	2488.4	138.5	197.9	244.6
Lower	2290.5	222.8	250.3	243.7
Lower	2040.2	98.5	88.7	94.2
Lower	1951.5	107.1	63.5	138
Lower	1888	57.3	79.5	88.2
Lower	1850	Bridge		
Lower	1808.5	56.3	25.6	26.7
Lower	1782.95	2.75	2.75	2.75
Lower	1780.2	2.75	2.75	2.75
Lower	1777.45	233.1	118.6	137
Lower	1658.9	2.75	2.75	2.75
Lower	1656.1	2.75	2.75	2.75
Lower	1653.3	73.4	68.7	67.6
Lower	1626	Bridge		
Lower	1584.6	3.6	3.6	3.6
Lower	1581	2.75	2.75	2.75
Lower	1578.2	2.75	2.75	2.75
Lower	1575.4	80	88.7	86
Lower	1537	Bridge		
Lower	1492.7	117	85.1	41.1
Lower	1407.6	5.5	5.5	5.5
Lower	1402.1	5.5	5.5	5.5
Lower	1396.6	37.9	36.6	33.9
Lower	1360	3.5	3.5	3.5
Lower	1356.5	3.5	3.5	3.5
Lower	1353	156	171.7	181.6
Lower	1278	Bridge		
Lower	1181.3	320.7	249.9	217.8
Lower	931.4			

SUMMARY OF CONTRACTION AND EXPANSION COEFFICIENTS
River: Los Penasquitos

Reach	River Sta.		Contr.	Expan.
Lower	4337.4		.1	.3
Lower	3918.5		.1	.3
Lower	3639.3		.1	.3
Lower	3241.5		.1	.3
Lower	2903.2		.1	.3
Lower	2488.4		.1	.3
Lower	2290.5		.1	.3
Lower	2040.2		.1	.3
Lower	1951.5		.1	.3
Lower	1888		.3	.3
Lower	1850	Bridge		
Lower	1808.5		.1	.3
Lower	1782.95		.1	.3
Lower	1780.2		.1	.3
Lower	1777.45		.1	.3
Lower	1658.9		.1	.3
Lower	1656.1		.1	.3
Lower	1653.3		.1	.3
Lower	1626	Bridge		
Lower	1584.6		.1	.3
Lower	1581		.1	.3
Lower	1578.2		.1	.3
Lower	1575.4		.1	.3
Lower	1537	Bridge		
Lower	1492.7		.1	.3
Lower	1407.6		.1	.3
Lower	1402.1		.1	.3
Lower	1396.6		.1	.3
Lower	1360		.1	.3
Lower	1356.5		.1	.3
Lower	1353		.1	.3
Lower	1278	Bridge		
Lower	1181.3		.1	.5
Lower	931.4		.1	.3

Profile Output Table - Standard Table 1

Reach	River Sta	Profile	Q Total	Min Ch El	W.S. Elev	Crit W.S.
E.G. Elev	E.G. Slope	Vel Chnl	Flow Area	Top Width	Froude # Chl	
(ft)	(ft/ft)	(ft/s)	(cfs) (sq ft)	(ft) (ft)	(ft)	(ft)
Lower	4337.4	100-yr	16800.00	32.23	47.65	
47.93	0.001175	4.29	4015.86	1039.43	0.22	
Lower	3918.5	100-yr	16800.00	31.33	46.23	
47.03	0.004128	7.36	2370.01	838.70	0.39	
Lower	3639.3	100-yr	16800.00	30.83	45.62	
46.10	0.002292	5.63	3038.88	662.35	0.29	
Lower	3241.5	100-yr	16800.00	29.93	44.63	
45.16	0.002466	6.02	2966.66	549.02	0.30	
Lower	2903.2	100-yr	16800.00	29.33	43.77	

44.32	0.002418	6.09	2957.39	1246.44	0.30	
Lower	2488.4	100-yr	16800.00	28.13	43.12	
43.58	0.001293	5.88	3270.34	1382.44	0.29	
Lower	2290.5	100-yr	16800.00	28.13	43.16	
43.34	0.000469	3.60	5008.79	1580.50	0.17	
Lower	2040.2	100-yr	16800.00	28.13	42.91	
43.21	0.000563	3.91	4033.69	1578.54	0.19	
Lower	1951.5	100-yr	16800.00	28.13	42.17	36.68
43.07	0.001513	7.92	2309.75	1587.43	0.38	
Lower	1888	100-yr	16800.00	28.13	41.79	36.72
42.93	0.001873	8.78	2045.83	1138.05	0.43	
Lower	1850		Bridge			
Lower	1808.5	100-yr	16800.00	28.13	41.30	
42.52	0.002113	9.26	1980.73	1078.92	0.46	
Lower	1782.95	100-yr	16800.00	28.13	40.91	36.93
42.42	0.002665	10.48	1863.78	606.55	0.52	
Lower	1780.2	100-yr	16800.00	28.13	40.86	36.88
42.41	0.002720	10.56	1814.67	582.44	0.52	
Lower	1777.45	100-yr	16800.00	28.13	40.87	36.93
42.39	0.002697	10.52	1855.73	604.79	0.52	
Lower	1658.9	100-yr	16800.00	27.93	40.82	
41.99	0.002099	8.92	2053.16	214.85	0.45	
Lower	1656.1	100-yr	16800.00	27.93	40.43	
41.94	0.005023	10.18	1756.90	189.67	0.52	
Lower	1653.3	100-yr	16800.00	27.93	40.63	36.27
41.84	0.002222	9.08	2012.58	213.32	0.46	
Lower	1626		Bridge			
Lower	1584.6	100-yr	16800.00	25.93	39.77	
41.31	0.001611	10.01	1756.62	181.63	0.52	
Lower	1581	100-yr	16800.00	25.93	39.76	
41.30	0.001616	10.02	1754.99	181.57	0.52	
Lower	1578.2	100-yr	16800.00	25.93	38.70	
41.20	0.005637	12.77	1356.68	152.49	0.71	
Lower	1575.4	100-yr	16800.00	25.93	39.25	35.82
40.95	0.001894	10.52	1662.25	178.14	0.56	
Lower	1537		Bridge			
Lower	1492.7	100-yr	16800.00	25.93	38.16	
40.17	0.002237	11.50	1547.23	161.00	0.61	
Lower	1407.6	100-yr	16800.00	25.93	37.84	
39.96	0.002265	11.85	1524.08	165.90	0.62	
Lower	1402.1	100-yr	16800.00	25.93	37.82	
39.95	0.002280	11.88	1511.76	157.44	0.62	
Lower	1396.6	100-yr	16800.00	25.93	37.80	
39.94	0.002291	11.90	1518.09	165.61	0.62	
Lower	1360	100-yr	16800.00	25.13	37.93	
39.78	0.001852	11.14	1632.16	159.57	0.57	
Lower	1356.5	100-yr	16800.00	25.13	37.76	
39.76	0.002007	11.48	1558.04	151.89	0.59	
Lower	1353	100-yr	16800.00	25.13	37.83	34.37
39.72	0.001904	11.23	1616.94	159.19	0.57	
Lower	1278		Bridge			
Lower	1181.3	100-yr	16800.00	25.13	36.15	34.25
38.56	0.003008	12.74	1474.60	332.64	0.70	
Lower	931.4	100-yr	19000.00	25.13	36.53	34.38
37.26	0.001183	8.21	4104.13	950.58	0.44	

ERRORS WARNINGS AND NOTES
Errors Warnings and Notes for Plan : PropNoClog

River: Los Penasquitos Reach: Lower RS: 4337.4 Profile: 100-yr
Warning:Divided flow computed for this cross-section.
Warning:The velocity head has changed by more than 0.5 ft (0.15 m). This may indicate the need for additional cross sections.
Warning:The conveyance ratio (upstream conveyance divided by downstream conveyance) is less than 0.7 or greater than 1.4.
This may indicate the need for additional cross sections.
River: Los Penasquitos Reach: Lower RS: 2903.2 Profile: 100-yr
Warning:Divided flow computed for this cross-section.
River: Los Penasquitos Reach: Lower RS: 2488.4 Profile: 100-yr
Warning:The conveyance ratio (upstream conveyance divided by downstream conveyance) is less than 0.7 or greater than 1.4.
This may indicate the need for additional cross sections.
River: Los Penasquitos Reach: Lower RS: 2040.2 Profile: 100-yr
Warning:The velocity head has changed by more than 0.5 ft (0.15 m). This may indicate the need for additional cross sections.
Warning:The conveyance ratio (upstream conveyance divided by downstream conveyance) is less than 0.7 or greater than 1.4.
This may indicate the need for additional cross sections.
River: Los Penasquitos Reach: Lower RS: 1951.5 Profile: 100-yr
Note: Multiple critical depths were found at this location. The critical depth with the lowest, valid, water surface was
used.
River: Los Penasquitos Reach: Lower RS: 1888 Profile: 100-yr
Warning:Divided flow computed for this cross-section.
Warning:The conveyance ratio (upstream conveyance divided by downstream conveyance) is less than 0.7 or greater than 1.4.
This may indicate the need for additional cross sections.
River: Los Penasquitos Reach: Lower RS: 1808.5 Profile: 100-yr
Warning:Divided flow computed for this cross-section.
River: Los Penasquitos Reach: Lower RS: 1782.95 Profile: 100-yr
Warning:Divided flow computed for this cross-section.
Note: Multiple critical depths were found at this location. The critical depth with the lowest, valid, water surface was
used.
River: Los Penasquitos Reach: Lower RS: 1780.2 Profile: 100-yr
Warning:Divided flow computed for this cross-section.
Note: Multiple critical depths were found at this location. The critical depth with the lowest, valid, water surface was
used.
River: Los Penasquitos Reach: Lower RS: 1777.45 Profile: 100-yr
Warning:Divided flow computed for this cross-section.
Note: Multiple critical depths were found at this location. The critical depth with the lowest, valid, water surface was
used.
River: Los Penasquitos Reach: Lower RS: 1658.9 Profile: 100-yr
Warning:The conveyance ratio (upstream conveyance divided by downstream conveyance) is less than 0.7 or greater than 1.4.
This may indicate the need for additional cross sections.
River: Los Penasquitos Reach: Lower RS: 1656.1 Profile: 100-yr
Warning:Divided flow computed for this cross-section.
Warning:The conveyance ratio (upstream conveyance divided by downstream conveyance) is less than 0.7 or greater than 1.4.
This may indicate the need for additional cross sections.
River: Los Penasquitos Reach: Lower RS: 1581 Profile: 100-yr
Warning:The velocity head has changed by more than 0.5 ft (0.15 m). This may indicate the need for additional cross sections.
Warning:The conveyance ratio (upstream conveyance divided by downstream conveyance) is less than 0.7 or greater than 1.4.

This may indicate the need for additional cross sections.
River: Los Penasquitos Reach: Lower RS: 1578.2 Profile: 100-yr
Warning:Divided flow computed for this cross-section.
Warning:The velocity head has changed by more than 0.5 ft (0.15 m). This may indicate the need for additional cross sections.
Warning:The conveyance ratio (upstream conveyance divided by downstream conveyance) is less than 0.7 or greater than 1.4.
This may indicate the need for additional cross sections.
River: Los Penasquitos Reach: Lower RS: 1402.1 Profile: 100-yr
Warning:Divided flow computed for this cross-section.
River: Los Penasquitos Reach: Lower RS: 1356.5 Profile: 100-yr
Warning:Divided flow computed for this cross-section.
River: Los Penasquitos Reach: Lower RS: 1181.3 Profile: 100-yr
Warning:The velocity head has changed by more than 0.5 ft (0.15 m). This may indicate the need for additional cross sections.
Warning:The conveyance ratio (upstream conveyance divided by downstream conveyance) is less than 0.7 or greater than 1.4.
This may indicate the need for additional cross sections.
Warning:The energy loss was greater than 1.0 ft (0.3 m). between the current and previous cross section. This may indicate
the need for additional cross sections.
Note: Multiple critical depths were found at this location. The critical depth with the lowest, valid, energy was used.
River: Los Penasquitos Reach: Lower RS: 931.4 Profile: 100-yr
Warning:Divided flow computed for this cross-section.

APPENDIX C

Location Hydraulic Study Form

Floodplain Encroachment Form

As-builts

Planning Study

Backup Data

LOCATION HYDRAULIC STUDY FORM

Dist. *11* Co. *SD* Rte. *005* K.P.
EA Bridge No. ***I-5 Flyover Bridge***
Floodplain Description:
Year-round flowing creek with shallow water channels and several bridge crossings. Location of interest: I-5 / Los Penasquitos Creek Intersection

1. Description of Proposal (include any physical barriers i.e. concrete barriers, soundwalls, etc. and design elements to minimize floodplain impacts)

This project includes an improvement to Interstate 5 at its crossing with Los Penasquitos Creek. The proposed flyover bridge is to be constructed above the existing I-5/I-805 interchange and would not have significant impacts to the existing floodplain.

2. ADT: Current **N/A (Bridge is not Existing)** Projected **25,900 (year 2030)**
(ADT values taken from Wilson & Company's Traffic Demand Forecasting Report for the I-5 North Coast Corridor Project, December 2006)

3. Hydraulic Data: Base Flood Q_{100}= *16,800* m^3 / s ***(Taken from 2003 Letter of Map Revision for Vista Sorrento Parkway Bridge completed by Chang Consultants)***

WSE_{100}= ***37.84 feet (upstream of Proposed I-5 Flyover)***
The flood of record, if greater than Q_{100}:
Q= *N/A* m^3 / s WSE= *N/A*
Overtopping flood Q=***(no increase from existing condition)*** m^3 / s
WSE=***(no increase from existing condition)***

Are NFIP maps and studies available? YES **X** NO_____

4. Is the highway location alternative within a regulatory floodway?
YES *X* NO_____

5. Attach map with flood limits outlined showing all buildings or other improvements within the base floodplain. ***(See Appendix 'A')***

Potential Q_{100} backwater damages:

A. Residences? NO___YES ***(no increase from existing condition)***
B. Other Bldgs? NO___YES ***(no increase from existing condition)***
C. Crops? NO **X** YES _____

FLOODPLAIN VALUES? NO **X** YES_____

6. Type of Traffic:

A. Emergency supply or evacuation route? NO_____YES__X____
B. Emergency vehicle access? NO_____YES__X____
C. Practicable detour available? NO_____YES__X____
D. School bus or mail route? NO_____YES__X____

7. Estimated duration of traffic interruption for 100-year event hours: ***There are no significant changes to the I-5/I-805 bridges crossing the Los Penasquitos Creek. Traffic interruptions are not anticipated. (no increase from proposed improvements).***

8. Estimated value of Q_{100} flood damages (if any) – moderate risk level.

A. Roadway $ ***(no increase from existing condition)***
B Property $ ***(no increase from existing condition)***
Total $ ***(no increase from existing condition)***

9. Assessment of Level of Risk Low__X____
Moderate____
High_____

For High Risk projects, during design phase, additional Design Study Risk Analysis May be necessary to determine design alternative.

Is there any longitudinal encroachment, significant encroachment, or any support of incompatible
Floodplain development? NO___X____YES _____

If yes, provide evaluation and discussion of practicability of alternatives in accordance with 23 CFR 650.113 ***(See report)***

Information developed to comply with the Federal requirement for the Location Hydraulic Study shall be retained in the project files.

Signature – Hydraulic/Project Engineer_____Date_____

FLOODPLAIN ENCROACHMENT REPORT SUMMARY

Dist. *11* Co. *SD* Rte. *005* K.P.
Bridge No. ***I-5 Flyover Bridge***
Limits: ***I-5 / Los Penasquitos Creek Intersection***

Floodplain Description: **The creek flows year-round with shallow water channels and several bridge crossings.**

		No	Yes
1.	Is the proposed action a longitudinal encroachment of the base floodplain?	X	
2.	Are the risks associated with the implementation of the proposed action significant?	X	
3.	Will the proposed action support probable incompatible floodplain development?	X	
4.	Are there any significant impacts on natural and beneficial floodplain values?	X	
5.	Routine construction procedures are required to minimize impacts on the floodplain. Are there any special mitigation measures necessary to minimize impacts or restore and preserve natural and beneficial floodplain values? If yes, explain.	X	
6.	Does the proposed action constitute a significant floodplain encroachment as defined in 23 CFR, Section 650.105(q).	X	
7.	Are Location Hydraulic Studies that document the above answers on file? If not explain.		X

PREPARED BY:

Signature – Hydraulic/Project Engineer Date

CONCURRED BY:

Signature –Caltrans Engineer Date

Signature – FHWA Transportation Engineer Date

DIST	COUNTY	ROUTE	KILOMETER POST TOTAL PROJECT	SHEET No	TOTAL SHEETS
11	SD	5,56,805	Var	1109	1549

G.S. Blakesley 05-01-01
REGISTERED CIVIL ENGINEER

9-3-01
PLANS APPROVAL DATE

REGISTERED PROFESSIONAL ENGINEER G.S. BLAKESLEY No. 45509 Exp. 12-31-02 CIVIL STATE OF CALIFORNIA

The State of California or its officers or agents shall not be responsible for the accuracy or completeness of electronic copies of this plan sheet.

Caltrans now has a web site. To get to the web site, go to: http://www.dot.ca.gov

NOTES :
1 Contour Interval = 50mm
2 X = 2500mm along NT805 Line
3 Contours do not Include Camber

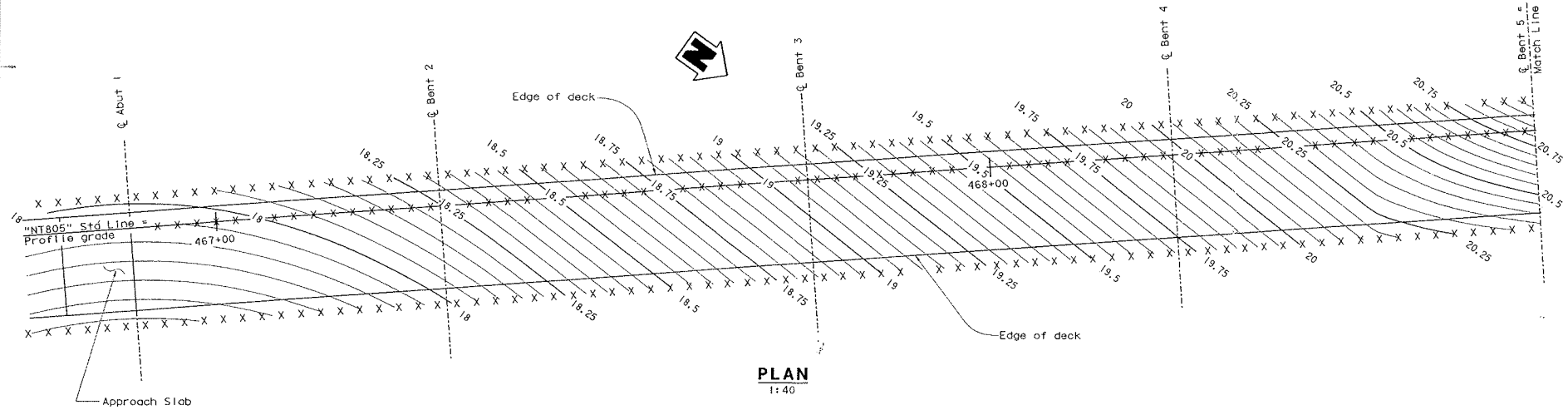

PLAN
1:40

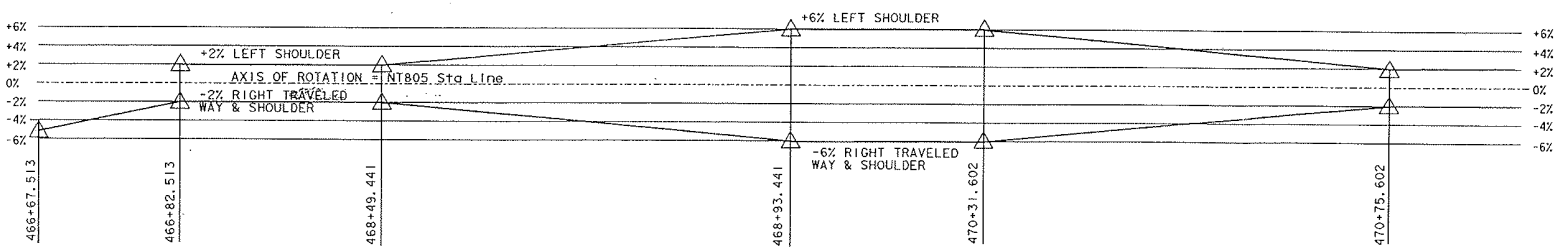

SUPERELEVATION DIAGRAM
No Scale

ALL DIMENSIONS ARE IN MILLIMETERS UNLESS OTHERWISE SHOWN

DESIGN	BY M. OKIMURA	CHECKED J. PETERSON	
DETAILS	BY J. LANE	CHECKED J. PETERSON	
QUANTITIES	BY K. NISHIMOTO	CHECKED J. POSEY	

STATE OF CALIFORNIA
DEPARTMENT OF TRANSPORTATION

DIVISION OF STRUCTURES
STRUCTURE DESIGN 11

BRIDGE NO. 57-1070G
KILOMETER POST 45.5

N805-N5 TRUCK CONNECTOR
DECK CONTOURS NO. 1

STRUCTURES DESIGN DETAIL SHEET (METRIC) REV. 3/1/99

ORIGINAL SCALE IN MILLIMETERS FOR REDUCED PLANS 0 10 20 30 40 50 60 70 80 90 100

CU 11275
EA 0301U1
FILE => j04dci.dgn

DISREGARD PRINTS BEARING EARLIER REVISION DATES

REVISION DATES (PRELIMINARY STAGE ONLY)

SHEET 4 OF 43

USERNAME => tranlkest DATE PLOTTED => 11-SEP-2001 TIME PLOTTED => 06:46

DIST	COUNTY	ROUTE	KILOMETER POST TOTAL PROJECT	SHEET No	TOTAL SHEETS
11	SD	5, 56, 805	Var	1110	1549

G. S. Blakeley 05-01-01
REGISTERED CIVIL ENGINEER

9-3-01
PLANS APPROVAL DATE

REGISTERED PROFESSIONAL ENGINEER G. S. BLAKESLEY No. 45509 EXP. 12-31-02 CIVIL STATE OF CALIFORNIA

The State of California or its officers or agents shall not be responsible for the accuracy or completeness of electronic copies of this plan sheet.

Caltrans now has a web site! To get to the web site, go to: http://www.dot.ca.gov

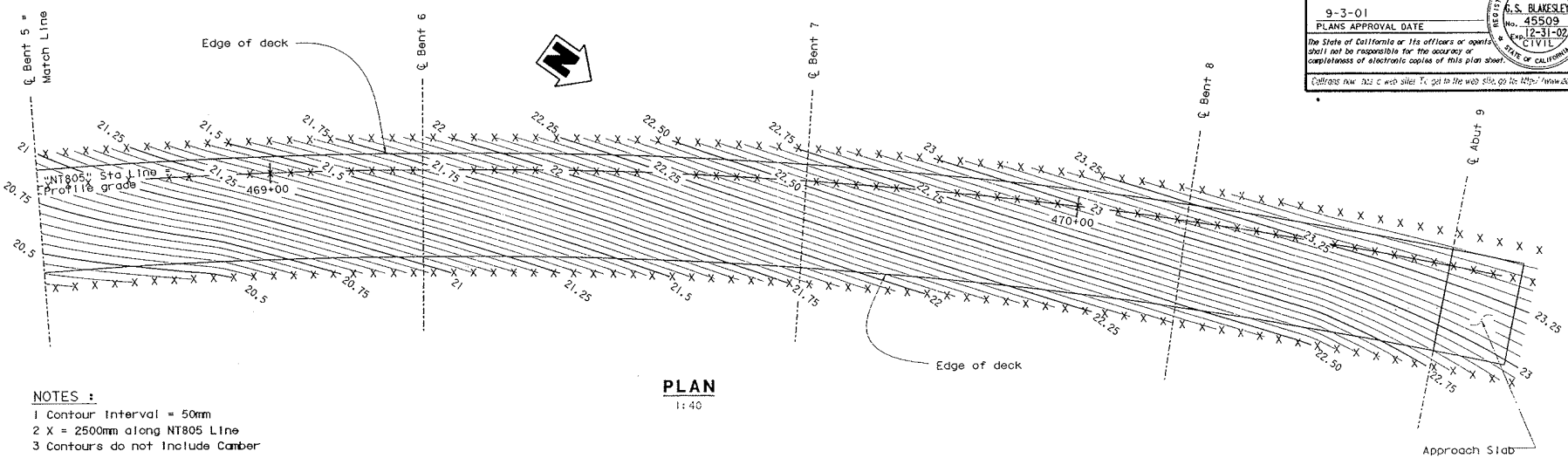

PLAN

1:40

NOTES :

1 Contour Interval = 50mm
2 X = 2500mm along NT805 Line
3 Contours do not Include Camber

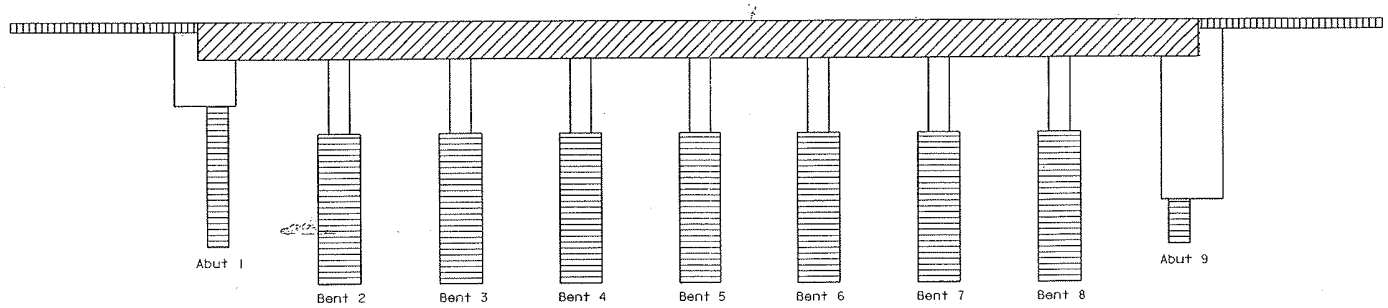

CONCRETE STRENGTH AND TYPE LIMITS

No Scale

- Structural Concrete, Bridge (25 MPa @ 28 days)
- Structural Concrete, Bridge (28 MPa @ 28 days)
- CIDH Pile Concrete
- Structural Concrete, Approach Slab

ALL DIMENSIONS ARE IN MILLIMETERS UNLESS OTHERWISE SHOWN

DESIGN	BY M. OKIMURA	CHECKED J. PETERSON	
DETAILS	BY J. LANE	CHECKED J. PETERSON	
QUANTITIES	BY K. NISHIMOTO	CHECKED J. POSEY	

STATE OF CALIFORNIA
DEPARTMENT OF TRANSPORTATION

DIVISION OF STRUCTURES
STRUCTURE DESIGN 11

BRIDGE NO. 57-1070G
KILOMETER POST 45.5

N805-N5 TRUCK CONNECTOR
DECK CONTOURS NO. 2

STRUCTURES DESIGN DETAIL SHEET (METRIC) REV. 3/1/99

ORIGINAL SCALE IN MILLIMETERS FOR REDUCED PLANS 0 10 20 30 40 50 60 70 80 90 100

CU 11275
EA 0301U1

DISREGARD PRINTS BEARING EARLIER REVISION DATES → 1-16-98 2-23-98 12-4-98 2-24-99 3-1-99 4-23-01

REVISION DATES (PRELIMINARY STAGE ONLY)

SHEET 5 OF 43

FILE = j05dc2.cgn

USERNAME = ?

DATE PLOTTED = 11-SEP-2001 TIME PLOTTED = 08:46

PLANS FOR THE IMPROVEMENT OF VISTA SORRENTO PARKWAY BRIDGE OVER LOS PENASQUITOS CREEK

GENERAL NOTES

Approval of these plans by the City Engineer does not authorize any work to be performed until a permit has been issued.

1. The approval of this plan or the issuance of a permit by the City of San Diego does not authorize the subdivider and owner to violate any Federal, State or City laws, ordinances, regulation, or policies, including, but not limited to, the Federal Endangered Species Act of 1973 and any amendments thereto (16 USC Section 1531 et seq.)

2. Before excavating, contractor shall verify location of underground utilities. No work to be performed until a permit has been issued.

   IMPORTANT NOTICE: Section 4216\4217 of the Government Code requires a dig alert identification number to be issued before a "permit to excavate" will be valid. For dig alert I.D. number call Underground Services Alert at 1-800-422-4133 two working days before you dig.

Underground Service Alert	1-800-422-4133
Gas & Electric Company	235-6323
Telephone Company & Fire Alarm	1-800-422-4133
Water & Sewer	1-800-422-4133
Communications Division	236-5505
Buildings & Irrigation	236-5500
Cable TV	455-6360

   Note: All electrical and gas services and all telephone services within this subdivision are "Underground Installations". For location of cables and appurtenances, contact the respective company.

3. All existing and/or proposed utility system and service facilities shall be installed underground in accordance with Section 102.0404 Subsection 2 of the Municipal Code and Subdivision Board Resolution no. 5655

4. Contractor shall coordinate his work with that of other contractors working on the site, including grading, drainage, landscaping and irrigation.

5. Location of water and sewer facilities shown on these plans shall take precedence in case of conflicts with other utilities not shown hereon.

6. Maintaining traffic - the contractor shall maintain one (1) traffic lane in each direction on 2-lane streets and two (2) lanes in each direction for traffic on all 4-or-more-lane streets during the working hours of 8:30 a.m. to 3:30 p.m.. Full width of all travel lanes on existing roadways must be maintained during the hours of 3:30 p.m. to 8:30 a.m. daily, and on Saturdays, Sundays, and designated working days. A 4-foot wide pedestrian access shall be provided and m[illegible]tained in accordance with section 7-10.1 of the Standard Specifications. [illegible]clarifications of the above, the contractor may contact Traffic Enginee[illegible] at 236-6040. Any modifications or change in alignment of the existing working or travel lanes of one-way or two-way streets shall receive prior approval from the City Traffic Engineer and shall be in accordance with Section 7-10.3 of the Standard Specifications, 1990 edition. Use signs, delineators, barricades, etc., as per 1990 State Of California traffic Control Manual. Delineators and steady burn lights are to outline the traffic path and barricades are to protect the work area. Contractor shall maintain access to existing roads, including unimproved roads, at all times during construction.

7. Contractor shall be responsible for any monumentation and/or benchmarks which will be disturbed or destroyed by construction. Such points shall be referenced and replaced with appropriate monumentation by a licensed Land Surveyor or a registered Civil Engineer authorized to practice land surveying. A corner record or record of survey, as appropriate, shall be filed by the licensed Land Surveyor or registered Civil Engineer as required by the Land Surveyor's Act.

8. See drawing numbers 28916-18-D and 28916-19-D for traffic striping plan.

9. Deviations or changes from these signed plans will not be allowed unless a construction change approved by the City Engineer is received by the City Inspector.

10. **No grading between March 15 and July 15.**

GEOTECHNICAL NOTES

1. Prior to placing any fill, settlement monuments should be placed in the areas with potential for consolidation settlement and the settlement shall be monitored by a licensed surveyor at intervals as recommended by the Geotechnical Engineer during grading and for the first month after completion of grading. Readings shall be not less than monthly thereafter.

2. The settlement monument readings shall be reviewed by the Geotechnical Engineer to determine the timing of surcharge removal and/or commencement of bridge construction.

3. All piles supporting the subject bridge shall be driven to the pile tip elevations shown on the plans and as recommended in the geotechnical report.

4. A representative of the Geotechnical Consultant shall observe actual pile placement in the field to verify soil conditions.

DECLARATION OF RESPONSIBLE CHARGE

I hereby declare that I am the Engineer of work for this project, that I have exercised responsible charge over the design of the project as defined in section 6703 of the business and professions code, and that the design is consistent with current standards.

I understand that the check of project drawings and specifications by the City of San Diego is confined to a review only, and does not relieve me, as Engineer of work, of my responsibilities for project design.

W. MARK ASHLEY RCE:C34299 Exp. 9-30-03
McDaniel Engineering Company, Inc.
5030 Camino De La Siesta, Suite 204
San Diego, California 92108
(619) 692-1520

6-22-00
Date

REGISTERED PROFESSIONAL ENGINEER W. Mark Ashley No. C34299 Exp. 9-30-03 Civil STATE OF CALIFORNIA

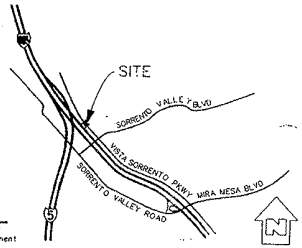

VICINITY MAP

Not to scale

REFERENCE DRAWINGS

Drawing 28916-D	Environmental Review Document DEP No. 91-0361
Drawing 28832-D	DEP No. 92-0610 Subsequent DEP No. 95-0554

SPECIAL NOTES

The following notes are provided to give directions to the contractor by the Engineer of work. The City Engineer's signature on these plans does not constitute approval of these notes, and the City will not be responsible for their enforcement.

1. Neither the owner, nor the engineer of work, will enforce safety measures or regulations. The contractor shall design, construct and maintain all safety devices, including shoring and shall be solely responsible for conforming to all Local, State and Federal safety and health standards, laws and regulations.

2. Location and elevation of existing improvement to be joined by work to be done shall be confirmed by field measurements prior to construction of the new work.

3. Contractor will make exploration excavations and locate existing underground facilities sufficiently ahead of construction to permit revisions to plans if revisions are necessary because of actual location of existing utilities.

4. Before excavating for this contract, verify location of underground utilities. The existence and location of any underground utility pipes or structures shown on these plans were obtained by a search of all available records.

5. Contractor is required to take precautionary measures to protect the utility lines shown hereon and any other existing lines not of record or not shown on these plans.

6. Contractor agrees that he shall assume sole and complete responsibility for job site conditions during the course of construction of this project, including safety of all persons and property; that this requirement shall apply continuously and not be limited to normal working hours; and that the contractor shall defend, indemnify and hold the owner and the engineer harmless from any and all liability, real or alleged, in connection with the performance of work on this project, excepting for liability arising from the sole negligence of the owner or the engineer.

CONSTRUCTION CHANGE TABLE

CHANGE	DATE	SHEET NUMBER REVISED OR ADDED THIS CHANGE

INDEX TO BRIDGE PLANS

SHEET NO	TITLE
1.	TITLE SHEET
2.	GENERAL PLAN
3.	BRIDGE LAYOUT DATA
4.	DECK CONTOURS
5.	FOUNDATION PLAN
6.	ABUTMENT 1 LAYOUT
7.	ABUTMENT 4 LAYOUT
8.	ABUTMENT DETAILS
9.	PIER DETAILS
10.	SUPERSTRUCTURE DETAILS No 1
11.	SUPERSTRUCTURE DETAILS No 2
12.	APPROACH SLAB DETAILS
13.	STRUCTURE APPROACH DRAINAGE DETAILS
14.	LOG OF TEST BORINGS-1

BENCHMARK

City of San Diego bench: Brass plug in the top of curb on Southeast corner of Sorrento Valley Road and Vista Sorrento Parkway.

Elevation: 33.145 Datum: M S L

STREET LIGHT NOTES

Street lights notes are not shown on these drawings. See drawings 28916-3-D.

SITE DEVELOPMENT

Grading of this site is being done concurrently under a separate contract, which is covered by drawing 28832-D.

WORK TO BE DONE

The improvements consist of the following work to be done according to these plans and the specifications and standard drawings of the City of San Diego.

STANDARD SPECIFICATIONS

1. Standard Specifications for Public Works Construction (1997 edition), including the regional and City of San Diego supplement amendments, doc. no. 769331, filed May 2, 1997.

2. 1999 Standard Special Provisions for Signals, Lighting and Electrical Systems of the City of San Diego document no. 769842, filed October 22, 1999.

3. California Department of Transportation, "Manual Of Traffic Controls For Construction And Maintenance Work Zones," (1996 edition, document no. 769843, filed January 24, 2000.

4. State of California, Department of Transportation, Standard Specifications (July 1992), document no. 769806, filed July 9, 1992.

STANDARD DRAWINGS

1. City of San Diego standard drawings, document no. 769332, filed May 2, 1997.

2. State of California, Department of Transportation Standard Plans (July 1992), document no. 769805, filed July 9, 1992.

TRAFFIC CONTROL NOTES

The Contractor shall submit a traffic control plan for approval to the Traffic Control Plan Check Counter (Phone 619-533-3946), Engineering Services Division, 5th floor, City Operations Building, 1222 First Avenue, San Diego, 2 working days (10 days for street closures) prior to starting work within the public right-of-way.

SPECIFICATIONS

Special provisions for the construction of Vista Sorrento Parkway Bridge over Los Penasquitos Creek

GRADING AND GEOTECHNICAL SPECIFICATIONS

1. All grading shall be done under observation and testing by a qualified Civil Engineer or Geotechnical Engineer and, if required, both a qualified Civil Engineer and a Geotechnical Engineer and an Engineering Geologist. All grading must be performed in accordance with applicable City Ordinance and the recommendations and specifications set forth in the soils report or geological/geotechnical investigation entitled: Geotechnical Investigation-Torrey Reserve Heights

   for Sorrento Valley Blvd to Sta 18+00 including Los Penasquitos Creek Bridge
   Prepared by GEOCON Inc. dated February 1996

2. All fill material shall be compacted to a minimum of 90% of the maximum dry density as determined by the most recent version of A.S.T.M. D-1557 or an approved alternative standard.

3. At the completion of the grading operations, an As-Graded Soils, or if required, an As-Graded Soils and Geological Report will be prepared in accordance with the most recent edition of the City of San Diego Technical Guidelines for Geotechnical Reports. One copy of the As-Graded report will be submitted to the Field Inspection Section and the Subdivision Section of the City Engineer's office within 15 days of the completion of grading.

4. The bridge and grading plans have been reviewed by the undersigned and found to be in conformance with the recommendation and specification outlined in the soils (geological) report.

5. FOR SOILS FILE SEE CITY RECORD S-967693

   R.C.E. 41618 date 7/25/00
   C.E.G. 1524 date 7/25/00
   GEOCON Inc. Phone No. (619) 558-6900

REGISTERED GEOLOGIST No. 1524 CERTIFIED ENGINEERING GEOLOGIST STATE OF CALIFORNIA

REGISTERED CIVIL ENGINEER No. 41618 STATE OF CALIFORNIA

ENGINEERING PERMIT NO. [illegible]
PRIVATE CONTRACT

PLANS FOR THE IMPROVEMENT OF:
VISTA SORRENTO PARKWAY BRIDGE

TITLE SHEET

CITY OF SAN DIEGO, CALIFORNIA
ENGINEERING DEPARTMENT
SHEET 1 OF 14 SHEETS

T.W. 95-0554
W.O. No. 967693

7/7/00
CITY ENGINEER DATE

DESCRIPTION	BY	APPROVED	DATE	PLANED
ORIGINAL	MCE			
As Built			9-21-04	9-21-04

PSM 6259
MCE AS COORD
2.4 MSP
CURRENT COORDINATES

CONTRACTOR Fracasso Inc. DATE STARTED 10-2-00
INSPECTOR Durant/Davis DATE COMPLETED 9-21-01

20880-1-D

McDANIEL ENGINEERING
5030 CAMINO DE LA SIESTA SUITE 204, SAN DIEGO, CA. 92108 . (619) 692-1520

ENGINEER OF WORK

REGISTERED PROFESSIONAL ENGINEER W. MARK ASHLEY No. 34299 Exp. 9-30-03 Civil STATE OF CALIFORNIA

PROJECT ENGINEER W. MARK ASHLEY	RCE	C34299	EXP	9-30-03	DATE	6-22-00

AS-BUILT

Filenamer:p:\750\753\details\753010ts.dgn Date: 05 JUL 100 Time:08:58:47

FILMED FROM THE ORIGINAL. BEST QUALITY OBTAINABLE. EXCESSIVE GRAY BACKGROUND MAY CAUSE A POOR QUALITY REPRODUCTION.

0 1 2 3 4 IN.

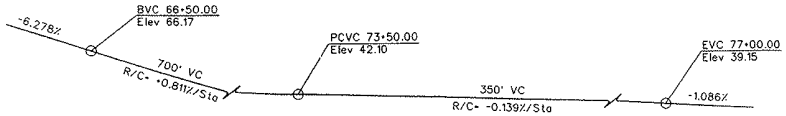

PROFILE GRADE

No Scale

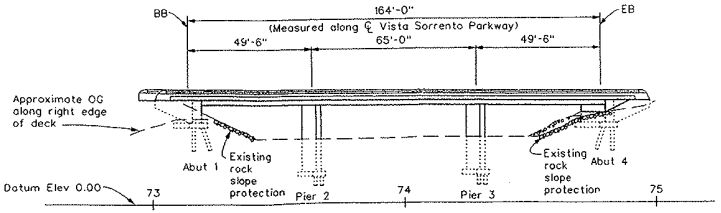

For piling data see "Foundation Plan" sheet

ELEVATION

1" = 20'

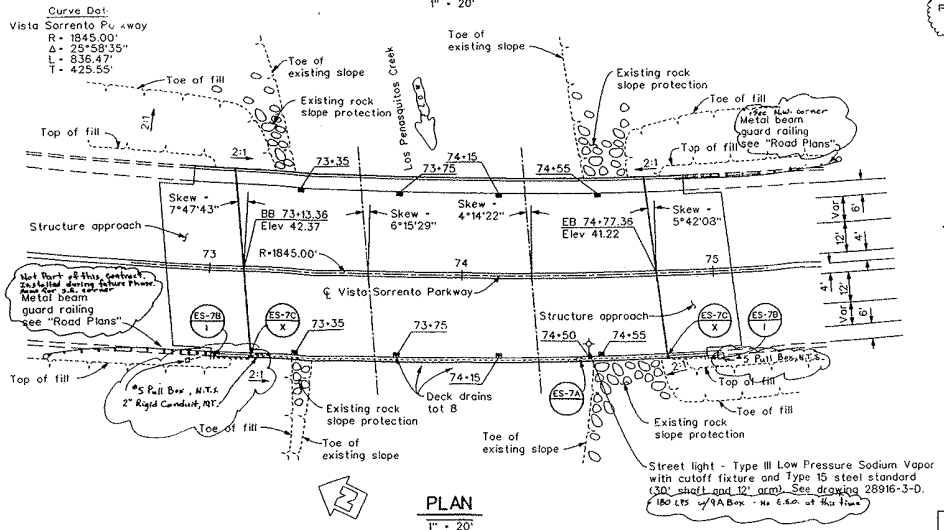

PLAN

1" = 20'

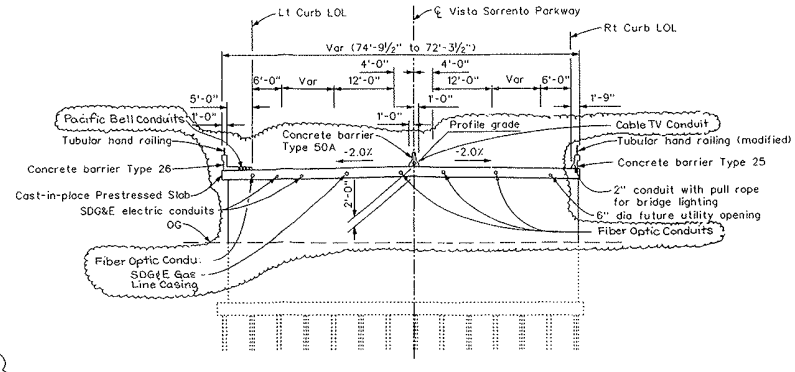

⚠ TYPICAL SECTION

1" = 10'

INDEX TO STANDARD PLANS

The following State of California Department of Transportation Standard Plans, dated July 1992, are a part of these contract drawings.

A62C	LIMITS OF PAYMENT FOR EXCAVATION AND BACKFILL
A75A	CONCRETE BARRIER TYPE 50
B0-1	BRIDGE DETAILS
B0-3	BRIDGE DETAILS
B0-13	BRIDGE DETAILS
B2-5	PILE DETAILS - CLASS 45 & CLASS 70
B6-21	JOINT SEALS
B7-5	DECK DRAINS
B11-51	TUBULAR HAND RAILING
B11-53	CONCRETE BARRIER TYPE 25
B11-54	CONCRETE BARRIER TYPE 26
ES-7A	SIGNAL AND LIGHTING DETAILS, ELECTRICAL DETAILS STRUCTURE INSTALLATIONS
ES-7B	SIGNAL AND LIGHTING DETAILS, ELECTRICAL DETAILS STRUCTURE INSTALLATIONS
ES-7C	SIGNAL AND LIGHTING DETAILS, ELECTRICAL DETAILS STRUCTURE INSTALLATIONS

PLAN SYMBOLS

(A) — Section identification

Standard Plan (July 1992) sheet no.

Detail no.

REGISTERED PROFESSIONAL ENGINEER — W. Mark Ashley — No. C34299 — Exp. 9-30-03 — CIVIL — STATE OF CALIFORNIA

McDANIEL ENGINEERING
5030 CAMINO DE LA SIESTA SUITE 204, SAN DIEGO, CA. 92108 - (619) 692-1920

ENGINEER OF WORK

C34299 — 9-30-03 — 6-22-00
PROJECT ENGINEER W. MARK ASHLEY, PE — EXP — DATE

PRIVATE CONTRACT

PLANS FOR THE IMPROVEMENT OF:

VISTA SORRENTO PARKWAY BRIDGE

GENERAL PLAN

CITY OF SAN DIEGO, CALIFORNIA
ENGINEERING DEPARTMENT
SHEET 2 OF 14 SHEETS

T.W. 95-0034
W.O. NO 967693

7/8/00
FOR CITY ENGINEER — DATE

DESCRIPTION	BY	APPROVED	DATE	PLANS
ORIGINAL	W.D.			
As-built	W.D.			

As-built — J.A.V. — J.E. — 7-21-00 (6-6)
CONTRACTOR Evergreen Inc — DATE STARTED 10-2-00
INSPECTOR Durbal/Reyes — DATE COMPLETED 8-21-01

28880-2-D

AS-BUILT

Filename: p:\750\753\details\753011gp.dgn — Date: 05 JUL 100 Time: 08:49:59

FILMED FROM THE ORIGINAL. BEST QUALITY OBTAINABLE. EXCESSIVE GRAY BACKGROUND MAY CAUSE A POOR QUALITY REPRODUCTION.

0 1 2 3 4 IN.

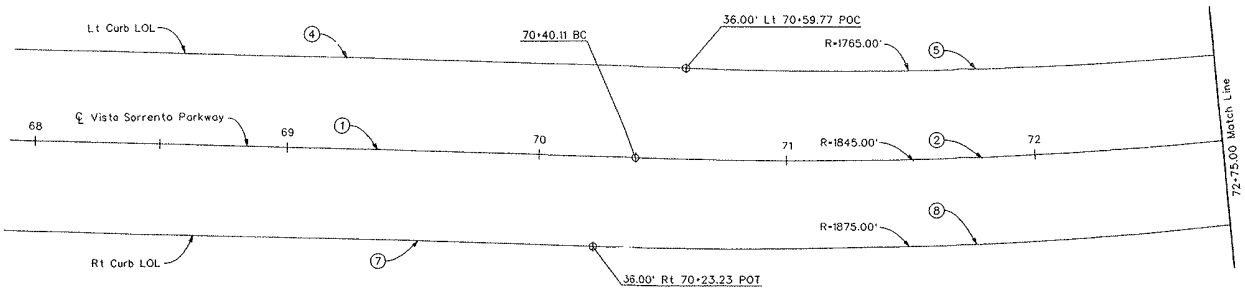

No.	Line	Radius	Bearing/Delta	Tangent	Length
1	Vista Sorrento Parkway		N 13°43'06" W		268.51'
2	Vista Sorrento Parkway	1845.00'	25°58'35"	425.55'	836.47'
3	Vista Sorrento Parkway		N 39°41'41" W		123.42'
4	Left Curb Layout Line		N 13°43'06" W		287.79'
5	Left Curb Layout Line	1765.00'	25°58'35"	407.10'	800.20'
6	Left Curb Layout Line		N 39°41'41" W		125.15'
7	Right Curb Layout Line		N 13°43'06" W		251.63'
8	Right Curb Layout Line	1875.00'	25°58'35"	432.47'	850.08'
9	Right Curb Layout Line		N 39°41'41" W		141.22'

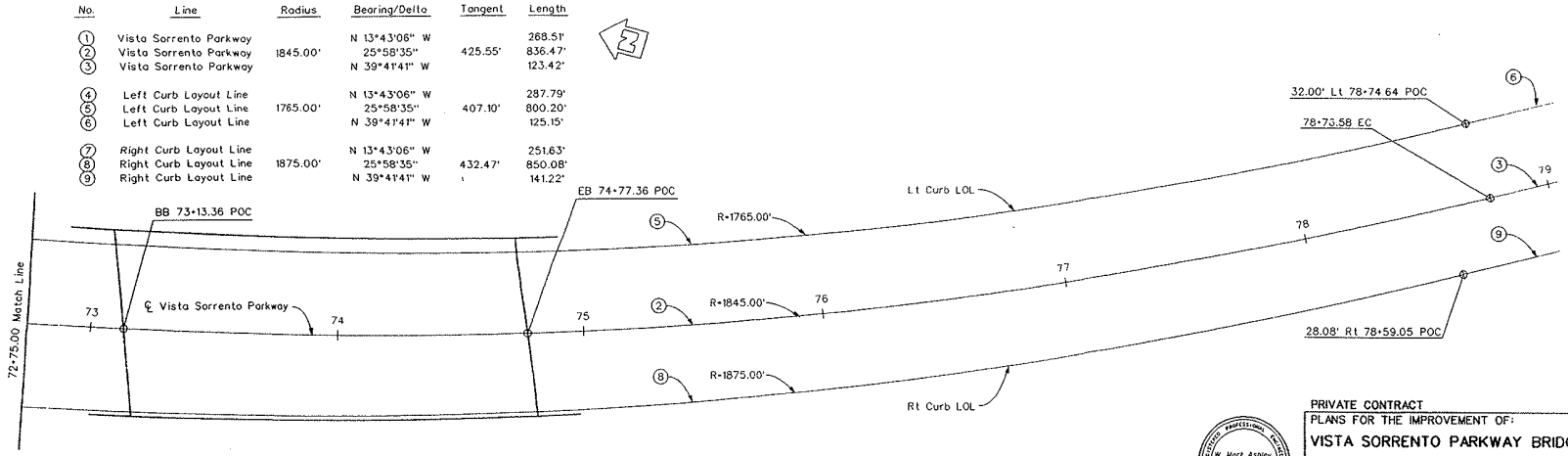

PLAN
1" = 20'

W. Mark Ashley
No. C34299
Exp. 9-30-03
CIVIL
REGISTERED PROFESSIONAL ENGINEER
STATE OF CALIFORNIA

McDANIEL ENGINEERING
5600 CAMINO DE LA SIESTA SUITE 204, SAN DIEGO, CA. 92108 . (619) 692-1920

ENGINEER OF WORK
C34299 9-30-03 6-22-00
PROJECT ENGINEER W. MARK ASHLEY RCE EXP DATE

PRIVATE CONTRACT
PLANS FOR THE IMPROVEMENT OF:
VISTA SORRENTO PARKWAY BRIDGE

BRIDGE LAYOUT DATA

CITY OF SAN DIEGO, CALIFORNIA
ENGINEERING DEPARTMENT
SHEET 3 OF 14 SHEETS

I.M. 95-0504
W.O. NO 967693

9/8/00
FOR CITY ENGINEER DATE

DESCRIPTION	BY	APPROVED	DATE	FILMED
ORIGINAL				
As-Built		J.E.	8/29/01	

CONTRACTOR Brecco's, Inc. DATE STARTED 10-2-00
INSPECTOR Buccat/Revels DATE COMPLETED 6-21-01

1994 6255
USE AT COORD.
2.4.1995
AMENDMENT PROPOSAL(S)

28880-3-D

AS-BUILT

Filename: p:\750\753\details\753015lo.dgn Date: 05 JUL 100 Time:08:50:34

FILMED FROM THE ORIGINAL. BEST QUALITY OBTAINABLE. EXCESSIVE GRAY BACKGROUND MAY CAUSE A POOR QUALITY REPRODUCTION.

0 1 2 3 4 IN.

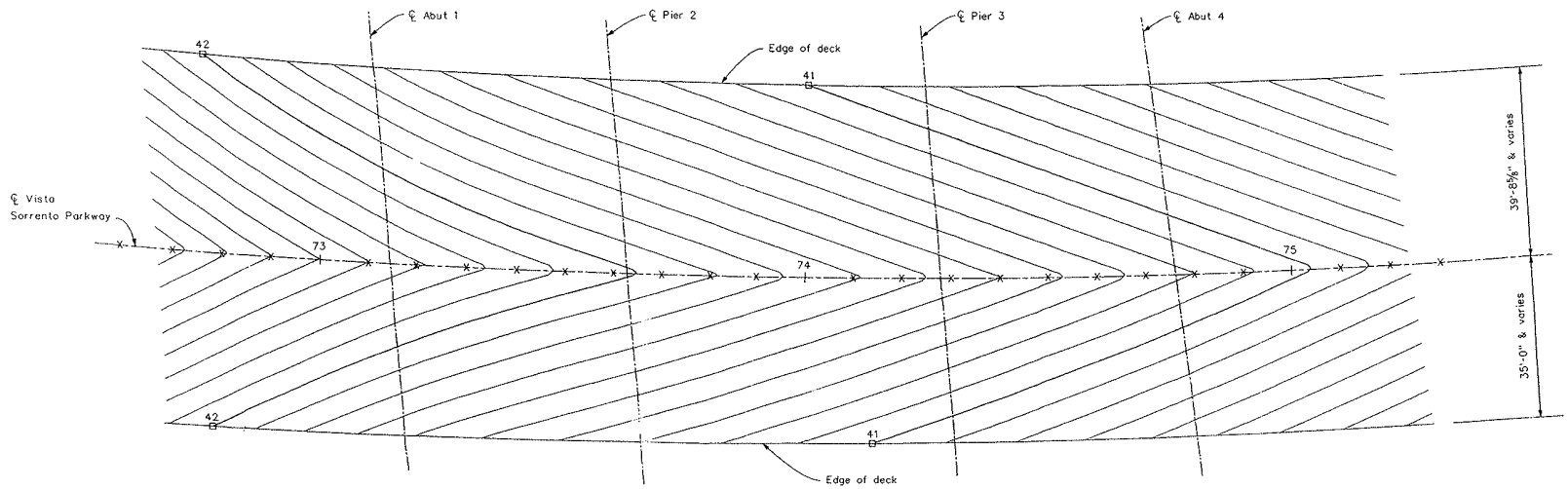

Notes:

1. Contour interval = 0.10 ft.
2. Contours do not include camber.
3. ⊡ - Indicates even foot contours.
4. X - Indicates 10' intervals.

GENERAL NOTES
LOAD FACTOR DESIGN

DESIGN: BRIDGE DESIGN SPECIFICATIONS (1983 AASHTO with INTERIMS and REVISIONS by CALTRANS)

DEAD LOAD: Includes 35 psf for future wearing surface

LIVE LOADING: HS20-44 and alternative and permit design load

SEISMIC LOADING: Peak Rock Acceleration = 0.5g
Depth of Alluvium = 10-80 ft

REINFORCED CONCRETE: f_y = 60,000 psi
f'_c = 3,250 psi
n = 9
Transverse Deck Slabs (Working Stress Design)
f_s = 20,000 psi
f_c = 1,200 psi
n = 10

PRESTRESSED CONCRETE: See "Prestressing Notes" on "Superstructure Details No. 1" sheet

STRUCTURAL STEEL: f_y = 36,000 psi

PLAN
1" = 10'

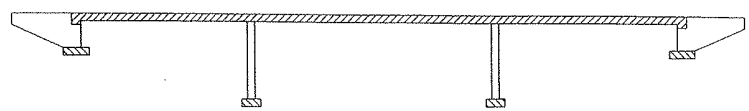

CONCRETE STRENGTH AND TYPE LIMITS

No scale

- Structural Concrete, Bridge (3250 psi @ 28 days)
- Structural Concrete, Bridge (4000 psi @ 28 days)
- Structural Concrete, Bridge Footing (3250 psi @ 28 days)

REGISTERED PROFESSIONAL ENGINEER
W. Mark Ashley
No. C34299
Exp. 9-30-03
CIVIL
STATE OF CALIFORNIA

PRIVATE CONTRACT
PLANS FOR THE IMPROVEMENT OF:
VISTA SORRENTO PARKWAY BRIDGE

DECK CONTOURS

CITY OF SAN DIEGO, CALIFORNIA
ENGINEERING DEPARTMENT
SHEET 4 OF 14 SHEETS

T.M. 95-0554
W.O. NO. 967693

FOR CITY ENGINEER — DATE 8/9/00

DESCRIPTION	BY	APPROVED	DATE	FILMED
ORIGINAL				

AS-Built — J.R. — 5-21-01-16.00

CONTRACTOR Erreco's Inc. DATE STARTED 10-2-00
INSPECTOR Durant/Revels DATE COMPLETED 6-21-01

TOTAL 6255
VAC BY 1000
TOTAL 1699
MARKET COORDINATES

28880-4 — D

McDANIEL ENGINEERING
5030 CAMINO DE LA SIESTA SUITE 204, SAN DIEGO, CA. 92108 - (619) 692-1920

ENGINEER OF WORK

PROJECT ENGINEER W. MARK ASHLEY RCE — C34299 — EXP 9-30-03 — DATE 6-22-00

Filename: p:\750\753\details\753021dc.dgn

Date: 05 JUL 100 Time:08:51:01

AS-BUILT

FILMED FROM THE ORIGINAL. BEST QUALITY OBTAINABLE. EXCESSIVE GRAY BACKGROUND MAY CAUSE A POOR QUALITY REPRODUCTION.

0 1 2 3 4 IN.

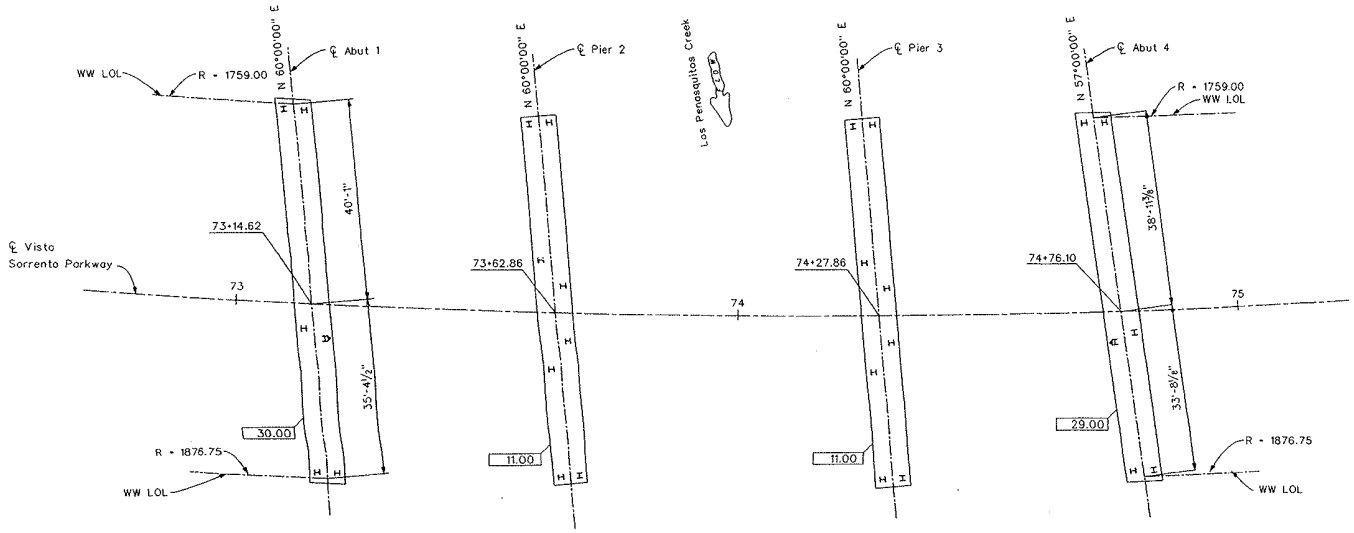

PLAN

1" = 10'

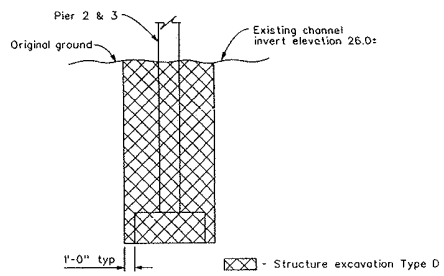

LIMITS OF TYPE D EXCAVATION

No Scale

Notes:

1. 00.00 - Indicates bottom of footing elevation
2. For Limits of excavation and backfill not shown see A62C
3. For pile layout and spacing see "Abutment 4 Layout" and "Pier Details" sheets

PILE DATA - STEEL PILE

Location	Type	Design Loading (Ultimate Load) Compression	Nominal Resistance Compression	Nominal Resistance Tension	Design Tip Elev	Specified Tip Elev
Abutment 1	HP 10X57	280 kips	254 kips	0 kips	-33.0 (1)	-33.0
Pier 2	HP 10X57	280 kips	280 kips	20 kips	-33.0 (1)	-33.0
Pier 3	HP 10X57	280 kips	280 kips	20 kips	-33.0 (1)	-33.0
Abutment 4	HP 10X57	280 kips	254 kips	0 kips	-33.0 (1)	-33.0

(1) - Design tip is controlled by the following demands: (1) Compression

REGISTERED PROFESSIONAL ENGINEER — W. Mark Ashley — No. C34299 — Exp. 9-30-03 — CIVIL — STATE OF CALIFORNIA

McDANIEL ENGINEERING
5030 CAMINO DE LA SIESTA SUITE 204, SAN DIEGO, CA. 92108 • (619) 692-1920

ENGINEER OF WORK

PROJECT ENGINEER W. MARK ASHLEY REG	C34299	CAP	6-30-03 DATE	6-22-00 DATE

PRIVATE CONTRACT

PLANS FOR THE IMPROVEMENT OF:

VISTA SORRENTO PARKWAY BRIDGE

FOUNDATION PLAN

CITY OF SAN DIEGO, CALIFORNIA
ENGINEERING DEPARTMENT
SHEET 5 OF 14 SHEETS

T.M. 93-0554
W.O. 967693
I.C.

9/8/00
CITY ENGINEER DATE

DESCRIPTION	BY	APPROVED	DATE	FILMED
ORIGINAL	MD E			MN
As-Built		J.E.	10-2-00	

CONTRACTOR Ericco's Inc. DATE STARTED 10-2-00
INSPECTOR Durant/Rovela DATE COMPLETED 9-21-01

"BM 6293 NAD 83 COORD"

"CP 499 NAD83" COORDINATES

28880-5-D

AS-BUILT

Filename: p:\750\753\details\753031fp.dgn Date: 05 JUL 100 Time: 08:51:27

FILMED FROM THE ORIGINAL. BEST QUALITY OBTAINABLE. EXCESSIVE GRAY BACKGROUND MAY CAUSE A POOR QUALITY REPRODUCTION.

0 1 2 3 4 FT.

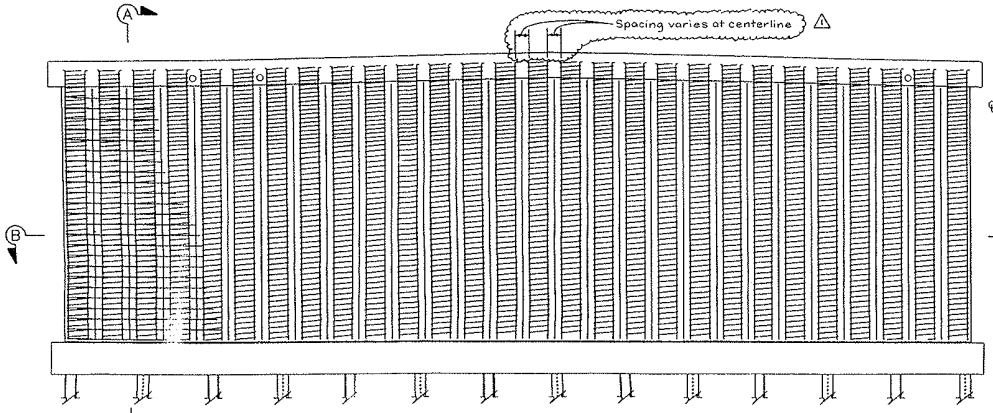

ELEVATION

1/4" = 1'-0"

Note: All piles not shown

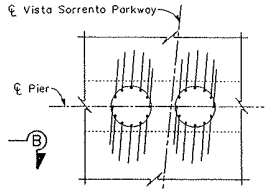

MAIN VERTICAL BAR HOOK LAYOUT

1/2" = 1'-0"

Note: Orient main vertical bar hooks parallel to ℄ Vista Sorrento Parkway

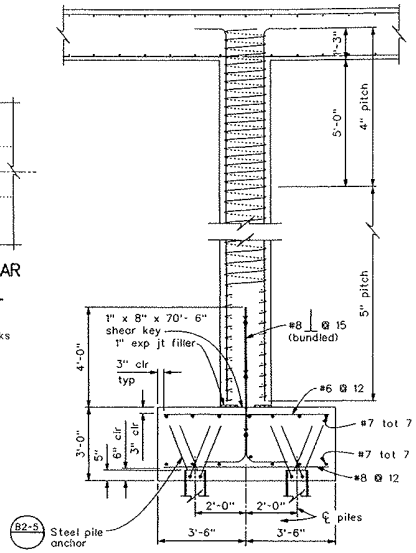

SECTION A-A

1/2" = 1'-0"

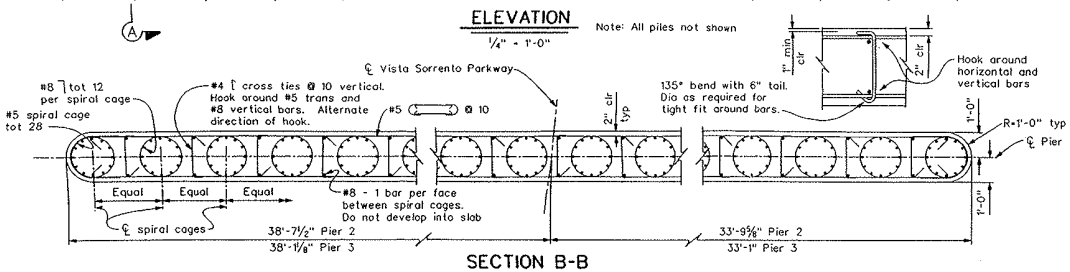

SECTION B-B

1/2" = 1'-0"

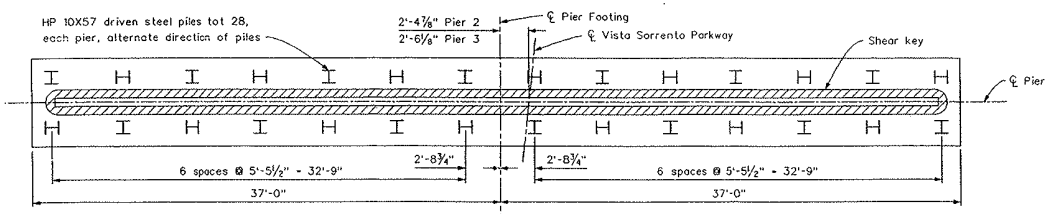

FOOTING PLAN

1/4" = 1'-0"

McDANIEL ENGINEERING
5030 CAMINO DE LA SIESTA SUITE 204 · SAN DIEGO, CA. 92108 · (619) 692-1920

ENGINEER OF WORK

C34299 — 9-30-03 — 6-22-00
PROJECT ENGINEER W. MARK ASHLEY RCE — EXP — DATE

REGISTERED PROFESSIONAL ENGINEER
W. Mark Ashley
No. C34299
Exp. 9-30-03
CIVIL
STATE OF CALIFORNIA

PRIVATE CONTRACT

PLANS FOR THE IMPROVEMENT OF:

VISTA SORRENTO PARKWAY BRIDGE

PIER DETAILS

CITY OF SAN DIEGO, CALIFORNIA
ENGINEERING DEPARTMENT
SHEET 9 OF 14 SHEETS

T.M. 93-0554
W.O. 967693

7/8/00
DATE
AND CITY ENGINEER

DESCRIPTION	BY	APPROVED	DATE	FILMED
ORIGINAL	WO 1			
△1 AS-BUILT change	WO			

A.S. Builts — J.C. — 4-11-01 — 4-11-01
CONTRACTOR Ferrara's Inc. — DATE STARTED 10-2-00
INSPECTOR Dumont/Revels — DATE COMPLETED 6-21-01

"014-5259 NAD 83" COORD
"14 1653 INDEX" COORDINATES

28880-9-D

AS-BUILT

Filename: p:\750\753\details\753051pd.dgn

Date: 05 JUL 100 Time:08:53:47

FILMED FROM THE ORIGINAL. BEST QUALITY OBTAINABLE. EXCESSIVE GRAY BACKGROUND MAY CAUSE A POOR QUALITY REPRODUCTION

0 1 2 3 4 IN.

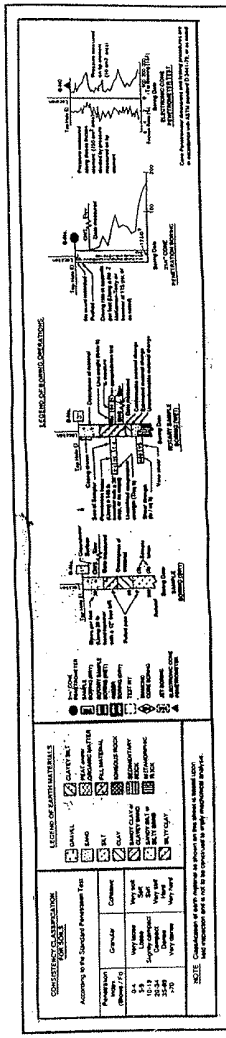

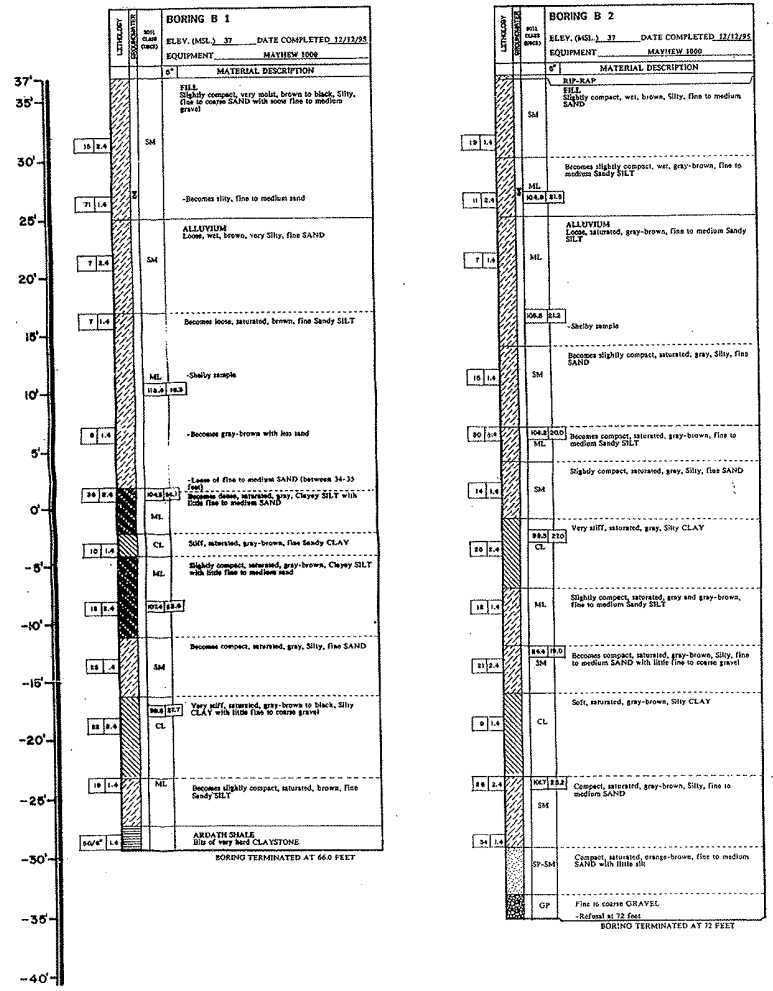

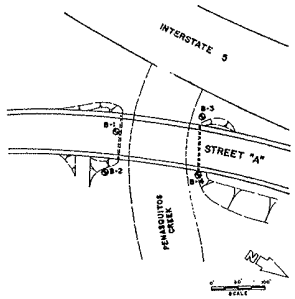

GEOCON INCORPORATED
GEOTECHNICAL CONSULTANTS
4740 RUFFNER STREET · SAN DIEGO, CALIFORNIA 92123-1413
PHONE 619 569-2202 · FAX 619 569-2249
PROJECT NO. 05506-12-05
FIGURE 1
DATE 12-23-1997

PRIVATE CONTRACT
PLANS FOR THE IMPROVEMENT OF:
VISTA SORRENTO PARKWAY BRIDGE

LOG OF TEST BORINGS

CITY OF SAN DIEGO, CALIFORNIA
ENGINEERING DEPARTMENT
SHEET 14 OF 14 SHEETS

T.W. 95-0554
A.O. 967693
NO.

CITY ENGINEER DATE

DESCRIPTION	BY	APPROVED	DATE	NAMES
GEOCON				
As-Built	J.R.		7-11-00	

ENGINEER Ericson, Inc. DATE STARTED 10-2-00
INSPECTOR Durant/Revels DATE COMPLETED 8-2-01

28880-14-D

AS-BUILT

FILMED FROM THE ORIGINAL. BEST QUALITY OBTAINABLE. EXCESSIVE GRAY BACKGROUND MAY CAUSE A POOR QUALITY REPRODUCTION.

DIST.	COUNTY	ROUTE	KILOMETER POST TOTAL PROJECT	SHEET NO.	TOTAL SHEETS
11	SD	5, 56, 805	Var	1106	1549

G.S. Blakeley 05-01-01
REGISTERED ENGINEER CIVIL

9-3-01
PLANS APPROVAL DATE

REGISTERED PROFESSIONAL ENGINEER G.S. BLAKESLEY No. 45509 Exp. 12-31-02 CIVIL STATE OF CALIFORNIA

The State of California or its officers or agents shall not be responsible for the accuracy or completeness of electronic copies of this plan sheet.

Caltrans now has a web site! To get to the web site, go to http://www.dot.ca.gov

Caltrans Metric

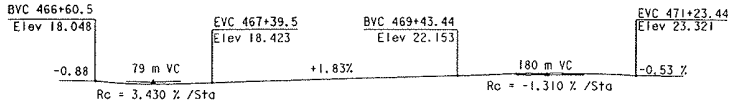

PROFILE GRADE

No Scale

Note:
For super elevation diagram see "Deck Contours No. 1" sheet

GENERAL NOTES
LOAD FACTOR DESIGN

DESIGN : BRIDGE DESIGN SPECIFICATIONS
(1992 15th edition AASHTO with Interims and Revisions by CALTRANS)
SEISMIC DESIGN: CALTRANS SEISMIC DESIGN CRITERIA (SDC), VERSION 1.1 JULY 1999
DEAD LOADING : Includes 1676 Pa for future wearing surface.
LIVE LOADING : HS20-44 and alternative and permit design load.
SEISMIC LOADING : Site specific ARS Curve.
(See Below)

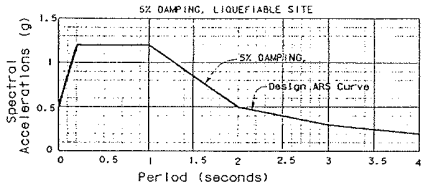

ACCELERATION RESPONSE SPECTRA

REINFORCED CONCRETE :
fy = 420 MPa
f'c = 25 MPa
n = 8
Transverse Deck Slabs (Working Stress Design)
fs = 140 MPa
fc = 10 MPa
n = 10

PRESTRESSED CONCRETE: See 'Prestressing Notes' on "GIRDER DETAILS" sheet.

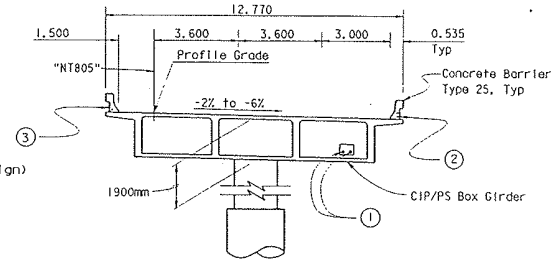

TYPICAL SECTION

1:100

QUANTITIES

STRUCTURE EXCAVATION (BRIDGE)	330	m3
STRUCTURE BACKFILL (BRIDGE)	75	m3
ISOLATION CASING BACKFILL	54	m3
1.7 m CAST-IN-DRILLED-HOLE CONCRETE PILING	157	m
3.2 m CAST-IN-DRILLED-HOLE CONCRETE PILING	129	m
1.7 m PERMANENT STEEL CASING	157	m
3.2 m PERMANENT STEEL CASING	129	m
1.5 m CAST-IN-DRILLED-HOLE CONCRETE PILING (ROCK SOCKET)	26	m
3.0 m CAST-IN-DRILLED-HOLE CONCRETE PILING (ROCK SOCKET)	82	m
PRESTRESSING CAST-IN-PLACE CONCRETE	LUMP	SUM
STRUCTURAL CONCRETE, BRIDGE	3,140	m3
STRUCTURAL CONCRETE, APPROACH SLAB (TYPE N)	74	m3
PTFE BEARING	8	EA
JOINT SEAL ASSEMBLY (MR 161 MM - 240 MM)	25	m
BAR REINFORCING STEEL (BRIDGE)	925,000	kg
ISOLATION CASING	24,500	kg
SLOPE PAVING (CONCRETE)	12	m3
BRIDGE DECK DRAINAGE SYSTEM	2,000	kg
CONCRETE BARRIER (TYPE 25)	729	m

STANDARD PLANS
Dated July 1999

A10A	ABBREVIATIONS
A62C	LIMITS OF PAYMENT FOR EXCAVATION AND BACKFILL - BRIDGE
B0-1	BRIDGE DETAILS
RSPB0-3	BRIDGE DETAILS
B0-5	BRIDGE DETAILS
B0-13	BRIDGE DETAILS
B7-1	BOX GIRDER DETAILS
B7-6	DECK DRAINS TYPES D-1 AND D-2
B7-7	DECK DRAINS TYPE D-3
B7-10	UTILITY OPENING BOX GIRDER
B8-5	CAST-IN-PLACE PRESTRESSED GIRDER DETAILS
RSPB11-53	CONCRETE BARRIER TYPE 25
B14-3	COMMUNICATION AND SPRINKLER CONTROL CONDUITS (CONDUIT LESS THAN SIZE 103)
B14-5	WATER SUPPLY LINE (DETAILS)

Standard Plan Sheet No.
Detail No.

INDEX TO PLANS

Sheet No.	Title
1	GENERAL PLAN
2	STRUCTURE PLAN NO. 1
3	STRUCTURE PLAN NO. 2
4	DECK CONTOURS NO. 1
5	DECK CONTOURS NO. 2
6	FOUNDATION DATA
7	FOUNDATION PLAN NO. 1
8	FOUNDATION PLAN NO. 2
9	FOUNDATION PLAN NO. 3
10	ABUTMENT 1 LAYOUT
11	ABUTMENT 9 LAYOUT
12	ABUTMENT DETAILS NO. 1
13	ABUTMENT DETAILS NO. 2
14	ABUTMENT DETAILS NO. 3
15	ABUTMENT DETAILS NO. 4
16	BENT COLUMN DETAILS NO. 1
17	BENT COLUMN DETAILS NO. 2
18	BENT CAP LAYOUT
19	BENT CAP DETAILS
20	TYPICAL SECTION
21	GIRDER LAYOUT NO. 1
22	GIRDER LAYOUT NO. 2
23	GIRDER DETAILS
24	ADDITIONAL GIRDER REINFORCEMENT
25	ISOLATION CASING DETAILS
26	PTFE/ELASTOMERIC BEARING PADS
27	ABUTMENT JOINT SEAL DETAILS
28	STRUCTURE APPROACH TYPE N(9S)
29	STRUCTURE APPROACH DRAINAGE DETAILS
30	SLOPE PAVING-FULL SLOPE
31	LOG OF TEST BORINGS 1 OF 13
32	LOG OF TEST BORINGS 2 OF 13
33	LOG OF TEST BORINGS 3 OF 13
34	LOG OF TEST BORINGS 4 OF 13
35	LOG OF TEST BORINGS 5 OF 13
36	LOG OF TEST BORINGS 6 OF 13
37	LOG OF TEST BORINGS 7 OF 13
38	LOG OF TEST BORINGS 8 OF 13
39	LOG OF TEST BORINGS 9 OF 13
40	LOG OF TEST BORINGS 10 OF 13
41	LOG OF TEST BORINGS 11 OF 13
42	LOG OF TEST BORINGS 12 OF 13
43	LOG OF TEST BORINGS 13 OF 13

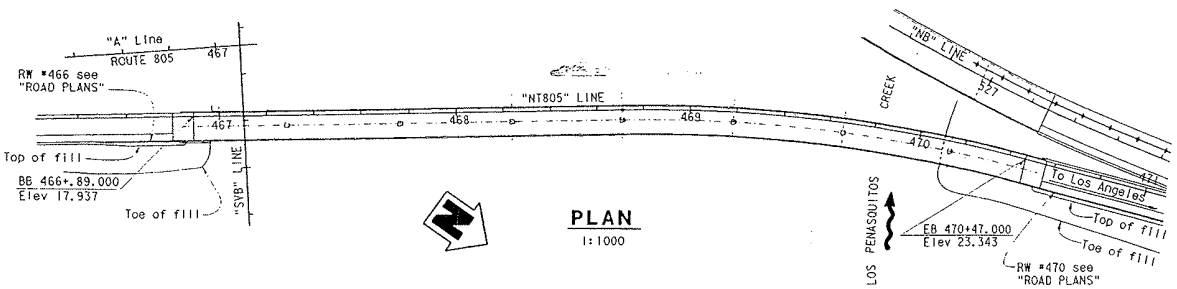

PLAN

1:1000

NOTES:

1. 2 - 103mm ø Communication Conduits in 155 mm X 305 mm opening, see "ROAD PLANS"
2. 1 - 53mm ø Conduit for lighting and sign illumination, see "ROAD PLANS"
   1 - 53mm ø Conduit for sprinkler control, see "ROAD PLANS"
3. 1 - 53mm ø Conduit for lighting and sign illumination, see "ROAD PLANS"
4. For alignment and other information, see "STRUCTURE PLAN No 1 and No 2" sheets
5. For Pile Data, see "FOUNDATION DATA" sheet

ALL DIMENSIONS ARE IN METERS UNLESS OTHERWISE SHOWN

Ramin Rashedi 05/01/01
DESIGN ENGINEER

DESIGN	BY M. OKIMURA	CHECKED J. Peterson	LOAD FACTOR DESIGN	LIVE LOADING: HS20-44 AND ALTERNATIVE AND PERMIT DESIGN LOAD	
DETAILS	BY J. LANE/D. Elliott	CHECKED J. Peterson	LAYOUT	BY M. OKIMURA	CHECKED J. Peterson
QUANTITIES	BY K. NISHIMOTO	CHECKED J. POSEY	SPECIFICATIONS	BY S. DOLLAGA	PLANS AND SPECS COMPARED BY S. DOLLAGA

STRUCTURES DESIGN GENERAL PLAN SHEET (METRIC) (REV. 4/15/97)

ORIGINAL SCALE IN MILLIMETERS FOR REDUCED PLANS 0 10 20 30 40 50 60 70 80 90 100

STATE OF CALIFORNIA
DEPARTMENT OF TRANSPORTATION

DIVISION OF STRUCTURES
STRUCTURE DESIGN 11

CU 11275
EA 0301U1

BRIDGE NO. 57-1070G
KILOMETER POST 45.5

N805-N5 TRUCK CONNECTOR
GENERAL PLAN

DISREGARD PRINTS BEARING EARLIER REVISION DATES

REVISION DATES (PRELIM. THEN STRUCT. ONLY)

SHEET 1 OF 43

FILE = jo1gp.dgn

DATE PLOTTED = 11-SEP-2001 TIME PLOTTED = 09:47

USERNAME = 1

3

DIST	COUNTY	ROUTE	KILOMETER POST TOTAL PROJECT	SHEET No	TOTAL SHEETS
11	SD	5,56,805	Var	1107	1549

G.S. Blakesley 05-01-01
REGISTERED CIVIL ENGINEER

9-3-01
PLANS APPROVAL DATE

REGISTERED PROFESSIONAL ENGINEER G.S. BLAKESLEY No. 45509 Exp. 12-31-02 CIVIL STATE OF CALIFORNIA

The State of California or its officers or agents shall not be responsible for the accuracy or completeness of electronic copies of this plan sheet.

Caltrans now has a web site! To get to the web site, go to: http://www.dot.ca.gov

Caltrans Metric

NOTES:

1. Paint "N805-N5 Truck Connector"
2. Paint " Bridge No. 57-1070G"
3. Structure Approach Type N(9S)
4. Paint Bent Numbers
5. MBGR, See "ROAD PLANS"
6. For drain pipe connection, See "ROAD PLANS". See "Abutment Details No. 4" for deck drain pipe details at abutment.

■ Indicates Deck Drain Type D-3 (B7-7)

◐ Indicates point of minimum vertical clearance

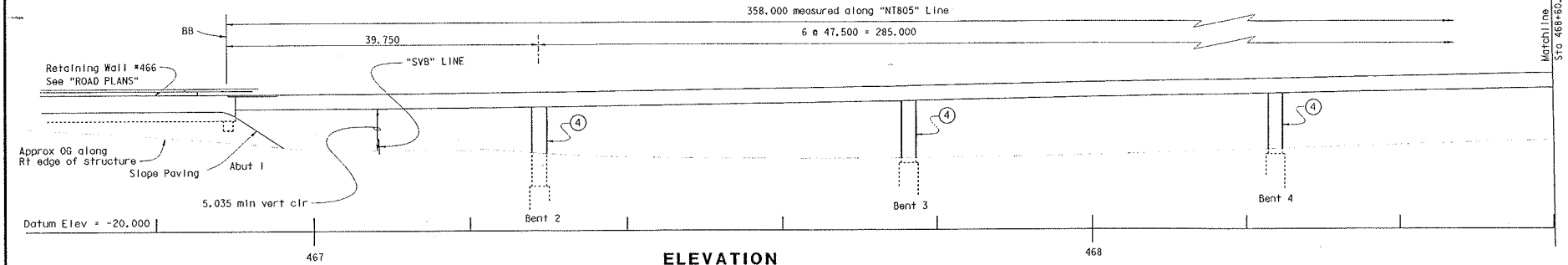

ELEVATION
1:250

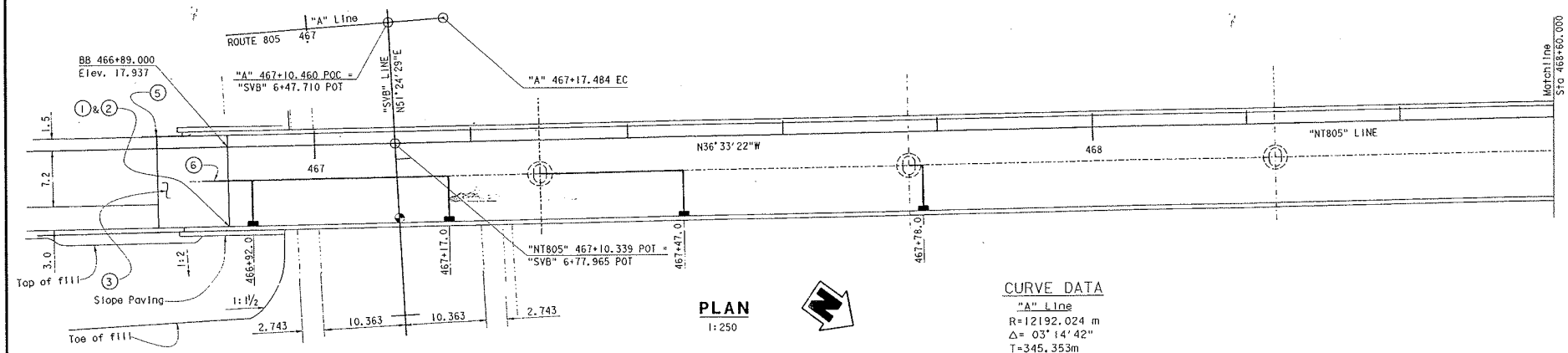

PLAN
1:250

CURVE DATA
"A" Line
R=12192.024 m
Δ= 03°14'42"
T=345.353m
L=690.522m

ALL DIMENSIONS ARE IN METERS UNLESS OTHERWISE SHOWN

DESIGN	BY M. OKIMURA	CHECKED J. PETERSON	STATE OF CALIFORNIA DEPARTMENT OF TRANSPORTATION	DIVISION OF STRUCTURES STRUCTURE DESIGN 11	BRIDGE NO. 57-1070G
DETAILS	BY J. LANE	CHECKED J. PETERSON			KILOMETER POST 45.5
QUANTITIES	BY K. NISHIMOTO	CHECKED J. POSEY			

N805-N5 TRUCK CONNECTOR
STRUCTURE PLAN NO. 1

STRUCTURES DESIGN DETAIL SHEET (METRIC) (REV. 3/1/99)

ORIGINAL SCALE IN MILLIMETERS FOR REDUCED PLANS 0 10 20 30 40 50 60 70 80 90 100

CU 11275
EA 0301U1

DISREGARD PRINTS BEARING EARLIER REVISION DATES

REVISION DATES (PRELIMINARY STAGE ONLY)

SHEET 2 OF 43

FILE => j02spl.dgn

DIST	COUNTY	ROUTE	KILOMETER POST TOTAL PROJECT	SHEET No	TOTAL SHEETS
11	SD	5, 56, 805	Var	1108	1549

G.S. Blakeley 05-01-01
REGISTERED CIVIL ENGINEER

9-3-01
PLANS APPROVAL DATE

REGISTERED PROFESSIONAL ENGINEER G.S. BLAKESLEY No. 45509 Exp. 12-31-02 CIVIL STATE OF CALIFORNIA

The State of California or its officers or agents shall not be responsible for the accuracy or completeness of electronic copies of this plan sheet.

Caltrans now has a web site! To get to the web site, go to: http://www.dot.ca.gov

NOTES:

1. Structure Approach Type N(9S)
2. Paint Bent Numbers

■ Indicates Deck Drain Type D-3 (B7-7)

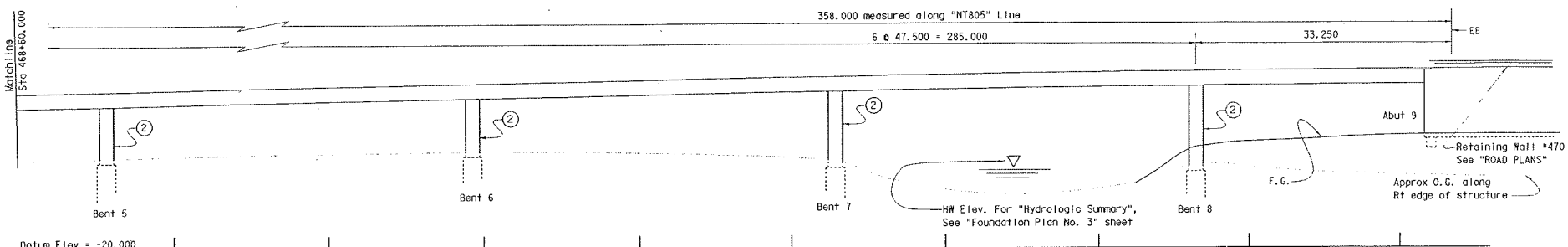

ELEVATION
1:250

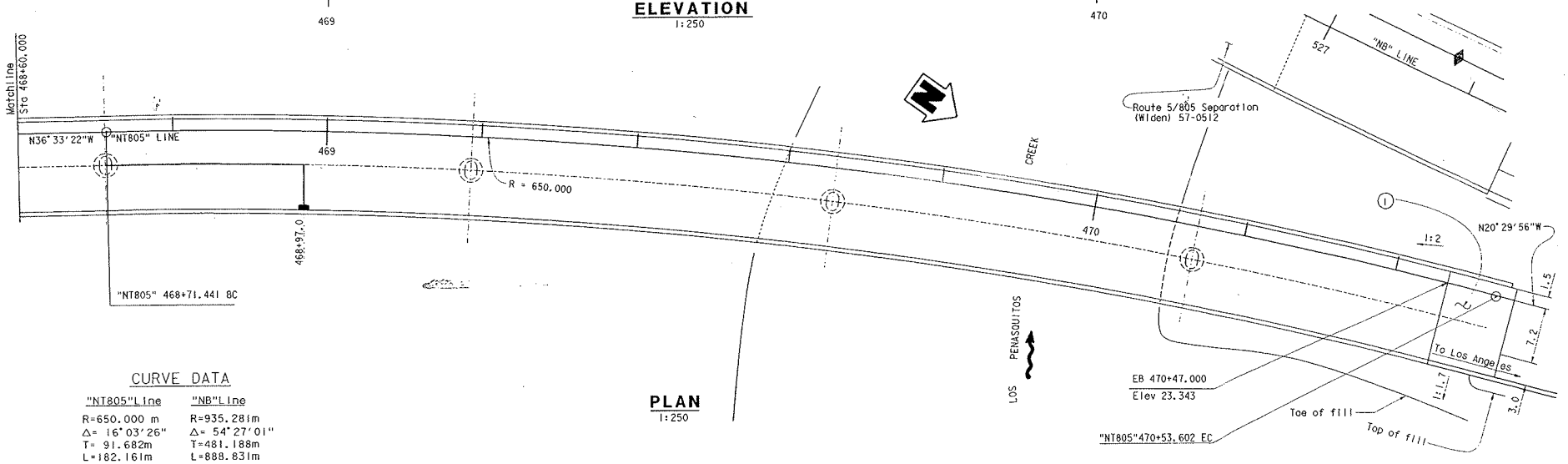

PLAN
1:250

CURVE DATA

"NT805"Line	"NB"Line
R=650.000 m	R=935.281m
Δ= 16°03'26"	Δ= 54°27'01"
T= 91.682m	T=481.188m
L=182.161m	L=888.831m

ALL DIMENSIONS ARE IN METERS UNLESS OTHERWISE SHOWN

DESIGN	BY M. OKIMURA	CHECKED J. PETERSON	
DETAILS	BY J. LANE	CHECKED J. PETERSON	
QUANTITIES	BY K. NISHIMOTO	CHECKED J. POSEY	

STATE OF CALIFORNIA
DEPARTMENT OF TRANSPORTATION

DIVISION OF STRUCTURES
STRUCTURE DESIGN 11

BRIDGE NO. 57-1070G
KILOMETER POST 45.5

N805-N5 TRUCK CONNECTOR
STRUCTURE PLAN NO. 2

CU 11275
EA 0301U1

DISREGARD PRINTS BEARING EARLIER REVISION DATES

REVISION DATES (PRN, UNIHPL, STACE ONLY)
4-26-00 7-27-00 10-4-00 2-5-01 7-5-01 3-6-01

SHEET 3 OF 43

STRUCTURES DESIGN DETAIL SHEET (METRIC) REV. 3/1/99

ORIGINAL SCALE IN MILLIMETERS FOR REDUCED PLANS 0 10 20 30 40 50 60 70 80 90 100

FILE => j03sp2.dgn

USERNAME =>

TIME PLOTTED => 11:58P/2001

DATE PLOTTED => 06-26

DIST	COUNTY	ROUTE	KILOMETER POST TOTAL PROJECT	SHEET No	TOTAL SHEETS
11	SD	5,56,805	Var	1111	1549

Caltrans Metric

G.S. Blakesley 05-01-01
REGISTERED CIVIL ENGINEER

9-3-01
PLANS APPROVAL DATE

REGISTERED PROFESSIONAL ENGINEER G.S. BLAKESLEY No. 45509 Exp. 12-31-02 CIVIL STATE OF CALIFORNIA

The State of California or its officers or agents shall not be responsible for the accuracy or completeness of electronic copies of this plan sheet.

Caltrans now has a web site! To get to the web site, go to: http://www.dot.ca.gov

Notes:

Design tip elevation is controlled by the following demands: (1) Compression; (2) Lateral Loads

PILE DATA TABLE

Support Location	Pile Type & Diameter	Working Stress Design **Design Loading (kN)** Compresssion	Load Factor Design **Nominal Resistance (kN)** Compresssion	Intended Length of Rock Socket (M)	Pile Cut-Off Elev. (M)	Permanent Steel Casing Specified Tip Elev. (M)	Design Pile Tip Elev. (M)	Specified Pile Tip Elev. (M)
Abutment 1	1.7 m CIDH w/permanent casing	1,800		3.97	+14.0	-8.53	-12.50(1)	-12.50
Bent 2	3.2 m CIDH w/permanent casing		26,250	11.28	+4.68	-7.92	-19.20(1) -16.66(2)	-19.20
Bent 3	3.2 m CIDH w/permanent casing		26,250	11.28	+6.12	-9.75	-21.03(1) -18.92(2)	-21.03
Bent 4	3.2 m CIDH w/permanent casing		26,250	11.28	+8.39	-10.06	-21.34(1) -17.52(2)	-21.34
Bent 5	3.2 m CIDH w/permanent casing		26,250	11.28	+8.89	-9.14	-20.42(1) -17.02(2)	-20.42
Bent 6	3.2 m CIDH w/permanent casing		26,250	11.58	+10.89	-11.28	-22.86(1) -18.07(2)	-22.86
Bent 7	3.2 m CIDH w/permanent casing		26,250	11.28	+9.17	-10.97	-22.25(1) -18.26(2)	-22.25
Bent 8	3.2 m CIDH w/permanent casing		26,250	13.87	+9.17	-12.34	-26.21(1) -18.26(2)	-26.22
Abutment 9(Left)	1.7 m CIDH w/permanent casing	1700		3.81	+19.1	-13.26	-17.07(1)	-17.07
Abutment 9(Mid)	1.7 m CIDH w/permanent casing	2275		4.72	+16.3	-13.26	-17.98(1)	-17.98
Abutment 9(Right)	1.7 m CIDH w/permanent casing	2850		5.33	+13.4	-13.26	-18.59(1)	-18.59

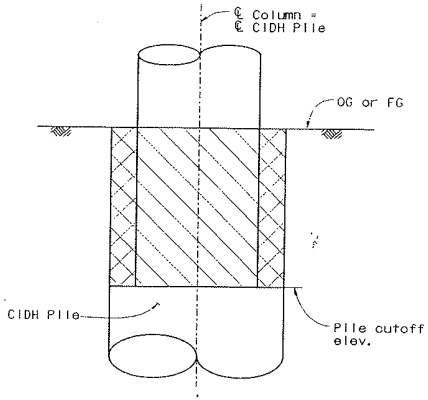

LIMITS OF PAYMENT FOR EXCAVATION & BACKFILL

No Scale

Structure Backfill (Bridge)

Structure Excavation (Bridge)

Note:

Bents 4, 5 & 6 only. See "ISOLATION CASING DETAILS" sheet for remaining bents.

DESIGN	BY M. OKIMURA	CHECKED J. PETERSON	
DETAILS	BY J. LANE/D. ELLIOTT	CHECKED J. PETERSON	
QUANTITIES	BY K. NISHIMOTO	CHECKED J. POSEY	

STATE OF CALIFORNIA
DEPARTMENT OF TRANSPORTATION

DIVISION OF STRUCTURES
STRUCTURE DESIGN 11

BRIDGE NO. 57-1070G
KILOMETER POST 45.5

N805-N5 TRUCK CONNECTOR
FOUNDATION DATA

STRUCTURES DESIGN DETAIL SHEET (METRIC) (REV. 4/20/00)

ORIGINAL SCALE IN MILLIMETERS FOR REDUCED PLANS 0 10 20 30 40 50 60 70 80 90 100

CU 11275
EA 0301U1

DISREGARD PRINTS BEARING EARLIER REVISION DATES

REVISION DATES (PRELIMINARY STAGE ONLY) 7-23-00 10-4-00 12-14-00 2-1-01 2-22-01 3-6-01

SHEET 6 OF 43

FILE => j06fnddata.dgn

USERNAME => tmilkes; DATE PLOTTED => 11-SEP-2001 TIME PLOTTED => 06:47

DIST	COUNTY	ROUTE	KILOMETER POST TOTAL PROJECT	SHEET NO.	TOTAL SHEETS
11	SD	5, 56, 805	Var	1112	1549

Caltrans Metric

G. S. Blakesley 05-01-01
REGISTERED ENGINEER-CIVIL

REGISTERED PROFESSIONAL ENGINEER G. S. BLAKESLEY No. 45509 Exp. 12-31-02 CIVIL STATE OF CALIFORNIA

9-3-01
PLANS APPROVAL DATE

The State of California or its officers or agents shall not be responsible for the accuracy or completeness of electronic copies of this plan sheet.

Caltrans now has a web site! To get to the web site, go to: http://www.dot.ca.gov

① 460 + 26.962 BC. "A" Line — N 581456.8927 / E 1909506.6035

② 467 + 10.460 "A" Line / 6 + 47.710 "SVB" Line — N 581993.1489 / E 1909082.9816

③ 467 + 17.484 EC. "A" Line — N 581998.5351 / E 1909078.4732

④ 467 + 10.339 "NT 805" Line / 6 + 77.965 "SVB" Line — N 582012.0206 / E 1909106.6286

⑤ 467 + 17.484 Begin "AR" Line / 7.01m Rt. 467 + 17.484 EC. "A" Line — N 582003.0360 / E 1909083.8480

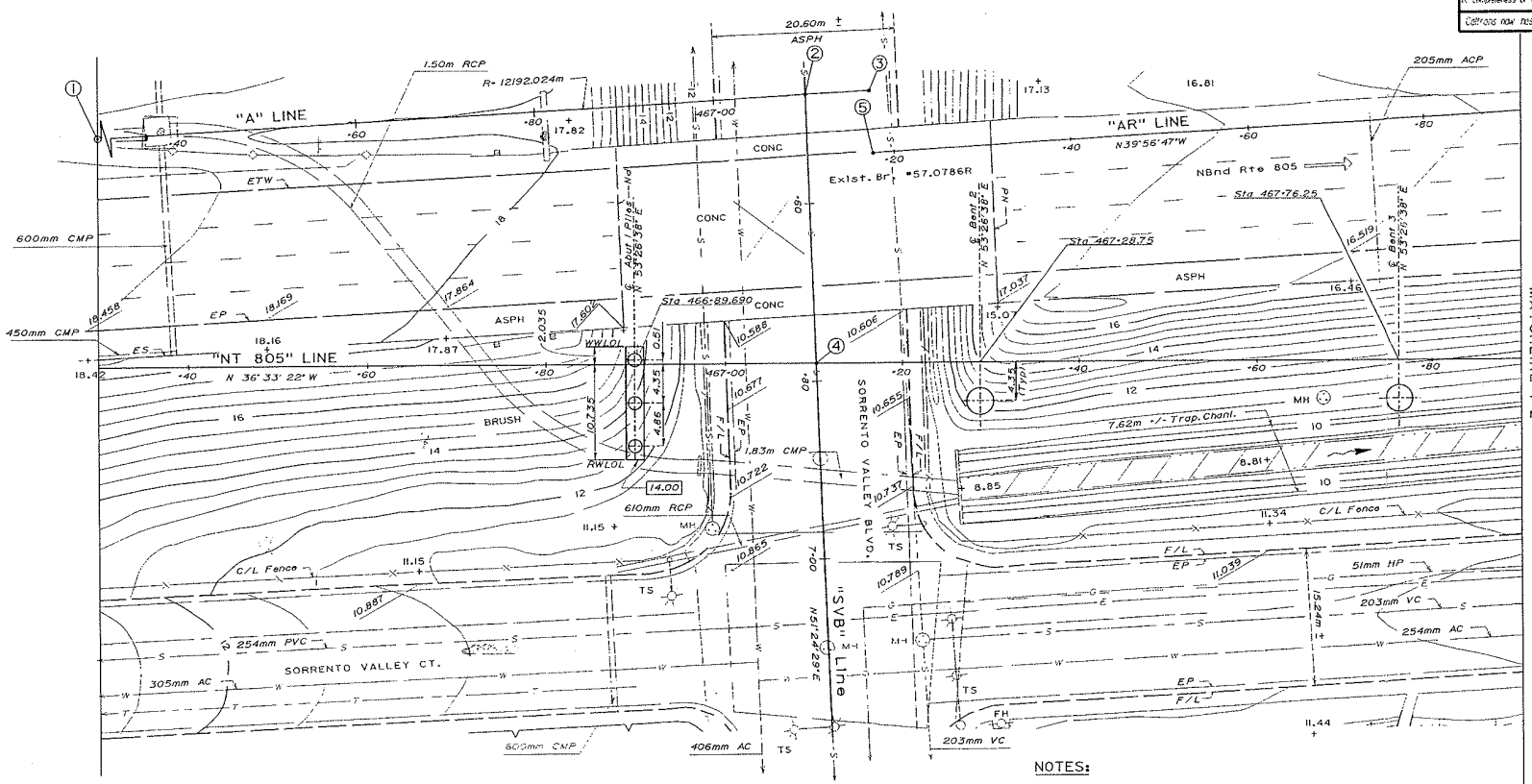

CURVE DATA

"A" Line
R- 12192.024 m
Δ- 03° 14' 42"
T- 345.353 m
L- 690.522 m
N 574170.3956
E 1899731.5122

BENCH MARKS

BM # 5-30.57 Elev.- 25.295 m
Fd. std. brass disk on the east shoulder of northbound Rte 5, 35.1m north of the northeast end of the bridge over Sorrento Valley Road.

BM # 805-28.20 Elev.- 19.812 m
Fd. std. br. disk on the east shoulder of NBnd Rte 805, 147.5m south of the bridge over Sorrento Valley Boulevard.

NOTES:

+ Denotes spot elev.
Underground utilities as shown are approximate.
DATUM: NAVD 1929 Adj. 1988
Indicates bottom of abutment elevation
○ Indicates CIDH Pile (see abutment and bent column sheets)

ALL DIMENSIONS ARE IN METERS UNLESS OTHERWISE SHOWN

SHT. 1 OF 3

PRELIMINARY INVESTIGATION SECTION							
SCALE 1:250	DATUM SEE NOTE	PHOTOGRAMMETRY AS OF:		DRAWN	BY L. Manabo 11/98		
		SURVEYED	BY	TRACED	BY		
ALIGNMENT TIES		FIELD CHECKED	BY L. Manabo 11/10/98	CHECKED	BY S. Wang 11/98		

DS OSMI MDET (CADD 5-95)
DS OSD 2145 (4/89)

DESIGN	BY M. OKIMURA	CHECKED	J. PETERSON
DETAILS	BY J. LANE	CHECKED	J. PETERSON
QUANTITIES	BY K. NISHIMOTO	CHECKED	J. POSEY

STATE OF CALIFORNIA
DEPARTMENT OF TRANSPORTATION

DIVISION OF STRUCTURES
STRUCTURE DESIGN 11

CU 11275
EA 0301U1

BRIDGE NO. 57-1070G
KILOMETER POST 45.5

N805-N5 TRUCK CONNECTOR
FOUNDATION PLAN NO. 1

DISREGARD PRINTS BEARING EARLIER REVISION DATES

REVISION DATES (PRELIMINARY STAGE ONLY)

SHEET 7 OF 43

FILE => j07tp1.dgn

DIST	COUNTY	ROUTE	KILOMETER POST TOTAL PROJECT	SHEET NO.	TOTAL SHEETS
11	SD	5, 56, 805	Var	1113	1549

G.S. Blakesley 05-01-01
REGISTERED ENGINEER-CIVIL

REGISTERED PROFESSIONAL ENGINEER G.S. BLAKESLEY No. 45509 Exp. 12-31-02 CIVIL STATE OF CALIFORNIA

9-3-01
PLANS APPROVAL DATE

The State of California or its officers or agents shall not be responsible for the accuracy or completeness of electronic copies of this plan sheet.

Caltrans now has a web site! To get to the web site, go to: http://www.dot.ca.gov

Caltrans Metric

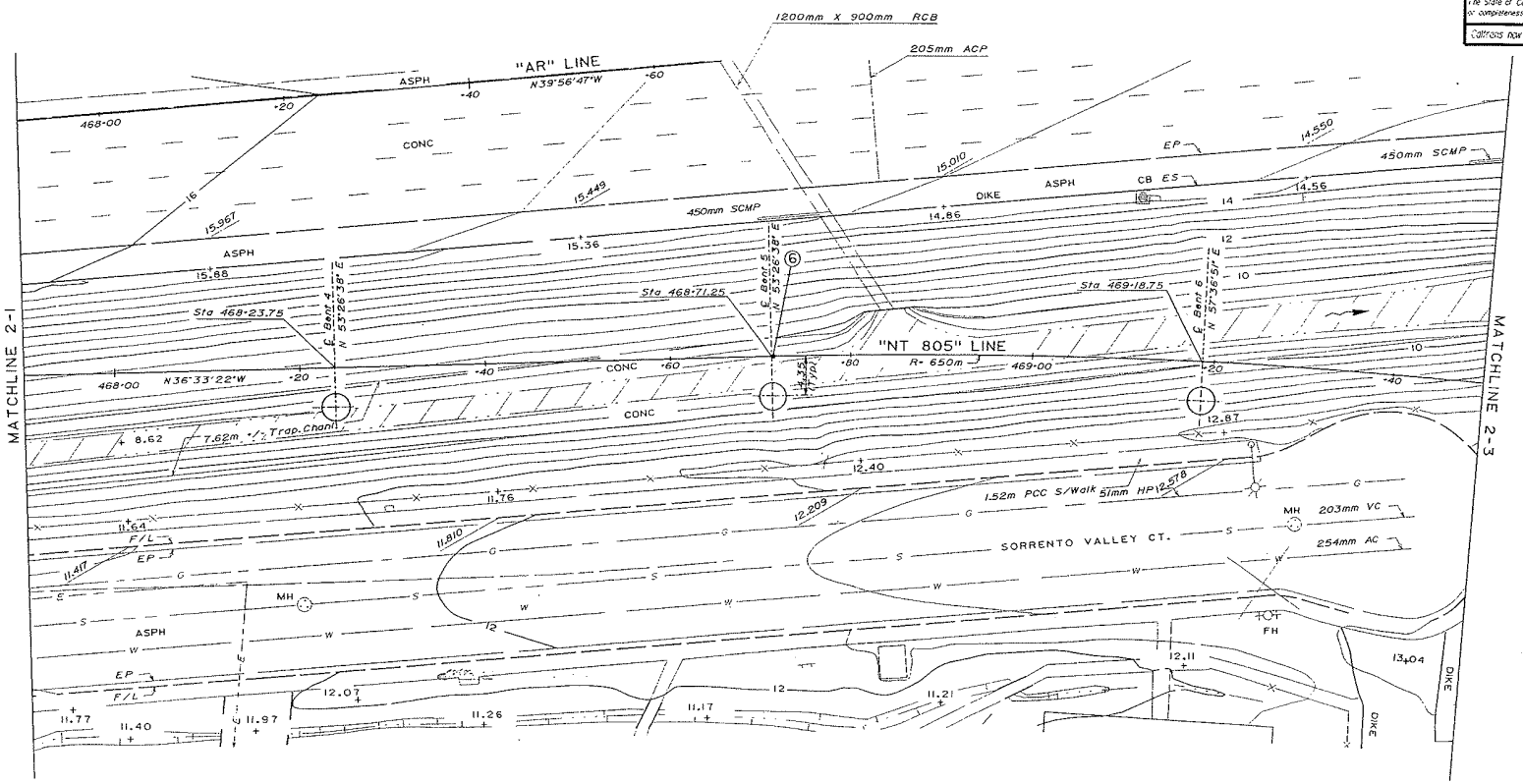

CURVE DATA

"NT 805" Line
R= 650.000 m
Δ= 16° 03' 25"
T= 91.681 m
L= 182.161 m
○ N 581754.2831
E 1908488.5463

BENCH MARKS

Refer to Sht. 1 of 3.

NOTES:

+ Denotes spot elev.
Underground utilities as shown are approximate
DATUM: NAVD 1929 Adj. 1988
○ Indicates CIDH Pile (see abutment and bent column sheets)

ALL DIMENSIONS ARE IN METERS UNLESS OTHERWISE SHOWN

SHT. 2 OF 3

PRELIMINARY INVESTIGATION SECTION							
SCALE 1:250	DATUM SEE NOTE	PHOTOGRAMMETRY AS OF:		DRAWN	BY L. Manabo 11/98		
		SURVEYED	BY	TRACED	BY		
ALIGNMENT TIES		FIELD CHECKED	BY L. Manabo 11/10/98	CHECKED	BY S. Wang 11/98		

DS OSM MDET (CADD 5-95)
DS OSD 2145 (4/89)

DESIGN	BY M. OKIMURA	CHECKED	J. PETERSON
DETAILS	BY J. LANE	CHECKED	J. PETERSON
QUANTITIES	BY K. NISHIMOTO	CHECKED	J. POSEY

STATE OF CALIFORNIA
DEPARTMENT OF TRANSPORTATION

DIVISION OF STRUCTURES
STRUCTURE DESIGN 11

BRIDGE NO. 57-1070G
KILOMETER POST 45.5

N805-N5 TRUCK CONNECTOR
FOUNDATION PLAN NO. 2

CU 11275
EA 0301U1

DISREGARD PRINTS BEARING EARLIER REVISION DATES

REVISION DATES (PRELIMINARY STAGE ONLY) 7-25-00 10-3-00 3-5-01 4-25-01

SHEET 8 OF 43

FILE => j08tp2.dgn

USERNAME => tmilkest DATE PLOTTED => 11-SEP-2001 TIME PLOTTED => 06:47

DIST	COUNTY	ROUTE	KILOMETER POST TOTAL PROJECT	SHEET NO.	TOTAL SHEETS
11	SD	5, 56, 805	Var	1114	1549

G.S. Blakesley 05-01-01
REGISTERED ENGINEER-CIVIL

REGISTERED PROFESSIONAL ENGINEER G.S. BLAKESLEY No. 45509 Exp. 12-31-02 CIVIL STATE OF CALIFORNIA

9-3-01
PLANS APPROVAL DATE

The State of California or its officers or agents shall not be responsible for the accuracy or completeness of electronic copies of this plan sheet.

Caltrans now has a web site! To get to the web site, go to: http://www.dot.ca.gov

Caltrans Metric

HYDROLOGIC SUMMARY

DRAINAGE AREA: 151 SQUARE KM

	BASE FLOOD	DESIGN FLOOD
FREQUENCY (YEARS)	50	100
DISCHARGE (CUBIC METER PER SECOND)	320	476
WATER SURFACE (ELEVATION AT BRIDGE, METER)	11.43	12.16

FLOOD PLAIN DATA ARE BASED UPON INFORMATION AVAILABLE WHEN THE PLANS WERE PREPARED AND ARE SHOWN TO MEET FEDERAL REQUIREMENTS. THE ACCURACY OF SAID INFORMATION IS NOT WARRANTED

7	522 + 37.078 BC, "NB" Line.	N 581806.9458 E 1908865.2270
8	531 + 25.910 EC, "NB" Line	N 582655.0320 E 1908750.8839
9	470 + 53.602 EC, "NT805" Line.	N 582300.9505 E 1908923.9616

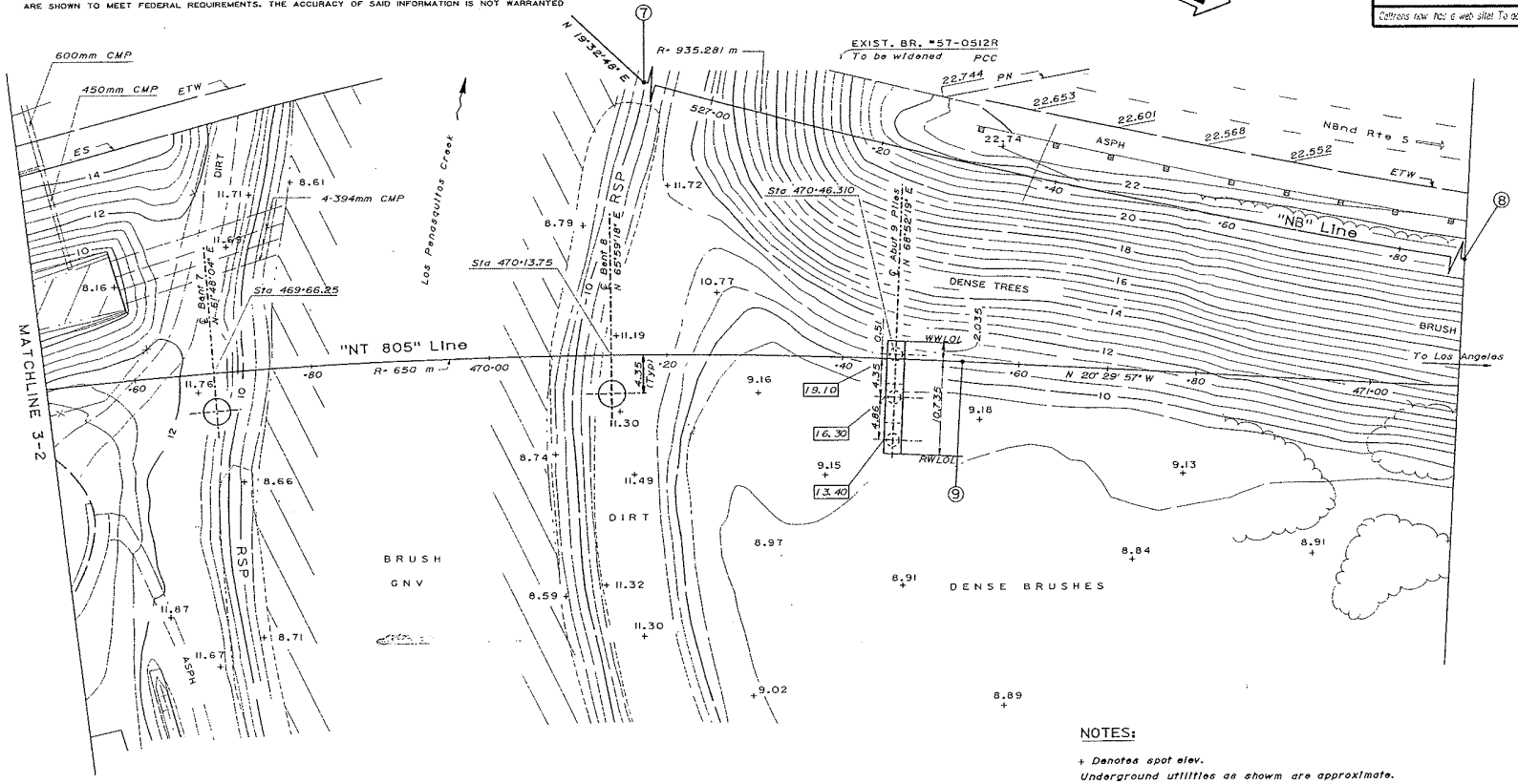

CURVE DATA

"NB" Line
R- 935.281 m
Δ- 54° 27' 01"
T- 481.188 m
L- 888.831 m
N 582119.8670
E 1907983.8469

"NT 805" Line
R- 650.000 m
Δ- 16° 03' 25"
T- 91.681 m
L- 182.161 m
N 581754.2831
E 1908488.5463

NOTES:

+ Denotes spot elev.
Underground utilities as shown are approximate.
DATUM: NAVD 1929 Adj. 1988
Indicates bottom of abutment elevation
Indicates CIDH Pile (see abutment and bent column sheets)

BENCH MARKS

Refer to Sht. 1 of 3.

ALL DIMENSIONS ARE IN METERS UNLESS OTHERWISE SHOWN

SHT. 3 OF 3

PRELIMINARY INVESTIGATION SECTION

SCALE 1:250	DATUM SEE NOTE	PHOTOGRAMMETRY AS OF:	DRAWN BY L. Manabo 11/98		
		SURVEYED BY	TRACED BY		
ALIGNMENT TIES		FIELD CHECKED BY L. Manabo 11/10/98	CHECKED BY S. Wang 11/98		

DS OSM MDET (CADD 5-95)
DS OSD 2145 (4/89)

DESIGN	BY M. OKIMURA	CHECKED J. PETERSON
DETAILS	BY J. LANE	CHECKED J. PETERSON
QUANTITIES	BY K. NISHIMOTO	CHECKED J. POSEY

STATE OF CALIFORNIA
DEPARTMENT OF TRANSPORTATION

DIVISION OF STRUCTURES
STRUCTURE DESIGN 11

BRIDGE NO. 57-1070G
KILOMETER POST 45.5

N805-N5 TRUCK CONNECTOR
FOUNDATION PLAN NO. 3

CU 11275
EA 0301U1

DISREGARD PRINTS BEARING EARLIER REVISION DATES

REVISION DATES (PRELIMINARY STAGE ONLY) 7-27-00 10-3-00 2-16-00 3-6-01 4-21-01

SHEET 9 OF 43

FILE => j09fp3.dgn

USERNAME => DATE PLOTTED => 11-SEP-2001 TIME PLOTTED => 06:47

DIST	COUNTY	ROUTE	KILOMETER POST TOTAL PROJECT	SHEET No	TOTAL SHEETS
11	SD	5, 56, 805	Var	1121	1549

G.S. Blakeley 05-01-01
REGISTERED CIVIL ENGINEER

9-3-01
PLANS APPROVAL DATE

REGISTERED PROFESSIONAL ENGINEER G.S. BLAKELEY No. 45509 Exp. 12-31-02 CIVIL STATE OF CALIFORNIA

The State of California or its officers or agents shall not be responsible for the accuracy or completeness of electronic copies of this plan sheet.

Caltrans now has a web site! To get to the web site, go to: http://www.dot.ca.gov

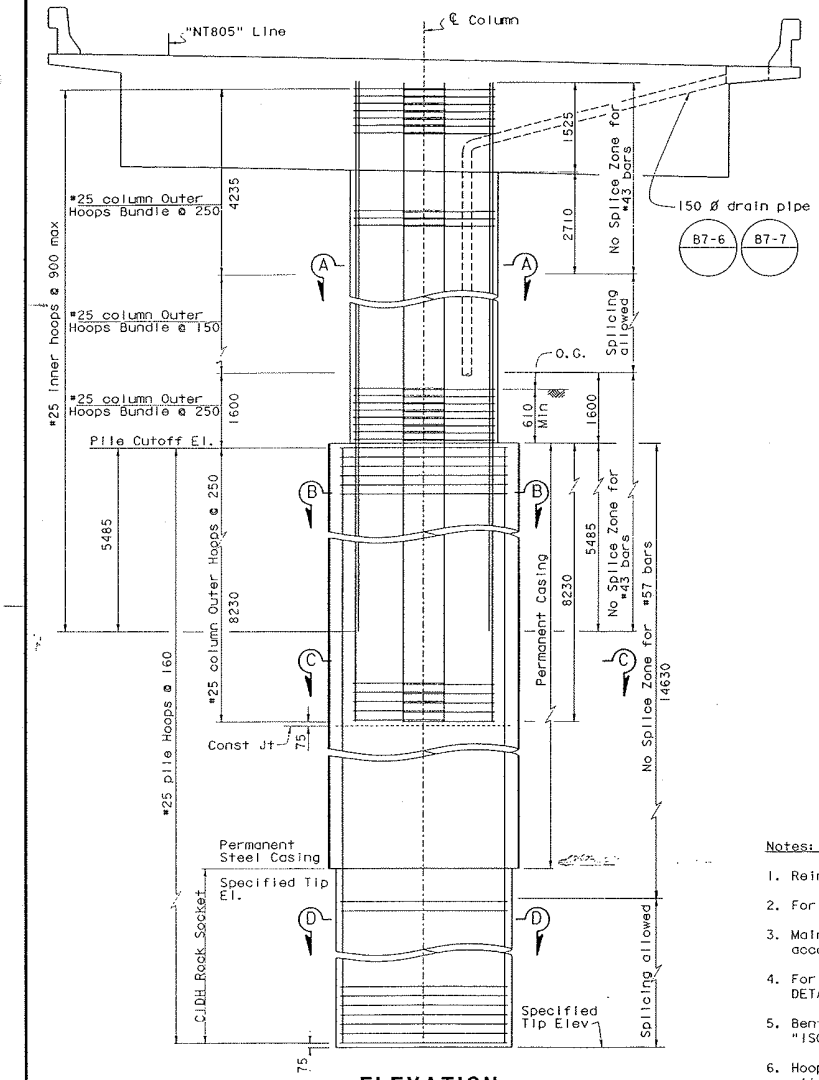

ELEVATION
1:40

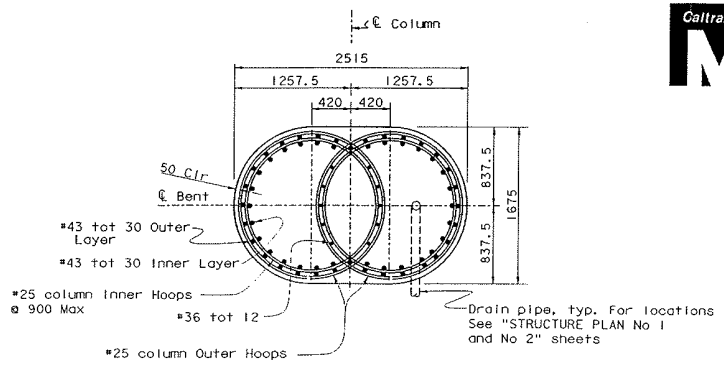

BENTS 2 & 8
SECTION A-A
1:25

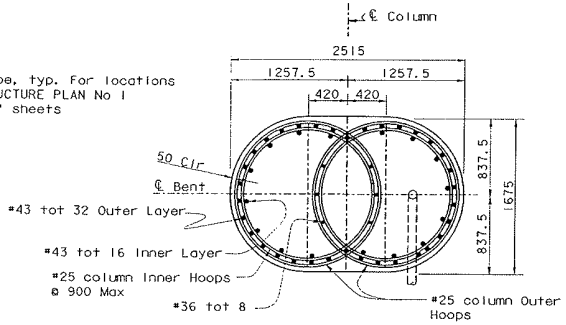

BENTS 3 & 7
SECTION A-A
1:25

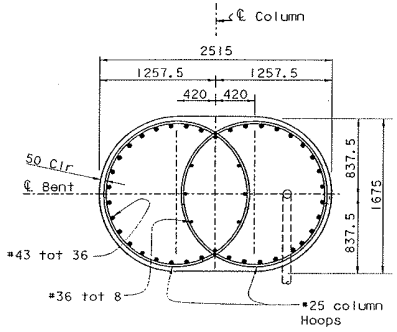

BENTS 4,5 & 6
SECTION A-A
1:25

Notes:

1. Reinf symmetrical about ℄ Column
2. For Pile Data Table, See " FOUNDATION DATA" sheet.
3. Main column reinf may be adjusted as necessary to accommodate drain pipes as directed by the engineer.
4. For Sections B-B, C-C and D-D, see "BENT COLUMN DETAILS No 2" sheet
5. Bents 2,3,7 & 8 require isolation casings. For details, see "ISOLATION CASING DETAILS" sheet.
6. Hoops, columns, and pile splices shall conform to the ultimate splice specifications.

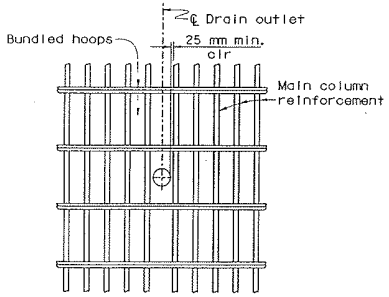

Adjust spacing of main column reinforcement to clear drain outlet

COLUMN REINFORCEMENT AT DRAIN OUTLET
No Scale

ALL DIMENSIONS ARE IN MILLIMETERS UNLESS OTHERWISE SHOWN

DESIGN	BY M. OKIMURA	CHECKED J. PETERSON	
DETAILS	BY J. LANE/D. ELLIOTT	CHECKED J. PETERSON	
QUANTITIES	BY K. NISHIMOTO	CHECKED J. POSEY	

STATE OF CALIFORNIA
DEPARTMENT OF TRANSPORTATION

DIVISION OF STRUCTURES
STRUCTURE DESIGN 11

CU 11275
EA 0301U1

BRIDGE NO. 57-1070G
KILOMETER POST 45.5

N805-N5 TRUCK CONNECTOR
BENT COLUMN DETAILS NO. 1

STRUCTURES DESIGN DETAIL SHEET (METRIC) (REV. 1/1/99)

ORIGINAL SCALE IN MILLIMETERS FOR REDUCED PLANS 0 10 20 30 40 50 60 70 80 90 100

FILE => j16coldetl.dgn

DISREGARD PRINTS BEARING EARLIER REVISION DATES

REVISION DATES (PRELIMINARY STAGE ONLY)

SHEET 16 OF 43

USERNAME => TRDING DATE PLOTTED => 10-SEP-2001 TIME PLOTTED => 14:34

DIST	COUNTY	ROUTE	KILOMETER POST TOTAL PROJECT	SHEET No	TOTAL SHEETS
11	SD	5, 56, 805	Var	1122	1549

G.S. Blakeley 05-01-01
REGISTERED CIVIL ENGINEER

9-3-01
PLANS APPROVAL DATE

REGISTERED PROFESSIONAL ENGINEER G.S. BLAKESLEY No. 45509 Exp. 12-31-02 CIVIL STATE OF CALIFORNIA

The State of California or its officers or agents shall not be responsible for the accuracy or completeness of electronic copies of this plan sheet.

Caltrans now has a web site! To get to the web site, go to: http://www.dot.ca.gov

Caltrans Metric

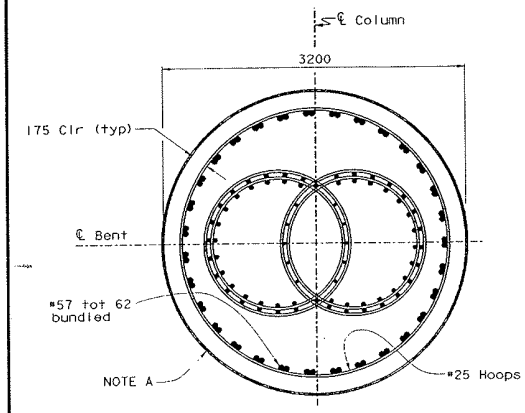

BENTS 2 & 8
1:25

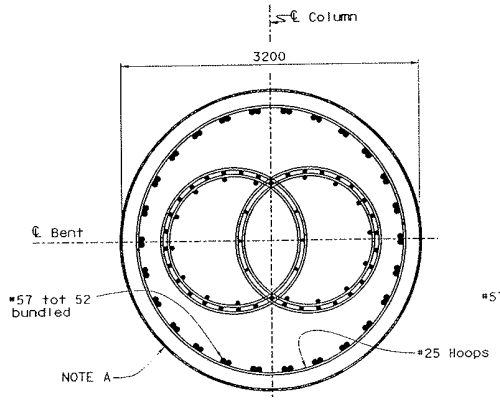

BENTS 3 & 7

SECTION B-B
1:25

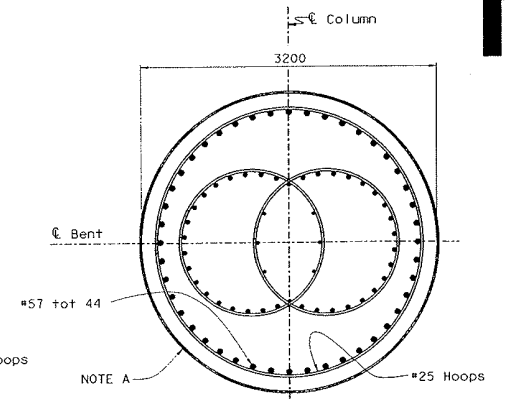

BENTS 4, 5 & 6
1:25

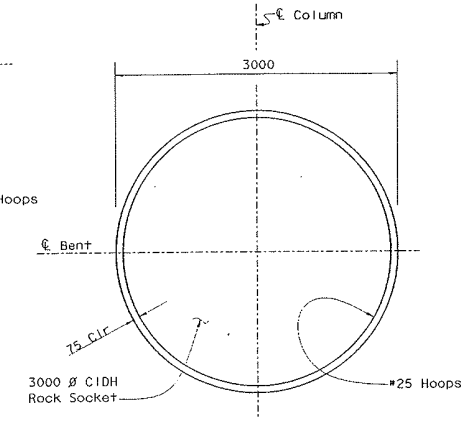

SECTION D-D
1:25

Note:

1. #57 Bars not shown. Details similar to those shown in "Section B-B" and "Section C-C"
2. For Pile Data Table, see "Foundation Data" sheet.
3. For location of section B-B, C-C and D-D, see " BENT Column DETAILS No. 1" sheet.

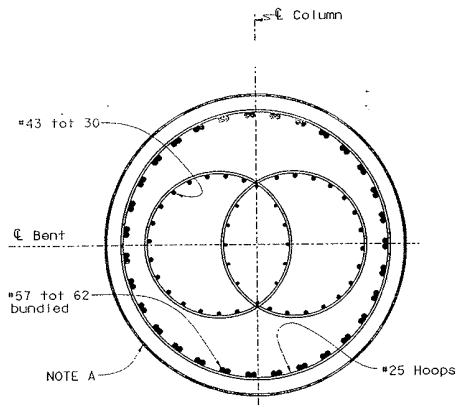

BENTS 2 & 8
1:25

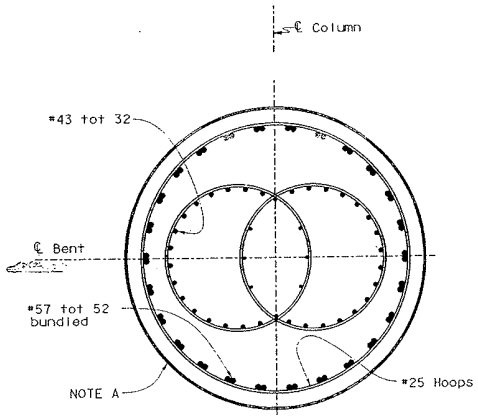

BENTS 3 & 7

SECTION C-C
1:25

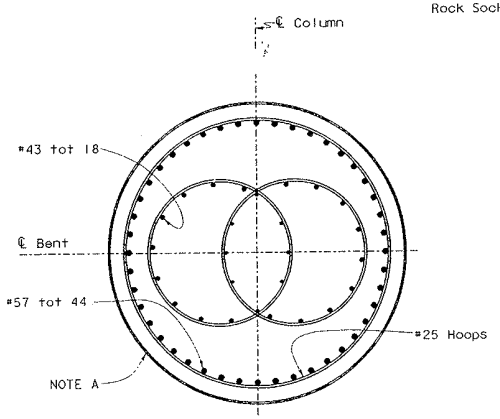

BENTS 4,5 & 6
1:25

NOTE A: Permanent Casing (Thickness to be determined by the Contractor)
Pile diameter = min inside diameter for permanent steel casing

ALL DIMENSIONS ARE IN MILLIMETERS UNLESS OTHERWISE SHOWN

DESIGN	BY M. OKIMURA	CHECKED J. PETERSON	
DETAILS	BY J. LANE	CHECKED J. PETERSON	
QUANTITIES	BY K. NISHIMOTO	CHECKED J. POSEY	

STATE OF CALIFORNIA
DEPARTMENT OF TRANSPORTATION

DIVISION OF STRUCTURES
STRUCTURE DESIGN 11

BRIDGE NO. 57-1070G
KILOMETER POST 45.5

CU 11275
EA 0301U1

N805-N5 TRUCK CONNECTOR
BENT COLUMN DETAILS NO. 2

STRUCTURES DESIGN DETAIL SHEET (METRIC) REV. 3/1/99

ORIGINAL SCALE IN MILLIMETERS FOR REDUCED PLANS 0 10 20 30 40 50 60 70 80 90 100

DISREGARD PRINTS BEARING EARLIER REVISION DATES → 3-1-96 3-29-96 10-1-96 3-28-00 2-1-01 3-1-01

REVISION DATES (PRELIMINARY STAGE ONLY)

SHEET 17 OF 43

FILE => 117co1det2.dgn

DATE PLOTTED => 10-12-2001 TIME PLOTTED => 14:54

DIST	COUNTY	ROUTE	KILOMETER POST TOTAL PROJECT	SHEET NO	TOTAL SHEETS
11	SD	5, 56, 805	Var	1123	1549

G. S. Blakesley 05-01-01
REGISTERED CIVIL ENGINEER

9-3-01
PLANS APPROVAL DATE

REGISTERED PROFESSIONAL ENGINEER G. S. BLAKESLEY No. 45509 Exp. 12-31-02 CIVIL STATE OF CALIFORNIA

The State of California or its officers or agents shall not be responsible for the accuracy or completeness of electronic copies of this plan sheet.

Caltrans now has a web site! To get to the web site, go to: http://www.dot.ca.gov

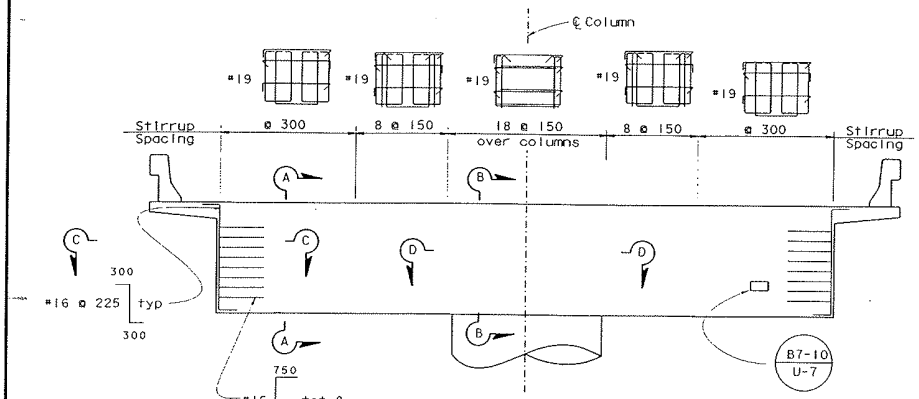

BENTS 2, 4, 5, 6 & 8
ELEVATION
1:40

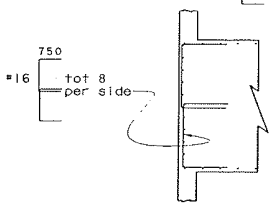

SECTION C-C
1:40

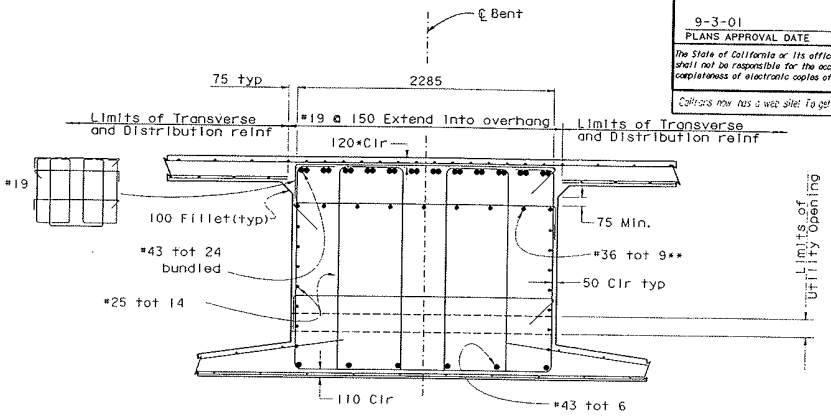

SECTION A-A
1:20

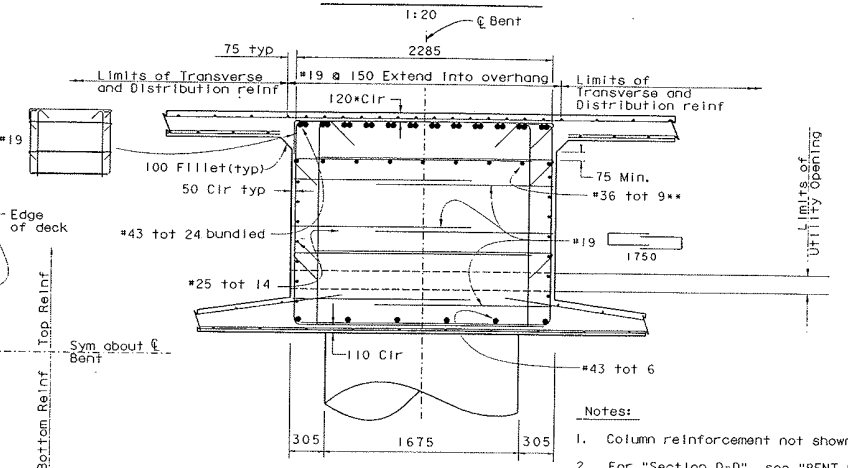

SECTION B-B
1:20

Notes:

1. Column reinforcement not shown for clarity
2. For "Section D-D", see "BENT CAP DETAILS" sheet.
3. Tails on 135° hooks shall be 10 bar diameter in length.

* Clearance to main cap reinforcement

** Reinforcement may be adjusted to clear p/s ducts

ALL DIMENSIONS ARE IN MILLIMETERS UNLESS OTHERWISE SHOWN

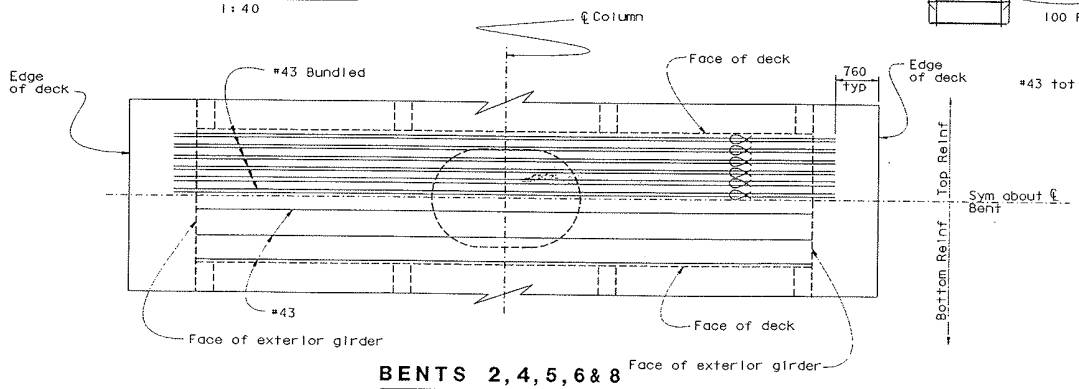

BENTS 2, 4, 5, 6 & 8
PLAN
1:40

DESIGN	BY M. OKIMURA	CHECKED J. PETERSON
DETAILS	BY J. LANE/D. ELLIOTT	CHECKED J. PETERSON
QUANTITIES	BY K. NISHIMOTO	CHECKED J. POSEY

STATE OF CALIFORNIA
DEPARTMENT OF TRANSPORTATION

DIVISION OF STRUCTURES
STRUCTURE DESIGN 11

BRIDGE NO. 57-1070G
KILOMETER POST 45.5

N805-N5 TRUCK CONNECTOR
BENT CAP LAYOUT

STRUCTURES DESIGN DETAIL SHEET (METRIC) (REV. 3/6/99)

ORIGINAL SCALE IN MILLIMETERS FOR REDUCED PLANS 0 10 20 30 40 50 60 70 80 90 100

CU 11275
EA 0301U1

FILE = j18bntccplyt.dgn

DISREGARD PRINTS BEARING EARLIER REVISION DATES

REVISION DATES (PRELIMINARY STATE ONLY) 3-1-96 7-28-00 7-14-98 2-26-99 3-6-98

SHEET 18 OF 43

USERNAME = TROTNO DATE PLOTTED = 10-SEP-2001 TIME PLOTTED = 13:25

DIST	COUNTY	ROUTE	KILOMETER POST TOTAL PROJECT	SHEET No	TOTAL SHEETS
11	SD	5, 56, 805	Var	1124	1549

G. S. Blakeley 05-01-01
REGISTERED CIVIL ENGINEER

9-3-01
PLANS APPROVAL DATE

REGISTERED PROFESSIONAL ENGINEER G.S. BLAKESLEY No. 45509 Exp. 12-31-02 CIVIL STATE OF CALIFORNIA

The State of California or its officers or agents shall not be responsible for the accuracy or completeness of electronic copies of this plan sheet.

Caltrans now has a web site! To get to the web site, go to: http://www.dot.ca.gov

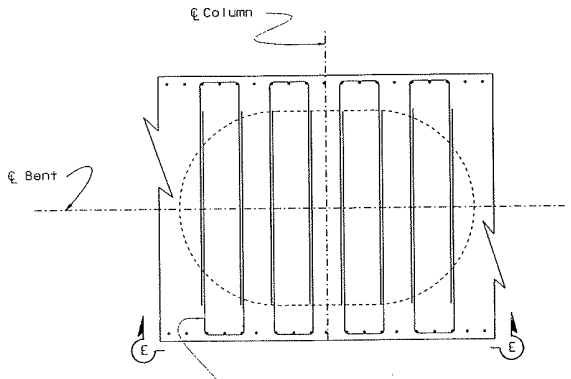

BENTS 4,5 & 6
SECTION D-D
1:20

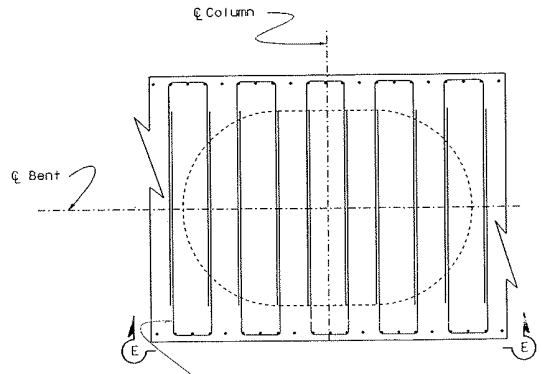

BENTS 3 & 7
SECTION D-D
1:20

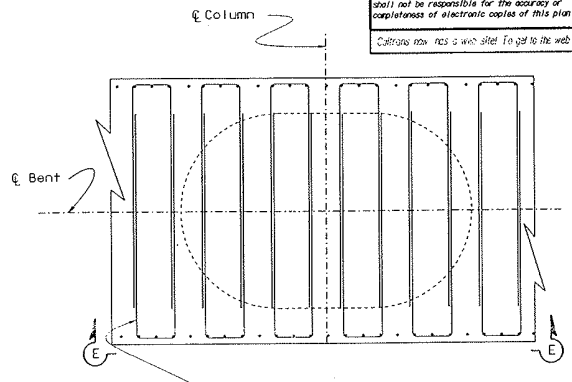

BENTS 2 & 8
SECTION D-D
1:20

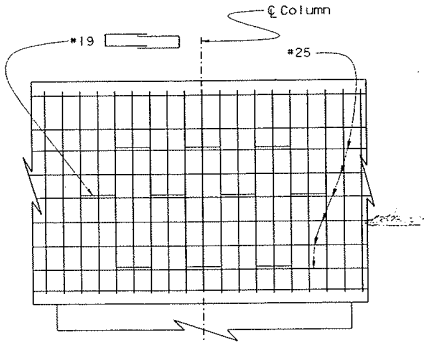

BENTS 4, 5 & 6
SECTION E-E
1:20

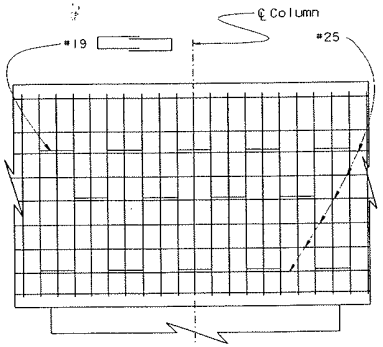

BENTS 3 & 7
SECTION E-E
1:20

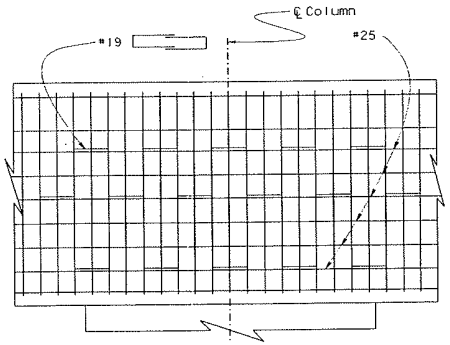

BENTS 2 & 8
SECTION E-E
1:20

Note: For location of "Section D-D see "BENT CAP LAYOUT" sheet.

ALL DIMENSIONS ARE IN MILLIMETERS UNLESS OTHERWISE SHOWN

DESIGN	BY M. OKIMURA	CHECKED J. PETERSON	
DETAILS	BY J. LANE	CHECKED J. PETERSON	
QUANTITIES	BY K. NISHIMOTO	CHECKED J. POSEY	

STATE OF CALIFORNIA
DEPARTMENT OF TRANSPORTATION

DIVISION OF STRUCTURES
STRUCTURE DESIGN 11

BRIDGE NO. 57-1070G
KILOMETER POST 45.5

N805-N5 TRUCK CONNECTOR
BENT CAP DETAILS

STRUCTURES DESIGN DETAIL SHEET (METRIC) REV. 3/1/99

ORIGINAL SCALE IN MILLIMETERS FOR REDUCED PLANS 0 10 20 30 40 50 60 70 80 90 100

CU 11275
EA 0301U1

FILE => j19ccpdet.dgn

DISREGARD PRINTS BEARING EARLIER REVISION DATES

REVISION DATES (PRELIMINARY STAGE ONLY)

SHEET 19 OF 43

USERNAME => T.
DATE PLOTTED => 10-SEP-2001 TIME PLOTTED => 14:55

DIST	COUNTY	ROUTE	KILOMETER POST TOTAL PROJECT	SHEET No	TOTAL SHEETS
11	SD	5, 56, 805	Var	1125	1549

G.S. Blakeley 05-01-01
REGISTERED CIVIL ENGINEER

9-3-01
PLANS APPROVAL DATE

G.S. BLAKESLEY No. 45509 EXP. 12-31-02 CIVIL — REGISTERED PROFESSIONAL ENGINEER — STATE OF CALIFORNIA

The State of California or its officers or agents shall not be responsible for the accuracy or completeness of electronic copies of this plan sheet.

Caltrans now has a web site! To get to the web site, go to: http://www.dot.ca.gov

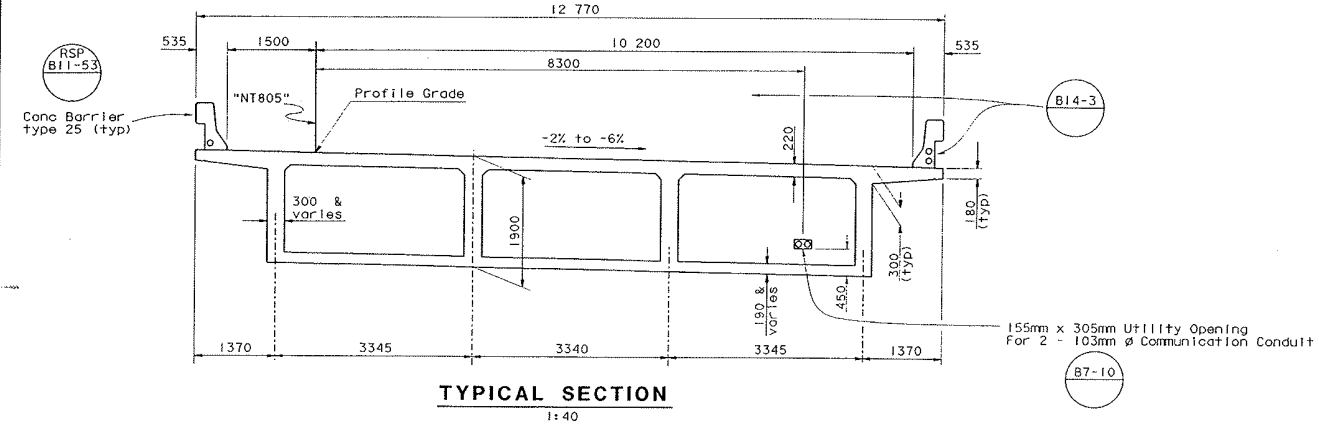

TYPICAL SECTION
1:40

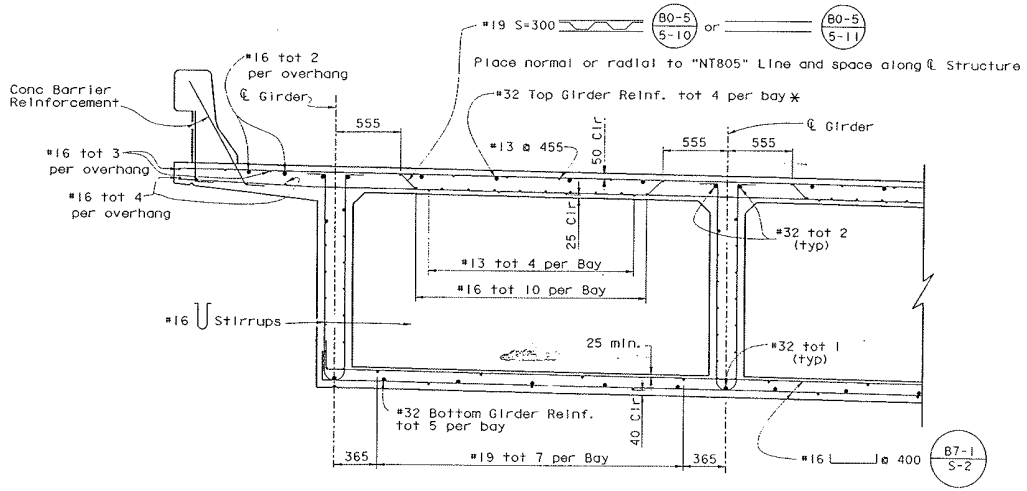

PART TYPICAL SECTION
1:20

B7-1 B0-5 B8-5

Note:

* Additional top girder reinforcement required at Bent 2 and 8. See "ADDITIONAL GIRDER REINFORCEMENT" sheet

ALL DIMENSIONS ARE IN MILLIMETERS UNLESS OTHERWISE SHOWN

DESIGN	BY M. OKIMURA	CHECKED J. PETERSON
DETAILS	BY G. KAKIGI / D. KUBOCHI	CHECKED J. PETERSON
QUANTITIES	BY K. NISHIMOTO	CHECKED J. POSEY

STATE OF CALIFORNIA
DEPARTMENT OF TRANSPORTATION

DIVISION OF STRUCTURES
STRUCTURE DESIGN 11

BRIDGE NO. 57-1070G
KILOMETER POST 45.5

N805-N5 TRUCK CONNECTOR
TYPICAL SECTION

STRUCTURES DESIGN DETAIL SHEET (METRIC) (REV. 9/2/98)

ORIGINAL SCALE IN MILLIMETERS FOR REDUCED PLANS 0 10 20 30 40 50 60 70 80 90 100

CU 11275
EA 0301U1

FILE => j20typsec.dgn

DISREGARD PRINTS BEARING EARLIER REVISION DATES

REVISION DATES (PRELIMINARY STAGE ONLY) 1-2-01 1-4-01 11-17-01 12-5-01 1-28-02 1-28-02 12-17-02 2-19-03

SHEET 20 OF 43

USERNAME => FREDING DATE PLOTTED => 10-SEP-2001 TIME PLOTTED => 14:35

DIST	COUNTY	ROUTE	KILOMETER POST TOTAL PROJECT	SHEET No.	TOTAL SHEETS
11	SD	5, 56, 805	Var	1130	1549

G.S. Blakeley 05-01-01
REGISTERED CIVIL ENGINEER

9-3-01
PLANS APPROVAL DATE

REGISTERED PROFESSIONAL ENGINEER G.S. BLAKESLEY No. 45509 EXP. 12-31-02 CIVIL STATE OF CALIFORNIA

The State of California or its officers or agents shall not be responsible for the accuracy or completeness of electronic copies of this plan sheet.

Caltrans now has a web site! To get to the web site, go to: http://www.dot.ca.gov

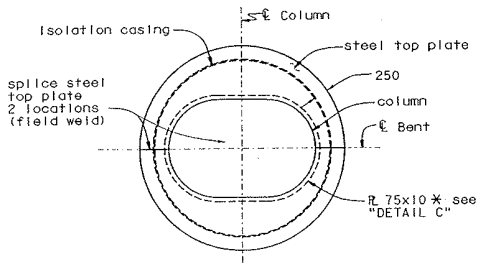

SECTION A-A

1:40

* L 76x76x11.1 may be substituted for PL 75x10. Outstanding leg may be clipped as required to conform to column shape.

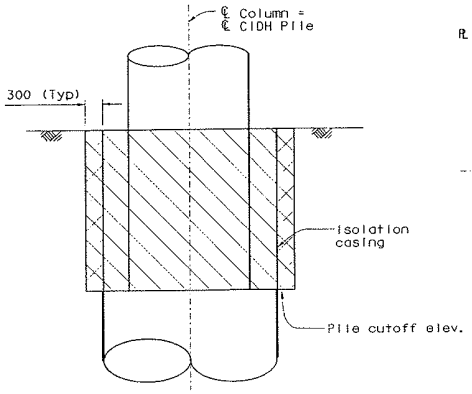

LIMITS OF PAYMENT FOR EXCAVATION & BACKFILL

No Scale

Isolation casing backfill

Structure Excavation (Bridge)

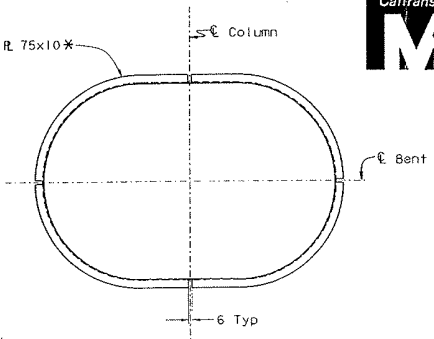

DETAIL C

No Scale

NOTE:
THE CONTRACTOR SHALL VERIFY ALL CONTROLLING FIELD DIMENSIONS BEFORE ORDERING OR FABRICATING ANY MATERIAL.

ISOLATION CASING LOCATION & LENGTH OF PAYMENT

Location	Length of payment (mm)
Bent 2	7700
Bent 3	5200
Bent 7	2200
Bent 8	2200

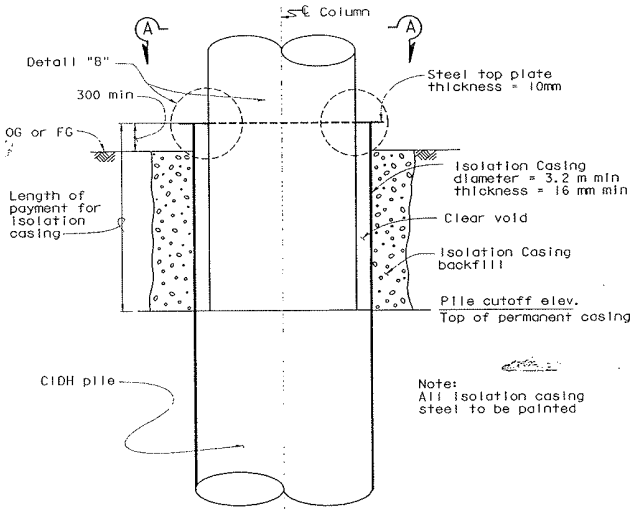

ISOLATION CASING

1:40

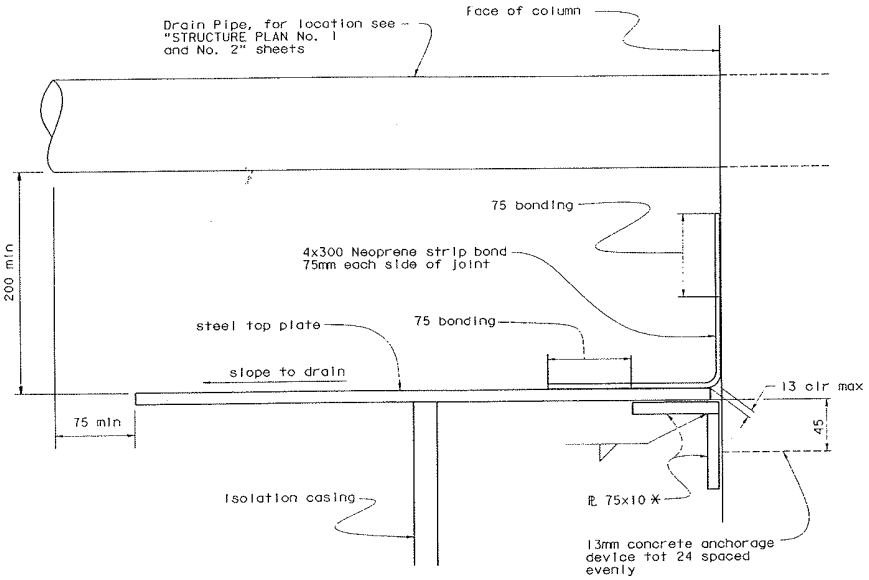

DETAIL "B"

No Scale

ALL DIMENSIONS ARE IN MILLIMETERS UNLESS OTHERWISE SHOWN

DESIGN	BY M. OKIMURA	CHECKED J. PETERSON	
DETAILS	BY J. LANE	CHECKED J. PETERSON	
QUANTITIES	BY K. NISHIMOTO	CHECKED J. POSEY	

STATE OF CALIFORNIA
DEPARTMENT OF TRANSPORTATION

DIVISION OF STRUCTURES
STRUCTURE DESIGN 11

BRIDGE NO. 57-1070G
KILOMETER POST 45.5

N805-N5 TRUCK CONNECTOR
ISOLATION CASING DETAILS

STRUCTURES DESIGN DETAIL SHEET (METRIC) (REV. 3/1/99)

ORIGINAL SCALE IN MILLIMETERS FOR REDUCED PLANS 0 10 20 30 40 50 60 70 80 90 100

CU 11275
EA 0301U1

FILE => j251cd.dgn

DISREGARD PRINTS BEARING EARLIER REVISION DATES

REVISION DATES (PRELIMINARY STAGE ONLY)

SHEET 25 OF 43

USERNAME =>

DATE PLOTTED => 10-SEP-2001 TIME PLOTTED => 13:57

DIST.	COUNTY	ROUTE	KILOMETER POST TOTAL PROJECT	SHEET NO.	TOTAL SHEETS
11	SD	5, 56, 805	Var	1230	1549

G.S. Blakeley 05-01-01
REGISTERED ENGINEER - CIVIL

9-3-01
PLANS APPROVAL DATE

REGISTERED PROFESSIONAL ENGINEER G.S. BLAKESLEY No. 45509 Exp. 12-31-02 CIVIL STATE OF CALIFORNIA

The State of California or its officers or agents shall not be responsible for the accuracy or completeness of electronic copies of this plan sheet.

Caltrans now has a web site! To get to the web site, go to: http://www.dot.ca.gov

Caltrans Metric

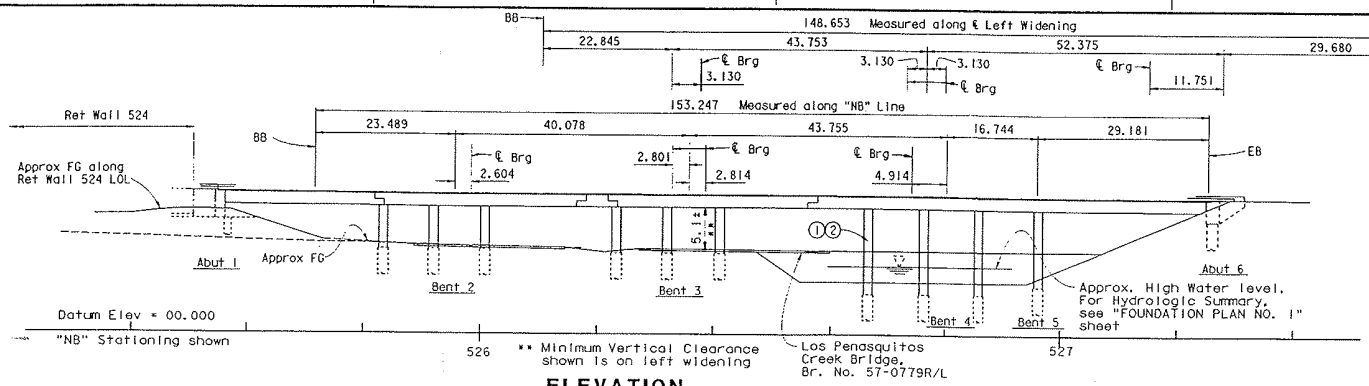

ELEVATION

1:400

NOTE:
Existing and Left Widening Columns not shown.

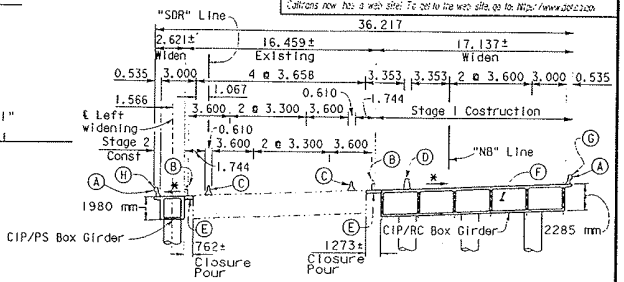

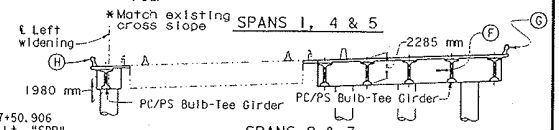

SPANS 1, 4 & 5

SPANS 2 & 3

Note: For details not noted see SPANS 1, 4 & 5

TYPICAL SECTION

1:200

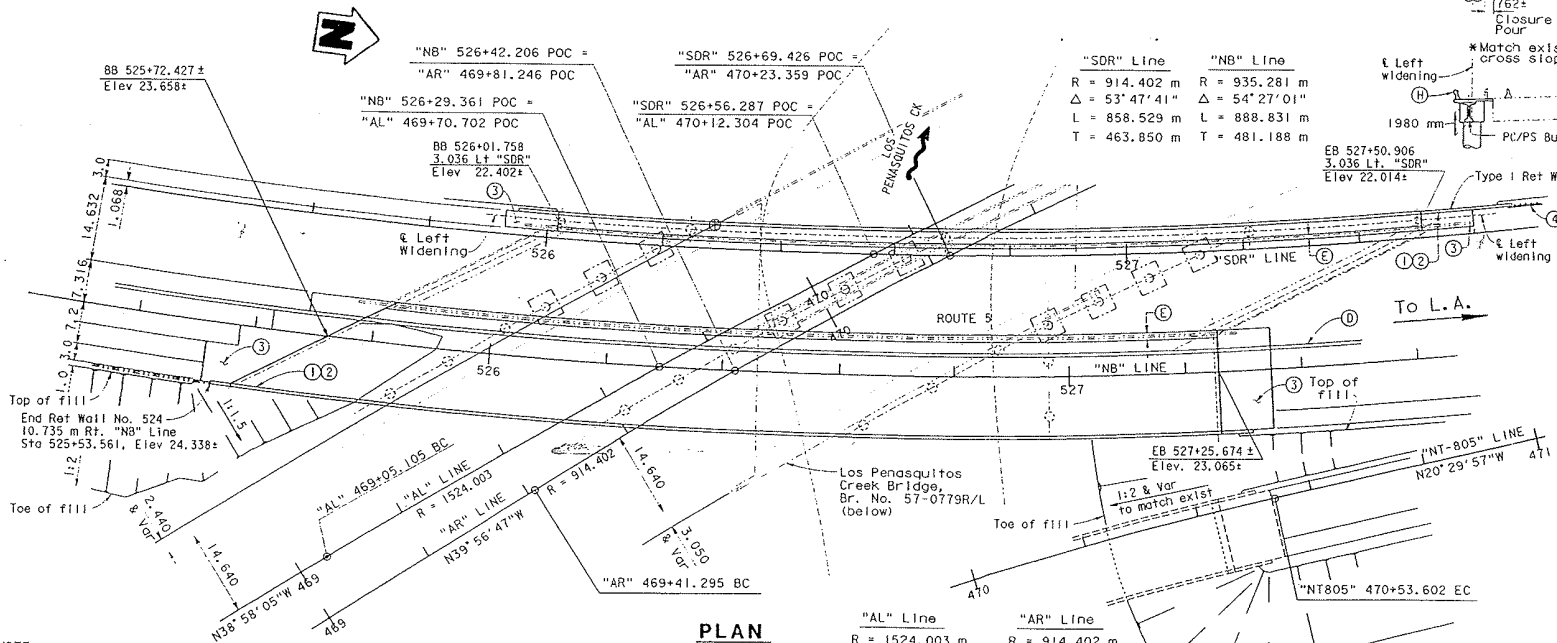

"SDR" Line	"NB" Line
R = 914.402 m	R = 935.281 m
Δ = 53°47'41"	Δ = 54°27'01"
L = 858.529 m	L = 888.831 m
T = 463.850 m	T = 481.188 m

"AL" Line	"AR" Line
R = 1524.003 m	R = 914.402 m
Δ = 12°14'00"	Δ = 13°13'47"
L = 325.394 m	L = 211.138 m
T = 163.318 m	T = 106.041 m

PLAN

1:400

NOTE:
THE CONTRACTOR SHALL VERIFY ALL CONTROLLING FIELD DIMENSIONS BEFORE ORDERING OR FABRICATING ANY MATERIAL.

For 'General Notes', 'Index to Plans', 'Standard Plans', 'Quantities', and 'Pile Data', see "INDEX TO PLANS" sheet

NOTES:

(A) Concrete Barrier Type 25

(B) Remove existing overhang and Barrier Railing Type 1.

(C) Temporay Railing (Type K)-see "ROAD PLANS".

(D) Concrete Barrier Type 60

(E) Closure Pour

(F) 2 - 103 mm dia. communication conduits, see "ROAD PLANS".

(G) 1 - 53 mm dia. conduit for lighting and sign illumination, see "ROAD PLANS".

1 - 53 mm dia. conduit for sprinkler control, see "ROAD PLANS".

(H) 1 - 53 mm dia. conduit for lighting and sign illumination, see "ROAD PLANS".

(1) Paint "Route 5/805 Separation"

(2) Paint "Bridge No. 57-0512R"

(3) Structure Approach Type N(9S)

(4) MBGR - see "ROAD PLANS".

⊕ Point of Minimum Vertical Clearance

ALL DIMENSIONS ARE IN METERS UNLESS OTHERWISE SHOWN

Ramin Rashedi 05/01/01
DESIGN ENGINEER

DESIGN	M. FUSTOK/M. OKIMURA	CHECKED L. WANG/J. HIGAREDA	LOAD FACTOR DESIGN
DETAILS	K. ENDOW	CHECKED M. FUSTOK/L. WANG	LAYOUT
QUANTITIES	W. FUSTOK	CHECKED F. ALTAMARONO/U. INYANG	SPECIFICATIONS

LIVE LOADING: HS20-44 AND ALTERNATIVE AND PERMIT DESIGN LOAD

BY K. ENDOW / L. CHARLOT — CHECKED M. FUSTOK/M. OKIMURA

BY S. DOLLAGA — PLANS AND SPECS COMPARED S. DOLLAGA

STATE OF CALIFORNIA
DEPARTMENT OF TRANSPORTATION

DIVISION OF STRUCTURES
STRUCTURE DESIGN 11

CU 11275
EA 0301U1

BRIDGE NO. 57-0512R
KILOMETER POST R49.2

ROUTE 5/805 SEPARATION (WIDEN)
GENERAL PLAN

STRUCTURES DESIGN GENERAL PLAN SHEET (METRIC) (REV. 4/15/97)

ORIGINAL SCALE IN MILLIMETERS FOR REDUCED PLANS 0 10 20 30 40 50 60 70 80 90 100

DISREGARD PRINTS BEARING EARLIER REVISION DATES

REVISION DATES (PRELIMINARY STAGE ONLY)

SHEET 1 OF 67

FILE => d01gp.dgn

DATE PLOTTED => 12-SEP-2001 TIME PLOTTED => 10:12

USERNAME => 2

GENERAL NOTES
LOAD FACTOR DESIGN

DESIGN : DESIGN BRIDGE SPECIFICATIONS
(1983 AASHTO with Interims and Revisions by CALTRANS)

SEISMIC DESIGN: CalTrans Seismic Design Criteria (SDC) Version 1.1, July 1999

DEAD LOADING : Includes 1676 Pa for future wearing surface.

LIVE LOADING : HS20-44 and alternative and permit design load.

SEISMIC LOADING : Site specific Acceleration Response Spectra Curve. (See Below)

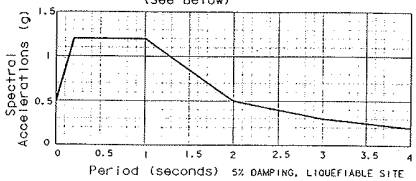

REINFORCED CONCRETE :
fy = 416 MPa
f'c = 25 MPa
n = 8
Transverse Deck Slabs (Working Stress Design)
fs = 137.9 MPa
fc = 8.3 MPa
n = 10

PRESTRESSED CONCRETE: See 'Prestressing Notes' on "GIRDER LAYOUT" sheets.

STRUCTURAL STEEL: 250 MPa

QUANTITIES

RECONSTRUCT TYPE 9 BRIDGE RAILING	2	m
BRIDGE REMOVAL (PORTION), LOCATION C	LUMP	SUM
STRUCTURE EXCAVATION (BRIDGE)	760	m3
STRUCTURE EXCAVATION (TYPE D)	10	m3
STRUCTURE BACKFILL (BRIDGE)	182	m3
ISOLATION CASING BACKFILL	145	m3
1.5 m CAST-IN-DRILLED-HOLE CONCRETE PILING	356	m
2.3 m CAST-IN-DRILLED-HOLE CONCRETE PILING	284	m
1.5 m PERMANENT STEEL CASING	356	m
2.3 m PERMANENT STEEL CASING	284	m
1.2 m CAST-IN-DRILLED-HOLE CONCRETE PILING (ROCK SOCKET)	43	m
2.1 m CAST-IN-DRILLED-HOLE CONCRETE PILING (ROCK SOCKET)	101	m
PRESTRESSING CAST-IN-PLACE CONCRETE	LUMP	SUM
PRESTRESSING	LUMP	SUM
STRUCTURAL CONCRETE, BRIDGE FOOTING	12	m3
STRUCTURAL CONCRETE, BRIDGE	2,810	m3
STRUCTURAL CONCRETE, APPROACH SLAB (TYPE N)	132	m3
DRILL AND BOND DOWEL	20	m
FURNISH PRECAST PRESTRESSED CONCRETE BULB-TEE GIRDER (30 m -35 m)	4	EA
FURNISH PRECAST PRESTRESSED CONCRETE BULB-TEE GIRDER (35 m -40 m)	8	EA
ERECT PRECAST PRETENSIONED GIRDER	12	EA
JOINT SEAL (MR 50MM - TYPE B)	60	m
BAR REINFORCING STEEL (BRIDGE)	945,000	kg
ISOLATION CASING	63,800	kg
BRIDGE DECK DRAINAGE SYSTEM	3,750	kg
CONCRETE BARRIER (TYPE 25)	355	m
CONCRETE BARRIER (TYPE 60A)	166	m

INDEX TO PLANS

Sheet No.	Title
1	GENERAL PLAN
2	INDEX TO PLANS NO. 1
3	INDEX TO PLANS NO. 2
4	FOUNDATION PLAN NO. 1
5	FOUNDATION PLAN NO. 2
6	ABUTMENT 1 LEFT LAYOUT
7	ABUTMENT 5 LEFT LAYOUT
8	ABUTMENT 1 AND 5 LEFT DETAILS NO. 1
9	ABUTMENT 1 AND 5 LEFT DETAILS NO. 2
10	ABUTMENT 1 AND 5 LEFT DETAILS NO. 3
11	ABUTMENT 1 AND 5 LEFT DETAILS NO. 4
12	ABUTMENT 1 RIGHT LAYOUT
13	ABUTMENT 1 RIGHT DETAILS NO. 1
14	ABUTMENT 1 RIGHT DETAILS NO. 2
15	ABUTMENT 6 RIGHT LAYOUT
16	ABUTMENT 6 RIGHT DETAILS NO. 1
17	ABUTMENT DETAILS
18	BENT 2 LEFT LAYOUT
19	BENT 2 LEFT DETAILS NO. 1
20	BENT 2 RIGHT LAYOUT
21	BENT 2 RIGHT DETAILS NO. 1
22	BENT 3 LEFT LAYOUT
23	BENT 3 LEFT DETAILS NO. 1
24	BENT 3 RIGHT LAYOUT
25	BENT 3 RIGHT DETAILS NO. 1
26	BENT 4 LEFT LAYOUT
27	BENT 4 LEFT DETAILS NO. 1
28	BENT 4 RIGHT LAYOUT
29	BENT 4 RIGHT DETAILS NO. 1
30	BENT 4 RIGHT DETAILS NO. 2
31	BENT 5 RIGHT LAYOUT
32	BENT 5 RIGHT DETAILS NO. 1
33	RIGHT WIDEN BENT DETAILS NO. 1
34	LEFT WIDEN COLUMN DETAILS
35	RIGHT WIDEN COLUMN DETAILS
36	TYPICAL SECTION NO. 1
37	TYPICAL SECTION NO. 2
38	TYPICAL SECTION NO. 3
39	GIRDER LAYOUT NO. 1
40	GIRDER LAYOUT NO. 2
41	GIRDER LAYOUT NO. 3

Caltrans Metric

DIST	COUNTY	ROUTE	KILOMETER POST TOTAL PROJECT	SHEET No	TOTAL SHEETS
11	SD	5, 56, 805	Var	1231	1549

G.S. Blakeley 05-01-01
REGISTERED CIVIL ENGINEER

9-3-01
PLANS APPROVAL DATE

REGISTERED PROFESSIONAL ENGINEER G.S. BLAKESLEY No. 45509 Exp. 12-31-02 CIVIL STATE OF CALIFORNIA

The State of California or its officers or agents shall not be responsible for the accuracy or completeness of electronic copies of this plan sheet.

Caltrans now has a web site! To get to the web site, go to: http://www.dot.ca.gov

INDEX TO PLANS

Sheet No.	Title
42	RIGHT WIDENING GIRDER REINFORCEMENT NO. 1
43	RIGHT WIDENING GIRDER REINFORCEMENT NO. 2
44	RIGHT WIDENING GIRDER REINFORCEMENT NO. 3
45	RIGHT WIDENING GIRDER REINFORCEMENT NO. 4
46	RIGHT WIDENING GIRDER REINFORCEMENT NO. 5
47	LEFT WIDENING GIRDER REINFORCEMENT
48	LEFT SIDE WIDENING - DECK CONSTRUCTION STAGING DETAILS
49	ABUTMENT PILE DETAILS
50	LEFT SIDE WIDENING - PRECAST/ PRESTRESSED BULB-TEE GIRDER DETAILS NO. 1
51	LEFT SIDE WIDENING - PRECAST/ PRESTRESSED BULB-TEE GIRDER DETAILS NO. 2
52	RIGHT SIDE WIDENING - PRECAST/ PRESTRESSED BULB-TEE GIRDER DETAILS NO. 1
53	RIGHT SIDE WIDENING - PRECAST/ PRESTRESSED BULB-TEE GIRDER DETAILS NO. 2
54	STRUCTURE APPROACH TYPE N(9S)
55	STRUCTURE APPROACH DRAINAGE DETAILS
56	MISCELLANEOUS DETAILS
57	RAILING AND OVERHANG MODIFICATIONS NO. 1
58	RAILING AND OVERHANG MODIFICATIONS NO. 2
59	COLUMN ISOLATION CASING DETAILS
60	LOG OF TEST BORINGS NO. 1
61	LOG OF TEST BORINGS NO. 2
62	LOG OF TEST BORINGS NO. 3
63	LOG OF TEST BORINGS NO. 4
64	LOG OF TEST BORINGS NO. 5
65	LOG OF TEST BORINGS NO. 6
66	LOG OF TEST BORINGS NO. 7
67	LOG OF TEST BORINGS NO. 8

PILE DATA TABLE - LEFT SIDE WIDENING

LOCATION	PILE TYPE	DESIGN LOADING	NOMINAL RESISTANCE		INTENDED LENGTH OF ROCK SOCKET	TOP OF PILE CUT-OFF ELEV	PERMANENT CASING SPECIFIED TIP ELEV	DESIGN TIP ELEVATION	DESIGN TIP ELEVATION (LATERAL LOADS)	SPECIFIED TIP ELEVATION
			COMPRESSION	TENSION						
ABUT 1	1500 mm CIDH	N/A	2550 kN	0 kN	3.96 m	+18.45 m	-9.45 m	-13.41 m (1)	-3.5 m(3)	-13.41 m
BENT 2	2300 mm CIDH	N/A	9350 kN	0 kN	7.96 m	+9.16 m	-9.45 m	-17.07 m (1)	-12.97 m(3)	-17.07 m
BENT 3	2300 mm CIDH	N/A	9350 kN	0 kN	7.62 m	+7.01 m	-12.80 m	-20.42 m(1)	-14.95 m(3)	-20.42 m
BENT 4	2300 mm CIDH	N/A	9350 kN	0 kN	6.71 m	+9.16 m	-12.34 m	-19.05 m (1)	-12.97 m(3)	-19.05 m
ABUT 5	1500 mm CIDH	N/A	3025 kN	0 kN	3.96 m	+18.15 m	-13.44 m	-17.40 m(1)	-17.40 m(3)	-17.40 m

PILE DATA TABLE - RIGHT SIDE WIDENING

LOCATION	PILE TYPE	DESIGN LOADING	NOMINAL RESISTANCE		INTENDED LENGTH OF ROCK SOCKET	TOP OF PILE CUT-OFF ELEV	PERMANENT CASING SPECIFIED TIP ELEV	DESIGN TIP ELEVATION	DESIGN TIP ELEVATION (LATERAL LOADS)	SPECIFIED TIP ELEVATION
			COMPRESSION	TENSION						
ABUT 1	1500 mm CIDH	N/A	2550 kN	0 kN	3.66 m	+18.91 m	-8.84 m	-12.5 m (1)	+0.610 m (3)	-12.5 m
BENT 2	2300 mm CIDH	N/A	9350 kN	0 kN	7.92 m	+9.16 m	-8.84 m	-16.76 m (1)	-10.35 m (3)	-16.76 m
BENT 3	2300 mm CIDH	N/A	9350 kN	0 kN	7.62 m	+9.16 m	-12.80 m	-20.42 m(1)	-10.35 m (3)	-20.42 m
BENT 4	2300 mm CIDH	N/A	9350 kN	0 kN	6.40 m	+7.01 m	-13.41 m	-19.81 m (1)	-13.7 m (3)	-19.81 m
BENT 5	2300 mm CIDH	N/A	9350 kN	0 kN	6.55 m	+9.16 m	-12.34 m	-18.90 m (1)	-11.6 m (3)	-18.90 m
ABUT 6	1500 mm CIDH	N/A	3025 kN	0 kN	3.35 m	+18.61 m	-13.72 m	-17.07 m (1)	-17.07 m (3)	-17.07 m

DESIGN TIP ELEVATIONS ARE CONTROLLED BY THE FOLLOWING DEMANDS:
(1) COMPRESSION; (2) TENSION; (3) LATERAL LOADING; (4) SCOUR POTENTIAL; (5) LIQUEFACTION POTENTIAL

STANDARD PLANS
Dated July 1999

	A10A	ABBREVIATIONS
	A62C	LIMITS OF PAYMENT FOR EXCAVATION AND BACKFILL - BRIDGE
	A76G	CONCRETE BARRIER TYPE 60S
RSP	B0-1	BRIDGE DETAILS
	B0-3	BRIDGE DETAILS
	B0-5	BRIDGE DETAILS
	B0-13	BRIDGE DETAILS
RSP	B3-1	RETAINING WALL TYPE 1 H:1200 THRU 9100 MM
RSP	B3-8	RETAINING WALL DETAILS NO. 1
	B6-21	JOINT SEALS - (MAXIMUM MOVEMENT RATING = 50 MM)
	B7-6	DECK DRAINS TYPES D-1 AND D-2
	B7-10	UTILITY OPENING-BOX GIRDER
RSP	B11-53	CONCRETE BARRIER TYPE 25

Standard Plan Sheet No.
Detail No.

NOTE:
For 'Concrete Strength and Type Limits', and 'Camber Diagram' see "INDEX TO PLANS NO. 2" sheet

NO SCALE

ALL DIMENSIONS ARE IN MILLIMETERS UNLESS OTHERWISE SHOWN

DESIGN	BY M. FUSTOK	CHECKED L. WANG/J. HIGAREDA	
DETAILS	BY L. CHARLOT 05/12/00	CHECKED M. FUSTOK/L. WANG	
QUANTITIES	BY M. FUSTOK	CHECKED U. INYANG	

STATE OF CALIFORNIA
DEPARTMENT OF TRANSPORTATION

DIVISION OF STRUCTURES
STRUCTURE DESIGN 11

BRIDGE NO. 57-0512R
KILOMETER POST R49.2

ROUTE 5/805 SEPARATION (WIDEN)
INDEX TO PLANS NO. 1

STRUCTURES DESIGN DETAIL SHEET (METRIC) REV. 3/1/99

ORIGINAL SCALE IN MILLIMETERS FOR REDUCED PLANS 0 10 20 30 40 50 60 70 80 90 100

CU 11275
EA 0301U1

DISREGARD PRINTS BEARING EARLIER REVISION DATES

REVISION DATES (PRELIMINARY STAGE ONLY)

SHEET 2 OF 67

FILE = 0021rpl.dgn

USERNAME => tfrank DATE PLOTTED => 12-SEP-2001 TIME PLOTTED => 10:12

DIST	COUNTY	ROUTE	KILOMETER POST TOTAL PROJECT	SHEET No	TOTAL SHEETS
11	SD	5, 56, 805	Var	1232	1549

G. S. Blakeley 05-01-01
REGISTERED CIVIL ENGINEER

9-3-01
PLANS APPROVAL DATE

REGISTERED PROFESSIONAL ENGINEER G. S. BLAKESLEY No. 45509 Exp. 12-31-02 CIVIL STATE OF CALIFORNIA

The State of California or its officers or agents shall not be responsible for the accuracy or completeness of electronic copies of this plan sheet.

Caltrans now has a web site! To get to the web site, go to http://www.dot.ca.gov

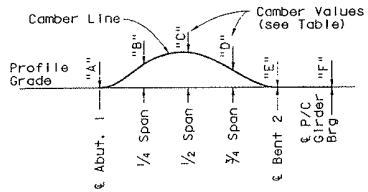

Girder No.	Camber Values (mm)					
	"A"	"B"	"C"	"D"	"E"	"F"
Ⓐ and Ⓑ	0	7	9	5	0	0
Ⓒ and Ⓓ	0	9	11	7	0	0
Ⓔ and Ⓕ	0	10	14	9	0	0

FIRST SPAN
(CIP R/C BOX GIRDER)

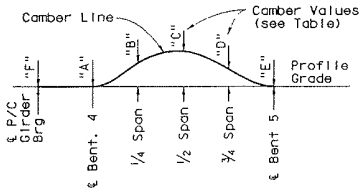

Girder No.	Camber Values (mm)					
	"A"	"B"	"C"	"D"	"E"	"F"
Ⓐ and Ⓑ	0	0	0	0	0	0
Ⓒ and Ⓓ	0	0	0	0	0	0
Ⓔ and Ⓕ	0	24	33	18	0	0

FOURTH SPAN
(CIP R/C BOX GIRDER)

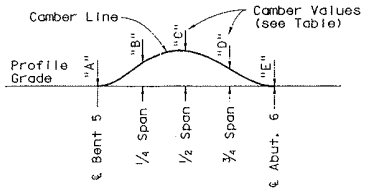

Girder No.	Camber Values (mm)				
	"A"	"B"	"C"	"D"	"E"
Ⓐ and Ⓑ	0	13	23	19	0
Ⓒ and Ⓓ	0	14	25	20	0
Ⓔ and Ⓕ	0	7	17	15	0

FIFTH SPAN
(CIP R/C BOX GIRDER)

Camber Values (mm)	
DECK DL	RAIL DL
47	1

SECOND SPAN
(PC/PS BULB-TEE GIRDER)

Camber Values (mm)	
DECK DL	RAIL DL
50	2

THIRD SPAN
(PC/PS BULB-TEE GIRDER)

Notes:
For Girder designation see "Girder Layout" sheets
Does not include allowance for falsework settlement

LEGEND

- Structural Concrete, Bridge
- Structural Concrete, Bridge - 28 MPa at 28 days
- Structural Concrete, Bridge - 31 MPa at 28 days
- Pre-Cast Pre-Stressed Bulb-tee Girder, see "PRE-STRESSED BULB-TEE GIRDER DETAILS" sheets
- CIDH Pile Concrete
- Structural Concrete Bridge Footing

CAMBER DIAGRAM - RIGHT SIDE WIDENING

NO SCALE

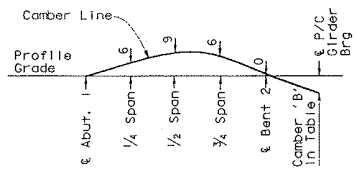

FIRST FRAME

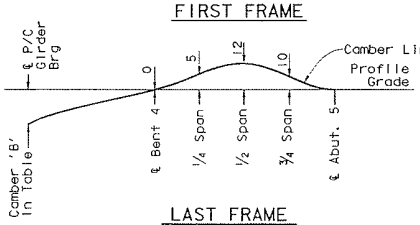

LAST FRAME

TIME DEPENDENT CAMBER VALUES

DAYS *	Span 2 Left End Girder Seat	Span 3 Right End Girder Seat
	Camber "B"	Camber "B"
30	-3 mm	5 mm
60	-3 mm	-7 mm
90	-3 mm	N/A **
120	-3 mm	N/A
180	-3 mm	N/A
240	-3 mm	N/A
360	-3 mm	N/A
720	-3 mm	N/A

* Elapsed time in days measured from prestressing of CIP/PS frame until erection of Pre-Cast girder

** Pre-cast girder shall be erected within 60 days after prestressing the last frame

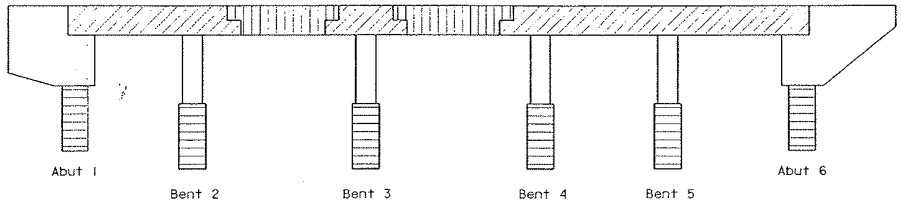

RIGHT SIDE WIDENING

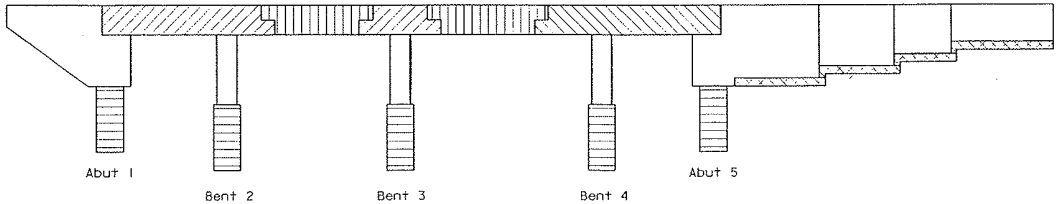

LEFT SIDE WIDENING

CONCRETE STRENGTH AND TYPE LIMITS

NO SCALE

CAMBER DIAGRAM - LEFT SIDE WIDENING

NO SCALE

NOTE:
THE CONTRACTOR SHALL VERIFY ALL CONTROLLING FIELD DIMENSIONS BEFORE ORDERING OR FABRICATING ANY MATERIAL.

ALL DIMENSIONS ARE IN MILLIMETERS UNLESS OTHERWISE SHOWN

DESIGN	BY M. OKIMURA/M. FUSTOK	CHECKED L. WANG/J. HIGAREDA	
DETAILS	BY L. CHARLOT 09/15/00	CHECKED L. WANG/M. FUSTOK	
QUANTITIES	BY W. FUSTOK	CHECKED U. INYANG	

STATE OF CALIFORNIA
DEPARTMENT OF TRANSPORTATION

DIVISION OF STRUCTURES
STRUCTURE DESIGN 11

BRIDGE NO. 57-0512R
KILOMETER POST R49.2

ROUTE 5/805 SEPARATION (WIDEN)

INDEX TO PLANS NO. 2

CU 11275
EA 0301U1

DISREGARD PRINTS BEARING EARLIER REVISION DATES

REVISION DATES (PRELIMINARY STAGE ONLY)

SHEET 3 OF 67

STRUCTURES DESIGN DETAIL SHEET (METRIC) REV. 4/20/00

ORIGINAL SCALE IN MILLIMETERS FOR REDUCED PLANS 0 10 20 30 40 50 60 70 80 90 100

FILE = d03itp2.dgn

USERNAME = ?

DATE PLOTTED = 12-SEP-2001 TIME PLOTTED = 10:12

DIST	COUNTY	ROUTE	KILOMETER POST TOTAL PROJECT	SHEET NO.	TOTAL SHEETS
11	SD	5, 56, 805	Var	1233	1549

G.S. Blakeley 05-01-01
REGISTERED ENGINEER-CIVIL

G.S. BLAKESLEY
No. 45509
Exp. 12-31-02
CIVIL
STATE OF CALIFORNIA
REGISTERED PROFESSIONAL ENGINEER

9-3-01
PLANS APPROVAL DATE

The State of California or its officers or agents shall not be responsible for the accuracy or completeness of electronic copies of this plan sheet.

Caltrans now has a web site! To get to the web site, go to: http://www.dot.ca.gov

Caltrans Metric

HYDROLOGIC SUMMARY

DRAINAGE AREA: 151 SQUARE KM

	BASE FLOOD	DESIGN FLOOD
FREQUENCY (YEARS)	50	100
DISCHARGE (CUBIC METER PER SECOND)	320	476
WATER SURFACE (ELEVATION AT BRIDGE, METER)	11.09	11.70

FLOOD PLAIN DATA ARE BASED UPON INFORMATION AVAILABLE WHEN THE PLANS WERE PREPARED AND ARE SHOWN TO MEET FEDERAL REQUIREMENTS. THE ACCURACY OF SAID INFORMATION IS NOT WARRANTED

①	522 + 49.176 BC, "SDR" Line	N 581825.2604
		E 1908849.4895
②	522 + 37.078 PCC, "NB" Line	N 581806.9458
		E 1908865.2270
③	469 + 01.444 "ST 805" Line	N 582105.3970
	525 + 41.682 "NB" Line	E 1908919.0153
④	469 + 13.817 BC, "ST 805" Line	N 582114.5004
		E 1908910.6361
⑤	469 + 32.372 "ST 805" Line	N 582128.2796
	525 + 57.546 "SDR" Line	E 1908898.2089
⑥	471 + 81.324 EC, "ST 805" Line	N 582334.8391
		E 1908760.6287
⑦	469 + 05.105 BC, "AL" Line	N 582141.1270
		E 1908956.4063
⑧	469 + 70.702 "AL" Line	N 582193.0007
	526 + 29.361 "NB" Line	E 1908916.2633
⑨	526 + 56.287 "SDR" Line	N 582226.7753
	470 + 12.304 "AL" Line	E 1908891.9762
⑩	469 + 41.295 BC, "AR" Line	N 582174.6195
		E 1908940.1456
⑪	469 + 81.264 "AR" Line	N 582205.7988
	526 + 42.206 "NB" Line	E 1908915.1710

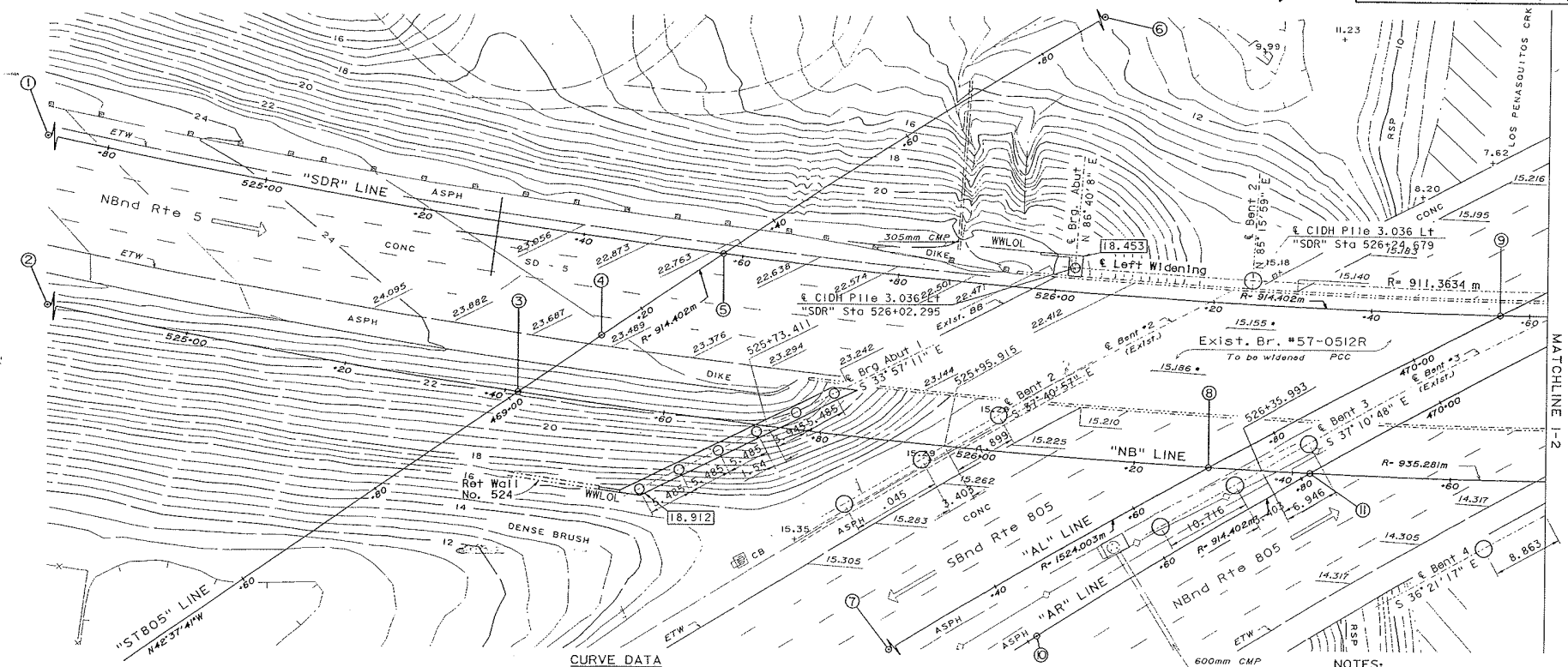

BENCH MARKS

BM * 5-30.57 Elev.- 25.295 m

Fd. std. br. disk on the east shoulder of northbound Rte5, 35.1m north of the NE end of the bridge over Sorrento Valley Road.

BM * 805-28.20 Elev.- 19.812 m

Fd.std.br.disk on the east shoulder of NBnd Rte 805, 147.5m south of the bridge over Sorrento Valley Boulevard.

CURVE DATA

* SDR * Line	* NB * Line	* ST805 * Line	* AL * Line	* AR * Line
R- 914.402 m	R- 935.281 m	R- 914.402 m	R- 1524.003 m	R- 914.402 m
Δ- 53° 47' 41"	Δ- 54° 27' 00"	Δ- 16° 45' 43"	Δ- 12° 14' 00"	Δ- 13° 13' 47"
T- 463.850 m	T- 481.188 m	T- 134.716 m	T- 163.318 m	T- 106.041 m
L- 858.529 m	L- 888.831 m	L- 267.508 m	L- 325.3941 m	L- 211.138 m
N 582119.8653	N 582119.8670	N 582733.7651	N 583099.5527	N 582761.7301
E 1907983.8458	E 1907983.8469	E 1909583.4216	E 1910141.3136	E 1909641.1678

NOTES:

+ Denotes spot elev.
* Denotes under structure elevation

Underground utilities as shown are approx.
DATUM: NAVD 1929 Adj. 1988

Indicates bottom of abutment elevation

ALL DIMENSIONS ARE IN METERS UNLESS OTHERWISE SHOWN

SHT. 1 OF 2

PRELIMINARY INVESTIGATION SECTION							
SCALE 1:250	DATUM SEE NOTE	PHOTOGRAMMETRY AS OF:		DRAWN BY L. Manabo 10/98	DESIGN BY M. FUSTOK	CHECKED L. WANG/J. HIGAREDA	
		SURVEYED BY		TRACED BY	DETAILS BY L. CHARLOT 05/09/2000	CHECKED M. FUSTOK/L. WANG	
ALIGNMENT TIES		FIELD CHECKED BY L. Manabo 10/7/98		CHECKED BY S. Wang 10/13/98	QUANTITIES BY M. FUSTOK	CHECKED U. INYANG	

OS OSM- MDET (CADD 5-95)
OS OSD 2145 (4/89)

STATE OF CALIFORNIA
DEPARTMENT OF TRANSPORTATION

DIVISION OF STRUCTURES
STRUCTURE DESIGN 11

CU 11275
EA 0301U1

BRIDGE NO. 57-0512R
KILOMETER POST R49.2

ROUTE 5/805 SEPARATION (WIDEN)
FOUNDATION PLAN NO. 1

DISREGARD PRINTS BEARING EARLIER REVISION DATES →

REVISION DATES (PRELIMINARY STAGE ONLY) 5/28/98 9/29/98 12/29/98 3/29/99 6/30/99 4/24/01

SHEET 4 OF 67

FILE => 304fp01.dgn

USERNAME => fitzerm DATE PLOTTED => 12-SEP-2001 TIME PLOTTED => 10:13

DIST	COUNTY	ROUTE	KILOMETER POST TOTAL PROJECT	SHEET NO.	TOTAL SHEETS
11	SD	5, 56, 805	Var	1234	1549

G.S. Blakeslee 05-01-01
REGISTERED ENGINEER-CIVIL

REGISTERED PROFESSIONAL ENGINEER G.S. BLAKESLEE No. 45509 Exp. 12-31-02 CIVIL STATE OF CALIFORNIA

9-3-01
PLANS APPROVAL DATE

The State of California or its officers or agents shall not be responsible for the accuracy or completeness of electronic copies of this plan sheet.

Caltrans now has a web site! To get to the web site, go to: http://www.dot.ca.gov

Caltrans Metric

⑫ 526 + 69.426 "SDR" Line	N 582239.8124	⑮ 531 + 07.705 EC. "SDR" Line	N 582644.3418
470 + 23.359 " AR" Line	E 1908890.3463		E 1908732.8814
⑬ 472 + 30.499 EC. "AL" Line	N 582413.9657	⑯ 531 + 25.910 EC. "NB" Line	N 582655.0320
	E 1908780.2282		E 1908750.8839
⑭ 471 + 52.433 EC. "AR" Line	N 582350.6348	⑰ 470 + 53.602 EC. "NT 805"	N 582300.9507
	E1908824.3864		E 1908923.9615

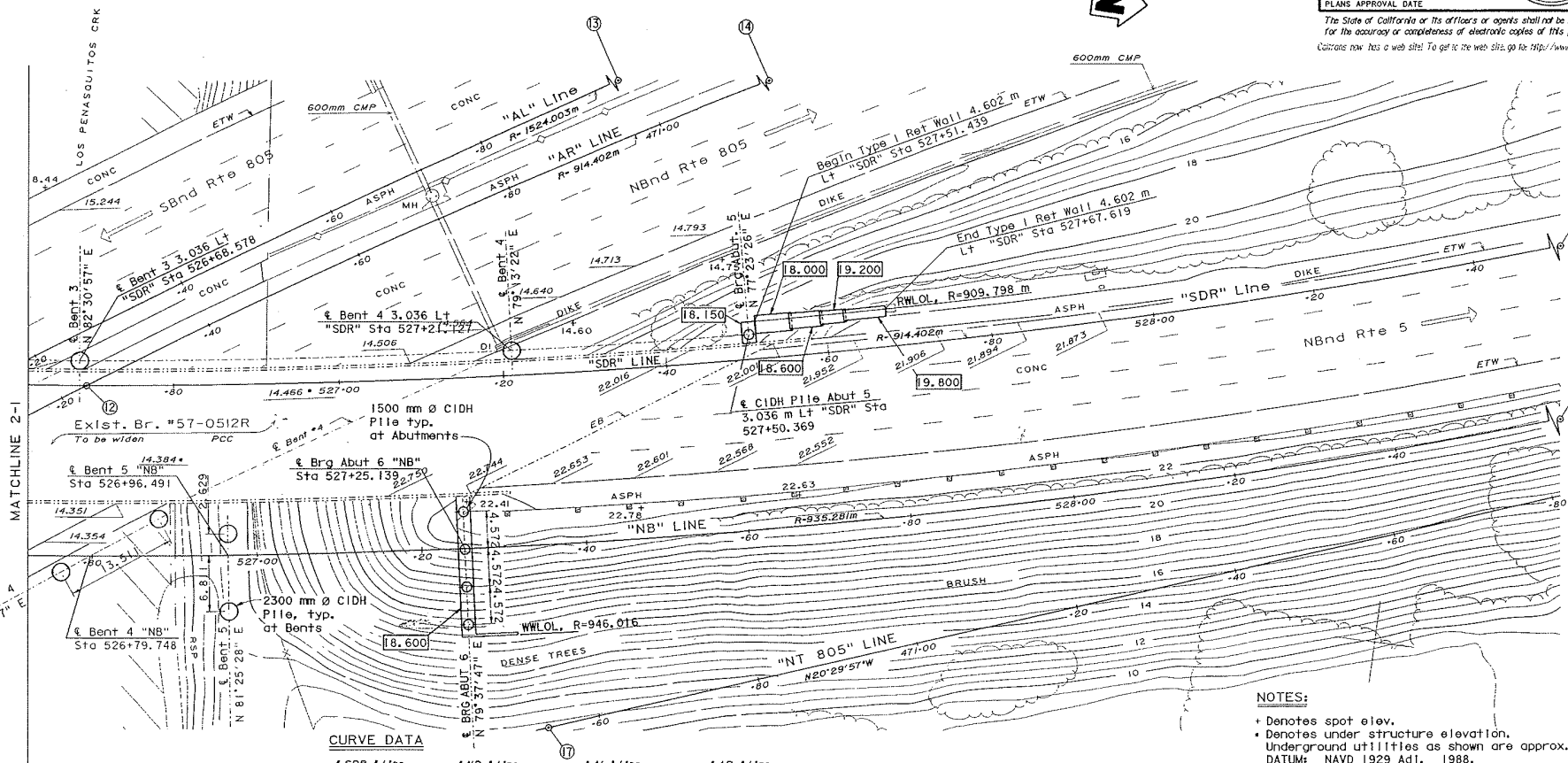

BENCH MARKS

Refer to sht. 1 of 2.

CURVE DATA

"SDR" Line	"NB" Line	"AL" Line	"AR" Line
R= 914.402 m	R= 935.281 m	R= 1524.003 m	R= 914.402 m
Δ= 53° 47' 41"	Δ= 54° 27' 00"	Δ= 12° 14' 00"	Δ= 13° 13' 47"
T= 463.850 m	T= 481.188 m	T= 163.318 m	T= 106.041 m
L= 858.529 m	L= 888.831 m	L= 325.3941 m	L= 211.138 m
N 582119.8653	N 582119.8670	N 583099.5527	N 582761.7301
E 1907983.8458	E 1907983.8469	E 1910141.3136	E 1909641.1678

NOTES:

+ Denotes spot elev.
▪ Denotes under structure elevation.
Underground utilities as shown are approx.
DATUM: NAVD 1929 Adj. 1988.

For CIDH Pile Shaft Tip and Cut-Off Elevations, see Pile Data Table on "INDEX TO PLANS" sheet.

18.693 Indicates Bottom of Footing or Bottom of Abutment Elevation.

ALL DIMENSIONS ARE IN METERS UNLESS OTHERWISE SHOWN

SHT. 2 OF 2

PRELIMINARY INVESTIGATION SECTION

SCALE	DATUM	PHOTOGRAMMETRY AS OF:	DRAWN	BY L.Manabo 10/98
1:250	SEE NOTE	SURVEYED BY	TRACED	BY
ALIGNMENT TIES		FIELD CHECKED BY L.Manabo 10/7/98	CHECKED	BY S.Wang 10/13/98

DESIGN	BY M. FUSTOK	CHECKED	L. WANG/J. HIGAREDA
DETAILS	BY L.CHARLOT 05/09/2000	CHECKED	M. FUSTOK/L. WANG
QUANTITIES	BY M. FUSTOK	CHECKED	U. INYANG

STATE OF CALIFORNIA
DEPARTMENT OF TRANSPORTATION

DIVISION OF STRUCTURES
STRUCTURE DESIGN 11

BRIDGE NO. 57-0512R
KILOMETER POST R49.2

ROUTE 5/805 SEPARATION (WIDEN)
FOUNDATION PLAN NO. 2

DS OSMI MDET (CADD 5-95)
DS OSD 2M5 (4/89)

CU 11275
EA 0301U1

DISREGARD PRINTS BEARING EARLIER REVISION DATES

REVISION DATES (PRELIMINARY STAGE ONLY)

SHEET 5 OF 67

FILE = 305fp2.dgn

USERNAME = s_f_

TIME PLOTTED = 07:11-SEP-2001

D:\DATE PLOTTED = 07-06-01

DIST	COUNTY	ROUTE	KILOMETER POST TOTAL PROJECT	SHEET No	TOTAL SHEETS
11	SD	5, 56, 805	Var	1249	1549

G.S. Blakesley 05-01-01
REGISTERED CIVIL ENGINEER

9-3-01
PLANS APPROVAL DATE

REGISTERED PROFESSIONAL ENGINEER G.S. BLAKESLEY No. 45509 Exp. 12-31-02 CIVIL STATE OF CALIFORNIA

The State of California or its officers or agents shall not be responsible for the accuracy or completeness of electronic copies of this plan sheet.

Caltrans now has a web site! To get to the web site, go to: http://www.dot.ca.gov

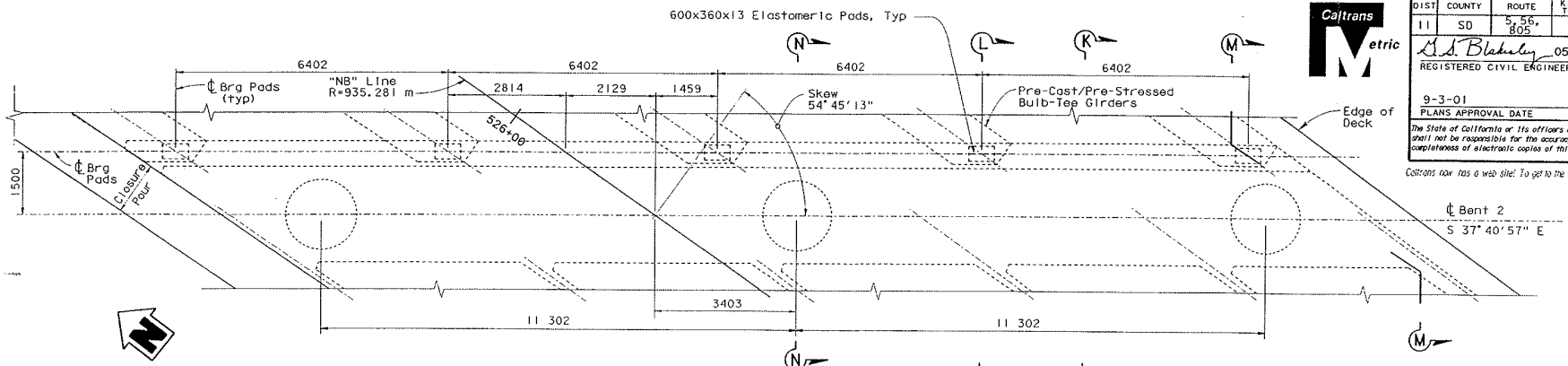

PLAN
1:50

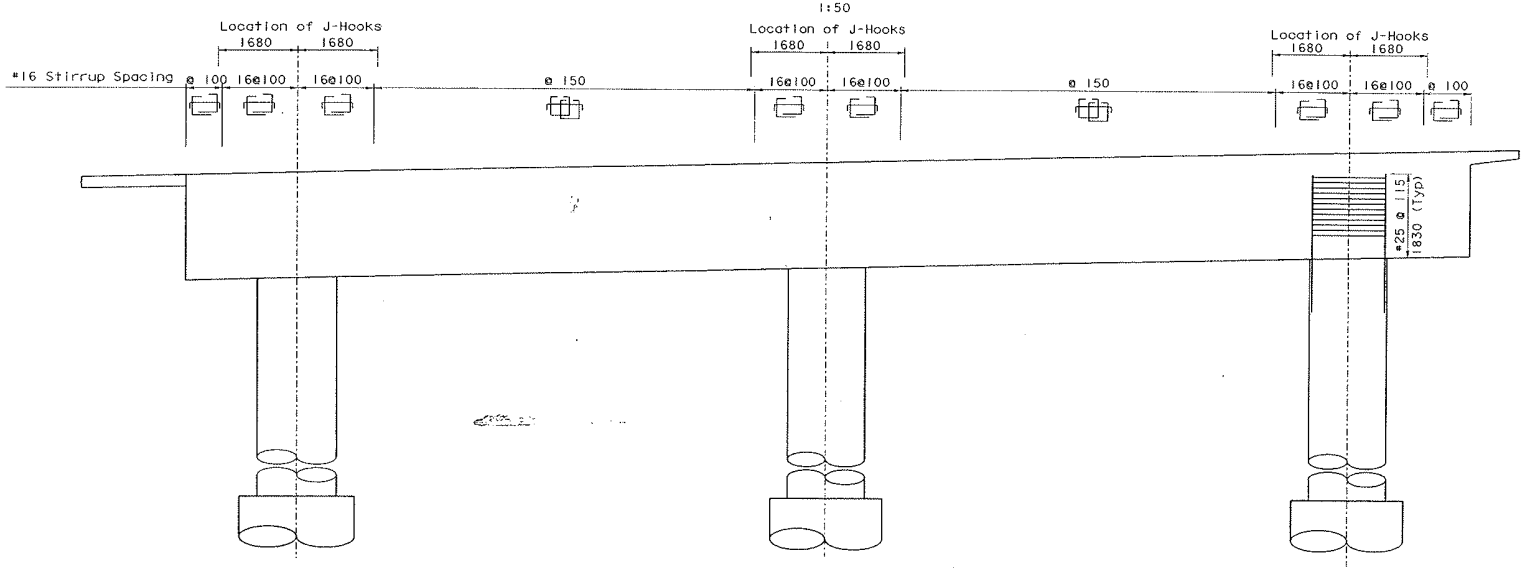

ELEVATION
1:50

NOTES:

1. For 'Section K-K', 'Section L-L', 'Section M-M', and 'Section N-N', see "BENT 2 RIGHT DETAILS NO. 1" sheet
2. Splices in main bent cap reinforcement shall be mechanically butt spliced. Splices must be staggered a minimum of 1500 mm.

NOTE:
THE CONTRACTOR SHALL VERIFY ALL CONTROLLING FIELD DIMENSIONS BEFORE ORDERING OR FABRICATING ANY MATERIAL.

ALL DIMENSIONS ARE IN MILLIMETERS UNLESS OTHERWISE SHOWN

DESIGN	BY M. FUSTOK	CHECKED L. WANG	
DETAILS	BY L. CHARLOT 03/20/2000	CHECKED M. FUSTOK	
QUANTITIES	BY M. FUSTOK	CHECKED F. ALTAMIRANO	

STATE OF CALIFORNIA
DEPARTMENT OF TRANSPORTATION

DIVISION OF STRUCTURES
STRUCTURE DESIGN 11

BRIDGE NO. 57-0512R
KILOMETER POST R49.2

ROUTE 5/805 SEPARATION (WIDEN)
BENT 2 RIGHT LAYOUT

STRUCTURES DESIGN DETAIL SHEET (METRIC) REV. 3/1/99

ORIGINAL SCALE IN MILLIMETERS FOR REDUCED PLANS 0 10 20 30 40 50 60 70 80 90 100

CU 11275
EA 0301U1

DISREGARD PRINTS BEARING EARLIER REVISION DATES 4-24-2001

REVISION DATES (PRELIMINARY STAGE ONLY)

SHEET 20 OF 67

FILE => d20bent_2right_1o.dgn

USERNAME => trienord DATE PLOTTED => 11-SEP-2001 TIME PLOTTED => 08:03

DIST	COUNTY	ROUTE	KILOMETER POST TOTAL PROJECT	SHEET No	TOTAL SHEETS
11	SD	5, 56, 805	Var	1253	1549

G.S. Blakesley 05-01-01
REGISTERED CIVIL ENGINEER

9-03-01
PLANS APPROVAL DATE

REGISTERED PROFESSIONAL ENGINEER G.S. BLAKESLEY No. 45509 Exp. 12-31-02 CIVIL STATE OF CALIFORNIA

The State of California or its officers or agents shall not be responsible for the accuracy or completeness of electronic copies of this plan sheet.

Caltrans now has a web site! To get to the web site, go to: http://www.dot.ca.gov

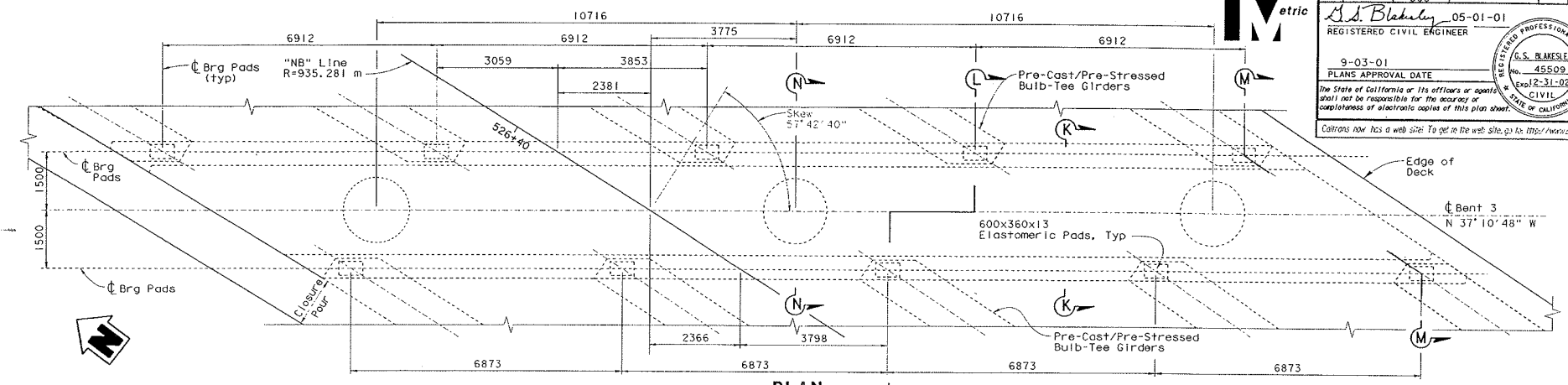

PLAN
1:50

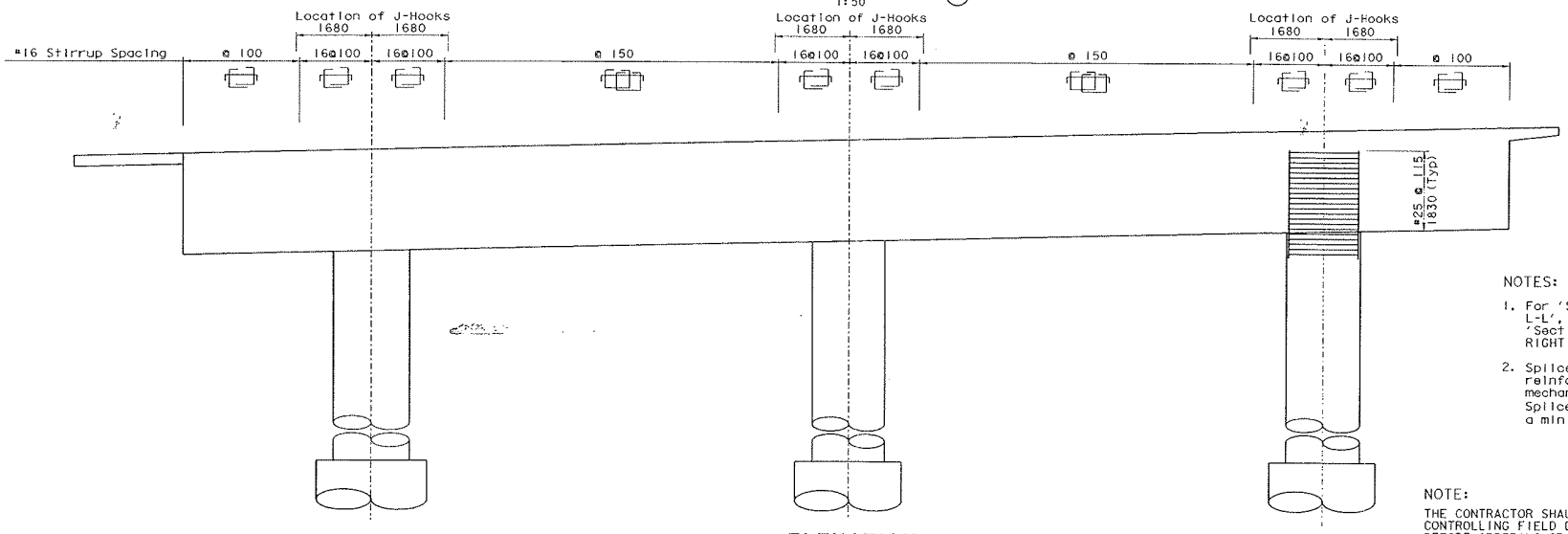

ELEVATION
1:50

NOTES:

1. For 'Section K-K', 'Section L-L', 'Section M-M', and 'Section N-N', see "BENT 3 RIGHT DETAILS NO. 1" sheet
2. Splices in main bent cap reinforcement shall be mechanically butt spliced. Splices must be staggered a minimum of 1500 mm.

NOTE:

THE CONTRACTOR SHALL VERIFY ALL CONTROLLING FIELD DIMENSIONS BEFORE ORDERING OR FABRICATING ANY MATERIAL.

ALL DIMENSIONS ARE IN MILLIMETERS UNLESS OTHERWISE SHOWN

DESIGN	BY M. FUSTOK	CHECKED L. WANG	
DETAILS	BY L. CHARLOT 03/23/2000	CHECKED M. FUSTOK	
QUANTITIES	BY M. FUSTOK	CHECKED F. ALTAMIRANO	

STATE OF CALIFORNIA
DEPARTMENT OF TRANSPORTATION

DIVISION OF STRUCTURES
STRUCTURE DESIGN 11

BRIDGE NO. 57-0512R
KILOMETER POST R49.2

ROUTE 5/805 SEPARATION (WIDEN)
BENT 3 RIGHT LAYOUT

STRUCTURES DESIGN DETAIL SHEET (METRIC) REV. 3/1/99

ORIGINAL SCALE IN MILLIMETERS FOR REDUCED PLANS 0 10 20 30 40 50 60 70 80 90 100

CU 11275
EA 0301U1

DISREGARD PRINTS BEARING EARLIER REVISION DATES

REVISION DATES (PRELIMINARY STAGE ONLY)

SHEET 24 OF 67

FILE => d24bent_3right_lo.dgn

USERNAME => trsoroi DATE PLOTTED => 11-SEP-2001 TIME PLOTTED => 08:57

DIST	COUNTY	ROUTE	KILOMETER POST TOTAL PROJECT	SHEET No	TOTAL SHEETS
11	SD	5,56,805	Var	1257	1549

Caltrans Metric

G.S. Blakesley 05-01-01
REGISTERED CIVIL ENGINEER

9-3-01
PLANS APPROVAL DATE

REGISTERED PROFESSIONAL ENGINEER G.S. BLAKESLEY No. 45509 Exp. 12-31-02 CIVIL STATE OF CALIFORNIA

The State of California or its officers or agents shall not be responsible for the accuracy or completeness of electronic copies of this plan sheet.

Caltrans now has a web site. To get to the web site, go to: http://www.dot.ca.gov

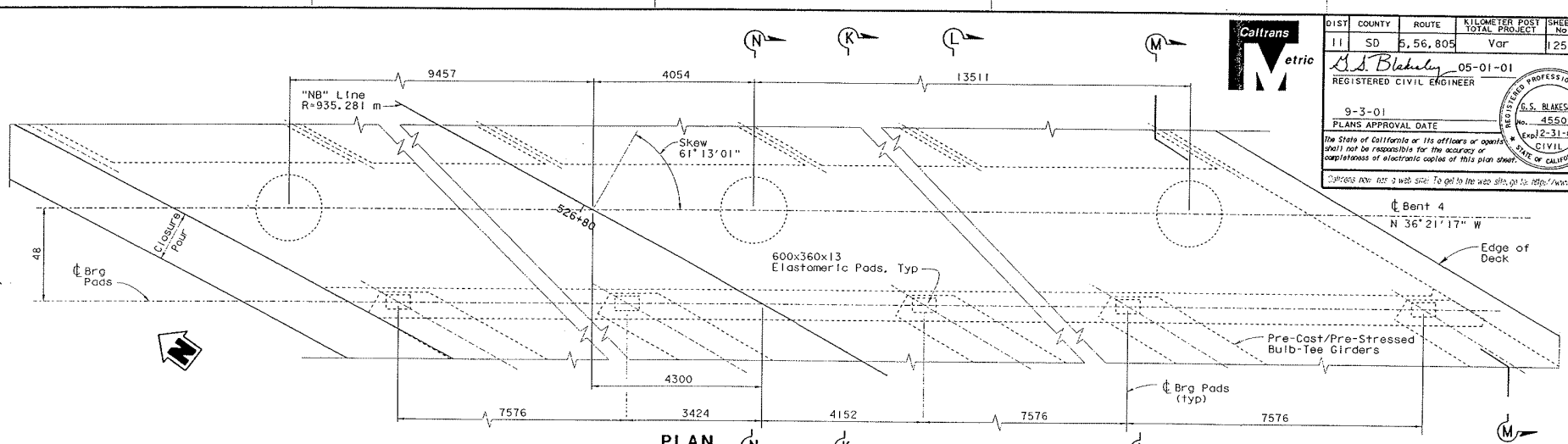

PLAN
1:50

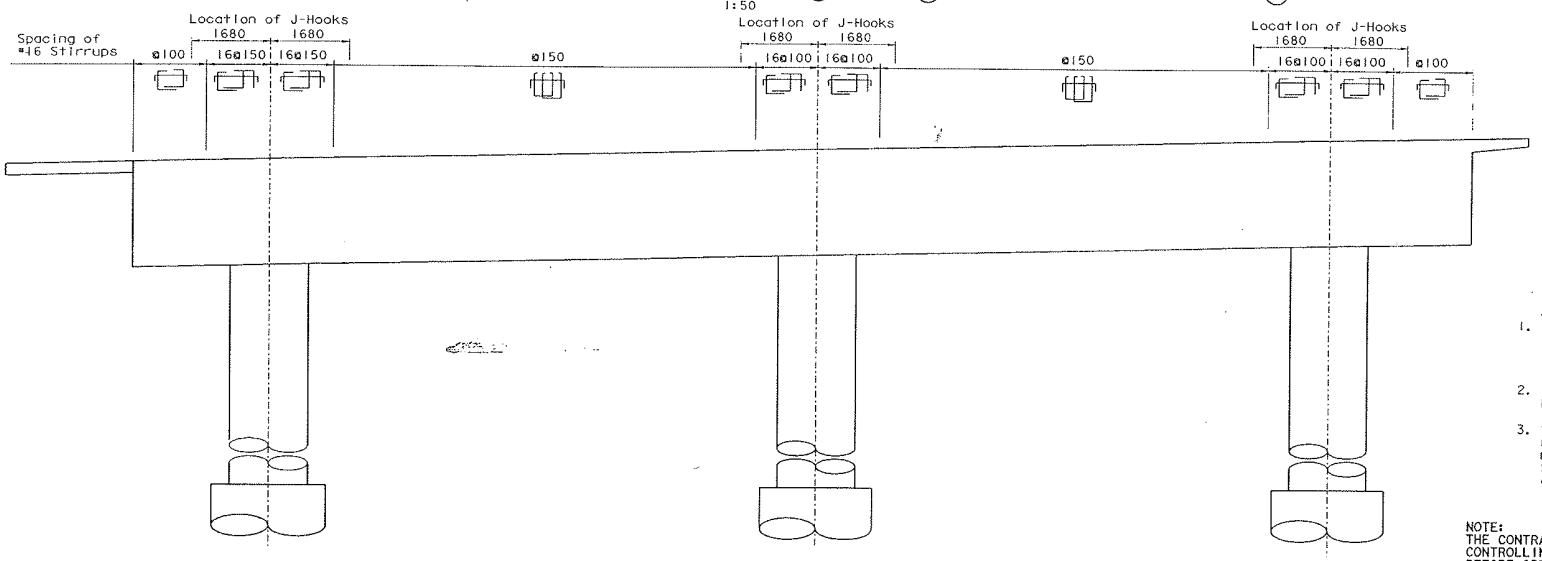

ELEVATION
1:50

NOTES:

1. For 'Section K-K', 'Section L-L', see "BENT 4 RIGHT DETAILS NO. 1" sheet
2. For 'Section M-M, 'Section N-N', see "Bent 4 RIGHT DETAILS NO. 2" sheet
3. Splices in main bent cap reinforcement shall be mechanically butt spliced. Splices must be staggered a minimum of 1500 mm.

NOTE:
THE CONTRACTOR SHALL VERIFY ALL CONTROLLING FIELD DIMENSIONS BEFORE ORDERING OR FABRICATING ANY MATERIAL.

ALL DIMENSIONS ARE IN MILLIMETERS UNLESS OTHERWISE SHOWN

DESIGN	BY M. FUSTOK	CHECKED L. WANG	STATE OF CALIFORNIA DEPARTMENT OF TRANSPORTATION	DIVISION OF STRUCTURES STRUCTURE DESIGN 11	BRIDGE NO. 57-0512R
DETAILS	BY L. CHARLOT 03/23/2000	CHECKED M. FUSTOK			KILOMETER POST R49.2
QUANTITIES	BY M. FUSTOK	CHECKED F. ALTAMIRANO			

ROUTE 5/805 SEPARATION (WIDEN)
BENT 4 RIGHT LAYOUT

STRUCTURES DESIGN DETAIL SHEET (METRIC) (REV. 3/1/99)

ORIGINAL SCALE IN MILLIMETERS FOR REDUCED PLANS 0 10 20 30 40 50 60 70 80 90 100

CU 11275
EA 0301U1

DISREGARD PRINTS BEARING EARLIER REVISION DATES

REVISION DATES (PRELIMINARY STAGE ONLY)

SHEET 28 OF 67

FILE => d28bent_4right_10.dgn

USERNAME => tr/mikes; DATE PLOTTED => 11-SEP-2001 TIME PLOTTED => 07:27

DIST	COUNTY	ROUTE	KILOMETER POST TOTAL PROJECT	SHEET No	TOTAL SHEETS
11	SD	5, 56, 805	Var	1263	1549

G. S. Blakeley 05-01-01
REGISTERED CIVIL ENGINEER

9-3-01
PLANS APPROVAL DATE

REGISTERED PROFESSIONAL ENGINEER G.S. BLAKESLEY NO. 45509 EXP. 12-31-02 CIVIL STATE OF CALIFORNIA

The State of California or its officers or agents shall not be responsible for the accuracy or completeness of electronic copies of this plan sheet.

Caltrans now has a web site! To get to the web site, go to: http://www.dot.ca.gov

Caltrans Metric

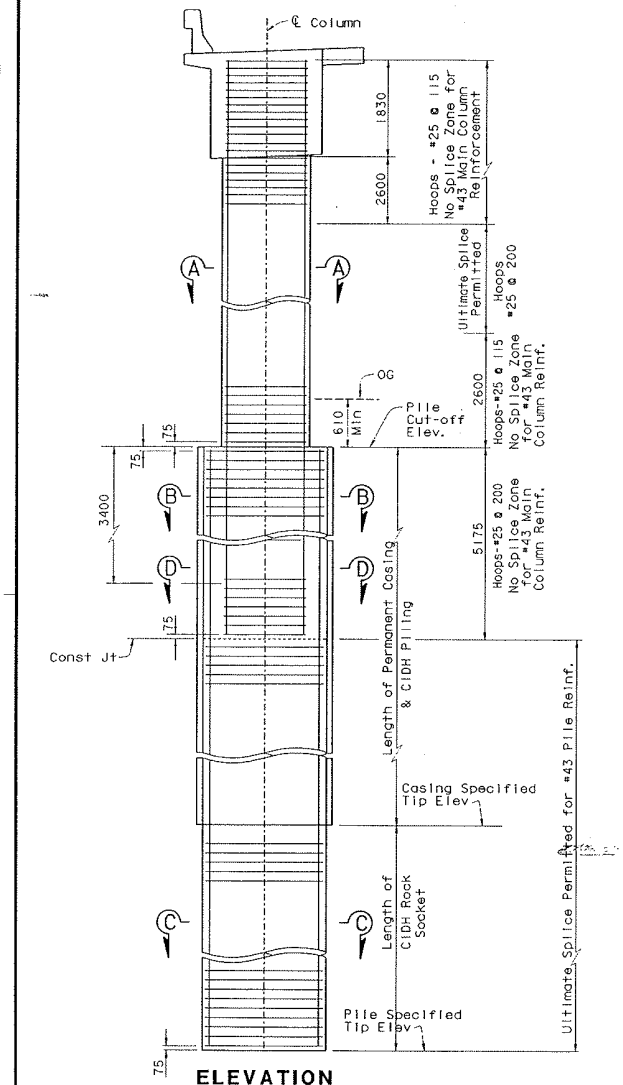

ELEVATION
No Scale

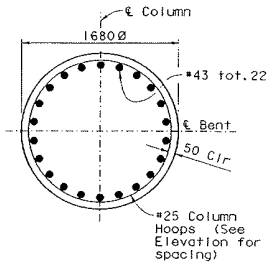

BENT 2 SECTION A-A
1:25

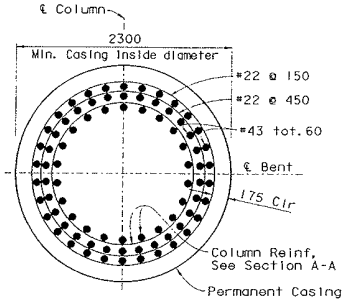

BENT 2 SECTION B-B
1:25

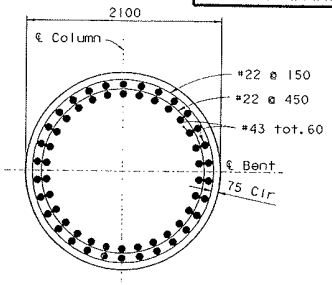

BENT 2, 3, & 4 SECTION C-C
1:25

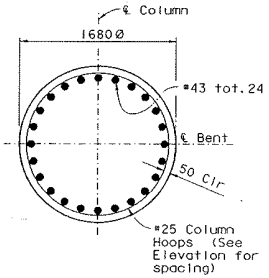

BENT 3 & 4 SECTION A-A
1:25

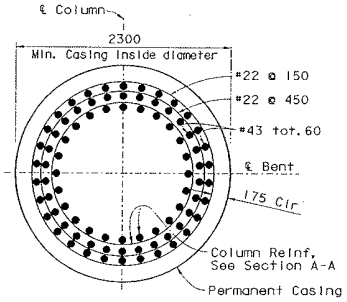

BENT 3 & 4 SECTION B-B
1:25

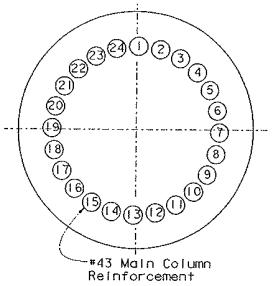

Extend "odd" numbered bars 3400 mm below pile cut-off elev.
Extend "even" numbered bars 5100 mm below pile cut-off elev.
(#43 Pile Reinf and hoops not shown)

SECTION "D-D"
No Scale

NOTES:

1. All reinforcement splices and hoop fabrication in Columns and Piles shall conform to Ultimate Splice Requirements
2. For 'Pile Data Table', see "INDEX TO PLANS NO. 1" sheet.
3. Reinforcing steel bars in the column @ Bent 3 shall be prefabricated epoxy coated.

ALL DIMENSIONS ARE IN MILLIMETERS UNLESS OTHERWISE SHOWN

	BY	CHECKED
DESIGN	M. OKIMURA/M. FUSTOK	L. WANG
DETAILS	L. CHARLOT 05/31/2000	M. FUSTOK
QUANTITIES	M. FUSTOK	U. INYANG

STATE OF CALIFORNIA
DEPARTMENT OF TRANSPORTATION

DIVISION OF STRUCTURES
STRUCTURE DESIGN 11

BRIDGE NO. 57-0512R
KILOMETER POST R49.2

ROUTE 5/805 SEPARATION (WIDEN)
LEFT WIDEN COLUMN DETAILS

STRUCTURES DESIGN DETAIL SHEET (METRIC) (REV. 1/1/99)

ORIGINAL SCALE IN MILLIMETERS FOR REDUCED PLANS 0 10 20 30 40 50 60 70 80 90 100

CU 11275
EA 0301U1

FILE => d34coldet1.dgn

DISREGARD PRINTS BEARING EARLIER REVISION DATES

REVISION DATES (PRELIMINARY STAGE ONLY)

SHEET 34 OF 67

USERNAME => FSHUKNAT DATE PLOTTED => 11-30-2000 TIME PLOTTED => 07:28

DIST	COUNTY	ROUTE	KILOMETER POST TOTAL PROJECT	SHEET No	TOTAL SHEETS
11	SD	5, 56, 805	Var	1264	1549

G.S. Blakeley 05-01-01
REGISTERED CIVIL ENGINEER

9-3-01
PLANS APPROVAL DATE

REGISTERED PROFESSIONAL ENGINEER G.S. BLAKESLEY No. 45509 Exp. 12-31-02 CIVIL STATE OF CALIFORNIA

The State of California or its officers or agents shall not be responsible for the accuracy or completeness of electronic copies of this plan sheet.

Caltrans now has a web site! To get to the web site, go to: http://www.dot.ca.gov

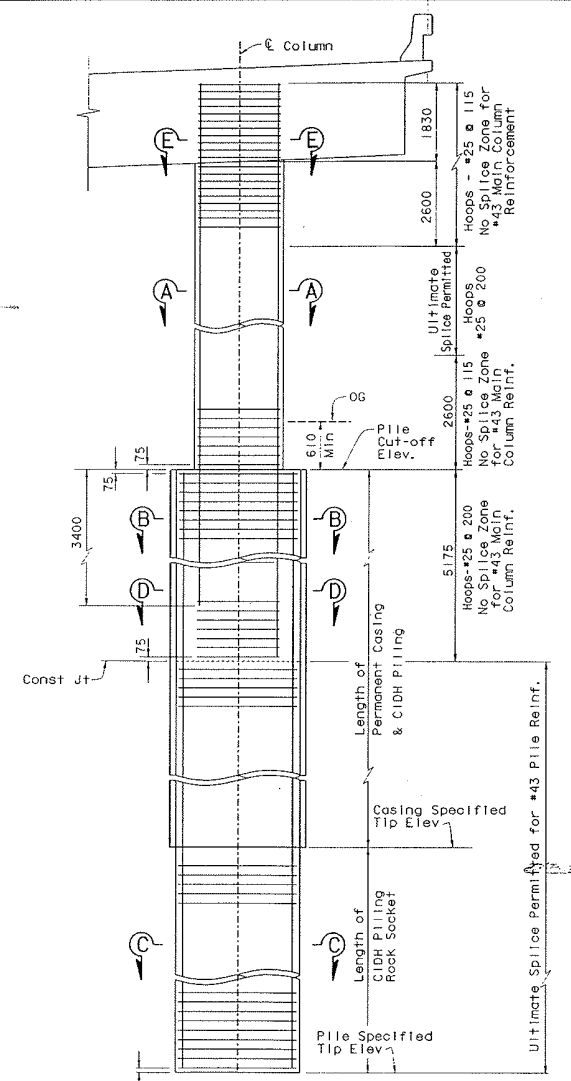

ELEVATION
No Scale

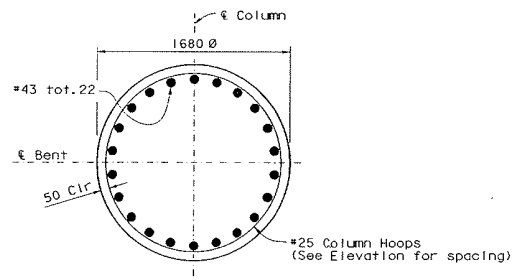

SECTION A-A
1:25

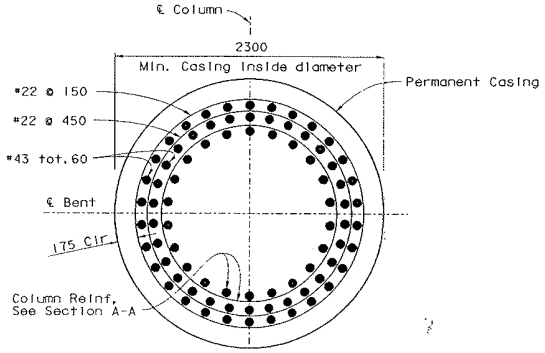

SECTION B-B
1:20

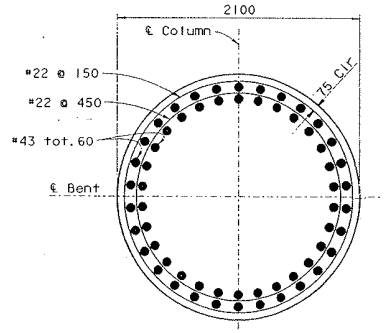

SECTION C-C
1:20

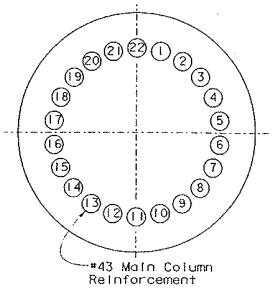

Extend "odd" numbered bars
3400 mm below pile cut-off elev.
Extend "even" numbered bars
5100 mm below pile cut-off elev.
(#43 Pile Reinf and hoops not shown)

SECTION D-D
No Scale

NOTES:

1. All reinforcement splices and hoop fabrication in Columns and Piles shall conform to Ultimate Splice Requirements.
2. For 'Pile Data Table', see "INDEX TO PLANS" sheet.
3. Reinforcing steel bars in columns @ Bent 4 shall be prefabricated epoxy coated.

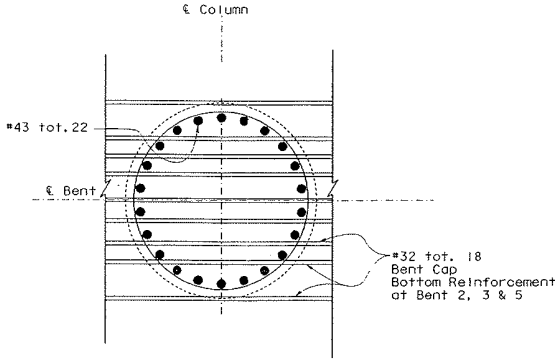

SECTION E-E
1:20

ALL DIMENSIONS ARE IN MILLIMETERS UNLESS OTHERWISE SHOWN

	BY	CHECKED
DESIGN	M. FUSTOK	L. WANG
DETAILS	L.CHARLOT 05/30/2000	M.FUSTOK
QUANTITIES	M. FUSTOK	F. ALTAMIRANO

STATE OF CALIFORNIA
DEPARTMENT OF TRANSPORTATION

DIVISION OF STRUCTURES
STRUCTURE DESIGN 11

BRIDGE NO. 57-0512R
KILOMETER POST R49.2

ROUTE 5/805 SEPARATION (WIDEN)
RIGHT WIDEN COLUMN DETAILS

STRUCTURES DESIGN DETAIL SHEET (METRIC) (REV. 1/1/99)

ORIGINAL SCALE IN MILLIMETERS FOR REDUCED PLANS 0 10 20 30 40 50 60 70 80 90 100

CU 11275
EA 0301U1

DISREGARD PRINTS BEARING EARLIER REVISION DATES

REVIS CK. DATES (PRELIMINARY STAGE ONLY)

SHEET 35 OF 67

FILE ** d35cor0a-2.dgn

DGNNAME ** TIME PLOTTED = 07:19

DIST.	COUNTY	ROUTE	KILOMETER POST TOTAL PROJECT	SHEET NO.	TOTAL SHEETS
11	SD	5, 56, 805	Var	1027	1549

G. S. Blakeley 05-01-01
REGISTERED ENGINEER - CIVIL

9-3-01
PLANS APPROVAL DATE

REGISTERED PROFESSIONAL ENGINEER G. S. BLAKESLEY No. 45509 Exp. 12-31-02 CIVIL STATE OF CALIFORNIA

The State of California or its officers or agents shall not be responsible for the accuracy or completeness of electronic copies of this plan sheet.

Caltrans now has a web site! To get to the web site, go to: http://www.dot.ca.gov

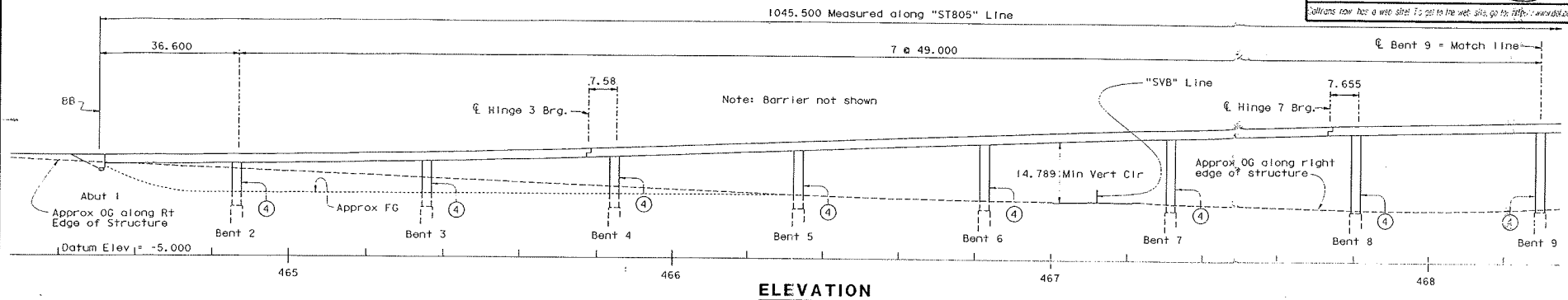

ELEVATION
1:500

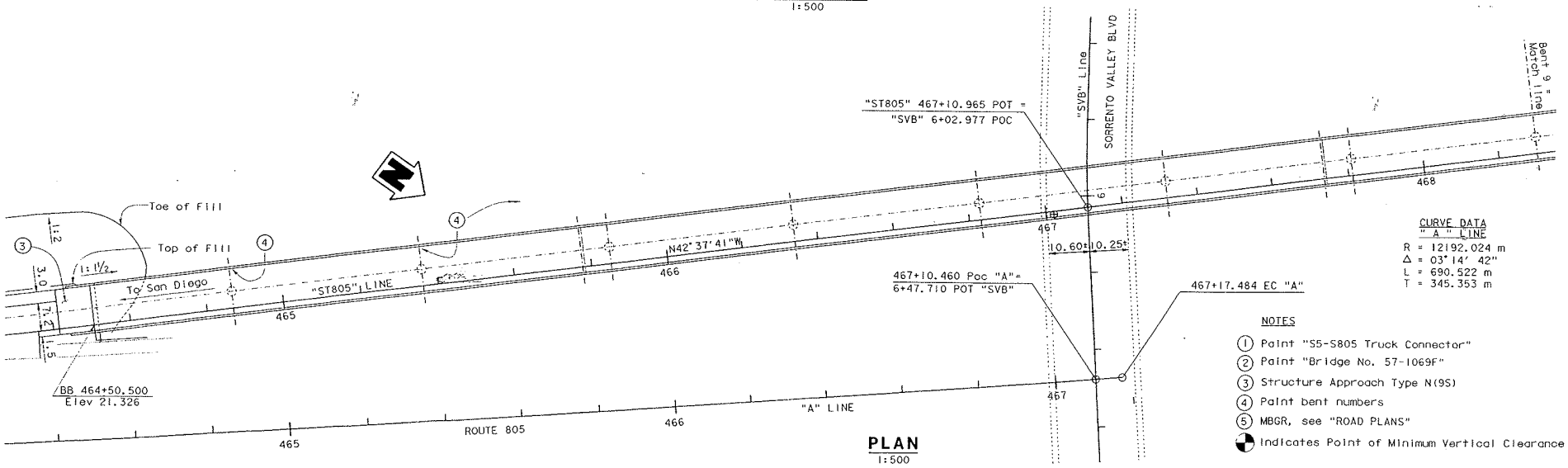

CURVE DATA
" A " LINE
R = 12192.024 m
Δ = 03° 14' 42"
L = 690.522 m
T = 345.353 m

NOTES
1. Paint "S5-S805 Truck Connector"
2. Paint "Bridge No. 57-1069F"
3. Structure Approach Type N(9S)
4. Paint bent numbers
5. MBGR, see "ROAD PLANS"

Indicates Point of Minimum Vertical Clearance

PLAN
1:500

ALL DIMENSIONS ARE IN METERS UNLESS OTHERWISE SHOWN

	BY	CHECKED
DESIGN	M. OKIMURA	G. BLAKESLEY
DETAILS	J. LANE	G. BLAKESLEY
QUANTITIES	J.PETERSON	P. NGUYEN

STATE OF CALIFORNIA
DEPARTMENT OF TRANSPORTATION

DIVISION OF STRUCTURES
STRUCTURE DESIGN 11

BRIDGE NO. 57-1069F
KILOMETER POST 45.2

S5-S805 TRUCK CONNECTOR
STRUCTURE PLAN NO. 1

STRUCTURES DESIGN DETAIL SHEET (METRIC) REV. 7/29/97

ORIGINAL SCALE IN MILLIMETERS FOR REDUCED PLANS 0 10 20 30 40 50 60 70 80 90 100

CU 11275
EA 0301U1

FILE => h02spl.dgn

DISREGARD PRINTS BEARING EARLIER REVISION DATES

REVISION DATES (PRELIMINARY STAGE ONLY)
1-8-01 1-17-01 1-24-01 4-25-01

SHEET 2 OF 80

USERNAME = T.STYS DATE PLOTTED => 10-31-2001 TIME PLOTTED => 12:57

1

Caltrans now has a web site! To get to the web site, go to: http://www.dot.ca.gov

DIST.	COUNTY	ROUTE	KILOMETER POST TOTAL PROJECT	SHEET NO.	TOTAL SHEETS
11	SD	5, 56, 805	Var	1028	1549

Caltrans Metric

G. S. Blakesley 05-01-01
REGISTERED ENGINEER - CIVIL

9-3-01
PLANS APPROVAL DATE

REGISTERED PROFESSIONAL ENGINEER G.S. BLAKESLEY No. 45509 Exp. 12-31-02 CIVIL STATE OF CALIFORNIA

The State of California or its officers or agents shall not be responsible for the accuracy or completeness of electronic copies of this plan sheet.

Note: Barrier not shown

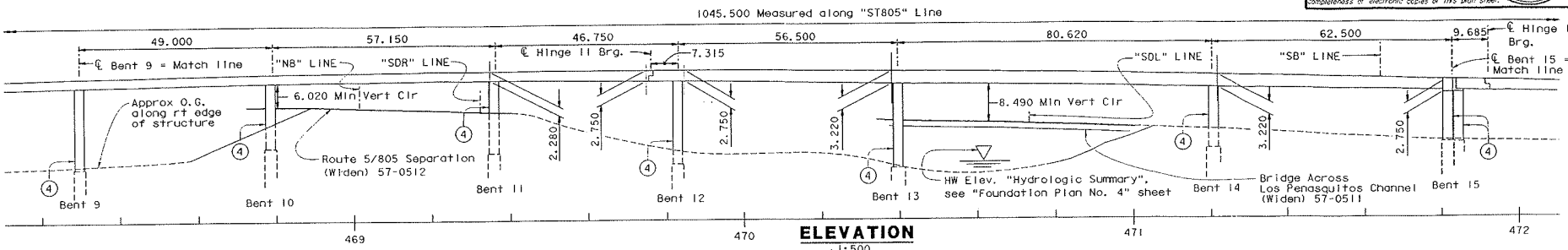

ELEVATION
1:500

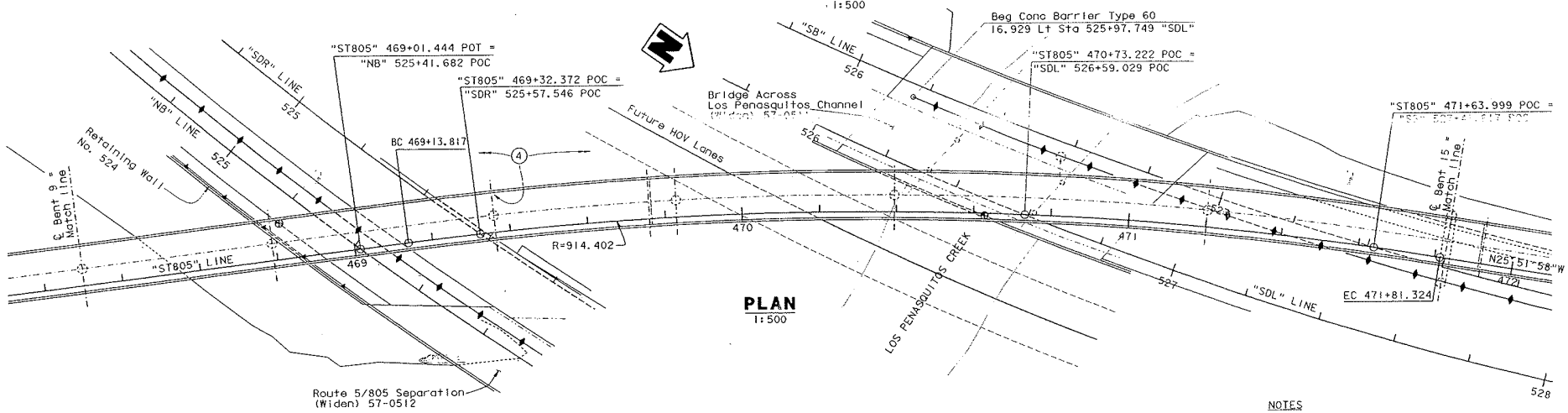

PLAN
1:500

CURVE DATA

"ST805" Line	" NB " LINE	"SDR" LINE	"SDL" LINE	" SB " LINE
R = 914.402 m	R = 935.281 m	R = 914.402 m	R = 975.362 m	R = 1167.800 m
Δ = 16°45'43"	Δ = 54°27'01"	Δ = 53°47'41"	Δ = 42°24'17"	Δ = 14°40'26"
L = 267.508 m	L = 888.831 m	L = 858.529 m	L = 721.866 m	L = 299.080 m
T = 134.716 m	T = 481.188 m	T = 463.850 m	T = 378.364 m	T = 150.363 m

NOTES

1. Paint "S5-S805 Truck Connector"
2. Paint "Bridge No. 57-1069F"
3. Structure Approach Type N(9S)
4. Paint bent numbers
5. MBGR, see "ROAD PLANS"

Indicates Point of Minimum Vertical Clearance

ALL DIMENSIONS ARE IN METERS UNLESS OTHERWISE SHOWN

	BY	CHECKED
DESIGN	M. OKIMURA	G. BLAKESLEY
DETAILS	J. LANE	G. BLAKESLEY
QUANTITIES	J. PETERSON	P. NGUYEN

STATE OF CALIFORNIA
DEPARTMENT OF TRANSPORTATION

DIVISION OF STRUCTURES
STRUCTURE DESIGN 11

BRIDGE NO. 57-1069F
KILOMETER POST 45.2

S5-S805 TRUCK CONNECTOR
STRUCTURE PLAN NO. 2

CU 11275
EA 0301U1

DISREGARD PRINTS BEARING EARLIER REVISION DATES

REVISION DATES (PRELIMINARY STAGE ONLY)

SHEET 3 OF 80

STRUCTURES DESIGN DETAIL SHEET (METRIC) REV. 7/29/97

ORIGINAL SCALE IN MILLIMETERS FOR REDUCED PLANS 0 10 20 30 40 50 60 70 80 90 100

FILE => h03sp2.dgn

DATE PLOTTED => 12-7-98
TIME PLOTTED => 10:54

DIST.	COUNTY	ROUTE	KILOMETER POST TOTAL PROJECT	SHEET NO.	TOTAL SHEETS
11	SD	5, 56, 805	Var	1029	1549

G. S. Blakeley 05-01-01
REGISTERED ENGINEER - CIVIL

9-3-01
PLANS APPROVAL DATE

REGISTERED PROFESSIONAL ENGINEER G. S. BLAKELEY No. 45509 Exp. 12-31-02 CIVIL STATE OF CALIFORNIA

The State of California or its officers or agents shall not be responsible for the accuracy or completeness of electronic copies of this plan sheet.

Caltrans now has a web site! To get to the web site, go to http://www.dot.ca.gov

Caltrans Metric

Note: Barrier not shown

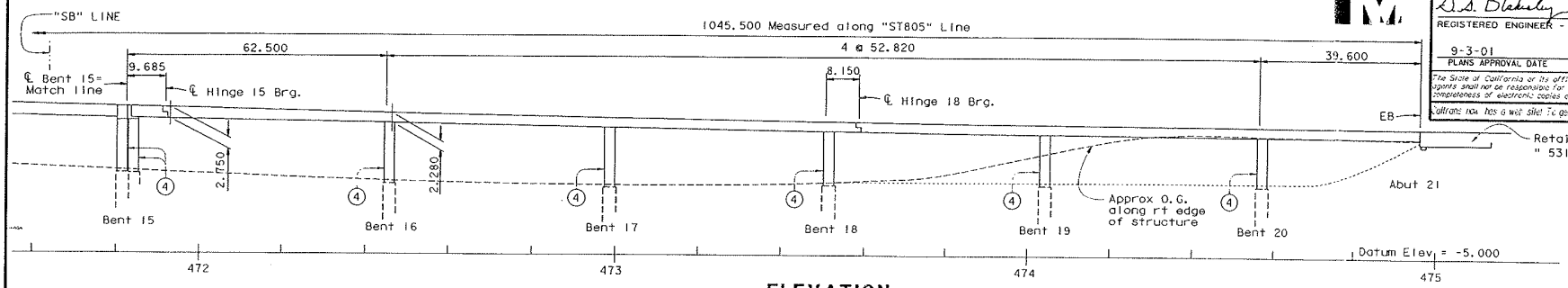

ELEVATION
1:500

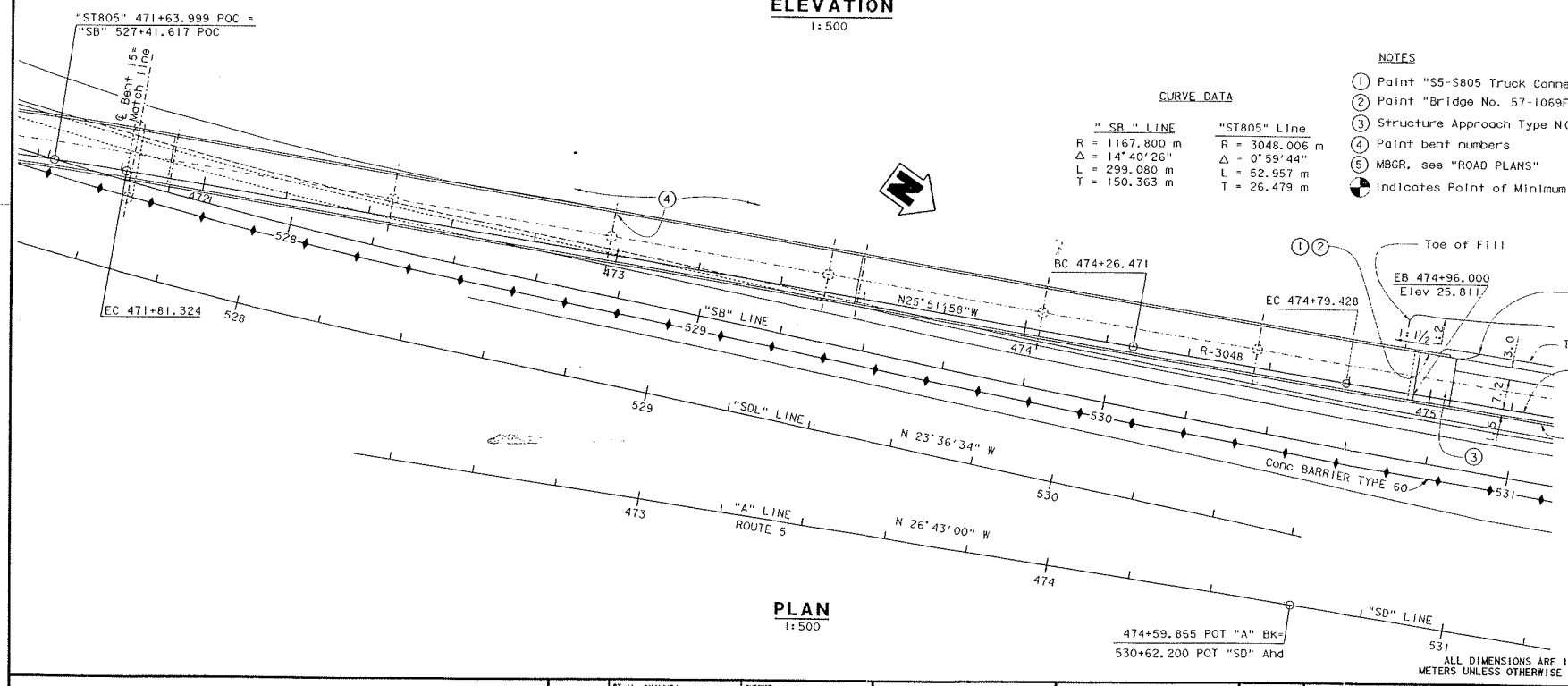

PLAN
1:500

CURVE DATA

" SB " LINE	"ST805" Line
R = 1167.800 m	R = 3048.006 m
Δ = 14°40'26"	Δ = 0°59'44"
L = 299.080 m	L = 52.957 m
T = 150.363 m	T = 26.479 m

NOTES

1. Paint "S5-S805 Truck Connector"
2. Paint "Bridge No. 57-1069F"
3. Structure Approach Type N(9S)
4. Paint bent numbers
5. MBGR, see "ROAD PLANS"

Indicates Point of Minimum Vertical Clearance

DESIGN	BY M. OKIMURA	CHECKED G. BLAKESLEY	
DETAILS	BY J. LANE	CHECKED G. BLAKESLEY	
QUANTITIES	BY J. PETERSON	CHECKED P. NGUYEN	

STATE OF CALIFORNIA
DEPARTMENT OF TRANSPORTATION

DIVISION OF STRUCTURES
STRUCTURE DESIGN 11

BRIDGE NO. 57-1069F
KILOMETER POST 45.2

S5-S805 TRUCK CONNECTOR
STRUCTURE PLAN NO. 3

STRUCTURES DESIGN DETAIL SHEET (METRIC) (REV. 7/29/97)

ORIGINAL SCALE IN MILLIMETERS FOR REDUCED PLANS 0 10 20 30 40 50 60 70 80 90 100

CU 11275
EA 0301U1

DISREGARD PRINTS BEARING EARLIER REVISION DATES

REVISION DATES (PRELIMINARY STAGE ONLY)

SHEET 4 OF 80

FILE => h04sp3.dgn

USERNAME => mrstrk DATE PLOTTED => 10-SEP-2001 TIME PLOTTED => 12:25

DIST	COUNTY	ROUTE	KILOMETER POST TOTAL PROJECT	SHEET No.	TOTAL SHEETS
11	SD	5, 56, 805	Var	1030	1549

G.S. Blakesley 05-01-01
REGISTERED CIVIL ENGINEER

9-3-01
PLANS APPROVAL DATE

REGISTERED PROFESSIONAL ENGINEER G. S. BLAKESLEY No. 45509 Exp. 12-31-02 CIVIL STATE OF CALIFORNIA

The State of California or its officers or agents shall not be responsible for the accuracy or completeness of electronic copies of this plan sheet.

Caltrans now has a web site! To get to the web site, go to: http://www.dot.ca.gov

Caltrans Metric

PILE DATA TABLE

Support Location	Pile Type & Diameter	Working Stress Design Loading (kN) Compression	Load Factor Design Nominal Resistance (kN) Compression	Intended Length of Rock Socket (m)	Pile Cut-Off Elev. (m)	Permanent Steel Casing Specified Tip Elev. (m) Right / Left	Design Pile Tip Elev. (m) Right / Left	Specified Pile Tip Elev. (M) Right / Left
Abutment 1*	1.5 m CIDH w/perm casing	1,000		3.05	+16.88	+0.61 / -2.44	-2.44 / -5.49(1)	-2.44 / -5.49
Bent 2	2.6 m CIDH w/perm casing		28,050	13.72	+7.65	-3.66	-17.38(1) / -12.16(2)	-17.38
Bent 3	2.6 m CIDH w/perm casing		28,050	12.80	+8.45	-6.71	-19.51(1) / -14.41(2)	-19.51
Bent 4	3.2 m CIDH w/perm casing		28,050	10.67	+6.13	-6.10	-16.77(1) / -12.16(2)	-16.77
Bent 5	3.4 m CIDH w/perm casing		28,050	10.97	+6.95	-7.01	-17.98(1) / -14.39(2)	-17.98
Bent 6	3.2 m CIDH w/perm casing		28,050	10.97	+8.19	-7.32	-18.29(1) / -16.19(2)	-18.29
Bent 7	3.2 m CIDH w/perm casing		28,050	11.28	+8.39	-8.84	-20.12(1) / -19.04(2)	-20.12
Bent 8	3.2 m CIDH w/perm casing		28,050	10.97	+9.39	-9.75	-20.72(1) / -18.04(2)	-20.72
Bent 9	3.8 m CIDH w/perm casing		28,050	9.75	+9.39	-10.36	-20.11(1) / -18.04(2)	-20.11
Bent 10	3.2 m CIDH w/perm casing		28,050	12.50	+14.18	-9.14	-21.64(1) / -5.63(2)	-21.64
Bent 11	3.2 m CIDH w/perm casing		28,050	17.07	+14.88	-9.45	-26.52(1) / -11.86(2)	-26.52
Bent 12	3.8 m CIDH w/perm casing		28,050	17.37	+8.95	-8.53	-25.90(1) / -20.01(2)	-25.9
Bent 13	3.8 m CIDH w/perm casing		40,950	22.25	+6.55	-11.58	-33.83(1) / -23.61(2)	-33.83
Bent 14	3.8 m CIDH w/perm casing		40,950	21.34	+7.97	-13.11	-34.45(1) / -17.94(2)	-34.45
Bent 15 Left	3.2 m CIDH w/perm casing		28,050	21.64	+10.44	-14.33	-35.97(1) / -10.24(2)	-35.97
Bent 15 Right	3.2 m CIDH w/perm casing		28,050	21.34	+10.44	-14.02	-35.36(1) / -10.24(2)	-35.36
Bent 16	3.2 m CIDH w/perm casing		28,050	28.35	+12.14	-14.02	-42.37(1) / -15.29(2)	-42.37
Bent 17	3.2 m CIDH w/perm casing		28,050	30.78	+9.39	-13.72	-44.50(1) / -18.04(2)	-44.5
Bent 18	3.2 m CIDH w/perm casing		28,050	31.39	+10.93	+4.57	-26.82(1) / -8.88(2)	-26.82
Bent 19	2.6 m CIDH w/perm casing		28,050	35.66	+11.66	+9.75	-25.91(1) / -2.06(2)	-25.91
Bent 20	2.6 m CIDH w/perm casing		28,050	33.53	+11.38	+9.14	-24.39(1) / -2.34(2)	-24.39
Abutment 21	1.5 m CIDH w/perm casing	1,050		3.35	+21.38	+8.53	+5.18(1)	+5.18

NOTES:

Design pile tip elevation is controlled by the following demands: (1) Compression, (2) Lateral Loads
* At Abutment 1, interpolate pile tips between outer right and outer left pile tips given.

Permanent steel casing specified tip elevation reflects 600 mm embedment into rock, elevation will be adjusted to conform with rock elevation.

For Pay Limits for Structure Excavation and Backfill for the bent locations see, "CAMBER DIAGRAM SHEET NO. 2" and "COLUMN ISOLATION CASING DETAILS" sheets.

INDEX TO PLANS

Sheet No.	Title
1	GENERAL PLAN
2	STRUCTURE PLAN NO. 1
3	STRUCTURE PLAN NO. 2
4	STRUCTURE PLAN NO. 3
5	INDEX TO PLANS
6	CAMBER DIAGRAM SHEET NO. 1
7	CAMBER DIAGRAM SHEET NO. 2
8	DECK CONTOURS NO. 1
9	DECK CONTOURS NO. 2
10	DECK CONTOURS NO. 3
11	DECK CONTOURS NO. 4
12	FOUNDATION PLAN 1
13	FOUNDATION PLAN 2
14	FOUNDATION PLAN 3
15	FOUNDATION PLAN 4
16	FOUNDATION PLAN 5
17	FOUNDATION PLAN 6
18	ABUTMENT 1 LAYOUT
19	ABUTMENT 21 LAYOUT
20	ABUTMENT DETAILS NO. 1
21	ABUTMENT DETAILS NO. 2
22	ABUTMENT DETAILS NO. 3
23	BENT CAP LAYOUT
24	BENTS 2,3,19,20 DETAILS
25	BENTS 4 thru 11,16,17,18 DETAILS
26	BENTS 12,14 DETAILS
27	BENT 13 DETAILS
28	OUTRIGGER BENT 15 LAYOUT
29	OUTRIGGER BENT 15 DETAILS
30	BENTS 2,3,19,20 COLUMN DETAILS
31	BENTS 4 thru 6,10,11,16 thru 18 COLUMN DETAILS
32	BENTS 7,8,&15 COLUMN DETAILS
33	BENT 9 COLUMN DETAILS
34	BENTS 12,14 COLUMN DETAILS
35	BENT 13 COLUMN DETAILS
36	COLUMN ISOLATION CASING DETAILS
37	TYPICAL SECTION
38	GIRDER LAYOUT NO. 1
39	GIRDER LAYOUT NO. 2
40	GIRDER LAYOUT NO. 3
41	GIRDER LAYOUT NO. 4
42	GIRDER LAYOUT NO. 5
43	GIRDER LAYOUT NO. 6
44	ADDITIONAL GIRDER REINFORCEMENT
45	HINGE LAYOUT
46	HINGE DETAILS NO. 1
47	HINGE DETAILS NO. 2
48	HINGE DETAILS NO. 3
49	HINGE DETAILS NO. 4
50	CABLE RESTRAINER UNIT-TYPE 2 DETAILS NO. 1
51	CABLE RESTRAINER UNIT-TYPE2 DETAILS NO. 2
52	STRUCTURE APPROACH TYPE N(9S)
53	STRUCTURE APPROACH DRAINAGE DETAILS
54	HINGE JOINT SEAL DETAILS (MOVEMENT RATING GREATER THAN 100 mm)
55	ABUTMENT JOINT SEAL ASSEMBLY (MAX MOVEMENT RATING= 100 mm)
56	PTFE/SPHERICAL EXPANSION BEARING DETAILS NO. 1
57	PTFE/SPHERICAL EXPANSION BEARING DETAILS NO. 2

INDEX TO PLANS (cont.)

Sheet No.	Title
58	LOG OF TEST BORINGS 1 OF 23
59	LOG OF TEST BORINGS 2 OF 23
60	LOG OF TEST BORINGS 3 OF 23
61	LOG OF TEST BORINGS 4 OF 23
62	LOG OF TEST BORINGS 5 OF 23
63	LOG OF TEST BORINGS 6 OF 23
64	LOG OF TEST BORINGS 7 OF 23
65	LOG OF TEST BORINGS 8 OF 23
66	LOG OF TEST BORINGS 9 OF 23
67	LOG OF TEST BORINGS 10 OF 23
68	LOG OF TEST BORINGS 11 OF 23
69	LOG OF TEST BORINGS 12 OF 23
70	LOG OF TEST BORINGS 13 OF 23
71	LOG OF TEST BORINGS 14 OF 23
72	LOG OF TEST BORINGS 15 OF 23
73	LOG OF TEST BORINGS 16 OF 23
74	LOG OF TEST BORINGS 17 OF 23
75	LOG OF TEST BORINGS 18 OF 23
76	LOG OF TEST BORINGS 19 OF 23
77	LOG OF TEST BORINGS 20 OF 23
78	LOG OF TEST BORINGS 21 OF 23
79	LOG OF TEST BORINGS 22 OF 23
80	LOG OF TEST BORINGS 23 OF 23

STANDARD PLANS
Dated July 1999

A10A	ABBREVIATIONS
A62C	LIMITS OF PAYMENT FOR EXCAVATION AND BACKFILL - BRIDGE
B0-1	BRIDGE DETAILS
RSP B0-3	BRIDGE DETAILS
B0-5	BRIDGE DETAILS
B0-13	BRIDGE DETAILS
B7-1	BOX GIRDER DETAILS
B7-7	DECK DRAINS TYPE D-3
B8-5	CAST-IN-PLACE PRESTRESSED GIRDER DETAILS
RSP B11-53	CONCRETE BARRIER TYPE 25
B14-3	COMMUNICATION AND SPRINKLER CONTROL CONDUITS (CONDUIT LESS THAN SIZE 103)
B14-5	WATER SUPPY LINE

Standard Plan Sheet No.
Detail No.

DESIGN	BY M. OKIMURA	CHECKED G. BLAKESLEY	
DETAILS	BY J. LANE	CHECKED G. BLAKESLEY	
QUANTITIES	BY J. PETERSON	CHECKED P. NGUYEN	

STATE OF CALIFORNIA
DEPARTMENT OF TRANSPORTATION

DIVISION OF STRUCTURES
STRUCTURE DESIGN 11

BRIDGE NO. 57-1069F
KILOMETER POST 45.2

CU 11275
EA 0301U1

S5-S805 TRUCK CONNECTOR
INDEX TO PLANS

DISREGARD PRINTS BEARING EARLIER REVISION DATES → 3-29-00 3-9-00 3-8-00 3-8-00 3-8-00 4-25-01

REVISION DATES (PRELIMINARY STAGE ONLY)

SHEET 5 OF 80

STRUCTURES DESIGN DETAIL SHEET (METRIC) REV. 3/1/99

ORIGINAL SCALE IN MILLIMETERS FOR REDUCED PLANS 0 10 20 30 40 50 60 70 80 90 100

FILE = n05itpl.dgn

DATE PLOTTED = 10-SEP-2001 TIME PLOTTED = 12:35

DIST	COUNTY	ROUTE	KILOMETER POST TOTAL PROJECT	SHEET No	TOTAL SHEETS
11	SD	5, 56, 805	Var	1031	1549

G. S. Blakesley 05-01-01
REGISTERED CIVIL ENGINEER

9-3-01
PLANS APPROVAL DATE

REGISTERED PROFESSIONAL ENGINEER G. S. BLAKESLEY No. 45509 Exp. 12-31-02 CIVIL STATE OF CALIFORNIA

The State of California or its officers or agents shall not be responsible for the accuracy or completeness of electronic copies of this plan sheet.

Caltrans now has a web site! To get to the web site, go to: http://www.dot.ca.gov

Caltrans Metric

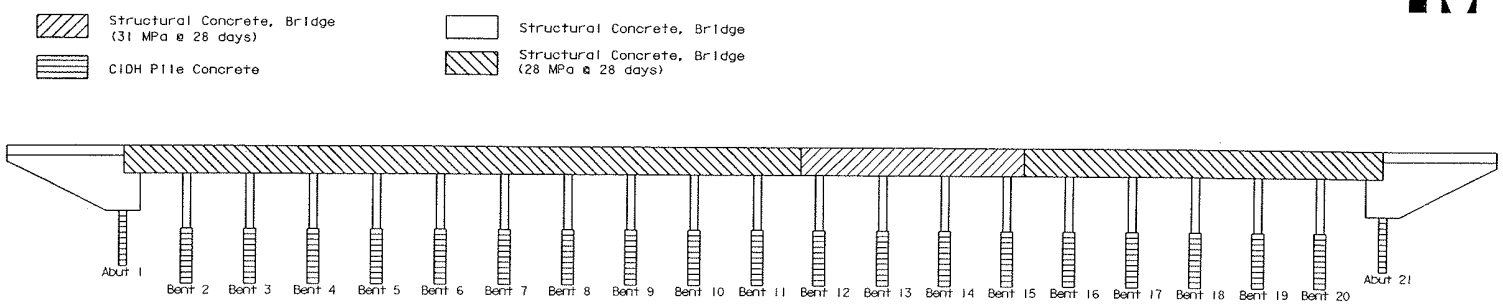

CONCRETE STRENGTH AND TYPE LIMITS

No Scale

Supported Hinge Dead Load + Prestress Reaction *

Hinge	Dead Load Reaction (kN)	PS Reaction (kN)
3	3420	170
7	3420	190
11	3460	80
15	4680	190
18	3630	190

* Unfactored loads

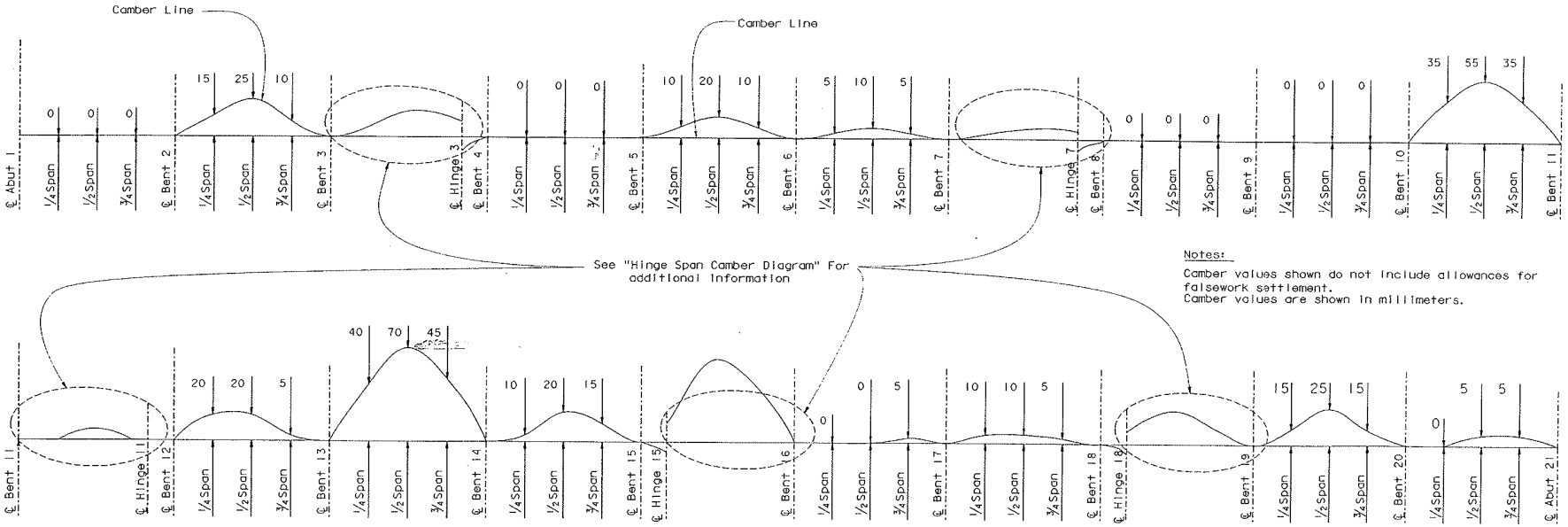

Notes:
Camber values shown do not include allowances for falsework settlement.
Camber values are shown in millimeters.

CAMBER DIAGRAM

No Scale

ALL DIMENSIONS ARE IN MILLIMETERS UNLESS OTHERWISE SHOWN

DESIGN	BY M. OKIMURA	CHECKED G. BLAKESLEY	
DETAILS	BY J. LANE	CHECKED G. BLAKESLEY	
QUANTITIES	BY J. PETERSON	CHECKED P. NGUYEN	

STATE OF CALIFORNIA
DEPARTMENT OF TRANSPORTATION

DIVISION OF STRUCTURES
STRUCTURE DESIGN 11

BRIDGE NO. 57-1069F
KILOMETER POST 45.2

S5-S805 TRUCK CONNECTOR
CAMBER DIAGRAM SHEET NO. 1

STRUCTURES DESIGN DETAIL SHEET (METRIC) (REV. 3/1/99)

ORIGINAL SCALE IN MILLIMETERS FOR REDUCED PLANS 0 10 20 30 40 50 60 70 80 90 100

CU 11275
EA 0301U1

DISREGARD PRINTS BEARING EARLIER REVISION DATES

REVISION DATES (PRELIMINARY STAGE ONLY)

SHEET 6 OF 80

LSERNAME => rrannda
DGN FILE => n06cmcrt.dgn

DATE PLOTTED => 10-SEP-2001
TIME PLOTTED => 13:00

DIST	COUNTY	ROUTE	KILOMETER POST TOTAL PROJECT	SHEET No	TOTAL SHEETS
11	SD	5, 56, 805	Var	1033	1549

G. S. Blakesley 05-01-01
REGISTERED CIVIL ENGINEER

9-3-01
PLANS APPROVAL DATE

REGISTERED PROFESSIONAL ENGINEER G. S. BLAKESLEY No. 45509 Exp. 12-31-02 CIVIL STATE OF CALIFORNIA

The State of California or its officers or agents shall not be responsible for the accuracy or completeness of electronic copies of this plan sheet.

Caltrans now has a web site! To get to the web site, go to: http://www.dot.ca.gov

Caltrans Metric

NOTES :
1 Contour Interval = 50mm
2 X = 2500mm along ST805 Line
3 Contours do not Include Camber

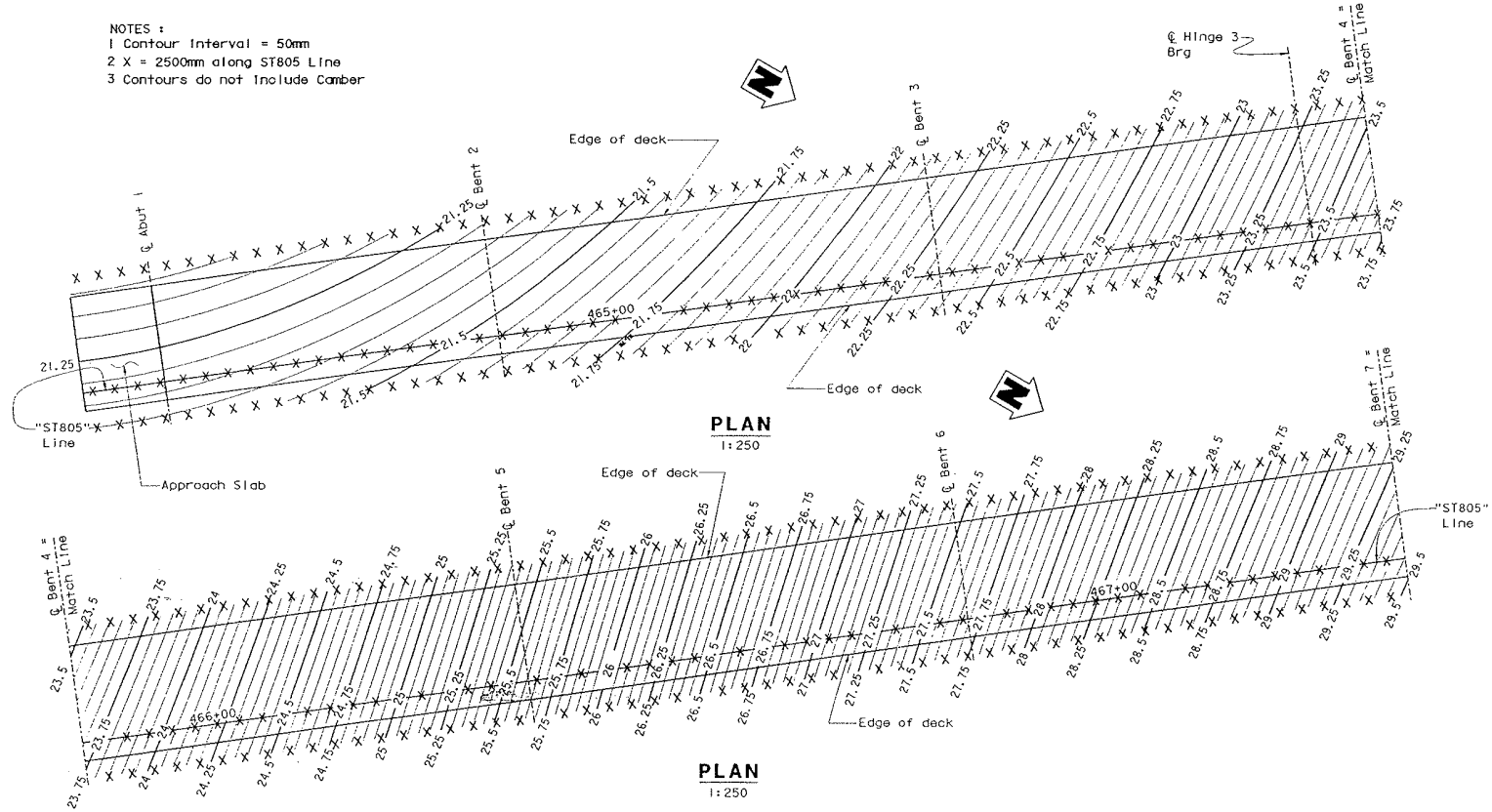

ALL DIMENSIONS ARE IN MILLIMETERS UNLESS OTHERWISE SHOWN

DESIGN	BY M. OKIMURA	CHECKED G. BLAKESLEY	
DETAILS	BY J. LANE	CHECKED G. BLAKESLEY	
QUANTITIES	BY J. PETERSON	CHECKED P. NGUYEN	

STATE OF CALIFORNIA
DEPARTMENT OF TRANSPORTATION

DIVISION OF STRUCTURES
STRUCTURE DESIGN 11

BRIDGE NO. 57-1069F
KILOMETER POST 45.2

S5-S805 TRUCK CONNECTOR
DECK CONTOURS NO. 1

STRUCTURES DESIGN DETAIL SHEET (METRIC) REV. 3/1/99

ORIGINAL SCALE IN MILLIMETERS FOR REDUCED PLANS 0 10 20 30 40 50 60 70 80 90 100

CU 11275
EA 0301U1

DISREGARD PRINTS BEARING EARLIER REVISION DATES

REVISION DATES (PRELIMINARY STAGE ONLY)

SHEET 8 OF 80

FILE => h08dc1.cgn

USERNAME => tcrannoo DATE PLOTTED => 10-SEP-2001 TIME PLOTTED => 13:01

DIST	COUNTY	ROUTE	KILOMETER POST TOTAL PROJECT	SHEET No	TOTAL SHEETS
11	SD	5, 56, 805	Var	1034	1549

G. S. Blakeley 05-01-01
REGISTERED CIVIL ENGINEER

9-3-01
PLANS APPROVAL DATE

REGISTERED PROFESSIONAL ENGINEER G. S. BLAKESLEY No. 45509 Exp. 12-31-02 CIVIL STATE OF CALIFORNIA

The State of California or its officers or agents shall not be responsible for the accuracy or completeness of electronic copies of this plan sheet.

Caltrans now has a web site! To get to the web site go to: http://www.dot.ca.gov

Caltrans Metric

NOTES :
1 Contour Interval = 50mm
2 X = 2500mm along ST805 Line
3 Contours do not include Camber

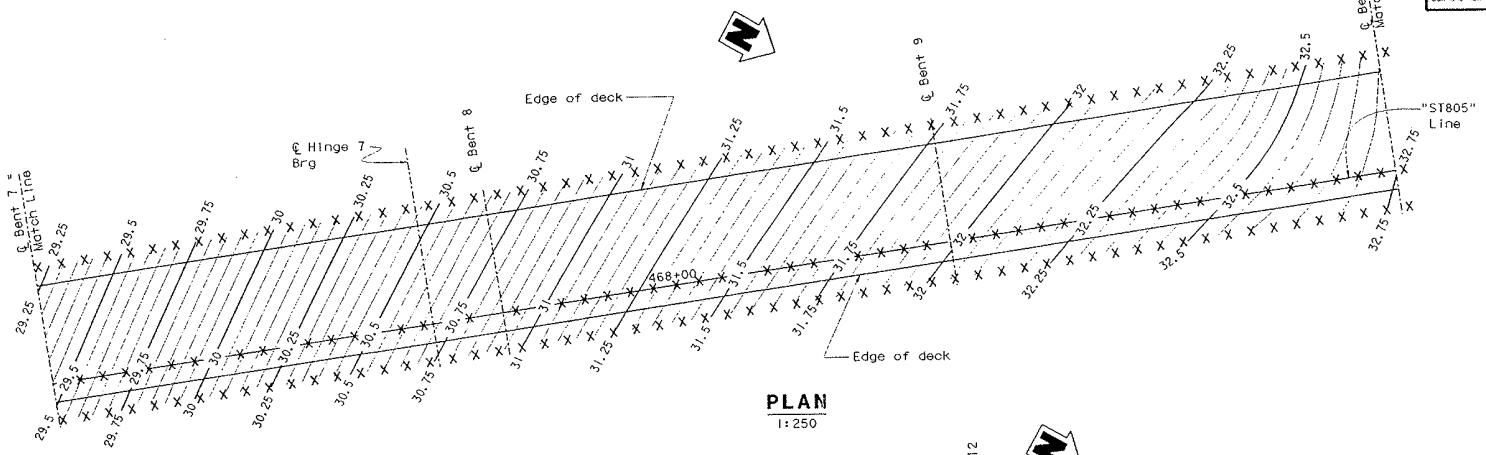

PLAN
1:250

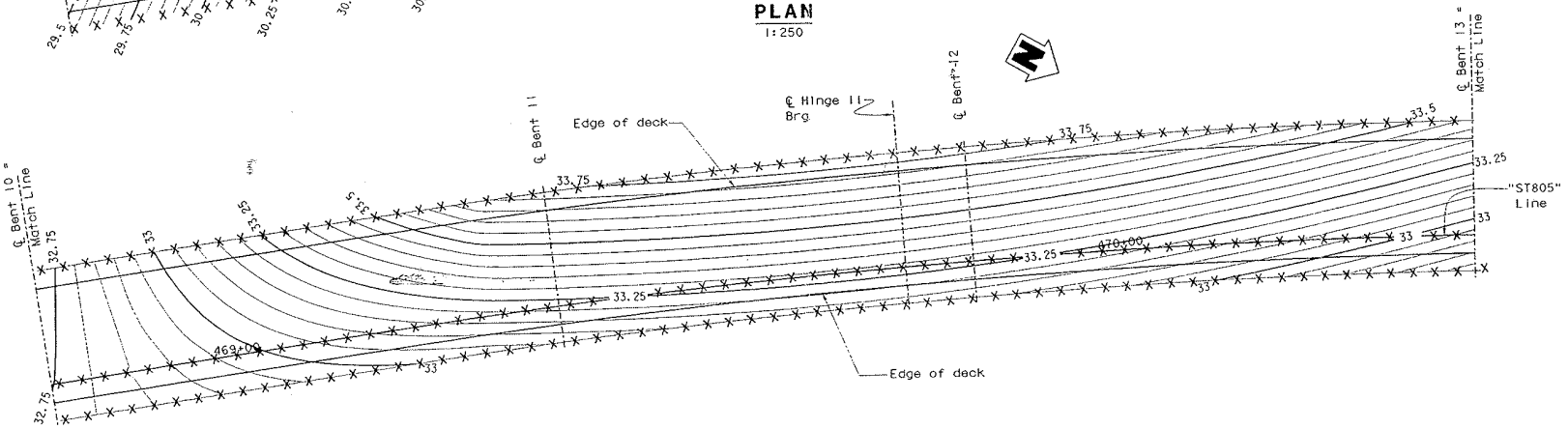

PLAN
1:250

ALL DIMENSIONS ARE IN MILLIMETERS UNLESS OTHERWISE SHOWN

DESIGN	BY M. OKIMURA	CHECKED G. BLAKESLEY	
DETAILS	BY J. LANE	CHECKED G. BLAKESLEY	
QUANTITIES	BY J. PETERSON	CHECKED P. NGUYEN	

STATE OF CALIFORNIA
DEPARTMENT OF TRANSPORTATION

DIVISION OF STRUCTURES
STRUCTURE DESIGN 11

CU 11275
EA 0301U1

BRIDGE NO. 57-1069F
KILOMETER POST 45.2

S5-S805 TRUCK CONNECTOR
DECK CONTOURS NO. 2

DISREGARD PRINTS BEARING EARLIER REVISION DATES → 3-13-98 10-1-98 5-1-01 4-15-01

SHEET 9 OF 80

STRUCTURES DESIGN DETAIL SHEET 04(METRIC) REV. 3/1/99

ORIGINAL SCALE IN MILLIMETERS FOR REDUCED PLANS 0 10 20 30 40 50 60 70 80 90 100

FILE s:\n09dc2.cgn

DGN FILENAME

TIME PLOTTED: 10-SEP-2001 13:01

DIST	COUNTY	ROUTE	KILOMETER POST TOTAL PROJECT	SHEET No	TOTAL SHEETS
11	SD	5, 56, 805	Var	1035	1549

G. S. Blakesley 05-01-01
REGISTERED CIVIL ENGINEER

9-3-01
PLANS APPROVAL DATE

REGISTERED PROFESSIONAL ENGINEER G.S. BLAKESLEY No. 45509 Exp. 12-31-02 CIVIL STATE OF CALIFORNIA

The State of California or its officers or agents shall not be responsible for the accuracy or completeness of electronic copies of this plan sheet.

Caltrans now has a web site! To get to the web site, go to: http://www.dot.ca.gov

Caltrans Metric

NOTES :
1 Contour Interval = 50mm
2 X = 2500mm along ST805 Line
3 Contours do not include Camber

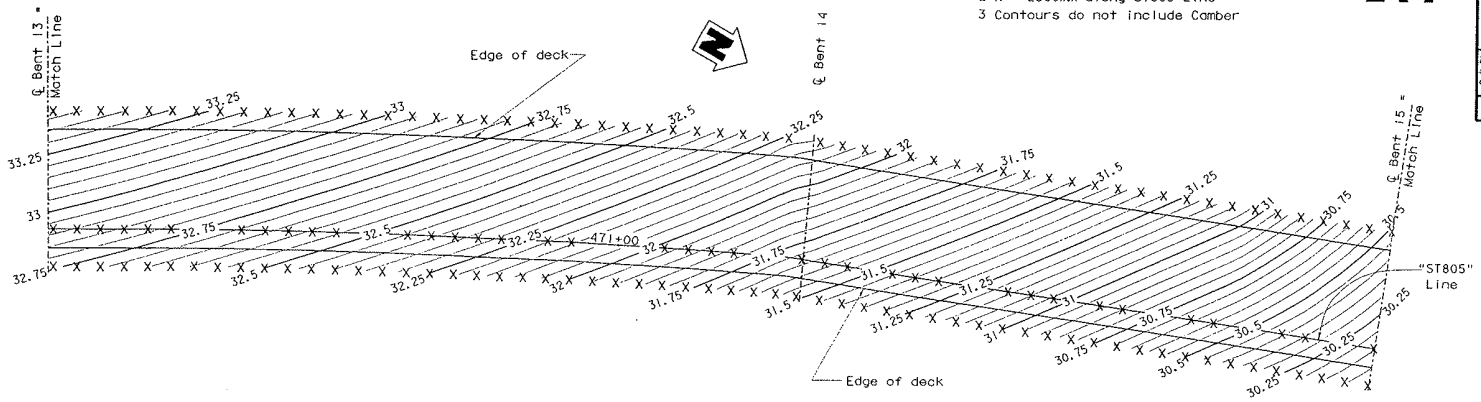

PLAN
1:250

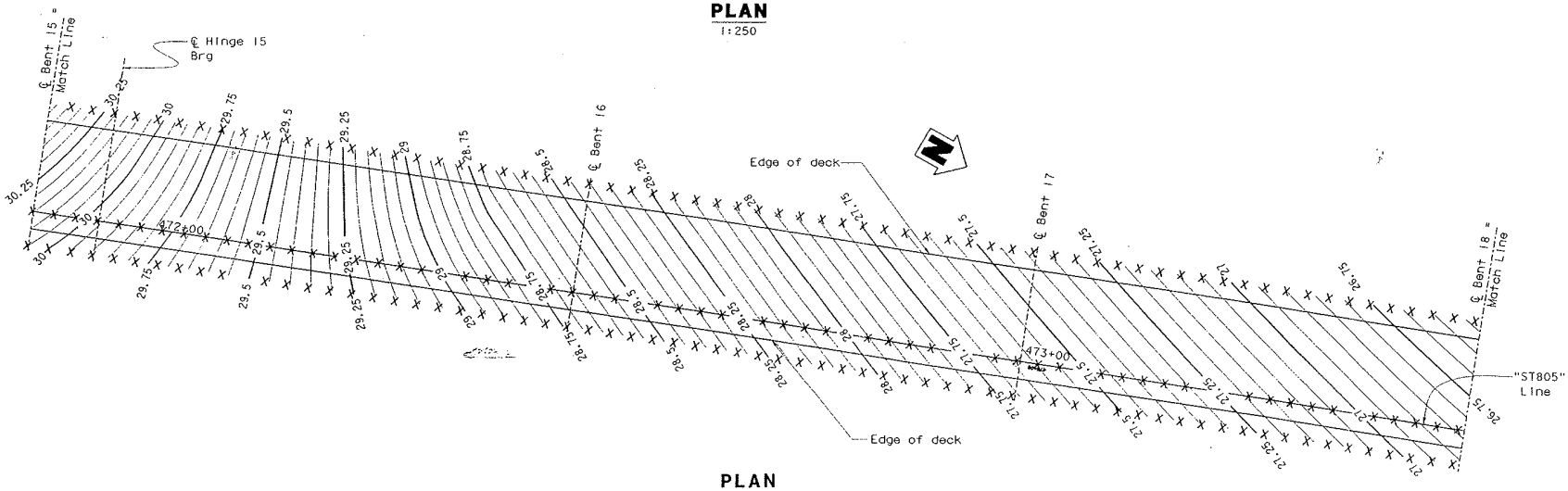

PLAN
1:250

ALL DIMENSIONS ARE IN MILLIMETERS UNLESS OTHERWISE SHOWN

DESIGN	BY M. OKIMURA	CHECKED G. BLAKESLEY	
DETAILS	BY J. LANE	CHECKED G. BLAKESLEY	
QUANTITIES	BY J. PETERSON	CHECKED P. NGUYEN	

STATE OF CALIFORNIA
DEPARTMENT OF TRANSPORTATION

DIVISION OF STRUCTURES
STRUCTURE DESIGN 11

BRIDGE NO. 57-1069F
KILOMETER POST 45.2

S5-S805 TRUCK CONNECTOR
DECK CONTOURS NO. 3

STRUCTURES DESIGN DETAIL SHEET (METRIC) (REV. 3/1/99)

ORIGINAL SCALE IN MILLIMETERS FOR REDUCED PLANS 0 10 20 30 40 50 60 70 80 90 100

CU 11275
EA 0301U1

DISREGARD PRINTS BEARING EARLIER REVISION DATES

REVISION DATES (PRELIMINARY STAGE ONLY)

SHEET 10 OF 80

FILE => h10dc3.dgn

USERNAME => tronnoo DATE PLOTTED => 10-SEP-2001 TIME PLOTTED => 13:01

DIST	COUNTY	ROUTE	KILOMETER POST TOTAL PROJECT	SHEET No	TOTAL SHEETS
11	SD	5, 56, 805	Var	1036	1549

Caltrans Metric

G. S. Blakesley 05-01-01
REGISTERED CIVIL ENGINEER

9-3-01
PLANS APPROVAL DATE

REGISTERED PROFESSIONAL ENGINEER G. S. BLAKESLEY No. 45509 Exp. 12-31-02 CIVIL STATE OF CALIFORNIA

The State of California or its officers or agents shall not be responsible for the accuracy or completeness of electronic copies of this plan sheet.

Caltrans now has a web site! To get to the web site, go to: http://www.dot.ca.gov

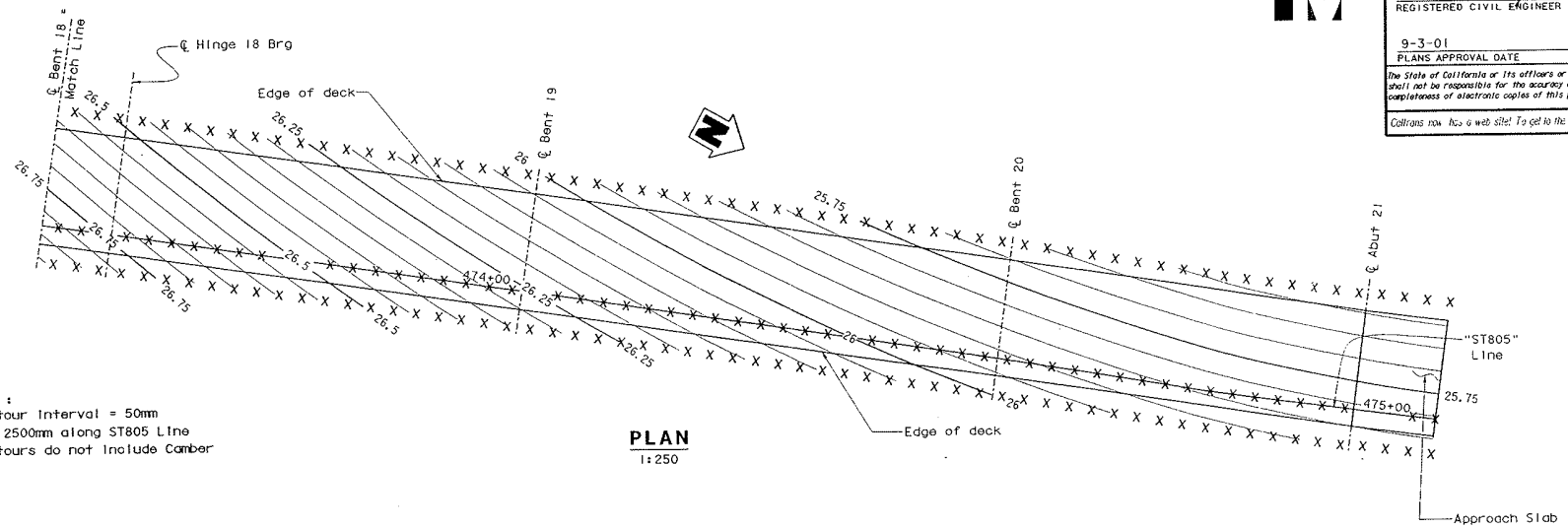

NOTES :
1 Contour Interval = 50mm
2 X = 2500mm along ST805 Line
3 Contours do not include Camber

PLAN
1:250

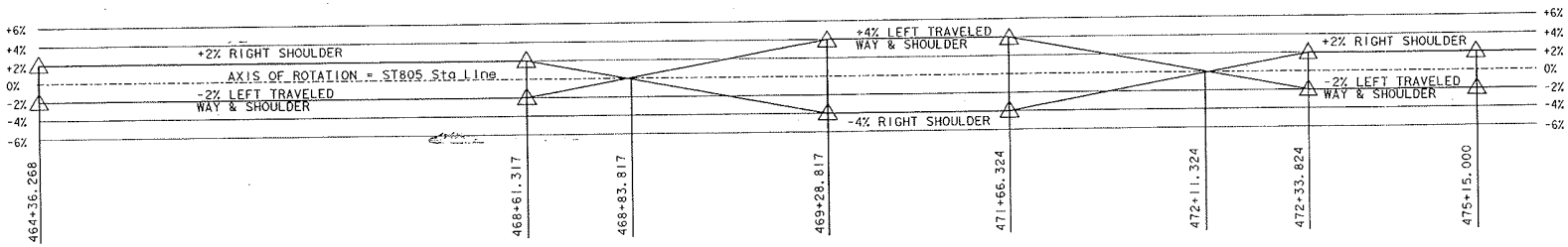

SUPERELEVATION DIAGRAM
No Scale

ALL DIMENSIONS ARE IN MILLIMETERS UNLESS OTHERWISE SHOWN

DESIGN	BY Mark Okimura	CHECKED G. BLAKESLEY	
DETAILS	BY Jim Lane	CHECKED G. BLAKESLEY	
QUANTITIES	BY J. PETERSON	CHECKED P. NGUYEN	

STATE OF CALIFORNIA
DEPARTMENT OF TRANSPORTATION

DIVISION OF STRUCTURES
STRUCTURE DESIGN 11

BRIDGE NO. 57-1069F
KILOMETER POST 45.2

S5-S805 TRUCK CONNECTOR
DECK CONTOURS NO. 4

STRUCTURES DESIGN DETAIL SHEET (METRIC) (REV. 3/1/99)

ORIGINAL SCALE IN MILLIMETERS FOR REDUCED PLANS 0 10 20 30 40 50 60 70 80 90 100

CU 11275
EA 0301U1

DISREGARD PRINTS BEARING EARLIER REVISION DATES

REVISION DATES (PRELIMINARY STAGE ONLY) 1-31-01 1-31-01 10-4-00 3-1-01

SHEET 11 OF 80

FILE => hlldc4.dgn

DATE PLOTTED => 10-SEP-2001 TIME PLOTTED => 13:01

DIST	COUNTY	ROUTE	KILOMETER POST TOTAL PROJECT	SHEET NO.	TOTAL SHEETS
11	SD	5, 56, 805	Var	1037	1549

G. S. Blakesley 05-01-01
REGISTERED ENGINEER-CIVIL

REGISTERED PROFESSIONAL ENGINEER
G. S. BLAKESLEY
No. 45509
Exp. 12-31-02
CIVIL
STATE OF CALIFORNIA

9-3-01
PLANS APPROVAL DATE

The State of California or its officers or agents shall not be responsible for the accuracy or completeness of electronic copies of this plan sheet.

Caltrans now has a web site! To get to the web site, go to: http://www.dot.ca.gov

Caltrans Metric

① 465 + 09.302 Begin "AL" Line - N 581833.3909
7.01 m Lt. 465 + 09.302 "A" Line E 1909205.3210

② 460 + 26.962 BC, "A" Line N 581456.8937
E 1909506.6026

③ 467 + 17.484 EC, "A" Line. N 581998.5351
E 1909078.4732

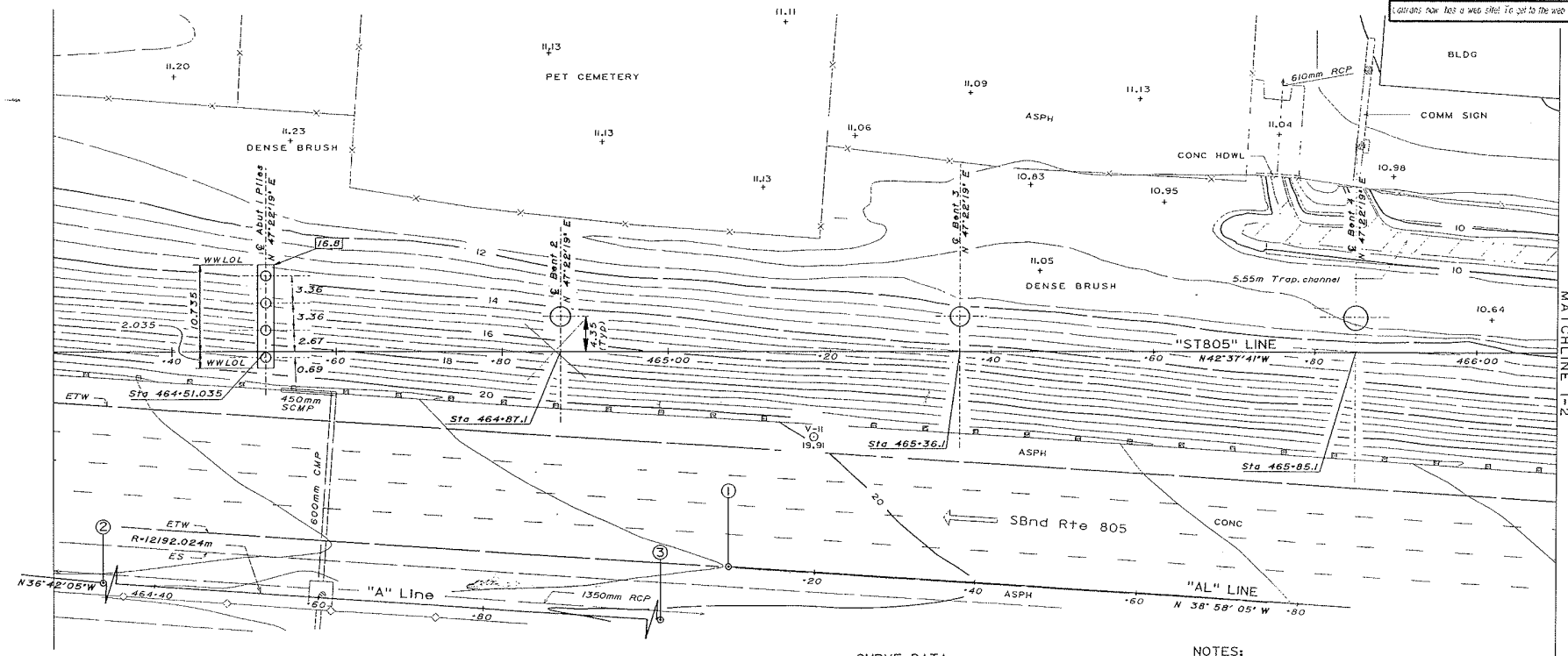

BENCH MARKS

BM # 805-28.20 Elev.= 19.812 m

Fd. std. br. disk on the east shoulder of northbound Rte 805, 147.5 m south of the bridge over Sorrento Valley Boulevard.

BM # 5-30.57 Elev.= 25.295 m

Fd. std. br. disk on the east shoulder of northbound Rte 5, 351 m north of the northeast end of the bridge over Sorrento Valley Road

CURVE DATA

"A" Line
R- 12192.024 m
Δ- 03° 14' 42"
T- 345.353 m
L- 690.522 m
N 574170.4110
E 1899731.5306

NOTES:

+ Denotes spot elev.
Underground utilities as shown are approx.
DATUM: NAVD 1929 Adj. 1988
Indicates bottom of abutment elevation
Indicates C.I.D.H. Pile (see abutment and bent column sheets)

ALL DIMENSIONS ARE IN METERS UNLESS OTHERWISE SHOWN

SHT. 1 OF 6

PRELIMINARY INVESTIGATION SECTION							
SCALE 1:250	DATUM SEE NOTE	PHOTOGRAMMETRY AS OF:		DRAWN	BY L. Manabo 9/98		
		SURVEYED	BY	TRACED	BY		
ALIGNMENT TIES		FIELD CHECKED	BY L. Manabo 9/23/98	CHECKED	BY S. Wang 10/1/98		

DESIGN	BY Mark Okimura	CHECKED	G. BLAKESLEY
DETAILS	BY Jim Lane	CHECKED	G. BLAKESLEY
QUANTITIES	BY J. PETERSON	CHECKED	P. NGUYEN

STATE OF CALIFORNIA
DEPARTMENT OF TRANSPORTATION

DIVISION OF STRUCTURES
STRUCTURE DESIGN 11

BRIDGE NO. 57-1069F
KILOMETER POST 45.2

S5-S805 TRUCK CONNECTOR
FOUNDATION PLAN NO. 1

CU 11275
EA 0301U1

DISREGARD PRINTS BEARING EARLIER REVISION DATES

REVISION DATES (PRELIMINARY STAGE ONLY) 7-27-00 10-4-00

SHEET 12 OF 80

DS OSMI MDET (CADD 5-95)
DS OSD 2145 (4/89)

FILE => h12fpl.dgn

USERNAME => frannao DATE PLOTTED => 10-SEP-2001

DIST	COUNTY	ROUTE	KILOMETER POST TOTAL PROJECT	SHEET NO.	TOTAL SHEETS
11	SD	5, 56, 805	Var	1038	1549

G. S. Blakesley 05-01-01
REGISTERED ENGINEER-CIVIL

9-3-01
PLANS APPROVAL DATE

REGISTERED PROFESSIONAL ENGINEER G. S. BLAKESLEY No. 45509 Exp. 12-31-02 CIVIL STATE OF CALIFORNIA

The State of California or its officers or agents shall not be responsible for the accuracy or completeness of electronic copies of this plan sheet.

Caltrans now has a web site! To get to the web site, go to: http://www.dot.ca.gov

Caltrans Metric

④ 467 + 10.965 "ST 805" Line N 581965.2493
6 + 02.977 "SVB" Line E 1909048.0145

⑤ 5 + 81.690 BC, "SVB" Line N 581952.6608
E 1909030.8541

⑥ 6 + 04.721 EC, "SVB" Line N 581966.3337
E 1909049.3810

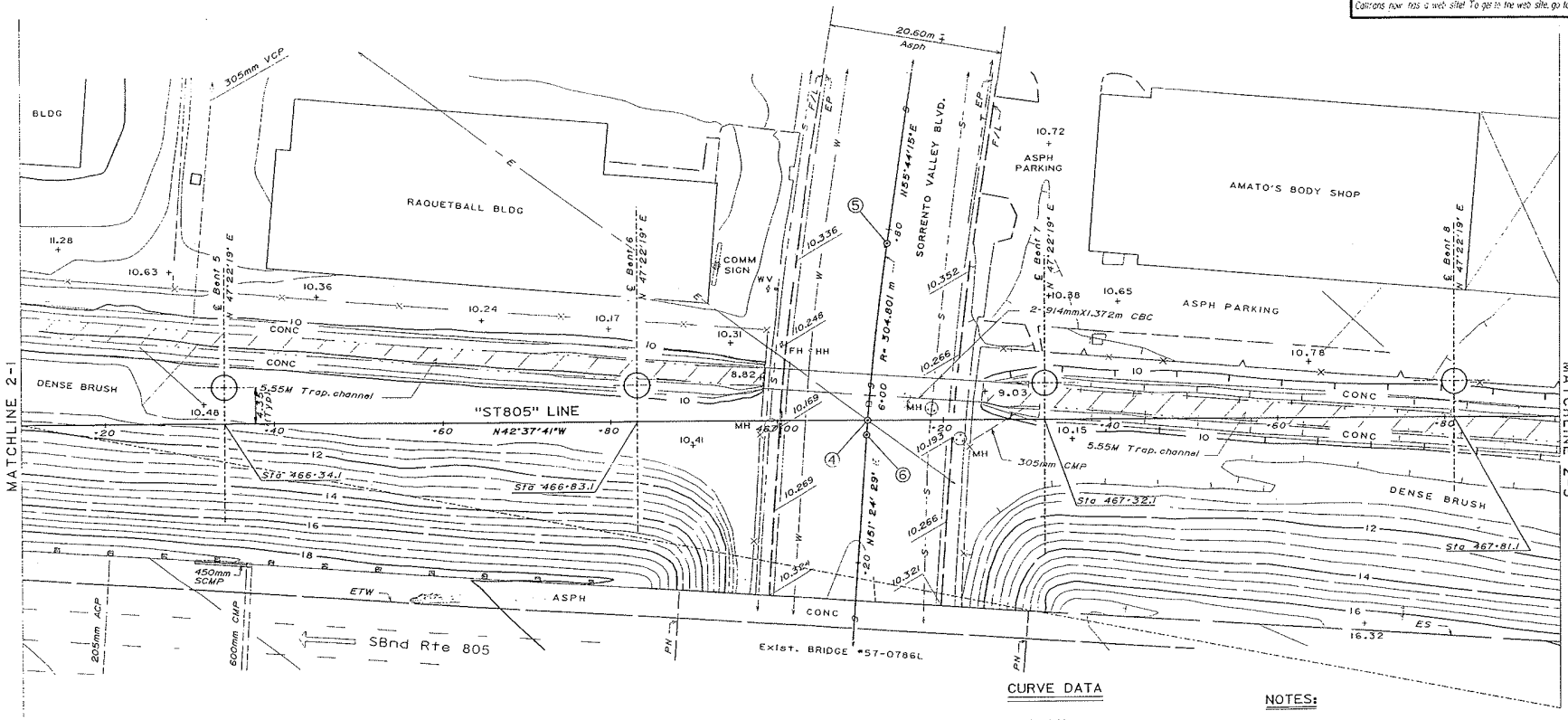

BENCH MARKS

Refer to Sht. 1 of 6

CURVE DATA

"SVB" Line
R= 304.801 m
Δ= 04°19'46"
T= 11.521 m
L= 23.031 m
○ *N 581700.7528*
E 1909202.4526

NOTES:

+ Denotes spot elev.
Underground utilities as shown are approx.
DATUM: NAVD 1929 Adj. 1988
○ Indicates C.I.D.H. Pile (see abutment and bent column sheets)

ALL DIMENSIONS ARE IN METERS UNLESS OTHERWISE SHOWN

SHT. 2 OF 6

PRELIMINARY INVESTIGATION SECTION							
SCALE 1:250	DATUM SEE NOTE	PHOTOGRAMMETRY AS OF:		DRAWN	BY L. Manabe 9/98		
		SURVEYED	BY	TRACED	BY		
ALIGNMENT TIES		FIELD CHECKED	BY L. Manabe 9/23/98	CHECKED	BY S. Wang 10/1/98		

DESIGN	BY Mark Oklmura	CHECKED	G. BLAKESLEY
DETAILS	BY Jim Lone	CHECKED	G. BLAKESLEY
QUANTITIES	BY J. PETERSON	CHECKED	P. NGUYEN

STATE OF CALIFORNIA
DEPARTMENT OF TRANSPORTATION

DIVISION OF STRUCTURES
STRUCTURE DESIGN 11

BRIDGE NO. 57-1069F
KILOMETER POST 45.2

S5-S805 TRUCK CONNECTOR
FOUNDATION PLAN NO. 2

CU 11275
EA 0301U1

DISREGARD PRINTS BEARING EARLIER REVISION DATES

REVISION DATES (PRELIMINARY STAGE ONLY)

SHEET 13 OF 80

DS OSMI MDET (CADD 5-95)
DS OSD 2145 (4/89)

FILE => hi3tp2.dgn

DATE PLOTTED => 10-SEP-2001 TIME PLOTTED => 13:01
USERNAME =>

DIST	COUNTY	ROUTE	KILOMETER POST TOTAL PROJECT	SHEET NO.	TOTAL SHEETS
11	SD	5, 56, 805	Var	1039	1549

Cultrans Metric

G. S. Blakesley 05-01-01
REGISTERED ENGINEER-CIVIL

REGISTERED PROFESSIONAL ENGINEER
G. S. BLAKESLEY
No. 45509
Exp. 12-31-02
CIVIL
STATE OF CALIFORNIA

9-3-01
PLANS APPROVAL DATE

The State of California or its officers or agents shall not be responsible for the accuracy or completeness of electronic copies of this plan sheet.

Cultrans now has a web site! To get to the web site, go to: http://www.dot.ca.gov

⑦ 522 + 37.078 PCC, "NB" Line N 581806.9458 E 1908865.2270

⑧ 469 + 01.444 "ST 805" Line N 582105.3970
525 + 41.682 "NB" Line E 1908919.0153

⑨ 531 + 25.910 EC, "NB" Line N 582655.0320 E 1908750.8839

⑩ 469 + 13.817 BC, "ST 805" Line N 582114.5004 E 1908910.6361

⑪ 522 + 49.176 BC, "SDR" Line N 581825.2604 E 1908849.4895

⑫ 469 + 32.372 "ST 805" Line N 582128.2796
525 + 57.546 "SDR" Line E 1908898.2089

⑬ 531 + 07.7049 EC, "SDR" Line N 582644.3418 E 1908732.8814

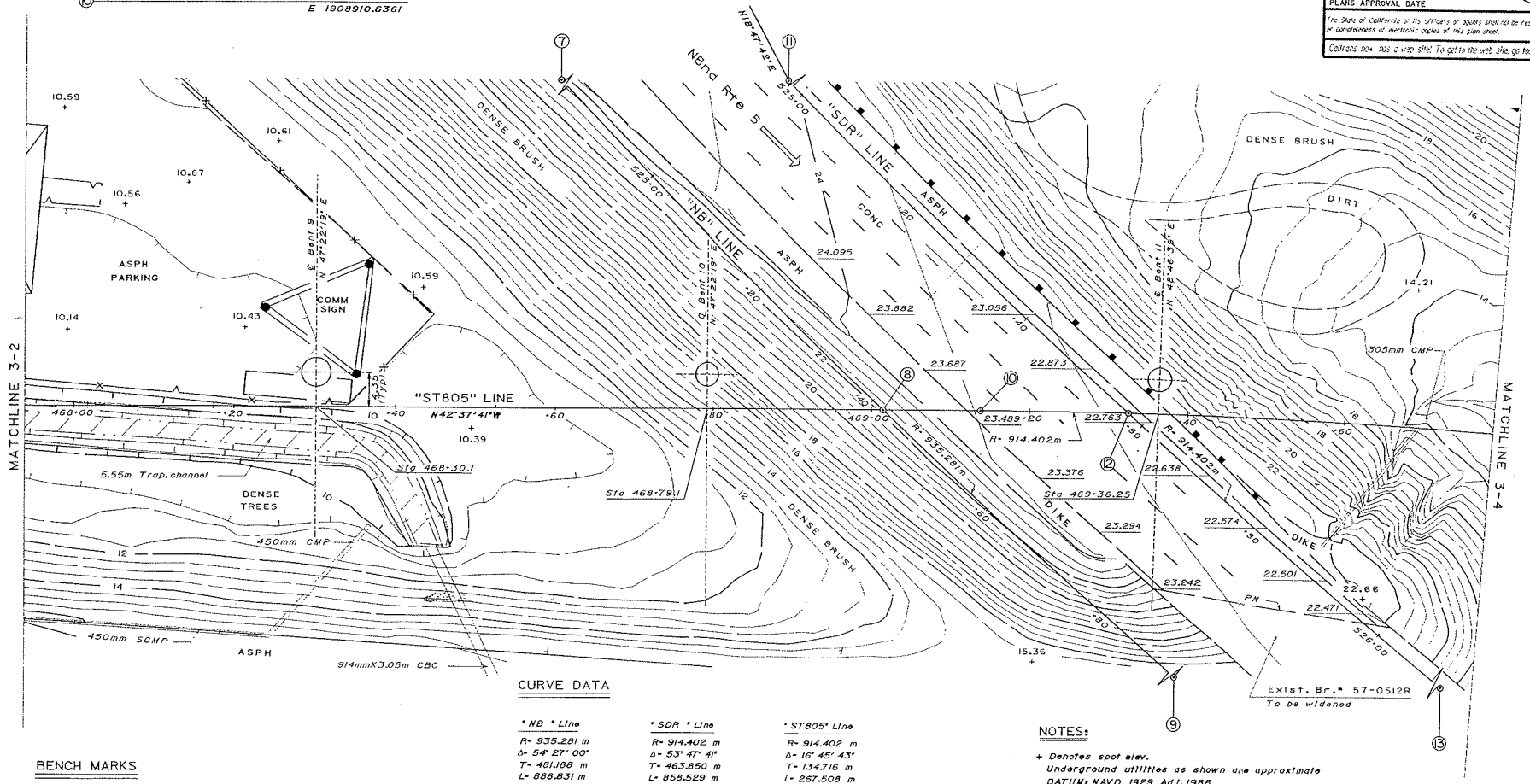

CURVE DATA

"NB" Line	"SDR" Line	"ST805" Line
R= 935.281 m	R= 914.402 m	R= 914.402 m
Δ= 54° 27' 00"	Δ= 53° 47' 41"	Δ= 16° 45' 43"
T= 481.188 m	T= 463.850 m	T= 134.716 m
L= 888.831 m	L= 858.529 m	L= 267.508 m
○ N 582119.8670 E 1907983.8469	○ N 582119.8653 E 1907983.8458	○ N 582733.7651 E 1909583.4216

NOTES:

+ Denotes spot elev.
Underground utilities as shown are approximate
DATUM: NAVD 1929 Adj. 1988
○ Indicates C.I.D.H. Pile (see abutment and bent column sheets)

BENCH MARKS

Refer to Sht. 1 Of 6

ALL DIMENSIONS ARE IN METERS UNLESS OTHERWISE SHOWN

SHT. 3 OF 6

PRELIMINARY INVESTIGATION SECTION

SCALE	DATUM	PHOTOGRAMMETRY AS OF:		DRAWN	BY L. Manabo 9/98
1:250	SEE NOTE	SURVEYED	BY	TRACED	BY
ALIGNMENT TIES		FIELD CHECKED	BY L. Manabo 9/24/98	CHECKED	BY S. Wang 10/1/98

DS OSM: MDET (CADD 5-95)
DS OSD 2145 (4/89)

DESIGN	BY Mark Okimura	CHECKED G. BLAKESLEY	
DETAILS	BY Jim Lane	CHECKED G. BLAKESLEY	
QUANTITIES	BY J. PETERSON	CHECKED P. NGUYEN	

STATE OF CALIFORNIA
DEPARTMENT OF TRANSPORTATION

DIVISION OF STRUCTURES
STRUCTURE DESIGN 11

BRIDGE NO. 57-1069F
KILOMETER POST 45.2

S5-S805 TRUCK CONNECTOR
FOUNDATION PLAN NO. 3

CU 11275
EA 0301U1

DISREGARD PRINTS BEARING EARLIER REVISION DATES

REVISION DATES (PRELIMINARY STAGE ONLY) 1-27-00 10-4-00

SHEET 14 OF 80

FILE => hi4fp3.dgn

USERNAME => trmikedi DATE PLOTTED => 10-SEP-2001 TIME PLOTTED => 13:08

DIST	COUNTY	ROUTE	KILOMETER POST TOTAL PROJECT	SHEET NO.	TOTAL SHEETS
11	SD	5, 56, 805	Var	1040	1549

G.S. Blakesley 05-01-01
REGISTERED ENGINEER-CIVIL

REGISTERED PROFESSIONAL ENGINEER G. S. BLAKESLEY No. 45509 Exp. 12-31-02 CIVIL STATE OF CALIFORNIA

9-3-01
PLANS APPROVAL DATE

The State of California or its officers or agents shall not be responsible for the accuracy or completeness of electronic copies of this plan sheet

Caltrans now has a web site! To get to the web site, go to: http://www.dot.ca.gov

Caltrans Metric

(14) 521 + 11.542 BC, "SDL" Line N 581700.8571 E 1908787.8337

(15) 470 + 73.222 "ST805" Line N 582240.5783
526 + 59.029 "SDL" Line E 1908813.4240

(16) 525 + 44.469 PCC, "SB" Line N 582128.0688 E 1908815.2120

HYDROLOGIC SUMMARY

DRAINAGE AREA: 151 SQUARE KM

	BASE FLOOD	DESIGN FLOOD
FREQUENCY (YEARS)	50	100
DISCHARGE (CUBIC METER PER SECOND)	320	476
WATER SURFACE (ELEVATION AT BRIDGE, METER)	10.91	11.46

FLOOD PLAIN DATA ARE BASED UPON INFORMATION AVAILABLE WHEN THE PLANS WERE PREPARED AND ARE SHOWN TO MEET FEDERAL REQUIREMENTS. THE ACCURACY OF SAID INFORMATION IS NOT WARRANTED

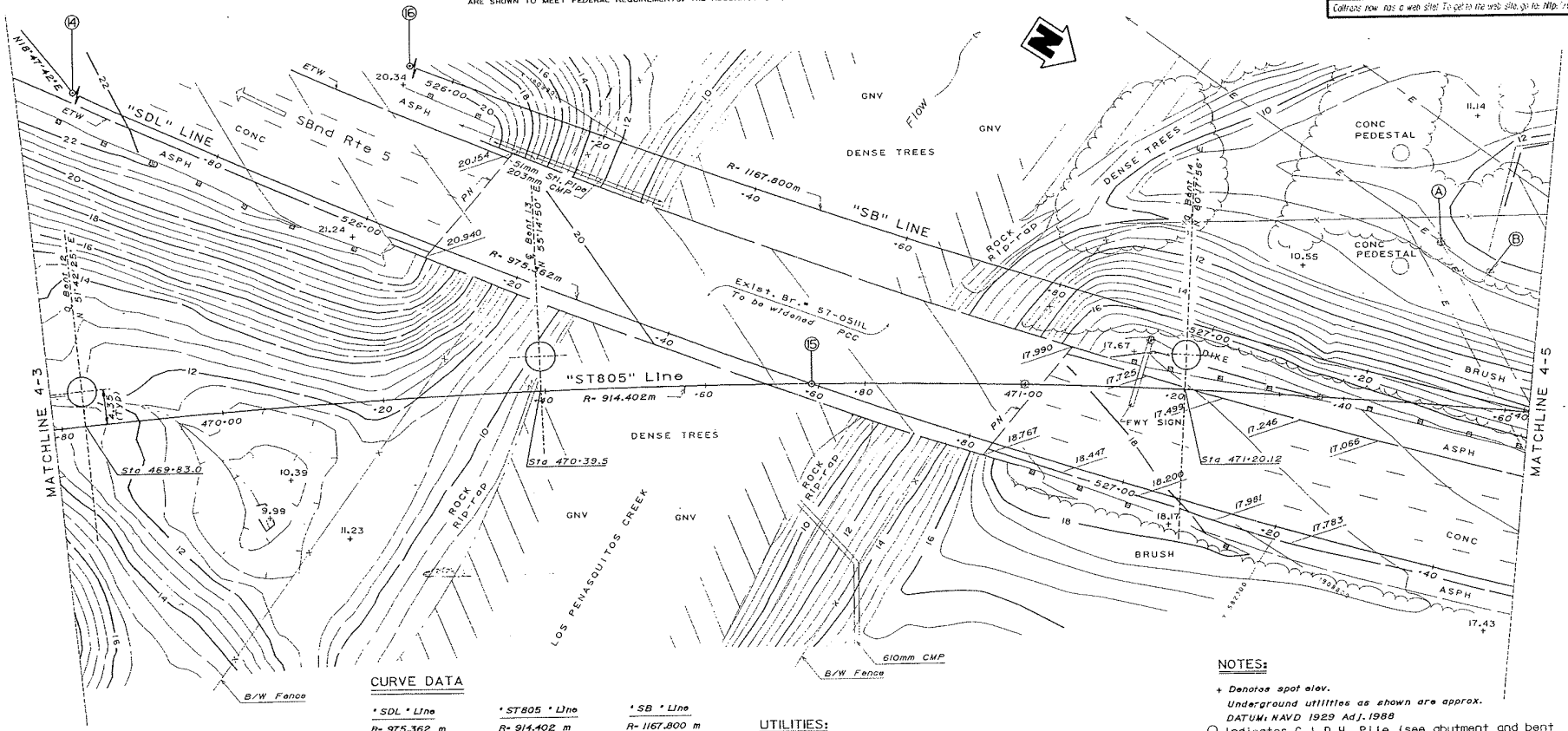

BENCH MARKS

Refer to Sht. 1 of 6

CURVE DATA

"SDL" Line
R- 975.362 m
Δ- 42° 24' 17"
T- 378.364 m
L- 721.867 m
N 582015.1022
E 1907864.4806

"ST805" Line
R- 914.402 m
Δ- 16° 45' 43"
T- 134.716 m
L- 267.508 m
N 582733.7651
E 1909583.4216

"SB" Line
R- 1167.800 m
Δ- 14° 40' 26"
T- 150.363 m
L- 299.080 m
N 581946.5765
E 1907661.5857

UTILITIES:

(A) PF (No No.)
3- cables NE-S at elev.- 27.37m ±
2- cables NE-S at elev.- 31.34m ±

(B) Guy Pole (No No.)
1- 51mm Steel pipe into the ground

NOTES:

+ Denotes spot elev.
Underground utilities as shown are approx.
DATUM: NAVD 1929 Adj. 1988
○ Indicates C.I.D.H. Pile (see abutment and bent column sheets)

ALL DIMENSIONS ARE IN METERS UNLESS OTHERWISE SHOWN

SHT. 4 OF 6

PRELIMINARY INVESTIGATION SECTION							
SCALE 1:250	DATUM SEE NOTE	PHOTOGRAMMETRY AS OF:	DRAWN BY L. Manabo 9/98	DESIGN BY Mark Okimura	CHECKED G. BLAKESLEY	STATE OF CALIFORNIA DEPARTMENT OF TRANSPORTATION	DIVISION OF STRUCTURES STRUCTURE DESIGN 11
ALIGNMENT TIES		SURVEYED BY	TRACED BY	DETAILS BY Jim Lane	CHECKED G. BLAKESLEY		
DS DSMI MOET (CADD 5-95) DS DSD 2145 (4/89)		FIELD CHECKED BY L. Manabo 9/24/98	CHECKED BY S. Wang 10/1/98	QUANTITIES BY J. PETERSON	CHECKED P. NGUYEN		CU 11275 EA 0301U1

BRIDGE NO. 57-1069F
KILOMETER POST 45.2
DISREGARD PRINTS BEARING EARLIER REVISION DATES
REVISION DATES (PRELIMINARY STAGE ONLY)

S5-S805 TRUCK CONNECTOR
FOUNDATION PLAN NO. 4

SHEET 15 OF 80

FILE => h15fp1.dgn

DATE PLOTTED => 10-SEP-2001 TIME PLOTTED => 13:07
USERNAME =>

DIST	COUNTY	ROUTE	KILOMETER POST TOTAL PROJECT	SHEET NO.	TOTAL SHEETS
11	SD	5, 56, 805	Var	1041	1549

G. S. Blakesley 05-01-01
REGISTERED ENGINEER-CIVIL

REGISTERED PROFESSIONAL ENGINEER G. S. BLAKESLEY No. 45509 Exp. 12-31-02 CIVIL STATE OF CALIFORNIA

9-3-01
PLANS APPROVAL DATE

The State of California or its officers or agents shall not be responsible for the accuracy or completeness of electronic copies of this plan sheet.

Caltrans now has a web site. To get to the web site, go to: http://www.dot.ca.gov

Caltrans Metric

(17) 471 + 63.999 "ST805" Line N 582319.3221
527 + 41.617 "SB" Line E 1908768.3346

(18) 471 + 81.324 EC, "ST805" Line N 582334.8391
E 1908760.6287

(19) 528 + 43.549 EC, "SB" Line N 582414.3834
E 1908731.6364

(20) 528 + 33.409 EC, "SDL" Line N 582405.7383
E 1908758.2014

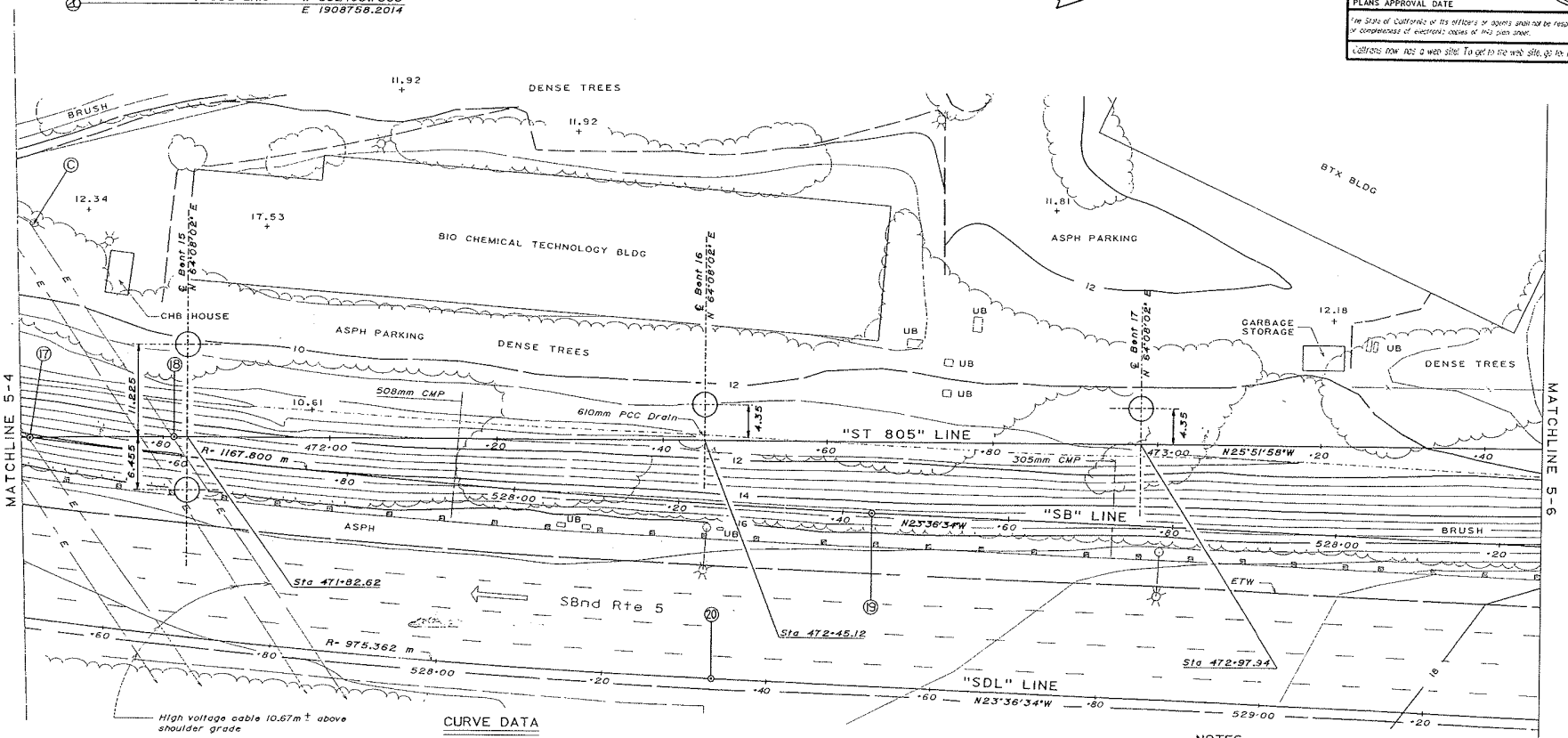

BENCH MARKS

Refer to Sht. 1 of 6.

CURVE DATA

"SDL" Line	"ST805" Line	"SB" Line
R- 975.362 m	R- 914.402 m	R- 1167.800 m
Δ- 42° 24' 17"	Δ- 16° 45' 43"	Δ- 14° 40' 26"
T- 378.364 m	T- 134.716 m	T- 150.363 m
L- 721.867 m	L- 267.508 m	L- 299.080 m
○ N 582015.1022 E 1907864.4806	○ N 582733.7651 E 1909583.4216	○ N 58946.6765 E 1907661.5857

UTILITIES:

(C) PP #96273
3- cables NE-S at elev.- 33.64m ±
4- cables NE-S at elev.- 27.58m ±
1- Transformer at elev.- 27.58m ±

NOTES:

+ Denotes spot elev.
Underground utilities as shown are approx.
DATUM: NAVD 1929 Adj. 1988
○ Indicates C.I.D.H. Pile (see abutment and bent column sheets)

ALL DIMENSIONS ARE IN METERS UNLESS OTHERWISE SHOWN

SHT. 5 OF 6

PRELIMINARY INVESTIGATION SECTION

SCALE	DATUM	PHOTOGRAMMETRY AS OF:		DRAWN	BY L. Manabo 9/98
1:250	SEE NOTE	SURVEYED	BY	TRACED	BY
ALIGNMENT TIES		FIELD CHECKED	BY L. Manabo 9/25/98	CHECKED	BY S. Wang 10/1/98

DS OSM: MDET (CADD 5-95)
DS OSD 2145 (4/89)

DESIGN	BY Mark Okimura	CHECKED	G. BLAKESLEY
DETAILS	BY Jim Lane	CHECKED	G. BLAKESLEY
QUANTITIES	BY J. PETERSON	CHECKED	P. NGUYEN

STATE OF CALIFORNIA
DEPARTMENT OF TRANSPORTATION

DIVISION OF STRUCTURES
STRUCTURE DESIGN 11

BRIDGE NO. 57-1069F
KILOMETER POST 45.2

S5-S805 TRUCK CONNECTOR
FOUNDATION PLAN NO. 5

CU 11275
EA 0301U1

DISREGARD PRINTS BEARING EARLIER REVISION DATES

REVISION DATES (PRELIMINARY STAGE ONLY)

SHEET 16 OF 80

FILE => h16fp5.dgn

USERNAME => trmilkes1 DATE PLOTTED => 10-SEP-2001 TIME PLOTTED => 13:07

DIST	COUNTY	ROUTE	KILOMETER POST TOTAL PROJECT	SHEET NO.	TOTAL SHEETS
11	SD	5, 56, 805	Var	1042	1549

Caltrans Metric

G. S. Blakesley 05-01-01
REGISTERED ENGINEER-CIVIL

REGISTERED PROFESSIONAL ENGINEER G. S. BLAKESLEY No. 45509 Exp. 12-31-02 CIVIL STATE OF CALIFORNIA

9-3-01
PLANS APPROVAL DATE

The State of California or its officers or agents shall not be responsible for the accuracy or completeness of electronic copies of this plan sheet.

Caltrans now has a web site! To get to the web site, go to: http://www.dot.ca.gov

(21) 474 + 26.471 BC, "ST805" Line N 582555.4259 E 1908653.6781

(22) 474 + 79.428 EC, "ST805" Line N 582602.8746 E 1908630.1615

(23) 529 + 51.078 BC, "SB" Line N 582512.9122 E 1908688.5708

(24) 531 + 46.862 EC, "SB" Line N 582689.6675 E 1908604.4535

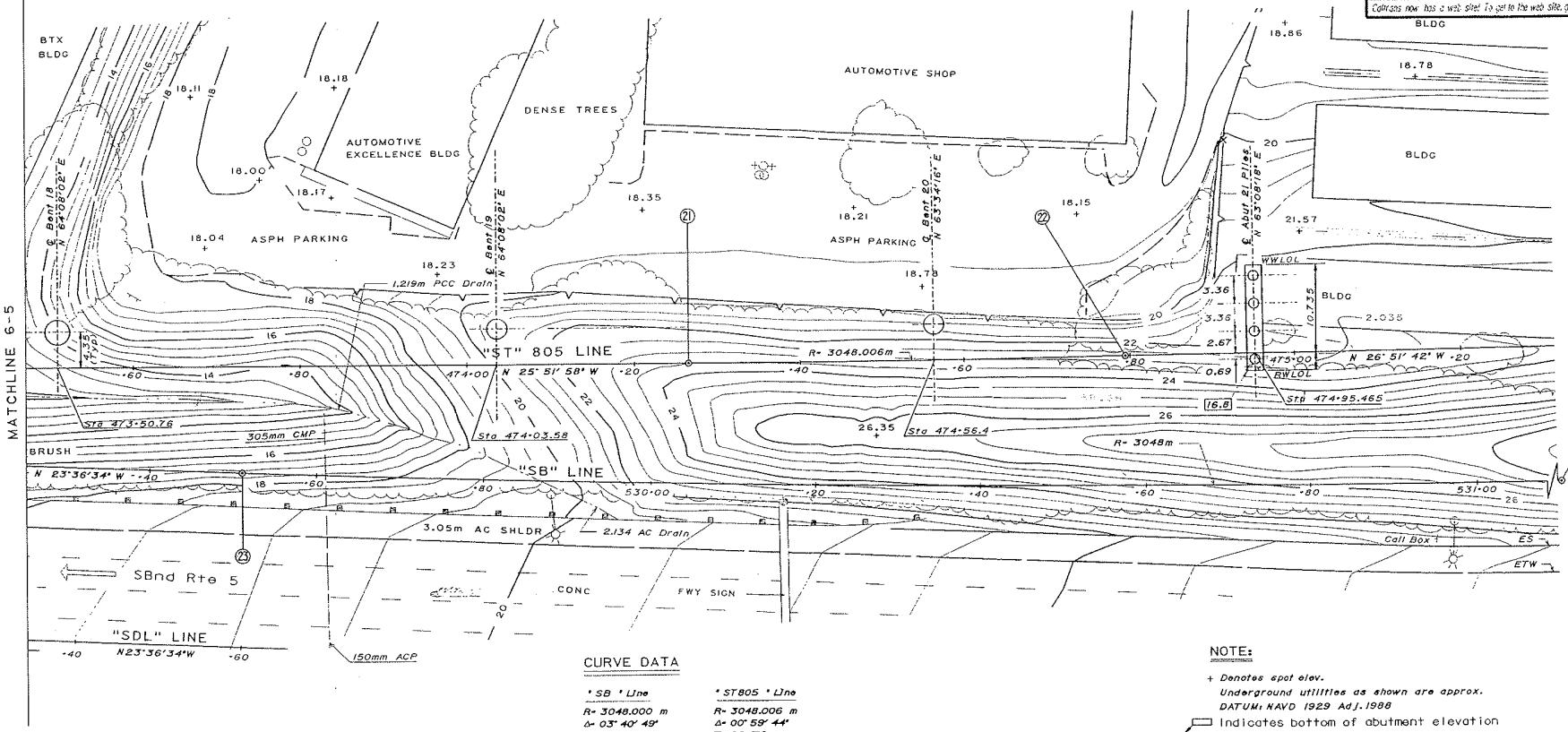

CURVE DATA

"SB" Line	"ST805" Line
R= 3048.000 m	R= 3048.006 m
Δ= 03° 40' 49"	Δ= 00° 59' 44"
T= 97.926 m	T= 26.479 m
L= 195.784 m	L= 52.957 m
N 581292.1880 E 1905895.6984	N 581225.6734 E 1905911.0336

NOTE:

+ Denotes spot elev.
Underground utilities as shown are approx.
DATUM: NAVD 1929 Adj. 1988
Indicates bottom of abutment elevation
Indicates C.I.D.H. Pile (see abutment and bent column sheets)

BENCH MARKS

Refer to Sht. 1 of 6

ALL DIMENSIONS ARE IN METERS UNLESS OTHERWISE SHOWN

SHT. 6 OF 6

PRELIMINARY INVESTIGATION SECTION											
SCALE 1:250	DATUM SEE NOTE	PHOTOGRAMMETRY AS OF:		DRAWN	BY L. Manabo 9/98	DESIGN	BY Mark Okimura	CHECKED G. BLAKESLEY	STATE OF CALIFORNIA DEPARTMENT OF TRANSPORTATION	DIVISION OF STRUCTURES STRUCTURE DESIGN 11	BRIDGE NO. 57-1069F
		SURVEYED	BY	TRACED	BY	DETAILS	BY Jim Lane	CHECKED G. BLAKESLEY			KILOMETER POST 45.2
ALIGNMENT TIES		FIELD CHECKED	BY L. Manabo 9/23/98	CHECKED	BY S. Wang 10/1/98	QUANTITIES	BY J. PETERSON	CHECKED P. NGUYEN			

DS OSMI MDET (CADD 5-95)
DS OSD 2145 (4/89)

0 10 20 30 40 50 60 70 80 90 100

CU 11275
EA 0301U1
FILE => h17fp6.dgn

S5-S805 TRUCK CONNECTOR
FOUNDATION PLAN NO. 6

DISREGARD PRINTS BEARING EARLIER REVISION DATES

REVISION DATES (PRELIMINARY STAGE ONLY) 7-27-00 10-4-00

SHEET 17 OF 80

DATE PLOTTED => 10-SEP-2001 TIME PLOTTED => 13:07

DIST	COUNTY	ROUTE	KILOMETER POST TOTAL PROJECT	SHEET No	TOTAL SHEETS
11	SD	5, 56, 805	Var	1053	1549

G.S. Blakesley 05-01-01
REGISTERED CIVIL ENGINEER

9-3-01
PLANS APPROVAL DATE

REGISTERED PROFESSIONAL ENGINEER G.S. BLAKESLEY No. 45509 Exp. 12-31-02 CIVIL STATE OF CALIFORNIA

The State of California or its officers or agents shall not be responsible for the accuracy or completeness of electronic copies of this plan sheet.

Caltrans now has a web site! To get to the web site, go to: http://www.dot.ca.gov

Caltrans Metric

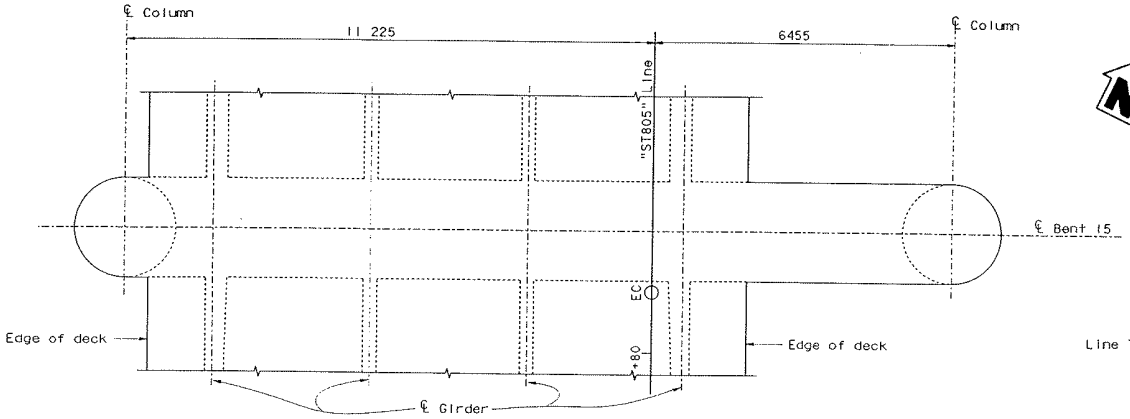

PLAN
1:50

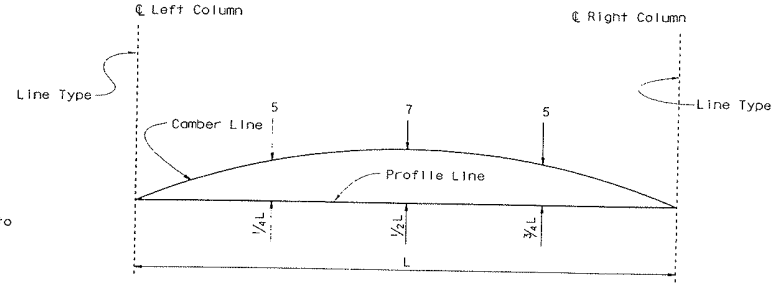

CAMBER DIAGRAM
No Scale

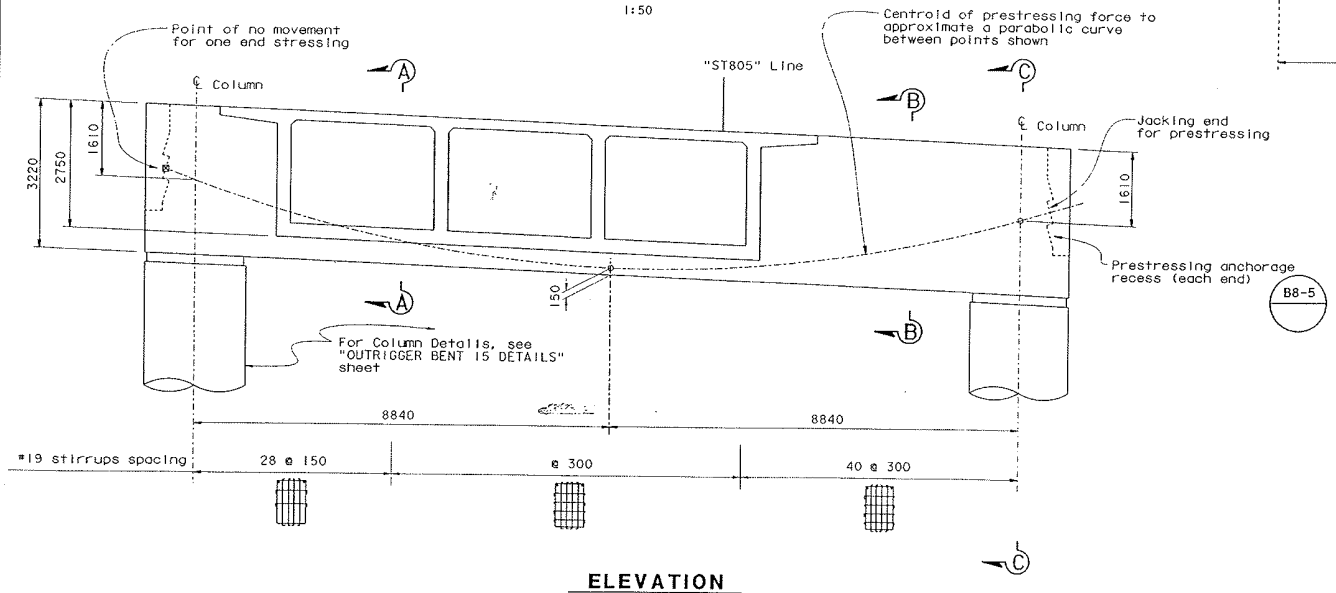

ELEVATION
1:50

PRESTRESSING NOTES

1860 MPa Low Relaxation Strand:

P_{jack} = 29500 kN

Anchor Set = 10 mm

Distribution of prestress force (Pjack) about ℄ bent shall not exceed the ratio of 3:2.

Concrete: f'_c = 28 MPa @ 28 days

f'_{ci} = 25 MPa @ time of stressing

Contractor shall submit elongation calculations based on initial stress at

Ø = 0.881 times jacking stress.

One end stressing shall be performed from the right end

Prestressing force shall be distributed uniformly across the entire width of the bent cap

Bent cap may be stressed prior to the prestressing of the superstructure

ALL DIMENSIONS ARE IN MILLIMETERS UNLESS OTHERWISE SHOWN

DESIGN	BY Mark Oklmura	CHECKED G. BLAKESLEY	
DETAILS	BY M. Carlson	CHECKED G. BLAKESLEY	
QUANTITIES	BY J. PETERSON	CHECKED P. NGUYEN	

STATE OF CALIFORNIA
DEPARTMENT OF TRANSPORTATION

DIVISION OF STRUCTURES
STRUCTURE DESIGN 11

BRIDGE NO. 57-1069F
KILOMETER POST 45.2

S5-S805 TRUCK CONNECTOR
OUTRIGGER BENT 15 LAYOUT

STRUCTURES DESIGN DETAIL SHEET (METRIC) REV. 3/1/99

ORIGINAL SCALE IN MILLIMETERS FOR REDUCED PLANS 0 10 20 30 40 50 60 70 80 90 100

CU 11275
EA 030101

DISREGARD PRINTS BEARING EARLIER REVISION DATES

REVISION DATES (PRELIMINARY STAGE ONLY)

SHEET 28 OF 80

FILE => h28bent15lo.dgn

USERNAME = s-stefloch TIME PLOTTED => 10:50:20.00 DATE PLOTTED => 10-SEP-2001

DIST	COUNTY	ROUTE	KILOMETER POST TOTAL PROJECT	SHEET No	TOTAL SHEETS
11	SD	5, 56, 805	Var	1054	1549

Caltrans Metric

G. S. Blakesley 05-01-01
REGISTERED CIVIL ENGINEER

9-3-01
PLANS APPROVAL DATE

REGISTERED PROFESSIONAL ENGINEER G. S. BLAKESLEY No. 45509 Exp. 12-31-02 CIVIL STATE OF CALIFORNIA

The State of California or its officers or agents shall not be responsible for the accuracy or completeness of electronic copies of this plan sheet.

Caltrans now has a web site! To get to the web site, go to: http://www.dot.ca.gov

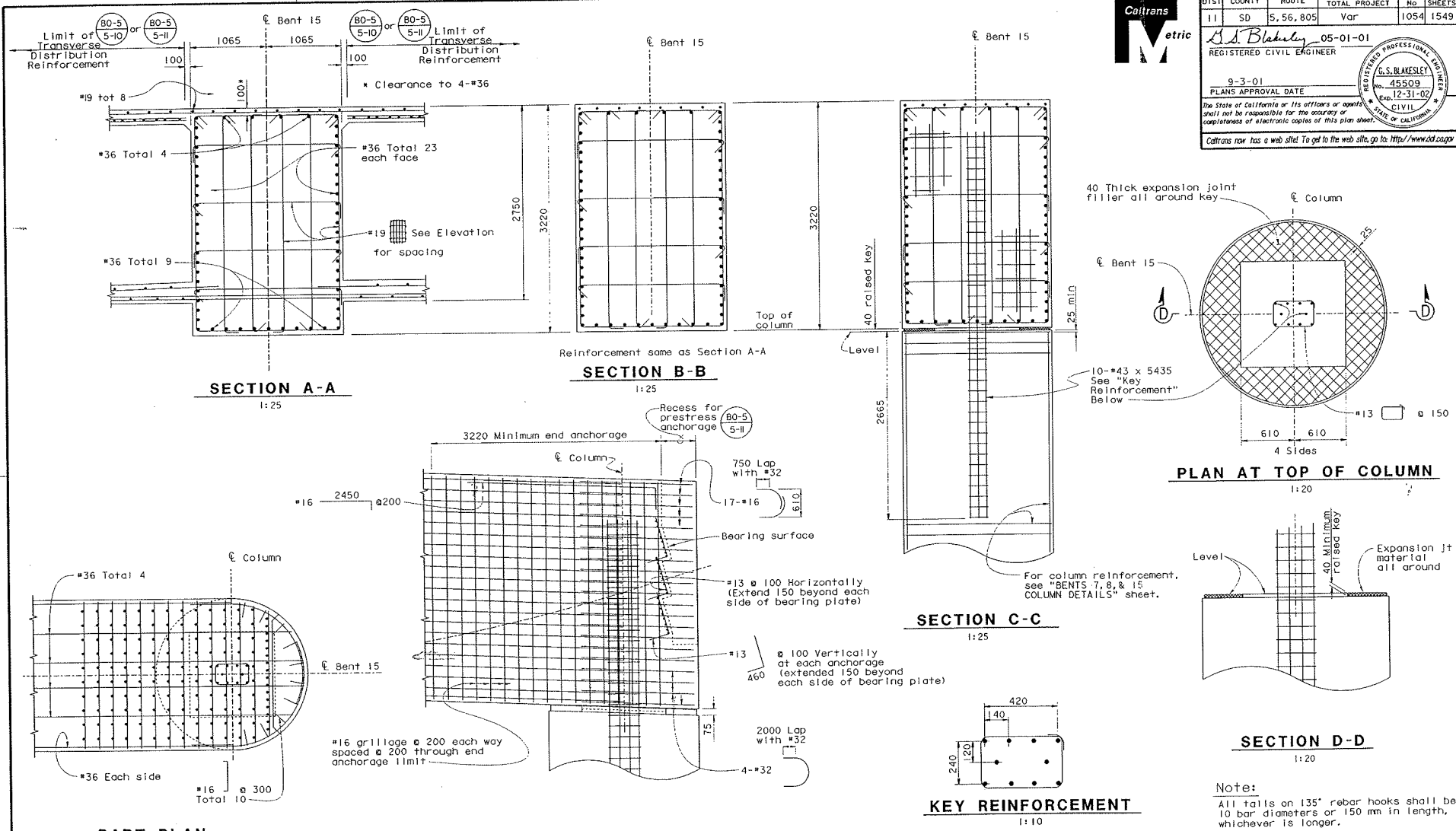

SECTION A-A
1:25

SECTION B-B
1:25

SECTION C-C
1:25

PLAN AT TOP OF COLUMN
1:20

SECTION D-D
1:20

PART ELEVATION
1:25

PART PLAN
1:25

KEY REINFORCEMENT
1:10

Note:
All tails on 135° rebar hooks shall be 10 bar diameters or 150 mm in length, whichever is longer.

ALL DIMENSIONS ARE IN MILLIMETERS UNLESS OTHERWISE SHOWN

DESIGN	BY Mark Okimura	CHECKED G. BLAKESLEY	
DETAILS	BY M. Carlson	CHECKED G. BLAKESLEY	
QUANTITIES	BY J. PETERSON	CHECKED P. NGUYEN	

STATE OF CALIFORNIA
DEPARTMENT OF TRANSPORTATION

DIVISION OF STRUCTURES
STRUCTURE DESIGN 11

BRIDGE NO. 57-1069F
KILOMETER POST 45.2

S5-S805 TRUCK CONNECTOR
OUTRIGGER BENT 15 DETAILS

STRUCTURES DESIGN DETAIL SHEET (METRIC) REV. 3/1/99

ORIGINAL SCALE IN MILLIMETERS FOR REDUCED PLANS 0 10 20 30 40 50 60 70 80 90 100

CU 11275
EA 0301U1

DISREGARD PRINTS BEARING EARLIER REVISION DATES

REVISION DATES (PRELIMINARY STATE ONLY)

SHEET 29 OF 80

FILE => h29bent15det.dgn

USERNAME => DATE PLOTTED => 14-SEP-2001 TIME PLOTTED => 08:51

DIST	COUNTY	ROUTE	KILOMETER POST TOTAL PROJECT	SHEET No	TOTAL SHEETS
11	SD	5, 56, 805	Var	1055	1549

G. S. Blakeley 05-01-01
REGISTERED CIVIL ENGINEER

9-3-01
PLANS APPROVAL DATE

REGISTERED PROFESSIONAL ENGINEER G. S. BLAKESLEY No. 45509 Exp. 12-31-02 CIVIL STATE OF CALIFORNIA

The State of California or its officers or agents shall not be responsible for the accuracy or completeness of electronic copies of this plan sheet.

Caltrans now has a web site! To get to the web site, go to: http://www.dot.ca.gov

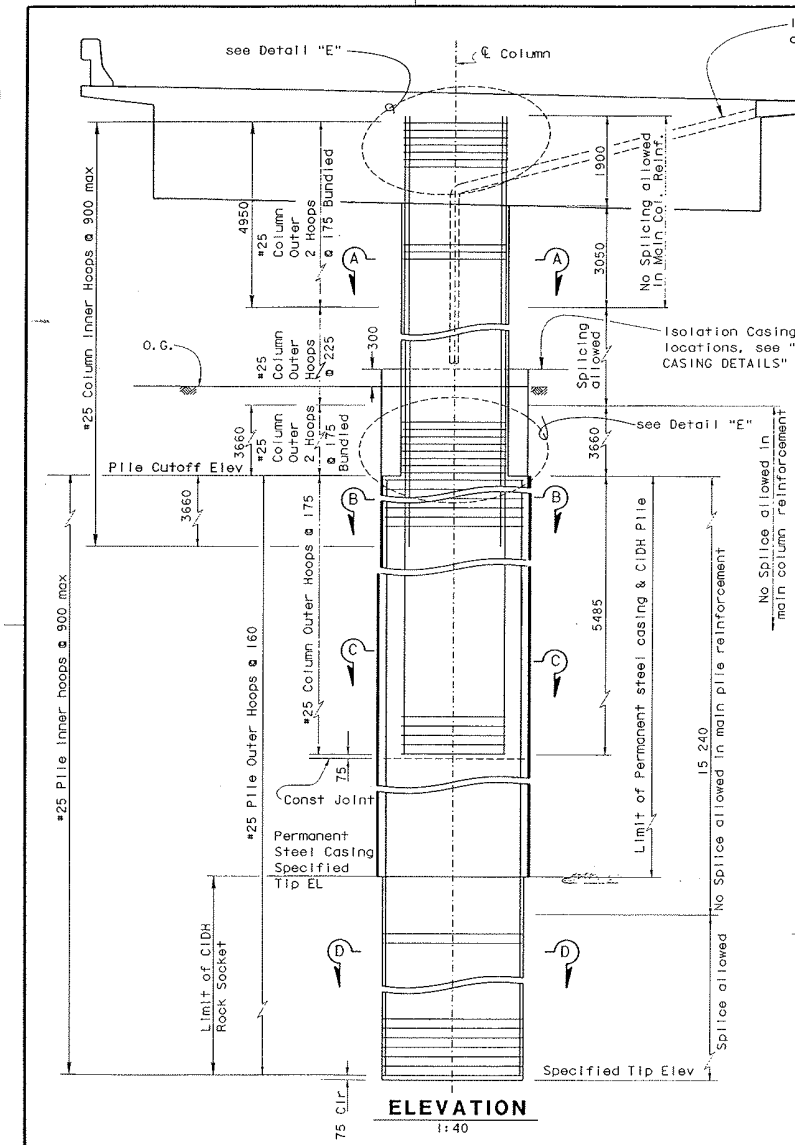

ELEVATION
1:40

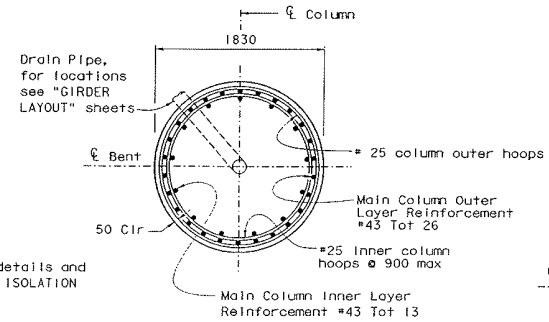

SECTION A-A
1:25

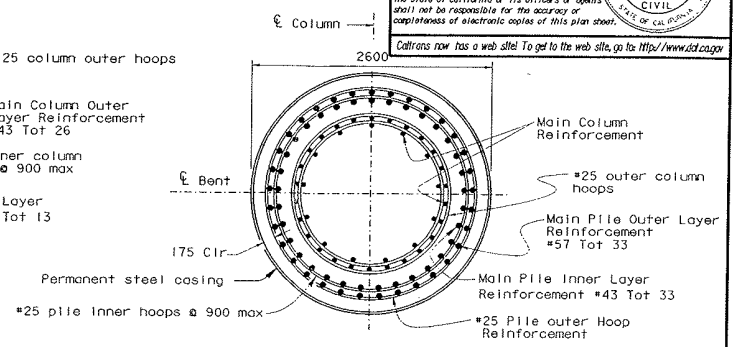

SECTION B-B
1:25

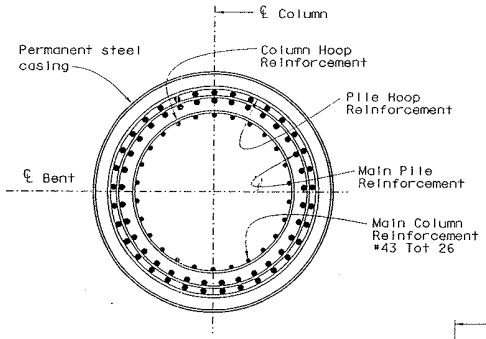

SECTION C-C
1:25

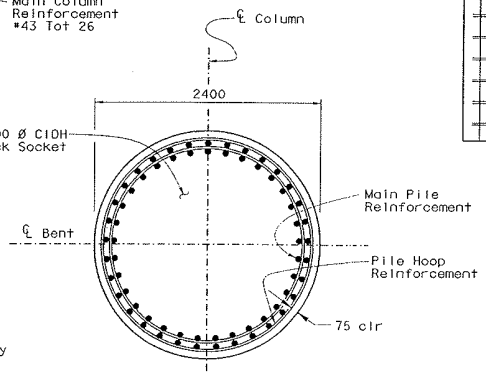

SECTION D-D
1:25

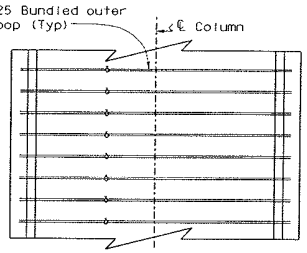

DETAIL E
No Scale

Note:

1. For Pile Data Table, see "INDEX TO PLANS" sheet.
2. Pile diameter = min inside diameter for permanent steel casing
3. Main Column reinf and column hoop reinf may be manipulated as necessary to accommodate drain pipes as directed by the engineer.
4. All splices and hoops in column and piles shall conform to ultimate splice specifications.

ALL DIMENSIONS ARE IN MILLIMETERS UNLESS OTHERWISE SHOWN

	BY	CHECKED
DESIGN	Mark Okimura	G. BLAKESLEY
DETAILS	Jim Lane	G. BLAKESLEY
QUANTITIES	J. PETERSON	P. NGUYEN

STATE OF CALIFORNIA
DEPARTMENT OF TRANSPORTATION

DIVISION OF STRUCTURES
STRUCTURE DESIGN 11

BRIDGE NO. 57-1069F
KILOMETER POST 45.2

S5-S805 TRUCK CONNECTOR
BENTS 2,3,19,20 COLUMN DETAILS

STRUCTURES DESIGN DETAIL SHEET (METRIC) REV. 1/3/99

ORIGINAL SCALE IN MILLIMETERS FOR REDUCED PLANS 0 10 20 30 40 50 60 70 80 90 100

CU 11275
EA 0301U1

DISREGARD PRINTS BEARING EARLIER REVISION DATES

REVISION DATES (PRELIMINARY STAGE ONLY)

SHEET 30 OF 80

FILE => h30coldetl.dgn

USERNAME => JEFFCHAN DATE PLOTTED => 10-SEP-2001 TIME PLOTTED => 15:42

DIST	COUNTY	ROUTE	KILOMETER POST TOTAL PROJECT	SHEET No	TOTAL SHEETS
11	SD	5,56,805	Var	1056	1549

Caltrans Metric

G. S. Blakesley 05-01-01
REGISTERED CIVIL ENGINEER

9-3-01
PLANS APPROVAL DATE

REGISTERED PROFESSIONAL ENGINEER G. S. BLAKESLEY No. 45509 Exp. 12-31-02 CIVIL STATE OF CALIFORNIA

The State of California or its officers or agents shall not be responsible for the accuracy or completeness of electronic copies of this plan sheet.

Caltrans now has a web site! To get to the web site, go to: http://www.dot.ca.gov

Note:
* @ 200 for Bent 11 and 18

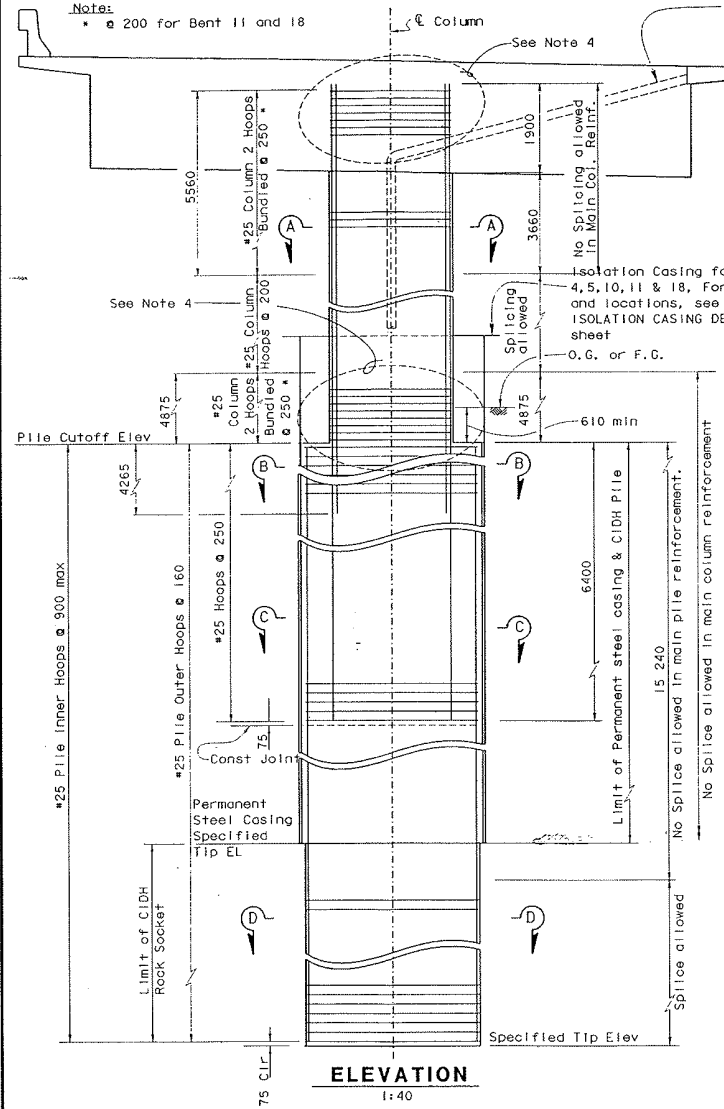

ELEVATION
1:40

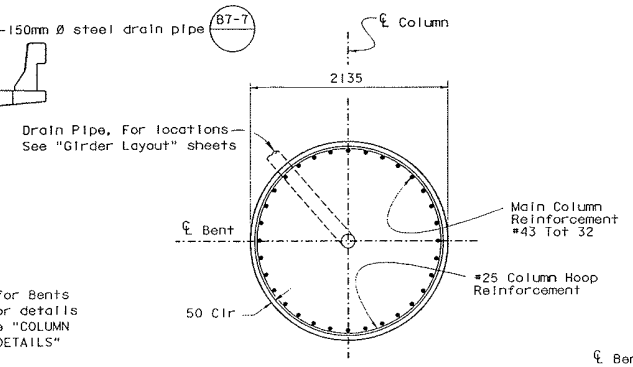

SECTION A-A
1:25

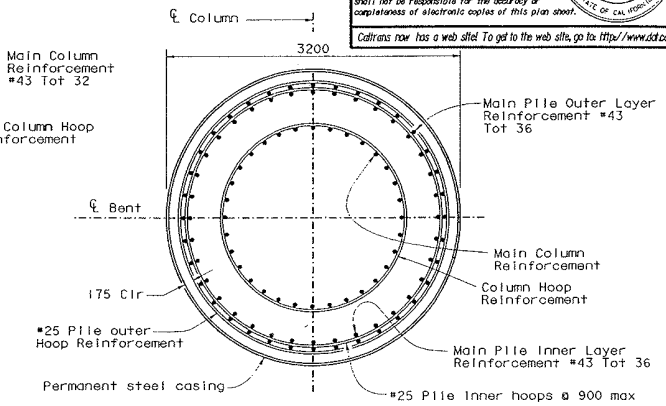

SECTION B-B
1:25

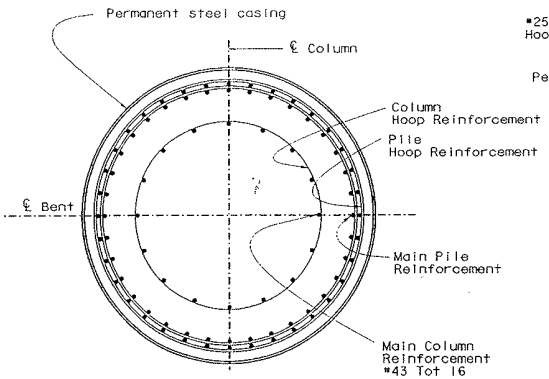

SECTION C-C
1:25

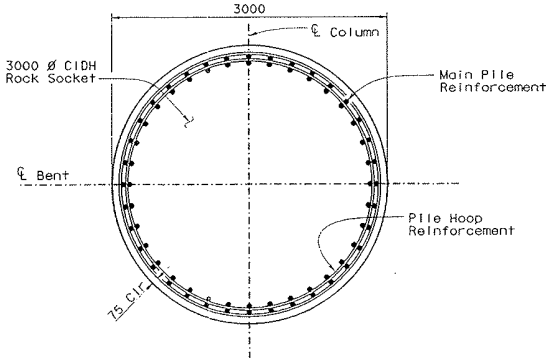

SECTION D-D
1:25

Note:

1. For Pile Data Table, see "Index to Plans" sheet.
2. Pile diameter = min inside diameter for permanent steel casing.
3. Main Column reinf and column hoop reinf may be manipulated as necessary to accommodate drain pipes as directed by the engineer.
4. See Detail "E" on "BENTS 2,3,19,20 COLUMN DETAILS" sheet.
5. All splices and hoops in columns and piles shall conform ultimate splice specifications.

ALL DIMENSIONS ARE IN MILLIMETERS UNLESS OTHERWISE SHOWN

DESIGN	BY Mark Okimura	CHECKED G. BLAKESLEY	
DETAILS	BY Jim Lane	CHECKED G. BLAKESLEY	
QUANTITIES	BY J. PETERSON	CHECKED P. NGUYEN	

STATE OF CALIFORNIA
DEPARTMENT OF TRANSPORTATION

DIVISION OF STRUCTURES
STRUCTURE DESIGN 11

BRIDGE NO. 57-1069F
KILOMETER POST 45.2

S5-S805 TRUCK CONNECTOR
BENTS 4 THRU 6,10,11,16 THRU 18 COLUMN DETAILS

STRUCTURES DESIGN DETAIL SHEET (METRIC) (REV. 1/1/99)

ORIGINAL SCALE IN MILLIMETERS FOR REDUCED PLANS 0 10 20 30 40 50 60 70 80 90 100

CU 11275
EA 0301U1

DISREGARD PRINTS BEARING EARLIER REVISION DATES

REVISION DATES (PRELIMINARY STAGE ONLY) 11-2-99 8-29-00 10-16-00 1-14-01 7-3-01

SHEET 31 OF 80

FILE => h31coldet2.dgn

USERNAME => DATE PLOTTED => 10-SEP-2001 TIME PLOTTED => 13:42

DIST	COUNTY	ROUTE	KILOMETER POST TOTAL PROJECT	SHEET No.	TOTAL SHEETS
11	SD	5, 56, 805	Var	1057	1549

G.S. Blakesley 05-01-01
REGISTERED CIVIL ENGINEER

9-3-01
PLANS APPROVAL DATE

REGISTERED PROFESSIONAL ENGINEER G.S. BLAKESLEY No. 45509 Exp. 12-31-02 CIVIL STATE OF CALIFORNIA

The State of California or its officers or agents shall not be responsible for the accuracy or completeness of electronic copies of this plan sheet.

Caltrans now has a web site! To get to the web site, go to: http://www.dot.ca.gov

Caltrans Metric

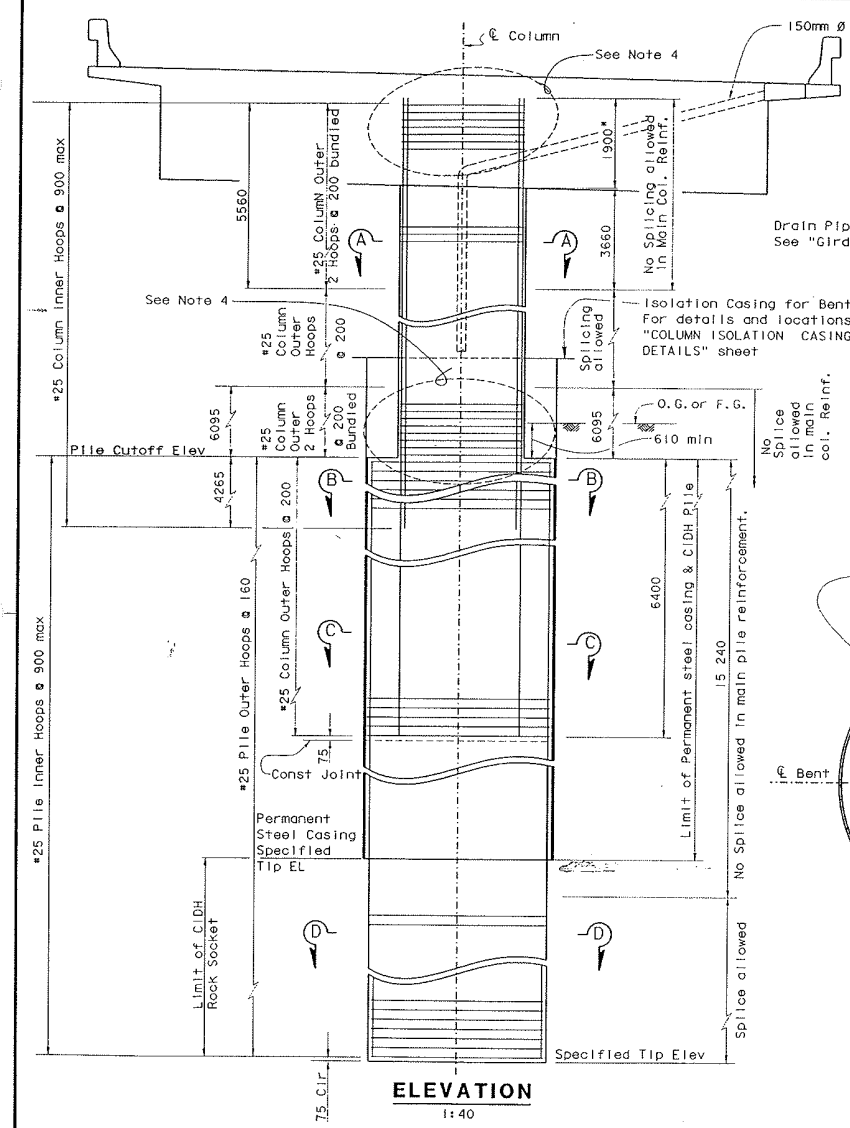

ELEVATION
1:40

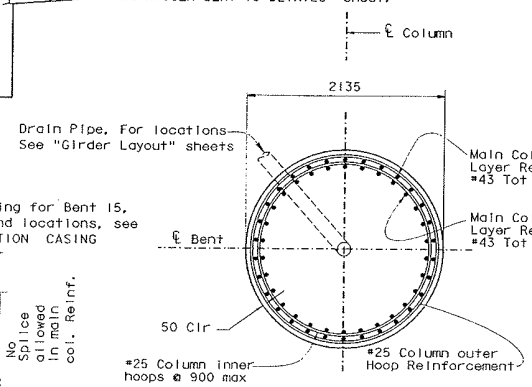

SECTION A-A
1:25

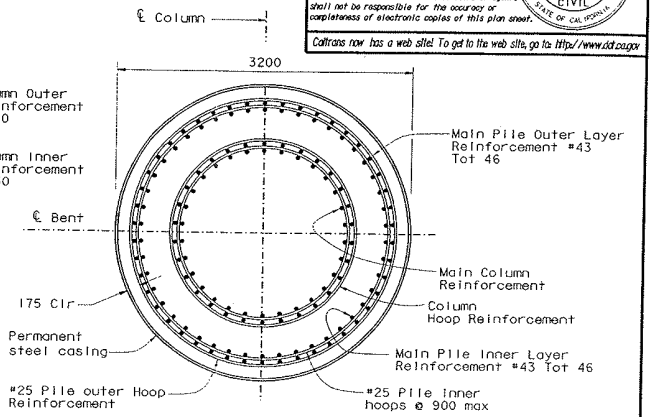

SECTION B-B
1:25

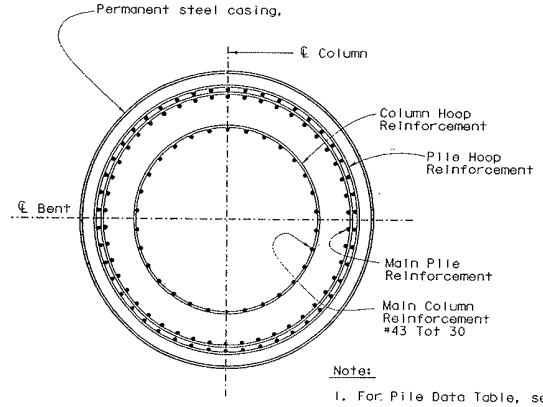

SECTION C-C
1:25

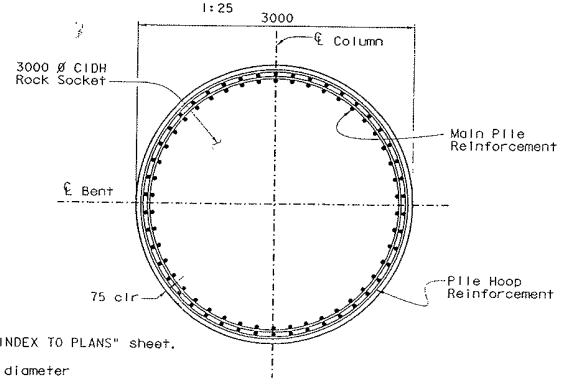

SECTION D-D
1:25

Note:

1. For Pile Data Table, see "INDEX TO PLANS" sheet.
2. Pile diameter = min inside diameter for permanent steel casing.
3. Main Column reinf and column hoop reinf may be manipulated as necessary to accommodate drain pipes as directed by the engineer.
4. See Detail "E" on "BENTS 2,3,19,20 COLUMN DETAILS" sheet.
5. All splices and hoops in column and piles shall conform to ultimate splice specifications.

ALL DIMENSIONS ARE IN MILLIMETERS UNLESS OTHERWISE SHOWN

	BY	CHECKED
DESIGN	Mark Okimura	G. BLAKESLEY
DETAILS	Jim Lane	G. BLAKESLEY
QUANTITIES	J. PETERSON	P. NGUYEN

STATE OF CALIFORNIA
DEPARTMENT OF TRANSPORTATION

DIVISION OF STRUCTURES
STRUCTURE DESIGN 11

BRIDGE NO. 57-1069F
KILOMETER POST 45.2

S5-S805 TRUCK CONNECTOR
BENTS 7,8,&15 COLUMN DETAILS

STRUCTURES DESIGN DETAIL SHEET (METRIC) REV. 1/1/99

ORIGINAL SCALE IN MILLIMETERS FOR REDUCED PLANS 0 10 20 30 40 50 60 70 80 90 100

CU 11275
EA 0301U1

DISREGARD PRINTS BEARING EARLIER REVISION DATES

REVISION DATES (PRELIMINARY STAGE ONLY): 11-1-99 3-31-00 12-18-00 1-4-01 3-10-01

SHEET 32 OF 80

FILE => h32colda*3.dgn

USERNAME => ffrfldnt DATE PLOTTED => 10-SEP-2001 TIME PLOTTED => 13:43

DIST	COUNTY	ROUTE	KILOMETER POST TOTAL PROJECT	SHEET No	TOTAL SHEETS
11	SD	5, 56, 805	Var	1058	1549

G. S. Blakesley 05-01-01
REGISTERED CIVIL ENGINEER

9-3-01
PLANS APPROVAL DATE

REGISTERED PROFESSIONAL ENGINEER G. S. BLAKESLEY No. 45509 EXP. 12-31-02 CIVIL STATE OF CALIFORNIA

The State of California or its officers or agents shall not be responsible for the accuracy or completeness of electronic copies of this plan sheet.

Caltrans now has a web site! To get to the web site, go to: http://www.dot.ca.gov

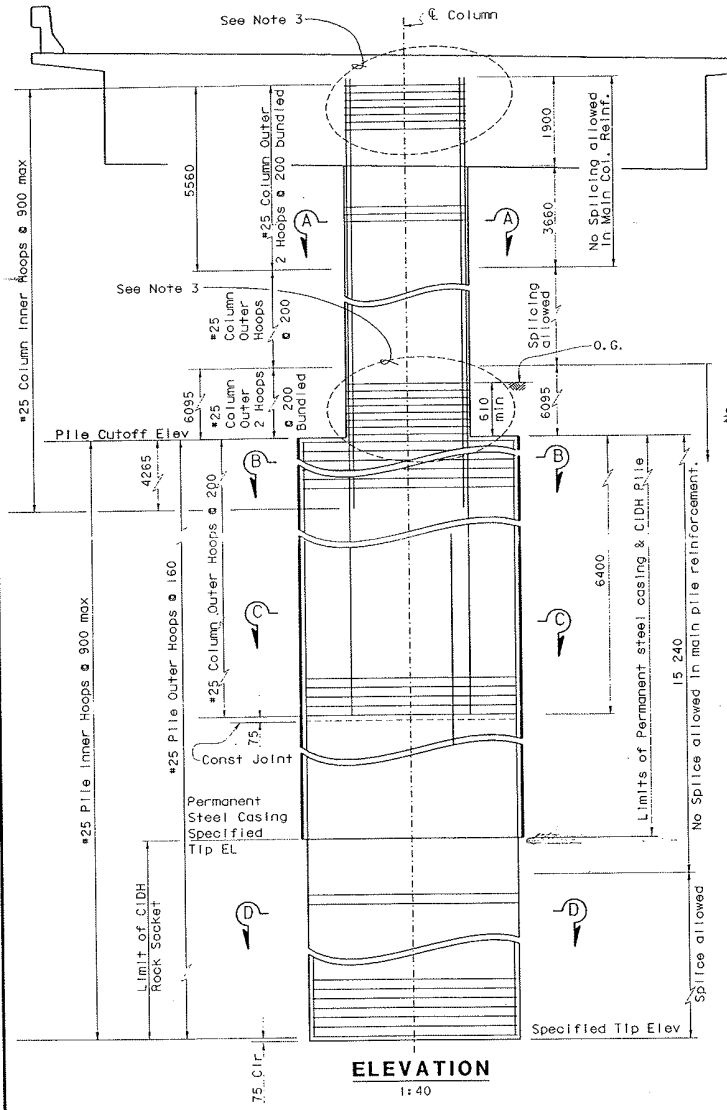

ELEVATION
1:40

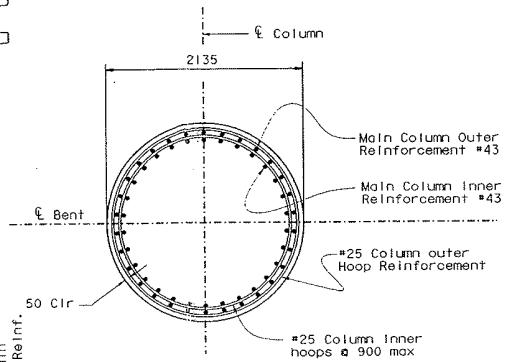

SECTION A-A
1:25

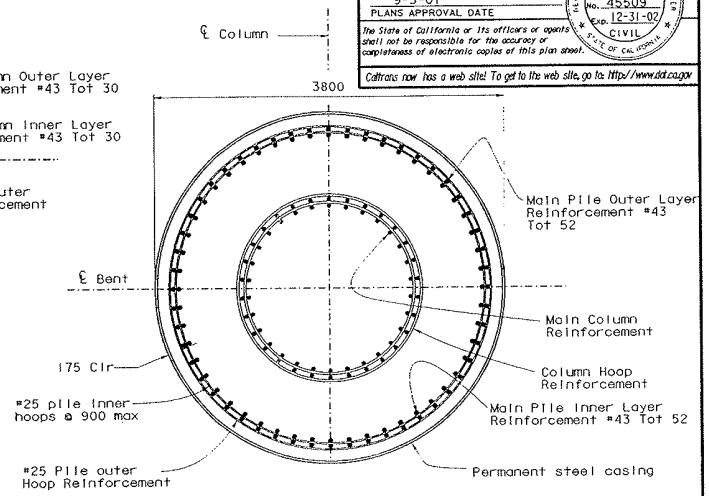

SECTION B-B
1:25

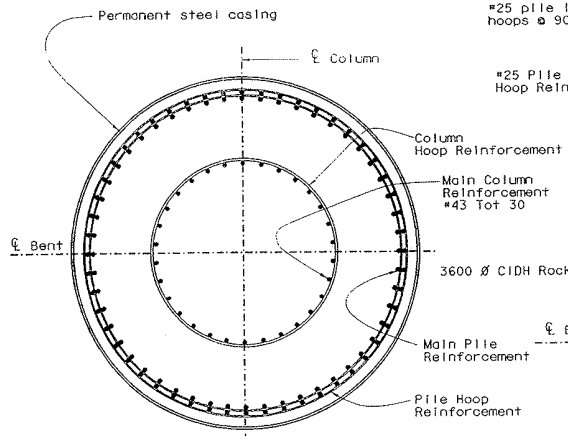

SECTION C-C
1:25

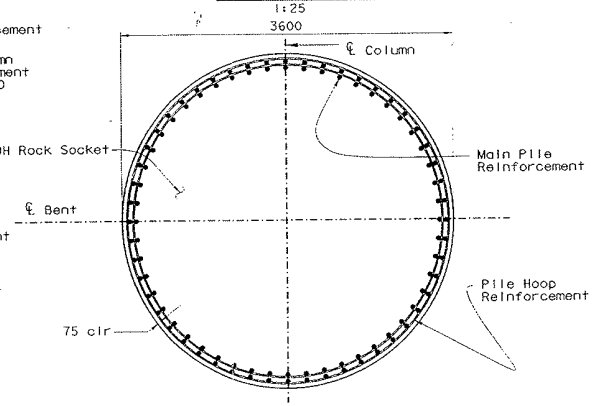

SECTION D-D
1:25

Note:

1. For Pile Data Table, see "INDEX TO PLANS" sheet.
2. Pile diameter = min inside diameter for permanent steel casing.
3. See Detail "E" on "BENTS 2,3,19,20 COLUMN DETAILS" sheet.
4. All splices and hoops in column and piles shall conform to ultimate splice specifications.

ALL DIMENSIONS ARE IN MILLIMETERS UNLESS OTHERWISE SHOWN

	BY	CHECKED
DESIGN	Mark Okimura	G. BLAKESLEY
DETAILS	Jim Lane	G. BLAKESLEY
QUANTITIES	J. PETERSON	P. NGUYEN

STATE OF CALIFORNIA
DEPARTMENT OF TRANSPORTATION

DIVISION OF STRUCTURES
STRUCTURE DESIGN 11

BRIDGE NO. 57-1069F
KILOMETER POST 45.2

S5-S805 TRUCK CONNECTOR
BENT 9 COLUMN DETAILS

CU 11275
EA 0301U1

DISREGARD PRINTS BEARING EARLIER REVISION DATES

REVISION DATES (PRELIMINARY STAGE ONLY)

SHEET 33 OF 80

STRUCTURES DESIGN DETAIL SHEET (METRIC) REV. 1/1/99

ORIGINAL SCALE IN MILLIMETERS FOR REDUCED PLANS 0 10 20 30 40 50 60 70 80 90 100

FILE = h33cordet4.dgn

USERNAME =
DATE PLOTTED = 18-SEP-2001
TIME PLOTTED = 13:43

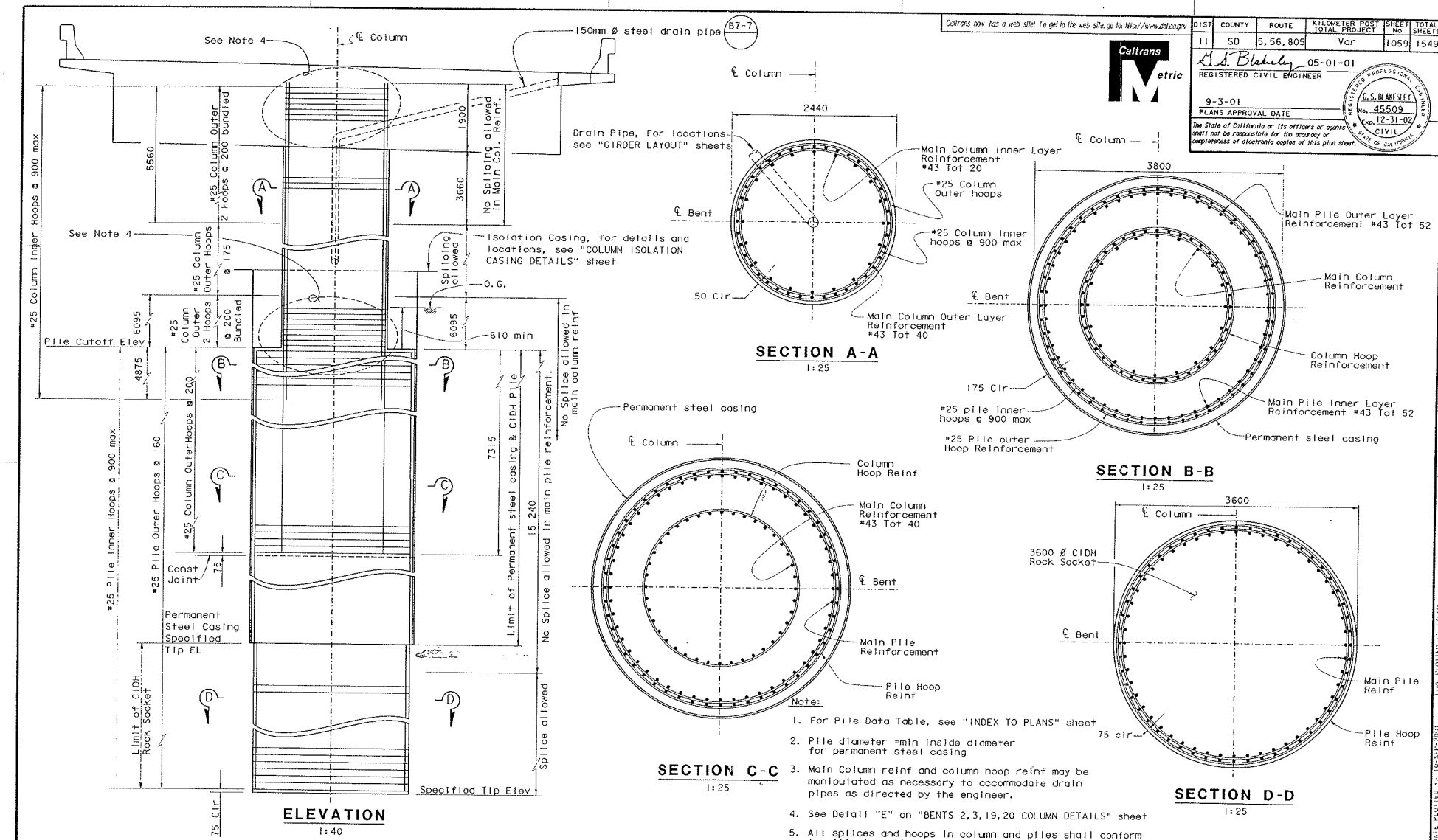

ELEVATION
1:40

SECTION A-A
1:25

SECTION B-B
1:25

SECTION C-C
1:25

SECTION D-D
1:25

Note:

1. For Pile Data Table, see "INDEX TO PLANS" sheet
2. Pile diameter =min inside diameter for permanent steel casing
3. Main Column reinf and column hoop reinf may be manipulated as necessary to accommodate drain pipes as directed by the engineer.
4. See Detail "E" on "BENTS 2,3,19,20 COLUMN DETAILS" sheet
5. All splices and hoops in column and piles shall conform to ultimate splice requirements

Caltrans now has a web site! To get to the web site, go to: http://www.dot.ca.gov

Caltrans Metric

DIST	COUNTY	ROUTE	KILOMETER POST TOTAL PROJECT	SHEET No	TOTAL SHEETS
11	SD	5, 56, 805	Var	1059	1549

G. S. Blakesley 05-01-01
REGISTERED CIVIL ENGINEER

9-3-01
PLANS APPROVAL DATE

The State of California or its officers or agents shall not be responsible for the accuracy or completeness of electronic copies of this plan sheet.

REGISTERED PROFESSIONAL ENGINEER G. S. BLAKESLEY No. 45509 Exp. 12-31-02 CIVIL STATE OF CALIFORNIA

ALL DIMENSIONS ARE IN MILLIMETERS UNLESS OTHERWISE SHOWN

DESIGN	BY Mark Okimura	CHECKED G. BLAKESLEY	
DETAILS	BY Jim Lane	CHECKED G. BLAKESLEY	
QUANTITIES	BY J. PETERSON	CHECKED P. NGUYEN	

STATE OF CALIFORNIA
DEPARTMENT OF TRANSPORTATION

DIVISION OF STRUCTURES
STRUCTURE DESIGN 11

BRIDGE NO. 57-1069F
KILOMETER POST 45.2

S5-S805 TRUCK CONNECTOR
BENTS 12,14 COLUMN DETAILS

STRUCTURES DESIGN DETAIL SHEET (METRIC) (REV. 1/1/99)

ORIGINAL SCALE IN MILLIMETERS FOR REDUCED PLANS 0 10 20 30 40 50 60 70 80 90 100

CU 11275
EA 0301U1

DISREGARD PRINTS BEARING EARLIER REVISION DATES

REVISION DATES (PRELIMINARY STAGE ONLY) 11-3-99 8-10-00 10-11-00 1-31-01 3-10-01

SHEET 34 OF 80

FILE => h34coldet5.dgn

USERNAME => trbing DATE PLOTTED => 10-SEP-2001 TIME PLOTTED => 13:40

Caltrans now has a web site! To get to the web site, go to: http://www.dot.ca.gov

DIST	COUNTY	ROUTE	KILOMETER POST TOTAL PROJECT	SHEET No	TOTAL SHEETS
11	SD	5, 56, 805	Var	1060	1549

Caltrans Metric

G. S. Blakesley 05-01-01
REGISTERED CIVIL ENGINEER

9-3-01
PLANS APPROVAL DATE

The State of California or its officers or agents shall not be responsible for the accuracy or completeness of electronic copies of this plan sheet.

REGISTERED PROFESSIONAL ENGINEER G. S. BLAKESLEY No. 45509 Exp. 12-31-02 CIVIL STATE OF CALIFORNIA

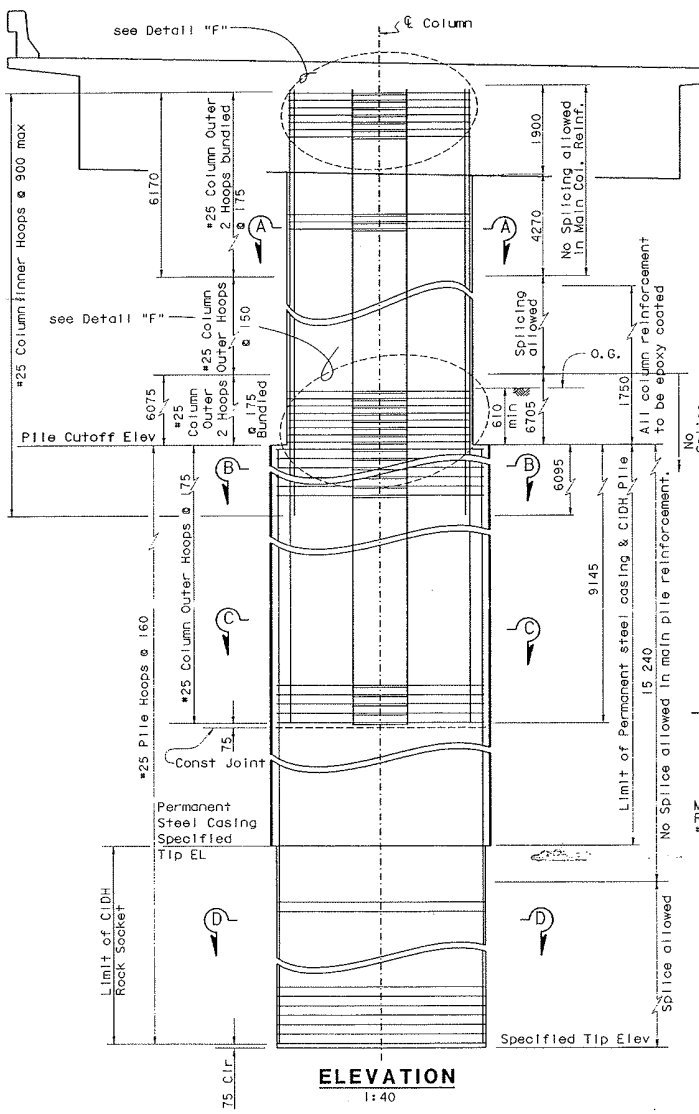

ELEVATION
1:40

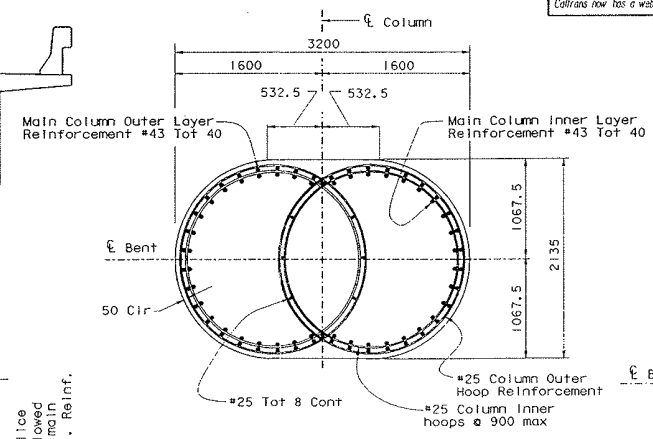

SECTION A-A
1:25

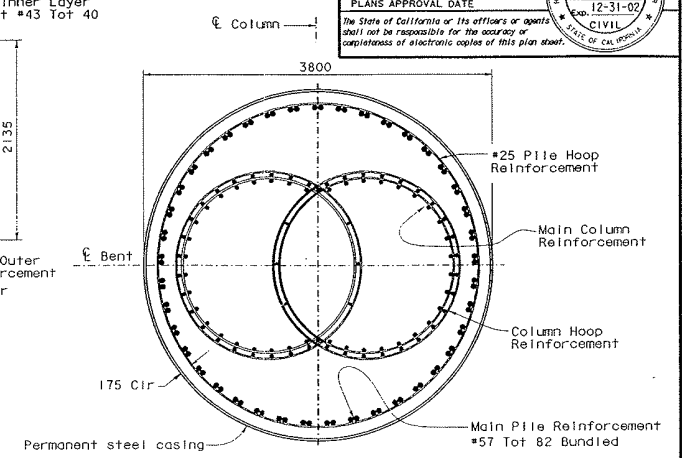

SECTION B-B
1:25

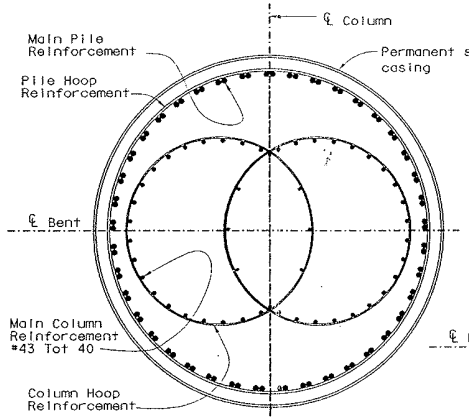

SECTION C-C
1:25

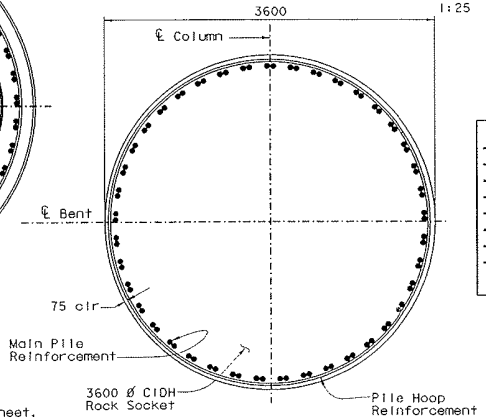

SECTION D-D
1:25

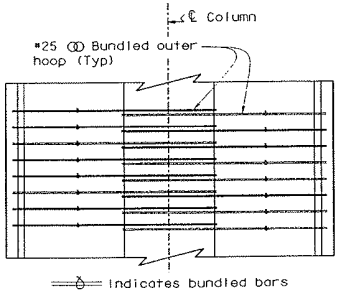

DETAIL F
No Scale

Notes:

1. For Pile Data Table, see "INDEX TO PLANS" sheet.
2. Pile diameter = min inside diameter for permanent steel casing.
3. Column Reinf Symmetrical about ℄ Column.
4. All splices and hoops in column and piles shall conform to ultimate splice specifications.

ALL DIMENSIONS ARE IN MILLIMETERS UNLESS OTHERWISE SHOWN

DESIGN	BY Mark Okimura	CHECKED G. BLAKESLEY	
DETAILS	BY Jim Lane	CHECKED G. BLAKESLEY	
QUANTITIES	BY J. PETERSON	CHECKED P. NGUYEN	

STATE OF CALIFORNIA
DEPARTMENT OF TRANSPORTATION

DIVISION OF STRUCTURES
STRUCTURE DESIGN 11

BRIDGE NO. 57-1069F
KILOMETER POST 45.2

S5-S805 TRUCK CONNECTOR
BENT 13 COLUMN DETAILS

STRUCTURES DESIGN DETAIL SHEET (METRIC) REV. 1/1/99

ORIGINAL SCALE IN MILLIMETERS FOR REDUCED PLANS 0 10 20 30 40 50 60 70 80 90 100

CU 11275
EA 0301U1

DISREGARD PRINTS BEARING EARLIER REVISION DATES

REVISION DATES (PRELIMINARY STAGE ONLY) 11-1-99 8-10-00 1-11-01 3-10-01

SHEET 35 OF 80

FILE => h35co det6.dgn

USERNAME => DATE PLOTTED => 10-SEP-2001 TIME PLOTTED => 13:40

Caltrans now has a web site! To get to the web site, go to http://www.dot.ca.gov

DIST.	COUNTY	ROUTE	KILOMETER POST TOTAL PROJECT	SHEET NO.	TOTAL SHEETS
11	SD	5, 56, 805	Var	1297	1549

G. S. Blakesley 05-01-01
REGISTERED ENGINEER - CIVIL

9-3-01
PLANS APPROVAL DATE

The State of California or its officers or agents shall not be responsible for the accuracy or completeness of electronic copies of this plan sheet.

REGISTERED PROFESSIONAL ENGINEER G. S. BLAKESLEY No. 45509 Exp. 12-31-02 CIVIL STATE OF CALIFORNIA

NOTE:
THE CONTRACTOR SHALL VERIFY ALL CONTROLLING FIELD DIMENSIONS BEFORE ORDERING OR FABRICATING ANY MATERIAL.

Caltrans Metric

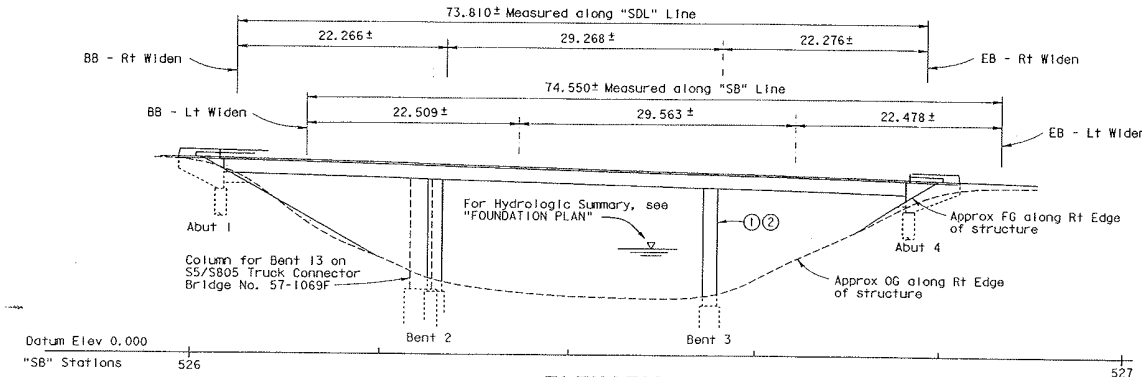

ELEVATION
1:250

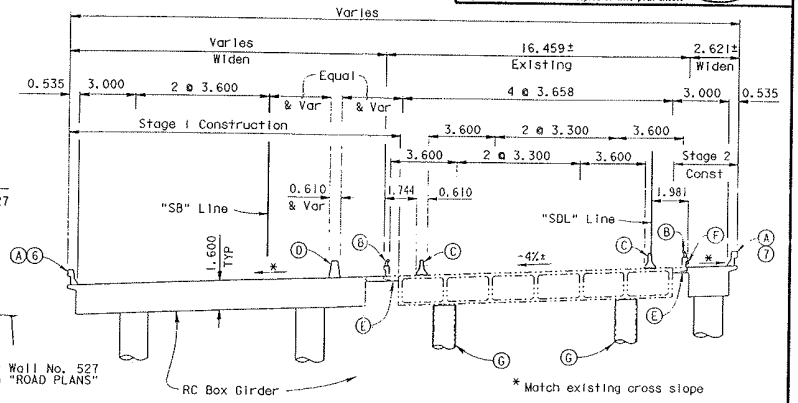

TYPICAL SECTION
1:125

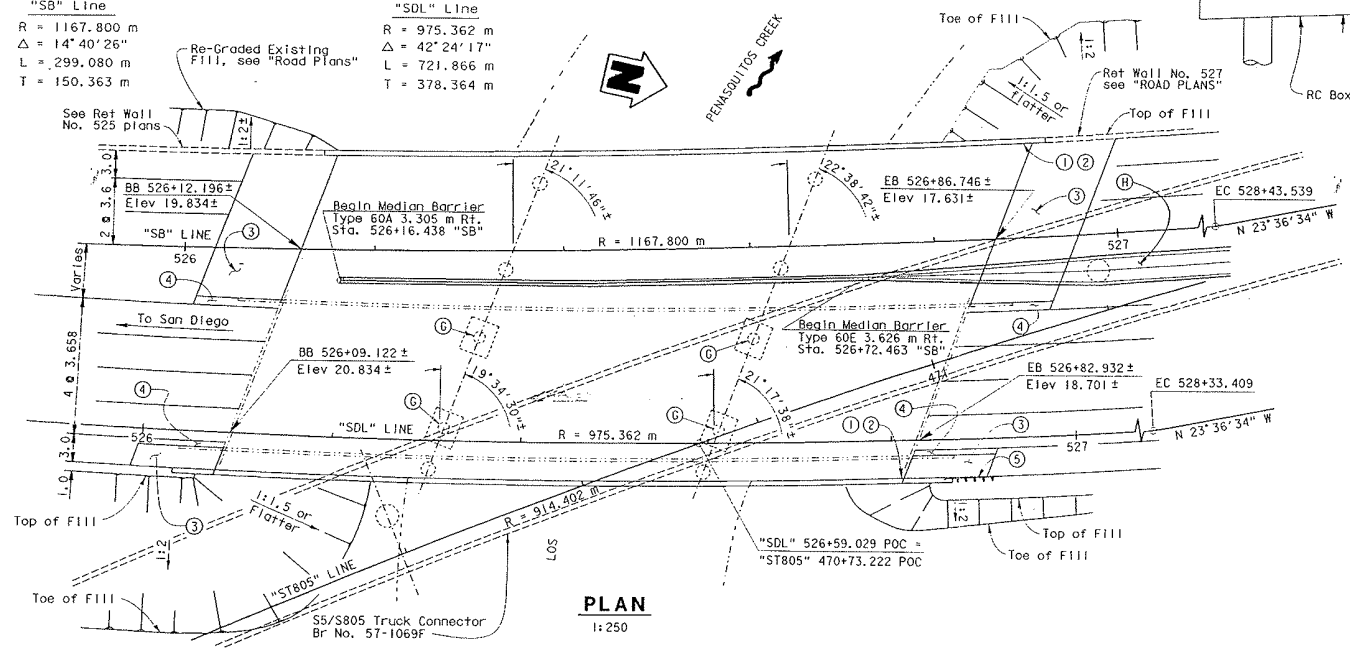

PLAN
1:250

Notes:

(A) Concrete Barrier Type 25
(B) Remove existing overhang Barrier Railing Type 1.
(C) Temporary Railing (Type K) - see "ROAD PLANS".
(D) Concrete Barrier Type 60A.
(E) Closure Pour
(F) Remove Existing Pipe
(G) P/F Column Casing Bents 2 & 3 see "MISCELLANEOUS DETAILS" sheet
(H) Concrete Barrier Type 60E, see "ROAD PLANS"
(1) Point "Los Penasquitos Creek Bridge"
(2) Point "Bridge No. 57-0511"
(3) Structure Approach Type N(9D).
(4) Structure Approach Type R(9D)
(5) MBGR - see "ROAD PLANS".
(6) 1- 53 mm Ø conduit for lighting and sign illumination, and 1- 53 mm Ø conduit for sprinkler control, see "ROAD PLANS".
(7) 1- 53 mm Ø conduit for lighting and sign illumination, see "ROAD PLANS".

For 'General Notes', 'Index to Plans', 'Standard Plans', and 'Quantities', see "INDEX TO PLANS" sheet.

ALL DIMENSIONS ARE IN METERS UNLESS OTHERWISE SHOWN

Ramin Rashedi 05/01/01
DESIGN ENGINEER

DESIGN	BY J. HIGAREDA/A. SEHGAL	CHECKED R. BRIGNANO	LOAD FACTOR DESIGN	LIVE LOADING: HS20-44 AND ALTERNATIVE AND PERMIT DESIGN LOAD
DETAILS	BY K. ENDOW	CHECKED R. BRIGNANO	LAYOUT	BY J. HIGAREDA / CHECKED R. BRIGNANO
QUANTITIES	BY U. INYANG	CHECKED K. NISHIMOTO	SPECIFICATIONS	BY S. DOLLAGA / PLANS AND SPECS COMPARED S. DOLLAGA

STRUCTURES DESIGN GENERAL PLAN SHEET (METRIC) (REV. 4/15/97)

ORIGINAL SCALE IN MILLIMETERS FOR REDUCED PLANS 0 10 20 30 40 50 60 70 80 90 100

STATE OF CALIFORNIA
DEPARTMENT OF TRANSPORTATION

DIVISION OF STRUCTURES
STRUCTURE DESIGN 11

CU 11275
EA 0301U1

FILE => colgp.dgn

BRIDGE NO. 57-0511
KILOMETER POST R49.2

DISREGARD PRINTS BEARING EARLIER REVISION DATES

REVISION DATES (PRELIMINARY STAGE ONLY) 1-25-99 3-1-99 3-17-00 3-30-00 10-2-00 1-5-01 1-8-01 3-8-01 3-28-01 3-24-01

BRIDGE ACROSS LOS PENASQUITOS CHANNEL (WIDEN)

GENERAL PLAN

SHEET 1 OF 29

USERNAME => rrinoya DATE PLOTTED => 12-3-2001 TIME PLOTTED => 08:12

(5)

Caltrans now has a web site! To get to the web site, go to: http://www.dot.ca.gov

DIST	COUNTY	ROUTE	KILOMETER POST TOTAL PROJECT	SHEET No	TOTAL SHEETS
11	SD	5, 56, 805	Var	1298	1549

G. S. Blakeley 05-01-01
REGISTERED CIVIL ENGINEER

9-3-01
PLANS APPROVAL DATE

REGISTERED PROFESSIONAL ENGINEER G. S. BLAKESLEY No. 45509 Exp. 12-31-02 CIVIL STATE OF CALIFORNIA

The State of California or its officers or agents shall not be responsible for the accuracy or completeness of electronic copies of this plan sheet.

Caltrans Metric

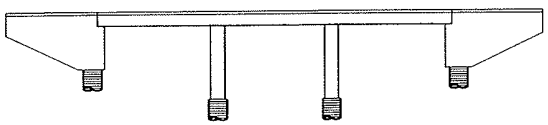

CIDH Concrete Pile

Structural Concrete, Bridge

CONCRETE STRENGTH AND TYPE LIMITS

No Scale

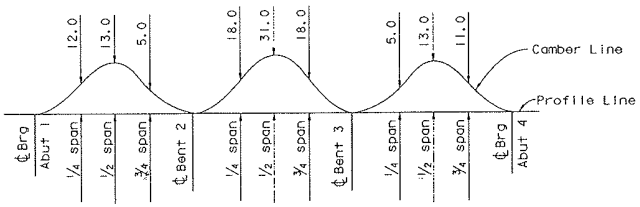

MEASUREMENT UNITS ARE MILLIMETERS FOR THIS DETAIL

CAMBER DIAGRAM LEFT WIDEN

No Scale

(Does not include allowance for falsework settlement)

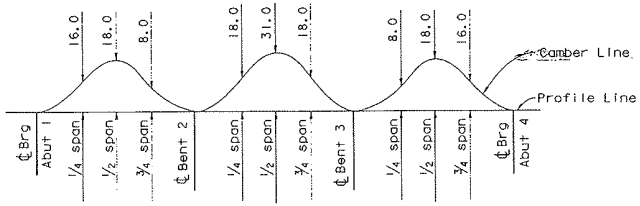

MEASUREMENT UNITS ARE MILLIMETERS FOR THIS DETAIL

CAMBER DIAGRAM RIGHT WIDEN

No Scale

(Does not include allowance for falsework settlement)

GENERAL NOTES
LOAD FACTOR DESIGN

DESIGN : DESIGN BRIDGE SPECIFICATIONS (1992 AASHTO with Interims and Revisions by CALTRANS)

SEISMIC DESIGN : Caltrans Seismic Design Criteria (SDC) Version 1.1 July 1999

DEAD LOADING : Includes 1676 Pa for future wearing surface.

LIVE LOADING : HS20-44 and alternative and permit design load.

SEISMIC LOADING : Peak Rock Acceleration = 0.5g

Site specific Acceleration Response Spectra (ARS) Curve. (See Below)

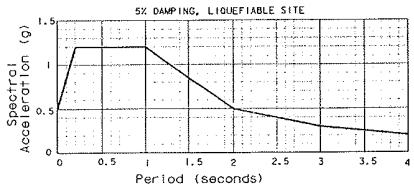

REINFORCED CONCRETE :
fy = 415 MPa
f'c = 25 MPa
n = 8
Transverse Deck Slabs (Working Stress Design)
fs = 138 MPa
fc = 8.3 MPa
n = 10

STRUCTURAL STEEL : 250 MPa

QUANTITIES

	LUMP SUM	
BRIDGE REMOVAL (PORTION), LOCATION B	LUMP	SUM
STRUCTURE EXCAVATION (BRIDGE)	125	m3
STRUCTURE EXCAVATION (TYPE D)	68	m3
STRUCTURE BACKFILL (BRIDGE)	125	m3
1.5 m CAST-IN-DRILLED-HOLE CONCRETE PILING	266	m
2.6 m CAST-IN-DRILLED-HOLE CONCRETE PILING	115	m
1.5 m PERMANENT STEEL CASING	266	m
2.6 m PERMANENT STEEL CASING	115	m
1.2 m CAST-IN-DRILLED-HOLE CONCRETE PILING (ROCK SOCKET)	38	m
2.4 m CAST-IN-DRILLED-HOLE CONCRETE PILING (ROCK SOCKET)	46	m
STRUCTURAL CONCRETE, BRIDGE	1,150	m3
STRUCTURAL CONCRETE, APPROACH SLAB (TYPE N)	100	m3
STRUCTURAL CONCRETE, APPROACH SLAB (TYPE R)	8	m3
PAVING NOTCH EXTENSION	2	m3
DRILL AND BOND DOWEL	7	m
JOINT SEAL (MR 30 MM)	45	m
BAR REINFORCING STEEL (BRIDGE)	627,000	kg
COLUMN CASING	8,700	kg
CONCRETE BARRIER (TYPE 25)	162	m
CONCRETE BARRIER (TYPE 60A)	56	m

INDEX TO PLANS

SHEET NO.	TITLE
1	GENERAL PLAN
2	INDEX TO PLANS
3	FOUNDATION PLAN
4	ABUTMENT 1 LAYOUT
5	ABUTMENT 4 LAYOUT
6	ABUTMENT DETAILS NO. 1
7	ABUTMENT DETAILS NO. 2
8	ABUTMENT DETAILS NO. 3
9	BENT PLAN & ELEVATION
10	BENT CAP DETAILS
11	BENT COLUMN & PILE DETAILS LEFT WIDEN
12	BENT COLUMN & PILE DETAILS RIGHT WIDEN
13	TYPICAL SECTION
14	GIRDER LAYOUT
15	LONGITUDINAL SECTION
16	TOP GIRDER REINFORCEMENT
17	BOTTOM GIRDER REINFORCEMENT
18	MISCELLANEOUS DETAILS
19	STRUCTURE APPROACH TYPE R(9D)
20	STRUCTURE APPROACH TYPE N(9D)
21	STRUCTURE APPROACH DRAINAGE DETAILS
22	LIMITS OF PAYMENT FOR EXCAVATION (TYPE D)
23	LOG OF TEST BORINGS NO. 1
24	LOG OF TEST BORINGS NO. 2
25	LOG OF TEST BORINGS NO. 3
26	LOG OF TEST BORINGS NO. 4
27	LOG OF TEST BORINGS NO. 5
28	LOG OF TEST BORINGS NO. 6
29	LOG OF TEST BORINGS NO. 7

STANDARD PLANS
Dated July 1999

SHEET NO.	TITLE
A10A	ABBREVIATIONS
A62C	LIMITS OF PAYMENT FOR EXCAVATION AND BACKFILL - BRIDGE
A76A	CONCRETE BARRIER TYPE 60A
A76C	CONCRETE BARRIER TYPE 60E
B0-1	BRIDGE DETAILS
RSP B0-3	BRIDGE DETAILS
B0-5	BRIDGE DETAILS
B0-13	BRIDGE DETAILS
B7-10	UTILITY OPENING
B6-21	JOINT SEALS - (MAXIMUM MOVEMENT RATING = 50 MM)
B7-1	BOX GIRDER DETAILS
RSP B11-53	CONCRETE BARRIER TYPE 25

Standard Plan Sheet No.

Detail No.

ALL DIMENSIONS ARE IN MILLIMETERS UNLESS OTHERWISE SHOWN

DESIGN	BY J. HIGAREDA	CHECKED R. BRIGNANO	
DETAILS	BY K. ENDOW	CHECKED R. BRIGNANO	
QUANTITIES	BY U. INYANG	CHECKED K. NISHIMOTO	

STATE OF CALIFORNIA
DEPARTMENT OF TRANSPORTATION

DIVISION OF STRUCTURES
STRUCTURE DESIGN 11

BRIDGE NO. 57-0511
KILOMETER POST R49.2

BRIDGE ACROSS LOS PENASQUITOS CHANNEL (WIDEN)

INDEX TO PLANS

STRUCTURES DESIGN DETAIL SHEET (METRIC) REV. 3/1/99

ORIGINAL SCALE IN MILLIMETERS FOR REDUCED PLANS 0 10 20 30 40 50 60 70 80 90 100

CU 11275
EA 0301U1

FILE => c02itp.dgn

DISREGARD PRINTS BEARING EARLIER REVISION DATES

REVISION DATES (PRELIMINARY STAGE ONLY)

SHEET 2 OF 29

USERNAME => DATE PLOTTED => 12-SEP-2001 TIME PLOTTED => 08:11

Caltrans now has a web site! To get to the web site, go to: http://www.dot.ca.gov

DIST	COUNTY	ROUTE	KILOMETER POST TOTAL PROJECT	SHEET NO.	TOTAL SHEETS
11	SD	5, 56, 805	Var	1299	1549

G.S. Blakeley 05-01-01
REGISTERED ENGINEER-CIVIL

9-3-01
PLANS APPROVAL DATE

REGISTERED PROFESSIONAL ENGINEER G.S. BLAKESLEY No. 45509 Exp. 12-31-02 CIVIL STATE OF CALIFORNIA

The State of California or its officers or agents shall not be responsible for the accuracy or completeness of electronic copies of this plan sheet.

Caltrans Metric

HYDROLOGIC SUMMARY

DRAINAGE AREA: 151 SQUARE KM

	BASE FLOOD	DESIGN FLOOD
FREQUENCY (YEARS)	50	100
DISCHARGE (CUBIC METER PER SECOND)	320	476
WATER SURFACE (ELEVATION AT BRIDGE, METER)	10.91	11.46

FLOOD PLAIN DATA ARE BASED UPON INFORMATION AVAILABLE WHEN THE PLANS WERE PREPARED AND ARE SHOWN TO MEET FEDERAL REQUIREMENTS. THE ACCURACY OF SAID INFORMATION IS NOT WARRANTED

1	525 + 44.469 PCC. "SB" Line.	N 582128.0688 E 1908815.2120
2	528 + 43.549 EC. "SB" Line	N 582414.3834 E 1908731.6364
3	521 + 11.542 BC. "SDL" Line.	N 581700.8571 E 1908787.8337
4	470 + 73.222 "ST805" Line 526 + 59.029 "SDL" Line	N 582240.5783 E 1908813.4240
5	528 + 33.409 EC. "SDL" Line	N 582405.7383 E 1908758.2014
6	469 + 13.817 BC. "ST805" Line	N 582114.5004 E 1908910.6361
7	471 + 81.3240 EC. "ST805" Line	N 582334.8391 E 1908760.6287

Denotes Bottom of abutment diaphragm elevation

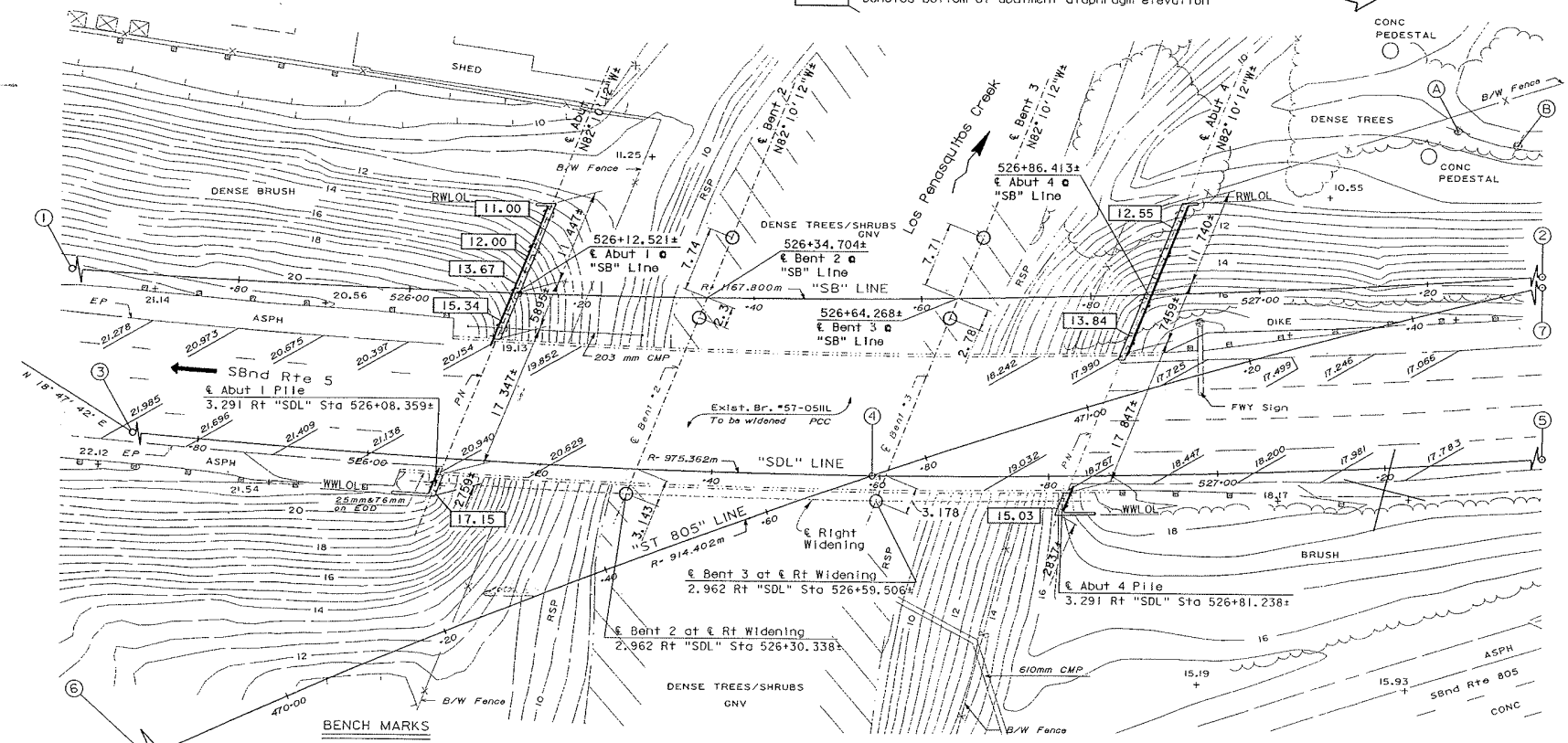

CURVE DATA

'SDL' Line
R- 975.362 m
Δ- 42° 24' 17"
T- 378.364 m
L- 721.867 m
N 582015.1022
E 1907864.4806

'ST805' Line
R- 914.402 m
Δ- 16° 45' 43"
T- 134.716 m
L- 267.508 m
N 582733.7667
E 1909583.4216

'SB' Line
R- 1167.8000 m
Δ- 14° 40' 25"
T- 150.362 m
L- 299.0798 m
N 581946.6765
E 1907661.5857

NOTES:

+ Denotes spot elev.
Underground utilities as shown are approximate.
DATUM: NAVD 1929 Adj. 1988

BENCH MARKS

BM # 5-30.57 Elev.- 25.295 m
Fd. std. brass disk on the east shoulder of northbound Rte 5, 35.1m north of the northeast end of the bridge over Sorrento Valley Road.

BM # 805-28.20 Elev.- 19.812 m
Fd. std. br. disk on the east shoulder of NBnd Rte 805, 147.5m south of the bridge over Sorrento Valley Boulevard.

UTILITIES

(A) PP (No No.)
2- HV cables NE-S at elev. 31.34m ±
3- HV cables NE-S at elev. 27.37m ±

(B) Guy Pole (No No.)
1- 51mm steel pipe into the ground

NOTE:
THE CONTRACTOR SHALL VERIFY ALL CONTROLLING FIELD DIMENSIONS BEFORE ORDERING OR FABRICATING ANY MATERIAL.

PRELIMINARY INVESTIGATION SECTION							
SCALE 1:250	DATUM SEE NOTE	PHOTOGRAMMETRY AS OF:		DRAWN	BY L. Manabo 10/98	DESIGN BY J. HIGAREDA	CHECKED R. BRIGNANO
		SURVEYED BY		TRACED BY		DETAILS BY K. ENDOW	CHECKED R. BRIGNANO
ALIGNMENT TIES		FIELD CHECKED BY L. Manabo 10/7/98		CHECKED BY S. Wang 10/14/98		QUANTITIES BY U. INYANG	CHECKED K. NISHIMOTO

DS OSMI MOET (CADD S-95)
DS OSD 2145 (4/89)

STATE OF CALIFORNIA
DEPARTMENT OF TRANSPORTATION

DIVISION OF STRUCTURES
STRUCTURE DESIGN 11

CU 11275
EA 0301U1

BRIDGE NO. 57-0511
KILOMETER POST R49.2

BRIDGE ACROSS LOS PENASQUITOS CHANNEL (WIDEN)

FOUNDATION PLAN

DISREGARD PRINTS BEARING EARLIER REVISION DATES

REVISION DATES (PRELIMINARY STAGE ONLY) 12-27-00 1-18-01 1-5-01 3-29-01 4-25-01

SHEET 3 OF 29

FILE => c03fp.dgn

USERNAME => tfrkovy DATE PLOTTED => 12-SEP-2001 TIME PLOTTED => 08:11

DIST	COUNTY	ROUTE	KILOMETER POST TOTAL PROJECT	SHEET No	TOTAL SHEETS
11	SD	5, 56, 805	Var	1305	1549

G. S. Blakesley 05-01-01
REGISTERED CIVIL ENGINEER

9-3-01
PLANS APPROVAL DATE

REGISTERED PROFESSIONAL ENGINEER G. S. BLAKESLEY No. 45509 Exp. 12-31-02 CIVIL STATE OF CALIFORNIA

The State of California or its officers or agents shall not be responsible for the accuracy or completeness of electronic copies of this plan sheet.

Caltrans now has a web site! To get to the web site, go to: http://www.dot.ca.gov

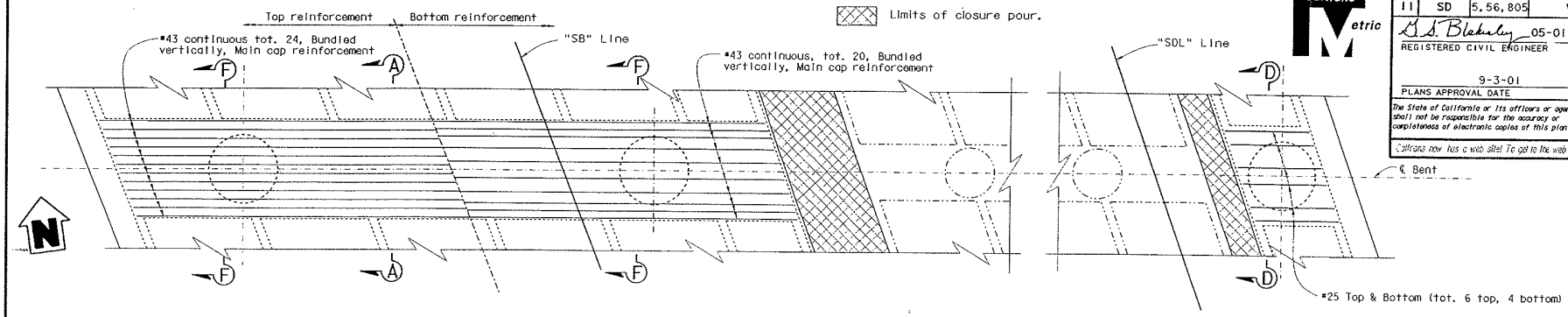

PLAN
1:50

Indicates Bundled Bars

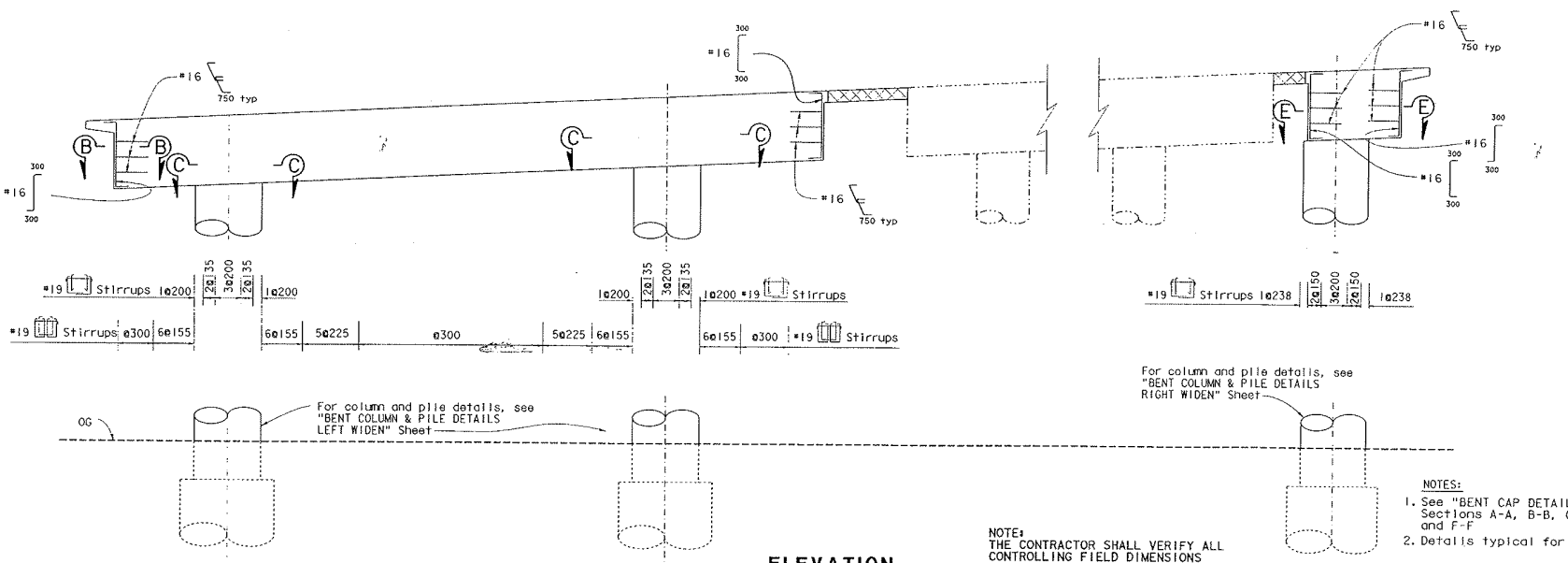

ELEVATION
1:50

NOTE:
THE CONTRACTOR SHALL VERIFY ALL CONTROLLING FIELD DIMENSIONS BEFORE ORDERING OR FABRICATING ANY MATERIAL.

NOTES:
1. See "BENT CAP DETAILS" Sheet for Sections A-A, B-B, C-C, D-D, E-E and F-F
2. Details typical for Bent 2 and Bent 3.

ALL DIMENSIONS ARE IN MILLIMETERS UNLESS OTHERWISE SHOWN

DESIGN	BY J. HIGAREDA	CHECKED R. BRIGNANO	
DETAILS	BY K. ENDOW	CHECKED R. BRIGNANO	
QUANTITIES	BY U. INYANG	CHECKED K. NISHIMOTO	

STATE OF CALIFORNIA
DEPARTMENT OF TRANSPORTATION

DIVISION OF STRUCTURES
STRUCTURE DESIGN 11

BRIDGE NO. 57-0511
KILOMETER POST R49.2

BRIDGE ACROSS LOS PENASQUITOS CHANNEL (WIDEN)
BENT PLAN & ELEVATION

STRUCTURES DESIGN DETAIL SHEET (METRIC) REV. 3/1/99

ORIGINAL SCALE IN MILLIMETERS FOR REDUCED PLANS 0 10 20 30 40 50 60 70 80 90 100

CU 11275
EA 0301U1

DISREGARD PRINTS BEARING EARLIER REVISION DATES

REVISION DATES (PRELIMINARY STAGE ONLY) 06-14-00 06-27-00 10-23-00 11-9-00 1-5-01 1-26-01 04-25-01

SHEET 9 OF 29

FILE => c09bnrlyt.dgn

USERNAME => trtonyv DATE PLOTTED => 12-SEP-2001 TIME PLOTTED => 08:12

DIST	COUNTY	ROUTE	KILOMETER POST TOTAL PROJECT	SHEET No	TOTAL SHEETS
11	SD	5, 56, 805	Var	1307	1549

G.S. Blakeley 05-01-01
REGISTERED CIVIL ENGINEER

9-3-01
PLANS APPROVAL DATE

G.S. BLAKELEY No. 45509 Exp. 12-31-02 CIVIL STATE OF CALIFORNIA

The State of California or its officers or agents shall not be responsible for the accuracy or completeness of electronic copies of this plan sheet.

Caltrans now has a web site! To get to the web site, go to: http://www.dot.ca.gov/

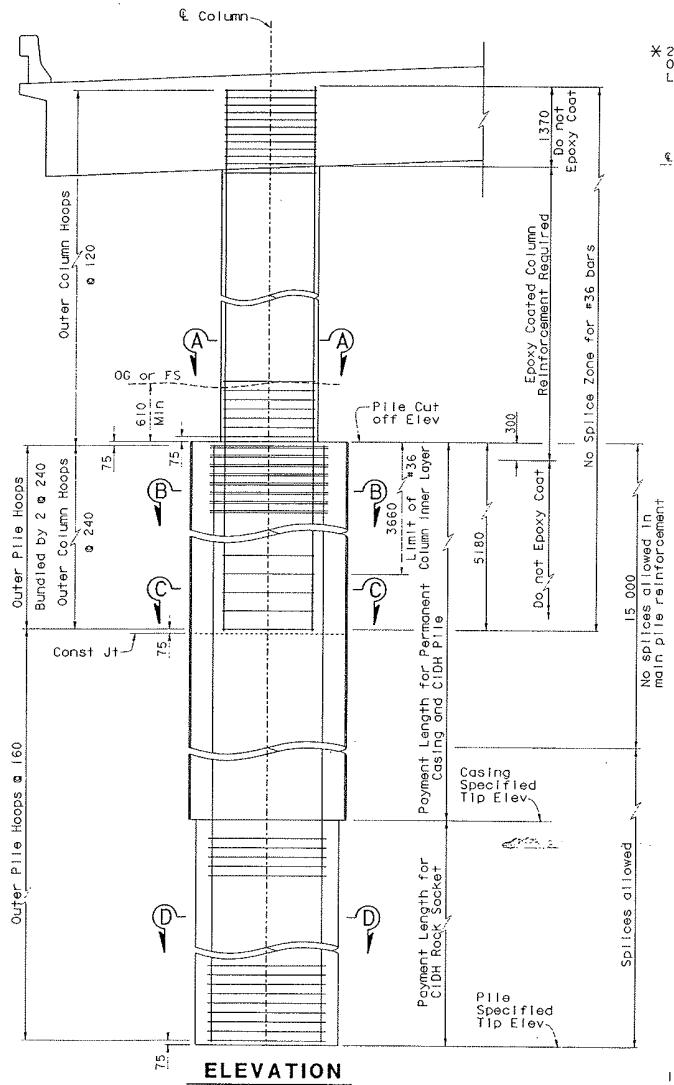

ELEVATION
1:40

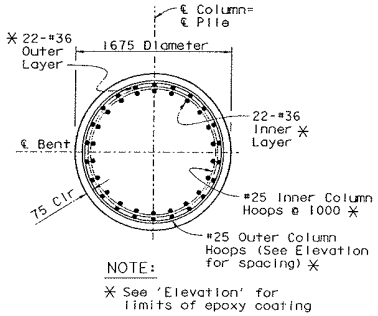

NOTE:
✳ See 'Elevation' for limits of epoxy coating

SECTION A-A
1:25

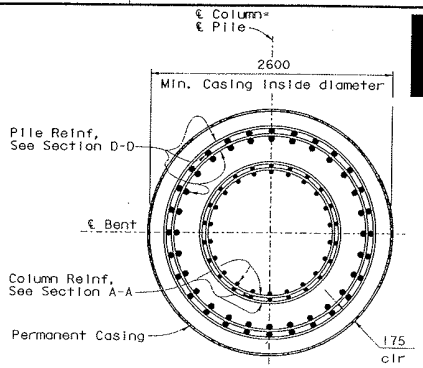

SECTION B-B
1:25

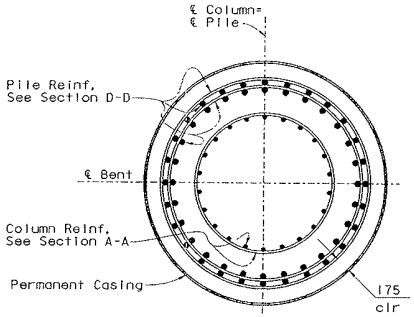

SECTION C-C
1:25

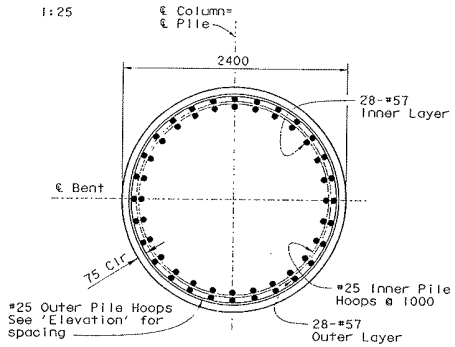

SECTION D-D
1:25

Design Loading				Nominal Resistance						
Support Location/Type & Diameter	Compression kN	Tension kN	Lateral kN	Compression kN	Tension kN	Intended Length of Rock Socket m	Pile Cutoff Elevation m	Permanent Casing Specified Tip Elevation✳ m	Design Pile Tip Elevation m	Specified Pile Tip Elevation m
Bent 2 / CIDH 2.6 m	N/A	N/A	N/A	12 050	0	7.31	+6.50	-13.11	-20.42(1) -14.23(3)	-20.42
Bent 3 / CIDH 2.6 m	N/A	N/A	N/A	12 500	0	9.45	+6.50	-13.41	-22.86(1) -17.27(3)	-22.86

Notes: Design tip elevation is controlled by the following demands: (1) Compression; (2) Tension; (3) Lateral Loads

NOTE:
1. All reinforcement splices and hoop fabrication in Columns and Piles shall conform to Ultimate Splice Requirements

✳ Includes 610 mm min. embedment into rock socket

ALL DIMENSIONS ARE IN MILLIMETERS UNLESS OTHERWISE SHOWN

	BY	CHECKED
DESIGN	J. HIGAREDA	R. BRIGNANO
DETAILS	D. KUBOCHI	R. BRIGNANO
QUANTITIES	U. INYANG	K. NISHIMOTO

STATE OF CALIFORNIA
DEPARTMENT OF TRANSPORTATION

DIVISION OF STRUCTURES
STRUCTURE DESIGN 11

BRIDGE NO. 57-0511
KILOMETER POST R49.2

BRIDGE ACROSS LOS PENASQUITOS CHANNEL (WIDEN)
BENT COLUMN & PILE DETAILS LEFT WIDEN

STRUCTURES DESIGN DETAIL SHEET (METRIC) (REV. 1/1/99)

ORIGINAL SCALE IN MILLIMETERS FOR REDUCED PLANS 0 10 20 30 40 50 60 70 80 90 100

CU 11275
EA 0301U1

DISREGARD PRINTS BEARING EARLIER REVISION DATES

REVISION DATES (PRELIMINARY STAGE ONLY)

SHEET 11 OF 29

FILE = C:\11\bdtcolcet.dgn

USERNAME = rrrlong
PLOTTED = 12-3-2001
11:08 AM

DIST	COUNTY	ROUTE	KILOMETER POST TOTAL PROJECT	SHEET No	TOTAL SHEETS
11	SD	5, 56, 805	Var	1308	1549

G.S. Blakeley 05-01-01
REGISTERED CIVIL ENGINEER

9-3-01
PLANS APPROVAL DATE

REGISTERED PROFESSIONAL ENGINEER G.S. BLAKESLEY No. 45509 Exp. 12-31-02 CIVIL STATE OF CALIFORNIA

The State of California or its officers or agents shall not be responsible for the accuracy or completeness of electronic copies of this plan sheet.

Caltrans now has a web site! To get to the web site, go to: http://www.dot.ca.gov

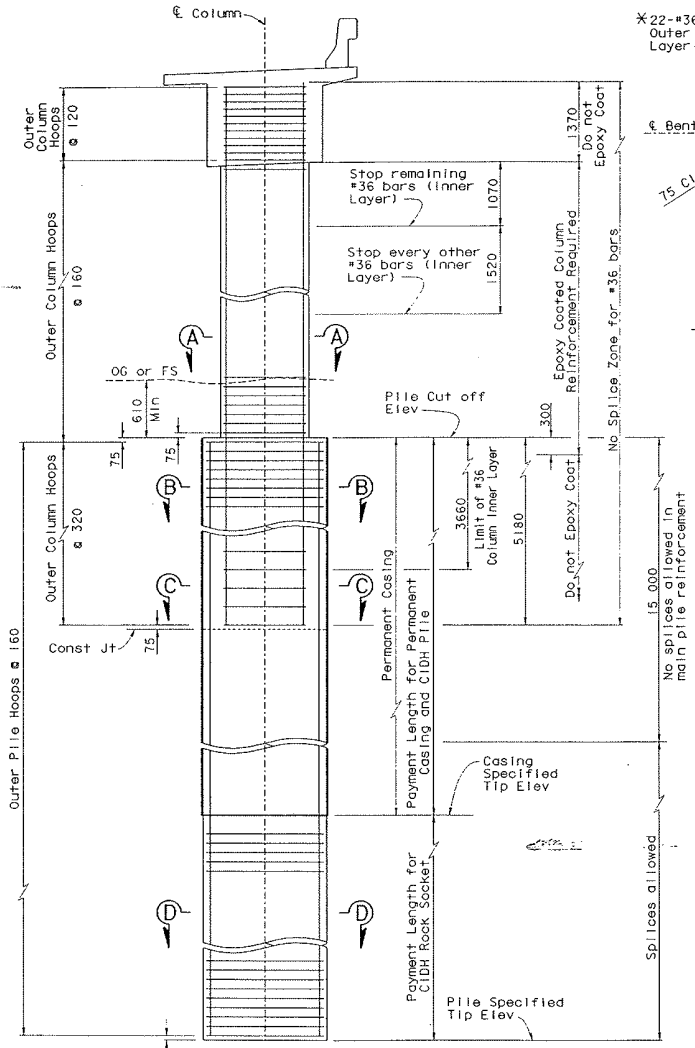

ELEVATION

1:40

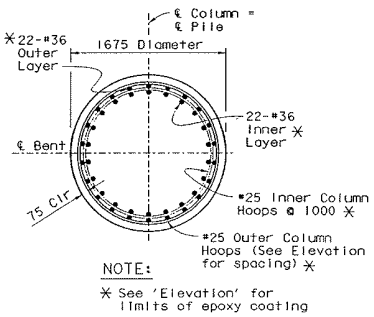

NOTE:
* See 'Elevation' for limits of epoxy coating

SECTION A-A

1:25

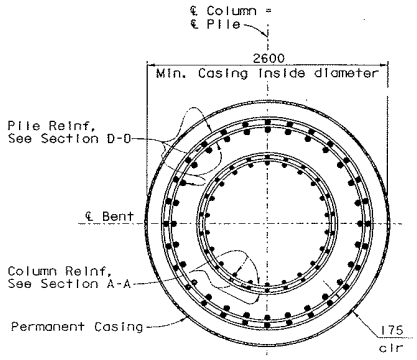

SECTION B-B

1:25

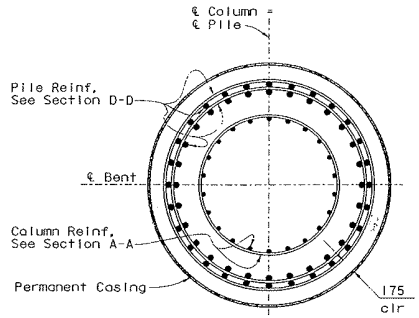

SECTION C-C

1:25

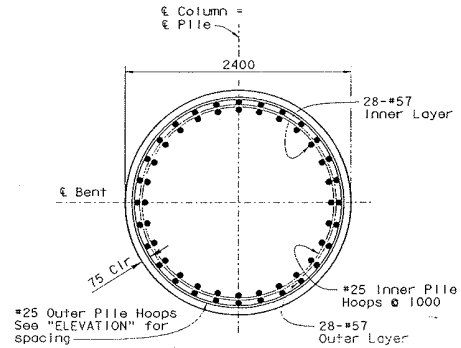

SECTION D-D

1:25

Design Loading				Nominal Resistance							
Support Location/Type & Diameter	Compression kN	Tension kN	Lateral kN	Compression kN	Tension kN	Intended Length of Rock Socket m	Pile Cutoff Elevation m	Permanent Casing Specified Tip Elevation* m	Design Pile Tip Elevation m		Specified Pile Tip Elevation m
Bent 2 / CIDH 2.6 m	N/A	N/A	N/A	7850	0	5.79	+6.50	-11.58	-17.37(1)	-14.23(3)	-17.37
Bent 3 / CIDH 2.6 m	N/A	N/A	N/A	7850	0	6.71	+6.50	-10.97	-17.68(1)	-17.27(3)	-17.68

Note: Design tip elevation is controlled by the following demands: (1) Compression; (2) Tension; (3) Lateral Loads

NOTE:

1. All reinforcement splices and hoop fabrication in Columns and Piles shall conform to Ultimate Splice Requirements

* Includes 610 mm min. embedment into rock socket

ALL DIMENSIONS ARE IN MILLIMETERS UNLESS OTHERWISE SHOWN

	BY	CHECKED
DESIGN	J. HIGAREDA	R. BRIGNANO
DETAILS	D. KUBOCHI	R. BRIGNANO
QUANTITIES	U. INYANG	K. NISHIMOTO

STATE OF CALIFORNIA
DEPARTMENT OF TRANSPORTATION

DIVISION OF STRUCTURES
STRUCTURE DESIGN 11

BRIDGE NO. 57-0511
KILOMETER POST R49.2

BRIDGE ACROSS LOS PENASQUITOS CHANNEL (WIDEN)
BENT COLUMN & PILE DETAILS RIGHT WIDEN

STRUCTURES DESIGN DETAIL SHEET (METRIC) REV. 1/1/99

ORIGINAL SCALE IN MILLIMETERS FOR REDUCED PLANS 0 10 20 30 40 50 60 70 80 90 100

CU 11275
EA 0301U1

DISREGARD PRINTS BEARING EARLIER REVISION DATES

REVISION DATES (PRELIMINARY STAGE ONLY) 08-21-00 08-21-00 11-1-00 1-2-01 1-17-01 04-19-01

SHEET 12 OF 29

FILE => c12rtotcolcat.dgn

USERNAME => 1
DATE PLOTTED => 08-24-2001
TIME PLOTTED => 11:58

DIST	COUNTY	ROUTE	KILOMETER POST TOTAL PROJECT	SHEET No	TOTAL SHEETS
11	SD	5, 56, 805	Var	1309	1549

G.S. Blakesley 05-01-01
REGISTERED CIVIL ENGINEER

9-3-01
PLANS APPROVAL DATE

The State of California or its officers or agents shall not be responsible for the accuracy or completeness of electronic copies of this plan sheet.

REGISTERED PROFESSIONAL ENGINEER G.S. BLAKESLEY No. 45509 Exp. 12-31-02 CIVIL STATE OF CALIFORNIA

Caltrans now has a web site! To get to the web site, go to: http://www.dot.ca.gov

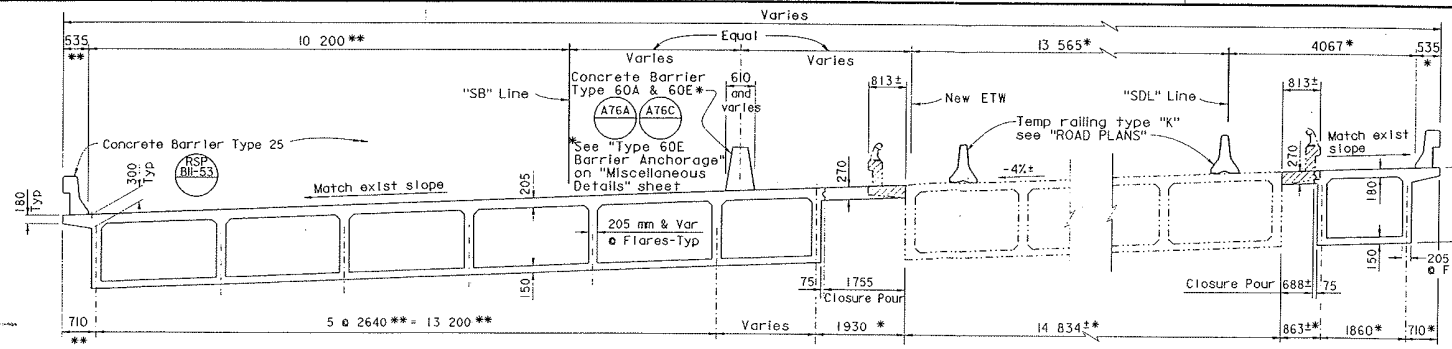

** Measured radial to "SB" Line

* Measured radial to "SDL" Line

TYPICAL SECTION

1:50

Limits of concrete removal

FALSEWORK RELEASE

Alternative 1:

Falsework shall be released as soon as permitted by the specifications. Closure pour shall not be placed sooner than 60 days after the falsework has been released.

Alternative 2:

Falsework shall not be released less than 28 days after the last concrete has been placed. Closure pour shall not be placed sooner than 14 days after the falsework has been released.

When Falsework Release Alternative 2 is used, camber values are 0.75 times those shown.

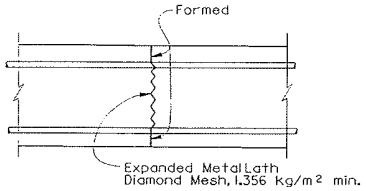

ALTERNATIVE DECK CONSTRUCTION JOINT

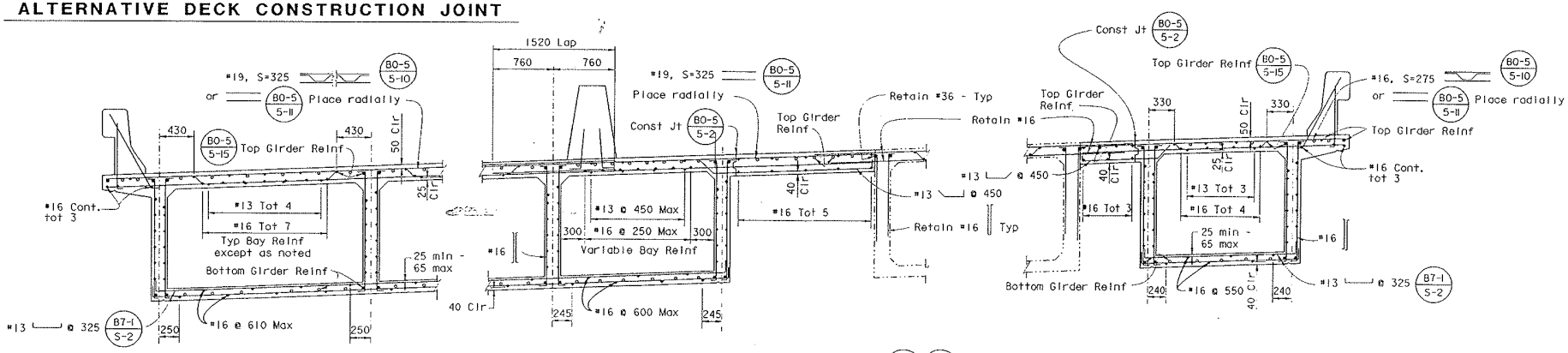

PART TYPICAL SECTION B0-5 B7-1

1:25

NOTE:
THE CONTRACTOR SHALL VERIFY ALL CONTROLLING FIELD DIMENSIONS BEFORE ORDERING OR FABRICATING ANY MATERIAL.

NOTE
For Longitudinal reinforcement see, "TOP GIRDER REINFORCEMENT," and "BOTTOM GIRDER REINFORCEMENT," sheets

ALL DIMENSIONS ARE IN MILLIMETERS UNLESS OTHERWISE SHOWN

DESIGN	BY J. HIGAREDA	CHECKED R. BRIGNANO	
DETAILS	BY K. ENDOW	CHECKED R. BRIGNANO	
QUANTITIES	BY U. INYANG	CHECKED K. NISHIMOTO	

STATE OF CALIFORNIA
DEPARTMENT OF TRANSPORTATION

DIVISION OF STRUCTURES
STRUCTURE DESIGN 11

BRIDGE NO. 57-0511
KILOMETER POST R49.2

BRIDGE ACROSS LOS PENASQUITOS CHANNEL (WIDEN)

TYPICAL SECTION

STRUCTURES DESIGN DETAIL SHEET (METRIC) REV. 9/2/98

ORIGINAL SCALE IN MILLIMETERS FOR REDUCED PLANS 0 10 20 30 40 50 60 70 80 90 100

CU 11275
EA 0301U1

DISREGARD PRINTS BEARING EARLIER REVISION DATES

REVISION DATES (PRELIMINARY STAGE ONLY)

SHEET 13 OF 29

FILE => c13typsec.dgn

USERNAME => tronndo DATE PLOTTED => 11-SEP-2001 TIME PLOTTED => 08:26

DISTRICT	COUNTY	ROUTE	KILOMETER POST TOTAL PROJECT	SHEET No.	TOTAL SHEETS
11	SD	5, 56, 805	Var	81	1549

Arturo G. Jacobo 04-23-01
REGISTERED CIVIL ENGINEER DATE

9-3-01
PLANS APPROVAL DATE

REGISTERED PROFESSIONAL ENGINEER A. G. JACOBO No. 50225 Exp. 06-30-05 CIVIL STATE OF CALIFORNIA

The State of California or its officers or agents shall not be responsible for the accuracy or completeness of electronic copies of this plan sheet.

Caltrans now has a web site! To get to the web site, go to http://www.dot.ca.gov

Caltrans Metric

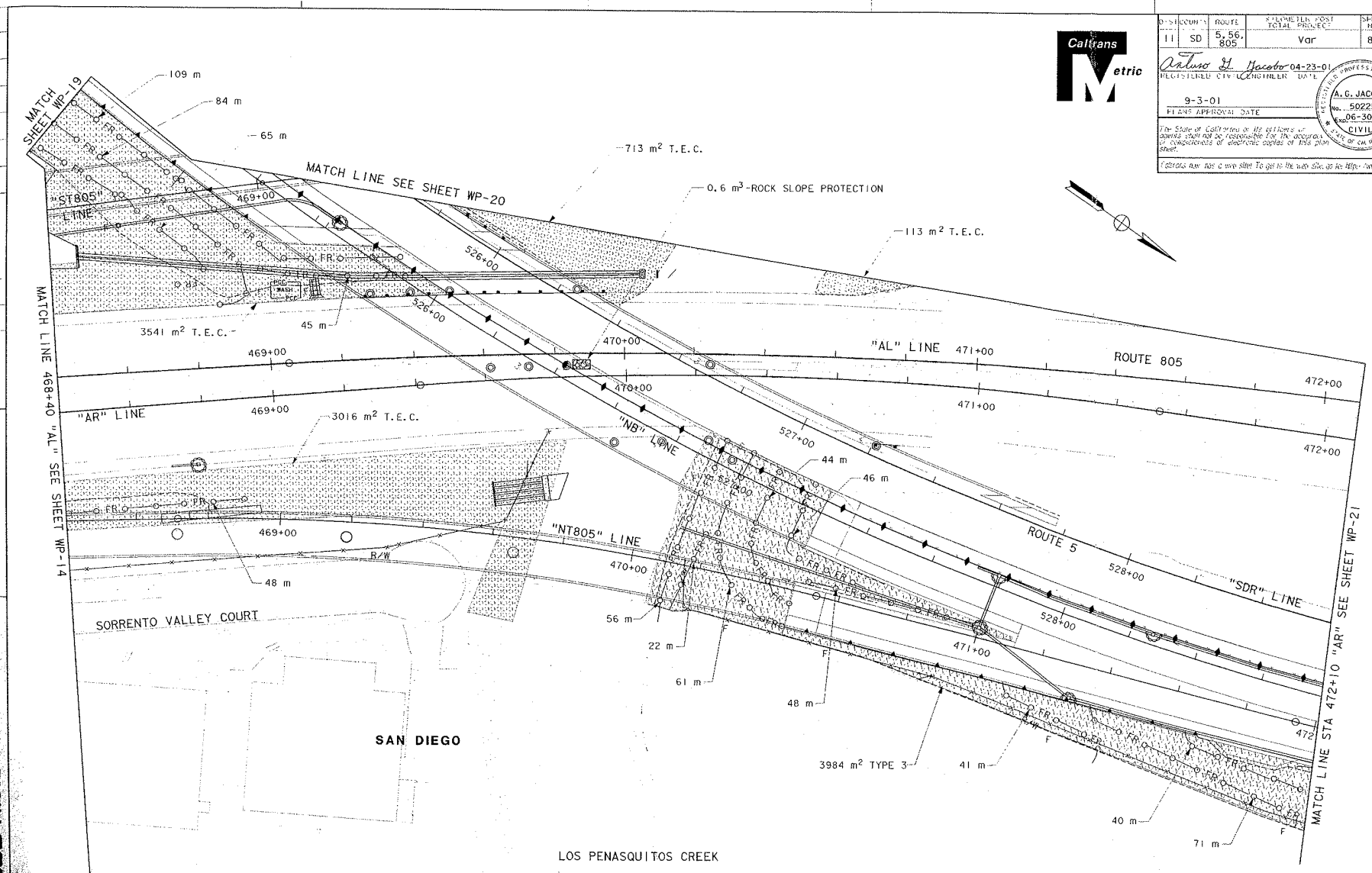

STATE OF CALIFORNIA — DEPARTMENT OF TRANSPORTATION
PROJECT DEVELOPMENT

PROJECT ENGINEER: A. G. JACOBO

CALCULATED/DESIGNED BY
CHECKED BY
DATE REVISED BY
DATE REVISED

WATER POLLUTION CONTROL
STAGE 2

THIS PLAN ACCURATE FOR EROSION CONTROL WORK ONLY

ALL DIMENSIONS ARE IN METERS UNLESS OTHERWISE SHOWN.

SCALE 1:500

WP-15

FOR REDUCED PLANS ORIGINAL SCALE IS IN MILLIMETERS 0 20 40 60 80

USERNAME => tmoi+ess1
DGN FILE - b0301ubc15.dgn

CU 11275 | EA 0301U1

LAST REVISION 08-06-01 | DATE PLOTTED => 08-SEP-2001 | TIME PLOTTED => 07:00

DIST	COUNTY	ROUTE	KILOMETER POST TOTAL PROJECT	SHEET No.
11	SD	5, 56, 805	Var	86

Arturo H. Jacobo 04-23-01
REGISTERED CIVIL ENGINEER DATE

9-3-01
PLANS APPROVAL DATE

REGISTERED PROFESSIONAL ENGINEER A. G. JACOBO No. 50225 Exp. 06-30-08 CIVIL STATE OF CALIFORNIA

The State of California or its officers or agents shall not be responsible for the accuracy or completeness of electronic copies of this plan sheet.

Caltrans has a web site! To get to the web site, go to: http://www.dot.ca.gov

Caltrans Metric

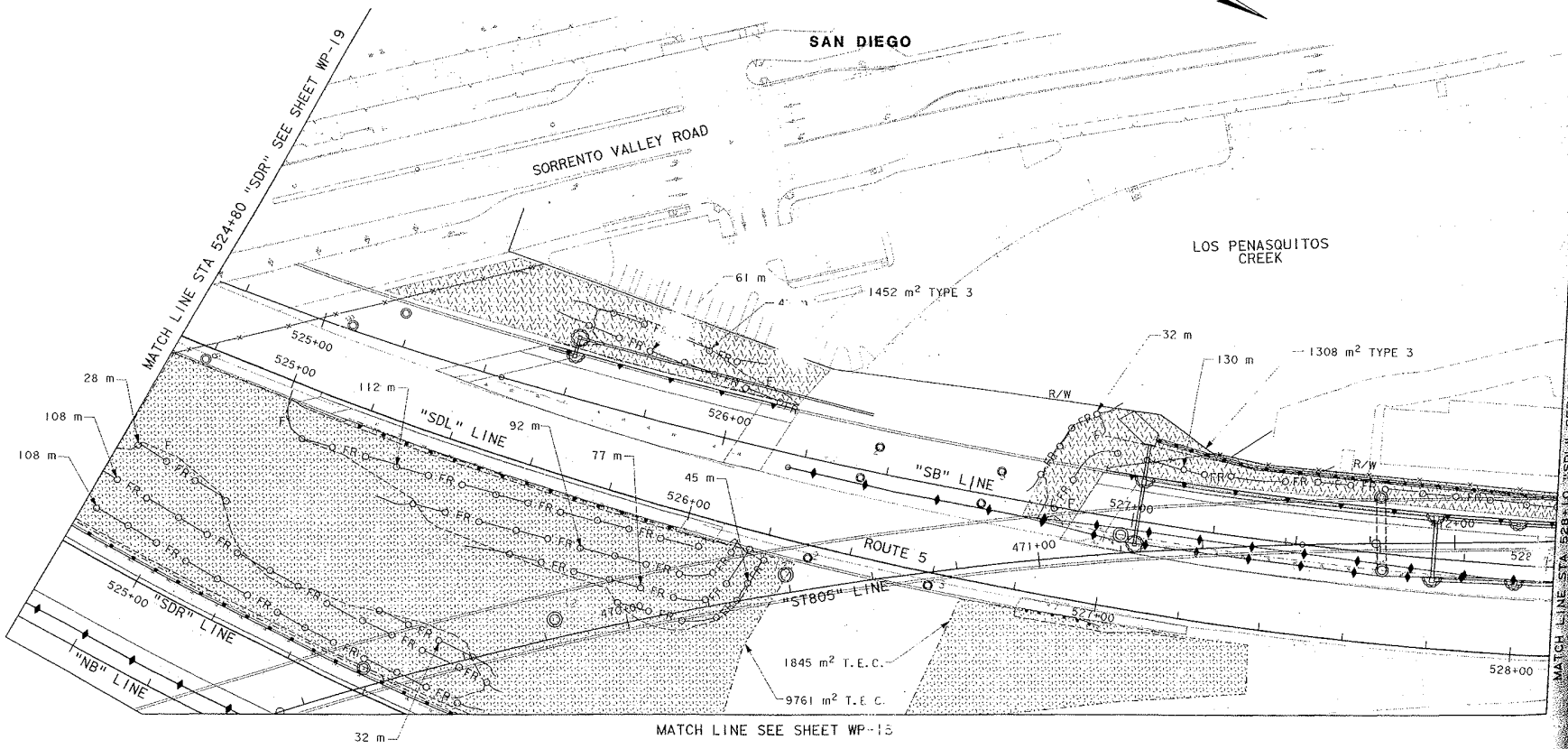

STATE OF CALIFORNIA - DEPARTMENT OF TRANSPORTATION
Caltrans PROJECT DEVELOPMENT

PROJECT ENGINEER A. G. JACOBO

CALCULATED/DESIGNED BY
CHECKED BY

DATE REVISED BY
DATE REVISED

WATER POLLUTION CONTROL
STAGE 2

SCALE 1:500

WP-20

THIS PLAN ACCURATE FOR EROSION CONTROL WORK ONLY

ALL DIMENSIONS ARE IN METERS UNLESS OTHERWISE SHOWN.

FOR REDUCED PLANS ORIGINAL SCALE IS IN MILLIMETERS 0 20 40 60 80

USERNAME => brosire
DGN FILE => bd30tuba20.dgn

CU 11275

EA 0361U1

STATE OF CALIFORNIA - DEPARTMENT OF TRANSPORTATION
PROJECT DEVELOPMENT
PROJECT ENGINEER A. G. JACOBO
CALCULATED/DESIGNED BY
CHECKED BY
DATE REVISED BY
DATE REVISED

DIST	COUNTY	ROUTE	KILOMETER POST TOTAL PROJECT	SHEET No.	TOTAL SHEETS
11	SD	5, 56, 805	Var	131	1549

Caltrans Metric

Arturo G. Jacobo 04-23-01
REGISTERED CIVIL ENGINEER DATE

9-3-01
PLANS APPROVAL DATE

REGISTERED PROFESSIONAL ENGINEER
A. G. JACOBO
No. 50225
Exp. 06-30-05
CIVIL
STATE OF CALIFORNIA

The State of California or its officers or agents shall not be responsible for the accuracy or completeness of electronic copies of this plan sheet.

Caltrans now has a web site! To get to the web site, go to http://www.dot.ca.gov

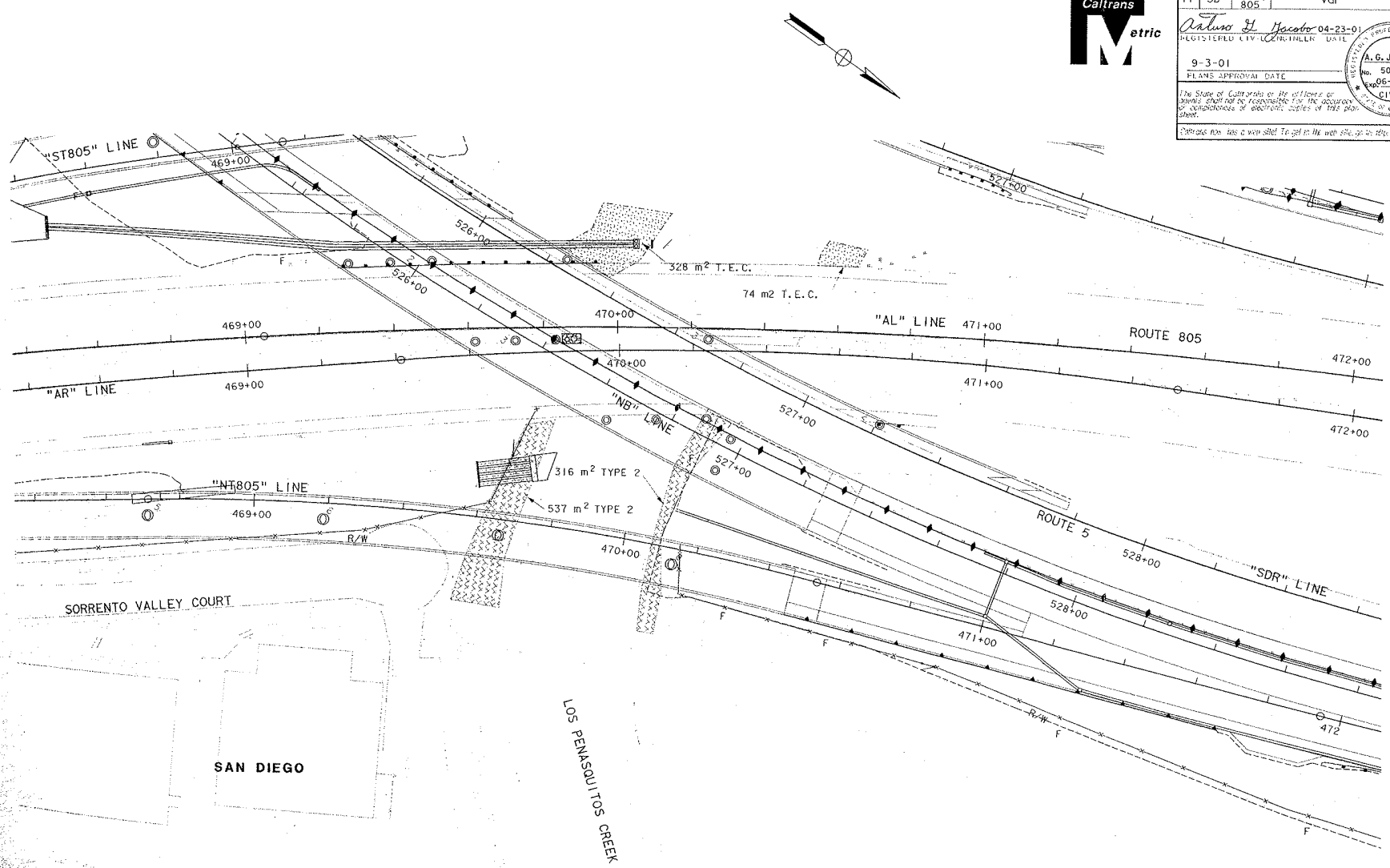

WATER POLLUTION CONTROL
STAGE 4

SCALE 1:500

WP-65

THIS PLAN ACCURATE FOR EROSION CONTROL WORK ONLY

ALL DIMENSIONS ARE IN METERS UNLESS OTHERWISE SHOWN.

FOR REDUCED PLANS ORIGINAL SCALE IS IN MILLIMETERS 0 20 40 60 80

USERNAME => lrolandi
DGN FILE => b0301uec65.dgn

CU 11275

EA 0301U1

LAST REVISION 08-06-01
DATE PLOTTED => 08-SEP-2001
TIME PLOTTED => 08:00

PROJECT DEVELOPMENT
A. G. JACOBO

D-ST	COUNT	ROUTE	KILOMETER POST TOTAL PROJECT	SHEET No.
11	SD	5, 56, 805	Var	132

Caltrans Metric

Arturo G. Jacobo 04-23-01
REGISTERED CIVIL ENGINEER DATE

9-3-01
PLANS APPROVAL DATE

REGISTERED PROFESSIONAL ENGINEER A. G. JACOBO No. 50225 Exp. 06-30-05 CIVIL STATE OF CALIFORNIA

The State of California or its officers or agents shall not be responsible for the accuracy or completeness of electronic copies of this plan sheet.

Caltrans now has a web site! To get to the web site, go to http://www.

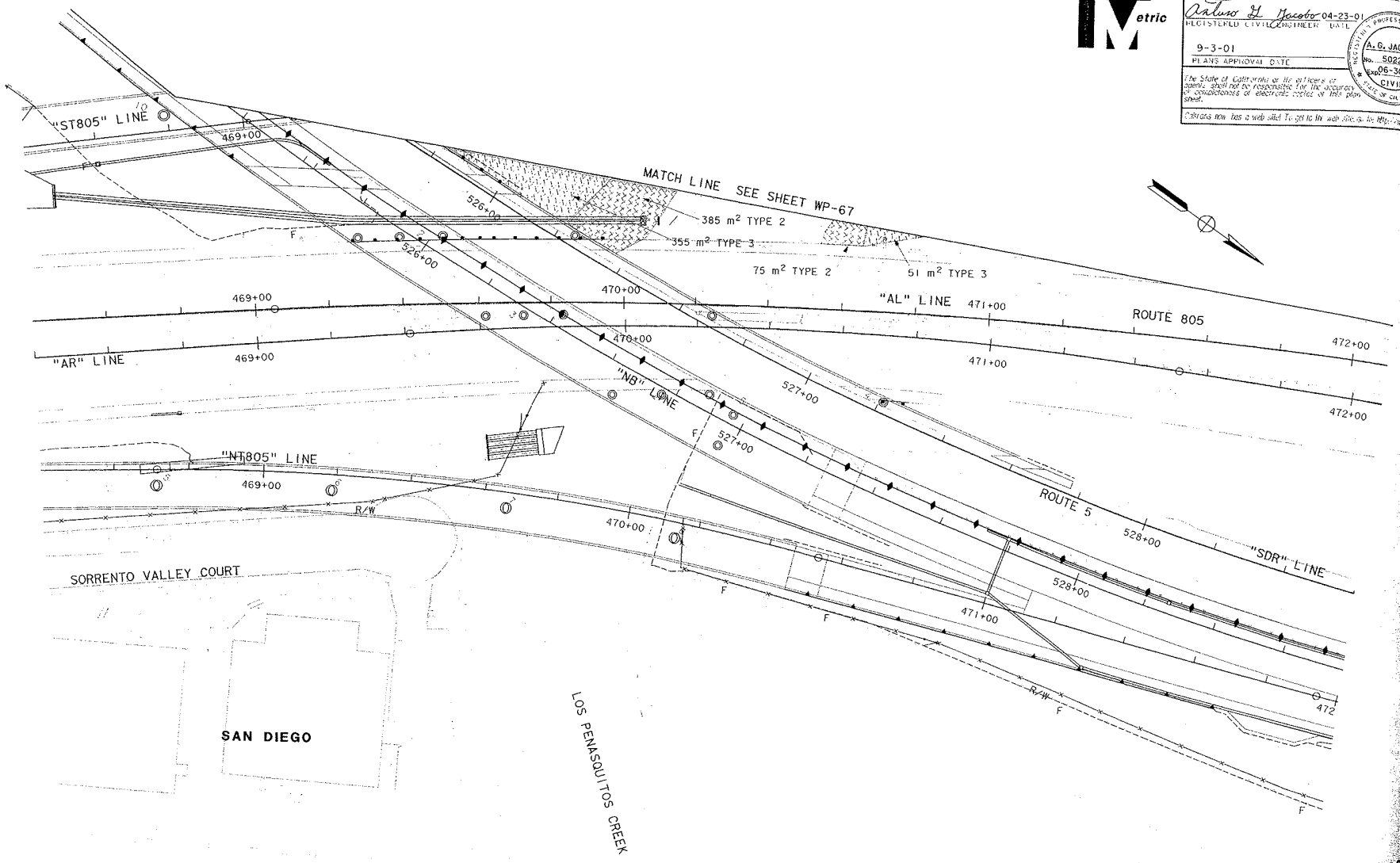

WATER POLLUTION CONTROL
STAGE 5

SCALE 1:500

WP-6

THIS PLAN ACCURATE FOR EROSION CONTROL WORK ONLY

ALL DIMENSIONS ARE IN METERS UNLESS OTHERWISE SHOWN.

FOR REDUCED PLANS ORIGINAL SCALE IS IN MILLIMETERS 0 20 40 60 80

USERNAME => lcolandt
DGN FILE => b0301uec66.dgn

CU 11275 | EA 0301U1

STATE OF CALIFORNIA - DEPARTMENT OF TRANSPORTATION
Caltrans PROJECT DEVELOPMENT

PROJECT ENGINEER A. G. JACOBO

CALCULATED/DESIGNED BY | DATE | REVISED BY
CHECKED BY | DATE REVISED

STATE OF CALIFORNIA - DEPARTMENT OF TRANSPORTATION
Caltrans PROJECT DEVELOPMENT

PROJECT ENGINEER A. G. JACOBO

CALCULATED/DESIGNED BY | DATE | REVISED BY
CHECKED BY | DATE REVISED

STATE OF CALIFORNIA - DEPARTMENT OF TRANSPORTATION - DIVISION OF STRUCTURES

DIST	COUNTY	ROUTE	KILOMETER POST TOTAL PROJECT
11	SD	5/805	

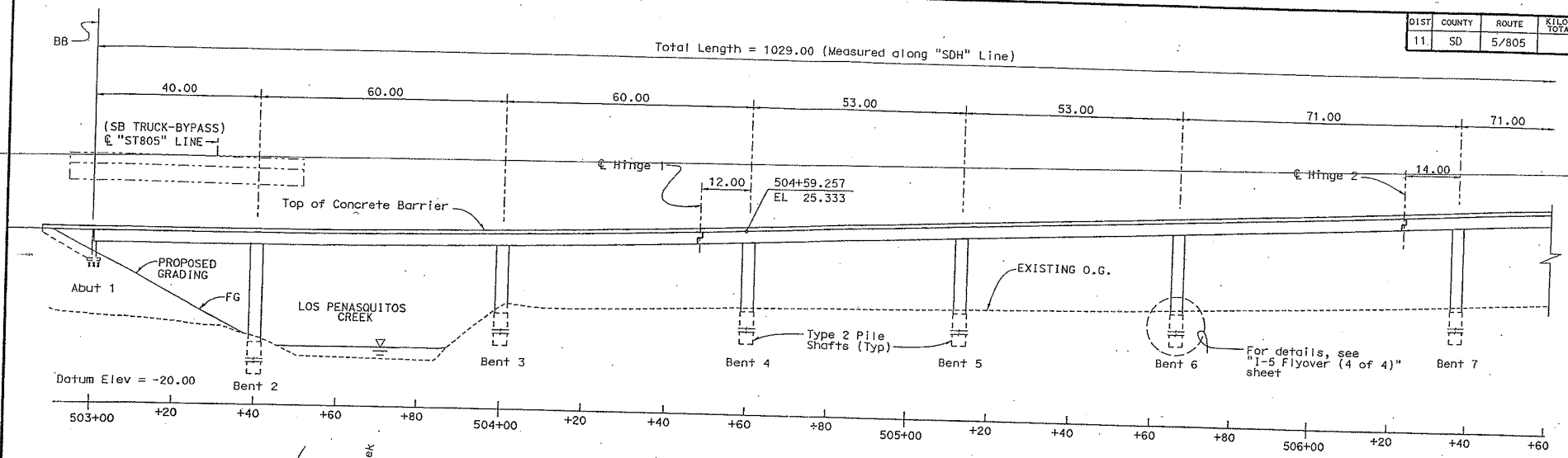

ELEVATION
1:1000

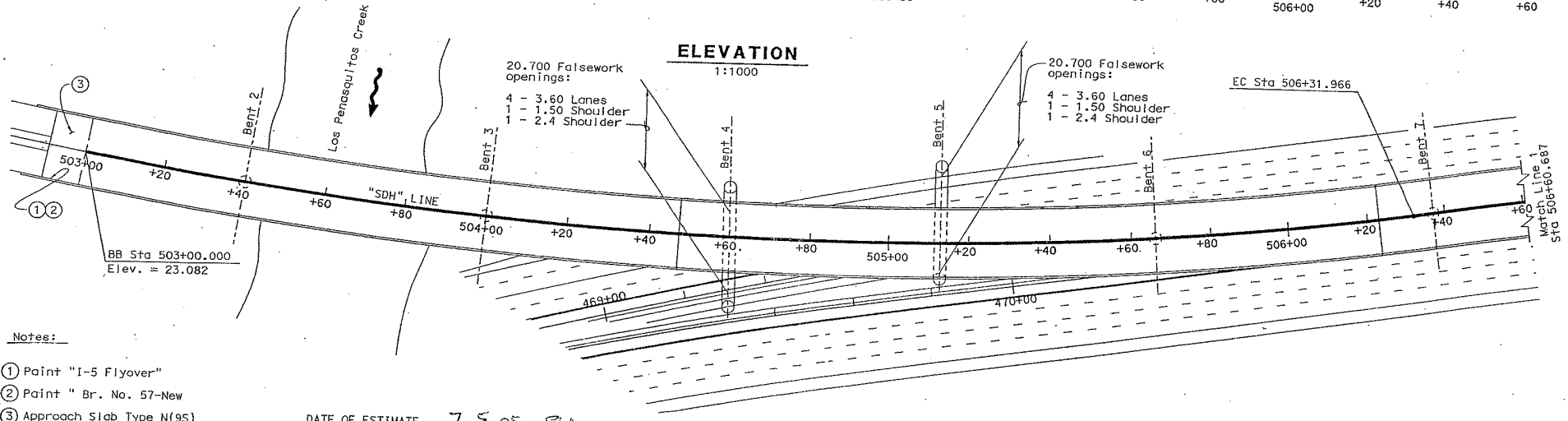

Notes:

1. Paint "I-5 Flyover"
2. Paint " Br. No. 57-New
3. Approach Slab Type N(9S)

DATE OF ESTIMATE	7-5-05 - PGA
BRIDGE REMOVAL	= N/A
STRUCTURE DEPTH	= 2.84 m
LENGTH	= 1029.00 m
WIDTH	= 17.70 m
AREA	= 18,213 m²
COST/ □M INCLUDING 10% MOBILIZATION & 25% CONTINGENCY	= $1945
TOTAL COST	= $35,426,000

PLAN
1:1000

ALL DIMENSIONS ARE IN METERS UNLESS OTHERWISE SHOWN

DESIGNED BY Gary Hight	DATE 6/05	STRUCTURE DESIGN SECTION 18
DRAWN BY D. Elliott	DATE 6/05	
CHECKED BY	DATE	
APPROVED	DATE	

PLANNING STUDY

I-5 Flyover (1 of 4)

BRIDGE NO. 57-New | CU 11

NAME => delliott DATE PLOTTED => 09-JUN-2005 TIME PLOTTED => 09:25

STATE CALIFORNIA - DEPARTMENT OF TRANSPORTATION - DIVISION OF STRUCTURES

DIST	COUNTY	ROUTE	KILOMETER POST TOTAL PROJECT
11	SD	5/805	

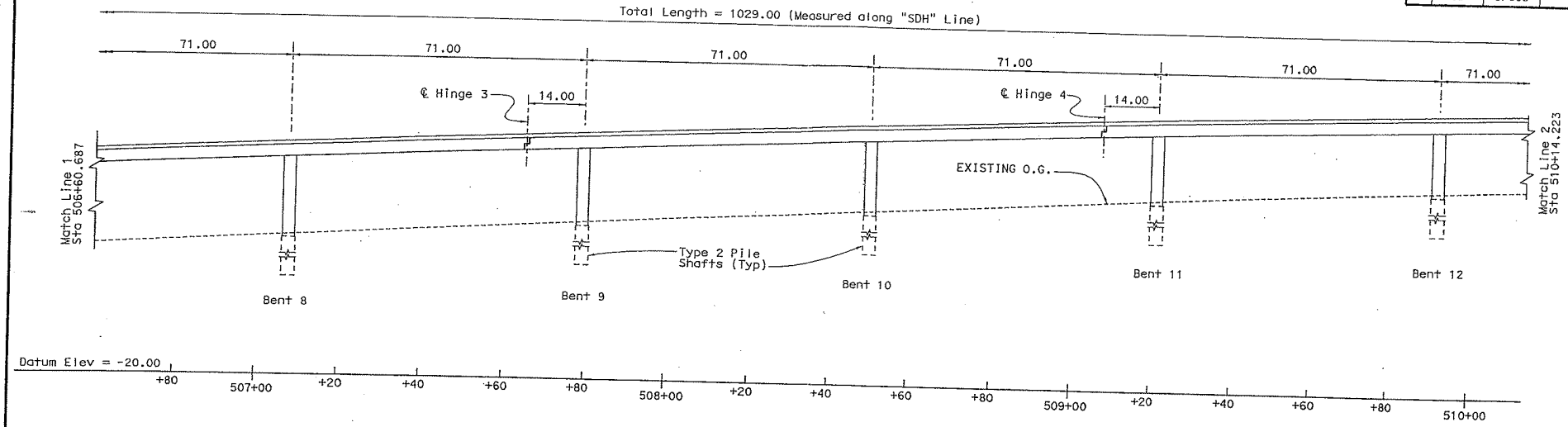

ELEVATION
1:1000

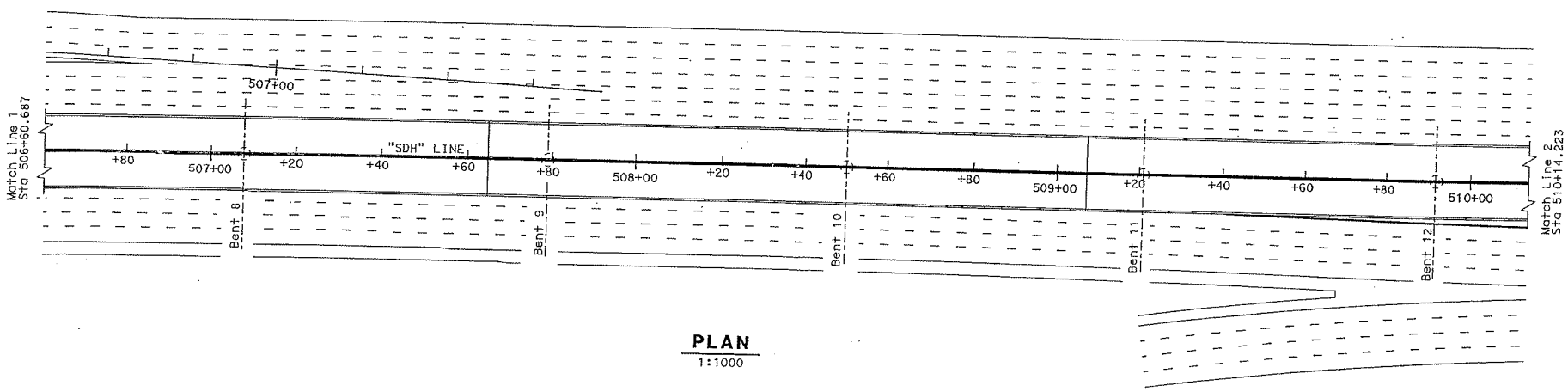

PLAN
1:1000

ALL DIMENSIONS ARE IN METERS UNLESS OTHERWISE SHOWN

DESIGNED BY Gary Hight	DATE 6/05	STRUCTURE DESIGN SECTION 18
DRAWN BY D. Elliott	DATE 6/05	
CHECKED BY	DATE	
APPROVED	DATE	

PLANNING STUDY

I-5 Flyover (2 of 4)

BRIDGE NO. 57-New | CU 11

Caltrans Metric

NAME => delliott DATE PLOTTED => 08-JUN-2005 TIME PLOTTED => 07:13

STATE CALIFORNIA - DEPARTMENT OF TRANSPORTATION - DIVISION OF STRUCTURES

DIST	COUNTY	ROUTE	KILOMETER POST TOTAL PROJECT
11	SD	5/805	

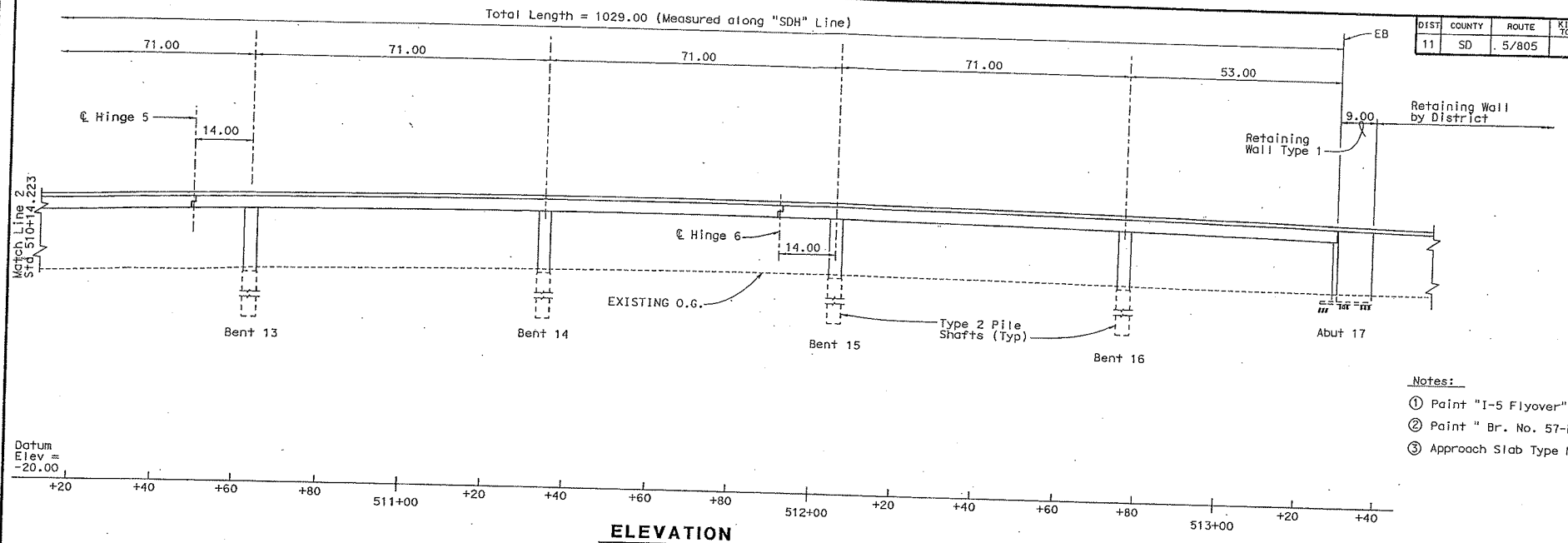

Notes:

① Paint "I-5 Flyover"

② Paint " Br. No. 57-New

③ Approach Slab Type N(9S)

ELEVATION

1:1000

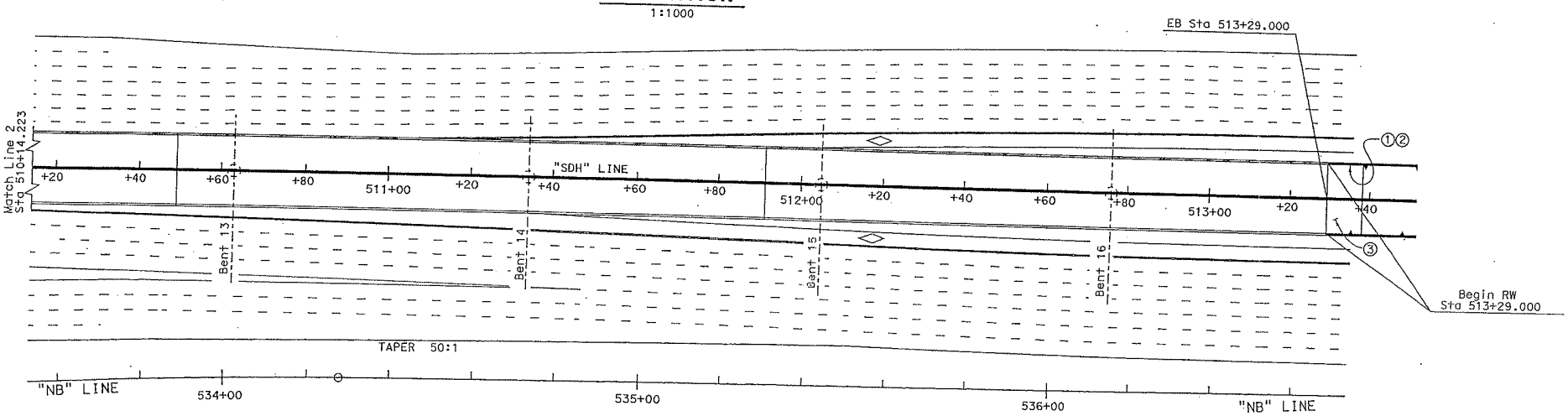

PLAN

1:1000

ALL DIMENSIONS ARE IN METERS UNLESS OTHERWISE SHOWN

DESIGNED BY Gary Hight	DATE 6/05	STRUCTURE DESIGN SECTION 18
DRAWN BY D. Elliott	DATE 6/05	
CHECKED BY	DATE	
APPROVED	DATE	

PLANNING STUDY

I-5 Flyover (3 of 4)

BRIDGE NO. 57-New | CU 11

AME => delliott DATE PLOTTED => 08-JUN-2005 TIME PLOTTED => 07:15

STATE OF CALIFORNIA - DEPARTMENT OF TRANSPORTATION - DIVISION OF STRUCTURES

DIST	COUNTY	ROUTE	KILOMETER POST TOTAL PROJECT
11	SD	5/805	

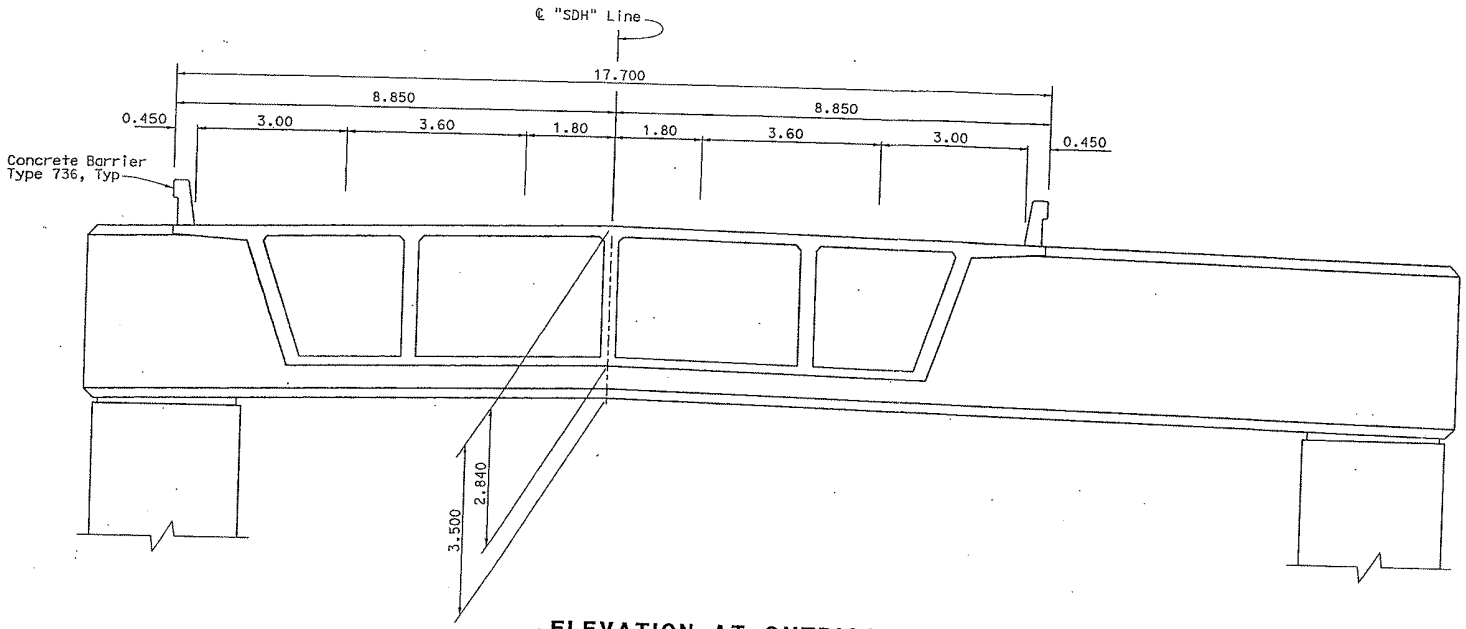

ELEVATION AT OUTRIGGER BENTS

1:100

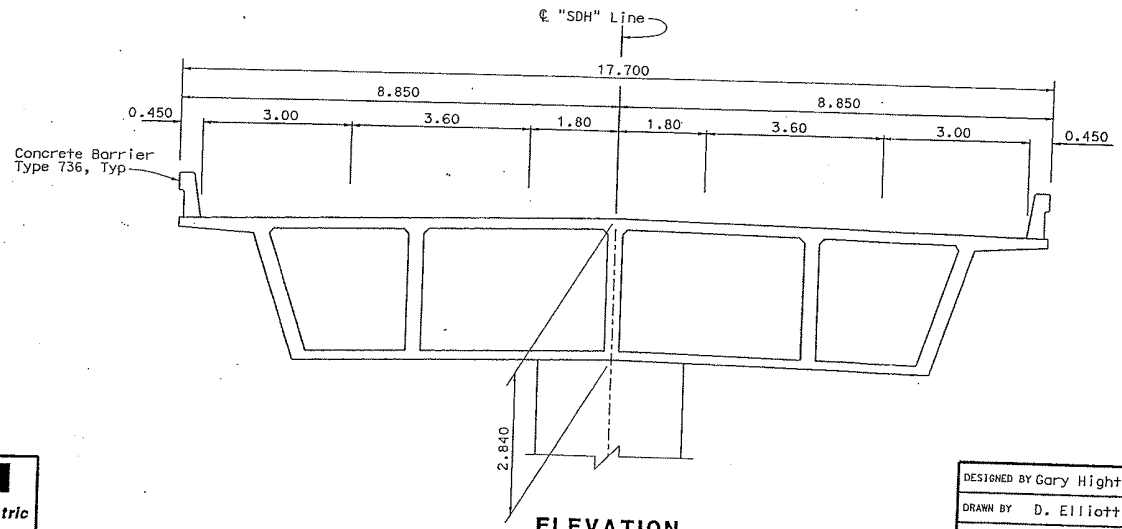

ELEVATION

1:100

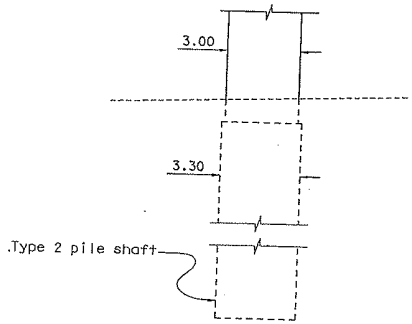

PILE SHAFT DETAIL

1:100

ALL DIMENSIONS ARE IN METERS UNLESS OTHERWISE SHOWN

DESIGNED BY Gary Hight	DATE 6/05	STRUCTURE DESIGN SECTION 18	PLANNING STUDY
DRAWN BY D. Elliott	DATE 6/05		I-5 Flyover (4 of 4)
CHECKED BY	DATE		BRIDGE NO. 57-New / CU 11
APPROVED	DATE		SCALE: As shown / EA 235800

Caltrans Metric

SERNAME => delliott DATE PLOTTED => 09-JUN-2005 TIME PLOTTED => 08:38

Federal Emergency Management Agency

Washington, D.C. 20472

MAR 18 2004

CERTIFIED MAIL
RETURN RECEIPT REQUESTED

The Honorable Dick Murphy
Mayor, City of San Diego
202 C Street, 11th Floor
San Diego, CA 92101

IN REPLY REFER TO:

Case No.:	04-09-0108P
Community Name:	City of San Diego, CA
Community No.:	060295
Effective Date of This Revision:	JUL 15 2004

Dear Mayor Murphy:

The Flood Insurance Study report and Flood Insurance Rate Map for your community have been revised by this Letter of Map Revision (LOMR). Please use the enclosed annotated map panel(s) revised by this LOMR for floodplain management purposes and for all flood insurance policies and renewals issued in your community.

Additional documents are enclosed which provide information regarding this LOMR. Please see the List of Enclosures below to determine which documents are included. Other attachments specific to this request may be included as referenced in the Determination Document. If you have any questions regarding floodplain management regulations for your community or the National Flood Insurance Program (NFIP) in general, please contact the Consultation Coordination Officer for your community. If you have any technical questions regarding this LOMR, please contact the Director, Federal Insurance and Mitigation Division of the Department of Homeland Security's Federal Emergency Management Agency (FEMA) in Oakland, California, at (510) 627-7103, or the FEMA Map Assistance Center toll free at 1-877-336-2627 (1-877-FEMA MAP). Additional information about the NFIP is available on our website at http://www.fema.gov/nfip.

Sincerely,

Max H. Yuan, P.E., Project Engineer
Hazard Identification Section
Mitigation Division
Emergency Preparedness
and Response Directorate

For: Doug Bellomo, P.E., CFM, Acting Chief
Hazard Identification Section
Mitigation Division
Emergency Preparedness
and Response Directorate

List of Enclosures:
- Letter of Map Revision Determination Document
- Annotated Flood Insurance Rate Map
- Annotated Flood Insurance Study Report

cc: Mr. Walter Gefrom, CFM
Floodplain Manager
Transportation & Drainage Design Division
City of San Diego

[redacted], M.S., P.E.
Chang Consultants

Federal Emergency Management Agency

Washington, D.C. 20472

LETTER OF MAP REVISION DETERMINATION DOCUMENT

COMMUNITY AND REVISION INFORMATION		PROJECT DESCRIPTION	BASIS OF REQUEST
COMMUNITY	City of San Diego San Diego County California	BRIDGE	HYDRAULIC ANALYSIS NEW TOPOGRAPHIC DATA
	COMMUNITY NO.: 060295		
IDENTIFIER	Vista Sorrento Parkway Bridge	APPROXIMATE LATITUDE & LONGITUDE: 32.715, -117.156 SOURCE: USGS QUADRANGLE DATUM: NAD 83	
FLOODING SOURCE(S) & REVISED REACH(ES)	Los Penasquitos Creek – from just downstream of Interstate Highway 5 (southbound) to approximately 6,500 feet upstream of Vista Sorrento Parkway		

SUMMARY OF REVISIONS

Effective Flooding:	Zone AE	Zone X (shaded)	Floodway	BFEs*	Zone X (shaded)
Revised Flooding:	Zone AE	Zone AE	Floodway	BFEs	Zone X (shaded)
Increases:	YES	YES	YES	YES	YES
Decreases:	YES	YES	YES	YES	YES

* BFEs – Base Flood Elevations

ANNOTATED MAPPING ENCLOSURES			ANNOTATED STUDY ENCLOSURES
TYPE: FIRM*	NO.: 06073C1336 F	Date: June 19, 1997	DATE OF EFFECTIVE FLOOD INSURANCE STUDY: July 2, 2002
TYPE: FIRM	NO.: 06073C1337 F	Date: June 19, 1997	FLOODWAY DATA TABLE: 8
TYPE: FIRM	NO.: 06073C1338 F	Date: June 19, 1997	PROFILE: 170P
TYPE: FIRM	NO.: 06073C1339 F	Date: June 19, 1997	PROFILE: 171P

* FIRM – Flood Insurance Rate Map; ** FBFM – Flood Boundary and Floodway Map; *** FHBM – Flood Hazard Boundary Map

DETERMINATION

This document provides the determination from the Department of Homeland Security's Federal Emergency Management Agency (FEMA) regarding a request for a Letter of Map Revision (LOMR) for the area described above. Using the information submitted, we have determined that a revision to the flood hazards depicted in the Flood Insurance Study (FIS) report and/or National Flood Insurance Program (NFIP) map is warranted. This document revises the effective NFIP map, as indicated in the attached documentation. Please use the enclosed annotated map panels revised by this LOMR for floodplain management purposes and for all flood insurance policies and renewals in your community.

This determination is based on the flood data presently available. The enclosed documents provide additional information regarding this determination. If you have any questions about this document, please contact the FEMA Map Assistance Center toll free at 1-877-336-2677 (1-877-FEMA MAP) or by letter addressed to the LOMR Depot, 3601 Eisenhower Avenue, Alexandria, VA 22304. Additional information about the NFIP is available on our website at http://www.fema.gov/nfip.

Doug Bellomo, P.E., CFM, Acting Chief
Hazard Identification Section
Mitigation Division
Emergency Preparedness and Response Directorate

102426DA04090108E102IAC

Federal Emergency Management Agency
Washington, D.C. 20472

LETTER OF MAP REVISION DETERMINATION DOCUMENT (CONTINUED)

COMMUNITY INFORMATION

APPLICABLE NFIP REGULATIONS/COMMUNITY OBLIGATION

We have made this determination pursuant to Section 206 of the Flood Disaster Protection Act of 1973 (P.L. 93-234) and in accordance with the National Flood Insurance Act of 1968, as amended (Title XIII of the Housing and Urban Development Act of 1968, P.L. 90-448), 42 U.S.C. 4001-4128, and 44 CFR Part 65. Pursuant to Section 1361 of the National Flood Insurance Act of 1968, as amended, communities participating in the NFIP are required to adopt and enforce floodplain management regulations that meet or exceed NFIP criteria. These criteria, including adoption of the FIS report and FIRM, and the modifications made by this LOMR, are the minimum requirements for continued NFIP participation and do not supersede more stringent State/Commonwealth or local requirements to which the regulations apply.

We provide the floodway designation to your community as a tool to regulate floodplain development. Therefore, the floodway revision we have described in this letter, while acceptable to us, must also be acceptable to your community and adopted by appropriate community action, as specified in Paragraph 60.3(d) of the NFIP regulations.

NFIP regulations Subparagraph 60.3(b)(7) requires communities to ensure that the flood-carrying capacity within the altered or relocated portion of any watercourse is maintained. This provision is incorporated into your community's existing floodplain management rdinances; therefore, responsibility for maintenance of the bridge rests with your community. We may request that your community ubmit a description and schedule of bridge activities.

COMMUNITY REMINDERS

We based this determination on the 1-percent-annual-chance flood discharges computed in the FIS for your community without considering subsequent changes in watershed characteristics that could increase flood discharges. Future development of projects upstream could cause increased flood discharges, which could cause increased flood hazards. A comprehensive restudy of your community's flood hazards would consider the cumulative effects of development on flood discharges subsequent to the publication of the FIS report for your community and could, therefore, establish greater flood hazards in this area.

Your community must regulate all proposed floodplain development and ensure that permits required by Federal and/or State/Commonwealth law have been obtained. State/Commonwealth or community officials, based on knowledge of local conditions and in the interest of safety, may set higher standards for construction or may limit development in floodplain areas. If your State/Commonwealth or community has adopted more restrictive or comprehensive floodplain management criteria, those criteria take precedence over the minimum NFIP requirements.

This determination is based on the flood data presently available. The enclosed documents provide additional information regarding this determination. If you have any questions about this document, please contact the FEMA Map Assistance Center toll free at 1-877-336-2677 (1-877-FEMA MAP) or by letter addressed to the LOMR Depot, 3601 Eisenhower Avenue, Alexandria, VA 22304. Additional information about the NFIP is available on our website at http://www.fema.gov/nfip.

Doug Bellomo, P.E., CFM, Acting Chief
Hazard Identification Section
Mitigation Division
Emergency Preparedness and Response Directorate

102426DA04090108E102IAC

Federal Emergency Management Agency
Washington, D.C. 20472

LETTER OF MAP REVISION DETERMINATION DOCUMENT (CONTINUED)

COMMUNITY INFORMATION (CONTINUED)

We will not print and distribute this LOMR to primary users, such as local insurance agents or mortgage lenders; instead, the community will serve as a repository for the new data. We encourage you to disseminate the information in this LOMR by preparing a news release for publication in your community's newspaper that describes the revision and explains how your community will provide the data and help interpret the NFIP maps. In that way, interested persons, such as property owners, insurance agents, and mortgage lenders, can benefit from the information.

We have designated a Consultation Coordination Officer (CCO) to assist your community. The CCO will be the primary liaison between your community and FEMA. For information regarding your CCO, please contact:

Ms. Sally M. Ziolkowski
Director, Federal Insurance and Mitigation Division
Federal Emergency Management Agency, Region IX
1111 Broadway Street, Suite 1200
Oakland, CA 94607-4052
(510) 627-7103

STATUS OF THE COMMUNITY NFIP MAPS

We will not physically revise and republish the FIRM and FIS report for your community to reflect the modifications made by this LOMR at this time. When changes to the previously cited FIRM panels and FIS report warrant physical revision and republication in the future, we will incorporate the modifications made by this LOMR at that time.

This determination is based on the flood data presently available. The enclosed documents provide additional information regarding this determination. If you have any questions about this document, please contact the FEMA Map Assistance Center toll free at 1-877-336-2677 (1-877-FEMA MAP) or by letter addressed to the LOMR Depot, 3601 Eisenhower Avenue, Alexandria, VA 22304. Additional information about the NFIP is available on our website at http://www.fema.gov/nfip.

Doug Bellomo, P.E., CFM, Acting Chief
Hazard Identification Section
Mitigation Division
Emergency Preparedness and Response Directorate

102426DA04090108E102IAC

Federal Emergency Management Agency
Washington, D.C. 20472

LETTER OF MAP REVISION
DETERMINATION DOCUMENT (CONTINUED)

PUBLIC NOTIFICATION OF REVISION

Within 90 days of the second publication in the local newspaper, a citizen may request that we reconsider this determination. Any request for reconsideration must be based on scientific or technical data. Therefore, this letter will be effective only after the 90-day appeal period has elapsed and we have resolved any appeals that we receive during this appeal period. Until this LOMR is effective, the revised BFEs presented in this LOMR may be changed.

This information will be published in the *Federal Register* and your local newspaper as detailed below.

LOCAL NEWSPAPER Name: *San Diego Daily Transcript*
Dates: 04/08/2004 04/15/2004

PUBLIC NOTIFICATION

FLOODING SOURCE	LOCATION OF REFERENCED ELEVATION	BFE (FEET NGVD)		MAP PANEL NUMBER(S)
		EFFECTIVE	REVISED	
Los Penasquitos Creek	Approximately 30 feet downstream of Interstate Highway 805 (southbound)	36	35	06073C1338 F
	Approximately 2,500 feet upstream of Vista Sorrento Parkway	40	45	06073C1337 F 06073C1339 F

This determination is based on the flood data presently available. The enclosed documents provide additional information regarding this determination. If you have any questions about this document, please contact the FEMA Map Assistance Center toll free at 1-877-336-2677 (1-877-FEMA MAP) or by letter addressed to the LOMR Depot, 3601 Eisenhower Avenue, Alexandria, VA 22304. Additional information about the NFIP is available on our website at http://www.fema.gov/nfip.

Doug Bellomo, P.E., CFM, Acting Chief
Hazard Identification Section
Mitigation Division
Emergency Preparedness and Response Directorate 102426DA04090108E102IAC

CHANGES ARE MADE IN DETERMINATIONS OF BASE FLOOD ELEVATIONS FOR THE CITY OF SAN DIEGO, SAN DIEGO COUNTY, CALIFORNIA, UNDER THE NATIONAL FLOOD INSURANCE PROGRAM

On June 19, 1997, the Department of Homeland Security's Federal Emergency Management Agency identified Special Flood Hazard Areas (SFHAs) in the City of San Diego, San Diego County, California, through issuance of a Flood Insurance Rate Map (FIRM). The Mitigation Division has determined that modification of the elevations of the flood having a 1-percent chance of being equaled or exceeded in any given year (base flood) for certain locations in this community is appropriate. The modified Base Flood Elevations (BFEs) revise the FIRM for the community.

The changes are being made pursuant to Section 206 of the Flood Disaster Protection Act of 1973 (Public Law 93-234) and are in accordance with the National Flood Insurance Act of 1968, as amended (Title XIII of the Housing and Urban Development Act of 1968, Public Law 90-448), 42 U.S.C. 4001-4128, and 44 CFR Part 65.

A hydraulic analysis was performed to incorporate updated topographic information and the effects of the existing Interstate Highway 805 northbound and southbound bridges and the new Vista Serrento Parkway bridge along Los Penasquitos Creek. This has resulted in a revised delineation of the regulatory floodway, increases and decreases in SFHA width, and increased and decreased BFEs for Los Penasquitos Creek. The table below indicates existing and modified BFEs for selected locations along the affected lengths of the flooding source(s) cited above.

Location	Existing BFE (feet)*	Modified BFE (feet)*
Approximately 30 feet downstream of Interstate Highway 805 (southbound)	36	35
Approximately 2,500 feet upstream of Vista Sorrento Parkway	40	45

*National Geodetic Vertical Datum, rounded to nearest whole foot

Under the above-mentioned Acts of 1968 and 1973, the Mitigation Division must develop criteria for floodplain management. To participate in the National Flood Insurance Program (NFIP), the community must use the modified BFEs to administer the floodplain management measures of the NFIP. These modified BFEs will also be used to calculate the appropriate flood insurance premium rates for new buildings and their contents and for the second layer of insurance on existing buildings and contents.

Upon the second publication of notice of these changes in this newspaper, any person has 90 days in which he or she can request, through the Chief Executive Officer of the community, that the Mitigation Division reconsider the determination. Any request for reconsideration must be based on knowledge of changed conditions or new scientific or technical data. All interested parties are on notice that until the 90-day period elapses, the Mitigation Division's determination to modify the BFEs may itself be changed.

Any person having knowledge or wishing to comment on these changes should immediately notify:

The Honorable Dick Murphy
Mayor, City of San Diego
202 C Street, 11th Floor
San Diego, CA 92101

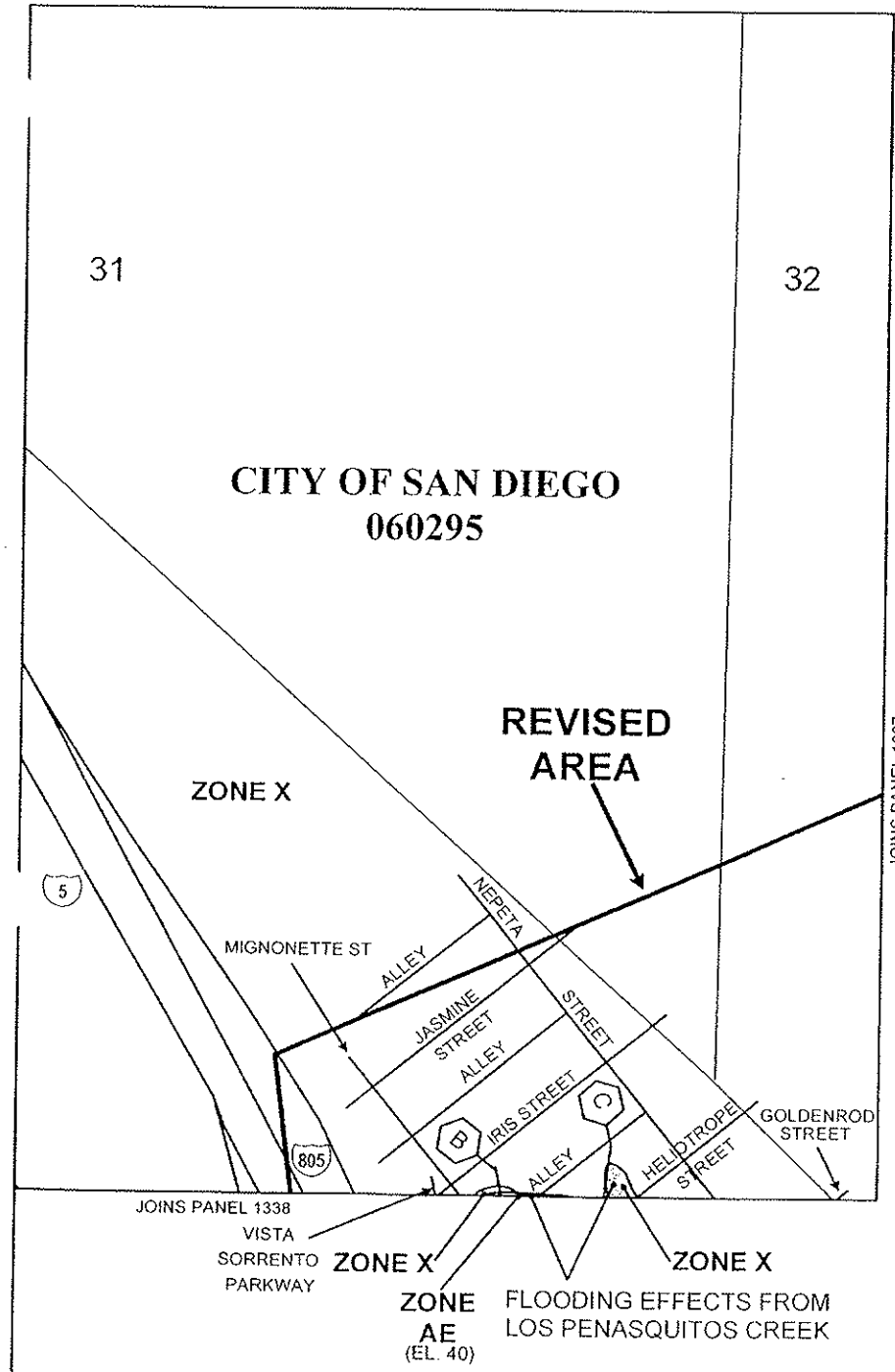

APPROXIMATE SCALE IN FEET

500 250 0 500

NATIONAL FLOOD INSURANCE PROGRAM

FIRM
FLOOD INSURANCE RATE MAP

SAN DIEGO COUNTY, CALIFORNIA
AND INCORPORATED AREAS

PANEL 1336 OF 2375
(SEE MAP INDEX FOR PANELS NOT PRINTED)

CONTAINS:

COMMUNITY	NUMBER	PANEL	SUFFIX
SAN DIEGO COUNTY UNINCORPORATED AREAS	060284	1336	F
SAN DIEGO, CITY OF	060295	1336	F

RED TO
LECT LOMR
ED JUL 15 2004

MAP NUMBER
06073C1336 F

EFFECTIVE DATE:
JUNE 19, 1997

Federal Emergency Management Agency

FLOODING SOURCE		FLOODWAY			BASE FLOOD WATER-SURFACE ELEVATION			
CROSS SECTION	DISTANCE[1]	WIDTH (FEET)	SECTION AREA (SQUARE FEET)	MEAN VELOCITY (FEET PER SECOND)	REGULATORY	WITHOUT FLOODWAY	WITH FLOODWAY	INCREASE
					(FEET NGVD)			
Los Penasquitos Creek				REVISED DATA				
A	1,470	150	1,504	12.1	35.3	35.3	35.7	0.4
B	2,044	289	3,226	5.1	40.1	40.1	40.1	0.0
C	2,279	360	4,430	3.5	40.3	40.3	40.3	0.0
D	2,569	265	2,490	7.4	40.5	40.5	40.5	0.0
E	2,909	202	2,492	6.8	41.0	41.0	41.4	0.4
F	3,249	222	2,547	6.6	42.0	42.0	42.5	0.5
G	3,619	271	2,966	5.7	43.0	43.0	43.7	0.7
H	4,339	399	4,080	4.2	45.3	45.3	46.1	0.8
I	5,545	500	3,743	4.8	45.9	45.9	46.6	0.7
J	5,905	530	3,770	4.3	45.9	45.9	46.8	0.9
K	6,283	600	3,503	4.9	46.2	46.2	47.0	0.8
L	6,915	600	2,252	7.3	46.7	46.7	47.4	0.7
M	7,367	590	2,461	7.6	47.9	47.9	48.8	0.9
N	7,783	550	2,370	8.3	49.1	49.1	49.6	0.5
O	8,274	304	1,418	11.8	51.2	51.2	51.5	0.3
P	8,904	540	2,555	6.6	54.5	54.5	55.0	0.5
Q	9,424	500	2,130	7.9	55.7	55.7	55.9	0.2
R	10,114	239	1,272	13.2	57.5	57.5	57.7	0.2
S	10,440	230	1,650	10.2	59.4	59.4	60.2	0.8
T	10,924	400	2,838	5.9	60.9	60.9	61.9	1.0
U	11,444	371	2,147	7.8	61.3	61.3	62.1	0.8
V	11,904	466	2,895	5.8	62.6	62.6	63.3	0.7
W	12,474	258	1,312	12.8	64.4	64.4	64.8	0.4
X	13,154	229	1,307	12.9	71.2	71.2	71.2	0.0
Y	13,310	100	956	17.6	71.8	71.8	71.8	0.0
Z	13,420	89	925	18.2	73.8	73.8	73.8	0.0

1Feet Above Mouth

TABLE 8

FEDERAL EMERGENCY MANAGEMENT AGENCY

SAN DIEGO COUNTY,CA
AND INCORPORATED AREAS

FLOODWAY DATA

LOS PENASQUITOS CREEK

REVISED TO REFLECT LOMR DATED JUL 15 2004

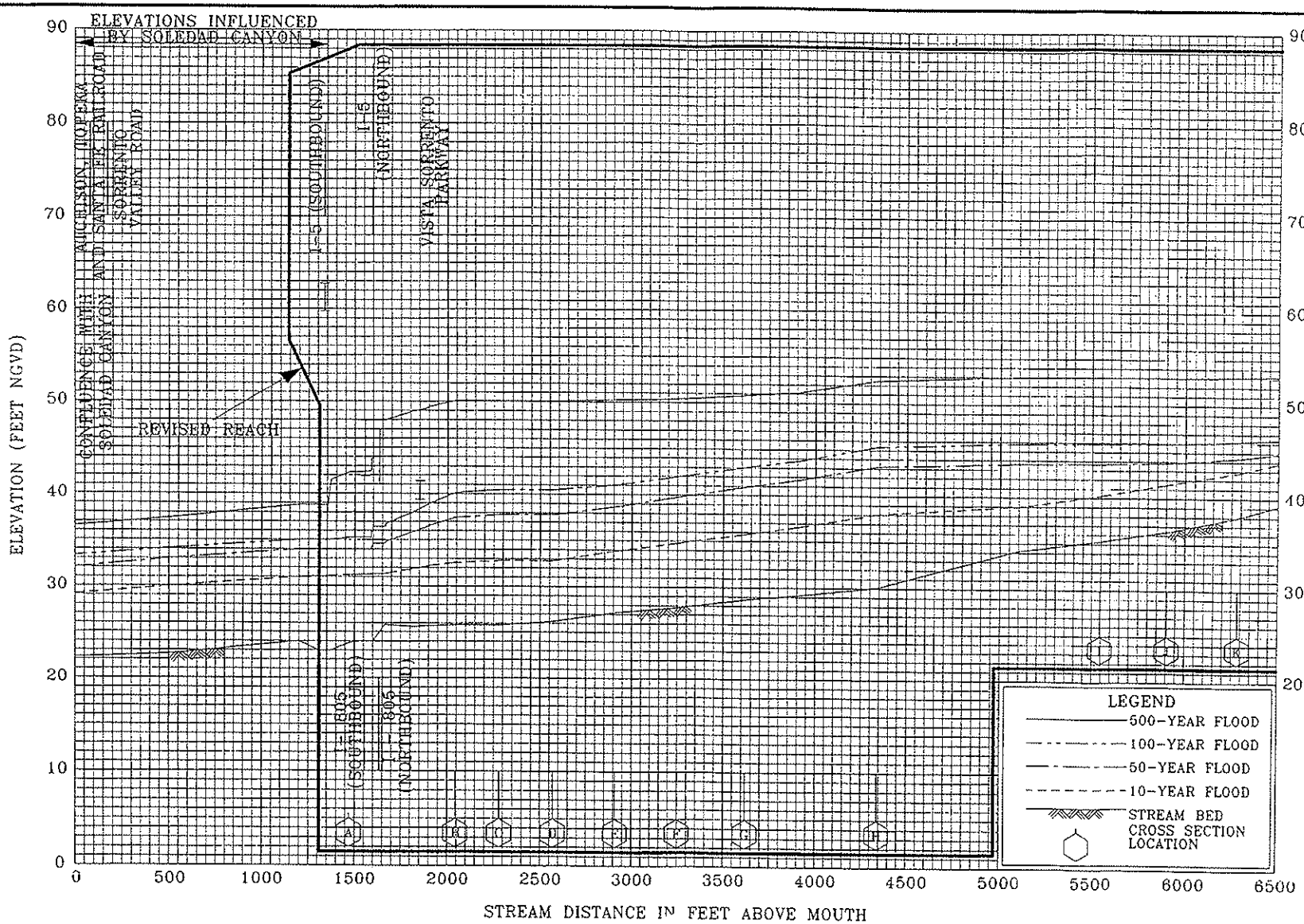

REVISED TO REFLECT LOMR DATED JUL 15 2004

FLOOD PROFILES

LOS PENASQUITOS CREEK

FEDERAL EMERGENCY MANAGEMENT AGENCY

SAN DIEGO COUNTY, CA
AND INCORPORATED AREAS

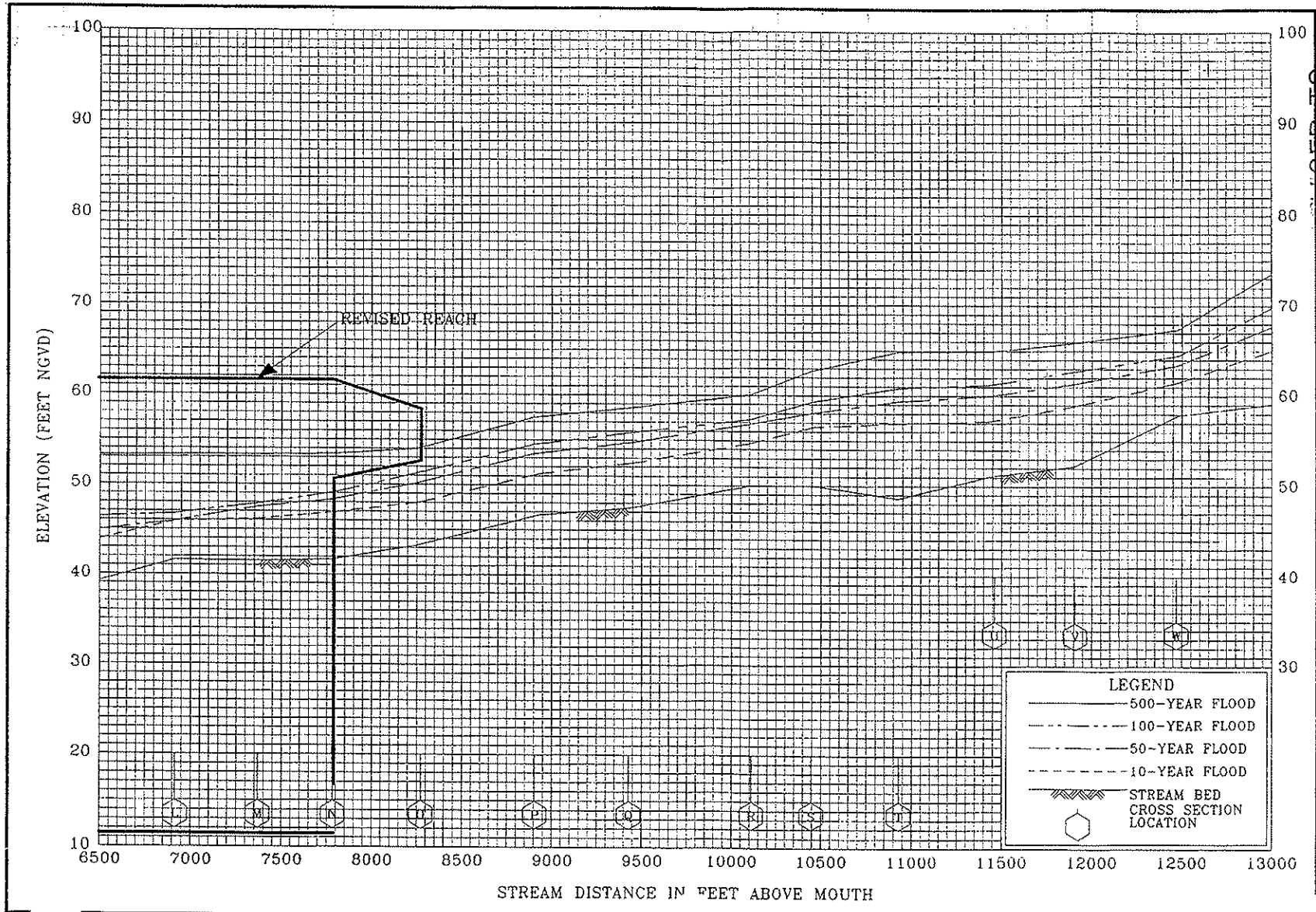

FLOOD PROFILES

LOS PENASQUITOS CREEK

REVISED TO REFLECT LOMR DATED JUL 15 2004

FEDERAL EMERGENCY MANAGEMENT AGENCY

SAN DIEGO COUNTY, CA
AND INCORPORATED AREAS

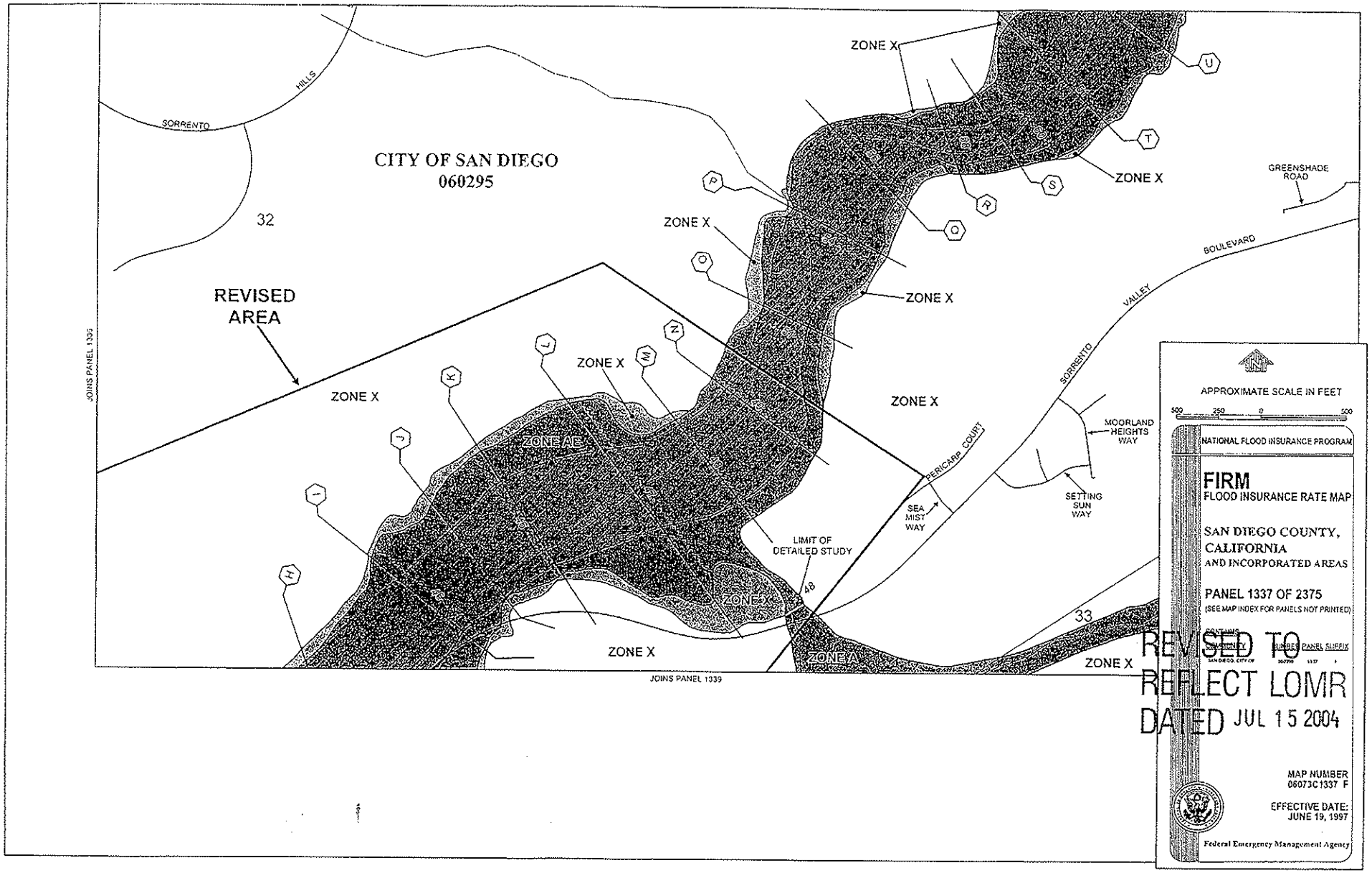
CITY OF SAN DIEGO
060295
32
REVISED AREA
SORRENTO
HILLS
ZONE X
ZONE AE
ZONE A
LIMIT OF DETAILED STUDY
48
PERICARP COURT
SEA MIST WAY
SETTING SUN WAY
MOORLAND HEIGHTS WAY
SORRENTO VALLEY BOULEVARD
GREENSHADE ROAD
33
JOINS PANEL 1339
JOINS PANEL 1335
APPROXIMATE SCALE IN FEET
500 250 0 500
NATIONAL FLOOD INSURANCE PROGRAM
FIRM
FLOOD INSURANCE RATE MAP
SAN DIEGO COUNTY, CALIFORNIA
AND INCORPORATED AREAS
PANEL 1337 OF 2375
(SEE MAP INDEX FOR PANELS NOT PRINTED)
MAP NUMBER
06073C1337 F
EFFECTIVE DATE:
JUNE 19, 1997
Federal Emergency Management Agency
REVISED TO REFLECT LOMR DATED JUL 15 2004

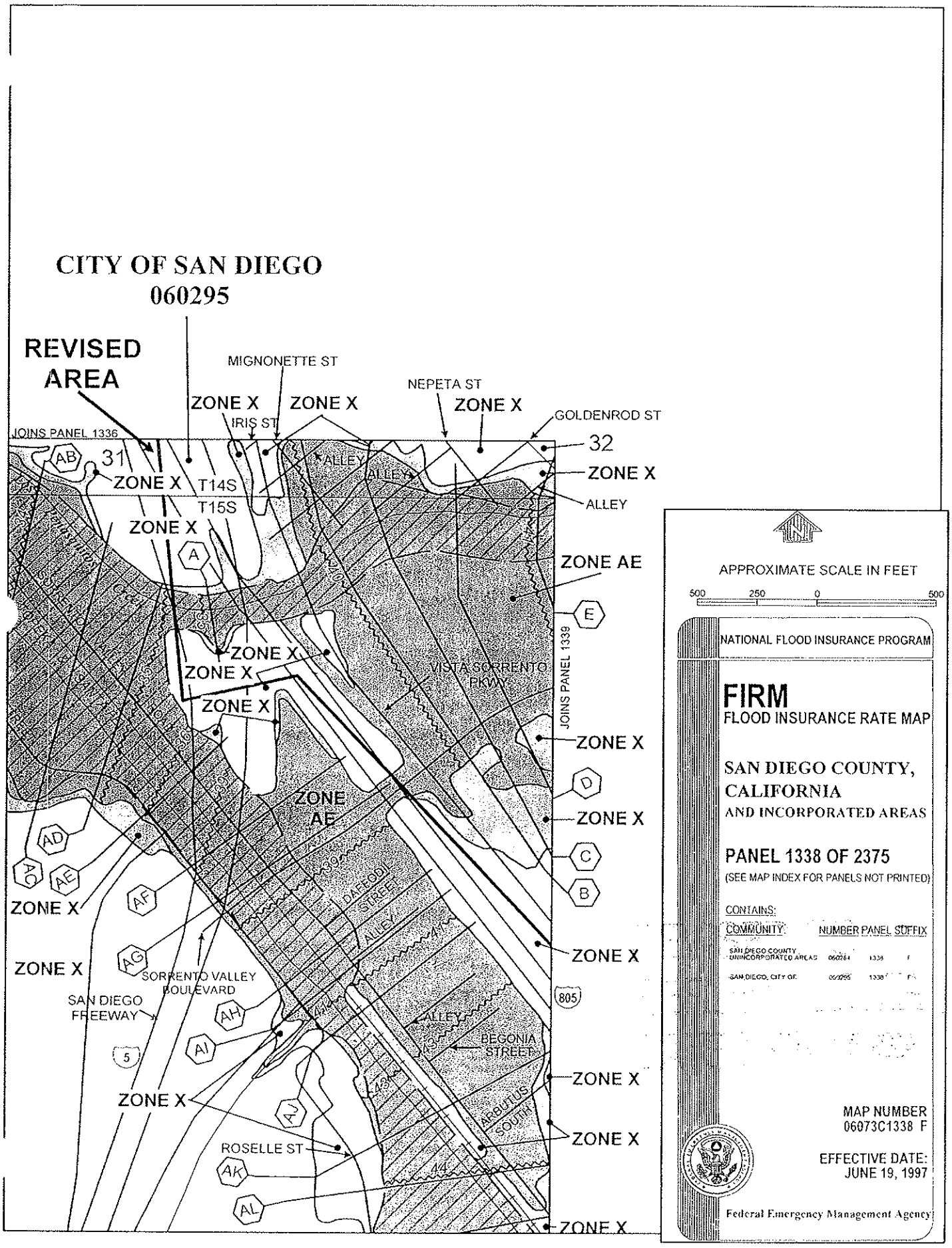
CITY OF SAN DIEGO
060295
REVISED AREA
MIGNONETTE ST
NEPETA ST
GOLDENROD ST
IRIS ST
ZONE X
ZONE X
ZONE X
JOINS PANEL 1336
31
32
AB
ZONE X
T14S
T15S
ALLEY
ALLEY
ZONE X
ALLEY
ZONE X
A
ZONE AE
E
ZONE X
ZONE X
ZONE X
VISTA SORRENTO PKWY
JOINS PANEL 1339
ZONE X
D
ZONE AE
ZONE X
AD
AC
AE
C
B
ZONE X
AF
DAFFODIL STREET
ALLEY
ZONE X
ZONE X
AG
SORRENTO VALLEY BOULEVARD
SAN DIEGO FREEWAY
805
AH
ALLEY
AI
BEGONIA STREET
5
ZONE X
ZONE X
AJ
ARBUTUS SOUTH
ZONE X
ROSELLE ST
AK
AL
ZONE X
APPROXIMATE SCALE IN FEET
500 250 0 500
NATIONAL FLOOD INSURANCE PROGRAM
FIRM
FLOOD INSURANCE RATE MAP
SAN DIEGO COUNTY, CALIFORNIA
AND INCORPORATED AREAS
PANEL 1338 OF 2375
(SEE MAP INDEX FOR PANELS NOT PRINTED)
CONTAINS:
COMMUNITY NUMBER PANEL SUFFIX
SAN DIEGO COUNTY UNINCORPORATED AREAS 060284 1338 F
SAN DIEGO, CITY OF 060295 1338 F
MAP NUMBER
06073C1338 F
EFFECTIVE DATE:
JUNE 19, 1997
Federal Emergency Management Agency

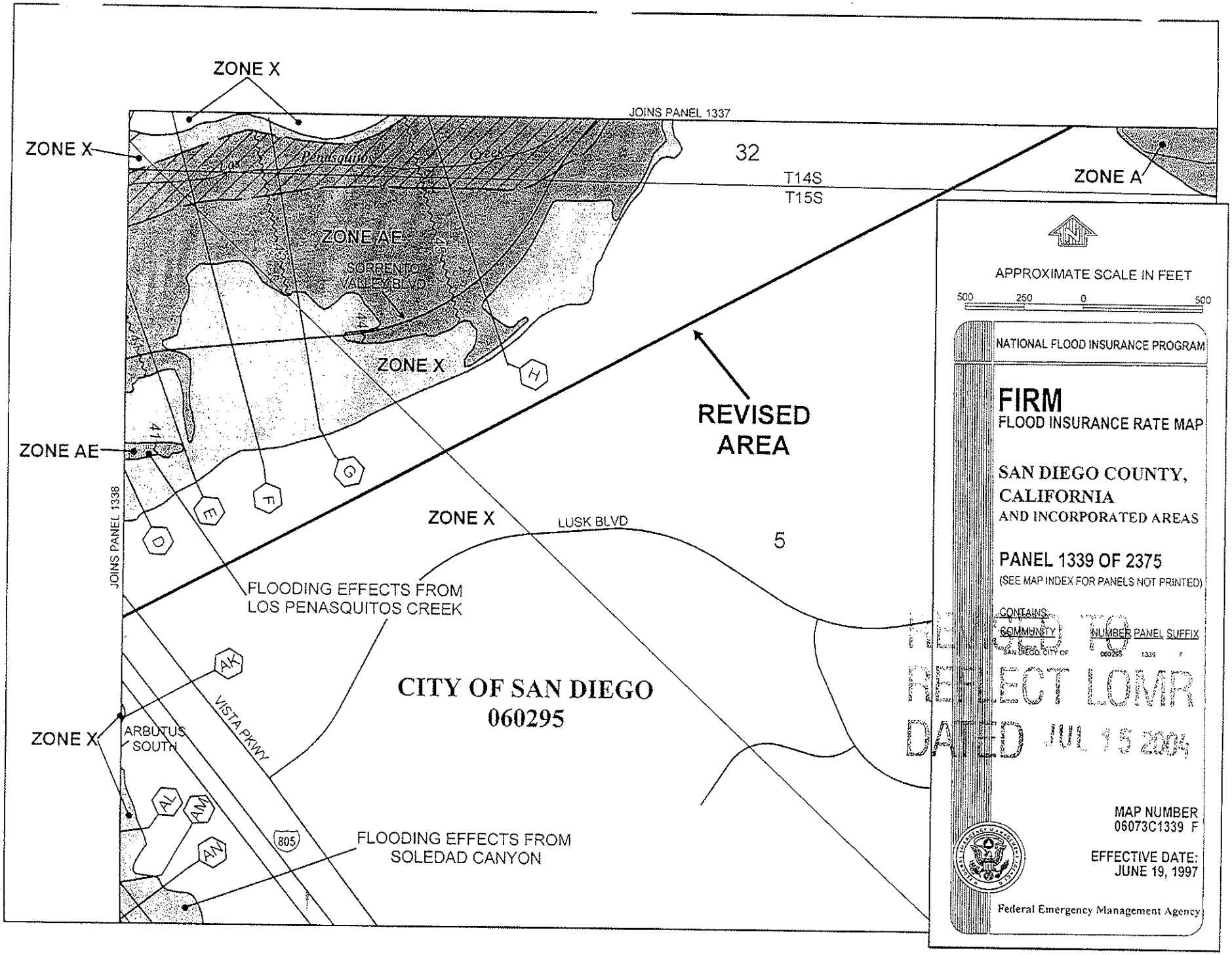
ZONE X
ZONE X
JOINS PANEL 1337
32
T14S
T15S
ZONE A
Los Penasquitos Creek
ZONE AE
SORRENTO VALLEY BLVD
ZONE X
H
REVISED AREA
ZONE AE
G
F
E
D
JOINS PANEL 1338
ZONE X
LUSK BLVD
5
FLOODING EFFECTS FROM LOS PENASQUITOS CREEK
AK
CITY OF SAN DIEGO
060295
VISTA PKWY
ZONE X
ARBUTUS SOUTH
AL
AM
AN
805
FLOODING EFFECTS FROM SOLEDAD CANYON
APPROXIMATE SCALE IN FEET
500 250 0 500
NATIONAL FLOOD INSURANCE PROGRAM
FIRM
FLOOD INSURANCE RATE MAP
SAN DIEGO COUNTY, CALIFORNIA
AND INCORPORATED AREAS
PANEL 1339 OF 2375
(SEE MAP INDEX FOR PANELS NOT PRINTED)
CONTAINS
COMMUNITY NUMBER PANEL SUFFIX
SAN DIEGO, CITY OF 060295 1339 F
REVISED TO REFLECT LOMR DATED JUL 15 2004
MAP NUMBER
06073C1339 F
EFFECTIVE DATE:
JUNE 19, 1997
Federal Emergency Management Agency

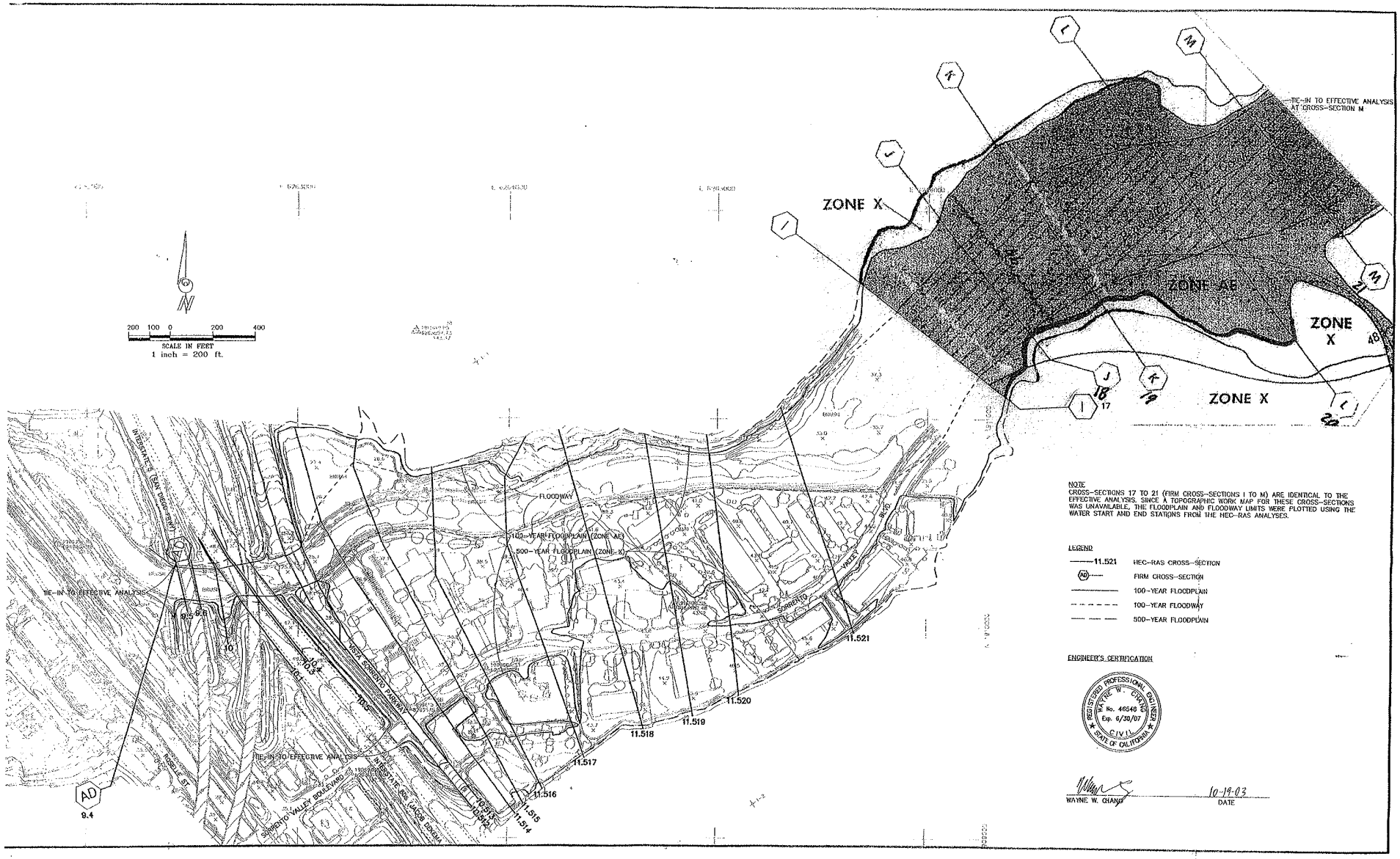

NOTE
CROSS-SECTIONS 17 TO 21 (FIRM CROSS-SECTIONS I TO M) ARE IDENTICAL TO THE EFFECTIVE ANALYSIS. SINCE A TOPOGRAPHIC WORK MAP FOR THESE CROSS-SECTIONS WAS UNAVAILABLE, THE FLOODPLAIN AND FLOODWAY LIMITS WERE PLOTTED USING THE WATER START AND END STATIONS FROM THE HEC-RAS ANALYSES.

LEGEND

11.521	HEC-RAS CROSS-SECTION
AD	FIRM CROSS-SECTION
	100-YEAR FLOODPLAIN
	100-YEAR FLOODWAY
	500-YEAR FLOODPLAIN

ENGINEER'S CERTIFICATION

REGISTERED PROFESSIONAL ENGINEER
WAYNE W. CHANG
No. 46540
Exp. 6/30/07
CIVIL
STATE OF CALIFORNIA

WAYNE W. CHANG

10-19-03
DATE

HEC-RAS TOPOGRAPHIC WORK MAP

I-5 North Coast Widening Floodplain Studies
Caltrans
DE Project 1683

RECORD OF CONVERSATION

DATE: 09/21/07 **TIME:** 8:30 AM **DE FILE No.** 1683-300

RECORDED BY: Glen Parker

SPOKE WITH: Ray Martinez

TELEPHONE No. 703-317-6251

NATURE OF CALL: ☐ Incoming ☒ Outgoing ☐ Meeting

DISTRIBUTION: Ray Martinez (Michael Baker), Glen Parker (Dokken Engineering), Tim Brownson (Caltrans), Wen Cheng (Michael Baker), Mike Skowronek (Michael Baker)

SUBJECT OF CONVERSATION: Acceptable FEMA floodplain modeling procedures

ITEMS DISCUSSED:

Available Backup Data to generate previously approved floodplain models: Glen explained that a formal request has been submitted for backup floodplain information for lagoons and creeks along I-5 with Zone AE floodplains between San Diego and Oceanside. In some cases the HEC-2 data provided by Michael Baker Corporation was limited and did not have enough information to recreate previously generated floodplain models with reasonable accuracy. Glen said in these cases, Dokken Engineering would prefer to create HEC-RAS models which tie in with FEMA cross sections to use as a basis for existing conditions. Ray said Dokken Engineering must use their expertise to decide whether the existing FEMA data can be reused and to document efforts in a Technical Studies Data Notebook (TSDN). There have been past situations which required an existing model to be recreated and it is acceptable to FEMA as long as the appropriate documentation supports the procedure. Glen agreed to document the scenarios where existing models could not be used with accuracy.

Coordination with FEMA and Caltrans: Glen said that Caltrans is in the planning phase for the I-5 North Coast Widening, which will widen I-5 from San Diego to Oceanside. At this point in time, a preferred alternative has not been identified and therefore no coordination has occurred between Caltrans and FEMA to begin processing LOMRs. Glen said the final design of this project would likely occur in different phases several years in the future. It would be beneficial to coordinate with FEMA when needed during the process. Glen asked who the appropriate FEMA contacts may be to continue coordination when needed throughout the process. Ray said to coordinate with Wen Chen and Michael Skowronek, who work at the RMC for FEMA Region IX and can act as Outreach Coordinators on behalf of FEMA, when appropriate depending on the development of the project.

SECTION 3

Carmel Valley Creek Location Hydraulic Study

DOKKEN ENGINEERING
www.dokkenengineering.com

Caltrans

SECTION 3:
CARMEL VALLEY CREEK LOCATION HYDRAULIC STUDY

3.0 PROJECT PURPOSE AND VICINITY MAP:

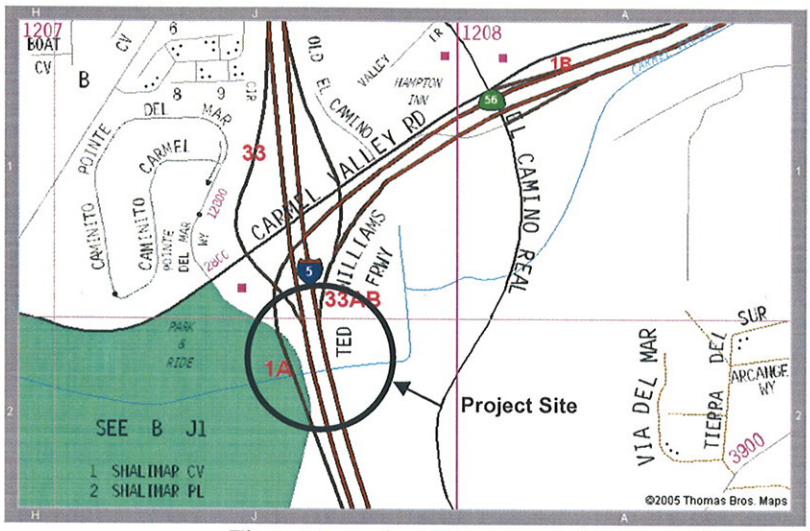

Figure 1: Project Vicinity Map

The Carmel Valley Creek at I-5 is located in the City of San Diego just south of Carmel Valley Road. (Thomas Bros. Maps, 2005)

This study was prepared for Caltrans for the purpose of determining impacts to the Carmel Valley Creek 100-year floodplain resulting from the proposed improvements to Interstate 5 (I-5).

This study specifically addresses the following:

1.) The Carmel Valley Creek 100-year floodplain as it presently exists,
2.) The Carmel Valley Creek 100-year floodplain after the I-5 Bridge has been widened and the Sorrento Valley Bridge is replaced.
3.) Performing a risk assessment associated with any possible encroachment, including impacts on natural and beneficial floodplain values, probable incompatible floodplain development, and special mitigation measures needed (if any) to minimize impacts to the floodplain.

The proposed improvements to the existing I-5 Bridge (No. 57-0590) require that the bridge be widened approximately one half of a lane width to the west. In addition, improvements within the project include the replacement of the existing Sorrento Valley Road Culvert with a bridge large enough to pass the 100-year flood. A flyover bridge, Carmel Valley Creek Truck Connector, at the I-5/SR-56 crossing has recently been completed. Results are provided in this study, which demonstrate that no rise to the water surface elevation (WSE) of the existing Carmel Valley Creek floodplain should occur due to the proposed improvements.

3.1 DESCRIPTION OF CREEK:

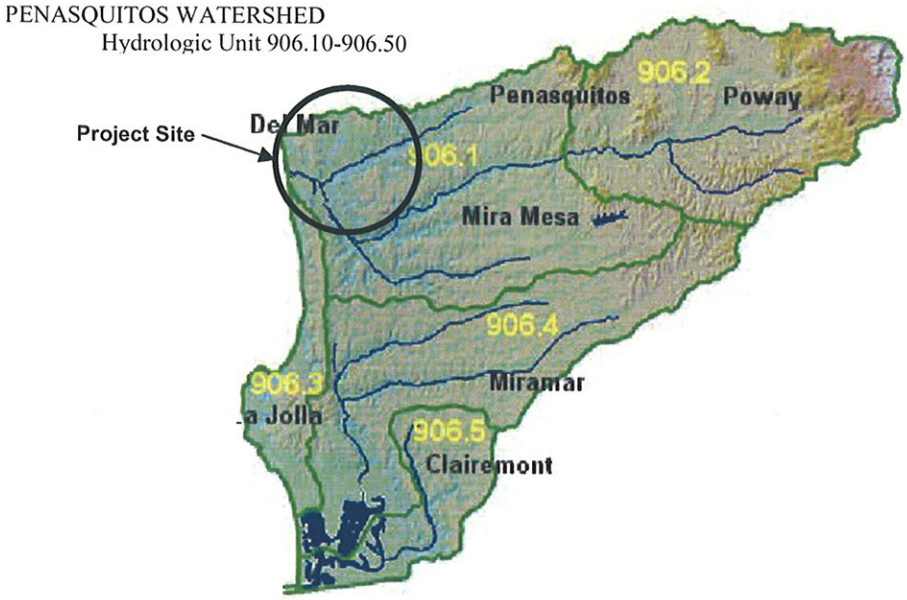

Figure 2: Regional Basin Area

The Carmel Valley Creek is located within the Los Penasquitos Lagoon watershed basin, designated as the Regional Water Quality Control Board's (RWQCB) Hydrologic Unit 906.10-906.50. The 170 square mile hydrologic unit includes the cities of San Diego, Poway, Del Mar and unincorporated regions of San Diego County. The major basins within the Los Penasquitos Lagoon watershed are Carroll (Soledad) Canyon, Los Penasquitos Canyon, and Carmel Valley. These basins flow in a westerly direction towards the Pacific Ocean. Elevations within the watershed range from 2,900 feet above mean sea level in the upper watershed to mean sea level.

The 15.7 square mile Carmel Valley sub-basin flows through the valley in a westward direction from its headwaters on Black Mountain to the Los Penasquitos marsh area. The creek was historically an ephemeral drainage; however, due to development within the upper watershed, the creek now supports year-round flow. Carmel Valley Creek is slightly incised within its upper reaches. Material eroded from the Carmel Valley network is deposited downstream in gradients as the drainage approaches the lagoon. Runoff from Carmel Valley Creek enters the Los Penasquitos Lagoon within the northeastern corner.

3.2 FLOODPLAIN MODELING METHODOLOGY:

The Carmel Valley Creek model begins upstream of the El Camino Real Bridge crossing. After the crossing, the creek opens up into a heavily vegetated plain over 700 feet wide and 1400 feet long. Several cross sections were defined in the open plain between El Camino Real and I-5 to accurately depict any back water effects that would occur due to the triple box culvert located at Sorrento Valley Road. The creek narrows as it passes beneath the I-5 Bridges and becomes completely constricted as it passes through the 40 foot wide Sorrento Valley Road triple box culvert.

Immediately west of I-5, the Sorrento Valley Road triple box culvert was modeled using the HEC-RAS culvert option to represent existing conditions. For proposed conditions, the existing culvert was removed and replaced with a bridge. The proposed Sorrento Valley Road Pedestrian Bridge creates a 443 foot opening spanning the entire Carmel Valley Creek.

The final bridge of interest was the Carmel Valley Creek Truck Connector. Since the bottom soffit of this bridge will be built far above any anticipated 100-year flood level only the piers of the bridge will cause any effect on the floodplain. Approximately 1050 feet west of the connector bridge, the model terminates, as the Carmel Valley Creek ties into Soledad Canyon. For this study, HEC-RAS was analyzed with the Standard Step Method under mixed flow conditions.

3.3 HEC-RAS INPUT

3.3.1 Cross Sectional Geometry:

Since Carmel Valley Creek has an established FEMA floodway, the majority of the cross sections in the model correspond to FEMA cross section locations. Additional cross sections were placed around each of the bridges to properly model them individually. ArcGIS 9.2 was used to cut the contours from topographic surveys provided by the San Diego Geographic Information Source (SanGIS) (2 foot contours, NAVD 88). Digital topography was also supplied by Caltrans (0.5 meter contours, NAVD 88). Topography provided by Caltrans, compiled by Olympic Mapping System, was used to input the elevation of the I-5 bridge deck elevations. Cross section elevations were based off the Caltrans topography of the I-5 bridge height and field measurements. All elevations given are in NAVD 88.

3.3.1.1 Bridges/Culverts

The existing bridges within the study area include the El Camino Real Bridge, the northbound to eastbound SR-56 Truck Connector, the I-5 Bridge, the Carmel Valley Creek Sorrento Valley Road (SVR) Culvert, and the westbound to southbound SR-56 Truck Connector. The Sorrento Valley Road Culvert is the main constriction point, which would be inundated by almost 3 feet of water during the 100-yr storm. All the other bridge decks are entirely above the floodplain and only their piers have any effect on the floodplain water surface elevations. The bridges were modeled using Energy (Standard Step) method and Momentum equations, with the highest energy answer selected.

The bridges were modeled at the following Cross sections:

- Cross section #1100 – westbound to southbound SR-56 Bridge Connector
- Cross section #1163 - Carmel Valley Creek SVR Culvert/ Bridge
- Cross section #1400 - I-5 Bridge
- Cross sections #1500 – northbound to eastbound SR-56 Bridge Connector
- Cross sections #3100 - El Camino Real Bridge

The as-builts and advanced planning studies (APS) used to model the structures listed above are located in Appendix C. In addition, the modeling was augmented from information gathered in the field. A clogging factor of +25% was added to the bridge piers with diameters greater than 4 feet. The small diameter piers were doubled in size. This approach was used to account for debris which could catch on the many piers within the floodplain and provide additional blockage to the flow.

The El Camino Real Bridge (Figure 3) is constructed atop 6 pier walls, 1.5 feet thick, and the bridge deck is well above the 100-yr floodplain. The pier walls were modeled as 3 feet thick to account for debris.

Figure 3: El Camino Real Bridge.

Figure 4: Carmel Valley Creek beneath the northbound to eastbound SR-56 Bridge Connector, looking south.

The northbound to eastbound SR-56 Bridge Connector, located east of the I-5 Bridge, has ten rows of 1.5 foot diameter concrete piers within the floodplain (structure contract plan no. 11-030111 in Appendix C). The deck of this connector is entirely above the floodplain and was not a concern in the model. The bridge piers were modeled with 3 foot diameters, including the clogging factor.

The existing I-5 Bridge consists of ten rows of 2 foot piers. The bridge piers were modeled as 4 foot diameters to account for debris. The proposed widening of the I-5 Bridge was input in accordance with the Carmel Valley Creek (Widen) Planning Study, dated November 2004 (Appendix C). The bridge would be widened to the west by 5.2 feet to 7.8 feet, and ten additional piers would be constructed within floodplain.

Figure 5: Carmel Valley Creek beneath the I-5 Bridge, looking east.

Figure 6: Carmel Valley Creek SVR Triple Box Culvert Bridge, looking east.

The existing Carmel Valley Creek SVR spans a triple box culvert, and was modeled with three 8.2 foot by 12.8 foot concrete boxes in series with 1 foot thick walls in between. The entrance loss value was defined as 0.5 for a headwall parallel to the embankment with three square edged sides. For proposed conditions, the replacement of the Carmel Valley Creek SVR Culvert Bridge was input in accordance with the Carmel Valley Creek SVR, Planning Study, dated June 2006 (Appendix C). The proposed replacement bridge was designed solely for pedestrian traffic. At 15 feet wide and 443 feet long, with thirteen rows of 18 inch piers, the bridge removes the existing constriction of the flow. The bridge piers were modeled as 3 foot diameter piers to account for debris.

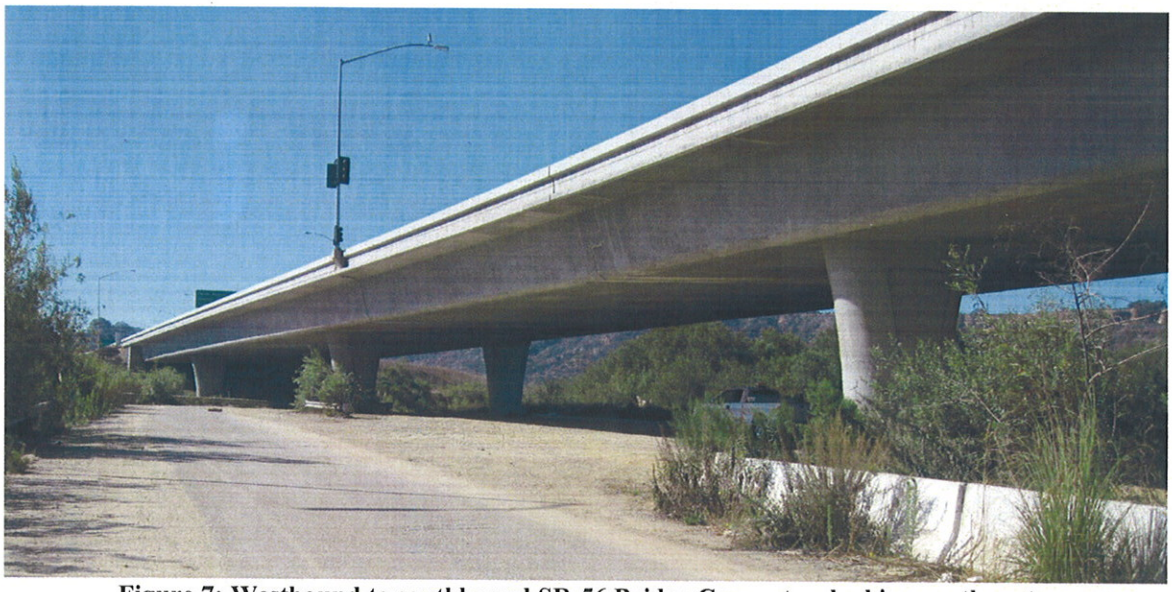

Figure 7: Westbound to southbound SR-56 Bridge Connector, looking southwest.

The westbound to southbound SR-56 Bridge Connector has three rows of 5.5 foot diameter concrete piers within the floodplain (structure contract plan no. 11-030114 in Appendix C). The deck of this connector is entirely above the floodplain and was not a concern in the model. The bridge piers were modeled with 7 foot diameters, including the clogging factor.

3.3.1.2 Ineffective Flow Areas

The cross section exhibits in Appendix A show the ineffective flow areas for the post project conditions. The contraction and expansion areas upstream and downstream of the bridges within the project vicinity are modeled as ineffective flow.

3.3.1.3 Flood Insurance Study Cross Sections

Detailed hydraulic analyses have been performed in this area, and a base floodplain elevation has been determined as shown in the Flood Insurance Rate Map (FIRM) (see Appendix A). The downstream boundary of the Carmel Valley Creek/ I-5 models tie into the confluence of Carmel Valley Creek and the Soledad Canyon FEMA floodplain at river station 356. Upstream the models tie into the Carmel Valley Creek FEMA cross section J, river station 4421.

3.3.1.4 Existing Floodplain Conditions

Several hydraulic models were developed to determine the most accurate methods in which to depict the floodplain of the Carmel Valley Creek. A HEC-2 model was received, dated 4/15/93, from FEMA per a backup data request that was submitted on 1/13/05. In addition to the HEC-2 model, topography, and a plan view of the cut cross sections along the Carmel Valley Creek were requested. Upon further coordination with FEMA, it was concluded that all of the available data for the established federal floodway had been received and back-up topography or working maps were not available. Only the HEC-2 output was received. Attempts were made to salvage the existing model by matching the HEC-2 model up to FIRM cross sections and recent topography. Based on cross sections within the FIRM, recent topography and the HEC-2 stations, elevations and reach lengths, it was determined that the model could not be regenerated with reasonable certainty. Therefore, a new existing conditions model was created using more recent information. Communication with FEMA and approval to recreate the existing model from current up to date information was approved, and the record of conversation was recorded (see Appendix C).

3.3.2 Manning's Roughness Coefficient:

Each cross section contained a left overbank, main channel, and right overbank, which represented the different regions of the waterway in terms of roughness coefficients. The main channel and overbanks were simulated as the creek bottom and channel side slopes respectively. Manning's Roughness Coefficients were obtained from *Haestad Methods, Floodplain Modeling Using HEC-RAS, first edition,* and through field verification. Upstream of the northbound to eastbound I-5/SR-56 connector, the left overbank consisted of medium to dense brush (0.10), while the main channel consisted of trees with thicker underbrush (0.12). The right overbank covered straight and uniform ground with short grass and few weeds (0.03). Beneath the I-5 Bridge and connector bridges, the main channel was modeled as uniform clean gravel (0.025). Downstream of I-5 and the connectors, the main channel passes through scattered brush (0.05), before entering another section of timber with dense brush (0.12).

Figure 8: Medium to Dense Brush

Figure 9: Timber with Dense Brush

Figure 10: Gravel, uniform section, clean

Figure 11: Scattered Brush

3.3.3 Starting Water Elevation:

The Carmel Valley Creek was originally analyzed under subcritical flow and was finalized as a mixed flow regime model based on model trial output (see section 3.4.1 Warning Messages for further discussion). The majority of the channel upstream of the northbound to eastbound SR-56 Connector Bridge would flow under a subcritical flow regime. Downstream of the I-5 Bridge there would be a section of supercritical flow, followed by a hydraulic jump as the Carmel Valley Creek flow enters the wider and flatter terrain of Soledad Canyon. The Carmel Valley Creek basin is located in a Zone AE, an area subject to inundation by the 1-percent-annual-chance flood event determined by detailed methods. Title 44 of the Code of Federal Regulations, Part 65 – *Identification and Mapping of Special Hazard Areas* states that proposed floodplain models must tie into existing FEMA approved water surface profiles within "one-half foot." Since a detailed analysis has been performed by FEMA for the Carmel Valley Creek in the vicinity of the project, tie-in information upstream of the model was obtained from FIRM Cross Section J: water surface elevation (WSE) of 38.6 feet in NAVD 88. Downstream of the model, cross section 356 was placed perpendicular to the Soledad Canyon floodplain, between Soledad Canyon FEMA cross sections I and J. The water surface elevation at downstream cross section #356 was determined to be 14.33 feet in NAVD 88 (See Carmel Valley Creek Flood Profiles, Appendix A). Cross section 356 was placed at the confluence with Soledad Canyon where the base flood elevation has been determined.

3.3.4 Discharge:

For the purposes of the floodplain analysis, 10,000 cfs was identified as the peak 100-year storm discharge, as identified in the Carmel Valley Creek Bridge Connector Foundation Plan (dated 1999) provided in appendix D. Discharge information obtained from the *Federal Emergency Management Agency (FEMA) Flood Insurance Study, San Diego County*: 9,800 cfs (dated 1997), was not used for this analysis due to outdated information.

3.4 HEC-RAS OUTPUT

The water surface elevations which are displayed in the appendices and output of this study are based on flooding that would occur during a 100-year storm. Appendix B contains water surface elevations of each cross section, as well as other hydraulic results for comparison. As shown in Table A, no significant increase to the existing 100-year floodplain would occur from the proposed improvements to the I-5 crossing:

Table A: Floodplain Comparison

FEMA XS	River Station	Q Total (cfs)	Existing W.S. Elev. (ft)	Proposed W.S. Elev. (ft)	Change in Elevation (ft)	Existing Top Width (ft)	Proposed Top Width (ft)	Change in Width (ft)
J	**4421**	10000	41.74	41.74	0.00	218.15	218.15	0
I	**4086**	10000	37.68	37.68	0.00	299.9	299.9	0
H	**3531**	10000	34.5	34.5	0.00	357.39	357.35	-0.04
	3254	10000	33.29	33.28	-0.01	607.28	608.18	-0.1
	3100	El Camino Real Bridge						
	3082	10000	31.54	31.52	-0.02	339.46	339.13	-0.33
G	**2846**	10000	30.43	30.39	-0.04	491.91	490.98	-0.93
F	**2255**	10000	27.48	27.17	-0.31	571.23	568.86	-2.37
E	**1826**	10000	26.12	25.22	-0.90	705.45	698.78	-6.67
D	**1543**	10000	25.31	23.87	-1.44	630.02	495.54	-134.48
	1500	Northbound Route 56 Connector						
C	**1442**	10000	23.99	22.47	-1.52	453.85	427.36	-26.49
	1400	I-5 Bridge						
	1197	10000	22.51	18.45	-4.06	504.12	406.51	-97.61
	1182	10000	22.51	18.46	-4.05	525.45	507.17	-18.28
	1163	Sorrento Valley Road*						
B	**1143**	10000	18.25	18.06	-0.19	403.13	504.8	101.67
	1100	Southbound Route 56 Connector						
A	**1045**	10000	16.9	16.9	0.00	713.71	713.71	0
	774	10000	14.38	14.38	0.00	1422.46	1422.46	0
	356	10000	14.33	14.33	0.00	1574.49	1574.49	0

* For existing conditions the Sorrento Valley Road was modeled as a culvert. For proposed conditions the Sorrento Valley Road was modeled as a bridge.

If the triple box culvert were to be replaced by the proposed pedestrian bridge, the water surface elevation would decrease upstream of Sorrento Valley Road. The replacement of the triple box culvert would be the main contributor of the reduction to the WSE. The 100-yr floodplain WSE would return to existing levels downstream of the El Camino Real Bridge. The I-5 Bridge and Sorrento Valley Road do not dictate the water surface elevations upstream of the El Camino Real Bridge.

3.4.1 Warning Messages

Warning messages encountered during the proposed model include the following:

The velocity head has changed by more than 0.5 ft (0.15 m). This may indicate the need for additional cross sections, displayed at cross sections #1045, #1400, and #1442. This message is common at obstructions such as bridges and additional cross sections are not normally added.

The conveyance ratio (upstream conveyance divided by downstream conveyance) is less than 0.7 or greater than 1.4. This may indicate the need for additional cross sections, displayed at cross sections #774, #1045, #1100, #1163, #1182, #1400, #1442, #1500, #1826, #2255, #2846, #3082, and #4086. Portions of the Carmel Valley Creek were relatively uniform and allowed for cross sections to be placed several hundred feet apart. These changes are appropriate based on the spacing of the sections.

The energy loss was greater than 1.0 ft (0.3 m) between the current and previous cross section. This may indicate the need for additional cross sections, displayed at cross sections #1045, #1400, #1826, #2255, #2846, #3082, #3100, #3531, #4086 and #4421. This message is occurring because of the changes and spacing of consecutive cross sections.

Divided flow computed for this cross section, displayed at cross section #1045, and #1543. This message was expected because of localized flooding occurring on Carmel Valley Road, North of the Carmel Valley Creek.

During the standard step iterations, when the assumed water surface was set equal to critical depth, the calculated water surface came back below critical depth. This indicates that there is not a valid subcritical answer. The program defaulted to critical depth. This warning displayed at cross sections #1045, and #1400. This situation was confirmed with a Froude # greater than 1, and so the model was run under a mixed flow regime as a result to this warning.

For the final momentum answer at the bridge, the upstream energy was computed lower than the downstream energy. This is not physically possible; the momentum answer has been disregarded. This warning was displayed for cross section #1100. The Energy (standard step) method was used for this cross section.

The energy equation could not be balanced within the specified number of iterations. The program used critical depth for the water surface and continued on with the calculations. This warning was displayed for cross section #1045, and #1400. This occurs beneath the I-5 Bridge and downstream of the westbound to southbound SR-56 Bridge Connector where the Froude # is 1. The critical depth solution is a valid for both of these locations.

3.5 RISK ASSESSMENT

Encroachment is defined by the Federal Emergency Management Agency (FEMA) as "construction, placement of fill, or similar alteration of topography in the floodplain that reduces the area available to convey floodwaters," and by the Federal Highway Administration (FHWA) as "an action within the base floodplain" (*Environmental Handbook Vol. 1*). As proven in the hydraulic analysis provided in Appendix B, upgrading Sorrento Valley Road and the addition of ten more concrete piers would not prevent the Carmel Valley Creek from conveying the 100-yr storm within the same limits as current conditions, both upstream and downstream of the proposed improvements. Although the proposed work can be interpreted as an encroachment by both definitions, it is not a significant encroachment and does not create any greater risks. Furthermore, the replacement of the Sorrento Valley Road Culvert will allow flood levels to lower, by more than 4 feet in the vicinity of the I-5 bridge crossing.

Natural and beneficial floodplain values, as defined in Chapter 17 "Definitions" in the Caltrans Standard Environmental Reference (SER), include fish, wildlife, plants, outdoor recreation, aquaculture, forestry, etc., that are found within a designated floodplain. Listed below are the beneficial uses of Carmel Valley Creek obtained from the Water Quality Control Plan for the San Diego Basin along with a short description and determination of impacts.

- Agricultural supply. This includes uses of water for farming, horticulture, or ranching, including but not limited to, irrigation, stock watering, or support of vegetation for range grazing. These items will not be affected since the agricultural areas along Carmel Valley Creek are considerably upstream of the I-5 crossing.

- Industrial service supply. This includes uses of water for industrial activities that do not depend primarily on water quality including, but not limited to, mining, cooling water supply, hydraulic conveyance, gravel washing, fire protection, or oil well re-pressurization. These activities do not occur around the project site and therefore will remain unaffected.

- Non-contact water recreation. This includes the uses of water for recreational activities involving proximity to water, but not normally involving body contact with water, where ingestion of water is reasonably possible. These uses include, but are not limited to, picnicking, sunbathing, hiking, beachcombing, camping, boating, tidepool and marine life study, hunting, sightseeing, or aesthetic enjoyment in conjunction with the above activities. It is unlikely that non-contact water recreation in Carmel Valley Creek takes place in the immediate vicinity of the I-5 Bridge; however, the proposed conditions would not alter the amount of non-contact water recreation that may occur within the Carmel Valley Creek.

- Warm freshwater habitat. This includes uses of water that support warm water ecosystems including, but not limited to, preservation or enhancement of aquatic habitats, vegetation, fish or wildlife, including invertebrates. The construction areas associated with the bridge widening may impact a limited amount of warm freshwater habitat. Currently, a Natural Environment Study (NES) is being prepared to support the I-5 North Coast Widening Project. The NES will assess if any warm freshwater habitat may be impacted and what mitigation measures, if any, are needed.

- Wildlife habitat. This includes uses of water that supports terrestrial ecosystems including, but not limited to, preservation and enhancement of terrestrial habitats, vegetation, wildlife, or wildlife water and food sources. The construction areas associated with the bridge widening may impact a limited amount of wildlife habitat. Currently, an NES is being prepared to support the I-5 North Coast Widening Project. The NES will assess if any wildlife habitat may be impacted and what mitigation measures, if any, are needed.

Since the effects of the proposed changes are localized around Sorrento Valley Road, the beneficial uses of Carmel Valley Creek would remain unchanged by the proposed I-5 widening. The widening of I-5 has no significant affect to the floodplain or its beneficial uses. The decrease of the 100-year floodplain at cross sections is from the replacement of Sorrento Valley Road triple box culvert with a pedestrian bridge. This change will lower the floodplain locally, but ties back into the existing floodplain with a few hundred feet both upstream and downstream.

3.6 SUMMARY AND CONCLUSION:

The existing Sorrento Valley Road Culvert located downstream of the I-5 bridge does not currently have the required capacity to pass the 100-year storm and would overtop during a 100-yr storm event. Therefore, this governs the majority of backwater effects at the I-5 bridge crossing. In proposed conditions, replacement of the culvert and widening of the existing I-5 freeway would lower the water surface elevations and slightly change the velocities around the I-5 Bridge. The functionality of the interchange will be improved without causing any greater risks to life or property within the floodplain. The proposed replacement pedestrian bridge and the widening of I-5 would improve the ability of the Carmel Valley Creek to convey the 100-yr storm event, and lower the WSE by approximately 4 feet.

APPENDIX 'A'

Cross Section Locations Exhibit

Flood Insurance Rate Map (FIRM)

Flood Insurance Study (FIS)

Flood Profiles

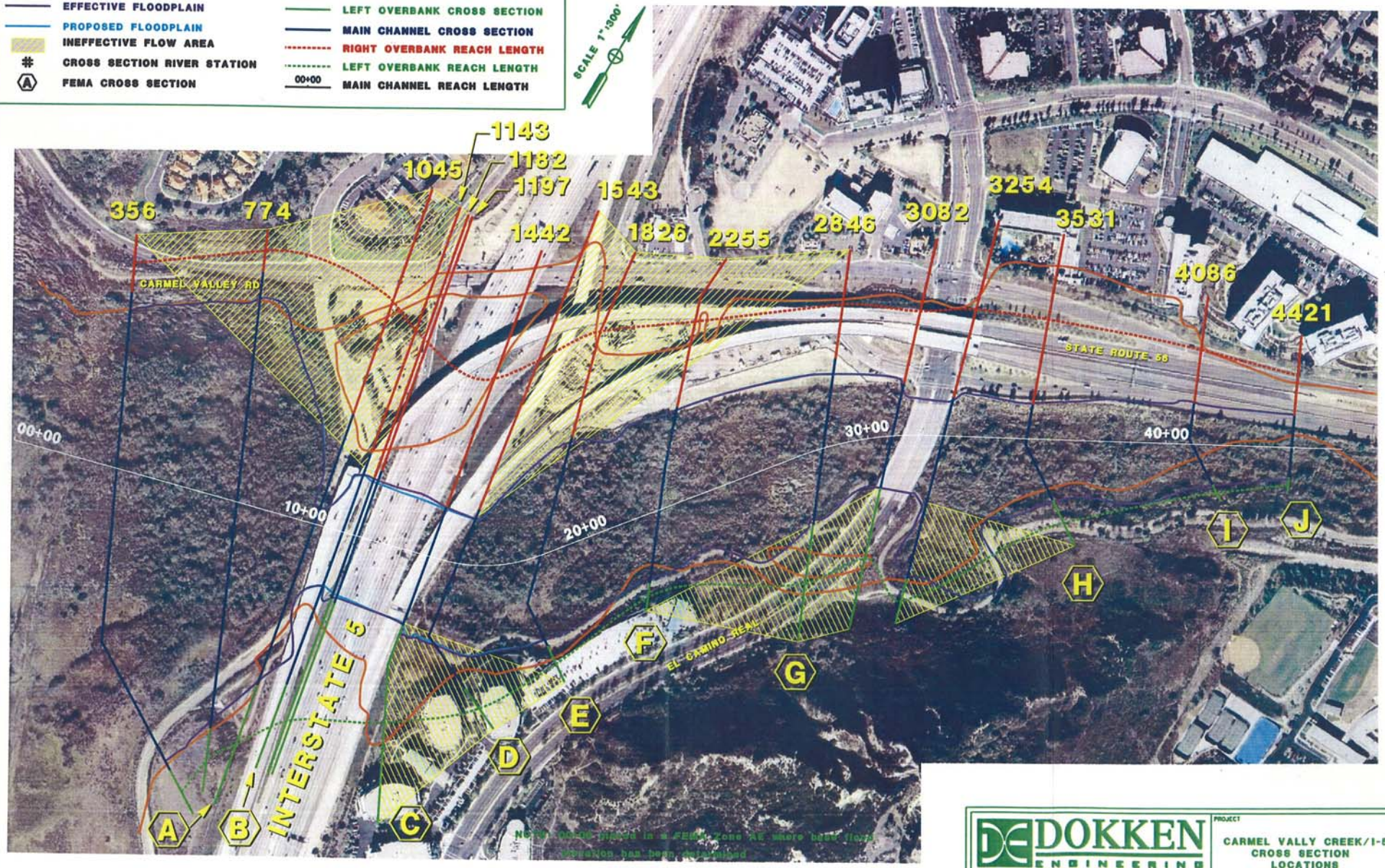

DOKKEN ENGINEERING
5675 RUFFIN ROAD
SUITE 250
SAN DIEGO, CA 92123
(858) 514-8377

PROJECT
CARMEL VALLY CREEK/I-5
CROSS SECTION
LOCATIONS

FEBRUARY 2008

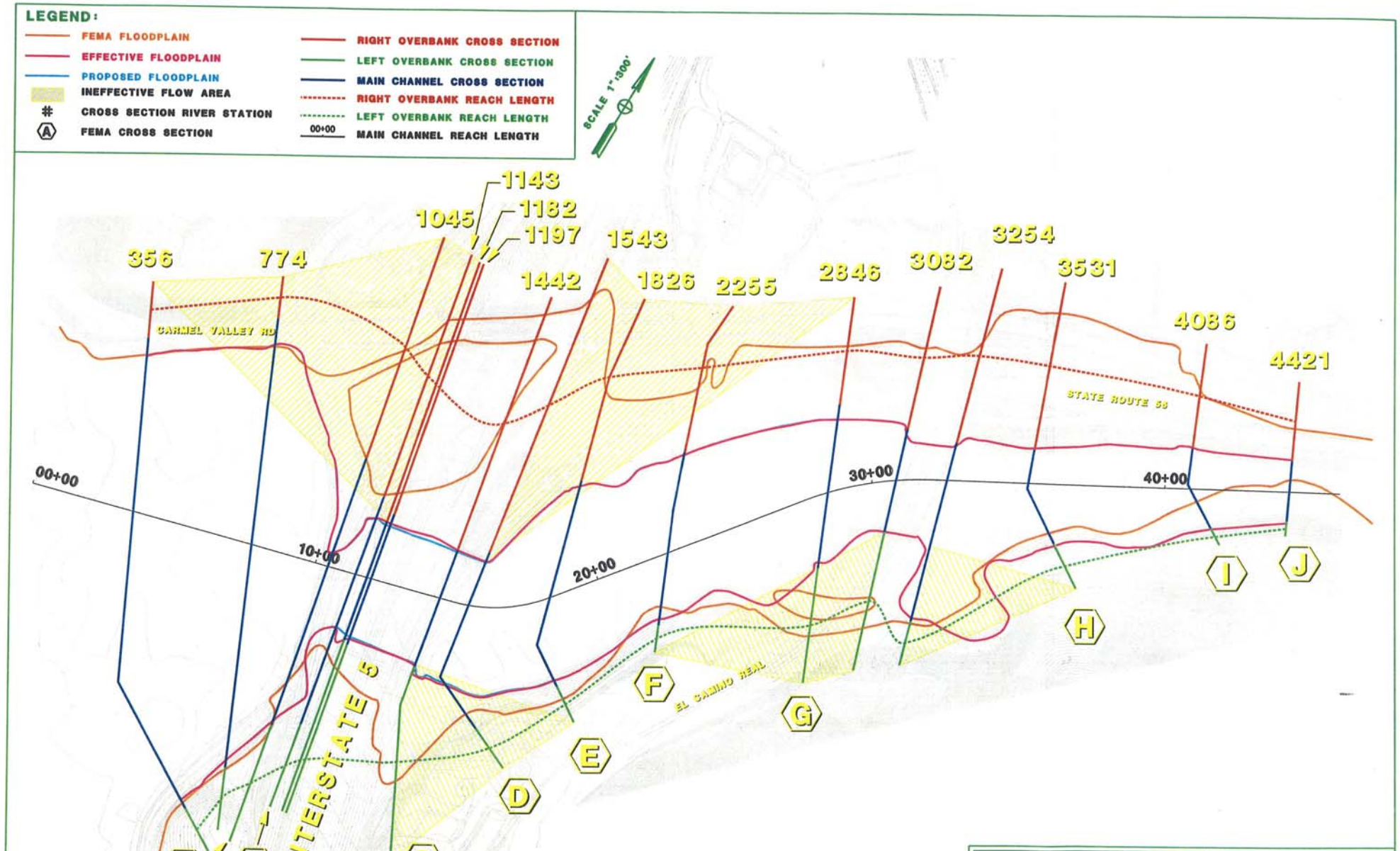

NOTE: 00+00 placed in a FEMA Zone AE where base flood elevation has been determined

DOKKEN ENGINEERING
5675 RUFFIN ROAD
SUITE 250
SAN DIEGO, CA 92123
(858) 514-8377

PROJECT

CARMEL VALLY CREEK/I-5
CROSS SECTION
LOCATIONS

FEBRUARY 2006

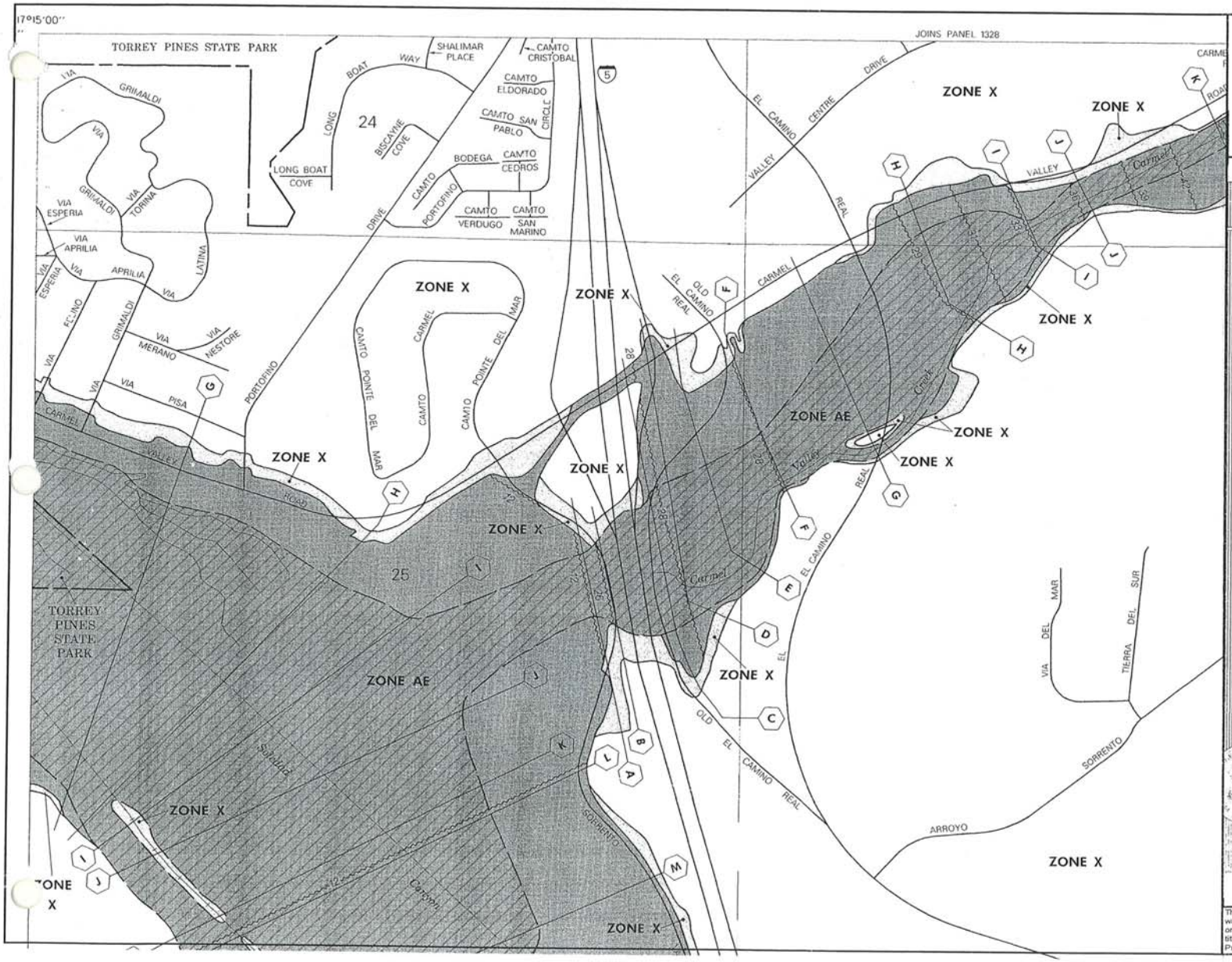

NATIONAL FLOOD INSURANCE PROGRAM

FIRM
FLOOD INSURANCE RATE MAP

SAN DIEGO COUNTY, CALIFORNIA AND INCORPORATED AREAS

PANEL 1336 OF 2375

(SEE MAP INDEX FOR PANELS NOT PRINTED)

CONTAINS COMMUNITY	NUMBER	PANEL	SUFFIX
SAN DIEGO CITY OF	060295	1336	F
SAN DIEGO COUNTY UNINCORPORATED AREAS	060284	1336	F

MAP NUMBER 06073C1336 F

EFFECTIVE DATE: JUNE 19, 1997

Federal Emergency Management Agency

This is an official copy of a portion of the above referenced flood map. It was extracted using F-MIT On-Line. This map does not reflect changes or amendments which may have been made subsequent to the date on the title block. For the latest product information about National Flood Insurance Program flood maps check the FEMA Flood Map Store at www.msc.fema.gov

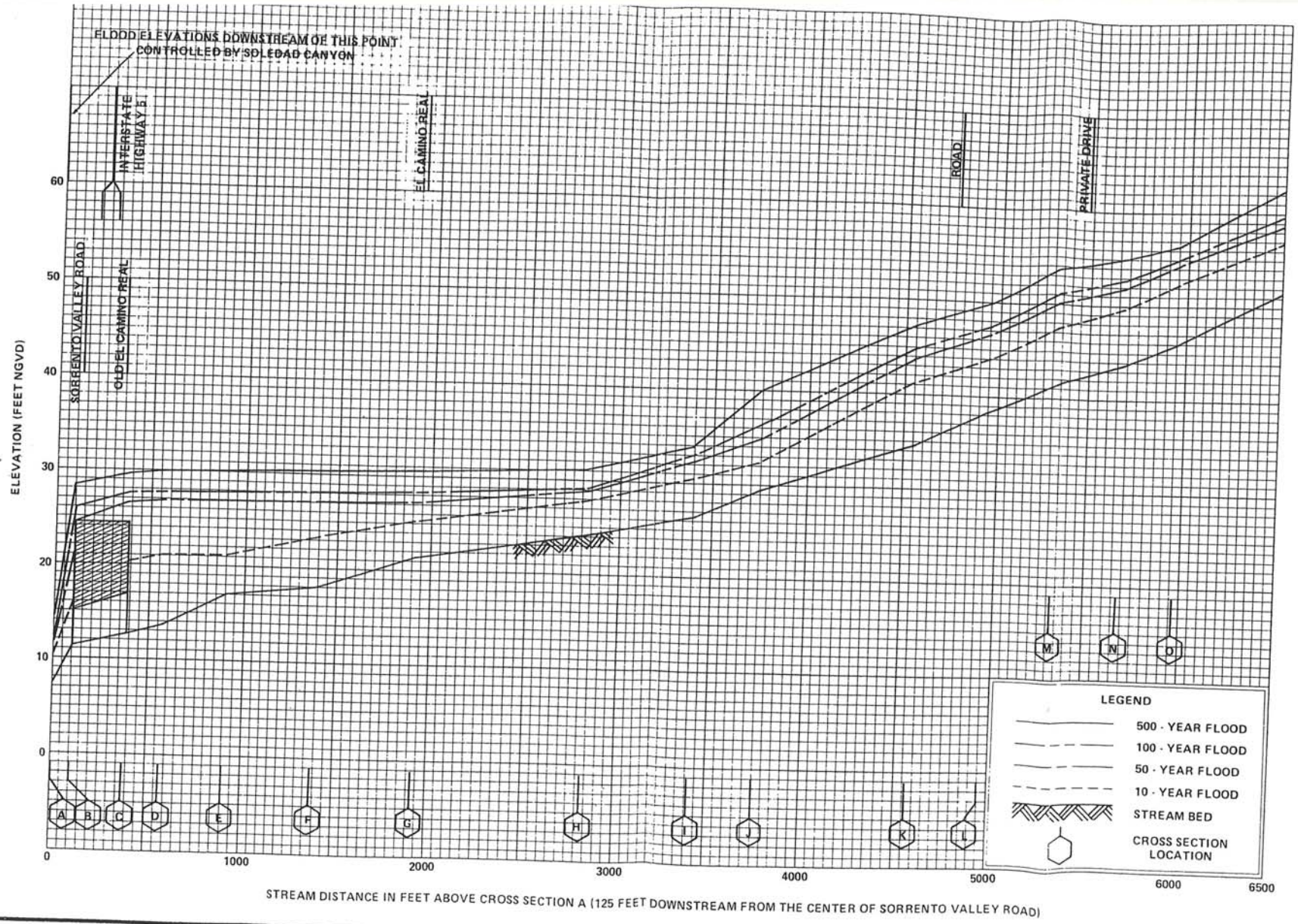

FLOOD PROFILES

CARMEL VALLEY CREEK

FEDERAL EMERGENCY MANAGEMENT AGENCY

SAN DIEGO COUNTY, CA
AND INCORPORATED AREAS

FLOODING SOURCE		FLOODWAY			BASE FLOOD WATER SURFACE ELEVATION			
CROSS SECTION	DISTANCE[1]	WIDTH (FEET)	SECTION AREA (SQUARE FEET)	MEAN VELOCITY (FEET PER SECOND)	REGULATORY	WITHOUT FLOODWAY	WITH FLOODWAY	INCREASE
					(FEET NGVD)			
Carmel Valley Creek								
A	0	327	990	9.9	12.3	12.3	12.3	0.0
B	93	482	1,199	8.2	26.0	26.0	26.0	0.0
C	380	740	3,161	3.1	27.7	27.7	27.7	0.0
D	570	760	9,079	1.1	27.8	27.8	27.9	0.1
E	900	670	6,620	1.2	27.9	27.9	27.9	0.0
F	1,380	320	1,713	4.7	28.0	28.0	28.0	0.0
G	1,920	642	2,515	3.2	28.3	28.3	28.9	0.6
H	2,820	570	1,519	5.3	29.1	29.1	30.1	1.0
I	3,410	150	741	10.9	33.1	33.1	33.2	0.1
J	3,750	167	782	10.3	36.4	36.4	37.1	0.7
K	4,560	150	904	8.2	44.9	44.9	45.4	0.5
L	4,950	200	960	7.7	47.7	47.7	48.7	1.0
M	5,320	175	1,071	6.9	51.1	51.1	51.2	0.1
N	5,680	230	1,027	7.2	52.8	52.8	53.6	0.8
O	5,960	270	1,157	6.4	55.1	55.1	55.7	0.6
P	6,900	115	650	11.4	63.2	63.2	63.9	0.7
Q	7,340	160	1,267	5.9	68.2	68.2	68.8	0.6
R	7,840	130	735	10.1	69.9	69.9	70.8	0.9
S	8,380	175	935	6.7	74.3	74.3	75.0	0.7
T	8,930	155	682	9.2	77.5	77.5	77.7	0.2
U	9,290	230	1,292	4.9	79.3	79.3	80.2	0.9
V	10,025	230	799	7.9	82.5	82.5	82.7	0.2
W	10,736	80	581	9.1	84.6	84.6	85.2	0.6
X	11,391	185	1,566	3.4	87.9	87.9	88.4	0.5
Y	11,942	164	1,196	4.4	88.2	88.2	88.6	0.4
Z	12,630	188	1,167	4.5	93.2	93.2	93.2	0.0

[1]Feet Above Cross Section A (125 Feet Downstream From the Center of Sorrento Valley Road)

TABLE 8

FEDERAL EMERGENCY MANAGEMENT AGENCY

SAN DIEGO COUNTY, CA
AND INCORPORATED AREAS

FLOODWAY DATA

CARMEL VALLEY CREEK

APPENDIX 'B'

Results Summary

HEC-RAS Cross Section Input/Output

Existing

Proposed

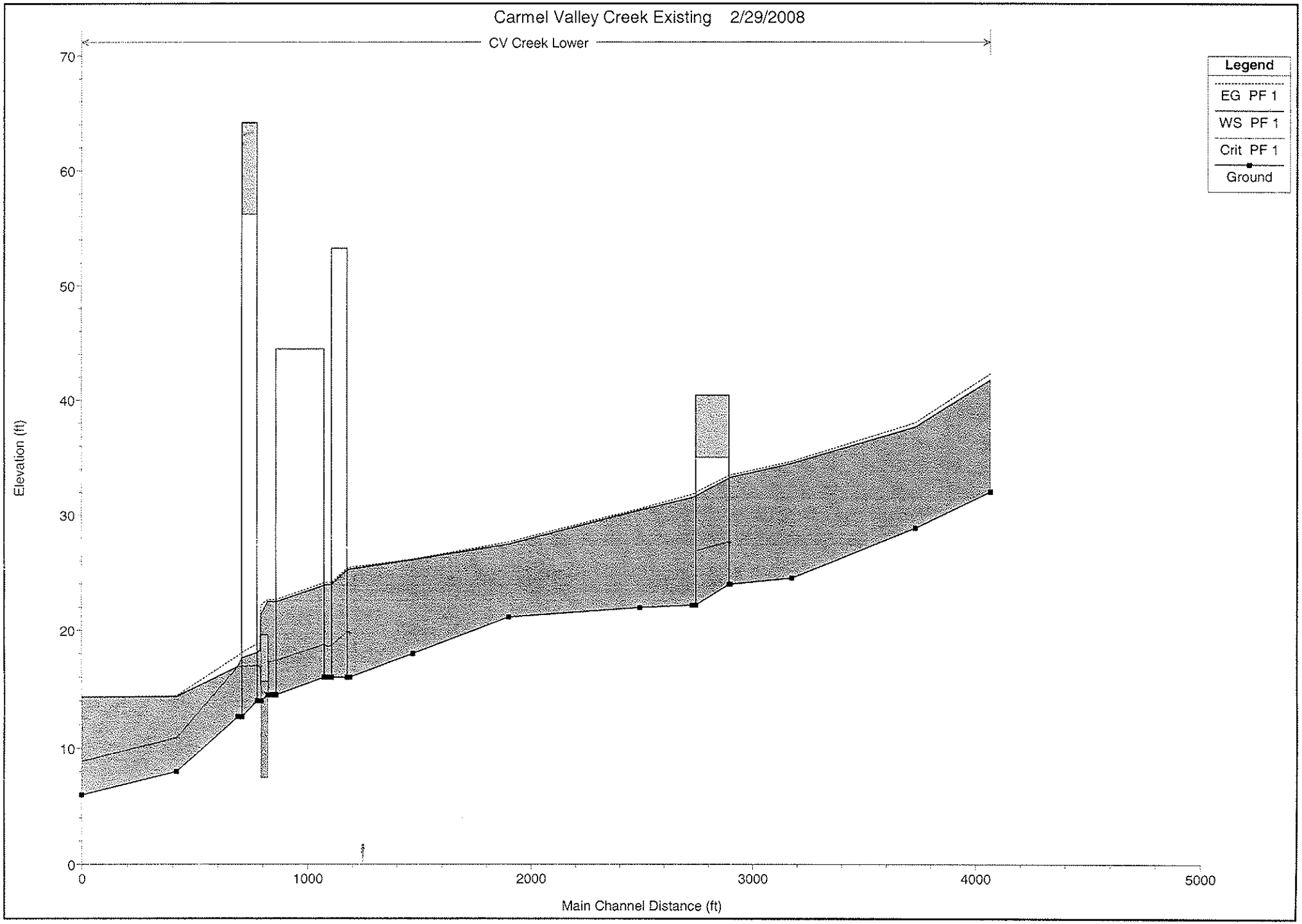
Carmel Valley Creek Existing 2/29/2008
CV Creek Lower
Legend
EG PF 1
WS PF 1
Crit PF 1
Ground
Elevation (ft)
Main Channel Distance (ft)
0
10
20
30
40
50
60
70
0
1000
2000
3000
4000
5000

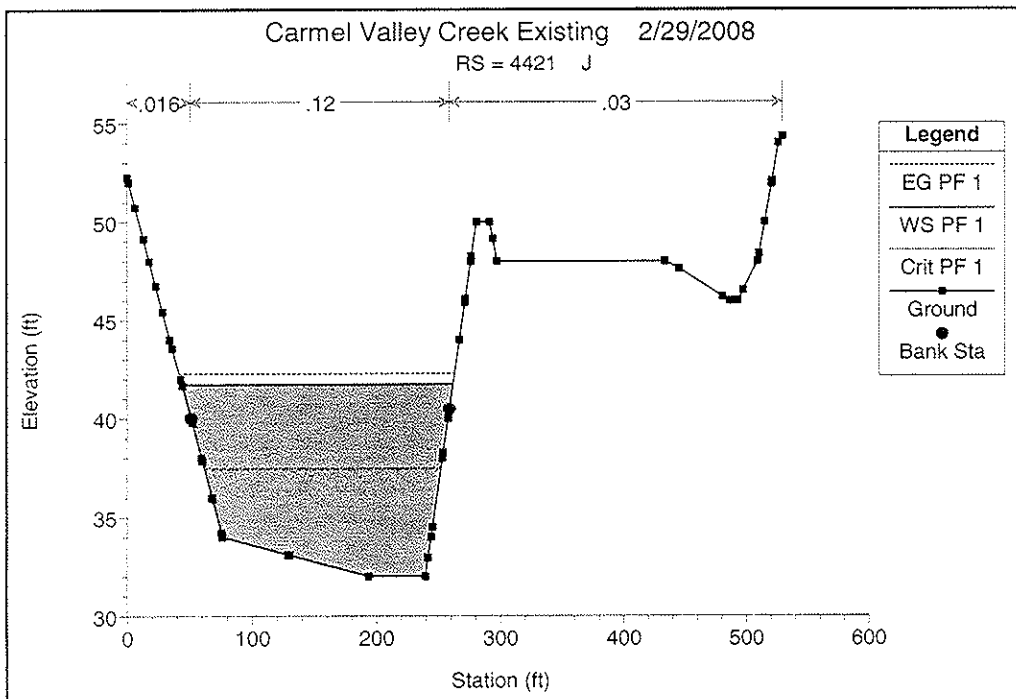
Carmel Valley Creek Existing 2/29/2008
RS = 4421 J
.016
.12
.03
Elevation (ft)
Station (ft)
Legend
EG PF 1
WS PF 1
Crit PF 1
Ground
Bank Sta

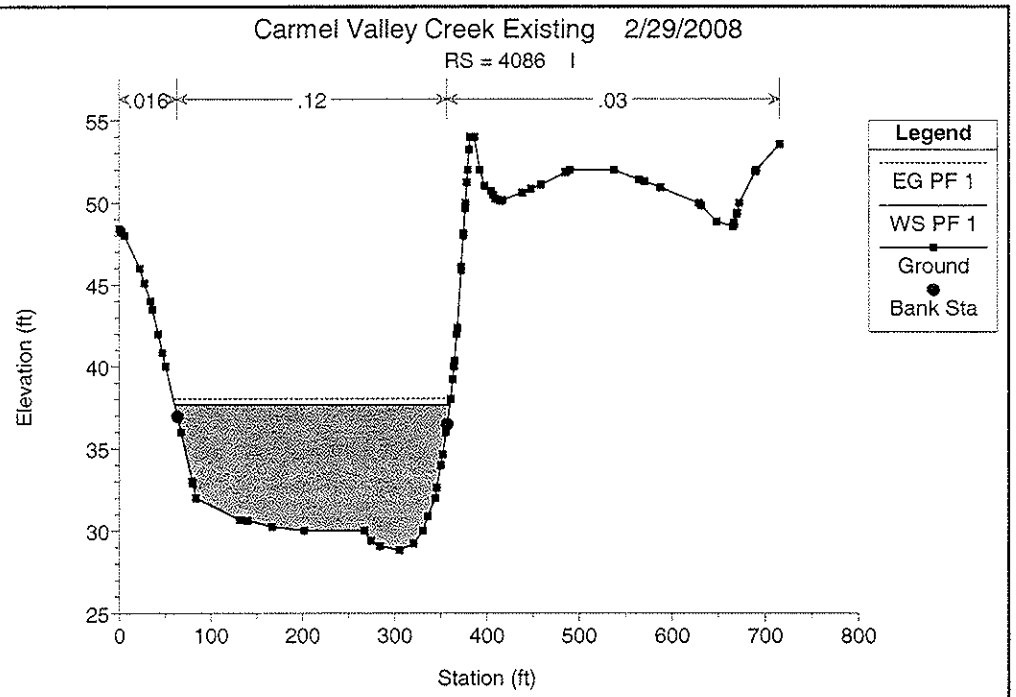
Carmel Valley Creek Existing 2/29/2008
RS = 4086 I
.016
.12
.03
Elevation (ft)
Station (ft)
Legend
EG PF 1
WS PF 1
Ground
Bank Sta

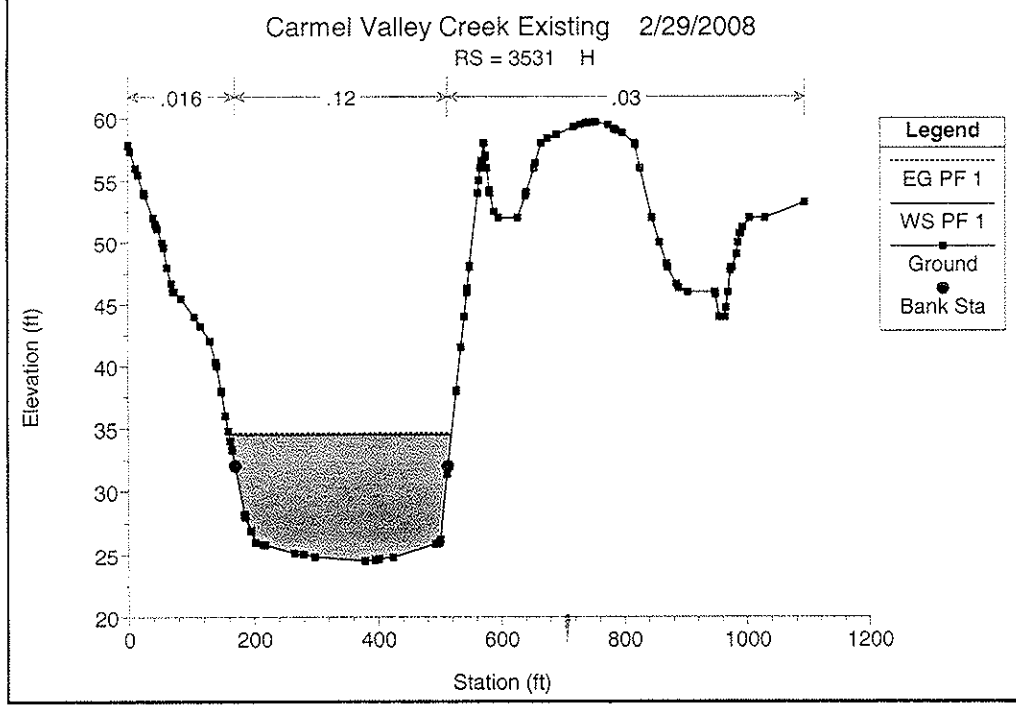
Carmel Valley Creek Existing 2/29/2008
RS = 3531 H
.016
.12
.03
Elevation (ft)
Station (ft)
Legend
EG PF 1
WS PF 1
Ground
Bank Sta

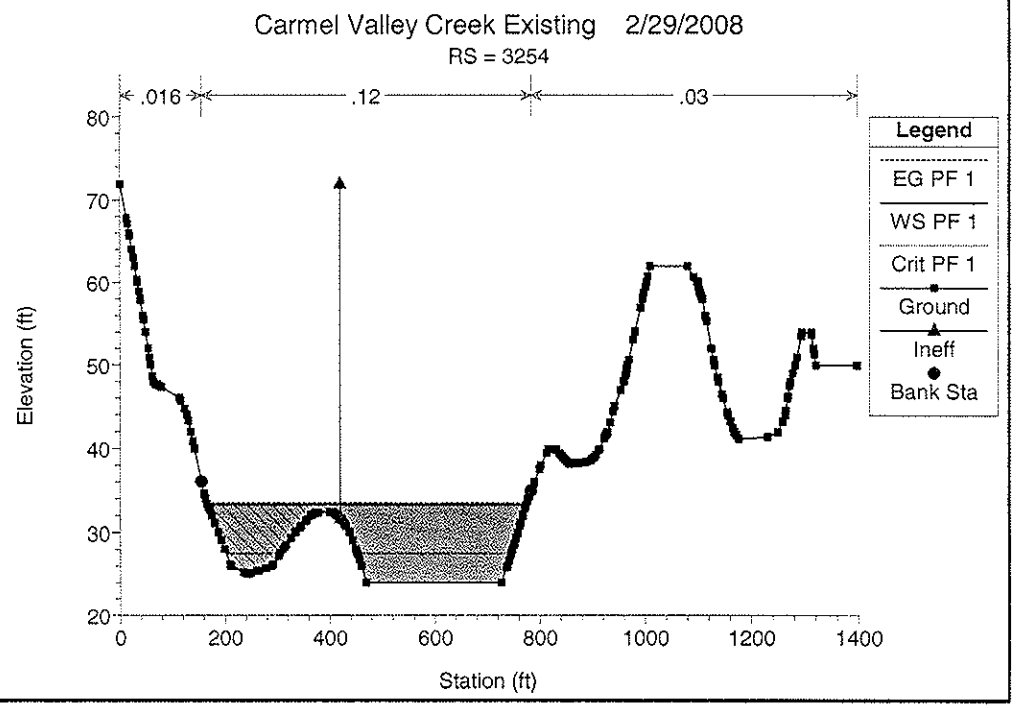
Carmel Valley Creek Existing 2/29/2008
RS = 3254
.016
.12
.03
Elevation (ft)
Station (ft)
Legend
EG PF 1
WS PF 1
Crit PF 1
Ground
Ineff
Bank Sta

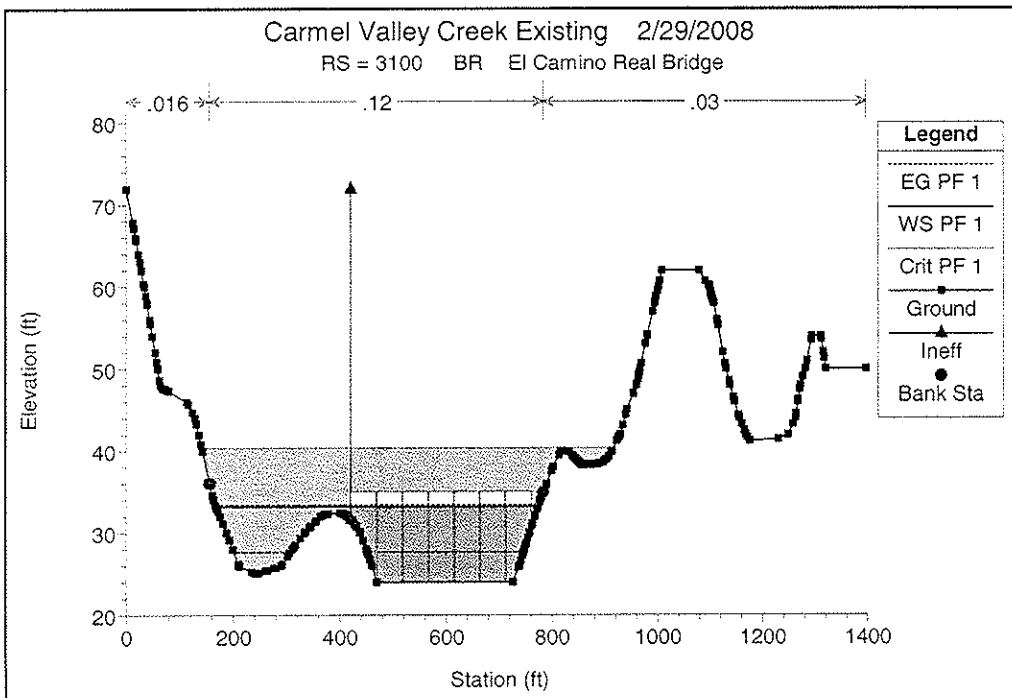
Carmel Valley Creek Existing 2/29/2008
RS = 3100 BR El Camino Real Bridge
.016
.12
.03
Legend
EG PF 1
WS PF 1
Crit PF 1
Ground
Ineff
Bank Sta
Elevation (ft)
Station (ft)

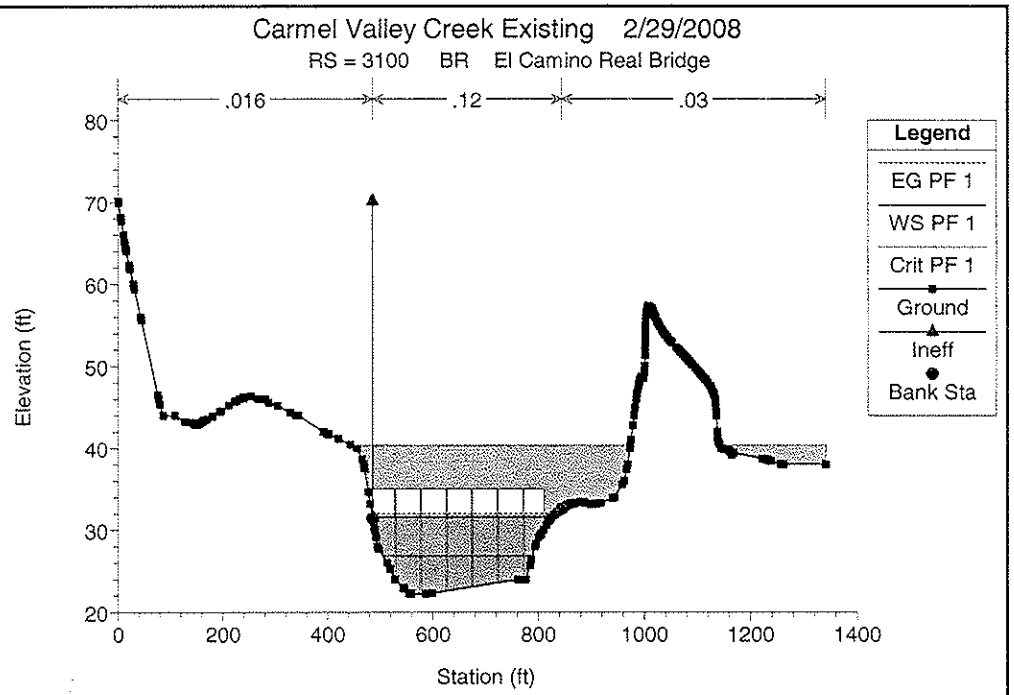
Carmel Valley Creek Existing 2/29/2008
RS = 3100 BR El Camino Real Bridge
.016
.12
.03
Legend
EG PF 1
WS PF 1
Crit PF 1
Ground
Ineff
Bank Sta
Elevation (ft)
Station (ft)

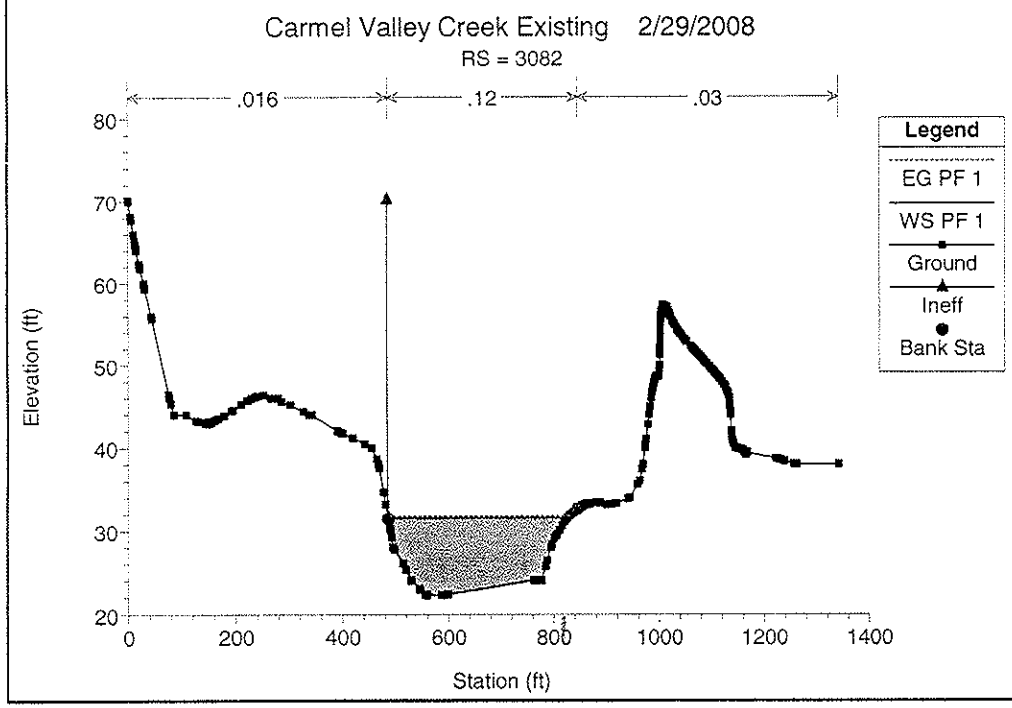
Carmel Valley Creek Existing 2/29/2008
RS = 3082
.016
.12
.03
Legend
EG PF 1
WS PF 1
Ground
Ineff
Bank Sta
Elevation (ft)
Station (ft)

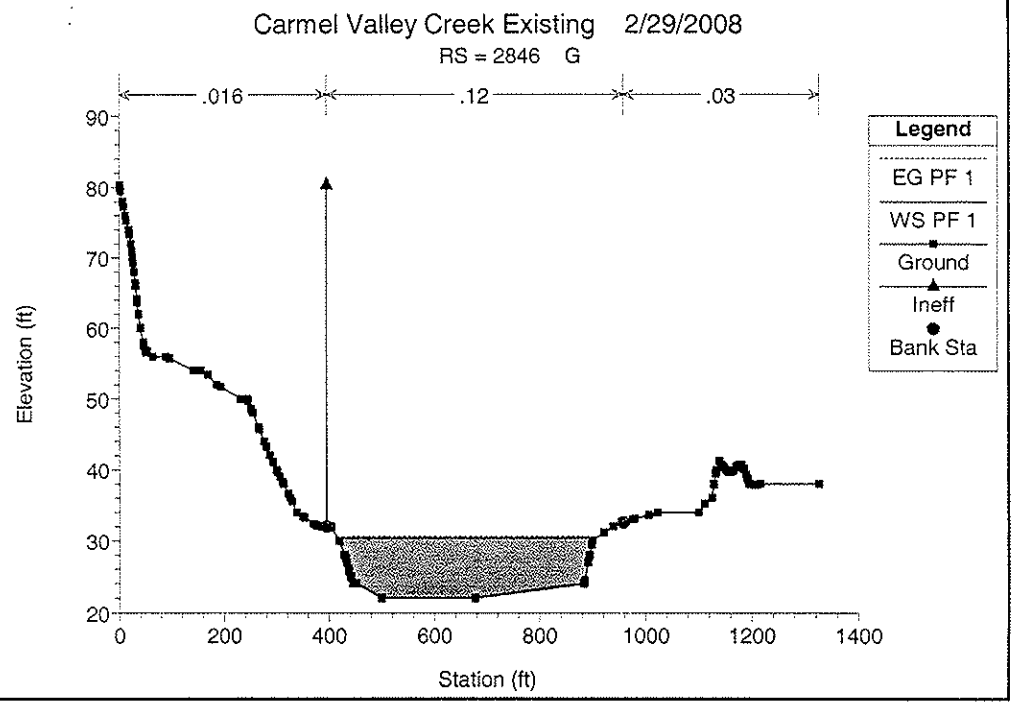
Carmel Valley Creek Existing 2/29/2008
RS = 2846 G
.016
.12
.03
Legend
EG PF 1
WS PF 1
Ground
Ineff
Bank Sta
Elevation (ft)
Station (ft)

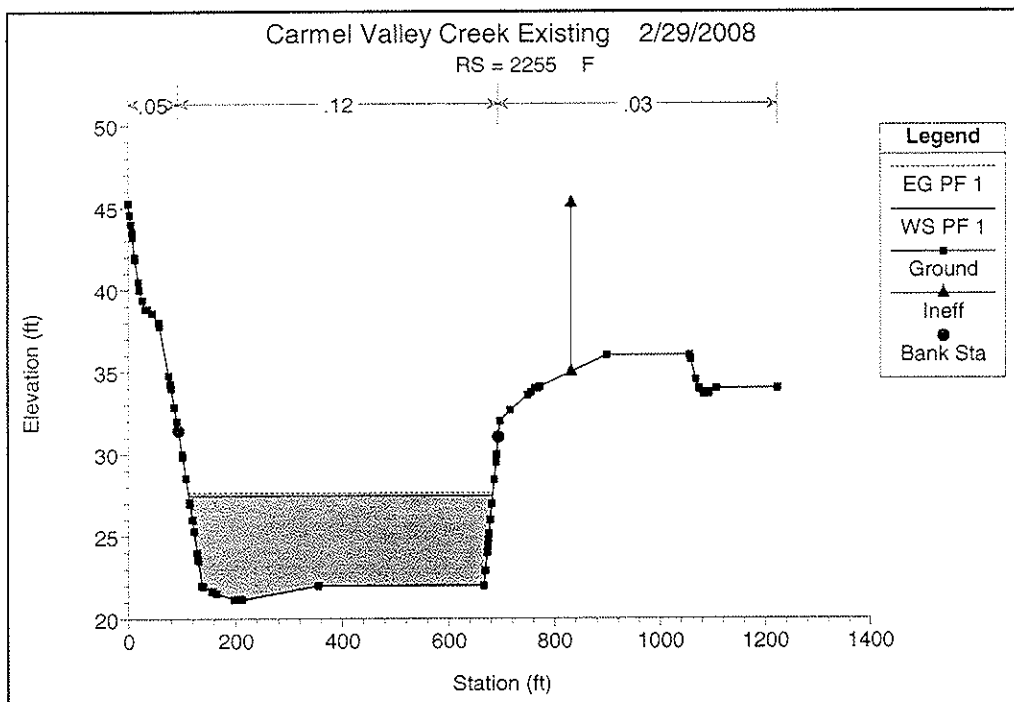
Carmel Valley Creek Existing 2/29/2008
RS = 2255 F
.05
.12
.03
Legend
EG PF 1
WS PF 1
Ground
Ineff
Bank Sta
Elevation (ft)
Station (ft)

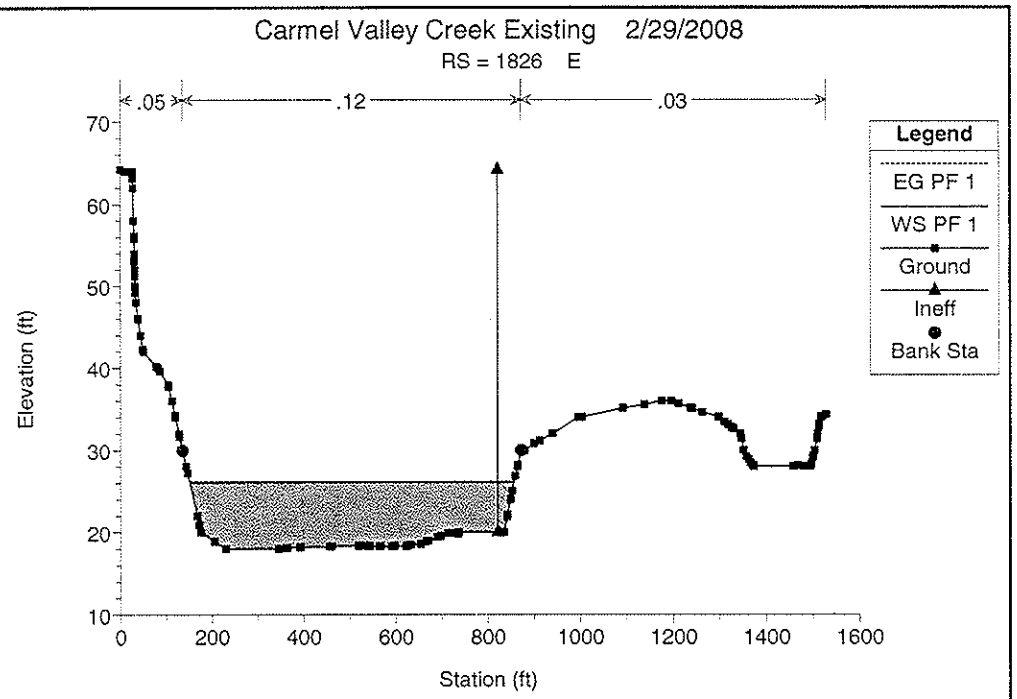
Carmel Valley Creek Existing 2/29/2008
RS = 1826 E
.05
.12
.03
Legend
EG PF 1
WS PF 1
Ground
Ineff
Bank Sta
Elevation (ft)
Station (ft)

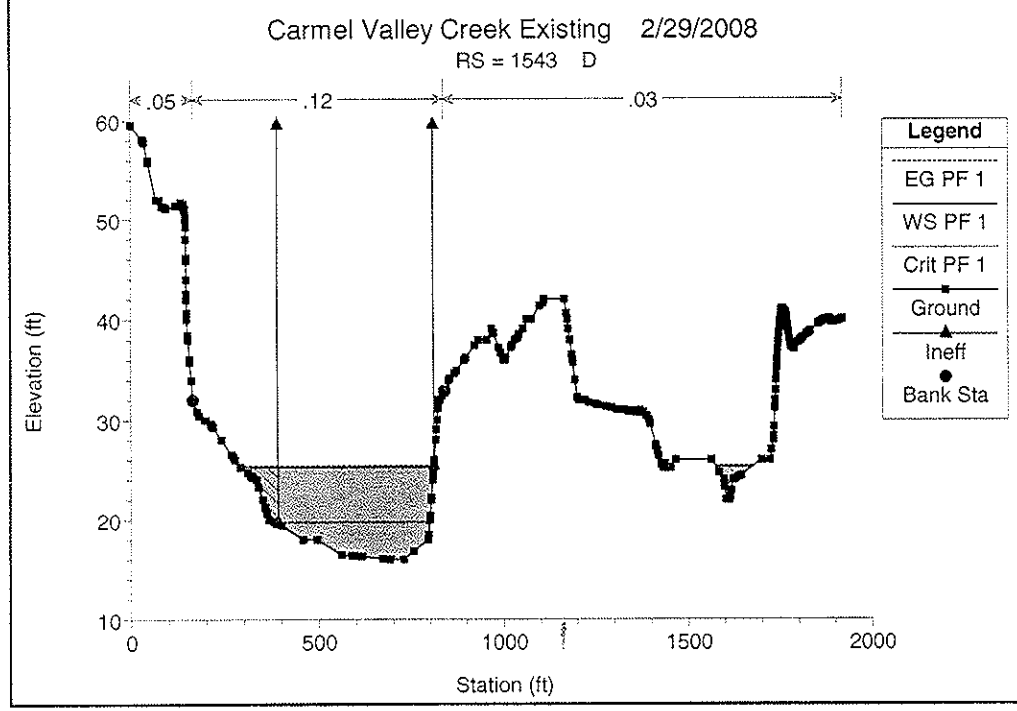
Carmel Valley Creek Existing 2/29/2008
RS = 1543 D
.05
.12
.03
Legend
EG PF 1
WS PF 1
Crit PF 1
Ground
Ineff
Bank Sta
Elevation (ft)
Station (ft)

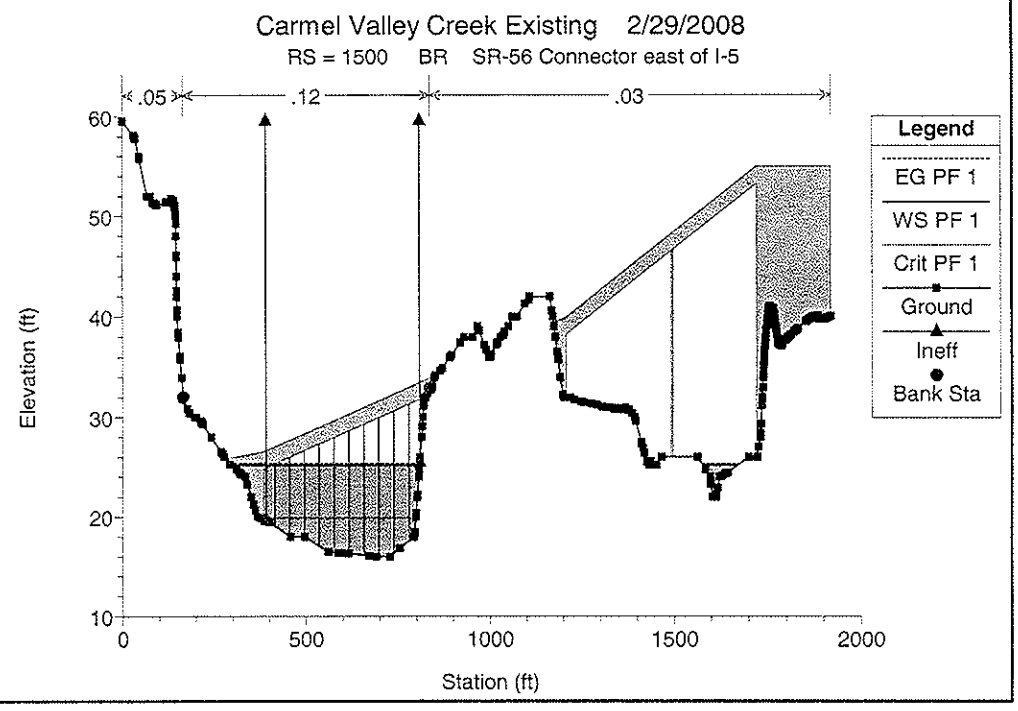
Carmel Valley Creek Existing 2/29/2008
RS = 1500 BR SR-56 Connector east of I-5
.05
.12
.03
Legend
EG PF 1
WS PF 1
Crit PF 1
Ground
Ineff
Bank Sta
Elevation (ft)
Station (ft)

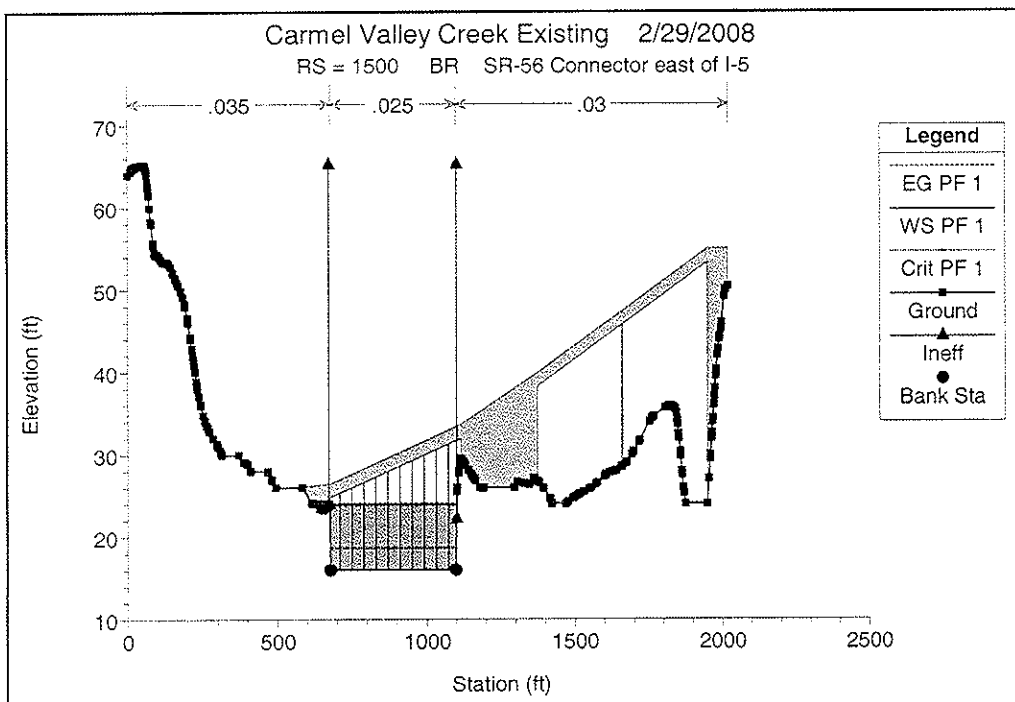
Carmel Valley Creek Existing 2/29/2008
RS = 1500 BR SR-56 Connector east of I-5
.035
.025
.03
Elevation (ft)
Station (ft)
Legend
EG PF 1
WS PF 1
Crit PF 1
Ground
Ineff
Bank Sta

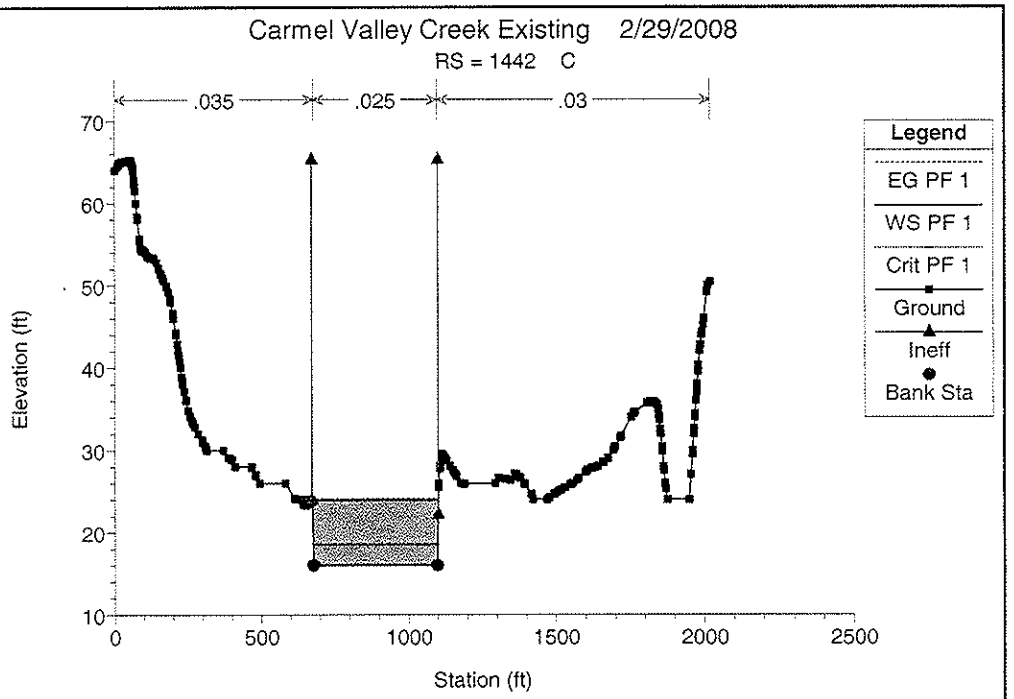
Carmel Valley Creek Existing 2/29/2008
RS = 1442 C
.035
.025
.03
Elevation (ft)
Station (ft)
Legend
EG PF 1
WS PF 1
Crit PF 1
Ground
Ineff
Bank Sta

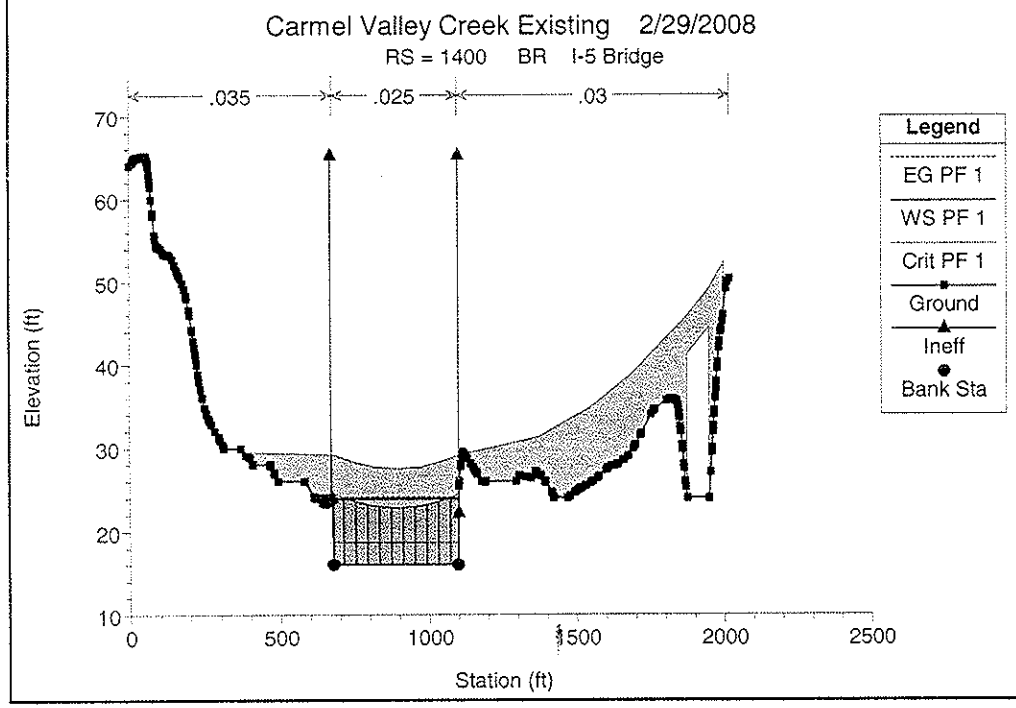
Carmel Valley Creek Existing 2/29/2008
RS = 1400 BR I-5 Bridge
.035
.025
.03
Elevation (ft)
Station (ft)
Legend
EG PF 1
WS PF 1
Crit PF 1
Ground
Ineff
Bank Sta

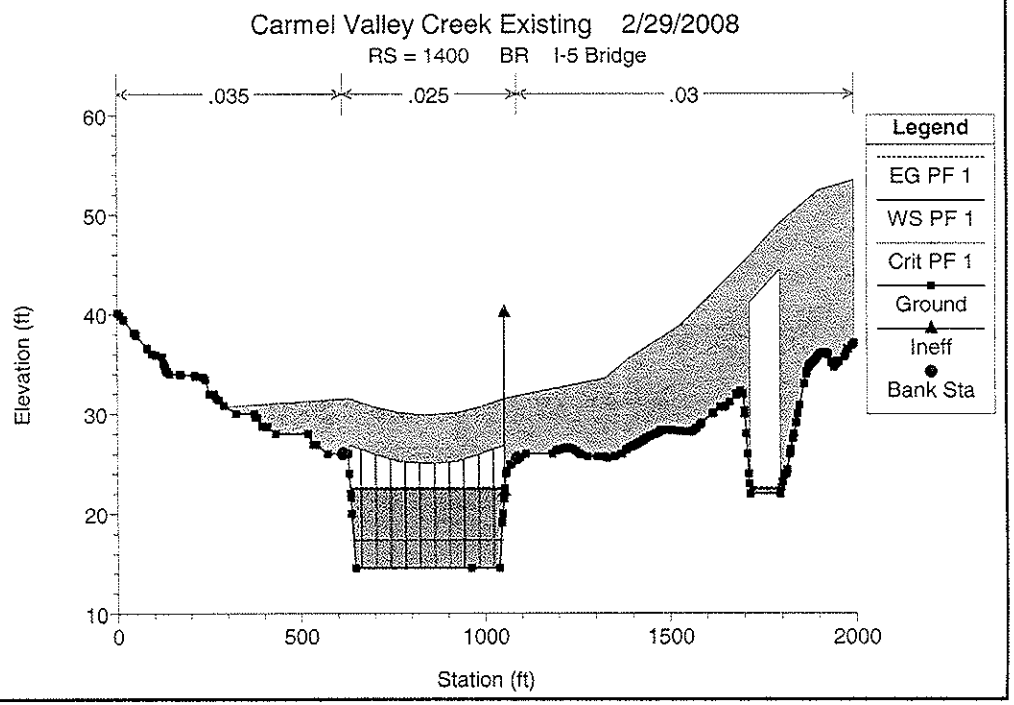
Carmel Valley Creek Existing 2/29/2008
RS = 1400 BR I-5 Bridge
.035
.025
.03
Elevation (ft)
Station (ft)
Legend
EG PF 1
WS PF 1
Crit PF 1
Ground
Ineff
Bank Sta

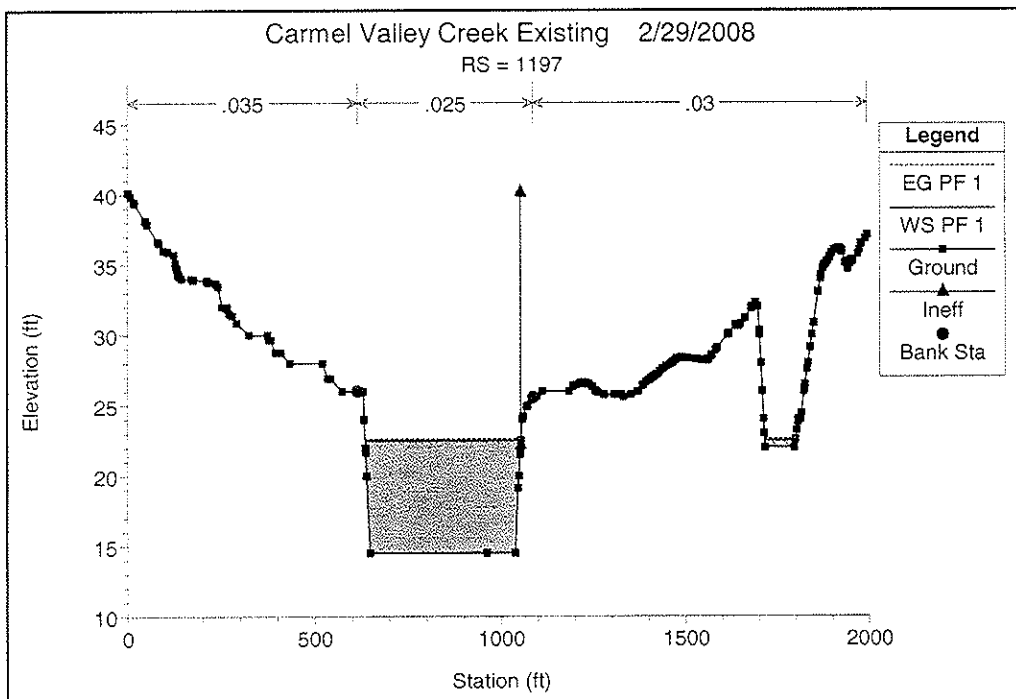
Carmel Valley Creek Existing 2/29/2008
RS = 1197
.035
.025
.03
Legend
EG PF 1
WS PF 1
Ground
Ineff
Bank Sta
Elevation (ft)
Station (ft)

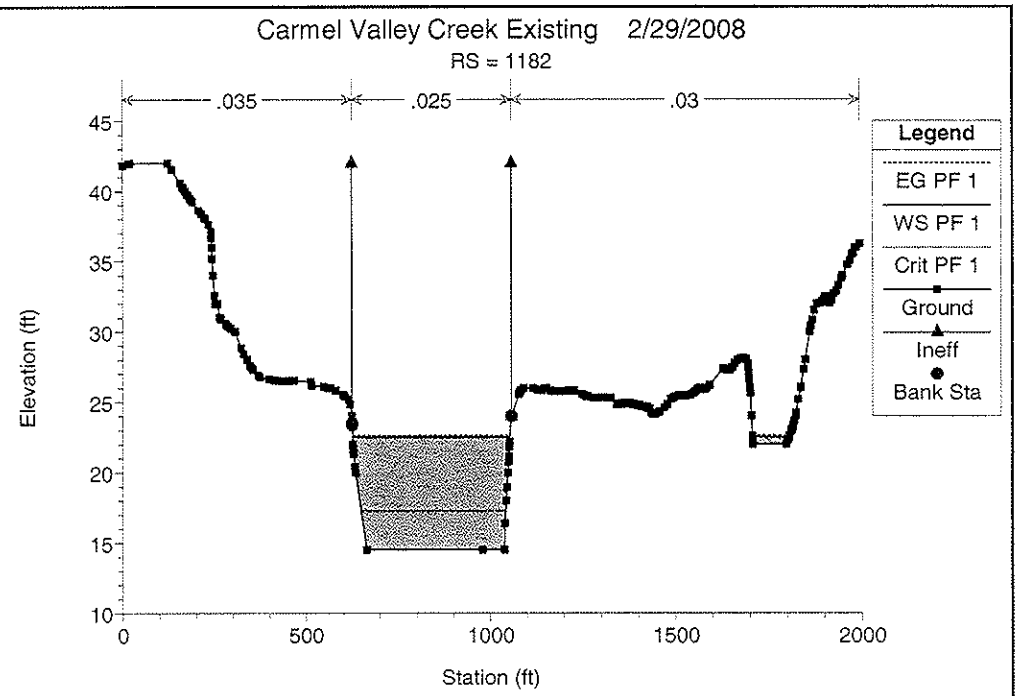
Carmel Valley Creek Existing 2/29/2008
RS = 1182
.035
.025
.03
Legend
EG PF 1
WS PF 1
Crit PF 1
Ground
Ineff
Bank Sta
Elevation (ft)
Station (ft)

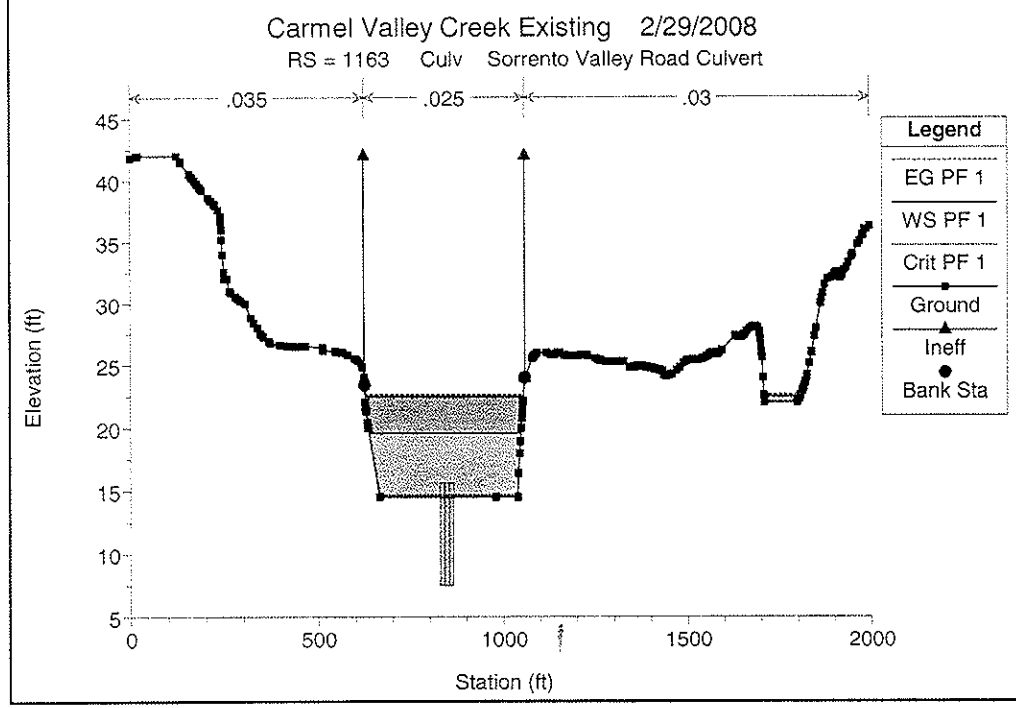
Carmel Valley Creek Existing 2/29/2008
RS = 1163 Culv Sorrento Valley Road Culvert
.035
.025
.03
Legend
EG PF 1
WS PF 1
Crit PF 1
Ground
Ineff
Bank Sta
Elevation (ft)
Station (ft)

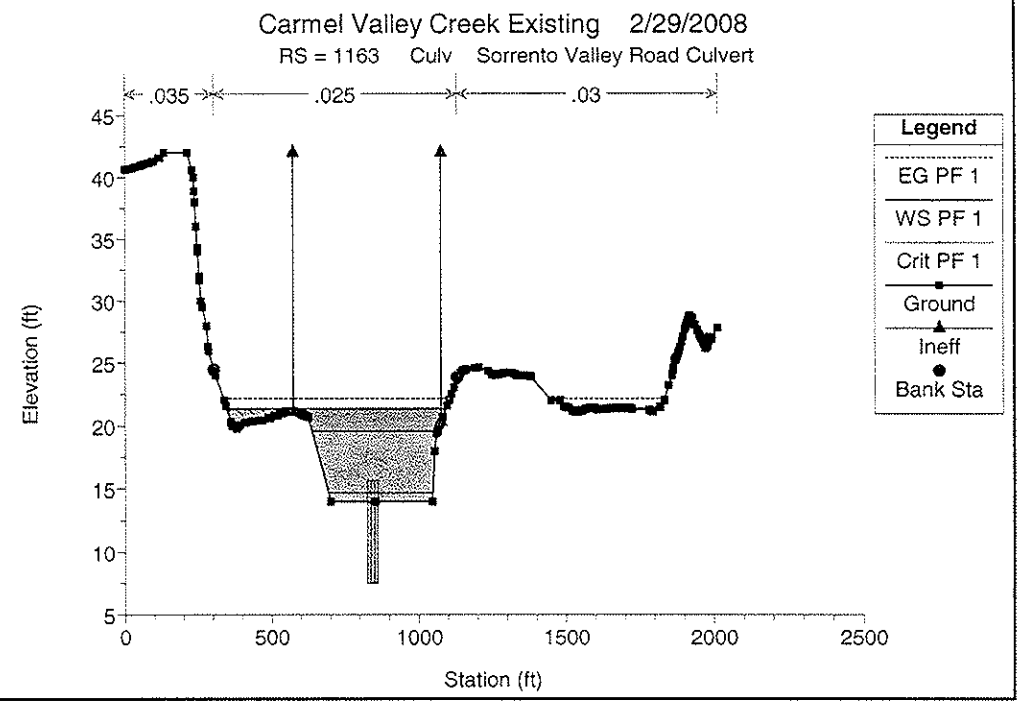
Carmel Valley Creek Existing 2/29/2008
RS = 1163 Culv Sorrento Valley Road Culvert
.035
.025
.03
Legend
EG PF 1
WS PF 1
Crit PF 1
Ground
Ineff
Bank Sta
Elevation (ft)
Station (ft)

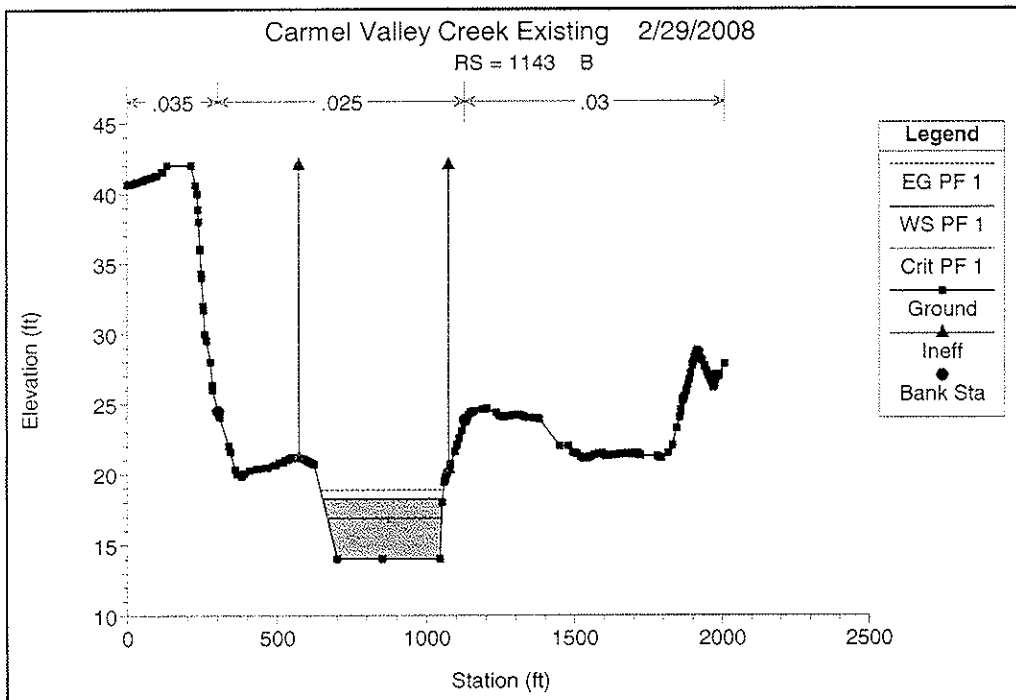
Carmel Valley Creek Existing 2/29/2008
RS = 1143 B
.035
.025
.03
Legend
EG PF 1
WS PF 1
Crit PF 1
Ground
Ineff
Bank Sta
Elevation (ft)
Station (ft)

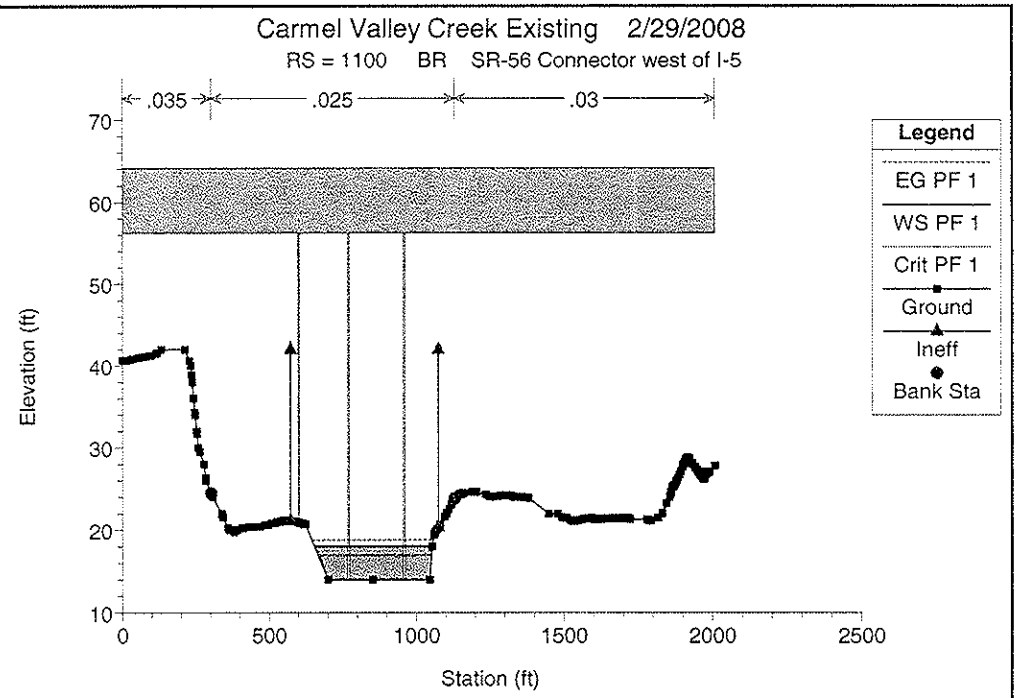
Carmel Valley Creek Existing 2/29/2008
RS = 1100 BR SR-56 Connector west of I-5
.035
.025
.03
Legend
EG PF 1
WS PF 1
Crit PF 1
Ground
Ineff
Bank Sta
Elevation (ft)
Station (ft)

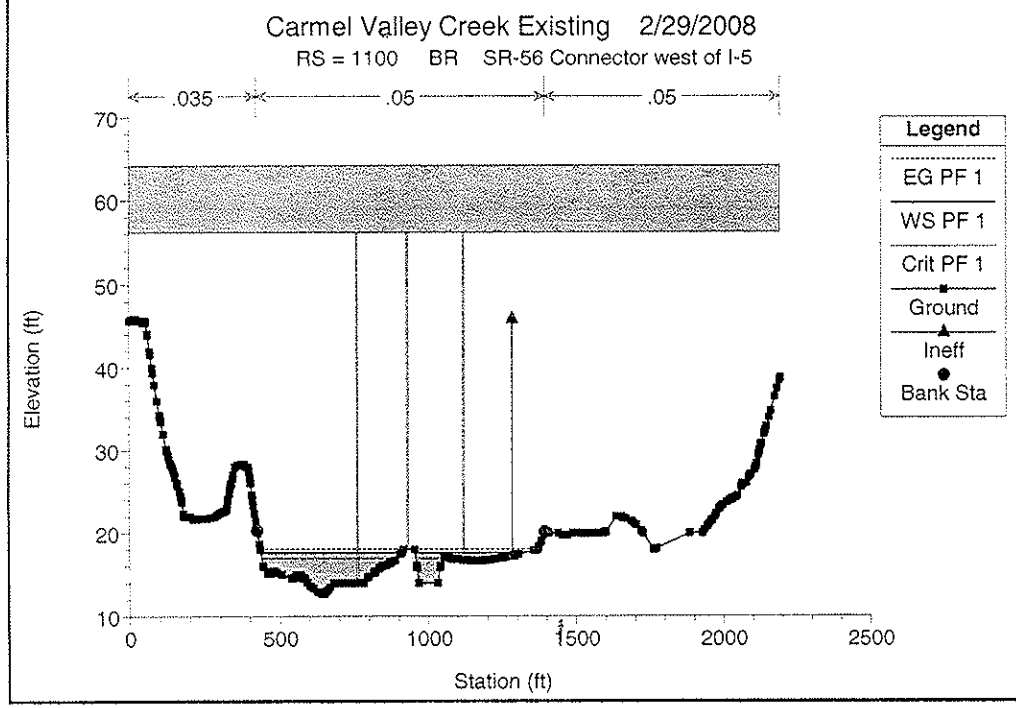
Carmel Valley Creek Existing 2/29/2008
RS = 1100 BR SR-56 Connector west of I-5
.035
.05
.05
Legend
EG PF 1
WS PF 1
Crit PF 1
Ground
Ineff
Bank Sta
Elevation (ft)
Station (ft)

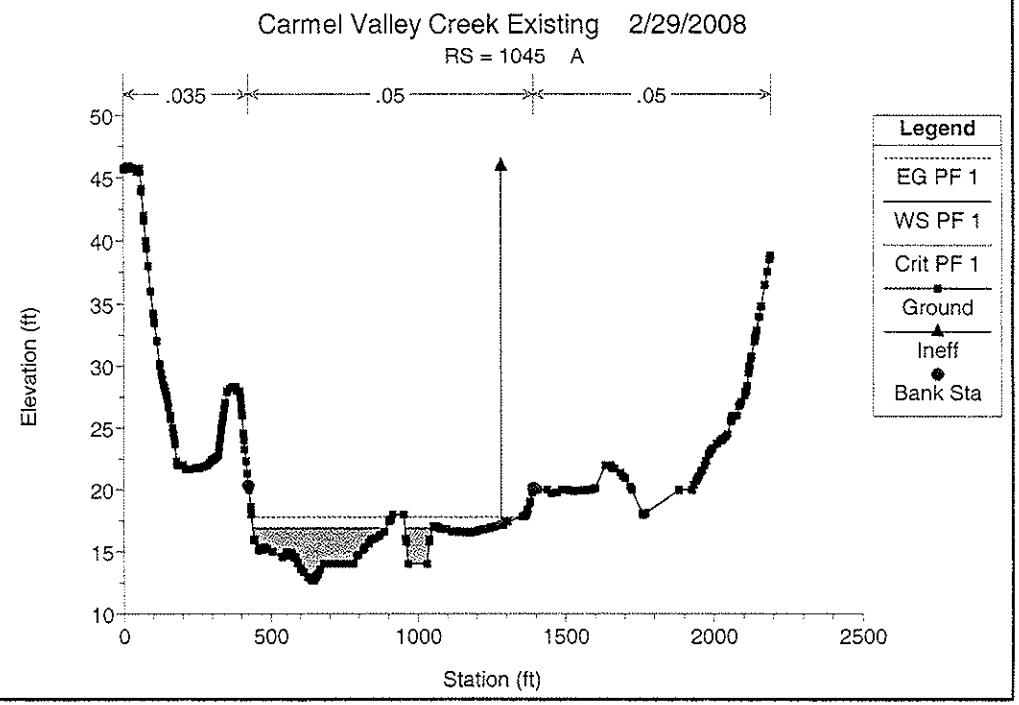
Carmel Valley Creek Existing 2/29/2008
RS = 1045 A
.035
.05
.05
Legend
EG PF 1
WS PF 1
Crit PF 1
Ground
Ineff
Bank Sta
Elevation (ft)
Station (ft)

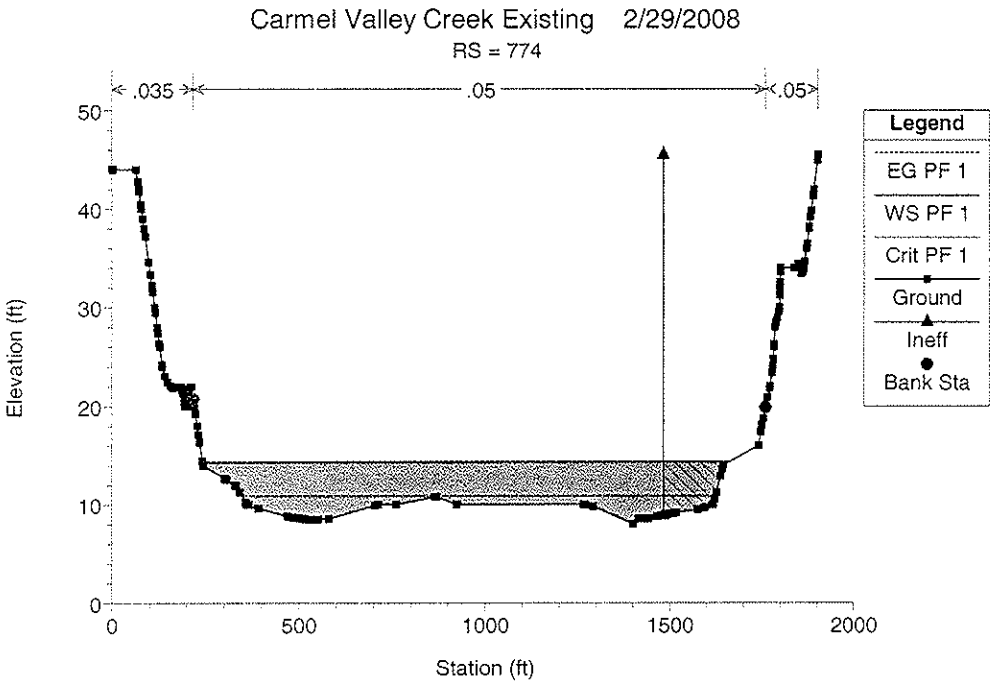
Carmel Valley Creek Existing 2/29/2008
RS = 774
.035
.05
.05
Elevation (ft)
Station (ft)
Legend
EG PF 1
WS PF 1
Crit PF 1
Ground
Ineff
Bank Sta

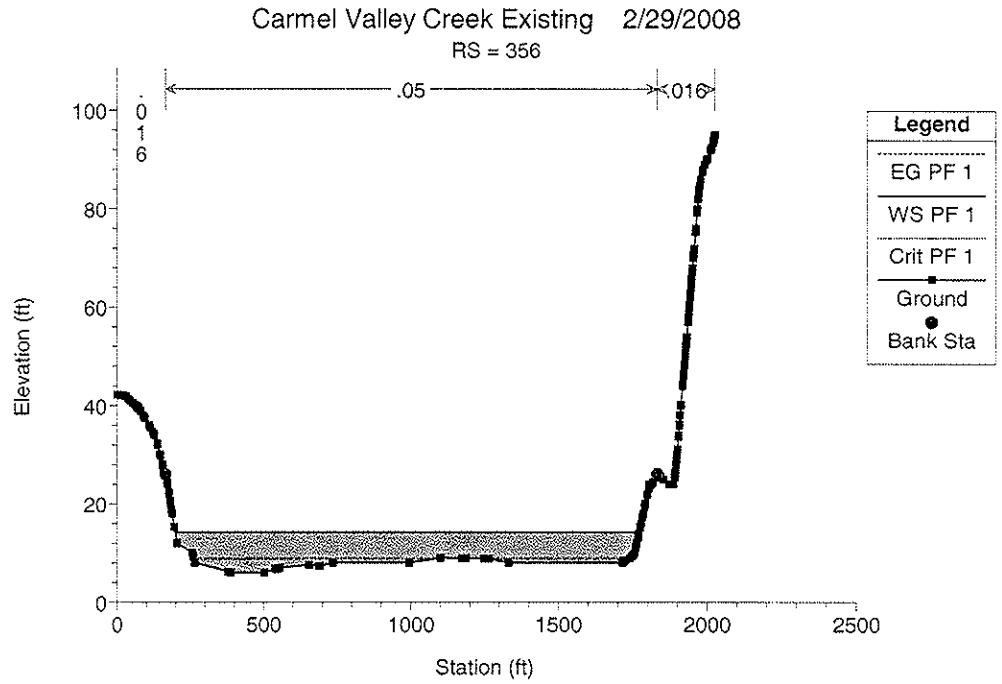
Carmel Valley Creek Existing 2/29/2008
RS = 356
.05
.016
Elevation (ft)
Station (ft)
Legend
EG PF 1
WS PF 1
Crit PF 1
Ground
Bank Sta

CV_EXIST.rep

HEC-RAS Version 3.1.3 May 2005
U.S. Army Corp of Engineers
Hydrologic Engineering Center
609 Second Street
Davis, California

```
X     X  XXXXXX    XXXX        XXXX       XX      XXXX
X     X  X        X    X       X   X     X  X    X
X     X  X        X            X   X    X    X   X
XXXXXXX  XXXX     X       XXX  XXXX     XXXXXX    XXXX
X     X  X        X            X  X     X    X        X
X     X  X        X    X       X   X    X    X        X
X     X  XXXXXX    XXXX        X    X   X    X   XXXXX
```

PROJECT DATA
Project Title: CarmelValleyCreek_Exist
Project File : CV_EXIST.prj
Run Date and Time: 2/29/2008 3:50:58 PM

Project in English units

Project Description:
Carmel Valley Creek - Existing Conditions Model

PLAN DATA

Plan Title: Carmel Valley Creek
Plan File : p:\1683_T064_I5_Floodplain\420_Env_ Stud\Carmel Valley\HEC RAS\Final\Existing\CV_EXIST.p01

Geometry Title: CV_Exist
Geometry File : p:\1683_T064_I5_Floodplain\420_Env_ Stud\Carmel Valley\HEC RAS\Final\Existing\CV_EXIST.g01

Flow Title : Carmel Valley Flow
Flow File : p:\1683_T064_I5_Floodplain\420_Env_ Stud\Carmel Valley\HEC RAS\Final\Existing\CV_EXIST.f01

Plan Summary Information:

Number of:	Cross Sections =	16	Multiple Openings =	0
	Culverts =	1	Inline Structures =	0
	Bridges =	4	Lateral Structures =	0

Computational Information
Water surface calculation tolerance = 0.01
Critical depth calculation tolerance = 0.01
Maximum number of iterations = 20
Maximum difference tolerance = 0.3
Flow tolerance factor = 0.001

Computation Options
Critical depth computed only where necessary
Conveyance Calculation Method: At breaks in n values only
Friction Slope Method: Average Conveyance
Computational Flow Regime: Mixed Flow

FLOW DATA

Flow Title: Carmel Valley Flow
Flow File : p:\1683_T064_I5_Floodplain\420_Env_ Stud\Carmel Valley\HEC RAS\Final\Existing\CV_EXIST.f01

Flow Data (cfs)

River	Reach	RS	PF 1
CV Creek	Lower	4421	10000

Boundary Conditions

River	Reach	Profile	Upstream	Downstream
CV Creek	Lower	PF 1	Known WS = 38.633	Known WS = 14.33

GEOMETRY DATA

Geometry Title: CV_Exist
Geometry File : p:\1683_T064_I5_Floodplain\420_Env_ Stud\Carmel Valley\HEC RAS\Final\Existing\CV_EXIST.g01

CROSS SECTION

RIVER: CV Creek
REACH: Lower RS: 4421

INPUT
Description: J
Station Elevation Data num= 55

Sta	Elev	Sta	Elev	Sta	Elev	Sta	Elev	Sta	Elev
0	52.26	1.03	52	6.1	50.75	12.84	49.13	17.47	48
22.65	46.76	28.08	45.43	34.09	44	35.88	43.56	42.44	42
43.77	41.68	50.81	40	51.74	39.78	59.2	38	59.77	37.86
67.6	36	67.85	35.94	75.17	34.2	75.96	34.01	76.01	34
128.72	33.09	129.52	33.08	193.37	32	239.37	32	241.51	32.94
243.94	34	245.08	34.5	253.1	38	253.71	38.27	257.67	40
258.71	40.45	266.82	44	271.18	45.9	271.4	46	271.59	46.08
275.98	48	276.52	48.24	280.55	50	291.23	50	293.78	49.16
297.24	48	433.54	48	445.17	47.62	480.38	46.2	486.48	46
492.92	46	497.05	46.52	509.08	48	510.26	48.38	515.05	50
520.48	51.94	520.65	52	520.85	52.07	526.21	54	529.36	54.34

Manning's n Values num= 3

Sta	n Val	Sta	n Val	Sta	n Val
0	.016	50.81	.12	258.71	.03

Bank Sta: Left Right Lengths: Left Channel Right Coeff Contr. Expan.

50.81 258.71 241.6 335.33 335.6 .1 .3

CROSS SECTION OUTPUT Profile #PF 1

E.G. Elev (ft)	42.28	Element	Left OB	Channel
Right OB				
Vel Head (ft)	0.53	Wt. n-Val.	0.016	0.120
0.030				
W.S. Elev (ft)	41.74	Reach Len. (ft)	241.60	335.33
335.60				
Crit W.S. (ft)	37.49	Flow Area (sq ft)	6.36	1700.87
1.91				
E.G. Slope (ft/ft)	0.013701	Area (sq ft)	6.36	1700.87
1.91				
Q Total (cfs)	10000.00	Flow (cfs)	61.90	9930.31
7.79				
Top Width (ft)	218.15	Top Width (ft)	7.30	207.90
2.95				
Vel Total (ft/s)	5.85	Avg. Vel. (ft/s)	9.73	5.84
4.09				
Max Chl Dpth (ft)	9.74	Hydr. Depth (ft)	0.87	8.18
0.65				
Conv. Total (cfs)	85432.4	Conv. (cfs)	528.8	84837.0
66.6				
Length Wtd. (ft)	335.01	Wetted Per. (ft)	7.50	210.39
3.22				
Min Ch El (ft)	32.00	Shear (lb/sq ft)	0.72	6.92
0.51				
Alpha	1.01	Stream Power (lb/ft s)	7.06	40.37
2.07				
Frctn Loss (ft)	4.18	Cum Volume (acre-ft)	0.19	342.53
0.71				
C & E Loss (ft)	0.05	Cum SA (acres)	0.18	55.18
0.81				

Warning: The energy loss was greater than 1.0 ft (0.3 m). between the current and previous cross
section. This may indicate the need for additional cross sections.

CROSS SECTION

RIVER: CV Creek
REACH: Lower RS: 4086

INPUT
Description: I
Station Elevation Data num= 80

Sta	Elev	Sta	Elev	Sta	Elev	Sta	Elev	Sta	Elev
0	48.42	1.53	48.32	3.13	48.24	5.78	48	22.44	46
27.15	45.11	34.23	44	36.34	43.48	42.42	42	47.11	40.85
50.62	40	63.1	36.95	67.02	36	79.23	33.02	79.82	32.88
83.41	32	131.54	30.66	139.96	30.62	166.4	30.23	201.42	30
267.01	30	274.12	29.39	283.67	29.05	305.37	28.83	320.36	29.24
330.71	30	336.06	30.9	344	32	345.75	32.61	350.32	34
352.15	34.64	355.79	36	356.98	36.46	360.77	38	363.06	39.2
364.5	40	364.96	40.34	367.6	42	368.04	42.37	372.25	45.89
372.38	46	372.47	46.08	374.77	48	374.96	48.16	376.77	49.67
377.16	50	378.65	51.25	379.55	52	381.01	53.22	381.94	54
386.94	54	392.78	52	397.78	51.04	405.31	50.71	407.56	50.47

409.83	50.24	414.82	50.13	417.28	50.19	438.64	50.63	448.14	50.87
459.13	51.12	485.31	51.85	486.62	51.88	490.65	52	537.81	52
565.33	51.4	570.93	51.3	588.12	50.94	629.07	50	632.02	49.83
648.11	48.88	665.94	48.57	666.9	48.79	667.4	48.68	669.82	49.31
670.44	49.4	672.48	50	690.21	51.9	691.23	52	715.84	53.55

Manning's n Values num= 3

Sta	n Val	Sta	n Val	Sta	n Val
0	.016	63.1	.12	356.98	.03

Bank Sta: Left	Right	Lengths: Left	Channel	Right	Coeff Contr.	Expan.
63.1	356.98	524.5	555.38	523.1	.1	.3

CROSS SECTION OUTPUT Profile #PF 1

E.G. Elev (ft)	38.05	Element	Left OB	Channel
Right OB				
Vel Head (ft)	0.36	Wt. n-Val.	0.016	0.120
0.030				
W.S. Elev (ft)	37.68	Reach Len. (ft)	524.50	555.38
523.10				
Crit W.S. (ft)		Flow Area (sq ft)	1.11	2066.12
1.85				
E.G. Slope (ft/ft)	0.011397	Area (sq ft)	1.11	2066.12
1.85				
Q Total (cfs)	10000.00	Flow (cfs)	5.51	9987.79
6.69				
Top Width (ft)	299.90	Top Width (ft)	3.01	293.88
3.01				
Vel Total (ft/s)	4.83	Avg. Vel. (ft/s)	4.99	4.83
3.62				
Max Chl Dpth (ft)	8.85	Hydr. Depth (ft)	0.37	7.03
0.61				
Conv. Total (cfs)	93670.1	Conv. (cfs)	51.7	93555.7
62.7				
Length Wtd. (ft)	555.21	Wetted Per. (ft)	3.10	295.46
3.25				
Min Ch El (ft)	28.83	Shear (lb/sq ft)	0.25	4.98
0.40				
Alpha	1.00	Stream Power (lb/ft s)	1.27	24.05
1.46				
Frctn Loss (ft)	3.32	Cum Volume (acre-ft)	0.17	328.03
0.69				
C & E Loss (ft)	0.06	Cum SA (acres)	0.15	53.25
0.79				

Warning: The conveyance ratio (upstream conveyance divided by downstream conveyance) is less than
0.7 or greater than 1.4. This may indicate the need for additional cross sections.
Warning: The energy loss was greater than 1.0 ft (0.3 m). between the current and previous cross
section. This may indicate the need for additional cross sections.

CROSS SECTION

RIVER: CV Creek
REACH: Lower RS: 3531

INPUT
Description: H
Station Elevation Data num= 125

Sta	Elev	Sta	Elev	Sta	Elev	Sta	Elev	Sta	Elev
0	57.87	3.19	57.34	12.07	56	15.37	55.47	24.92	54.07
25.25	54.02	25.44	54	26.41	53.87	39.95	52	43.28	51.53
44.67	51.37	46.78	51.12	55.14	50	57.2	49.59	62.26	48
69.12	46.69	71.6	46	73.63	46	84.3	45.5	105.61	44
115.79	43.23	131.41	42	140.05	40.34	141.79	40	148.77	38
149.15	37.89	155.75	36	160.12	34.8	163.09	34	165.8	33.29
170.53	32.04	170.69	32	185.21	28.18	185.88	28	195.01	26.9
202.13	26	214.01	25.82	217.22	25.79	264.55	25.13	278.77	25.06
297.18	24.82	377.81	24.52	394.73	24.59	394.83	24.59	400.55	24.67
423.71	24.79	492.71	25.89	496.95	25.92	499.89	26	500.39	26.23
511.73	31.39	512.87	31.9	513.08	32	513.38	32.14	526.19	37.94
526.31	38	526.4	38.04	534.07	41.51	539.61	44	543.99	45.96
544.07	46	544.7	46.28	548.54	48	548.82	48.13	561.97	54
564.27	55.03	566.46	56	568.05	56.61	571.3	58	572.49	58
574.58	57.04	574.97	56.87	577.2	56	581.11	54.22	581.45	54.07
581.6	54	588.74	52.51	595.7	52	626.84	52	639.23	53.8
640.58	54	640.99	54.07	653.29	56	655.64	56.43	664.61	58
674.95	58.37	689.46	58.67	717.13	59.29	727.89	59.48	738.02	59.58
741.89	59.66	749.59	59.63	753.08	59.69	773.98	59.45	783.3	59.13
786.33	59.03	796.46	58.82	816.58	58	817.21	57.87	825.41	56
844.69	52	856.96	50	868.4	48.27	870.22	48	884.91	46.64
888.16	46.33	902.41	46	947.33	46	948.04	45.79	954.37	44
963.46	44	965.32	44.73	968.49	46	972.99	47.78	973.51	48
975.89	48	982.65	49.04	982.82	49.06	985.5	50	987.63	50.73
989.51	50.71	992.5	51.24	1004.17	52	1029.15	52	1093.82	53.28

Manning's n Values num= 3

Sta	n Val	Sta	n Val	Sta	n Val
0	.016	170.53	.12	513.08	.03

Bank Sta: Left	Right	Lengths: Left	Channel	Right	Coeff Contr.	Expan.
170.53	513.08	605.3	276.6	243.2	.1	.3

CROSS SECTION OUTPUT Profile #PF 1

E.G. Elev (ft)	34.67	Element	Left OB	Channel	Right OB
Vel Head (ft)	0.16	Wt. n-Val.	0.016	0.120	0.030
W.S. Elev (ft)	34.50	Reach Len. (ft)	605.30	276.60	243.20
Crit W.S. (ft)		Flow Area (sq ft)	11.50	3070.21	6.90
E.G. Slope (ft/ft)	0.003674	Area (sq ft)	11.50	3070.21	6.90
Q Total (cfs)	10000.00	Flow (cfs)	72.87	9904.52	22.60
Top Width (ft)	357.39	Top Width (ft)	9.31	342.55	5.52
Vel Total (ft/s)	3.24	Avg. Vel. (ft/s)	6.34	3.23	3.27
Max Chl Dpth (ft)	9.98	Hydr. Depth (ft)	1.24	8.96	1.25
Conv. Total (cfs)	164988.5	Conv. (cfs)	1202.3	163413.3	372.9
Length Wtd. (ft)	277.76	Wetted Per. (ft)	9.63	344.52	6.06
Min Ch El (ft)	24.52	Shear (lb/sq ft)	0.27	2.04	

0.26				
Alpha	1.01	Stream Power (lb/ft s)	1.73	6.59
0.85				
Frctn Loss (ft)	1.18	Cum Volume (acre-ft)	0.09	295.29
0.64				
C & E Loss (ft)	0.00	Cum SA (acres)	0.08	49.19
0.74				

Warning: The energy loss was greater than 1.0 ft (0.3 m). between the current and previous cross section. This may indicate the need for additional cross sections.

CROSS SECTION

RIVER: CV Creek
REACH: Lower RS: 3254

INPUT
Description:
Station Elevation Data num= 269

Sta	Elev	Sta	Elev	Sta	Elev	Sta	Elev	Sta	Elev
0	71.91	11.89	67.81	13.88	67.12	17	66	17.96	65.64
22.48	64	25.15	63	27.89	62	32.27	60.35	33.23	60
36.1	58.92	38.43	58	38.87	57.83	43.51	56	44.8	55.48
48.56	54	53.59	52	56.32	50.9	58.59	50	61.94	48.65
63.58	48	68.06	47.69	68.93	47.67	70.12	47.64	71.86	47.59
74.62	47.5	79.04	47.34	112.86	46	115.43	45.7	123.54	44.71
128.09	44	130.51	43.3	135.36	42	139.15	40.87	142.1	40
155.42	36.04	155.57	36	155.96	35.89	160.48	34.59	162.7	34
165.92	33.39	168.24	33	171.12	32.63	174.65	32	180.11	31.09
187.24	30	192.37	29.12	198.81	28	209.41	26.2	210.55	26
211.29	25.95	235.51	25.2	241.91	25.04	248.53	25.16	260.64	25.4
264.45	25.43	277.28	25.71	279.26	25.73	289.22	26	291.34	26.18
302.09	27.21	305.1	27.53	310.28	28	313.16	28.27	316.39	28.54
325.56	29.36	333.51	30	334.52	30.07	335.17	30.12	342.16	30.6
345.2	30.8	353.19	31.34	355.66	31.5	363.04	32	365.81	32.09
365.89	32.1	365.96	32.1	370.9	32.26	371.52	32.27	372.45	32.29
376.07	32.32	377.35	32.32	400.16	32.41	401.72	32.4	406.16	32.36
408.69	32.26	412.3	32.11	413.89	32.04	413.99	32.04	414.97	32
420.87	31.58	421.91	31.52	423.39	31.41	427.12	31.02	430.22	30.74
436.54	30.09	436.78	30.05	437.37	30	442.85	29.03	448.79	28
450.48	27.71	452.34	27.38	456.08	26.73	459.98	26	469.03	24
726.28	24	736.54	25.84	737.32	25.97	737.46	26	737.93	26
740.39	26.61	743.3	27.25	744.18	27.43	745.51	27.64	747.33	28
749.71	28.52	750.22	28.63	751.14	28.77	754.03	29.39	756.73	29.88
757.35	30	761.19	30.82	762.89	31.12	767.4	32	767.72	32.07
767.87	32.09	771.59	32.88	773.07	33.15	775.64	33.67	776.44	33.81
777.46	34	779.2	34.32	779.66	34.4	779.88	34.44	782.38	34.85
782.79	34.91	783.34	34.99	785.01	35.23	788.72	35.85	789.48	35.98
789.58	36	799.32	37.56	801.7	38	813.21	39.47	815.96	40
830.52	40	831.88	39.91	832.13	39.89	837.56	39.44	839.23	39.32
842.49	39.08	844.44	38.95	847.54	38.76	848.73	38.7	851.49	38.53
852.28	38.47	854.64	38.31	855.06	38.27	855.35	38.26	855.65	38.23
855.87	38.21	856.04	38.19	856.18	38.19	861.4	38.33	861.8	38.31
868.8	38.36	871.77	38.27	872.55	38.28	873.56	38.29	884.47	38.35
885.9	38.37	888.61	38.48	895.86	38.57	897.14	38.67	899.89	38.88
903.41	38.99	906.84	39.31	912.03	39.84	912.35	39.87	913.54	40
922.07	41.25	924.43	41.56	925.5	41.67	926.24	41.72	926.88	41.76
928.59	42	933.38	43.13	938.83	44.43	941.46	45.05	953.22	46.98
959.22	48	959.46	48.04	959.53	48.05	959.59	48.08	962.68	48.74

963.07	48.9	963.85	49.21	964.09	49.32	964.32	49.42	964.54	49.5
964.74	49.58	966.14	50	968.36	50.67	976.65	53.07	979.91	54
980.24	54.1	990.21	56.94	993.91	58	994.76	58.24	996.59	58.77
999.37	59.49	1001.14	60	1003.71	60.7	1008.01	62	1077.87	62
1090.32	60.66	1096.55	60.14	1096.67	60.18	1097.28	60	1098.58	60
1099.41	59.52	1100.03	59.21	1100.75	59.02	1101.89	58.84	1102.12	58.8
1102.29	58.77	1102.39	58.75	1103.63	58.54	1104.9	58.31	1105.04	58.26
1105.86	58	1106.32	58	1112.23	56	1112.69	55.85	1114.23	55.32
1123.68	52	1127.64	50.6	1129.36	50	1135.37	48.54	1137.52	48
1143.69	46.52	1146.05	46	1153.08	44.34	1154.67	44	1159.77	43.26
1164.4	42.5	1167.15	42	1170.77	41.66	1175.57	41.24	1229.51	41.44
1248.33	42	1257.37	43.28	1262.23	44	1263.34	44.53	1266.48	46
1267.01	46.24	1269.89	47.51	1271.02	48	1275.92	49.03	1280.62	50
1283.61	50.96	1291.65	53.53	1293.11	54	1310.69	54	1311.36	53.67
1314.85	52	1316.37	51.3	1319.48	50	1396.2	50		

Manning's n Values num= 3

Sta	n Val	Sta	n Val	Sta	n Val
0	.016	155.42	.12	782.79	.03

Bank Sta: Left	Right	Lengths: Left	Channel	Right	Coeff Contr.	Expan.
155.42	782.79	187.9	172.21	187.17	.1	.3

Ineffective Flow num= 1

Sta L	Sta R	Elev	Permanent
0	420		F

CROSS SECTION OUTPUT Profile #PF 1

E.G. Elev (ft)	33.48	Element	Left OB	Channel
Right OB				
Vel Head (ft)	0.19	Wt. n-Val.		0.120
W.S. Elev (ft)	33.29	Reach Len. (ft)	5.50	5.50
5.50				
Crit W.S. (ft)	27.52	Flow Area (sq ft)		2851.47
E.G. Slope (ft/ft)	0.004993	Area (sq ft)		3981.95
Q Total (cfs)	10000.00	Flow (cfs)		10000.00
Top Width (ft)	607.28	Top Width (ft)		607.28
Vel Total (ft/s)	3.51	Avg. Vel. (ft/s)		3.51
Max Chl Dpth (ft)	9.29	Hydr. Depth (ft)		8.06
Conv. Total (cfs)	141522.9	Conv. (cfs)		141522.9
Length Wtd. (ft)	5.50	Wetted Per. (ft)		355.35
Min Ch El (ft)	24.00	Shear (lb/sq ft)		2.50
Alpha	1.00	Stream Power (lb/ft s)		8.77
Frctn Loss (ft)	0.03	Cum Volume (acre-ft)	0.01	272.90
0.62				
C & E Loss (ft)	0.00	Cum SA (acres)	0.01	46.17
0.72				

RIVER: CV Creek
REACH: Lower RS: 3100

INPUT
Description: El Camino Real Bridge
Distance from Upstream XS = 5.5
Deck/Roadway Width = 150
Weir Coefficient = 2.6
Upstream Deck/Roadway Coordinates
num= 6

Sta	Hi Cord	Lo Cord	Sta	Hi Cord	Lo Cord	Sta	Hi Cord	Lo Cord
0	40.41	0	420	40.41	0	420	40.41	35
760	40.41	35	760	40.41	0	1500	40.41	0

Upstream Bridge Cross Section Data
Station Elevation Data num= 269

Sta	Elev	Sta	Elev	Sta	Elev	Sta	Elev	Sta	Elev
0	71.91	11.89	67.81	13.88	67.12	17	66	17.96	65.64
22.48	64	25.15	63	27.89	62	32.27	60.35	33.23	60
36.1	58.92	38.43	58	38.87	57.83	43.51	56	44.8	55.48
48.56	54	53.59	52	56.32	50.9	58.59	50	61.94	48.65
63.58	48	68.06	47.69	68.93	47.67	70.12	47.64	71.86	47.59
74.62	47.5	79.04	47.34	112.86	46	115.43	45.7	123.54	44.71
128.09	44	130.51	43.3	135.36	42	139.15	40.87	142.1	40
155.42	36.04	155.57	36	155.96	35.89	160.48	34.59	162.7	34
165.92	33.39	168.24	33	171.12	32.63	174.65	32	180.11	31.09
187.24	30	192.37	29.12	198.81	28	209.41	26.2	210.55	26
211.29	25.95	235.51	25.2	241.91	25.04	248.53	25.16	260.64	25.4
264.45	25.43	277.28	25.71	279.26	25.73	289.22	26	291.34	26.18
302.09	27.21	305.1	27.53	310.28	28	313.16	28.27	316.39	28.54
325.56	29.36	333.51	30	334.52	30.07	335.17	30.12	342.16	30.6
345.2	30.8	353.19	31.34	355.66	31.5	363.04	32	365.81	32.09
365.89	32.1	365.96	32.1	370.9	32.26	371.52	32.27	372.45	32.29
376.07	32.32	377.35	32.32	400.16	32.41	401.72	32.4	406.16	32.36
408.69	32.26	412.3	32.11	413.89	32.04	413.99	32.04	414.97	32
420.87	31.58	421.91	31.52	423.39	31.41	427.12	31.02	430.22	30.74
436.54	30.09	436.78	30.05	437.37	30	442.85	29.03	448.79	28
450.48	27.71	452.34	27.38	456.08	26.73	459.98	26	469.03	24
726.28	24	736.54	25.84	737.32	25.97	737.46	26	737.93	26
740.39	26.61	743.3	27.25	744.18	27.43	745.51	27.64	747.33	28
749.71	28.52	750.22	28.63	751.14	28.77	754.03	29.39	756.73	29.88
757.35	30	761.19	30.82	762.89	31.12	767.4	32	767.72	32.07
767.87	32.09	771.59	32.88	773.07	33.15	775.64	33.67	776.44	33.81
777.46	34	779.2	34.32	779.66	34.4	779.88	34.44	782.38	34.85
782.79	34.91	783.34	34.99	785.01	35.23	788.72	35.85	789.48	35.98
789.58	36	799.32	37.56	801.7	38	813.21	39.47	815.96	40
830.52	40	831.88	39.91	832.13	39.89	837.56	39.44	839.23	39.32
842.49	39.08	844.44	38.95	847.54	38.76	848.73	38.7	851.49	38.53
852.28	38.47	854.64	38.31	855.06	38.27	855.35	38.26	855.65	38.23
855.87	38.21	856.04	38.19	856.18	38.19	861.4	38.33	861.8	38.31
868.8	38.36	871.77	38.27	872.55	38.28	873.56	38.29	884.47	38.35
885.9	38.37	888.61	38.48	895.86	38.57	897.14	38.67	899.89	38.88
903.41	38.99	906.84	39.31	912.03	39.84	912.35	39.87	913.54	40
922.07	41.25	924.43	41.56	925.5	41.67	926.24	41.72	926.88	41.76
928.59	42	933.38	43.13	938.83	44.43	941.46	45.05	953.22	46.98
959.22	48	959.46	48.04	959.53	48.05	959.59	48.08	962.68	48.74
963.07	48.9	963.85	49.21	964.09	49.32	964.32	49.42	964.54	49.5
964.74	49.58	966.14	50	968.36	50.67	976.65	53.07	979.91	54
980.24	54.1	990.21	56.94	993.91	58	994.76	58.24	996.59	58.77
999.37	59.49	1001.14	60	1003.71	60.7	1008.01	62	1077.87	62
1090.32	60.66	1096.55	60.14	1096.67	60.18	1097.28	60	1098.58	60

1099.41	59.52	1100.03	59.21	1100.75	59.02	1101.89	58.84	1102.12	58.8
1102.29	58.77	1102.39	58.75	1103.63	58.54	1104.9	58.31	1105.04	58.26
1105.86	58	1106.32	58	1112.23	56	1112.69	55.85	1114.23	55.32
1123.68	52	1127.64	50.6	1129.36	50	1135.37	48.54	1137.52	48
1143.69	46.52	1146.05	46	1153.08	44.34	1154.67	44	1159.77	43.26
1164.4	42.5	1167.15	42	1170.77	41.66	1175.57	41.24	1229.51	41.44
1248.33	42	1257.37	43.28	1262.23	44	1263.34	44.53	1266.48	46
1267.01	46.24	1269.89	47.51	1271.02	48	1275.92	49.03	1280.62	50
1283.61	50.96	1291.65	53.53	1293.11	54	1310.69	54	1311.36	53.67
1314.85	52	1316.37	51.3	1319.48	50	1396.2	50		

Manning's n Values num= 3

Sta	n Val	Sta	n Val	Sta	n Val
0	.016	155.42	.12	782.79	.03

Bank Sta: Left	Right	Coeff Contr.	Expan.
155.42	782.79	.1	.3

Ineffective Flow num= 1

Sta L	Sta R	Elev	Permanent
0	420		F

Downstream Deck/Roadway Coordinates
num= 6

Sta	Hi Cord	Lo Cord	Sta	Hi Cord	Lo Cord	Sta	Hi Cord	Lo Cord
0	40.41	35	470	40.41	0	470	40.41	35
810	40.41	35	810	40.41	0	1500	40.41	0

Downstream Bridge Cross Section Data
Station Elevation Data num= 294

Sta	Elev	Sta	Elev	Sta	Elev	Sta	Elev	Sta	Elev
0	70.19	.46	70	4.87	68.16	5.24	68	6	67.69
10.18	66	12.4	65.12	13.42	64.74	14.62	64.28	15.42	64
20.74	62.34	21.86	62	22.21	61.9	22.5	61.82	28.81	60
29.35	59.84	30.95	59.39	42.74	56	43.98	55.64	75.9	46.48
77.59	46	80.1	45.35	85.87	44	108.15	44	127.14	43.28
130.43	43.21	144.64	43.08	146.13	42.92	149.42	43.14	150.29	42.99
151.17	42.88	154.78	43.12	155.22	43.09	155.59	43.07	155.88	43.05
156.06	43.04	160.77	43.26	161	43.28	161.9	43.33	164.34	43.47
169.61	43.53	179.55	43.87	180.53	43.91	193.56	44.47	196.53	44.56
211.88	45.26	222.82	45.69	225.52	45.8	231.35	46	238.94	46.24
239.31	46.22	239.59	46.19	239.88	46.15	253.98	46.38	267.23	46
281.26	46	287.68	45.6	304.33	45.22	328.61	44.41	338.9	44
344.54	44	391.58	42.03	392.44	42	398.65	41.82	400.64	41.75
401.56	41.72	419.94	41.19	420.7	41.17	442.6	40.45	455.6	40
465.16	38.62	468.47	38	469.61	37.57	477.28	34.64	481.13	33.18
485.73	31.41	488.51	30.34	489.39	30	491.61	29.15	494.58	28
497.25	27.71	513.25	26	518.58	25.25	528.33	24	543.61	22.97
545.94	22.86	554.76	22.29	556.39	22.32	558.24	22.21	586.74	22.24
598.59	22.32	760.98	24	776.49	24	783.81	25.71	786.68	26.39
794.07	28	795.81	28.32	800.28	29.07	803.65	29.4	804.69	29.5
805.62	29.6	809.48	30	809.82	30.03	809.92	30.05	810.06	30.06
815.03	30.6	819.09	31.06	821.83	31.29	823.51	31.44	824.68	31.53
829.05	31.82	829.47	31.84	829.84	31.86	832.21	32	835.54	32.19
836.45	32.24	841.07	32.47	844.03	32.56	844.56	32.59	845.59	32.66
847.57	32.65	848.49	32.72	848.59	32.72	850.69	32.87	851.07	32.88
851.65	32.87	853.56	33.08	854.61	33.06	856.48	33.01	858.5	33.22
861.63	33.14	863.15	33.28	867.39	33.19	878.46	33.43	882.66	33.39
885.93	33.39	886.74	33.38	887.64	33.35	898.77	33.16	907.41	33.17
909.5	33.22	917.85	33.3	939.94	33.87	944.11	34	958.24	35.57
962.71	36	967.06	37.44	968.73	38	972.73	40	973.42	40.35
974.83	41.05	978.2	42.8	980.52	44	982.36	44.96	984.79	46
986.45	46.72	987.98	47.22	989.4	47.69	989.8	47.79	990.7	48
991.74	48.24	991.91	48.28	993.32	48.53	993.6	48.58	994.6	48.65

994.87	48.67	995.68	48.59	995.89	48.57	996.16	48.57	997.02	48.56
997.38	48.58	998.24	48.63	998.75	48.69	999.65	49.16	1000.23	49.26
1000.82	50	1001.32	51.32	1001.54	52	1001.73	52.97	1001.94	54
1002.1	54.82	1002.24	55.5	1003.06	56	1003.86	56.48	1004.4	56.62
1005.4	57.09	1006.64	57.35	1007.89	57.33	1009.95	57.19	1011.63	57.08
1013.36	57.06	1014.41	56.99	1016.55	56.66	1017.15	56.56	1019.07	56.26
1019.28	56.23	1020.73	56	1020.98	55.96	1021.03	55.95	1024.07	55.47
1024.94	55.38	1026.58	55.18	1027.96	55.03	1029.22	54.88	1032.52	54.51
1034.81	54.26	1035.22	54.21	1037.64	54.01	1037.73	54	1040.14	53.8
1040.56	53.77	1043.59	53.51	1044.4	53.45	1048.06	53.15	1050.56	52.95
1052.11	52.85	1059.72	52.33	1060.14	52.31	1062.19	52.17	1062.4	52.15
1064.7	52	1064.77	52	1067.46	51.81	1069.76	51.66	1072.44	51.48
1073.36	51.42	1076.13	51.22	1077.18	51.14	1079.06	51.01	1080.35	50.91
1083.29	50.7	1085.07	50.58	1088.11	50.36	1090.43	50.2	1090.77	50.17
1095.49	49.84	1095.82	49.82	1096.31	49.78	1099.82	49.51	1100.58	49.46
1103.33	49.25	1104.46	49.16	1106.57	49	1108.01	48.9	1111.27	48.65
1114.64	48.4	1115.64	48.32	1119.29	48	1119.67	47.97	1119.8	47.96
1123.77	47.61	1124.49	47.55	1126.69	47.26	1129.23	46.87	1130.64	46.68
1131.53	46.45	1132.93	46	1133.94	45.67	1134.62	45.04	1135.33	44.37
1135.65	44	1137.26	42.05	1138.27	41.24	1139.36	40.8	1141.09	40.55
1141.84	40.44	1144.94	40	1145.17	39.99	1148.61	39.91	1152.04	39.86
1152.48	39.86	1156.11	39.83	1156.27	39.83	1159.31	39.71	1159.4	39.72
1161.6	39.54	1163.81	39.22	1163.95	39.25	1164.63	39.16	1166.78	39.44
1167.62	39.39	1222.36	38.73	1225.12	38.68	1227.61	38.63	1229.83	38.58
1232.51	38.53	1238.02	38.41	1255.81	38.07	1256.39	38.06	1256.85	38.04
1258.64	38	1259.07	38.03	1262.12	38	1341.43	38		

Manning's n Values num= 3

Sta	n Val	Sta	n Val	Sta	n Val
0	.016	485.73	.12	844.56	.03

Bank Sta: Left	Right	Coeff Contr.	Expan.
485.73	844.56	.1	.3

Ineffective Flow num= 1

Sta L	Sta R	Elev	Permanent
0	485		F

Upstream Embankment side slope = 0 horiz. to 1.0 vertical
Downstream Embankment side slope = 0 horiz. to 1.0 vertical
Maximum allowable submergence for weir flow = .95
Elevation at which weir flow begins =
Energy head used in spillway design =
Spillway height used in design =
Weir crest shape = Broad Crested

Number of Piers = 6

Pier Data
Pier Station Upstream= 468.57 Downstream= 528.57
Upstream num= 2

Width	Elev	Width	Elev
3	0	3	50

Downstream num= 2

Width	Elev	Width	Elev
3	0	3	50

Pier Data
Pier Station Upstream= 517.14 Downstream= 577.14
Upstream num= 2

Width	Elev	Width	Elev
3	0	3	50

Downstream num= 2

Width	Elev	Width	Elev

```
       3       0       3      50

Pier Data
Pier Station     Upstream=  565.71    Downstream=  625.71
Upstream     num=       2
    Width   Elev    Width   Elev
       3       0       3      50
Downstream     num=       2
    Width   Elev    Width   Elev
       3       0       3      50

Pier Data
Pier Station     Upstream=  614.28    Downstream=  674.28
Upstream     num=       2
    Width   Elev    Width   Elev
       3       0       3      50
Downstream     num=       2
    Width   Elev    Width   Elev
       3       0       3      50

Pier Data
Pier Station     Upstream=  662.85    Downstream=  722.85
Upstream     num=       2
    Width   Elev    Width   Elev
       3       0       3      50
Downstream     num=       2
    Width   Elev    Width   Elev
       3       0       3      50

Pier Data
Pier Station     Upstream=  711.42    Downstream=  771.42
Upstream     num=       2
    Width   Elev    Width   Elev
       3       0       3      50
Downstream     num=       2
    Width   Elev    Width   Elev
       3       0       3      50

Number of Bridge Coefficient Sets =  1

Low Flow Methods and Data
       Energy
Selected Low Flow Methods = Highest Energy Answer

High Flow Method
       Energy Only

Additional Bridge Parameters
       Add Friction component to Momentum
       Do not add Weight component to Momentum
       Class B flow critical depth computations use critical depth
           inside the bridge at the upstream end
       Criteria to check for pressure flow = Upstream energy grade line

BRIDGE OUTPUT  Profile #PF 1


  E.G. US. (ft)                 33.48    Element                 Inside BR US
Inside BR DS
  W.S. US. (ft)                 33.29    E.G. Elev (ft)                33.45
31.97
  Q Total (cfs)              10000.00    W.S. Elev (ft)                33.22
31.68
```

Q Bridge (cfs)	10000.00	Crit W.S. (ft)	27.69
26.89			
Q Weir (cfs)		Max Chl Dpth (ft)	9.22
9.47			
Weir Sta Lft (ft)		Vel Total (ft/s)	3.78
4.28			
Weir Sta Rgt (ft)		Flow Area (sq ft)	2643.44
2336.23			
Weir Submerg		Froude # Chl	0.23
0.27			
Weir Max Depth (ft)		Specif Force (cu ft)	12709.33
10894.66			
Min El Weir Flow (ft)	40.42	Hydr Depth (ft)	8.21
7.61			
Min El Prs (ft)	35.00	W.P. Total (ft)	433.51
409.59			
Delta EG (ft)	1.68	Conv. Total (cfs)	109252.7
92460.3			
Delta WS (ft)	1.75	Top Width (ft)	322.00
306.97			
BR Open Area (sq ft)	3215.30	Frctn Loss (ft)	1.47
0.16			
BR Open Vel (ft/s)	4.28	C & E Loss (ft)	0.01
0.01			
Coef of Q		Shear Total (lb/sq ft)	3.19
4.17			
Br Sel Method	Energy only	Power Total (lb/ft s)	12.07
17.83			

Warning: The energy loss was greater than 1.0 ft (0.3 m). between the current and previous cross
section. This may indicate the need for additional cross sections.

CROSS SECTION

RIVER: CV Creek
REACH: Lower RS: 3082

INPUT
Description:
Station Elevation Data num= 294

Sta	Elev	Sta	Elev	Sta	Elev	Sta	Elev	Sta	Elev
0	70.19	.46	70	4.87	68.16	5.24	68	6	67.69
10.18	66	12.4	65.12	13.42	64.74	14.62	64.28	15.42	64
20.74	62.34	21.86	62	22.21	61.9	22.5	61.82	28.81	60
29.35	59.84	30.95	59.39	42.74	56	43.98	55.64	75.9	46.48
77.59	46	80.1	45.35	85.87	44	108.15	44	127.14	43.28
130.43	43.21	144.64	43.08	146.13	42.92	149.42	43.14	150.29	42.99
151.17	42.88	154.78	43.12	155.22	43.09	155.59	43.07	155.88	43.05
156.06	43.04	160.77	43.26	161	43.28	161.9	43.33	164.34	43.47
169.61	43.53	179.55	43.87	180.53	43.91	193.56	44.47	196.53	44.56
211.88	45.26	222.82	45.69	225.52	45.8	231.35	46	238.94	46.24
239.31	46.22	239.59	46.19	239.88	46.15	253.98	46.38	267.23	46
281.26	46	287.68	45.6	304.33	45.22	328.61	44.41	338.9	44
344.54	44	391.58	42.03	392.44	42	398.65	41.82	400.64	41.75
401.56	41.72	419.94	41.19	420.7	41.17	442.6	40.45	455.6	40
465.16	38.62	468.47	38	469.61	37.57	477.28	34.64	481.13	33.18
485.73	31.41	488.51	30.34	489.39	30	491.61	29.15	494.58	28
497.25	27.71	513.25	26	518.58	25.25	528.33	24	543.61	22.97
545.94	22.86	554.76	22.29	556.39	22.32	558.24	22.21	586.74	22.24

598.59	22.32	760.98	24	776.49	24	783.81	25.71	786.68	26.39
794.07	28	795.81	28.32	800.28	29.07	803.65	29.4	804.69	29.5
805.62	29.6	809.48	30	809.82	30.03	809.92	30.05	810.06	30.06
815.03	30.6	819.09	31.06	821.83	31.29	823.51	31.44	824.68	31.53
829.05	31.82	829.47	31.84	829.84	31.86	832.21	32	835.54	32.19
836.45	32.24	841.07	32.47	844.03	32.56	844.56	32.59	845.59	32.66
847.57	32.65	848.49	32.72	848.59	32.72	850.69	32.87	851.07	32.88
851.65	32.87	853.56	33.08	854.61	33.06	856.48	33.01	858.5	33.22
861.63	33.14	863.15	33.28	867.39	33.19	878.46	33.43	882.66	33.39
885.93	33.39	886.74	33.38	887.64	33.35	898.77	33.16	907.41	33.17
909.5	33.22	917.85	33.3	939.94	33.87	944.11	34	958.24	35.57
962.71	36	967.06	37.44	968.73	38	972.73	40	973.42	40.35
974.83	41.05	978.2	42.8	980.52	44	982.36	44.96	984.79	46
986.45	46.72	987.98	47.22	989.4	47.69	989.8	47.79	990.7	48
991.74	48.24	991.91	48.28	993.32	48.53	993.6	48.58	994.6	48.65
994.87	48.67	995.68	48.59	995.89	48.57	996.16	48.57	997.02	48.56
997.38	48.58	998.24	48.63	998.75	48.69	999.65	49.16	1000.23	49.26
1000.82	50	1001.32	51.32	1001.54	52	1001.73	52.97	1001.94	54
1002.1	54.82	1002.24	55.5	1003.06	56	1003.86	56.48	1004.4	56.62
1005.4	57.09	1006.64	57.35	1007.89	57.33	1009.95	57.19	1011.63	57.08
1013.36	57.06	1014.41	56.99	1016.55	56.66	1017.15	56.56	1019.07	56.26
1019.28	56.23	1020.73	56	1020.98	55.96	1021.03	55.95	1024.07	55.47
1024.94	55.38	1026.58	55.18	1027.96	55.03	1029.22	54.88	1032.52	54.51
1034.81	54.26	1035.22	54.21	1037.64	54.01	1037.73	54	1040.14	53.8
1040.56	53.77	1043.59	53.51	1044.4	53.45	1048.06	53.15	1050.56	52.95
1052.11	52.85	1059.72	52.33	1060.14	52.31	1062.19	52.17	1062.4	52.15
1064.7	52	1064.77	52	1067.46	51.81	1069.76	51.66	1072.44	51.48
1073.36	51.42	1076.13	51.22	1077.18	51.14	1079.06	51.01	1080.35	50.91
1083.29	50.7	1085.07	50.58	1088.11	50.36	1090.43	50.2	1090.77	50.17
1095.49	49.84	1095.82	49.82	1096.31	49.78	1099.82	49.51	1100.58	49.46
1103.33	49.25	1104.46	49.16	1106.57	49	1108.01	48.9	1111.27	48.65
1114.64	48.4	1115.64	48.32	1119.29	48	1119.67	47.97	1119.8	47.96
1123.77	47.61	1124.49	47.55	1126.69	47.26	1129.23	46.87	1130.64	46.68
1131.53	46.45	1132.93	46	1133.94	45.67	1134.62	45.04	1135.33	44.37
1135.65	44	1137.26	42.05	1138.27	41.24	1139.36	40.8	1141.09	40.55
1141.84	40.44	1144.94	40	1145.17	39.99	1148.61	39.91	1152.04	39.86
1152.48	39.86	1156.11	39.83	1156.27	39.83	1159.31	39.71	1159.4	39.72
1161.6	39.54	1163.81	39.22	1163.95	39.25	1164.63	39.16	1166.78	39.44
1167.62	39.39	1222.36	38.73	1225.12	38.68	1227.61	38.63	1229.83	38.58
1232.51	38.53	1238.02	38.41	1255.81	38.07	1256.39	38.06	1256.85	38.04
1258.64	38	1259.07	38.03	1262.12	38	1341.43	38		

Manning's n Values num= 3

Sta	n Val	Sta	n Val	Sta	n Val
0	.016	485.73	.12	844.56	.03

Bank Sta: Left	Right	Lengths: Left	Channel	Right	Coeff Contr.	Expan.
485.73	844.56	216.44	235.72	262.16	.1	.3

Ineffective Flow num= 1

Sta L	Sta R	Elev	Permanent
0	485		F

CROSS SECTION OUTPUT Profile #PF 1

E.G. Elev (ft)	31.80	Element	Left OB	Channel
Right OB				
Vel Head (ft)	0.26	Wt. n-Val.	0.016	0.120
W.S. Elev (ft)	31.54	Reach Len. (ft)	216.44	235.72
262.16				
Crit W.S. (ft)		Flow Area (sq ft)	0.02	2452.92

E.G. Slope (ft/ft)	0.007798	Area (sq ft)	0.02	2452.92
Q Total (cfs)	10000.00	Flow (cfs)	0.03	9999.97
Top Width (ft)	339.46	Top Width (ft)	0.34	339.12
Vel Total (ft/s)	4.08	Avg. Vel. (ft/s)	1.28	4.08
Max Chl Dpth (ft)	9.33	Hydr. Depth (ft)	0.07	7.23
Conv. Total (cfs)	113243.5	Conv. (cfs)	0.3	113243.1
Length Wtd. (ft)	235.72	Wetted Per. (ft)	0.37	340.73
Min Ch El (ft)	22.21	Shear (lb/sq ft)	0.03	3.50
Alpha	1.00	Stream Power (lb/ft s)	0.04	14.29
Frctn Loss (ft) 0.62	1.21	Cum Volume (acre-ft)	0.01	262.99
C & E Loss (ft) 0.72	0.04	Cum SA (acres)	0.01	44.91

Warning: The conveyance ratio (upstream conveyance divided by downstream conveyance) is less than
0.7 or greater than 1.4. This may indicate the need for additional cross sections.
Warning: The energy loss was greater than 1.0 ft (0.3 m). between the current and previous cross
section. This may indicate the need for additional cross sections.

CROSS SECTION

RIVER: CV Creek
REACH: Lower RS: 2846

INPUT
Description: G
Station Elevation Data num= 147

Sta	Elev	Sta	Elev	Sta	Elev	Sta	Elev	Sta	Elev
0	80.34	.84	80	2	79.54	5.82	78	7.63	77.28
10.8	76	12.87	75.29	17.31	74	18	74	19.33	73.31
21.92	72	23.76	70.86	25	70	26.12	69.22	27.88	68
30.05	66.49	30.75	66	33.36	64.19	33.63	64	34.14	63.65
36.51	62	40.01	60.11	40.23	60	45.24	58	46.21	57.63
46.88	57.52	48.97	56.81	49.73	56.89	50.71	56.59	53.31	56.73
63.76	56	88.74	56	95.58	55.76	141.52	54	155.28	54
168.6	53.43	185.99	52	193.64	51.69	231.46	50	243.64	50
244.24	49.89	245.41	49.68	251.38	48.59	252.28	48.41	254.6	48
265.32	46	267.02	45.68	276.1	44	280.07	43.25	286.61	42
292.77	41.07	299.62	40	301.57	39.67	306.4	38.99	311.09	38.27
313.11	38	321.65	36.61	326.03	36	329.03	35.5	338.24	34
349.43	33.44	352.81	33.26	369.75	32.41	373.93	32.23	376.64	32.13
376.79	32.12	377.66	32.08	377.85	32.08	381.81	32.1	381.87	32.1
384.91	32	395.27	32	403.45	32	404.35	31.87	418.33	30
418.54	29.97	428.12	28	429.15	28	430.08	27.7	431.14	27.42
432.91	26.83	436.46	26	437.68	25.69	440.54	24.97	441.42	24.74
444.41	24	451.26	24	499.49	22	677.06	22	882.92	23.97
883.86	24	884.9	24.38	891.27	26.91	893.27	27.7	894.02	28
897.6	29.42	897.94	29.55	899.06	30	920.72	31.16	938.6	32

957.66	32.53	962.1	32.63	975.91	33.01	979.16	33.06	1005.29	33.6
1021.98	34	1099.47	34	1110.71	35.19	1124.96	36	1128.15	37.86
1128.46	38	1132.13	39.45	1132.75	39.69	1133.79	40	1138.43	41.27
1139.33	41.18	1143.16	40.75	1146.17	40.46	1147.18	40.35	1151.2	40.02
1151.4	40	1155.81	39.68	1160.92	39.63	1165.45	39.85	1165.92	39.87
1170.25	40.35	1170.95	40.39	1174.02	40.61	1175.31	40.61	1177.7	40.68
1181.21	40.59	1184.49	40.21	1184.94	40.17	1185.82	40	1189.36	39.25
1191.93	38.7	1193.52	38.32	1195.65	38	1197.23	37.97	1201.02	37.93
1203.71	37.89	1204.12	37.91	1205.94	37.88	1206.78	37.86	1207.18	37.88
1215.54	38	1325.96	38						

Manning's n Values num= 3

Sta	n Val	Sta	n Val	Sta	n Val
0	.016	395.27	.12	957.66	.03

Bank Sta: Left	Right	Lengths: Left	Channel	Right	Coeff Contr.	Expan.
395.27	957.66	531.77	591.09	510.32	.1	.3

Ineffective Flow num= 1

Sta L	Sta R	Elev	Permanent
0	395		F

CROSS SECTION OUTPUT Profile #PF 1

E.G. Elev (ft)	30.55	Element	Left OB	Channel
Right OB				
Vel Head (ft)	0.12	Wt. n-Val.		0.120
W.S. Elev (ft)	30.43	Reach Len. (ft)	531.77	591.09
510.32				
Crit W.S. (ft)		Flow Area (sq ft)		3576.75
E.G. Slope (ft/ft)	0.003638	Area (sq ft)		3576.75
Q Total (cfs)	10000.00	Flow (cfs)		10000.00
Top Width (ft)	491.91	Top Width (ft)		491.91
Vel Total (ft/s)	2.80	Avg. Vel. (ft/s)		2.80
Max Chl Dpth (ft)	8.43	Hydr. Depth (ft)		7.27
Conv. Total (cfs)	165788.5	Conv. (cfs)		165788.5
Length Wtd. (ft)	591.09	Wetted Per. (ft)		493.87
Min Ch El (ft)	22.00	Shear (lb/sq ft)		1.64
Alpha	1.00	Stream Power (lb/ft s)		4.60
Frctn Loss (ft)	2.91	Cum Volume (acre-ft)	0.01	246.67
0.62				
C & E Loss (ft)	0.00	Cum SA (acres)	0.01	42.66
0.72				

Warning: The energy loss was greater than 1.0 ft (0.3 m). between the current and previous cross
section. This may indicate the need for additional cross sections.

CROSS SECTION

RIVER: CV Creek
REACH: Lower RS: 2255

INPUT
Description: F
Station Elevation Data num= 78

Sta	Elev	Sta	Elev	Sta	Elev	Sta	Elev	Sta	Elev
0	45.29	2.55	44.59	4.73	44	6.48	43.5	7.41	43.21
11.22	42	11.58	41.92	11.87	41.86	17.89	40.5	19.79	40
26.23	39.36	31.53	38.81	33.17	38.83	35.21	38.82	43.92	38.58
56.01	38	57.53	37.78	74.99	34.77	77.95	34.24	79.22	34
85.54	32.85	89.85	32	92.98	31.42	100.01	30	100.98	29.81
106.8	28.53	113.52	27.07	113.99	26.96	118.4	26	121.68	25.28
127.56	24	129.69	23.53	136.71	22	138.9	21.95	139.14	21.96
155.37	21.67	157.59	21.64	164.24	21.53	198.05	21.15	204.22	21.2
209.43	21.17	212.13	21.15	354.35	22	665.94	22	669.07	22.9
672.78	24	673.97	24.41	674.83	24.76	676.02	25.17	678.47	26
681.34	26.96	685.65	28.42	688.85	29.48	689.95	29.85	690.41	30
693.52	31.04	696.42	32	716.14	32.68	748.75	33.56	755.11	33.75
762.11	34	767.58	34	772.16	34.09	899.12	36	1055.93	36
1057.92	35.75	1068.04	34.52	1073.76	34	1074.57	33.92	1082.39	33.64
1083.01	33.68	1085.81	33.62	1086.95	33.68	1088.05	33.75	1091.09	33.66
1093.33	33.74	1107.04	34	1223.32	34				

Manning's n Values num= 3

Sta	n Val	Sta	n Val	Sta	n Val
0	.05	92.98	.12	693.52	.03

Bank Sta: Left	Right	Lengths: Left	Channel	Right	Coeff Contr.	Expan.
92.98	693.52	383.15	429.01	326.21	.1	.3

Ineffective Flow num= 1

Sta L	Sta R	Elev	Permanent
831	1223.32		F

CROSS SECTION OUTPUT Profile #PF 1

E.G. Elev (ft)	27.64	Element	Left OB	Channel
Right OB Vel Head (ft)	0.16	Wt. n-Val.		0.120
W.S. Elev (ft)	27.48	Reach Len. (ft)	383.15	429.01
326.21 Crit W.S. (ft)		Flow Area (sq ft)		3117.18
E.G. Slope (ft/ft)	0.007010	Area (sq ft)		3117.18
Q Total (cfs)	10000.00	Flow (cfs)		10000.00
Top Width (ft)	571.23	Top Width (ft)		571.23
Vel Total (ft/s)	3.21	Avg. Vel. (ft/s)		3.21
Max Chl Dpth (ft)	6.33	Hydr. Depth (ft)		5.46
Conv. Total (cfs)	119434.6	Conv. (cfs)		119434.6
Length Wtd. (ft)	429.01	Wetted Per. (ft)		572.71
Min Ch El (ft)	21.15	Shear (lb/sq ft)		2.38
Alpha	1.00	Stream Power (lb/ft s)		7.64

Frctn Loss (ft)	1.43	Cum Volume (acre-ft)	0.01	201.26
0.62				
C & E Loss (ft)	0.03	Cum SA (acres)	0.01	35.45
0.72				

Warning: The conveyance ratio (upstream conveyance divided by downstream conveyance) is less than
0.7 or greater than 1.4. This may indicate the need for additional cross sections.
Warning: The energy loss was greater than 1.0 ft (0.3 m). between the current and previous cross
section. This may indicate the need for additional cross sections.

CROSS SECTION

RIVER: CV Creek
REACH: Lower RS: 1826

INPUT
Description: E
Station Elevation Data num= 132

Sta	Elev	Sta	Elev	Sta	Elev	Sta	Elev	Sta	Elev
0	64.2	10.35	64	26.25	64	26.58	63.17	27.04	62
28.66	58	29.43	56.14	29.48	56	29.56	55.77	30.19	54
30.5	53.04	30.84	52	31.09	51.22	31.48	50	32.37	49.16
33.56	48	37.91	46.03	37.97	46	43.39	44	48.71	42.29
49.56	42	78.13	40.18	81.38	40	81.96	40	86.48	39.62
103.67	38	104.65	37.76	111.75	36	118.61	34.28	119.75	34
127.65	32	128.92	31.68	135.52	30	143.4	28	146.53	27.2
167.03	22	171.34	20.9	174.9	20	204.4	18.89	229.62	18
345.36	18	362.14	18.11	362.96	18.11	391.69	18.19	393.02	18.18
456.54	18.29	460.29	18.32	518.91	18.35	522.37	18.38	540.17	18.32
542.86	18.34	563.78	18.29	563.99	18.3	564.85	18.3	565.19	18.31
566.75	18.32	590.56	18.28	593.2	18.31	596.49	18.34	622.3	18.32
626.01	18.37	632.3	18.48	653.56	18.58	666.08	18.89	670.78	18.95
690.04	19.4	696.8	19.51	713.18	19.85	715.23	19.9	716.19	19.92
716.92	19.92	717.71	19.91	723.59	19.89	723.97	19.89	734.2	19.79
737.16	20	834.79	20	841.42	21.9	842.2	22.13	848.78	24
852.42	25.02	858.85	26.86	863.32	28	864.22	28.22	871.88	30
879.32	30	899.68	30.82	911.91	31.17	939.88	32.05	995.7	34
998.91	34	1003.09	34.06	1092.03	35.11	1137.85	35.54	1175.49	36
1196.4	36	1211.38	35.66	1236.79	35.15	1240.58	35.08	1262.69	34.62
1296.91	34.03	1298.29	34	1310.21	33.43	1317.6	33.12	1325.25	32.78
1330.14	32.61	1344.5	32	1346.79	31.4	1351.28	30	1357.19	29.21
1362.23	28.85	1366.12	28.43	1371.63	28.12	1373.1	28	1457.4	28
1467.45	28.13	1481.44	28	1494.92	28	1496.47	28.38	1499.19	29.06
1500.1	29.29	1503.3	30	1507.7	31.41	1509.55	32	1512.25	32.87
1513.09	33.13	1516.01	34	1516.07	34	1518.8	34.08	1518.98	34.08
1527.12	34.31	1528.03	34.33						

Manning's n Values num= 3

Sta	n Val	Sta	n Val	Sta	n Val
0	.05	135.52	.12	871.88	.03

Bank Sta: Left	Right	Lengths: Left	Channel	Right	Coeff Contr.	Expan.
135.52	871.88	299.52	282.81	207	.1	.3

Ineffective Flow num= 1

Sta L	Sta R	Elev	Permanent
821	1528.03		F

CROSS SECTION OUTPUT Profile #PF 1

E.G. Elev (ft)	26.18	Element		Left OB	Channel
Right OB Vel Head (ft)	0.06	Wt. n-Val.			0.120
W.S. Elev (ft)	26.12	Reach Len. (ft)		299.52	282.81
207.00 Crit W.S. (ft)		Flow Area (sq ft)			4888.14
E.G. Slope (ft/ft)	0.001933	Area (sq ft)			5037.98
Q Total (cfs)	10000.00	Flow (cfs)			10000.00
Top Width (ft)	705.45	Top Width (ft)			705.45
Vel Total (ft/s)	2.05	Avg. Vel. (ft/s)			2.05
Max Chl Dpth (ft)	8.12	Hydr. Depth (ft)			7.29
Conv. Total (cfs)	227453.9	Conv. (cfs)			227453.9
Length Wtd. (ft)	282.81	Wetted Per. (ft)			671.03
Min Ch El (ft)	18.00	Shear (lb/sq ft)			0.88
Alpha	1.00	Stream Power (lb/ft s)			1.80
Frctn Loss (ft) 0.62	0.73	Cum Volume (acre-ft)		0.01	161.10
C & E Loss (ft) 0.72	0.01	Cum SA (acres)		0.01	29.16

CROSS SECTION

RIVER: CV Creek
REACH: Lower RS: 1543

INPUT
Description: D
Station Elevation Data num= 313

Sta	Elev	Sta	Elev	Sta	Elev	Sta	Elev	Sta	Elev
0	59.56	30.27	58.13	33.14	58	34.23	57.82	44.58	56
45.85	55.79	67.39	52	76.19	52	82.53	51.38	84.24	51.37
85.35	51.35	88.1	51.27	90.21	51.24	92.76	51.21	94.59	51.15
118.3	51.4	120.81	51.47	133.27	51.79	139.8	51.59	141.02	51.26
142.21	50.93	143.98	51.09	145.15	50.25	145.5	50	145.73	49.28
146.15	48	146.77	46.14	146.82	46	146.86	45.89	147.49	44
147.96	42.58	148.16	42	148.61	40.66	148.81	40.05	151.19	38.45
151.99	38	156.15	36.11	156.4	36	156.79	35.82	160.65	34
165.45	32	176.48	30.88	180.53	30.46	182.25	30.42	196.23	30
200.64	30	212.24	29.66	213.69	29.6	214.64	29.54	215.89	29.47
218.47	29.31	240.86	28	268.28	26.52	272.8	26.31	276.9	26
291.06	25.26	310.38	24.71	318.38	24.4	321.41	24.29	323.06	24.24
333.51	24	338.91	23.24	350.3	22	356.34	21.21	361.44	20.62
367.24	20	379.62	19.86	381.09	19.83	388.93	19.66	399.33	19.47
457.47	18	495.43	18	560.34	16.48	587.9	16.38	592.59	16.38
613.14	16.3	615.31	16.3	671	16.07	671.42	16.07	690.73	16

728.13	16	754.62	16.85	793.87	18	794.45	18	795.41	18.46
798.41	20	799.16	20.37	802.31	22	802.72	22.21	806.19	24
806.29	24.05	807.59	24.73	809.81	25.86	810.08	26	813.98	28
816.06	29.07	817.89	30	820.21	31.16	820.68	31.39	821.19	31.63
821.67	31.84	821.77	31.89	822.08	32	826.42	32	831.33	32.41
834.42	32.69	837.74	32.87	842.66	33.13	848.49	34	852.21	34.18
864.25	34.68	871.27	34.92	890.33	36	891.7	36	895.12	36.24
919.26	37.44	930.2	38	953.21	38	966.09	39.07	971.08	38.64
985.5	37.23	990.73	36.7	997	36.1	997.25	36.08	997.37	36.07
998.09	36	1000.99	36	1003.17	36.16	1004.31	36.25	1018.01	37.26
1019.91	37.39	1021.23	37.49	1028.54	38	1028.75	38.01	1037.31	38.2
1040.78	38.55	1051.07	39.05	1061.2	40	1074.38	40	1096.29	41.32
1106.5	41.63	1108.27	42	1163.1	42	1168.6	40.61	1170.79	40
1174.08	39.07	1178.06	38	1183.19	36.51	1184.75	36	1185.43	35.76
1190.73	34	1198.23	32.25	1201.12	32	1218.39	32	1227.82	31.76
1227.92	31.76	1229.83	31.74	1248.34	31.6	1254.52	31.53	1275.66	31.35
1290.32	31.26	1305.21	31.07	1315.26	31.04	1322.92	31.05	1336	30.85
1340.76	30.87	1344.28	30.9	1346.52	30.95	1354.66	30.78	1356.96	30.84
1360.32	30.92	1362.74	30.85	1367.09	30.97	1374.11	30.7	1377.19	30.79
1384.63	30.4	1386.16	30.44	1392.28	30	1394.97	29.62	1410.13	27.5
1411.5	27.31	1414.59	26.87	1417.96	26.4	1424.93	25.51	1426.08	25.6
1431.42	25.17	1434.08	25.4	1435.68	25.59	1451	25.17	1464.97	26
1561.59	26	1582.58	24.73	1595.22	24	1596.57	23.57	1597.58	23.24
1601.45	22	1611.14	22	1612.61	22.27	1615.89	22.92	1620.24	24
1624.73	24.07	1626.39	24.1	1636.75	24.3	1643.17	24.44	1698.35	26
1721.72	26	1724.6	27.02	1730.04	28	1730.55	28.42	1731.67	29.34
1734	31.24	1734.93	32	1736.12	32.98	1737.37	34	1737.77	34.33
1738.81	35.18	1739.51	35.66	1740.13	36	1741.09	36.6	1741.85	37.07
1743.17	37.66	1743.45	37.82	1743.92	38	1745.04	38.57	1745.41	38.7
1746.33	39.14	1747.97	39.67	1748.24	39.78	1749.01	40	1749.46	40.16
1749.61	40.2	1751.33	40.76	1751.9	40.89	1752.75	40.88	1753.41	41.06
1754.13	41.05	1755.19	40.96	1755.98	40.95	1756.79	40.93	1758.62	40.8
1760.44	40.77	1761.23	40.72	1762.19	40.71	1763.18	40.69	1763.81	40.65
1765.39	40.32	1765.68	40.3	1766.89	40	1767.5	39.83	1767.66	39.79
1769.11	39.38	1769.63	39.23	1770.47	39	1771.43	38.73	1772.73	38.37
1773.06	38.27	1774.16	38	1775.08	37.8	1775.28	37.78	1776.97	37.45
1777.52	37.4	1777.68	37.53	1779.25	37.32	1780.23	37.38	1781.72	37.22
1783.32	37.3	1786.38	37.14	1786.84	37.28	1788.38	37.34	1797.62	37.74
1798.29	37.76	1803.23	37.94	1803.38	37.95	1804.93	38	1807.19	38.08
1807.39	38.09	1811.08	38.22	1811.61	38.24	1819.13	38.5	1822.54	38.61
1825.37	38.71	1828.49	38.81	1830.21	38.86	1850.97	39.53	1852	39.56
1856.72	39.68	1860.99	39.78	1861.33	39.79	1865.87	39.89	1866.04	39.9
1866.2	39.9	1870.31	40	1870.92	40.01	1871.17	40.02	1874.16	40.03
1877.07	40.05	1877.18	40.05	1882.94	40.08	1883.03	40.08	1883.22	40.06
1884.22	40	1887.4	39.8	1887.76	39.77	1888.51	39.78	1895.95	39.81
1896.27	39.81	1900.07	39.83	1900.36	39.83	1904.2	39.84	1904.7	39.85
1911.08	39.95	1911.29	39.95	1917.89	40.05				

Manning's n Values num= 3

Sta	n Val	Sta	n Val	Sta	n Val
0	.05	165.45	.12	837.74	.03

Bank Sta: Left	Right	Lengths: Left	Channel	Right	Coeff Contr.	Expan.
165.45	837.74	321.52	101.33	163.33	.1	.3

Ineffective Flow num= 2

Sta L	Sta R	Elev	Permanent
0	391		F
809	1917.89		F

CROSS SECTION OUTPUT Profile #PF 1

E.G. Elev (ft) 25.44 Element Left OB Channel

Right OB				
Vel Head (ft)	0.14	Wt. n-Val.		0.120
W.S. Elev (ft)	25.31	Reach Len. (ft)	11.92	11.92
11.92 Crit W.S. (ft)	19.78	Flow Area (sq ft)		3361.97
E.G. Slope (ft/ft)	0.003598	Area (sq ft)		3634.70
121.97 Q Total (cfs)	10000.00	Flow (cfs)		10000.00
Top Width (ft)	630.02	Top Width (ft)		518.57
111.44 Vel Total (ft/s)	2.97	Avg. Vel. (ft/s)		2.97
Max Chl Dpth (ft)	9.31	Hydr. Depth (ft)		8.05
Conv. Total (cfs)	166703.0	Conv. (cfs)		166703.0
Length Wtd. (ft)	11.92	Wetted Per. (ft)		419.56
Min Ch El (ft)	16.00	Shear (lb/sq ft)		1.80
Alpha	1.00	Stream Power (lb/ft s)		5.35
Frctn Loss (ft) 0.33		Cum Volume (acre-ft)	0.01	132.95
C & E Loss (ft) 0.46		Cum SA (acres)	0.01	25.19

Warning: Divided flow computed for this cross-section.

BRIDGE

RIVER: CV Creek
REACH: Lower RS: 1500

INPUT
Description: SR-56 Connector east of I-5
Distance from Upstream XS = 11.92
Deck/Roadway Width = 70
Weir Coefficient = 2.6
Upstream Deck/Roadway Coordinates
num= 10

Sta	Hi Cord	Lo Cord	Sta	Hi Cord	Lo Cord	Sta	Hi Cord	Lo Cord
0	24	0	383.73	26.56	0	383.73	26.56	24.81
821.15	33.72	31.97	821.15	33.72	0	1208.28	40	0
1208.28	40	38.25	1719.08	55	53.25	1719.08	55	0
2000	55	0						

Upstream Bridge Cross Section Data
Station Elevation Data num= 313

Sta	Elev	Sta	Elev	Sta	Elev	Sta	Elev	Sta	Elev
0	59.56	30.27	58.13	33.14	58	34.23	57.82	44.58	56
45.85	55.79	67.39	52	76.19	52	82.53	51.38	84.24	51.37
85.35	51.35	88.1	51.27	90.21	51.24	92.76	51.21	94.59	51.15
118.3	51.4	120.81	51.47	133.27	51.79	139.8	51.59	141.02	51.26
142.21	50.93	143.98	51.09	145.15	50.25	145.5	50	145.73	49.28
146.15	48	146.77	46.14	146.82	46	146.86	45.89	147.49	44
147.96	42.58	148.16	42	148.61	40.66	148.81	40.05	151.19	38.45

151.99	38	156.15	36.11	156.4	36	156.79	35.82	160.65	34
165.45	32	176.48	30.88	180.53	30.46	182.25	30.42	196.23	30
200.64	30	212.24	29.66	213.69	29.6	214.64	29.54	215.89	29.47
218.47	29.31	240.86	28	268.28	26.52	272.8	26.31	276.9	26
291.06	25.26	310.38	24.71	318.38	24.4	321.41	24.29	323.06	24.24
333.51	24	338.91	23.24	350.3	22	356.34	21.21	361.44	20.62
367.24	20	379.62	19.86	381.09	19.83	388.93	19.66	399.33	19.47
457.47	18	495.43	18	560.34	16.48	587.9	16.38	592.59	16.38
613.14	16.3	615.31	16.3	671	16.07	671.42	16.07	690.73	16
728.13	16	754.62	16.85	793.87	18	794.45	18	795.41	18.46
798.41	20	799.16	20.37	802.31	22	802.72	22.21	806.19	24
806.29	24.05	807.59	24.73	809.81	25.86	810.08	26	813.98	28
816.06	29.07	817.89	30	820.21	31.16	820.68	31.39	821.19	31.63
821.67	31.84	821.77	31.89	822.08	32	826.42	32	831.33	32.41
834.42	32.69	837.74	32.87	842.66	33.13	848.49	34	852.21	34.18
864.25	34.68	871.27	34.92	890.33	36	891.7	36	895.12	36.24
919.26	37.44	930.2	38	953.21	38	966.09	39.07	971.08	38.64
985.5	37.23	990.73	36.7	997	36.1	997.25	36.08	997.37	36.07
998.09	36	1000.99	36	1003.17	36.16	1004.31	36.25	1018.01	37.26
1019.91	37.39	1021.23	37.49	1028.54	38	1028.75	38.01	1037.31	38.2
1040.78	38.55	1051.07	39.05	1061.2	40	1074.38	40	1096.29	41.32
1106.5	41.63	1108.27	42	1163.1	42	1168.6	40.61	1170.79	40
1174.08	39.07	1178.06	38	1183.19	36.51	1184.75	36	1185.43	35.76
1190.73	34	1198.23	32.25	1201.12	32	1218.39	32	1227.82	31.76
1227.92	31.76	1229.83	31.74	1248.34	31.6	1254.52	31.53	1275.66	31.35
1290.32	31.26	1305.21	31.07	1315.26	31.04	1322.92	31.05	1336	30.85
1340.76	30.87	1344.28	30.9	1346.52	30.95	1354.66	30.78	1356.96	30.84
1360.32	30.92	1362.74	30.85	1367.09	30.97	1374.11	30.7	1377.19	30.79
1384.63	30.4	1386.16	30.44	1392.28	30	1394.97	29.62	1410.13	27.5
1411.5	27.31	1414.59	26.87	1417.96	26.4	1424.93	25.51	1426.08	25.6
1431.42	25.17	1434.08	25.4	1435.68	25.59	1451	25.17	1464.97	26
1561.59	26	1582.58	24.73	1595.22	24	1596.57	23.57	1597.58	23.24
1601.45	22	1611.14	22	1612.61	22.27	1615.89	22.92	1620.24	24
1624.73	24.07	1626.39	24.1	1636.75	24.3	1643.17	24.44	1698.35	26
1721.72	26	1724.6	27.02	1730.04	28	1730.55	28.42	1731.67	29.34
1734	31.24	1734.93	32	1736.12	32.98	1737.37	34	1737.77	34.33
1738.81	35.18	1739.51	35.66	1740.13	36	1741.09	36.6	1741.85	37.07
1743.17	37.66	1743.45	37.82	1743.92	38	1745.04	38.57	1745.41	38.7
1746.33	39.14	1747.97	39.67	1748.24	39.78	1749.01	40	1749.46	40.16
1749.61	40.2	1751.33	40.76	1751.9	40.89	1752.75	40.88	1753.41	41.06
1754.13	41.05	1755.19	40.96	1755.98	40.95	1756.79	40.93	1758.62	40.8
1760.44	40.77	1761.23	40.72	1762.19	40.71	1763.18	40.69	1763.81	40.65
1765.39	40.32	1765.68	40.3	1766.89	40	1767.5	39.83	1767.66	39.79
1769.11	39.38	1769.63	39.23	1770.47	39	1771.43	38.73	1772.73	38.37
1773.06	38.27	1774.16	38	1775.08	37.8	1775.28	37.78	1776.97	37.45
1777.52	37.4	1777.68	37.53	1779.25	37.32	1780.23	37.38	1781.72	37.22
1783.32	37.3	1786.38	37.14	1786.84	37.28	1788.38	37.34	1797.62	37.74
1798.29	37.76	1803.23	37.94	1803.38	37.95	1804.93	38	1807.19	38.08
1807.39	38.09	1811.08	38.22	1811.61	38.24	1819.13	38.5	1822.54	38.61
1825.37	38.71	1828.49	38.81	1830.21	38.86	1850.97	39.53	1852	39.56
1856.72	39.68	1860.99	39.78	1861.33	39.79	1865.87	39.89	1866.04	39.9
1866.2	39.9	1870.31	40	1870.92	40.01	1871.17	40.02	1874.16	40.03
1877.07	40.05	1877.18	40.05	1882.94	40.08	1883.03	40.08	1883.22	40.06
1884.22	40	1887.4	39.8	1887.76	39.77	1888.51	39.78	1895.95	39.81
1896.27	39.81	1900.07	39.83	1900.36	39.83	1904.2	39.84	1904.7	39.85
1911.08	39.95	1911.29	39.95	1917.89	40.05				

Manning's n Values num= 3

Sta	n Val	Sta	n Val	Sta	n Val
0	.05	165.45	.12	837.74	.03

Bank Sta: Left	Right	Coeff Contr.	Expan.
165.45	837.74	.1	.3

Ineffective Flow num= 2

Sta L	Sta R	Elev	Permanent
0	391		F
809	1917.89		F

Downstream Deck/Roadway Coordinates

num= 10

Sta	Hi Cord	Lo Cord	Sta	Hi Cord	Lo Cord	Sta	Hi Cord	Lo Cord
0	24	0	676.77	26.56	0	676.77	26.56	24.81
1114.19	33.72	31.97	1114.19	33.72	0	1374.52	40	0
1374.52	40	38.25	1948.06	55	53.25	1948.06	55	0
2020	55	0						

Downstream Bridge Cross Section Data

Station Elevation Data num= 291

Sta	Elev	Sta	Elev	Sta	Elev	Sta	Elev	Sta	Elev
0	64	9.05	64.39	10.38	64.53	13.66	64.76	16.02	64.86
18.14	64.88	20.57	64.99	22.53	64.92	24.35	65.02	25.85	64.97
27.28	65.08	28.34	65.05	28.64	65.07	29.38	65.05	30.48	65.05
31.31	65.06	31.64	65.04	32.65	65.03	34.3	65.05	35.2	65.08
40.02	65.15	41.88	65.17	44.13	65.2	49.56	65.26	51.3	65.23
52.99	65.12	56.35	65.17	57.73	64.9	59.35	64.6	60.28	64.61
61.22	64.37	62.54	64	62.7	63.94	65.19	62.96	66.23	62.54
66.72	62.35	67.6	62	68.86	61.53	72.88	60	77.19	58.38
78.19	58	84.21	55.68	85.46	55.33	88.25	54.56	89.12	54.45
91.32	54.18	91.69	54.21	94.26	54.36	98.62	54.31	103.76	54.07
103.99	54.06	104.79	54	109.82	53.64	110.9	53.6	115.64	53.4
117.7	53.38	122	53.31	128.93	53.36	131.56	53.3	135.53	53.19
142.26	52.78	149.4	52.09	149.7	52.06	149.89	52.05	150.41	52
156.21	51.49	158.62	51.27	162.98	50.91	167.71	50.51	175.85	49.88
176.44	49.81	182.54	49.17	187.76	48.39	188.96	48.22	190.11	48
197.34	46.65	198.61	46.36	200.17	46	207.81	44.25	208.31	44.11
208.7	44	212.73	42.88	215.87	42	218.31	41.47	219.73	41.2
221.04	40.75	223.33	40	227.95	38.86	229.96	38.38	230.02	38.36
231.32	38	236.61	37.1	242.38	36.09	242.63	36.05	242.92	36
251.02	34.83	256.12	34.16	256.72	34.08	257.45	34	262.55	33.55
266.95	33.24	272.78	32.81	284.45	32	297.05	31.33	298.1	31.19
300.56	30.96	307.71	30.48	310.74	30.23	311.15	30.2	313.84	30
369.58	30	387.23	29.1	392.46	29.08	397.83	28.87	399.93	28.84
409.11	28	466.19	28	466.9	27.95	467.7	27.89	479.18	27.06
480.82	26.85	494.1	26	580.96	26	612.15	24.14	612.87	24.14
616.19	24.04	616.55	24.04	619.04	24	636.03	24	640.49	23.41
647.47	23.32	649.07	23.25	653.38	23.32	656.6	23.61	657.26	23.58
659.96	23.9	660.1	23.89	660.68	24	671.03	24	671.96	23.93
672.09	23.8	675.84	16	1097.84	16	1101.14	25.5	1102.25	26
1106.28	27.83	1106.66	28	1106.79	28.06	1106.9	28.1	1109.55	29.14
1110.53	29.4	1111.13	29.55	1111.46	29.56	1112.23	29.58	1113.93	29.5
1117.41	29.35	1117.48	29.34	1122.14	29.1	1124.93	28.95	1128.81	28.75
1139.79	28.13	1140.2	28.11	1149.01	27.62	1154.17	27.32	1158.84	27.07
1162.62	26.85	1177.92	26	1178.72	25.99	1188.22	25.91	1190.27	26
1294.33	26	1304.5	26.69	1304.71	26.69	1306.88	26.67	1327.12	26.53
1328.9	26.52	1345.44	26.4	1358.94	27.17	1364.2	27.03	1372.65	26.74
1374.52	26.77	1378.33	26.64	1390.79	26	1391.81	26	1393.44	25.86
1413.72	24.73	1416.65	24.58	1420.18	24.07	1420.42	24.05	1421.2	24
1467.82	24	1475.26	24.21	1476.12	24.24	1477.42	24.27	1492.08	24.68
1496.03	24.77	1503.48	24.97	1509.84	25.1	1513.52	25.19	1514.91	25.21
1516.59	25.25	1527.17	25.45	1528.75	25.49	1530.4	25.52	1547.56	25.86
1548.51	25.89	1554.78	26	1569.37	26.39	1575.6	26.61	1599.15	27.35
1603.06	27.5	1604.28	27.57	1605.28	27.62	1617.78	27.85	1618.24	27.87
1618.62	27.88	1627.09	27.91	1627.76	27.91	1635.6	28	1639.68	28.1
1640.41	28.1	1641	28.11	1656.27	28.5	1657.97	28.52	1658.66	28.54
1659.54	28.58	1660.69	28.62	1673.24	29	1674.71	29.08	1692.32	30
1696.58	30.28	1698.78	30.43	1715.7	31.55	1718.67	31.74	1752.84	34

1760.2	34.43	1761.53	34.5	1762.59	34.54	1764.86	34.61	1765.76	34.63
1805.58	35.71	1816.92	35.9	1817.65	35.91	1826.09	35.9	1826.53	35.91
1826.72	35.9	1832.23	35.72	1832.82	35.7	1833.49	35.69	1837.08	35.58
1838.8	35.53	1839	35.53	1842.89	35.02	1845.53	34.16	1845.99	34
1847.05	33.61	1849.93	32.51	1851.39	32	1855.82	30.36	1856.75	30
1857.12	29.86	1861.96	28	1863.06	27.58	1867.16	26	1869.47	25.32
1874.34	24	1948.06	24	1953.82	27.08	1958.36	29.52	1959.26	30
1962.99	32	1964.1	32.6	1966.72	34	1967.53	34.43	1970.46	36
1972.43	37.06	1974.19	38	1977.06	39.54	1977.92	40	1978.42	40.27
1982.25	42	1984.12	42.79	1988.34	44	1988.85	44.14	1989.71	44.3
1994.36	45.19	1996.75	46	2006.19	49.22	2008.1	50	2010.36	50
2017.72	50.39								

Manning's n Values num= 3

Sta	n Val	Sta	n Val	Sta	n Val
0	.035	675.84	.025	1097.84	.03

Bank Sta: Left	Right	Coeff Contr.	Expan.
675.84	1097.84	.1	.3

Ineffective Flow num= 2

Sta L	Sta R	Elev	Permanent
0	671		F
1100	2017.72		F

Upstream Embankment side slope = 0 horiz. to 1.0 vertical
Downstream Embankment side slope = 0 horiz. to 1.0 vertical
Maximum allowable submergence for weir flow = .95
Elevation at which weir flow begins =
Energy head used in spillway design =
Spillway height used in design =
Weir crest shape = Broad Crested

Number of Piers = 11

Pier Data
Pier Station Upstream= 414.54 Downstream= 707.58
Upstream num= 2

Width	Elev	Width	Elev
3	0	3	50

Downstream num= 2

Width	Elev	Width	Elev
3	0	3	50

Pier Data
Pier Station Upstream= 454.68 Downstream= 747.72
Upstream num= 2

Width	Elev	Width	Elev
3	0	3	50

Downstream num= 2

Width	Elev	Width	Elev
3	0	3	50

Pier Data
Pier Station Upstream= 494.89 Downstream= 787.93
Upstream num= 2

Width	Elev	Width	Elev
3	0	3	50

Downstream num= 2

Width	Elev	Width	Elev
3	0	3	50

Pier Data
Pier Station Upstream= 535.18 Downstream= 828.22

```
Upstream      num=        2
    Width    Elev     Width    Elev
       3        0        3      50
Downstream      num=        2
    Width    Elev     Width    Elev
       3        0        3      50

Pier Data
Pier Station      Upstream=  575.56    Downstream=   868.6
Upstream      num=        2
    Width    Elev     Width    Elev
       3        0        3      50
Downstream      num=        2
    Width    Elev     Width    Elev
       3        0        3      50

Pier Data
Pier Station      Upstream=  616.06    Downstream=   909.1
Upstream      num=        2
    Width    Elev     Width    Elev
       3        0        3      50
Downstream      num=        2
    Width    Elev     Width    Elev
       3        0        3      50

Pier Data
Pier Station      Upstream=   656.7    Downstream=  949.74
Upstream      num=        2
    Width    Elev     Width    Elev
       3        0        3      50
Downstream      num=        2
    Width    Elev     Width    Elev
       3        0        3      50

Pier Data
Pier Station      Upstream=  697.48    Downstream=  990.52
Upstream      num=        2
    Width    Elev     Width    Elev
       3        0        3      50
Downstream      num=        2
    Width    Elev     Width    Elev
       3        0        3      50

Pier Data
Pier Station      Upstream=  738.43    Downstream= 1031.47
Upstream      num=        2
    Width    Elev     Width    Elev
       3        0        3      50
Downstream      num=        2
    Width    Elev     Width    Elev
       3        0        3      50

Pier Data
Pier Station      Upstream=  779.41    Downstream= 1072.45
Upstream      num=        2
    Width    Elev     Width    Elev
       3        0        3      50
Downstream      num=        2
    Width    Elev     Width    Elev
       3        0        3      50

Pier Data
Pier Station      Upstream= 1493.06    Downstream=  1659.3
```

```
Upstream      num=        2
    Width    Elev     Width    Elev
    6.25       0      6.25      50
Downstream      num=        2
    Width    Elev     Width    Elev
    6.25       0      6.25      50

Number of Bridge Coefficient Sets =  1

Low Flow Methods and Data
       Energy
       Momentum                Cd    =     1.2
Selected Low Flow Methods = Highest Energy Answer

High Flow Method
       Energy Only

Additional Bridge Parameters
       Add Friction component to Momentum
       Do not add Weight component to Momentum
       Class B flow critical depth computations use critical depth
           inside the bridge at the upstream end
       Criteria to check for pressure flow = Upstream energy grade line

BRIDGE OUTPUT  Profile #PF 1


  E.G. US. (ft)                 25.44    Element                 Inside BR US
Inside BR DS
  W.S. US. (ft)                 25.31    E.G. Elev (ft)                25.38
24.13
  Q Total (cfs)              10000.00    W.S. Elev (ft)                25.21
23.97
  Q Bridge (cfs)             10000.00    Crit W.S. (ft)                19.92
18.73
  Q Weir (cfs)                           Max Chl Dpth (ft)              9.21
 7.97
  Weir Sta Lft (ft)                      Vel Total (ft/s)               3.25
 3.20
  Weir Sta Rgt (ft)                      Flow Area (sq ft)           3076.18
3125.59
  Weir Submerg                           Froude # Chl                   0.20
 0.20
  Weir Max Depth (ft)                    Specif Force (cu ft)       13602.74
13430.69
  Min El Weir Flow (ft)         26.69    Hydr Depth (ft)                8.31
 7.95
  Min El Prs (ft)               53.25    W.P. Total (ft)              568.92
556.96
  Delta EG (ft)                  1.32    Conv. Total (cfs)          117345.2
588737.3
  Delta WS (ft)                  1.32    Top Width (ft)               469.35
393.84
  BR Open Area (sq ft)        4298.01    Frctn Loss (ft)

  BR Open Vel (ft/s)             3.25    C & E Loss (ft)

  Coef of Q                              Shear Total (lb/sq ft)         2.45
 0.10
  Br Sel Method              Momentum    Power Total (lb/ft s)          7.97
 0.32
```

Warning: The conveyance ratio (upstream conveyance divided by downstream conveyance) is less than
0.7 or greater than 1.4. This may indicate the need for additional cross sections.

CROSS SECTION

RIVER: CV Creek
REACH: Lower RS: 1442

INPUT
Description: C
Station Elevation Data num= 291

Sta	Elev	Sta	Elev	Sta	Elev	Sta	Elev	Sta	Elev
0	64	9.05	64.39	10.38	64.53	13.66	64.76	16.02	64.86
18.14	64.88	20.57	64.99	22.53	64.92	24.35	65.02	25.85	64.97
27.28	65.08	28.34	65.05	28.64	65.07	29.38	65.05	30.48	65.05
31.31	65.06	31.64	65.04	32.65	65.03	34.3	65.05	35.2	65.08
40.02	65.15	41.88	65.17	44.13	65.2	49.56	65.26	51.3	65.23
52.99	65.12	56.35	65.17	57.73	64.9	59.35	64.6	60.28	64.61
61.22	64.37	62.54	64	62.7	63.94	65.19	62.96	66.23	62.54
66.72	62.35	67.6	62	68.86	61.53	72.88	60	77.19	58.38
78.19	58	84.21	55.68	85.46	55.33	88.25	54.56	89.12	54.45
91.32	54.18	91.69	54.21	94.26	54.36	98.62	54.31	103.76	54.07
103.99	54.06	104.79	54	109.82	53.64	110.9	53.6	115.64	53.4
117.7	53.38	122	53.31	128.93	53.36	131.56	53.3	135.53	53.19
142.26	52.78	149.4	52.09	149.7	52.06	149.89	52.05	150.41	52
156.21	51.49	158.62	51.27	162.98	50.91	167.71	50.51	175.85	49.88
176.44	49.81	182.54	49.17	187.76	48.39	188.96	48.22	190.11	48
197.34	46.65	198.61	46.36	200.17	46	207.81	44.25	208.31	44.11
208.7	44	212.73	42.88	215.87	42	218.31	41.47	219.73	41.2
221.04	40.75	223.33	40	227.95	38.86	229.96	38.38	230.02	38.36
231.32	38	236.61	37.1	242.38	36.09	242.63	36.05	242.92	36
251.02	34.83	256.12	34.16	256.72	34.08	257.45	34	262.55	33.55
266.95	33.24	272.78	32.81	284.45	32	297.05	31.33	298.1	31.19
300.56	30.96	307.71	30.48	310.74	30.23	311.15	30.2	313.84	30
369.58	30	387.23	29.1	392.46	29.08	397.83	28.87	399.93	28.84
409.11	28	466.19	28	466.9	27.95	467.7	27.89	479.18	27.06
480.82	26.85	494.1	26	580.96	26	612.15	24.14	612.87	24.14
616.19	24.04	616.55	24.04	619.04	24	636.03	24	640.49	23.41
647.47	23.32	649.07	23.25	653.38	23.32	656.6	23.61	657.26	23.58
659.96	23.9	660.1	23.89	660.68	24	671.03	24	671.96	23.93
672.09	23.8	675.84	16	1097.84	16	1101.14	25.5	1102.25	26
1106.28	27.83	1106.66	28	1106.79	28.06	1106.9	28.1	1109.55	29.14
1110.53	29.4	1111.13	29.55	1111.46	29.56	1112.23	29.58	1113.93	29.5
1117.41	29.35	1117.48	29.34	1122.14	29.1	1124.93	28.95	1128.81	28.75
1139.79	28.13	1140.2	28.11	1149.01	27.62	1154.17	27.32	1158.84	27.07
1162.62	26.85	1177.92	26	1178.72	25.99	1188.22	25.91	1190.27	26
1294.33	26	1304.5	26.69	1304.71	26.69	1306.88	26.67	1327.12	26.53
1328.9	26.52	1345.44	26.4	1358.94	27.17	1364.2	27.03	1372.65	26.74
1374.52	26.77	1378.33	26.64	1390.79	26	1391.81	26	1393.44	25.86
1413.72	24.73	1416.65	24.58	1420.18	24.07	1420.42	24.05	1421.2	24
1467.82	24	1475.26	24.21	1476.12	24.24	1477.42	24.27	1492.08	24.68
1496.03	24.77	1503.48	24.97	1509.84	25.1	1513.52	25.19	1514.91	25.21
1516.59	25.25	1527.17	25.45	1528.75	25.49	1530.4	25.52	1547.56	25.86
1548.51	25.89	1554.78	26	1569.37	26.39	1575.6	26.61	1599.15	27.35
1603.06	27.5	1604.28	27.57	1605.28	27.62	1617.78	27.85	1618.24	27.87
1618.62	27.88	1627.09	27.91	1627.76	27.91	1635.6	28	1639.68	28.1
1640.41	28.1	1641	28.11	1656.27	28.5	1657.97	28.52	1658.66	28.54
1659.54	28.58	1660.69	28.62	1673.24	29	1674.71	29.08	1692.32	30
1696.58	30.28	1698.78	30.43	1715.7	31.55	1718.67	31.74	1752.84	34

1760.2	34.43	1761.53	34.5	1762.59	34.54	1764.86	34.61	1765.76	34.63
1805.58	35.71	1816.92	35.9	1817.65	35.91	1826.09	35.9	1826.53	35.91
1826.72	35.9	1832.23	35.72	1832.82	35.7	1833.49	35.69	1837.08	35.58
1838.8	35.53	1839	35.53	1842.89	35.02	1845.53	34.16	1845.99	34
1847.05	33.61	1849.93	32.51	1851.39	32	1855.82	30.36	1856.75	30
1857.12	29.86	1861.96	28	1863.06	27.58	1867.16	26	1869.47	25.32
1874.34	24	1948.06	24	1953.82	27.08	1958.36	29.52	1959.26	30
1962.99	32	1964.1	32.6	1966.72	34	1967.53	34.43	1970.46	36
1972.43	37.06	1974.19	38	1977.06	39.54	1977.92	40	1978.42	40.27
1982.25	42	1984.12	42.79	1988.34	44	1988.85	44.14	1989.71	44.3
1994.36	45.19	1996.75	46	2006.19	49.22	2008.1	50	2010.36	50
2017.72	50.39								

Manning's n Values num= 3

Sta	n Val	Sta	n Val	Sta	n Val
0	.035	675.84	.025	1097.84	.03

Bank Sta: Left	Right	Lengths: Left	Channel	Right	Coeff Contr.	Expan.
675.84	1097.84	294.18	244.62	253.63	.1	.3

Ineffective Flow num= 2

Sta L	Sta R	Elev	Permanent
0	671		F
1100	2017.72		F

CROSS SECTION OUTPUT Profile #PF 1

E.G. Elev (ft)	24.12	Element	Left OB	Channel
Right OB				
Vel Head (ft)	0.14	Wt. n-Val.	0.035	0.025
0.030				
W.S. Elev (ft)	23.99	Reach Len. (ft)	13.34	13.34
13.34				
Crit W.S. (ft)	18.60	Flow Area (sq ft)	15.36	3369.76
10.53				
E.G. Slope (ft/ft)	0.000156	Area (sq ft)	27.70	3369.76
11.07				
Q Total (cfs)	10000.00	Flow (cfs)	11.14	9979.96
8.90				
Top Width (ft)	453.85	Top Width (ft)	29.07	422.00
2.77				
Vel Total (ft/s)	2.94	Avg. Vel. (ft/s)	0.73	2.96
0.85				
Max Chl Dpth (ft)	7.99	Hydr. Depth (ft)	3.33	7.99
4.88				
Conv. Total (cfs)	801769.0	Conv. (cfs)	893.2	800162.1
713.7				
Length Wtd. (ft)	13.34	Wetted Per. (ft)	9.57	422.00
6.58				
Min Ch El (ft)	16.00	Shear (lb/sq ft)	0.02	0.08
0.02				
Alpha	1.01	Stream Power (lb/ft s)	0.01	0.23
0.01				
Frctn Loss (ft)		Cum Volume (acre-ft)	0.00	125.57
0.19				
C & E Loss (ft)		Cum SA (acres)	0.00	24.27
0.35				

BRIDGE

RIVER: CV Creek
REACH: Lower RS: 1400

INPUT
Description: I-5 Bridge
Distance from Upstream XS = 13.34
Deck/Roadway Width = 214.2
Weir Coefficient = 2.6
Upstream Deck/Roadway Coordinates
num= 18

Sta	Hi Cord	Lo Cord	Sta	Hi Cord	Lo Cord	Sta	Hi Cord	Lo Cord
0	30	0	680.08	29.25	0	680.08	29.25	24.5
745.5	28.4	23.65	815.5	27.8	23.05	890.83	27.6	22.85
971.5	27.8	23.05	1036.1	28.4	23.65	1101.58	29.25	24.5
1101.58	29.25	0	1373.5	31.4	0	1546.4	34.9	0
1686.9	38.9	0	1874.34	45.93	0	1874.34	45.93	41.18
1948.06	49.21	44.46	1948.06	49.21	0	2000	52.5	0

Upstream Bridge Cross Section Data
Station Elevation Data num= 291

Sta	Elev	Sta	Elev	Sta	Elev	Sta	Elev	Sta	Elev
0	64	9.05	64.39	10.38	64.53	13.66	64.76	16.02	64.86
18.14	64.88	20.57	64.99	22.53	64.92	24.35	65.02	25.85	64.97
27.28	65.08	28.34	65.05	28.64	65.07	29.38	65.05	30.48	65.05
31.31	65.06	31.64	65.04	32.65	65.03	34.3	65.05	35.2	65.08
40.02	65.15	41.88	65.17	44.13	65.2	49.56	65.26	51.3	65.23
52.99	65.12	56.35	65.17	57.73	64.9	59.35	64.6	60.28	64.61
61.22	64.37	62.54	64	62.7	63.94	65.19	62.96	66.23	62.54
66.72	62.35	67.6	62	68.86	61.53	72.88	60	77.19	58.38
78.19	58	84.21	55.68	85.46	55.33	88.25	54.56	89.12	54.45
91.32	54.18	91.69	54.21	94.26	54.36	98.62	54.31	103.76	54.07
103.99	54.06	104.79	54	109.82	53.64	110.9	53.6	115.64	53.4
117.7	53.38	122	53.31	128.93	53.36	131.56	53.3	135.53	53.19
142.26	52.78	149.4	52.09	149.7	52.06	149.89	52.05	150.41	52
156.21	51.49	158.62	51.27	162.98	50.91	167.71	50.51	175.85	49.88
176.44	49.81	182.54	49.17	187.76	48.39	188.96	48.22	190.11	48
197.34	46.65	198.61	46.36	200.17	46	207.81	44.25	208.31	44.11
208.7	44	212.73	42.88	215.87	42	218.31	41.47	219.73	41.2
221.04	40.75	223.33	40	227.95	38.86	229.96	38.38	230.02	38.36
231.32	38	236.61	37.1	242.38	36.09	242.63	36.05	242.92	36
251.02	34.83	256.12	34.16	256.72	34.08	257.45	34	262.55	33.55
266.95	33.24	272.78	32.81	284.45	32	297.05	31.33	298.1	31.19
300.56	30.96	307.71	30.48	310.74	30.23	311.15	30.2	313.84	30
369.58	30	387.23	29.1	392.46	29.08	397.83	28.87	399.93	28.84
409.11	28	466.19	28	466.9	27.95	467.7	27.89	479.18	27.06
480.82	26.85	494.1	26	580.96	26	612.15	24.14	612.87	24.14
616.19	24.04	616.55	24.04	619.04	24	636.03	24	640.49	23.41
647.47	23.32	649.07	23.25	653.38	23.32	656.6	23.61	657.26	23.58
659.96	23.9	660.1	23.89	660.68	24	671.03	24	671.96	23.93
672.09	23.8	675.84	16	1097.84	16	1101.14	25.5	1102.25	26
1106.28	27.83	1106.66	28	1106.79	28.06	1106.9	28.1	1109.55	29.14
1110.53	29.4	1111.13	29.55	1111.46	29.56	1112.23	29.58	1113.93	29.5
1117.41	29.35	1117.48	29.34	1122.14	29.1	1124.93	28.95	1128.81	28.75
1139.79	28.13	1140.2	28.11	1149.01	27.62	1154.17	27.32	1158.84	27.07
1162.62	26.85	1177.92	26	1178.72	25.99	1188.22	25.91	1190.27	26
1294.33	26	1304.5	26.69	1304.71	26.69	1306.88	26.67	1327.12	26.53
1328.9	26.52	1345.44	26.4	1358.94	27.17	1364.2	27.03	1372.65	26.74
1374.52	26.77	1378.33	26.64	1390.79	26	1391.81	26	1393.44	25.86
1413.72	24.73	1416.65	24.58	1420.18	24.07	1420.42	24.05	1421.2	24
1467.82	24	1475.26	24.21	1476.12	24.24	1477.42	24.27	1492.08	24.68
1496.03	24.77	1503.48	24.97	1509.84	25.1	1513.52	25.19	1514.91	25.21
1516.59	25.25	1527.17	25.45	1528.75	25.49	1530.4	25.52	1547.56	25.86
1548.51	25.89	1554.78	26	1569.37	26.39	1575.6	26.61	1599.15	27.35

1603.06	27.5	1604.28	27.57	1605.28	27.62	1617.78	27.85	1618.24	27.87
1618.62	27.88	1627.09	27.91	1627.76	27.91	1635.6	28	1639.68	28.1
1640.41	28.1	1641	28.11	1656.27	28.5	1657.97	28.52	1658.66	28.54
1659.54	28.58	1660.69	28.62	1673.24	29	1674.71	29.08	1692.32	30
1696.58	30.28	1698.78	30.43	1715.7	31.55	1718.67	31.74	1752.84	34
1760.2	34.43	1761.53	34.5	1762.59	34.54	1764.86	34.61	1765.76	34.63
1805.58	35.71	1816.92	35.9	1817.65	35.91	1826.09	35.9	1826.53	35.91
1826.72	35.9	1832.23	35.72	1832.82	35.7	1833.49	35.69	1837.08	35.58
1838.8	35.53	1839	35.53	1842.89	35.02	1845.53	34.16	1845.99	34
1847.05	33.61	1849.93	32.51	1851.39	32	1855.82	30.36	1856.75	30
1857.12	29.86	1861.96	28	1863.06	27.58	1867.16	26	1869.47	25.32
1874.34	24	1948.06	24	1953.82	27.08	1958.36	29.52	1959.26	30
1962.99	32	1964.1	32.6	1966.72	34	1967.53	34.43	1970.46	36
1972.43	37.06	1974.19	38	1977.06	39.54	1977.92	40	1978.42	40.27
1982.25	42	1984.12	42.79	1988.34	44	1988.85	44.14	1989.71	44.3
1994.36	45.19	1996.75	46	2006.19	49.22	2008.1	50	2010.36	50
2017.72	50.39								

Manning's n Values num= 3

Sta	n Val	Sta	n Val	Sta	n Val
0	.035	675.84	.025	1097.84	.03

Bank Sta: Left	Right	Coeff Contr.	Expan.
675.84	1097.84	.1	.3

Ineffective Flow num= 2

Sta L	Sta R	Elev	Permanent
0	671		F
1100	2017.72		F

Downstream Deck/Roadway Coordinates
num= 19

Sta	Hi Cord	Lo Cord	Sta	Hi Cord	Lo Cord	Sta	Hi Cord	Lo Cord
0	30	0	632.19	31.6	0	632.19	31.6	26.85
697.61	30.75	26	767.61	30.15	25.2	842.94	29.95	25
923.61	30.15	25.2	988.21	30.75	26	1053.69	31.6	26.85
1053.69	31.6	0	1325.61	33.6	0	1386.56	35.5	0
1527.06	38.9	0	1714.51	45.93	0	1714.51	45.93	41.18
1795.06	49.21	44.46	1795.06	49.21	0	1900	52.5	0
2200	55.77	0						

Downstream Bridge Cross Section Data
Station Elevation Data num= 238

Sta	Elev	Sta	Elev	Sta	Elev	Sta	Elev	Sta	Elev
0	40.16	1.11	40.12	1.57	40.14	7.57	39.87	8.17	39.84
16.37	39.47	18.51	39.38	45.64	38.17	47.11	38.11	52.24	37.88
80.79	36.64	83.16	36.53	95.33	36	105.69	35.95	106.71	35.88
122.5	35.71	126.21	35.09	127.06	34.88	130.74	34.75	131.09	34.55
131.93	34.4	133.23	34.34	134.54	34.29	135.38	34.25	136.06	34.22
136.23	34.21	136.41	34.21	136.6	34.2	137.3	34.17	142.47	34
170.12	34	174.22	33.95	174.97	33.93	210.89	33.86	213.49	33.77
235.44	33.68	239.86	33.43	251.83	32	263.6	32	264.87	31.91
265.56	31.89	270.72	31.52	278.4	31.39	290.7	30.84	323.02	30
373.81	30	375.9	29.65	378.6	29.65	381.44	29.64	394.23	28.75
408.83	28.73	432.38	28	519.63	28	534.48	26.92	541.98	26.9
573.08	26	614.87	26	629.46	26	630.59	24.03	630.64	23.97
634.27	22	634.85	21.66	636.87	20	647.09	14.5	962.09	14.5
1038.96	14.5	1046.04	19.13	1048	20	1051.49	21.54	1051.55	21.56
1052.53	22	1053.71	22.52	1057.11	24	1059.69	24.2	1068.5	24.9
1069.9	24.93	1072.95	24.99	1081.09	25.48	1087.57	25.55	1097.18	25.65
1111.5	26	1183.47	26	1193.5	26.33	1195.07	26.41	1204.31	26.43
1213.83	26.5	1216.12	26.59	1221.96	26.63	1228.79	26.59	1234.43	26.48
1237.26	26.51	1246.15	26.3	1247.75	26.31	1255.08	26.04	1255.74	26
1260.25	25.91	1260.8	25.91	1278.23	25.75	1279.32	25.76	1304.77	25.75

1305.48	25.76	1306.19	25.76	1307.11	25.75	1307.78	25.74	1324.06	25.76
1325	25.75	1330.77	25.59	1351.43	25.77	1352	25.76	1368.95	25.97
1369.1	25.97	1371.5	26	1381.84	26.39	1384.51	26.45	1391.52	26.66
1399.25	26.76	1403.75	26.85	1405.14	26.9	1410.32	26.99	1414.39	27.05
1419.5	27.17	1424.96	27.24	1429.3	27.4	1430.7	27.42	1436.67	27.58
1439.48	27.62	1446.66	27.77	1456.9	27.9	1462.73	28	1464.72	28.03
1464.79	28.04	1464.85	28.04	1470.95	28.18	1471.27	28.18	1475.21	28.32
1476.44	28.31	1485.42	28.37	1487.89	28.35	1501.99	28.35	1505.32	28.33
1527.48	28.26	1528.85	28.26	1542.95	28.22	1543.38	28.22	1551.54	28.19
1552.64	28.2	1555.77	28.18	1557	28.19	1557.99	28.19	1558.78	28.21
1559.81	28.22	1560.48	28.24	1560.97	28.26	1567.56	28.47	1569.39	28.52
1571.07	28.59	1581.03	28.9	1585.41	29.06	1613.86	30	1616.44	30.08
1616.88	30.1	1635.42	30.7	1640.63	30.65	1642.29	30.64	1646.49	30.72
1649.09	30.79	1659.95	31.18	1677.27	31.9	1677.73	31.91	1677.99	31.92
1679.75	32	1688.27	32.29	1689.2	32.29	1693.06	32	1695.98	32
1699.76	30.33	1700.39	30	1704.12	28	1707.62	26	1711.08	24
1712.8	23	1714.51	22	1795.06	22	1797.72	22.59	1800.91	23.22
1804.98	23.82	1805.91	23.97	1805.99	23.97	1806.48	24	1812.24	24
1813.85	24.41	1821.34	26	1822.09	26.15	1823.63	26.45	1829.51	27.57
1832.03	28	1838.04	29.11	1843	30	1847.73	30.87	1860.32	33.04
1866.19	34	1867.51	34.22	1867.67	34.24	1867.83	34.25	1871.69	34.69
1872.09	34.69	1873.1	34.73	1875.84	34.89	1877.88	34.98	1880.12	34.99
1883.41	35.16	1885.72	35.23	1889.81	35.44	1891.64	35.53	1896.51	35.75
1897.39	35.8	1902.24	36	1908.08	36.11	1912.85	36.14	1914.01	36.14
1918.49	36.11	1922.87	36	1924.56	35.92	1925.05	35.86	1933.84	35.07
1935.67	35.07	1940.11	34.67	1941.21	34.89	1942.94	35.2	1947.15	35.03
1950.01	35.3	1953.77	35.22	1967.81	35.71	1972.44	36	1976.22	36.49
1978.67	36.45	1988.75	36.83	1993.73	37.08				

Manning's n Values num= 3

Sta	n Val	Sta	n Val	Sta	n Val
0	.035	614.87	.025	1087.57	.03

Bank Sta: Left	Right	Coeff Contr.	Expan.
614.87	1087.57	.1	.3

Ineffective Flow num= 1

Sta L	Sta R	Elev	Permanent
1053	1993.73		F

Upstream Embankment side slope = 0 horiz. to 1.0 vertical
Downstream Embankment side slope = 0 horiz. to 1.0 vertical
Maximum allowable submergence for weir flow = .95
Elevation at which weir flow begins =
Energy head used in spillway design =
Spillway height used in design =
Weir crest shape = Broad Crested

Number of Piers = 10

Pier Data
Pier Station Upstream= 710.83 Downstream= 662.94
Upstream num= 2

Width	Elev	Width	Elev
4	0	4	40

Downstream num= 2

Width	Elev	Width	Elev
4	0	4	40

Pier Data
Pier Station Upstream= 750.83 Downstream= 702.94
Upstream num= 2

Width	Elev	Width	Elev
4	0	4	40

```
Downstream      num=        2
    Width   Elev    Width   Elev
       4       0       4      40

Pier Data
Pier Station     Upstream=  790.83    Downstream=  742.94
Upstream     num=        2
    Width   Elev    Width   Elev
       4       0       4      40
Downstream      num=        2
    Width   Elev    Width   Elev
       4       0       4      40

Pier Data
Pier Station     Upstream=  830.83    Downstream=  782.94
Upstream     num=        2
    Width   Elev    Width   Elev
       4       0       4      40
Downstream      num=        2
    Width   Elev    Width   Elev
       4       0       4      40

Pier Data
Pier Station     Upstream=  870.83    Downstream=  822.94
Upstream     num=        2
    Width   Elev    Width   Elev
       4       0       4      40
Downstream      num=        2
    Width   Elev    Width   Elev
       4       0       4      40

Pier Data
Pier Station     Upstream=  910.83    Downstream=  862.94
Upstream     num=        2
    Width   Elev    Width   Elev
       4       0       4      40
Downstream      num=        2
    Width   Elev    Width   Elev
       4       0       4      40

Pier Data
Pier Station     Upstream=  950.83    Downstream=  902.94
Upstream     num=        2
    Width   Elev    Width   Elev
       4       0       4      40
Downstream      num=        2
    Width   Elev    Width   Elev
       4       0       4      40

Pier Data
Pier Station     Upstream=  990.83    Downstream=  942.94
Upstream     num=        2
    Width   Elev    Width   Elev
       4       0       4      40
Downstream      num=        2
    Width   Elev    Width   Elev
       4       0       4      40

Pier Data
Pier Station     Upstream= 1030.83    Downstream=  982.94
Upstream     num=        2
    Width   Elev    Width   Elev
       4       0       4      40
```

```
Downstream      num=        2
    Width   Elev    Width   Elev
       4       0       4      40

Pier Data
Pier Station     Upstream= 1070.83    Downstream= 1022.94
Upstream      num=        2
    Width   Elev    Width   Elev
       4       0       4      40
Downstream      num=        2
    Width   Elev    Width   Elev
       4       0       4      40

Number of Bridge Coefficient Sets =  1

Low Flow Methods and Data
       Energy
       Momentum                Cd   =     1.2
Selected Low Flow Methods = Highest Energy Answer

High Flow Method
       Pressure and Weir flow
           Submerged Inlet Cd          =
           Submerged Inlet + Outlet Cd =      .8
           Max Low Cord                =

Additional Bridge Parameters
       Add Friction component to Momentum
       Do not add Weight component to Momentum
       Class B flow critical depth computations use critical depth
           inside the bridge at the upstream end
       Criteria to check for pressure flow = Upstream energy grade line

BRIDGE OUTPUT  Profile #PF 1


  E.G. US. (ft)                  24.12    Element                  Inside BR US
Inside BR DS
  W.S. US. (ft)                  23.99    E.G. Elev (ft)                24.11
22.67
  Q Total (cfs)               10000.00    W.S. Elev (ft)                23.91
22.49
  Q Bridge (cfs)              10000.00    Crit W.S. (ft)                18.79
17.41
  Q Weir (cfs)                            Max Chl Dpth (ft)              7.91
 7.99
  Weir Sta Lft (ft)                       Vel Total (ft/s)               3.58
 3.42
  Weir Sta Rgt (ft)                       Flow Area (sq ft)           2791.14
2920.24
  Weir Submerg                            Froude # Chl                   0.22
 0.22
  Weir Max Depth (ft)                     Specif Force (cu ft)       12871.64
12574.13
  Min El Weir Flow (ft)          29.96    Hydr Depth (ft)               34.29
 7.69
  Min El Prs (ft)                44.46    W.P. Total (ft)              829.53
543.57
  Delta EG (ft)                   1.46    Conv. Total (cfs)          372872.6
532413.2
  Delta WS (ft)                   1.47    Top Width (ft)                81.98
460.81
  BR Open Area (sq ft)         2815.56    Frctn Loss (ft)
```

BR Open Vel (ft/s) 3.58 C & E Loss (ft)

Coef of Q Shear Total (lb/sq ft) 0.15
0.12
Br Sel Method Momentum Power Total (lb/ft s) 0.54
0.41

CROSS SECTION

RIVER: CV Creek
REACH: Lower RS: 1197

INPUT
Description:
Station Elevation Data num= 238

Sta	Elev	Sta	Elev	Sta	Elev	Sta	Elev	Sta	Elev
0	40.16	1.11	40.12	1.57	40.14	7.57	39.87	8.17	39.84
16.37	39.47	18.51	39.38	45.64	38.17	47.11	38.11	52.24	37.88
80.79	36.64	83.16	36.53	95.33	36	105.69	35.95	106.71	35.88
122.5	35.71	126.21	35.09	127.06	34.88	130.74	34.75	131.09	34.55
131.93	34.4	133.23	34.34	134.54	34.29	135.38	34.25	136.06	34.22
136.23	34.21	136.41	34.21	136.6	34.2	137.3	34.17	142.47	34
170.12	34	174.22	33.95	174.97	33.93	210.89	33.86	213.49	33.77
235.44	33.68	239.86	33.43	251.83	32	263.6	32	264.87	31.91
265.56	31.89	270.72	31.52	278.4	31.39	290.7	30.84	323.02	30
373.81	30	375.9	29.65	378.6	29.65	381.44	29.64	394.23	28.75
408.83	28.73	432.38	28	519.63	28	534.48	26.92	541.98	26.9
573.08	26	614.87	26	629.46	26	630.59	24.03	630.64	23.97
634.27	22	634.85	21.66	636.87	20	647.09	14.5	962.09	14.5
1038.96	14.5	1046.04	19.13	1048	20	1051.49	21.54	1051.55	21.56
1052.53	22	1053.71	22.52	1057.11	24	1059.69	24.2	1068.5	24.9
1069.9	24.93	1072.95	24.99	1081.09	25.48	1087.57	25.55	1097.18	25.65
1111.5	26	1183.47	26	1193.5	26.33	1195.07	26.41	1204.31	26.43
1213.83	26.5	1216.12	26.59	1221.96	26.63	1228.79	26.59	1234.43	26.48
1237.26	26.51	1246.15	26.3	1247.75	26.31	1255.08	26.04	1255.74	26
1260.25	25.91	1260.8	25.91	1278.23	25.75	1279.32	25.76	1304.77	25.75
1305.48	25.76	1306.19	25.76	1307.11	25.75	1307.78	25.74	1324.06	25.76
1325	25.75	1330.77	25.59	1351.43	25.77	1352	25.76	1368.95	25.97
1369.1	25.97	1371.5	26	1381.84	26.39	1384.51	26.45	1391.52	26.66
1399.25	26.76	1403.75	26.85	1405.14	26.9	1410.32	26.99	1414.39	27.05
1419.5	27.17	1424.96	27.24	1429.3	27.4	1430.7	27.42	1436.67	27.58
1439.48	27.62	1446.66	27.77	1456.9	27.9	1462.73	28	1464.72	28.03
1464.79	28.04	1464.85	28.04	1470.95	28.18	1471.27	28.18	1475.21	28.32
1476.44	28.31	1485.42	28.37	1487.89	28.35	1501.99	28.35	1505.32	28.33
1527.48	28.26	1528.85	28.26	1542.95	28.22	1543.38	28.22	1551.54	28.19
1552.64	28.2	1555.77	28.18	1557	28.19	1557.99	28.19	1558.78	28.21
1559.81	28.22	1560.48	28.24	1560.97	28.26	1567.56	28.47	1569.39	28.52
1571.07	28.59	1581.03	28.9	1585.41	29.06	1613.86	30	1616.44	30.08
1616.88	30.1	1635.42	30.7	1640.63	30.65	1642.29	30.64	1646.49	30.72
1649.09	30.79	1659.95	31.18	1677.27	31.9	1677.73	31.91	1677.99	31.92
1679.75	32	1688.27	32.29	1689.2	32.29	1693.06	32	1695.98	32
1699.76	30.33	1700.39	30	1704.12	28	1707.62	26	1711.08	24
1712.8	23	1714.51	22	1795.06	22	1797.72	22.59	1800.91	23.22
1804.98	23.82	1805.91	23.97	1805.99	23.97	1806.48	24	1812.24	24
1813.85	24.41	1821.34	26	1822.09	26.15	1823.63	26.45	1829.51	27.57
1832.03	28	1838.04	29.11	1843	30	1847.73	30.87	1860.32	33.04
1866.19	34	1867.51	34.22	1867.67	34.24	1867.83	34.25	1871.69	34.69
1872.09	34.69	1873.1	34.73	1875.84	34.89	1877.88	34.98	1880.12	34.99
1883.41	35.16	1885.72	35.23	1889.81	35.44	1891.64	35.53	1896.51	35.75

1897.39	35.8	1902.24	36	1908.08	36.11	1912.85	36.14	1914.01	36.14
1918.49	36.11	1922.87	36	1924.56	35.92	1925.05	35.86	1933.84	35.07
1935.67	35.07	1940.11	34.67	1941.21	34.89	1942.94	35.2	1947.15	35.03
1950.01	35.3	1953.77	35.22	1967.81	35.71	1972.44	36	1976.22	36.49
1978.67	36.45	1988.75	36.83	1993.73	37.08				

Manning's n Values num= 3

Sta	n Val	Sta	n Val	Sta	n Val
0	.035	614.87	.025	1087.57	.03

Bank Sta: Left	Right	Lengths: Left	Channel	Right	Coeff Contr.	Expan.
614.87	1087.57	16.25	15.14	20.8	.1	.3

Ineffective Flow num= 1

Sta L	Sta R	Elev	Permanent
1053	1993.73		F

CROSS SECTION OUTPUT Profile #PF 1

E.G. Elev (ft)	22.66	Element	Left OB	Channel
Right OB Vel Head (ft)	0.15	Wt. n-Val.		0.025
W.S. Elev (ft)	22.51	Reach Len. (ft)	16.25	15.14
20.80 Crit W.S. (ft)		Flow Area (sq ft)		3251.55
E.G. Slope (ft/ft)	0.000177	Area (sq ft)		3251.65
42.24 Q Total (cfs)	10000.00	Flow (cfs)		10000.00
Top Width (ft)	504.12	Top Width (ft)		420.37
83.75 Vel Total (ft/s)	3.08	Avg. Vel. (ft/s)		3.08
Max Chl Dpth (ft)	8.01	Hydr. Depth (ft)		7.75
Conv. Total (cfs)	751661.3	Conv. (cfs)		751661.3
Length Wtd. (ft)	15.14	Wetted Per. (ft)		423.91
Min Ch El (ft)	14.50	Shear (lb/sq ft)		0.08
Alpha	1.00	Stream Power (lb/ft s)		0.26
Frctn Loss (ft)	0.00	Cum Volume (acre-ft)		109.40
0.05 C & E Loss (ft)	0.00	Cum SA (acres)		22.91
0.11				

Warning: Divided flow computed for this cross-section.

CROSS SECTION

RIVER: CV Creek
REACH: Lower RS: 1182

INPUT
Description:
Station Elevation Data num= 282

Sta	Elev	Sta	Elev	Sta	Elev	Sta	Elev	Sta	Elev
0	41.82	16.6	41.97	16.76	41.97	19.75	42	123.11	42
132.88	41.58	134.14	41.52	157.21	40.55	162.91	40.32	165.03	40.23
170.79	40	170.96	39.99	176.75	39.76	177.58	39.73	177.79	39.72
182.95	39.51	185.38	39.42	189.85	39.24	207.29	38.61	213.62	38.41
214.93	38.36	222.68	38.12	223.08	38.11	225.48	38.01	225.62	38
234.16	37.63	240.95	37.11	241.37	36.68	242.46	36	243.89	35.2
246.39	34	249.79	32.6	251.17	32	258.09	32	264.8	31.04
265.45	31.02	265.98	31	267.72	30.9	280.99	30.6	282.32	30.5
288.05	30.39	293.62	30.27	294.36	30.22	305.44	30.02	306.8	30
322.64	28.85	329.46	28.42	338.53	28.03	339.31	28	347.43	27.59
349.88	27.46	354.4	27.35	355.6	27.28	369.91	26.9	374.19	26.78
398.32	26.62	413.09	26.56	419.19	26.52	434.34	26.51	438.02	26.49
447.59	26.51	449.3	26.52	454.57	26.53	457.98	26.52	466.81	26.52
512.19	26.43	513.99	26.18	546.88	26.11	547.7	26.05	561.23	26.02
561.82	26	567.08	26	579.24	25.82	580.5	25.81	599.24	25.52
602.1	25.47	605.23	25.36	615.14	25.16	618.66	24.83	623.75	24
624.8	23.35	625.42	22	626.53	21.63	628.21	21.31	631.9	20.4
633.62	20	664.04	14.5	978.46	14.5	1038.32	14.5	1039.2	16.39
1042.81	18	1044.9	18.94	1047.27	20	1048.91	20.79	1049.7	21.13
1051.25	21.81	1051.68	22	1051.98	22.15	1055.82	24	1056.85	24
1058.05	24	1077.07	25.54	1079.25	25.62	1080.11	25.72	1081.62	25.76
1084.21	25.86	1089.56	25.97	1090.56	26	1115.78	26	1126.77	25.86
1127.54	25.88	1137.03	25.84	1137.89	25.86	1146.37	26	1151.66	26
1163.13	25.79	1163.36	25.8	1163.77	25.81	1173.07	25.75	1177.83	25.77
1187.79	25.75	1197.75	25.76	1208.25	25.8	1208.53	25.8	1215.95	25.83
1219.81	25.79	1223.47	25.81	1224.88	25.81	1225.23	25.8	1226.61	25.77
1246.82	25.55	1249.55	25.53	1256	25.45	1259.7	25.37	1263.56	25.4
1276.31	25.28	1279.45	25.3	1288.82	25.29	1290.98	25.3	1291.73	25.3
1292.66	25.31	1302.24	25.31	1304.21	25.32	1306.21	25.32	1308.77	25.3
1310.65	25.28	1322.64	25.3	1325.4	25.28	1342.43	24.8	1346.76	24.83
1352.82	24.89	1355.62	24.85	1363.76	24.95	1369.22	24.87	1375.67	24.95
1384.25	24.81	1388.15	24.87	1396.67	24.73	1399.88	24.75	1401.16	24.77
1402.21	24.79	1409.91	24.66	1412.63	24.69	1419.75	24.59	1423.87	24.63
1428.91	24.5	1430.14	24.52	1434.31	24.21	1438.3	24.12	1439.19	24.13
1445.94	24.14	1454.97	24.25	1457.09	24.29	1469.59	24.58	1477.7	24.82
1487.5	25.19	1494.57	25.3	1498.18	25.39	1508.27	25.42	1510.96	25.46
1513.11	25.45	1525.4	25.41	1528.32	25.45	1538.47	25.48	1541.6	25.56
1550.08	25.66	1552.41	25.72	1558.44	25.89	1563.94	25.97	1564.09	25.98
1568.2	25.96	1570.82	25.85	1577.9	25.9	1578.35	25.9	1578.7	25.88
1584.57	26	1590.82	26.16	1591.97	26.2	1627.56	27.36	1632.07	27.31
1639.01	27.25	1641.03	27.24	1644.74	27.28	1646.15	27.3	1650.66	27.43
1651.44	27.46	1653.01	27.48	1658.62	27.74	1659.83	27.74	1666.55	27.97
1674.32	28.09	1674.74	28.1	1682.76	28.13	1683.19	28.14	1683.5	28.14
1689.47	28.02	1689.7	28	1693.62	27.7	1694.28	27.54	1695.98	27.12
1697.8	26.59	1699.61	26	1700.72	25.62	1703.84	24	1706.32	22.59
1707.16	22.11	1707.28	22.05	1707.36	22	1796.46	22	1797.96	22.23
1801.96	22.33	1804.12	22.48	1804.68	22.54	1805.34	22.6	1810.02	22.9
1810.81	22.98	1811.69	23.05	1813.78	23.2	1815.25	23.34	1817.89	23.6
1818.43	23.64	1821.82	24	1823.01	24.2	1828.88	25.15	1835.45	26
1835.8	26.05	1843.17	27.32	1847.65	28	1859.84	30	1862.31	30.4
1865.93	30.83	1871.65	31.53	1879.13	31.98	1879.23	31.98	1886.79	32.03
1886.91	32.04	1892.96	32.13	1893.6	32.17	1898.2	32.32	1901.01	32.48
1903.82	32.5	1905.95	32.51	1909.01	32.39	1913.36	32.05	1913.55	32.04
1917.83	32.34	1919.08	32.25	1924.09	32.7	1930.93	32.88	1936.38	33.27
1943.98	33.76	1944.85	33.82	1945.64	33.85	1947.63	34	1961.03	34.77
1967.4	35.06	1973.03	35.5	1975.16	35.56	1976.79	35.54	1979.83	36
1984.65	36	1993.73	36.27						

Manning's n Values num= 3

Sta	n Val	Sta	n Val	Sta	n Val
0	.035	624.8	.025	1056.85	.03

Bank Sta: Left	Right	Lengths: Left	Channel	Right	Coeff Contr.	Expan.
624.8	1056.85	167.09	39.56	57.37	.1	.3

Ineffective Flow num= 2

Sta L	Sta R	Elev	Permanent
0	624		F
1057	1993.73		F

CROSS SECTION OUTPUT Profile #PF 1

E.G. Elev (ft)	22.66	Element	Left OB	Channel
Right OB Vel Head (ft)	0.15	Wt. n-Val.		0.025
W.S. Elev (ft)	22.51	Reach Len. (ft)	167.09	39.56
57.37 Crit W.S. (ft)	17.29	Flow Area (sq ft)		3217.68
E.G. Slope (ft/ft)	0.000187	Area (sq ft)		3217.68
47.22 Q Total (cfs)	10000.00	Flow (cfs)		10000.00
Top Width (ft)	525.45	Top Width (ft)		427.54
97.92 Vel Total (ft/s)	3.11	Avg. Vel. (ft/s)		3.11
Max Chl Dpth (ft)	8.01	Hydr. Depth (ft)		7.53
Conv. Total (cfs)	730391.5	Conv. (cfs)		730391.5
Length Wtd. (ft)	39.56	Wetted Per. (ft)		431.13
Min Ch El (ft)	14.50	Shear (lb/sq ft)		0.09
Alpha	1.00	Stream Power (lb/ft s)		0.27
Frctn Loss (ft) 0.03		Cum Volume (acre-ft)		108.28
C & E Loss (ft) 0.06		Cum SA (acres)		22.76

CULVERT

RIVER: CV Creek
REACH: Lower RS: 1163

INPUT
Description: Sorrento Valley Road Culvert
Distance from Upstream XS = 4
Deck/Roadway Width = 30
Weir Coefficient = 2.6
Upstream Deck/Roadway Coordinates
num= 2

Sta	Hi Cord	Lo Cord	Sta	Hi Cord	Lo Cord
0	19.59	0	2100	19.59	0

Upstream Bridge Cross Section Data
Station Elevation Data num= 282

Sta	Elev	Sta	Elev	Sta	Elev	Sta	Elev	Sta	Elev
0	41.82	16.6	41.97	16.76	41.97	19.75	42	123.11	42

132.88	41.58	134.14	41.52	157.21	40.55	162.91	40.32	165.03	40.23
170.79	40	170.96	39.99	176.75	39.76	177.58	39.73	177.79	39.72
182.95	39.51	185.38	39.42	189.85	39.24	207.29	38.61	213.62	38.41
214.93	38.36	222.68	38.12	223.08	38.11	225.48	38.01	225.62	38
234.16	37.63	240.95	37.11	241.37	36.68	242.46	36	243.89	35.2
246.39	34	249.79	32.6	251.17	32	258.09	32	264.8	31.04
265.45	31.02	265.98	31	267.72	30.9	280.99	30.6	282.32	30.5
288.05	30.39	293.62	30.27	294.36	30.22	305.44	30.02	306.8	30
322.64	28.85	329.46	28.42	338.53	28.03	339.31	28	347.43	27.59
349.88	27.46	354.4	27.35	355.6	27.28	369.91	26.9	374.19	26.78
398.32	26.62	413.09	26.56	419.19	26.52	434.34	26.51	438.02	26.49
447.59	26.51	449.3	26.52	454.57	26.53	457.98	26.52	466.81	26.52
512.19	26.43	513.99	26.18	546.88	26.11	547.7	26.05	561.23	26.02
561.82	26	567.08	26	579.24	25.82	580.5	25.81	599.24	25.52
602.1	25.47	605.23	25.36	615.14	25.16	618.66	24.83	623.75	24
624.8	23.35	625.42	22	626.53	21.63	628.21	21.31	631.9	20.4
633.62	20	664.04	14.5	978.46	14.5	1038.32	14.5	1039.2	16.39
1042.81	18	1044.9	18.94	1047.27	20	1048.91	20.79	1049.7	21.13
1051.25	21.81	1051.68	22	1051.98	22.15	1055.82	24	1056.85	24
1058.05	24	1077.07	25.54	1079.25	25.62	1080.11	25.72	1081.62	25.76
1084.21	25.86	1089.56	25.97	1090.56	26	1115.78	26	1126.77	25.86
1127.54	25.88	1137.03	25.84	1137.89	25.86	1146.37	26	1151.66	26
1163.13	25.79	1163.36	25.8	1163.77	25.81	1173.07	25.75	1177.83	25.77
1187.79	25.75	1197.75	25.76	1208.25	25.8	1208.53	25.8	1215.95	25.83
1219.81	25.79	1223.47	25.81	1224.88	25.81	1225.23	25.8	1226.61	25.77
1246.82	25.55	1249.55	25.53	1256	25.45	1259.7	25.37	1263.56	25.4
1276.31	25.28	1279.45	25.3	1288.82	25.29	1290.98	25.3	1291.73	25.3
1292.66	25.31	1302.24	25.31	1304.21	25.32	1306.21	25.32	1308.77	25.3
1310.65	25.28	1322.64	25.3	1325.4	25.28	1342.43	24.8	1346.76	24.83
1352.82	24.89	1355.62	24.85	1363.76	24.95	1369.22	24.87	1375.67	24.95
1384.25	24.81	1388.15	24.87	1396.67	24.73	1399.88	24.75	1401.16	24.77
1402.21	24.79	1409.91	24.66	1412.63	24.69	1419.75	24.59	1423.87	24.63
1428.91	24.5	1430.14	24.52	1434.31	24.21	1438.3	24.12	1439.19	24.13
1445.94	24.14	1454.97	24.25	1457.09	24.29	1469.59	24.58	1477.7	24.82
1487.5	25.19	1494.57	25.3	1498.18	25.39	1508.27	25.42	1510.96	25.46
1513.11	25.45	1525.4	25.41	1528.32	25.45	1538.47	25.48	1541.6	25.56
1550.08	25.66	1552.41	25.72	1558.44	25.89	1563.94	25.97	1564.09	25.98
1568.2	25.96	1570.82	25.85	1577.9	25.9	1578.35	25.9	1578.7	25.88
1584.57	26	1590.82	26.16	1591.97	26.2	1627.56	27.36	1632.07	27.31
1639.01	27.25	1641.03	27.24	1644.74	27.28	1646.15	27.3	1650.66	27.43
1651.44	27.46	1653.01	27.48	1658.62	27.74	1659.83	27.74	1666.55	27.97
1674.32	28.09	1674.74	28.1	1682.76	28.13	1683.19	28.14	1683.5	28.14
1689.47	28.02	1689.7	28	1693.62	27.7	1694.28	27.54	1695.98	27.12
1697.8	26.59	1699.61	26	1700.72	25.62	1703.84	24	1706.32	22.59
1707.16	22.11	1707.28	22.05	1707.36	22	1796.46	22	1797.96	22.23
1801.96	22.33	1804.12	22.48	1804.68	22.54	1805.34	22.6	1810.02	22.9
1810.81	22.98	1811.69	23.05	1813.78	23.2	1815.25	23.34	1817.89	23.6
1818.43	23.64	1821.82	24	1823.01	24.2	1828.88	25.15	1835.45	26
1835.8	26.05	1843.17	27.32	1847.65	28	1859.84	30	1862.31	30.4
1865.93	30.83	1871.65	31.53	1879.13	31.98	1879.23	31.98	1886.79	32.03
1886.91	32.04	1892.96	32.13	1893.6	32.17	1898.2	32.32	1901.01	32.48
1903.82	32.5	1905.95	32.51	1909.01	32.39	1913.36	32.05	1913.55	32.04
1917.83	32.34	1919.08	32.25	1924.09	32.7	1930.93	32.88	1936.38	33.27
1943.98	33.76	1944.85	33.82	1945.64	33.85	1947.63	34	1961.03	34.77
1967.4	35.06	1973.03	35.5	1975.16	35.56	1976.79	35.54	1979.83	36
1984.65	36	1993.73	36.27						

Manning's n Values num= 3

Sta	n Val	Sta	n Val	Sta	n Val
0	.035	624.8	.025	1056.85	.03

Bank Sta: Left	Right	Coeff Contr.	Expan.
624.8	1056.85	.1	.3

Ineffective Flow num= 2

Sta L	Sta R	Elev	Permanent
0	624		F
1057	1993.73		F

Downstream Deck/Roadway Coordinates
num= 2

Sta	Hi Cord	Lo Cord	Sta	Hi Cord	Lo Cord
0	19.59	0	2100	19.59	0

Downstream Bridge Cross Section Data
Station Elevation Data num= 275

Sta	Elev	Sta	Elev	Sta	Elev	Sta	Elev	Sta	Elev
0	40.64	.09	40.64	7.12	40.66	12.61	40.71	25.15	40.75
33.41	40.86	49.43	40.92	55.22	40.99	64.54	41.08	79.45	41.15
92.26	41.26	95.67	41.28	98.77	41.29	114.41	41.56	114.71	41.56
119.07	41.58	133.19	42	212.48	42	227.61	40.6	233.72	40
235.86	38.88	237.51	38	241.89	36.06	242.02	36	246.3	34.31
247.17	34	252.74	32	253.58	31.7	258.68	30	264.12	29.51
277.58	28	282.74	26.34	284.22	26	284.45	25.98	302.26	24.46
306.04	24.15	306.6	24.12	308.36	24	338.45	22	343.65	21.58
359.93	20.3	364.23	20	372.05	20	380.61	19.8	381.78	19.8
388.05	20	390.08	20.06	390.59	20.06	407.09	20.25	409.1	20.25
431	20.37	435.79	20.37	462.54	20.45	467.72	20.45	486.56	20.61
496.19	20.62	508.31	20.82	519.59	20.82	526.9	21.01	535.55	21.01
541.76	21.11	546.79	21.16	565.97	21.16	570.6	21.15	575.26	21.13
580.2	21.09	589.53	21.08	593.5	21.04	599.11	20.93	603.37	20.93
606.1	20.87	606.63	20.87	607.23	20.86	609.94	20.83	612	20.8
615.57	20.77	618.86	20.72	619.17	20.71	622.99	20.69	700	14
852.29	14	1045.36	14	1053.09	18	1059.51	19.42	1062.77	19.57
1063.79	19.72	1064.63	19.78	1068.86	20	1070.99	20.12	1071.44	20.14
1079.24	20.61	1081.39	20.72	1095.21	21.59	1095.39	21.61	1101.83	22
1103.56	22.1	1110.39	22.51	1119.08	23.05	1128.26	23.66	1129.74	23.75
1130.55	23.81	1133.32	24	1140.91	24.19	1146.84	24.35	1147.13	24.34
1149.82	24.41	1152.33	24.36	1154.14	24.41	1157.36	24.48	1159.86	24.47
1188.54	24.62	1192.02	24.61	1195.49	24.61	1201.12	24.64	1203.77	24.65
1234.69	24.35	1235.41	24.36	1235.76	24.36	1247.22	24.12	1247.49	24.12
1247.96	24.11	1248.59	24.11	1260.17	24.03	1260.36	24.03	1272.53	24.11
1273.54	24.1	1281.81	24.15	1282.9	24.15	1288.54	24.17	1289.43	24.17
1290.5	24.18	1292.93	24.19	1293.85	24.19	1297.68	24.2	1297.94	24.2
1303.07	24.22	1308.29	24.22	1314.98	24.18	1319.87	24.14	1321.14	24.14
1328.43	24.09	1331.59	24	1353.7	24	1358.43	23.98	1376.03	23.96
1376.62	23.96	1379.8	23.89	1380.79	23.89	1449.14	22	1479.56	22
1493.11	21.55	1501.83	21.49	1502.27	21.48	1508.86	21.44	1509.58	21.44
1520.68	21.2	1527.97	21.15	1528.87	21.11	1531.55	21.11	1534.24	21.12
1537.08	21.16	1538.42	21.12	1543.04	21.18	1544.92	21.14	1551.65	21.23
1552.03	21.22	1553.95	21.21	1555.93	21.21	1565.28	21.35	1566.13	21.35
1580.88	21.45	1588.28	21.41	1594.88	21.47	1601.45	21.35	1605.81	21.28
1610.34	21.28	1615.12	21.31	1616.34	21.31	1618.46	21.33	1619.45	21.32
1622.41	21.32	1623.48	21.33	1628.44	21.33	1630.44	21.35	1637.53	21.36
1640.36	21.39	1646.86	21.39	1650.42	21.42	1656.3	21.41	1658.71	21.43
1663.87	21.4	1665.26	21.42	1669.62	21.4	1671.92	21.44	1675.61	21.44
1677.14	21.45	1680.08	21.45	1683	21.42	1684.84	21.46	1687.83	21.41
1689.91	21.46	1693.03	21.39	1709.62	21.48	1713.26	21.44	1715.45	21.41
1716.34	21.4	1719.58	21.37	1720.26	21.36	1720.69	21.35	1722.95	21.33
1779.85	21.27	1780.71	21.26	1788.5	21.18	1790.74	21.15	1793.57	21.13
1815.89	21.51	1816.86	21.5	1817.41	21.5	1830.81	22	1831.36	22.05
1845.37	23.23	1856.29	24	1858.99	24.38	1860.47	24.57	1864.96	25.17
1865.28	25.2	1865.69	25.24	1866.38	25.25	1866.9	25.31	1867.83	25.32
1868.94	25.32	1869.76	25.4	1873.39	25.51	1877.32	25.8	1877.75	25.83
1879.76	26	1883.4	26.3	1888.05	26.7	1892.8	27.13	1898.9	27.7
1899.49	27.76	1899.93	27.79	1900.31	27.81	1900.68	27.82	1902.35	28
1905.42	28.26	1908.5	28.46	1910.43	28.5	1912.27	28.7	1915.47	28.65

1916.84	28.83	1921.49	28.64	1921.84	28.66	1922.6	28.64	1923.62	28.59
1932.11	28.1	1932.35	28.08	1932.6	28.07	1940.03	27.68	1941.98	27.57
1947.47	27.31	1949.95	27.17	1954.66	27	1956.64	26.9	1960.17	26.69
1963.42	26.52	1968.72	26.19	1969.29	26.15	1973.96	26.35	1975.03	26.3
1978.7	26.72	1980.2	27.1	1988.25	26.92	1990.42	27.09	2008.8	27.83

Manning's n Values num= 3

Sta	n Val	Sta	n Val	Sta	n Val
0	.035	302.26	.025	1130.55	.03

Bank Sta: Left	Right	Coeff Contr.	Expan.
302.26	1130.55	.1	.3

Ineffective Flow num= 2

Sta L	Sta R	Elev	Permanent
0	573		F
1075	2008.8		F

Upstream Embankment side slope = 0 horiz. to 1.0 vertical
Downstream Embankment side slope = 0 horiz. to 1.0 vertical
Maximum allowable submergence for weir flow = .95
Elevation at which weir flow begins =
Energy head used in spillway design =
Spillway height used in design =
Weir crest shape = Broad Crested

Number of Culverts = 1

Culvert Name	Shape	Rise	Span
SVR	Box	8.2	12.5

FHWA Chart # 8 - flared wingwalls
FHWA Scale # 1 - Wingwall flared 30 to 75 deg.
Solution Criteria = Highest U.S. EG

Culvert	Upstrm Dist	Length	Top n	Bottom n	Depth Blocked	Entrance Loss Coef	Exit Loss Coef
1	4.25	30	.016	.016	0	.5	

Number of Barrels = 3
Upstream Elevation = 7.45
Centerline Stations

Sta.	Sta.	Sta.
832.36	845.15	857.95

Downstream Elevation = 7.45
Centerline Stations

Sta.	Sta.	Sta.
829.62	842.41	855.21

CROSS SECTION

RIVER: CV Creek
REACH: Lower RS: 1143

INPUT
Description: B
Station Elevation Data num= 275

Sta	Elev	Sta	Elev	Sta	Elev	Sta	Elev	Sta	Elev
0	40.64	.09	40.64	7.12	40.66	12.61	40.71	25.15	40.75
33.41	40.86	49.43	40.92	55.22	40.99	64.54	41.08	79.45	41.15
92.26	41.26	95.67	41.28	98.77	41.29	114.41	41.56	114.71	41.56
119.07	41.58	133.19	42	212.48	42	227.61	40.6	233.72	40
235.86	38.88	237.51	38	241.89	36.06	242.02	36	246.3	34.31
247.17	34	252.74	32	253.58	31.7	258.68	30	264.12	29.51
277.58	28	282.74	26.34	284.22	26	284.45	25.98	302.26	24.46

306.04	24.15	306.6	24.12	308.36	24	338.45	22	343.65	21.58
359.93	20.3	364.23	20	372.05	20	380.61	19.8	381.78	19.8
388.05	20	390.08	20.06	390.59	20.06	407.09	20.25	409.1	20.25
431	20.37	435.79	20.37	462.54	20.45	467.72	20.45	486.56	20.61
496.19	20.62	508.31	20.82	519.59	20.82	526.9	21.01	535.55	21.01
541.76	21.11	546.79	21.16	565.97	21.16	570.6	21.15	575.26	21.13
580.2	21.09	589.53	21.08	593.5	21.04	599.11	20.93	603.37	20.93
606.1	20.87	606.63	20.87	607.23	20.86	609.94	20.83	612	20.8
615.57	20.77	618.86	20.72	619.17	20.71	622.99	20.69	700	14
852.29	14	1045.36	14	1053.09	18	1059.51	19.42	1062.77	19.57
1063.79	19.72	1064.63	19.78	1068.86	20	1070.99	20.12	1071.44	20.14
1079.24	20.61	1081.39	20.72	1095.21	21.59	1095.39	21.61	1101.83	22
1103.56	22.1	1110.39	22.51	1119.08	23.05	1128.26	23.66	1129.74	23.75
1130.55	23.81	1133.32	24	1140.91	24.19	1146.84	24.35	1147.13	24.34
1149.82	24.41	1152.33	24.36	1154.14	24.41	1157.36	24.48	1159.86	24.47
1188.54	24.62	1192.02	24.61	1195.49	24.61	1201.12	24.64	1203.77	24.65
1234.69	24.35	1235.41	24.36	1235.76	24.36	1247.22	24.12	1247.49	24.12
1247.96	24.11	1248.59	24.11	1260.17	24.03	1260.36	24.03	1272.53	24.11
1273.54	24.1	1281.81	24.15	1282.9	24.15	1288.54	24.17	1289.43	24.17
1290.5	24.18	1292.93	24.19	1293.85	24.19	1297.68	24.2	1297.94	24.2
1303.07	24.22	1308.29	24.22	1314.98	24.18	1319.87	24.14	1321.14	24.14
1328.43	24.09	1331.59	24	1353.7	24	1358.43	23.98	1376.03	23.96
1376.62	23.96	1379.8	23.89	1380.79	23.89	1449.14	22	1479.56	22
1493.11	21.55	1501.83	21.49	1502.27	21.48	1508.86	21.44	1509.58	21.44
1520.68	21.2	1527.97	21.15	1528.87	21.11	1531.55	21.11	1534.24	21.12
1537.08	21.16	1538.42	21.12	1543.04	21.18	1544.92	21.14	1551.65	21.23
1552.03	21.22	1553.95	21.21	1555.93	21.21	1565.28	21.35	1566.13	21.35
1580.88	21.45	1588.28	21.41	1594.88	21.47	1601.45	21.35	1605.81	21.28
1610.34	21.28	1615.12	21.31	1616.34	21.31	1618.46	21.33	1619.45	21.32
1622.41	21.32	1623.48	21.33	1628.44	21.33	1630.44	21.35	1637.53	21.36
1640.36	21.39	1646.86	21.39	1650.42	21.42	1656.3	21.41	1658.71	21.43
1663.87	21.4	1665.26	21.42	1669.62	21.4	1671.92	21.44	1675.61	21.44
1677.14	21.45	1680.08	21.45	1683	21.42	1684.84	21.46	1687.83	21.41
1689.91	21.46	1693.03	21.39	1709.62	21.48	1713.26	21.44	1715.45	21.41
1716.34	21.4	1719.58	21.37	1720.26	21.36	1720.69	21.35	1722.95	21.33
1779.85	21.27	1780.71	21.26	1788.5	21.18	1790.74	21.15	1793.57	21.13
1815.89	21.51	1816.86	21.5	1817.41	21.5	1830.81	22	1831.36	22.05
1845.37	23.23	1856.29	24	1858.99	24.38	1860.47	24.57	1864.96	25.17
1865.28	25.2	1865.69	25.24	1866.38	25.25	1866.9	25.31	1867.83	25.32
1868.94	25.32	1869.76	25.4	1873.39	25.51	1877.32	25.8	1877.75	25.83
1879.76	26	1883.4	26.3	1888.05	26.7	1892.8	27.13	1898.9	27.7
1899.49	27.76	1899.93	27.79	1900.31	27.81	1900.68	27.82	1902.35	28
1905.42	28.26	1908.5	28.46	1910.43	28.5	1912.27	28.7	1915.47	28.65
1916.84	28.83	1921.49	28.64	1921.84	28.66	1922.6	28.64	1923.62	28.59
1932.11	28.1	1932.35	28.08	1932.6	28.07	1940.03	27.68	1941.98	27.57
1947.47	27.31	1949.95	27.17	1954.66	27	1956.64	26.9	1960.17	26.69
1963.42	26.52	1968.72	26.19	1969.29	26.15	1973.96	26.35	1975.03	26.3
1978.7	26.72	1980.2	27.1	1988.25	26.92	1990.42	27.09	2008.8	27.83

Manning's n Values num= 3

Sta	n Val	Sta	n Val	Sta	n Val
0	.035	302.26	.025	1130.55	.03

Bank Sta: Left	Right	Lengths: Left	Channel	Right	Coeff Contr.	Expan.
302.26	1130.55	133.35	97.85	122.84	.1	.3

Ineffective Flow num= 2

Sta L	Sta R	Elev	Permanent
0	573		F
1075	2008.8		F

CROSS SECTION OUTPUT Profile #PF 1

E.G. Elev (ft)	18.86	Element	Left OB	Channel
Right OB				
Vel Head (ft)	0.62	Wt. n-Val.		0.025
W.S. Elev (ft)	18.25	Reach Len. (ft)	12.25	12.25
12.25				
Crit W.S. (ft)	16.91	Flow Area (sq ft)		1588.89
E.G. Slope (ft/ft)	0.001808	Area (sq ft)		1588.89
Q Total (cfs)	10000.00	Flow (cfs)		10000.00
Top Width (ft)	403.13	Top Width (ft)		403.13
Vel Total (ft/s)	6.29	Avg. Vel. (ft/s)		6.29
Max Chl Dpth (ft)	4.25	Hydr. Depth (ft)		3.94
Conv. Total (cfs)	235179.6	Conv. (cfs)		235179.6
Length Wtd. (ft)	12.25	Wetted Per. (ft)		404.31
Min Ch El (ft)	14.00	Shear (lb/sq ft)		0.44
Alpha	1.00	Stream Power (lb/ft s)		2.79
Frctn Loss (ft)		Cum Volume (acre-ft)		106.10
C & E Loss (ft)		Cum SA (acres)		22.39

BRIDGE

RIVER: CV Creek
REACH: Lower RS: 1100

INPUT
Description: SR-56 Connector west of I-5
Distance from Upstream XS = 12.25
Deck/Roadway Width = 67.5
Weir Coefficient = 2.6
Upstream Deck/Roadway Coordinates
num= 2

Sta	Hi Cord	Lo Cord	Sta	Hi Cord	Lo Cord
0	64.2	56.2	2100	64.2	56.2

Upstream Bridge Cross Section Data
Station Elevation Data num= 275

Sta	Elev	Sta	Elev	Sta	Elev	Sta	Elev	Sta	Elev
0	40.64	.09	40.64	7.12	40.66	12.61	40.71	25.15	40.75
33.41	40.86	49.43	40.92	55.22	40.99	64.54	41.08	79.45	41.15
92.26	41.26	95.67	41.28	98.77	41.29	114.41	41.56	114.71	41.56
119.07	41.58	133.19	42	212.48	42	227.61	40.6	233.72	40
235.86	38.88	237.51	38	241.89	36.06	242.02	36	246.3	34.31
247.17	34	252.74	32	253.58	31.7	258.68	30	264.12	29.51
277.58	28	282.74	26.34	284.22	26	284.45	25.98	302.26	24.46
306.04	24.15	306.6	24.12	308.36	24	338.45	22	343.65	21.58
359.93	20.3	364.23	20	372.05	20	380.61	19.8	381.78	19.8
388.05	20	390.08	20.06	390.59	20.06	407.09	20.25	409.1	20.25
431	20.37	435.79	20.37	462.54	20.45	467.72	20.45	486.56	20.61

496.19	20.62	508.31	20.82	519.59	20.82	526.9	21.01	535.55	21.01
541.76	21.11	546.79	21.16	565.97	21.16	570.6	21.15	575.26	21.13
580.2	21.09	589.53	21.08	593.5	21.04	599.11	20.93	603.37	20.93
606.1	20.87	606.63	20.87	607.23	20.86	609.94	20.83	612	20.8
615.57	20.77	618.86	20.72	619.17	20.71	622.99	20.69	700	14
852.29	14	1045.36	14	1053.09	18	1059.51	19.42	1062.77	19.57
1063.79	19.72	1064.63	19.78	1068.86	20	1070.99	20.12	1071.44	20.14
1079.24	20.61	1081.39	20.72	1095.21	21.59	1095.39	21.61	1101.83	22
1103.56	22.1	1110.39	22.51	1119.08	23.05	1128.26	23.66	1129.74	23.75
1130.55	23.81	1133.32	24	1140.91	24.19	1146.84	24.35	1147.13	24.34
1149.82	24.41	1152.33	24.36	1154.14	24.41	1157.36	24.48	1159.86	24.47
1188.54	24.62	1192.02	24.61	1195.49	24.61	1201.12	24.64	1203.77	24.65
1234.69	24.35	1235.41	24.36	1235.76	24.36	1247.22	24.12	1247.49	24.12
1247.96	24.11	1248.59	24.11	1260.17	24.03	1260.36	24.03	1272.53	24.11
1273.54	24.1	1281.81	24.15	1282.9	24.15	1288.54	24.17	1289.43	24.17
1290.5	24.18	1292.93	24.19	1293.85	24.19	1297.68	24.2	1297.94	24.2
1303.07	24.22	1308.29	24.22	1314.98	24.18	1319.87	24.14	1321.14	24.14
1328.43	24.09	1331.59	24	1353.7	24	1358.43	23.98	1376.03	23.96
1376.62	23.96	1379.8	23.89	1380.79	23.89	1449.14	22	1479.56	22
1493.11	21.55	1501.83	21.49	1502.27	21.48	1508.86	21.44	1509.58	21.44
1520.68	21.2	1527.97	21.15	1528.87	21.11	1531.55	21.11	1534.24	21.12
1537.08	21.16	1538.42	21.12	1543.04	21.18	1544.92	21.14	1551.65	21.23
1552.03	21.22	1553.95	21.21	1555.93	21.21	1565.28	21.35	1566.13	21.35
1580.88	21.45	1588.28	21.41	1594.88	21.47	1601.45	21.35	1605.81	21.28
1610.34	21.28	1615.12	21.31	1616.34	21.31	1618.46	21.33	1619.45	21.32
1622.41	21.32	1623.48	21.33	1628.44	21.33	1630.44	21.35	1637.53	21.36
1640.36	21.39	1646.86	21.39	1650.42	21.42	1656.3	21.41	1658.71	21.43
1663.87	21.4	1665.26	21.42	1669.62	21.4	1671.92	21.44	1675.61	21.44
1677.14	21.45	1680.08	21.45	1683	21.42	1684.84	21.46	1687.83	21.41
1689.91	21.46	1693.03	21.39	1709.62	21.48	1713.26	21.44	1715.45	21.41
1716.34	21.4	1719.58	21.37	1720.26	21.36	1720.69	21.35	1722.95	21.33
1779.85	21.27	1780.71	21.26	1788.5	21.18	1790.74	21.15	1793.57	21.13
1815.89	21.51	1816.86	21.5	1817.41	21.5	1830.81	22	1831.36	22.05
1845.37	23.23	1856.29	24	1858.99	24.38	1860.47	24.57	1864.96	25.17
1865.28	25.2	1865.69	25.24	1866.38	25.25	1866.9	25.31	1867.83	25.32
1868.94	25.32	1869.76	25.4	1873.39	25.51	1877.32	25.8	1877.75	25.83
1879.76	26	1883.4	26.3	1888.05	26.7	1892.8	27.13	1898.9	27.7
1899.49	27.76	1899.93	27.79	1900.31	27.81	1900.68	27.82	1902.35	28
1905.42	28.26	1908.5	28.46	1910.43	28.5	1912.27	28.7	1915.47	28.65
1916.84	28.83	1921.49	28.64	1921.84	28.66	1922.6	28.64	1923.62	28.59
1932.11	28.1	1932.35	28.08	1932.6	28.07	1940.03	27.68	1941.98	27.57
1947.47	27.31	1949.95	27.17	1954.66	27	1956.64	26.9	1960.17	26.69
1963.42	26.52	1968.72	26.19	1969.29	26.15	1973.96	26.35	1975.03	26.3
1978.7	26.72	1980.2	27.1	1988.25	26.92	1990.42	27.09	2008.8	27.83

Manning's n Values num= 3

Sta	n Val	Sta	n Val	Sta	n Val
0	.035	302.26	.025	1130.55	.03

Bank Sta: Left	Right	Coeff Contr.	Expan.
302.26	1130.55	.1	.3

Ineffective Flow num= 2

Sta L	Sta R	Elev	Permanent
0	573		F
1075	2008.8		F

Downstream Deck/Roadway Coordinates
num= 2

Sta	Hi Cord	Lo Cord	Sta	Hi Cord	Lo Cord
0	64.2	56.2	2300	64.2	56.2

Downstream Bridge Cross Section Data
Station Elevation Data num= 347

Sta	Elev	Sta	Elev	Sta	Elev	Sta	Elev	Sta	Elev
0	45.66	.11	45.66	4.32	45.8	12.79	45.88	13.12	45.89
13.35	45.89	13.75	45.9	19.28	45.9	19.79	45.91	25.61	45.78
27.19	45.7	43.78	45.45	48.76	45.51	54.23	45.72	55.16	45.46
60.13	44.12	60.57	44	60.85	43.93	67.94	42	69.4	41.62
75.39	40	77.75	39.39	82.91	38	91.97	36	100.93	34.27
102.3	34	105.01	33.48	112.64	32	122.52	30.17	123.5	30
127.14	29.47	128.76	29.3	131.92	28.89	136.62	28.45	138.39	28.25
141.61	28	144.58	27.67	146.92	27.36	149.69	26.95	151.63	26.67
157.75	26	158.94	25.86	160.12	25.71	166.27	24.99	169.72	24.5
171.02	24.35	173.21	24	173.37	23.97	174.32	23.72	179.77	22.32
180.94	22	202.41	22	211.08	21.64	219.97	21.7	221.92	21.65
244.12	21.78	245.66	21.74	254.82	21.8	256.71	21.75	271.49	21.88
271.73	21.88	272.2	21.87	283.95	21.99	284.55	22	291.26	22.19
292.06	22.22	298.4	22.36	299.53	22.39	305.06	22.48	306.53	22.52
311.5	22.56	313.96	22.62	317.09	22.68	318.76	22.69	321.71	22.82
322.59	23.02	324.68	23.42	325.36	23.53	327.54	24	327.86	24.06
327.98	24.09	331.6	24.74	332.93	25.02	335.04	25.38	337.37	25.77
337.75	25.83	338.77	26	342.12	26.55	345.08	27.03	350.64	27.92
350.86	27.95	351.15	28	360.72	28.22	363.14	28.23	370.22	28.37
382.08	28.34	385.56	28	395.7	28	397.77	27.48	399.79	26.87
400.67	26.58	402.4	26.07	402.46	26.05	402.62	26	407.16	24.56
409.11	24	411.7	23.28	415.62	22.33	419.83	21.32	424.33	20.3
425.16	20.11	425.62	20	431.66	18.62	432.2	18.5	434.36	18
443.1	16	444	15.9	444.56	15.91	458.56	15.09	463.52	15.31
468.42	15.14	472.16	15.26	478.72	15.37	479.39	15.35	486.77	15.2
505.14	14.99	537.85	14.55	539.99	14.53	549.17	14.66	554.19	14.94
559.63	14.75	564.06	14.63	568.65	14.93	572.87	14.74	579.64	14.48
582.88	14.57	591.5	14.06	591.88	14.04	600.55	13.65	603.2	13.58
611.02	13.32	625.5	12.95	630.59	12.91	638.33	12.71	642.38	12.78
647	12.67	647.94	12.71	652.53	12.93	656.19	13.06	660.95	13.21
667.68	13.53	679.2	13.99	679.26	13.99	679.41	14	689.35	14
691.18	14	692.82	14	698.94	14	703.57	14	704.04	14
705.31	14	707.58	14	708.11	14	710.49	14	721.44	14
725.2	14	733.93	14	738.7	14	749.64	14	753.01	14
759.59	14	768.61	14	770.07	14	781.65	14	793.19	14.63
798.07	14.74	814.22	15.16	817.6	15.26	820.22	15.35	832.67	15.68
834.27	15.74	835.4	15.77	843.22	16	846.64	16.02	846.71	16.02
846.88	16.03	855.77	16.1	868.64	16.25	871.81	16.36	886.99	16.6
903.47	17.44	908.43	17.58	909.98	17.62	914.66	18	952.51	18
959.48	16.03	959.58	16	960.25	15.81	966.98	14	1031.37	14
1038.95	15.83	1039.39	15.93	1039.67	16	1039.88	16	1053.2	17.04
1064.02	17.08	1070.37	16.95	1077.78	16.82	1097.28	16.86	1114.68	16.65
1130.94	16.68	1140.08	16.6	1150.28	16.61	1153.64	16.59	1156.93	16.59
1162.42	16.57	1165.44	16.58	1168.26	16.57	1170.98	16.58	1174.07	16.58
1176.5	16.59	1179.9	16.58	1189.4	16.62	1193.78	16.65	1201.82	16.68
1209.3	16.74	1221.95	16.8	1227.77	16.84	1243.5	16.92	1250.23	16.98
1251.92	16.99	1256.01	17.02	1265.43	17.07	1282.58	17.22	1287.1	17.25
1303.79	17.42	1305.53	17.44	1355.53	17.87	1359.57	17.84	1364.89	17.93
1365.58	17.91	1369.2	18	1372.28	18.26	1373.64	18.39	1379.49	18.91
1381.33	19.07	1389.4	19.79	1389.87	19.83	1391.4	20	1393.67	20.14
1406.37	20	1438.75	20	1454.19	19.71	1470.71	19.76	1471.08	19.76
1487.22	20	1510.21	20	1519.21	19.92	1528.56	19.9	1528.98	19.89
1529.26	19.89	1539.18	19.92	1539.37	19.92	1550.79	19.94	1551.03	19.94
1563.92	19.97	1564.56	20	1581.9	20	1589.16	20.03	1589.25	20.03
1594.38	20.07	1595.94	20.08	1597.36	20.08	1601.31	20.15	1635.92	22
1653.31	22	1657.84	21.8	1657.95	21.8	1658.61	21.79	1666.52	21.73
1666.71	21.73	1687.63	21.39	1695.29	21.12	1702.91	20.95	1720.13	20.25
1725.44	20	1761.53	18.08	1763.1	18	1764.76	18	1770.24	18.11
1770.88	18.12	1771.6	18.14	1883.83	20	1927.07	20	1933.56	20.4
1942.27	20.73	1944.37	20.89	1950.26	21.1	1956.63	21.44	1959.79	21.54
1962.22	21.61	1969.52	22	1974.61	22.34	1974.76	22.36	1983.32	22.89
1983.72	22.92	1986.18	23	1990.09	23.19	1995.85	23.35	1997.87	23.41

2010.12	23.74	2011.45	23.77	2019.79	24	2026.56	24	2027.83	24.11
2032.55	24.18	2039.7	24.34	2046.18	24.5	2058.62	25.57	2061.07	25.69
2062.69	25.92	2063.1	25.95	2063.69	26	2077.8	26	2084.67	26.77
2088.72	26.97	2092.61	27.14	2104.11	27.67	2106.64	28	2109.88	28
2111.74	28.43	2117.89	29.48	2119.58	29.83	2121.01	30	2125.1	30.64
2126.19	30.71	2127.68	30.8	2137.18	32	2139.29	32.27	2141.16	32.47
2144.36	32.89	2153.2	34	2159.98	34.81	2173.02	36.52	2181	37.54
2189.36	38.55	2191.73	38.83						

Manning's n Values num= 3

Sta	n Val	Sta	n Val	Sta	n Val
0	.035	424.33	.05	1393.67	.05

Bank Sta: Left	Right	Coeff Contr.	Expan.
424.33	1393.67	.1	.3

Ineffective Flow num= 1

Sta L	Sta R	Elev	Permanent
1283	2191.73		F

Upstream Embankment side slope = 0 horiz. to 1.0 vertical
Downstream Embankment side slope = 0 horiz. to 1.0 vertical
Maximum allowable submergence for weir flow = .95
Elevation at which weir flow begins =
Energy head used in spillway design =
Spillway height used in design =
Weir crest shape = Broad Crested

Number of Piers = 3

Pier Data
Pier Station Upstream= 600.51 Downstream= 760.49
Upstream num= 2

Width	Elev	Width	Elev
7	0	7	60

Downstream num= 2

Width	Elev	Width	Elev
7	0	7	60

Pier Data
Pier Station Upstream= 769.83 Downstream= 929.81
Upstream num= 2

Width	Elev	Width	Elev
7	0	7	60

Downstream num= 2

Width	Elev	Width	Elev
7	0	7	60

Pier Data
Pier Station Upstream= 958.75 Downstream= 1118.73
Upstream num= 2

Width	Elev	Width	Elev
7	0	7	60

Downstream num= 2

Width	Elev	Width	Elev
7	0	7	60

Number of Bridge Coefficient Sets = 1

Low Flow Methods and Data
Energy
Momentum Cd = 1.2
Selected Low Flow Methods = Highest Energy Answer

High Flow Method
Energy Only

Additional Bridge Parameters
Add Friction component to Momentum
Do not add Weight component to Momentum
Class B flow critical depth computations use critical depth
inside the bridge at the upstream end
Criteria to check for pressure flow = Upstream energy grade line

BRIDGE OUTPUT Profile #PF 1

E.G. US. (ft)	18.86	Element	Inside BR US
Inside BR DS			
W.S. US. (ft)	18.25	E.G. Elev (ft)	18.81
18.09			
Q Total (cfs)	10000.00	W.S. Elev (ft)	18.09
17.64			
Q Bridge (cfs)	10000.00	Crit W.S. (ft)	16.98
16.92			
Q Weir (cfs)		Max Chl Dpth (ft)	4.09
4.97			
Weir Sta Lft (ft)		Vel Total (ft/s)	6.81
5.40			
Weir Sta Rgt (ft)		Flow Area (sq ft)	1468.82
1851.47			
Weir Submerg		Froude # Chl	0.62
0.62			
Weir Max Depth (ft)		Specif Force (cu ft)	5043.34
4552.92			
Min El Weir Flow (ft)	64.21	Hydr Depth (ft)	3.80
2.34			
Min El Prs (ft)	56.20	W.P. Total (ft)	404.16
799.97			
Delta EG (ft)	1.05	Conv. Total (cfs)	206365.3
96272.6			
Delta WS (ft)	1.35	Top Width (ft)	386.62
835.52			
BR Open Area (sq ft)	19604.77	Frctn Loss (ft)	
BR Open Vel (ft/s)	6.81	C & E Loss (ft)	
Coef of Q		Shear Total (lb/sq ft)	0.53
1.56			
Br Sel Method	Momentum	Power Total (lb/ft s)	3.63
8.42			

Warning: The conveyance ratio (upstream conveyance divided by downstream conveyance) is less than
0.7 or greater than 1.4. This may indicate the need for additional cross sections.
Warning: The conveyance ratio (upstream conveyance divided by downstream conveyance) is less than
0.7 or greater than 1.4. This may indicate the need for additional cross sections.

CROSS SECTION

RIVER: CV Creek

REACH: Lower RS: 1045

INPUT
Description: A
Station Elevation Data num= 347

Sta	Elev	Sta	Elev	Sta	Elev	Sta	Elev	Sta	Elev
0	45.66	.11	45.66	4.32	45.8	12.79	45.88	13.12	45.89
13.35	45.89	13.75	45.9	19.28	45.9	19.79	45.91	25.61	45.78
27.19	45.7	43.78	45.45	48.76	45.51	54.23	45.72	55.16	45.46
60.13	44.12	60.57	44	60.85	43.93	67.94	42	69.4	41.62
75.39	40	77.75	39.39	82.91	38	91.97	36	100.93	34.27
102.3	34	105.01	33.48	112.64	32	122.52	30.17	123.5	30
127.14	29.47	128.76	29.3	131.92	28.89	136.62	28.45	138.39	28.25
141.61	28	144.58	27.67	146.92	27.36	149.69	26.95	151.63	26.67
157.75	26	158.94	25.86	160.12	25.71	166.27	24.99	169.72	24.5
171.02	24.35	173.21	24	173.37	23.97	174.32	23.72	179.77	22.32
180.94	22	202.41	22	211.08	21.64	219.97	21.7	221.92	21.65
244.12	21.78	245.66	21.74	254.82	21.8	256.71	21.75	271.49	21.88
271.73	21.88	272.2	21.87	283.95	21.99	284.55	22	291.26	22.19
292.06	22.22	298.4	22.36	299.53	22.39	305.06	22.48	306.53	22.52
311.5	22.56	313.96	22.62	317.09	22.68	318.76	22.69	321.71	22.82
322.59	23.02	324.68	23.42	325.36	23.53	327.54	24	327.86	24.06
327.98	24.09	331.6	24.74	332.93	25.02	335.04	25.38	337.37	25.77
337.75	25.83	338.77	26	342.12	26.55	345.08	27.03	350.64	27.92
350.86	27.95	351.15	28	360.72	28.22	363.14	28.23	370.22	28.37
382.08	28.34	385.56	28	395.7	28	397.77	27.48	399.79	26.87
400.67	26.58	402.4	26.07	402.46	26.05	402.62	26	407.16	24.56
409.11	24	411.7	23.28	415.62	22.33	419.83	21.32	424.33	20.3
425.16	20.11	425.62	20	431.66	18.62	432.2	18.5	434.36	18
443.1	16	444	15.9	444.56	15.91	458.56	15.09	463.52	15.31
468.42	15.14	472.16	15.26	478.72	15.37	479.39	15.35	486.77	15.2
505.14	14.99	537.85	14.55	539.99	14.53	549.17	14.66	554.19	14.94
559.63	14.75	564.06	14.63	568.65	14.93	572.87	14.74	579.64	14.48
582.88	14.57	591.5	14.06	591.88	14.04	600.55	13.65	603.2	13.58
611.02	13.32	625.5	12.95	630.59	12.91	638.33	12.71	642.38	12.78
647	12.67	647.94	12.71	652.53	12.93	656.19	13.06	660.95	13.21
667.68	13.53	679.2	13.99	679.26	13.99	679.41	14	689.35	14
691.18	14	692.82	14	698.94	14	703.57	14	704.04	14
705.31	14	707.58	14	708.11	14	710.49	14	721.44	14
725.2	14	733.93	14	738.7	14	749.64	14	753.01	14
759.59	14	768.61	14	770.07	14	781.65	14	793.19	14.63
798.07	14.74	814.22	15.16	817.6	15.26	820.22	15.35	832.67	15.68
834.27	15.74	835.4	15.77	843.22	16	846.64	16.02	846.71	16.02
846.88	16.03	855.77	16.1	868.64	16.25	871.81	16.36	886.99	16.6
903.47	17.44	908.43	17.58	909.98	17.62	914.66	18	952.51	18
959.48	16.03	959.58	16	960.25	15.81	966.98	14	1031.37	14
1038.95	15.83	1039.39	15.93	1039.67	16	1039.88	16	1053.2	17.04
1064.02	17.08	1070.37	16.95	1077.78	16.82	1097.28	16.86	1114.68	16.65
1130.94	16.68	1140.08	16.6	1150.28	16.61	1153.64	16.59	1156.93	16.59
1162.42	16.57	1165.44	16.58	1168.26	16.57	1170.98	16.58	1174.07	16.58
1176.5	16.59	1179.9	16.58	1189.4	16.62	1193.78	16.65	1201.82	16.68
1209.3	16.74	1221.95	16.8	1227.77	16.84	1243.5	16.92	1250.23	16.98
1251.92	16.99	1256.01	17.02	1265.43	17.07	1282.58	17.22	1287.1	17.25
1303.79	17.42	1305.53	17.44	1355.53	17.87	1359.57	17.84	1364.89	17.93
1365.58	17.91	1369.2	18	1372.28	18.26	1373.64	18.39	1379.49	18.91
1381.33	19.07	1389.4	19.79	1389.87	19.83	1391.4	20	1393.67	20.14
1406.37	20	1438.75	20	1454.19	19.71	1470.71	19.76	1471.08	19.76
1487.22	20	1510.21	20	1519.21	19.92	1528.56	19.9	1528.98	19.89
1529.26	19.89	1539.18	19.92	1539.37	19.92	1550.79	19.94	1551.03	19.94
1563.92	19.97	1564.56	20	1581.9	20	1589.16	20.03	1589.25	20.03
1594.38	20.07	1595.94	20.08	1597.36	20.08	1601.31	20.15	1635.92	22
1653.31	22	1657.84	21.8	1657.95	21.8	1658.61	21.79	1666.52	21.73
1666.71	21.73	1687.63	21.39	1695.29	21.12	1702.91	20.95	1720.13	20.25

1725.44	20	1761.53	18.08	1763.1	18	1764.76	18	1770.24	18.11
1770.88	18.12	1771.6	18.14	1883.83	20	1927.07	20	1933.56	20.4
1942.27	20.73	1944.37	20.89	1950.26	21.1	1956.63	21.44	1959.79	21.54
1962.22	21.61	1969.52	22	1974.61	22.34	1974.76	22.36	1983.32	22.89
1983.72	22.92	1986.18	23	1990.09	23.19	1995.85	23.35	1997.87	23.41
2010.12	23.74	2011.45	23.77	2019.79	24	2026.56	24	2027.83	24.11
2032.55	24.18	2039.7	24.34	2046.18	24.5	2058.62	25.57	2061.07	25.69
2062.69	25.92	2063.1	25.95	2063.69	26	2077.8	26	2084.67	26.77
2088.72	26.97	2092.61	27.14	2104.11	27.67	2106.64	28	2109.88	28
2111.74	28.43	2117.89	29.48	2119.58	29.83	2121.01	30	2125.1	30.64
2126.19	30.71	2127.68	30.8	2137.18	32	2139.29	32.27	2141.16	32.47
2144.36	32.89	2153.2	34	2159.98	34.81	2173.02	36.52	2181	37.54
2189.36	38.55	2191.73	38.83						

Manning's n Values num= 3

Sta	n Val	Sta	n Val	Sta	n Val
0	.035	424.33	.05	1393.67	.05

Bank Sta: Left	Right	Lengths: Left	Channel	Right	Coeff Contr.	Expan.
424.33	1393.67	112.47	270.89	459.51	.1	.3

Ineffective Flow num= 1

Sta L	Sta R	Elev	Permanent
1283	2191.73		F

CROSS SECTION OUTPUT Profile #PF 1

E.G. Elev (ft)	17.81	Element	Left OB	Channel
Right OB				
Vel Head (ft)	0.91	Wt. n-Val.		0.050
W.S. Elev (ft)	16.90	Reach Len. (ft)	112.47	270.89
459.51				
Crit W.S. (ft)	16.90	Flow Area (sq ft)		1303.29
E.G. Slope (ft/ft)	0.029920	Area (sq ft)		1303.29
Q Total (cfs)	10000.00	Flow (cfs)		10000.00
Top Width (ft)	713.71	Top Width (ft)		713.71
Vel Total (ft/s)	7.67	Avg. Vel. (ft/s)		7.67
Max Chl Dpth (ft)	4.23	Hydr. Depth (ft)		1.83
Conv. Total (cfs)	57812.3	Conv. (cfs)		57812.3
Length Wtd. (ft)	270.89	Wetted Per. (ft)		714.68
Min Ch El (ft)	12.67	Shear (lb/sq ft)		3.41
Alpha	1.00	Stream Power (lb/ft s)		26.14
Frctn Loss (ft)	0.40	Cum Volume (acre-ft)		102.43
C & E Loss (ft)	0.26	Cum SA (acres)		21.01

Warning: The energy equation could not be balanced within the specified number of iterations. The
program used critical depth for the water surface and continued on with the

calculations.
Warning: Divided flow computed for this cross-section.
Warning: The velocity head has changed by more than 0.5 ft (0.15 m). This may indicate the need for
additional cross sections.
Warning: The conveyance ratio (upstream conveyance divided by downstream conveyance) is less than
0.7 or greater than 1.4. This may indicate the need for additional cross sections.
Warning: The energy loss was greater than 1.0 ft (0.3 m). between the current and previous cross
section. This may indicate the need for additional cross sections.
Warning: During the standard step iterations, when the assumed water surface was set equal to critical
depth, the calculated water surface came back below critical depth. This indicates that there
is not a valid subcritical answer. The program defaulted to critical depth.

CROSS SECTION

RIVER: CV Creek
REACH: Lower RS: 774

INPUT
Description:
Station Elevation Data num= 170

Sta	Elev	Sta	Elev	Sta	Elev	Sta	Elev	Sta	Elev
0	44.06	1.92	44	63.49	44	67.94	42.77	70.79	42
71.49	41.8	76.26	40.47	77.71	40.07	77.96	40	81.35	39.03
85.05	38	87.8	37.22	97.13	34.59	101.64	33.31	105.27	32.25
105.75	32.12	106.15	32	107.66	31.56	112.97	30	114.72	29.49
119.8	28	122.25	27.37	125.42	26.35	126.63	26	133.28	24.24
134.2	24	141.14	23.08	147.35	22.46	147.73	22.44	148.02	22.43
155.28	22.1	155.37	22.1	160.43	21.88	166.63	21.94	167.7	22
185.14	22	186.01	21.8	186.7	21.65	188.09	21.34	192.15	20.49
194.13	20.08	194.69	20	197.4	20	200.62	20.54	203.84	21.15
208.28	22	212.02	22	216.71	20.76	219.51	20	222.39	19.26
227.19	18	230.73	17.1	233.54	16.36	240.92	14.46	242.72	14
299.89	12.66	304.13	12.57	305.55	12.53	328.51	12	330.76	11.9
340.44	11.23	356.61	10.2	358.89	10	365.03	10	390.46	9.61
468.66	8.8	483.95	8.69	486.63	8.68	492.15	8.65	494.44	8.65
497.73	8.62	500.7	8.61	508.9	8.56	514.04	8.52	515.99	8.5
527.43	8.44	532.1	8.43	536.61	8.44	541.32	8.43	546.49	8.47
551.47	8.46	579.95	8.53	702.63	9.88	704.65	9.9	712.33	10
760.39	10	865.48	10.77	868.36	10.77	923.95	10	1266.33	10
1268.98	9.94	1269.79	9.94	1290.86	9.78	1401.17	8	1414.46	8.55
1416.39	8.57	1416.88	8.57	1428.24	8.54	1428.75	8.55	1441.17	8.55
1442.69	8.56	1465.3	8.79	1474.28	8.82	1478.87	8.87	1494.36	8.98
1500.46	9.04	1505.26	9.04	1510.62	9.09	1517.77	9.14	1575.47	9.47
1592.01	9.66	1596.56	9.69	1615.57	10	1618.06	10	1621.88	10.56
1626.24	11.21	1637.91	12.92	1642.32	13.58	1645.19	14	1741.61	16
1746.78	17.4	1749.41	18	1750.21	18.16	1753.31	18.74	1759.42	19.83
1759.84	19.9	1760.08	19.95	1760.38	20	1765.34	20.91	1770.66	21.85
1771.47	22	1777.25	23.39	1778.81	23.76	1779.16	23.85	1779.92	24
1780.99	24.78	1782.88	26	1783.28	26.26	1785.97	28	1788.55	28.45
1789.91	28.68	1791.7	28.97	1794.99	29.53	1797.4	29.91	1797.63	29.94
1797.99	30	1798.51	31.24	1798.78	32	1799.25	32.54	1800.13	33.56
1800.59	34	1837.87	34	1848.26	34.38	1853.79	34.1	1854.65	34
1856.67	33.42	1857.53	33.46	1862.22	33.57	1864.23	34	1866.41	34.63
1871.06	36	1872.57	36.46	1877.8	38	1878.37	38.17	1881.95	39.22
1884.02	39.84	1889.21	41.38	1891.31	42	1901.28	44.96	1903.22	45.53

Manning's n Values num= 3

Sta	n Val	Sta	n Val	Sta	n Val
0	.035	216.71	.05	1759.42	.05

Bank Sta: Left	Right	Lengths: Left	Channel	Right	Coeff Contr.	Expan.
216.71	1759.42	136	417.54	444.14	.1	.3

Ineffective Flow num= 1

Sta L	Sta R	Elev	Permanent
1482	1903.22		F

CROSS SECTION OUTPUT Profile #PF 1

E.G. Elev (ft)	14.43	Element	Left OB	Channel
Right OB				
Vel Head (ft)	0.05	Wt. n-Val.		0.050
W.S. Elev (ft)	14.38	Reach Len. (ft)	136.00	417.54
444.14				
Crit W.S. (ft)	10.90	Flow Area (sq ft)		5645.79
E.G. Slope (ft/ft)	0.000471	Area (sq ft)		6397.30
Q Total (cfs)	10000.00	Flow (cfs)		10000.00
Top Width (ft)	1422.46	Top Width (ft)		1422.46
Vel Total (ft/s)	1.77	Avg. Vel. (ft/s)		1.77
Max Chl Dpth (ft)	6.38	Hydr. Depth (ft)		4.55
Conv. Total (cfs)	460671.8	Conv. (cfs)		460671.8
Length Wtd. (ft)	417.54	Wetted Per. (ft)		1240.97
Min Ch El (ft)	8.00	Shear (lb/sq ft)		0.13
Alpha	1.00	Stream Power (lb/ft s)		0.24
Frctn Loss (ft)	0.08	Cum Volume (acre-ft)		78.49
C & E Loss (ft)	0.01	Cum SA (acres)		14.36

Warning: The conveyance ratio (upstream conveyance divided by downstream conveyance) is less than
0.7 or greater than 1.4. This may indicate the need for additional cross sections.
Note: Hydraulic jump has occurred between this cross section and the previous upstream section.

CROSS SECTION

RIVER: CV Creek
REACH: Lower RS: 356

INPUT
Description:
Station Elevation Data num= 195

Sta	Elev	Sta	Elev	Sta	Elev	Sta	Elev	Sta	Elev
0	42.29	3.97	42.25	5.87	42.26	10.65	42.16	14.34	42.1
16.56	42.07	17.11	42.07	26.06	42	28.46	42	29.81	41.93
30.04	41.92	37.77	41.44	39.42	41.35	45.18	41	54.34	40.53
62.06	40.15	64.91	40	65.69	39.96	67.7	39.84	68.02	39.82
68.39	39.79	68.68	39.77	69.09	39.74	69.52	39.7	70.17	39.65
71.01	39.57	72.38	39.47	73.91	39.34	79.46	38.91	81.28	38.76
88.95	38	92.56	37.65	95.23	37.4	108.84	36	113.95	35.49
120.79	34.75	125.71	34.23	127.48	34	136.89	32.37	138.6	32
146.13	30.14	146.63	30.02	146.71	30	147.56	29.79	154.88	28
155.46	27.9	156.51	27.71	165.79	26	170	24.59	170.82	24.29
171.83	24	176.35	22.33	177.25	22	181.19	20.55	182.66	20
185.98	18.78	188.06	18	195.37	15.29	203.86	12.11	204.16	12
205.47	11.95	205.57	11.95	257.23	10	259.97	9.23	264.26	8
379.43	6.18	388.43	6	502.17	6	540.58	6.71	541.15	6.71
549.17	6.86	552.99	6.94	555.83	7.02	654.9	7.54	687.97	7.33
691.9	7.35	735.25	8	994.89	8	1100.99	8.97	1172.89	8.89
1185.82	8.91	1247.53	8.85	1251.91	8.84	1252.83	8.84	1264.78	8.81
1330.85	8	1715.79	8	1719.67	8.27	1722.37	8.38	1726.18	8.55
1741.57	8.89	1746.87	9.26	1748.65	9.41	1752.07	9.68	1756.99	10
1760.83	11.06	1764.09	12	1768.2	13.13	1771.22	14	1775.55	15.19
1778.37	16	1782.91	17.25	1785.53	18	1790.25	19.3	1792.71	20
1798.76	21.7	1799.81	22	1803.81	23.11	1806.02	23.67	1806.9	23.91
1807.32	24	1813.98	24	1816.71	24.34	1818.6	24.37	1826.2	25.38
1827.03	25.44	1829.16	26	1833.06	26	1837.01	26	1844.33	25.51
1853.52	24.93	1873.1	24	1886.22	24	1890.51	25.32	1890.87	25.44
1891.23	25.55	1891.61	25.66	1892.39	25.88	1892.78	26	1893.3	26.35
1893.64	26.6	1895.56	28	1896.85	28.93	1898.33	30	1899.87	31.11
1903.42	33.68	1903.87	34	1906.61	35.98	1906.9	36.19	1909.41	38
1909.56	38.11	1912.18	40	1912.45	40.19	1917.73	44	1918.18	44.32
1920.5	46	1921.01	46.37	1923.28	48	1923.84	48.41	1926.05	50
1926.66	50.44	1928.83	52	1929.47	52.47	1931.6	54	1935.84	57.06
1937.14	58	1938.66	59.09	1939.92	60	1941.06	60.82	1942.69	62
1943.75	62.76	1945.47	64	1947.11	65.19	1948.24	66	1949.92	67.21
1951.01	68	1953.79	70	1954.78	70.71	1956.56	72	1961.12	75.29
1962.11	76	1966.71	79.32	1967.65	80	1970.43	82	1972.45	83.46
1973.31	84	1975.31	84.67	1978.33	86	1985.08	87.58	1987.05	88
1993.75	89.07	1999.99	90	2001.64	90.26	2013.05	92	2013.85	92.15
2014.1	92.2	2014.57	92.3	2015.67	92.54	2020.1	93.45	2022.03	93.91
2022.43	94	2023.89	94.34	2024.43	94.47	2025.53	94.72	2026.82	95.08

Manning's n Values num= 3

Sta	n Val	Sta	n Val	Sta	n Val
0	.016	165.79	.05	1833.06	.016

Bank Sta: Left	Right	Coeff Contr.	Expan.
165.79	1833.06	.1	.3

CROSS SECTION OUTPUT Profile #PF 1

E.G. Elev (ft)	14.35	Element	Left OB	Channel
Right OB				
Vel Head (ft)	0.02	Wt. n-Val.		0.050
W.S. Elev (ft)	14.33	Reach Len. (ft)		
Crit W.S. (ft)	8.90	Flow Area (sq ft)		9978.72
E.G. Slope (ft/ft)	0.000097	Area (sq ft)		9978.72
Q Total (cfs)	10000.00	Flow (cfs)		10000.00

Top Width (ft)	1574.49	Top Width (ft)	1574.49
Vel Total (ft/s)	1.00	Avg. Vel. (ft/s)	1.00
Max Chl Dpth (ft)	8.33	Hydr. Depth (ft)	6.34
Conv. Total (cfs)	1014984.0	Conv. (cfs)	1014984.0
Length Wtd. (ft)		Wetted Per. (ft)	1575.93
Min Ch El (ft)	6.00	Shear (lb/sq ft)	0.04
Alpha	1.00	Stream Power (lb/ft s)	0.04
Frctn Loss (ft)		Cum Volume (acre-ft)	
C & E Loss (ft)		Cum SA (acres)	

SUMMARY OF MANNING'S N VALUES

River:CV Creek

Reach	River Sta.	n1	n2	n3
Lower	4421	.016	.12	.03
Lower	4086	.016	.12	.03
Lower	3531	.016	.12	.03
Lower	3254	.016	.12	.03
Lower	3100	Bridge		
Lower	3082	.016	.12	.03
Lower	2846	.016	.12	.03
Lower	2255	.05	.12	.03
Lower	1826	.05	.12	.03
Lower	1543	.05	.12	.03
Lower	1500	Bridge		
Lower	1442	.035	.025	.03
Lower	1400	Bridge		
Lower	1197	.035	.025	.03
Lower	1182	.035	.025	.03
Lower	1163	Culvert		
Lower	1143	.035	.025	.03
Lower	1100	Bridge		
Lower	1045	.035	.05	.05
Lower	774	.035	.05	.05
Lower	356	.016	.05	.016

SUMMARY OF REACH LENGTHS

River: CV Creek

Reach	River Sta.	Left	Channel	Right
Lower	4421	241.6	335.33	335.6
Lower	4086	524.5	555.38	523.1
Lower	3531	605.3	276.6	243.2

Lower	3254	187.9	172.21	187.17
Lower	3100	Bridge		
Lower	3082	216.44	235.72	262.16
Lower	2846	531.77	591.09	510.32
Lower	2255	383.15	429.01	326.21
Lower	1826	299.52	282.81	207
Lower	1543	321.52	101.33	163.33
Lower	1500	Bridge		
Lower	1442	294.18	244.62	253.63
Lower	1400	Bridge		
Lower	1197	16.25	15.14	20.8
Lower	1182	167.09	39.56	57.37
Lower	1163	Culvert		
Lower	1143	133.35	97.85	122.84
Lower	1100	Bridge		
Lower	1045	112.47	270.89	459.51
Lower	774	136	417.54	444.14
Lower	356			

SUMMARY OF CONTRACTION AND EXPANSION COEFFICIENTS
River: CV Creek

Reach	River Sta.	Contr.	Expan.
Lower	4421	.1	.3
Lower	4086	.1	.3
Lower	3531	.1	.3
Lower	3254	.1	.3
Lower	3100	Bridge	
Lower	3082	.1	.3
Lower	2846	.1	.3
Lower	2255	.1	.3
Lower	1826	.1	.3
Lower	1543	.1	.3
Lower	1500	Bridge	
Lower	1442	.1	.3
Lower	1400	Bridge	
Lower	1197	.1	.3
Lower	1182	.1	.3
Lower	1163	Culvert	
Lower	1143	.1	.3
Lower	1100	Bridge	
Lower	1045	.1	.3
Lower	774	.1	.3
Lower	356	.1	.3

Profile Output Table - Standard Table 1

Reach	River Sta	Profile	Q Total	Min Ch El	W.S. Elev	Crit W.S.
E.G. Elev	E.G. Slope	Vel Chnl	Flow Area	Top Width	Froude # Chl	
			(cfs)	(ft)	(ft)	(ft)
(ft)	(ft/ft)	(ft/s)	(sq ft)	(ft)		
Lower	4421	PF 1	10000.00	32.00	41.74	37.49
42.28	0.013701	5.84	1709.13	218.15	0.36	
Lower	4086	PF 1	10000.00	28.83	37.68	

38.05	0.011397	4.83	2069.08	299.90	0.32	
Lower	3531	PF 1	10000.00	24.52	34.50	
34.67	0.003674	3.23	3088.61	357.39	0.19	
Lower	3254	PF 1	10000.00	24.00	33.29	27.52
33.48	0.004993	3.51	2851.47	607.28	0.22	
Lower	3100		Bridge			
Lower	3082	PF 1	10000.00	22.21	31.54	
31.80	0.007798	4.08	2452.94	339.46	0.27	
Lower	2846	PF 1	10000.00	22.00	30.43	
30.55	0.003638	2.80	3576.75	491.91	0.18	
Lower	2255	PF 1	10000.00	21.15	27.48	
27.64	0.007010	3.21	3117.18	571.23	0.24	
Lower	1826	PF 1	10000.00	18.00	26.12	
26.18	0.001933	2.05	4888.14	705.45	0.13	
Lower	1543	PF 1	10000.00	16.00	25.31	19.78
25.44	0.003598	2.97	3361.97	630.02	0.18	
Lower	1500		Bridge			
Lower	1442	PF 1	10000.00	16.00	23.99	18.60
24.12	0.000156	2.96	3395.65	453.85	0.18	
Lower	1400		Bridge			
Lower	1197	PF 1	10000.00	14.50	22.51	
22.66	0.000177	3.08	3251.55	504.12	0.19	
Lower	1182	PF 1	10000.00	14.50	22.51	17.29
22.66	0.000187	3.11	3217.68	525.45	0.20	
Lower	1163		Culvert			
Lower	1143	PF 1	10000.00	14.00	18.25	16.91
18.86	0.001808	6.29	1588.89	403.13	0.56	
Lower	1100		Bridge			
Lower	1045	PF 1	10000.00	12.67	16.90	16.90
17.81	0.029920	7.67	1303.29	713.71	1.00	
Lower	774	PF 1	10000.00	8.00	14.38	10.90
14.43	0.000471	1.77	5645.79	1422.46	0.15	
Lower	356	PF 1	10000.00	6.00	14.33	8.90
14.35	0.000097	1.00	9978.72	1574.49	0.07	

ERRORS WARNINGS AND NOTES
Errors Warnings and Notes for Plan : CVC Existing

River: CV Creek Reach: Lower RS: 4421 Profile: PF 1
Warning:The energy loss was greater than 1.0 ft (0.3 m). between the current and previous cross section. This may indicate
the need for additional cross sections.
River: CV Creek Reach: Lower RS: 4086 Profile: PF 1
Warning:The conveyance ratio (upstream conveyance divided by downstream conveyance) is less than 0.7 or greater than 1.4.
This may indicate the need for additional cross sections.
Warning:The energy loss was greater than 1.0 ft (0.3 m). between the current and previous cross section. This may indicate
the need for additional cross sections.
River: CV Creek Reach: Lower RS: 3531 Profile: PF 1
Warning:The energy loss was greater than 1.0 ft (0.3 m). between the current and previous cross section. This may indicate
the need for additional cross sections.
River: CV Creek Reach: Lower RS: 3100 Profile: PF 1 Upstream

Warning:The energy loss was greater than 1.0 ft (0.3 m). between the current and previous cross section. This may indicate
the need for additional cross sections.
River: CV Creek Reach: Lower RS: 3082 Profile: PF 1
Warning:The conveyance ratio (upstream conveyance divided by downstream conveyance) is less than 0.7 or greater than 1.4.
This may indicate the need for additional cross sections.
Warning:The energy loss was greater than 1.0 ft (0.3 m). between the current and previous cross section. This may indicate
the need for additional cross sections.
River: CV Creek Reach: Lower RS: 2846 Profile: PF 1
Warning:The energy loss was greater than 1.0 ft (0.3 m). between the current and previous cross section. This may indicate
the need for additional cross sections.
River: CV Creek Reach: Lower RS: 2255 Profile: PF 1
Warning:The conveyance ratio (upstream conveyance divided by downstream conveyance) is less than 0.7 or greater than 1.4.
This may indicate the need for additional cross sections.
Warning:The energy loss was greater than 1.0 ft (0.3 m). between the current and previous cross section. This may indicate
the need for additional cross sections.
River: CV Creek Reach: Lower RS: 1543 Profile: PF 1
Warning:Divided flow computed for this cross-section.
River: CV Creek Reach: Lower RS: 1500 Profile: PF 1 Upstream
Warning:The conveyance ratio (upstream conveyance divided by downstream conveyance) is less than 0.7 or greater than 1.4.
This may indicate the need for additional cross sections.
River: CV Creek Reach: Lower RS: 1197 Profile: PF 1
Warning:Divided flow computed for this cross-section.
River: CV Creek Reach: Lower RS: 1100 Profile: PF 1 Upstream
Warning:The conveyance ratio (upstream conveyance divided by downstream conveyance) is less than 0.7 or greater than 1.4.
This may indicate the need for additional cross sections.
River: CV Creek Reach: Lower RS: 1100 Profile: PF 1 Downstream
Warning:The conveyance ratio (upstream conveyance divided by downstream conveyance) is less than 0.7 or greater than 1.4.
This may indicate the need for additional cross sections.
River: CV Creek Reach: Lower RS: 1045 Profile: PF 1
Warning:The energy equation could not be balanced within the specified number of iterations. The program used critical depth
for the water surface and continued on with the calculations.
Warning:Divided flow computed for this cross-section.
Warning:The velocity head has changed by more than 0.5 ft (0.15 m). This may indicate the need for additional cross sections.
Warning:The conveyance ratio (upstream conveyance divided by downstream conveyance) is less than 0.7 or greater than 1.4.
This may indicate the need for additional cross sections.
Warning:The energy loss was greater than 1.0 ft (0.3 m). between the current and previous cross section. This may indicate
the need for additional cross sections.
Warning:During the standard step iterations, when the assumed water surface was set equal to critical depth, the calculated
water surface came back below critical depth. This indicates that there is not a valid subcritical answer. The
program defaulted to critical depth.
River: CV Creek Reach: Lower RS: 774 Profile: PF 1
Warning:The conveyance ratio (upstream conveyance divided by downstream conveyance) is less than 0.7 or greater than 1.4.
This may indicate the need for additional cross sections.
Note: Hydraulic jump has occurred between this cross section and the previous upstream section.

PROSPOSED

HEC-RAS Plan: CVC Proposed River: CV Creek Reach: Lower Profile: PF 1

Reach	River Sta	Profile	Q Total	Min Ch El	W.S. Elev	Crit W.S.	E.G. Elev	E.G. Slope	Vel Chnl	Flow Area	Top Width	Froude # Chl
			(cfs)	(ft)	(ft)	(ft)	(ft)	(ft/ft)	(ft/s)	(sq ft)	(ft)	
Lower	4421	PF 1	10000.00	32.00	41.74	37.49	42.28	0.013701	5.84	1709.14	218.15	0.36
Lower	4086	PF 1	10000.00	28.83	37.68		38.05	0.011400	4.83	2068.90	299.90	0.32
Lower	3531	PF 1	10000.00	24.52	34.50		34.66	0.003682	3.23	3086.52	357.35	0.19
Lower	3254	PF 1	10000.00	24.00	33.28	27.52	33.47	0.005012	3.51	2848.05	607.18	0.22
Lower	3100		Bridge									
Lower	3082	PF 1	10000.00	22.21	31.52		31.78	0.007862	4.09	2446.12	339.13	0.27
Lower	2846	PF 1	10000.00	22.00	30.39		30.51	0.003689	2.81	3559.36	490.98	0.18
Lower	2255	PF 1	10000.00	21.15	27.17		27.34	0.008487	3.40	2938.37	568.86	0.26
Lower	1826	PF 1	10000.00	18.00	25.22		25.30	0.002969	2.33	4288.10	698.78	0.16
Lower	1543	PF 1	10000.00	16.00	23.87	19.78	24.07	0.006858	3.62	2762.27	495.54	0.25
Lower	1500		Bridge									
Lower	1442	PF 1	10000.00	16.00	22.47	18.59	22.67	0.000322	3.64	2747.32	427.36	0.25
Lower	1400		Bridge									
Lower	1197	PF 1	10000.00	12.00	18.45		18.68	0.000370	3.88	2574.60	406.51	0.27
Lower	1182	PF 1	10000.00	12.00	18.46	14.62	18.67	0.000335	3.73	2683.80	507.17	0.26
Lower	1163		Bridge									
Lower	1143	PF 1	10000.00	12.00	18.06	14.40	18.24	0.000313	3.47	2884.74	504.80	0.25
Lower	1100		Bridge									
Lower	1045	PF 1	10000.00	12.67	16.90	16.90	17.81	0.029920	7.67	1303.29	713.71	1.00
Lower	774	PF 1	10000.00	8.00	14.38	10.90	14.43	0.000471	1.77	5645.79	1422.46	0.15
Lower	356	PF 1	10000.00	6.00	14.33	8.90	14.35	0.000097	1.00	9978.72	1574.49	0.07

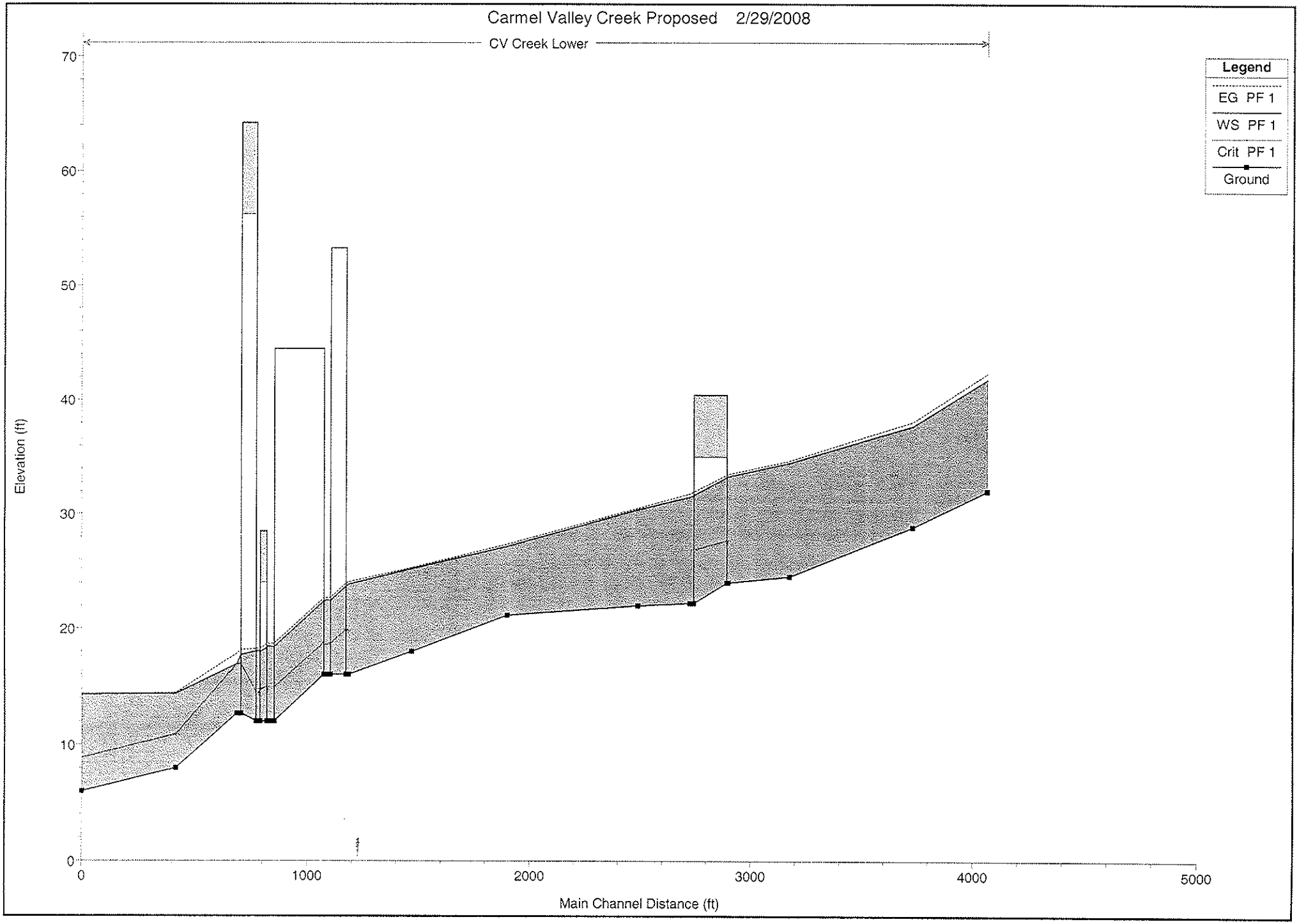
Carmel Valley Creek Proposed 2/29/2008
CV Creek Lower
Legend
EG PF 1
WS PF 1
Crit PF 1
Ground
Elevation (ft)
0
10
20
30
40
50
60
70
0
1000
2000
3000
4000
5000
Main Channel Distance (ft)

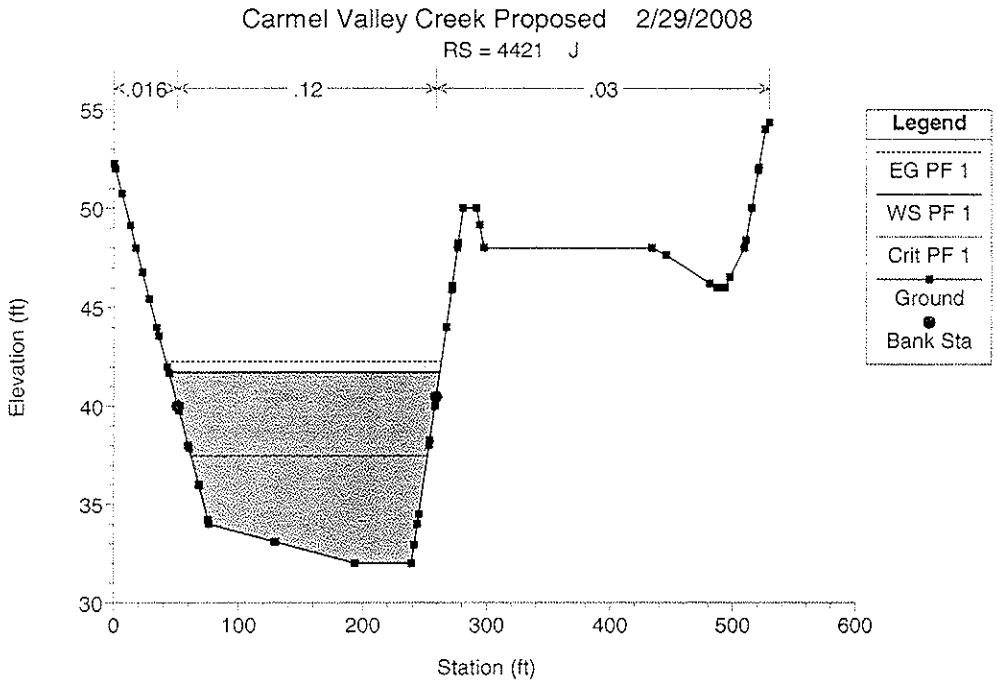
Carmel Valley Creek Proposed 2/29/2008
RS = 4421 J
.016
.12
.03
Legend
EG PF 1
WS PF 1
Crit PF 1
Ground
Bank Sta
Elevation (ft)
Station (ft)

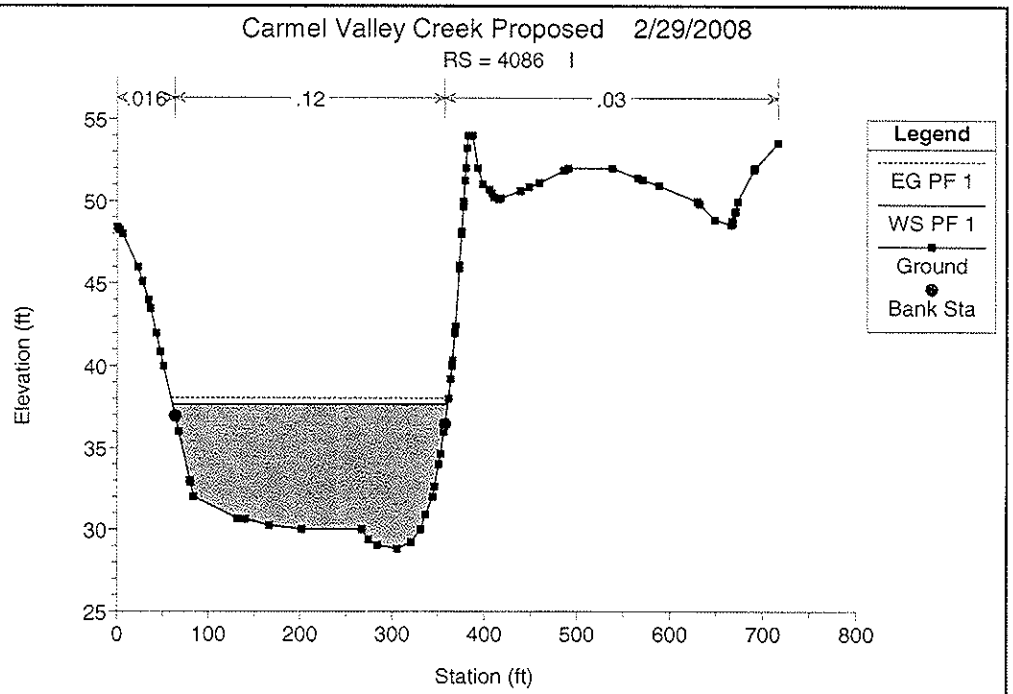
Carmel Valley Creek Proposed 2/29/2008
RS = 4086 I
.016
.12
.03
Legend
EG PF 1
WS PF 1
Ground
Bank Sta
Elevation (ft)
Station (ft)

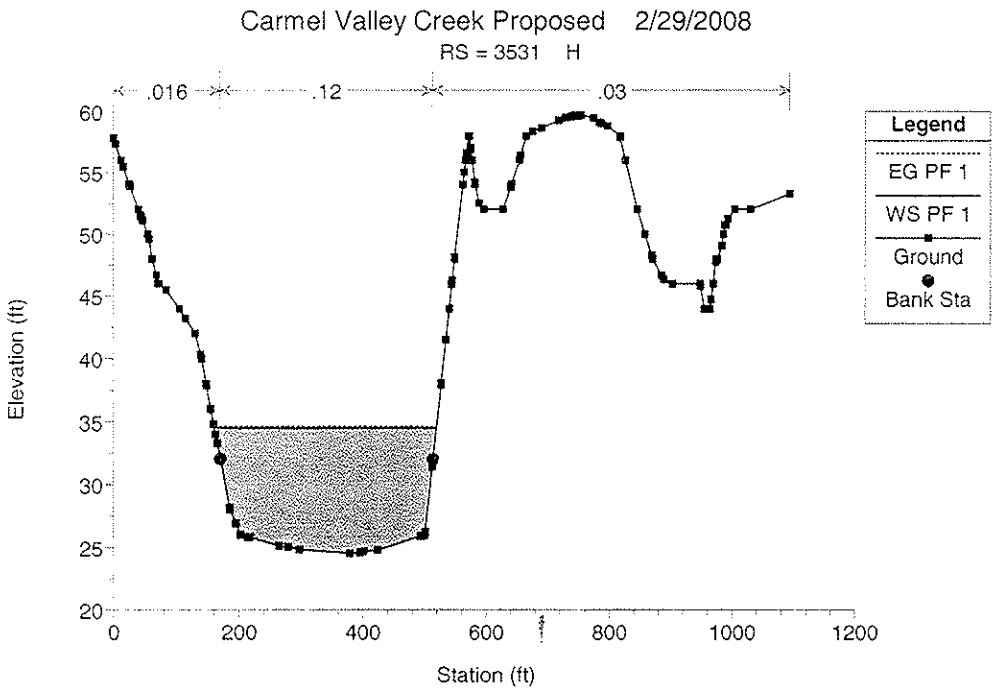
Carmel Valley Creek Proposed 2/29/2008
RS = 3531 H
.016
.12
.03
Legend
EG PF 1
WS PF 1
Ground
Bank Sta
Elevation (ft)
Station (ft)

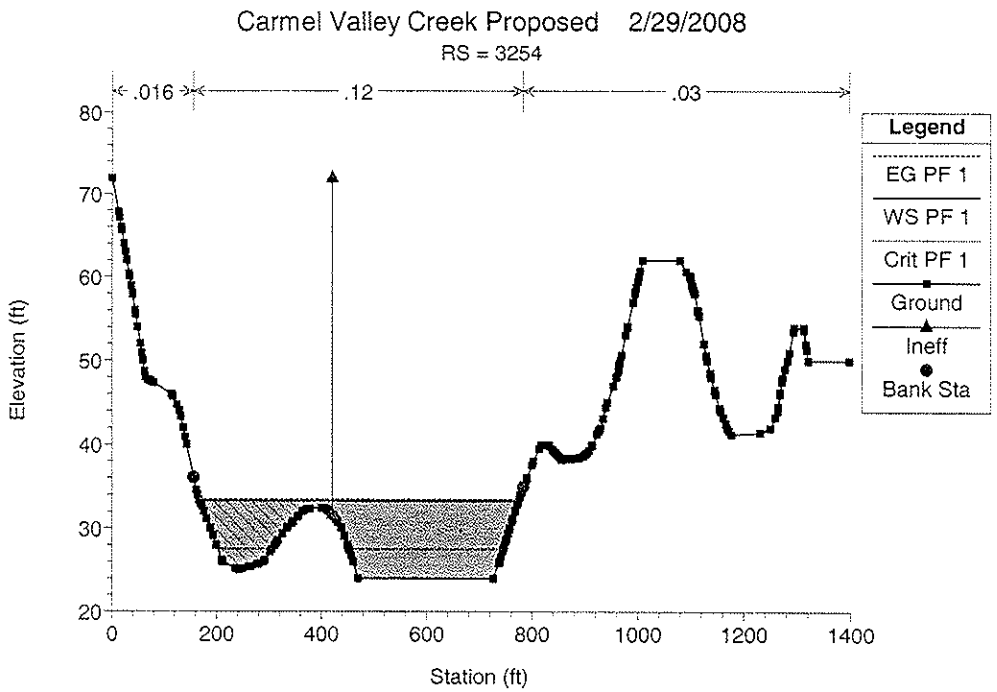
Carmel Valley Creek Proposed 2/29/2008
RS = 3254
.016
.12
.03
Legend
EG PF 1
WS PF 1
Crit PF 1
Ground
Ineff
Bank Sta
Elevation (ft)
Station (ft)

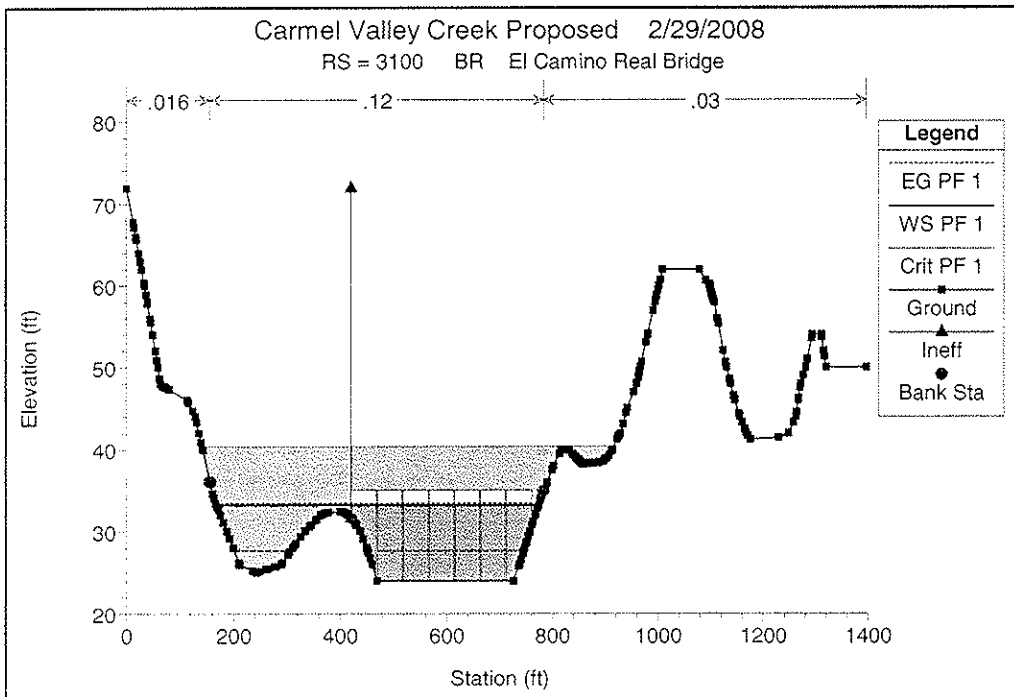
Carmel Valley Creek Proposed 2/29/2008
RS = 3100 BR El Camino Real Bridge
.016
.12
.03
Legend
EG PF 1
WS PF 1
Crit PF 1
Ground
Ineff
Bank Sta
Elevation (ft)
Station (ft)

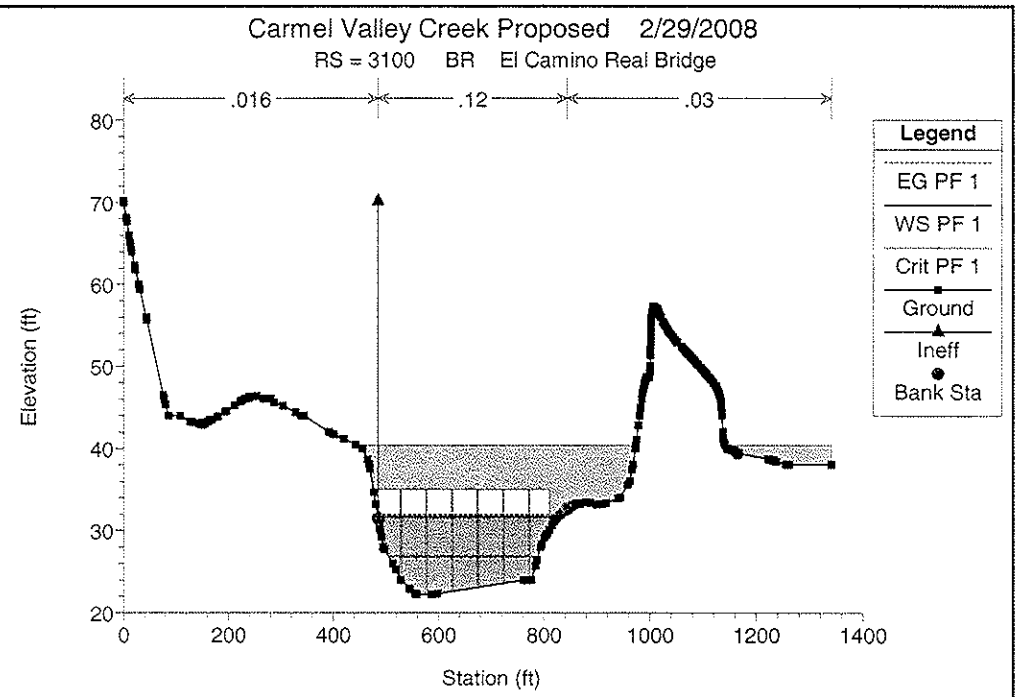
Carmel Valley Creek Proposed 2/29/2008
RS = 3100 BR El Camino Real Bridge
.016
.12
.03
Legend
EG PF 1
WS PF 1
Crit PF 1
Ground
Ineff
Bank Sta
Elevation (ft)
Station (ft)

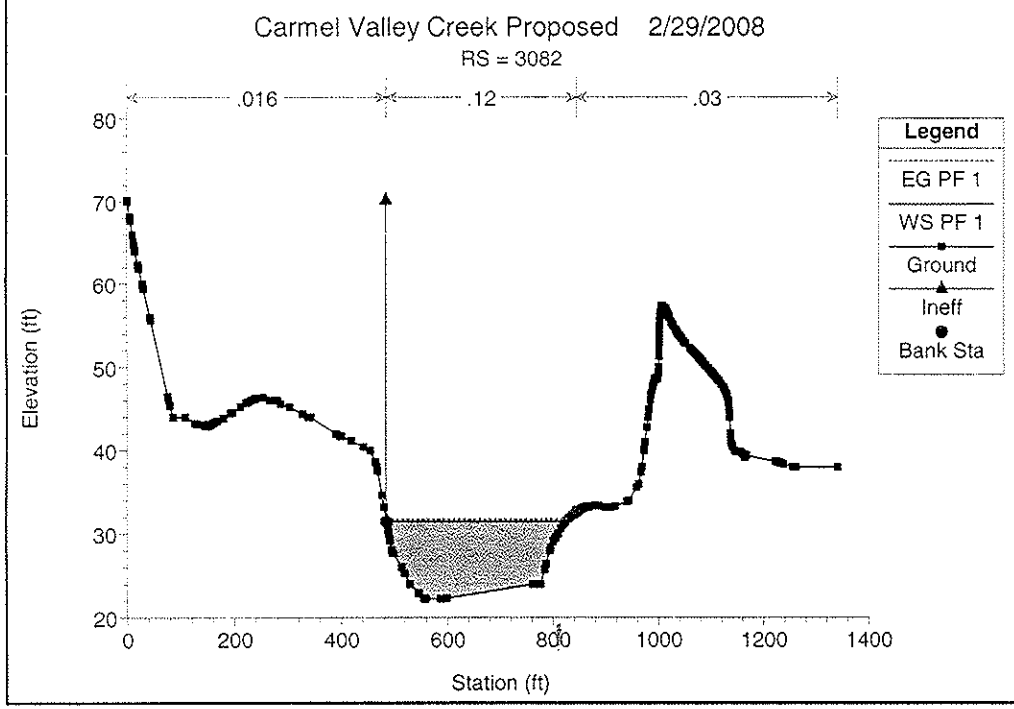
Carmel Valley Creek Proposed 2/29/2008
RS = 3082
.016
.12
.03
Legend
EG PF 1
WS PF 1
Ground
Ineff
Bank Sta
Elevation (ft)
Station (ft)

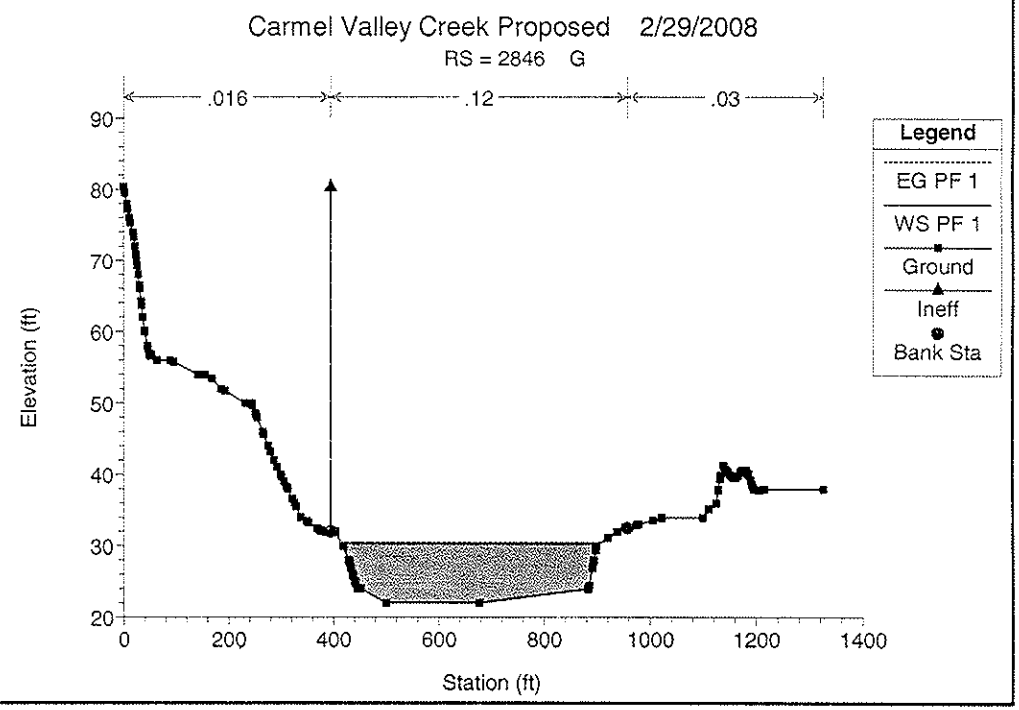
Carmel Valley Creek Proposed 2/29/2008
RS = 2846 G
.016
.12
.03
Legend
EG PF 1
WS PF 1
Ground
Ineff
Bank Sta
Elevation (ft)
Station (ft)

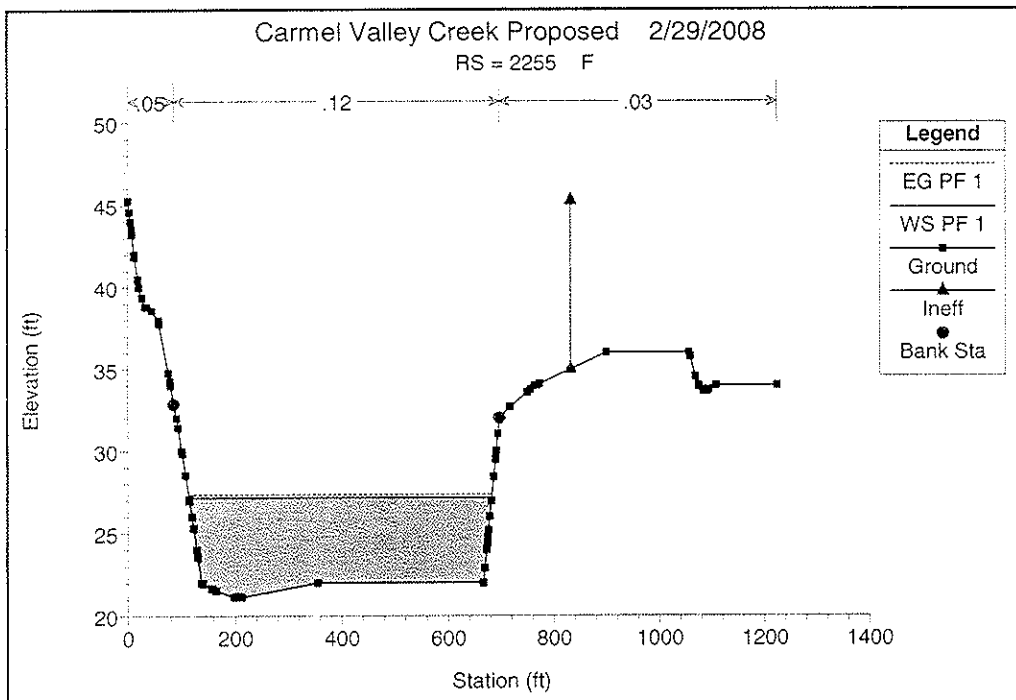
Carmel Valley Creek Proposed 2/29/2008
RS = 2255 F
.05
.12
.03
Legend
EG PF 1
WS PF 1
Ground
Ineff
Bank Sta
Elevation (ft)
Station (ft)

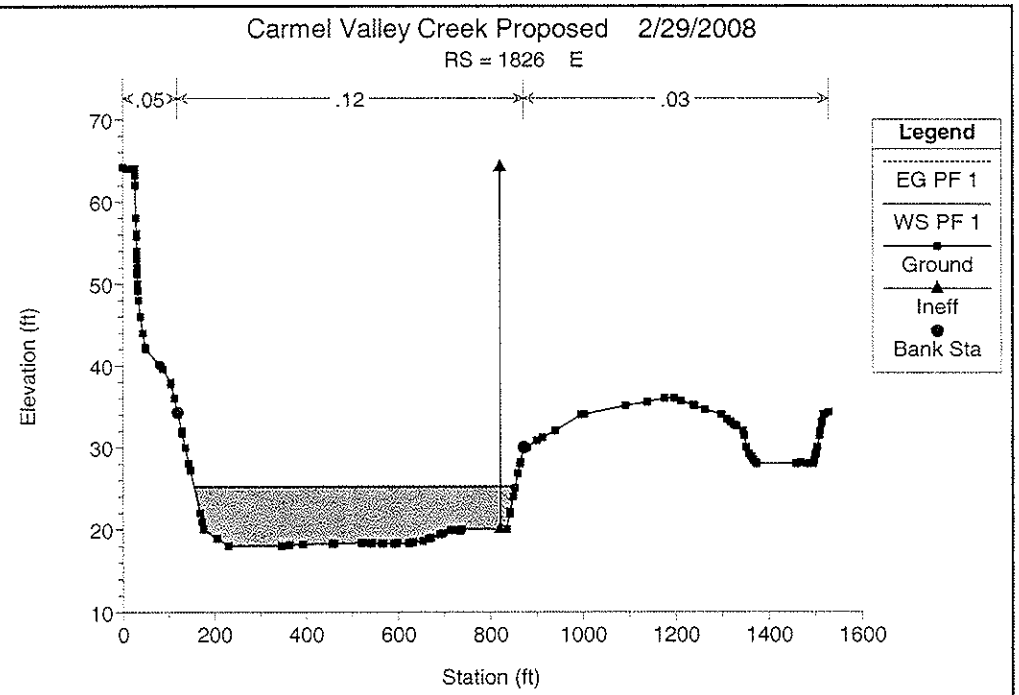
Carmel Valley Creek Proposed 2/29/2008
RS = 1826 E
.05
.12
.03
Legend
EG PF 1
WS PF 1
Ground
Ineff
Bank Sta
Elevation (ft)
Station (ft)

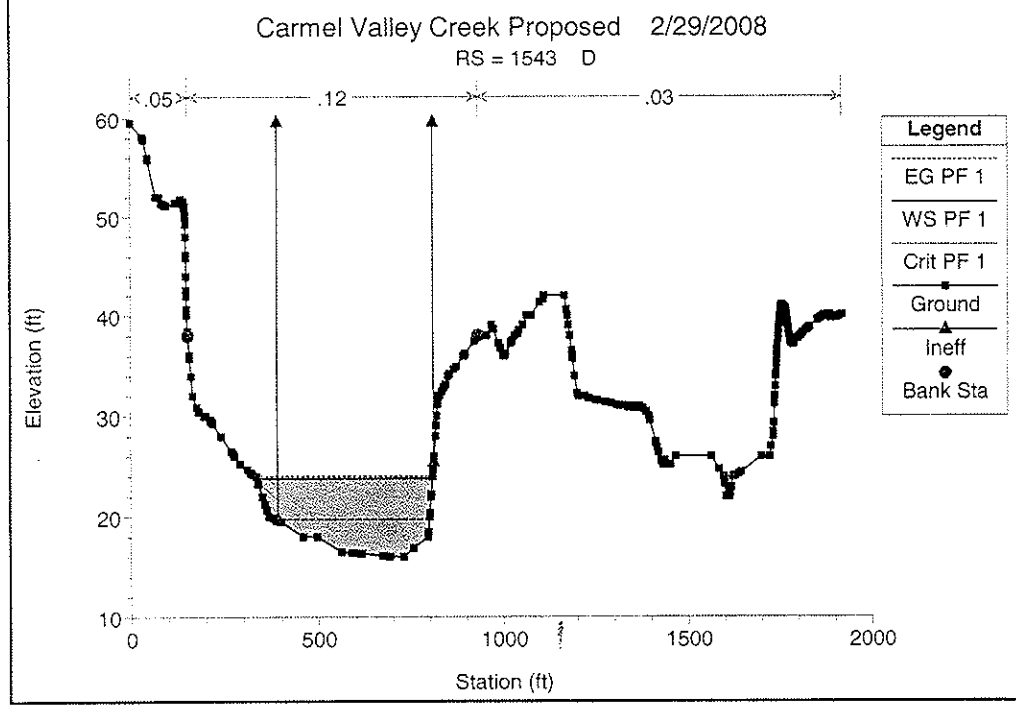
Carmel Valley Creek Proposed 2/29/2008
RS = 1543 D
.05
.12
.03
Legend
EG PF 1
WS PF 1
Crit PF 1
Ground
Ineff
Bank Sta
Elevation (ft)
Station (ft)

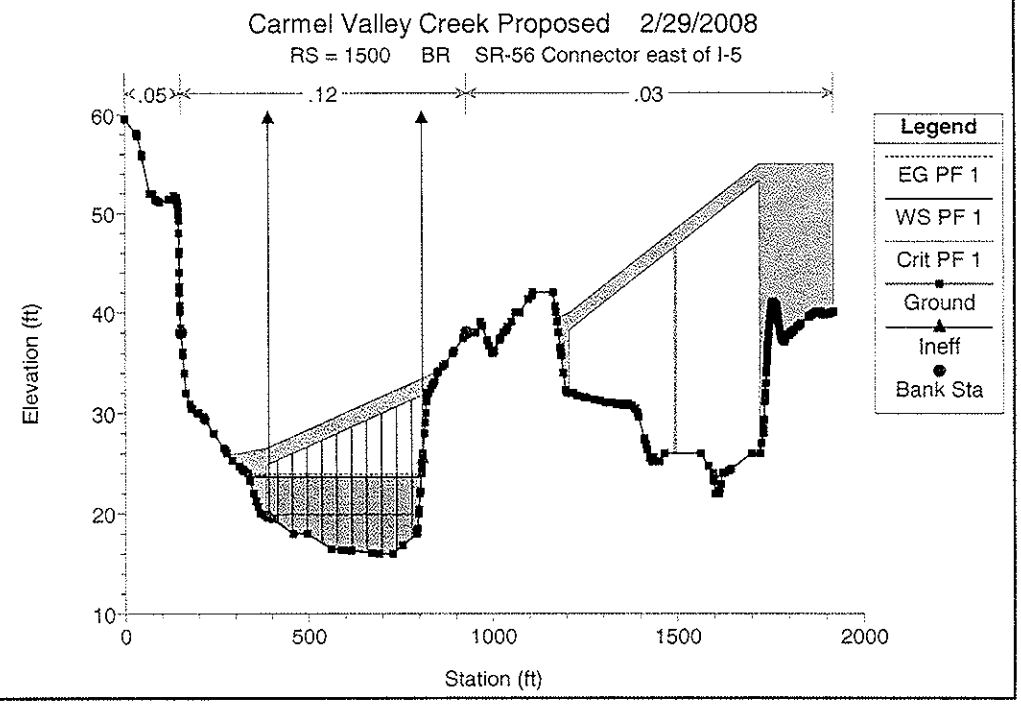
Carmel Valley Creek Proposed 2/29/2008
RS = 1500 BR SR-56 Connector east of I-5
.05
.12
.03
Legend
EG PF 1
WS PF 1
Crit PF 1
Ground
Ineff
Bank Sta
Elevation (ft)
Station (ft)

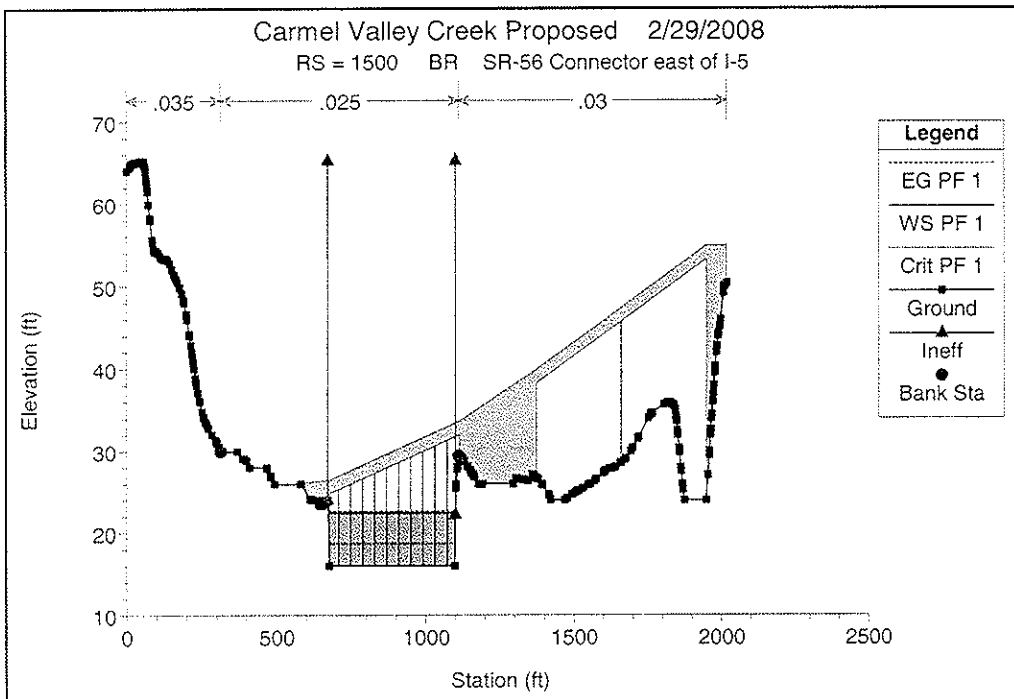
Carmel Valley Creek Proposed 2/29/2008
RS = 1500 BR SR-56 Connector east of I-5
.035
.025
.03
Legend
EG PF 1
WS PF 1
Crit PF 1
Ground
Ineff
Bank Sta
Elevation (ft)
Station (ft)

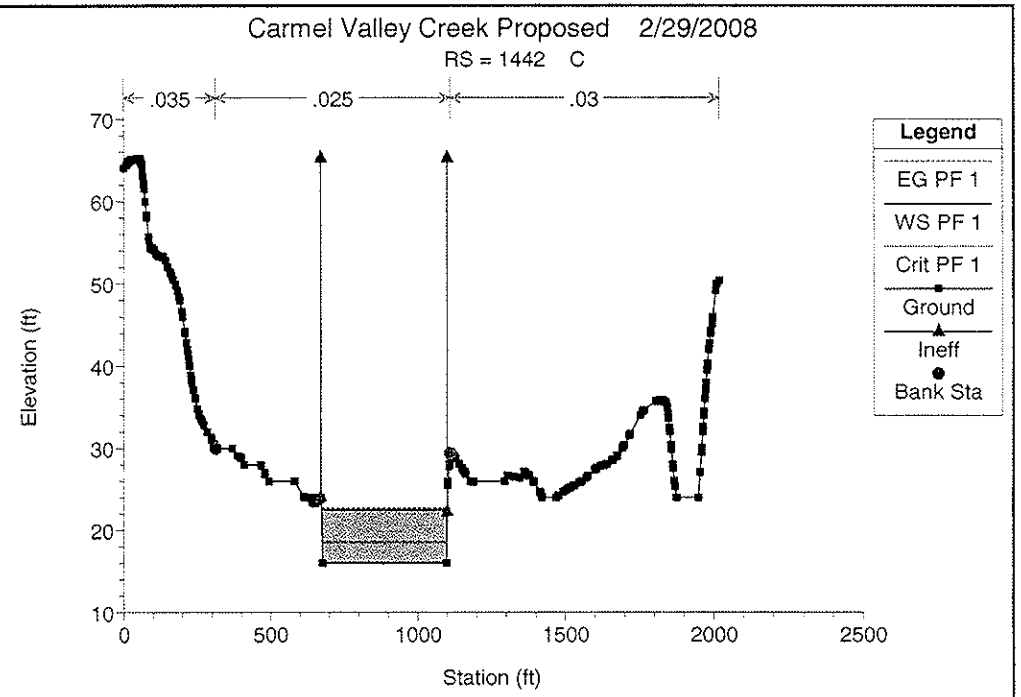
Carmel Valley Creek Proposed 2/29/2008
RS = 1442 C
.035
.025
.03
Legend
EG PF 1
WS PF 1
Crit PF 1
Ground
Ineff
Bank Sta
Elevation (ft)
Station (ft)

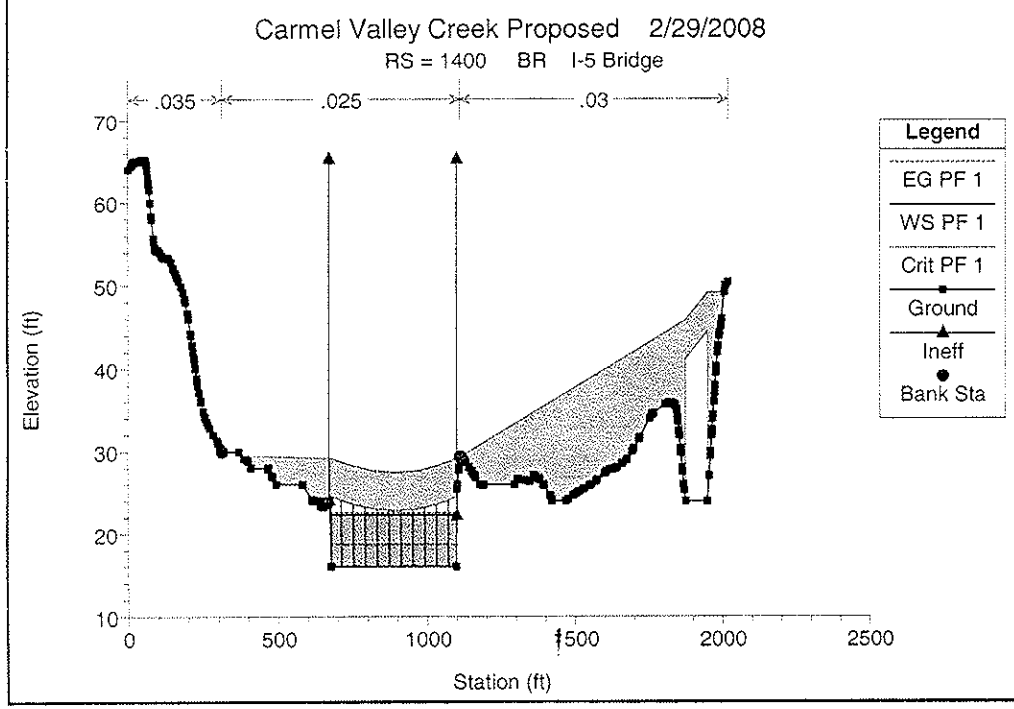
Carmel Valley Creek Proposed 2/29/2008
RS = 1400 BR I-5 Bridge
.035
.025
.03
Legend
EG PF 1
WS PF 1
Crit PF 1
Ground
Ineff
Bank Sta
Elevation (ft)
Station (ft)

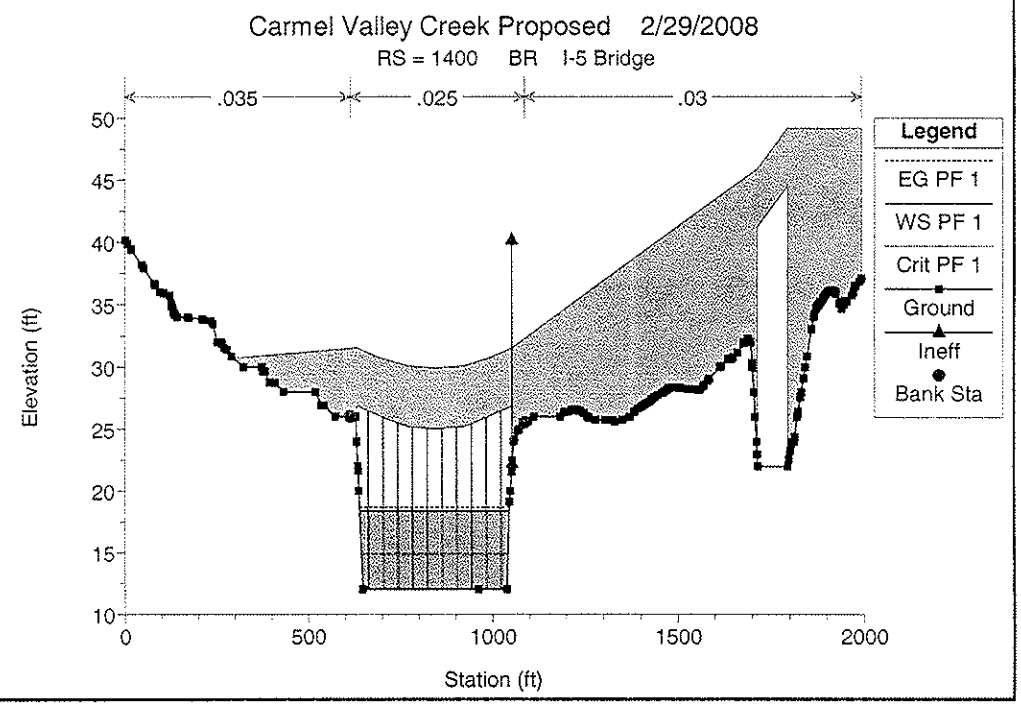
Carmel Valley Creek Proposed 2/29/2008
RS = 1400 BR I-5 Bridge
.035
.025
.03
Legend
EG PF 1
WS PF 1
Crit PF 1
Ground
Ineff
Bank Sta
Elevation (ft)
Station (ft)

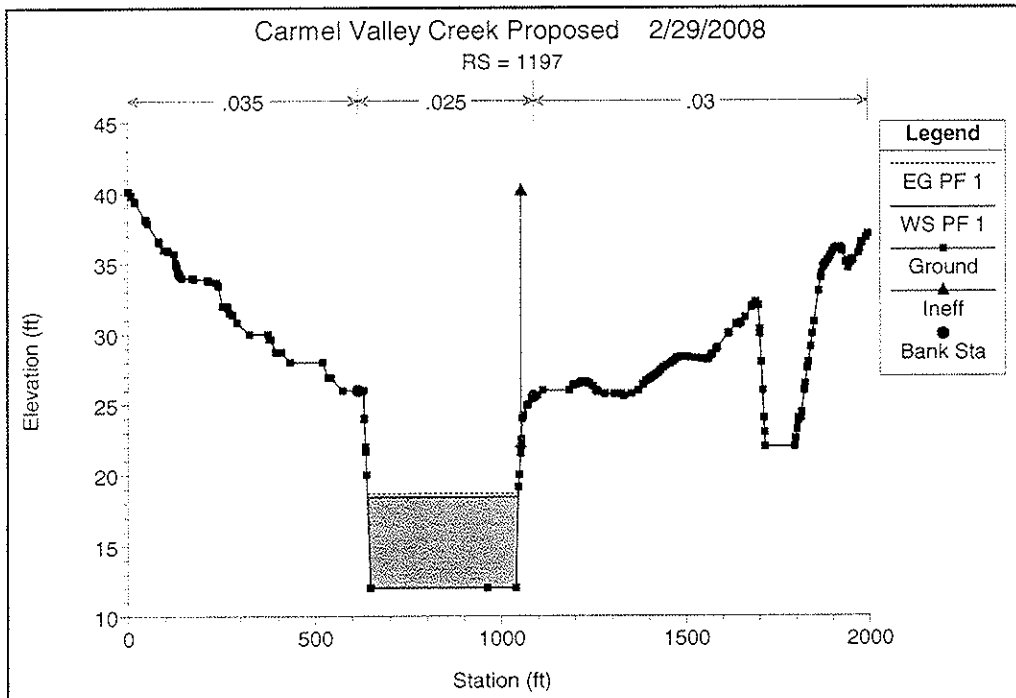
Carmel Valley Creek Proposed 2/29/2008
RS = 1197
.035
.025
.03
Legend
EG PF 1
WS PF 1
Ground
Ineff
Bank Sta
Elevation (ft)
Station (ft)

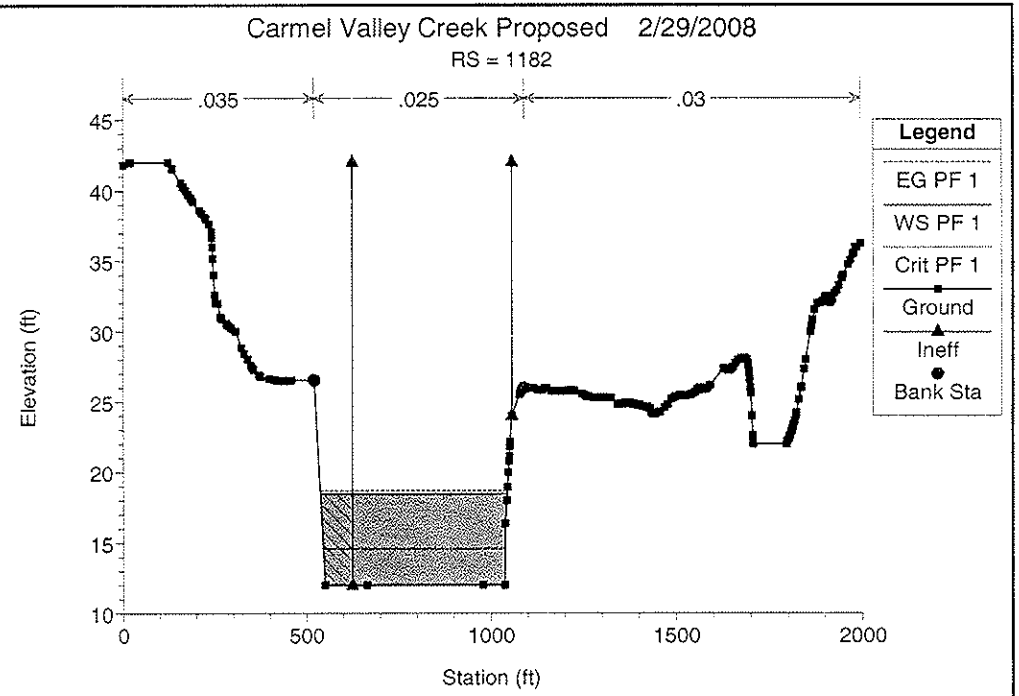
Carmel Valley Creek Proposed 2/29/2008
RS = 1182
.035
.025
.03
Legend
EG PF 1
WS PF 1
Crit PF 1
Ground
Ineff
Bank Sta
Elevation (ft)
Station (ft)

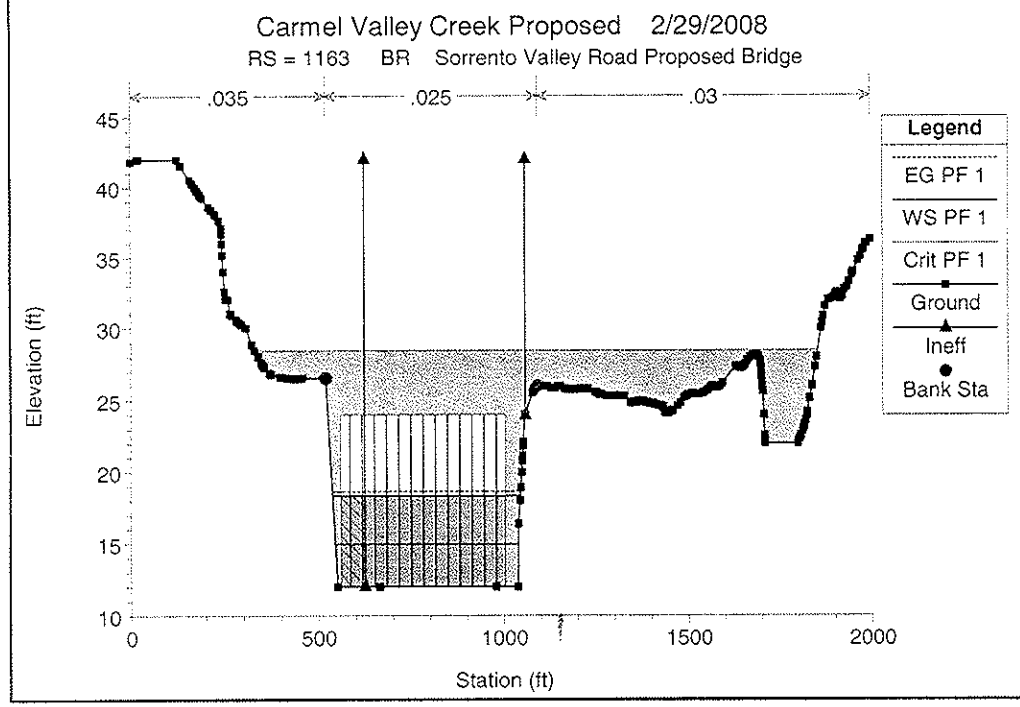
Carmel Valley Creek Proposed 2/29/2008
RS = 1163 BR Sorrento Valley Road Proposed Bridge
.035
.025
.03
Legend
EG PF 1
WS PF 1
Crit PF 1
Ground
Ineff
Bank Sta
Elevation (ft)
Station (ft)

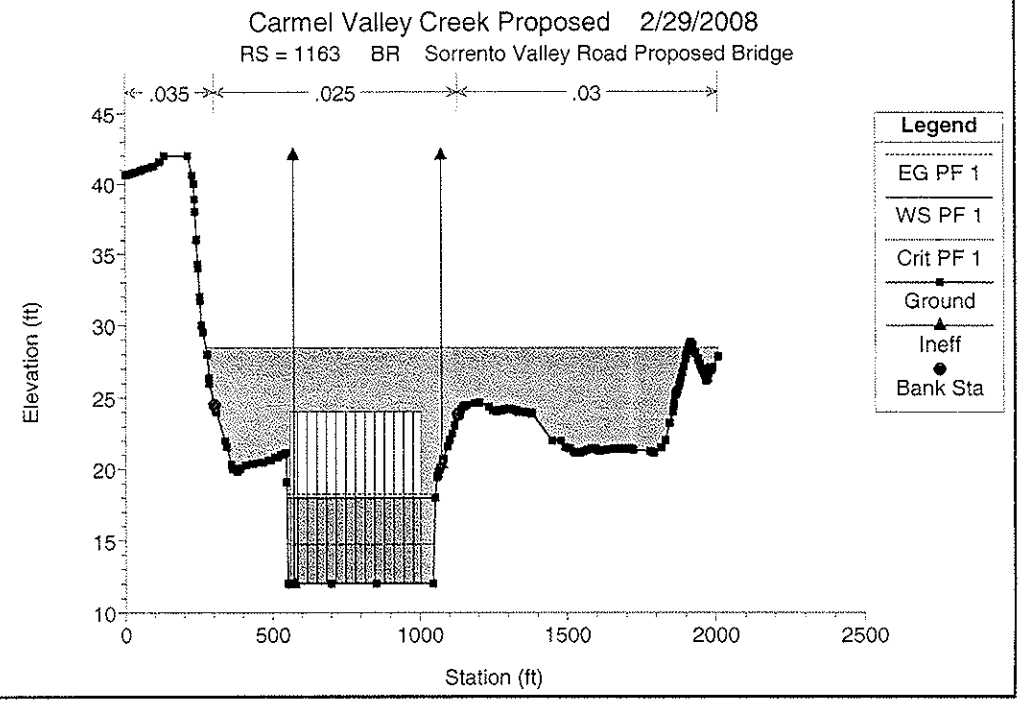
Carmel Valley Creek Proposed 2/29/2008
RS = 1163 BR Sorrento Valley Road Proposed Bridge
.035
.025
.03
Legend
EG PF 1
WS PF 1
Crit PF 1
Ground
Ineff
Bank Sta
Elevation (ft)
Station (ft)

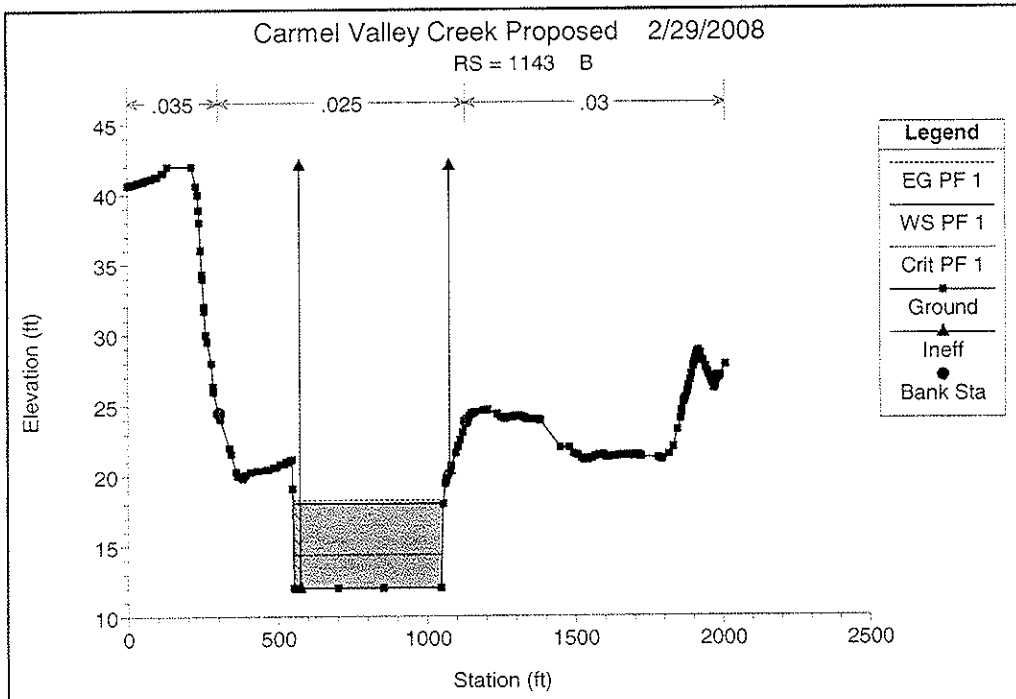
Carmel Valley Creek Proposed 2/29/2008
RS = 1143 B
.035
.025
.03
Legend
EG PF 1
WS PF 1
Crit PF 1
Ground
Ineff
Bank Sta
Elevation (ft)
Station (ft)

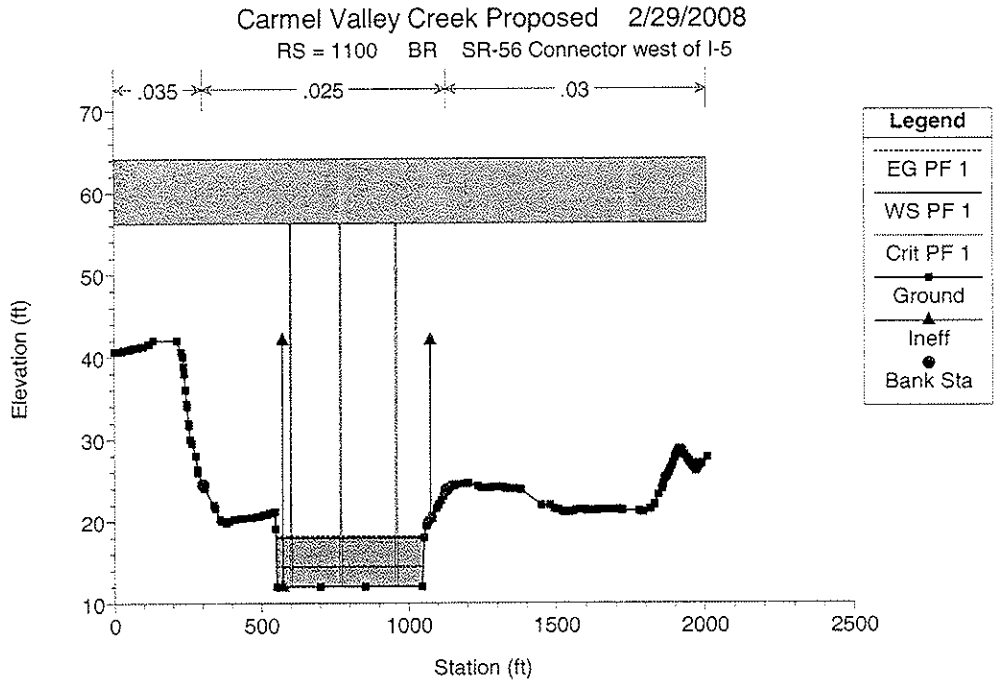
Carmel Valley Creek Proposed 2/29/2008
RS = 1100 BR SR-56 Connector west of I-5
.035
.025
.03
Legend
EG PF 1
WS PF 1
Crit PF 1
Ground
Ineff
Bank Sta
Elevation (ft)
Station (ft)

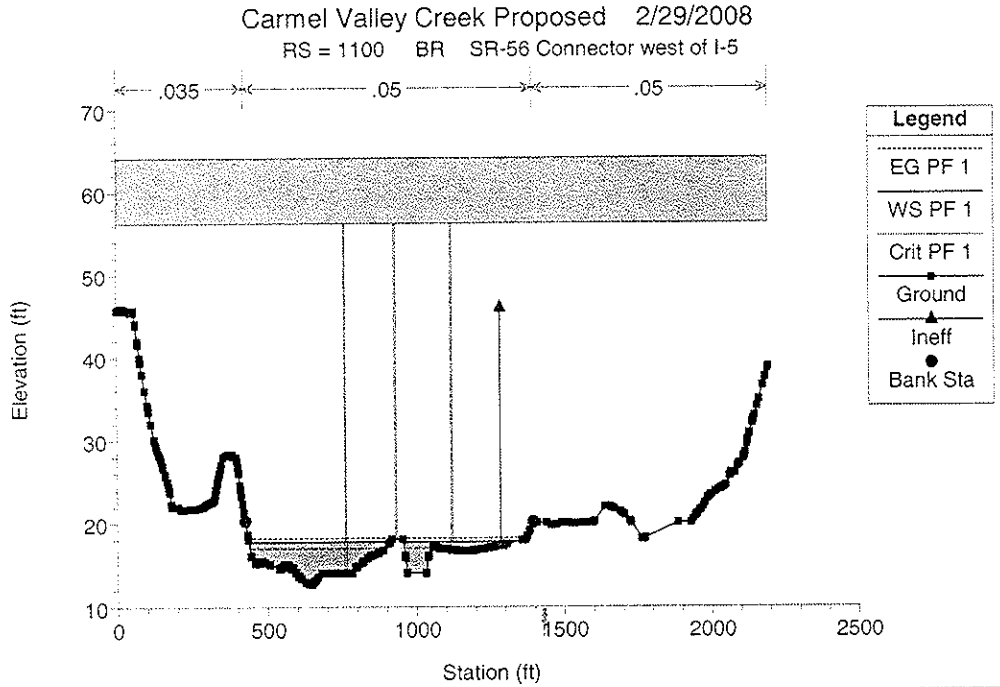
Carmel Valley Creek Proposed 2/29/2008
RS = 1100 BR SR-56 Connector west of I-5
.035
.05
.05
Legend
EG PF 1
WS PF 1
Crit PF 1
Ground
Ineff
Bank Sta
Elevation (ft)
Station (ft)

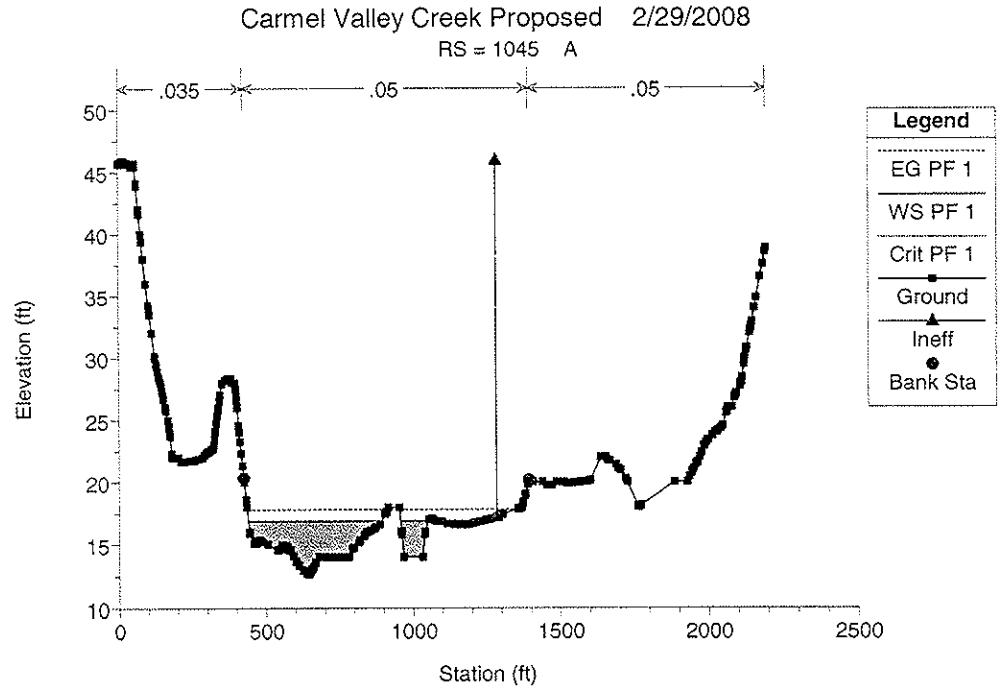
Carmel Valley Creek Proposed 2/29/2008
RS = 1045 A
.035
.05
.05
Legend
EG PF 1
WS PF 1
Crit PF 1
Ground
Ineff
Bank Sta
Elevation (ft)
Station (ft)

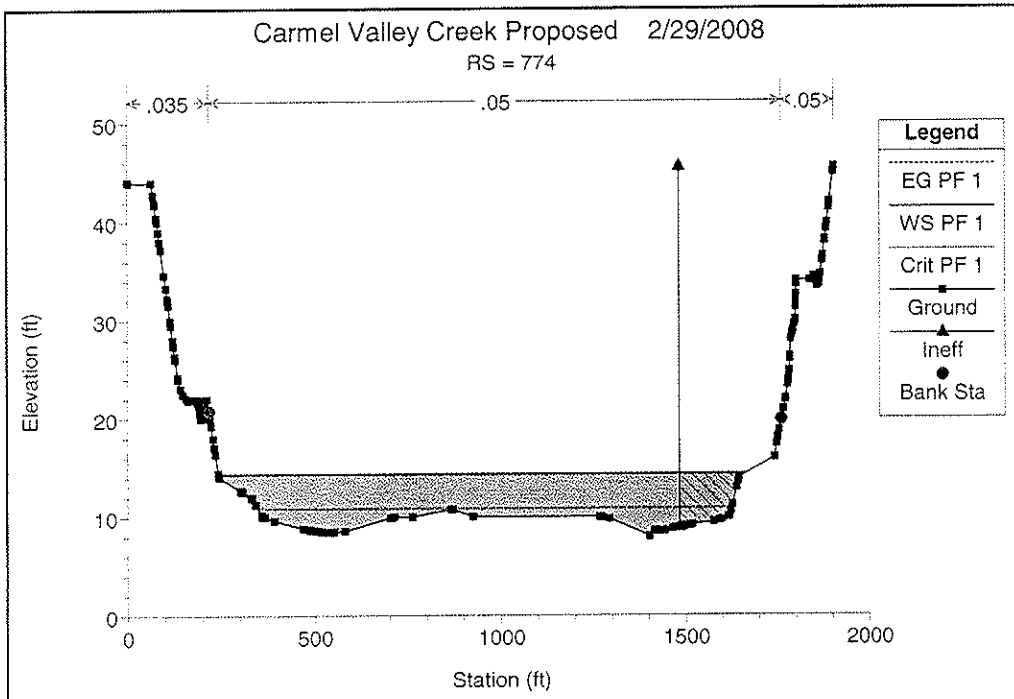
Carmel Valley Creek Proposed 2/29/2008
RS = 774
.035
.05
.05
Legend
EG PF 1
WS PF 1
Crit PF 1
Ground
Ineff
Bank Sta
Elevation (ft)
Station (ft)
0
10
20
30
40
50
0
500
1000
1500
2000

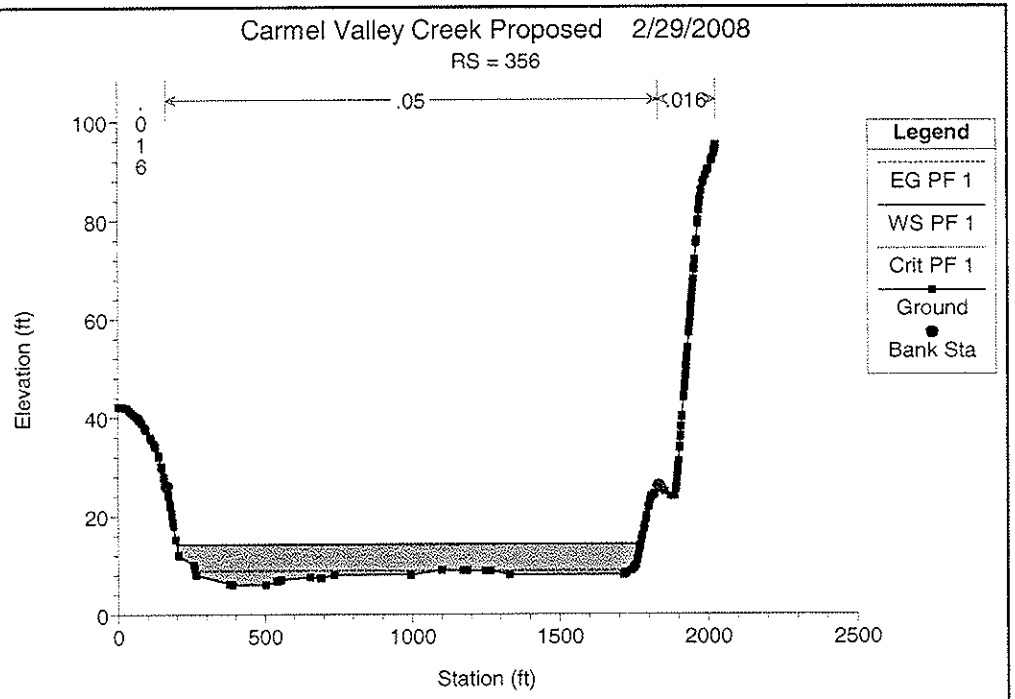
Carmel Valley Creek Proposed 2/29/2008
RS = 356
.05
.016
Legend
EG PF 1
WS PF 1
Crit PF 1
Ground
Bank Sta
Elevation (ft)
Station (ft)
0
20
40
60
80
100
0
500
1000
1500
2000
2500

Proposed.rep

HEC-RAS Version 3.1.3 May 2005
U.S. Army Corp of Engineers
Hydrologic Engineering Center
609 Second Street
Davis, California

```
X     X  XXXXXX    XXXX        XXXX       XX      XXXX
X     X  X        X    X       X   X     X  X    X
X     X  X        X            X   X    X    X   X
XXXXXXX  XXXX     X       XXX  XXXX     XXXXXX    XXXX
X     X  X        X            X  X     X    X        X
X     X  X        X    X       X   X    X    X        X
X     X  XXXXXX    XXXX        X    X   X    X   XXXXX
```

PROJECT DATA
Project Title: CarmelValleyCreek_Proposed
Project File : Proposed.prj
Run Date and Time: 2/29/2008 3:53:00 PM

Project in English units

Project Description:
Carmel Valley Creek - Proposed Conditions Model

PLAN DATA

Plan Title: Carmel Valley Creek
Plan File : p:\1683_T064_I5_Floodplain\420_Env_ Stud\Carmel Valley\HEC RAS\Final\Proposed\Proposed.p01

Geometry Title: CV_Proposed
Geometry File : p:\1683_T064_I5_Floodplain\420_Env_ Stud\Carmel Valley\HEC RAS\Final\Proposed\Proposed.g02

Flow Title : Carmel Valley Flow
Flow File : p:\1683_T064_I5_Floodplain\420_Env_ Stud\Carmel Valley\HEC RAS\Final\Proposed\Proposed.f01

Plan Summary Information:

Number of:	Cross Sections =	16	Multiple Openings =	0
	Culverts =	0	Inline Structures =	0
	Bridges =	5	Lateral Structures =	0

Computational Information
Water surface calculation tolerance = 0.01
Critical depth calculation tolerance = 0.01
Maximum number of iterations = 20
Maximum difference tolerance = 0.3
Flow tolerance factor = 0.001

Computation Options
Critical depth computed only where necessary
Conveyance Calculation Method: At breaks in n values only
Friction Slope Method: Average Conveyance
Computational Flow Regime: Mixed Flow

FLOW DATA

Flow Title: Carmel Valley Flow
Flow File : p:\1683_T064_I5_Floodplain\420_Env_ Stud\Carmel Valley\HEC RAS\Final\Proposed\Proposed.f01

Flow Data (cfs)

River	Reach	RS	PF 1
CV Creek	Lower	4421	10000

Boundary Conditions

River	Reach	Profile	Upstream	Downstream
CV Creek	Lower	PF 1	Known WS = 38.633	Known WS = 14.33

GEOMETRY DATA

Geometry Title: CV_Proposed
Geometry File : p:\1683_T064_I5_Floodplain\420_Env_ Stud\Carmel Valley\HEC RAS\Final\Proposed\Proposed.g02

CROSS SECTION

RIVER: CV Creek
REACH: Lower RS: 4421

INPUT
Description: J
Station Elevation Data num= 55

Sta	Elev	Sta	Elev	Sta	Elev	Sta	Elev	Sta	Elev
0	52.26	1.03	52	6.1	50.75	12.84	49.13	17.47	48
22.65	46.76	28.08	45.43	34.09	44	35.88	43.56	42.44	42
43.77	41.68	50.81	40	51.74	39.78	59.2	38	59.77	37.86
67.6	36	67.85	35.94	75.17	34.2	75.96	34.01	76.01	34
128.72	33.09	129.52	33.08	193.37	32	239.37	32	241.51	32.94
243.94	34	245.08	34.5	253.1	38	253.71	38.27	257.67	40
258.71	40.45	266.82	44	271.18	45.9	271.4	46	271.59	46.08
275.98	48	276.52	48.24	280.55	50	291.23	50	293.78	49.16
297.24	48	433.54	48	445.17	47.62	480.38	46.2	486.48	46
492.92	46	497.05	46.52	509.08	48	510.26	48.38	515.05	50
520.48	51.94	520.65	52	520.85	52.07	526.21	54	529.36	54.34

Manning's n Values num= 3

Sta	n Val	Sta	n Val	Sta	n Val
0	.016	50.81	.12	258.71	.03

Bank Sta: Left Right Lengths: Left Channel Right Coeff Contr. Expan.

50.81 258.71 241.6 335.33 335.6 .1 .3

CROSS SECTION OUTPUT Profile #PF 1

E.G. Elev (ft)	42.28	Element	Left OB	Channel
Right OB				
Vel Head (ft)	0.53	Wt. n-Val.	0.016	0.120
0.030				
W.S. Elev (ft)	41.74	Reach Len. (ft)	241.60	335.33
335.60				
Crit W.S. (ft)	37.49	Flow Area (sq ft)	6.36	1700.88
1.91				
E.G. Slope (ft/ft)	0.013701	Area (sq ft)	6.36	1700.88
1.91				
Q Total (cfs)	10000.00	Flow (cfs)	61.90	9930.30
7.79				
Top Width (ft)	218.15	Top Width (ft)	7.30	207.90
2.95				
Vel Total (ft/s)	5.85	Avg. Vel. (ft/s)	9.74	5.84
4.09				
Max Chl Dpth (ft)	9.74	Hydr. Depth (ft)	0.87	8.18
0.65				
Conv. Total (cfs)	85433.2	Conv. (cfs)	528.9	84837.8
66.6				
Length Wtd. (ft)	335.01	Wetted Per. (ft)	7.50	210.39
3.22				
Min Ch El (ft)	32.00	Shear (lb/sq ft)	0.72	6.92
0.51				
Alpha	1.01	Stream Power (lb/ft s)	7.06	40.37
2.07				
Frctn Loss (ft)	4.18	Cum Volume (acre-ft)	0.18	330.07
0.19				
C & E Loss (ft)	0.05	Cum SA (acres)	0.17	55.82
0.17				

Warning: The energy loss was greater than 1.0 ft (0.3 m). between the current and previous cross
section. This may indicate the need for additional cross sections.

CROSS SECTION

RIVER: CV Creek
REACH: Lower RS: 4086

INPUT
Description: I
Station Elevation Data num= 80

Sta	Elev	Sta	Elev	Sta	Elev	Sta	Elev	Sta	Elev
0	48.42	1.53	48.32	3.13	48.24	5.78	48	22.44	46
27.15	45.11	34.23	44	36.34	43.48	42.42	42	47.11	40.85
50.62	40	63.1	36.95	67.02	36	79.23	33.02	79.82	32.88
83.41	32	131.54	30.66	139.96	30.62	166.4	30.23	201.42	30
267.01	30	274.12	29.39	283.67	29.05	305.37	28.83	320.36	29.24
330.71	30	336.06	30.9	344	32	345.75	32.61	350.32	34
352.15	34.64	355.79	36	356.98	36.46	360.77	38	363.06	39.2
364.5	40	364.96	40.34	367.6	42	368.04	42.37	372.25	45.89
372.38	46	372.47	46.08	374.77	48	374.96	48.16	376.77	49.67
377.16	50	378.65	51.25	379.55	52	381.01	53.22	381.94	54
386.94	54	392.78	52	397.78	51.04	405.31	50.71	407.56	50.47

409.83	50.24	414.82	50.13	417.28	50.19	438.64	50.63	448.14	50.87
459.13	51.12	485.31	51.85	486.62	51.88	490.65	52	537.81	52
565.33	51.4	570.93	51.3	588.12	50.94	629.07	50	632.02	49.83
648.11	48.88	665.94	48.57	666.9	48.79	667.4	48.68	669.82	49.31
670.44	49.4	672.48	50	690.21	51.9	691.23	52	715.84	53.55

Manning's n Values num= 3

Sta	n Val	Sta	n Val	Sta	n Val
0	.016	63.1	.12	356.98	.03

Bank Sta: Left	Right	Lengths: Left	Channel	Right	Coeff Contr.	Expan.
63.1	356.98	524.5	555.38	523.1	.1	.3

CROSS SECTION OUTPUT Profile #PF 1

E.G. Elev (ft)	38.05	Element	Left OB	Channel
Right OB				
Vel Head (ft)	0.36	Wt. n-Val.	0.016	0.120
0.030				
W.S. Elev (ft)	37.68	Reach Len. (ft)	524.50	555.38
523.10				
Crit W.S. (ft)		Flow Area (sq ft)	1.10	2065.95
1.84				
E.G. Slope (ft/ft)	0.011400	Area (sq ft)	1.10	2065.95
1.84				
Q Total (cfs)	10000.00	Flow (cfs)	5.50	9987.81
6.68				
Top Width (ft)	299.90	Top Width (ft)	3.00	293.88
3.01				
Vel Total (ft/s)	4.83	Avg. Vel. (ft/s)	4.99	4.83
3.62				
Max Chl Dpth (ft)	8.85	Hydr. Depth (ft)	0.37	7.03
0.61				
Conv. Total (cfs)	93656.6	Conv. (cfs)	51.5	93542.4
62.6				
Length Wtd. (ft)	555.21	Wetted Per. (ft)	3.09	295.46
3.25				
Min Ch El (ft)	28.83	Shear (lb/sq ft)	0.25	4.98
0.40				
Alpha	1.00	Stream Power (lb/ft s)	1.27	24.06
1.46				
Frctn Loss (ft)	3.32	Cum Volume (acre-ft)	0.16	315.57
0.18				
C & E Loss (ft)	0.06	Cum SA (acres)	0.14	53.89
0.15				

Warning: The conveyance ratio (upstream conveyance divided by downstream conveyance) is less than
0.7 or greater than 1.4. This may indicate the need for additional cross sections.
Warning: The energy loss was greater than 1.0 ft (0.3 m). between the current and previous cross
section. This may indicate the need for additional cross sections.

CROSS SECTION

RIVER: CV Creek
REACH: Lower RS: 3531

INPUT
Description: H
Station Elevation Data num= 125

Sta	Elev	Sta	Elev	Sta	Elev	Sta	Elev	Sta	Elev
0	57.87	3.19	57.34	12.07	56	15.37	55.47	24.92	54.07
25.25	54.02	25.44	54	26.41	53.87	39.95	52	43.28	51.53
44.67	51.37	46.78	51.12	55.14	50	57.2	49.59	62.26	48
69.12	46.69	71.6	46	73.63	46	84.3	45.5	105.61	44
115.79	43.23	131.41	42	140.05	40.34	141.79	40	148.77	38
149.15	37.89	155.75	36	160.12	34.8	163.09	34	165.8	33.29
170.53	32.04	170.69	32	185.21	28.18	185.88	28	195.01	26.9
202.13	26	214.01	25.82	217.22	25.79	264.55	25.13	278.77	25.06
297.18	24.82	377.81	24.52	394.73	24.59	394.83	24.59	400.55	24.67
423.71	24.79	492.71	25.89	496.95	25.92	499.89	26	500.39	26.23
511.73	31.39	512.87	31.9	513.08	32	513.38	32.14	526.19	37.94
526.31	38	526.4	38.04	534.07	41.51	539.61	44	543.99	45.96
544.07	46	544.7	46.28	548.54	48	548.82	48.13	561.97	54
564.27	55.03	566.46	56	568.05	56.61	571.3	58	572.49	58
574.58	57.04	574.97	56.87	577.2	56	581.11	54.22	581.45	54.07
581.6	54	588.74	52.51	595.7	52	626.84	52	639.23	53.8
640.58	54	640.99	54.07	653.29	56	655.64	56.43	664.61	58
674.95	58.37	689.46	58.67	717.13	59.29	727.89	59.48	738.02	59.58
741.89	59.66	749.59	59.63	753.08	59.69	773.98	59.45	783.3	59.13
786.33	59.03	796.46	58.82	816.58	58	817.21	57.87	825.41	56
844.69	52	856.96	50	868.4	48.27	870.22	48	884.91	46.64
888.16	46.33	902.41	46	947.33	46	948.04	45.79	954.37	44
963.46	44	965.32	44.73	968.49	46	972.99	47.78	973.51	48
975.89	48	982.65	49.04	982.82	49.06	985.5	50	987.63	50.73
989.51	50.71	992.5	51.24	1004.17	52	1029.15	52	1093.82	53.28

Manning's n Values num= 3

Sta	n Val	Sta	n Val	Sta	n Val
0	.016	170.53	.12	513.08	.03

Bank Sta: Left	Right	Lengths: Left	Channel	Right	Coeff Contr.	Expan.
170.53	513.08	605.3	276.6	243.2	.1	.3

CROSS SECTION OUTPUT Profile #PF 1

E.G. Elev (ft)	34.66	Element	Left OB	Channel	Right OB
Vel Head (ft)	0.17	Wt. n-Val.	0.016	0.120	0.030
W.S. Elev (ft)	34.50	Reach Len. (ft)	605.30	276.60	243.20
Crit W.S. (ft)		Flow Area (sq ft)	11.45	3068.20	6.87
E.G. Slope (ft/ft)	0.003682	Area (sq ft)	11.45	3068.20	6.87
Q Total (cfs)	10000.00	Flow (cfs)	72.49	9905.02	22.49
Top Width (ft)	357.35	Top Width (ft)	9.29	342.55	5.51
Vel Total (ft/s)	3.24	Avg. Vel. (ft/s)	6.33	3.23	3.27
Max Chl Dpth (ft)	9.98	Hydr. Depth (ft)	1.23	8.96	1.25
Conv. Total (cfs)	164800.5	Conv. (cfs)	1194.7	163235.2	370.6
Length Wtd. (ft)	277.75	Wetted Per. (ft)	9.61	344.52	6.05
Min Ch El (ft)	24.52	Shear (lb/sq ft)	0.27	2.05	

0.26				
Alpha	1.01	Stream Power (lb/ft s)	1.73	6.61
0.85				
Frctn Loss (ft)	1.19	Cum Volume (acre-ft)	0.08	282.84
0.13				
C & E Loss (ft)	0.00	Cum SA (acres)	0.07	49.83
0.10				

Warning: The energy loss was greater than 1.0 ft (0.3 m). between the current and previous cross
section. This may indicate the need for additional cross sections.

CROSS SECTION

RIVER: CV Creek
REACH: Lower RS: 3254

INPUT
Description:
Station Elevation Data num= 269

Sta	Elev	Sta	Elev	Sta	Elev	Sta	Elev	Sta	Elev
0	71.91	11.89	67.81	13.88	67.12	17	66	17.96	65.64
22.48	64	25.15	63	27.89	62	32.27	60.35	33.23	60
36.1	58.92	38.43	58	38.87	57.83	43.51	56	44.8	55.48
48.56	54	53.59	52	56.32	50.9	58.59	50	61.94	48.65
63.58	48	68.06	47.69	68.93	47.67	70.12	47.64	71.86	47.59
74.62	47.5	79.04	47.34	112.86	46	115.43	45.7	123.54	44.71
128.09	44	130.51	43.3	135.36	42	139.15	40.87	142.1	40
155.42	36.04	155.57	36	155.96	35.89	160.48	34.59	162.7	34
165.92	33.39	168.24	33	171.12	32.63	174.65	32	180.11	31.09
187.24	30	192.37	29.12	198.81	28	209.41	26.2	210.55	26
211.29	25.95	235.51	25.2	241.91	25.04	248.53	25.16	260.64	25.4
264.45	25.43	277.28	25.71	279.26	25.73	289.22	26	291.34	26.18
302.09	27.21	305.1	27.53	310.28	28	313.16	28.27	316.39	28.54
325.56	29.36	333.51	30	334.52	30.07	335.17	30.12	342.16	30.6
345.2	30.8	353.19	31.34	355.66	31.5	363.04	32	365.81	32.09
365.89	32.1	365.96	32.1	370.9	32.26	371.52	32.27	372.45	32.29
376.07	32.32	377.35	32.32	400.16	32.41	401.72	32.4	406.16	32.36
408.69	32.26	412.3	32.11	413.89	32.04	413.99	32.04	414.97	32
420.87	31.58	421.91	31.52	423.39	31.41	427.12	31.02	430.22	30.74
436.54	30.09	436.78	30.05	437.37	30	442.85	29.03	448.79	28
450.48	27.71	452.34	27.38	456.08	26.73	459.98	26	469.03	24
726.28	24	736.54	25.84	737.32	25.97	737.46	26	737.93	26
740.39	26.61	743.3	27.25	744.18	27.43	745.51	27.64	747.33	28
749.71	28.52	750.22	28.63	751.14	28.77	754.03	29.39	756.73	29.88
757.35	30	761.19	30.82	762.89	31.12	767.4	32	767.72	32.07
767.87	32.09	771.59	32.88	773.07	33.15	775.64	33.67	776.44	33.81
777.46	34	779.2	34.32	779.66	34.4	779.88	34.44	782.38	34.85
782.79	34.91	783.34	34.99	785.01	35.23	788.72	35.85	789.48	35.98
789.58	36	799.32	37.56	801.7	38	813.21	39.47	815.96	40
830.52	40	831.88	39.91	832.13	39.89	837.56	39.44	839.23	39.32
842.49	39.08	844.44	38.95	847.54	38.76	848.73	38.7	851.49	38.53
852.28	38.47	854.64	38.31	855.06	38.27	855.35	38.26	855.65	38.23
855.87	38.21	856.04	38.19	856.18	38.19	861.4	38.33	861.8	38.31
868.8	38.36	871.77	38.27	872.55	38.28	873.56	38.29	884.47	38.35
885.9	38.37	888.61	38.48	895.86	38.57	897.14	38.67	899.89	38.88
903.41	38.99	906.84	39.31	912.03	39.84	912.35	39.87	913.54	40
922.07	41.25	924.43	41.56	925.5	41.67	926.24	41.72	926.88	41.76
928.59	42	933.38	43.13	938.83	44.43	941.46	45.05	953.22	46.98
959.22	48	959.46	48.04	959.53	48.05	959.59	48.08	962.68	48.74

963.07	48.9	963.85	49.21	964.09	49.32	964.32	49.42	964.54	49.5
964.74	49.58	966.14	50	968.36	50.67	976.65	53.07	979.91	54
980.24	54.1	990.21	56.94	993.91	58	994.76	58.24	996.59	58.77
999.37	59.49	1001.14	60	1003.71	60.7	1008.01	62	1077.87	62
1090.32	60.66	1096.55	60.14	1096.67	60.18	1097.28	60	1098.58	60
1099.41	59.52	1100.03	59.21	1100.75	59.02	1101.89	58.84	1102.12	58.8
1102.29	58.77	1102.39	58.75	1103.63	58.54	1104.9	58.31	1105.04	58.26
1105.86	58	1106.32	58	1112.23	56	1112.69	55.85	1114.23	55.32
1123.68	52	1127.64	50.6	1129.36	50	1135.37	48.54	1137.52	48
1143.69	46.52	1146.05	46	1153.08	44.34	1154.67	44	1159.77	43.26
1164.4	42.5	1167.15	42	1170.77	41.66	1175.57	41.24	1229.51	41.44
1248.33	42	1257.37	43.28	1262.23	44	1263.34	44.53	1266.48	46
1267.01	46.24	1269.89	47.51	1271.02	48	1275.92	49.03	1280.62	50
1283.61	50.96	1291.65	53.53	1293.11	54	1310.69	54	1311.36	53.67
1314.85	52	1316.37	51.3	1319.48	50	1396.2	50		

Manning's n Values num= 3

Sta	n Val	Sta	n Val	Sta	n Val
0	.016	155.42	.12	782.79	.03

Bank Sta: Left	Right	Lengths: Left	Channel	Right	Coeff Contr.	Expan.
155.42	782.79	187.9	172.21	187.17	.1	.3

Ineffective Flow num= 1

Sta L	Sta R	Elev	Permanent
0	420		F

CROSS SECTION OUTPUT Profile #PF 1

E.G. Elev (ft)	33.47	Element	Left OB	Channel
Right OB				
Vel Head (ft)	0.19	Wt. n-Val.		0.120
W.S. Elev (ft)	33.28	Reach Len. (ft)	5.50	5.50
5.50				
Crit W.S. (ft)	27.52	Flow Area (sq ft)		2848.05
E.G. Slope (ft/ft)	0.005012	Area (sq ft)		3976.08
Q Total (cfs)	10000.00	Flow (cfs)		10000.00
Top Width (ft)	607.18	Top Width (ft)		607.18
Vel Total (ft/s)	3.51	Avg. Vel. (ft/s)		3.51
Max Chl Dpth (ft)	9.28	Hydr. Depth (ft)		8.05
Conv. Total (cfs)	141253.4	Conv. (cfs)		141253.4
Length Wtd. (ft)	5.50	Wetted Per. (ft)		355.30
Min Ch El (ft)	24.00	Shear (lb/sq ft)		2.51
Alpha	1.00	Stream Power (lb/ft s)		8.81
Frctn Loss (ft)	0.04	Cum Volume (acre-ft)	0.00	260.48
0.11				
C & E Loss (ft)	0.00	Cum SA (acres)	0.00	46.82
0.08				

BRIDGE

RIVER: CV Creek
REACH: Lower RS: 3100

INPUT
Description: El Camino Real Bridge
Distance from Upstream XS = 5.5
Deck/Roadway Width = 150
Weir Coefficient = 2.6
Upstream Deck/Roadway Coordinates
num= 6

Sta	Hi Cord	Lo Cord	Sta	Hi Cord	Lo Cord	Sta	Hi Cord	Lo Cord
0	40.41	0	420	40.41	0	420	40.41	35
760	40.41	35	760	40.41	0	1500	40.41	0

Upstream Bridge Cross Section Data
Station Elevation Data num= 269

Sta	Elev	Sta	Elev	Sta	Elev	Sta	Elev	Sta	Elev
0	71.91	11.89	67.81	13.88	67.12	17	66	17.96	65.64
22.48	64	25.15	63	27.89	62	32.27	60.35	33.23	60
36.1	58.92	38.43	58	38.87	57.83	43.51	56	44.8	55.48
48.56	54	53.59	52	56.32	50.9	58.59	50	61.94	48.65
63.58	48	68.06	47.69	68.93	47.67	70.12	47.64	71.86	47.59
74.62	47.5	79.04	47.34	112.86	46	115.43	45.7	123.54	44.71
128.09	44	130.51	43.3	135.36	42	139.15	40.87	142.1	40
155.42	36.04	155.57	36	155.96	35.89	160.48	34.59	162.7	34
165.92	33.39	168.24	33	171.12	32.63	174.65	32	180.11	31.09
187.24	30	192.37	29.12	198.81	28	209.41	26.2	210.55	26
211.29	25.95	235.51	25.2	241.91	25.04	248.53	25.16	260.64	25.4
264.45	25.43	277.28	25.71	279.26	25.73	289.22	26	291.34	26.18
302.09	27.21	305.1	27.53	310.28	28	313.16	28.27	316.39	28.54
325.56	29.36	333.51	30	334.52	30.07	335.17	30.12	342.16	30.6
345.2	30.8	353.19	31.34	355.66	31.5	363.04	32	365.81	32.09
365.89	32.1	365.96	32.1	370.9	32.26	371.52	32.27	372.45	32.29
376.07	32.32	377.35	32.32	400.16	32.41	401.72	32.4	406.16	32.36
408.69	32.26	412.3	32.11	413.89	32.04	413.99	32.04	414.97	32
420.87	31.58	421.91	31.52	423.39	31.41	427.12	31.02	430.22	30.74
436.54	30.09	436.78	30.05	437.37	30	442.85	29.03	448.79	28
450.48	27.71	452.34	27.38	456.08	26.73	459.98	26	469.03	24
726.28	24	736.54	25.84	737.32	25.97	737.46	26	737.93	26
740.39	26.61	743.3	27.25	744.18	27.43	745.51	27.64	747.33	28
749.71	28.52	750.22	28.63	751.14	28.77	754.03	29.39	756.73	29.88
757.35	30	761.19	30.82	762.89	31.12	767.4	32	767.72	32.07
767.87	32.09	771.59	32.88	773.07	33.15	775.64	33.67	776.44	33.81
777.46	34	779.2	34.32	779.66	34.4	779.88	34.44	782.38	34.85
782.79	34.91	783.34	34.99	785.01	35.23	788.72	35.85	789.48	35.98
789.58	36	799.32	37.56	801.7	38	813.21	39.47	815.96	40
830.52	40	831.88	39.91	832.13	39.89	837.56	39.44	839.23	39.32
842.49	39.08	844.44	38.95	847.54	38.76	848.73	38.7	851.49	38.53
852.28	38.47	854.64	38.31	855.06	38.27	855.35	38.26	855.65	38.23
855.87	38.21	856.04	38.19	856.18	38.19	861.4	38.33	861.8	38.31
868.8	38.36	871.77	38.27	872.55	38.28	873.56	38.29	884.47	38.35
885.9	38.37	888.61	38.48	895.86	38.57	897.14	38.67	899.89	38.88
903.41	38.99	906.84	39.31	912.03	39.84	912.35	39.87	913.54	40
922.07	41.25	924.43	41.56	925.5	41.67	926.24	41.72	926.88	41.76
928.59	42	933.38	43.13	938.83	44.43	941.46	45.05	953.22	46.98
959.22	48	959.46	48.04	959.53	48.05	959.59	48.08	962.68	48.74
963.07	48.9	963.85	49.21	964.09	49.32	964.32	49.42	964.54	49.5
964.74	49.58	966.14	50	968.36	50.67	976.65	53.07	979.91	54
980.24	54.1	990.21	56.94	993.91	58	994.76	58.24	996.59	58.77
999.37	59.49	1001.14	60	1003.71	60.7	1008.01	62	1077.87	62
1090.32	60.66	1096.55	60.14	1096.67	60.18	1097.28	60	1098.58	60

1099.41	59.52	1100.03	59.21	1100.75	59.02	1101.89	58.84	1102.12	58.8
1102.29	58.77	1102.39	58.75	1103.63	58.54	1104.9	58.31	1105.04	58.26
1105.86	58	1106.32	58	1112.23	56	1112.69	55.85	1114.23	55.32
1123.68	52	1127.64	50.6	1129.36	50	1135.37	48.54	1137.52	48
1143.69	46.52	1146.05	46	1153.08	44.34	1154.67	44	1159.77	43.26
1164.4	42.5	1167.15	42	1170.77	41.66	1175.57	41.24	1229.51	41.44
1248.33	42	1257.37	43.28	1262.23	44	1263.34	44.53	1266.48	46
1267.01	46.24	1269.89	47.51	1271.02	48	1275.92	49.03	1280.62	50
1283.61	50.96	1291.65	53.53	1293.11	54	1310.69	54	1311.36	53.67
1314.85	52	1316.37	51.3	1319.48	50	1396.2	50		

Manning's n Values num= 3

Sta	n Val	Sta	n Val	Sta	n Val
0	.016	155.42	.12	782.79	.03

Bank Sta: Left Right Coeff Contr. Expan.

155.42	782.79	.1	.3

Ineffective Flow num= 1

Sta L	Sta R	Elev	Permanent
0	420		F

Downstream Deck/Roadway Coordinates
num= 6

Sta	Hi Cord	Lo Cord	Sta	Hi Cord	Lo Cord	Sta	Hi Cord	Lo Cord
0	40.41	35	470	40.41	0	470	40.41	35
810	40.41	35	810	40.41	0	1500	40.41	0

Downstream Bridge Cross Section Data
Station Elevation Data num= 294

Sta	Elev	Sta	Elev	Sta	Elev	Sta	Elev	Sta	Elev
0	70.19	.46	70	4.87	68.16	5.24	68	6	67.69
10.18	66	12.4	65.12	13.42	64.74	14.62	64.28	15.42	64
20.74	62.34	21.86	62	22.21	61.9	22.5	61.82	28.81	60
29.35	59.84	30.95	59.39	42.74	56	43.98	55.64	75.9	46.48
77.59	46	80.1	45.35	85.87	44	108.15	44	127.14	43.28
130.43	43.21	144.64	43.08	146.13	42.92	149.42	43.14	150.29	42.99
151.17	42.88	154.78	43.12	155.22	43.09	155.59	43.07	155.88	43.05
156.06	43.04	160.77	43.26	161	43.28	161.9	43.33	164.34	43.47
169.61	43.53	179.55	43.87	180.53	43.91	193.56	44.47	196.53	44.56
211.88	45.26	222.82	45.69	225.52	45.8	231.35	46	238.94	46.24
239.31	46.22	239.59	46.19	239.88	46.15	253.98	46.38	267.23	46
281.26	46	287.68	45.6	304.33	45.22	328.61	44.41	338.9	44
344.54	44	391.58	42.03	392.44	42	398.65	41.82	400.64	41.75
401.56	41.72	419.94	41.19	420.7	41.17	442.6	40.45	455.6	40
465.16	38.62	468.47	38	469.61	37.57	477.28	34.64	481.13	33.18
485.73	31.41	488.51	30.34	489.39	30	491.61	29.15	494.58	28
497.25	27.71	513.25	26	518.58	25.25	528.33	24	543.61	22.97
545.94	22.86	554.76	22.29	556.39	22.32	558.24	22.21	586.74	22.24
598.59	22.32	760.98	24	776.49	24	783.81	25.71	786.68	26.39
794.07	28	795.81	28.32	800.28	29.07	803.65	29.4	804.69	29.5
805.62	29.6	809.48	30	809.82	30.03	809.92	30.05	810.06	30.06
815.03	30.6	819.09	31.06	821.83	31.29	823.51	31.44	824.68	31.53
829.05	31.82	829.47	31.84	829.84	31.86	832.21	32	835.54	32.19
836.45	32.24	841.07	32.47	844.03	32.56	844.56	32.59	845.59	32.66
847.57	32.65	848.49	32.72	848.59	32.72	850.69	32.87	851.07	32.88
851.65	32.87	853.56	33.08	854.61	33.06	856.48	33.01	858.5	33.22
861.63	33.14	863.15	33.28	867.39	33.19	878.46	33.43	882.66	33.39
885.93	33.39	886.74	33.38	887.64	33.35	898.77	33.16	907.41	33.17
909.5	33.22	917.85	33.3	939.94	33.87	944.11	34	958.24	35.57
962.71	36	967.06	37.44	968.73	38	972.73	40	973.42	40.35
974.83	41.05	978.2	42.8	980.52	44	982.36	44.96	984.79	46
986.45	46.72	987.98	47.22	989.4	47.69	989.8	47.79	990.7	48
991.74	48.24	991.91	48.28	993.32	48.53	993.6	48.58	994.6	48.65

994.87	48.67	995.68	48.59	995.89	48.57	996.16	48.57	997.02	48.56
997.38	48.58	998.24	48.63	998.75	48.69	999.65	49.16	1000.23	49.26
1000.82	50	1001.32	51.32	1001.54	52	1001.73	52.97	1001.94	54
1002.1	54.82	1002.24	55.5	1003.06	56	1003.86	56.48	1004.4	56.62
1005.4	57.09	1006.64	57.35	1007.89	57.33	1009.95	57.19	1011.63	57.08
1013.36	57.06	1014.41	56.99	1016.55	56.66	1017.15	56.56	1019.07	56.26
1019.28	56.23	1020.73	56	1020.98	55.96	1021.03	55.95	1024.07	55.47
1024.94	55.38	1026.58	55.18	1027.96	55.03	1029.22	54.88	1032.52	54.51
1034.81	54.26	1035.22	54.21	1037.64	54.01	1037.73	54	1040.14	53.8
1040.56	53.77	1043.59	53.51	1044.4	53.45	1048.06	53.15	1050.56	52.95
1052.11	52.85	1059.72	52.33	1060.14	52.31	1062.19	52.17	1062.4	52.15
1064.7	52	1064.77	52	1067.46	51.81	1069.76	51.66	1072.44	51.48
1073.36	51.42	1076.13	51.22	1077.18	51.14	1079.06	51.01	1080.35	50.91
1083.29	50.7	1085.07	50.58	1088.11	50.36	1090.43	50.2	1090.77	50.17
1095.49	49.84	1095.82	49.82	1096.31	49.78	1099.82	49.51	1100.58	49.46
1103.33	49.25	1104.46	49.16	1106.57	49	1108.01	48.9	1111.27	48.65
1114.64	48.4	1115.64	48.32	1119.29	48	1119.67	47.97	1119.8	47.96
1123.77	47.61	1124.49	47.55	1126.69	47.26	1129.23	46.87	1130.64	46.68
1131.53	46.45	1132.93	46	1133.94	45.67	1134.62	45.04	1135.33	44.37
1135.65	44	1137.26	42.05	1138.27	41.24	1139.36	40.8	1141.09	40.55
1141.84	40.44	1144.94	40	1145.17	39.99	1148.61	39.91	1152.04	39.86
1152.48	39.86	1156.11	39.83	1156.27	39.83	1159.31	39.71	1159.4	39.72
1161.6	39.54	1163.81	39.22	1163.95	39.25	1164.63	39.16	1166.78	39.44
1167.62	39.39	1222.36	38.73	1225.12	38.68	1227.61	38.63	1229.83	38.58
1232.51	38.53	1238.02	38.41	1255.81	38.07	1256.39	38.06	1256.85	38.04
1258.64	38	1259.07	38.03	1262.12	38	1341.43	38		

Manning's n Values num= 3

Sta	n Val	Sta	n Val	Sta	n Val
0	.016	485.73	.12	844.56	.03

Bank Sta: Left	Right	Coeff Contr.	Expan.
485.73	844.56	.1	.3

Ineffective Flow num= 1

Sta L	Sta R	Elev	Permanent
0	485		F

Upstream Embankment side slope = 0 horiz. to 1.0 vertical
Downstream Embankment side slope = 0 horiz. to 1.0 vertical
Maximum allowable submergence for weir flow = .95
Elevation at which weir flow begins =
Energy head used in spillway design =
Spillway height used in design =
Weir crest shape = Broad Crested

Number of Piers = 6

Pier Data
Pier Station Upstream= 468.57 Downstream= 528.57
Upstream num= 2

Width	Elev	Width	Elev
3	0	3	50

Downstream num= 2

Width	Elev	Width	Elev
3	0	3	50

Pier Data
Pier Station Upstream= 517.14 Downstream= 577.14
Upstream num= 2

Width	Elev	Width	Elev
3	0	3	50

Downstream num= 2

Width	Elev	Width	Elev

```
       3       0       3      50

Pier Data
Pier Station     Upstream=  565.71    Downstream=  625.71
Upstream     num=       2
    Width   Elev    Width   Elev
       3       0       3      50
Downstream     num=       2
    Width   Elev    Width   Elev
       3       0       3      50

Pier Data
Pier Station     Upstream=  614.28    Downstream=  674.28
Upstream     num=       2
    Width   Elev    Width   Elev
       3       0       3      50
Downstream     num=       2
    Width   Elev    Width   Elev
       3       0       3      50

Pier Data
Pier Station     Upstream=  662.85    Downstream=  722.85
Upstream     num=       2
    Width   Elev    Width   Elev
       3       0       3      50
Downstream     num=       2
    Width   Elev    Width   Elev
       3       0       3      50

Pier Data
Pier Station     Upstream=  711.42    Downstream=  771.42
Upstream     num=       2
    Width   Elev    Width   Elev
       3       0       3      50
Downstream     num=       2
    Width   Elev    Width   Elev
       3       0       3      50

Number of Bridge Coefficient Sets =  1

Low Flow Methods and Data
       Energy
Selected Low Flow Methods = Highest Energy Answer

High Flow Method
       Energy Only

Additional Bridge Parameters
       Add Friction component to Momentum
       Do not add Weight component to Momentum
       Class B flow critical depth computations use critical depth
           inside the bridge at the upstream end
       Criteria to check for pressure flow = Upstream energy grade line

BRIDGE OUTPUT  Profile #PF 1


  E.G. US. (ft)                 33.47    Element                 Inside BR US
Inside BR DS
  W.S. US. (ft)                 33.28    E.G. Elev (ft)                33.44
31.95
  Q Total (cfs)              10000.00    W.S. Elev (ft)                33.21
31.66
```

Q Bridge (cfs)	10000.00	Crit W.S. (ft)	27.69
Q Weir (cfs)	26.89	Max Chl Dpth (ft)	9.21
Weir Sta Lft (ft)	9.45	Vel Total (ft/s)	3.79
Weir Sta Rgt (ft)	4.29	Flow Area (sq ft)	2640.27
Weir Submerg	2330.45	Froude # Chl	0.23
Weir Max Depth (ft)	0.27	Specif Force (cu ft)	12684.67
Min El Weir Flow (ft)	10853.97	Hydr Depth (ft)	8.20
Min El Prs (ft)	40.42	W.P. Total (ft)	433.39
Delta EG (ft)	7.59	Conv. Total (cfs)	109053.7
Delta WS (ft)	409.31	Top Width (ft)	322.00
BR Open Area (sq ft)	1.69	Frctn Loss (ft)	1.48
BR Open Vel (ft/s)	92113.4	C & E Loss (ft)	0.01
Coef of Q	1.76	Shear Total (lb/sq ft)	3.20
Br Sel Method	306.92	Power Total (lb/ft s)	12.11
	Energy only		

Warning: The energy loss was greater than 1.0 ft (0.3 m). between the current and previous cross section. This may indicate the need for additional cross sections.

CROSS SECTION

RIVER: CV Creek
REACH: Lower RS: 3082

INPUT
Description:
Station Elevation Data num= 294

Sta	Elev	Sta	Elev	Sta	Elev	Sta	Elev	Sta	Elev
0	70.19	.46	70	4.87	68.16	5.24	68	6	67.69
10.18	66	12.4	65.12	13.42	64.74	14.62	64.28	15.42	64
20.74	62.34	21.86	62	22.21	61.9	22.5	61.82	28.81	60
29.35	59.84	30.95	59.39	42.74	56	43.98	55.64	75.9	46.48
77.59	46	80.1	45.35	85.87	44	108.15	44	127.14	43.28
130.43	43.21	144.64	43.08	146.13	42.92	149.42	43.14	150.29	42.99
151.17	42.88	154.78	43.12	155.22	43.09	155.59	43.07	155.88	43.05
156.06	43.04	160.77	43.26	161	43.28	161.9	43.33	164.34	43.47
169.61	43.53	179.55	43.87	180.53	43.91	193.56	44.47	196.53	44.56
211.88	45.26	222.82	45.69	225.52	45.8	231.35	46	238.94	46.24
239.31	46.22	239.59	46.19	239.88	46.15	253.98	46.38	267.23	46
281.26	46	287.68	45.6	304.33	45.22	328.61	44.41	338.9	44
344.54	44	391.58	42.03	392.44	42	398.65	41.82	400.64	41.75
401.56	41.72	419.94	41.19	420.7	41.17	442.6	40.45	455.6	40
465.16	38.62	468.47	38	469.61	37.57	477.28	34.64	481.13	33.18
485.73	31.41	488.51	30.34	489.39	30	491.61	29.15	494.58	28
497.25	27.71	513.25	26	518.58	25.25	528.33	24	543.61	22.97
545.94	22.86	554.76	22.29	556.39	22.32	558.24	22.21	586.74	22.24

598.59	22.32	760.98	24	776.49	24	783.81	25.71	786.68	26.39
794.07	28	795.81	28.32	800.28	29.07	803.65	29.4	804.69	29.5
805.62	29.6	809.48	30	809.82	30.03	809.92	30.05	810.06	30.06
815.03	30.6	819.09	31.06	821.83	31.29	823.51	31.44	824.68	31.53
829.05	31.82	829.47	31.84	829.84	31.86	832.21	32	835.54	32.19
836.45	32.24	841.07	32.47	844.03	32.56	844.56	32.59	845.59	32.66
847.57	32.65	848.49	32.72	848.59	32.72	850.69	32.87	851.07	32.88
851.65	32.87	853.56	33.08	854.61	33.06	856.48	33.01	858.5	33.22
861.63	33.14	863.15	33.28	867.39	33.19	878.46	33.43	882.66	33.39
885.93	33.39	886.74	33.38	887.64	33.35	898.77	33.16	907.41	33.17
909.5	33.22	917.85	33.3	939.94	33.87	944.11	34	958.24	35.57
962.71	36	967.06	37.44	968.73	38	972.73	40	973.42	40.35
974.83	41.05	978.2	42.8	980.52	44	982.36	44.96	984.79	46
986.45	46.72	987.98	47.22	989.4	47.69	989.8	47.79	990.7	48
991.74	48.24	991.91	48.28	993.32	48.53	993.6	48.58	994.6	48.65
994.87	48.67	995.68	48.59	995.89	48.57	996.16	48.57	997.02	48.56
997.38	48.58	998.24	48.63	998.75	48.69	999.65	49.16	1000.23	49.26
1000.82	50	1001.32	51.32	1001.54	52	1001.73	52.97	1001.94	54
1002.1	54.82	1002.24	55.5	1003.06	56	1003.86	56.48	1004.4	56.62
1005.4	57.09	1006.64	57.35	1007.89	57.33	1009.95	57.19	1011.63	57.08
1013.36	57.06	1014.41	56.99	1016.55	56.66	1017.15	56.56	1019.07	56.26
1019.28	56.23	1020.73	56	1020.98	55.96	1021.03	55.95	1024.07	55.47
1024.94	55.38	1026.58	55.18	1027.96	55.03	1029.22	54.88	1032.52	54.51
1034.81	54.26	1035.22	54.21	1037.64	54.01	1037.73	54	1040.14	53.8
1040.56	53.77	1043.59	53.51	1044.4	53.45	1048.06	53.15	1050.56	52.95
1052.11	52.85	1059.72	52.33	1060.14	52.31	1062.19	52.17	1062.4	52.15
1064.7	52	1064.77	52	1067.46	51.81	1069.76	51.66	1072.44	51.48
1073.36	51.42	1076.13	51.22	1077.18	51.14	1079.06	51.01	1080.35	50.91
1083.29	50.7	1085.07	50.58	1088.11	50.36	1090.43	50.2	1090.77	50.17
1095.49	49.84	1095.82	49.82	1096.31	49.78	1099.82	49.51	1100.58	49.46
1103.33	49.25	1104.46	49.16	1106.57	49	1108.01	48.9	1111.27	48.65
1114.64	48.4	1115.64	48.32	1119.29	48	1119.67	47.97	1119.8	47.96
1123.77	47.61	1124.49	47.55	1126.69	47.26	1129.23	46.87	1130.64	46.68
1131.53	46.45	1132.93	46	1133.94	45.67	1134.62	45.04	1135.33	44.37
1135.65	44	1137.26	42.05	1138.27	41.24	1139.36	40.8	1141.09	40.55
1141.84	40.44	1144.94	40	1145.17	39.99	1148.61	39.91	1152.04	39.86
1152.48	39.86	1156.11	39.83	1156.27	39.83	1159.31	39.71	1159.4	39.72
1161.6	39.54	1163.81	39.22	1163.95	39.25	1164.63	39.16	1166.78	39.44
1167.62	39.39	1222.36	38.73	1225.12	38.68	1227.61	38.63	1229.83	38.58
1232.51	38.53	1238.02	38.41	1255.81	38.07	1256.39	38.06	1256.85	38.04
1258.64	38	1259.07	38.03	1262.12	38	1341.43	38		

Manning's n Values num= 3

Sta	n Val	Sta	n Val	Sta	n Val
0	.016	485.73	.12	844.56	.03

Bank Sta: Left	Right	Lengths: Left	Channel	Right	Coeff Contr.	Expan.
485.73	844.56	216.44	235.72	262.16	.1	.3

Ineffective Flow num= 1

Sta L	Sta R	Elev	Permanent
0	485		F

CROSS SECTION OUTPUT Profile #PF 1

E.G. Elev (ft)	31.78	Element	Left OB	Channel
Right OB				
Vel Head (ft)	0.26	Wt. n-Val.	0.016	0.120
W.S. Elev (ft)	31.52	Reach Len. (ft)	216.44	235.72
262.16				
Crit W.S. (ft)		Flow Area (sq ft)	0.02	2446.10

E.G. Slope (ft/ft)	0.007862	Area (sq ft)	0.02	2446.10
Q Total (cfs)	10000.00	Flow (cfs)	0.02	9999.98
Top Width (ft)	339.13	Top Width (ft)	0.29	338.84
Vel Total (ft/s)	4.09	Avg. Vel. (ft/s)	1.15	4.09
Max Chl Dpth (ft)	9.31	Hydr. Depth (ft)	0.06	7.22
Conv. Total (cfs)	112782.2	Conv. (cfs)	0.2	112781.9
Length Wtd. (ft)	235.72	Wetted Per. (ft)	0.31	340.44
Min Ch El (ft)	22.21	Shear (lb/sq ft)	0.03	3.53
Alpha	1.00	Stream Power (lb/ft s)	0.03	14.42
Frctn Loss (ft)	1.22	Cum Volume (acre-ft)	0.00	250.58
0.11				
C & E Loss (ft)	0.04	Cum SA (acres)	0.00	45.55
0.08				

Warning: The conveyance ratio (upstream conveyance divided by downstream conveyance) is less than
0.7 or greater than 1.4. This may indicate the need for additional cross sections.
Warning: The energy loss was greater than 1.0 ft (0.3 m). between the current and previous cross
section. This may indicate the need for additional cross sections.

CROSS SECTION

RIVER: CV Creek
REACH: Lower RS: 2846

INPUT
Description: G
Station Elevation Data num= 147

Sta	Elev	Sta	Elev	Sta	Elev	Sta	Elev	Sta	Elev
0	80.34	.84	80	2	79.54	5.82	78	7.63	77.28
10.8	76	12.87	75.29	17.31	74	18	74	19.33	73.31
21.92	72	23.76	70.86	25	70	26.12	69.22	27.88	68
30.05	66.49	30.75	66	33.36	64.19	33.63	64	34.14	63.65
36.51	62	40.01	60.11	40.23	60	45.24	58	46.21	57.63
46.88	57.52	48.97	56.81	49.73	56.89	50.71	56.59	53.31	56.73
63.76	56	88.74	56	95.58	55.76	141.52	54	155.28	54
168.6	53.43	185.99	52	193.64	51.69	231.46	50	243.64	50
244.24	49.89	245.41	49.68	251.38	48.59	252.28	48.41	254.6	48
265.32	46	267.02	45.68	276.1	44	280.07	43.25	286.61	42
292.77	41.07	299.62	40	301.57	39.67	306.4	38.99	311.09	38.27
313.11	38	321.65	36.61	326.03	36	329.03	35.5	338.24	34
349.43	33.44	352.81	33.26	369.75	32.41	373.93	32.23	376.64	32.13
376.79	32.12	377.66	32.08	377.85	32.08	381.81	32.1	381.87	32.1
384.91	32	395.27	32	403.45	32	404.35	31.87	418.33	30
418.54	29.97	428.12	28	429.15	28	430.08	27.7	431.14	27.42
432.91	26.83	436.46	26	437.68	25.69	440.54	24.97	441.42	24.74
444.41	24	451.26	24	499.49	22	677.06	22	882.92	23.97
883.86	24	884.9	24.38	891.27	26.91	893.27	27.7	894.02	28
897.6	29.42	897.94	29.55	899.06	30	920.72	31.16	938.6	32

957.66	32.53	962.1	32.63	975.91	33.01	979.16	33.06	1005.29	33.6
1021.98	34	1099.47	34	1110.71	35.19	1124.96	36	1128.15	37.86
1128.46	38	1132.13	39.45	1132.75	39.69	1133.79	40	1138.43	41.27
1139.33	41.18	1143.16	40.75	1146.17	40.46	1147.18	40.35	1151.2	40.02
1151.4	40	1155.81	39.68	1160.92	39.63	1165.45	39.85	1165.92	39.87
1170.25	40.35	1170.95	40.39	1174.02	40.61	1175.31	40.61	1177.7	40.68
1181.21	40.59	1184.49	40.21	1184.94	40.17	1185.82	40	1189.36	39.25
1191.93	38.7	1193.52	38.32	1195.65	38	1197.23	37.97	1201.02	37.93
1203.71	37.89	1204.12	37.91	1205.94	37.88	1206.78	37.86	1207.18	37.88
1215.54	38	1325.96	38						

Manning's n Values num= 3

Sta	n Val	Sta	n Val	Sta	n Val
0	.016	395.27	.12	957.66	.03

Bank Sta: Left	Right	Lengths: Left	Channel	Right	Coeff Contr.	Expan.
395.27	957.66	531.77	591.09	510.32	.1	.3

Ineffective Flow num= 1

Sta L	Sta R	Elev	Permanent
0	395		F

CROSS SECTION OUTPUT Profile #PF 1

E.G. Elev (ft)	30.51	Element	Left OB	Channel
Right OB				
Vel Head (ft)	0.12	Wt. n-Val.		0.120
W.S. Elev (ft)	30.39	Reach Len. (ft)	531.77	591.09
510.32				
Crit W.S. (ft)		Flow Area (sq ft)		3559.36
E.G. Slope (ft/ft)	0.003689	Area (sq ft)		3559.36
Q Total (cfs)	10000.00	Flow (cfs)		10000.00
Top Width (ft)	490.98	Top Width (ft)		490.98
Vel Total (ft/s)	2.81	Avg. Vel. (ft/s)		2.81
Max Chl Dpth (ft)	8.39	Hydr. Depth (ft)		7.25
Conv. Total (cfs)	164653.7	Conv. (cfs)		164653.7
Length Wtd. (ft)	591.09	Wetted Per. (ft)		492.94
Min Ch El (ft)	22.00	Shear (lb/sq ft)		1.66
Alpha	1.00	Stream Power (lb/ft s)		4.67
Frctn Loss (ft)	3.17	Cum Volume (acre-ft)		234.34
0.11				
C & E Loss (ft)	0.01	Cum SA (acres)		43.31
0.08				

Warning: The conveyance ratio (upstream conveyance divided by downstream conveyance) is less than
0.7 or greater than 1.4. This may indicate the need for additional cross sections.
Warning: The energy loss was greater than 1.0 ft (0.3 m). between the current and previous cross

section. This may indicate the need for additional cross sections.

CROSS SECTION

RIVER: CV Creek
REACH: Lower RS: 2255

INPUT
Description: F
Station Elevation Data num= 78

Sta	Elev	Sta	Elev	Sta	Elev	Sta	Elev	Sta	Elev
0	45.29	2.55	44.59	4.73	44	6.48	43.5	7.41	43.21
11.22	42	11.58	41.92	11.87	41.86	17.89	40.5	19.79	40
26.23	39.36	31.53	38.81	33.17	38.83	35.21	38.82	43.92	38.58
56.01	38	57.53	37.78	74.99	34.77	77.95	34.24	79.22	34
85.54	32.85	89.85	32	92.98	31.42	100.01	30	100.98	29.81
106.8	28.53	113.52	27.07	113.99	26.96	118.4	26	121.68	25.28
127.56	24	129.69	23.53	136.71	22	138.9	21.95	139.14	21.96
155.37	21.67	157.59	21.64	164.24	21.53	198.05	21.15	204.22	21.2
209.43	21.17	212.13	21.15	354.35	22	665.94	22	669.07	22.9
672.78	24	673.97	24.41	674.83	24.76	676.02	25.17	678.47	26
681.34	26.96	685.65	28.42	688.85	29.48	689.95	29.85	690.41	30
693.52	31.04	696.42	32	716.14	32.68	748.75	33.56	755.11	33.75
762.11	34	767.58	34	772.16	34.09	899.12	36	1055.93	36
1057.92	35.75	1068.04	34.52	1073.76	34	1074.57	33.92	1082.39	33.64
1083.01	33.68	1085.81	33.62	1086.95	33.68	1088.05	33.75	1091.09	33.66
1093.33	33.74	1107.04	34	1223.32	34				

Manning's n Values num= 3

Sta	n Val	Sta	n Val	Sta	n Val
0	.05	85.54	.12	696.42	.03

Bank Sta: Left	Right	Lengths: Left	Channel	Right	Coeff Contr.	Expan.
85.54	696.42	383.15	429.01	326.21	.1	.3

Ineffective Flow num= 1

Sta L	Sta R	Elev	Permanent
831	1223.32		F

CROSS SECTION OUTPUT Profile #PF 1

E.G. Elev (ft)	27.34	Element	Left OB	Channel
Right OB				
Vel Head (ft)	0.18	Wt. n-Val.		0.120
W.S. Elev (ft)	27.17	Reach Len. (ft)	383.15	429.01
326.21				
Crit W.S. (ft)		Flow Area (sq ft)		2938.37
E.G. Slope (ft/ft)	0.008487	Area (sq ft)		2938.37
Q Total (cfs)	10000.00	Flow (cfs)		10000.00
Top Width (ft)	568.86	Top Width (ft)		568.86
Vel Total (ft/s)	3.40	Avg. Vel. (ft/s)		3.40
Max Chl Dpth (ft)	6.02	Hydr. Depth (ft)		5.17
Conv. Total (cfs)	108545.9	Conv. (cfs)		108545.9
Length Wtd. (ft)	429.01	Wetted Per. (ft)		570.25

Min Ch El (ft)	21.15	Shear (lb/sq ft)	2.73
Alpha	1.00	Stream Power (lb/ft s)	9.29
Frctn Loss (ft) 0.11	2.01	Cum Volume (acre-ft)	190.25
C & E Loss (ft) 0.08	0.03	Cum SA (acres)	36.12

Warning: The conveyance ratio (upstream conveyance divided by downstream conveyance) is less than
0.7 or greater than 1.4. This may indicate the need for additional cross sections.
Warning: The energy loss was greater than 1.0 ft (0.3 m). between the current and previous cross
section. This may indicate the need for additional cross sections.

CROSS SECTION

RIVER: CV Creek
REACH: Lower RS: 1826

INPUT
Description: E
Station Elevation Data num= 132

Sta	Elev	Sta	Elev	Sta	Elev	Sta	Elev	Sta	Elev
0	64.2	10.35	64	26.25	64	26.58	63.17	27.04	62
28.66	58	29.43	56.14	29.48	56	29.56	55.77	30.19	54
30.5	53.04	30.84	52	31.09	51.22	31.48	50	32.37	49.16
33.56	48	37.91	46.03	37.97	46	43.39	44	48.71	42.29
49.56	42	78.13	40.18	81.38	40	81.96	40	86.48	39.62
103.67	38	104.65	37.76	111.75	36	118.61	34.28	119.75	34
127.65	32	128.92	31.68	135.52	30	143.4	28	146.53	27.2
167.03	22	171.34	20.9	174.9	20	204.4	18.89	229.62	18
345.36	18	362.14	18.11	362.96	18.11	391.69	18.19	393.02	18.18
456.54	18.29	460.29	18.32	518.91	18.35	522.37	18.38	540.17	18.32
542.86	18.34	563.78	18.29	563.99	18.3	564.85	18.3	565.19	18.31
566.75	18.32	590.56	18.28	593.2	18.31	596.49	18.34	622.3	18.32
626.01	18.37	632.3	18.48	653.56	18.58	666.08	18.89	670.78	18.95
690.04	19.4	696.8	19.51	713.18	19.85	715.23	19.9	716.19	19.92
716.92	19.92	717.71	19.91	723.59	19.89	723.97	19.89	734.2	19.79
737.16	20	834.79	20	841.42	21.9	842.2	22.13	848.78	24
852.42	25.02	858.85	26.86	863.32	28	864.22	28.22	871.88	30
879.32	30	899.68	30.82	911.91	31.17	939.88	32.05	995.7	34
998.91	34	1003.09	34.06	1092.03	35.11	1137.85	35.54	1175.49	36
1196.4	36	1211.38	35.66	1236.79	35.15	1240.58	35.08	1262.69	34.62
1296.91	34.03	1298.29	34	1310.21	33.43	1317.6	33.12	1325.25	32.78
1330.14	32.61	1344.5	32	1346.79	31.4	1351.28	30	1357.19	29.21
1362.23	28.85	1366.12	28.43	1371.63	28.12	1373.1	28	1457.4	28
1467.45	28.13	1481.44	28	1494.92	28	1496.47	28.38	1499.19	29.06
1500.1	29.29	1503.3	30	1507.7	31.41	1509.55	32	1512.25	32.87
1513.09	33.13	1516.01	34	1516.07	34	1518.8	34.08	1518.98	34.08
1527.12	34.31	1528.03	34.33						

Manning's n Values num= 3

Sta	n Val	Sta	n Val	Sta	n Val
0	.05	118.61	.12	871.88	.03

Bank Sta: Left Right Lengths: Left Channel Right Coeff Contr. Expan.

118.61 871.88 299.52 282.8 207 .1 .3

Ineffective Flow num= 1

Sta L	Sta R	Elev	Permanent
821	1528.03		F

CROSS SECTION OUTPUT Profile #PF 1

E.G. Elev (ft)	25.30	Element	Left OB	Channel
Right OB Vel Head (ft)	0.08	Wt. n-Val.		0.120
W.S. Elev (ft)	25.22	Reach Len. (ft)	299.52	282.80
207.00 Crit W.S. (ft)		Flow Area (sq ft)		4288.10
E.G. Slope (ft/ft)	0.002969	Area (sq ft)		4407.71
Q Total (cfs)	10000.00	Flow (cfs)		10000.00
Top Width (ft)	698.78	Top Width (ft)		698.78
Vel Total (ft/s)	2.33	Avg. Vel. (ft/s)		2.33
Max Chl Dpth (ft)	7.22	Hydr. Depth (ft)		6.43
Conv. Total (cfs)	183516.8	Conv. (cfs)		183516.8
Length Wtd. (ft)	282.80	Wetted Per. (ft)		667.38
Min Ch El (ft)	18.00	Shear (lb/sq ft)		1.19
Alpha	1.00	Stream Power (lb/ft s)		2.78
Frctn Loss (ft) 0.11	1.22	Cum Volume (acre-ft)		154.08
C & E Loss (ft) 0.08	0.01	Cum SA (acres)		29.87

Warning: The conveyance ratio (upstream conveyance divided by downstream conveyance) is less than 0.7 or greater than 1.4. This may indicate the need for additional cross sections.
Warning: The energy loss was greater than 1.0 ft (0.3 m). between the current and previous cross section. This may indicate the need for additional cross sections.

CROSS SECTION

RIVER: CV Creek
REACH: Lower RS: 1543

INPUT
Description: D
Station Elevation Data num= 313

Sta	Elev	Sta	Elev	Sta	Elev	Sta	Elev	Sta	Elev
0	59.56	30.27	58.13	33.14	58	34.23	57.82	44.58	56
45.85	55.79	67.39	52	76.19	52	82.53	51.38	84.24	51.37
85.35	51.35	88.1	51.27	90.21	51.24	92.76	51.21	94.59	51.15
118.3	51.4	120.81	51.47	133.27	51.79	139.8	51.59	141.02	51.26

142.21	50.93	143.98	51.09	145.15	50.25	145.5	50	145.73	49.28
146.15	48	146.77	46.14	146.82	46	146.86	45.89	147.49	44
147.96	42.58	148.16	42	148.61	40.66	148.81	40.05	151.19	38.45
151.99	38	156.15	36.11	156.4	36	156.79	35.82	160.65	34
165.45	32	176.48	30.88	180.53	30.46	182.25	30.42	196.23	30
200.64	30	212.24	29.66	213.69	29.6	214.64	29.54	215.89	29.47
218.47	29.31	240.86	28	268.28	26.52	272.8	26.31	276.9	26
291.06	25.26	310.38	24.71	318.38	24.4	321.41	24.29	323.06	24.24
333.51	24	338.91	23.24	350.3	22	356.34	21.21	361.44	20.62
367.24	20	379.62	19.86	381.09	19.83	388.93	19.66	399.33	19.47
457.47	18	495.43	18	560.34	16.48	587.9	16.38	592.59	16.38
613.14	16.3	615.31	16.3	671	16.07	671.42	16.07	690.73	16
728.13	16	754.62	16.85	793.87	18	794.45	18	795.41	18.46
798.41	20	799.16	20.37	802.31	22	802.72	22.21	806.19	24
806.29	24.05	807.59	24.73	809.81	25.86	810.08	26	813.98	28
816.06	29.07	817.89	30	820.21	31.16	820.68	31.39	821.19	31.63
821.67	31.84	821.77	31.89	822.08	32	826.42	32	831.33	32.41
835.85	32.81	837.74	32.87	842.66	33.13	848.49	34	852.21	34.18
864.25	34.68	871.27	34.92	890.33	36	891.7	36	895.12	36.24
919.26	37.44	930.2	38	953.21	38	966.09	39.07	971.08	38.64
985.5	37.23	990.73	36.7	997	36.1	997.25	36.08	997.37	36.07
998.09	36	1000.99	36	1003.17	36.16	1004.31	36.25	1018.01	37.26
1019.91	37.39	1021.23	37.49	1028.54	38	1028.75	38.01	1037.31	38.2
1040.78	38.55	1051.07	39.05	1061.2	40	1074.38	40	1096.29	41.32
1106.5	41.63	1108.27	42	1163.1	42	1168.6	40.61	1170.79	40
1174.08	39.07	1178.06	38	1183.19	36.51	1184.75	36	1185.43	35.76
1190.73	34	1198.23	32.25	1201.12	32	1218.39	32	1227.82	31.76
1227.92	31.76	1229.83	31.74	1248.34	31.6	1254.52	31.53	1275.66	31.35
1290.32	31.26	1305.21	31.07	1315.26	31.04	1322.92	31.05	1336	30.85
1340.76	30.87	1344.28	30.9	1346.52	30.95	1354.66	30.78	1356.96	30.84
1360.32	30.92	1362.74	30.85	1367.09	30.97	1374.11	30.7	1377.19	30.79
1384.63	30.4	1386.16	30.44	1392.28	30	1394.97	29.62	1410.13	27.5
1411.5	27.31	1414.59	26.87	1417.96	26.4	1424.93	25.51	1426.08	25.6
1431.42	25.17	1434.08	25.4	1435.68	25.59	1451	25.17	1464.97	26
1561.59	26	1582.58	24.73	1595.22	24	1596.57	23.57	1597.58	23.24
1601.45	22	1611.14	22	1612.61	22.27	1615.89	22.92	1620.24	24
1624.73	24.07	1626.39	24.1	1636.75	24.3	1643.17	24.44	1698.35	26
1721.72	26	1724.6	27.02	1730.04	28	1730.55	28.42	1731.67	29.34
1734	31.24	1734.93	32	1736.12	32.98	1737.37	34	1737.77	34.33
1738.81	35.18	1739.51	35.66	1740.13	36	1741.09	36.6	1741.85	37.07
1743.17	37.66	1743.45	37.82	1743.92	38	1745.04	38.57	1745.41	38.7
1746.33	39.14	1747.97	39.67	1748.24	39.78	1749.01	40	1749.46	40.16
1749.61	40.2	1751.33	40.76	1751.9	40.89	1752.75	40.88	1753.41	41.06
1754.13	41.05	1755.19	40.96	1755.98	40.95	1756.79	40.93	1758.62	40.8
1760.44	40.77	1761.23	40.72	1762.19	40.71	1763.18	40.69	1763.81	40.65
1765.39	40.32	1765.68	40.3	1766.89	40	1767.5	39.83	1767.66	39.79
1769.11	39.38	1769.63	39.23	1770.47	39	1771.43	38.73	1772.73	38.37
1773.06	38.27	1774.16	38	1775.08	37.8	1775.28	37.78	1776.97	37.45
1777.52	37.4	1777.68	37.53	1779.25	37.32	1780.23	37.38	1781.72	37.22
1783.32	37.3	1786.38	37.14	1786.84	37.28	1788.38	37.34	1797.62	37.74
1798.29	37.76	1803.23	37.94	1803.38	37.95	1804.93	38	1807.19	38.08
1807.39	38.09	1811.08	38.22	1811.61	38.24	1819.13	38.5	1822.54	38.61
1825.37	38.71	1828.49	38.81	1830.21	38.86	1850.97	39.53	1852	39.56
1856.72	39.68	1860.99	39.78	1861.33	39.79	1865.87	39.89	1866.04	39.9
1866.2	39.9	1870.31	40	1870.92	40.01	1871.17	40.02	1874.16	40.03
1877.07	40.05	1877.18	40.05	1882.94	40.08	1883.03	40.08	1883.22	40.06
1884.22	40	1887.4	39.8	1887.76	39.77	1888.51	39.78	1895.95	39.81
1896.27	39.81	1900.07	39.83	1900.36	39.83	1904.2	39.84	1904.7	39.85
1911.08	39.95	1911.29	39.95	1917.89	40.05				

Manning's n Values num= 3

Sta	n Val	Sta	n Val	Sta	n Val
0	.05	151.99	.12	930.2	.03

Bank Sta: Left	Right	Lengths: Left	Channel	Right	Coeff Contr.	Expan.
151.99	930.2	321.52	101.33	163.33	.1	.3

Ineffective Flow num= 2

Sta L	Sta R	Elev	Permanent
0	391		F
809	1917.89		F

CROSS SECTION OUTPUT Profile #PF 1

E.G. Elev (ft)	24.07	Element	Left OB	Channel
Right OB				
Vel Head (ft)	0.20	Wt. n-Val.		0.120
W.S. Elev (ft)	23.87	Reach Len. (ft)	11.92	11.92
11.92				
Crit W.S. (ft)	19.78	Flow Area (sq ft)		2762.27
E.G. Slope (ft/ft)	0.006858	Area (sq ft)		2922.93
32.05				
Q Total (cfs)	10000.00	Flow (cfs)		10000.00
Top Width (ft)	495.54	Top Width (ft)		471.48
24.07				
Vel Total (ft/s)	3.62	Avg. Vel. (ft/s)		3.62
Max Chl Dpth (ft)	7.87	Hydr. Depth (ft)		6.66
Conv. Total (cfs)	120755.4	Conv. (cfs)		120755.4
Length Wtd. (ft)	11.92	Wetted Per. (ft)		416.41
Min Ch El (ft)	16.00	Shear (lb/sq ft)		2.84
Alpha	1.00	Stream Power (lb/ft s)		10.28
Frctn Loss (ft)		Cum Volume (acre-ft)		130.28
0.03				
C & E Loss (ft)		Cum SA (acres)		26.07
0.02				

Warning: Divided flow computed for this cross-section.

BRIDGE

RIVER: CV Creek
REACH: Lower RS: 1500

INPUT
Description: SR-56 Connector east of I-5
Distance from Upstream XS = 11.92
Deck/Roadway Width = 70
Weir Coefficient = 2.6
Upstream Deck/Roadway Coordinates
num= 10

Sta	Hi Cord	Lo Cord	Sta	Hi Cord	Lo Cord	Sta	Hi Cord	Lo Cord
0	24	0	383.73	26.56	0	383.73	26.56	24.81
821.15	33.72	31.97	821.15	33.72	0	1208.28	40	0
1208.28	40	38.25	1719.08	55	53.25	1719.08	55	0

2000 55 0

Upstream Bridge Cross Section Data
Station Elevation Data num= 313

Sta	Elev	Sta	Elev	Sta	Elev	Sta	Elev	Sta	Elev
0	59.56	30.27	58.13	33.14	58	34.23	57.82	44.58	56
45.85	55.79	67.39	52	76.19	52	82.53	51.38	84.24	51.37
85.35	51.35	88.1	51.27	90.21	51.24	92.76	51.21	94.59	51.15
118.3	51.4	120.81	51.47	133.27	51.79	139.8	51.59	141.02	51.26
142.21	50.93	143.98	51.09	145.15	50.25	145.5	50	145.73	49.28
146.15	48	146.77	46.14	146.82	46	146.86	45.89	147.49	44
147.96	42.58	148.16	42	148.61	40.66	148.81	40.05	151.19	38.45
151.99	38	156.15	36.11	156.4	36	156.79	35.82	160.65	34
165.45	32	176.48	30.88	180.53	30.46	182.25	30.42	196.23	30
200.64	30	212.24	29.66	213.69	29.6	214.64	29.54	215.89	29.47
218.47	29.31	240.86	28	268.28	26.52	272.8	26.31	276.9	26
291.06	25.26	310.38	24.71	318.38	24.4	321.41	24.29	323.06	24.24
333.51	24	338.91	23.24	350.3	22	356.34	21.21	361.44	20.62
367.24	20	379.62	19.86	381.09	19.83	388.93	19.66	399.33	19.47
457.47	18	495.43	18	560.34	16.48	587.9	16.38	592.59	16.38
613.14	16.3	615.31	16.3	671	16.07	671.42	16.07	690.73	16
728.13	16	754.62	16.85	793.87	18	794.45	18	795.41	18.46
798.41	20	799.16	20.37	802.31	22	802.72	22.21	806.19	24
806.29	24.05	807.59	24.73	809.81	25.86	810.08	26	813.98	28
816.06	29.07	817.89	30	820.21	31.16	820.68	31.39	821.19	31.63
821.67	31.84	821.77	31.89	822.08	32	826.42	32	831.33	32.41
835.85	32.81	837.74	32.87	842.66	33.13	848.49	34	852.21	34.18
864.25	34.68	871.27	34.92	890.33	36	891.7	36	895.12	36.24
919.26	37.44	930.2	38	953.21	38	966.09	39.07	971.08	38.64
985.5	37.23	990.73	36.7	997	36.1	997.25	36.08	997.37	36.07
998.09	36	1000.99	36	1003.17	36.16	1004.31	36.25	1018.01	37.26
1019.91	37.39	1021.23	37.49	1028.54	38	1028.75	38.01	1037.31	38.2
1040.78	38.55	1051.07	39.05	1061.2	40	1074.38	40	1096.29	41.32
1106.5	41.63	1108.27	42	1163.1	42	1168.6	40.61	1170.79	40
1174.08	39.07	1178.06	38	1183.19	36.51	1184.75	36	1185.43	35.76
1190.73	34	1198.23	32.25	1201.12	32	1218.39	32	1227.82	31.76
1227.92	31.76	1229.83	31.74	1248.34	31.6	1254.52	31.53	1275.66	31.35
1290.32	31.26	1305.21	31.07	1315.26	31.04	1322.92	31.05	1336	30.85
1340.76	30.87	1344.28	30.9	1346.52	30.95	1354.66	30.78	1356.96	30.84
1360.32	30.92	1362.74	30.85	1367.09	30.97	1374.11	30.7	1377.19	30.79
1384.63	30.4	1386.16	30.44	1392.28	30	1394.97	29.62	1410.13	27.5
1411.5	27.31	1414.59	26.87	1417.96	26.4	1424.93	25.51	1426.08	25.6
1431.42	25.17	1434.08	25.4	1435.68	25.59	1451	25.17	1464.97	26
1561.59	26	1582.58	24.73	1595.22	24	1596.57	23.57	1597.58	23.24
1601.45	22	1611.14	22	1612.61	22.27	1615.89	22.92	1620.24	24
1624.73	24.07	1626.39	24.1	1636.75	24.3	1643.17	24.44	1698.35	26
1721.72	26	1724.6	27.02	1730.04	28	1730.55	28.42	1731.67	29.34
1734	31.24	1734.93	32	1736.12	32.98	1737.37	34	1737.77	34.33
1738.81	35.18	1739.51	35.66	1740.13	36	1741.09	36.6	1741.85	37.07
1743.17	37.66	1743.45	37.82	1743.92	38	1745.04	38.57	1745.41	38.7
1746.33	39.14	1747.97	39.67	1748.24	39.78	1749.01	40	1749.46	40.16
1749.61	40.2	1751.33	40.76	1751.9	40.89	1752.75	40.88	1753.41	41.06
1754.13	41.05	1755.19	40.96	1755.98	40.95	1756.79	40.93	1758.62	40.8
1760.44	40.77	1761.23	40.72	1762.19	40.71	1763.18	40.69	1763.81	40.65
1765.39	40.32	1765.68	40.3	1766.89	40	1767.5	39.83	1767.66	39.79
1769.11	39.38	1769.63	39.23	1770.47	39	1771.43	38.73	1772.73	38.37
1773.06	38.27	1774.16	38	1775.08	37.8	1775.28	37.78	1776.97	37.45
1777.52	37.4	1777.68	37.53	1779.25	37.32	1780.23	37.38	1781.72	37.22
1783.32	37.3	1786.38	37.14	1786.84	37.28	1788.38	37.34	1797.62	37.74
1798.29	37.76	1803.23	37.94	1803.38	37.95	1804.93	38	1807.19	38.08
1807.39	38.09	1811.08	38.22	1811.61	38.24	1819.13	38.5	1822.54	38.61
1825.37	38.71	1828.49	38.81	1830.21	38.86	1850.97	39.53	1852	39.56
1856.72	39.68	1860.99	39.78	1861.33	39.79	1865.87	39.89	1866.04	39.9

1866.2	39.9	1870.31	40	1870.92	40.01	1871.17	40.02	1874.16	40.03		
1877.07	40.05	1877.18	40.05	1882.94	40.08	1883.03	40.08	1883.22	40.06		
1884.22	40	1887.4	39.8	1887.76	39.77	1888.51	39.78	1895.95	39.81		
1896.27	39.81	1900.07	39.83	1900.36	39.83	1904.2	39.84	1904.7	39.85		
1911.08	39.95	1911.29	39.95	1917.89	40.05						

Manning's n Values num= 3

Sta	n Val	Sta	n Val	Sta	n Val
0	.05	151.99	.12	930.2	.03

Bank Sta: Left	Right	Coeff Contr.	Expan.
151.99	930.2	.1	.3

Ineffective Flow num= 2

Sta L	Sta R	Elev	Permanent
0	391		F
809	1917.89		F

Downstream Deck/Roadway Coordinates

num= 10

Sta	Hi Cord	Lo Cord	Sta	Hi Cord	Lo Cord	Sta	Hi Cord	Lo Cord
0	24	0	676.77	26.56	0	676.77	26.56	24.81
1114.19	33.72	31.97	1114.19	33.72	0	1374.52	40	0
1374.52	40	38.25	1948.06	55	53.25	1948.06	55	0
2020	55	0						

Downstream Bridge Cross Section Data

Station Elevation Data num= 291

Sta	Elev	Sta	Elev	Sta	Elev	Sta	Elev	Sta	Elev
0	64	9.05	64.39	10.38	64.53	13.66	64.76	16.02	64.86
18.14	64.88	20.57	64.99	22.53	64.92	24.35	65.02	25.85	64.97
27.28	65.08	28.34	65.05	28.64	65.07	29.38	65.05	30.48	65.05
31.31	65.06	31.64	65.04	32.65	65.03	34.3	65.05	35.2	65.08
40.02	65.15	41.88	65.17	44.13	65.2	49.56	65.26	51.3	65.23
52.99	65.12	56.35	65.17	57.73	64.9	59.35	64.6	60.28	64.61
61.22	64.37	62.54	64	62.7	63.94	65.19	62.96	66.23	62.54
66.72	62.35	67.6	62	68.86	61.53	72.88	60	77.19	58.38
78.19	58	84.21	55.68	85.46	55.33	88.25	54.56	89.12	54.45
91.32	54.18	91.69	54.21	94.26	54.36	98.62	54.31	103.76	54.07
103.99	54.06	104.79	54	109.82	53.64	110.9	53.6	115.64	53.4
117.7	53.38	122	53.31	128.93	53.36	131.56	53.3	135.53	53.19
142.26	52.78	149.4	52.09	149.7	52.06	149.89	52.05	150.41	52
156.21	51.49	158.62	51.27	162.98	50.91	167.71	50.51	175.85	49.88
176.44	49.81	182.54	49.17	187.76	48.39	188.96	48.22	190.11	48
197.34	46.65	198.61	46.36	200.17	46	207.81	44.25	208.31	44.11
208.7	44	212.73	42.88	215.87	42	218.31	41.47	219.73	41.2
221.04	40.75	223.33	40	227.95	38.86	229.96	38.38	230.02	38.36
231.32	38	236.61	37.1	242.38	36.09	242.63	36.05	242.92	36
251.02	34.83	256.12	34.16	256.72	34.08	257.45	34	262.55	33.55
266.95	33.24	272.78	32.81	284.45	32	297.05	31.33	298.1	31.19
300.56	30.96	307.71	30.48	310.74	30.23	311.15	30.2	313.84	30
369.58	30	387.23	29.1	392.46	29.08	397.83	28.87	399.93	28.84
409.11	28	466.19	28	466.9	27.95	467.7	27.89	479.18	27.06
480.82	26.85	494.1	26	580.96	26	612.15	24.14	612.87	24.14
616.19	24.04	616.55	24.04	619.04	24	636.03	24	640.49	23.41
647.47	23.32	649.07	23.25	653.38	23.32	656.6	23.61	657.26	23.58
659.96	23.9	660.1	23.89	660.68	24	671.03	24	671.96	23.93
672.09	23.8	675.84	16	1097.84	16	1101.14	25.5	1102.25	26
1106.28	27.83	1106.66	28	1106.79	28.06	1106.9	28.1	1109.55	29.14
1110.53	29.4	1111.13	29.55	1111.46	29.56	1112.23	29.58	1113.93	29.5
1117.41	29.35	1117.48	29.34	1122.14	29.1	1124.93	28.95	1128.81	28.75
1139.79	28.13	1140.2	28.11	1149.01	27.62	1154.17	27.32	1158.84	27.07
1162.62	26.85	1177.92	26	1178.72	25.99	1188.22	25.91	1190.27	26
1294.33	26	1304.5	26.69	1304.71	26.69	1306.88	26.67	1327.12	26.53

1328.9	26.52	1345.44	26.4	1358.94	27.17	1364.2	27.03	1372.65	26.74
1374.52	26.77	1378.33	26.64	1390.79	26	1391.81	26	1393.44	25.86
1413.72	24.73	1416.65	24.58	1420.18	24.07	1420.42	24.05	1421.2	24
1467.82	24	1475.26	24.21	1476.12	24.24	1477.42	24.27	1492.08	24.68
1496.03	24.77	1503.48	24.97	1509.84	25.1	1513.52	25.19	1514.91	25.21
1516.59	25.25	1527.17	25.45	1528.75	25.49	1530.4	25.52	1547.56	25.86
1548.51	25.89	1554.78	26	1569.37	26.39	1575.6	26.61	1599.15	27.35
1603.06	27.5	1604.28	27.57	1605.28	27.62	1617.78	27.85	1618.24	27.87
1618.62	27.88	1627.09	27.91	1627.76	27.91	1635.6	28	1639.68	28.1
1640.41	28.1	1641	28.11	1656.27	28.5	1657.97	28.52	1658.66	28.54
1659.54	28.58	1660.69	28.62	1673.24	29	1674.71	29.08	1692.32	30
1696.58	30.28	1698.78	30.43	1715.7	31.55	1718.67	31.74	1752.84	34
1760.2	34.43	1761.53	34.5	1762.59	34.54	1764.86	34.61	1765.76	34.63
1805.58	35.71	1816.92	35.9	1817.65	35.91	1826.09	35.9	1826.53	35.91
1826.72	35.9	1832.23	35.72	1832.82	35.7	1833.49	35.69	1837.08	35.58
1838.8	35.53	1839	35.53	1842.89	35.02	1845.53	34.16	1845.99	34
1847.05	33.61	1849.93	32.51	1851.39	32	1855.82	30.36	1856.75	30
1857.12	29.86	1861.96	28	1863.06	27.58	1867.16	26	1869.47	25.32
1874.34	24	1948.06	24	1953.82	27.08	1958.36	29.52	1959.26	30
1962.99	32	1964.1	32.6	1966.72	34	1967.53	34.43	1970.46	36
1972.43	37.06	1974.19	38	1977.06	39.54	1977.92	40	1978.42	40.27
1982.25	42	1984.12	42.79	1988.34	44	1988.85	44.14	1989.71	44.3
1994.36	45.19	1996.75	46	2006.19	49.22	2008.1	50	2010.36	50
2017.72	50.39								

Manning's n Values num= 3

Sta	n Val	Sta	n Val	Sta	n Val
0	.035	313.84	.025	1110.53	.03

Bank Sta: Left	Right	Coeff Contr.	Expan.
313.84	1110.53	.1	.3

Ineffective Flow num= 2

Sta L	Sta R	Elev	Permanent
0	671		F
1100	2017.72		F

Upstream Embankment side slope = 0 horiz. to 1.0 vertical
Downstream Embankment side slope = 0 horiz. to 1.0 vertical
Maximum allowable submergence for weir flow = .95
Elevation at which weir flow begins =
Energy head used in spillway design =
Spillway height used in design =
Weir crest shape = Broad Crested

Number of Piers = 11

Pier Data
Pier Station Upstream= 414.54 Downstream= 707.58
Upstream num= 2

Width	Elev	Width	Elev
3	0	3	50

Downstream num= 2

Width	Elev	Width	Elev
3	0	3	50

Pier Data
Pier Station Upstream= 454.68 Downstream= 747.72
Upstream num= 2

Width	Elev	Width	Elev
3	0	3	50

Downstream num= 2

Width	Elev	Width	Elev
3	0	3	50

```
Pier Data
Pier Station      Upstream=  494.89    Downstream=  787.93
Upstream      num=        2
    Width    Elev    Width    Elev
        3       0        3      50
Downstream      num=        2
    Width    Elev    Width    Elev
        3       0        3      50

Pier Data
Pier Station      Upstream=  535.18    Downstream=  828.22
Upstream      num=        2
    Width    Elev    Width    Elev
        3       0        3      50
Downstream      num=        2
    Width    Elev    Width    Elev
        3       0        3      50

Pier Data
Pier Station      Upstream=  575.56    Downstream=   868.6
Upstream      num=        2
    Width    Elev    Width    Elev
        3       0        3      50
Downstream      num=        2
    Width    Elev    Width    Elev
        3       0        3      50

Pier Data
Pier Station      Upstream=  616.06    Downstream=   909.1
Upstream      num=        2
    Width    Elev    Width    Elev
        3       0        3      50
Downstream      num=        2
    Width    Elev    Width    Elev
        3       0        3      50

Pier Data
Pier Station      Upstream=   656.7    Downstream=  949.74
Upstream      num=        2
    Width    Elev    Width    Elev
        3       0        3      50
Downstream      num=        2
    Width    Elev    Width    Elev
        3       0        3      50

Pier Data
Pier Station      Upstream=  697.48    Downstream=  990.52
Upstream      num=        2
    Width    Elev    Width    Elev
        3       0        3      50
Downstream      num=        2
    Width    Elev    Width    Elev
        3       0        3      50

Pier Data
Pier Station      Upstream=  738.43    Downstream= 1031.47
Upstream      num=        2
    Width    Elev    Width    Elev
        3       0        3      50
Downstream      num=        2
    Width    Elev    Width    Elev
        3       0        3      50
```

```
Pier Data
Pier Station     Upstream=  779.41    Downstream= 1072.45
Upstream     num=       2
    Width   Elev    Width   Elev
       3       0       3      50
Downstream     num=       2
    Width   Elev    Width   Elev
       3       0       3      50

Pier Data
Pier Station     Upstream= 1493.06    Downstream=  1659.3
Upstream     num=       2
    Width   Elev    Width   Elev
    6.25       0    6.25      50
Downstream     num=       2
    Width   Elev    Width   Elev
    6.25       0    6.25      50

Number of Bridge Coefficient Sets =  1

Low Flow Methods and Data
       Energy
       Momentum                Cd   =     1.2
Selected Low Flow Methods = Highest Energy Answer

High Flow Method
       Energy Only

Additional Bridge Parameters
       Add Friction component to Momentum
       Do not add Weight component to Momentum
       Class B flow critical depth computations use critical depth
           inside the bridge at the upstream end
       Criteria to check for pressure flow = Upstream energy grade line

BRIDGE OUTPUT  Profile #PF 1


  E.G. US. (ft)                 24.07    Element                 Inside BR US
Inside BR DS
  W.S. US. (ft)                 23.87    E.G. Elev (ft)                23.95
22.68
  Q Total (cfs)              10000.00    W.S. Elev (ft)                23.70
22.44
  Q Bridge (cfs)             10000.00    Crit W.S. (ft)                19.92
18.73
  Q Weir (cfs)                           Max Chl Dpth (ft)              7.70
 6.44
  Weir Sta Lft (ft)                      Vel Total (ft/s)               4.01
 3.96
  Weir Sta Rgt (ft)                      Flow Area (sq ft)           2493.75
2525.63
  Weir Submerg                           Froude # Chl                  0.28
 0.28
  Weir Max Depth (ft)                    Specif Force (cu ft)        9618.37
9354.27
  Min El Weir Flow (ft)         26.69    Hydr Depth (ft)                6.48
 6.42
  Min El Prs (ft)               53.25    W.P. Total (ft)              518.04
526.45
  Delta EG (ft)                  1.40    Conv. Total (cfs)           88036.4
427005.1
```

Delta WS (ft)	1.40	Top Width (ft)	414.72
393.31			
BR Open Area (sq ft)	4298.01	Frctn Loss (ft)	
BR Open Vel (ft/s)	4.01	C & E Loss (ft)	
Coef of Q		Shear Total (lb/sq ft)	3.88
0.16			
Br Sel Method	Momentum	Power Total (lb/ft s)	15.55
0.65			

Warning: The conveyance ratio (upstream conveyance divided by downstream conveyance) is less than
0.7 or greater than 1.4. This may indicate the need for additional cross sections.

CROSS SECTION

RIVER: CV Creek
REACH: Lower RS: 1442

INPUT
Description: C
Station Elevation Data num= 291

Sta	Elev	Sta	Elev	Sta	Elev	Sta	Elev	Sta	Elev
0	64	9.05	64.39	10.38	64.53	13.66	64.76	16.02	64.86
18.14	64.88	20.57	64.99	22.53	64.92	24.35	65.02	25.85	64.97
27.28	65.08	28.34	65.05	28.64	65.07	29.38	65.05	30.48	65.05
31.31	65.06	31.64	65.04	32.65	65.03	34.3	65.05	35.2	65.08
40.02	65.15	41.88	65.17	44.13	65.2	49.56	65.26	51.3	65.23
52.99	65.12	56.35	65.17	57.73	64.9	59.35	64.6	60.28	64.61
61.22	64.37	62.54	64	62.7	63.94	65.19	62.96	66.23	62.54
66.72	62.35	67.6	62	68.86	61.53	72.88	60	77.19	58.38
78.19	58	84.21	55.68	85.46	55.33	88.25	54.56	89.12	54.45
91.32	54.18	91.69	54.21	94.26	54.36	98.62	54.31	103.76	54.07
103.99	54.06	104.79	54	109.82	53.64	110.9	53.6	115.64	53.4
117.7	53.38	122	53.31	128.93	53.36	131.56	53.3	135.53	53.19
142.26	52.78	149.4	52.09	149.7	52.06	149.89	52.05	150.41	52
156.21	51.49	158.62	51.27	162.98	50.91	167.71	50.51	175.85	49.88
176.44	49.81	182.54	49.17	187.76	48.39	188.96	48.22	190.11	48
197.34	46.65	198.61	46.36	200.17	46	207.81	44.25	208.31	44.11
208.7	44	212.73	42.88	215.87	42	218.31	41.47	219.73	41.2
221.04	40.75	223.33	40	227.95	38.86	229.96	38.38	230.02	38.36
231.32	38	236.61	37.1	242.38	36.09	242.63	36.05	242.92	36
251.02	34.83	256.12	34.16	256.72	34.08	257.45	34	262.55	33.55
266.95	33.24	272.78	32.81	284.45	32	297.05	31.33	298.1	31.19
300.56	30.96	307.71	30.48	310.74	30.23	311.15	30.2	313.84	30
369.58	30	387.23	29.1	392.46	29.08	397.83	28.87	399.93	28.84
409.11	28	466.19	28	466.9	27.95	467.7	27.89	479.18	27.06
480.82	26.85	494.1	26	580.96	26	612.15	24.14	612.87	24.14
616.19	24.04	616.55	24.04	619.04	24	636.03	24	640.49	23.41
647.47	23.32	649.07	23.25	653.38	23.32	656.6	23.61	657.26	23.58
659.96	23.9	660.1	23.89	660.68	24	671.03	24	671.96	23.93
672.09	23.8	675.84	16	1097.84	16	1101.14	25.5	1102.25	26
1106.28	27.83	1106.66	28	1106.79	28.06	1106.9	28.1	1109.55	29.14
1110.53	29.4	1111.13	29.55	1111.46	29.56	1112.23	29.58	1113.93	29.5
1117.41	29.35	1117.48	29.34	1122.14	29.1	1124.93	28.95	1128.81	28.75
1139.79	28.13	1140.2	28.11	1149.01	27.62	1154.17	27.32	1158.84	27.07
1162.62	26.85	1177.92	26	1178.72	25.99	1188.22	25.91	1190.27	26
1294.33	26	1304.5	26.69	1304.71	26.69	1306.88	26.67	1327.12	26.53

1328.9	26.52	1345.44	26.4	1358.94	27.17	1364.2	27.03	1372.65	26.74
1374.52	26.77	1378.33	26.64	1390.79	26	1391.81	26	1393.44	25.86
1413.72	24.73	1416.65	24.58	1420.18	24.07	1420.42	24.05	1421.2	24
1467.82	24	1475.26	24.21	1476.12	24.24	1477.42	24.27	1492.08	24.68
1496.03	24.77	1503.48	24.97	1509.84	25.1	1513.52	25.19	1514.91	25.21
1516.59	25.25	1527.17	25.45	1528.75	25.49	1530.4	25.52	1547.56	25.86
1548.51	25.89	1554.78	26	1569.37	26.39	1575.6	26.61	1599.15	27.35
1603.06	27.5	1604.28	27.57	1605.28	27.62	1617.78	27.85	1618.24	27.87
1618.62	27.88	1627.09	27.91	1627.76	27.91	1635.6	28	1639.68	28.1
1640.41	28.1	1641	28.11	1656.27	28.5	1657.97	28.52	1658.66	28.54
1659.54	28.58	1660.69	28.62	1673.24	29	1674.71	29.08	1692.32	30
1696.58	30.28	1698.78	30.43	1715.7	31.55	1718.67	31.74	1752.84	34
1760.2	34.43	1761.53	34.5	1762.59	34.54	1764.86	34.61	1765.76	34.63
1805.58	35.71	1816.92	35.9	1817.65	35.91	1826.09	35.9	1826.53	35.91
1826.72	35.9	1832.23	35.72	1832.82	35.7	1833.49	35.69	1837.08	35.58
1838.8	35.53	1839	35.53	1842.89	35.02	1845.53	34.16	1845.99	34
1847.05	33.61	1849.93	32.51	1851.39	32	1855.82	30.36	1856.75	30
1857.12	29.86	1861.96	28	1863.06	27.58	1867.16	26	1869.47	25.32
1874.34	24	1948.06	24	1953.82	27.08	1958.36	29.52	1959.26	30
1962.99	32	1964.1	32.6	1966.72	34	1967.53	34.43	1970.46	36
1972.43	37.06	1974.19	38	1977.06	39.54	1977.92	40	1978.42	40.27
1982.25	42	1984.12	42.79	1988.34	44	1988.85	44.14	1989.71	44.3
1994.36	45.19	1996.75	46	2006.19	49.22	2008.1	50	2010.36	50
2017.72	50.39								

Manning's n Values num= 3

Sta	n Val	Sta	n Val	Sta	n Val
0	.035	313.84	.025	1110.53	.03

Bank Sta: Left	Right	Lengths: Left	Channel	Right	Coeff Contr.	Expan.
313.84	1110.53	294.18	244.62	253.63	.1	.3

Ineffective Flow num= 2

Sta L	Sta R	Elev	Permanent
0	671		F
1100	2017.72		F

CROSS SECTION OUTPUT Profile #PF 1

E.G. Elev (ft)	22.67	Element	Left OB	Channel
Right OB				
Vel Head (ft)	0.21	Wt. n-Val.		0.025
W.S. Elev (ft)	22.47	Reach Len. (ft)	9.34	9.34
9.34				
Crit W.S. (ft)	18.59	Flow Area (sq ft)		2747.32
E.G. Slope (ft/ft)	0.000322	Area (sq ft)		2747.33
Q Total (cfs)	10000.00	Flow (cfs)		10000.00
Top Width (ft)	427.36	Top Width (ft)		427.36
Vel Total (ft/s)	3.64	Avg. Vel. (ft/s)		3.64
Max Chl Dpth (ft)	6.47	Hydr. Depth (ft)		6.43
Conv. Total (cfs)	557279.3	Conv. (cfs)		557279.3
Length Wtd. (ft)	9.34	Wetted Per. (ft)		435.76
Min Ch El (ft)	16.00	Shear (lb/sq ft)		0.13

Alpha	1.00	Stream Power (lb/ft s)	0.46
Frctn Loss (ft)		Cum Volume (acre-ft)	124.30
C & E Loss (ft)		Cum SA (acres)	25.14

Warning: The velocity head has changed by more than 0.5 ft (0.15 m). This may indicate the need for
additional cross sections.
Warning: The conveyance ratio (upstream conveyance divided by downstream conveyance) is less than
0.7 or greater than 1.4. This may indicate the need for additional cross sections.

BRIDGE

RIVER: CV Creek
REACH: Lower RS: 1400

INPUT
Description: I-5 Bridge
Distance from Upstream XS = 9.34
Deck/Roadway Width = 222
Weir Coefficient = 2.6
Upstream Deck/Roadway Coordinates
num= 15

Sta	Hi Cord	Lo Cord	Sta	Hi Cord	Lo Cord	Sta	Hi Cord	Lo Cord
0	30	0	680.08	29.25	0	680.08	29.25	24.5
745.5	28.4	23.65	815.5	27.8	23.05	890.83	27.6	22.85
971.5	27.8	23.05	1036.1	28.4	23.65	1101.58	29.25	24.5
1101.58	29.25	0	1874.34	45.93	0	1874.34	45.93	41.18
1948.06	49.21	44.46	1948.06	49.21	0	2000	49.21	0

Upstream Bridge Cross Section Data
Station Elevation Data num= 291

Sta	Elev	Sta	Elev	Sta	Elev	Sta	Elev	Sta	Elev
0	64	9.05	64.39	10.38	64.53	13.66	64.76	16.02	64.86
18.14	64.88	20.57	64.99	22.53	64.92	24.35	65.02	25.85	64.97
27.28	65.08	28.34	65.05	28.64	65.07	29.38	65.05	30.48	65.05
31.31	65.06	31.64	65.04	32.65	65.03	34.3	65.05	35.2	65.08
40.02	65.15	41.88	65.17	44.13	65.2	49.56	65.26	51.3	65.23
52.99	65.12	56.35	65.17	57.73	64.9	59.35	64.6	60.28	64.61
61.22	64.37	62.54	64	62.7	63.94	65.19	62.96	66.23	62.54
66.72	62.35	67.6	62	68.86	61.53	72.88	60	77.19	58.38
78.19	58	84.21	55.68	85.46	55.33	88.25	54.56	89.12	54.45
91.32	54.18	91.69	54.21	94.26	54.36	98.62	54.31	103.76	54.07
103.99	54.06	104.79	54	109.82	53.64	110.9	53.6	115.64	53.4
117.7	53.38	122	53.31	128.93	53.36	131.56	53.3	135.53	53.19
142.26	52.78	149.4	52.09	149.7	52.06	149.89	52.05	150.41	52
156.21	51.49	158.62	51.27	162.98	50.91	167.71	50.51	175.85	49.88
176.44	49.81	182.54	49.17	187.76	48.39	188.96	48.22	190.11	48
197.34	46.65	198.61	46.36	200.17	46	207.81	44.25	208.31	44.11
208.7	44	212.73	42.88	215.87	42	218.31	41.47	219.73	41.2
221.04	40.75	223.33	40	227.95	38.86	229.96	38.38	230.02	38.36
231.32	38	236.61	37.1	242.38	36.09	242.63	36.05	242.92	36
251.02	34.83	256.12	34.16	256.72	34.08	257.45	34	262.55	33.55
266.95	33.24	272.78	32.81	284.45	32	297.05	31.33	298.1	31.19
300.56	30.96	307.71	30.48	310.74	30.23	311.15	30.2	313.84	30
369.58	30	387.23	29.1	392.46	29.08	397.83	28.87	399.93	28.84

409.11	28	466.19	28	466.9	27.95	467.7	27.89	479.18	27.06
480.82	26.85	494.1	26	580.96	26	612.15	24.14	612.87	24.14
616.19	24.04	616.55	24.04	619.04	24	636.03	24	640.49	23.41
647.47	23.32	649.07	23.25	653.38	23.32	656.6	23.61	657.26	23.58
659.96	23.9	660.1	23.89	660.68	24	671.03	24	671.96	23.93
672.09	23.8	675.84	16	1097.84	16	1101.14	25.5	1102.25	26
1106.28	27.83	1106.66	28	1106.79	28.06	1106.9	28.1	1109.55	29.14
1110.53	29.4	1111.13	29.55	1111.46	29.56	1112.23	29.58	1113.93	29.5
1117.41	29.35	1117.48	29.34	1122.14	29.1	1124.93	28.95	1128.81	28.75
1139.79	28.13	1140.2	28.11	1149.01	27.62	1154.17	27.32	1158.84	27.07
1162.62	26.85	1177.92	26	1178.72	25.99	1188.22	25.91	1190.27	26
1294.33	26	1304.5	26.69	1304.71	26.69	1306.88	26.67	1327.12	26.53
1328.9	26.52	1345.44	26.4	1358.94	27.17	1364.2	27.03	1372.65	26.74
1374.52	26.77	1378.33	26.64	1390.79	26	1391.81	26	1393.44	25.86
1413.72	24.73	1416.65	24.58	1420.18	24.07	1420.42	24.05	1421.2	24
1467.82	24	1475.26	24.21	1476.12	24.24	1477.42	24.27	1492.08	24.68
1496.03	24.77	1503.48	24.97	1509.84	25.1	1513.52	25.19	1514.91	25.21
1516.59	25.25	1527.17	25.45	1528.75	25.49	1530.4	25.52	1547.56	25.86
1548.51	25.89	1554.78	26	1569.37	26.39	1575.6	26.61	1599.15	27.35
1603.06	27.5	1604.28	27.57	1605.28	27.62	1617.78	27.85	1618.24	27.87
1618.62	27.88	1627.09	27.91	1627.76	27.91	1635.6	28	1639.68	28.1
1640.41	28.1	1641	28.11	1656.27	28.5	1657.97	28.52	1658.66	28.54
1659.54	28.58	1660.69	28.62	1673.24	29	1674.71	29.08	1692.32	30
1696.58	30.28	1698.78	30.43	1715.7	31.55	1718.67	31.74	1752.84	34
1760.2	34.43	1761.53	34.5	1762.59	34.54	1764.86	34.61	1765.76	34.63
1805.58	35.71	1816.92	35.9	1817.65	35.91	1826.09	35.9	1826.53	35.91
1826.72	35.9	1832.23	35.72	1832.82	35.7	1833.49	35.69	1837.08	35.58
1838.8	35.53	1839	35.53	1842.89	35.02	1845.53	34.16	1845.99	34
1847.05	33.61	1849.93	32.51	1851.39	32	1855.82	30.36	1856.75	30
1857.12	29.86	1861.96	28	1863.06	27.58	1867.16	26	1869.47	25.32
1874.34	24	1948.06	24	1953.82	27.08	1958.36	29.52	1959.26	30
1962.99	32	1964.1	32.6	1966.72	34	1967.53	34.43	1970.46	36
1972.43	37.06	1974.19	38	1977.06	39.54	1977.92	40	1978.42	40.27
1982.25	42	1984.12	42.79	1988.34	44	1988.85	44.14	1989.71	44.3
1994.36	45.19	1996.75	46	2006.19	49.22	2008.1	50	2010.36	50
2017.72	50.39								

Manning's n Values num= 3

Sta	n Val	Sta	n Val	Sta	n Val
0	.035	313.84	.025	1110.53	.03

Bank Sta: Left	Right	Coeff Contr.	Expan.
313.84	1110.53	.1	.3

Ineffective Flow num= 2

Sta L	Sta R	Elev	Permanent
0	671		F
1100	2017.72		F

Downstream Deck/Roadway Coordinates
num= 15

Sta	Hi Cord	Lo Cord	Sta	Hi Cord	Lo Cord	Sta	Hi Cord	Lo Cord
0	30	0	632.19	31.6	0	632.19	31.6	26.85
697.61	30.75	26	767.61	30.15	25.2	842.94	29.95	25
923.61	30.15	25.2	988.21	30.75	26	1053.69	31.6	26.85
1053.69	31.6	0	1714.51	45.93	0	1714.51	45.93	41.18
1795.06	49.21	44.46	1795.06	49.21	0	2000	49.21	0

Downstream Bridge Cross Section Data
Station Elevation Data num= 238

Sta	Elev	Sta	Elev	Sta	Elev	Sta	Elev	Sta	Elev
0	40.16	1.11	40.12	1.57	40.14	7.57	39.87	8.17	39.84
16.37	39.47	18.51	39.38	45.64	38.17	47.11	38.11	52.24	37.88
80.79	36.64	83.16	36.53	95.33	36	105.69	35.95	106.71	35.88

122.5	35.71	126.21	35.09	127.06	34.88	130.74	34.75	131.09	34.55
131.93	34.4	133.23	34.34	134.54	34.29	135.38	34.25	136.06	34.22
136.23	34.21	136.41	34.21	136.6	34.2	137.3	34.17	142.47	34
170.12	34	174.22	33.95	174.97	33.93	210.89	33.86	213.49	33.77
235.44	33.68	239.86	33.43	251.83	32	263.6	32	264.87	31.91
265.56	31.89	270.72	31.52	278.4	31.39	290.7	30.84	323.02	30
373.81	30	375.9	29.65	378.6	29.65	381.44	29.64	394.23	28.75
408.83	28.73	432.38	28	519.63	28	534.48	26.92	541.98	26.9
573.08	26	614.87	26	629.46	26	630.59	24.03	630.64	23.97
634.27	22	634.85	21.66	636.87	20	647.09	12	962.09	12
1038.96	12	1046.04	19.13	1048	20	1051.49	21.54	1051.55	21.56
1052.53	22	1053.71	22.52	1057.11	24	1059.69	24.2	1068.5	24.9
1069.9	24.93	1072.95	24.99	1081.09	25.48	1087.57	25.55	1097.18	25.65
1111.5	26	1183.47	26	1193.5	26.33	1195.07	26.41	1204.31	26.43
1213.83	26.5	1216.12	26.59	1221.96	26.63	1228.79	26.59	1234.43	26.48
1237.26	26.51	1246.15	26.3	1247.75	26.31	1255.08	26.04	1255.74	26
1260.25	25.91	1260.8	25.91	1278.23	25.75	1279.32	25.76	1304.77	25.75
1305.48	25.76	1306.19	25.76	1307.11	25.75	1307.78	25.74	1324.06	25.76
1325	25.75	1330.77	25.59	1351.43	25.77	1352	25.76	1368.95	25.97
1369.1	25.97	1371.5	26	1381.84	26.39	1384.51	26.45	1391.52	26.66
1399.25	26.76	1403.75	26.85	1405.14	26.9	1410.32	26.99	1414.39	27.05
1419.5	27.17	1424.96	27.24	1429.3	27.4	1430.7	27.42	1436.67	27.58
1439.48	27.62	1446.66	27.77	1456.9	27.9	1462.73	28	1464.72	28.03
1464.79	28.04	1464.85	28.04	1470.95	28.18	1471.27	28.18	1475.21	28.32
1476.44	28.31	1485.42	28.37	1487.89	28.35	1501.99	28.35	1505.32	28.33
1527.48	28.26	1528.85	28.26	1542.95	28.22	1543.38	28.22	1551.54	28.19
1552.64	28.2	1555.77	28.18	1557	28.19	1557.99	28.19	1558.78	28.21
1559.81	28.22	1560.48	28.24	1560.97	28.26	1567.56	28.47	1569.39	28.52
1571.07	28.59	1581.03	28.9	1585.41	29.06	1613.86	30	1616.44	30.08
1616.88	30.1	1635.42	30.7	1640.63	30.65	1642.29	30.64	1646.49	30.72
1649.09	30.79	1659.95	31.18	1677.27	31.9	1677.73	31.91	1677.99	31.92
1679.75	32	1688.27	32.29	1689.2	32.29	1693.06	32	1695.98	32
1699.76	30.33	1700.39	30	1704.12	28	1707.62	26	1711.08	24
1712.8	23	1714.51	22	1795.06	22	1797.72	22.59	1800.91	23.22
1804.98	23.82	1805.91	23.97	1805.99	23.97	1806.48	24	1812.24	24
1813.85	24.41	1821.34	26	1822.09	26.15	1823.63	26.45	1829.51	27.57
1832.03	28	1838.04	29.11	1843	30	1847.73	30.87	1860.32	33.04
1866.19	34	1867.51	34.22	1867.67	34.24	1867.83	34.25	1871.69	34.69
1872.09	34.69	1873.1	34.73	1875.84	34.89	1877.88	34.98	1880.12	34.99
1883.41	35.16	1885.72	35.23	1889.81	35.44	1891.64	35.53	1896.51	35.75
1897.39	35.8	1902.24	36	1908.08	36.11	1912.85	36.14	1914.01	36.14
1918.49	36.11	1922.87	36	1924.56	35.92	1925.05	35.86	1933.84	35.07
1935.67	35.07	1940.11	34.67	1941.21	34.89	1942.94	35.2	1947.15	35.03
1950.01	35.3	1953.77	35.22	1967.81	35.71	1972.44	36	1976.22	36.49
1978.67	36.45	1988.75	36.83	1993.73	37.08				

Manning's n Values num= 3

Sta	n Val	Sta	n Val	Sta	n Val
0	.035	614.87	.025	1087.57	.03

Bank Sta: Left	Right	Coeff Contr.	Expan.
614.87	1087.57	.1	.3

Ineffective Flow num= 1

Sta L	Sta R	Elev	Permanent
1053	1993.73		F

Upstream Embankment side slope = 0 horiz. to 1.0 vertical
Downstream Embankment side slope = 0 horiz. to 1.0 vertical
Maximum allowable submergence for weir flow = .95
Elevation at which weir flow begins =
Energy head used in spillway design =
Spillway height used in design =
Weir crest shape = Broad Crested

```
Number of Piers =  10

Pier Data
Pier Station     Upstream=  710.83    Downstream=  662.94
Upstream     num=        2
    Width   Elev    Width   Elev
       4       0       4      40
Downstream     num=        2
    Width   Elev    Width   Elev
       4       0       4      40

Pier Data
Pier Station     Upstream=  750.83    Downstream=  702.94
Upstream     num=        2
    Width   Elev    Width   Elev
       4       0       4      40
Downstream     num=        2
    Width   Elev    Width   Elev
       4       0       4      40

Pier Data
Pier Station     Upstream=  790.83    Downstream=  742.94
Upstream     num=        2
    Width   Elev    Width   Elev
       4       0       4      40
Downstream     num=        2
    Width   Elev    Width   Elev
       4       0       4      40

Pier Data
Pier Station     Upstream=  830.83    Downstream=  782.94
Upstream     num=        2
    Width   Elev    Width   Elev
       4       0       4      40
Downstream     num=        2
    Width   Elev    Width   Elev
       4       0       4      40

Pier Data
Pier Station     Upstream=  870.83    Downstream=  822.94
Upstream     num=        2
    Width   Elev    Width   Elev
       4       0       4      40
Downstream     num=        2
    Width   Elev    Width   Elev
       4       0       4      40

Pier Data
Pier Station     Upstream=  910.83    Downstream=  862.94
Upstream     num=        2
    Width   Elev    Width   Elev
       4       0       4      40
Downstream     num=        2
    Width   Elev    Width   Elev
       4       0       4      40

Pier Data
Pier Station     Upstream=  950.83    Downstream=  902.94
Upstream     num=        2
    Width   Elev    Width   Elev
       4       0       4      40
Downstream     num=        2
```

```
    Width    Elev     Width    Elev
       4       0        4       40

Pier Data
Pier Station      Upstream=  990.83    Downstream=  942.94
Upstream      num=        2
    Width    Elev     Width    Elev
       4       0        4       40
Downstream      num=        2
    Width    Elev     Width    Elev
       4       0        4       40

Pier Data
Pier Station      Upstream= 1030.83    Downstream=  982.94
Upstream      num=        2
    Width    Elev     Width    Elev
       4       0        4       40
Downstream      num=        2
    Width    Elev     Width    Elev
       4       0        4       40

Pier Data
Pier Station      Upstream= 1070.83    Downstream= 1022.94
Upstream      num=        2
    Width    Elev     Width    Elev
       4       0        4       40
Downstream      num=        2
    Width    Elev     Width    Elev
       4       0        4       40

Number of Bridge Coefficient Sets =  1

Low Flow Methods and Data
       Energy
       Momentum                Cd    =     1.2
Selected Low Flow Methods = Highest Energy Answer

High Flow Method
       Energy Only

Additional Bridge Parameters
       Add Friction component to Momentum
       Do not add Weight component to Momentum
       Class B flow critical depth computations use critical depth
           inside the bridge at the upstream end
       Criteria to check for pressure flow = Upstream energy grade line

BRIDGE OUTPUT  Profile #PF 1

  E.G. US. (ft)                  22.67    Element                  Inside BR US
Inside BR DS
  W.S. US. (ft)                  22.47    E.G. Elev (ft)                 22.65
18.70
  Q Total (cfs)                10000.00    W.S. Elev (ft)                 22.38
18.40
  Q Bridge (cfs)               10000.00    Crit W.S. (ft)                 18.79
14.91
  Q Weir (cfs)                             Max Chl Dpth (ft)               6.38
 6.40
  Weir Sta Lft (ft)                        Vel Total (ft/s)                4.13
 4.35
  Weir Sta Rgt (ft)                        Flow Area (sq ft)            2419.04
```

2299.02			
Weir Submerg		Froude # Chl	0.29
0.31			
Weir Max Depth (ft)		Specif Force (cu ft)	8998.95
8659.80			
Min El Weir Flow (ft)	29.96	Hydr Depth (ft)	6.37
6.27			
Min El Prs (ft)	44.46	W.P. Total (ft)	512.04
499.31			
Delta EG (ft)	3.99	Conv. Total (cfs)	404814.7
378194.4			
Delta WS (ft)	4.02	Top Width (ft)	379.98
366.40			
BR Open Area (sq ft)	2815.56	Frctn Loss (ft)	
BR Open Vel (ft/s)	4.35	C & E Loss (ft)	
Coef of Q		Shear Total (lb/sq ft)	0.18
0.20			
Br Sel Method	Momentum	Power Total (lb/ft s)	0.74
0.87			

Warning: The energy equation could not be balanced within the specified number of iterations. The
program used critical depth for the water surface and continued on with the calculations.
Warning: The velocity head has changed by more than 0.5 ft (0.15 m). This may indicate the need for
additional cross sections.
Warning: The conveyance ratio (upstream conveyance divided by downstream conveyance) is less than
0.7 or greater than 1.4. This may indicate the need for additional cross sections.
Warning: The energy loss was greater than 1.0 ft (0.3 m). between the current and previous cross
section. This may indicate the need for additional cross sections.
Warning: During the standard step iterations, when the assumed water surface was set equal to critical
depth, the calculated water surface came back below critical depth. This indicates that there
is not a valid subcritical answer. The program defaulted to critical depth.
Warning: The velocity head has changed by more than 0.5 ft (0.15 m). This may indicate the need for
additional cross sections.
Warning: The conveyance ratio (upstream conveyance divided by downstream conveyance) is less than
0.7 or greater than 1.4. This may indicate the need for additional cross sections.
Warning: The energy loss was greater than 1.0 ft (0.3 m). between the current and previous cross
section. This may indicate the need for additional cross sections.

CROSS SECTION

RIVER: CV Creek
REACH: Lower RS: 1197

INPUT
Description:

Station Elevation Data num= 238

Sta	Elev	Sta	Elev	Sta	Elev	Sta	Elev	Sta	Elev
0	40.16	1.11	40.12	1.57	40.14	7.57	39.87	8.17	39.84
16.37	39.47	18.51	39.38	45.64	38.17	47.11	38.11	52.24	37.88
80.79	36.64	83.16	36.53	95.33	36	105.69	35.95	106.71	35.88
122.5	35.71	126.21	35.09	127.06	34.88	130.74	34.75	131.09	34.55
131.93	34.4	133.23	34.34	134.54	34.29	135.38	34.25	136.06	34.22
136.23	34.21	136.41	34.21	136.6	34.2	137.3	34.17	142.47	34
170.12	34	174.22	33.95	174.97	33.93	210.89	33.86	213.49	33.77
235.44	33.68	239.86	33.43	251.83	32	263.6	32	264.87	31.91
265.56	31.89	270.72	31.52	278.4	31.39	290.7	30.84	323.02	30
373.81	30	375.9	29.65	378.6	29.65	381.44	29.64	394.23	28.75
408.83	28.73	432.38	28	519.63	28	534.48	26.92	541.98	26.9
573.08	26	614.87	26	629.46	26	630.59	24.03	630.64	23.97
634.27	22	634.85	21.66	636.87	20	647.09	12	962.09	12
1038.96	12	1046.04	19.13	1048	20	1051.49	21.54	1051.55	21.56
1052.53	22	1053.71	22.52	1057.11	24	1059.69	24.2	1068.5	24.9
1069.9	24.93	1072.95	24.99	1081.09	25.48	1087.57	25.55	1097.18	25.65
1111.5	26	1183.47	26	1193.5	26.33	1195.07	26.41	1204.31	26.43
1213.83	26.5	1216.12	26.59	1221.96	26.63	1228.79	26.59	1234.43	26.48
1237.26	26.51	1246.15	26.3	1247.75	26.31	1255.08	26.04	1255.74	26
1260.25	25.91	1260.8	25.91	1278.23	25.75	1279.32	25.76	1304.77	25.75
1305.48	25.76	1306.19	25.76	1307.11	25.75	1307.78	25.74	1324.06	25.76
1325	25.75	1330.77	25.59	1351.43	25.77	1352	25.76	1368.95	25.97
1369.1	25.97	1371.5	26	1381.84	26.39	1384.51	26.45	1391.52	26.66
1399.25	26.76	1403.75	26.85	1405.14	26.9	1410.32	26.99	1414.39	27.05
1419.5	27.17	1424.96	27.24	1429.3	27.4	1430.7	27.42	1436.67	27.58
1439.48	27.62	1446.66	27.77	1456.9	27.9	1462.73	28	1464.72	28.03
1464.79	28.04	1464.85	28.04	1470.95	28.18	1471.27	28.18	1475.21	28.32
1476.44	28.31	1485.42	28.37	1487.89	28.35	1501.99	28.35	1505.32	28.33
1527.48	28.26	1528.85	28.26	1542.95	28.22	1543.38	28.22	1551.54	28.19
1552.64	28.2	1555.77	28.18	1557	28.19	1557.99	28.19	1558.78	28.21
1559.81	28.22	1560.48	28.24	1560.97	28.26	1567.56	28.47	1569.39	28.52
1571.07	28.59	1581.03	28.9	1585.41	29.06	1613.86	30	1616.44	30.08
1616.88	30.1	1635.42	30.7	1640.63	30.65	1642.29	30.64	1646.49	30.72
1649.09	30.79	1659.95	31.18	1677.27	31.9	1677.73	31.91	1677.99	31.92
1679.75	32	1688.27	32.29	1689.2	32.29	1693.06	32	1695.98	32
1699.76	30.33	1700.39	30	1704.12	28	1707.62	26	1711.08	24
1712.8	23	1714.51	22	1795.06	22	1797.72	22.59	1800.91	23.22
1804.98	23.82	1805.91	23.97	1805.99	23.97	1806.48	24	1812.24	24
1813.85	24.41	1821.34	26	1822.09	26.15	1823.63	26.45	1829.51	27.57
1832.03	28	1838.04	29.11	1843	30	1847.73	30.87	1860.32	33.04
1866.19	34	1867.51	34.22	1867.67	34.24	1867.83	34.25	1871.69	34.69
1872.09	34.69	1873.1	34.73	1875.84	34.89	1877.88	34.98	1880.12	34.99
1883.41	35.16	1885.72	35.23	1889.81	35.44	1891.64	35.53	1896.51	35.75
1897.39	35.8	1902.24	36	1908.08	36.11	1912.85	36.14	1914.01	36.14
1918.49	36.11	1922.87	36	1924.56	35.92	1925.05	35.86	1933.84	35.07
1935.67	35.07	1940.11	34.67	1941.21	34.89	1942.94	35.2	1947.15	35.03
1950.01	35.3	1953.77	35.22	1967.81	35.71	1972.44	36	1976.22	36.49
1978.67	36.45	1988.75	36.83	1993.73	37.08				

Manning's n Values num= 3

Sta	n Val	Sta	n Val	Sta	n Val
0	.035	614.87	.025	1087.57	.03

Bank Sta: Left	Right	Lengths: Left	Channel	Right	Coeff Contr.	Expan.
614.87	1087.57	16.25	15.14	20.8	.1	.3

Ineffective Flow num= 1

Sta L	Sta R	Elev	Permanent
1053	1993.73		F

CROSS SECTION OUTPUT Profile #PF 1

E.G. Elev (ft)	18.68	Element	Left OB	Channel	Right OB
Vel Head (ft)	0.23	Wt. n-Val.		0.025	
W.S. Elev (ft)	18.45	Reach Len. (ft)	16.25	15.14	20.80
Crit W.S. (ft)		Flow Area (sq ft)		2574.60	
E.G. Slope (ft/ft)	0.000370	Area (sq ft)		2574.60	
Q Total (cfs)	10000.00	Flow (cfs)		10000.00	
Top Width (ft)	406.51	Top Width (ft)		406.51	
Vel Total (ft/s)	3.88	Avg. Vel. (ft/s)		3.88	
Max Chl Dpth (ft)	6.45	Hydr. Depth (ft)		6.33	
Conv. Total (cfs)	519651.3	Conv. (cfs)		519651.3	
Length Wtd. (ft)	15.14	Wetted Per. (ft)		411.42	
Min Ch El (ft)	12.00	Shear (lb/sq ft)		0.14	
Alpha	1.00	Stream Power (lb/ft s)		0.56	
Frctn Loss (ft)	0.01	Cum Volume (acre-ft)		110.98	
C & E Loss (ft)	0.01	Cum SA (acres)		23.04	

CROSS SECTION

RIVER: CV Creek
REACH: Lower RS: 1182

INPUT
Description:
Station Elevation Data num= 262

Sta	Elev	Sta	Elev	Sta	Elev	Sta	Elev	Sta	Elev
0	41.82	16.6	41.97	16.76	41.97	19.75	42	123.11	42
132.88	41.58	134.14	41.52	157.21	40.55	162.91	40.32	165.03	40.23
170.79	40	170.96	39.99	176.75	39.76	177.58	39.73	177.79	39.72
182.95	39.51	185.38	39.42	189.85	39.24	207.29	38.61	213.62	38.41
214.93	38.36	222.68	38.12	223.08	38.11	225.48	38.01	225.62	38
234.16	37.63	240.95	37.11	241.37	36.68	242.46	36	243.89	35.2
246.39	34	249.79	32.6	251.17	32	258.09	32	264.8	31.04
265.45	31.02	265.98	31	267.72	30.9	280.99	30.6	282.32	30.5
288.05	30.39	293.62	30.27	294.36	30.22	305.44	30.02	306.8	30
322.64	28.85	329.46	28.42	338.53	28.03	339.31	28	347.43	27.59
349.88	27.46	354.4	27.35	355.6	27.28	369.91	26.9	374.19	26.78
398.32	26.62	413.09	26.56	419.19	26.52	434.34	26.51	438.02	26.49
447.59	26.51	449.3	26.52	454.57	26.53	457.98	26.52	520	26.52
550	12	664.04	12	978.46	12	1038.32	12	1039.2	16.39
1042.81	18	1044.9	18.94	1047.27	20	1048.91	20.79	1049.7	21.13
1051.25	21.81	1051.68	22	1051.98	22.15	1055.82	24	1056.85	24
1058.05	24	1077.07	25.54	1079.25	25.62	1080.11	25.72	1081.62	25.76
1084.21	25.86	1089.56	25.97	1090.56	26	1115.78	26	1126.77	25.86
1127.54	25.88	1137.03	25.84	1137.89	25.86	1146.37	26	1151.66	26

1163.13	25.79	1163.36	25.8	1163.77	25.81	1173.07	25.75	1177.83	25.77
1187.79	25.75	1197.75	25.76	1208.25	25.8	1208.53	25.8	1215.95	25.83
1219.81	25.79	1223.47	25.81	1224.88	25.81	1225.23	25.8	1226.61	25.77
1246.82	25.55	1249.55	25.53	1256	25.45	1259.7	25.37	1263.56	25.4
1276.31	25.28	1279.45	25.3	1288.82	25.29	1290.98	25.3	1291.73	25.3
1292.66	25.31	1302.24	25.31	1304.21	25.32	1306.21	25.32	1308.77	25.3
1310.65	25.28	1322.64	25.3	1325.4	25.28	1342.43	24.8	1346.76	24.83
1352.82	24.89	1355.62	24.85	1363.76	24.95	1369.22	24.87	1375.67	24.95
1384.25	24.81	1388.15	24.87	1396.67	24.73	1399.88	24.75	1401.16	24.77
1402.21	24.79	1409.91	24.66	1412.63	24.69	1419.75	24.59	1423.87	24.63
1428.91	24.5	1430.14	24.52	1434.31	24.21	1438.3	24.12	1439.19	24.13
1445.94	24.14	1454.97	24.25	1457.09	24.29	1469.59	24.58	1477.7	24.82
1487.5	25.19	1494.57	25.3	1498.18	25.39	1508.27	25.42	1510.96	25.46
1513.11	25.45	1525.4	25.41	1528.32	25.45	1538.47	25.48	1541.6	25.56
1550.08	25.66	1552.41	25.72	1558.44	25.89	1563.94	25.97	1564.09	25.98
1568.2	25.96	1570.82	25.85	1577.9	25.9	1578.35	25.9	1578.7	25.88
1584.57	26	1590.82	26.16	1591.97	26.2	1627.56	27.36	1632.07	27.31
1639.01	27.25	1641.03	27.24	1644.74	27.28	1646.15	27.3	1650.66	27.43
1651.44	27.46	1653.01	27.48	1658.62	27.74	1659.83	27.74	1666.55	27.97
1674.32	28.09	1674.74	28.1	1682.76	28.13	1683.19	28.14	1683.5	28.14
1689.47	28.02	1689.7	28	1693.62	27.7	1694.28	27.54	1695.98	27.12
1697.8	26.59	1699.61	26	1700.72	25.62	1703.84	24	1706.32	22.59
1707.16	22.11	1707.28	22.05	1707.36	22	1796.46	22	1797.96	22.23
1801.96	22.33	1804.12	22.48	1804.68	22.54	1805.34	22.6	1810.02	22.9
1810.81	22.98	1811.69	23.05	1813.78	23.2	1815.25	23.34	1817.89	23.6
1818.43	23.64	1821.82	24	1823.01	24.2	1828.88	25.15	1835.45	26
1835.8	26.05	1843.17	27.32	1847.65	28	1859.84	30	1862.31	30.4
1865.93	30.83	1871.65	31.53	1879.13	31.98	1879.23	31.98	1886.79	32.03
1886.91	32.04	1892.96	32.13	1893.6	32.17	1898.2	32.32	1901.01	32.48
1903.82	32.5	1905.95	32.51	1909.01	32.39	1913.36	32.05	1913.55	32.04
1917.83	32.34	1919.08	32.25	1924.09	32.7	1930.93	32.88	1936.38	33.27
1943.98	33.76	1944.85	33.82	1945.64	33.85	1947.63	34	1961.03	34.77
1967.4	35.06	1973.03	35.5	1975.16	35.56	1976.79	35.54	1979.83	36
1984.65	36	1993.73	36.27						

Manning's n Values num= 3

Sta	n Val	Sta	n Val	Sta	n Val
0	.035	520	.025	1090.56	.03

Bank Sta: Left	Right	Lengths: Left	Channel	Right	Coeff Contr.	Expan.
520	1090.56	167.09	39.56	57.37	.1	.3

Ineffective Flow num= 2

Sta L	Sta R	Elev	Permanent
0	624		F
1057	1993.73		F

CROSS SECTION OUTPUT Profile #PF 1

E.G. Elev (ft)	18.67	Element	Left OB	Channel
Right OB				
Vel Head (ft)	0.22	Wt. n-Val.		0.025
W.S. Elev (ft)	18.46	Reach Len. (ft)	4.00	4.00
4.00				
Crit W.S. (ft)	14.62	Flow Area (sq ft)		2683.80
E.G. Slope (ft/ft)	0.000335	Area (sq ft)		3204.69
Q Total (cfs)	10000.00	Flow (cfs)		10000.00
Top Width (ft)	507.17	Top Width (ft)		507.17

Vel Total (ft/s)	3.73	Avg. Vel. (ft/s)	3.73
Max Chl Dpth (ft)	6.46	Hydr. Depth (ft)	6.39
Conv. Total (cfs)	545952.1	Conv. (cfs)	545952.1
Length Wtd. (ft)	4.00	Wetted Per. (ft)	423.86
Min Ch El (ft)	12.00	Shear (lb/sq ft)	0.13
Alpha	1.00	Stream Power (lb/ft s)	0.49
Frctn Loss (ft)		Cum Volume (acre-ft)	109.98
C & E Loss (ft)		Cum SA (acres)	22.88

Warning: The conveyance ratio (upstream conveyance divided by downstream conveyance) is less than
0.7 or greater than 1.4. This may indicate the need for additional cross sections.

BRIDGE

RIVER: CV Creek
REACH: Lower RS: 1163

INPUT
Description: Sorrento Valley Road Proposed Bridge
Distance from Upstream XS = 4
Deck/Roadway Width = 30
Weir Coefficient = 2.6
Upstream Deck/Roadway Coordinates
num= 6

Sta	Hi Cord	Lo Cord	Sta	Hi Cord	Lo Cord	Sta	Hi Cord	Lo Cord
0	28.48	0	559.95	28.48	0	559.95	28.48	24
1002.86	28.48	24	1002.86	28.48	0	2100	28.48	0

Upstream Bridge Cross Section Data
Station Elevation Data num= 262

Sta	Elev	Sta	Elev	Sta	Elev	Sta	Elev	Sta	Elev
0	41.82	16.6	41.97	16.76	41.97	19.75	42	123.11	42
132.88	41.58	134.14	41.52	157.21	40.55	162.91	40.32	165.03	40.23
170.79	40	170.96	39.99	176.75	39.76	177.58	39.73	177.79	39.72
182.95	39.51	185.38	39.42	189.85	39.24	207.29	38.61	213.62	38.41
214.93	38.36	222.68	38.12	223.08	38.11	225.48	38.01	225.62	38
234.16	37.63	240.95	37.11	241.37	36.68	242.46	36	243.89	35.2
246.39	34	249.79	32.6	251.17	32	258.09	32	264.8	31.04
265.45	31.02	265.98	31	267.72	30.9	280.99	30.6	282.32	30.5
288.05	30.39	293.62	30.27	294.36	30.22	305.44	30.02	306.8	30
322.64	28.85	329.46	28.42	338.53	28.03	339.31	28	347.43	27.59
349.88	27.46	354.4	27.35	355.6	27.28	369.91	26.9	374.19	26.78
398.32	26.62	413.09	26.56	419.19	26.52	434.34	26.51	438.02	26.49
447.59	26.51	449.3	26.52	454.57	26.53	457.98	26.52	520	26.52
550	12	664.04	12	978.46	12	1038.32	12	1039.2	16.39
1042.81	18	1044.9	18.94	1047.27	20	1048.91	20.79	1049.7	21.13
1051.25	21.81	1051.68	22	1051.98	22.15	1055.82	24	1056.85	24
1058.05	24	1077.07	25.54	1079.25	25.62	1080.11	25.72	1081.62	25.76
1084.21	25.86	1089.56	25.97	1090.56	26	1115.78	26	1126.77	25.86
1127.54	25.88	1137.03	25.84	1137.89	25.86	1146.37	26	1151.66	26

1163.13	25.79	1163.36	25.8	1163.77	25.81	1173.07	25.75	1177.83	25.77
1187.79	25.75	1197.75	25.76	1208.25	25.8	1208.53	25.8	1215.95	25.83
1219.81	25.79	1223.47	25.81	1224.88	25.81	1225.23	25.8	1226.61	25.77
1246.82	25.55	1249.55	25.53	1256	25.45	1259.7	25.37	1263.56	25.4
1276.31	25.28	1279.45	25.3	1288.82	25.29	1290.98	25.3	1291.73	25.3
1292.66	25.31	1302.24	25.31	1304.21	25.32	1306.21	25.32	1308.77	25.3
1310.65	25.28	1322.64	25.3	1325.4	25.28	1342.43	24.8	1346.76	24.83
1352.82	24.89	1355.62	24.85	1363.76	24.95	1369.22	24.87	1375.67	24.95
1384.25	24.81	1388.15	24.87	1396.67	24.73	1399.88	24.75	1401.16	24.77
1402.21	24.79	1409.91	24.66	1412.63	24.69	1419.75	24.59	1423.87	24.63
1428.91	24.5	1430.14	24.52	1434.31	24.21	1438.3	24.12	1439.19	24.13
1445.94	24.14	1454.97	24.25	1457.09	24.29	1469.59	24.58	1477.7	24.82
1487.5	25.19	1494.57	25.3	1498.18	25.39	1508.27	25.42	1510.96	25.46
1513.11	25.45	1525.4	25.41	1528.32	25.45	1538.47	25.48	1541.6	25.56
1550.08	25.66	1552.41	25.72	1558.44	25.89	1563.94	25.97	1564.09	25.98
1568.2	25.96	1570.82	25.85	1577.9	25.9	1578.35	25.9	1578.7	25.88
1584.57	26	1590.82	26.16	1591.97	26.2	1627.56	27.36	1632.07	27.31
1639.01	27.25	1641.03	27.24	1644.74	27.28	1646.15	27.3	1650.66	27.43
1651.44	27.46	1653.01	27.48	1658.62	27.74	1659.83	27.74	1666.55	27.97
1674.32	28.09	1674.74	28.1	1682.76	28.13	1683.19	28.14	1683.5	28.14
1689.47	28.02	1689.7	28	1693.62	27.7	1694.28	27.54	1695.98	27.12
1697.8	26.59	1699.61	26	1700.72	25.62	1703.84	24	1706.32	22.59
1707.16	22.11	1707.28	22.05	1707.36	22	1796.46	22	1797.96	22.23
1801.96	22.33	1804.12	22.48	1804.68	22.54	1805.34	22.6	1810.02	22.9
1810.81	22.98	1811.69	23.05	1813.78	23.2	1815.25	23.34	1817.89	23.6
1818.43	23.64	1821.82	24	1823.01	24.2	1828.88	25.15	1835.45	26
1835.8	26.05	1843.17	27.32	1847.65	28	1859.84	30	1862.31	30.4
1865.93	30.83	1871.65	31.53	1879.13	31.98	1879.23	31.98	1886.79	32.03
1886.91	32.04	1892.96	32.13	1893.6	32.17	1898.2	32.32	1901.01	32.48
1903.82	32.5	1905.95	32.51	1909.01	32.39	1913.36	32.05	1913.55	32.04
1917.83	32.34	1919.08	32.25	1924.09	32.7	1930.93	32.88	1936.38	33.27
1943.98	33.76	1944.85	33.82	1945.64	33.85	1947.63	34	1961.03	34.77
1967.4	35.06	1973.03	35.5	1975.16	35.56	1976.79	35.54	1979.83	36
1984.65	36	1993.73	36.27						

Manning's n Values num= 3

Sta	n Val	Sta	n Val	Sta	n Val
0	.035	520	.025	1090.56	.03

Bank Sta: Left	Right	Coeff Contr.	Expan.
520	1090.56	.1	.3

Ineffective Flow num= 2

Sta L	Sta R	Elev	Permanent
0	624		F
1057	1993.73		F

Downstream Deck/Roadway Coordinates
num= 6

Sta	Hi Cord	Lo Cord	Sta	Hi Cord	Lo Cord	Sta	Hi Cord	Lo Cord
0	28.48	0	560.32	28.48	0	560.32	28.48	24
1003.23	28.48	24	1003.23	28.48	0	2100	28.48	0

Downstream Bridge Cross Section Data
Station Elevation Data num= 261

Sta	Elev	Sta	Elev	Sta	Elev	Sta	Elev	Sta	Elev
0	40.64	.09	40.64	7.12	40.66	12.61	40.71	25.15	40.75
33.41	40.86	49.43	40.92	55.22	40.99	64.54	41.08	79.45	41.15
92.26	41.26	95.67	41.28	98.77	41.29	114.41	41.56	114.71	41.56
119.07	41.58	133.19	42	212.48	42	227.61	40.6	233.72	40
235.86	38.88	237.51	38	241.89	36.06	242.02	36	246.3	34.31
247.17	34	252.74	32	253.58	31.7	258.68	30	264.12	29.51
277.58	28	282.74	26.34	284.22	26	284.45	25.98	302.26	24.46
306.04	24.15	306.6	24.12	308.36	24	338.45	22	343.65	21.58

359.93	20.3	364.23	20	372.05	20	380.61	19.8	381.78	19.8
388.05	20	390.08	20.06	390.59	20.06	407.09	20.25	409.1	20.25
431	20.37	435.79	20.37	462.54	20.45	467.72	20.45	486.56	20.61
496.19	20.62	508.31	20.82	519.59	20.82	526.9	21.01	535.55	21.01
541.76	21.11	546.79	21.16	547.91	19.08	552.35	12	570	12
700	12	852.29	12	1045.36	12	1053.09	18	1059.51	19.42
1062.77	19.57	1063.79	19.72	1064.63	19.78	1068.86	20	1070.99	20.12
1071.44	20.14	1079.24	20.61	1081.39	20.72	1095.21	21.59	1095.39	21.61
1101.83	22	1103.56	22.1	1110.39	22.51	1119.08	23.05	1128.26	23.66
1129.74	23.75	1130.55	23.81	1133.32	24	1140.91	24.19	1146.84	24.35
1147.13	24.34	1149.82	24.41	1152.33	24.36	1154.14	24.41	1157.36	24.48
1159.86	24.47	1188.54	24.62	1192.02	24.61	1195.49	24.61	1201.12	24.64
1203.77	24.65	1234.69	24.35	1235.41	24.36	1235.76	24.36	1247.22	24.12
1247.49	24.12	1247.96	24.11	1248.59	24.11	1260.17	24.03	1260.36	24.03
1272.53	24.11	1273.54	24.1	1281.81	24.15	1282.9	24.15	1288.54	24.17
1289.43	24.17	1290.5	24.18	1292.93	24.19	1293.85	24.19	1297.68	24.2
1297.94	24.2	1303.07	24.22	1308.29	24.22	1314.98	24.18	1319.87	24.14
1321.14	24.14	1328.43	24.09	1331.59	24	1353.7	24	1358.43	23.98
1376.03	23.96	1376.62	23.96	1379.8	23.89	1380.79	23.89	1449.14	22
1479.56	22	1493.11	21.55	1501.83	21.49	1502.27	21.48	1508.86	21.44
1509.58	21.44	1520.68	21.2	1527.97	21.15	1528.87	21.11	1531.55	21.11
1534.24	21.12	1537.08	21.16	1538.42	21.12	1543.04	21.18	1544.92	21.14
1551.65	21.23	1552.03	21.22	1553.95	21.21	1555.93	21.21	1565.28	21.35
1566.13	21.35	1580.88	21.45	1588.28	21.41	1594.88	21.47	1601.45	21.35
1605.81	21.28	1610.34	21.28	1615.12	21.31	1616.34	21.31	1618.46	21.33
1619.45	21.32	1622.41	21.32	1623.48	21.33	1628.44	21.33	1630.44	21.35
1637.53	21.36	1640.36	21.39	1646.86	21.39	1650.42	21.42	1656.3	21.41
1658.71	21.43	1663.87	21.4	1665.26	21.42	1669.62	21.4	1671.92	21.44
1675.61	21.44	1677.14	21.45	1680.08	21.45	1683	21.42	1684.84	21.46
1687.83	21.41	1689.91	21.46	1693.03	21.39	1709.62	21.48	1713.26	21.44
1715.45	21.41	1716.34	21.4	1719.58	21.37	1720.26	21.36	1720.69	21.35
1722.95	21.33	1779.85	21.27	1780.71	21.26	1788.5	21.18	1790.74	21.15
1793.57	21.13	1815.89	21.51	1816.86	21.5	1817.41	21.5	1830.81	22
1831.36	22.05	1845.37	23.23	1856.29	24	1858.99	24.38	1860.47	24.57
1864.96	25.17	1865.28	25.2	1865.69	25.24	1866.38	25.25	1866.9	25.31
1867.83	25.32	1868.94	25.32	1869.76	25.4	1873.39	25.51	1877.32	25.8
1877.75	25.83	1879.76	26	1883.4	26.3	1888.05	26.7	1892.8	27.13
1898.9	27.7	1899.49	27.76	1899.93	27.79	1900.31	27.81	1900.68	27.82
1902.35	28	1905.42	28.26	1908.5	28.46	1910.43	28.5	1912.27	28.7
1915.47	28.65	1916.84	28.83	1921.49	28.64	1921.84	28.66	1922.6	28.64
1923.62	28.59	1932.11	28.1	1932.35	28.08	1932.6	28.07	1940.03	27.68
1941.98	27.57	1947.47	27.31	1949.95	27.17	1954.66	27	1956.64	26.9
1960.17	26.69	1963.42	26.52	1968.72	26.19	1969.29	26.15	1973.96	26.35
1975.03	26.3	1978.7	26.72	1980.2	27.1	1988.25	26.92	1990.42	27.09
2008.8	27.83								

Manning's n Values num= 3

Sta	n Val	Sta	n Val	Sta	n Val
0	.035	302.26	.025	1130.55	.03

Bank Sta: Left	Right	Coeff Contr.	Expan.
302.26	1130.55	.1	.3

Ineffective Flow num= 2

Sta L	Sta R	Elev	Permanent
0	573		F
1075	2008.8		F

Upstream Embankment side slope = 0 horiz. to 1.0 vertical
Downstream Embankment side slope = 0 horiz. to 1.0 vertical
Maximum allowable submergence for weir flow = .95
Elevation at which weir flow begins =
Energy head used in spillway design =
Spillway height used in design =

Weir crest shape = Broad Crested

Number of Piers = 13

Pier Data
Pier Station Upstream= 584.56 Downstream= 584.93
Upstream num= 2

Width	Elev	Width	Elev
3	0	3	30

Downstream num= 2

Width	Elev	Width	Elev
3	0	3	30

Pier Data
Pier Station Upstream= 617.36 Downstream= 617.73
Upstream num= 2

Width	Elev	Width	Elev
3	0	3	30

Downstream num= 2

Width	Elev	Width	Elev
3	0	3	30

Pier Data
Pier Station Upstream= 650.17 Downstream= 650.54
Upstream num= 2

Width	Elev	Width	Elev
3	0	3	30

Downstream num= 2

Width	Elev	Width	Elev
3	0	3	30

Pier Data
Pier Station Upstream= 682.98 Downstream= 683.35
Upstream num= 2

Width	Elev	Width	Elev
3	0	3	30

Downstream num= 2

Width	Elev	Width	Elev
3	0	3	30

Pier Data
Pier Station Upstream= 715.79 Downstream= 716.16
Upstream num= 2

Width	Elev	Width	Elev
3	0	3	30

Downstream num= 2

Width	Elev	Width	Elev
3	0	3	30

Pier Data
Pier Station Upstream= 748.6 Downstream= 748.97
Upstream num= 2

Width	Elev	Width	Elev
3	0	3	30

Downstream num= 2

Width	Elev	Width	Elev
3	0	3	30

Pier Data
Pier Station Upstream= 781.41 Downstream= 781.78
Upstream num= 2

Width	Elev	Width	Elev
3	0	3	30

```
Downstream      num=        2
    Width   Elev    Width   Elev
       3       0       3      30

Pier Data
Pier Station     Upstream=  814.22    Downstream=  814.59
Upstream     num=        2
    Width   Elev    Width   Elev
       3       0       3      30
Downstream      num=        2
    Width   Elev    Width   Elev
       3       0       3      30

Pier Data
Pier Station     Upstream=  847.02    Downstream=  847.39
Upstream     num=        2
    Width   Elev    Width   Elev
       3       0       3      30
Downstream      num=        2
    Width   Elev    Width   Elev
       3       0       3      30

Pier Data
Pier Station     Upstream=  879.83    Downstream=   880.2
Upstream     num=        2
    Width   Elev    Width   Elev
       3       0       3      30
Downstream      num=        2
    Width   Elev    Width   Elev
       3       0       3      30

Pier Data
Pier Station     Upstream=  912.64    Downstream=  913.01
Upstream     num=        2
    Width   Elev    Width   Elev
       3       0       3      30
Downstream      num=        2
    Width   Elev    Width   Elev
       3       0       3      30

Pier Data
Pier Station     Upstream=  945.45    Downstream=  945.63
Upstream     num=        2
    Width   Elev    Width   Elev
       3       0       3      30
Downstream      num=        2
    Width   Elev    Width   Elev
       3       0       3      30

Pier Data
Pier Station     Upstream=  978.26    Downstream=  978.63
Upstream     num=        2
    Width   Elev    Width   Elev
       3       0       3      30
Downstream      num=        2
    Width   Elev    Width   Elev
       3       0       3      30

Number of Bridge Coefficient Sets =  1

Low Flow Methods and Data
       Energy
       Momentum                Cd    =     1.2
```

Selected Low Flow Methods = Highest Energy Answer

High Flow Method
Energy Only

Additional Bridge Parameters
Add Friction component to Momentum
Do not add Weight component to Momentum
Class B flow critical depth computations use critical depth inside the bridge at the upstream end
Criteria to check for pressure flow = Upstream energy grade line

BRIDGE OUTPUT Profile #PF 1

E.G. US. (ft)	18.67	Element	Inside BR US
Inside BR DS			
W.S. US. (ft)	18.46	E.G. Elev (ft)	18.66
18.26			
Q Total (cfs)	10000.00	W.S. Elev (ft)	18.34
17.97			
Q Bridge (cfs)	10000.00	Crit W.S. (ft)	14.96
14.73			
Q Weir (cfs)		Max Chl Dpth (ft)	6.34
5.97			
Weir Sta Lft (ft)		Vel Total (ft/s)	4.56
4.28			
Weir Sta Rgt (ft)		Flow Area (sq ft)	2191.42
2336.44			
Weir Submerg		Froude # Chl	0.32
0.31			
Weir Max Depth (ft)		Specif Force (cu ft)	8359.71
8305.82			
Min El Weir Flow (ft)	28.49	Hydr Depth (ft)	6.34
5.97			
Min El Prs (ft)	24.00	W.P. Total (ft)	485.25
546.50			
Delta EG (ft)	0.43	Conv. Total (cfs)	355862.9
365805.2			
Delta WS (ft)	0.40	Top Width (ft)	403.91
403.91			
BR Open Area (sq ft)	4150.32	Frctn Loss (ft)	
BR Open Vel (ft/s)	4.56	C & E Loss (ft)	
Coef of Q		Shear Total (lb/sq ft)	0.22
0.20			
Br Sel Method	Momentum	Power Total (lb/ft s)	1.02
0.85			

Warning: The conveyance ratio (upstream conveyance divided by downstream conveyance) is less than 0.7 or greater than 1.4. This may indicate the need for additional cross sections.

CROSS SECTION

RIVER: CV Creek
REACH: Lower RS: 1143

INPUT
Description: B
Station Elevation Data num= 261

Sta	Elev	Sta	Elev	Sta	Elev	Sta	Elev	Sta	Elev
0	40.64	.09	40.64	7.12	40.66	12.61	40.71	25.15	40.75
33.41	40.86	49.43	40.92	55.22	40.99	64.54	41.08	79.45	41.15
92.26	41.26	95.67	41.28	98.77	41.29	114.41	41.56	114.71	41.56
119.07	41.58	133.19	42	212.48	42	227.61	40.6	233.72	40
235.86	38.88	237.51	38	241.89	36.06	242.02	36	246.3	34.31
247.17	34	252.74	32	253.58	31.7	258.68	30	264.12	29.51
277.58	28	282.74	26.34	284.22	26	284.45	25.98	302.26	24.46
306.04	24.15	306.6	24.12	308.36	24	338.45	22	343.65	21.58
359.93	20.3	364.23	20	372.05	20	380.61	19.8	381.78	19.8
388.05	20	390.08	20.06	390.59	20.06	407.09	20.25	409.1	20.25
431	20.37	435.79	20.37	462.54	20.45	467.72	20.45	486.56	20.61
496.19	20.62	508.31	20.82	519.59	20.82	526.9	21.01	535.55	21.01
541.76	21.11	546.79	21.16	547.91	19.08	552.35	12	570	12
700	12	852.29	12	1045.36	12	1053.09	18	1059.51	19.42
1062.77	19.57	1063.79	19.72	1064.63	19.78	1068.86	20	1070.99	20.12
1071.44	20.14	1079.24	20.61	1081.39	20.72	1095.21	21.59	1095.39	21.61
1101.83	22	1103.56	22.1	1110.39	22.51	1119.08	23.05	1128.26	23.66
1129.74	23.75	1130.55	23.81	1133.32	24	1140.91	24.19	1146.84	24.35
1147.13	24.34	1149.82	24.41	1152.33	24.36	1154.14	24.41	1157.36	24.48
1159.86	24.47	1188.54	24.62	1192.02	24.61	1195.49	24.61	1201.12	24.64
1203.77	24.65	1234.69	24.35	1235.41	24.36	1235.76	24.36	1247.22	24.12
1247.49	24.12	1247.96	24.11	1248.59	24.11	1260.17	24.03	1260.36	24.03
1272.53	24.11	1273.54	24.1	1281.81	24.15	1282.9	24.15	1288.54	24.17
1289.43	24.17	1290.5	24.18	1292.93	24.19	1293.85	24.19	1297.68	24.2
1297.94	24.2	1303.07	24.22	1308.29	24.22	1314.98	24.18	1319.87	24.14
1321.14	24.14	1328.43	24.09	1331.59	24	1353.7	24	1358.43	23.98
1376.03	23.96	1376.62	23.96	1379.8	23.89	1380.79	23.89	1449.14	22
1479.56	22	1493.11	21.55	1501.83	21.49	1502.27	21.48	1508.86	21.44
1509.58	21.44	1520.68	21.2	1527.97	21.15	1528.87	21.11	1531.55	21.11
1534.24	21.12	1537.08	21.16	1538.42	21.12	1543.04	21.18	1544.92	21.14
1551.65	21.23	1552.03	21.22	1553.95	21.21	1555.93	21.21	1565.28	21.35
1566.13	21.35	1580.88	21.45	1588.28	21.41	1594.88	21.47	1601.45	21.35
1605.81	21.28	1610.34	21.28	1615.12	21.31	1616.34	21.31	1618.46	21.33
1619.45	21.32	1622.41	21.32	1623.48	21.33	1628.44	21.33	1630.44	21.35
1637.53	21.36	1640.36	21.39	1646.86	21.39	1650.42	21.42	1656.3	21.41
1658.71	21.43	1663.87	21.4	1665.26	21.42	1669.62	21.4	1671.92	21.44
1675.61	21.44	1677.14	21.45	1680.08	21.45	1683	21.42	1684.84	21.46
1687.83	21.41	1689.91	21.46	1693.03	21.39	1709.62	21.48	1713.26	21.44
1715.45	21.41	1716.34	21.4	1719.58	21.37	1720.26	21.36	1720.69	21.35
1722.95	21.33	1779.85	21.27	1780.71	21.26	1788.5	21.18	1790.74	21.15
1793.57	21.13	1815.89	21.51	1816.86	21.5	1817.41	21.5	1830.81	22
1831.36	22.05	1845.37	23.23	1856.29	24	1858.99	24.38	1860.47	24.57
1864.96	25.17	1865.28	25.2	1865.69	25.24	1866.38	25.25	1866.9	25.31
1867.83	25.32	1868.94	25.32	1869.76	25.4	1873.39	25.51	1877.32	25.8
1877.75	25.83	1879.76	26	1883.4	26.3	1888.05	26.7	1892.8	27.13
1898.9	27.7	1899.49	27.76	1899.93	27.79	1900.31	27.81	1900.68	27.82
1902.35	28	1905.42	28.26	1908.5	28.46	1910.43	28.5	1912.27	28.7
1915.47	28.65	1916.84	28.83	1921.49	28.64	1921.84	28.66	1922.6	28.64
1923.62	28.59	1932.11	28.1	1932.35	28.08	1932.6	28.07	1940.03	27.68
1941.98	27.57	1947.47	27.31	1949.95	27.17	1954.66	27	1956.64	26.9
1960.17	26.69	1963.42	26.52	1968.72	26.19	1969.29	26.15	1973.96	26.35
1975.03	26.3	1978.7	26.72	1980.2	27.1	1988.25	26.92	1990.42	27.09
2008.8	27.83								

Manning's n Values num= 3

Sta	n Val	Sta	n Val	Sta	n Val
0	.035	302.26	.025	1130.55	.03

Bank Sta: Left Right Lengths: Left Channel Right Coeff Contr. Expan.

302.26 1130.55 133.35 97.85 122.84 .1 .3

Ineffective Flow num= 2

Sta L	Sta R	Elev	Permanent
0	573		F
1075	2008.8		F

CROSS SECTION OUTPUT Profile #PF 1

E.G. Elev (ft)	18.24	Element	Left OB	Channel
Right OB Vel Head (ft)	0.19	Wt. n-Val.		0.025
W.S. Elev (ft)	18.06	Reach Len. (ft)	12.25	12.25
12.25 Crit W.S. (ft)	14.40	Flow Area (sq ft)		2884.74
E.G. Slope (ft/ft)	0.000313	Area (sq ft)		3021.32
Q Total (cfs)	10000.00	Flow (cfs)		10000.00
Top Width (ft)	504.80	Top Width (ft)		504.80
Vel Total (ft/s)	3.47	Avg. Vel. (ft/s)		3.47
Max Chl Dpth (ft)	6.06	Hydr. Depth (ft)		6.01
Conv. Total (cfs)	564879.2	Conv. (cfs)		564879.2
Length Wtd. (ft)	12.25	Wetted Per. (ft)		482.41
Min Ch El (ft)	12.00	Shear (lb/sq ft)		0.12
Alpha	1.00	Stream Power (lb/ft s)		0.41
Frctn Loss (ft)	0.00	Cum Volume (acre-ft)		107.66
C & E Loss (ft)	0.00	Cum SA (acres)		22.50

BRIDGE

RIVER: CV Creek
REACH: Lower RS: 1100

INPUT
Description: SR-56 Connector west of I-5
Distance from Upstream XS = 12.25
Deck/Roadway Width = 67.5
Weir Coefficient = 2.6
Upstream Deck/Roadway Coordinates
num= 2

Sta	Hi Cord	Lo Cord	Sta	Hi Cord	Lo Cord
0	64.2	56.2	2100	64.2	56.2

Upstream Bridge Cross Section Data
Station Elevation Data num= 261

Sta	Elev	Sta	Elev	Sta	Elev	Sta	Elev	Sta	Elev
0	40.64	.09	40.64	7.12	40.66	12.61	40.71	25.15	40.75
33.41	40.86	49.43	40.92	55.22	40.99	64.54	41.08	79.45	41.15

92.26	41.26	95.67	41.28	98.77	41.29	114.41	41.56	114.71	41.56
119.07	41.58	133.19	42	212.48	42	227.61	40.6	233.72	40
235.86	38.88	237.51	38	241.89	36.06	242.02	36	246.3	34.31
247.17	34	252.74	32	253.58	31.7	258.68	30	264.12	29.51
277.58	28	282.74	26.34	284.22	26	284.45	25.98	302.26	24.46
306.04	24.15	306.6	24.12	308.36	24	338.45	22	343.65	21.58
359.93	20.3	364.23	20	372.05	20	380.61	19.8	381.78	19.8
388.05	20	390.08	20.06	390.59	20.06	407.09	20.25	409.1	20.25
431	20.37	435.79	20.37	462.54	20.45	467.72	20.45	486.56	20.61
496.19	20.62	508.31	20.82	519.59	20.82	526.9	21.01	535.55	21.01
541.76	21.11	546.79	21.16	547.91	19.08	552.35	12	570	12
700	12	852.29	12	1045.36	12	1053.09	18	1059.51	19.42
1062.77	19.57	1063.79	19.72	1064.63	19.78	1068.86	20	1070.99	20.12
1071.44	20.14	1079.24	20.61	1081.39	20.72	1095.21	21.59	1095.39	21.61
1101.83	22	1103.56	22.1	1110.39	22.51	1119.08	23.05	1128.26	23.66
1129.74	23.75	1130.55	23.81	1133.32	24	1140.91	24.19	1146.84	24.35
1147.13	24.34	1149.82	24.41	1152.33	24.36	1154.14	24.41	1157.36	24.48
1159.86	24.47	1188.54	24.62	1192.02	24.61	1195.49	24.61	1201.12	24.64
1203.77	24.65	1234.69	24.35	1235.41	24.36	1235.76	24.36	1247.22	24.12
1247.49	24.12	1247.96	24.11	1248.59	24.11	1260.17	24.03	1260.36	24.03
1272.53	24.11	1273.54	24.1	1281.81	24.15	1282.9	24.15	1288.54	24.17
1289.43	24.17	1290.5	24.18	1292.93	24.19	1293.85	24.19	1297.68	24.2
1297.94	24.2	1303.07	24.22	1308.29	24.22	1314.98	24.18	1319.87	24.14
1321.14	24.14	1328.43	24.09	1331.59	24	1353.7	24	1358.43	23.98
1376.03	23.96	1376.62	23.96	1379.8	23.89	1380.79	23.89	1449.14	22
1479.56	22	1493.11	21.55	1501.83	21.49	1502.27	21.48	1508.86	21.44
1509.58	21.44	1520.68	21.2	1527.97	21.15	1528.87	21.11	1531.55	21.11
1534.24	21.12	1537.08	21.16	1538.42	21.12	1543.04	21.18	1544.92	21.14
1551.65	21.23	1552.03	21.22	1553.95	21.21	1555.93	21.21	1565.28	21.35
1566.13	21.35	1580.88	21.45	1588.28	21.41	1594.88	21.47	1601.45	21.35
1605.81	21.28	1610.34	21.28	1615.12	21.31	1616.34	21.31	1618.46	21.33
1619.45	21.32	1622.41	21.32	1623.48	21.33	1628.44	21.33	1630.44	21.35
1637.53	21.36	1640.36	21.39	1646.86	21.39	1650.42	21.42	1656.3	21.41
1658.71	21.43	1663.87	21.4	1665.26	21.42	1669.62	21.4	1671.92	21.44
1675.61	21.44	1677.14	21.45	1680.08	21.45	1683	21.42	1684.84	21.46
1687.83	21.41	1689.91	21.46	1693.03	21.39	1709.62	21.48	1713.26	21.44
1715.45	21.41	1716.34	21.4	1719.58	21.37	1720.26	21.36	1720.69	21.35
1722.95	21.33	1779.85	21.27	1780.71	21.26	1788.5	21.18	1790.74	21.15
1793.57	21.13	1815.89	21.51	1816.86	21.5	1817.41	21.5	1830.81	22
1831.36	22.05	1845.37	23.23	1856.29	24	1858.99	24.38	1860.47	24.57
1864.96	25.17	1865.28	25.2	1865.69	25.24	1866.38	25.25	1866.9	25.31
1867.83	25.32	1868.94	25.32	1869.76	25.4	1873.39	25.51	1877.32	25.8
1877.75	25.83	1879.76	26	1883.4	26.3	1888.05	26.7	1892.8	27.13
1898.9	27.7	1899.49	27.76	1899.93	27.79	1900.31	27.81	1900.68	27.82
1902.35	28	1905.42	28.26	1908.5	28.46	1910.43	28.5	1912.27	28.7
1915.47	28.65	1916.84	28.83	1921.49	28.64	1921.84	28.66	1922.6	28.64
1923.62	28.59	1932.11	28.1	1932.35	28.08	1932.6	28.07	1940.03	27.68
1941.98	27.57	1947.47	27.31	1949.95	27.17	1954.66	27	1956.64	26.9
1960.17	26.69	1963.42	26.52	1968.72	26.19	1969.29	26.15	1973.96	26.35
1975.03	26.3	1978.7	26.72	1980.2	27.1	1988.25	26.92	1990.42	27.09
2008.8	27.83								

Manning's n Values num= 3

Sta	n Val	Sta	n Val	Sta	n Val
0	.035	302.26	.025	1130.55	.03

Bank Sta: Left	Right	Coeff Contr.	Expan.
302.26	1130.55	.1	.3

Ineffective Flow num= 2

Sta L	Sta R	Elev	Permanent
0	573		F
1075	2008.8		F

Downstream Deck/Roadway Coordinates
num= 2

Sta	Hi Cord	Lo Cord	Sta	Hi Cord	Lo Cord
0	64.2	56.2	2300	64.2	56.2

Downstream Bridge Cross Section Data
Station Elevation Data num= 347

Sta	Elev	Sta	Elev	Sta	Elev	Sta	Elev	Sta	Elev
0	45.66	.11	45.66	4.32	45.8	12.79	45.88	13.12	45.89
13.35	45.89	13.75	45.9	19.28	45.9	19.79	45.91	25.61	45.78
27.19	45.7	43.78	45.45	48.76	45.51	54.23	45.72	55.16	45.46
60.13	44.12	60.57	44	60.85	43.93	67.94	42	69.4	41.62
75.39	40	77.75	39.39	82.91	38	91.97	36	100.93	34.27
102.3	34	105.01	33.48	112.64	32	122.52	30.17	123.5	30
127.14	29.47	128.76	29.3	131.92	28.89	136.62	28.45	138.39	28.25
141.61	28	144.58	27.67	146.92	27.36	149.69	26.95	151.63	26.67
157.75	26	158.94	25.86	160.12	25.71	166.27	24.99	169.72	24.5
171.02	24.35	173.21	24	173.37	23.97	174.32	23.72	179.77	22.32
180.94	22	202.41	22	211.08	21.64	219.97	21.7	221.92	21.65
244.12	21.78	245.66	21.74	254.82	21.8	256.71	21.75	271.49	21.88
271.73	21.88	272.2	21.87	283.95	21.99	284.55	22	291.26	22.19
292.06	22.22	298.4	22.36	299.53	22.39	305.06	22.48	306.53	22.52
311.5	22.56	313.96	22.62	317.09	22.68	318.76	22.69	321.71	22.82
322.59	23.02	324.68	23.42	325.36	23.53	327.54	24	327.86	24.06
327.98	24.09	331.6	24.74	332.93	25.02	335.04	25.38	337.37	25.77
337.75	25.83	338.77	26	342.12	26.55	345.08	27.03	350.64	27.92
350.86	27.95	351.15	28	360.72	28.22	363.14	28.23	370.22	28.37
382.08	28.34	385.56	28	395.7	28	397.77	27.48	399.79	26.87
400.67	26.58	402.4	26.07	402.46	26.05	402.62	26	407.16	24.56
409.11	24	411.7	23.28	415.62	22.33	419.83	21.32	424.33	20.3
425.16	20.11	425.62	20	431.66	18.62	432.2	18.5	434.36	18
443.1	16	444	15.9	444.56	15.91	458.56	15.09	463.52	15.31
468.42	15.14	472.16	15.26	478.72	15.37	479.39	15.35	486.77	15.2
505.14	14.99	537.85	14.55	539.99	14.53	549.17	14.66	554.19	14.94
559.63	14.75	564.06	14.63	568.65	14.93	572.87	14.74	579.64	14.48
582.88	14.57	591.5	14.06	591.88	14.04	600.55	13.65	603.2	13.58
611.02	13.32	625.5	12.95	630.59	12.91	638.33	12.71	642.38	12.78
647	12.67	647.94	12.71	652.53	12.93	656.19	13.06	660.95	13.21
667.68	13.53	679.2	13.99	679.26	13.99	679.41	14	689.35	14
691.18	14	692.82	14	698.94	14	703.57	14	704.04	14
705.31	14	707.58	14	708.11	14	710.49	14	721.44	14
725.2	14	733.93	14	738.7	14	749.64	14	753.01	14
759.59	14	768.61	14	770.07	14	781.65	14	793.19	14.63
798.07	14.74	814.22	15.16	817.6	15.26	820.22	15.35	832.67	15.68
834.27	15.74	835.4	15.77	843.22	16	846.64	16.02	846.71	16.02
846.88	16.03	855.77	16.1	868.64	16.25	871.81	16.36	886.99	16.6
903.47	17.44	908.43	17.58	909.98	17.62	914.66	18	952.51	18
959.48	16.03	959.58	16	960.25	15.81	966.98	14	1031.37	14
1038.95	15.83	1039.39	15.93	1039.67	16	1039.88	16	1053.2	17.04
1064.02	17.08	1070.37	16.95	1077.78	16.82	1097.28	16.86	1114.68	16.65
1130.94	16.68	1140.08	16.6	1150.28	16.61	1153.64	16.59	1156.93	16.59
1162.42	16.57	1165.44	16.58	1168.26	16.57	1170.98	16.58	1174.07	16.58
1176.5	16.59	1179.9	16.58	1189.4	16.62	1193.78	16.65	1201.82	16.68
1209.3	16.74	1221.95	16.8	1227.77	16.84	1243.5	16.92	1250.23	16.98
1251.92	16.99	1256.01	17.02	1265.43	17.07	1282.58	17.22	1287.1	17.25
1303.79	17.42	1305.53	17.44	1355.53	17.87	1359.57	17.84	1364.89	17.93
1365.58	17.91	1369.2	18	1372.28	18.26	1373.64	18.39	1379.49	18.91
1381.33	19.07	1389.4	19.79	1389.87	19.83	1391.4	20	1393.67	20.14
1406.37	20	1438.75	20	1454.19	19.71	1470.71	19.76	1471.08	19.76
1487.22	20	1510.21	20	1519.21	19.92	1528.56	19.9	1528.98	19.89
1529.26	19.89	1539.18	19.92	1539.37	19.92	1550.79	19.94	1551.03	19.94
1563.92	19.97	1564.56	20	1581.9	20	1589.16	20.03	1589.25	20.03
1594.38	20.07	1595.94	20.08	1597.36	20.08	1601.31	20.15	1635.92	22

1653.31	22	1657.84	21.8	1657.95	21.8	1658.61	21.79	1666.52	21.73
1666.71	21.73	1687.63	21.39	1695.29	21.12	1702.91	20.95	1720.13	20.25
1725.44	20	1761.53	18.08	1763.1	18	1764.76	18	1770.24	18.11
1770.88	18.12	1771.6	18.14	1883.83	20	1927.07	20	1933.56	20.4
1942.27	20.73	1944.37	20.89	1950.26	21.1	1956.63	21.44	1959.79	21.54
1962.22	21.61	1969.52	22	1974.61	22.34	1974.76	22.36	1983.32	22.89
1983.72	22.92	1986.18	23	1990.09	23.19	1995.85	23.35	1997.87	23.41
2010.12	23.74	2011.45	23.77	2019.79	24	2026.56	24	2027.83	24.11
2032.55	24.18	2039.7	24.34	2046.18	24.5	2058.62	25.57	2061.07	25.69
2062.69	25.92	2063.1	25.95	2063.69	26	2077.8	26	2084.67	26.77
2088.72	26.97	2092.61	27.14	2104.11	27.67	2106.64	28	2109.88	28
2111.74	28.43	2117.89	29.48	2119.58	29.83	2121.01	30	2125.1	30.64
2126.19	30.71	2127.68	30.8	2137.18	32	2139.29	32.27	2141.16	32.47
2144.36	32.89	2153.2	34	2159.98	34.81	2173.02	36.52	2181	37.54
2189.36	38.55	2191.73	38.83						

```
Manning's n Values          num=        3
     Sta   n Val      Sta   n Val      Sta   n Val
       0    .035   424.33     .05  1393.67     .05

Bank Sta: Left   Right    Coeff Contr.   Expan.
        424.33 1393.67            .1        .3
Ineffective Flow      num=        1
   Sta L   Sta R    Elev  Permanent
    1283 2191.73                F

Upstream Embankment side slope                =       0 horiz. to 1.0 vertical
Downstream Embankment side slope              =       0 horiz. to 1.0 vertical
Maximum allowable submergence for weir flow =      .95
Elevation at which weir flow begins           =
Energy head used in spillway design           =
Spillway height used in design                =
Weir crest shape                              = Broad Crested

Number of Piers =  3

Pier Data
Pier Station     Upstream=  600.51    Downstream=  760.49
Upstream     num=        2
    Width   Elev    Width   Elev
        7       0       7     60
Downstream     num=        2
    Width   Elev    Width   Elev
        7       0       7     60

Pier Data
Pier Station     Upstream=  769.83    Downstream=  929.81
Upstream     num=        2
    Width   Elev    Width   Elev
        7       0       7     60
Downstream     num=        2
    Width   Elev    Width   Elev
        7       0       7     60

Pier Data
Pier Station     Upstream=  958.75    Downstream= 1118.73
Upstream     num=        2
    Width   Elev    Width   Elev
        7       0       7     60
Downstream     num=        2
    Width   Elev    Width   Elev
        7       0       7     60
```

Number of Bridge Coefficient Sets = 1

Low Flow Methods and Data
Energy
Momentum Cd = 1.2
Selected Low Flow Methods = Highest Energy Answer

High Flow Method
Energy Only

Additional Bridge Parameters
Add Friction component to Momentum
Do not add Weight component to Momentum
Class B flow critical depth computations use critical depth inside the bridge at the upstream end
Criteria to check for pressure flow = Upstream energy grade line

BRIDGE OUTPUT Profile #PF 1

E.G. US. (ft)	18.24	Element	Inside BR US
Inside BR DS			
W.S. US. (ft)	18.06	E.G. Elev (ft)	18.24
18.14			
Q Total (cfs)	10000.00	W.S. Elev (ft)	18.03
17.72			
Q Bridge (cfs)	10000.00	Crit W.S. (ft)	14.48
16.92			
Q Weir (cfs)		Max Chl Dpth (ft)	6.03
5.05			
Weir Sta Lft (ft)		Vel Total (ft/s)	3.64
5.23			
Weir Sta Rgt (ft)		Flow Area (sq ft)	2745.95
1912.68			
Weir Submerg		Froude # Chl	0.26
0.59			
Weir Max Depth (ft)		Specif Force (cu ft)	9388.89
4645.00			
Min El Weir Flow (ft)	64.21	Hydr Depth (ft)	5.98
2.42			
Min El Prs (ft)	56.20	W.P. Total (ft)	497.48
801.87			
Delta EG (ft)	0.43	Conv. Total (cfs)	509748.9
101475.0			
Delta WS (ft)	1.16	Top Width (ft)	483.67
846.09			
BR Open Area (sq ft)	21071.63	Frctn Loss (ft)	0.07
0.29			
BR Open Vel (ft/s)	5.23	C & E Loss (ft)	0.02
0.05			
Coef of Q		Shear Total (lb/sq ft)	0.13
1.45			
Br Sel Method	Energy only	Power Total (lb/ft s)	0.48
7.56			

Warning: For the final momentum answer at the bridge, the upstream energy was computed lower than the downstream energy. This is not physically possible, the momentum answer has been disregarded.
Warning: The conveyance ratio (upstream conveyance divided by downstream conveyance)

is less than
0.7 or greater than 1.4. This may indicate the need for additional cross sections.
Warning: The conveyance ratio (upstream conveyance divided by downstream conveyance) is less than
0.7 or greater than 1.4. This may indicate the need for additional cross sections.

CROSS SECTION

RIVER: CV Creek
REACH: Lower RS: 1045

INPUT
Description: A
Station Elevation Data num= 347

Sta	Elev	Sta	Elev	Sta	Elev	Sta	Elev	Sta	Elev
0	45.66	.11	45.66	4.32	45.8	12.79	45.88	13.12	45.89
13.35	45.89	13.75	45.9	19.28	45.9	19.79	45.91	25.61	45.78
27.19	45.7	43.78	45.45	48.76	45.51	54.23	45.72	55.16	45.46
60.13	44.12	60.57	44	60.85	43.93	67.94	42	69.4	41.62
75.39	40	77.75	39.39	82.91	38	91.97	36	100.93	34.27
102.3	34	105.01	33.48	112.64	32	122.52	30.17	123.5	30
127.14	29.47	128.76	29.3	131.92	28.89	136.62	28.45	138.39	28.25
141.61	28	144.58	27.67	146.92	27.36	149.69	26.95	151.63	26.67
157.75	26	158.94	25.86	160.12	25.71	166.27	24.99	169.72	24.5
171.02	24.35	173.21	24	173.37	23.97	174.32	23.72	179.77	22.32
180.94	22	202.41	22	211.08	21.64	219.97	21.7	221.92	21.65
244.12	21.78	245.66	21.74	254.82	21.8	256.71	21.75	271.49	21.88
271.73	21.88	272.2	21.87	283.95	21.99	284.55	22	291.26	22.19
292.06	22.22	298.4	22.36	299.53	22.39	305.06	22.48	306.53	22.52
311.5	22.56	313.96	22.62	317.09	22.68	318.76	22.69	321.71	22.82
322.59	23.02	324.68	23.42	325.36	23.53	327.54	24	327.86	24.06
327.98	24.09	331.6	24.74	332.93	25.02	335.04	25.38	337.37	25.77
337.75	25.83	338.77	26	342.12	26.55	345.08	27.03	350.64	27.92
350.86	27.95	351.15	28	360.72	28.22	363.14	28.23	370.22	28.37
382.08	28.34	385.56	28	395.7	28	397.77	27.48	399.79	26.87
400.67	26.58	402.4	26.07	402.46	26.05	402.62	26	407.16	24.56
409.11	24	411.7	23.28	415.62	22.33	419.83	21.32	424.33	20.3
425.16	20.11	425.62	20	431.66	18.62	432.2	18.5	434.36	18
443.1	16	444	15.9	444.56	15.91	458.56	15.09	463.52	15.31
468.42	15.14	472.16	15.26	478.72	15.37	479.39	15.35	486.77	15.2
505.14	14.99	537.85	14.55	539.99	14.53	549.17	14.66	554.19	14.94
559.63	14.75	564.06	14.63	568.65	14.93	572.87	14.74	579.64	14.48
582.88	14.57	591.5	14.06	591.88	14.04	600.55	13.65	603.2	13.58
611.02	13.32	625.5	12.95	630.59	12.91	638.33	12.71	642.38	12.78
647	12.67	647.94	12.71	652.53	12.93	656.19	13.06	660.95	13.21
667.68	13.53	679.2	13.99	679.26	13.99	679.41	14	689.35	14
691.18	14	692.82	14	698.94	14	703.57	14	704.04	14
705.31	14	707.58	14	708.11	14	710.49	14	721.44	14
725.2	14	733.93	14	738.7	14	749.64	14	753.01	14
759.59	14	768.61	14	770.07	14	781.65	14	793.19	14.63
798.07	14.74	814.22	15.16	817.6	15.26	820.22	15.35	832.67	15.68
834.27	15.74	835.4	15.77	843.22	16	846.64	16.02	846.71	16.02
846.88	16.03	855.77	16.1	868.64	16.25	871.81	16.36	886.99	16.6
903.47	17.44	908.43	17.58	909.98	17.62	914.66	18	952.51	18
959.48	16.03	959.58	16	960.25	15.81	966.98	14	1031.37	14
1038.95	15.83	1039.39	15.93	1039.67	16	1039.88	16	1053.2	17.04
1064.02	17.08	1070.37	16.95	1077.78	16.82	1097.28	16.86	1114.68	16.65
1130.94	16.68	1140.08	16.6	1150.28	16.61	1153.64	16.59	1156.93	16.59
1162.42	16.57	1165.44	16.58	1168.26	16.57	1170.98	16.58	1174.07	16.58
1176.5	16.59	1179.9	16.58	1189.4	16.62	1193.78	16.65	1201.82	16.68

1209.3	16.74	1221.95	16.8	1227.77	16.84	1243.5	16.92	1250.23	16.98
1251.92	16.99	1256.01	17.02	1265.43	17.07	1282.58	17.22	1287.1	17.25
1303.79	17.42	1305.53	17.44	1355.53	17.87	1359.57	17.84	1364.89	17.93
1365.58	17.91	1369.2	18	1372.28	18.26	1373.64	18.39	1379.49	18.91
1381.33	19.07	1389.4	19.79	1389.87	19.83	1391.4	20	1393.67	20.14
1406.37	20	1438.75	20	1454.19	19.71	1470.71	19.76	1471.08	19.76
1487.22	20	1510.21	20	1519.21	19.92	1528.56	19.9	1528.98	19.89
1529.26	19.89	1539.18	19.92	1539.37	19.92	1550.79	19.94	1551.03	19.94
1563.92	19.97	1564.56	20	1581.9	20	1589.16	20.03	1589.25	20.03
1594.38	20.07	1595.94	20.08	1597.36	20.08	1601.31	20.15	1635.92	22
1653.31	22	1657.84	21.8	1657.95	21.8	1658.61	21.79	1666.52	21.73
1666.71	21.73	1687.63	21.39	1695.29	21.12	1702.91	20.95	1720.13	20.25
1725.44	20	1761.53	18.08	1763.1	18	1764.76	18	1770.24	18.11
1770.88	18.12	1771.6	18.14	1883.83	20	1927.07	20	1933.56	20.4
1942.27	20.73	1944.37	20.89	1950.26	21.1	1956.63	21.44	1959.79	21.54
1962.22	21.61	1969.52	22	1974.61	22.34	1974.76	22.36	1983.32	22.89
1983.72	22.92	1986.18	23	1990.09	23.19	1995.85	23.35	1997.87	23.41
2010.12	23.74	2011.45	23.77	2019.79	24	2026.56	24	2027.83	24.11
2032.55	24.18	2039.7	24.34	2046.18	24.5	2058.62	25.57	2061.07	25.69
2062.69	25.92	2063.1	25.95	2063.69	26	2077.8	26	2084.67	26.77
2088.72	26.97	2092.61	27.14	2104.11	27.67	2106.64	28	2109.88	28
2111.74	28.43	2117.89	29.48	2119.58	29.83	2121.01	30	2125.1	30.64
2126.19	30.71	2127.68	30.8	2137.18	32	2139.29	32.27	2141.16	32.47
2144.36	32.89	2153.2	34	2159.98	34.81	2173.02	36.52	2181	37.54
2189.36	38.55	2191.73	38.83						

Manning's n Values num= 3

Sta	n Val	Sta	n Val	Sta	n Val
0	.035	424.33	.05	1393.67	.05

Bank Sta: Left	Right	Lengths: Left	Channel	Right	Coeff Contr.	Expan.
424.33	1393.67	112.47	270.89	459.51	.1	.3

Ineffective Flow num= 1

Sta L	Sta R	Elev	Permanent
1283	2191.73		F

CROSS SECTION OUTPUT Profile #PF 1

E.G. Elev (ft)	17.81	Element	Left OB	Channel
Right OB				
Vel Head (ft)	0.91	Wt. n-Val.		0.050
W.S. Elev (ft)	16.90	Reach Len. (ft)	112.47	270.89
459.51				
Crit W.S. (ft)	16.90	Flow Area (sq ft)		1303.29
E.G. Slope (ft/ft)	0.029920	Area (sq ft)		1303.29
Q Total (cfs)	10000.00	Flow (cfs)		10000.00
Top Width (ft)	713.71	Top Width (ft)		713.71
Vel Total (ft/s)	7.67	Avg. Vel. (ft/s)		7.67
Max Chl Dpth (ft)	4.23	Hydr. Depth (ft)		1.83
Conv. Total (cfs)	57812.3	Conv. (cfs)		57812.3
Length Wtd. (ft)	270.89	Wetted Per. (ft)		714.68
Min Ch El (ft)	12.67	Shear (lb/sq ft)		3.41

Alpha	1.00	Stream Power (lb/ft s)	26.14
Frctn Loss (ft)	0.40	Cum Volume (acre-ft)	102.43
C & E Loss (ft)	0.26	Cum SA (acres)	21.01

Warning: The energy equation could not be balanced within the specified number of iterations. The
program used critical depth for the water surface and continued on with the calculations.
Warning: Divided flow computed for this cross-section.
Warning: The velocity head has changed by more than 0.5 ft (0.15 m). This may indicate the need for
additional cross sections.
Warning: The conveyance ratio (upstream conveyance divided by downstream conveyance) is less than
0.7 or greater than 1.4. This may indicate the need for additional cross sections.
Warning: The energy loss was greater than 1.0 ft (0.3 m). between the current and previous cross
section. This may indicate the need for additional cross sections.
Warning: During the standard step iterations, when the assumed water surface was set equal to critical
depth, the calculated water surface came back below critical depth. This indicates that there
is not a valid subcritical answer. The program defaulted to critical depth.

CROSS SECTION

RIVER: CV Creek
REACH: Lower RS: 774

INPUT
Description:
Station Elevation Data num= 170

Sta	Elev	Sta	Elev	Sta	Elev	Sta	Elev	Sta	Elev
0	44.06	1.92	44	63.49	44	67.94	42.77	70.79	42
71.49	41.8	76.26	40.47	77.71	40.07	77.96	40	81.35	39.03
85.05	38	87.8	37.22	97.13	34.59	101.64	33.31	105.27	32.25
105.75	32.12	106.15	32	107.66	31.56	112.97	30	114.72	29.49
119.8	28	122.25	27.37	125.42	26.35	126.63	26	133.28	24.24
134.2	24	141.14	23.08	147.35	22.46	147.73	22.44	148.02	22.43
155.28	22.1	155.37	22.1	160.43	21.88	166.63	21.94	167.7	22
185.14	22	186.01	21.8	186.7	21.65	188.09	21.34	192.15	20.49
194.13	20.08	194.69	20	197.4	20	200.62	20.54	203.84	21.15
208.28	22	212.02	22	216.71	20.76	219.51	20	222.39	19.26
227.19	18	230.73	17.1	233.54	16.36	240.92	14.46	242.72	14
299.89	12.66	304.13	12.57	305.55	12.53	328.51	12	330.76	11.9
340.44	11.23	356.61	10.2	358.89	10	365.03	10	390.46	9.61
468.66	8.8	483.95	8.69	486.63	8.68	492.15	8.65	494.44	8.65
497.73	8.62	500.7	8.61	508.9	8.56	514.04	8.52	515.99	8.5
527.43	8.44	532.1	8.43	536.61	8.44	541.32	8.43	546.49	8.47
551.47	8.46	579.95	8.53	702.63	9.88	704.65	9.9	712.33	10
760.39	10	865.48	10.77	868.36	10.77	923.95	10	1266.33	10
1268.98	9.94	1269.79	9.94	1290.86	9.78	1401.17	8	1414.46	8.55
1416.39	8.57	1416.88	8.57	1428.24	8.54	1428.75	8.55	1441.17	8.55
1442.69	8.56	1465.3	8.79	1474.28	8.82	1478.87	8.87	1494.36	8.98
1500.46	9.04	1505.26	9.04	1510.62	9.09	1517.77	9.14	1575.47	9.47

1592.01	9.66	1596.56	9.69	1615.57	10	1618.06	10	1621.88	10.56
1626.24	11.21	1637.91	12.92	1642.32	13.58	1645.19	14	1741.61	16
1746.78	17.4	1749.41	18	1750.21	18.16	1753.31	18.74	1759.42	19.83
1759.84	19.9	1760.08	19.95	1760.38	20	1765.34	20.91	1770.66	21.85
1771.47	22	1777.25	23.39	1778.81	23.76	1779.16	23.85	1779.92	24
1780.99	24.78	1782.88	26	1783.28	26.26	1785.97	28	1788.55	28.45
1789.91	28.68	1791.7	28.97	1794.99	29.53	1797.4	29.91	1797.63	29.94
1797.99	30	1798.51	31.24	1798.78	32	1799.25	32.54	1800.13	33.56
1800.59	34	1837.87	34	1848.26	34.38	1853.79	34.1	1854.65	34
1856.67	33.42	1857.53	33.46	1862.22	33.57	1864.23	34	1866.41	34.63
1871.06	36	1872.57	36.46	1877.8	38	1878.37	38.17	1881.95	39.22
1884.02	39.84	1889.21	41.38	1891.31	42	1901.28	44.96	1903.22	45.53

Manning's n Values num= 3

Sta	n Val	Sta	n Val	Sta	n Val
0	.035	216.71	.05	1759.42	.05

Bank Sta: Left	Right	Lengths: Left	Channel	Right	Coeff Contr.	Expan.
216.71	1759.42	136	417.54	444.14	.1	.3

Ineffective Flow num= 1

Sta L	Sta R	Elev	Permanent
1482	1903.22		F

CROSS SECTION OUTPUT Profile #PF 1

E.G. Elev (ft)	14.43	Element	Left OB	Channel
Right OB				
Vel Head (ft)	0.05	Wt. n-Val.		0.050
W.S. Elev (ft)	14.38	Reach Len. (ft)	136.00	417.54
444.14				
Crit W.S. (ft)	10.90	Flow Area (sq ft)		5645.79
E.G. Slope (ft/ft)	0.000471	Area (sq ft)		6397.30
Q Total (cfs)	10000.00	Flow (cfs)		10000.00
Top Width (ft)	1422.46	Top Width (ft)		1422.46
Vel Total (ft/s)	1.77	Avg. Vel. (ft/s)		1.77
Max Chl Dpth (ft)	6.38	Hydr. Depth (ft)		4.55
Conv. Total (cfs)	460671.8	Conv. (cfs)		460671.8
Length Wtd. (ft)	417.54	Wetted Per. (ft)		1240.97
Min Ch El (ft)	8.00	Shear (lb/sq ft)		0.13
Alpha	1.00	Stream Power (lb/ft s)		0.24
Frctn Loss (ft)	0.08	Cum Volume (acre-ft)		78.49
C & E Loss (ft)	0.01	Cum SA (acres)		14.36

Warning: The conveyance ratio (upstream conveyance divided by downstream conveyance) is less than
0.7 or greater than 1.4. This may indicate the need for additional cross sections.

Note: Hydraulic jump has occurred between this cross section and the previous upstream section.

CROSS SECTION

RIVER: CV Creek
REACH: Lower RS: 356

INPUT
Description:
Station Elevation Data num= 195

Sta	Elev	Sta	Elev	Sta	Elev	Sta	Elev	Sta	Elev
0	42.29	3.97	42.25	5.87	42.26	10.65	42.16	14.34	42.1
16.56	42.07	17.11	42.07	26.06	42	28.46	42	29.81	41.93
30.04	41.92	37.77	41.44	39.42	41.35	45.18	41	54.34	40.53
62.06	40.15	64.91	40	65.69	39.96	67.7	39.84	68.02	39.82
68.39	39.79	68.68	39.77	69.09	39.74	69.52	39.7	70.17	39.65
71.01	39.57	72.38	39.47	73.91	39.34	79.46	38.91	81.28	38.76
88.95	38	92.56	37.65	95.23	37.4	108.84	36	113.95	35.49
120.79	34.75	125.71	34.23	127.48	34	136.89	32.37	138.6	32
146.13	30.14	146.63	30.02	146.71	30	147.56	29.79	154.88	28
155.46	27.9	156.51	27.71	165.79	26	170	24.59	170.82	24.29
171.83	24	176.35	22.33	177.25	22	181.19	20.55	182.66	20
185.98	18.78	188.06	18	195.37	15.29	203.86	12.11	204.16	12
205.47	11.95	205.57	11.95	257.23	10	259.97	9.23	264.26	8
379.43	6.18	388.43	6	502.17	6	540.58	6.71	541.15	6.71
549.17	6.86	552.99	6.94	555.83	7.02	654.9	7.54	687.97	7.33
691.9	7.35	735.25	8	994.89	8	1100.99	8.97	1172.89	8.89
1185.82	8.91	1247.53	8.85	1251.91	8.84	1252.83	8.84	1264.78	8.81
1330.85	8	1715.79	8	1719.67	8.27	1722.37	8.38	1726.18	8.55
1741.57	8.89	1746.87	9.26	1748.65	9.41	1752.07	9.68	1756.99	10
1760.83	11.06	1764.09	12	1768.2	13.13	1771.22	14	1775.55	15.19
1778.37	16	1782.91	17.25	1785.53	18	1790.25	19.3	1792.71	20
1798.76	21.7	1799.81	22	1803.81	23.11	1806.02	23.67	1806.9	23.91
1807.32	24	1813.98	24	1816.71	24.34	1818.6	24.37	1826.2	25.38
1827.03	25.44	1829.16	26	1833.06	26	1837.01	26	1844.33	25.51
1853.52	24.93	1873.1	24	1886.22	24	1890.51	25.32	1890.87	25.44
1891.23	25.55	1891.61	25.66	1892.39	25.88	1892.78	26	1893.3	26.35
1893.64	26.6	1895.56	28	1896.85	28.93	1898.33	30	1899.87	31.11
1903.42	33.68	1903.87	34	1906.61	35.98	1906.9	36.19	1909.41	38
1909.56	38.11	1912.18	40	1912.45	40.19	1917.73	44	1918.18	44.32
1920.5	46	1921.01	46.37	1923.28	48	1923.84	48.41	1926.05	50
1926.66	50.44	1928.83	52	1929.47	52.47	1931.6	54	1935.84	57.06
1937.14	58	1938.66	59.09	1939.92	60	1941.06	60.82	1942.69	62
1943.75	62.76	1945.47	64	1947.11	65.19	1948.24	66	1949.92	67.21
1951.01	68	1953.79	70	1954.78	70.71	1956.56	72	1961.12	75.29
1962.11	76	1966.71	79.32	1967.65	80	1970.43	82	1972.45	83.46
1973.31	84	1975.31	84.67	1978.33	86	1985.08	87.58	1987.05	88
1993.75	89.07	1999.99	90	2001.64	90.26	2013.05	92	2013.85	92.15
2014.1	92.2	2014.57	92.3	2015.67	92.54	2020.1	93.45	2022.03	93.91
2022.43	94	2023.89	94.34	2024.43	94.47	2025.53	94.72	2026.82	95.08

Manning's n Values num= 3

Sta	n Val	Sta	n Val	Sta	n Val
0	.016	165.79	.05	1833.06	.016

Bank Sta: Left	Right	Coeff Contr.	Expan.
165.79	1833.06	.1	.3

CROSS SECTION OUTPUT Profile #PF 1

E.G. Elev (ft)	14.35	Element	Left OB	Channel
Right OB				
Vel Head (ft)	0.02	Wt. n-Val.		0.050
W.S. Elev (ft)	14.33	Reach Len. (ft)		
Crit W.S. (ft)	8.90	Flow Area (sq ft)		9978.72
E.G. Slope (ft/ft)	0.000097	Area (sq ft)		9978.72
Q Total (cfs)	10000.00	Flow (cfs)		10000.00
Top Width (ft)	1574.49	Top Width (ft)		1574.49
Vel Total (ft/s)	1.00	Avg. Vel. (ft/s)		1.00
Max Chl Dpth (ft)	8.33	Hydr. Depth (ft)		6.34
Conv. Total (cfs)	1014984.0	Conv. (cfs)		1014984.0
Length Wtd. (ft)		Wetted Per. (ft)		1575.93
Min Ch El (ft)	6.00	Shear (lb/sq ft)		0.04
Alpha	1.00	Stream Power (lb/ft s)		0.04
Frctn Loss (ft)		Cum Volume (acre-ft)		
C & E Loss (ft)		Cum SA (acres)		

SUMMARY OF MANNING'S N VALUES

River:CV Creek

Reach	River Sta.	n1	n2	n3
Lower	4421	.016	.12	.03
Lower	4086	.016	.12	.03
Lower	3531	.016	.12	.03
Lower	3254	.016	.12	.03
Lower	3100	Bridge		
Lower	3082	.016	.12	.03
Lower	2846	.016	.12	.03
Lower	2255	.05	.12	.03
Lower	1826	.05	.12	.03
Lower	1543	.05	.12	.03
Lower	1500	Bridge		
Lower	1442	.035	.025	.03
Lower	1400	Bridge		
Lower	1197	.035	.025	.03
Lower	1182	.035	.025	.03
Lower	1163	Bridge		
Lower	1143	.035	.025	.03
Lower	1100	Bridge		
Lower	1045	.035	.05	.05
Lower	774	.035	.05	.05
Lower	356	.016	.05	.016

SUMMARY OF REACH LENGTHS

River: CV Creek

Reach	River Sta.	Left	Channel	Right
Lower	4421	241.6	335.33	335.6
Lower	4086	524.5	555.38	523.1
Lower	3531	605.3	276.6	243.2
Lower	3254	187.9	172.21	187.17
Lower	3100	Bridge		
Lower	3082	216.44	235.72	262.16
Lower	2846	531.77	591.09	510.32
Lower	2255	383.15	429.01	326.21
Lower	1826	299.52	282.8	207
Lower	1543	321.52	101.33	163.33
Lower	1500	Bridge		
Lower	1442	294.18	244.62	253.63
Lower	1400	Bridge		
Lower	1197	16.25	15.14	20.8
Lower	1182	167.09	39.56	57.37
Lower	1163	Bridge		
Lower	1143	133.35	97.85	122.84
Lower	1100	Bridge		
Lower	1045	112.47	270.89	459.51
Lower	774	136	417.54	444.14
Lower	356			

SUMMARY OF CONTRACTION AND EXPANSION COEFFICIENTS
River: CV Creek

Reach	River Sta.	Contr.	Expan.
Lower	4421	.1	.3
Lower	4086	.1	.3
Lower	3531	.1	.3
Lower	3254	.1	.3
Lower	3100	Bridge	
Lower	3082	.1	.3
Lower	2846	.1	.3
Lower	2255	.1	.3
Lower	1826	.1	.3
Lower	1543	.1	.3
Lower	1500	Bridge	
Lower	1442	.1	.3
Lower	1400	Bridge	
Lower	1197	.1	.3
Lower	1182	.1	.3
Lower	1163	Bridge	
Lower	1143	.1	.3
Lower	1100	Bridge	
Lower	1045	.1	.3
Lower	774	.1	.3
Lower	356	.1	.3

Profile Output Table - Standard Table 1

Reach	River Sta	Profile	Q Total	Min Ch El	W.S. Elev	Crit W.S.
E.G. Elev	E.G. Slope	Vel Chnl	Flow Area	Top Width	Froude # Chl	
			(cfs)	(ft)	(ft)	(ft)
(ft)	(ft/ft)	(ft/s)	(sq ft)	(ft)		
Lower	4421	PF 1	10000.00	32.00	41.74	37.49
42.28	0.013701	5.84	1709.14	218.15	0.36	
Lower	4086	PF 1	10000.00	28.83	37.68	
38.05	0.011400	4.83	2068.90	299.90	0.32	
Lower	3531	PF 1	10000.00	24.52	34.50	
34.66	0.003682	3.23	3086.52	357.35	0.19	
Lower	3254	PF 1	10000.00	24.00	33.28	27.52
33.47	0.005012	3.51	2848.05	607.18	0.22	
Lower	3100		Bridge			
Lower	3082	PF 1	10000.00	22.21	31.52	
31.78	0.007862	4.09	2446.12	339.13	0.27	
Lower	2846	PF 1	10000.00	22.00	30.39	
30.51	0.003689	2.81	3559.36	490.98	0.18	
Lower	2255	PF 1	10000.00	21.15	27.17	
27.34	0.008487	3.40	2938.37	568.86	0.26	
Lower	1826	PF 1	10000.00	18.00	25.22	
25.30	0.002969	2.33	4288.10	698.78	0.16	
Lower	1543	PF 1	10000.00	16.00	23.87	19.78
24.07	0.006858	3.62	2762.27	495.54	0.25	
Lower	1500		Bridge			
Lower	1442	PF 1	10000.00	16.00	22.47	18.59
22.67	0.000322	3.64	2747.32	427.36	0.25	
Lower	1400		Bridge			
Lower	1197	PF 1	10000.00	12.00	18.45	
18.68	0.000370	3.88	2574.60	406.51	0.27	
Lower	1182	PF 1	10000.00	12.00	18.46	14.62
18.67	0.000335	3.73	2683.80	507.17	0.26	
Lower	1163		Bridge			
Lower	1143	PF 1	10000.00	12.00	18.06	14.40
18.24	0.000313	3.47	2884.74	504.80	0.25	
Lower	1100		Bridge			
Lower	1045	PF 1	10000.00	12.67	16.90	16.90
17.81	0.029920	7.67	1303.29	713.71	1.00	
Lower	774	PF 1	10000.00	8.00	14.38	10.90
14.43	0.000471	1.77	5645.79	1422.46	0.15	
Lower	356	PF 1	10000.00	6.00	14.33	8.90
14.35	0.000097	1.00	9978.72	1574.49	0.07	

ERRORS WARNINGS AND NOTES

Errors Warnings and Notes for Plan : CVC Proposed

River: CV Creek Reach: Lower RS: 4421 Profile: PF 1

Warning:The energy loss was greater than 1.0 ft (0.3 m). between the current and previous cross section. This may indicate the need for additional cross sections.

River: CV Creek Reach: Lower RS: 4086 Profile: PF 1
Warning:The conveyance ratio (upstream conveyance divided by downstream conveyance) is less than 0.7 or greater than 1.4.
This may indicate the need for additional cross sections.
Warning:The energy loss was greater than 1.0 ft (0.3 m). between the current and previous cross section. This may indicate
the need for additional cross sections.
River: CV Creek Reach: Lower RS: 3531 Profile: PF 1
Warning:The energy loss was greater than 1.0 ft (0.3 m). between the current and previous cross section. This may indicate
the need for additional cross sections.
River: CV Creek Reach: Lower RS: 3100 Profile: PF 1 Upstream
Warning:The energy loss was greater than 1.0 ft (0.3 m). between the current and previous cross section. This may indicate
the need for additional cross sections.
River: CV Creek Reach: Lower RS: 3082 Profile: PF 1
Warning:The conveyance ratio (upstream conveyance divided by downstream conveyance) is less than 0.7 or greater than 1.4.
This may indicate the need for additional cross sections.
Warning:The energy loss was greater than 1.0 ft (0.3 m). between the current and previous cross section. This may indicate
the need for additional cross sections.
River: CV Creek Reach: Lower RS: 2846 Profile: PF 1
Warning:The conveyance ratio (upstream conveyance divided by downstream conveyance) is less than 0.7 or greater than 1.4.
This may indicate the need for additional cross sections.
Warning:The energy loss was greater than 1.0 ft (0.3 m). between the current and previous cross section. This may indicate
the need for additional cross sections.
River: CV Creek Reach: Lower RS: 2255 Profile: PF 1
Warning:The conveyance ratio (upstream conveyance divided by downstream conveyance) is less than 0.7 or greater than 1.4.
This may indicate the need for additional cross sections.
Warning:The energy loss was greater than 1.0 ft (0.3 m). between the current and previous cross section. This may indicate
the need for additional cross sections.
River: CV Creek Reach: Lower RS: 1826 Profile: PF 1
Warning:The conveyance ratio (upstream conveyance divided by downstream conveyance) is less than 0.7 or greater than 1.4.
This may indicate the need for additional cross sections.
Warning:The energy loss was greater than 1.0 ft (0.3 m). between the current and previous cross section. This may indicate
the need for additional cross sections.
River: CV Creek Reach: Lower RS: 1543 Profile: PF 1
Warning:Divided flow computed for this cross-section.
River: CV Creek Reach: Lower RS: 1500 Profile: PF 1 Upstream
Warning:The conveyance ratio (upstream conveyance divided by downstream conveyance) is less than 0.7 or greater than 1.4.
This may indicate the need for additional cross sections.
River: CV Creek Reach: Lower RS: 1442 Profile: PF 1
Warning:The velocity head has changed by more than 0.5 ft (0.15 m). This may indicate the need for additional cross sections.
Warning:The conveyance ratio (upstream conveyance divided by downstream conveyance) is less than 0.7 or greater than 1.4.
This may indicate the need for additional cross sections.
River: CV Creek Reach: Lower RS: 1400 Profile: PF 1 Upstream
Warning:The energy equation could not be balanced within the specified number of iterations. The program used critical depth
for the water surface and continued on with the calculations.
Warning:The velocity head has changed by more than 0.5 ft (0.15 m). This may indicate the need for additional cross sections.
Warning:The conveyance ratio (upstream conveyance divided by downstream conveyance) is less than 0.7 or greater than 1.4.

This may indicate the need for additional cross sections.
Warning:The energy loss was greater than 1.0 ft (0.3 m). between the current and previous cross section. This may indicate
the need for additional cross sections.
Warning:During the standard step iterations, when the assumed water surface was set equal to critical depth, the calculated
water surface came back below critical depth. This indicates that there is not a valid subcritical answer. The
program defaulted to critical depth.
River: CV Creek Reach: Lower RS: 1400 Profile: PF 1 Downstream
Warning:The velocity head has changed by more than 0.5 ft (0.15 m). This may indicate the need for additional cross sections.
Warning:The conveyance ratio (upstream conveyance divided by downstream conveyance) is less than 0.7 or greater than 1.4.
This may indicate the need for additional cross sections.
Warning:The energy loss was greater than 1.0 ft (0.3 m). between the current and previous cross section. This may indicate
the need for additional cross sections.
River: CV Creek Reach: Lower RS: 1182 Profile: PF 1
Warning:The conveyance ratio (upstream conveyance divided by downstream conveyance) is less than 0.7 or greater than 1.4.
This may indicate the need for additional cross sections.
River: CV Creek Reach: Lower RS: 1163 Profile: PF 1 Downstream
Warning:The conveyance ratio (upstream conveyance divided by downstream conveyance) is less than 0.7 or greater than 1.4.
This may indicate the need for additional cross sections.
River: CV Creek Reach: Lower RS: 1100 Profile: PF 1
Warning:For the final momentum answer at the bridge, the upstream energy was computed lower than the downstream energy. This
is not physically possible, the momentum answer has been disregarded.
River: CV Creek Reach: Lower RS: 1100 Profile: PF 1 Upstream
Warning:The conveyance ratio (upstream conveyance divided by downstream conveyance) is less than 0.7 or greater than 1.4.
This may indicate the need for additional cross sections.
River: CV Creek Reach: Lower RS: 1100 Profile: PF 1 Downstream
Warning:The conveyance ratio (upstream conveyance divided by downstream conveyance) is less than 0.7 or greater than 1.4.
This may indicate the need for additional cross sections.
River: CV Creek Reach: Lower RS: 1045 Profile: PF 1
Warning:The energy equation could not be balanced within the specified number of iterations. The program used critical depth
for the water surface and continued on with the calculations.
Warning:Divided flow computed for this cross-section.
Warning:The velocity head has changed by more than 0.5 ft (0.15 m). This may indicate the need for additional cross sections.
Warning:The conveyance ratio (upstream conveyance divided by downstream conveyance) is less than 0.7 or greater than 1.4.
This may indicate the need for additional cross sections.
Warning:The energy loss was greater than 1.0 ft (0.3 m). between the current and previous cross section. This may indicate
the need for additional cross sections.
Warning:During the standard step iterations, when the assumed water surface was set equal to critical depth, the calculated
water surface came back below critical depth. This indicates that there is not a valid subcritical answer. The
program defaulted to critical depth.
River: CV Creek Reach: Lower RS: 774 Profile: PF 1
Warning:The conveyance ratio (upstream conveyance divided by downstream conveyance) is less than 0.7 or greater than 1.4.
This may indicate the need for additional cross sections.
Note: Hydraulic jump has occurred between this cross section and the previous upstream section.

APPENDIX 'C'

Location Hydraulic Study Form

Floodplain Encroachment Form

As-builts

Planning Study

Backup Data

LOCATION HYDRAULIC STUDY FORM

Dist. *11* Co. *SD* Rte. *005* K.P.
EA Bridge No. *57-0590*
Floodplain Description:
Year-round flowing creek with heavy vegetation and several bridge crossing. Location of interest: I-5 / Carmel Valley Creek Intersection

1. Description of Proposal (include any physical barriers i.e. concrete barriers, soundwalls, etc. and design elements to minimize floodplain impacts)

This project includes an improvement to the I-5 / Bridge over Carmel Valley Creek. The preferred bridge to be widened to the west and an additional bridge would replace the existing Sorrento Valley Road Culvert; proposed improvements would not have significant impacts to the existing floodplain.

2. ADT: Current **313,000** Projected **391,800** ***(year 2030)***
(Current ADT values taken from SANDAG: Transportation Forecast Information Center)

3. Hydraulic Data: Base Flood Q_{100}= ***10,000*** ft^3 / s ***(Taken from 1994 Carmel Valley Creek Connector As-builts)***

WSE_{100}= **22.47 feet (Upstream face of I-5 Bridge)**
The flood of record, if greater than Q_{100}:
Q= ***N/A*** ft^3 / s WSE= ***N/A***
Overtopping flood Q= ***(no increase from existing condition)*** ft^3 / s
WSE= ***(no increase from existing condition)***

Are NFIP maps and studies available? YES **X** NO_____

4. Is the highway location alternative within a regulatory floodway ?
YES ***X*** NO_____

5. Attach map with flood limits outlined showing all buildings or other improvements within the base floodplain. ***(See Appendix 'A')***

Potential Q_{100} backwater damages:

A. Residences? NO___ YES ***(no increase from existing condition)***
B. Other Bldgs? NO___ YES ***(no increase from existing condition)***
C. Crops? NO ***X*** YES _____
D. Natural and beneficial

FLOODPLAIN VALUES? NO **X** YES_____

6. Type of Traffic:

A. Emergency supply or evacuation route? NO_____YES__X____
B. Emergency vehicle access? NO_____YES__X____
C. Practicable detour available? NO_____YES__X____
D. School bus or mail route? NO_____YES__X____

7. Estimated duration of traffic interruption for 100-year event hours: ***There are no significant changes to the I-5 bridge crossing the Carmel Valley Creek. Traffic interruptions are not anticipated. (no increase from proposed improvements).***

8. Estimated value of Q_{100} flood damages (if any) – moderate risk level.

A. Roadway $ ***(no increase from existing condition)***
B Property $ ***(no increase from existing condition)***
Total $ ***(no increase from existing condition)***

9. Assessment of Level of Risk Low__X____
Moderate____
High_____

For High Risk projects, during design phase, additional Design Study Risk Analysis May be necessary to determine design alternative.

Is there any longitudinal encroachment, significant encroachment, or any support of incompatible
Floodplain development? NO___X____YES _____

If yes, provide evaluation and discussion of practicability of alternatives in accordance with 23 CFR 650.113

Information developed to comply with the Federal requirement for the Location Hydraulic Study shall be retained in the project files.

Signature – Hydraulic/Project Engineer_____Date_____

FLOODPLAIN ENCROACHMENT REPORT SUMMARY

Dist. *11* Co. *SD* Rte. *005* K.P.
Bridge No. *57-0590*
Limits: ***I-5 / Carmel Valley Creek Intersection***

Floodplain Description: **Year-round flowing creek with heavy vegetation and several bridge crossings.**

		No	Yes
1.	Is the proposed action a longitudinal encroachment of the base floodplain?	X	
2.	Are the risks associated with the implementation of the proposed action significant?	X	
3.	Will the proposed action support probable incompatible floodplain development?	X	
4.	Are there any significant impacts on natural and beneficial floodplain values?	X	
5.	Routine construction procedures are required to minimize impacts on the floodplain. Are there any special mitigation measures necessary to minimize impacts or restore and preserve natural and beneficial floodplain values? If yes, explain.	X	
6.	Does the proposed action constitute a significant floodplain encroachment as defined in 23 CFR, Section 650.105(q).	X	
7.	Are Location Hydraulic Studies that document the above answers on file? If not explain.		X

PREPARED BY:

_____ _____
Signature – Hydraulic/Project Engineer Date

CONCURRED BY:

_____ _____
Signature –Caltrans Engineer Date

_____ _____
Signature – FHWA Transportation Engineer Date

RECEIVED 0-4-06

DIST	COUNTY	ROUTE	KILOMETER POST TOTAL PROJECT
11	SD	5	

To get to the Caltrans web site, go to: http://www.dot.ca.gov

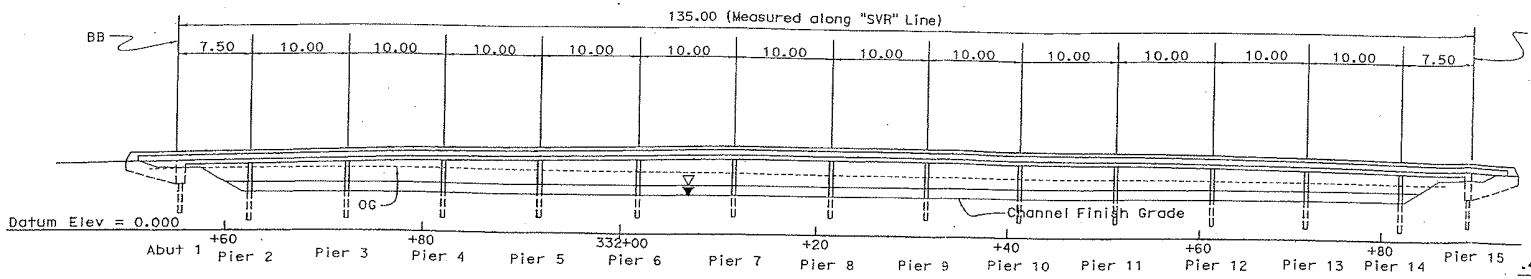

ELEVATION
1:125

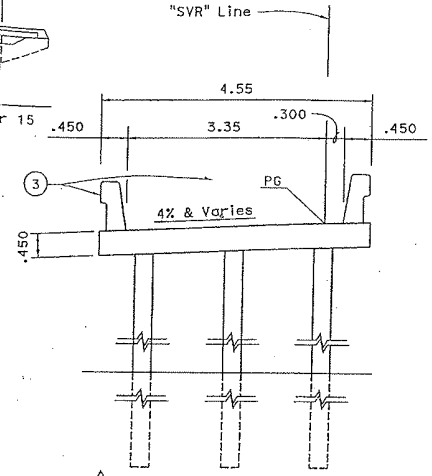

TYPICAL SECTION
1:20

1
R = 182.88
Δ = 29°33' 53"
T = 48.26
L = 94.37

2
R = 128.02
Δ = 49°19' 24"
T = 58.78
L = 110.21

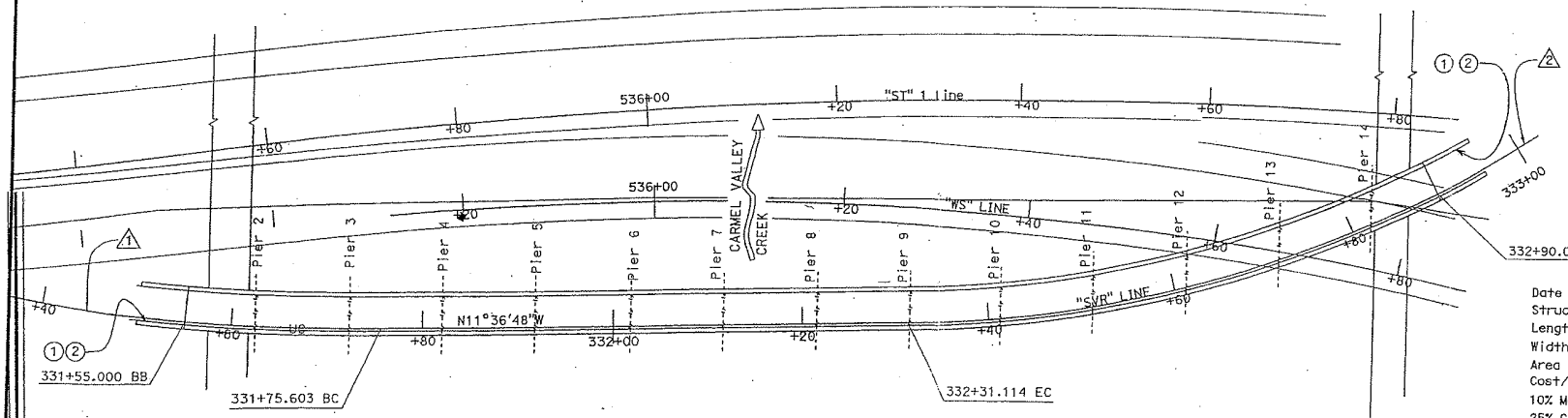

PLAN
1:125

Date of Estimate	7/13/06 - PGA
Structure Depth	0.450 M
Length	135.00 M
Width	4.55 M
Area	614.25 Sq M
Cost/SM including 10% Mobilization & 25% Contongencies	$2349
Total Cost	$1,444,000

1. Paint "Carmel Valley CreekSVR"
2. Paint Br. No. 57-NEW"
3. Concrete Barrier Type 732

ALL DIMENSIONS ARE IN METERS UNLESS OTHERWISE SHOWN

DESIGNED BY Gary Hight	DATE June 06	STRUCTURE DESIGN BRANCH 18	PLANNING STUDY
DRAWN BY Marvin Lane	DATE June 06		CARMEL VALLEY CREEK SVR
CHECKED BY	DATE		BRIDGE NO. 57-NEW / CU 11
APPROVED	DATE		SCALE: As Noted / EA 235800

FILE => carmelvalleycreek.dgn

STRUCTURES DESIGN ADVANCE PLANNING STUDY SHEET (METRIC) (REV.07-12-04)

USERNAME => ghight DATE PLOTTED => 23-JUN-2006 TIME PLOTTED => 13:24

STATE OF CALIFORNIA - DEPARTMENT OF TRANSPORTATION - DIVISION OF STRUCTURES

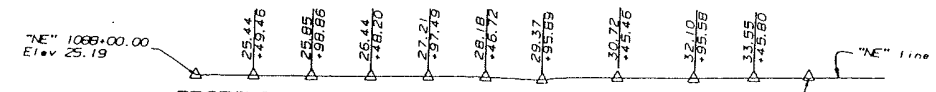

OG and GP are approximate, projected from right edge of deck.

PROFILE GRADE

No scale

"Δ" - indicates PI

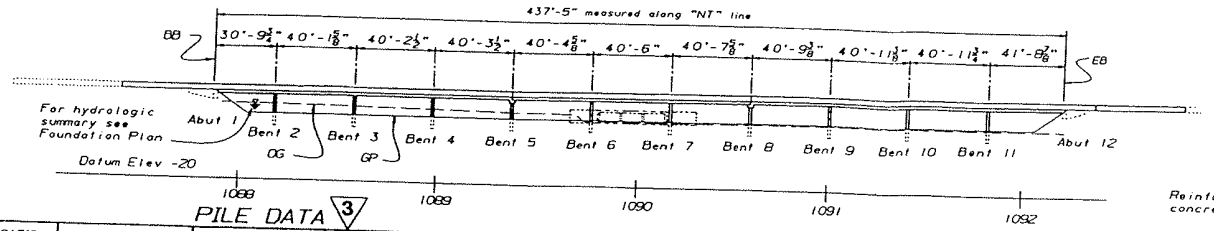

ELEVATION

1"=30'

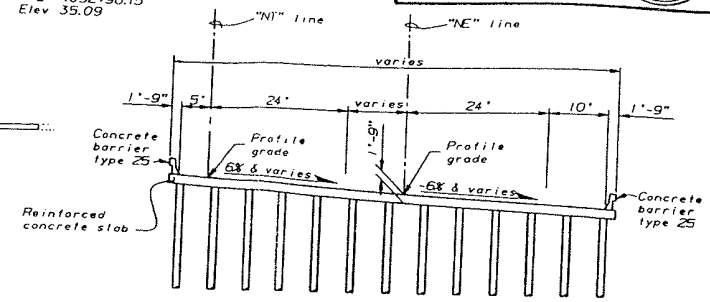

TYPICAL SECTION

1"=10'

PILE DATA

3

LOCATION	DESIGN LOADING	PILE TYPE .500*	SPECIFIED TIP ELEV	PROBABLE TIP ELEV	Avg
Abut 1	45 tons	PP 14 x ~~.891~~	-80.0 pipe	-85.0	-81.89
Bent 2	70 tons	PP 18 x .500*	-80.0	-85.0	-81.00
Bent 3	70 tons		-80.0	-85.0	-81.00
Bent 4	70 tons		-80.0	-85.0	-72.23
Bent 5	70 tons		-80.0	-85.0	-92.64
Bent 6	70 tons		-90.0	-95.0	-86.00
Bent 7	70 tons		-90.0	-95.0	-84.75
Bent 8	70 tons		-95.0	-100.0	-93.57
Bent 9	70 tons		-95.0	-100.0	-96.11
Bent 10	70 tons		-95.0	-100.0	-95.00
Bent 11	70 tons		-95.0	-100.0	-90.89
Abut 12	45 tons	PP 14 x ~~.891~~	-90.0 pipe	-95.0	

3

.500 *

* or HP14 x 89

NOTE:

Specified Tip Elevations are controlled by tension and negative friction requirements. "ENA" bearing may exceed 2X the design loading shown on the plans.

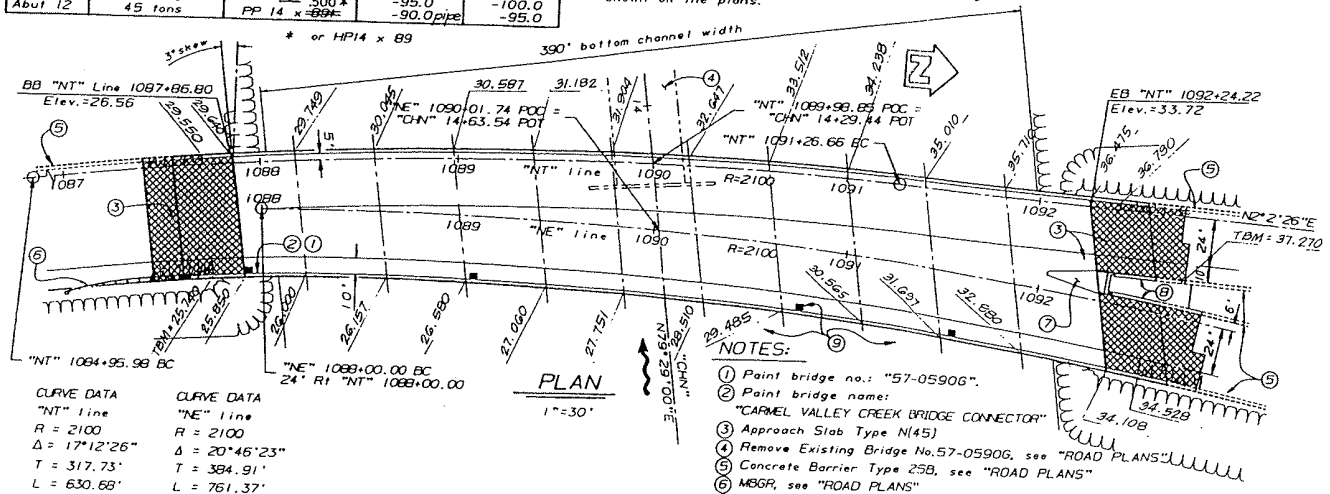

PLAN

1"=30'

CURVE DATA
"NT" line
R = 2100
Δ = 17°12'26"
T = 317.73'
L = 630.68'

CURVE DATA
"NE" line
R = 2100
Δ = 20°46'23"
T = 384.91'
L = 761.37'

NOTES:

1. Paint bridge no.: "57-0590G".
2. Paint bridge name: "CARMEL VALLEY CREEK BRIDGE CONNECTOR"
3. Approach Slab Type N(45)
4. Remove Existing Bridge No.57-0590G, see "ROAD PLANS"
5. Concrete Barrier Type 25B, see "ROAD PLANS"
6. MBGR, see "ROAD PLANS"
7. Crash Cushion-Hex Foam
8. Concrete Barrier Type 25
9. Deck Drain

For 'Quantities' See 'Deck Contours' sheet.

Standard Plan Sheet No.

Detail No.

INDEX TO PLANS

Sheet No.	Sheet Title
1	GENERAL PLAN
2	DECK CONTOURS
3	FOUNDATION PLAN
4	ABUTMENT DETAILS
5	BENT DETAILS
6	TYPICAL SECTION
7	FRAME 1 SLAB REINFORCEMENT
8	FRAME 2 SLAB REINFORCEMENT
9	FRAME 3 SLAB REINFORCEMENT
10	SLAB REINFORCEMENT DETAILS
11	HINGE AT BENT 5
12	HINGE AT BENT 8
13	SLAB HINGE DETAILS
14	BENT PILE DETAILS
15	DECK DRAINAGE DETAILS
16	APPROACH SLAB LAYOUT
17	STRUCTURE APPROACH TYPE N(45) DETAILS NO.1
18	STRUCTURE APPROACH TYPE N(45) DETAILS NO.2
19	STRUCTURE APPROACH DRAINAGE DETAILS
20	VEHICLE CRASH CUSHION-HEX FOAM
21	LOG OF TEST BORINGS 1 OF 5
22	LOG OF TEST BORINGS 2 OF 5
23	LOG OF TEST BORINGS 3 OF 5
24	LOG OF TEST BORINGS 4 OF 5
25	LOG OF TEST BORINGS 5 OF 5

STANDARD PLANS DATED JULY 1992

B0-1	BRIDGE DETAILS
B0-13	BRIDGE DETAILS
B2-5	PILE DETAILS-CLASS 45 AND CLASS 70
B6-21	JOINT SEALS (MAXIMUM MOVEMENT RATING=2")
B7-6	DECK DRAINS TYPE D-1 AND D2
B11-53	CONCRETE BARRIER TYPE 25
A62C	LIMITS OF PAYMENT FOR EXCAVATION AND BACKFILL

3 REVISED PER ADDENDUM NO. 3 DATED NOVEMBER 22, 1994

REGISTERED ENGINEER - CIVIL
8-29-94
PLANS APPROVAL DATE

REGISTERED PROFESSIONAL ENGINEER Don Fukushima No. 16075 Exp. 6/30/97 CIVIL STATE OF CALIFORNIA

AS BUILT
P.A
CORRECTIONS BY BIZZIGOTTI
CONTRACT NO. 11-030114
DATE 1-16-98
3-8-99

DESIGN	BY Jeff Wiley	CHECKED Brent Massey	LOAD FACTOR DESIGN	LIVE LOADING HS20-44 AND ALTERNATIVE AND PERMIT DESIGN LOAD	
DETAILS	BY D.Radley/AKO 4-91	CHECKED Brent Massey	LAYOUT	BY Jeff Wiley	CHECKED Brent Massey
QUANTITIES	BY Dave Tiberi	CHECKED Julio Gomez	SPECIFICATIONS	BY	CHECKED

DESIGN ENGINEER

DS 050 (2-38) (CADD 4/89)

ORIGINAL SCALE IN INCHES FOR REDUCED PLANS 0 1 2 3

STATE OF CALIFORNIA
DEPARTMENT OF TRANSPORTATION

DIVISION OF STRUCTURES
STRUCTURE DESIGN 10

CU 11
EA 030111

BRIDGE NO. 57-0590G
POST MILE R32.72

CARMEL VALLEY CREEK BRIDGE CONNECTOR
GENERAL PLAN

DISREGARD PRINTS BEARING EARLIER REVISION DATES

REVISION DATES (PRELIMINARY STAGE ONLY)

SHEET 1 OF 25

× Indicates 10' intervals.

Contours do not include camber.

REGISTERED ENGINEER - CIVIL

8-29-94

PLANS APPROVAL DATE

REGISTERED PROFESSIONAL ENGINEER DON FUKUSHIMA No. 16075 Exp. 6-30-97 CIVIL STATE OF CALIFORNIA

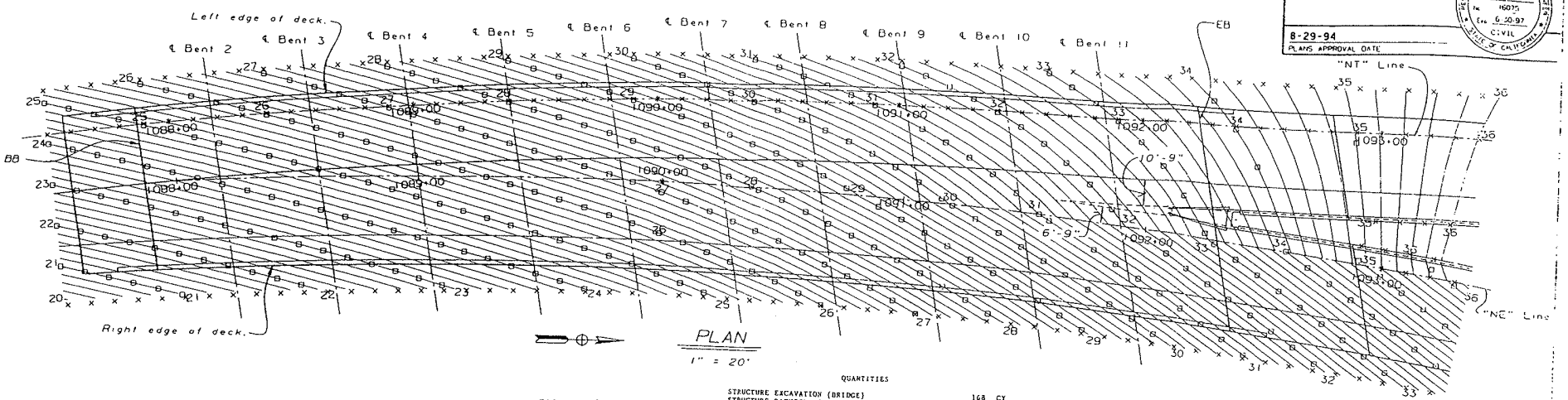

PLAN

1" = 20'

QUANTITIES

STRUCTURE EXCAVATION (BRIDGE)	168	CY
STRUCTURE BACKFILL (BRIDGE)	82	CY
~~FURNISH 18" CAST-IN STEEL SHELL CONCRETE PILING~~	~~31,020~~	~~LF~~ 14,818 LF
~~DRIVE 18" CAST-IN STEEL SHELL CONCRETE PILE~~	~~1,150~~	~~EA~~ 128 EA
STRUCTURAL CONCRETE, BRIDGE	7,385	CY
STRUCTURAL CONCRETE, APPROACH SLAB (TYPE N)	305	CY
~~JOINT SEAL (NR 1 1/2")~~	~~150~~	~~LF~~ PAID FOR AS APPR. SLAB
JOINT SEAL (TYPE B-NR 1 1/2")	150	LF
BAR REINFORCING STEEL (BRIDGE)	404,560	LB
MISCELLANEOUS METAL (BRIDGE)	970	LB
MISCELLANEOUS METAL (RESTRAINER)	170	LB
CONCRETE BARRIER (TYPE 25)	1,150	LF
CRASH CUSHION, FRANGIBLE CARTRIDGE (NEXFOAM)	1	EA
FURNISH 18" CAST-IN-STEEL SHELL CONCRETE PILE	14,620	LF
DRIVE 18" CAST-IN-STEEL SHELL CONCRETE PILE	128	EA
FURNISH 14" STEEL PIPE PILING	2,455 ~~2,300~~	LF
DRIVE 14" STEEL PIPE PILE	22	EA

3

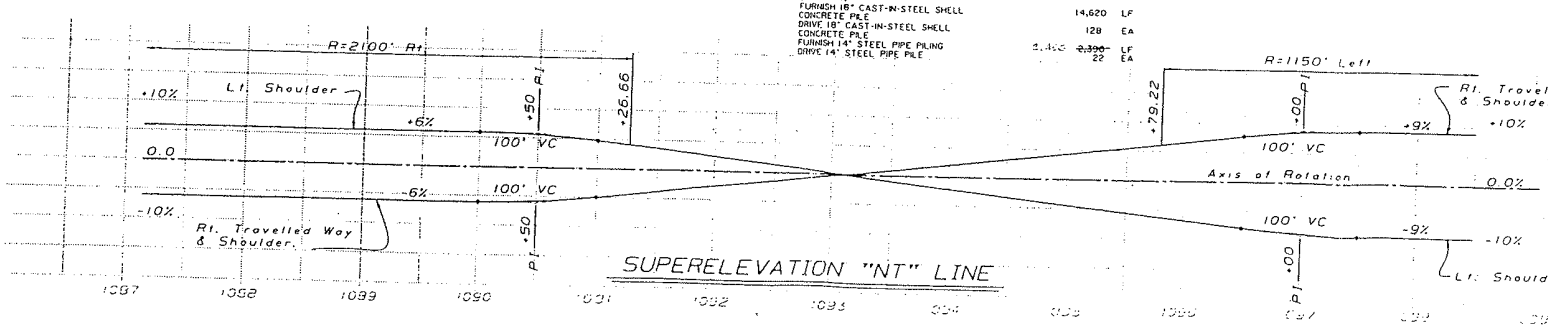

SUPERELEVATION "NT" LINE

AS BUILT

CORRECTIONS BY A.P. BIZZIGOTTI

CONTRACT NO. 11-030114

DATE 1-16-98

~~Feb~~ 3-8-99

3 REVISED PER ADDENDUM NO. 3 DATED NOVEMBER 22, 1994

DESIGN	Jeff Wiley	CHECKED	Brent Massey
DETAILS	Dave Radley 9-92	CHECKED	Brent Massey
QUANTITIES	Dave Tiberi	CHECKED	Julio Gomez

STATE OF CALIFORNIA
DEPARTMENT OF TRANSPORTATION

DIVISION OF STRUCTURES
STRUCTURE DESIGN 10

CU 11
EA 030111

BRIDGE NO. 57-0590G
POST MILE R32.72

CARMEL VALLEY CREEK BRIDGE CONNECTOR

DECK CONTOURS

DISREGARD PRINTS BEARING EARLIER REVISION DATES

ORIGINAL SCALE IN INCHES FOR REDUCED PLANS 0 1 2 3

DS 050 2139 (CADD 1/89)

DIST.	COUNTY	ROUTE	POST MILES TOTAL PROJECT	SHEET NO	TOTAL SHEETS
11	SD	S. 56	R31.6/R34.8, 0.0/1.0	715	741

REGISTERED ENGINEER - CIVIL

8-29-94
PLANS APPROVAL DATE

REGISTERED PROFESSIONAL ENGINEER — DON FLUHARTY — No. 10075 — Exp. 6-30-97 — CIVIL — STATE OF CALIFORNIA

HYDROLOGIC SUMMARY

DRAINAGE AREA: 15 square miles

	DESIGN FLOOD	BASE FLOOD
FREQUENCY (Years)		100
DISCHARGE (Cubic feet per second)		10,000
WATER SURFACE (Elevation of bridge)		17.6

Flood plain data are based upon information available when the plans were prepared and are shown to meet Federal requirements. The accuracy of said information is not warranted by the State and interested or affected parties should make their own investigation.

		NORTH	EAST
(A)	1084+95.90 BC ℄ "NT"	278593.243	1696467.900
(B)	1091+26.66 E.C ℄ "NT"	279217.436	1696396.087
(C)	1088+00.00 BC ℄ "NE"	278834.265	1696433.669
(D)	1095+61.37 PCC ℄ "NE"	279646.907	1696516.704
(E)	1089+39.86 POC ℄ "NT" 14+29.44 POT ℄ "CHN"	279090.639	1696395.399
(F)	1090+02.76 POC ℄ "NE" 14+63.54 POT ℄ "CHN"	279096.390	1696428.983
(G)	1090+50.00 "CV2" 66' Rt 1090+50.00 POC "SD"	279124.974	1696324.461

CURVE DATA

R - 2100' (NT Line)
Δ - 17°12'26
L - 630.678
T - 317.711
N 279142.662
E 1698494.753

R - 2100' (NE Line)
Δ - 20°46'23"
L - 761.372'
T - 384.912'
N 279044.075
E 1698328.319

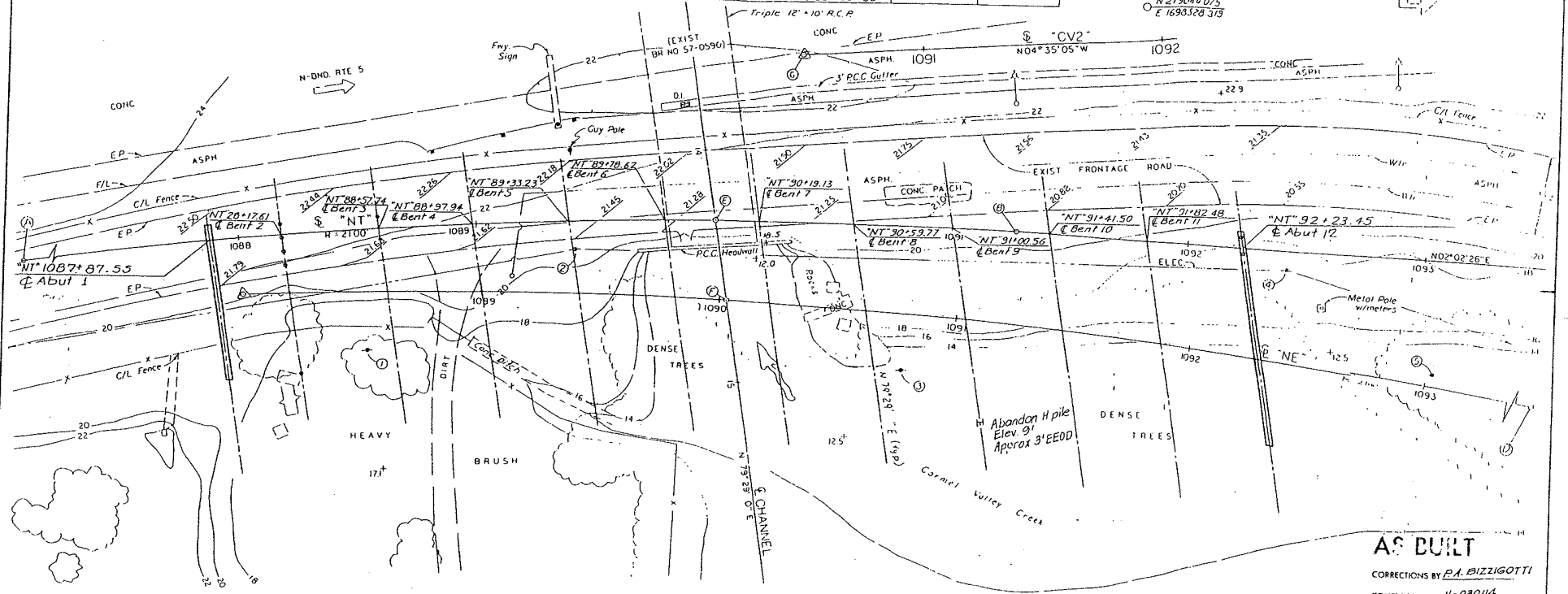

AS BUILT
CORRECTIONS BY P.A. BIZZIGOTTI
CONTRACT NO. 11-030114
DATE 1-15-98

BENCH MARKS

B.M # 5-56 NE — Elev 49.97'
Calif. Dept of Trans. brass disk in SW cor. of drainage inlet, 90'± Lt of Sta 1113+65± Carmel Valley Rd

B.M # 56-03L — Elev 38.96'
Calif. Dept of Trans brass disk on mid-pt of curb, NW corner of El Camino Real and Carmel Valley Rd.

NOTES

All piles not shown
Underground utilities as shown are approx
+ denotes spot elevation
denotes electrolier

UTILITIES

(7) PP (no #)
1 cable N-S @ Elev 43'±

(3) PP # 97354
4 wires N-S @ Elev 61'±

(J) PP (no #)
1 cable N-S @ Elev 28'±

(1) PP # 97355
4 wires N-S @ Elev 62'±
1 transformer @ Elev 60'±
1 cable 11E @ Elev 55'±

(4) PP (no #)
1 cable N-S @ Elev 28'±

3-8-99

PRELIMINARY INVESTIGATION SECTION											
SCALE 1" = 20'	DATUM NGS 1929	PHOTOGRAMMETRY AS OF		DRAWN	5.Ode 8-11-89	DESIGN	Jeff Wiley	CHECKED	Brent Massey		
		SURVEYED		TRACED		DETAILS	Dave Radley 9-92	CHECKED	Brent Massey		
ALIGNMENT TIES		FIELD CHG	H. Joe 8-89	CHECKED	H. Joe 12-89	QUANTITIES	Dave Tiberi	CHECKED	Julio Gomez		

STATE OF CALIFORNIA
DEPARTMENT OF TRANSPORTATION

DIVISION OF STRUCTURES
STRUCTURE DESIGN 10

CU 11
EA 030111

BRIDGE NO. 57-0590G
POST MILE R32.72

CARMEL VALLEY CREEK BRIDGE CONNECTOR
FOUNDATION PLAN

SHEET 3 OF 215

DS 960 2-95 (4/091)

ORIGINAL SCALE IN INCHES FOR REDUCED PLANS 0 1 2 3

DISREGARD POINTS DEPICTING EARLIER REVISION DATES

REVISION DATES (PRELIMINARY STAGE ONLY)

11	50	5.56	0.0/1.0	617	741

REGISTERED ENGINEER - CIVIL

REGISTERED PROFESSIONAL ENGINEER DON FUKUSHIMA No. 16075 Exp. 6-30-97 CIVIL STATE OF CALIFORNIA

8-29-94
PLANS APPROVAL DATE

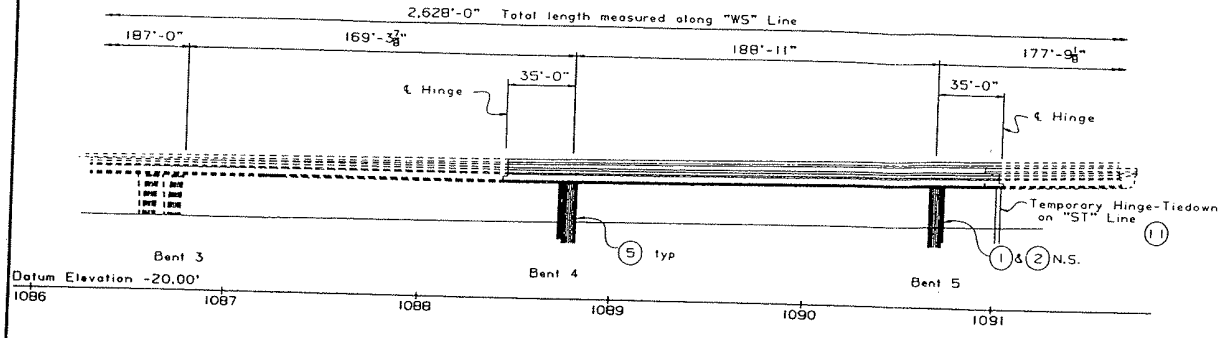

ELEVATION

SCALE: 1" = 30'

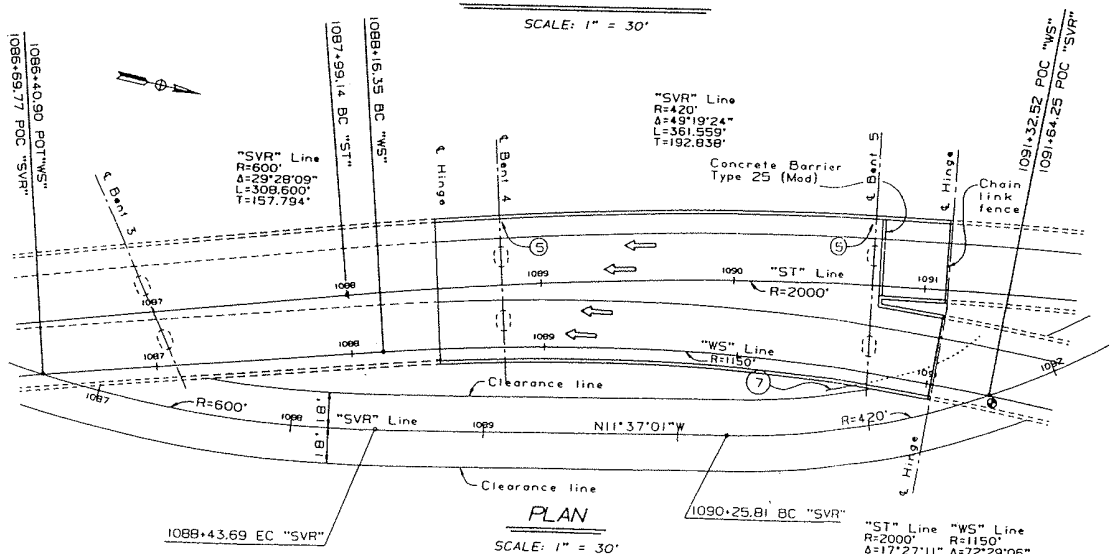

PLAN

SCALE: 1" = 30'

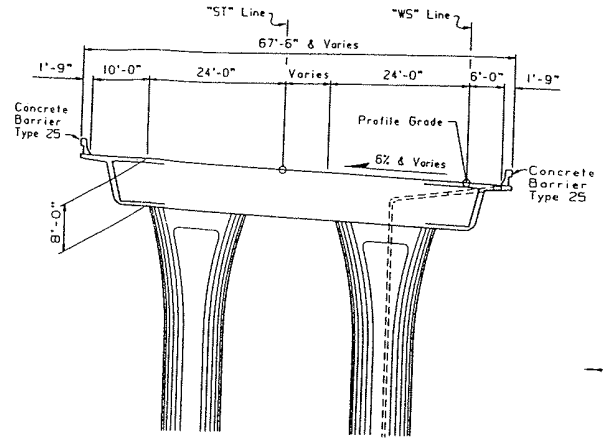

TYPICAL SECTION - SPANS 1 THRU 4

SHOWN AT STATION 1088+70.00

NO SCALE

For Legend see "STRUCTURE PLAN NO.1"

DESIGN	8* DTE/AMI	CHECKED	AJC
DETAILS	8* Don Fukushima 5-91	CHECKED	AJC
QUANTITIES	8* AJC	CHECKED	JMG/DW

STATE OF CALIFORNIA
DEPARTMENT OF TRANSPORTATION

DIVISION OF STRUCTURES
STRUCTURE DESIGN 10

BRIDGE NO. 57-0989F
POST MILE 31.8

CU 11
EA 030111

ROUTE 56/5 SEPARATION
STRUCTURE PLAN NO.2

DS 050 2-39 (CADD 4/89)

ORIGINAL SCALE IN INCHES FOR REDUCED PLANS 0 1 2 3

DISREGARD PRINTS BEARING EARLIER REVISION DATES

REVISION DATES (PRELIMINARY STAGE ONLY) 8-29-94 5-6-94 11-2-93 12-2-93 1-7-93 3-3-93 3-29-93 12-7-93 1-11-94

SHEET 4 OF 75

STATE OF CALIFORNIA - DEPARTMENT OF TRANSPORTATION - DIVISION OF STRUC

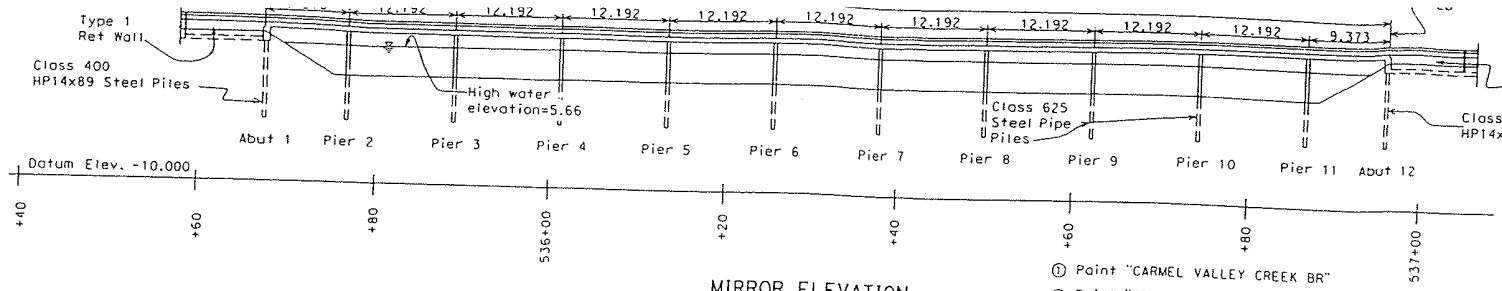

MIRROR ELEVATION

Date of Estimate	1-6-05-P6A
Structure Depth	0.533 M
Length	128.472 M
Width	1.589-2.373 M
Area	255.0 SQ M
Cost/SM including 10% Mobilization & 25% Contongencies	$ 3759
Total Cost	$ 959,000

① Paint "CARMEL VALLEY CREEK BR"
② Paint "BR. NO. 57-0590"
③ Approach Slab Type N(90)
④ Temp Rail (Type K) See " Road Plans"

LEGEND

- - - Denotes existing structure
—— Denotes new construction
▨ Bridge Removal (Portion)

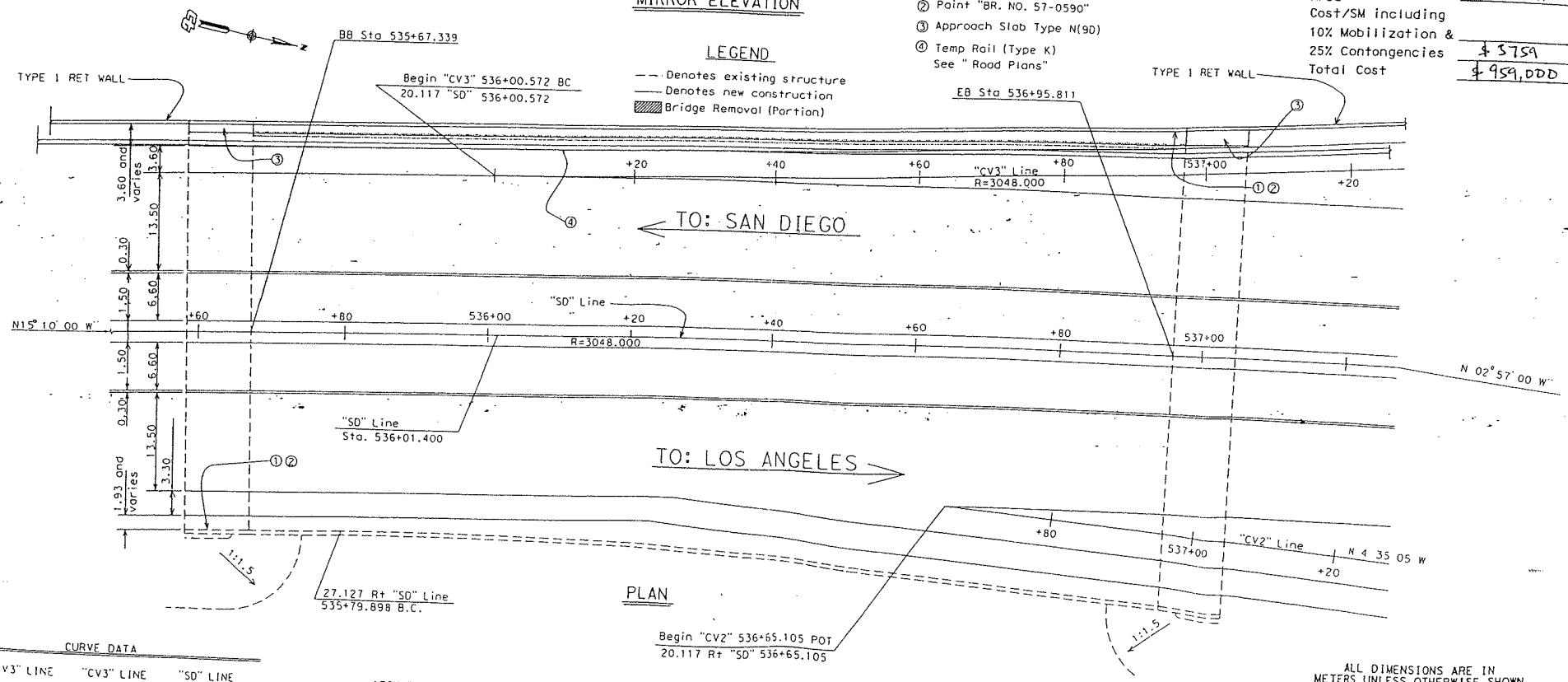

PLAN

CURVE DATA

"CV3" LINE	"CV3" LINE	"SD" LINE
R= 3048.000	R= 1303.02	R= 3048.000
Δ= 01° 43' 10"	Δ= 02° 14' 35"	Δ= 12° 13' 00"
L= 91.470	L= 649.897	L= 649.897
T= 45.744	T= 25.509	T= 326.185

ASSUMPTIONS:

1 Abutments: HP14x89 Driven Steel H Piles
2 Piers: Class 625 Closed Ended Steel Pipe Piles
3 9.00 m long Type 1 Ret Walls at abutments. Continuation by District

ALL DIMENSIONS ARE IN METERS UNLESS OTHERWISE SHOWN

DESIGNED BY GARY HIGHT	DATE Nov-2004	STRUCTURE DESIGN SECTION 18	PLANNING STUDY
DRAWN BY GARY HIGHT	DATE Nov-2004		CARMEL VALLEY CREEK (WIDEN)
CHECKED BY	DATE		BRIDGE NO. 57-0590 / CU 11
APPROVED	DATE		SCALE: No Scale / EA 235800

FILE => Carmel Valley Creek.dgn

STRUCTURES DESIGN ADVANCE PLANNING STUDY SHEET (METRIC) (REV. 8/2/04)

USERNAME => gnight DATE PLOTTED => 09-DEC-2004 TIME PLOTTED => 10:43

STATE OF CALIFORNIA - DEPARTMENT OF TRANSPORTATION - DIVISION OF STRUCTURES

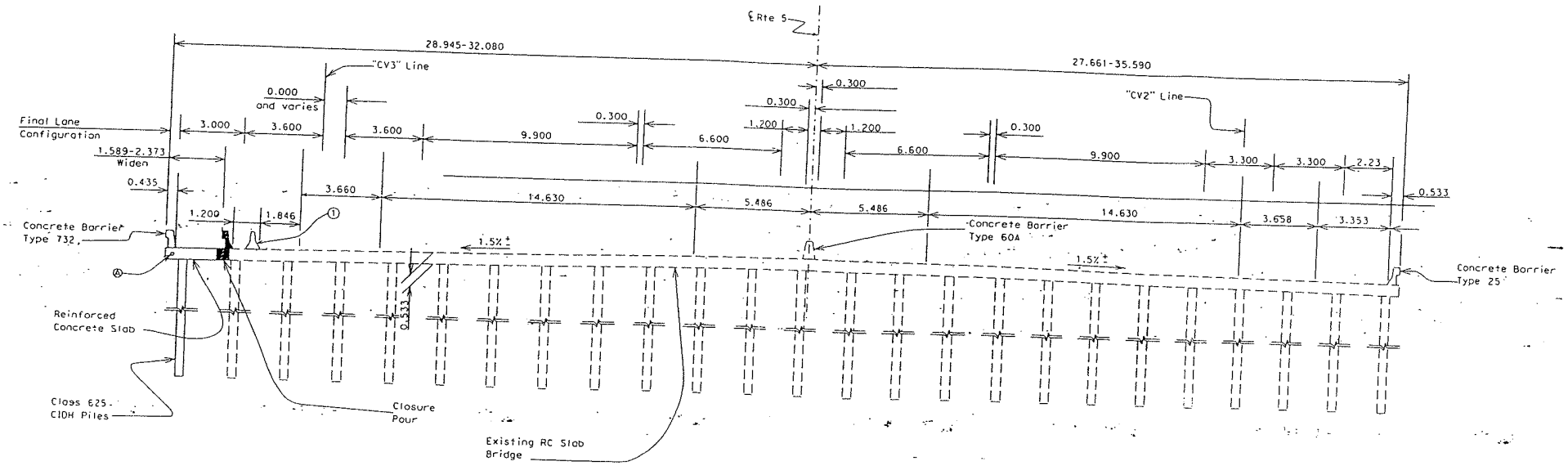

TYPICAL SECTION

UTILITIES

Ⓐ 152 mm Water Supply Line

NOTES:

① Temp Rail (Type K)
See " Road Plans"

LEGEND

- - - Denotes existing structure
—— Denotes new construction
▨ Bridge Removal (Portion)

ALL DIMENSIONS ARE IN METERS UNLESS OTHERWISE SHOWN

DESIGNED BY GARY HIGHT	DATE NOV-04	STRUCTURE DESIGN SECTION 18	PLANNING STUDY
DRAWN BY GARY HIGHT	DATE NOV-04		CARMEL VALLEY CREEK (WIDEN)
CHECKED BY	DATE		BRIDGE NO. 57-0590 / CU 11
APPROVED	DATE		SCALE: No Scale / EA 235800

FILE => Carmel Valley Creek.dgn

STRUCTURES DESIGN ADVANCE PLANNING STUDY SHEET (METRIC) (REV. 8/2/94)

USERNAME => ghight DATE PLOTTED => 08-DEC-2004 TIME PLOTTED => 10:43

I-5 North Coast Widening Floodplain Studies
Caltrans
DE Project 1683

RECORD OF CONVERSATION

DATE: 09/21/07 **TIME:** 8:30 AM **DE FILE No.** 1683-300

RECORDED BY: Glen Parker

SPOKE WITH: Ray Martinez

TELEPHONE No. 703-317-6251

NATURE OF CALL: ☐ Incoming ☒ Outgoing ☐ Meeting

DISTRIBUTION: Ray Martinez (Michael Baker), Glen Parker (Dokken Engineering), Tim Brownson (Caltrans), Wen Cheng (Michael Baker), Mike Skowronek (Michael Baker)

SUBJECT OF CONVERSATION: Acceptable FEMA floodplain modeling procedures

ITEMS DISCUSSED:

Available Backup Data to generate previously approved floodplain models: Glen explained that a formal request has been submitted for backup floodplain information for lagoons and creeks along I-5 with Zone AE floodplains between San Diego and Oceanside. In some cases the HEC-2 data provided by Michael Baker Corporation was limited and did not have enough information to recreate previously generated floodplain models with reasonable accuracy. Glen said in these cases, Dokken Engineering would prefer to create HEC-RAS models which tie in with FEMA cross sections to use as a basis for existing conditions. Ray said Dokken Engineering must use their expertise to decide whether the existing FEMA data can be reused and to document efforts in a Technical Studies Data Notebook (TSDN). There have been past situations which required an existing model to be recreated and it is acceptable to FEMA as long as the appropriate documentation supports the procedure. Glen agreed to document the scenarios where existing models could not be used with accuracy.

Coordination with FEMA and Caltrans: Glen said that Caltrans is in the planning phase for the I-5 North Coast Widening, which will widen I-5 from San Diego to Oceanside. At this point in time, a preferred alternative has not been identified and therefore no coordination has occurred between Caltrans and FEMA to begin processing LOMRs. Glen said the final design of this project would likely occur in different phases several years in the future. It would be beneficial to coordinate with FEMA when needed during the process. Glen asked who the appropriate FEMA contacts may be to continue coordination when needed throughout the process. Ray said to coordinate with Wen Chen and Michael Skowronek, who work at the RMC for FEMA Region IX and can act as Outreach Coordinators on behalf of FEMA, when appropriate depending on the development of the project.