# Bikeway Typical Sections

## The following improvement options are being studied

### Class I Bikeway Typical Sections

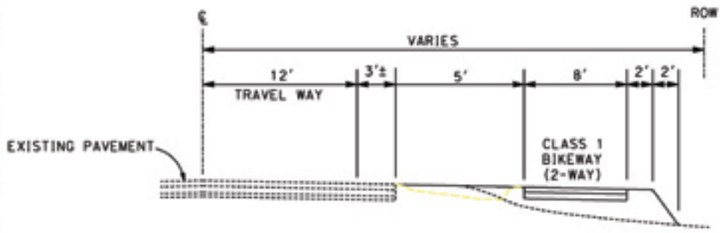


Class I Bikeway (Detached)
Hum 255 with wide Right of Way

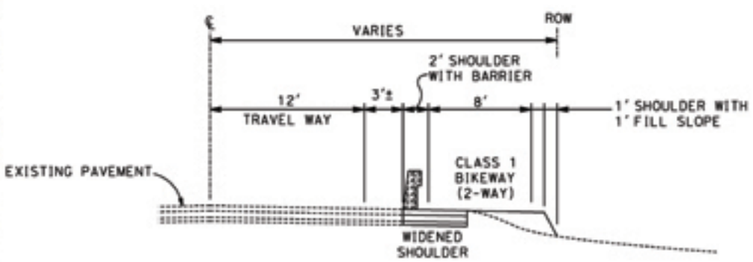


Class I Bikeway (Attached)
Hum 255 with narrow Right of Way

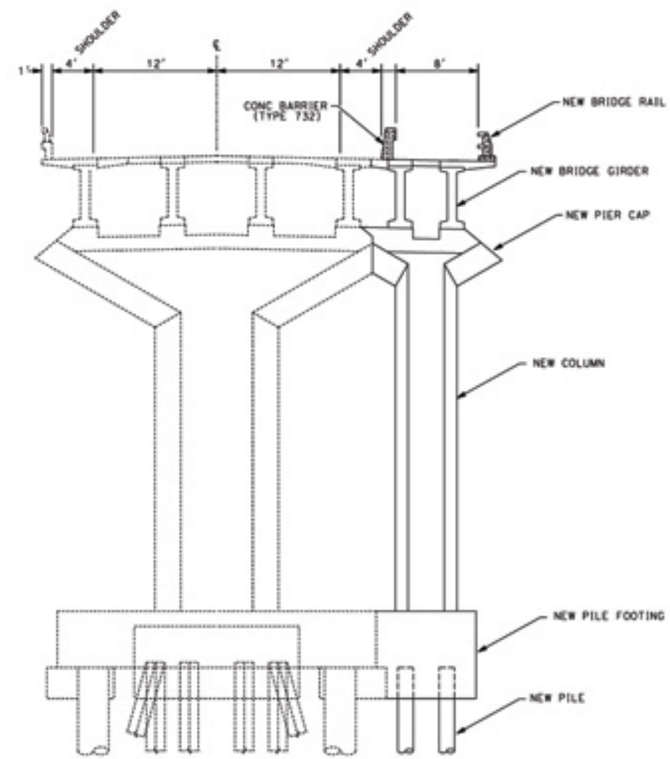


Class I Bikeway
Humboldt Bay Bridges

### Class II, III Bikeway Typical Sections

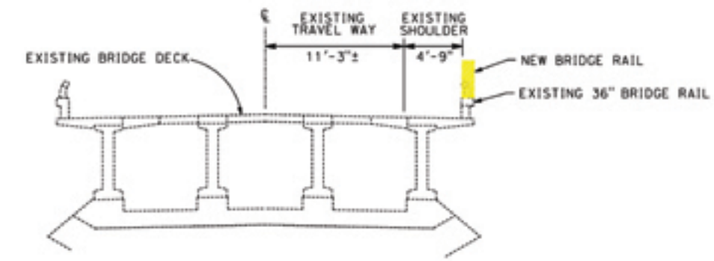


Class II Bikeway (Sign/Stripping)
Class III Bikeway (Signing Only)
Humboldt Bay Bridges

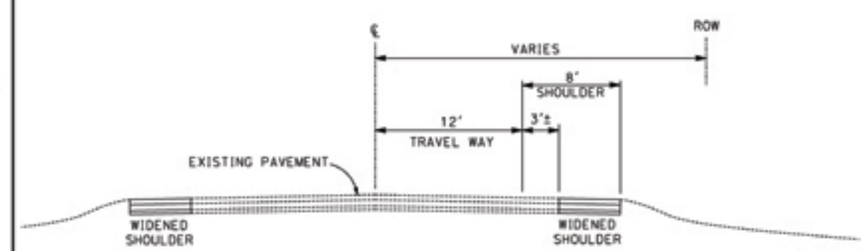


Class II Bikeway (Sign/Stripping)
Class III Bikeway (Signing Only)
Hum 255

*A Caltrans Feasibility Study*

Hum - 255