GUIDE SPECIFICATIONS FOR SEISMIC DESIGN OF STEEL BRIDGES

First Edition

State of California
Department of Transportation

December 2001

PREFACE

Seismic bridge design has been evolving based on research findings and lessons learned from past earthquakes. Since the 1994 Northridge earthquake, Caltrans has been shifting toward a displacement-based design approach emphasizing capacity design. In July 1999, Caltrans published a performance-based single comprehensive document, the Caltrans Seismic Design Criteria, Version 1.1, which focused mainly on typical new concrete bridges. In September 1999, a Structural Steel Committee Task Group was formed to develop the seismic design criteria for steel bridges.

The provisions presented in the *Guide Specifications for Seismic Design of Steel Bridges* (*Guide*) are based on past successful experiences, various codes and specifications, state-of-the-art research and knowledge. The *Guide* has passed through five successive drafts and critical reviews since January 2000. It has been developed as a consensus document to provide a uniform guideline for the seismic design of the steel bridges. The *Guide* is supplemental to the current Caltrans SDC (Version 1.2 December 2001) and shall be applied in conjunction with the current Caltrans Bridge Design Specifications (LFD Version April 2000).

The *Guide* is presented in a side-by-side column format with the specification text placed in the left column and the corresponding commentary text printed in the right column. The *Guide* consists of seven chapters and six appendices. The Commentary and Appendices to this *Guide* are integral parts of the *Guide*. They are prepared to provide background information concerning the development of the *Guide*.

The development of the first edition of the *Guide* was a joint team effort product of the Structural Steel Committee, the Earthquake Engineering Committee, and included many people who gave unselfishly of their time and talent. This effort is gratefully acknowledged. Following is recognition of those individuals who have been instrumental in producing this document.

Task Group - Substantial Contribution:
Lian Duan, Steve Altman, Martin Pohll and Kevin Harper.

Internal Comment and Review:
Mohamed Akkari, Jess Avila, Allan Chow, Al Christensen, Joe Downing, Mahmoud Fustok, Susan Hida, Mike Keever, Mark Mahan, Tom Ostrom, Shannon Post, Li-Hong Shen, Eugene Thimmhardy and Cheefong Yang.

External Comment and Review:
Michel Bruneau, State University of New York at Buffalo; Ahmad Itani, University of Nevada at Reno; M. Myint Lwin, Federal Highway Administration; Mark Reno, Quincy Engineering; Chuck Seim, TY Lin International; Shawn Sun, California Department of General Services; Shouji Toma, Hokkai-Gakuen University, Japan; and Chia-Ming Uang, University of California at San Diego.

Figures and Drawings: Fangfei Chen

for

Richard Land, Deputy Division Chief
Structure Design, Division of Engineering Services

TABLE OF CONTENTS

PREFACE i
DEFINITIONS iv
NOTATION vii

1. INTRODUCTION 1
1.1. Scope 1
1.2. Referenced Specifications and Standards 1
1.3. Bridge Categories 2
1.4. Seismic Performance Criteria 2

2. **GENERAL PROVISIONS** 3
2.1. Loads and Load Combination 3
2.2. Seismic Design Acceptance Criteria 3
2.2.1. Structural Component Classification 3
2.2.2. Damage Levels, Strain and Ductility in Structural Steel 6
2.2.3. Displacements 8
2.2.4. Forces 8

3. STRUCTURAL ANALYSIS 9
3.1. Analysis Methods 9
3.1.1. General 9
3.1.2. Moment-Curvature Analysis 11
3.2. Structural Modeling 12
3.2.1. General 12
3.2.2. Materials 13
3.2.3. Geometry 13
3.2.4. Effective Section Properties 15

4. DESIGN REQUIREMENTS 16
4.1. Proportions 16
4.2. Materials 17
4.3. Effective Net Sections 18
4.4. Effective Length of Compression Members 18
4.5. Limiting Width-Thickness Ratios 19
4.6. Limiting Slenderness Parameters 19
4.7. Built-up Members 23
4.8. Shear Connectors 24
4.9. Restraining Components 26
4.10. Welding 28

5. DUCTILE SEISMIC RESISTING SYSTEMS 29
5.1. Ductile Substructure Systems 29
5.1.1. Moment Resisting Frames 29
5.1.2. Concentrically Braced Frames 32
5.1.3. Eccentrically Braced Frames 34
5.2. Ductile End Cross Frames and Diaphragms 37
5.2.1. General 37
5.2.2. Effective Column Area 38
5.2.3. Boundary Conditions of Effective Columns 38
5.3. Integral Connection Systems 39
5.3.1. General 39
5.3.2. Steel Girder Superstructures 39
5.3.3. Concrete Columns 40
5.3.4. Concrete Bent Cap Beams 40
5.3.5. Concrete End Diaphragms at Abutments 41

6. DUCTILE COMPONENTS 42
6.1. General 42
6.2. Tension Members 42
6.3. Compression Members 42
6.4. Flexural Members 43
6.5. Members Subjected to Combined Flexure and Axial Force 43

7. CAPACITY-PROTECTED COMPONENTS 44
7.1. General 44
7.2. Tension Members 44
7.3. Compression Members 44
7.4. Flexural Members 45
7.5. Members Subjected to Combined Flexure and Axial Force 45
7.6. Connections and Splices 45
7.6.1. General 45
7.6.2. Bracing Connections 46
7.6.3. Beam-to-Column Connections 47
7.6.4. Gusset Plate Connections 48
7.7. Fasteners and Holes 54
7.8. Anchor Rods and Anchorage Assemblies 54

APPENDICES
A. STRESS-STRAIN RELATIONSHIPS FOR STRUCTURAL STEEL 56
B. EFFECTIVE SECTION PROPERTIES 58
C. YIELD SURFACE EQUATIONS FOR DOUBLY SYMMETRICAL STEEL SECTIONS 63
D. DESIGN FORMULAS (U.S. UNITS) 65
E. LATERAL STIFFNESS OF GIRDER BRIDGES IN TRANSVERSE DIRECTION 67
F. REFERENCES 71

DEFINITIONS

The following definitions are supplemental to the definitions given in the Caltrans Seismic Design Criteria Version 1.2 (Caltrans 2001) and the Caltrans Bridge Design Specifications (Caltrans 2000).

Block Shear Rupture – A failure phenomenon or limit state for a bolted web connection of coped beams or any tension connection by the tearing out of a portion of a plate along the centerlines of the bolt holes. The block shear rupture strength combines tensile strength on one plane and shear strength on a perpendicular plane.

Bracing Member - A member intended to brace a main member or part thereof against lateral movement.

Capacity-Protected Component - A component expected to experience minimum damage and to behave essentially elastic during the design earthquakes.

Connections - A combination of joints used to transmit forces between two or more members.

Concentrically Braced Frame (CBF) - A diagonally braced frame in which all members of the bracing system are subjected primarily to axial forces.

Design Earthquake – Earthquake loads represented by Acceleration Response Spectrum (ARS) curves specified in Caltrans *SDC* or site-specific ARS curves.

Design Strength - Resistance (axial/shear force, moment, as appropriate) provided by structural components, the product of the nominal strength and the resistance factor.

Displacement Ductility - Ratio of ultimate-to-yield displacement.

Ductile Component – A component expected to experience repairable damage during the *FEE* and significant damage but without failure during the *SEE*.

Ductility - Ratio of ultimate-to-yield deformation.

Eccentrically Braced Frame (EBF) - A diagonally braced frame that has at least one end of each bracing member connected to a link.

Expected Nominal Strength - Nominal strength of a component based on its expected yield strength.

Functional Evaluation Earthquake (FEE) - A lower level design earthquake that has relatively small magnitude but may occur several times during the life of the bridge. It may be assessed either deterministically or probabilistically. The determination of this event is to be reviewed by a Caltrans-approved consensus group.

Joint – An area where member ends, surfaces, or edges are attached by plates, fasteners and welds.

Link - In *EBF*, the segment of a beam that is located between the ends of two diagonal braces or between the end of a diagonal brace and a column. Under lateral loading, the link deforms plastically in shear thereby absorbing energy. The length of the link is defined as the clear distance between the ends of two diagonal braces or between the diagonal brace and the column face.

Maximum Credible Earthquake (MCE) - The largest earthquake that is capable of occurring along an earthquake fault, based on current geologic information as defined by the 1996 Caltrans Seismic Hazard Map.

Moment Resisting Frame (MRF) - A frame system in which seismic forces are resisted by shear and flexure in members, and connections in the frame.

Nominal Strength – The capacity of a component to resist the effects of loads, as determined by computations using specified material strength, dimensions and formulas derived form acceptable principles of structural mechanics or by field tests or laboratory test of scaled models, allowing for modeling effects, and differences between laboratory and field conditions.

Overstrength Capacity - The maximum possible strength capacity of a ductile component considering actual strength variation between the component and adjacent components. It is estimated by an overstrength factor of 1.2 times expected nominal strength.

Panel Zone - The web area of the beam-to-column connection delineated by the extension of column and beam flanges.

Rotation Ductility - Ratio of ultimate-to-yield rotation.

Safety Evaluation Earthquake (SEE) - An upper level design earthquake that has only a small probability of occurring during the life of the bridge. It may be assessed either deterministically or probabilistically. The deterministic assessment corresponds to the Maximum Credible Earthquake (MCE). The probabilistically assessed earthquake typically has a long return period (approximately 1000-2000 years).

Splice – The connection between two structural elements jointed at their end to form a single, longer element.

Ultimate Displacement - The lateral displacement of a component or a frame corresponding to the expected damage level, not to exceed the displacement when the lateral resistance degrades to a minimum of 80 percent of the peak resistance.

Ultimate Rotation - The rotation corresponding to the expected damage level at which strain in the extreme fiber reaches its strain limit, not to exceed the rotation when the moment resistance degrades to a minimum of 80 percent of the peak moment resistance.

Upper Bound Solution – A solution calculated on the basis of an assumed mechanism which is always at best equal to or greater than the true ultimate load.

Yield Rotation - The rotation at the onset of yielding in the extreme tension fiber.

Yield Displacement - The lateral displacement of a component or a frame at the onset of forming the first plastic hinge.

NOTATION

Numbers in parentheses after the definition of a symbol refer to the Article where the symbol first appears or is used.

a = distance between two battens along the member axis (mm) (Appendix B)

a = length of the beam outside of a link (mm) (Appendix E)

A_b = cross-sectional area of a batten plate (mm^2) (Appendix B)

A_b = cross-sectional area of each brace (mm^2) (Appendix E)

A_{close} = area enclosed within the mean dimension for a box-shaped section (mm^2) (Appendix B)

A_d = cross-sectional area of all diagonal lacings in one panel (mm^2) (Appendix B)

A_e = effective net section area (mm^2) (Article 4.3)

A_{equiv} = cross-sectional area of a thin-walled plate equivalent to lacing bars considering shear transferring capacity (mm^2) (Appendix B)

A^*_{equiv} = cross-sectional area of a thin-walled plate equivalent to lacing bars or battens assuming full section integrity (mm^2) (Appendix B)

A_f = flange area to which battens or laces are attached (mm^2) (Appendix B)

A_g = web gross area of a rectangular tube or cross-sectional area of a pipe (mm^2) (Article 4.9)

A_g = gross cross-sectional area (mm^2) (Article 7.6.4.3)

A_g = area of a stiffened girder (mm^2) (Appendix E)

A_i = cross-sectional area of an individual main component i (mm^2) (Appendix B)

A_l = cross-sectional area of shear links (mm2) (Appendix E)

A_n = net section area (mm^2) (Article 4.3)

A_r = cross-sectional area of a fastener (mm^2) (Appendix B)

$A_{s,l}$ = shear area of a shear link (mm^2) (Appendix E)

A_{tg} = gross area resisting tension (mm^2) (Article 7.6.4.3)

A_{tn} = net area resisting tension (mm^2) (Article 7.6.4.3)

A_{vg} = gross area resisting shear (mm^2) (Article 7.6.4.3)

A_{vn} = net area resisting shear (mm^2) (Article 7.6.4.3)

A^*_i = cross-sectional area above or below the plastic neutral axis (mm^2) (Appendix B)

A_1 = bearing area of a steel pipe in concrete (mm^2) (C4.9)

A_2 = confinement concrete area equal to the embedment length of a steel pipe times the concrete edge width bound by two 45° lines drawn from the outside diameter of the pipe to the edge of concrete element (mm^2) (C4.9)

b = width of a gusset plate perpendicular to the edge (mm) (Article 7.6.4.2)

b_f = beam flange width (mm) (Article 5.1.2)

b_i = length of the particular segment of a section (mm) (Appendix B)

C_s = seismic coefficient from the design response spectrum curve (C3.2.3)

d_g = overall girder depth (mm) (Article 7.6.3)

d_z = panel zone depth between continuity plates (mm) (Article 7.6.3)

D = outside diameter of a steel pipe (mm) (Table 4.5)

e = link length (mm) (C5.1.3)

E = modulus of elasticity of steel (200,000 MPa) (Table 4.6)

E_s = modulus of elasticity of steel (MPa) (Appendix A)

f_s = stress in steel (MPa) (Appendix A)

f_y = yield stress of steel (MPa) (Appendix A)

f_{sb} = rupture stress of steel (MPa) (Appendix A)

f_{su} = maximum stress of steel (MPa) (Appendix A)

f'_c = specified compressive strength of concrete at 28 days (MPa) (C4.9)

F_u = specified minimum tensile strength of steel (MPa) (Article 7.6.4.3)

F_y = specified minimum yield strength of steel (MPa) (Article 4.2)

F_{ye} = expected yield strength of steel (MPa) (Article 4.2)

F_{yf} = specified minimum yield strength of a flange component (MPa) (Appendix B)

F_{yw} = specified minimum yield strength of a web component (battens or lacing bars) (MPa) (Appendix B)

F_C = nominal strength (axial/shear force, moment, as appropriate) of a capacity-protected component determined in accordance with Article 7 (Article 2.2.4)

F_D = force demand (axial/shear force, moment, as appropriate) on a capacity-protected component determined by the joint equilibrium of overstrength capacities of adjacent ductile components or elastic seismic forces if there is no yielding in ductile members (Article 2.2.4)

h = frame height (mm) (C5.1.3)

h = depth of a member in the lacing plane (mm) (Appendix B)

h = height of a girder bridge = $h_{sup} + h_{sup} + h_{sub}$ (mm) (Appendix E)

h_{bear} = height of a bearing (mm) (Appendix E)

h_{sg} = height of a steel girder (mm) (Appendix E)

h_{sub} = height of the substructure (mm) (Appendix E)

h_{sup} = height of the girder superstructure measured from the bottom of the girder flange to central gravity of the concrete deck (mm) (Appendix E)

H = height of the pier from the point of fixity for the foundation (mm) (C3.2.3)

H = height of a stiffened girder (mm) (Appendix E)

I_b = moment of inertia of a batten plate (mm^4) (Appendix B)

I_i = moment of inertia of a main individual component i (mm^4) (Appendix B)

I_l = moment of inertia of shear links (mm^4) (Appendix E)

$I_{y\text{-}y}$ = moment of inertia of a section about y-y axis considering shear transferring capacity (mm^4) (Appendix B)

I_s = moment of inertia of a stiffener about its strong axis (mm^4) (Article 7.6.4.2)

I_{sg} = moment of inertia of a stiffened girder in the bearing location (mainly due to bearing stiffeners) in the lateral direction (mm^4) (Appendix E)

K = effective length factor of a member (Article 4.4)

K_{bear} = lateral stiffness of bearings at bent (kN/mm) (Appendix E)

K_{endf} = lateral stiffness of an end cross frame/diaphragm (kN/mm) (Appendix E)

K_{trans} = lateral stiffness of a girder bridge bent in the transverse direction (kN/mm) (Appendix E)

K_{sg} = lateral stiffness of a steel girder (kN/mm) (Appendix E)

K_{sub} = lateral stiffness of the substructure at a bent (N/mm) (Appendix E)

K_{sup} = lateral stiffness of the superstructure at a bent (kN/mm) (Appendix E)

l_d = embedment length of a steel pipe (mm) (C4.9)

l_b = length of each brace (mm) (Appendix E)

L = unsupported length of a member (mm) (Article 4.4)

L_g = unsupported length of a gusset plate (mm) (Article 7.6.4.2)

L_s = girder spacing (mm) (Appendix E)

L_1 = distance from the centerline of the Whitmore section to the interior corner of a gusset (mm) (C7.6.4.4)

L_2, L_3 = distance from the outside corner of the Whitmore section to the edge of a member; negative value shall be used when the part of Whitmore section enters into the member (mm) (C7.6.4.4)

m = number of panels between the point of maximum calculated moment to the point of zero moment to either side (as an approximation, the number of panels in half of the main member length (L/2) may be used) (Appendix B)

m = sum of the superstructure mass and a half of substructure mass in the tributary area (kg) (Appendix E)

m_b = number of batten planes (Appendix B)

m_l = number of lacing planes (Appendix B)

M = flexural moment due to seismic and permanent loads (N-mm) (Article 7.6.4.7)

M_n = nominal flexural moment strength (N-mm) (Article 7.6.4.5)

M_{oc} = overstrength moment of a ductile column = $1.2M_{pc}$ (N-mm) (Article 5.1.1)

M^*_{oc} = overstrength flexural moment in the column at the beam centerlines = $[M_{oc}+M_v]$ (N-mm) (Article 5.1.1)

M_o^{col} = overstrength plastic moment of a concrete column (N-mm) (Article 5.3.2)

$M_{p\text{-}b}$ = plastic moment of a batten plate about the strong axis (N-mm) (Appendix B)

M_p^{col} = idealized plastic moment capacity of a column calculated by moment-curvature analysis (N-mm) (C3.2.3)

M^*_{pb} = expected design flexural strengths of the beam at the intersection of the beam and the column centerline (N-mm) (Article 5.1.1)

M_{pc} = expected plastic moment capacity (N-mm) estimated by yield surface equations in Appendix C based on the expected yield strength F_{ye}, or approximated as $Z_c(F_{ye}–P/A_g)$ (Article 5.1.1)

M_v = additional moment due to the shear amplification from the actual location of the column plastic hinge to the beam centerline (N-mm) (Article 5.1.1)

$\sum M^*_{pb}$ = sum of the nominal flexural strength of the beam(s) at the intersection of the beam and the column centerlines (N-mm) (Article 5.1.1)

$\sum M^*_{oc}$ = sum of overstrength flexural moments in the column(s) above and below the joint at the intersection of the beam and column centerlines (N-mm) (Article 5.1.1)

n_r = number of fasteners of the connecting lacing bar or battens to the main component at one connection (Appendix B)

P = axial force due to seismic and permanent loads (N) (Article 5.1.1)

P_{dl} = axial dead load (N) (C3.2.3)

P_n = nominal axial strength of a member (N) (Article 5.1.2)

P_y = yield axial strength (A_gF_y) (N) (Article 5.1.2)

P_n^{comp} = nominal compressive strength of a lacing bar, can be determined by AISC-LRFD (1999) column curve (N) (Appendix B)

P_n^{ten} = nominal tensile strength of a lacing bar, can be determined by AISC-LRFD (1999) (N) (Appendix B)

R = ratio between the elastic force and the lateral strength of the pier or bent (C3.2.3)

R_n = nominal shear strength of a HSS shear key (MN) (Article 4.9)

R_y = overstrengh factor for steel (Article 4.2)

r = radius of gyration (mm) (Article 4.4)

r_y = radius of gyration about the minor axis (mm) (Table 4.6)

t = plate thickness (mm) (Table 4.5)

t_{equiv} = thickness of equivalent thin-walled plate (mm) (Appendix B)

t_f = beam flange thickness (mm) (Article 5.1.2)

t_i = average thickness of a segment b_i (mm) (Appendix B)

t_p = total thickness of the panel zone including doubler plates (mm) (Article 7.6.3)

t_w = thickness of a web plate (mm) (Table 4.5)

T = period of vibration (second) (C3.2.3)

T^* = $1.25T_s$ and T_s is period at the end of constant design spectral acceleration (second) (C3.2.3)

V = shear force due to seismic and permanent loads (N) (Article 7.6.4.7)

V_n = nominal shear strength (N) (Article 7.6.3)

w_z = panel zone width between girder flanges (mm) (Article 7.6.3)

x_i = distance between *y-y* axis and the centroid of the main individual component *i* (mm) (Appendix B)

x_i^* = distance between the center of gravity of a section A_i^* and plastic neutral *y-y* axis *(mm)* (Appendix B)

y_i^* = distance between center of gravity of a section A_i^* and the plastic neutral *x-x* axis *(mm)* (Appendix B)

Z = plastic section modulus about the strong axis of the cross section of a gusset plate (mm^3) (Article 7.6.4.5)

Z_c = plastic section modulus of a column (mm^3) (Article 5.1.1)

$Z_{x\text{-}x}$ = plastic section modulus of a section about the plastic *x-x* neutral axis (mm^3) (Appendix B)

$Z_{y\text{-}y}$ = plastic section modulus of a section about the plastic *y-y* neutral axis (mm^3) (Appendix B)

α = brace's angle with the horizontal direction (Appendix E)

α_{fix} = fixity factor, equal to 12 if full fixity is provided at both flanges of a steel girder; 3 if one end is fully fixed and other one pinned; and 0 if both ends are pinned (Appendix E)

β_m = reduction factor for the moment of inertia (Appendix B)

β_t = reduction factor for the torsion constant (Appendix B)

ϕ = resistance factor (Article 7.1)

ϕ = angle between a diagonal lacing bar and the axis perpendicular to the member axis (Appendix B)

ϕ_{bs} = resistance factor for block shear rupture (Article 7.1)

ϕ_f = resistance factor for fracture in the net section (Article 7.1)

ε_s = strain in steel (Appendix A)

ε_{sh} = strain at the onset of strain hardening of steel (Article 2.2.2)

ε_{su} = strain corresponding to the maximum stress of steel (Appendix A)

ε_{sb} = rupture strain of steel (Appendix A)

ε_y = yield strain of steel (Article 2.2.2)

λ_b = slenderness parameter for flexural members (Article 4.6)

λ_{bp} = limiting slenderness parameter for flexural members (Article 4.6)

λ_c = slenderness parameter for compression members (Article 4.6)

λ_{cp} = limiting slenderness parameter for compression members (Article 4.6)

λ_p = limiting width-thickness ratio of a compression element for ductile components (Article 4.5)

λ_r = limiting width-thickness ratio of a compression element for capacity-protected components (Article 4.5)

μ_Δ = displacement ductility, ratio of ultimate-to-yield displacement (Δ_u/Δ_y) (Article 2.2.2)

μ_θ = rotation ductility, ratio of ultimate-to-yield rotation (θ_u/θ_y) (Article 2.2.2)

θ_y = yield rotation which is the rotation at the onset of yielding in the extreme tension fiber (Article 2.2.2)

θ_p = plastic rotation angle (C5.1.3)

θ_u = ultimate rotation capacity which is the rotation corresponding to the expected damage level at which strain in the extreme fiber reaches its strain limit as specified in Table 2.2.2, not to exceed the rotation when the moment resistance degrades to a minimum of 80 percent of the peak moment resistance (Article 2.2.2)

γ_p = link plastic rotation angle (C5.1.3)

Δ_e = displacement demand from the seismic analysis (mm) (C3.2.3)

Δ_p = plastic frame displacement (mm) (C5.1.3)

Δ_r = relative lateral offset between the point of contra-flexure and the base of the plastic hinge (mm) (C3.2.3)

Δ_u = ultimate lateral displacement capacity which is the lateral displacement of a component or a frame corresponding to the expected damage level limit as specified in Table 2.2.2, not to exceed the displacement when the lateral resistance degrades to a minimum of 80 percent of the peak resistance (mm) (Article 2.2.2)

Δ_y = yield displacement which is the lateral displacement of a component or a frame at the onset of forming the first plastic hinge (mm) (Article 2.2.2)

Δ_C = displacement capacity determined by using a static push over analysis in which both material and geometric non-linearities are considered (mm) (Article 2.2.3)

Δ_D = displacement demand determined by one of the analysis methods specified in Article 3.1 (mm) (Article 2.2.3)

SPECIFICATIONS

COMMENTARY

1. INTRODUCTION

1.1 Scope

The Guide Specifications for Seismic Design of Steel Bridges (*Guide*) is intended for the seismic design of steel bridges. The *Guide* is supplemental to the Caltrans Seismic Design Criteria Version 1.2 (Caltrans 2001), hereafter referred to as the SDC. These provisions shall be applied in conjunction with the Caltrans Bridge Design Specifications (Caltrans 2000a), hereafter referred to as the BDS.

1.2 Referenced Specifications and Standards

The following documents are referenced in the *Guide*:

AASHTO (1998). *LRFD Bridge Design Specifications*, 2nd Edition with 1999, 2000 and 2001 Interims.

ACI (1999). *Building Code Requirements for Structural Concrete* (ACI 318-99) *and Commentary* (ACI 318R-99).

AISC (1999a). *Load and Resistance Factor Design for Structural Steel Buildings*, 3rd Edition.

AISC (1997). *Seismic Provisions for Structural Steel Buildings with Supplements No. 1* (1999b) *and No. 2* (2000).

Caltrans (2000a). *Bridge Design Specifications*.

Caltrans (2001). *Seismic Design Criteria*, Version 1.2.

SPECIFICATIONS | COMMENTARY

Caltrans (1995a). *Bridge Memo to Designers Manual*.

Caltrans (1995b). *Bridge Design Aids Manual*.

1.3 Bridge Categories

All steel bridges shall be categorized as either Important or Ordinary in accordance with the Bridge Memo to Designer (MTD) 20-1 (Caltrans 1999).

1.4 Seismic Performance Criteria

All steel bridges shall be designed to meet the Seismic Performance Criteria specified in the MTD 20-1.

SPECIFICATIONS

COMMENTARY

2. GENERAL PROVISIONS

2.1 Loads and Load Combination

Earthquake loads shall be in accordance with Article 2.1 of the SDC.

2.2 Seismic Design Acceptance Criteria

2.2.1 Structural Component Classification

Structural components of a steel bridge are classified into two categories: Ductile and Capacity-protected as shown in Table 2.2.1.

C2.2.1

Ductile components are those expected to experience repairable damage during the Functional Evaluation Earthquake (FEE) and significant damage but without failure during the Safety Evaluation Earthquake (SEE). The components shall be pre-identified and well-detailed to behave inelastically without significant degradation of strength or stiffness. Capacity-protected components are those expected to experience minimum damage, and to behave essentially elastic during both the FEE and the SEE.

Earthquake resisting systems shall be designed to meet the seismic performance criteria. A dual level design may be needed for nonstandard ordinary bridges and important bridges. For example, in both the longitudinal and transverse directions, isolation bearings could be used to dissipate energy for a moderate to large earthquake while column hinging could be used as a second mechanism for the Maximum Credible Earthquake (MCE) once

SPECIFICATIONS	COMMENTARY
	displacement limits are reached in the bearings. Similarly in the transverse direction ductile end cross frames or diaphragms could be used for a moderate to large earthquake while ductile columns will be activated in an extremely large event when the displacement limits are reached in the end cross frames or diaphragms.

Table 2.2.1 Structural Component Classification

Direction	Structural System	Component Classification		
		Ductile		**Capacity-protected**
Longitudinal	Integral/Non-integral Bent Connections	Columns Piers		Bent caps Superstructures Foundations
		Isolation Bearings		Bent Caps Superstructures Substructures
Transverse	Non-integral Bent Connections	Isolation Bearings		Bent Caps Superstructures Substructures
	Ductile End-Diaphragm System	Concentrically Braced Frames	Bracing members	Bracing connections Girders Substructures
		Eccentrically Braced Frames	Links	Diagonal braces Beam outside of Links Girders, Connections Substructures
	Ductile Substructure Systems	Moment Resisting Frames	Columns	Bent Caps Superstructures Connections Foundations
		Eccentrically Braced Frames	Links	Superstructures Diagonal braces Beam outside of Links Connections, Columns Foundations
		Concentrically Braced Frames	Bracing members	Superstructures Bracing connections Beams, Columns Foundations

SPECIFICATIONS

2.2.2 Damage Levels, Strain and Ductility in Structural Steel

The following limiting strains, ductility and corresponding damage levels may be used.

Table 2.2.2 Damage Levels, Strain and Ductility in Structural Steel

Damage Level	Strain	Ductility	
	ε	μ_θ	μ_Δ
Significant	ε_{sh}	8	4
Repairable	Larger of $\begin{cases} 0.008 \\ 2\varepsilon_{sh}/3 \end{cases}$	6	3
Minimum	Larger of $\begin{cases} 0.003 \\ 1.5\varepsilon_y \end{cases}$	2	1.5

where

ε_{sh} = strain at the onset of strain hardening of steel

ε_y = yield strain of steel

μ_Δ = displacement ductility, ratio of ultimate-to-yield displacement (Δ_u/Δ_y)

μ_θ = rotation ductility, ratio of ultimate-to-yield rotation (θ_u/θ_y)

Δ_y = yield displacement which is the lateral displacement of a component or a frame at the onset of forming the first plastic hinge (mm)

θ_y = yield rotation which is the rotation at the onset of yielding in the extreme tension fiber

COMMENTARY

C2.2.2

Table 2.2.2 provides quantitative strain and ductility limits corresponding to the three damage levels specified in the Caltrans Seismic Performance Criteria in the MTD 20-1 (Caltrans 1999).

SPECIFICATIONS

Δ_u = ultimate displacement capacity which is the lateral displacement of a component or a frame corresponding to the expected damage level limit as specified in Table 2.2.2, not to exceed the displacement when the lateral resistance degrades to a minimum of 80 percent of the peak resistance (Figure C2.2.2a) (mm)

θ_u = ultimate rotation capacity corresponding to the expected damage level at which strain in the extreme fiber reaches its strain limit as specified in Table 2.2.2, not to exceed the rotation when the moment resistance degrades to a minimum of 80 percent of the peak moment resistance (Fig. C.2.2b)

COMMENTARY

Figure C2.2.2 shows typical load-deformation curves.

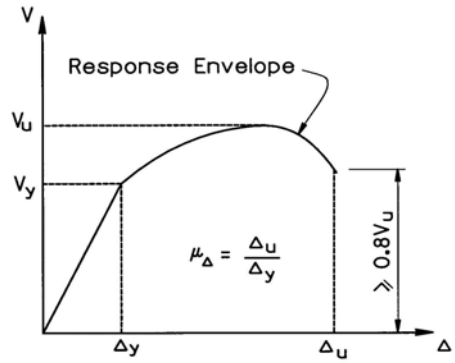

(a)

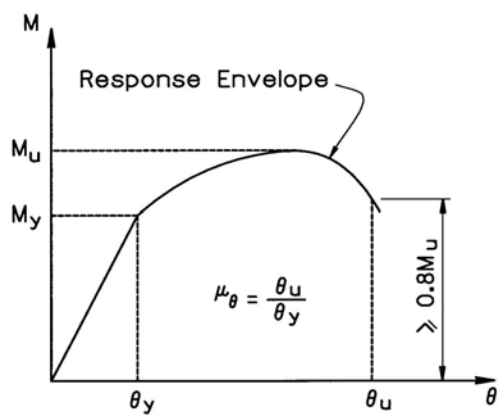

(b)

Figure C2.2.2 Load-Deformation Curves

SPECIFICATIONS

COMMENTARY

2.2.3 Displacements

The displacements in a global and local ductile system shall satisfy the following requirement:

$$\Delta_D \leq \Delta_C \qquad (2.2.3\text{-}1)$$

where

Δ_D = displacement demand determined by one of the analysis methods specified in Article 3.1 (mm)

Δ_C = displacement capacity determined by using a static push over analysis in which both material and geometric non-linearities are considered (mm)

2.2.4 Forces

The forces in a capacity-protected component shall satisfy the following requirement:

$$F_D \leq F_C \qquad (2.2.4\text{-}1)$$

where

F_D = force demand (axial/shear force, moment, as appropriate) on a capacity-protected component determined by the joint equilibrium of overstrength capacities of adjacent ductile components or elastic seismic forces if there is no yielding in ductile members

F_C = nominal strength (axial/shear force, moment, as appropriate) of a capacity-protected component determined in accordance with Article 7

SPECIFICATIONS

COMMENTARY

3. STRUCTURAL ANALYSIS

3.1 Analysis Methods

3.1.1 General

Analysis methods such as Equivalent Static Analysis (ESA), Elastic Dynamic Analysis (EDA), Inelastic Static Analysis (ISA) presented in Article 5.2 of the SDC shall apply.

C3.1

Inelastic Static Analysis (ISA), commonly referred to as the "push over analysis", shall be used to determine the displacement capacity of a steel bridge. ISA can be categorized into three types of analysis: (1) elastic-plastic hinge, (2) refined plastic hinge, and (3) distributed plasticity.

The simplest method, elastic-plastic hinge analysis, may be used to obtain an upper bound solution. The most accurate method, distributed plasticity analysis, can be used to obtain a better solution. Refined plastic hinge analysis is an alternative that can reasonably achieve both computational efficiency and accuracy.

In an elastic-plastic hinge (lumped plasticity) analysis, material inelasticity is taken into account using concentrated "zero-length" plastic hinges which maintain plastic moment capacities and rotate freely. When the section reaches its plastic moment capacity, a plastic hinge is formed and element stiffness is adjusted (King et al. 1992; Levy et al. 1997). For regions in a framed member away from the plastic hinge, elastic behavior is assumed. It does not, however, accurately represent the distributed plasticity and associated P-δ effects. This analysis provides an upper bound solution.

SPECIFICATIONS

COMMENTARY

In the refined plastic hinge analysis (Chen and Toma 1994), a two-surface yield model considers the reduction of plastic moment capacity at the plastic hinge due to the presence of axial force, and an effective tangent modulus accounts for the stiffness degradation due to distributed plasticity along a frame member. This analysis is similar to the elastic-plastic hinge analysis in efficiency and simplicity and also accounts for distributed plasticity.

Distributed plasticity analysis models the spread of inelasticity through the cross sections and along the length of the members. This is also referred to as plastic zone analysis, spread-of-plasticity analysis, or elasto-plastic analysis by various researchers. In this analysis, a member needs to be subdivided into several elements along its length to model the inelastic behavior more accurately. Two main approaches have been successfully used to model plastification of members in a second-order distributed plasticity analysis:

(1) Cross sectional behavior is described as an input for the analysis by means of moment-thrust-curvature (M-P-ϕ) and moment-thrust-axial strain (M-P-ε) relations, which may be obtained separately from a moment-curvature analysis or approximated by closed-form expressions (Chen and Atsuta 1977).

SPECIFICATIONS

COMMENTARY

(2) Cross sections are subdivided into elementary areas and the state of stresses and strains are traced explicitly using the proper stress-strain relations for all elements during the analysis.

3.1.2 Moment-Curvature Analysis

In a moment-curvature analysis for a ductile structural steel component, the following assumptions are usually made:

- Section that are plane before bending, remain plane after bending
- Shear and torsional deformation is negligible
- Stress-strain relationships for steel

C3.1.2

The steel section shall be divided into layers or filaments and a typical steel stress-strain relationship assumed. The yield moment M_y is the section moment at the onset of yielding of an extreme fiber. The ultimate moment M_u is the moment at the peak moment capacity.

A set of typical moment-curvature curves for a steel I-section is shown in Figure C3.1.2.

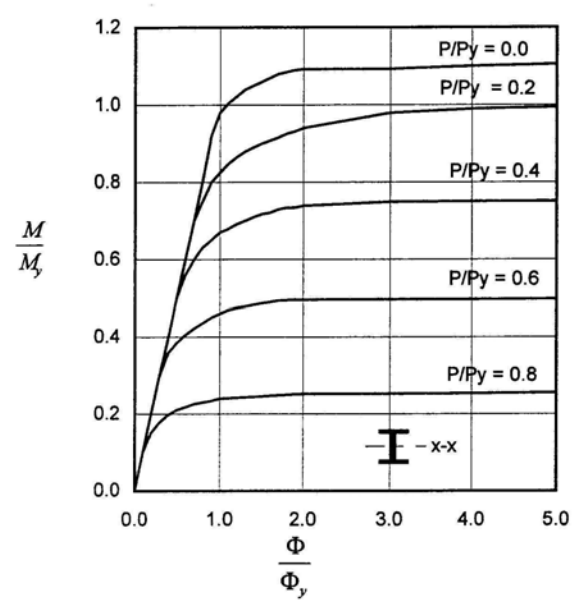

Figure C3.1.2 Moment-Curvature Curves

SPECIFICATIONS

COMMENTARY

3.2 Structural Modeling

3.2.1 General

The principles presented in Articles 5.3, 5.4 and 5.5 of the SDC shall generally apply. The straight steel girder superstructure should be modeled as a series of three-dimensional frame elements. Bent caps and columns shall be modeled as three-dimensional frame elements.

C3.2.1

In general, dynamic behavior of a bridge structure can be predicted by the finite element method. The elements can be frame (beam), shell, solid elements or other types of elements idealizing the real structures. Two types of finite element models, simplified and detailed, are typically used for dynamic analysis of a steel bridge structure. A simplified model uses two-dimensional or three-dimensional frame elements, as so-called "stick" models to represent superstructures and columns. A detailed model uses solid elements for superstructure deck, shell elements for steel girders, and frame elements for columns.

A recent report (Itani and Sedarat 2000) indicated that the dynamic characteristics of straight steel girder bridges can be captured by the simplified modeling procedure. The five elements per span are sufficient for a good representation of the first three vibration modes of a span (ATC, 1996). When the periods of the higher modes of a span are within the acceleration-control region of the earthquake response spectrum, it is necessary to include more elements to capture high modes. In general, if the contribution of the ith mode needs to be included in the analysis, the span

SPECIFICATIONS

COMMENTARY

should be modeled by 2i-1 elements over the span length (Itani and Sedarat 2000).

3.2.2 Materials

Structural steel shall be modeled to closely represent actual testing behavior. In the absence of material data and test results, the stress-strain relationships represented in Appendix A may be used in the analysis.

3.2.3 Geometry

The member forces, moment and displacements induced by *P-Δ* effects, shall be considered in evaluating the overall structural frame stability.

The *P-Δ* effects can be ignored when the requirement specified in Article 4.4 of the SDC is satisfied.

C3.2.3

The P-Δ effects can be evaluated by a large deflection analysis, usually referred to as second-order analysis or geometrically nonlinear analysis where equilibrium equations are established with respect to the deformed geometry of the structure. In lieu of a second-order elastic analysis, the moment magnification method specified in Article 4.5.3.2.2 of the AASHTO-LRFD (1998) may be used.

A small deflection analysis is usually referred to as first-order analysis or geometrically linear analysis where equilibrium equations are established with respect to undeformed (or original) geometry of the structure. It is recognized that a first-order analysis always underestimates the force and deformation effects.

SPECIFICATIONS

COMMENTARY

The Caltrans SDC states that: If equation 4.3 (as shown below) is satisfied, P-Δ effects can typically be ignored.

$$P_{dl}\,\Delta_r \;\le\; 0.2\,M_p^{col} \qquad \text{(C3.2.3-1)}$$

where:

P_{dl} = axial dead load (N)

Δ_r = *relative lateral offset between the point of contra-flexure and the base of the plastic hinge (mm)*

M_p^{col} = *idealized plastic moment capacity of a column calculated by moment-curvature analysis (N-mm)*

The UBC (1997) specifies that PΔ need not be considered when the ratio of secondary moment to primary moment does not exceed 0.10.

The recently recommended AASHTO-LRFD Guidelines (NCHRP 12-49, 2001) require that the displacement of a pier or bent in the longitudinal and transverse direction must satisfy the following equation:

$$\Delta_e \;\le\; 0.25\,\frac{C_s H}{R_d} \qquad \text{(C3.2.3-2)}$$

$$R_d = \begin{cases} \left(1 - \dfrac{1}{R}\right)\dfrac{T^*}{T} + \dfrac{1}{R} & \text{for } T < T^* \\ 1.0 & \text{for } T \ge T^* \end{cases} \qquad \text{(C3.2.3-3)}$$

where

Δ_e = *displacement demand from the seismic analysis (mm)*

SPECIFICATIONS

COMMENTARY

C_s = *seismic coefficient from the design response spectrum curve*

H = *height of the pier form the point of fixity for the foundation (mm)*

R = *ratio between the elastic force and the lateral strength of the pier or bent*

T = *period of vibration (second)*

T^* = *$1.25T_s$ and T_s is period at the end of constant design spectral acceleration (second)*

3.2.4 Effective Section Properties

Effective section properties presented in Appendix B may be used for built-up members in a seismic analysis in lieu of more refined properties.

SPECIFICATIONS | COMMENTARY

4. DESIGN REQUIREMENTS

4.1 Proportions

Structural systems for bridges shall be proportioned and designed to provide effective load paths and continuity, and to reduce the seismic demands and effects on the structural system to the greatest possible extent. Steel components within the structural system shall be designed to achieve their desired performance.

C4.1

For steel bridges, structural components shall be generally designed to ensure that inelastic deformation only occurs in the specially detailed ductile substructure elements. Inelastic behavior in the form of controlled damage may be permitted in some of the superstructure components such as the end cross-frames, end diaphragms, and bearings. The inertial forces generated by the deck shall be transferred to the substructure through girders, trusses, cross frames, lateral bracings, end diaphragms and bearings.

At transition and splice locations of a ductile member, changes in the stiffness and the strength of the member shall not exceed 50 percent.

SPECIFICATIONS

4.2 Materials

Structural steel used in ductile components that protect other structural elements by the capacity design principle shall meet one of the following

- AASHTO M270 (ASTM A709M) Grade 345 and Grade 345W
- ASTM A992 Steel
- A500 Grade B or A501 Steels

Other steels may be used provided that they are compatible to the approved Grade 345 steels. The specified minimum yield strength of steel used for ductile components shall not exceed 345 MPa unless the suitability of the material is determined by testing.

Expected yield strength F_{ye} of steel is defined as:

$$F_{ye} = R_y F_y \qquad (4.2\text{-}1)$$

where

F_{ye} = expected yield strength of steel (MPa)

R_y = overstrengh factor for steel

F_y = specified minimum yield strength of steel (MPa)

COMMENTARY

C4.2

The materials specified herein are recommended in the recently recommended AASHTO-LRFD Guidelines (NCHRP 12-49 2001).

The AISC Seismic Provisions (AISC 1997) specify that structural steel permitted for use in seismic design shall meet the following characteristics: (1) a ratio of yield strength to tensile strength not greater than 0.85; (2) a pronounced stress-strain plateau at the yield strength; (3) a large inleastic strain capacity (for example, tensile elongation of 20 percent or greater in a 127-mm gage length); and (4) good weldability. M270 Grade 250 (ASTM 709 Grade 36 Steel) is not recommended for use in the ductile components because it has a wide range between its expected yield and ultimate strength, as well as a large overstrength factor.

The AISC Seismic Provisions Supplement No. 2 (AISC 2000) provides the following overstrength factor R_y values:

Table C4.2 R_y Values

Application	R_y
Plate and all other products	1.1
Hot-rolled structural shapes and bars	
ASTM A36	1.5
A572 Grade 42	1.3
All other grades	1.1
Hollow Structural Section	
ASTM A500, A501, A618 and A84	1.3
Steel Pipe - ASTM A53	1.4

SPECIFICATIONS | COMMENTARY

4.3 Effective Net Sections

The net section, A_n, of a tension member shall be determined in accordance with Article 10.9 and 10.16.14 of the BDS.

The effective net section, A_e, of a tension member shall be determined in accordance with Article 10.9 of the BDS.

4.4 Effective Length of Compression Members

In the absence of more accurate analysis, the effective length factor K for compression members may be determined in accordance with Appendix C of the BDS.

For built-up members, if the buckling mode involves relative deformations that produce shear forces in the connectors between individual shapes, KL/r shall be modified in accordance with Article E4 of the AISC-LRFD (1999a).

SPECIFICATIONS

COMMENTARY

4.5 Limiting Width-Thickness Ratios

For capacity-protected components, the width-thickness ratios of compression elements shall not exceed the limiting values, λ_r, as specified in Table 4.5. For ductile components, width-thickness ratios of compression elements shall not exceed the limiting values, λ_p, as specified in Table 4.5.

4.6 Limiting Slenderness Parameters

The slenderness parameter λ_c for compression members, and λ_b for flexural members shall not exceed the limiting values, λ_{cp} and λ_{bp}, as specified in Table 4.6, respectively.

SPECIFICATIONS COMMENTARY

Table 4.5 Limiting Width-Thickness Ratios

No	Description of Elements	Examples	Width-Thickness Ratios	λ_r	λ_p
	UNSTIFFENED ELEMENTS				
1	Flanges of I-shaped rolled beams and channels in flexure	Figure 4.5(a) Figure 4.5(c)	b/t	$\mathbf{\frac{370}{\sqrt{F_y - 69}}}$	$\mathbf{\frac{137}{\sqrt{F_y}}}$
2	Outstanding legs of pairs of angles in continuous contact; flanges of channels in axial compression; angles and plates projecting from beams or compression members	Figure 4.5(d) Figure 4.5(e)	b/t	$\mathbf{\frac{250}{\sqrt{F_y}}}$	$\frac{137}{\sqrt{F_y}}$
	STIFFENED ELEMENTS				
3	Flanges of square and rectangular box and hollow structural section of uniform thickness subject to bending or compression; flange cover plates and diaphragm plates between lines of fasteners or welds.	Figure 4.5(b)	b/t	$\mathbf{\frac{625}{\sqrt{F_y}}}$	$\mathbf{290/\sqrt{F_y}}$ (tubes) $\mathbf{400/\sqrt{F_y}}$ (others)
4	Unsupported width of cover plates perforated with a succession of access holes	Figure 4.5(d)	b/t	$\mathbf{\frac{830}{\sqrt{F_y}}}$	$\mathbf{\frac{400}{\sqrt{F_y}}}$
5	All other uniformly compressed stiffened elements, i.e., supported along two edges.	Figures 4.5(a) (c),(d),(f)	b/t h/t_w	$\mathbf{\frac{665}{\sqrt{F_y}}}$	$290/\sqrt{F_y}$ (w/lacing) $400/\sqrt{F_y}$ (others)
6	Webs in flexural compression	Figures 4.5(a) (c),(d),(f)	h/t_w	$\mathbf{\frac{2550}{\sqrt{F_y}}}$	$\mathbf{\frac{1365}{\sqrt{F_y}}}$
7	Webs in combined flexural and axial compression	Figures 4.5(a) (c),(d),(f)	h/t_w	$\mathbf{\frac{2550}{\sqrt{F_y}} \times \left(1 - \frac{0.74P}{\phi_b P_y}\right)}$	For $\mathbf{P_u \le 0.125\phi_b P_y}$ $\mathbf{\frac{1365}{\sqrt{F_y}}\left(1 - \frac{1.54P}{\phi_b P_y}\right)}$ For $\mathbf{P_u > 0.125\,\phi_b P_y}$ $\mathbf{\frac{500}{\sqrt{F_y}}\left(2.33 - \frac{P}{\phi_b P_y}\right) \ge \frac{665}{\sqrt{F_y}}}$
8	Longitudinally stiffened plates in compression	Figure 4.5(e)	b/t	$\frac{297\sqrt{k}}{\sqrt{F_y}}$	$\frac{197\sqrt{k}}{\sqrt{F_y}}$
9	Round HSS in axial compression or flexure		D/t	$\frac{17930}{F_y}$	$\mathbf{\frac{8950}{F_y}}$

Notes:
1. Width-Thickness Ratios shown in **Bold** are from AISC-LRFD (1999a) and AISC-Seismic Provisions (1997). F_y is MPa
2. k = buckling coefficient specified by Article 6.11.2.1.3a of AASHTO-LRFD (AASHTO,1998)

for $n = 1$, $\boldsymbol{k} = (8\boldsymbol{I_s} / \boldsymbol{bt}^3)^{1/3} \le 4.0$ for $n = 2,3,4$ and 5, $\boldsymbol{k} = (14.3\boldsymbol{I_s} / \boldsymbol{bt}^3\boldsymbol{n}^4)^{1/3} \le 4.0$

n = number of equally spaced longitudinal compression flange stiffeners
I_s = moment of inertia of a longitudinal stiffener about an axis parallel to the bottom flange and taken at the base of the stiffener

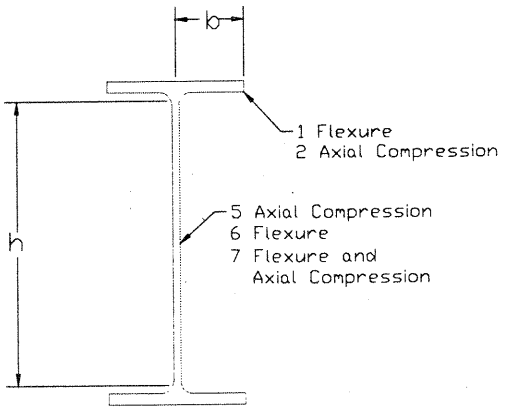

(a) Rolled I Section

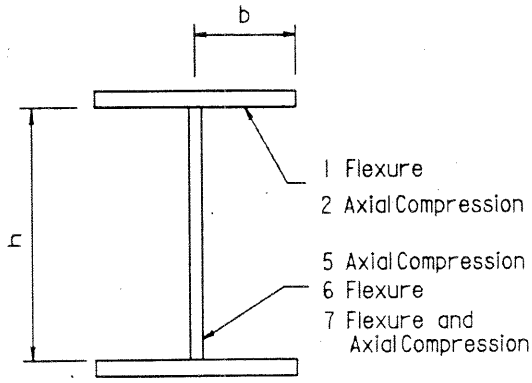

(d) Built Up I Section

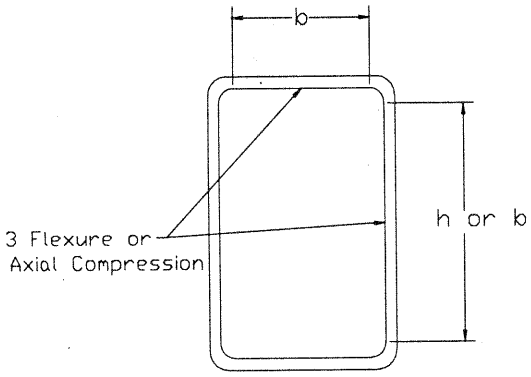

(b) Hollow Structural Tube

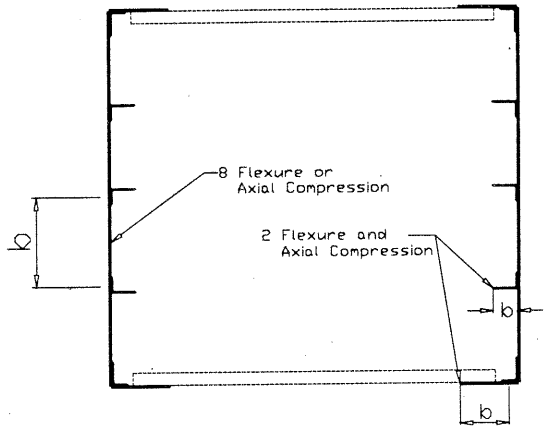

(e) Longitudinally Stiffened Built Up Box Section

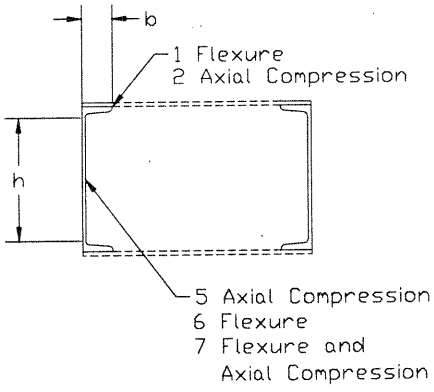

(c) Built-up Channels

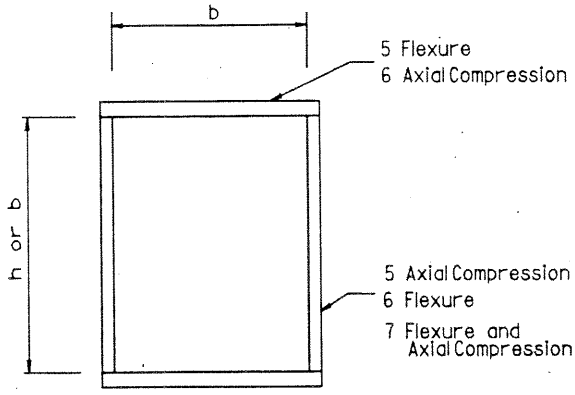

(f) Built-up Box

Figure 4.5 Selected Cross Sections

SPECIFICATIONS

Table 4.6 Limiting Slenderness Parameters

Member Classification		Limiting Slenderness Parameters	
Ductile	Compression Member	λ_{cp}	0.75
	Flexural Member	λ_{bp}	$17240/F_y$
Capacity-Protected	Compression Member	λ_{cp}	1.5
	Flexural Member	λ_{bp}	$1970/\sqrt{F_y}$

$\lambda_c = \left(\frac{KL}{r\pi}\right)\sqrt{\frac{F_y}{E}}$ (slenderness parameter for compression members)

$\lambda_b = \frac{L}{r_y}$ (slenderness parameter for flexural members)

λ_{cp} = limiting slenderness parameter for compression members

λ_{bp} = limiting slenderness parameter for flexural members

K = effective length factor of a member

L = unsupported length of a member (mm)

r = radius of gyration (mm)

r_y = radius of gyration about the minor axis (mm)

F_y = specified minimum yield strength of steel (MPa)

E = modulus of elasticity of steel (200,000 MPa)

SPECIFICATIONS

4.7 Built-up Members

For built-up members, lacing including flat bars, angles, channels, or other shapes employed as lacing, or batten plates, or connectors shall be so spaced that *l/r* of the flange included between their connections shall not exceed three-fourths times the governing slenderness ratio for the laced member as a whole.

COMMENTARY

C4.7

Two types of built-up members are commonly used for steel construction. The first type includes the laced or battened members with widely spaced flange components and the second type consists of closely spaced shapes interconnected by welds or connectors. It is known that compressive strength of both types of built-up members is affected by the shearing effect. For the first type, the shearing effects results from the deformation of flange components and laces, while for the second type, the shearing effect is caused by the shearing of intermediate connectors. The current practice (AISC-LRFD 1999a) considers the shear effects of the second type, but not the first type. A recent study (Duan, et al. 2002) has shown that the compressive strength of built-up members may also affected by the compound buckling due to the interaction between the global buckling mode of the member and the localized flange component buckling mode between lacing points or intermediate connectors. The ¾(KL/r) rule for latticed members is recommended to avoid significant effect of the compound buckling.

SPECIFICATIONS

COMMENTARY

4.8 Shear Connectors

Shear connectors shall be provided on the flanges of girders, end cross frames or diaphragms to transfer seismic loads from the concrete deck to the abutments or pier supports.

C 4.8

The cross frames or diaphragms at the end of each span are the main components to transfer the lateral seismic loads from the deck down to the bearing locations. Recent tests on a 0.4 scale experimental steel girder bridge (18.3 m long) conducted by University of Nevada, Reno (Carden, et al. 2001) indicated that too few shear connectors between the girders and deck at the bridge end did not allow the end cross frame to reach its ultimate capacity. Supporting numerical analysis on a continuous multi-span bridge showed that for non-composite negative moment regions, the absence of shear connectors at the end of a bridge span caused large weak axis bending stresses in the girders likely to cause buckling or yielding of the girders before the capacity of the ductile component was reached. Furthermore there were large forces in the intermediate cross frames, therefore, the end cross frames were no longer the only main components transferring lateral seismic loads form the deck to the bearings. It is, therefore, recommended that adequate shear connectors be provided above supports to transfer seismic lateral loads. These shear connectors can be placed on the girders or the top struts of the end cross frame or diaphragms.

SPECIFICATIONS

For the transverse seismic load, the effective shear connectors should be taken as those located on the flanges of girders, end cross frames or diaphragms that are no further than $9t_w$ on each side of the outer projecting elements of the bearing stiffener group.

For the longitudinal seismic load, the effective shear connectors should be taken as all those located on the girder flange within the tributary span length of the support.

The seismic load at columns/piers should be the smaller of the following:

- The overstrength shear of the columns/piers
- 1.3 times the capacity of the bracing systems if they are considered as ductile seismic resisting systems

The seismic load at abutments should be the smaller of the following:

- The overstrength shear of the shear keys
- 1.3 times the capacity of the bracing systems if they are considered as ductile seismic resisting systems

Nominal strength of the shear connectors shall be in accordance with Article 10.38.5.1.2 of the BDS.

COMMENTARY

The lateral stiffness for a girder bridge bent in the transverse direction as presented in Appendix E may be used to estimate the period of fundamental mode of vibration in the transverse direction.

SPECIFICATIONS

4.9 Restraining Components

Hinge restrainers and/or shear keys shall be provided to prevent excessive lateral movement of the superstructure relative to the substructure.

Hinge restrainers shall be designed as a secondary line of defense against unseating of girders in accordance with Article 7.2.6 of the SDC.

When supports have ample width to tolerate seismic displacements, shear keys may be designed as fuse elements in accordance with Article 7.8.4 of the SDC. When excessive seismic displacements must be prevented, shear keys shall be provided and designed as capacity-protected elements.

Concrete shear keys shall be designed in accordance with applicable provisions in the SDC and the BDS.

COMMENTARY

C 4.9

Figure C4.9 shows typical shear keys for a girder bridge.

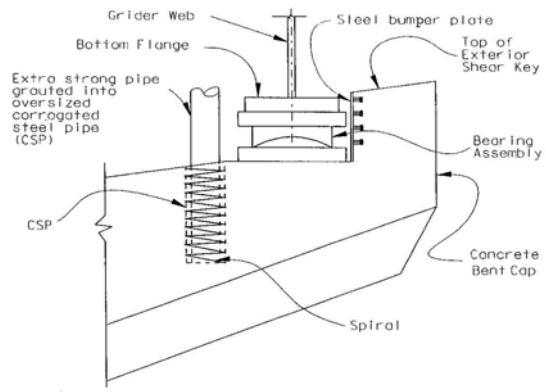

Figure C4.9 Shear Keys

The extra strong pipe is the preferred system for interior shear keys (Figure C4.9) as it requires less space and provides more access for future inspection and maintenance. Concrete shear keys that are impacted by relatively thin steel elements such as girder flanges shall be armored with sufficiently thick steel plates or angles to distribute the line load over an area of concrete to reduce the bearing stress to an acceptable value (Figure C4.9).

SPECIFICATIONS

For steel tubing and pipe shear keys, the outside diameter-wall thickness ratio of a round hollow structural sections (HSS), and the outside width-thickness ratio of a rectangular HSS shall not exceed λ_p as specified in Table 4.5 unless its wall is stiffened or it is concrete filled. The nominal shear strength of a HSS shear key, R_n, shall be calculated by:

$$R_n = 0.58 F_y A_g \qquad (4.9.1)$$

where

A_g = web gross area of a rectangular tube or cross-sectional area of a pipe (mm^2)

F_y = specified minimum yield strength of steel (MPa)

The steel shear key shall be adequately embedded in the base concrete or positively connected to the base steel.

COMMENTARY

Steel pipe shear key tests reported by Frosch (1999) have shown that proper embedment was required to produce shear yielding of the pipe. The pipe embedment lengths may be determined by considering the bearing of the pipe on the concrete and an overstrength factor of 1.2 for pipe as follows:

$$l_d = \frac{2.1 R_n}{f'_c D \sqrt{\frac{A_2}{A_1}}} \qquad \text{(C4.9-1)}$$

where

l_d = *embedment length of a steel pipe (mm)*

f'_c = *specified compressive strength of concrete at 28 days (MPa)*

D = *outside diameter of a steel pipe (mm)*

R_n = *nominal shear strength of a steel pipe (MN)*

A_1 = *bearing area of a steel pipe in concrete (mm^2)*

A_2 = *confinement concrete area equal to the embedment length of a steel pipe times the concrete edge width bound by two 45° lines drawn from the outside diameter of the pipe to the edge of concrete element (mm^2)*

$\sqrt{A_2/A_1}$ = *confinement factor not more than 2.*

In deriving Equation (C4.9-1), design bearing strength of concrete is based on $\phi(0.85 f'_c) = 0.7(0.85 f'_c)$

SPECIFICATIONS

4.10 Welding

Welds located in the expected inelastic region of ductile components are preferably complete penetration welds. Partial penetration groove welds are not recommended in these regions. If the fillet welds are only practical solution for an inelastic region, Quality Control (QC) and Quality Assurance (QA) inspection procedures for the Fracture Critical Members specified in the Caltrans Standard Specifications (Caltrans 2000b) shall be followed.

COMMENTARY

C4.10

Recent tests on the Richmond-San Rafael Bridge tower shear links with fillet welds showed that the fillet welds in the inelastic regions performed well (Itani, 1997).

SPECIFICATIONS

COMMENTARY

5. DUCTILE SEISMIC RESISTING SYSTEMS

5.1 Ductile Substructure Systems

Steel multi-column bents or towers shall be designed for lateral loads as ductile Moment-Resisting Frames (MRF) or ductile braced frames such as Concentrically Braced Frames (CBF) and Eccentrically Braced Frames (EBF).

C5.1

For Moment-Resisting Frames, the columns shall preferably be designed for the primary inelastic deformation. For Concentrically Braced Frames, diagonal members shall be designed to yield when members are in tension and to buckle inelastically when they are in compression. For Eccentrically Braced Frames, the "link", a short beam segment (AISC 1997) shall be designed and detailed for significant inelastic deformations. All connections shall preferably be designed to remain essentially elastic.

If a reinforced concrete substructure is to be used in conjunction with a steel superstructure then design of the concrete substructure shall be in accordance with the appropriate provisions specified in the SDC. The designer should take advantage of the lightweight steel girder superstructure compared with a concrete superstructure.

5.1.1 Moment Resisting Frames

For single level multi-column bents, inelastic deformation under seismic loads shall be limited to the columns only. All other components shall be designed to remain essentially elastic.

C5.1.1

SPECIFICATIONS

Axial compression force in columns due to the seismic load combined with permanent loads shall not exceed $0.3A_gF_y$. Potential plastic hinge locations, near the top and bottom of each column, shall be laterally supported. Columns shall be designed as members subjected to combined flexure and axial force in accordance with Article 6.5.

Beams shall be designed in accordance with Article 10.48 of the BDS (Caltrans 2000).

The beam and column strengths at the connection shall satisfy the following requirement:

$$\sum M^*_{pb} \geq \sum M^*_{oc} \qquad (5.1.1)$$

where

$\sum M^*_{pb}$ = sum of the nominal flexural strength of the beam(s) at the intersection of the beam and the column centerlines (N-mm). M^*_{pb} is shown in Figure C5.1.1

$\sum M^*_{oc}$ = sum of overstrength flexural moments in the column(s) above and below the joint at the intersection of the beam and column centerlines (N-mm). M^*_{oc} = $[M_{oc}+M_v]$ as shown in Figure C5.1.1

COMMENTARY

The axial load limitation is enforced to ensure ductile column performance and to avoid early yielding and sudden strength and stiffness degradation when the columns are subjected to high axial loads.

For a ductile moment-resisting frame, the capacity design concept is applied to ensure that inelastic deformations only occur in the specially detailed ductile substructure elements. To ensure a weak-column strong-girder design, the beam-to-column strength ratio must satisfy this requirement.

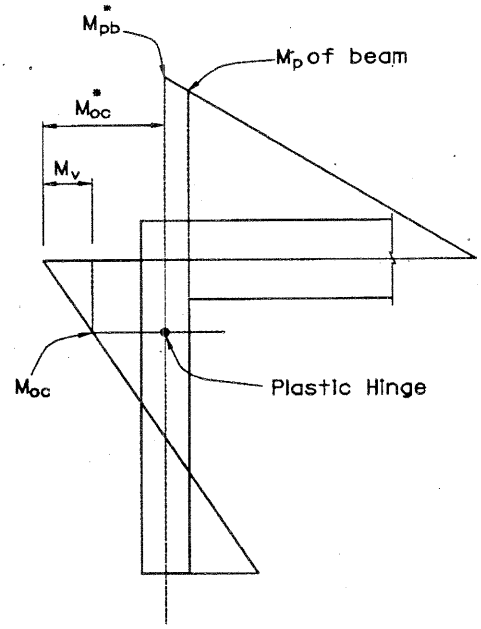

Figure C5.1.1 Beam-to-Column Strength

SPECIFICATIONS

M_{oc} = overstrength moment of a ductile column = $1.2M_{pc}$ (N-mm)

M_{pc} = expected plastic moment capacity (N-mm) estimated by yield surface equations in Appendix C based on the expected yield strength F_{ye}, or approximated as $Z_c(F_{ye}–P/A_g)$

M_v = additional moment due to the shear amplification from the actual location of the column plastic hinge to the beam centerline (Fig. C5.1.1) (N-mm)

A_g = gross cross-sectional area of a column (mm^2)

P = axial force due to seismic and permanent loads (N)

Z_c = plastic section modulus of a column (mm^3)

The beam-to-column connection and panel zone shall be designed in accordance with Article 7.6.3.

COMMENTARY

Overstrength factor, 1.2, is used to primarily account for strain hardening and the potential overstrength of idealized plastic moment capacity of a column estimated by yield surface equations. An overstrength factor of 1.2 is used for concrete columns in Article 4.3 of the SDC.

SPECIFICATIONS

COMMENTARY

5.1.2 Concentrically Braced Frames

Inelastic deformation under lateral loads shall be limited to bracing members only. All other components shall be designed to remain essentially elastic.

Bracing member design shall be in accordance with Article 6.2 for tension braces and Article 6.3 for compression braces.

Bracing connections shall be in accordance with Article 7.6.2.

For built-up bracing members, the slenderness ratio of the individual elements between the stitches shall not be greater than 0.4 times the governing slenderness ratio of the built-up members as a whole. When it can be shown that braces will buckle without causing shear in the stitches, the spacing of the stitches shall be such that the slenderness ratio of the individual element between the stitches does not exceed three-fourths times the governing slenderness ratio of the built-up member.

V-type and inverted-V-type bracing shall meet the following requirements:

C5.1.2

Concentrically braced frames (CBFs) exhibit the best seismic performance and contribute significantly to the total hysteretic energy dissipation when the diagonal members undergo both yielding in tension and inelastic buckling in compression. The energy absorption capability of a brace in compression depends on its slenderness ratio (KL/r) and its resistance to local buckling. Since CBFs are subjected to more stringent detailing requirements, they are expected to withstand significant inelastic deformations during the SEE.

This requirement (AISC 1997) ensures that the beam will not fail due to the large unbalanced force after buckling and yielding of the braces.

SPECIFICATIONS

COMMENTARY

(1) A beam that is intersected by braces shall be continuous between columns and designed to support the effects of all the prescribed tributary gravity loads including an unbalanced vertical seismic force and assuming that the bracing is not present. This unbalanced lateral load shall be the maximum unbalanced vertical force applied to the beam by the braces. It shall be calculated using a minimum of P_y for the brace in tension and a maximum of $0.3P_n$ for the brace in compression.

(2) The top and bottom flanges of the beam at the point of intersection of the braces shall be adequately braced laterally; the lateral bracing shall be designed for two percent of the expected nominal beam flange strength ($F_{ye}b_ft_f$).

SPECIFICATIONS

5.1.3 Eccentrically Braced Frames

Inelastic deformation under lateral loads shall be limited to the links between two braces. All other components shall be designed to remain essentially elastic. Link-to-column connections shall be avoided. Links at the deck level shall be avoided. Columns and braces shall be designed to resist the forces generated by overstrength shear capacity of the link.

The width-thickness ratio of links shall not exceed λ_p as specified in Table 4.5. The web of a link shall be single thickness without double-plate reinforcement and without web penetrations. Openings shall also be avoided.

COMMENTARY

C5.1.3

Research results have shown that a well designed EBF system possesses high stiffness in the elastic range and excellent ductility capacity in the inelastic range (Popov et al. 1989). The high elastic stiffness is provided by the braces. The high ductility capacity is achieved by transmitting one brace force to another brace or column, through shear and bending in a short beam segment designated as a "link". When properly detailed, these links provide a reliable source of energy dissipation. By following the capacity design concept, buckling of braces and beams outside of the link can be prevented because these members have been designed to remain essentially elastic while resisting forces associated with the fully yielded and strain hardened links. The AISC Seismic Provisions (1997) for the EBF design are intended to achieve this objective.

SPECIFICATIONS

The design strength of the link shall be in accordance with Articles 15.2d to 15.2g of the AISC Seismic Provisions (AISC 1997).

The link stiffeners shall be designed in accordance with Article 15.3 of the AISC Seismic Provisions (AISC 1997).

Lateral supports shall be designed in accordance with Article 15.5 of the AISC Seismic Provisions (AISC 1997).

The diagonal brace and the beam outside of the link shall be designed in accordance with Article 15.6 of the AISC Seismic Provisions (AISC 1997).

COMMENTARY

Links yielding in shear possesses a greater rotational capacity than links yielding in bending. The link rotation angle, γ_p, is the plastic rotation angle between the link and the beam outside of the link, and can be conservatively determined assuming that the braced bay will deform in a rigid-plastic mechanism. Plastic mechanisms for two EBF configurations are illustrated in Fig. C5.1.3. It should be pointed out that links located at bent-cap level (deck level) as shown in Fig. C5.1.3a are not desirable as these can produce undesirable deck damage. The plastic rotation is determined using a frame drift angle, $\theta_p = \Delta_p/h$, where Δ_p is the plastic frame displacement and h is the frame height. Alternatively, the plastic rotation angle can be determined more accurately by inelastic nonlinear analyses.

SPECIFICATIONS

Both the beams and diagonal braces should be designed as beam-columns in accordance with Article 6.9.2.2 of the AASHTO-LRFD (AASHTO 1998). The beam design should be based on the expected material properties and diagonal braces strength should be based on nominal material properties. Each lateral bracing member shall have a required strength of two percent of the expected nominal beam flange strength ($F_{ye}b_f t_f$).

The diagonal brace-to-beam connection at the link end of the brace shall be designed to resist at least the expected nominal strength of the brace. The width-thickness ratio of the brace elements should not exceed λ_p as specified in Table 4.5.

Beam-to-column connections away from the links can be designed as simple shear connections. The connection must have a strength adequate to resist a rotation about the longitudinal axis of the beam resulting from two equal and opposite forces of at least two percent of the expected nominal beam flange strength ($F_{ye}b_f t_f$).

Columns shall be designed to resist the forces generated by overstrength shear of the link.

COMMENTARY

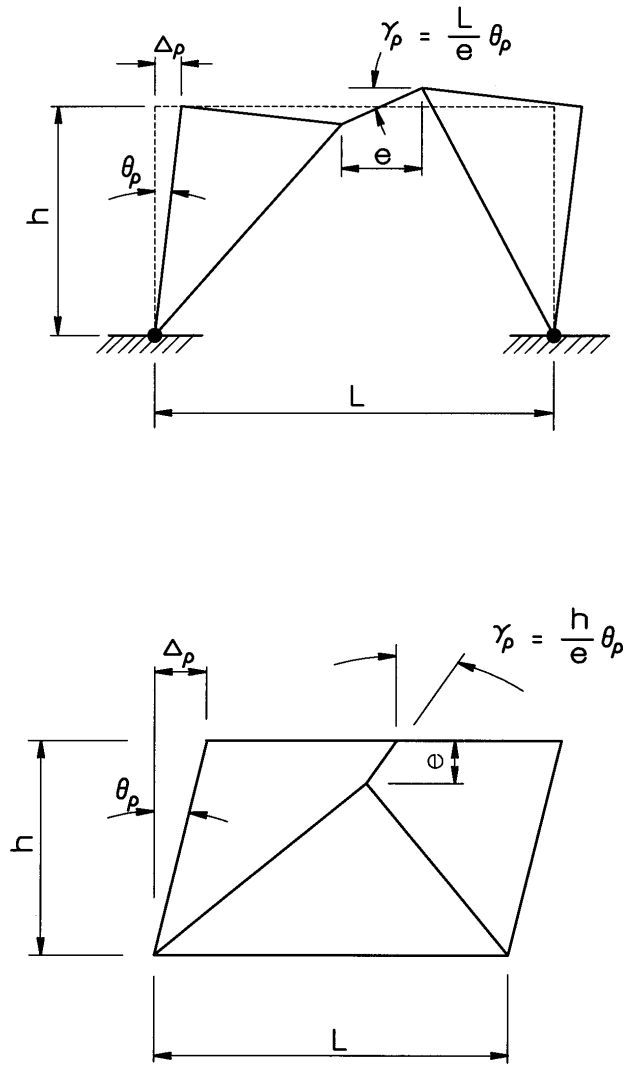

(a)

(b)

Figure C5.1.3 Plastic Mechanisms of EBF

SPECIFICATIONS

COMMENTARY

5.2 Ductile End Cross Frames and Diaphragms

5.2.1 General

A ductile end cross frame or diaphragm can be a concentrically braced frame (CBF) or an eccentrically braced frame (EBF), or a specially designed system (Fehling et al, 1992; Nakashima 1995; Tsai et al. 1993, Zahrai and Bruneau 1999). The ductile end cross frames or diaphragms shall not be used in curved bridges.

Displacement of an end cross frame or diaphragm is the relative lateral displacement between the deck (or the top strut) and the bottom of the girder. The displacement ductility of a ductile end cross frame or diaphragm shall not be less than limiting values specified in Table 2.2.2. Design provisions in Articles 5.1.2 and 5.1.3 shall apply. The bridge girders with transverse stiffeners act as columns in the CBF and EBF. The effective area of these equivalent columns is defined in Article 5.2.2. A top and bottom struts in CBF shall be provided to allow for unbalanced forces when one member buckles.

C5.2.1

End cross frames or diaphragms in slab-on-girder steel bridges may be designed as ductile systems for better inelastic performance and energy dissipation capacity to limit the seismic forces transferred to the substructure in transverse direction. Ductile end diaphragm systems are usually effective in longer span bridges and may not be effective for short span bridges when the superstructure is significantly stiffer than the substructure. More detailed guidelines are under development based on the new research conducted by the University of Nevada at Reno.

SPECIFICATIONS

COMMENTARY

5.2.2 Effective Column Area

For bearing stiffeners bolted to the web, the effective column section shall be taken as the stiffener elements only. For stiffeners welded to the web, the effective column section shall be taken as all stiffener elements, plus a centrally located strip of web extending not more than $9t_w$ on each side of the outer projecting elements of the stiffener group.

C5.2.2

For a ductile end cross frame or diaphragm, bearing stiffener column specified in Article 10.34.6.1 of the BDS is assumed as an equivalent column.

5.2.3 Boundary Conditions of Effective Columns

The bottom of effective columns should be assumed as pinned while the top of the columns may be assumed as fixed.

C5.2.3

Boundary conditions of effective columns depend on bearing details and the bending stiffness of some tributary length of deck about the longitudinal bridge axis. It may be conservative to consider the top fixed to allow the maximum contribution as an upper bound to the stiffness of effective columns. A finite element analysis indicates that the contribution of the effective columns is around 5 percent in the elastic range; while relative contribution will be significant when the cross frames yield (Zahrai and Bruneau 1998).

SPECIFICATIONS

COMMENTARY

5.3 Integral Connection Systems

5.3.1 General

Integral connections between steel girder superstructures and concrete substructures shall be appropriately detailed and designed to maintain its full integrity to resist seismic effects.

5.3.2 Steel Girder Superstructures

Steel girder superstructures shall be designed to resist the forces generated by the overstrength plastic moment capacity M_o^{col} of the concrete columns. Effective superstructure width resisting longitudinal seismic moments generated by a concrete column shall be the sum of the column cross-sectional dimension in the transverse direction and the depth of the superstructure in accordance with Article 7.2.1.1 of the SDC. A wider effective width may be used if the bent cap is designed in accordance with Article 5.3.3. Steel-concrete composite action of the superstructure can be considered only if adequate shear studs are provided in accordance with Article 10.52 of the BDS.

C5.3.1

Integral connections for steel girder bridges make the entire structure act as one system to resist loads and result in more economical foundations. The integral connection systems may be effective for short span bridges. Practice of this detail also increases vertical clearance, and provides improved aesthetics. More detailed guidelines are under development based on the new research conducted by UCSD and NCHRP.

SPECIFICATIONS

COMMENTARY

5.3.3 Concrete Columns

Design provisions for concrete columns in the SDC shall apply.

5.3.4 Concrete Bent Cap Beams

When an effective superstructure width wider than that specified in Article 5.3.2 is used, concrete cap beams shall be designed to resist torsional moments generated by overstrength plastic moment capacity M_o^{col} of the concrete column. Torsion capacity of concrete cap beam shall be designed in accordance with Article 5.8.3.6 of the AASHTO-LRFD (1998).

C5.3.4

Recent component test results found out that (Patty et al. 2001):

- *Stiffeners on the girder web in the cap beam region increased maximum capacity of the connection by providing a confining effect to the concrete cap.*
- *Post-tensioning the cap beam increased the initial capacity and decreased the damage level during the initial loading stage, but did not increase ultimate moment and rotation capacities. The detail is much less congested than conventional reinforced concrete cap beams.*

SPECIFICATIONS

5.3.5 Concrete End Diaphragms at Abutments

Concrete end diaphragms may be used at the abutments of steel I-girder bridges and shall be continuous with the deck and extended as close as possible to the bottom flange of the girder. The end diaphragm should be designed to resist the permanent, live, as well as transverse and longitudinal wind and seismic lateral loads. The connection of the diaphragm to the steel girder should be able to resist the longitudinal seismic soil pressures without the girder punching through it. The connection should include continuous reinforcement that is placed both behind the girder and placed through drilled holes in the girder web near the front face of the diaphragm for flexural moments. Headed anchors shall be welded to the girder web to resist longitudinal shear and punching forces.

COMMENTARY

C5.3.5

Concrete end diaphragms are preferred over steel cross frames due to their ability to better mobilize the soil behind the abutment thus reducing seismic loads to the columns. Even if the soil-abutment interaction is not accounted for in the design for the MCE, the soil-abutment interaction will reduce the movement and damage during the FEE events.

SPECIFICATIONS | COMMENTARY

6. DUCTILE COMPONENTS

6.1 General

Ductile components shall be designed and detailed to provide ductile inelastic behavior without significant strength and stiffness degradation, and to prevent failure from non-ductile failure modes, such as elastic buckling (shear, compression, flexural-torsion, torsion) and fracture. Ductile components shall not be spliced in the inelastic region.

6.2 Tension Members

C6.2

Yielding in the gross section shall be the governing failure mode. Fracture in the net section and block shear rupture failure shall be prevented.

Tension bracing members in a CBF system shall be designed to resist at least 30 percent but not more than 70 percent of the total lateral force applied to the CBF system.

This requirement is to provide redundancy and balance to the tensile and compressive strengths in a CBF system.

6.3 Compression Members

C6.3

Inelastic flexural buckling shall be the governing failure mode.

The design strength of a bracing member in axial compression shall be taken as $0.8\phi_c P_n$, where ϕ_c is taken as 0.85 and P_n is the nominal axial compression strength of the brace.

The reduction factor of 0.8 has been prescribed for CBF systems in the previous seismic building provisions (AISC 1992) to account for the degradation of compressive

SPECIFICATIONS

COMMENTARY

strength in the post-buckling region. The 1997 AISC Seismic Provisions have removed this reduction factor for CBFs. It is suggested to apply this strength reduction factor for the steel bridges (Uang et al. 1999). In determining the design forces generated by a bracing member on adjacent capacity-protected components, this reduction factor should not be used, if the application of this reduction factor will lead to a less conservative design.

6.4 Flexural Members

Moment and curvature capacities shall be determined by a moment-curvature analysis based on the specified minimum yield strength of material. The potential plastic hinge locations shall be laterally braced. Shear strength shall be based on specified minimum shear yield strength in web sections in accordance with Article 10.48.8 of the BDS. When the axial compression force due to seismic and permanent loads exceeds $0.15A_gF_y$, the members shall be considered as members subjected to combined flexure and axial force.

6.5 Members Subjected to Combined Flexure and Axial Force

Load-carrying and displacement capacities shall be determined by a moment-curvature analysis based on the expected material properties with consideration of residual stresses and out-of-straightness.

SPECIFICATIONS

COMMENTARY

7. CAPACITY-PROTECTED COMPONENTS

7.1 General

Design strength shall be based on the nominal strength of structural components multiplied by a resistance factor ϕ as follows:

- For fracture in the net section $\phi_f = 0.8$
- For block shear $\phi_{bs} = 0.8$
- For bolts and welds $\phi = 0.8$
- For all other cases $\phi = 1.0$

C7.1

To account for unavoidable inaccuracies in the theory, variation in the material properties, workmanship and dimensions, nominal strength of structural components should be modified by a resistance factor ϕ to obtain the design strength or resistance.

7.2 Tension Members

The nominal strength of a tension member shall be determined in accordance with Articles 10.12.3 and 10.19.4.3 of the BDS. It is the smallest value obtained according to (a) yielding in gross section; (b) fracture in net section; (c) block shear rupture.

7.3 Compression Members

The nominal strength of a compression member shall be determined in accordance with Article 6.9 of the AASHTO-LRFD (AASHTO 1998).

SPECIFICATIONS | COMMENTARY

7.4 Flexural Members

The nominal flexural strength and shear strength of a flexural member shall be determined in accordance to Articles 10.48 of the BDS.

7.5 Members Subjected to Combined Flexure and Axial Force

Members subjected to combined flexure and axial force shall satisfy the provisions specified in Article 6.9 of the AASHTO-LRFD (AASHTO 1998).

7.6 Connections and Splices

7.6.1 General

The nominal strength of connections and splices for ductile members shall not be less than overstrength capacities of members being connected and spliced, respectively.

The design strength of connections and splices for the capacity-protected members shall not be less than design strengths of members being connected and spliced, respectively.

Yielding in the gross section shall be the governing failure mode; fracture in the net section and block shear failure shall be prevented.

Splices shall be designed for the strength of the smaller member spliced.

SPECIFICATIONS

COMMENTARY

7.6.2 Bracing Connections

The nominal strength of bracing connections shall not be less than the overstrength axial tensile capacity of the brace.

The brace shall be terminated on the gusset a minimum of two times the gusset thickness from a line perpendicular to the brace axis about which the gusset plate may bend unrestrained by the beam, columns, or other brace joints (AISC 1997).

The nominal strength of bracing connections shall not be less than the overstrength flexural moment capacity of the brace about the critical buckling axis. An exception to this requirement is permitted when the braced connections meet the requirements in the above paragraph, can accommodate the inelastic rotations associated with brace post-buckling deformations, and have a design strength at least equal to the expected nominal axial compressive strength of the brace.

C7.6.2

Testing (Astaneh et al., 1986) has shown that where a single gusset plate connection is used, the rotation at the end of a brace can be accommodated as long as the brace end is separated by at least two times the gusset thickness from a line perpendicular to the brace centerline, drawn from the point on the gusset plate nearest to the brace end that is constrained from out-of-plane rotation (see Figure C7.6.2). The effect of end fixity should be considered in determining the critical buckling axis if rigid end conditions are used for in-plane buckling, and pinned connections are used for out-of-plane buckling. More information on seismic design of gusset plates can be obtained from Astaneh (1998).

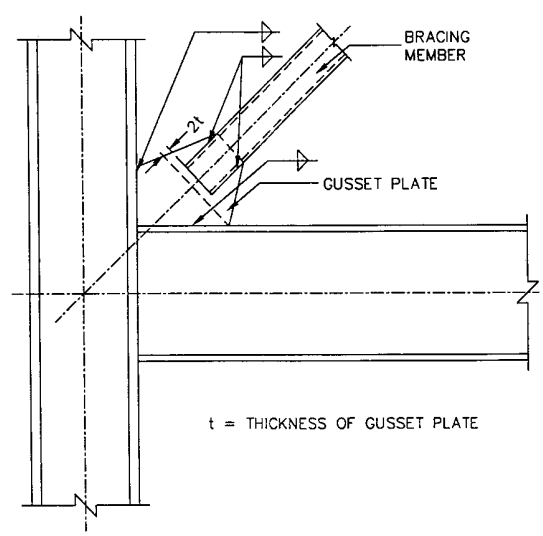

Figure C7.6.2 Brace-to-Gusset Plate Requirement for Buckling Out-of-plane Bracing System

SPECIFICATIONS

7.6.3 Beam-to-Column Connections

The nominal strength of beam-to-column connections and the panel zone (Fig. C7.6.3) in the Moment-Resisting Frames shall not be less than forces generated by overstrength moment, M_{oc}, of the column. The nominal shear strength of the panel zone, V_n, shall be determined by:

$$V_n = 0.58 F_y d_g t_p \qquad (7.6.3\text{-}1)$$

where

d_g = overall girder depth (mm)

t_p = total thickness of the panel zone including doubler plates (mm)

The panel zone thickness, t_p, shall satisfy the following requirement:

$$t_p \geq \frac{d_z + w_z}{90} \qquad (7.6.3\text{-}2)$$

where

d_z = panel zone depth between continuity plates (mm)

w_z = panel zone width between girder flanges (mm)

COMMENTARY

C7.6.3

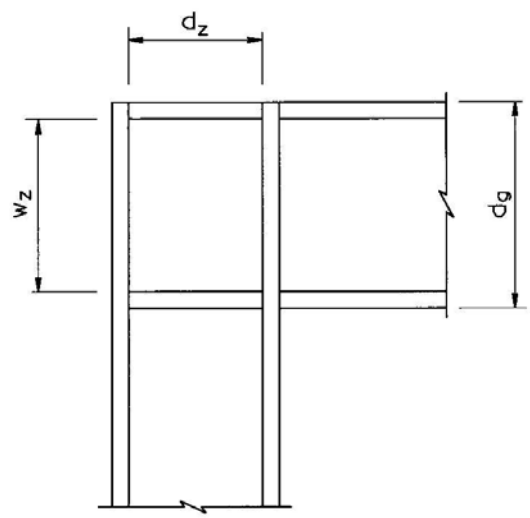

Figure C7.6.3 A Typical Panel Zone

SPECIFICATIONS | COMMENTARY

7.6.4 Gusset Plate Connections

7.6.4.1 General

Nominal strengths of a gusset plate shall not be less than forces generated by the overstrength capacities of connected ductile members and the nominal strengths of connected capacity-protected members. The nominal strength shall be based on the effective width as shown in Fig. C7.6.4.1.

C7.6.4.1

A comprehensive discussion on seismic design of gusset plates can be found in the Report by Astaneh (1998).

Figure C7.6.4.1 shows the effective width for a gusset plate in accordance with Whitmore's method (Whitmore 1952).

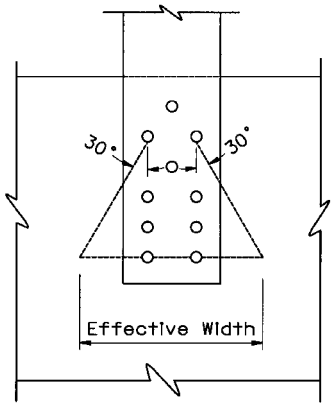

(a) Bolted

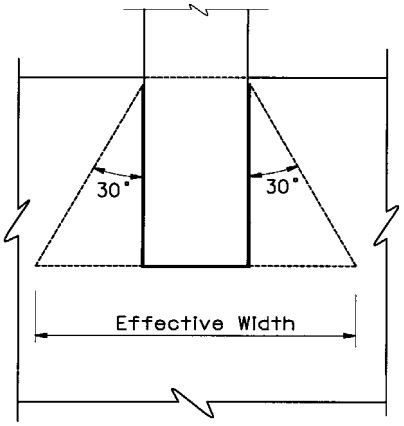

(b) Welded

Figure 7.6.4.1 Effective Width of Gusset Plate

SPECIFICATIONS

7.6.4.2 Limiting Unsupported Edge Length to Thickness Ratio

The unsupported edge length to thickness ratio of a gusset plate shall satisfy:

$$\frac{L_g}{t} \le 2.06\sqrt{\frac{E}{F_y}} \qquad (7.6.4.2\text{-}1)$$

where

L_g = unsupported edge length of a gusset plate (mm)

t = thickness of a gusset plate (mm)

When L_g/t is larger than $1.6\sqrt{E/F_y}$, the compression stress of a gusset plate shall be less than $0.8F_y$. Otherwise, the plate shall be stiffened.

For stiffened edge, the following requirements shall be satisfied:

- For welded stiffeners, slenderness ratio of the stiffener plus a width of gusset plate equal to ten times its thickness shall be $l/r \le 40$.
- For bolted stiffeners, slenderness ratio of the stiffener between fasteners shall be $l/r \le 40$.
- The moment of inertia of the stiffener shall be

$$I_s \ge \begin{cases} 1.83t^4\sqrt{(b/t)^2 - 144} \\ 9.2t^4 \end{cases} \qquad (7.6.4.2\text{-}2)$$

where

I_s = moment of inertia of a stiffener about its strong axis (mm^4)

COMMENTARY

C7.6.4.2

Equation 7.6.4.2-1 is an AASHTO-LRFD (AASHTO 1998) requirement.

The limit of $1.6\sqrt{E/F_y}$ is set forth in Caltrans SFOBB West Span Seismic Retrofit Design Criteria (Caltrans 1997) and validated by UNR Test (Itani, Vesco and Dietrich 1998).

The moment of inertia of the stiffener that is required to develop the post buckling strength of a long plate has been experimentally determined by Eq. (7.6.4.2-2) (AISI 1962).

SPECIFICATIONS

b = width of a gusset plate perpendicular to the edge (mm)

t = thickness of a gusset plate (mm)

7.6.4.3 Tensile Strength

The design tensile strength of a gusset plate shall be:

$$\phi P_n = \phi\, A_g F_y \le \begin{cases} \phi_f\, A_n F_u \\ \phi_{bs} P_{bs} \end{cases} \qquad (7.6.4.3\text{-}1)$$

where

$$P_{bs} = \begin{cases} 0.58\, F_y A_{vg} + F_u A_{tn} & \text{for } A_{tn} \ge 0.58 A_{vn} \\ 0.58\, F_u A_{vn} + F_y A_{tg} & \text{for } A_{tn} < 0.58 A_{vn} \end{cases} \qquad (7.6.4.3\text{-}2)$$

A_n = net cross-sectional area (mm^2)

A_g = gross cross-sectional area (mm^2)

A_{vg} = gross area resisting shear (mm^2)

A_{vn} = net area resisting shear (mm^2)

A_{tg} = gross area resisting tension (mm^2)

A_{tn} = net area resisting tension (mm^2)

F_y = specified minimum yield strength of steel (MPa)

F_u = specified minimum tensile strength of steel (MPa)

COMMENTARY

C7.6.4.3

This requirement is to ensure that the tensile strength is governed by yielding in the gross section, and fracture in the net section and block shear rupture are prevented.

SPECIFICATIONS

7.6.4.4 Compressive Strength

The nominal compressive strength of a gusset plate, P_n, shall be calculated according to Article 6.9.4.1 of the AASHTO-LRFD (AASHTO 1998).

COMMENTARY

C7.6.4.4

AASHTO-LRFD (AASHTO 1998) provides a more rational design formula for columns than the BDS.

Symbol K in AASHTO-LRFD Eqs. (6.9.4.1-1) and (6.9.4.1-2) is the effective length factor, which is equal to 0.6 for the gusset supported by both edges, and 1.2 for the gusset supported by one edge only (AISC 2001); A_s *is the average effective cross section area defined by Whitmore's method; l is the perpendicular distance from the Whitmore section to the interior corner of the gusset. For members that are not perpendicular to each other as shown in Figure C7.6.4.4 (AISC 2001), l can be alternatively determined as the average value of*

$$l = \frac{L_1 + L_2 + L_3}{3} \qquad \text{(C7.6.4.4)}$$

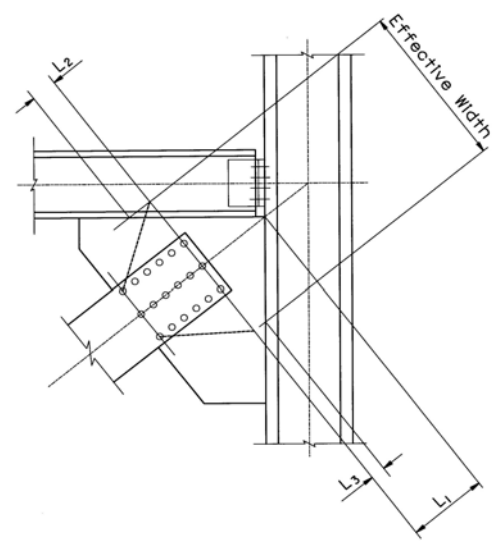

Figure C7.6.4.4 Gusset Plate Connection

SPECIFICATIONS

COMMENTARY

where

L_1 = *distance from the centerline of the Whitmore section to the interior corner of a gusset plate (mm)*

L_2, L_3 = *distance from the outside corner of the Whitmore section to the edge of a member; negative value shall be used when the part of Whitmore section enters into the member (mm)*

7.6.4.5 In-Plane Moment Strength (Strong Axis)

The nominal moment strength of a gusset plate, M_n, shall be determined by:

$$M_n = ZF_y \qquad (7.6.4.5)$$

where

Z = plastic section modulus about the strong axis of the cross section of a gusset plate (mm^3)

7.6.4.6 In-Plane Shear Strength

The nominal shear strength of a gusset plate, V_n, shall be determined by:

$$V_n = 0.58 F_y A_g \qquad (7.6.4.6)$$

where

A_g = gross area of a gusset plate (mm^2)

SPECIFICATIONS

COMMENTARY

7.6.4.7 Combined Moment, Shear and Axial Force

The full yield strength of a gusset plate subjected to a combination of in-plane moment, shear and axial force shall be determined by the following equations (ASCE 1971):

$$\frac{M}{M_n} + \left(\frac{P}{P_y}\right)^2 + \frac{\left(\frac{V}{V_n}\right)^4}{\left[1 - \left(\frac{P}{P_y}\right)^2\right]} = 1 \qquad (7.6.4.7\text{-}1)$$

where

V = shear force due to seismic and permanent loads (N)

M = moment due to seismic and permanent loads (N-mm)

P = axial force due to seismic and permanent loads (N)

M_n = nominal moment strength determined by Eq. (7.6.4.5) (N-mm)

V_n = nominal shear strength determined by Eq. (7.6.4.6) (N)

P_y = yield axial strength (A_gF_y) (N)

7.6.4.8 Out-of-Plane Forces Consideration

For double gusset plate connections, out-of-plane moment shall be resolved into a couple of tension and compression forces acting on the near and far side plates. Separate shear connections shall be provided to resist out-of-plane shear.

SPECIFICATIONS

For single gusset plate connections, out-of-plane moment and shear are about the weak axis.

7.7 Fasteners and Holes

The nominal strength of a fastener for shear, tension, combined shear and tension, shall be calculated in accordance with Article 10.56.1.3 of the BDS.

The bearing capacity on fastener holes shall be calculated in accordance with Article 10.56.1.3.4 of the BDS.

Additional tension forces resulting from prying action must be accounted for in determining applied loads on fasteners. The connected elements (primarily angles) must also be checked for adequate flexural strength.

7.8 Anchor Rods and Anchorage Assemblies

Steel superstructures and columns shall be anchored with sufficient capacity to transfer the lateral force demands to substructures or foundations. Shear and tension (uplift) resisting elements preferably shall be separated.

Anchor bolts may be used to resist small shear forces, but shear keys are the preferred method of resisting lateral seismic loads. Shear keys shall be designed in accordance with Article 4.9.

COMMENTARY

C7.7

A325 high strength bolts shall be used. A490 bolts are not recommended. If considered, however, the designer shall consult with the Steel Committee.

Prying action forces may be determined from the equations presented in AISC-LRFD Manual (AISC, 2001).

C7.8

SPECIFICATIONS

Yielding of the anchor rods shall be the governing failure mode. A brittle concrete tensile failure shall be prevented. Edge distance and embedment length of anchor rods shall be such that a ductile failure occurs. Concrete failure surfaces shall be based on a shear stress of $0.166\sqrt{f'_c}$ (f'_c in MPa) or $2\sqrt{f'_c}$ (f'_c in psi) and account for edge distances and overlapping shear zones.

Capacity of anchorage assemblies in concrete shall be based on reinforced concrete behavior with bonded or unbonded anchor rods under combined axial load and bending moment. All anchor rods outside of the compressive region may be taken to full minimum tensile strength and anchor rods within the compression regions may be ignored.

The nominal strength of anchor rods for shear, tension and combined shear and tension, shall be calculated according to Article 10.56.1.3 of the BDS.

When anchor rods are required to resist a calculated tensile force T_u, headed anchor rods shall be used to form a more positive anchorage. Hooked anchor rods shall not be used for superstructure anchorage. High strength steels are not recommended for use in hooked rods. Quenched and tempered anchor rods shall not be welded.

COMMENTARY

The AISC-LRFD Manual (AISC 2001) Table 8.26 provides the minimum edge distance and embedment length for typical anchor rods. The PCI Design Handbook (PCI 1999) provides method of calculating strength of embebbed bolts and rods.

APPENDIX A

STRESS-STRAIN RELATIONSHIPS FOR STRUCTURAL STEEL

This appendix presents stress-strain relationships of structural steel for the use in a seismic analysis.

For structural steel, its stress-strain relationship under a monotonic loading can be idealized with four parts: elastic, plastic, strain hardening and softening as shown in Fig. A.1.

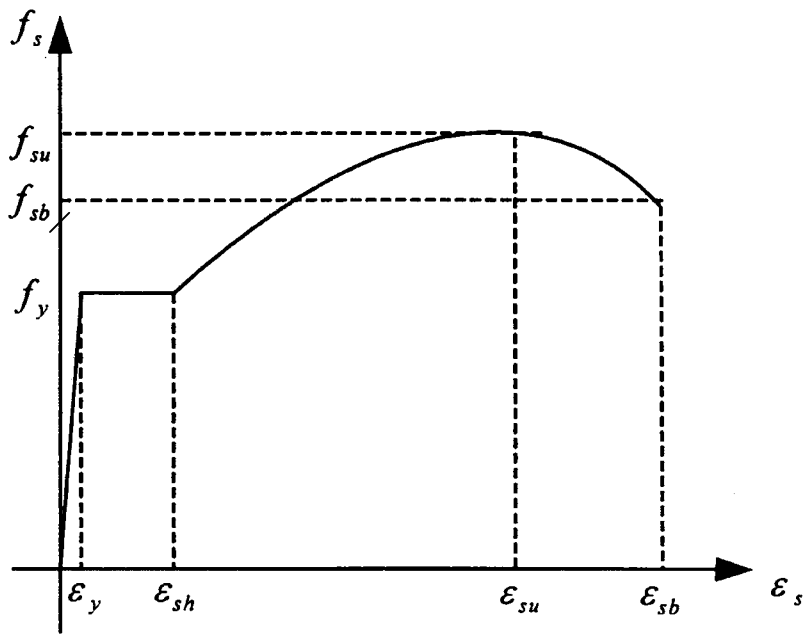

Figure A.1 Idealized Stress-Strain Curve for Structural Steel

The simplest multi-linear expression for idealized stress-strain curve of structural steel is:

$$f_s = \begin{cases} E_s \varepsilon_s & 0 \le \varepsilon_s \le \varepsilon_y \\ f_y & \varepsilon_y < \varepsilon_s \le \varepsilon_{sh} \\ f_y + \dfrac{\varepsilon_s - \varepsilon_{sh}}{\varepsilon_{su} - \varepsilon_{sh}}\left(f_{su} - f_y\right) & \varepsilon_{sh} < \varepsilon_s \le \varepsilon_{su} \\ f_{su} - \dfrac{\varepsilon_s - \varepsilon_{su}}{\varepsilon_{sb} - \varepsilon_{su}}\left(f_{su} - f_{sb}\right) & \varepsilon_{su} < \varepsilon_s \le \varepsilon_{sb} \end{cases} \tag{A-1}$$

where

f_s = stress in steel (MPa)

ε_s = strain in steel

E_s = modulus of elasticity of steel (MPa)

f_y = yield stress of steel (MPa)

ε_y = yield strain of steel

ε_{sh} = strain at the onset of strain hardening of steel

f_{su} = maximum stress of steel (MPa)

ε_{su} = strain corresponding to the maximum stress of steel

f_{sb} = rupture stress of steel (MPa)

ε_{sb} = rupture strain of steel

For both strain-hardening and softening portions, the following expression proposed by Holzer et al. (1975) may be used.

$$f_s = f_y\left[1+\frac{\varepsilon_s-\varepsilon_{sh}}{\varepsilon_{su}-\varepsilon_{sh}}\left(\frac{f_{su}}{f_y}-1\right)\exp\left(1-\frac{\varepsilon_s-\varepsilon_{sh}}{\varepsilon_{su}-\varepsilon_{sh}}\right)\right] \quad \text{for } \varepsilon_{sh}<\varepsilon_s\le\varepsilon_{sb} \qquad \text{(A-2)}$$

The nominal limiting values for stress and strain proposed by Holzer et al. (1975) is shown in Table A-1.

Table A-1 Nominal Limiting Values for Steel Stress-Strain Curves

f_y (MPa) (ksi)	f_u (MPa) (ksi)	ε_y	ε_{sh}	ε_{su}	ε_{sb}
280 (40)	550 (80)	0.00138	0.0230	0.140	0.200
420 (60)	730 (106)	0.00207	0.0060	0.087	0.136
520 (75)	900 (130)	0.00259	0.0027	0.073	0.115

APPENDIX B

EFFECTIVE SECTION PROPERTIES

This appendix presents formulas of effective section properties for latticed members as shown in Fig. B.1 for possible use in a seismic analysis (Duan, Reno and Lynch 2000).

B.1. Cross-sectional Area - *A*

The contribution of lacing bars for carrying vertical load is assumed negligible. The cross-sectional area of latticed member is only based on individual main components.

$$A = \sum A_i \tag{B-1}$$

where

A_i = cross-sectional area of an individual main component i (mm^2)

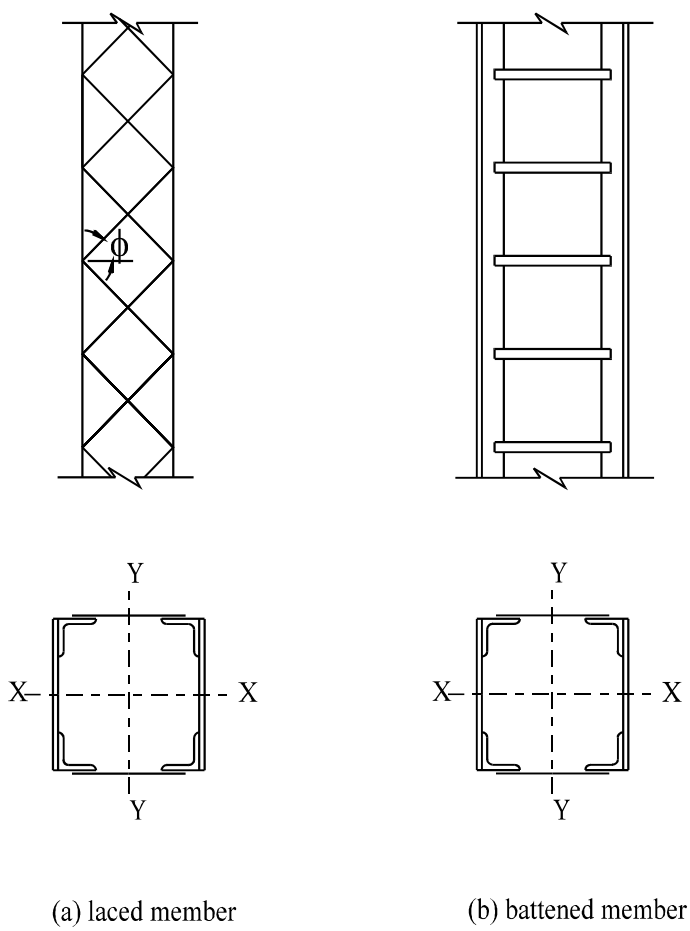

Figure B.1 Typical Latticed Members

B.2. Moment of Inertia - *I*

B2.1. Lacing Bars or Battens in Plane of Web (bending about y-y axis in Fig. B.1)

$$I_{y-y} = \sum I_{(y-y)i} + \beta_m \sum A_i x_i^2 \qquad \text{(B-2)}$$

where

I_{y-y} = moment of inertia of a section about *y-y* axis considering shear transferring capacity (mm^4)

I_i = moment of inertia of a main individual component *i* (mm^4)

x_i = distance between *y-y* axis and the centroid of the main individual component *i* (mm)

β_m = reduction factor for the moment of inertia

<u>For laced member (Fig. B.1a)</u>

$$\beta_m = \frac{m \sin \phi \times smaller\ of \begin{cases} m_l\ (P_n^{comp} + P_n^{ten}) \\ m_l\, n_r\, A_r\, (0.6\, F_u) \end{cases}}{F_{yf}\ A_f} \leq 1.0 \qquad \text{(B-3a)}$$

<u>For battened member (Fig. B.1b)</u>

$$\beta_m = \frac{m \times smaller\ of \begin{cases} m_b\ A_b\, (0.6\, F_{yw}) \\ m_b\, (2\, M_{p-b} / h) \\ m_b n_r\ A_r\, (0.6\, F_u) \end{cases}}{F_{yf}\ A_f} \leq 1.0 \qquad \text{(B-3b)}$$

where

ϕ = angle between a diagonal lacing bar and the axis perpendicular to the member axis (see Fig. B.2)

A_b = cross-sectional area of batten plate (mm^2)

A_f = flange area to which battens or laces are attached (mm^2)

F_{yf} = specified minimum yield strength of a flange component (MPa)

F_{yw} = specified minimum yield strength of a web component (battens or lacing bars) (MPa)

F_u = specified minimum tensile strength of fasteners (MPa)

A_r = cross-sectional area of a fastener (mm^2)

n_r = number of fasteners of connecting lacing bar or battens to the main component at one connection

m = number of panels between point of maximum calculated moment to point of zero moment to either side (as an approximation, the number of panels in half of the main member length (L/2) may be used)

m_b = number of batten planes

m_l = number of lacing planes

$M_{p\text{-}b}$ = plastic moment of a batten plate about strong axis (N-mm)

P_n^{comp} = nominal compressive strength of lacing bar, can be determined by AISC-LRFD (1999) column curve (N)

P_n^{ten} = nominal tensile strength of lacing bar, can be determined by AISC-LRFD (1999) (N)

B.2.2. Lacing Bars or Battens in Plane of Flange (bending about x-x axis in Fig. B.1)

$$I_{x-x} = \sum I_{(x-x)i} + \sum A_i\, y_i^2 \qquad \text{(B-4)}$$

B.3. Plastic Section Modulus - *Z*

B.3.1. Lacing Bars or Battens in Plane of Web (bending about y-y axis in Fig. B.1)

$$Z_{y-y} = \beta_m \sum x_i^* \; A_i^* \qquad \text{(B-5)}$$

where

$Z_{y\text{-}y}$ = plastic section modulus of a section about the plastic *y-y* neutral axis (mm^3)

x_i^* = distance between the center of the gravity of a section A_i^* and the plastic neutral *y-y* axis (mm)

y_i^* = distance between the center of the gravity of a section A_i^* and the plastic neutral *x-x* axis (mm)

A_i^* = cross-sectional area above or below the plastic neutral axis (mm^2)

B.3.2. Lacing Bars or Battens in Plane of Flange (bending about x-x axis in Fig. B.1)

$$Z_{x-x} = \sum y_i^* \; A_i^* \tag{B-6}$$

where

Z_{x-x} = plastic section modulus of a section about the plastic *x-x* neutral axis (mm^3)

B.4. Torsional Constant - *J*

$$J = \frac{4\ (A_{close})^2}{\sum \frac{b_i}{t_i}} \tag{B-7}$$

where

A_{close} = area enclosed within the mean dimension for a box-shaped section (mm^2)

b_i = length of the particular segment of a section (mm)

t_i = average thickness of a segment b_i (mm)

For determination of torsional constant of a latticed member, the lacing bars or batten plates can be replaced by reduced equivalent thin-walled plates defined as:

$$A_{equiv} = \beta_t \; A_{equiv}^* \tag{B-8}$$

<u>For laced member (Fig. B.1a)</u>

$$A_{equiv}^* = 3.12\ A_d \sin\phi \cos^2\phi \tag{B-9a}$$

<u>For battened member (Fig. B.1b)</u>

$$A_{equiv}^* = 74.88 \frac{1}{\frac{2a\,h}{I_b} + \frac{a^2}{I_f}} \tag{B-9b}$$

$$t_{equiv} = \frac{A_{equiv}}{h} \tag{B-10}$$

where

a = distance between two battens along the member axis (mm)

A_{equiv} = cross-sectional area of a thin-walled plate equivalent to lacing bars considering shear transferring capacity (mm^2)

A^*_{equiv} = cross-sectional area of a thin-walled plate equivalent to lacing bars or battens assuming full section integrity (mm^2)

t_{equiv} = thickness of equivalent thin-walled plate (mm)

h = depth of a member in the lacing plane (mm)

A_d = cross-sectional area of all diagonal lacings in one panel (mm^2)

I_b = moment of inertia of a batten plate (mm^4)

β_t = reduction factor for the torsion constant

For laced member (Fig. B.1a)

$$\beta_t = \frac{\cos\phi \times \textit{smaller of} \begin{cases} P_n^{comp} + P_n^{ten} \\ n_r A_r (0.6 F_u) \end{cases}}{0.6 F_{yw} A^*_{equiv}} \leq 1.0 \qquad \text{(B-11a)}$$

For battened member (Fig. B.1b)

$$\beta_t = \frac{\textit{smaller of} \begin{cases} A_b (0.6 F_{yw}) h / a \\ 2 M_{p-b} / a \\ n_r A_r (0.6 F_u) h / a \end{cases}}{0.6 F_{yw} A^*_{equiv}} \leq 1.0 \qquad \text{(B-11b)}$$

APPENDIX C

YIELD SURFACE EQUATIONS FOR DOUBLY SYMMETRICAL STEEL SECTIONS

This appendix presents the yield surface expressions for typical steel sections suitable for use in an inelastic static analysis

The general shape of yield surface for a doubly symmetrical steel section as shown in Fig. C.1 can be described approximately by the following general equation (Duan and Chen 1990).

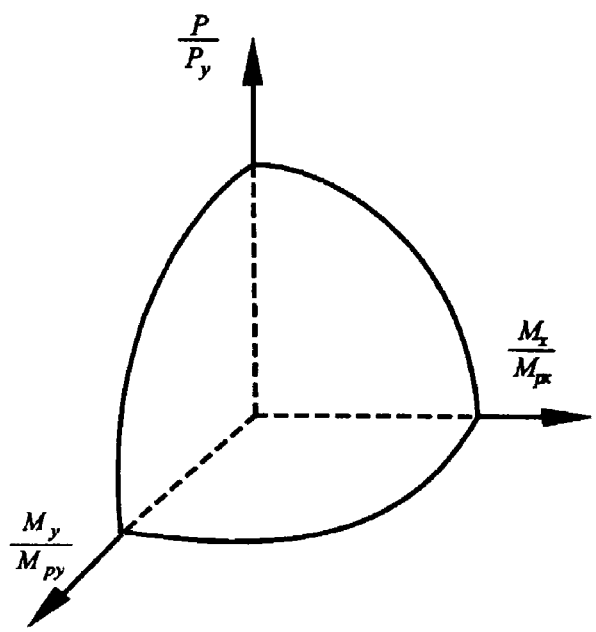

Figure C.1 Typical Yield Surface for Structural Steel Sections

$$\left(\frac{M_x}{M_{pcx}}\right)^{\alpha_x} + \left(\frac{M_y}{M_{pcy}}\right)^{\alpha_y} = 1.0 \qquad \text{(C-1)}$$

where M_{pcx} and M_{pcy} are the moment capacities about respective axes, reduced for the presence of axial load; and can be obtained by the following formulas:

$$M_{pcx} = M_{px}\left[1-\left(\frac{P}{P_y}\right)^{\beta_x}\right] \tag{C-2}$$

$$M_{pcy} = M_{py}\left[1-\left(\frac{P}{P_y}\right)^{\beta_y}\right] \tag{C-3}$$

where P is axial load; M_{px} and M_{py} are plastic moments about x-x and y-y principal axes, respectively; α_x, α_y, β_x and β_y are parameters which depend on cross sectional shapes and area distribution and listed in Table C.1.

Equation (C-1) represents a smooth and convex surface in the three-dimensional stress-resultant space. It meets all special conditions and is easy to implement in a computer-based structural analysis.

Table C.1 Parameters for Doubly Symmetrical Steel Sections

Section Types	α_x	α_y	β_x	β_y
Solid rectangular	1.7 +1.3 (P/P_y)	1.7 +1.3 (P/P_y)	2.0	2.0
Solid circular	2.0	2.0	2.1	2.1
I-shape	2.0	1.2 + 2 (P/P_y)	1.3	2 + 1.2 (A_w/A_f)
Thin-walled box	1.7 + 1.5 (P/P_y)	1.7 + 1.5 (P/P_y)	$2-0.5\,\overline{B} \geq 1.3$	$2-0.5\,\overline{B} \geq 1.3$
Thin-walled circular	2.0	2.0	1.75	1.75
where $\overline{B}$ is ratio of width to depth of box section with respect to bending axis				

Orbison (1982) developed the following equation for a wide-flange section by trial and error and curve fitting:

$$\begin{aligned} &1.15\left(\frac{P}{P_y}\right)^2+\left(\frac{M_x}{M_{px}}\right)^2+\left(\frac{M_y}{M_{py}}\right)^4+3.67\left(\frac{P}{P_y}\right)\left(\frac{M_x}{M_{px}}\right)^2 \\ &+3.0\left(\frac{P}{P_y}\right)^2\left(\frac{M_y}{M_{py}}\right)^2+4.65\left(\frac{M_x}{M_{px}}\right)^4\left(\frac{M_y}{M_{py}}\right)^2 = 1.0 \end{aligned} \tag{C-4}$$

APPENDIX D

DESIGN FORMULAS (U.S. UNITS)

This appendix provides design formulas which are unit sensitive with U.S. Units.

Table 4.6 Limiting Slenderness Parameters

Member Classification		Limiting Slenderness Parameters	
Ductile	Compression Member	λ_{cp}	0.75
	Flexural Member	λ_{bp}	$2500 / F_y$
Capacity-Protected	Compression Member	λ_{cp}	1.5
	Flexural Member	λ_{bp}	$750 / \sqrt{F_y}$

$\lambda_c = \left(\frac{KL}{r\pi}\right)\sqrt{\frac{F_y}{E}}$ (slenderness parameter for compression members)

$\lambda_b = \frac{L}{r_y}$ (slenderness parameter for flexural members)

λ_{cp} = limiting slenderness parameter for compression members
λ_{bp} = limiting slenderness parameter for flexural members
K = effective length factor of a member
L = unsupported length of a member (in.)
r = radius of gyration (in.)
r_y = radius of gyration about the minor axis (in.)
F_y = specified minimum yield strength of steel (ksi)
E = modulus of elasticity of steel (29,000 ksi)

$$T = 2\pi\sqrt{\frac{m}{K_{trans}}} = 2\pi\sqrt{\frac{W}{g\,K_{trans}}} = 0.32\sqrt{\frac{W}{K_{trans}}} \qquad \text{(E-1)}$$

where
W = sum of the superstructure weight and a half of substructure weight in the tributary area (kips)
K_{trans} = lateral stiffness of a girder bridge bent in the transverse direction (kips/in.)

SPECIFICATIONS COMMENTARY

Table 4.5 Limiting Width-Thickness Ratios

No	Description of Elements	Examples	Width-Thickness Ratios	λ_r	λ_p
	UNSTIFFENED ELEMENTS				
1	Flanges of I-shaped rolled beams and channels in flexure	Figure 4.5(a) Figure 4.5(c)	b/t	$\mathbf{\frac{370}{\sqrt{F_y - 69}}}$	$\mathbf{\frac{137}{\sqrt{F_y}}}$
2	Outstanding legs of pairs of angles in continuous contact; flanges of channels in axial compression; angles and plates projecting from beams or compression members	Figure 4.5(d) Figure 4.5(e)	b/t	$\mathbf{\frac{250}{\sqrt{F_y}}}$	$\frac{137}{\sqrt{F_y}}$
	STIFFENED ELEMENTS				
3	Flanges of square and rectangular box and hollow structural section of uniform thickness subject to bending or compression; flange cover plates and diaphragm plates between lines of fasteners or welds.	Figure 4.5(b)	b/t	$\mathbf{\frac{625}{\sqrt{F_y}}}$	$\mathbf{290/\sqrt{F_y}}$ (tubes) $\mathbf{400/\sqrt{F_y}}$ (others)
4	Unsupported width of cover plates perforated with a succession of access holes	Figure 4.5(d)	b/t	$\mathbf{\frac{830}{\sqrt{F_y}}}$	$\mathbf{\frac{400}{\sqrt{F_y}}}$
5	All other uniformly compressed stiffened elements, i.e., supported along two edges.	Figures 4.5(a) (c),(d),(f)	b/t h/t_w	$\mathbf{\frac{665}{\sqrt{F_y}}}$	$290/\sqrt{F_y}$ (w/lacing) $400/\sqrt{F_y}$ (others)
6	Webs in flexural compression	Figures 4.5(a) (c),(d),(f)	h/t_w	$\mathbf{\frac{2550}{\sqrt{F_y}}}$	$\mathbf{\frac{1365}{\sqrt{F_y}}}$
7	Webs in combined flexural and axial compression	Figures 4.5(a) (c),(d),(f)	h/t_w	$\mathbf{\frac{2550}{\sqrt{F_y}} \times \left(1 - \frac{0.74P}{\phi_b P_y}\right)}$	For $\mathbf{P_u \le 0.125\phi_b P_y}$ $\mathbf{\frac{1365}{\sqrt{F_y}}\left(1 - \frac{1.54P}{\phi_b P_y}\right)}$ For $\mathbf{P_u > 0.125\,\phi_b P_y}$ $\mathbf{\frac{500}{\sqrt{F_y}}\left(2.33 - \frac{P}{\phi_b P_y}\right) \ge \frac{665}{\sqrt{F_y}}}$
8	Longitudinally stiffened plates in compression	Figure 4.5(e)	b/t	$\frac{297\sqrt{k}}{\sqrt{F_y}}$	$\frac{197\sqrt{k}}{\sqrt{F_y}}$
9	Round HSS in axial compression or flexure		D/t	$\frac{17930}{F_y}$	$\mathbf{\frac{8950}{F_y}}$

Notes:
1. Width-Thickness Ratios shown in **Bold** are from AISC-LRFD (1999a) and AISC-Seismic Provisions (1997). F_y is MPa
2. k = buckling coefficient specified by Article 6.11.2.1.3a of AASHTO-LRFD (AASHTO,1998)

for $n = 1$, $\boldsymbol{k} = (8\boldsymbol{I_s} / \boldsymbol{bt}^3)^{1/3} \le 4.0$ for $n = 2,3,4$ and 5, $\boldsymbol{k} = (14.3\boldsymbol{I_s} / \boldsymbol{bt}^3\boldsymbol{n}^4)^{1/3} \le 4.0$

n = number of equally spaced longitudinal compression flange stiffeners
I_s = moment of inertia of a longitudinal stiffener about an axis parallel to the bottom flange and taken at the base of the stiffener

APPENDIX E

LATERAL STIFFNESS OF GIRDER BRIDGES IN TRANSVERSE DIRECTION

This appendix presents the lateral stiffness calculation for a steel girder bridge bent in the transverse direction as shown in Figure E.1. The lateral stiffness may used to estimate the period of fundamental mode of vibration in the transverse direction.

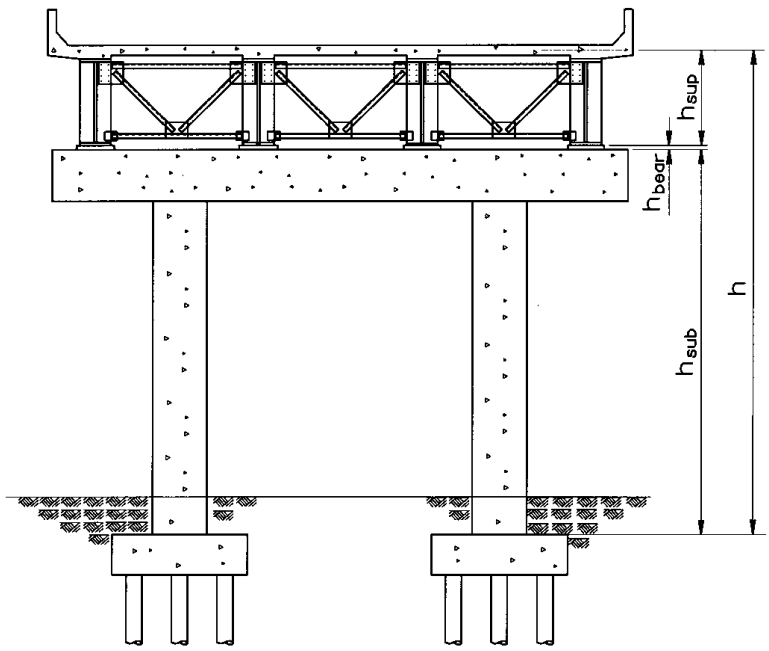

Figure E.1. A Typical Steel Girder Bridge Bent

The fundamental period in the transverse direction is given by:

$$T = 2\pi\sqrt{\frac{m}{K_{trans}}} \qquad \text{(E-1)}$$

where

m = sum of the superstructure mass and a half of substructure mass in the tributary area (kg)

K_{trans} = lateral stiffness of a girder bridge bent in the transverse direction (kN/mm)

Lateral Stiffness

$$K_{trans} = \frac{1}{\frac{1}{K_{sup}} + \frac{\alpha_{bear}}{K_{bear}} + \frac{\alpha_{sub}}{K_{sub}}} \tag{E-2}$$

$$\alpha_{bear} = 1 + 3\left(\frac{h_{sup}}{h_{bear}}\right) + 3\left(\frac{h_{sup}}{h_{bear}}\right)^2 \tag{E-3}$$

$$\alpha_{sub} = 1 - 3\left(\frac{h}{h_{sub}}\right) + 3\left(\frac{h}{h_{sub}}\right)^2 \tag{E-4}$$

where

h_{sup} = height of the girder superstructure measured from the bottom of the girder flange to central gravity of the concrete deck (mm)

h_{bear} = height of a bearing (mm)

h_{sub} = height of the substructure (mm)

h = height of a girder bridge = $h_{sup} + h_{sup} + h_{sub}$ (mm)

K_{sup} = lateral stiffness of the superstructure at a bent (kN/mm) (kN/mm)

K_{sub} = lateral stiffness of the substructure at a bent (N/mm)

K_{bear} = lateral stiffness of bearings at a bent (kN/mm)

Stiffness of End Cross Frames

$$K_{sup} = \sum K_{endf} + \sum K_{sg} \tag{E-5}$$

$$K_{sg} = \frac{\alpha_{fix} E I_{sg}}{h_{sg}^3} \tag{E-6}$$

where

K_{endf} = lateral stiffness of an end cross frame/diaphragm (kN/mm)

K_{sg} = lateral stiffness of a steel girder (kN/mm)

I_{sg} = moment of inertia of a stiffened girder in the bearing location (mainly due to bearing stiffeners) in the lateral direction (mm^4)

h_{sg} = height of a steel girder (mm)

E = modulus of elasticity of steel (kPa)

α_{fix} = fixity factor, equal to 12 if full fixity is provided at both flanges of a steel girder; 3 if one end is fully fixed and other one pinned; and 0 if both ends are pinned.

It is the engineer's judgement to determine the level of fixity provided at the ends of girders. It should be noted that the most conservative solution is not obtained when zero fixity is assumed because fixity also adds strength to the diaphragms. The role of the ductile diaphragms is to limit the magnitude of the maximum forces that can be developed in the substructure.

For EBF Cross Frames as shown in Figure E.2 (Zahrai and Bruneau, 1998)

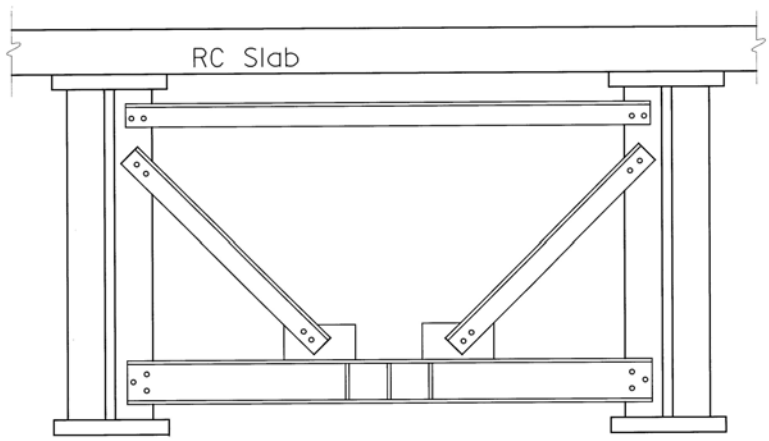

Figure E.2. A Typical EBF Ductile Cross Frame

$$K_{endf} = \frac{E}{\dfrac{l_b}{2A_b\cos^2\alpha} + \dfrac{a}{2A_l} + \dfrac{e^2H^2}{12L_sI_l} + \dfrac{1.3eH^2}{aL_sA_{s,l}} + \dfrac{H\tan^2\alpha}{2A_g}} \qquad \text{(E-7)}$$

where

l_b = length of each brace (mm)

A_b = cross-sectional area of each brace (mm^2)

L_s = girder spacing (mm)

a = length of the beam outside of a link (mm)

e = length of a shear link (mm)

I_l = moment of inertia of a shear link (mm^4)

A_l = cross-sectional area of a shear link (mm2)

$A_{s,l}$ = shear area of a shear link (mm^2)

H = height of a stiffened girder (mm)

A_g = area of a stiffened girder (mm^2)

α = brace's angle with the horizontal direction

For X or V-Type Cross Frames

$$K_{endf} = \frac{2EA_b \cos^2\alpha}{l_b} \tag{E-8}$$

APPENDIX F

REFERENCES

1. AASHTO. (1998). *LRFD Bridge Design Specifications*, 2nd Ed., and 1999, 2000 and 2001 Interims, American Association of State Highway and Transportation Officials, Washington, DC.
2. ACI. (1999). *Building Requirements for Structural Concrete (ACI 318-99) and Commentary (ACI 318R-99)*, American Concrete Institute, Farmington Hills, MI.
3. AISC. (1992). *Seismic Provisions for Structural Steel Buildings*, American Institute of Steel Construction, Chicago, IL.
4. AISC. (1999a). *Load and Resistance Factor Design Specification for Structural Steel Buildings*, 3rd Ed., American Institute of Steel Construction, Chicago, IL.
5. AISC. (2001). *Manual of Steel Construction, Load and Resistance Factor Design,* 3rd Ed., American Institute of Steel Construction, Chicago, IL.
6. AISC. (1997). *Seismic Provisions for Structural Steel Buildings*, American Institute of Steel Construction, Chicago, IL.
7. AISC. (1999b). *Seismic Provisions for Structural Steel Buildings (1997) Supplement No. 1* American Institute of Steel Construction, Chicago, IL.
8. AISC. (2000). *Seismic Provisions for Structural Steel Buildings*, (1997) *Supplement No. 2* American Institute of Steel Construction, Chicago, IL.
9. AISI. (1962). *Light Gage Cold-Formed Steel Design Manual*, American Iron and Steel Institute, Washington, DC.
10. ASCE. (1971). *Plastic Design in Steel, A Guide and Commentary*, American Society of Civil Engineers, New York, NY.
11. ATC (1996). *Improved Seismic Design Criteria for California Bridges: Provisional Recommendations*, (ATC-32), Applied Technology Council, Redwood City, CA.
12. Astaneh, A. A., Goel, S. C., and Hanson, R. D. (1986). "Earthquake-resistant Design of Double Angle Bracings," *Engineering Journal*, AISC, 23(4).
13. Astaneh, A. A. (1998). "Seismic Behavior and Design of Gusset Plate," *Steel Tips*, Structural Steel Education Council, Moraga, CA.

14. Caltrans. (1995a). *Bridge Memo to Designers Manual,* California Department of Transportation, Sacramento, CA.
15. Caltrans. (1995b). *Bridge Design Aids Manual,* California Department of Transportation, Sacramento, CA.
16. Caltrans. (1997). *San Francisco-Oakland Bay Bridge West Spans Seismic Retrofit Design Criteria*, Final Draft, California Department of Transportation, Sacramento, CA.
17. Caltrans. (1999). *Memo to Designers 20-1 Seismic Design Methodology,* California Department of Transportation, Sacramento, CA.
18. Caltrans. (2000a). *Bridge Design Specifications,* California Department of Transportation, Sacramento, CA.
19. Caltrans. (2000b). *Standard Specifications,* California Department of Transportation, Sacramento, CA.
20. Caltrans. (2001). *Seismic Design Criteria Version 1.2*. California Department of Transportation, Sacramento, CA, December.
21. Carden, L., Garcia-Alvarez, S., Itani, A, and Buckle, I. (2001). "Cyclic Response of Steel Plate Girder Bridges in the Transverse Direction," *The Sixth Caltrans Seismic Research Workshop*, Divisions of Engineering Services, California Department of Transportation, Sacramento, CA, June 12-13.
22. Chen, W. F., and Atsuta, T. (1977). *Theory of Beam-Columns*, Vol.1 and 2, McGraw-Hill Inc., New York, NY.
23. Chen, W. F., and Toma, S. (1994). *Advanced Analysis of Steel Frames*, CRC Press, Boca Raton, FL.
24. Duan, L. and Chen, W. F. (1990). "A Yield Surface Equation for Doubly Symmetrical Section," *Structural Engineering*, 12(2), pp. 114-119.
25. Duan, L., Reno, M. and Lynch J. (2000). "Section Properties for Latticed Members of San Francisco-Oakland Bay Bridge," *J. Bridge Engrg*., ASCE, 5(2), pp. 156-164.
26. Duan, L., Reno, M. and Uang, C.M. (2002). "Effect of Compound Buckling on Compression Strength of Built-up Member," *Engrg. J*., AISC, 39(1), (in Press).
27. Fehling, E., Pauli, W. and Bouwkamp, J. G. (1992). "Use of Vertical Shear-Links in Eccentrically Braced Frames," *Proc., 10th World Conf. on Earthquake Engrg*., Madrid, Vol. 9, pp. 4475-4479.

28. Frosch, R. J. (1999). "Shear Transfer between Concrete Elements Using Steel Pipe Connection," *ACI Structural Journal*, 96(6), pp. 1003-1008.
29. Holzer, S.M., et al. (1975). SINDER. "A Computer Code for General Analysis of Two-Dimensional Reinforced Concrete Structures," *Report* AFWL-TR-74-228 Vol.1. Air Force Weapons Laboratory, Kirtland, AFB, NM.
30. ICBO, (1997). *Uniform Building Code*, International Conference of Building Officials, Whitter, CA.
31. Itani, A. M. (1997). "Cyclic Behavior of Richmond-San Rafael Tower Links," *Report* No. CCEER 99-4, Center for Civil Engineering Earthquake Research, University of Nevada, Reno, NV
32. Itani, A. M. and Sedarat, H. (2000). "Seismic Analysis and Design of the AISI LRFD Design Examples of Steel Highway Bridges," *Report* No. CEER 00-8, Center for Civil Engineering Earthquake Research, University of Nevada, Reno, NV.
33. Itani, A. M., Vesco, T. D. and Dietrich, A M. (1998). "Cyclic Behavior of As-Built Laced Members with End Gusset Plates on the San Francisco-Oakland Bay Bridge," *Report* No. CCEER 98-01, Center for Civil Engineering Earthquake Research, University of Nevada, Reno, NV.
34. King, W. S., White, D. W. and Chen, W. F. (1992). "Second-Order Inelastic Analysis Methods for Steel-Frame Design," *J. Struct. Engrg*., ASCE, 118(2), pp. 408-428.
35. Levy, R., Joseph, F., Spillers, W. R. (1997). "Member Stiffness with Offset Hinges," *J. Struct. Engrg*., ASCE, 123(4), pp. 527-529.
36. Nakashima, M. (1995). "Strain-Hardening Behavior of Shear Panels Made of Low-Yield Steel. I: Test," *J. Struct. Engrg.*, ASCE, 121(12), pp. 1742-1749.
37. NCHRP 12-49 (2001). *Recommended LRFD Guidelines for the Seismic Design of Highway Bridges, Part I: Specifications and Part II: Commentary and Appendixes*, NCHRP 12-49 Project Team, MCEER, State University of New York at Buffalo, Buffalo, NY.
38. Orbison, J. G. (1982). *Nonlinear Static Analysis of Three-dimensional Steel Frames*, Dept. of Structural Engineering, Cornell University, NY.
39. Patty, J. Seible F. and Uang, C .M. (2001). "Longitudinal Seismic Response of Concrete Substructure Steel Superstructure Integral Bridge Connections", *The Sixth Caltrans Seismic Research Workshop*, Divisions of Engineering Services, California Department of Transportation, Sacramento, CA, June 12-13.

40. PCI. (1999). *PCI Design Handbook – Precast and Prestressed Concrete*, Fifth Edition, Precast/Prestressed Concrete Institute, Chicago, IL.
41. Popov, E. P. and Tsai, K. C. (1989). "Performance of Large Seismic Steel Moment Connections under Cyclic Loads," *Engrg. J.*, AISC, 26(2), pp. 51-60.
42. Tsai, K. C., Yang, Y. F. and Lin, J. L. (1993). "Seismic Eccentrically Braced Frames," *Int'l J. of Struct. Design of Tall Buildings*, 2(1), pp. 53-74.
43. Uang, C. M., Tsai, K. C. and Bruneau M. (1999). "Chapter 39: Seismic Design of Steel Bridges," *Bridge Engineering Handbook*, Ed., Chen, W. F. and Duan, L., CRC Press, Boca Raton, FL.
44. Whitmore, R. E. (1952). "Experimental Investigation of Stresses in Gusset Plates," *Bulletin 16*, University of Tennessee, Knoxville, TN.
45. Zahrai, S. M. and Bruneau, M. (1998). "Impact of Diaphragms on Seismic Responses of Straight Slab-on-Girder Steel Bridges," *J. Struct. Engrg.* 124(8), pp. 938-947.
46. Zahrai, S. M. and Bruneau, M. (1999). "Ductile End-Diaphragms for Seismic Retrofit of Slab-on-Girder Steel Bridges," *J. Struct. Engrg.* 125(1), pp. 71-80.