| DIST | COUNTY | ROUTE | POST MILES TOTAL PROJECT | SHEET No. | TOTAL SHEETS |
|---|---|---|---|---|---|
| | | | | | |

REGISTERED CIVIL ENGINEER DATE

PLANS APPROVAL DATE

REGISTERED PROFESSIONAL ENGINEER No. Exp. CIVIL STATE OF CALIFORNIA

*The State of California or its officers or agents shall not be responsible for the accuracy or completeness of scanned copies of this plan sheet.*

*The Registered Civil Engineer for the project is responsible for the selection and proper application of the component design and any modifications shown.*

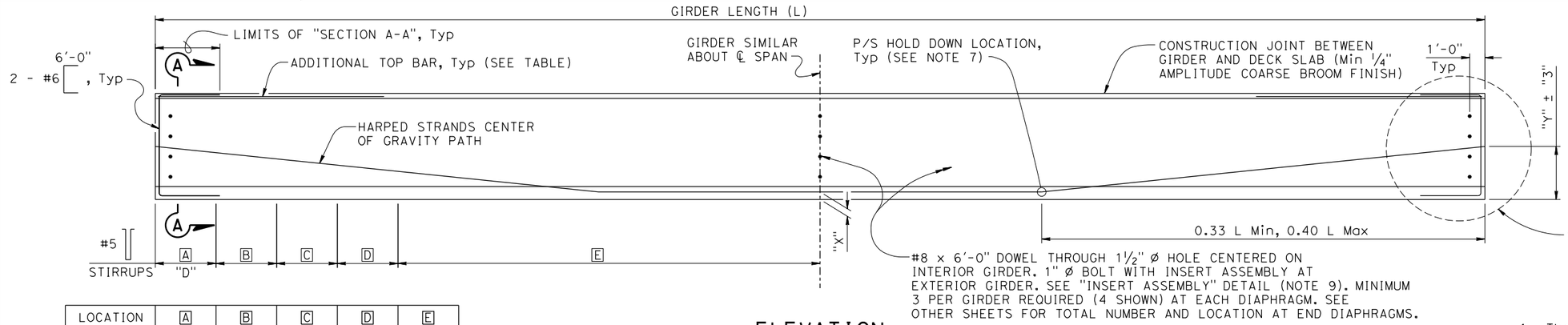


## ELEVATION

| LOCATION | A | B | C | D | E |
|---|---|---|---|---|---|
| GIRDER A | #5 @ 3 | #_ @ _ | #_ @ _ | #_ @ _ | #_ @ _ |
| GIRDER B | | | | | |
| GIRDER C | | | | | |
| GIRDER etc | | | | | |

NOTE:
Girder ends to be cast such that a level surface is provided at bearing pads

| LOCATION | GIRDER LENGTH (L) | GIRDER DEPTH (D) | "X" (in) | JACKING FORCE (P) (kips) | As, min (in²) | "Y" (in) | CONCRETE STRENGTH (ksi) | | MIDSPAN DEAD LOAD DEFLECTION (in) | | ADDITIONAL TOP BAR (EACH END) |
|---|---|---|---|---|---|---|---|---|---|---|---|
| | | | | | | | f'ci | f'c | DECK | RAIL | |
| GIRDER A | | | 4 | | | | | | | | #_ x _ Tot _ |
| | | | 6 | | | | | | | | |
| GIRDER B | | | 4 | | | | | | | | |
| | | | 6 | | | | | | | | |
| GIRDER C | | | 4 | | | | | | | | |
| | | | 6 | | | | | | | | |
| GIRDER etc | | | 4 | | | | | | | | |
| | | | 6 | | | | | | | | |

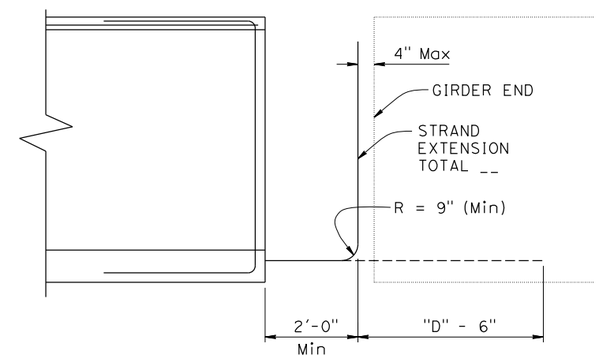


## STRAND EXTENSION HOOK DETAIL (AT BENT)

## NOTES

1. The Jacking Force (P) is the jacking force required at the point of control along the span. The jacking force does not include any specific fabrication losses.
2. Concrete strength:
   f'ci is at time of initial stressing
   f'c is at 28 days
3. Deflection components are informational only and will be used to set screed line elevations.
4. Screed line elevations for deck concrete will be determined by the Engineer.
5. Prestressing strand shall be 270 ksi low relaxation.
6. Contractor may interpolate "Jacking Force" and "X" values between the limits shown, as approved by the Engineer.
7. There must be a minimum of two hold downs per girder for the prestressing within the span.
8. As, min is the minimum area required of prestressing steel.
9. For "INSERT ASSEMBLY" Detail, see "PC/PRETENSIONED WIDE FLANGE GIRDER (HARPED STRANDS MISC. DETAILS)" sheet.

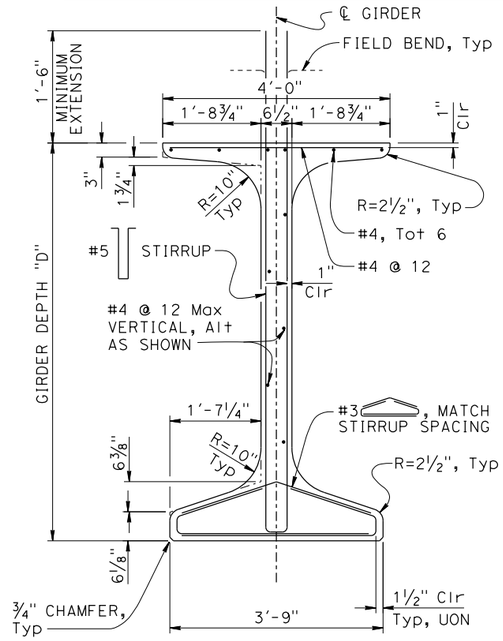


## TYPICAL GIRDER SECTION

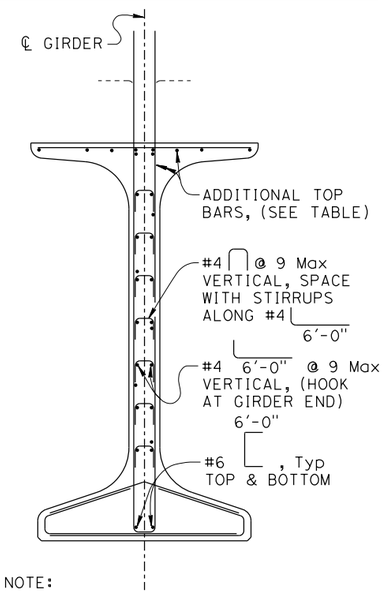


NOTE:
For details not shown, see "TYPICAL GIRDER SECTION"

## SECTION A-A

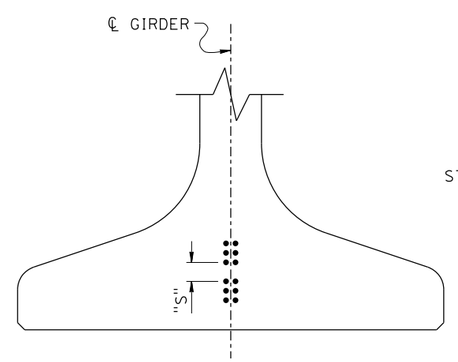


STRAND CLEARANCES NOTES:

1. Strands may be bundled in groups consisting of 3 vertically, 2 horizontally at midspan, and separated at the ends.
2. The minimum distance "S" between groups or individual strands is 1¾" for 0.5" Ø strand and 2" for 0.6" Ø strand.
3. "S" is measured between centers of adjacent strands.
4. Approval of Engineer is required for deviation.

## CLEARANCES FOR PRETENSIONED STRANDS

**NO SCALE**

BRIDGE STANDARD DETAILS

| xs1-124-1 | October 2016 | The components of the Bridge Standard Details have been prepared under the responsible charge of the Technical Owner, a registered civil engineer in the State of California |
|---|---|---|
| FILE NO. | APPROVAL DATE | |

Refer to: http://www.dot.ca.gov/hq/esc/techpubs/manual/bridgemanuals/bridge-standard-detail-sheets/index.html

FILE => $REQUEST
USERNAME => $USER TIME PLOTTED => $TIME DATE PLOTTED => $DATE

ORIGINAL SCALE IN INCHES FOR REDUCED PLANS 0 1 2 3

STATE OF CALIFORNIA DEPARTMENT OF TRANSPORTATION

DIVISION OF ENGINEERING SERVICES

BRIDGE NO.
POST MILE

# PC/PRETENSIONED WIDE FLANGE GIRDER (HARPED STRANDS)

UNIT:
PROJECT NUMBER & PHASE: CONTRACT NO.:

DISREGARD PRINTS BEARING EARLIER REVISION DATES

REVISION DATES: 10-3-16, 11-1-16 SHEET OF