Appendix A Project Plans

Layout sheets L-1 through L-6 illustrate the preliminary project plans. Sheets X-1 through X-10 depict typical cross sections for roadways in the project limits.

Dist	COUNTY	ROUTE	POST MILES TOTAL PROJECT	SHEET No.	TOTAL SHEETS
04	SM	101	16.3/17.06		

REGISTERED CIVIL ENGINEER DATE

PLANS APPROVAL DATE

REGISTERED PROFESSIONAL ENGINEER No. Exp. CIVIL STATE OF CALIFORNIA

THE STATE OF CALIFORNIA OR ITS OFFICERS OR AGENTS SHALL NOT BE RESPONSIBLE FOR THE ACCURACY OR COMPLETENESS OF ELECTRONIC COPIES OF THIS PLAN SHEET.

URS Corporation
1333 Broadway
Suite 800
Oakland, CA 94612

SMCTA
1250 San Carlos Ave
San Carlos, CA 94070

. ALL COORDINATE DISTANCES & BEARINGS ARE BASED ON NAD 1983
ALL ELEVATIONS ARE BASED ON THE NORTH ATLANTIC VERTICAL DATUM OF 1988. (NAVD 1988)
FOR COMPLEX RIGHT OF WAY AND ACCURATE ACCESS DATA,
SEE RIGHT OF WAY RECORD AT DISTRICT OFFICE

BURLINGAME

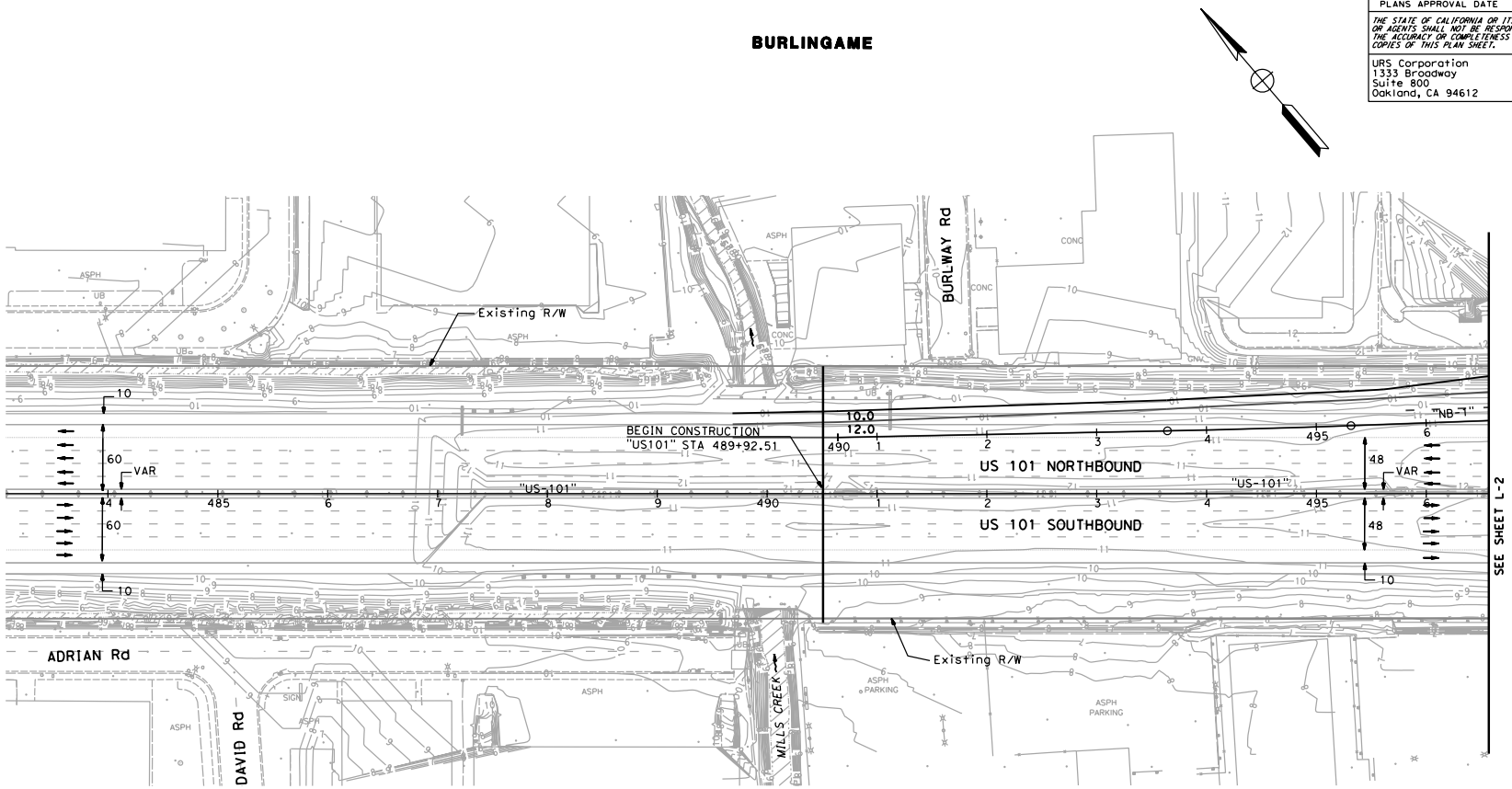

LEGEND:

- Existing R/W
- Proposed R/W
- Proposed City R/W
- Temporary Construction Easement (TCE)
- Edge of Shoulder
- Edge of Traveled Way
- Lane Line
- Sidewalk
- Concrete Barrier
- Retaining Wall
- Metal Beam Guard Rail
- Direction of Traffic Flow
- Noise Measurement / Receptor (modeled) Location

ABBREVIATIONS:
MVP: Maintenance Vehicle Rollout
TCE: Temporary Construction Easement
CHP: California Highway Patrol Enforcement Area

PRELIMINARY PLANS SUBJECT TO REVISION

ALL DIMENSIONS ARE IN FEET UNLESS OTHERWISE SHOWN

LAYOUT L-1

SCALE: 1"=50'

STATE OF CALIFORNIA - DEPARTMENT OF TRANSPORTATION
Caltrans

CONSULTANT FUNCTIONAL SUPERVISOR
CALCULATED-DESIGNED BY ERDAL KARATAYLIOGLU
CHECKED BY RAMESH SATHIAMURTHY
REVISED BY
DATE REVISED

LAST REVISION 12-08-08
DATE PLOTTED => $DATE
TIME PLOTTED => $TIME

BORDER LAST REVISED 3/1/2007
RELATIVE BORDER SCALE IS IN INCHES 0 50 100 150
USERNAME => $USER
DGN FILE => $REQUEST
CU 04226
EA 235840

Dist	COUNTY	ROUTE	POST MILES TOTAL PROJECT	SHEET No.	TOTAL SHEETS
04	SM	101	16.3/17.06		

REGISTERED CIVIL ENGINEER DATE

PLANS APPROVAL DATE

REGISTERED PROFESSIONAL ENGINEER NO. Exp. CIVIL STATE OF CALIFORNIA

THE STATE OF CALIFORNIA OR ITS OFFICERS OR AGENTS SHALL NOT BE RESPONSIBLE FOR THE ACCURACY OR COMPLETENESS OF ELECTRONIC COPIES OF THIS PLAN SHEET.

URS Corporation
1333 Broadway
Suite 800
Oakland, CA 94612

SMCTA
1250 San Carlos Ave
San Carlos, CA 94070

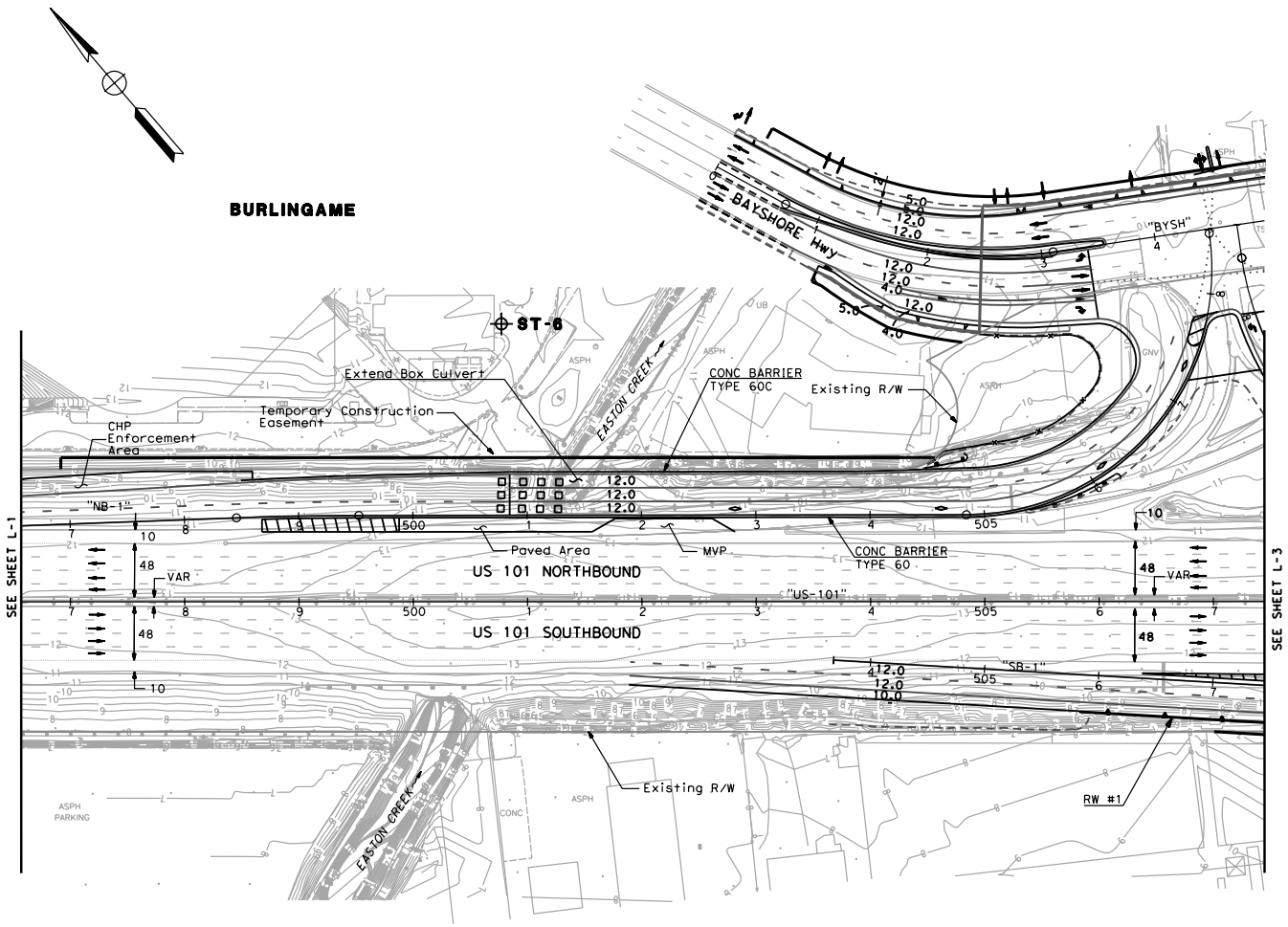

PRELIMINARY PLANS
SUBJECT TO REVISION

ALL DIMENSIONS ARE IN
FEET UNLESS OTHERWISE SHOWN

LAYOUT L-2

SCALE: 1"=50'

REVISED BY	DATE REVISED

CALCULATED-DESIGNED BY	ERDAL KARATAYLIOGLU
CHECKED BY	RAMESH SATHIAMURTHY

CONSULTANT FUNCTIONAL SUPERVISOR

STATE OF CALIFORNIA - DEPARTMENT OF TRANSPORTATION

Caltrans

LAST REVISION 12-08-08 | DATE PLOTTED => $DATE | TIME PLOTTED => $TIME

BORDER LAST REVISED 3/1/2007 | RELATIVE BORDER SCALE IS IN INCHES 0 50 100 150 | USERNAME => $USER | DGN FILE => $REQUEST | CU 04226 | EA 235840

Dist	COUNTY	ROUTE	POST MILES TOTAL PROJECT	SHEET No.	TOTAL SHEETS
04	SM	101	16.3/17.06		

REGISTERED CIVIL ENGINEER DATE

PLANS APPROVAL DATE

REGISTERED PROFESSIONAL ENGINEER NO. EXP. CIVIL STATE OF CALIFORNIA

THE STATE OF CALIFORNIA OR ITS OFFICERS OR AGENTS SHALL NOT BE RESPONSIBLE FOR THE ACCURACY OR COMPLETENESS OF ELECTRONIC COPIES OF THIS PLAN SHEET.

URS Corporation
1333 Broadway
Suite 800
Oakland, CA 94612

SMCTA
1250 San Carlos Ave
San Carlos, CA 94070

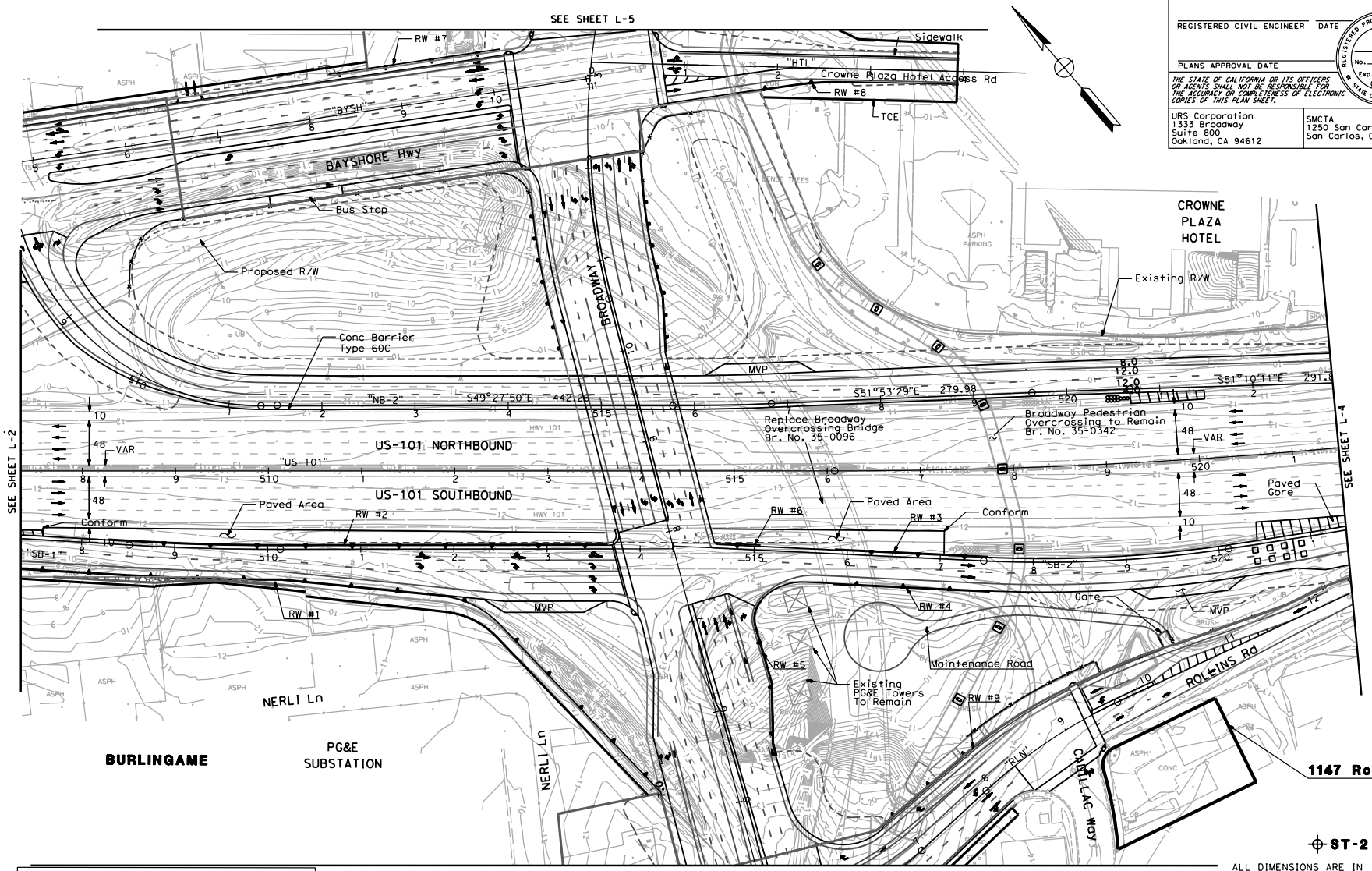

ST-2

ALL DIMENSIONS ARE IN FEET UNLESS OTHERWISE SHOWN

LAYOUT L-3

SCALE: 1"=50'

PRELIMINARY PLANS SUBJECT TO REVISION

REVISED BY	DATE REVISED

CALCULATED-DESIGNED BY	CHECKED BY
ERDAL KARATAYLIOGLU	RAMESH SATHIAMURTHY

CONSULTANT FUNCTIONAL SUPERVISOR

STATE OF CALIFORNIA - DEPARTMENT OF TRANSPORTATION

Caltrans

LAST REVISION 12-08-08 | DATE PLOTTED => $DATE | TIME PLOTTED => $TIME

BORDER LAST REVISED 3/1/2007 | RELATIVE BORDER SCALE IS IN INCHES 0 50 100 150 | USERNAME => $USER DGN FILE => $REQUEST | CU 04226 | EA 235840

Dist	COUNTY	ROUTE	POST MILES TOTAL PROJECT	SHEET No.	TOTAL SHEETS
04	SM	101	16.3/17.06		

REGISTERED CIVIL ENGINEER DATE

PLANS APPROVAL DATE

REGISTERED PROFESSIONAL ENGINEER No. Exp. CIVIL STATE OF CALIFORNIA

THE STATE OF CALIFORNIA OR ITS OFFICERS OR AGENTS SHALL NOT BE RESPONSIBLE FOR THE ACCURACY OR COMPLETENESS OF ELECTRONIC COPIES OF THIS PLAN SHEET.

URS Corporation
1333 Broadway
Suite 800
Oakland, CA 94612

SMCTA
1250 San Carlos Ave
San Carlos, CA 94070

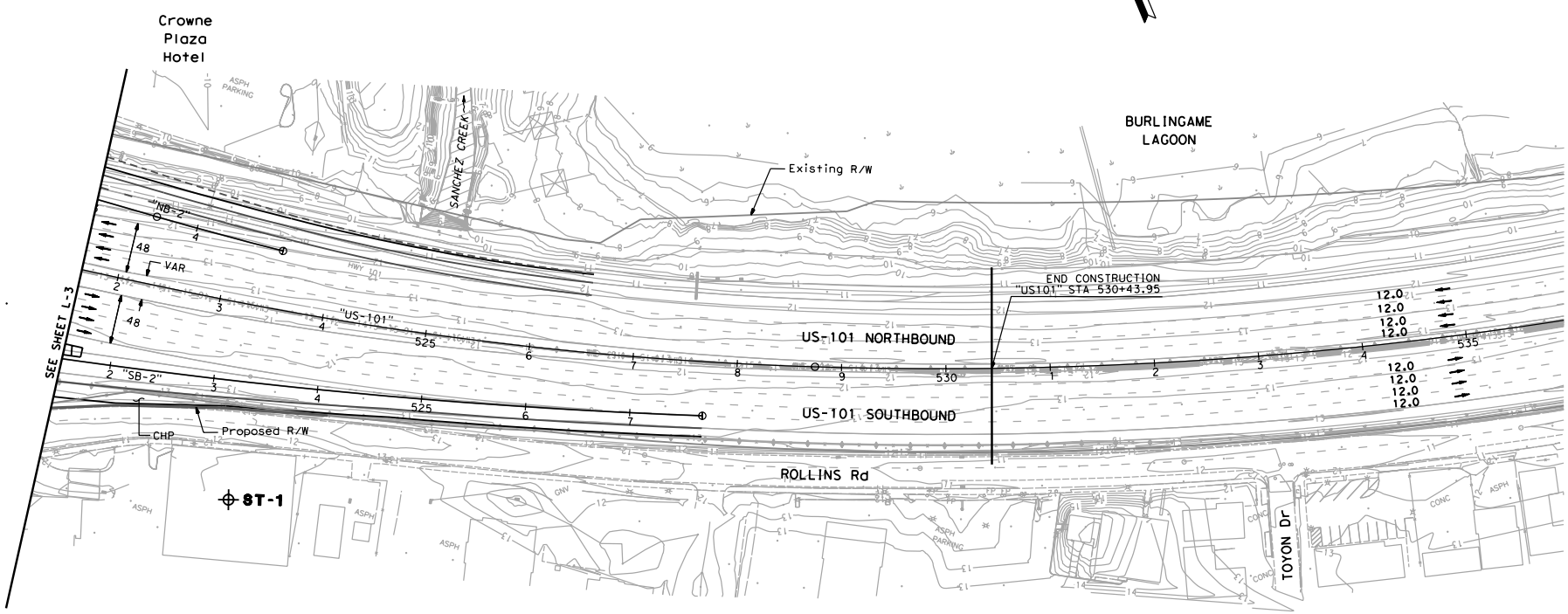

BURLINGAME

PRELIMINARY PLANS
SUBJECT TO REVISION

ALL DIMENSIONS ARE IN
FEET UNLESS OTHERWISE SHOWN

LAYOUT L-4

SCALE: 1"=50'

STATE OF CALIFORNIA - DEPARTMENT OF TRANSPORTATION

Caltrans

CONSULTANT FUNCTIONAL SUPERVISOR

CALCULATED-DESIGNED BY: ERDAL KARATAYLIOGLU

CHECKED BY: RAMESH SATHIAMURTHY

REVISED BY

DATE REVISED

LAST REVISION 12-08-08

DATE PLOTTED => $DATE
TIME PLOTTED => $TIME

BORDER LAST REVISED 3/1/2007

RELATIVE BORDER SCALE IS IN INCHES 0 50 100 150

USERNAME => $USER
DGN FILE => $REQUEST

CU 04226

EA 235840

Dist	COUNTY	ROUTE	POST MILES TOTAL PROJECT	SHEET No.	TOTAL SHEETS
04	SM	101	16.3/17.06		

REGISTERED CIVIL ENGINEER DATE

PLANS APPROVAL DATE

REGISTERED PROFESSIONAL ENGINEER No. Exp. CIVIL STATE OF CALIFORNIA

THE STATE OF CALIFORNIA OR ITS OFFICERS OR AGENTS SHALL NOT BE RESPONSIBLE FOR THE ACCURACY OR COMPLETENESS OF ELECTRONIC COPIES OF THIS PLAN SHEET.

URS Corporation
1333 Broadway
Suite 800
Oakland, CA 94612

SMCTA
1250 San Carlos Ave
San Carlos, CA 94070

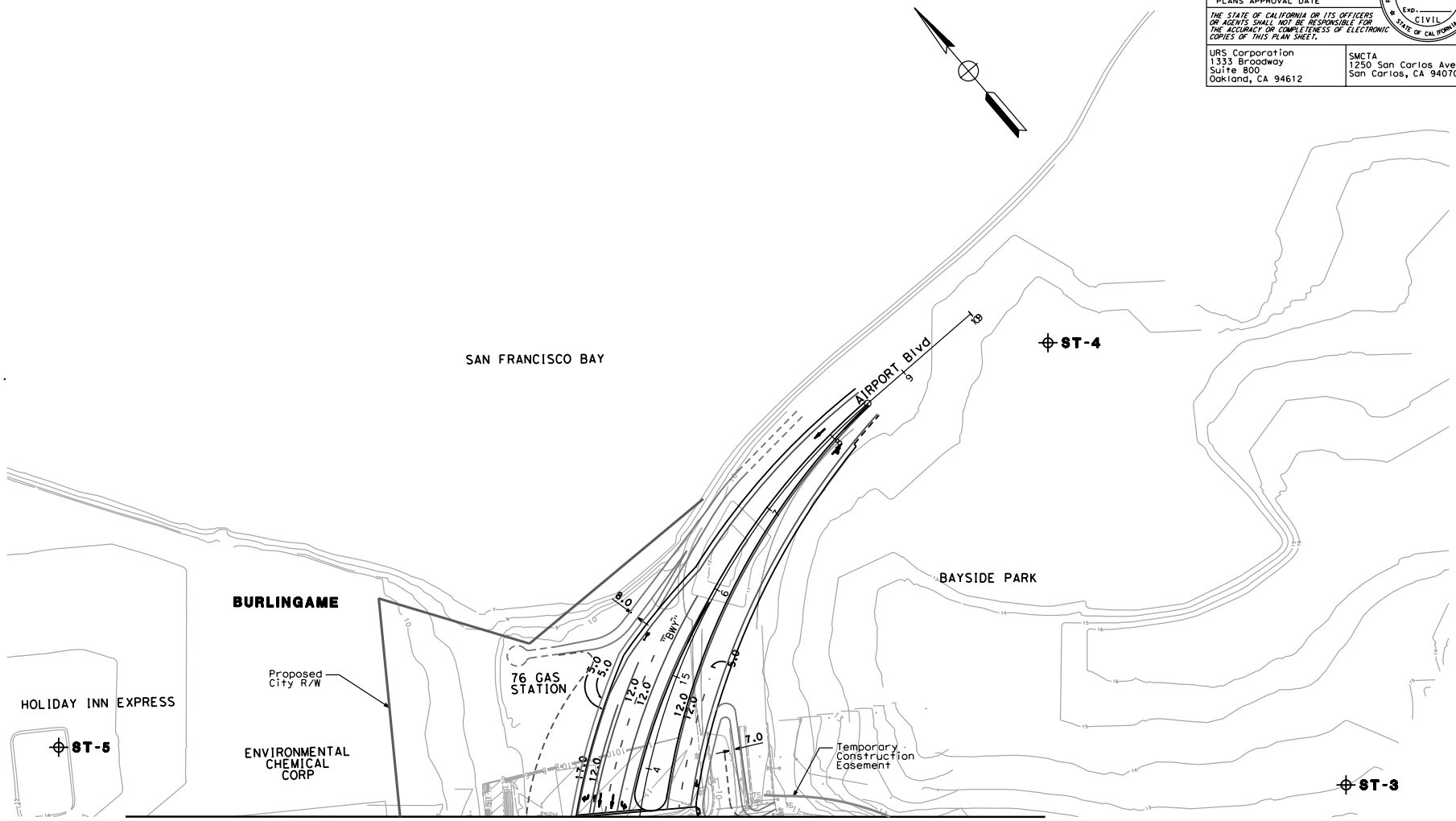

PRELIMINARY PLANS SUBJECT TO REVISION

ALL DIMENSIONS ARE IN FEET UNLESS OTHERWISE SHOWN

LAYOUT L-5

SCALE: 1"=50'

STATE OF CALIFORNIA - DEPARTMENT OF TRANSPORTATION

Caltrans

CONSULTANT FUNCTIONAL SUPERVISOR

CALCULATED-DESIGNED BY: ERDAL KARATAYLIOGLU

CHECKED BY: RAMESH SATHIAMURTHY

REVISED BY

DATE REVISED

LAST REVISION 12-08-08 DATE PLOTTED => $DATE TIME PLOTTED => $TIME

BORDER LAST REVISED 3/1/2007

RELATIVE BORDER SCALE IS IN INCHES 0 50 100 150

USERNAME => $USER
DGN FILE => $REQUEST

CU 04226

EA 235840

Dist	COUNTY	ROUTE	POST MILES TOTAL PROJECT	SHEET No.	TOTAL SHEETS
04	SM	101	16.3/17.06		

REGISTERED CIVIL ENGINEER DATE

PLANS APPROVAL DATE

REGISTERED PROFESSIONAL ENGINEER No. Exp. CIVIL STATE OF CALIFORNIA

THE STATE OF CALIFORNIA OR ITS OFFICERS OR AGENTS SHALL NOT BE RESPONSIBLE FOR THE ACCURACY OR COMPLETENESS OF ELECTRONIC COPIES OF THIS PLAN SHEET.

URS Corporation
1333 Broadway
Suite 800
Oakland, CA 94612

SMCTA
1250 San Carlos Ave
San Carlos, CA 94070

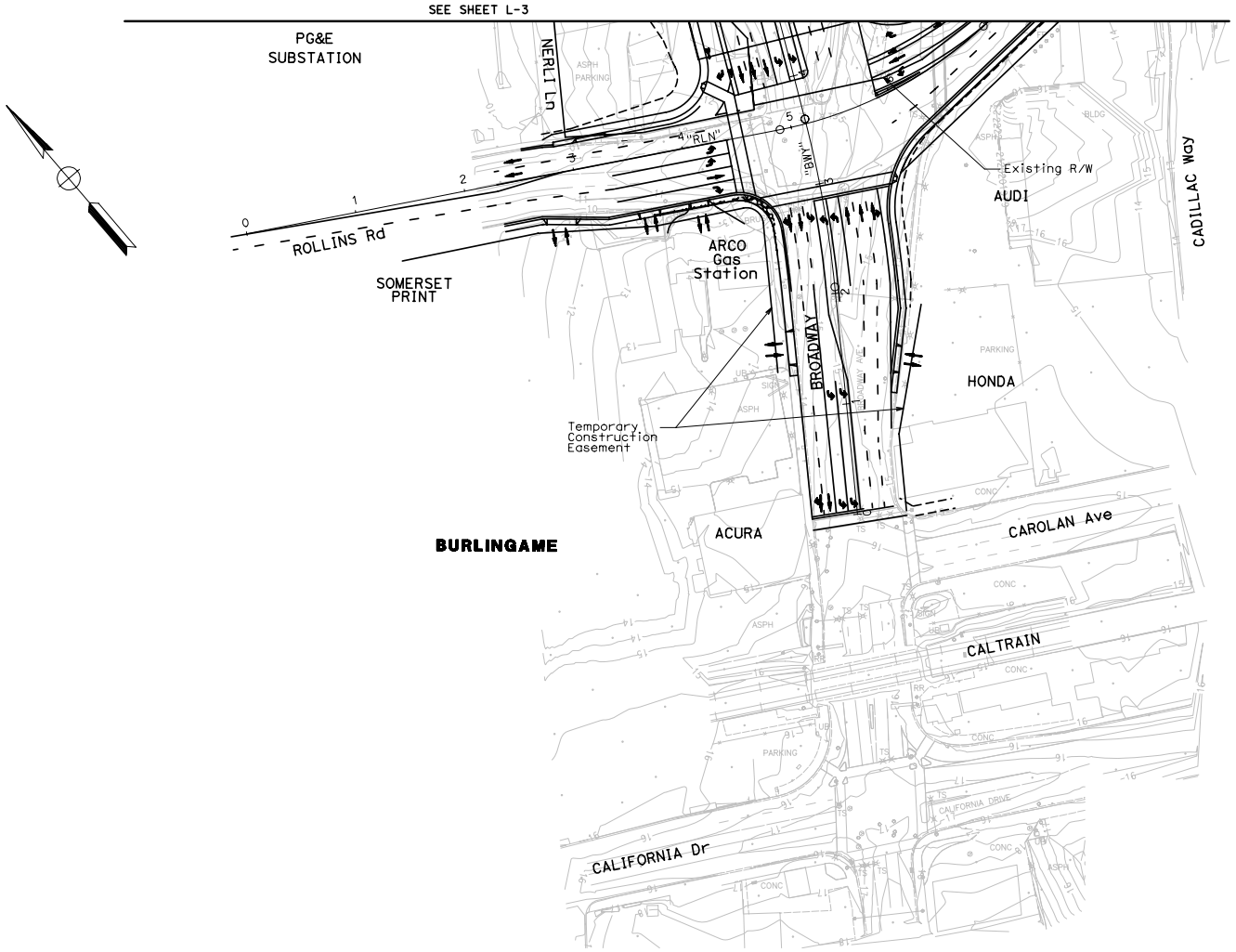

PRELIMINARY PLANS SUBJECT TO REVISION

ALL DIMENSIONS ARE IN FEET UNLESS OTHERWISE SHOWN

LAYOUT L-6

SCALE: 1"=50'

STATE OF CALIFORNIA - DEPARTMENT OF TRANSPORTATION

Caltrans

CONSULTANT FUNCTIONAL SUPERVISOR

CALCULATED-DESIGNED BY ERDAL KARATAYLIOGLU

CHECKED BY RAMESH SATHIAMURTHY

REVISED BY

DATE REVISED

LAST REVISION 12-08-08

DATE PLOTTED => 7/6/2010
TIME PLOTTED => 4:12:29 PM

BORDER LAST REVISED 3/1/2007

RELATIVE BORDER SCALE IS IN INCHES 0 50 100 150

USERNAME => Joel_Dickerson
DGN FILE => ...\Sheets\EA-Layout\Sheet6.sht

CU 04226

EA 235840

NOTES:
1. DIMENSIONS OF THE STRUCTURAL SECTIONS ARE SUBJECT TO TOLERANCES SPECIFIED IN THE STANDARD SPECIFICATIONS.
2. SUPERELEVATION AS SHOWN OR AS DIRECTED BY THE ENGINEER.
3. STRUCTURAL SECTION CALCULATIONS ARE BASED ON CALCULATED TI=10 AND R VALUE=5 FOR RAMPS AND LOCAL STREETS.

PAVEMENT SECTIONS*

*1
- 0.75' HMA (Type A)
- 0.55' CI3 AB
- 0.95' CI4 AS

+2
- 0.10' HMA-OGFC
- 0.75' HMA (Type A)
- 1.00' CI3 AB
- 0.75' CI4 AS

*3
- 0.50' PCC
- 0.35' CI4 AS

*4
- 0.10' & Var HMA Overlay

*5
- 0.10' HMA-OGFC
- 0.10' COLD PLANE AC

* Design based on Traffic Index.

+ Design matches adjacent US-101 Aux Lane Project shoulder section

ABBREVATIONS:

HMA	HOT MIX ASPHALT
AB	AGGREGATE BASE
AS	AGGREGATE SUBBASE
SW	SIDEWALK
OGFC	OPEN GRADED FRICTION COURSE

SEE CALTRANS STANDARD PLANS FOR ABBREVIATIONS NOT LISTED.

Dist	COUNTY	ROUTE	POST MILES TOTAL PROJECT	SHEET No.	TOTAL SHEETS
04	SM	101	16.3/17.06		

REGISTERED CIVIL ENGINEER DATE

PLANS APPROVAL DATE

REGISTERED PROFESSIONAL ENGINEER NO. EXP. CIVIL STATE OF CALIFORNIA

THE STATE OF CALIFORNIA OR ITS OFFICERS OR AGENTS SHALL NOT BE RESPONSIBLE FOR THE ACCURACY OR COMPLETENESS OF ELECTRONIC COPIES OF THIS PLAN SHEET.

URS Corporation
1333 Broadway
Suite 800
Oakland, CA 94612

SMCTA
1250 San Carlos Ave
San Carlos, CA 94070

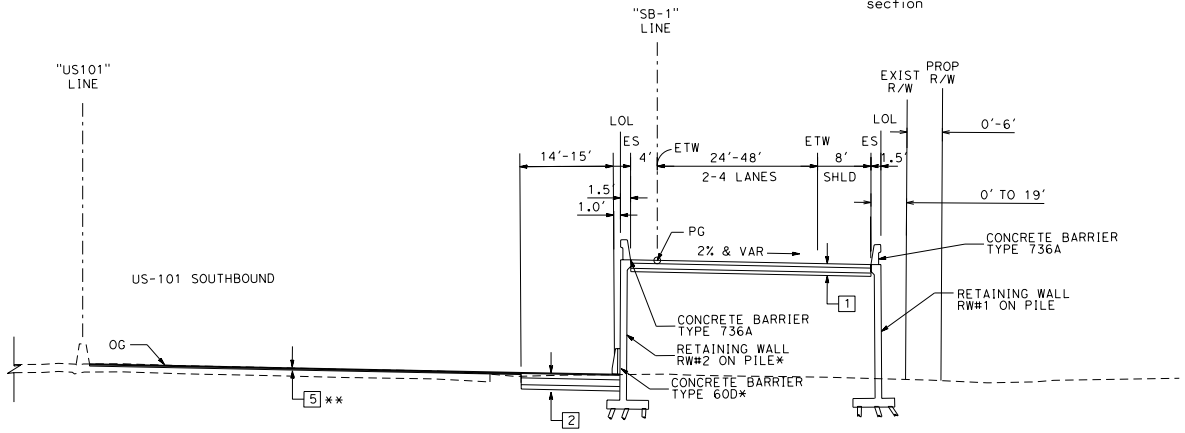

OFF-RAMP - SB US101 TO BROADWAY

"SB-1" STA: 505+91.39 TO 511+87.46
*"SB-1" STA: 507+78.53 TO 511+87.46
** "SB-1" STA 507+56 TO 511+87.46

DESIGN DESIGNATION

Traffic Index (20-Year Design Life) = 10.0 (RAMPS & LOCAL ROADS)

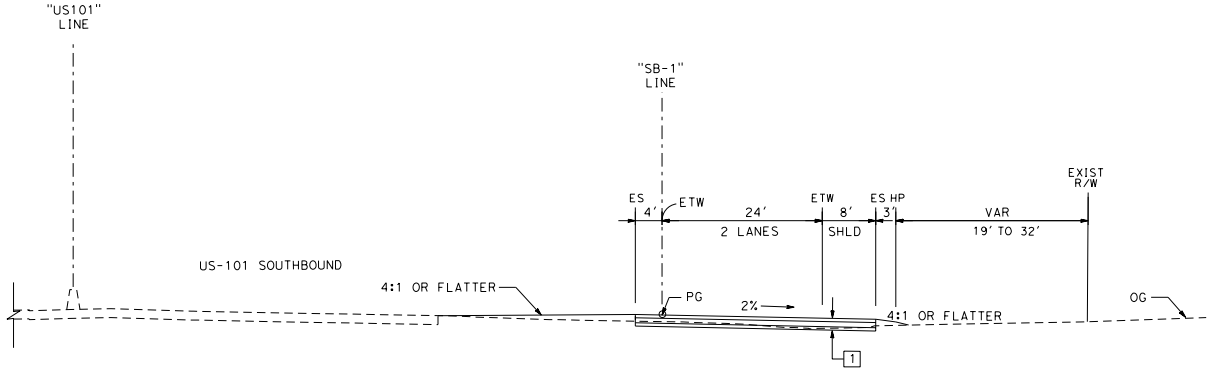

OFF-RAMP - SB US101 TO BROADWAY

"SB-1" 503+67.71 TO 505+91.39

PRELIMINARY PLANS
NOT FOR CONSTRUCTION

No Scale
ALL DIMENSIONS ARE IN FEET UNLESS OTHERWISE SHOWN

TYPICAL CROSS SECTIONS X-1

STATE OF CALIFORNIA - DEPARTMENT OF TRANSPORTATION
Caltrans

CONSULTANT FUNCTIONAL SUPERVISOR

CALCULATED-DESIGNED BY ERDAL KARATAYLIOGLU
CHECKED BY RAMESH SATHIAMURTHY

REVISED BY
DATE REVISED

LAST REVISION 12-08-08
DATE PLOTTED => 12/28/2010
TIME PLOTTED => 2:00:34 PM

BORDER LAST REVISED 3/1/2007

RELATIVE BORDER SCALE IS IN INCHES 0 50 100 150

USERNAME => Joel_Dickerson
DGN FILE => ...\CADD\Sheets\CA-TypXSec\X-1.dgn

CU 04226

EA 235840

Dist	COUNTY	ROUTE	POST MILES TOTAL PROJECT	SHEET No.	TOTAL SHEETS
04	SM	101	16.3/17.06		

REGISTERED CIVIL ENGINEER DATE

PLANS APPROVAL DATE

REGISTERED PROFESSIONAL ENGINEER NO. EXP. CIVIL STATE OF CALIFORNIA

THE STATE OF CALIFORNIA OR ITS OFFICERS OR AGENTS SHALL NOT BE RESPONSIBLE FOR THE ACCURACY OR COMPLETENESS OF ELECTRONIC COPIES OF THIS PLAN SHEET.

URS Corporation
1333 Broadway
Suite 800
Oakland, CA 94612

SMCTA
1250 San Carlos Ave
San Carlos, CA 94070

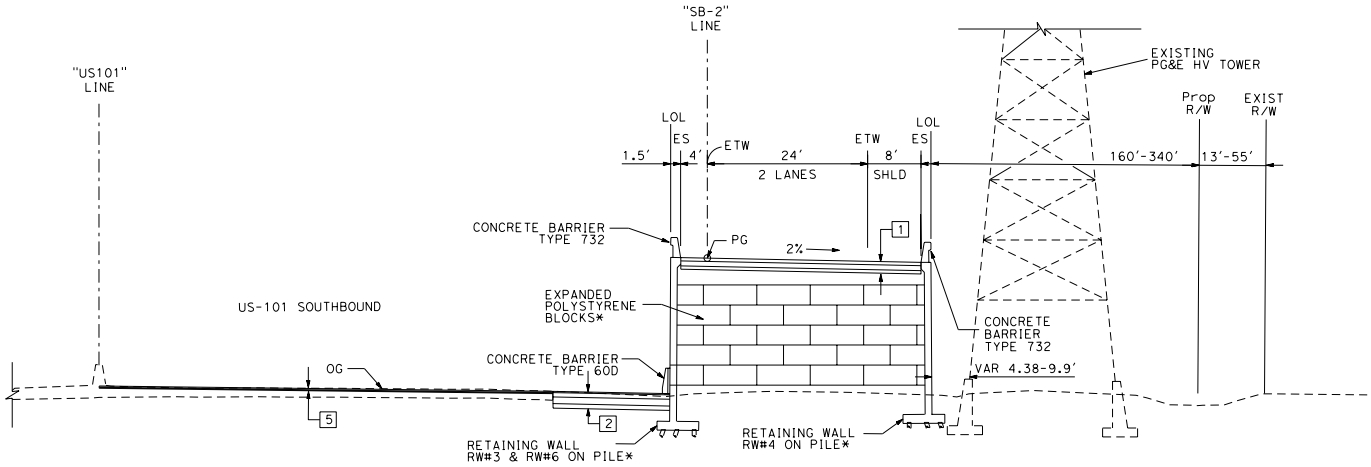

ON-RAMP - BROADWAY TO SB US101

"SB-2" STA: 514+61.15 TO 517+70.48
* "SB-2" STA: 515+06.66 TO 515+86.66
Design Alternatives for the proposed structure under evaluation.

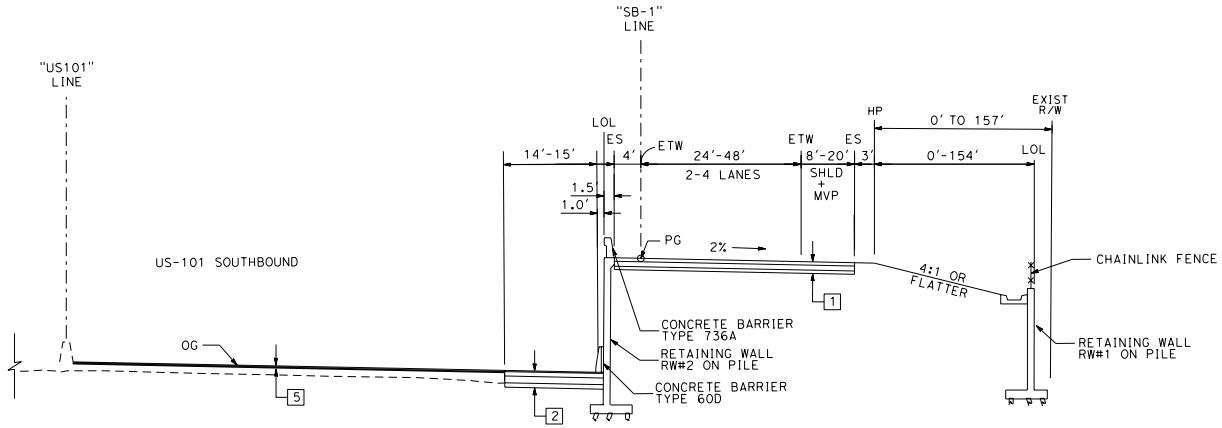

OFF-RAMP - SB US101 TO BROADWAY

"SB-1" STA: 511+87.46 TO 513+74.20

PRELIMINARY PLANS
NOT FOR CONSTRUCTION

No Scale
ALL DIMENSIONS ARE IN
FEET UNLESS OTHERWISE SHOWN

TYPICAL CROSS SECTIONS
X-2

REVISED BY	DATE REVISED

CALCULATED-DESIGNED BY	CHECKED BY
ERDAL KARATAYLIOGLU	RAMESH SATHIAMURTHY

CONSULTANT FUNCTIONAL SUPERVISOR

STATE OF CALIFORNIA - DEPARTMENT OF TRANSPORTATION
Caltrans

LAST REVISION 12-08-08
DATE PLOTTED => 12/28/2010
TIME PLOTTED => 2:02:35 PM

BORDER LAST REVISED 3/1/2007 | RELATIVE BORDER SCALE IS IN INCHES 0 50 100 150 | USERNAME => Joel_Dickerson DGN FILE => ...\CADD\Sheets\CA-TypXSec\X-2.dgn | CU 04226 | EA 235840

Dist	COUNTY	ROUTE	POST MILES TOTAL PROJECT	SHEET No.	TOTAL SHEETS
04	SM	101	16.3/17.06		

REGISTERED CIVIL ENGINEER DATE

PLANS APPROVAL DATE

REGISTERED PROFESSIONAL ENGINEER NO. EXP. CIVIL STATE OF CALIFORNIA

THE STATE OF CALIFORNIA OR ITS OFFICERS OR AGENTS SHALL NOT BE RESPONSIBLE FOR THE ACCURACY OR COMPLETENESS OF ELECTRONIC COPIES OF THIS PLAN SHEET.

URS Corporation
1333 Broadway
Suite 800
Oakland, CA 94612

SMCTA
1250 San Carlos Ave
San Carlos, CA 94070

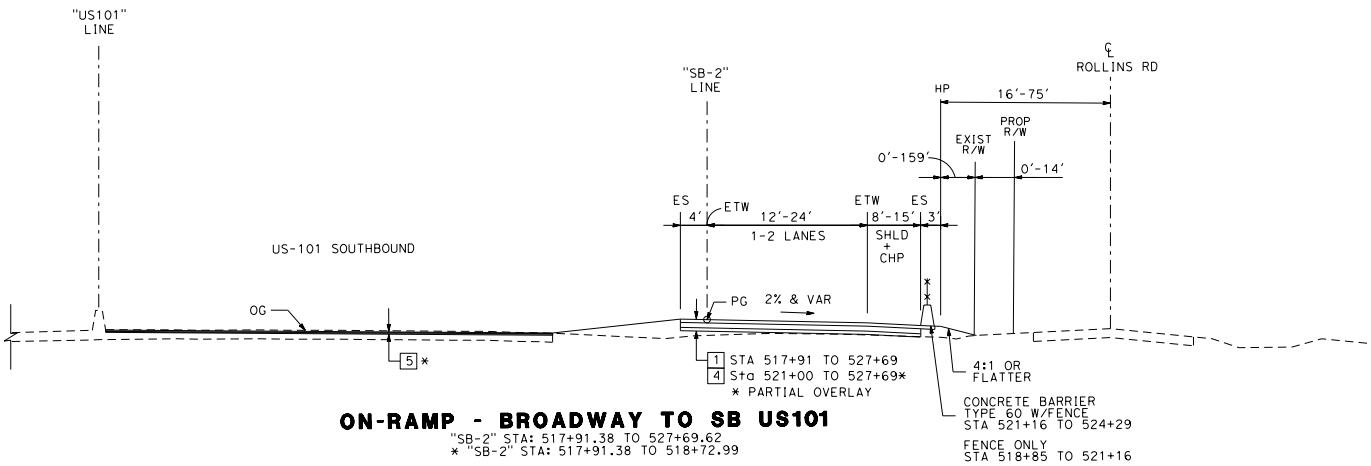

ON-RAMP - BROADWAY TO SB US101

"SB-2" STA: 517+91.38 TO 527+69.62
* "SB-2" STA: 517+91.38 TO 518+72.99

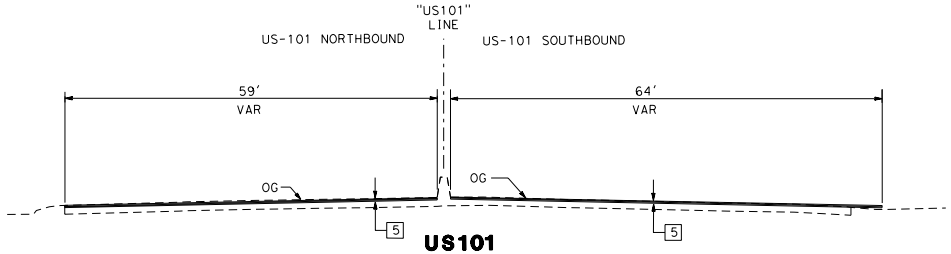

US101

"US-101" NB STA: 507+57 TO 526+55.53
"US-101" SB STA: 507+57 TO 523+00

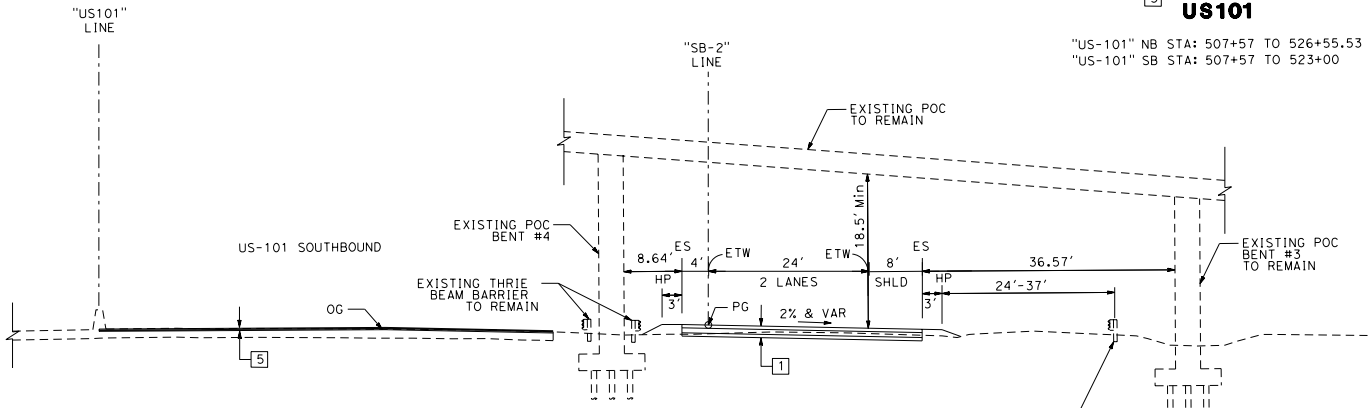

ON-RAMP - BROADWAY TO SB US101

"SB-2" STA: 517+70.48 TO 517+91.38

PRELIMINARY PLANS
NOT FOR CONSTRUCTION

No Scale
ALL DIMENSIONS ARE IN
FEET UNLESS OTHERWISE SHOWN

TYPICAL CROSS SECTIONS
X-3

REVISED BY	DATE REVISED

CALCULATED-DESIGNED BY	ERDAL KARATAYLIOGLU
CHECKED BY	RAMESH SATHIAMURTHY

CONSULTANT FUNCTIONAL SUPERVISOR

STATE OF CALIFORNIA - DEPARTMENT OF TRANSPORTATION
Caltrans

LAST REVISION 12-08-08
DATE PLOTTED => 12/28/2010
TIME PLOTTED => 2:03:20 PM

BORDER LAST REVISED 3/1/2007

RELATIVE BORDER SCALE IS IN INCHES 0 50 100 150

USERNAME => Joel_Dickerson
DGN FILE => ...\CADD\Sheets\CA-TypXSec\X-3.dgn

CU 04226

EA 235840

Dist	COUNTY	ROUTE	POST MILES TOTAL PROJECT	SHEET No.	TOTAL SHEETS
04	SM	101	16.3/17.06		

REGISTERED CIVIL ENGINEER DATE

PLANS APPROVAL DATE

REGISTERED PROFESSIONAL ENGINEER NO. EXP. CIVIL STATE OF CALIFORNIA

THE STATE OF CALIFORNIA OR ITS OFFICERS OR AGENTS SHALL NOT BE RESPONSIBLE FOR THE ACCURACY OR COMPLETENESS OF ELECTRONIC COPIES OF THIS PLAN SHEET.

URS Corporation
1333 Broadway
Suite 800
Oakland, CA 94612

SMCTA
1250 San Carlos Ave
San Carlos, CA 94070

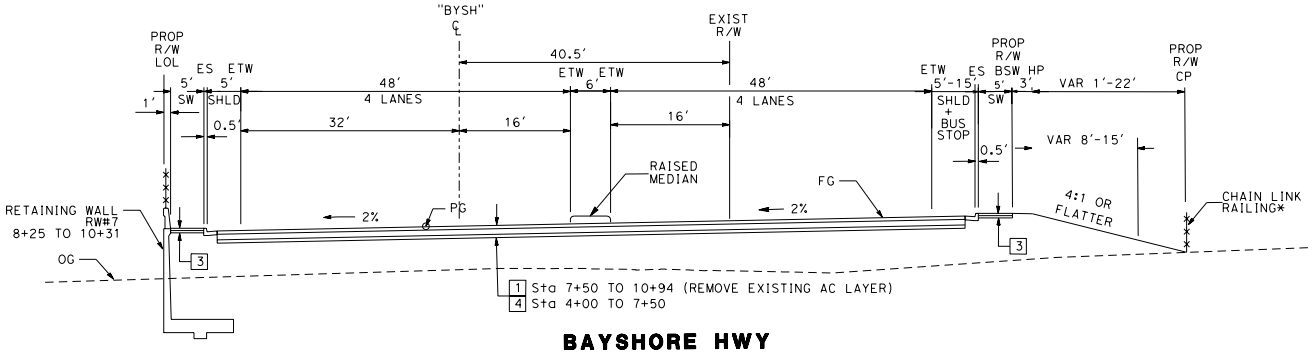

BAYSHORE HWY

"BYSH" STA: 4+00.00 TO 10+94.00
*"BYSH" STA: 5+80.00 TO 10+20.00

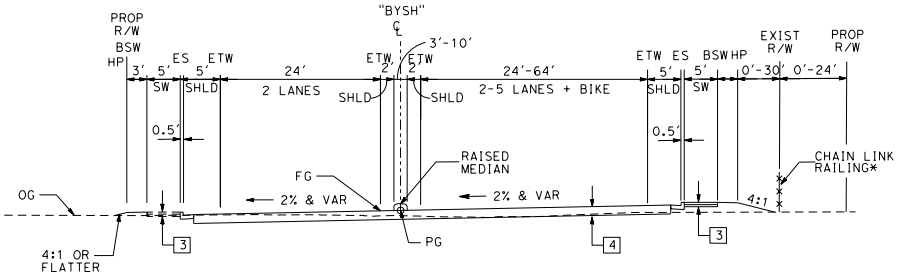

BAYSHORE HWY

"BYSH" STA: 0+00.00 TO 4+00.00
* "BYSH" STA: 2+45.00 TO 3+40.00

PRELIMINARY PLANS
NOT FOR CONSTRUCTION

No Scale
ALL DIMENSIONS ARE IN
FEET UNLESS OTHERWISE SHOWN

TYPICAL CROSS SECTIONS
X-4

REVISED BY	DATE REVISED

CALCULATED-DESIGNED BY	CHECKED BY
ERDAL KARATAYLIOGLU	RAMESH SATHIAMURTHY

CONSULTANT FUNCTIONAL SUPERVISOR

STATE OF CALIFORNIA - DEPARTMENT OF TRANSPORTATION

Caltrans

LAST REVISION 12-08-08

DATE PLOTTED => 12/28/2010
TIME PLOTTED => 2:28:39 PM

Dist	COUNTY	ROUTE	POST MILES TOTAL PROJECT	SHEET No.	TOTAL SHEETS
04	SM	101	16.3/17.06		

REGISTERED CIVIL ENGINEER DATE

PLANS APPROVAL DATE

REGISTERED PROFESSIONAL ENGINEER NO. EXP. CIVIL STATE OF CALIFORNIA

THE STATE OF CALIFORNIA OR ITS OFFICERS OR AGENTS SHALL NOT BE RESPONSIBLE FOR THE ACCURACY OR COMPLETENESS OF ELECTRONIC COPIES OF THIS PLAN SHEET.

URS Corporation
1333 Broadway
Suite 800
Oakland, CA 94612

SMCTA
1250 San Carlos Ave
San Carlos, CA 94070

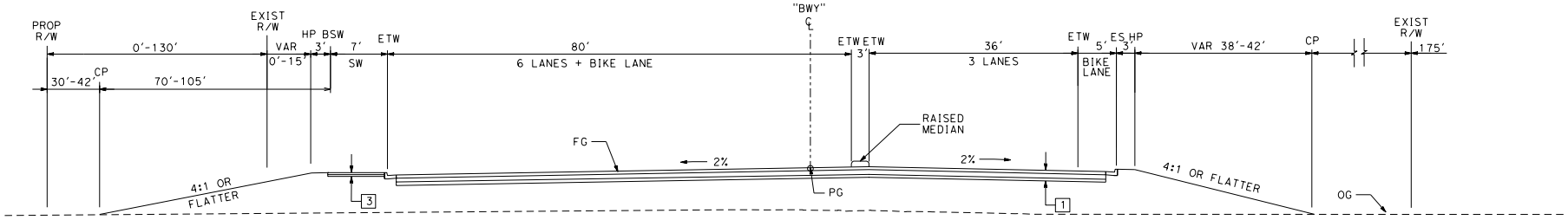

BROADWAY

"BWY" STA: 3+80.00 TO 5+43.98

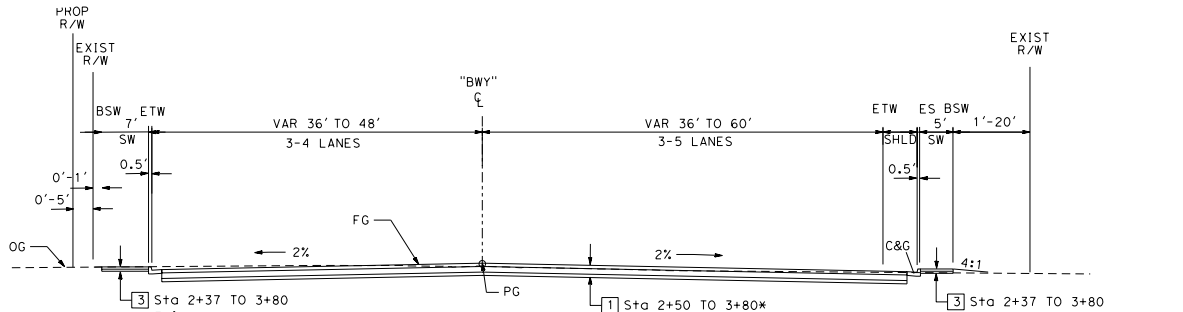

BROADWAY

"BWY" STA: 0+00.00 TO 3+80.00

* REMOVE EXISTING AC LAYER

PRELIMINARY PLANS
NOT FOR CONSTRUCTION

No Scale
ALL DIMENSIONS ARE IN
FEET UNLESS OTHERWISE SHOWN

TYPICAL CROSS SECTIONS
X-5

STATE OF CALIFORNIA - DEPARTMENT OF TRANSPORTATION
Caltrans

CONSULTANT FUNCTIONAL SUPERVISOR

CALCULATED-DESIGNED BY ERDAL KARATAYLIOGLU
CHECKED BY RAMESH SATHIAMURTHY

REVISED BY
DATE REVISED

LAST REVISION 12-08-08
DATE PLOTTED => 12/28/2010
TIME PLOTTED => 2:29:09 PM

BORDER LAST REVISED 3/1/2007

RELATIVE BORDER SCALE IS IN INCHES 0 50 100 150

USERNAME => Joel_Dickerson
DGN FILE => ...\CADD\Sheets\CA-TypXSec\X-5.dgn

CU 04226

EA 235840

Dist	COUNTY	ROUTE	POST MILES TOTAL PROJECT	SHEET No.	TOTAL SHEETS
04	SM	101	16.3/17.06		

REGISTERED CIVIL ENGINEER DATE

PLANS APPROVAL DATE

REGISTERED PROFESSIONAL ENGINEER NO. EXP. CIVIL STATE OF CALIFORNIA

THE STATE OF CALIFORNIA OR ITS OFFICERS OR AGENTS SHALL NOT BE RESPONSIBLE FOR THE ACCURACY OR COMPLETENESS OF ELECTRONIC COPIES OF THIS PLAN SHEET.

URS Corporation
1333 Broadway
Suite 800
Oakland, CA 94612

SMCTA
1250 San Carlos Ave
San Carlos, CA 94070

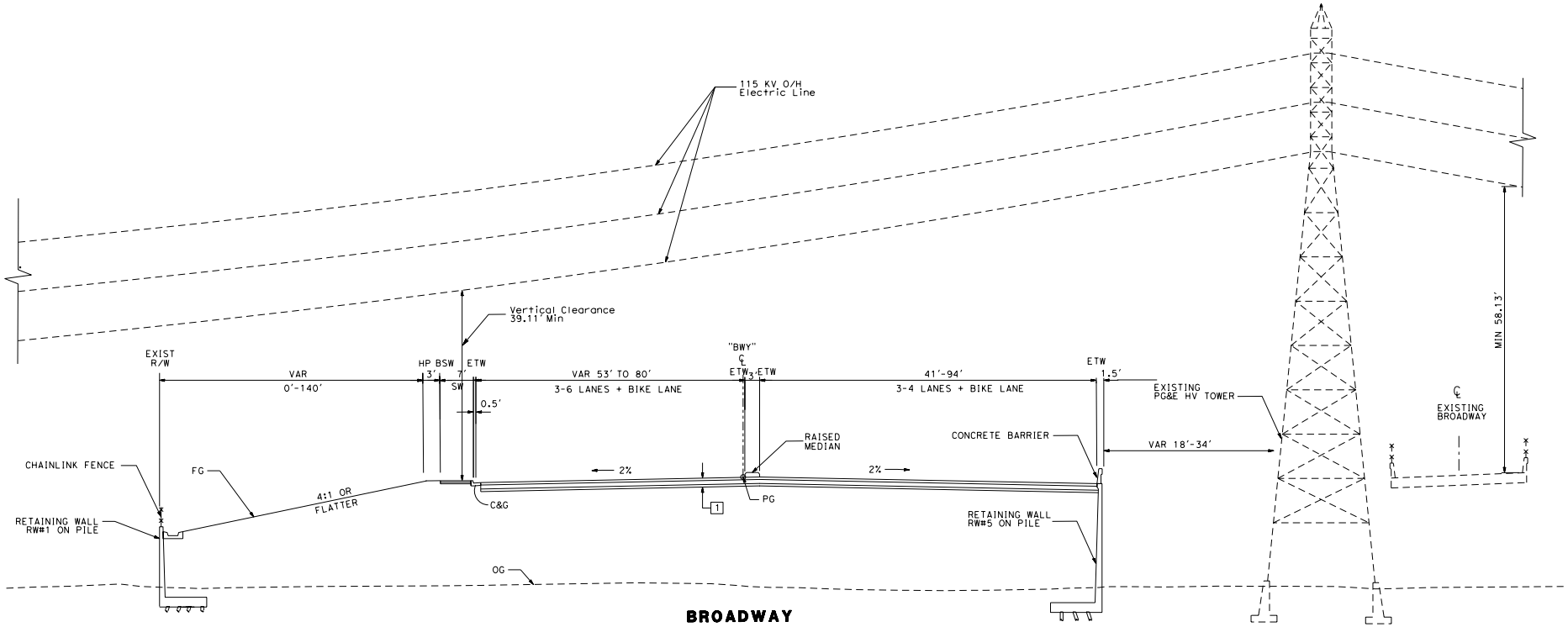

BROADWAY

"BWY" STA: 5+43.98 TO 7+85.12

PRELIMINARY PLANS
NOT FOR CONSTRUCTION

ALL DIMENSIONS ARE IN
FEET UNLESS OTHERWISE SHOWN

TYPICAL CROSS SECTIONS
X-6

STATE OF CALIFORNIA - DEPARTMENT OF TRANSPORTATION

Caltrans

CONSULTANT FUNCTIONAL SUPERVISOR

CALCULATED-DESIGNED BY ERDAL KARATAYLIOGLU

CHECKED BY RAMESH SATHIAMURTHY

REVISED BY

DATE REVISED

LAST REVISION 12-08-08

DATE PLOTTED => 12/28/2010
TIME PLOTTED => 2:04:41 PM

BORDER LAST REVISED 3/1/2007

RELATIVE BORDER SCALE IS IN INCHES 0 50 100 150

USERNAME => Joel_Dickerson
DGN FILE => ...\CADD\Sheets\CA-TypXSec\X-6.dgn

CU 04226

EA 235840

Dist	COUNTY	ROUTE	POST MILES TOTAL PROJECT	SHEET No.	TOTAL SHEETS
04	SM	101	16.3/17.06		

REGISTERED CIVIL ENGINEER DATE

PLANS APPROVAL DATE

REGISTERED PROFESSIONAL ENGINEER NO. EXP. CIVIL STATE OF CALIFORNIA

THE STATE OF CALIFORNIA OR ITS OFFICERS OR AGENTS SHALL NOT BE RESPONSIBLE FOR THE ACCURACY OR COMPLETENESS OF ELECTRONIC COPIES OF THIS PLAN SHEET.

URS Corporation
1333 Broadway
Suite 800
Oakland, CA 94612

SMCTA
1250 San Carlos Ave
San Carlos, CA 94070

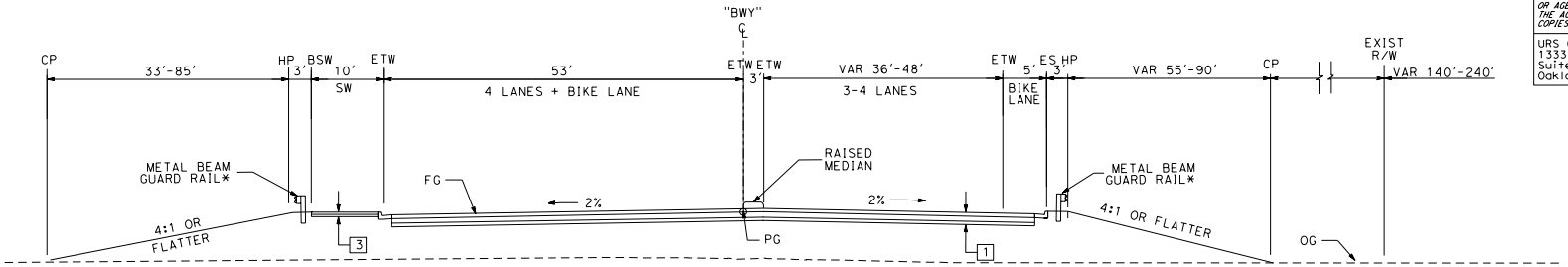

BROADWAY

"BWY" STA: 9+90.68 TO 13+20.00

*"BWY" STA: 9+90.68 TO 11+60.00

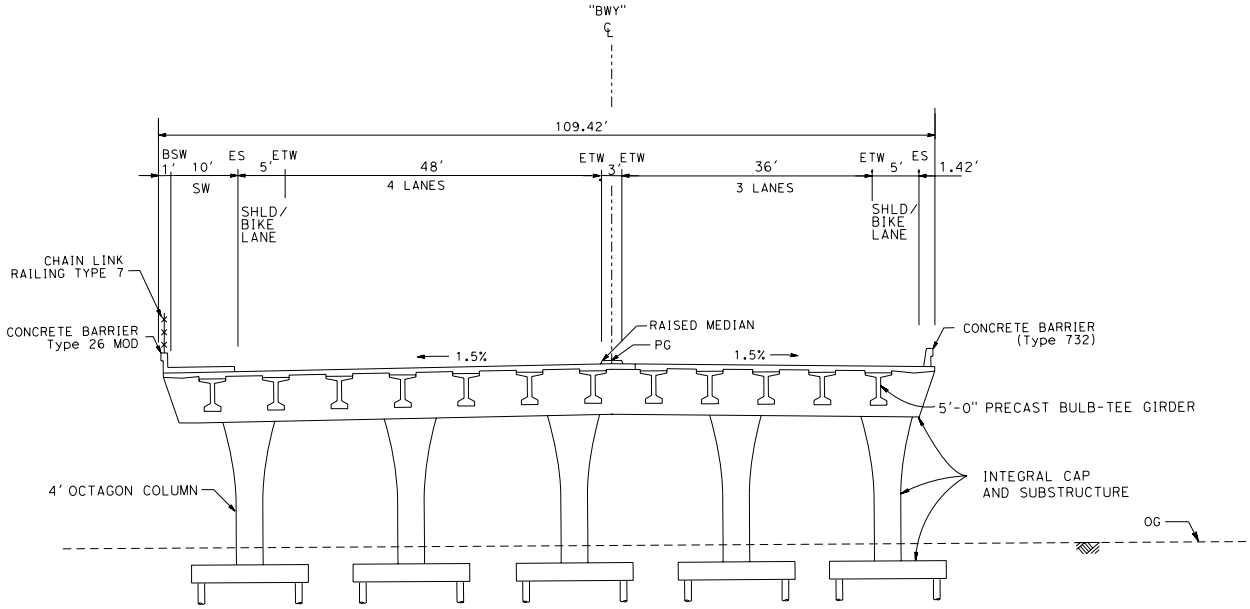

BROADWAY OVERCROSSING

(BRIDGE No: 35-0096)

"BWY STA: 7+85.12 TO 9+90.68

PRELIMINARY PLANS
NOT FOR CONSTRUCTION

No Scale
ALL DIMENSIONS ARE IN
FEET UNLESS OTHERWISE SHOWN

TYPICAL CROSS SECTIONS
X-7

STATE OF CALIFORNIA - DEPARTMENT OF TRANSPORTATION

Caltrans

CONSULTANT FUNCTIONAL SUPERVISOR

CALCULATED-DESIGNED BY ERDAL KARATAYLIOGLU

CHECKED BY RAMESH SATHIAMURTHY

REVISED BY

DATE REVISED

LAST REVISION 12-08-08

DATE PLOTTED => 12/28/2010
TIME PLOTTED => 2:05:05 PM

BORDER LAST REVISED 3/1/2007

RELATIVE BORDER SCALE IS IN INCHES 0 50 100 150

USERNAME => Joel_Dickerson
DGN FILE => ...\CADD\Sheets\CA-TypXSec\X-7.dgn

CU 04226

EA 235840

Dist	COUNTY	ROUTE	POST MILES TOTAL PROJECT	SHEET No.	TOTAL SHEETS
04	SM	101	16.3/17.06		

REGISTERED CIVIL ENGINEER DATE

PLANS APPROVAL DATE

REGISTERED PROFESSIONAL ENGINEER NO. EXP. CIVIL STATE OF CALIFORNIA

THE STATE OF CALIFORNIA OR ITS OFFICERS OR AGENTS SHALL NOT BE RESPONSIBLE FOR THE ACCURACY OR COMPLETENESS OF ELECTRONIC COPIES OF THIS PLAN SHEET.

URS Corporation
1333 Broadway
Suite 800
Oakland, CA 94612

SMCTA
1250 San Carlos Ave
San Carlos, CA 94070

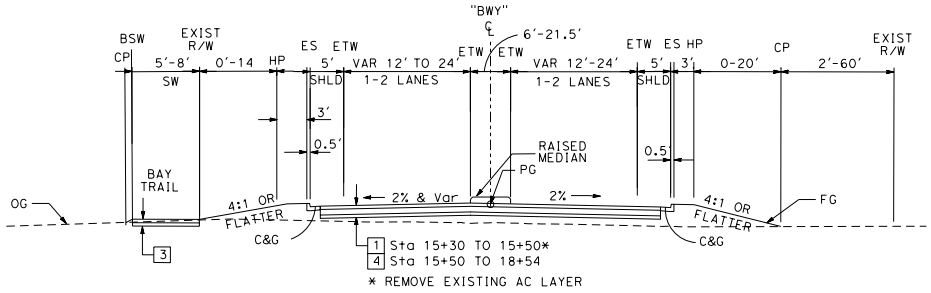

AIRPORT BLVD/BROADWAY

"BWY" STA: 15+30.00 TO 18+54.72

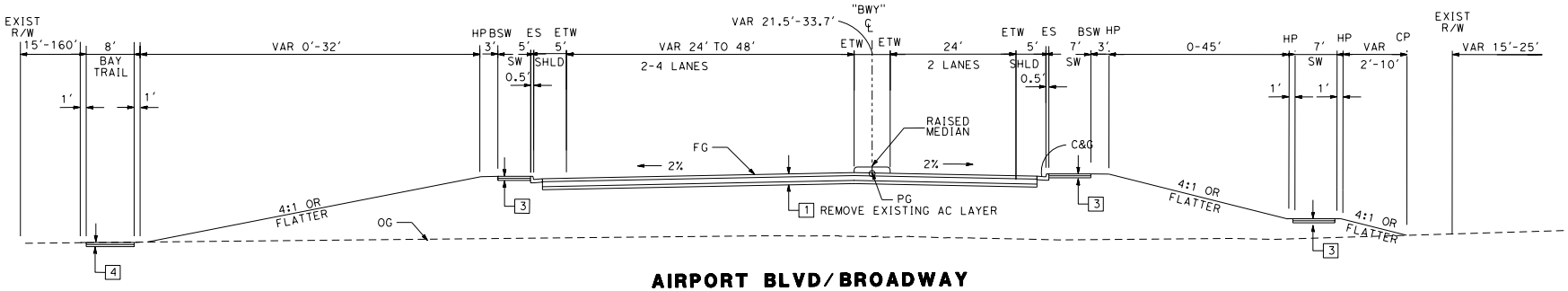

AIRPORT BLVD/BROADWAY

"BWY" STA: 13+30.00 TO 15+30.00

PRELIMINARY PLANS
NOT FOR CONSTRUCTION

No Scale
ALL DIMENSIONS ARE IN
FEET UNLESS OTHERWISE SHOWN

TYPICAL CROSS SECTIONS
X-8

REVISED BY	DATE REVISED

CALCULATED-DESIGNED BY	CHECKED BY
ERDAL KARATAYLIOGLU	RAMESH SATHIAMURTHY

CONSULTANT FUNCTIONAL SUPERVISOR

STATE OF CALIFORNIA - DEPARTMENT OF TRANSPORTATION

Caltrans

LAST REVISION 12-08-08

DATE PLOTTED => 12/28/2010
TIME PLOTTED => 2:29:47 PM

Dist	COUNTY	ROUTE	POST MILES TOTAL PROJECT	SHEET No.	TOTAL SHEETS
04	SM	101	16.3/17.06		

REGISTERED CIVIL ENGINEER DATE

PLANS APPROVAL DATE

REGISTERED PROFESSIONAL ENGINEER NO. EXP. CIVIL STATE OF CALIFORNIA

THE STATE OF CALIFORNIA OR ITS OFFICERS OR AGENTS SHALL NOT BE RESPONSIBLE FOR THE ACCURACY OR COMPLETENESS OF ELECTRONIC COPIES OF THIS PLAN SHEET.

URS Corporation
1333 Broadway
Suite 800
Oakland, CA 94612

SMCTA
1250 San Carlos Ave
San Carlos, CA 94070

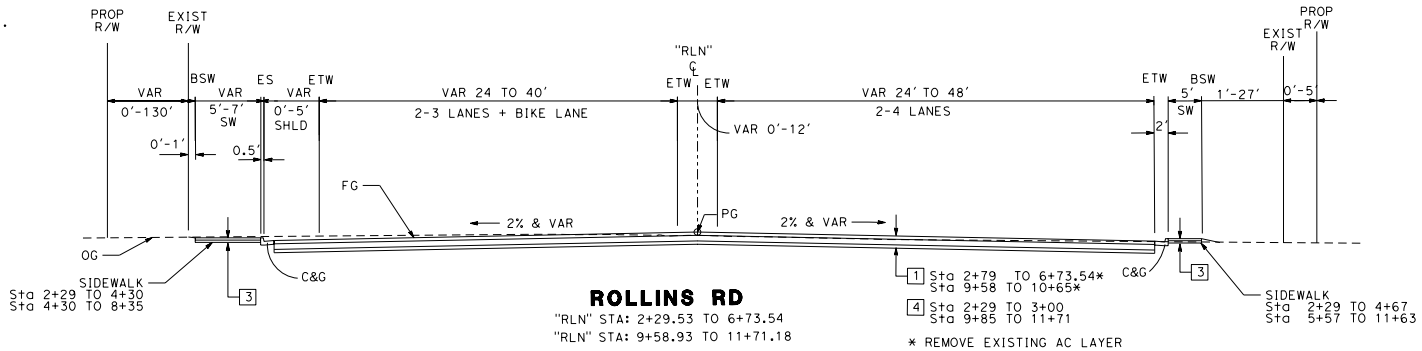

ROLLINS RD

"RLN" STA: 2+29.53 TO 6+73.54
"RLN" STA: 9+58.93 TO 11+71.18

* REMOVE EXISTING AC LAYER

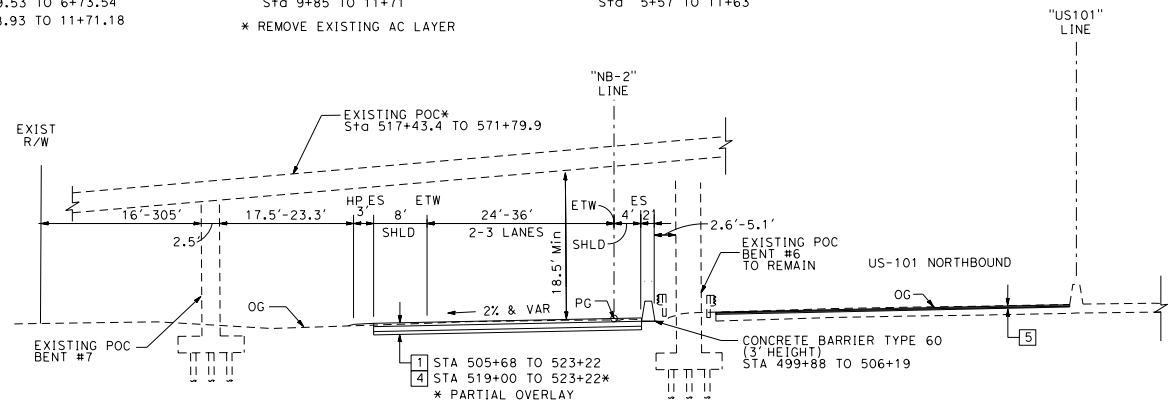

OFF-RAMP - NB US101 TO BAYSHORE HWY

"NB-2" STA: 505+68.5 TO 523+22.31

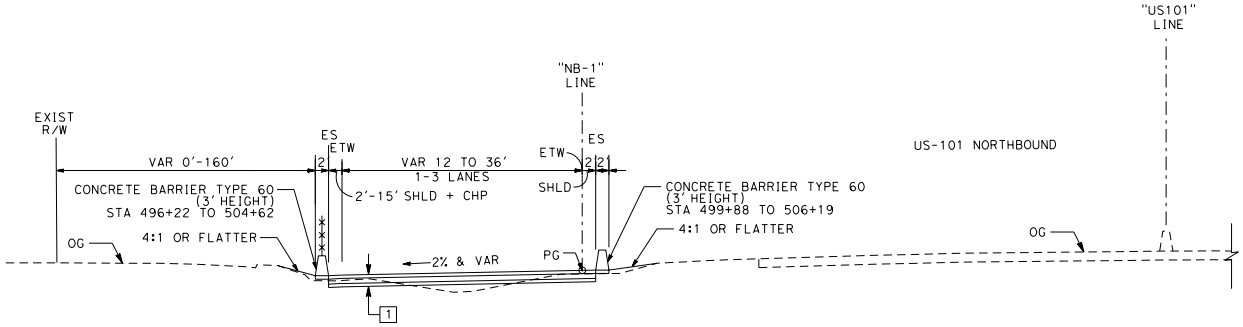

ON-RAMP - BAYSHORE HWY TO NB US-101

NB-1 STA: 490+64.40 TO 508+57.00

PRELIMINARY PLANS
NOT FOR CONSTRUCTION

No Scale
ALL DIMENSIONS ARE IN
FEET UNLESS OTHERWISE SHOWN

TYPICAL CROSS SECTIONS
X-9

REVISED BY	DATE REVISED

CALCULATED-DESIGNED BY	CHECKED BY
ERDAL KARATAYLIOGLU	RAMESH SATHIAMURTHY

CONSULTANT FUNCTIONAL SUPERVISOR

STATE OF CALIFORNIA - DEPARTMENT OF TRANSPORTATION

Caltrans

LAST REVISION 12-08-08

DATE PLOTTED => 12/28/2010
TIME PLOTTED => 2:32:32 PM

Dist	COUNTY	ROUTE	POST MILES TOTAL PROJECT	SHEET No.	TOTAL SHEETS
04	SM	101	16.3/17.06		

REGISTERED CIVIL ENGINEER DATE

PLANS APPROVAL DATE

REGISTERED PROFESSIONAL ENGINEER NO. EXP. CIVIL STATE OF CALIFORNIA

THE STATE OF CALIFORNIA OR ITS OFFICERS OR AGENTS SHALL NOT BE RESPONSIBLE FOR THE ACCURACY OR COMPLETENESS OF ELECTRONIC COPIES OF THIS PLAN SHEET.

URS Corporation
1333 Broadway
Suite 800
Oakland, CA 94612

SMCTA
1250 San Carlos Ave
San Carlos, CA 94070

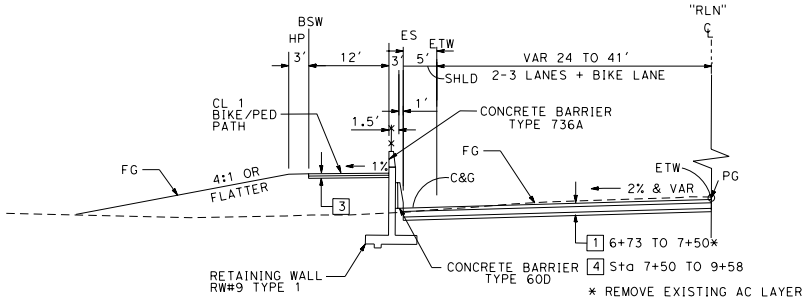

ROLLINS RD

"RLN" STA: 6+73.54 TO 9+58.93

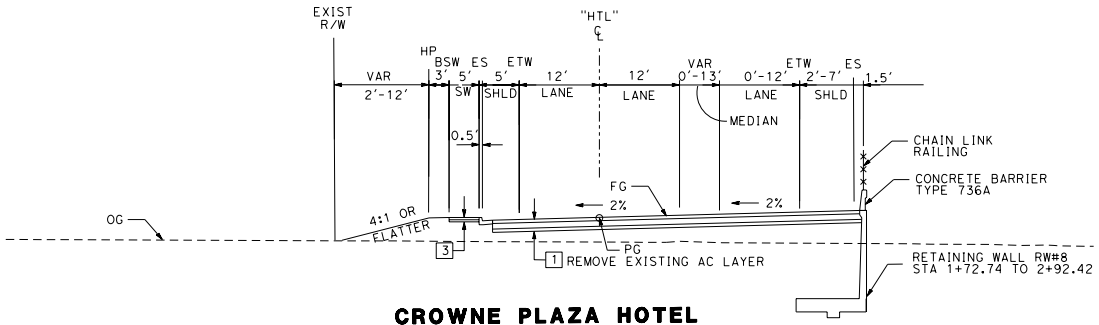

CROWNE PLAZA HOTEL ACCESS RD

"HTL" STA: 1+72.74 TO 4+04.76

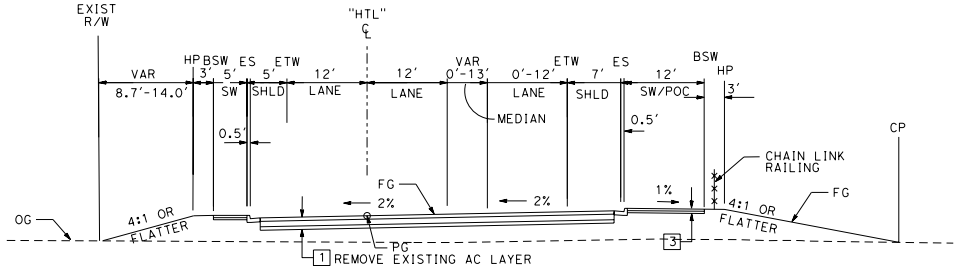

CROWNE PLAZA HOTEL ACCESS RD

"HTL" STA: 0+63.93 TO 1+72.74

PRELIMINARY PLANS
NOT FOR CONSTRUCTION

No Scale
ALL DIMENSIONS ARE IN
FEET UNLESS OTHERWISE SHOWN

TYPICAL CROSS SECTIONS X-10

STATE OF CALIFORNIA - DEPARTMENT OF TRANSPORTATION
Caltrans

CONSULTANT FUNCTIONAL SUPERVISOR
CALCULATED-DESIGNED BY ERDAL KARATAYLIOGLU
CHECKED BY RAMESH SATHIAMURTHY
REVISED BY
DATE REVISED

LAST REVISION 12-08-08
DATE PLOTTED => 12/28/2010
TIME PLOTTED => 2:30:26 PM

Dist	COUNTY	ROUTE	POST MILES TOTAL PROJECT	SHEET No.	TOTAL SHEETS
04	SM	101	16.3/17.06		

REGISTERED CIVIL ENGINEER DATE

PLANS APPROVAL DATE

REGISTERED PROFESSIONAL ENGINEER NO. EXP. CIVIL STATE OF CALIFORNIA

THE STATE OF CALIFORNIA OR ITS OFFICERS OR AGENTS SHALL NOT BE RESPONSIBLE FOR THE ACCURACY OR COMPLETENESS OF ELECTRONIC COPIES OF THIS PLAN SHEET.

URS Corporation
1333 Broadway
Suite 800
Oakland, CA 94612

SMCTA
1250 San Carlos Ave
San Carlos, CA 94070

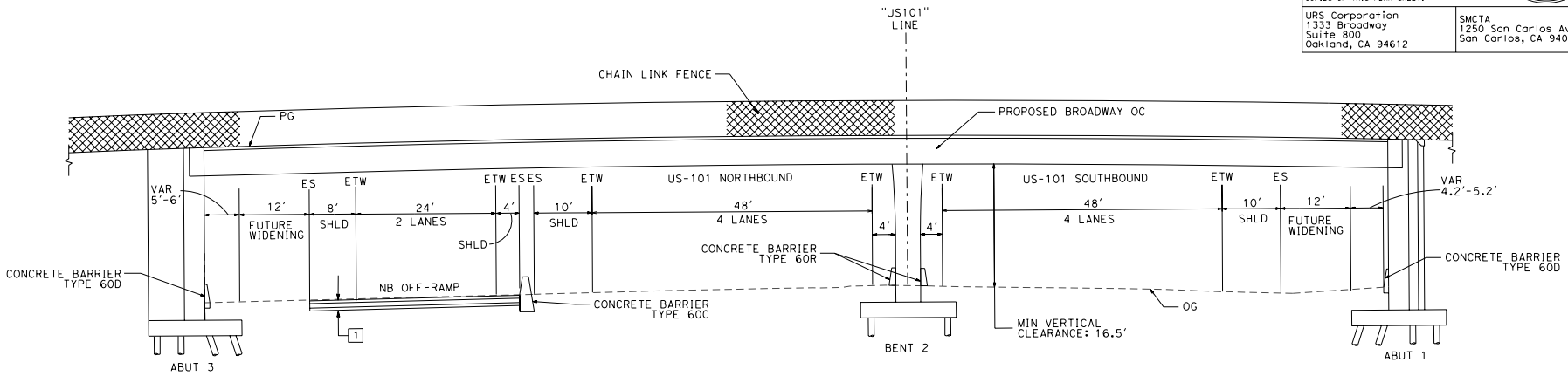

"US 101" STA: 514+00
BROADWAY OVERCROSSING

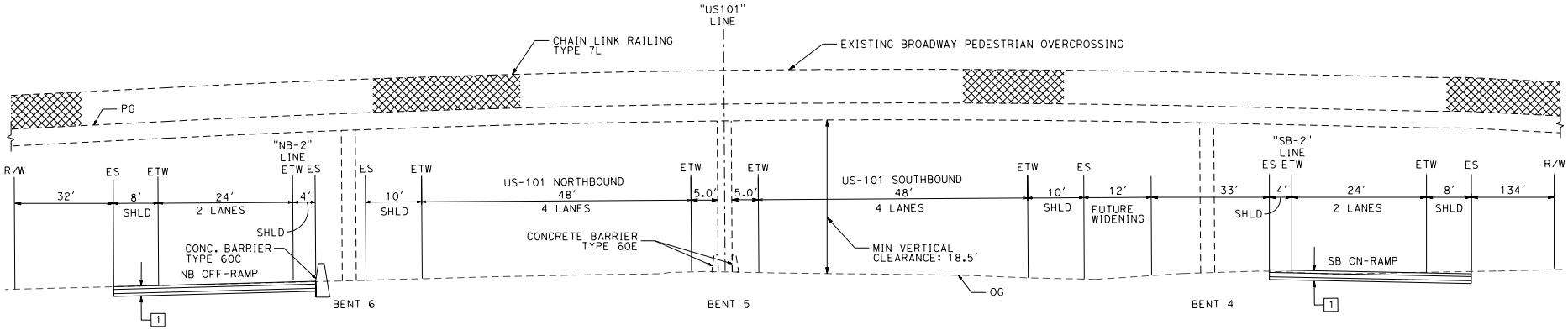

"US 101" STA: 517+90
BROADWAY PEDESTRIAN OVERCROSSING

PRELIMINARY PLANS
NOT FOR CONSTRUCTION

No Scale
ALL DIMENSIONS ARE IN
FEET UNLESS OTHERWISE SHOWN

TYPICAL CROSS SECTIONS
X-11

REVISED BY	DATE REVISED

CALCULATED-DESIGNED BY: ERDAL KARATAYLIOGLU
CHECKED BY: RAMESH SATHIAMURTHY
CONSULTANT FUNCTIONAL SUPERVISOR

STATE OF CALIFORNIA - DEPARTMENT OF TRANSPORTATION
Caltrans

LAST REVISION 12-08-08
DATE PLOTTED => 12/28/2010
TIME PLOTTED => 2:12:39 PM

BORDER LAST REVISED 3/1/2007 | RELATIVE BORDER SCALE IS IN INCHES 0 50 100 150 | USERNAME => Joel_Dickerson DGN FILE => ...\Sheets\CA-TypXSec\X-11.dgn | CU 04226 | EA 235840

Appendix B CEQA Checklist

Supporting documentation of all CEQA checklist determinations is provided in Chapter 2 of this Initial Study/Environmental Assessment. Documentation of "No Impact" determinations is provided at the beginning of Chapter 2. Discussion of all impacts, avoidance, minimization, and/or mitigation measures is under the appropriate topic headings in Chapter 2.

CEQA Environmental Checklist

04-SM-101	16.30/17.06	235840
Dist.-Co.-Rte.	P.M/P.M.	E.A.

This checklist identifies physical, biological, social and economic factors that might be affected by the proposed project. In many cases, background studies performed in connection with the projects indicate no impacts. A NO IMPACT answer in the last column reflects this determination. Where there is a need for clarifying discussion, the discussion is included either following the applicable section of the checklist or is within the body of the environmental document itself. The words "significant" and "significance" used throughout the following checklist are related to CEQA, not NEPA, impacts. The questions in this form are intended to encourage the thoughtful assessment of impacts and do not represent thresholds of significance.

	Potentially Significant Impact	Less Than Significant with Mitigation	Less Than Significant Impact	No Impact
I. AESTHETICS: Would the project:				
a) Have a substantial adverse effect on a scenic vista?	☐	☐	☐	☒
b) Substantially damage scenic resources, including, but not limited to, trees, rock outcroppings, and historic buildings within a state scenic highway?	☐	☐	☐	☒
c) Substantially degrade the existing visual character or quality of the site and its surroundings?	☐	☐	☒	☐
d) Create a new source of substantial light or glare which would adversely affect day or nighttime views in the area?	☐	☐	☒	☐
II. AGRICULTURE AND FOREST RESOURCES: In determining whether impacts to agricultural resources are significant environmental effects, lead agencies may refer to the California Agricultural Land Evaluation and Site Assessment Model (1997) prepared by the California Dept. of Conservation as an optional model to use in assessing impacts on agriculture and farmland. In determining whether impacts to forest resources, including timberland, are significant environmental effects, lead agencies may refer to information compiled by the California Department of Forestry and Fire Protection regarding the state's inventory of forest land, including the Forest and Range Assessment Project and the Forest Legacy Assessment Project; and the forest carbon measurement methodology provided in Forest Protocols adopted by the California Air Resources Board. Would the project:				
a) Convert Prime Farmland, Unique Farmland, or Farmland of Statewide Importance (Farmland), as shown on the maps prepared pursuant to the Farmland Mapping and Monitoring Program of the California Resources Agency, to non-agricultural use?	☐	☐	☐	☒
b) Conflict with existing zoning for agricultural use, or a Williamson Act contract?	☐	☐	☐	☒

	Potentially Significant Impact	Less Than Significant with Mitigation	Less Than Significant Impact	No Impact
c) Conflict with existing zoning for, or cause rezoning of, forest land (as defined in Public Resources Code section 12220(g)), timberland (as defined by Public Resources Code section 4526), or timberland zoned Timberland Production (as defined by Government Code section 51104(g))?	☐	☐	☐	☒
d) Result in the loss of forest land or conversion of forest land to non-forest use?	☐	☐	☐	☒
e) Involve other changes in the existing environment which, due to their location or nature, could result in conversion of Farmland, to non-agricultural use or conversion of forest land to non-forest use?	☐	☐	☐	☒
III. AIR QUALITY: Where available, the significance criteria established by the applicable air quality management or air pollution control district may be relied upon to make the following determinations. Would the project:				
a) Conflict with or obstruct implementation of the applicable air quality plan?	☐	☐	☐	☒
b) Violate any air quality standard or contribute substantially to an existing or projected air quality violation?	☐	☐	☒	☐
c) Result in a cumulatively considerable net increase of any criteria pollutant for which the project region is non-attainment under an applicable federal or state ambient air quality standard (including releasing emissions which exceed quantitative thresholds for ozone precursors)?	☐	☐	☐	☒
d) Expose sensitive receptors to substantial pollutant concentrations?	☐	☐	☒	☐
e) Create objectionable odors affecting a substantial number of people?	☐	☐	☒	☐
IV. BIOLOGICAL RESOURCES: Would the project:				
a) Have a substantial adverse effect, either directly or through habitat modifications, on any species identified as a candidate, sensitive, or special status species in local or regional plans, policies, or regulations, or by the California Department of Fish and Game or U.S. Fish and Wildlife Service?	☐	☐	☒	☐
b) Have a substantial adverse effect on any riparian habitat or other sensitive natural community identified in local or regional plans, policies, regulations or by the California Department of Fish and Game or US Fish and Wildlife Service?	☐	☐	☐	☒

	Potentially Significant Impact	Less Than Significant with Mitigation	Less Than Significant Impact	No Impact
c) Have a substantial adverse effect on federally protected wetlands as defined by Section 404 of the Clean Water Act (including, but not limited to, marsh, vernal pool, coastal, etc.) through direct removal, filling, hydrological interruption, or other means?	☐	☒	☐	☐
d) Interfere substantially with the movement of any native resident or migratory fish or wildlife species or with established native resident or migratory wildlife corridors, or impede the use of native wildlife nursery sites?	☐	☐	☒	☐
e) Conflict with any local policies or ordinances protecting biological resources, such as a tree preservation policy or ordinance?	☐	☐	☒	☐
f) Conflict with the provisions of an adopted Habitat Conservation Plan, Natural Community Conservation Plan, or other approved local, regional, or state habitat conservation plan?	☐	☐	☐	☒
V. CULTURAL RESOURCES: Would the project:				
a) Cause a substantial adverse change in the significance of a historical resource as defined in §15064.5?	☐	☐	☐	☒
b) Cause a substantial adverse change in the significance of an archaeological resource pursuant to §15064.5?	☐	☐	☒	☐
c) Directly or indirectly destroy a unique paleontological resource or site or unique geologic feature?	☐	☐	☐	☒
d) Disturb any human remains, including those interred outside of formal cemeteries?	☐	☐	☐	☒
VI. GEOLOGY AND SOILS: Would the project:				
a) Expose people or structures to potential substantial adverse effects, including the risk of loss, injury, or death involving:	☐	☐	☒	☐
i) Rupture of a known earthquake fault, as delineated on the most recent Alquist-Priolo Earthquake Fault Zoning Map issued by the State Geologist for the area or based on other substantial evidence of a known fault? Refer to Division of Mines and Geology Special Publication 42.	☐	☐	☒	☐
ii) Strong seismic ground shaking?	☐	☐	☒	☐
iii) Seismic-related ground failure, including liquefaction?	☐	☐	☒	☐

	Potentially Significant Impact	Less Than Significant with Mitigation	Less Than Significant Impact	No Impact
iv) Landslides?	☐	☐	☐	☒
b) Result in substantial soil erosion or the loss of topsoil?	☐	☐	☒	☐
c) Be located on a geologic unit or soil that is unstable, or that would become unstable as a result of the project, and potentially result in on- or off-site landslide, lateral spreading, subsidence, liquefaction or collapse?	☐	☐	☒	☐
d) Be located on expansive soil, as defined in Table 18-1-B of the Uniform Building Code (1994), creating substantial risks to life or property?	☐	☐	☐	☒
e) Have soils incapable of adequately supporting the use of septic tanks or alternative waste water disposal systems where sewers are not available for the disposal of waste water?	☐	☐	☐	☒

VII. GREENHOUSE GAS EMISSIONS: Would the project:

a) Generate greenhouse gas emissions, either directly or indirectly, that may have a significant impact on the environment? b) Conflict with an applicable plan, policy or regulation adopted for the purpose of reducing the emissions of greenhouse gases?	An assessment of the greenhouse gas emissions and climate change is included in the body of environmental document. While Caltrans has included this good faith effort in order to provide the public and decision-makers as much information as possible about the project, it is Caltrans determination that in the absence of further regulatory or scientific information related to GHG emissions and CEQA significance, it is too speculative to make a significance determination regarding the project's direct and indirect impact with respect to climate change. Caltrans does remain firmly committed to implementing measures to help reduce the potential effects of the project. These measures are outlined in the body of the environmental document.

VIII. HAZARDS AND HAZARDOUS MATERIALS: Would the project:

a) Create a significant hazard to the public or the environment through the routine transport, use, or disposal of hazardous materials?	☐	☐	☐	☒
b) Create a significant hazard to the public or the environment through reasonably foreseeable upset and accident conditions involving the release of hazardous materials into the environment?	☐	☐	☒	☐
c) Emit hazardous emissions or handle hazardous or acutely hazardous materials, substances, or waste within one-quarter mile of an existing or proposed school?	☐	☐	☐	☒

	Potentially Significant Impact	Less Than Significant with Mitigation	Less Than Significant Impact	No Impact
d) Be located on a site which is included on a list of hazardous materials sites compiled pursuant to Government Code Section 65962.5 and, as a result, would it create a significant hazard to the public or the environment?	☐	☐	☒	☐
e) For a project located within an airport land use plan or, where such a plan has not been adopted, within two miles of a public airport or public use airport, would the project result in a safety hazard for people residing or working in the project area?	☐	☐	☐	☒
f) For a project within the vicinity of a private airstrip, would the project result in a safety hazard for people residing or working in the project area?	☐	☐	☐	☒
g) Impair implementation of or physically interfere with an adopted emergency response plan or emergency evacuation plan?	☐	☐	☒	☐
h) Expose people or structures to a significant risk of loss, injury or death involving wildland fires, including where wildlands are adjacent to urbanized areas or where residences are intermixed with wildlands?	☐	☐	☐	☒
IX. HYDROLOGY AND WATER QUALITY: Would the project:				
a) Violate any water quality standards or waste discharge requirements?	☐	☐	☒	☐
b) Substantially deplete groundwater supplies or interfere substantially with groundwater recharge such that there would be a net deficit in aquifer volume or a lowering of the local groundwater table level (e.g., the production rate of pre-existing nearby wells would drop to a level which would not support existing land uses or planned uses for which permits have been granted)?	☐	☐	☐	☒
c) Substantially alter the existing drainage pattern of the site or area, including through the alteration of the course of a stream or river, in a manner which would result in substantial erosion or siltation on- or off-site?	☐	☐	☒	☐
d) Substantially alter the existing drainage pattern of the site or area, including through the alteration of the course of a stream or river, or substantially increase the rate or amount of surface runoff in a manner which would result in flooding on- or off-site?	☐	☐	☐	☒
e) Create or contribute runoff water which would exceed the capacity of existing or planned stormwater drainage systems or provide substantial additional sources of polluted runoff?	☐	☐	☒	☐
f) Otherwise substantially degrade water quality?	☐	☐	☐	☒

	Potentially Significant Impact	Less Than Significant with Mitigation	Less Than Significant Impact	No Impact
g) Place housing within a 100-year flood hazard area as mapped on a federal Flood Hazard Boundary or Flood Insurance Rate Map or other flood hazard delineation map?	☐	☐	☐	☒
h) Place within a 100-year flood hazard area structures which would impede or redirect flood flows?	☐	☐	☒	☐
i) Expose people or structures to a significant risk of loss, injury or death involving flooding, including flooding as a result of the failure of a levee or dam?	☐	☐	☐	☒
j) Inundation by seiche, tsunami, or mudflow	☐	☐	☐	☒
X. LAND USE AND PLANNING: Would the project:				
a) Physically divide an established community?	☐	☐	☐	☒
b) Conflict with any applicable land use plan, policy, or regulation of an agency with jurisdiction over the project (including, but not limited to the general plan, specific plan, local coastal program, or zoning ordinance) adopted for the purpose of avoiding or mitigating an environmental effect?	☐	☐	☐	☒
c) Conflict with any applicable habitat conservation plan or natural community conservation plan?	☐	☐	☐	☒
XI. MINERAL RESOURCES: Would the project:				
a) Result in the loss of availability of a known mineral resource that would be of value to the region and the residents of the state?	☐	☐	☐	☒
b) Result in the loss of availability of a locally-important mineral resource recovery site delineated on a local general plan, specific plan or other land use plan?	☐	☐	☐	☒
XII. NOISE: Would the project result in:				
a) Exposure of persons to or generation of noise levels in excess of standards established in the local general plan or noise ordinance, or applicable standards of other agencies?	☐	☐	☒	☐
b) Exposure of persons to or generation of excessive groundborne vibration or groundborne noise levels?	☐	☐	☐	☒
c) A substantial permanent increase in ambient noise levels in the project vicinity above levels existing without the project?	☐	☐	☐	☒

	Potentially Significant Impact	Less Than Significant with Mitigation	Less Than Significant Impact	No Impact
d) A substantial temporary or periodic increase in ambient noise levels in the project vicinity above levels existing without the project?	☐	☐	☒	☐
e) For a project located within an airport land use plan or, where such a plan has not been adopted, within two miles of a public airport or public use airport, would the project expose people residing or working in the project area to excessive noise levels?	☐	☐	☐	☒
f) For a project within the vicinity of a private airstrip, would the project expose people residing or working in the project area to excessive noise levels?	☐	☐	☐	☒
XIII. POPULATION AND HOUSING: Would the project:				
a) Induce substantial population growth in an area, either directly (for example, by proposing new homes and businesses) or indirectly (for example, through extension of roads or other infrastructure)?	☐	☐	☐	☒
b) Displace substantial numbers of existing housing, necessitating the construction of replacement housing elsewhere?	☐	☐	☐	☒
c) Displace substantial numbers of people, necessitating the construction of replacement housing elsewhere?	☐	☐	☐	☒
XIV. PUBLIC SERVICES:				
a) Would the project result in substantial adverse physical impacts associated with the provision of new or physically altered governmental facilities, need for new or physically altered governmental facilities, the construction of which could cause significant environmental impacts, in order to maintain acceptable service ratios, response times or other performance objectives for any of the public services:				
Fire protection?	☐	☐	☐	☒
Police protection?	☐	☐	☐	☒
Schools?	☐	☐	☐	☒
Parks?	☐	☐	☐	☒
Other public facilities?	☐	☐	☐	☒

	Potentially Significant Impact	Less Than Significant with Mitigation	Less Than Significant Impact	No Impact
XV. RECREATION:				
a) Would the project increase the use of existing neighborhood and regional parks or other recreational facilities such that substantial physical deterioration of the facility would occur or be accelerated?	☐	☐	☐	☒
b) Does the project include recreational facilities or require the construction or expansion of recreational facilities which might have an adverse physical effect on the environment?	☐	☐	☐	☒
XVI. TRANSPORTATION/TRAFFIC: Would the project:				
a) Conflict with an applicable plan, ordinance or policy establishing measures of effectiveness for the performance of the circulation system, taking into account all modes of transportation including mass transit and non-motorized travel and relevant components of the circulation system, including but not limited to intersections, streets, highways and freeways, pedestrian and bicycle paths, and mass transit?	☐	☐	☒	☐
b) Conflict with an applicable congestion management program, including, but not limited to level of service standards and travel demand measures, or other standards established by the county congestion management agency for designated roads or highways?	☐	☐	☒	☐
c) Result in a change in air traffic patterns, including either an increase in traffic levels or a change in location that results in substantial safety risks?	☐	☐	☐	☒
d) Substantially increase hazards due to a design feature (e.g., sharp curves or dangerous intersections) or incompatible uses (e.g., farm equipment)?	☐	☐	☐	☒
e) Result in inadequate emergency access?	☐	☐	☒	☐
f) Conflict with adopted policies, plans or programs regarding public transit, bicycle, or pedestrian facilities, or otherwise decrease the performance or safety of such facilities?	☐	☐	☐	☒
XVII. UTILITIES AND SERVICE SYSTEMS: Would the project:				
a) Exceed wastewater treatment requirements of the applicable Regional Water Quality Control Board?	☐	☐	☐	☒
b) Require or result in the construction of new water or wastewater treatment facilities or expansion of existing facilities, the construction of which could cause significant environmental effects?	☐	☐	☐	☒

	Potentially Significant Impact	Less Than Significant with Mitigation	Less Than Significant Impact	No Impact
c) Require or result in the construction of new storm water drainage facilities or expansion of existing facilities, the construction of which could cause significant environmental effects?	☐	☐	☒	☐
d) Have sufficient water supplies available to serve the project from existing entitlements and resources, or are new or expanded entitlements needed?	☐	☐	☐	☒
e) Result in a determination by the wastewater treatment provider which serves or may serve the project that it has adequate capacity to serve the project's projected demand in addition to the provider's existing commitments?	☐	☐	☐	☒
f) Be served by a landfill with sufficient permitted capacity to accommodate the project's solid waste disposal needs?	☐	☐	☐	☒
g) Comply with federal, state, and local statutes and regulations related to solid waste?	☐	☐	☐	☒

XVIII. MANDATORY FINDINGS OF SIGNIFICANCE:

a) Does the project have the potential to degrade the quality of the environment, substantially reduce the habitat of a fish or wildlife species, cause a fish or wildlife population to drop below self-sustaining levels, threaten to eliminate a plant or animal community, substantially reduce the number or restrict the range of a rare or endangered plant or animal or eliminate important examples of the major periods of California history or prehistory?	☐	☐	☒	☐
b) Does the project have impacts that are individually limited, but cumulatively considerable? ("Cumulatively considerable" means that the incremental effects of a project are considerable when viewed in connection with the effects of past projects, the effects of other current projects, and the effects of probable future projects.)	☐	☐	☒	☐
c) Does the project have environmental effects which will cause substantial adverse effects on human beings, either directly or indirectly?	☐	☐	☒	☐

Appendix C Title VI Policy Statement

STATE OF CALIFORNIA—BUSINESS, TRANSPORTATION AND HOUSING AGENCY ARNOLD SCHWARZENEGGER, Governor

DEPARTMENT OF TRANSPORTATION
OFFICE OF THE DIRECTOR
P.O. Box 942873, MS-49
SACRAMENTO, CA 94273-0001
PHONE (916) 654-5266
FAX (916) 654-6608
TTY 711

Flex your power!
Be energy efficient!

July 20, 2010

TITLE VI
POLICY STATEMENT

The California Department of Transportation, under Title VI of the Civil Rights Act of 1964 and related statutes, ensures that no person in the State of California shall, on the grounds of race, color, national origin, sex, disability, or age, be excluded from participation in, be denied the benefits of, or be otherwise subjected to discrimination under any program or activity it administers.

For information or guidance on how to file a complaint based on the grounds of race, color, national origin, sex, disability, or age, please visit the following web page: http://www.dot.ca.gov/hq/bep/title_vi/t6_violated.htm.

Additionally, if you need this information in an alternate format, such as in Braille or in a language other than English, please contact Charles Wahnon, Manager, Title VI and Americans with Disabilities Act Program, California Department of Transportation, 1823 14th Street, MS-79, Sacramento, CA 95811. Phone: (916) 324-1353 or toll free 1-866-810-6346 (voice), TTY 711, fax (916) 324-1869, or via email: charles_wahnon@dot.ca.gov.

CINDY McKIM
Director

"Caltrans improves mobility across California"

❖

Appendix D Summary of Relocation Benefits

Declaration of Policy

"The purpose of this title is to establish a *uniform policy for fair and equitable treatment* of persons displaced as a result of federal and federally assisted programs in order that such persons *shall not suffer disproportionate injuries* as a result of programs designed for the benefit of the public as a whole."

The Fifth Amendment to the U.S. Constitution states, "No Person shall…be deprived of life, liberty, or property, without due process of law, nor shall private property be taken for public use without just compensation." The Uniform Act sets forth in statute the due process that must be followed in Real Property acquisitions involving federal funds. Supplementing the Uniform Act is the government-wide single rule for all agencies to follow, set forth in 49 Code of Federal Regulations, Part 24. Displaced individuals, families, businesses, farms, and nonprofit organizations may be eligible for relocation advisory services and payments, as discussed below.

Fair Housing

The Fair Housing Law (Title VIII of the Civil Rights Act of 1968) sets forth the policy of the United States to provide, within constitutional limitations, for fair housing. This Act, and as amended, makes discriminatory practices in the purchase and rental of most residential units illegal. Whenever possible, minority persons shall be given reasonable opportunities to relocate to any available housing regardless of neighborhood, as long as the replacement dwellings are decent, safe, and sanitary and are within their financial means. This policy, however, does not require Caltrans to provide a person a larger payment than is necessary to enable a person to relocate to a comparable replacement dwelling.

Any persons to be displaced will be assigned to a relocation advisor, who will work closely with each displacee in order to see that all payments and benefits are fully utilized, and that all regulations are observed, thereby avoiding the possibility of displacees jeopardizing or forfeiting any of their benefits or payments. At the time of the initiation of negotiations (usually the first written offer to purchase), owner-occupants are given a detailed explanation of the state's relocation services. Tenant occupants of properties to be acquired are contacted soon after the initiation of negotiations, and also are given a detailed explanation of the Caltrans Relocation

Assistance Program. To avoid loss of possible benefits, no individual, family, business, farm, or nonprofit organization should commit to purchase or rent a replacement property without first contacting a Caltrans relocation advisor.

Relocation Assistance Advisory Services

In accordance with the Uniform Relocation Assistance and Real Property Acquisition Policies Act of 1970, as amended, Caltrans will provide relocation advisory assistance to any person, business, farm or nonprofit organization displaced as a result of the acquisition of real property for public use, so long as they are legally present in the United States. Caltrans will assist eligible displacees in obtaining comparable replacement housing by providing current and continuing information on the availability and prices of both houses for sale and rental units that are "decent, safe and sanitary." Nonresidential displacees will receive information on comparable properties for lease or purchase (For business, farm and nonprofit organization relocation services, see below).

Residential replacement dwellings will be in a location generally not less desirable than the displacement neighborhood at prices or rents within the financial ability of the individuals and families displaced, and reasonably accessible to their places of employment. Before any displacement occurs, comparable replacement dwellings will be offered to displacees that are open to all persons regardless of race, color, religion, sex, national origin, and consistent with the requirements of Title VIII of the Civil Rights Act of 1968. This assistance will also include the supplying of information concerning Federal and State assisted housing programs, and any other known services being offered by public and private agencies in the area.

Persons who are eligible for relocation payments and who are legally occupying the property required for the project will not be asked to move without first being given at least 90 days written notice. Residential occupants eligible for relocation payment(s) will not be required to move unless at least one comparable "decent, safe and sanitary" replacement dwelling, available on the market, is offered to them by Caltrans.

Residential Relocation Payments

The Relocation Assistance Program will help eligible residential occupants by paying certain costs and expenses. These costs are limited to those necessary for or incidental to the purchase or rental of a replacement dwelling and actual reasonable moving expenses to a new location within 50 miles of the displacement property.

Any actual moving costs in excess of the 50 miles are the responsibility of the displacee. The Residential Relocation Assistance Program can be summarized as follows:

Moving Costs

Any displaced person, who lawfully occupied the acquired property, regardless of the length of occupancy in the property acquired, will be eligible for reimbursement of moving costs. Displacees will receive either the actual reasonable costs involved in moving themselves and personal property up to a maximum of 50 miles, or a fixed payment based on a fixed moving cost schedule. Lawful occupants who move into the displacement property after the initiation of negotiations must wait until the Department obtains control of the property in order to be eligible for relocation payments.

Purchase Differential

In addition to moving and related expense payments, fully eligible homeowners may be entitled to payments for increased costs of replacement housing.

Homeowners who have owned and occupied their property for 180 days or more prior to the date of the initiation of negotiations (usually the first written offer to purchase the property), may qualify to receive a price differential payment and may qualify to receive reimbursement for certain nonrecurring costs incidental to the purchase of the replacement property. An interest differential payment is also available if the interest rate for the loan on the replacement dwelling is higher than the loan rate on the displacement dwelling, subject to certain limitations on reimbursement based upon the replacement property interest rate. The maximum combination of these three supplemental payments that the owner-occupant can receive is $22,500. If the total entitlement (without the moving payments) is in excess of $22,500, the Last Resort Housing Program will be used (See the explanation of the Last Resort Housing Program below).

Rent Differential

Tenants and certain owner-occupants (based on length of ownership) who have occupied the property to be acquired by Caltrans prior to the date of the initiation of negotiations may qualify to receive a rent differential payment. This payment is made when Caltrans determines that the cost to rent a comparable “decent, safe and sanitary” replacement dwelling will be more than the present rent of the displacement dwelling. As an alternative, the tenant may qualify for a down payment benefit

designed to assist in the purchase of a replacement property and the payment of certain costs incidental to the purchase, subject to certain limitations noted under the *Down Payment* section below. The maximum amount payable to any eligible tenant and any owner-occupant of less than 180 days, in addition to moving expenses, is $5,250. If the total entitlement for rent supplement exceeds $5,250, the Last Resort Housing Program will be used.

In order to receive any relocation benefits, the displaced person must buy or rent and occupy a "decent, safe and sanitary" replacement dwelling within one year from the date the Department takes legal possession of the property, or from the date the displacee vacates the displacement property, whichever is later.

Down Payment

The down payment option has been designed to aid owner-occupants of less than 180 days and tenants in legal occupancy prior to Caltrans' initiation of negotiations. The down payment and incidental expenses cannot exceed the maximum payment of $5,250. The one-year eligibility period in which to purchase and occupy a "decent, safe and sanitary" replacement dwelling will apply.

Last Resort Housing

Federal regulations (49 CFR 24) contain the policy and procedure for implementing the Last Resort Housing Program on federal-aid projects. Last Resort Housing benefits are, except for the amounts of payments and the methods in making them, the same as those benefits for standard residential relocation as explained above. Last Resort Housing has been deigned primarily to cover situations where a displacee cannot be relocated because of lack of available comparable replacement housing, or when the anticipated replacement housing payments exceed the $22,500 and $5,250 limits of the standard relocation procedure, because either the displacee lacks the financial ability or other valid circumstances.

After the initiation of negotiations, Caltrans will within a reasonable length of time, personally contact the displacees to gather important information, including the following:

- Number of people to be displaced;
- Specific arrangements needed to accommodate any family member(s) with special needs;
- Financial ability to relocate into comparable replacement dwelling which will adequately house all members of the family;

- Preferences in area of relocation;
- Location of employment or school.

Nonresidential Relocation Assistance

The Nonresidential Relocation Assistance Program provides assistance to businesses, farms and nonprofit organizations in locating suitable replacement property, and reimbursement for certain costs involved in relocation. The Relocation Advisory Assistance Program will provide current lists of properties offered for sale or rent, suitable for a particular business's specific relocation needs. The types of payments available to eligible businesses, farms and nonprofit organizations are: searching and moving expenses, and possibly reestablishment expenses; or a fixed in lieu payment instead of any moving, searching and reestablishment expenses. The payment types can be summarized as follows:

Moving Expenses

Moving expenses may include the following actual, reasonable costs:

- The moving of inventory, machinery, equipment and similar business-related property, including: dismantling, disconnecting, crating, packing, loading, insuring, transporting, unloading, unpacking, and reconnecting of personal property. Items acquired in the Right of Way contract may not be moved under the Relocation Assistance Program. If the displacee buys an Item Pertaining to the Realty back at salvage value, the cost to move that item is borne by the displacee.
- Loss of tangible personal property provides payment for actual, direct loss of personal property that the owner is permitted not to move.
- Expenses related to searching for a new business site, up to $2,500, for reasonable expenses actually incurred.

Reestablishment Expenses

Reestablishment expenses related to the operation of the business at the new location, up to $10,000 for reasonable expenses actually incurred.

Fixed In Lieu Payment

A fixed payment in lieu of moving, searching, and reestablishment payments may be available to businesses which meet certain eligibility requirements. This payment is an amount equal to half the average annual net earnings for the last two taxable years prior to the relocation and may not be less than $1,000 nor more than $20,000.

Additional Information

Reimbursement for moving costs and replacement housing payments are not considered income for the purpose of the Internal Revenue Code of 1954, or for the purpose of determining the extent of eligibility of a displacee for assistance under the Social Security Act, or any other law, *except* for any Federal law providing local "Section 8" Housing Programs.

Any person, business, farm or nonprofit organization which has been refused a relocation payment by the Caltrans relocation advisor or believes that the payment(s) offered by the agency are inadequate, may appeal for a special hearing of the complaint. No legal assistance is required. Information about the appeal procedure is available from the relocation advisor.

California law allows for the payment for lost goodwill that arises from the displacement for a public project. A list of ineligible expenses can be obtained from Caltrans Right of Way. California's law and the federal regulations covering relocation assistance provide that no payment shall be duplicated by other payments being made by the displacing agency.

Important Notice

To avoid loss of possible benefits, no individual, family, business, farm or nonprofit organization should commit to purchase or rent a replacement property without first contacting a Department of Transportation relocation advisor at:

State of California
Department of Transportation, District #4
111 Grand Avenue
Oakland, CA 94612

Appendix E Glossary of Technical Terms

This appendix briefly explains the technical terms and names used in this IS/EA. Appendix G provides a list of acronyms.

Best Management Practice (BMP)	Any program, technology, process, operating method, measure or device that controls, prevents, removes or reduces pollution.
Basin Plan	A specific plan for control of water quality within one of the nine hydrologic basins of the State under the regulation of a Water Quality Control Board.
Buttonhook (or Hook) ramp	A ramp shaped like the letter "J."
Cloverleaf interchange	An interchange type that has two or four loop ramps. The example below is a four-loop cloverleaf interchange with collector-distributor roads. A two-loop cloverleaf is sometimes called a partial cloverleaf interchange.

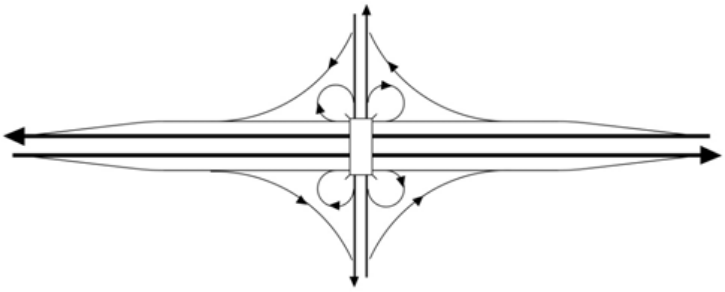

Image source: Highway Design Manual, Chapter 500, Department 2009g.

Cumulative effects	Project effects that are related to other actions with individually insignificant but cumulatively significant impacts.
Decibel	A numerical expression of the relative loudness of a sound.

Diamond interchange	An interchange type that has two or four diagonal ramps that form a diamond shape. The example below has four diagonal ramps. A two-ramp diamond is sometimes called a partial diamond interchange.

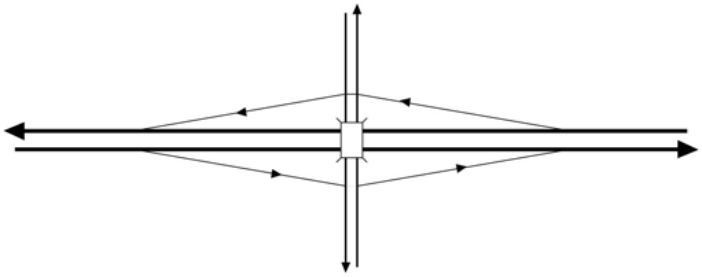

Image source: Highway Design Manual, Chapter 500, Department 2009g.

Encroachment (floodplain)	An action within the limits of the 100-year floodplain.
Endangered	Plant or animal species that are in danger of extinction throughout all or a significant portion of its range.
Erosion	The wearing away of the land surface by running water, wind, ice, or other geological agents.
Federal Register	Federal publication that provides official notice of federal administrative hearings and issuance of proposed and final federal administrative rules and regulations.
Floodplain (100-year)	The area subject to flooding by a flood or tide that has a one percent chance of being exceeded in any given year.
FONSI	Finding of No Significant Impact, issued by the Department under its responsibilities pursuant to 23 United States Code (USC) 327 upon approval of the NEPA review process.
Habitat	The place or type of site where a plant or animal naturally or normally lives and grows.
Hectare	A unit of surface measure in the metric system, equal to 10,000 square meters.
Initial Study (IS)	Environmental review document prepared to comply with CEQA
Initial Site Assessment	A Department of Transportation term for an initial study to determine hazardous waste issues on a project.

L_{eq}	A unit used for evaluation of sound impacts, L_{eq} is the measurement of the fluctuating sound level received by a receptor averaged over a time interval (usually one hour).
Level of Service (LOS)	A measurement of capacity of a roadway.
Mitigation	Compensation for an impact by replacement or provision of substitute resources or environments. Mitigation can include avoiding an impact by not taking a certain action, minimizing impacts by limiting the degree of an action, or rectifying an impact by repairing or restoring the affected environment.
Negative Declaration (ND)	Issued upon approval of the environmental review process under CEQA
NPDES	National Pollutant Discharge Elimination System. A permit regulated by the Regional Water Quality Control Board that is required if more than one acre of original ground is graded. One condition of this permit is that the contractor must submit a Storm Water Pollution Prevention Plan (SWPPP), which is similar to the Water Pollution Control Plan required by Caltrans' Standard Specification 7-1.01G.
Practicable	An action that is capable of being done after taking into consideration cost, existing technology and logistics in light of overall project purposes.
Receptors	Term used in air quality and noise studies that refers to houses or businesses that could be affected by a project.
Regulatory agency	An agency that has jurisdiction by law.
Responsible agency	A public agency other than the Lead Agency that has responsibility for carrying out or approving a project under CEQA.
Right-of-way	A general term denoting land, property, or interest therein, usually in a strip, acquired for or devoted to transportation purposes.

Riparian	Pertaining to the banks and other adjacent terrestrial (as opposed to aquatic) environs of freshwater bodies, watercourses, estuaries, and surface-emergent aquifers, whose transported freshwater provides soil moisture sufficient in excess of that available through local precipitation to potentially support the growth of vegetation.
RTP	Regional Transportation Plan, prepared by the Metropolitan Transportation Commission (MTC), the regional agency responsible for transportation planning and funding.
Special-status species	Plant or animal species that are either (1) Federally listed, proposed for or a candidate for listing as threatened or endangered; (2) bird species protected under the Federal Migratory Bird Treaty Act; (3) protected under State endangered species laws and regulations, plant protection laws and regulations, Fish and Game codes, or species of special concern listings and policies; (4) recognized by national, State, or local environmental organizations (e.g., California Native Plant Society).
STIP	The State Transportation Improvement Program, updated every two years, is the California Transportation Commission's priorities for improvements on and off the State highway system.
SWPPP	A Storm Water Pollution Prevention Plan is prepared to evaluate sources of discharges and activities that may affect storm water runoff, and implement measures or practices to reduce or prevent such discharges.
Threatened	A species that is likely to become endangered in the foreseeable future in the absence of special protection.
Trumpet interchange	An interchange type that is typically used for three-way interchanges, with one ramp that makes a 270-degree loop.

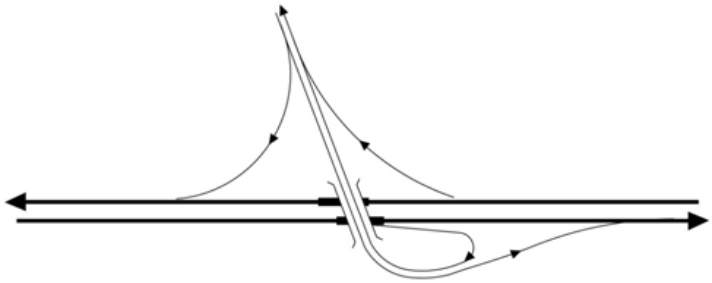

Image source: Highway Design Manual, Chapter 500, Department 2009g.

Waters of the United States	As defined by the USACE in 33 Code of Federal Regulations 328.3(a): 1. All waters that are currently used, or were used in the past, or may be susceptible to use in interstate or foreign commerce, including all waters that are subject to the ebb and flow of the tide; 2. All interstate waters including interstate wetlands; 3. All other waters such as intrastate lakes, rivers, streams (including intermittent streams), mudflats, sandflats, wetlands, sloughs, prairie potholes, wet meadows, playa lakes, or natural ponds, the use, degradation or destruction of which could affect interstate or foreign commerce, including any such waters: (i) Which are or could be used by interstate or foreign travelers for recreational or other purposes; or (ii) From which fish or shellfish are or could be taken and sold in interstate or foreign commerce; or (iii) Which are used or could be used for industrial purposes by industries in interstate commerce; 4. All impoundment of waters otherwise defined as waters of the United States under this definition; 5. Tributaries of waters identified in paragraphs 1-4; 6. The territorial seas; 7. Wetlands adjacent to waters (waters that are not wetlands themselves) identified in paragraphs 1-6.
Wetlands	When used in a formal context, such as in this IS/EA, wetlands are areas that are inundated or saturated by surface or groundwater at a frequency and duration sufficient to support, and under normal circumstances will support, a prevalence of vegetation typically adapted for life in saturated soil conditions. Wetlands generally include swamps, marshes, bogs, and similar areas [33 CFR 328.3(b)].

Appendix F Minimization and/or Mitigation Summary

Table F-1 Summary of Minimization and/or Mitigation Measures

Minimization and/or Mitigation Measure	Page Reference in IS/EA	Responsible Party	Timing
Parks and Recreation			
Develop a trail closure plan that will: (1) minimize the number of days that the Bay Trail and Bay Trail extension will be closed to the public; (2) include a mandatory signage plan notifying Bay Trail users of closed segments or full closures (and post notices at Bay Trail access points as appropriate); and (3) provide a detour or alternate route for trail users during construction. Keep trail closures to the minimum period possible.	2-21	Department, San Mateo County Transportation Authority (SMCTA)	During final design and before submitting Bay Conservation and Development Commission (BCDC) permit application
Relocations and Real Property Acquisition			
Provide businesses with relocation assistance payments and counseling in accordance with the Federal Uniform Relocation Assistance and Real Properties Acquisition Policies Act and in compliance with Title VI of the Civil Rights Act.	2-31	Department Right of Way (ROW), SMCTA	Final design and ROW
Utilities and Emergency Services			
Protect the three existing Pacific Gas and Electric Company (PG&E) transmission towers and their foundations during construction.	2-34	Department, SMCTA, and Construction Contractor	Final design, construction
If necessary, obtain a longitudinal encroachment policy variance for the high-voltage transmission lines suspended from the PG&E transmission towers.	2-34	Department, SMCTA	Plans, Specifications, and Estimates (PS&E)
Traffic and Transportation/Pedestrian and Bicycle Facilities			
Develop a Transportation Management Plan (TMP) to address impacts to motor vehicle, bicycle, and pedestrian access during project construction. The TMP will address traffic impacts from stage construction, detours, other traffic handling concerns. The plan will maintain bicycle and pedestrian access to the maximum extent feasible as part of construction staging, include briefing local public officials and developing a public information program to notify the public of project progress and upcoming closures and detours, and include outreach to ride sharing agencies, transit operators, and neighborhood and special interest groups. The TMP will include maintaining access for emergency response vehicles during project construction. Detours and lane closures that increase traffic qeueing to unacceptable levels in the vicinity of the at-grade Caltrain crossing will be avoided.	2-21, 2-34, 2-46	SMCTA	Final design

Table F-1 Summary of Minimization and/or Mitigation Measures

Minimization and/or Mitigation Measure	Page Reference in IS/EA	Responsible Party	Timing
Visual/Aesthetics			
Provide replacement tree planting through use of locally appropriate trees of tall stature (potentially including coastal redwoods, coastal live oaks, cork oaks, or similar species) to restore and enhance the interchange. Where possible, plant clinging vines to soften the appearance of concrete retaining walls.	2-72	SMCTA, Department	Design, construction
Provide architectural treatments, particularly surface texture treatment, for major structures including the overcrossing parapet and all visible retaining walls to reduce surface reflectivity, brightness, and visual monotony. Consider surface texture treatments similar to those on the existing pedestrian overcrossing. Consider upgraded fencing and ornamental light fixtures (examples shown in Figure 2.5-2) for the Broadway overcrossing. Also consider ornamental light fixtures where appropriate for Broadway, Bayshore Highway, and Airport Boulevard in the project limits.	2-72	SMCTA, Department, City of Burlingame	Final design
Provide replacement tree planting at the southbound on- and off-ramps and in the northeast quadrant of the interchange; along the west side of Bayshore Highway; at the gas station at the corner of Bayshore Highway and Airport Boulevard, which is proposed to be acquired and removed for the project; and along the Bay Trail. Consider other landscaping for the area between the project and the Bay Trail to replace lost trees, shrubs and lawn in the area northeast of Airport Boulevard, to soften the new earth embankment north of Airport Boulevard, to screen and soften the visual foreground of the new retaining wall along Bayshore Highway, and to enhance the landside trail environment.	2-72	SMCTA, Department	Final design, post-construction
Cultural Resources			
Designate the site of CA-SMA-317 as an Environmentally Sensitive Area (ESA). Determine the specific method of establishing the ESA during final design.	2-76	Department, SMCTA, and Construction Contractor	Final design, construction
If cultural materials are found during construction, divert all earth-moving activity within and around the immediate discovery area until after an archaeologist can assess the nature and significance of the find.	2-76	SMCTA, Resident Engineer, Construction Contractor	Final design, construction
Contact the County Coroner if human remains are discovered and stop disturbances and activities in any area or nearby area suspected to overlie remains. Folllow provisions of California Public Resources Code Section 5097.98 as applicable.	2-76	SMCTA, Resident Engineer, Construction Contractor	Final design, construction
Water Quality and Storm Water Runoff			
Minimize disturbed soil areas and maintain existing vegetation to the maximum extent practicable. Limit work during the rainy season to the extent practicable to avoid storm water runoff impacts.	2-87	SMCTA, Resident Engineer, Construction Contractor	Final design, construction

Table F-1 Summary of Minimization and/or Mitigation Measures

Minimization and/or Mitigation Measure	Page Reference in IS/EA	Responsible Party	Timing
Prepare a Storm Water Pollution Prevention Plan (SWPPP) that includes storm water best management practices (BMPs) for temporary soil stablization and sediment control, that meets the standards and objectives set forth in Section 7-1.01G of the Department Standard Specifications, and complies with the goals and restrictions in the Regional Water Quality Control Board (RWQCB) Basin Plan.	2-87, 2-137	SMCTA, Construction Contractor	Final design
Include the feasible temporary and permanent erosion control BMPs specified in the IS/EA.	2-88 thru 2-89	SMCTA, Construction Contractor	PS&E
Geology, Soils, and Seismicity			
Perform additional geotechnical subsurface and design investigations that include site-specific evaluation of subsurface conditions at the locations of proposed foundation features.	2-93	SMCTA	Final design
Design and construct project elements to meet seismic design requirements for ground shaking and ground motions for the project location and site conditions.	2-93	SMCTA, Construction Contractor	Design, construction
Hazardous Waste and Materials			
Further investigation of the sites identified in Table 2.10-1 is recommended due to the potential presence of petroleum hydrocarbons, solvents, and aerially deposited lead in soil and/or groundwater.	2-99	SMCTA	Final design
For excavations that extend to groundwater, perform groundwater sampling, analysis, and characterization before construction. Determine treatment and disposal options for extracted groundwater before dewatering.	2-99	SMCTA	Final design
For soil excavation planned near properties where petroleum hydrocarbon-impacted soils may be present, sample, test, and characterize the soil.	2-100	SMCTA	Final design
For soil excavation planned near properties where chlorinated compounds may be present, sample, test, and characterize the soil and groundwater for chlorinated compounds.	2-100	SMCTA, Construction Contractor	Pre-construction
Test surface soils for aerially deposited lead and heavy metals. Use test results to determine soil management options and any special soils handling requirements for the construction contractor, including implementing a health and safety plan.	2-100	SMCTA, Construction Contractor	Final design
Test structures that will be removed or modified by the project for hazardous materials such as lead-based paint and asbestos using a qualified and licensed inspector.	2-100	SMCTA, Construction Contractor	Pre-construction
Properly characterize and dispose contaminated soil, groundwater, and other hazardous materials at an appropriate facility per applicable regulations.	2-100	SMCTA, Construction Contractor	Final design (testing), construction (disposal)
Air Quality			
Ensure that construction contractor complies with Department Special Provisions and Standard Specifications to minimize or eliminate dust and minimize pollutant emissions in construction equipment.	2-116, 2-117	SMCTA, Department Design/Const.	Final design, construction

Table F-1 Summary of Minimization and/or Mitigation Measures

Minimization and/or Mitigation Measure	Page Reference in IS/EA	Responsible Party	Timing
Noise			
Prohibit unnecessary idling of internal combustion engines within 100 feet of residences.	2-124	SMCTA Resident Engineer, Construction Contractor	Final design, construction
Avoid staging of construction equipment within 200 feet of hotels and residences and locate stationary noise-generating construction equipment, such as air compressors, portable power generators, or self-powered lighting systems away from noise-sensitive residences.	2-124	SMCTA Resident Engineer, Construction Contractor	Final design, construction
Require all construction equipment to conform to Section 14-8.02, Noise Control, of the latest Standard Specifications.	2-125	SMCTA Resident Engineer, Construction Contractor	Construction
Require the contractor to implement a construction noise monitoring program and if feasible provide additional mitigation as necessary (in the form of noise control blankets or other temporary noise barriers, etc.) for affected receivers.	2-125	SMCTA, Department	Final design, construction
Natural Communities			
Develop a project landscaping plan that includes areas that were previously covered in pavement and areas that were temporarily disturbed during construction, where feasible. Include tree planting ratios of 1:1 or greater and the use of native species where possible.	2-128	Department Landscape Design	Final design
Remove trees before the start of the nesting season for raptors and migratory birds (February 1) to avoid impacts to birds that are protected under the Migratory Bird Treaty Act (MBTA).	2-129	SMCTA, Construction Contractor	Final design, preconstruction, during construction
Preserve vegetation in areas of the project limits where no construction is planned.	2-129	SMCTA, Construction Contractor	Final design, preconstruction, during construction
Wetlands and Other Waters of the United States			
Implement measures included in the Section 401 certification, Section 1602 Agreement, or Section 404 permit.	2-137	SMCTA, Construction Contractor	Final design, preconstruction, during construction
Where work areas encroach on live or dry streams or wetlands, construct and maintain RWQCB-approved physical barriers adequate to prevent the flow or discharge of sediment into these systems.	2-137	SMCTA, Construction Contractor	Final design, preconstruction, during construction
Minimize discharge of sediment into streams during construction of the barriers.	2-137	SMCTA, Construction Contractor	Final design, preconstruction, during construction
Contain discharge through the use of RWQCB-approved measures to keep sediment from entering jurisdictional waters beyond the project limits.	2-138	SMCTA, Construction Contractor	Final design, preconstruction, during construction

Table F-1 Summary of Minimization and/or Mitigation Measures

Minimization and/or Mitigation Measure	Page Reference in IS/EA	Responsible Party	Timing
Clean all off-road construction equipment of potential noxious weed sources (mud and vegetation) before entering the project area and after entering a potentially infested area before moving on to another area. Employ whatever cleaning methods (typically spraying with a high-pressure water hose) are necessary to ensure that equipment is free of noxious weeds.	2-138	SMCTA, Construction Contractor	Final design, preconstruction, during construction
Equipment can be considered free of soil, seeds, and other such debris when a visual inspection does not disclose such material. Disassembly of equipment components or specialized inspection tools is not required. Place equipment washing stations in areas that afford easy containment and monitoring (preferably outside of the project area), and that do not drain into sensitive (riparian, wetland, etc.) areas.	2-138	SMCTA, Construction Contractor	Final design, preconstruction, during construction
Restore all temporarily affected areas to approximately the original site conditions.	2-138	Construction Contractor	Preconstruction, during construction, post construction
If excavation is required in the unnamed drainage channel, remove and restore the native salt marsh vegetation along the channel. Options for restoration include preserving the native plants in a nursery and replanting them after construction is complete, or replanting using plugs from the surrounding remaining vegetation.	2-138	Department, SMCTA, U.S. Army Corps of Engineers (USACE), Construction Contractor	Final design, construction
Prepare a Compensatory Mitigation Proposal and submit to the USACE.	2-138	SMCTA, Department,	Preconstruction
Animal Species			
Schedule vegetation removal (trees and ground cover) in the project's construction area during nonbreeding season (September 1 to February 1).	2-145	Construction Contractor	Final design, preconstruction, during construction
If construction is scheduled during the nesting season (February 1 through August 31), have a qualified biologist conduct preconstruction surveys of trees and vegetation within and extending approximately 500 feet from the perimeter of the construction area as well as the Broadway overcrossing and pedestrian overcrossing. Complete surveys no more than 15 days prior to ground-disturbing activities.	2-146	SMCTA, Construction Contractor	Final design, preconstruction, during construction
If an active nest is found, a qualified biologist should determine a temporary buffer size based on the type of construction activity and type of affected species, and delineate the buffer using ESA fencing, pin flags, and/or yellow caution tape. The buffer should be 300 feet radius unless otherwise defined by the biologist. Postpone clearing and construction in the buffer until the active nest is vacated and the juveniles have fledged, as determined or verified by the biologist, and there is no evidence of second nesting attempts.	2-146	SMCTA, Construction Contractor	Preconstruction, construction

Table F-1 Summary of Minimization and/or Mitigation Measures

Minimization and/or Mitigation Measure	Page Reference in IS/EA	Responsible Party	Timing
If a buffer area for nesting activity is established, have a qualified biologist check the nest area approximately weekly for potential construction-related disturbances. Prohibit construction in the buffer until the nest is no longer active. If nesting birds are present and attempt to build nests during construction, the biologist should work with California Department of Fish and Game (CDFG) to prevent nests from becoming established.	2-146	SMCTA	Preconstruction, construction
Limit all construction to the existing and proposed right-of-way.	2-146	SMCTA Resident Engineer, Construction Contractor	Final design, preconstruction, during construction
Construct temporary cofferdam(s) using only sandbags filled with clean gravel or sand--i.e. gravel or sand substantially free of dirt, silt or other debris that would adversely affect water quality if released into the stream--to install the Easton Creek culvert extension. Screen the downstream outlet of the diversion pump with 1/4-inch mesh screen material during all dewatering in accordance with NOAA Fisheries Fish Screening Criteria (NMFS 1997) for fingerling-sized fish unless otherwise directed by NOAA Fisheries. If sediment removal in the unnamed drainage channel is required, conduct work only after upstream culvert work is complete. If the berm separating the unnamed drainage channel from San Francisco Bay is removed, do so only after completion of the culvert work (including sediment removal, if necessary) and during low tide.	2-147, 2-166	SMCTA, Construction Contractor	Final design, construction
Prevent all debris, soil, silt, sand, bark, slash, sawdust, cement, concrete, washings, petroleum products or other organic or earthen material from entering into or being placed where it may be washed by rainfall or runoff into waters of the United States, nonjurisdictional drainages, or other suitable California red-legged frog (CRLF) habitat. Allow no discharges of excessively turbid water, and ensure that all equipment is well-maintained and free of leaks.	2-147	Construction Contractor	Construction
Before construction activities, have a qualified biologist conduct an education program for all construction personnel. The training should include the components described on page 2-147. The biologist should prepare a fact sheet conveying this information and distribute it to all construction crews and project personnel entering the project footprint. Upon completion of the program, the biologist should have personnel sign a form stating that they attended the program and understand all of the avoidance and minimization measures and implications of the Federal Endangered Species Act, California Endangered Species Act, and all other federal, state, and local regulatory requirements.	2-147	SMCTA	Preconstruction, during construction

Table F-1 Summary of Minimization and/or Mitigation Measures

Minimization and/or Mitigation Measure	Page Reference in IS/EA	Responsible Party	Timing
Install temporary erosion control and slope stabilization BMPs before the start of the wet season (October 15 through April 15). Erosion control measures may include silt fencing, straw wattles, coir blankets, sediment traps, and other protective measures to minimize the potential for erosion of sediment beyond the work area or degradation of water quality in adjacent aquatic habitats.	2-147	SMCTA, Construction Contractor	Preconstruction, during construction
Upon project completion, regrade the slopes at the foot of each end of the overcrossing and revegetate them according to Department policy with appropriate native species to the maximum extent possible. Develop a post-construction monitoring plan during final design, and periodically monitor re-establishment of vegetation and control of nonnative invasive species consistent with the plan.	2-148	SMCTA, Department, Construction Contractor	Final design, during and after construction
Threatened and Endangered Species			
Have a qualified botanist conduct a focused preconstruction survey for California seablite during the blooming period for the species (July to October) in 2013. If the species is identified in the BSA during the focused preconstruction survey, contact the USFWS for guidance on exclusion buffers, and determine additional avoidance and minimization methods through supplemental consultation.	2-165	SMCTA	Preconstruction, July-Oct. 2013
Restrict all in-stream work in Easton Creek (and, if necessary, the unnamed drainage channel) to during the dry season (April 15 through October 15), to minimize effects on creek flows and reduce the potential for sedimentation.	2-166	SMCTA, Construction Contractor	Final design, construction
Install the cofferdams required for work at Easton Creek during low tide.	2-166	SMCTA, Construction Contractor	Final design, construction
Have a NOAA Fisheries-qualified biological monitor present during installation and removal of the cofferdams to ensure that impacts to Easton Creek and downstream waters are minimized.	2-166	SMCTA, Construction Contractor	Final design, construction
Implement the measures, terms, and conditions set forth in the Biological Opinion (USFWS 2011; see Appendix I) to avoid or minimize impacts to CRLF and its potential habitat.	2-166	Department, SMCTA, Resident Engineer, Construction Contractor	Final design, preconstruction, during construction
Install exclusion fencing such as Ertec E-fence or an equivalent prior to any construction during the dry season (April 15 through October 15). The location of the exclusion fencing will be determined by the Resident Engineer and a USFWS-approved biologist in cooperation with the USFWS. The exclusion fencing will remain in place throughout the duration of the project and will be regularly inspected and maintained.	2-166	SMCTA, Construction Contractor	Preconstruction, April 15-Oct. 15
Do not use plastic or synthetic monofilament netting erosion control materials. Acceptable substitutes include natural fibers such as jute, coconut, twine, or other similar fibers.	2-167	SMCTA, Construction Contractor	Final design, construction

Table F-1 Summary of Minimization and/or Mitigation Measures

Minimization and/or Mitigation Measure	Page Reference in IS/EA	Responsible Party	Timing
Have a USFWS-approved biologist conduct preconstruction surveys for CRLF before any vegetation clearing and grubbing or other ground-disturbing activities that may result in take of CRLF. The surveys will consist of walking transects while conducting visual encounter surveys in areas that will be subject to ground disturbing activities. If CRLF are found during the preconstruction surveys, the USFWS will be contacted immediately, and work in the area will cease until the individual(s) are relocated to a suitable site in conformance with approved USFWS protocol.	2-167	SMCTA, Construction Contractor	Final design, preconstruction, during construction
Have a USFWS-approved biologist onsite to monitor for CRLF during clearing and grubbing and other activities that may result in take of CRLF. Through communication with the Resident Engineer or their designee, the biologist may stop work if deemed necessary for any reason to protect CRLF and will advise the Resident Engineer or designee on how to proceed accordingly. If a CRLF is found, work will be halted and the USFWS will be notified immediately. Work in the area will not resume until the individual(s) are relocated by the USFWS-approved biologist to a suitable site in conformance with approved USFWS protocol.	2-167	SMCTA, Construction Contractor	Final design, during construction
Have a CDFG/USFWS-approved biologist conduct preconstruction surveys before any ground-disturbing activities in potential San Francisco garter snake (SFGS) habitat. These surveys will consist of walking transects while conducting visual encounter surveys in areas that will be subject to vegetation clearing, grubbing, grading, cut and fill, or other ground-disturbing activities. If an SFGS is observed during a survey, notify the USFWS and CDFG, and monitor the SFGS until it leaves the area on its own accord.	2-167	SMCTA	Preconstruction, during construction
After vegetation removal in potential SFGS habitat, have a CDFG/USFWS-approved biologist on call as needed to monitor construction activities in potential habitat and inspect the exclusion fencing to ensure that it remains intact throughout the duration of construction. Through communication with the Resident Engineer or their designee, the biologist may stop work if deemed necessary for any reason to protect SFGS and will advise the Resident Engineer or designee on how to proceed accordingly.	2-168	SMCTA, Construction Contractor	Final design, construction
Invasive Species			
Use no noxious weeds in project landscaping and erosion control.	2-169	SMCTA, Construction Contractor	Construction
Allow no disposal of soil and plant materials from areas that support invasive species to areas dominated by native vegetation.	2-169	SMCTA Resident Engineer, Construction Contractor	Final design, construction

Table F-1 Summary of Minimization and/or Mitigation Measures

Minimization and/or Mitigation Measure	Page Reference in IS/EA	Responsible Party	Timing
Educate Resident Engineers on weed identification and the importance of controlling and preventing the spread of identified invasive nonnative species.	2-169	SMCTA	Preconstruction, during construction
Use gravel and/or fill material from weed-free sources for placement in relatively weed-free areas. Certified weed-free imported materials (or rice straw in upland areas) will be used.	2-169	SMCTA, Construction Contractor	Final design, construction

Appendix G List of Acronyms

AADT	Annual Average Daily Traffic
AB	Assembly Bill
ABAG	Association of Bay Area Governments
ADA	Americans with Disabilities Act
ADL	aerially deposited lead
APE	area of potential effect
BAAQMD	Bay Area Air Quality Management District
BART	Bay Area Rapid Transit
Bay	San Francisco Bay
BCDC	Bay Conservation and Development Commission
BMP	best management practice
BSA	biological study area
Caltrans	California Department of Transportation
CARB	California Air Resources Board
CCC	Central California Coast
CDFG	California Department of Fish and Game
CEQ	Council on Environmental Quality
CEQA	California Environmental Quality Act
CERCLA	Comprehensive Environmental Response, Compensation and Liability Act of 1980
CERFA	Community Environmental Response Facilitation Act
CESA	California Endangered Species Act
CFR	Code of Federal Regulations
CHRIS/NWIC	California Historic Resources Inventory System, Northwest Information Center
CNDDB	California Natural Diversity Database
CNPS	California Native Plant Society
CO	carbon monoxide
CO_2	carbon dioxide
CO Protocol	*Transportation Project-Level Carbon Monoxide Protocol* (Garza, Graney, and Sperling 1998)
CRHR	California Register of Historical Resources
CRLF	California red-legged frog
CSS	context sensitive solutions
CT6054 BG5	Census Tract 6054, Block Group 5
CT6051 BG2	Census Tract 6051, Block Group 2
CWA	Clean Water Act
dBA	A-weighted decibel
dbh	diameter at breast height
DDT	dichlorodiphenyltrichloroethane
Department	California Department of Transportation
DPS	Distinct Population Segment
DSA	disturbed soil area
EA	Environmental Assessment
EDR	Environmental Data Resources, Inc.
EFH	Essential Fish Habitat
EO	Executive Order

ESA	environmentally sensitive area
FEMA	Federal Emergency Management Agency
FESA	Federal Endangered Species Act
FHWA	Federal Highway Administration
FIFRA	Federal Insecticide, Fungicide, and Rodenticide Act
FIRM	Flood Insurance Rate Map
FMP	fisheries management plan
FONSI	Finding of No Significant Impact
FTA	Federal Transit Administration
GHG	greenhouse gas
HAPC	Habitat Area of Particular Concern
HFC-23	fluoroform
HFC-134a	s, s, s, 2–tetrafluoroethane
HFC-152a	difluoroethane
HHS	Department of Health and Human Services
HOV	high-occupancy vehicle
IPCC	Intergovernmental Panel on Climate Change
IS	Initial Study
ITS	Intelligent Transportation Systems
L_{eq}	equivalent sound level
$L_{eq(hr)}$	equivalent sound level per hour
LOS	level of service
LUST	leaking underground storage tank
M	moment magnitude, an earthquake intensity measure
$\mu g/m^3$	microgram(s) per cubic meter
MBTA	Migratory Bird Treaty Act
MCE	Maximum Credible Earthquake
mg/m^3	milligram(s) per cubic meter
MLD	Most Likely Descendent
MND	Mitigated Negative Declaration
MOU	memorandum of understanding
mpg	miles per gallon
mph	miles per hour
MSAT	Mobile Source Air Toxic
MTC	Metropolitan Transportation Commission
MVM	million vehicle miles
NAAQS	National Ambient Air Quality Standards
NAC	Noise Abatement Criteria
NAHC	Native American Heritage Commission
ND	Negative Declaration
NEPA	National Environmental Policy Act
NHPA	National Historic Preservation Act of 1966
NO_2	nitrogen dioxide
NOAA Fisheries	National Oceanic and Atmospheric Administration's National Marine Fisheries Service
NO_x	nitrogen oxide
NOC	Notice of Construction
NOCC	Notice of Completion of Construction
NPDES	National Pollutant Discharge Elimination System
NRCS	Natural Resources Conservation Service
NRHP	National Register of Historic Places

O_3	ozone
OSHA	Occupational Safety and Health Act
PA	Programmatic Agreement
PCB	polychlorinated biphenyl
PDT	Project Development Team
PG&E	Pacific Gas and Electric Company
PM_{10}	particulate matter less than 10 micrometers in diameter
$PM_{2.5}$	particulate matter less than 2.5 micrometers in diameter
ppm	part(s) per million
PRC	(California) Public Resources Code
PS&E	Plans, Specifications, and Estimates
PSR	Project Study Report
RAP	Relocation Assistance Program
RCRA	Resource Conservation and Recovery Act of 1976
ROG	reactive organic gas
RTP	Regional Transportation Plan
RWQCB	Regional Water Quality Control Board
SAFETEA-LU	Safe, Accountable, Flexible, Efficient Transportation Equity Act: A Legacy for Users
SCH #	State Clearinghouse reference number
SFBAAB	San Francisco Bay Area Air Basin
SFGS	San Francisco garter snake
SFO	San Francisco International Airport
SHPO	State Historic Preservation Office(r)
SIP	State Implementation Plan
SMCTA	San Mateo County Transportation Authority
SO_2	sulfur dioxide
SPCA	Society for the Prevention of Cruelty to Animals
SWMP	Storm Water Management Plan
SWPPP	Storm Water Pollution Prevention Plan
SWRCB	State Water Resources Control Board
TASAS	Traffic Accident Surveillance and Analysis System
TCE	temporary construction easement
TCM	Transportation Control Measures
TDM	Transportation demand management
TIP	Transportation Improvement Program
TMDL	Total Maximum Daily Load
TMP	Transportation Management Plan
TNM	Traffic Noise Model
TOT	transient occupancy tax
TSCA	Toxic Substances Control Act
TSM	Transportation systems management
US 101	United States Highway 101
USACE	U.S. Army Corps of Engineers
USC	United States Code
USEPA	U.S. Environmental Protection Agency
USFWS	U.S. Fish and Wildlife Service
USGS	U.S. Geological Survey
UST	underground storage tank

VA	value analysis
VMT	vehicle miles traveled
WPCP	Water Pollution Control Plan

Appendix H List of Technical Studies

The following technical studies were prepared to support this environmental document:

- Air Quality Impact Assessment (URS, January 21, 2011)
- Archaeological Survey Report (URS, December 2009)
- Biological Assessment (URS, September 2010)
- Community Impact Assessment (URS, November 2009)
- Geotechnical Impact Report (URS, May 2009)
- Historic Property Survey Report (URS, December 2009)
- Historic Resources Evaluation Report (JRP Historical Consulting, December 2009)
- Water Quality Study (WRECO, July 2009)
- Initial Site Assessment (URS, May 2009)
- Jurisdictional Delineation (URS, August 2010)
- Location Hydraulic Study (WRECO, November 2009)
- Natural Environment Study (URS, April 21, 2010)
- Noise Study Report (Illingworth and Rodkin, September 2009)
- Storm Water Data Report (WRECO, January 2010)
- Traffic Operations Analysis Report (URS, June 4, 2010)
- Visual Impact Assessment (William Kanemoto and Associates, December 2009)